DATE REVISED	DATE FILMED	DATE REVISED	DATE FILMED	FED.RD. DIST.NO.	STATE	FED.AID PROJ.NO.	SHEET NO.	TOTAL SHEETS
				6	ARK.			
				JOB NO.		020629	1	122

(2) HWY. 65 - YELLOW BEND PORT (S)

ARKANSAS DEPARTMENT OF TRANSPORTATION
CONSTRUCTION PLANS FOR STATE HIGHWAY

HWY. 65 - YELLOW BEND PORT (S)

CHICOT & DESHA COUNTIES

ROUTE 35 SECTIONS 9 , 10 & 11

JOB 020629

FED. AID PROJ. STPR-0921(3)

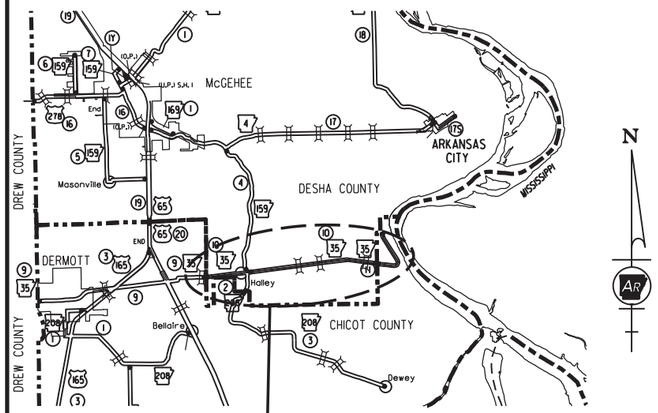

PROJECT LOCATION

VICINITY MAP

NOT TO SCALE

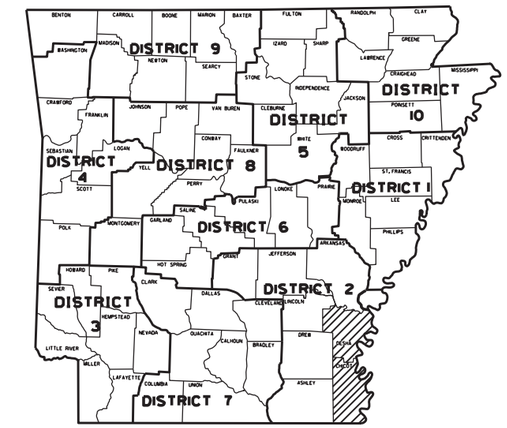

ARK. HWY. DIST. NO. 2

BRIDGE EXCEPTIONS

⚠ STA. 133+12.34
28'-0" CLEAR ROADWAY
188.71' TOTAL LENGTH
BR. NO 03600
STA. 135+01.05

BRIDGE DATA

(1) STA. 315+43.88
28'-0" CLEAR ROADWAY
239.61' TOTAL LENGTH
BR. NO 05140
STA. 317+83.49
POLYMER OVERLAY

(2) STA. 355+68.21
28'-0" CLEAR ROADWAY
179.70' TOTAL LENGTH
BR. NO 05139
STA. 357+47.91
POLYMER OVERLAY

(3) STA. 442+41.97
28'-0" CLEAR ROADWAY
199.38' TOTAL LENGTH
BR. NO 05138
STA. 444+41.35
POLYMER OVERLAY

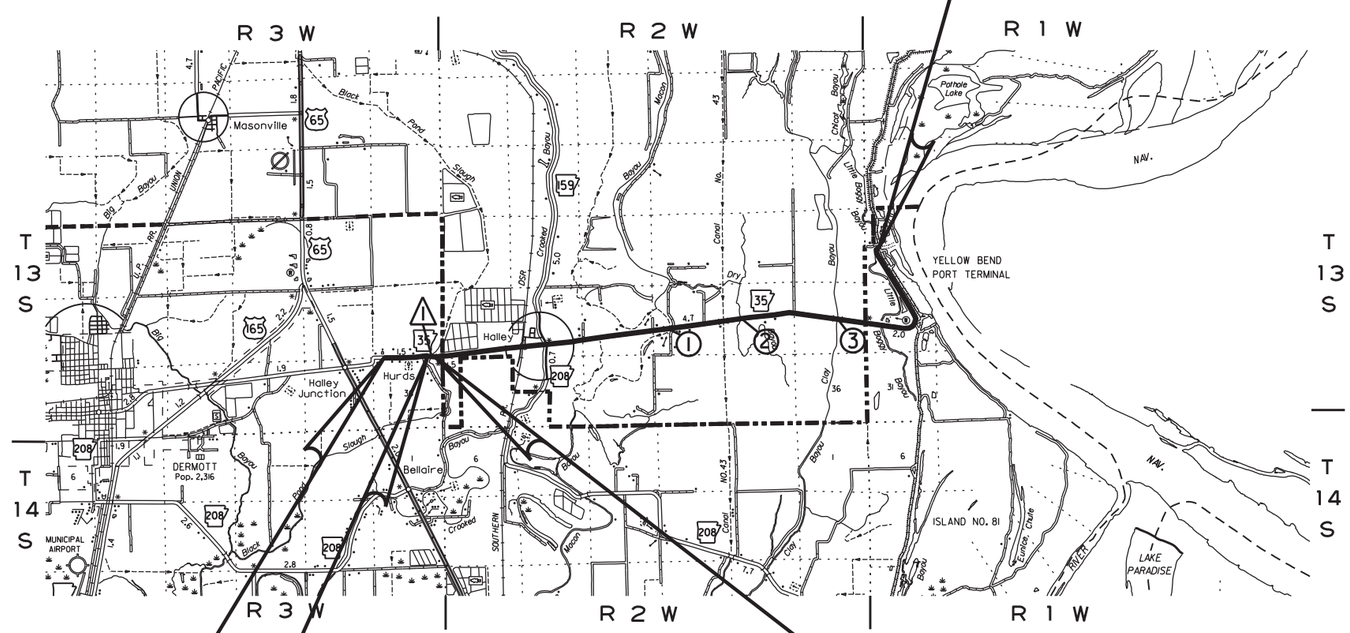

STA. 571+22.08
END JOB 020629

STA. 100+00.00
BEGIN JOB 020629
LOG MILE 5.27

STA. 133+12.34
BEGIN JOB EXCEPTION

STA. 135+01.05
END JOB EXCEPTION

DESIGN TRAFFIC DATA

DESIGN YEAR	2040
2020 ADT	270
2040 ADT	300
2040 DHV	33
DIRECTIONAL DISTRIBUTION	0.60%
TRUCKS	20%
AVERAGE RUNNING SPEED SECT. 9	55 MPH
AVERAGE RUNNING SPEED SECT. 10	45 MPH
AVERAGE RUNNING SPEED SECT. 11	50 MPH

PROJECT COORDINATES:

	BEGIN	MID-POINT	END
LAT.	N33° 32' 03"	N33° 32' 19"	N33° 33' 11"
LONG.	W91° 21' 35"	W91° 17' 13"	W91° 14' 27"

LENGTH OF PROJECT CALCULATED ALONG C.L.

GROSS LENGTH OF PROJECT	47122.08	FEET	OR	8.925	MILES
NET " " ROADWAY	46314.68	"	"	8.772	"
NET " " BRIDGES	618.69	"	"	0.117	"
NET " " PROJECT	46933.37	"	"	8.889	"

APPROVED

STATE OF ARKANSAS
LICENSED PROFESSIONAL ENGINEER
No. 7836
M.E. BANKS

Banks, Emanuel
Sep 18 2020 5:13 PM
DocuSign

DEPUTY DIRECTOR
AND CHIEF ENGINEER

10/11/2019

R020629.DGN

STATE OF ARKANSAS
LICENSED PROFESSIONAL ENGINEER
No. 11425
TRINITY D. SMITH

Sep 18 2020 1:12 PM

DocuSign

INDEX OF SHEETS

SHEET NO.	TITLE	BRIDGE NO.	DRWG. NO.
1	TITLE SHEET		
2	INDEX OF SHEETS AND STANDARD DRAWINGS		
3	GOVERNING SPECIFICATIONS AND GENERAL NOTES		
4 - 5	TYPICAL SECTIONS OF IMPROVEMENT		
6 - 8	SPECIAL DETAILS		
9 - 59	TEMPORARY EROSION CONTROL DETAILS		
60 - 61	MAINTENANCE OF TRAFFIC DETAILS		
62	PERMANENT PAVEMENT MARKING DETAILS		
63 - 70	QUANTITIES		
71	SCHEDULE OF BRIDGE QUANTITIES	05140, 05139, 05138	61736
72	SUMMARY OF QUANTITIES AND REVISIONS		
73 - 90	SURVEY CONTROL DETAILS		
91 - 122	PLAN AND PROFILE SHEETS		

BRIDGE STANDARD DRAWINGS

DRWG.NO.	TITLE	DATE
55036	STANDARD DETAILS FOR TYPE 'AT' APPROACH GUTTERS (BRIDGES WITH 6" CURBS & TYPE A, B, C, D OR E RAILING)	11-07-19
55039	STANDARD DETAILS FOR TYPE 'CT' APPROACH GUTTERS (BRIDGES WITH CURB)	11-07-19
55064	STANDARD DETAILS FOR JOINT REPAIRS & MODIFICATION	11-07-19

ROADWAY STANDARD DRAWINGS

DRWG.NO.	TITLE	DATE
CDP-1	CONCRETE DITCH PAVING	12-08-16
FES-1	FLARED END SECTION	10-18-96
FES-2	FLARED END SECTION	10-18-96
GR-6	GUARDRAIL DETAILS	11-07-19
GR-7	GUARDRAIL DETAILS	11-07-19
GR-8	GUARDRAIL DETAILS	11-07-19
GR-9	GUARDRAIL DETAILS	11-07-19
GR-10	GUARDRAIL DETAILS	11-07-19
GR-11	GUARDRAIL DETAILS	11-07-19
GR-12	GUARDRAIL DETAILS	05-14-20
MB-1	MAILBOX DETAILS	11-18-04
PBC-1	PRECAST CONCRETE BOX CULVERTS	01-28-15
PCC-1	CONCRETE PIPE CULVERT FILL HEIGHTS & BEDDING	02-27-14
PCM-1	METAL PIPE CULVERT FILL HEIGHTS & BEDDING	02-27-14
PCP-1	PLASTIC PIPE CULVERT (HIGH DENSITY POLYETHYLENE)	02-27-14
PCP-2	PLASTIC PIPE CULVERT (PVC F949)	02-27-14
PCP-3	PLASTIC PIPE CULVERT (POLYPROPYLENE)	02-27-20
PM-1	PAVEMENT MARKING DETAILS	02-27-20
PU-1	DETAILS OF PIPE UNDERDRAIN	12-08-16
RCB-1	REINFORCED CONCRETE BOX CULVERT DETAILS	07-26-12
RCB-2	EXCAVATION PAY LIMITS, BACKFILL, & SOLID SODDING FOR BOX CULVERTS	11-20-03
RCB-3	METHOD OF EXTENDING EXISTING R.C. BOX CULVERTS	10-12-95
RRS-1	PAVEMENT MARKING FOR RAILROAD CROSSING	12-08-16
SE-2	TABLES AND METHOD OF SUPERELEVATION FOR TWO-WAY TRAFFIC	11-07-19
TC-1	STANDARD TRAFFIC CONTROLS FOR HIGHWAY CONSTRUCTION	11-07-19
TC-2	STANDARD TRAFFIC CONTROLS FOR HIGHWAY CONSTRUCTION	11-07-19
TC-3	STANDARD TRAFFIC CONTROLS FOR HIGHWAY CONSTRUCTION	02-27-20
TEC-1	TEMPORARY EROSION CONTROL DEVICES	11-16-17
TEC-2	TEMPORARY EROSION CONTROL DEVICES	06-02-94
TEC-3	TEMPORARY EROSION CONTROL DEVICES	11-03-94
W-X003-1	DETAILS OF STANDARD WINGS FOR REINFORCED CONCRETE BOX CULVERTS	05-10-66
R-100X-0	DETAILS OF STANDARD BARREL SECTIONS FOR REINFORCED CONCRETE BOX CULVERTS	02-08-63

STATE OF ARKANSAS
LICENSED PROFESSIONAL ENGINEER
No. 11425
TRINITY D. SMITH

Sep 18 2020 12:35 PM

DocuSign

GOVERNING SPECIFICATIONS

ARKANSAS STATE HIGHWAY COMMISSION STANDARD SPECIFICATIONS FOR HIGHWAY CONSTRUCTION, EDITION OF 2014, AND THE FOLLOWING SPECIAL PROVISIONS AND SUPPLEMENTAL SPECIFICATIONS:

NUMBER	TITLE
ERRATA_____	ERRATA FOR THE BOOK OF STANDARD SPECIFICATIONS
FHWA-1273__	REQUIRED CONTRACT PROVISIONS FEDERAL-AID CONSTRUCTION CONTRACTS
FHWA-1273__	SUPPLEMENT - EQUAL EMPLOYMENT OPPORTUNITY - NOTICE TO CONTRACTORS
FHWA-1273__	SUPPLEMENT - SPECIFIC EQUAL EMPLOYMENT OPPORTUNITY RESPONSIBILITIES (23 U.S.C. 140)
FHWA-1273__	SUPPLEMENT - EQUAL EMPLOYMENT OPPORTUNITY - GOALS AND TIMETABLES
FHWA-1273__	SUPPLEMENT - EQUAL EMPLOYMENT OPPORTUNITY - FEDERAL STANDARDS
FHWA-1273__	SUPPLEMENT - TRAINING PROGRAM - JOB 020629
FHWA-1273__	SUPPLEMENT - POSTERS AND NOTICES REQUIRED FOR FEDERAL-AID PROJECTS
FHWA-1273__	SUPPLEMENT - WAGE RATE DETERMINATION
100-3_____	CONTRACTOR'S LICENSE
100-4_____	DEPARTMENT NAME CHANGE
102-2_____	ISSUANCE OF PROPOSALS
108-1_____	LIQUIDATED DAMAGES
108-2_____	WORK ALLOWED PRIOR TO ISSUANCE OF WORK ORDER
110-1_____	PROTECTION OF WATER QUALITY AND WETLANDS
210-1_____	UNCLASSIFIED EXCAVATION
303-1_____	AGGREGATE BASE COURSE
306-1_____	QUALITY CONTROL AND ACCEPTANCE
400-1_____	TACK COATS
400-4_____	DESIGN AND QUALITY CONTROL OF ASPHALT MIXTURES
400-5_____	PERCENT AIR VOIDS FOR ACHM MIX DESIGNS
400-6_____	LIQUID ANTI-STRIP ADDITIVE
404-3_____	DESIGN OF ASPHALT MIXTURES
410-1_____	CONSTRUCTION REQUIREMENTS AND ACCEPTANCE OF ASPHALT CONCRETE PLANT MIX COURSES
410-2_____	DEVICES FOR MEASURING DENSITY FOR ROLLING PATTERNS
505-1_____	PORTLAND CEMENT CONCRETE DRIVEWAY
600-2_____	INCIDENTAL CONSTRUCTION
603-1_____	LANE CLOSURE NOTIFICATION
604-1_____	RETROREFLECTIVE SHEETING FOR TRAFFIC CONTROL DEVICES IN CONSTRUCTION ZONES
604-3_____	TRAFFIC CONTROL DEVICES IN CONSTRUCTION ZONES (MASH)
605-1_____	CONCRETE DITCH PAVING
606-1_____	PIPE CULVERTS FOR SIDE DRAINS
617-1_____	GUARDRAIL TERMINAL (TYPE 2)
620-1_____	MULCH COVER
734-1_____	BRIDGE END TERMINAL
800-1_____	STRUCTURES
804-2_____	REINFORCING STEEL FOR STRUCTURES
JOB 020629__	BIDDING REQUIREMENTS AND CONDITIONS
JOB 020629__	BRIDGE DECK REPAIR FOR POLYMER OVERLAYS
JOB 020629__	BROADBAND INTERNET SERVICE FOR ASPHALT CONCRETE PLANT
JOB 020629__	BROADBAND INTERNET SERVICE FOR FIELD OFFICE
JOB 020629__	CARGO PREFERENCE ACT REQUIREMENTS
JOB 020629__	CULVERT CLEAN OUT
JOB 020629__	DISADVANTAGED BUSINESS ENTERPRISE BIDDER'S RESPONSIBILITIES
JOB 020629__	ESTABLISHING CONTRACT TIME - WORKING DAY CONTRACT
JOB 020629__	EXTENSION FOR PIPE CULVERTS
JOB 020629__	FLEXIBLE BEGINNING OF WORK
JOB 020629__	GOALS FOR DISADVANTAGED BUSINESS ENTERPRISE PARTICIPATION
JOB 020629__	INSURANCE, CONSTRUCTION, AND FLAGGING REQUIREMENTS ON RAILROAD PROPERTY (NLA)
JOB 020629__	MAINTENANCE OF TRAFFIC
JOB 020629__	MANDATORY ELECTRONIC CONTRACT
JOB 020629__	MANDATORY ELECTRONIC DOCUMENT SUBMITTAL
JOB 020629__	PARTNERING REQUIREMENTS
JOB 020629__	PERCENT WITHIN LIMITS/PAVEMENT SMOOTHNESS (IRI)
JOB 020629__	PLASTIC PIPE
JOB 020629__	POLYMER OVERLAY
JOB 020629__	PRICE ADJUSTMENT FOR ASPHALT BINDER
JOB 020629__	SHORING FOR CULVERTS
JOB 020629__	SOIL STABILIZATION
JOB 020629__	STORM WATER POLLUTION PREVENTION PLAN
JOB 020629__	SUBMISSION OF ASPHALT CONCRETE HOT MIX ACCEPTANCE TEST RESULTS
JOB 020629__	UTILITY ADJUSTMENTS
JOB 020629__	VALUE ENGINEERING
JOB 020629__	WARM MIX ASPHALT
JOB 020629__	WELLHEAD PROTECTION

GENERAL NOTES

1. GRADE LINE DENOTES FINISHED GRADE WHERE SHOWN ON PLANS.
2. ALL PIPE LINES, POWER, TELEPHONE, AND TELEGRAPH LINES TO BE MOVED OR LOWERED BY THE RESPECTIVE OWNERS AS PER AGREEMENT WITH SUCH OWNERS.
3. ANY EQUIPMENT OR APPURTENANCE THAT INTERFERES WITH THE PROPOSED CONSTRUCTION AND WHICH MAY BE THE PROPERTY OF UTILITY SERVICE ORGANIZATIONS SHALL BE MOVED BY THE OWNERS UNLESS OTHERWISE PROVIDED.
4. THE CONTRACTOR SHALL BE RESPONSIBLE FOR MAINTAINING U. S. MAILBOXES WITHIN THE PROJECT LIMITS IN SUCH A MANNER THAT THE PUBLIC MAY RECEIVE CONTINUED MAIL SERVICE. PAYMENT WILL BE CONSIDERED INCLUDED IN THE PRICE BID FOR THE VARIOUS BID ITEMS.
5. ALL LAND MONUMENTS LOCATED WITHIN THE CONSTRUCTION AREA SHALL BE PROTECTED IN ACCORDANCE WITH SECTION 107.12 OF THE STANDARD SPECIFICATIONS.
6. ALL TREES THAT DO NOT DIRECTLY INTERFERE WITH THE PROPOSED CONSTRUCTION SHALL BE SPARED AS DIRECTED BY THE ENGINEER. CARE AND DISCRETION SHALL BE USED TO ENSURE THAT ALL TREES NOT TO BE REMOVED SHALL BE HARMED AS LITTLE AS POSSIBLE DURING THE CONSTRUCTION OPERATIONS.
7. THE CONTRACTOR SHALL BE RESPONSIBLE FOR PROVIDING A FENCE TO CONTROL LIVESTOCK IN AREAS WHERE PASTURES ARE SEVERED. WIRE FENCE MAY BE CONSTRUCTED INITIALLY, OR IN LIEU THEREOF, THE CONTRACTOR AT HIS OWN EXPENSE, MAY ELECT TO PROVIDE TEMPORARY FENCING SUITABLE TO CONTAIN LIVESTOCK.
8. THE SEQUENCE AS SHOWN ON THE MAINTENANCE OF TRAFFIC PLANS IS A GENERAL OUTLINE FOR THE CONSTRUCTION OF THIS PROJECT, AND IN NO WAY IS IT INTENDED TO COVER EVERY ITEM IN THE PROJECT. ITEMS NOT CRITICAL TO THE CONSTRUCTION SEQUENCE MAY BE CONSTRUCTED IN ANY STAGE AS APPROVED BY THE RESIDENT ENGINEER.
9. ALL FLEXIBLE BASE AND ASPHALTIC PAVEMENTS REMOVED SHALL BE PAID FOR UNDER THE ITEM NO. 210 - UNCLASSIFIED EXCAVATION.
10. THE EXISTING ASPHALT PAVEMENT TO BE REMOVED FROM THE REMAINING PAVEMENT SHALL BE SEPARATED BY SAWING ALONG A NEAT LINE. AFTER SAWING, THE PAVEMENT TO BE REMOVED SHALL BE CAREFULLY REMOVED IN A MANNER THAT WILL NOT DAMAGE THE PAVEMENT THAT IS TO REMAIN. ANY DAMAGE OF THE ASPHALT PAVEMENT THAT IS TO REMAIN IN PLACE SHALL BE REPAIRED AT THE CONTRACTOR'S EXPENSE.
11. THIS PROJECT IS COVERED UNDER A SECTION 404 NATIONWIDE 14 PERMIT. REFER TO SECTION 110 OF THE STANDARD SPECIFICATIONS, EDITION OF 2014, FOR PERMIT REQUIREMENTS.

DATE REVISED	DATE FILMED	DATE REVISED	DATE FILMED	FED.RD. DIST.NO.	STATE	FED.AID PROJ.NO.	SHEET NO.	TOTAL SHEETS
				6	ARK.			
				JOB NO.		020629	4	122

(2) TYPICAL SECTIONS OF IMPROVEMENT

STATE OF ARKANSAS
LICENSED PROFESSIONAL ENGINEER
No. 11425
TRINITY D. SMITH

Sep 18 2020 12:35 PM

DocuSign

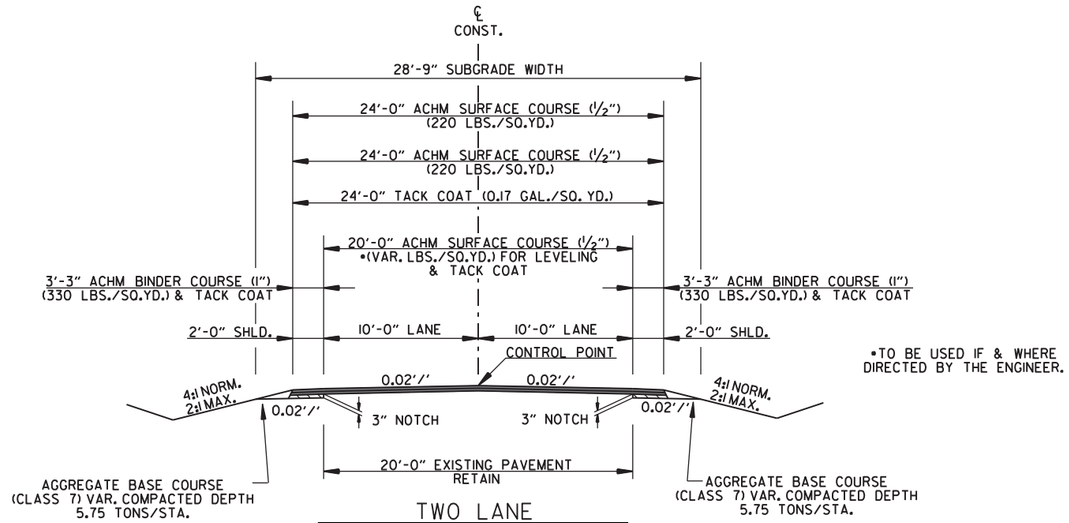

*TO BE USED IF & WHERE DIRECTED BY THE ENGINEER.

TWO LANE TANGENT SECTION

STA. 100+00.00 TO STA. 127+64.16
STA. 133+00.00 TO STA. 133+12.34
STA. 135+01.05 TO STA. 135+20.00
STA. 142+82.76 TO STA. 193+31.86
STA. 201+46.76 TO STA. 355+68.21
STA. 357+47.91 TO STA. 401+42.14
STA. 413+39.09 TO STA. 442+41.97
STA. 444+41.35 TO STA. 494+29.88
STA. 514+60.40 TO STA. 557+01.16
STA. 565+05.96 TO STA. 565+55.00

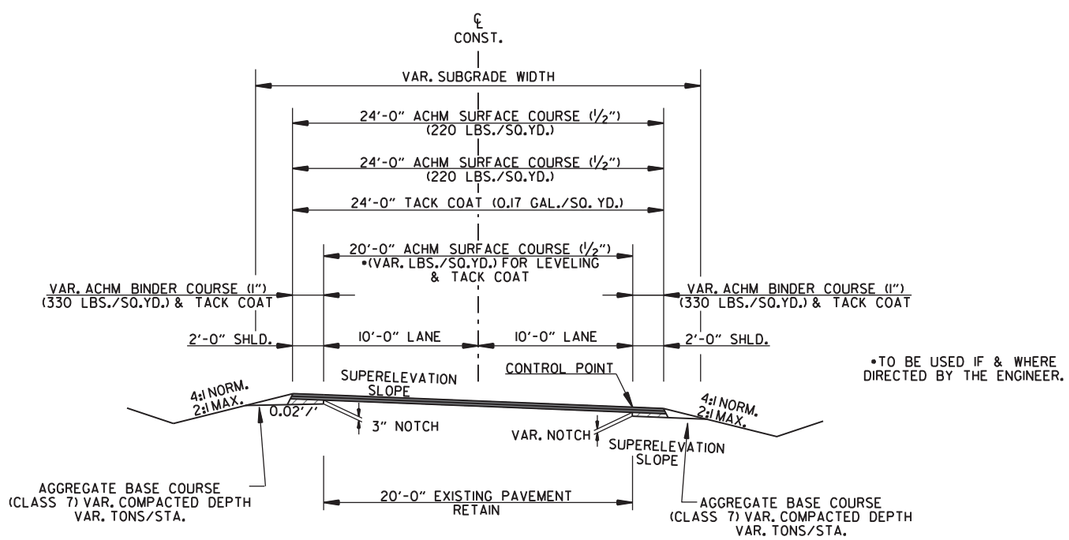

*TO BE USED IF & WHERE DIRECTED BY THE ENGINEER.

TWO LANE SUPERELEVATION SECTION

STA. 127+64.16 TO STA. 133+00.00
STA. 135+20.00 TO STA. 142+82.76
STA. 401+42.14 TO STA. 413+39.09
STA. 494+29.88 TO STA. 514+60.40
STA. 557+01.16 TO STA. 565+05.96

NOTES:

1. REFER TO CROSS SECTIONS FOR DEVIATION FROM THE NORMAL SLOPES. NO CHANGES SHALL BE MADE FROM THE PLANNED SLOPES WITHOUT THE APPROVAL OF THE ENGINEER.
2. THE THICKNESS OF AGGREGATE BASE COURSE SHALL BE WITHIN PLUS OR MINUS ONE INCH OF THE PLAN THICKNESS SHOWN. THE CONTRACTOR WILL CORRECT ANY DEFICIENT THICKNESS THAT DOES NOT MEET TOLERANCE INDICATED. PAYMENT WILL NOT BE MADE FOR MATERIAL PLACED IN EXCESS OF THE TOLERANCE INDICATED.
3. WITH THE APPROVAL OF THE ENGINEER, THE CONTRACTOR WILL BE ALLOWED TO SUBSTITUTE, AT NO ADDITIONAL COST TO THE DEPARTMENT, THE FIRST LIFT OF ACHM SURFACE COURSE (1/2") IN LIEU OF AGGREGATE BASE COURSE ON THE SHOULDERS.
4. THE FINAL 2" OF SURFACE COURSE IS TO BE PLACED AFTER ALL OTHER COURSES HAVE BEEN LAID. LONGITUDINAL JOINTS SHALL BE AT LANE LINES.
5. ASPHALT FOR LEVELING OF EXISITING PAVEMENT SHALL BE PLACED ONLY IF AND WHERE DIRECTED BY THE ENGINEER. CALCULATIONS FOR THE AMOUNT OF LEVELING AND/OR LEVELING OPERATIONS SHALL BE PERFORMED BEFORE CONSTRUCTING NOTCH AND WIDENING. CALCULATIONS WILL NOT BE PAID FOR DIRECTLY, BUT PAYMENT WILL BE CONSIDERED INCLUDED IN THE VARIOUS PAY ITEMS.

9/17/2020

R020629.DGN

TYPICAL SECTIONS OF IMPROVEMENT

DATE REVISED	DATE FILMED	DATE REVISED	DATE FILMED	FED.RD. DIST.NO.	STATE	FED.AID PROJ.NO.	SHEET NO.	TOTAL SHEETS
				6	ARK.			
				JOB NO.		020629	5	122

(2) TYPICAL SECTIONS OF IMPROVEMENT

STATE OF ARKANSAS
LICENSED PROFESSIONAL ENGINEER
No. 11425
TRINITY D. SMITH

Sep 18 2020 12:37 PM

DocuSign

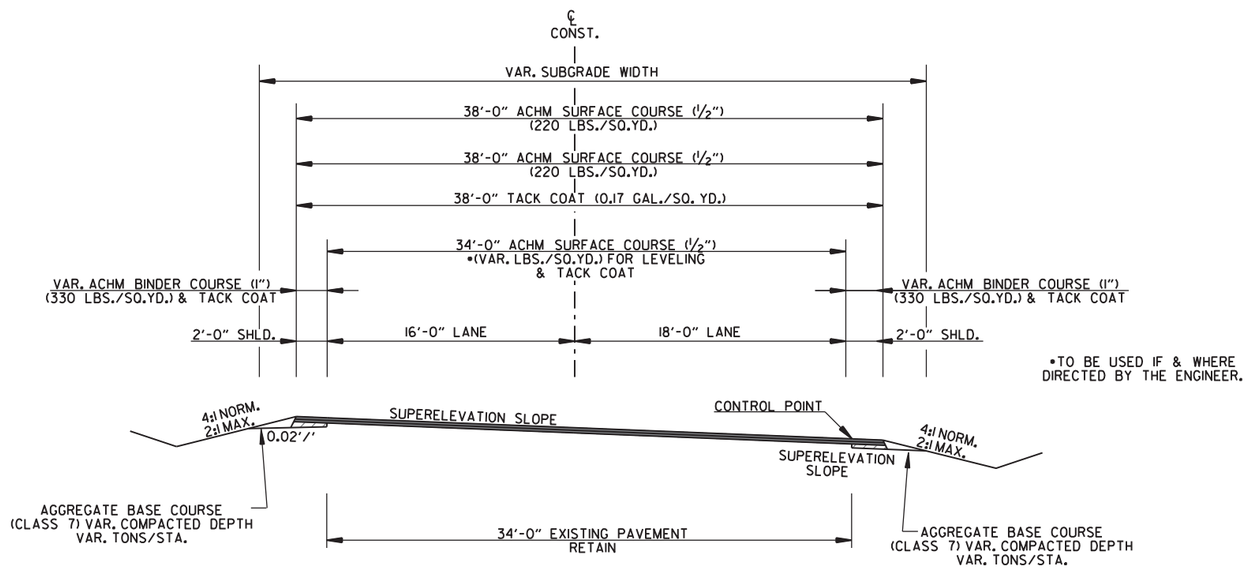

TWO LANE
SUPERELEVATION SECTION

STA. 569+20.00 TO STA. 570+39.14

NOTES:

1. REFER TO CROSS SECTIONS FOR DEVIATION FROM THE NORMAL SLOPES. NO CHANGES SHALL BE MADE FROM THE PLANNED SLOPES WITHOUT THE APPROVAL OF THE ENGINEER.

2. THE THICKNESS OF AGGREGATE BASE COURSE SHALL BE WITHIN PLUS OR MINUS ONE INCH OF THE PLAN THICKNESS SHOWN. THE CONTRACTOR WILL CORRECT ANY DEFICIENT THICKNESS THAT DOES NOT MEET TOLERANCE INDICATED. PAYMENT WILL NOT BE MADE FOR MATERIAL PLACED IN EXCESS OF THE TOLERANCE INDICATED.

3. WITH THE APPROVAL OF THE ENGINEER, THE CONTRACTOR WILL BE ALLOWED TO SUBSTITUTE, AT NO ADDITIONAL COST TO THE DEPARTMENT, THE FIRST LIFT OF ACHM SURFACE COURSE (1/2") IN LIEU OF AGGREGATE BASE COURSE ON THE SHOULDERS.

4. THE FINAL 2" OF SURFACE COURSE IS TO BE PLACED AFTER ALL OTHER COURSES HAVE BEEN LAID. LONGITUDINAL JOINTS SHALL BE AT LANE LINES.

5. ASPHALT FOR LEVELING OF EXISITING PAVEMENT SHALL BE PLACED ONLY IF AND WHERE DIRECTED BY THE ENGINEER. CALCULATIONS FOR THE AMOUNT OF LEVELING AND/OR LEVELING OPERATIONS SHALL BE PERFORMED BEFORE CONSTRUCTING NOTCH AND WIDENING. CALCULATIONS WILL NOT BE PAID FOR DIRECTLY. BUT PAYMENT WILL BE CONSIDERED INCLUDED IN THE VARIOUS PAY ITEMS.

DATE REVISED	DATE FILMED	DATE REVISED	DATE FILMED	FED.RD. DIST.NO.	STATE	FED.AID PROJ.NO.	SHEET NO.	TOTAL SHEETS
				6	ARK.			
				JOB NO.		020629	6	122

(2) SPECIAL DETAILS

STATE OF ARKANSAS
LICENSED PROFESSIONAL ENGINEER
No. 11425
TRINITY D. SMITH

Sep 18 2020 12:38 PM

DocuSign

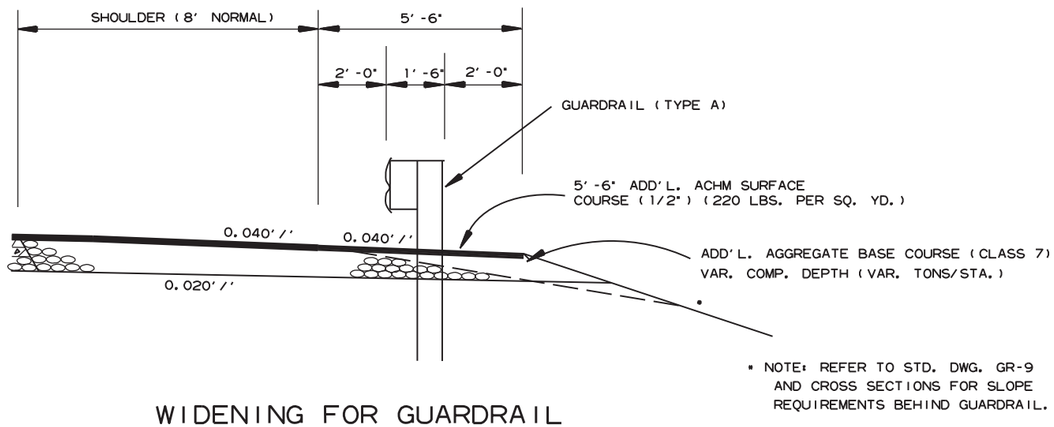

WIDENING FOR GUARDRAIL

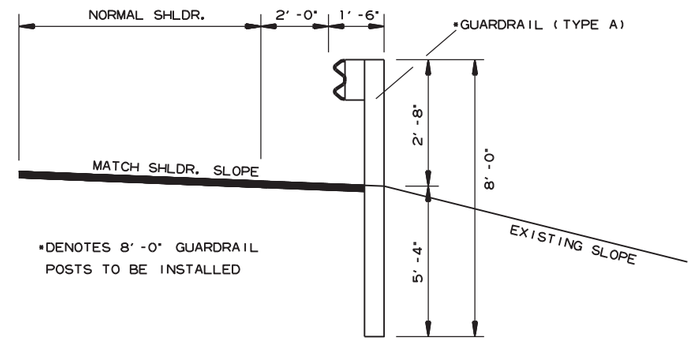

SECTION DETAIL FOR GUARDRAIL

NOTE: REFER TO STANDARD DRAWINGS GR-6, GR-8, GR-9, GR-10, GR-11, & GR-12 FOR ADDITIONAL INFORMATION.

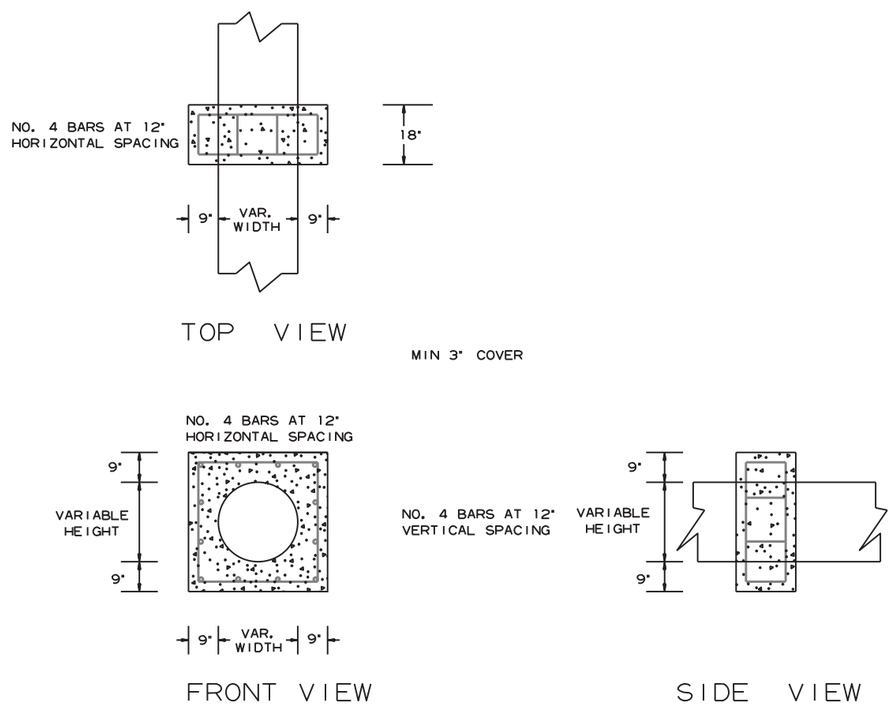

PIPE EXTENSION
REINFORCED CONCRETE COLLAR DETAIL

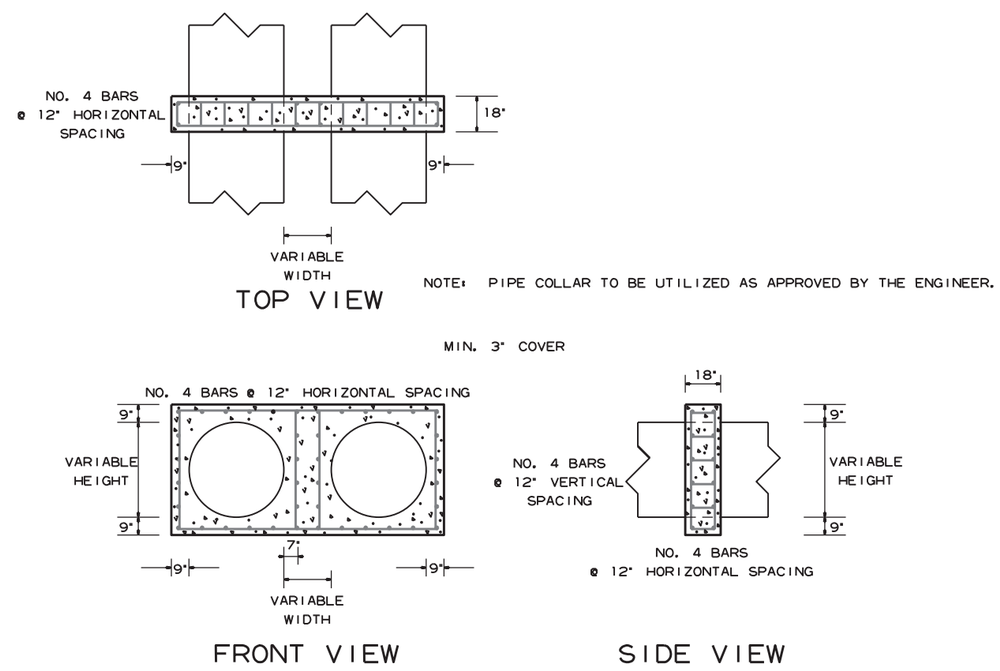

PIPE EXTENSION
REINFORCED CONCRETE COLLAR DETAIL

7/7/2020

R020629.DGN

SPECIAL DETAILS

DATE REVISED	DATE FILMED	DATE REVISED	DATE FILMED	FED.RD. DIST.NO.	STATE	FED.AID PROJ.NO.	SHEET NO.	TOTAL SHEETS
				6	ARK.			
				JOB NO.		020629	7	122

(2) SPECIAL DETAILS

STATE OF ARKANSAS
LICENSED PROFESSIONAL ENGINEER
No. 11425
TRINITY D. SMITH

Sep 18 2020 12:38 PM

DocuSign

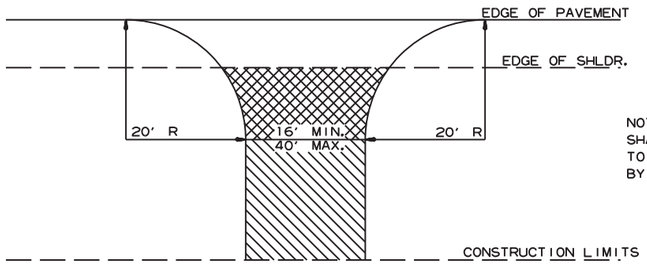

NOTE: TURNOUTS AND PRIVATE DRIVES SHALL BE MODIFIED WHERE NECESSARY TO MEET LOCAL CONDITIONS AS DIRECTED BY THE ENGINEER.

ASPHALT CONCRETE HOT MIX SURFACE COURSE (220 LBS. PER SQ. YD.)
AGGREGATE BASE COURSE (CLASS 7)
7" COMP. DEPTH IF ASPHALT DRIVE EXIST OR
6" CONCRETE IF CONCRETE DRIVE EXIST.

AGGREGATE BASE COURSE (CLASS 7)
9" COMP. DEPTH OR CONFORM
TO EXISTING DRIVEWAY

DETAIL FOR DRIVEWAY TURNOUTS (COLLECTORS)

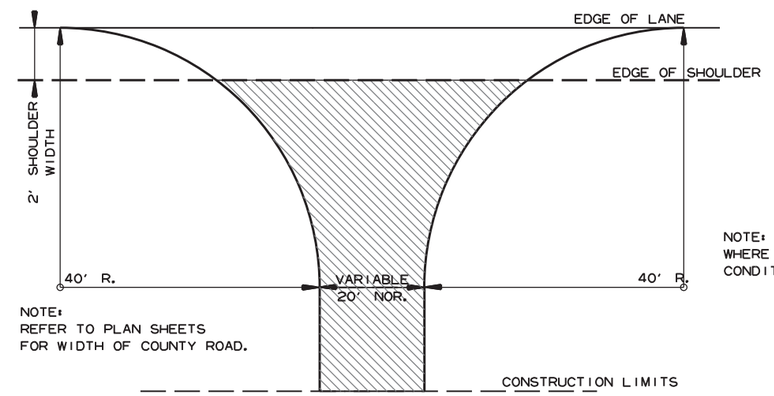

NOTE:
REFER TO PLAN SHEETS
FOR WIDTH OF COUNTY ROAD.

NOTE: TURNOUTS SHALL BE MODIFIED WHERE NECESSARY TO MEET LOCAL CONDITIONS AS DIRECTED BY THE ENGINEER.

ACHM SURFACE COURSE (1/2")
(220 LBS. PER SQ. YD.) AND
AGGREGATE BASE COURSE (CLASS 7)
7" COMP. DEPTH

DETAIL FOR COUNTY ROAD TURNOUTS OPEN SHOULDER SECTION

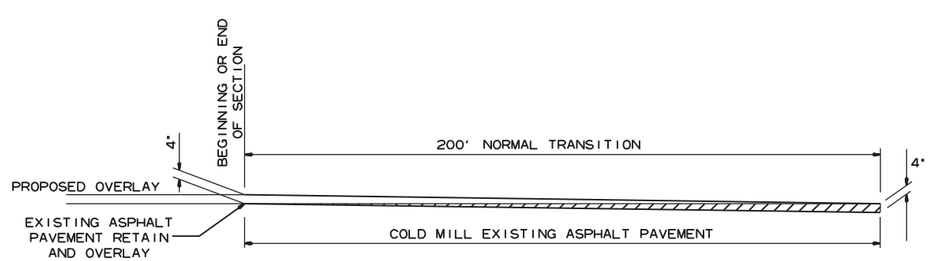

DETAIL FOR TRANSITIONS

7/7/2020

R020629.DGN

DATE REVISED	DATE FILMED	DATE REVISED	DATE FILMED	FED.RD. DIST.NO.	STATE	FED.AID PROJ.NO.	SHEET NO.	TOTAL SHEETS
				6	ARK.			
				JOB NO.		020629	8	122

(2) SPECIAL DETAILS

STATE OF ARKANSAS
LICENSED PROFESSIONAL ENGINEER
No. 11425
TRINITY D. SMITH

Sep 18 2020 12:39 PM

DocuSign

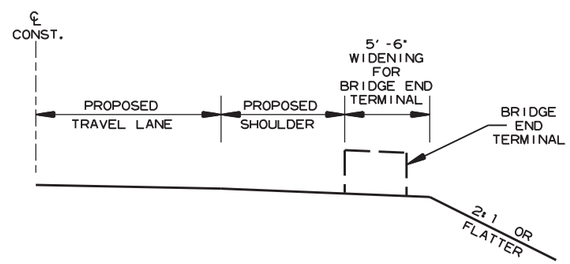

SECTION A-A

NOTE:
ELIMINATE OR MODIFY APPROACH CURB SECTION TO FIT BRIDGE END TERMINAL. NO PAYMENT SHALL BE MADE FOR ELIMINATING OR MODIFYING THIS CURB BUT SHALL BE CONSIDERED IN PAYMENT MADE FOR APPROACH GUTTERS OF THE TYPE SPECIFIED.

NOTE:
BRIDGE END TERMINAL SHALL CONFORM TO THE FOLLOWING:
-MAXIMUM LENGTH: 20'
-MAXIMUM HEIGHT: 2.75'
-DESIGN SPEED: 55 MPH

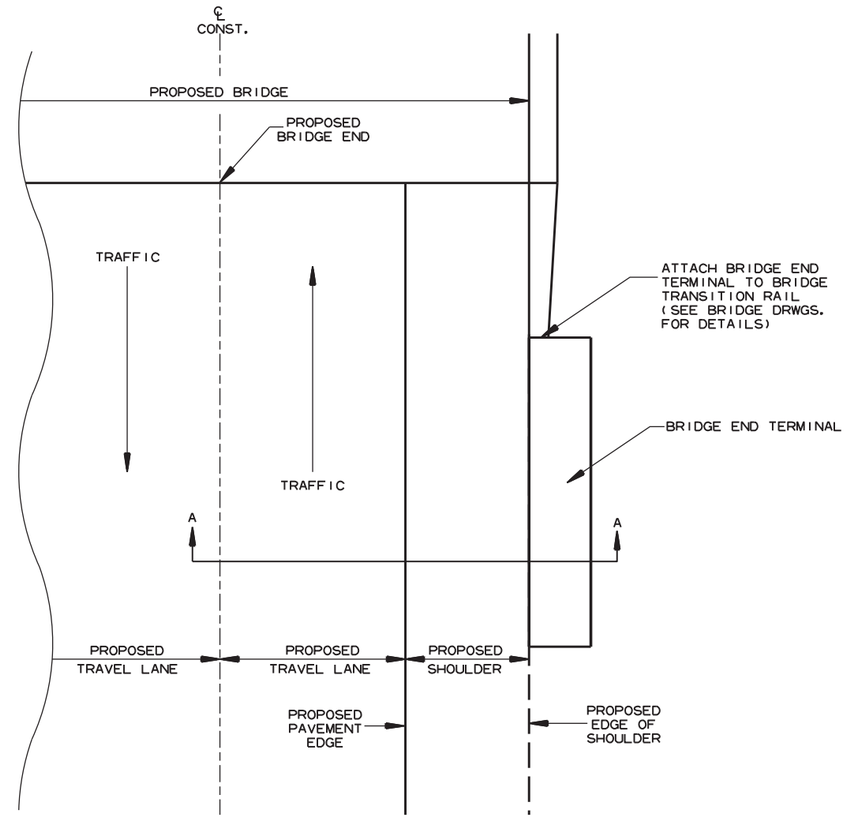

PLAN VIEW

BRIDGE END TERMINAL DETAILS

7/7/2020

R020629.DGN

SPECIAL DETAILS

DATE REVISED	DATE FILMED	DATE REVISED	DATE FILMED	FED.RD. DIST.NO.	STATE	FED.AID PROJ.NO.	SHEET NO.	TOTAL SHEETS
				6	ARK.			
				JOB NO.		020629	9	122

2 TEMPORARY EROSION CONTROL DETAILS

STATE OF ARKANSAS
LICENSED PROFESSIONAL ENGINEER
No. 11425
TRINITY D. SMITH

Sep 18 2020 12:39 PM

DocuSign

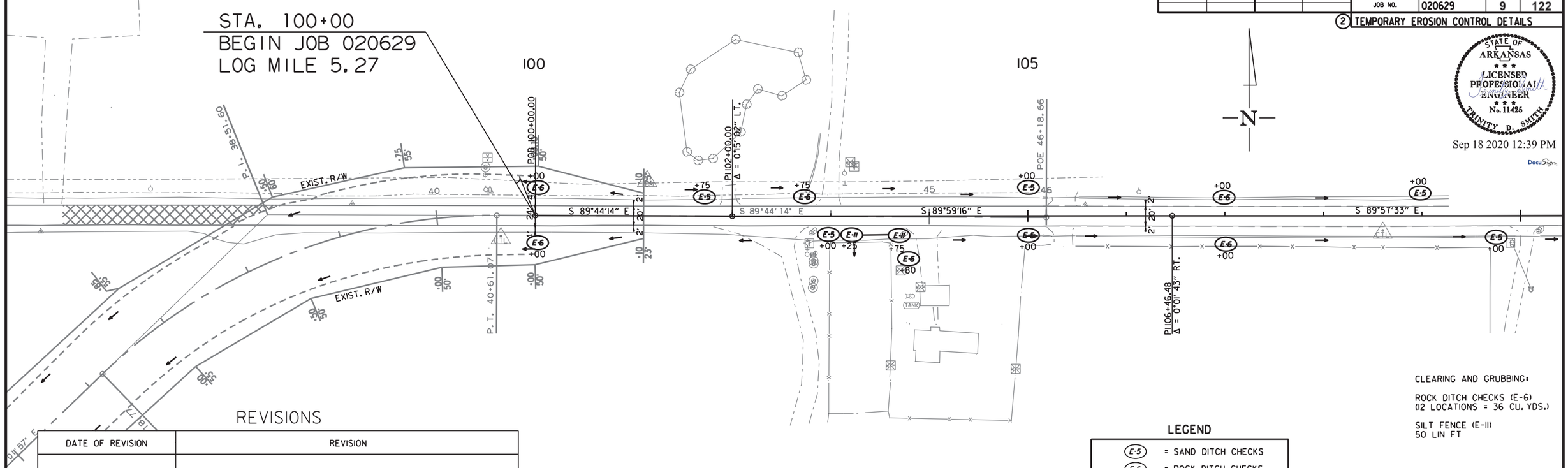

CLEARING AND GRUBBING:

ROCK DITCH CHECKS (E-6)
(12 LOCATIONS = 36 CU. YDS.)

SILT FENCE (E-11)
50 LIN FT

REVISIONS

DATE OF REVISION	REVISION

LEGEND

E-5	= SAND DITCH CHECKS
E-6	= ROCK DITCH CHECKS
E-11	= SILT FENCE

NOTE: PERIMETER CONTROLS SHALL BE PLACED AS CLEARING AND GRUBBING OPERATIONS ARE STARTED. RETAIN ALL EROSION CONTROL DEVICES UNTIL END OF CONSTRUCTION UNLESS OTHERWISE NOTED.

CLEARING AND GRUBBING:

ROCK DITCH CHECKS (E-6)
(14 LOCATIONS = 42 CU. YDS.)

SILT FENCE (E-11)
890 LIN FT

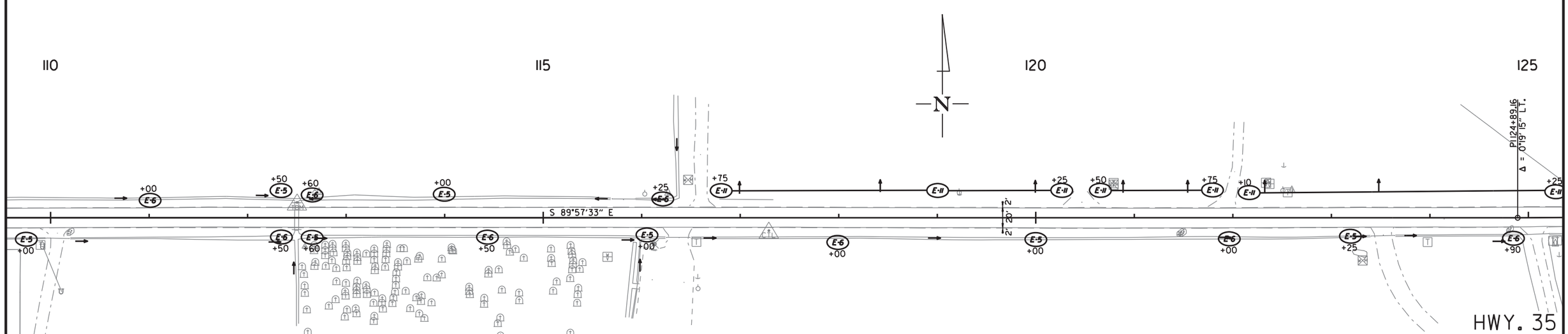

HWY. 35
CLEARING AND GRUBBING
TEMPORARY EROSION CONTROL DETAILS

6/17/2020

R020629.DGN

DATE REVISED	DATE FILMED	DATE REVISED	DATE FILMED	FED.RD. DIST.NO.	STATE	FED.AID PROJ.NO.	SHEET NO.	TOTAL SHEETS
				6	ARK.			
				JOB NO.		020629	10	122

2 TEMPORARY EROSION CONTROL DETAILS

STATE OF ARKANSAS
LICENSED PROFESSIONAL ENGINEER
No. 11425
TRINITY D. SMITH

Sep 18 2020 12:39 PM

DocuSign

CLEARING AND GRUBBING:

ROCK DITCH CHECKS (E-6)
(13 LOCATIONS = 39 CU. YDS.)

SILT FENCE (E-11)
925 LIN FT

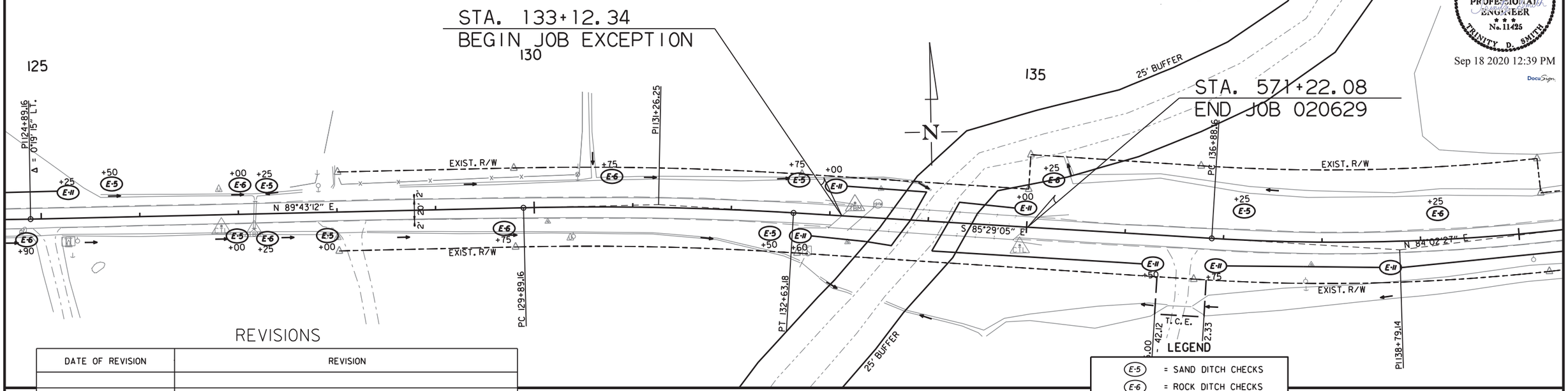

REVISIONS

DATE OF REVISION	REVISION

LEGEND

E-5	= SAND DITCH CHECKS
E-6	= ROCK DITCH CHECKS
E-11	= SILT FENCE

NOTE: PERIMETER CONTROLS SHALL BE PLACED AS CLEARING AND GRUBBING OPERATIONS ARE STARTED. RETAIN ALL EROSION CONTROL DEVICES UNTIL END OF CONSTRUCTION UNLESS OTHERWISE NOTED.

CLEARING AND GRUBBING:

ROCK DITCH CHECKS (E-6)
(9 LOCATIONS = 27 CU. YDS.)

SILT FENCE (E-11)
1350 LIN FT

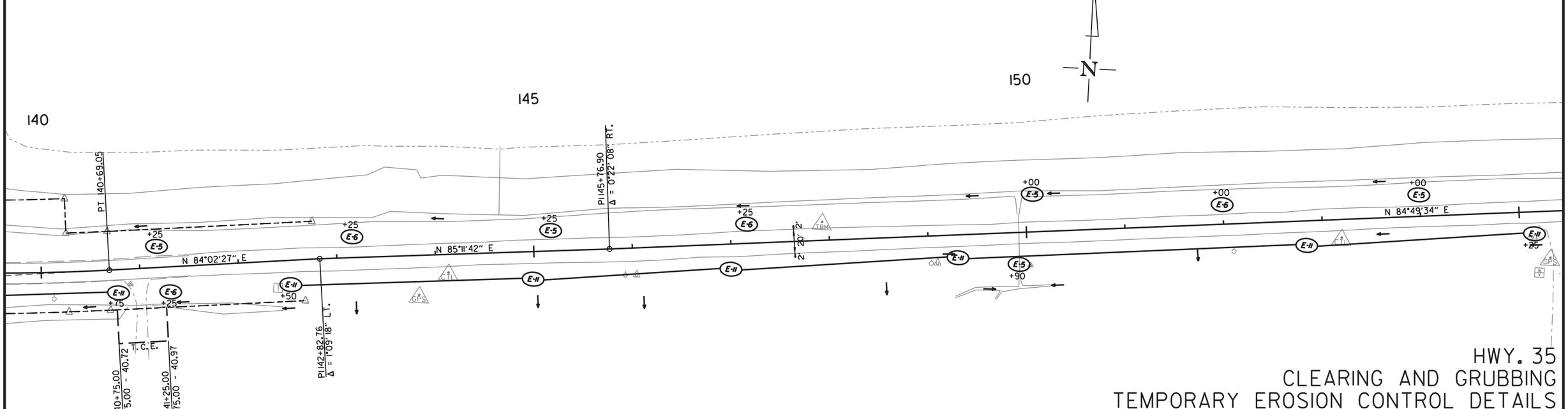

HWY. 35
CLEARING AND GRUBBING
TEMPORARY EROSION CONTROL DETAILS

6/17/2020

R020629.DGN

DATE REVISED	DATE FILMED	DATE REVISED	DATE FILMED	FED.RD. DIST.NO.	STATE	FED.AID PROJ.NO.	SHEET NO.	TOTAL SHEETS
				6	ARK.			
				JOB NO.		020629	11	122

(2) TEMPORARY EROSION CONTROL DETAILS

STATE OF ARKANSAS
LICENSED PROFESSIONAL ENGINEER
No. 11425
TRINITY D. SMITH

Sep 18 2020 12:39 PM

DocuSign

CLEARING AND GRUBBING:

ROCK DITCH CHECKS (E-6)
(17 LOCATIONS = 51 CU. YDS.)

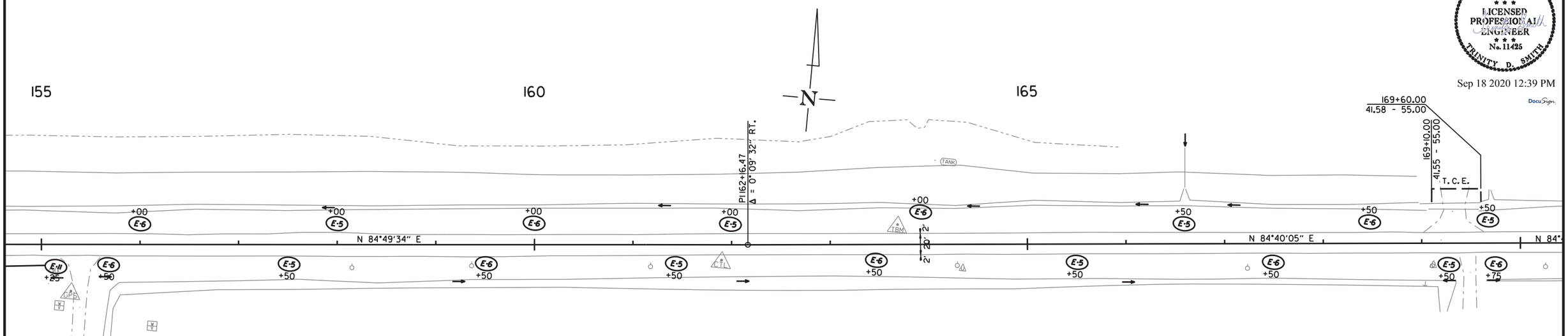

REVISIONS

DATE OF REVISION	REVISION

LEGEND

E-5	= SAND DITCH CHECKS
E-6	= ROCK DITCH CHECKS
E-11	= SILT FENCE

NOTE: PERIMETER CONTROLS SHALL BE PLACED AS CLEARING AND GRUBBING OPERATIONS ARE STARTED. RETAIN ALL EROSION CONTROL DEVICES UNTIL END OF CONSTRUCTION UNLESS OTHERWISE NOTED.

CLEARING AND GRUBBING:

ROCK DITCH CHECKS (E-6)
(17 LOCATIONS = 51 CU. YDS.)

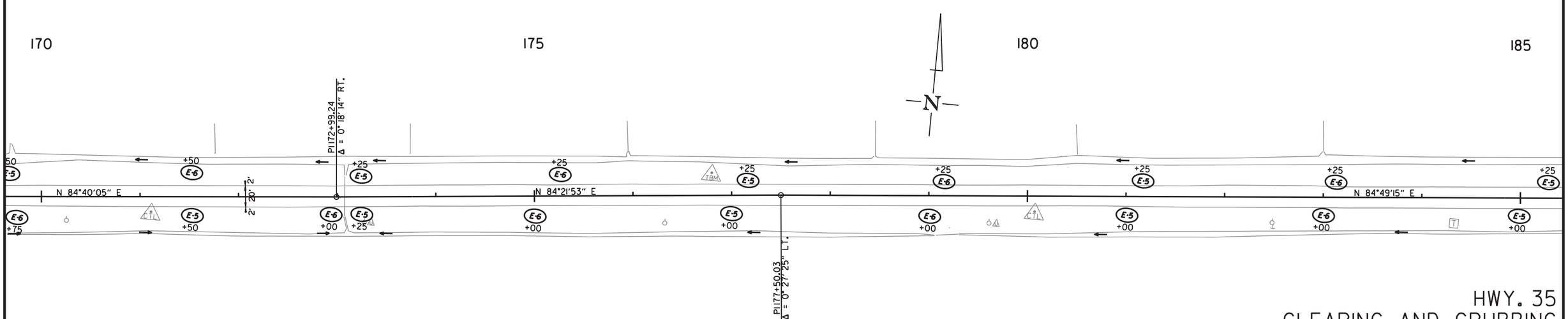

6/17/2020

R020629.DGN

HWY. 35
CLEARING AND GRUBBING
TEMPORARY EROSION CONTROL DETAILS

DATE REVISED	DATE FILMED	DATE REVISED	DATE FILMED	FED.RD. DIST.NO.	STATE	FED.AID PROJ.NO.	SHEET NO.	TOTAL SHEETS
				6	ARK.			
				JOB NO.		020629	12	122

(2) TEMPORARY EROSION CONTROL DETAILS

STATE OF ARKANSAS
LICENSED PROFESSIONAL ENGINEER
No. 11425
TRINITY D. SMITH

Sep 18 2020 12:40 PM

DocuSign

CLEARING AND GRUBBING:

ROCK DITCH CHECKS (E-6)
(16 LOCATIONS = 48 CU. YDS.)

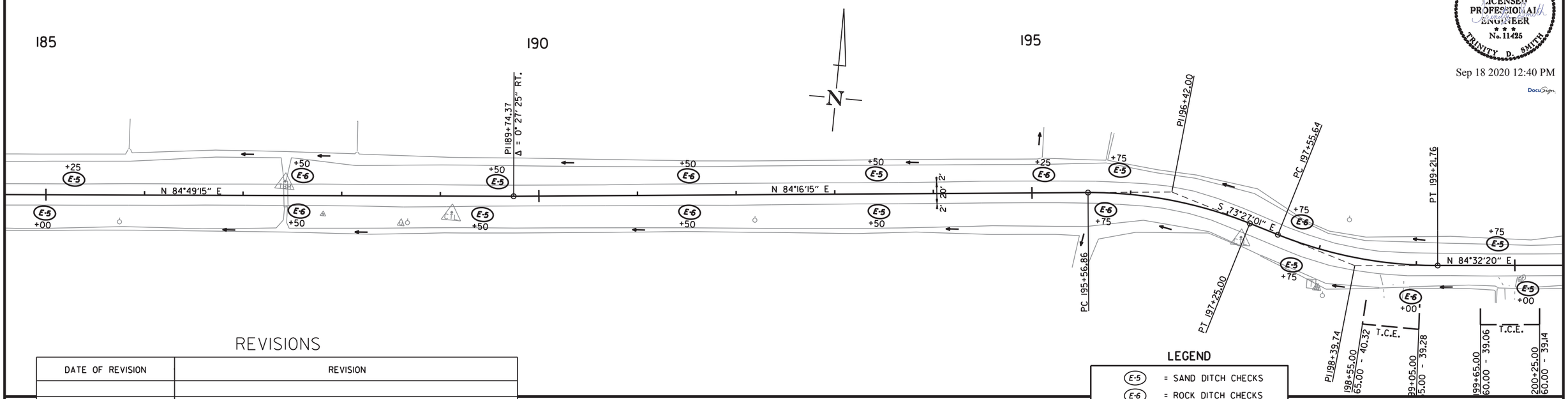

REVISIONS

DATE OF REVISION	REVISION

LEGEND

E-5	= SAND DITCH CHECKS
E-6	= ROCK DITCH CHECKS
E-11	= SILT FENCE

NOTE: PERIMETER CONTROLS SHALL BE PLACED AS CLEARING AND GRUBBING OPERATIONS ARE STARTED. RETAIN ALL EROSION CONTROL DEVICES UNTIL END OF CONSTRUCTION UNLESS OTHERWISE NOTED.

CLEARING AND GRUBBING:

ROCK DITCH CHECKS (E-6)
(9 LOCATIONS = 27 CU. YDS.)

SILT FENCE (E-11)
1250 LIN FT

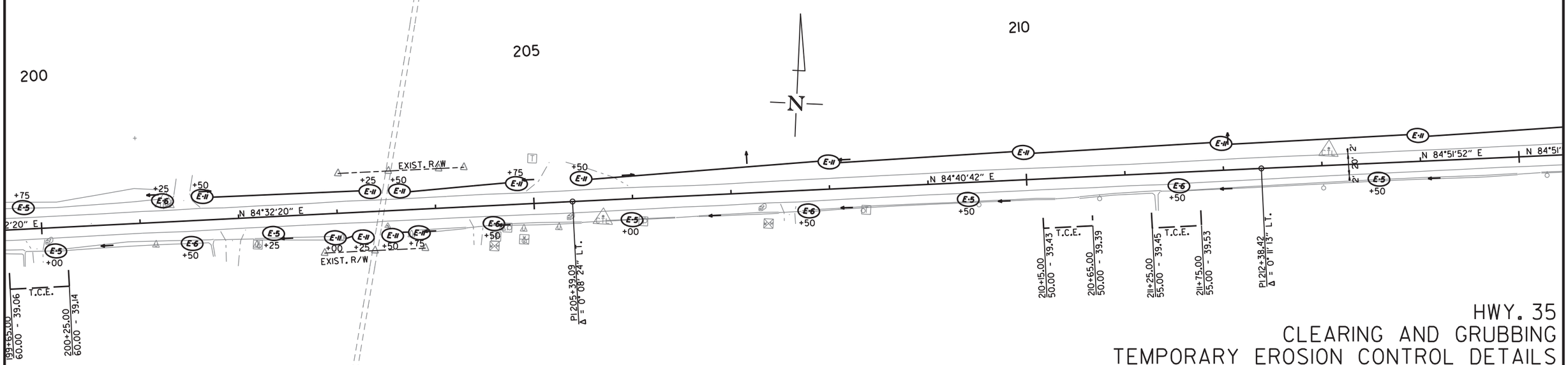

6/17/2020

R020629.DGN

HWY. 35
CLEARING AND GRUBBING
TEMPORARY EROSION CONTROL DETAILS

DATE REVISED	DATE FILMED	DATE REVISED	DATE FILMED	FED.RD. DIST.NO.	STATE	FED.AID PROJ.NO.	SHEET NO.	TOTAL SHEETS
				6	ARK.			
				JOB NO.		020629	13	122

(2) TEMPORARY EROSION CONTROL DETAILS

STATE OF ARKANSAS
LICENSED PROFESSIONAL ENGINEER
No. 11425
TRINITY D. SMITH

Sep 18 2020 12:40 PM

DocuSign

CLEARING AND GRUBBING:

ROCK DITCH CHECKS (E-6)
(18 LOCATIONS = 54 CU. YDS.)

SILT FENCE (E-11)
815 LIN FT

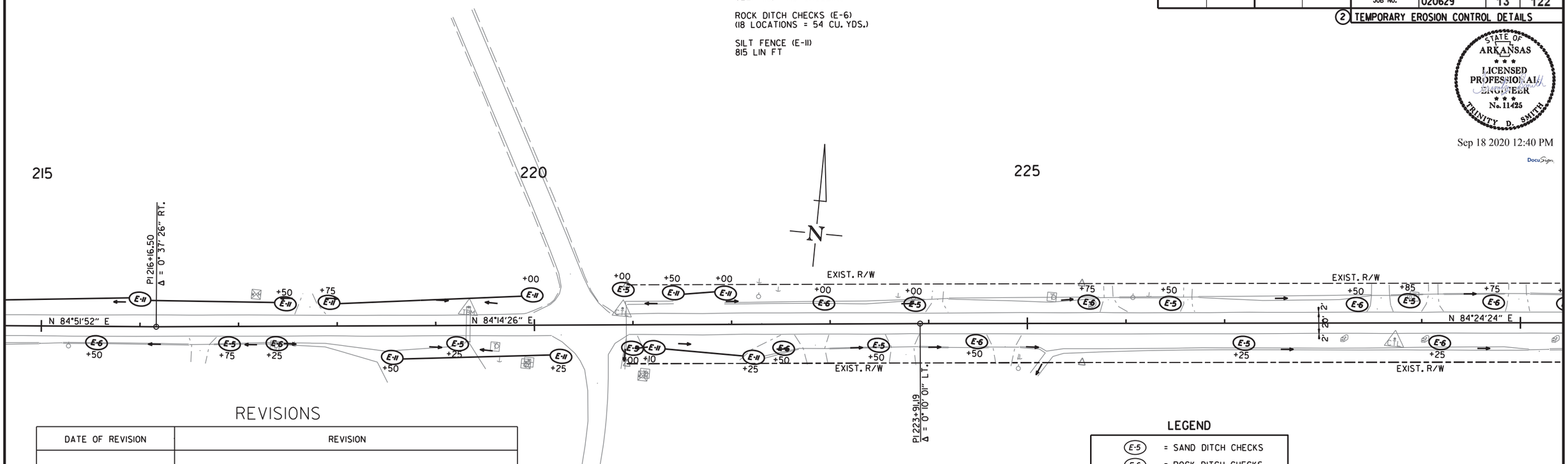

REVISIONS

DATE OF REVISION	REVISION

LEGEND

E-5	= SAND DITCH CHECKS
E-6	= ROCK DITCH CHECKS
E-11	= SILT FENCE

NOTE: PERIMETER CONTROLS SHALL BE PLACED AS CLEARING AND GRUBBING OPERATIONS ARE STARTED. RETAIN ALL EROSION CONTROL DEVICES UNTIL END OF CONSTRUCTION UNLESS OTHERWISE NOTED.

CLEARING AND GRUBBING:

ROCK DITCH CHECKS (E-6)
(18 LOCATIONS = 57 CU. YDS.)

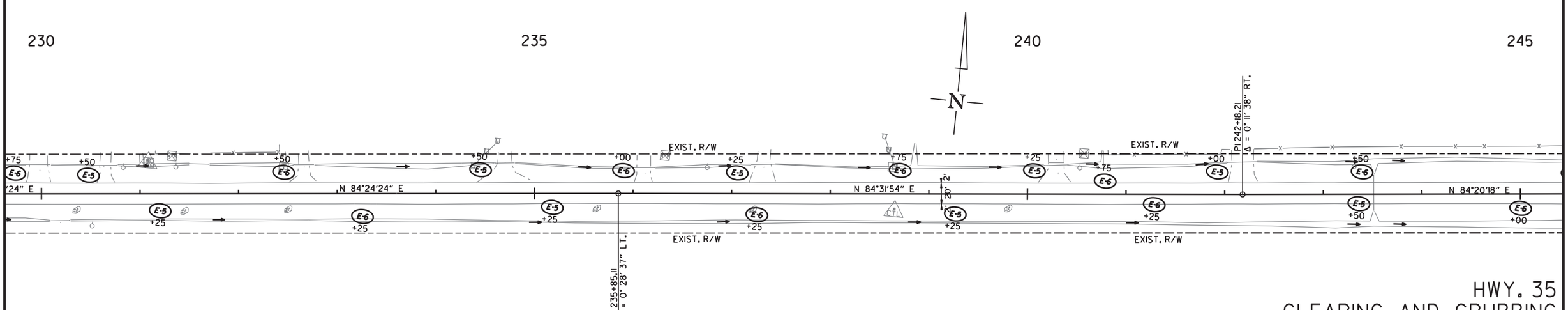

6/17/2020

R020629.DGN

HWY. 35
CLEARING AND GRUBBING
TEMPORARY EROSION CONTROL DETAILS

DATE REVISED	DATE FILMED	DATE REVISED	DATE FILMED	FED.RD. DIST.NO.	STATE	FED.AID PROJ.NO.	SHEET NO.	TOTAL SHEETS
				6	ARK.			
				JOB NO.		020629	14	122

(2) TEMPORARY EROSION CONTROL DETAILS

STATE OF ARKANSAS
LICENSED PROFESSIONAL ENGINEER
No. 11425
TRINITY D. SMITH

Sep 18 2020 12:40 PM

DocuSign

CLEARING AND GRUBBING:

ROCK DITCH CHECKS (E-6)
(12 LOCATIONS = 36 CU. YDS.)

SILT FENCE (E-11)
700 LIN FT

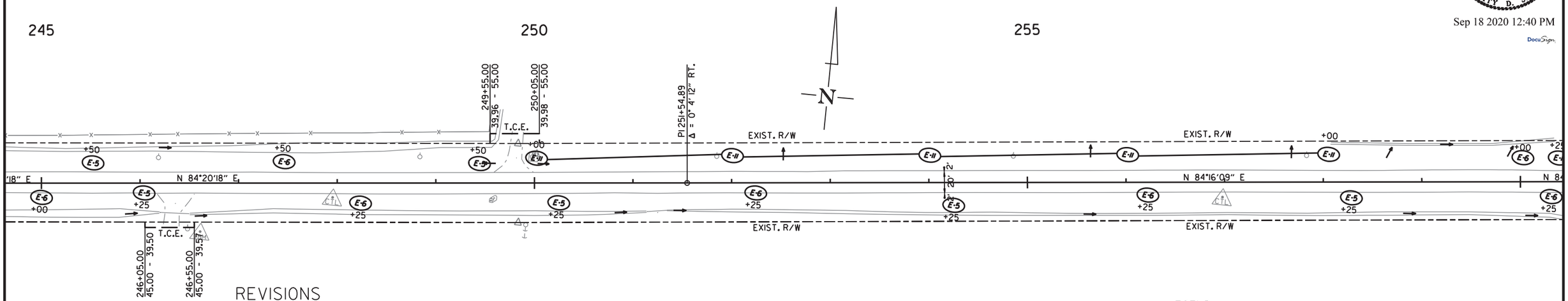

REVISIONS

DATE OF REVISION	REVISION

LEGEND

E-5	= SAND DITCH CHECKS
E-6	= ROCK DITCH CHECKS
E-11	= SILT FENCE

NOTE: PERIMETER CONTROLS SHALL BE PLACED AS CLEARING AND GRUBBING OPERATIONS ARE STARTED. RETAIN ALL EROSION CONTROL DEVICES UNTIL END OF CONSTRUCTION UNLESS OTHERWISE NOTED.

CLEARING AND GRUBBING:

ROCK DITCH CHECKS (E-6)
(5 LOCATIONS = 15 CU. YDS.)

SILT FENCE (E-11)
2100 LIN FT

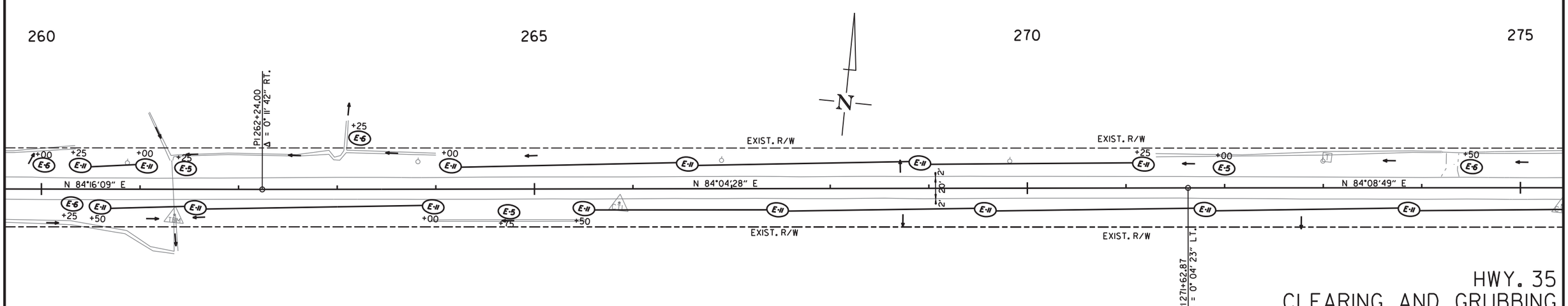

6/17/2020

R020629.DGN

HWY. 35
CLEARING AND GRUBBING
TEMPORARY EROSION CONTROL DETAILS

DATE REVISED	DATE FILMED	DATE REVISED	DATE FILMED	FED.RD. DIST.NO.	STATE	FED.AID PROJ.NO.	SHEET NO.	TOTAL SHEETS
				6	ARK.			
				JOB NO.		020629	15	122

(2) TEMPORARY EROSION CONTROL DETAILS

STATE OF ARKANSAS
LICENSED PROFESSIONAL ENGINEER
No. 11425
TRINITY D. SMITH

Sep 18 2020 12:40 PM

DocuSign

CLEARING AND GRUBBING:

ROCK DITCH CHECKS (E-6)
(11 LOCATIONS = 33 CU. YDS.)

SILT FENCE (E-11)
725 LIN FT

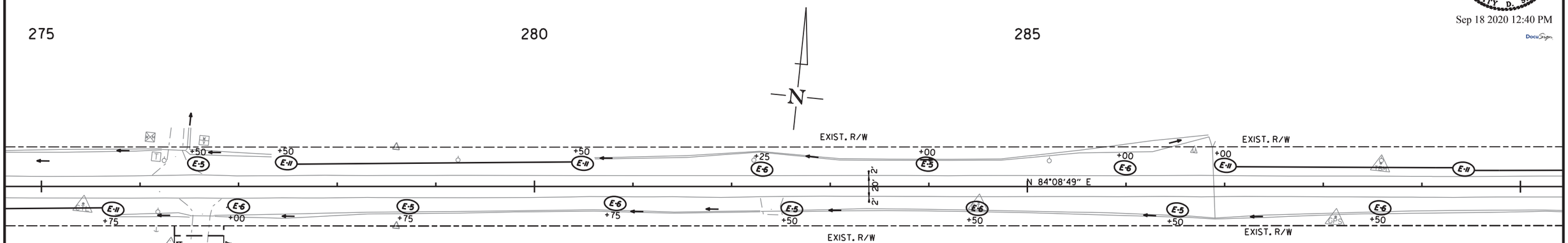

REVISIONS

DATE OF REVISION	REVISION

LEGEND

E-5	= SAND DITCH CHECKS
E-6	= ROCK DITCH CHECKS
E-11	= SILT FENCE

NOTE: PERIMETER CONTROLS SHALL BE PLACED AS CLEARING AND GRUBBING OPERATIONS ARE STARTED. RETAIN ALL EROSION CONTROL DEVICES UNTIL END OF CONSTRUCTION UNLESS OTHERWISE NOTED.

CLEARING AND GRUBBING:

ROCK DITCH CHECKS (E-6)
(12 LOCATIONS = 36 CU. YDS.)

SILT FENCE (E-11)
875 LIN FT

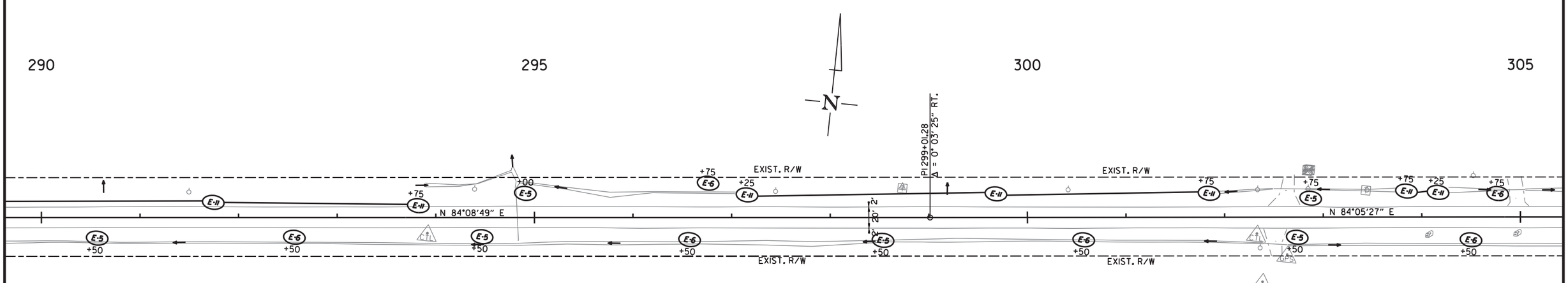

6/17/2020

R020629.DGN

HWY. 35
CLEARING AND GRUBBING
TEMPORARY EROSION CONTROL DETAILS

DATE REVISED	DATE FILMED	DATE REVISED	DATE FILMED	FED.RD. DIST.NO.	STATE	FED.AID PROJ.NO.	SHEET NO.	TOTAL SHEETS
				6	ARK.			
				JOB NO.		020629	16	122

2 TEMPORARY EROSION CONTROL DETAILS

STATE OF ARKANSAS
LICENSED PROFESSIONAL ENGINEER
No. 11425
TRINITY D. SMITH

Sep 18 2020 12:41 PM

DocuSign

CLEARING AND GRUBBING:

ROCK DITCH CHECKS (E-6)
(13 LOCATIONS = 39 CU. YDS.)

SILT FENCE (E-11)
435 LIN FT

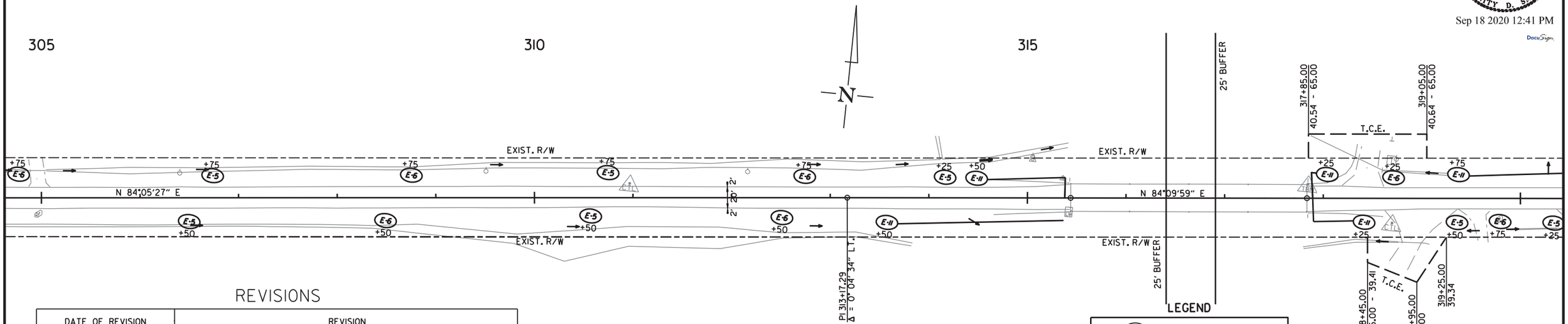

REVISIONS

DATE OF REVISION	REVISION

LEGEND

E-5	= SAND DITCH CHECKS
E-6	= ROCK DITCH CHECKS
E-11	= SILT FENCE

NOTE: PERIMETER CONTROLS SHALL BE PLACED AS CLEARING AND GRUBBING OPERATIONS ARE STARTED. RETAIN ALL EROSION CONTROL DEVICES UNTIL END OF CONSTRUCTION UNLESS OTHERWISE NOTED.

CLEARING AND GRUBBING:

ROCK DITCH CHECKS (E-6)
(14 LOCATIONS = 42 CU. YDS.)

SILT FENCE (E-11)
275 LIN FT

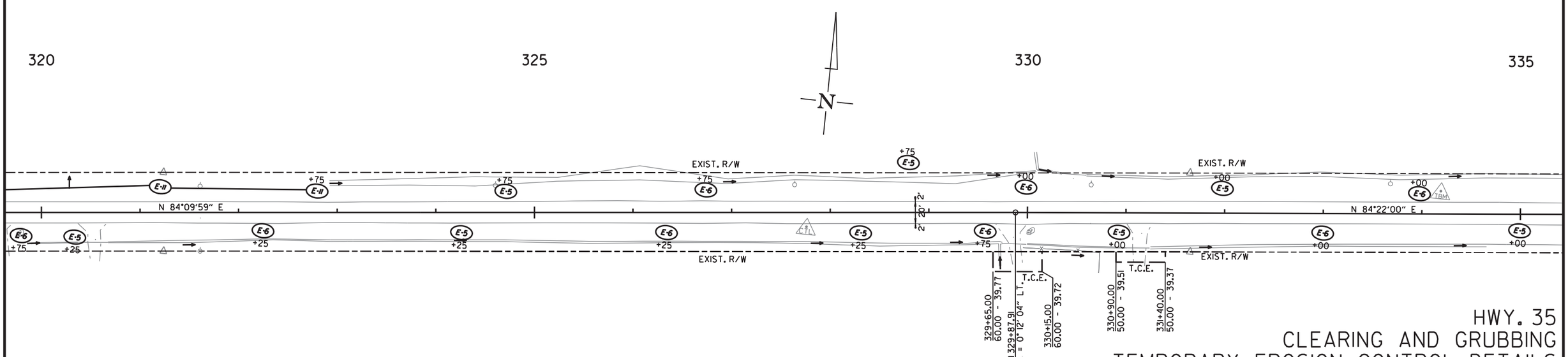

6/17/2020

R020629.DGN

HWY. 35
CLEARING AND GRUBBING
TEMPORARY EROSION CONTROL DETAILS

DATE REVISED	DATE FILMED	DATE REVISED	DATE FILMED	FED.RD. DIST.NO.	STATE	FED.AID PROJ.NO.	SHEET NO.	TOTAL SHEETS
				6	ARK.			
				JOB NO.		020629	17	122

2 TEMPORARY EROSION CONTROL DETAILS

STATE OF ARKANSAS
LICENSED PROFESSIONAL ENGINEER
No. 11425
TRINITY D. SMITH

Sep 18 2020 12:41 PM

DocuSign

CLEARING AND GRUBBING:

ROCK DITCH CHECKS (E-6)
(17 LOCATIONS = 51 CU. YDS.)

SILT FENCE (E-11)
50 LIN FT

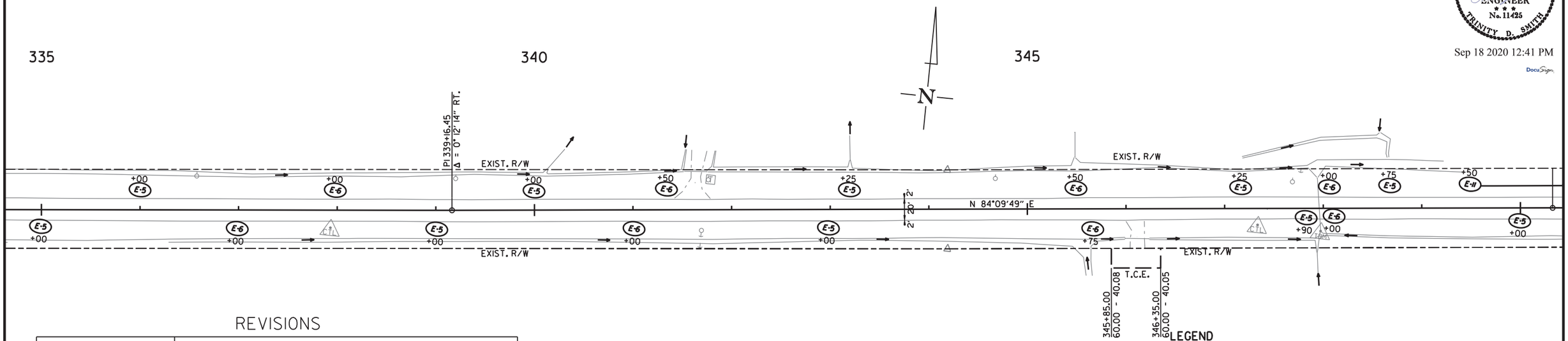

REVISIONS

DATE OF REVISION	REVISION

LEGEND

E-5	= SAND DITCH CHECKS
E-6	= ROCK DITCH CHECKS
E-11	= SILT FENCE

NOTE: PERIMETER CONTROLS SHALL BE PLACED AS CLEARING AND GRUBBING OPERATIONS ARE STARTED. RETAIN ALL EROSION CONTROL DEVICES UNTIL END OF CONSTRUCTION UNLESS OTHERWISE NOTED.

CLEARING AND GRUBBING:

ROCK DITCH CHECKS (E-6)
(8 LOCATIONS = 24 CU. YDS.)

SILT FENCE (E-11)
1225 LIN FT

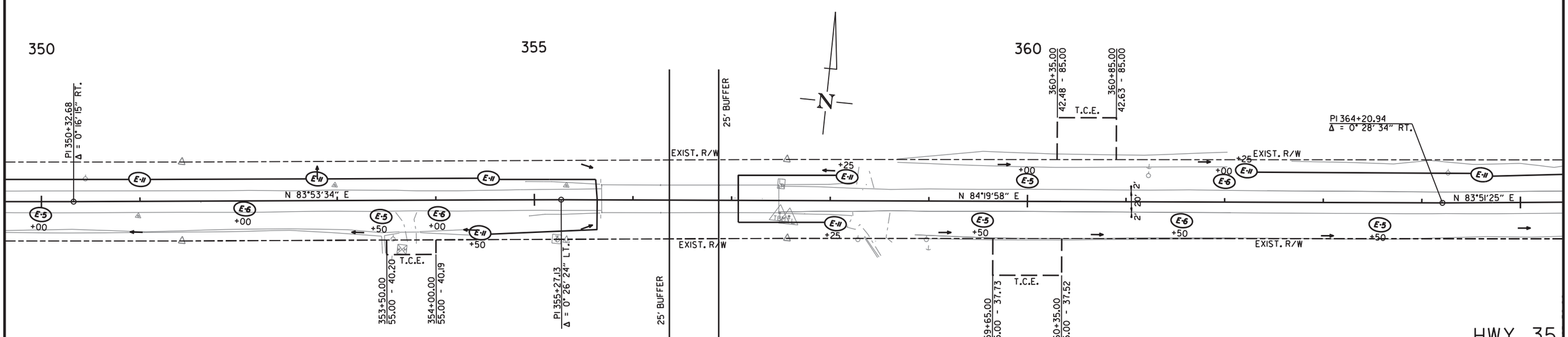

6/17/2020

R020629.DGN

HWY. 35
CLEARING AND GRUBBING
TEMPORARY EROSION CONTROL DETAILS

DATE REVISED	DATE FILMED	DATE REVISED	DATE FILMED

FED.RD. DIST.NO.	STATE	FED.AID PROJ.NO.	SHEET NO.	TOTAL SHEETS
6	ARK.			
JOB NO.		020629	18	122

(2) TEMPORARY EROSION CONTROL DETAILS

STATE OF ARKANSAS
LICENSED PROFESSIONAL ENGINEER
No. 11425
TRINITY D. SMITH

Sep 18 2020 12:41 PM

DocuSign

CLEARING AND GRUBBING:

ROCK DITCH CHECKS (E-6)
(12 LOCATIONS = 36 CU. YDS.)

SILT FENCE (E-11)
50 LIN FT

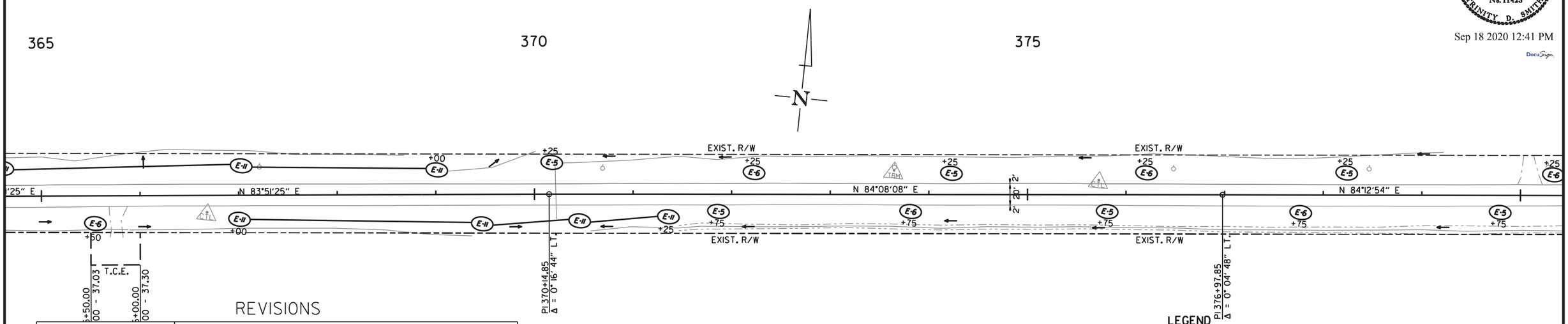

REVISIONS

DATE OF REVISION	REVISION

LEGEND

E-5	= SAND DITCH CHECKS
E-6	= ROCK DITCH CHECKS
E-11	= SILT FENCE

NOTE: PERIMETER CONTROLS SHALL BE PLACED AS CLEARING AND GRUBBING OPERATIONS ARE STARTED. RETAIN ALL EROSION CONTROL DEVICES UNTIL END OF CONSTRUCTION UNLESS OTHERWISE NOTED.

CLEARING AND GRUBBING:

ROCK DITCH CHECKS (E-6)
(10 LOCATIONS = 30 CU. YDS.)

SILT FENCE (E-11)
1050 LIN FT

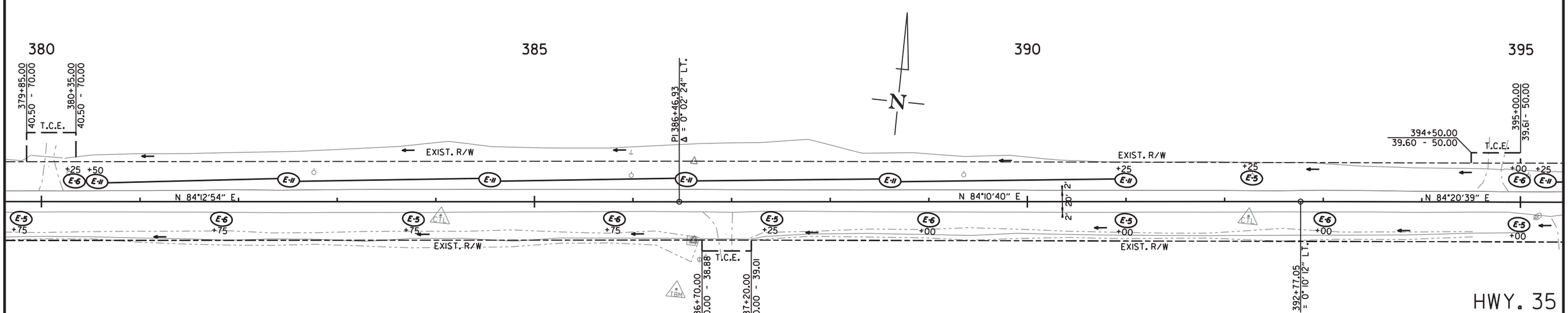

HWY. 35
CLEARING AND GRUBBING
TEMPORARY EROSION CONTROL DETAILS

6/17/2020

R020629.DGN

DATE REVISED	DATE FILMED	DATE REVISED	DATE FILMED	FED.RD. DIST.NO.	STATE	FED.AID PROJ.NO.	SHEET NO.	TOTAL SHEETS
				6	ARK.			
				JOB NO.		020629	19	122

(2) TEMPORARY EROSION CONTROL DETAILS

STATE OF ARKANSAS
LICENSED PROFESSIONAL ENGINEER
No. 11425
TRINITY D. SMITH

Sep 18 2020 12:41 PM

DocuSign

CLEARING AND GRUBBING:

ROCK DITCH CHECKS (E-6)
(8 LOCATIONS = 24 CU. YDS.)

SILT FENCE (E-11)
1675 LIN FT

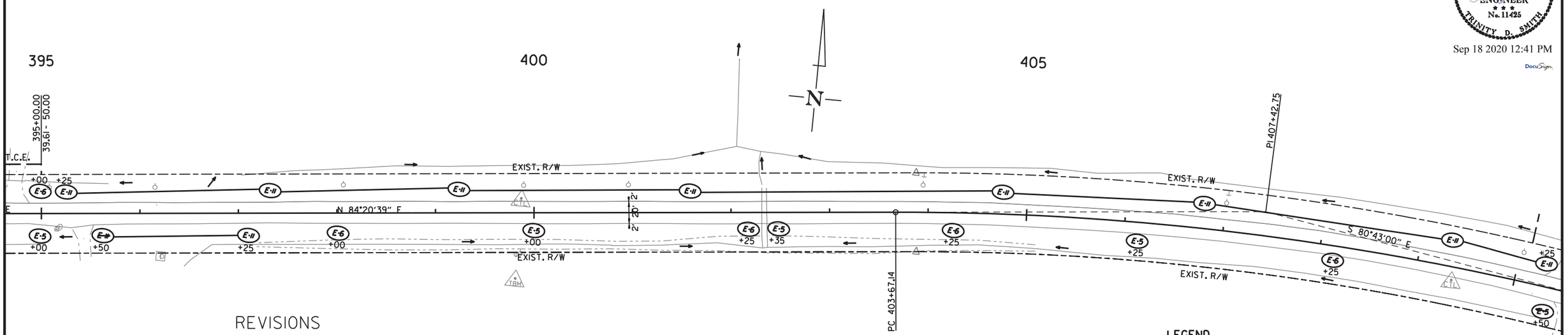

REVISIONS

DATE OF REVISION	REVISION

LEGEND

E-5	= SAND DITCH CHECKS
E-6	= ROCK DITCH CHECKS
E-11	= SILT FENCE

NOTE: PERIMETER CONTROLS SHALL BE PLACED AS CLEARING AND GRUBBING OPERATIONS ARE STARTED. RETAIN ALL EROSION CONTROL DEVICES UNTIL END OF CONSTRUCTION UNLESS OTHERWISE NOTED.

CLEARING AND GRUBBING:

ROCK DITCH CHECKS (E-6)
(9 LOCATIONS = 27 CU. YDS.)

SILT FENCE (E-11)
1275 LIN FT

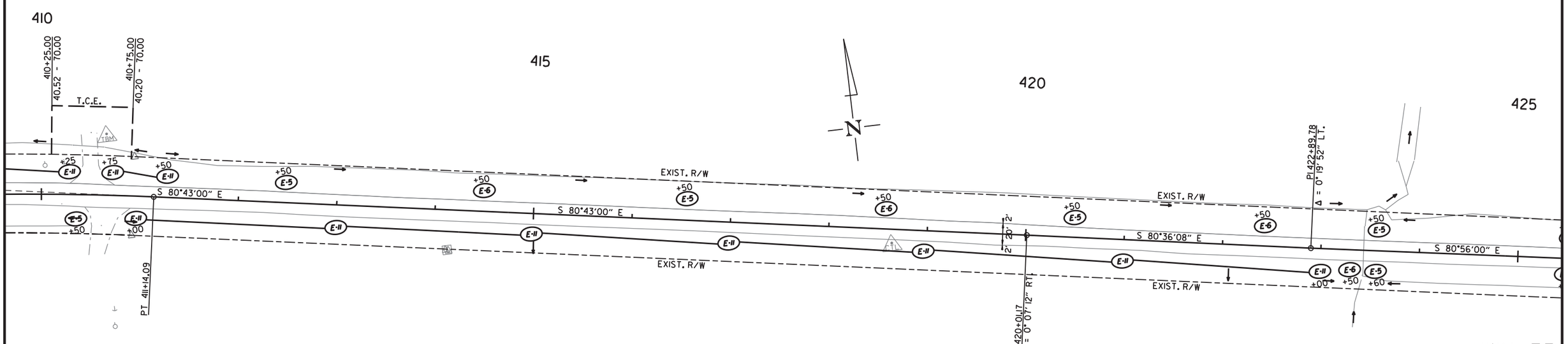

6/17/2020

R020629.DGN

HWY. 35
CLEARING AND GRUBBING
TEMPORARY EROSION CONTROL DETAILS

DATE REVISED	DATE FILMED	DATE REVISED	DATE FILMED	FED.RD. DIST.NO.	STATE	FED.AID PROJ.NO.	SHEET NO.	TOTAL SHEETS
				6	ARK.			
				JOB NO.		020629	20	122

(2) TEMPORARY EROSION CONTROL DETAILS

STATE OF ARKANSAS
LICENSED PROFESSIONAL ENGINEER
No. 11425
TRINITY D. SMITH

Sep 18 2020 12:42 PM

DocuSign

CLEARING AND GRUBBING:

ROCK DITCH CHECKS (E-6)
(16 LOCATIONS = 48 CU. YDS.)

SILT FENCE (E-11)
75 LIN FT

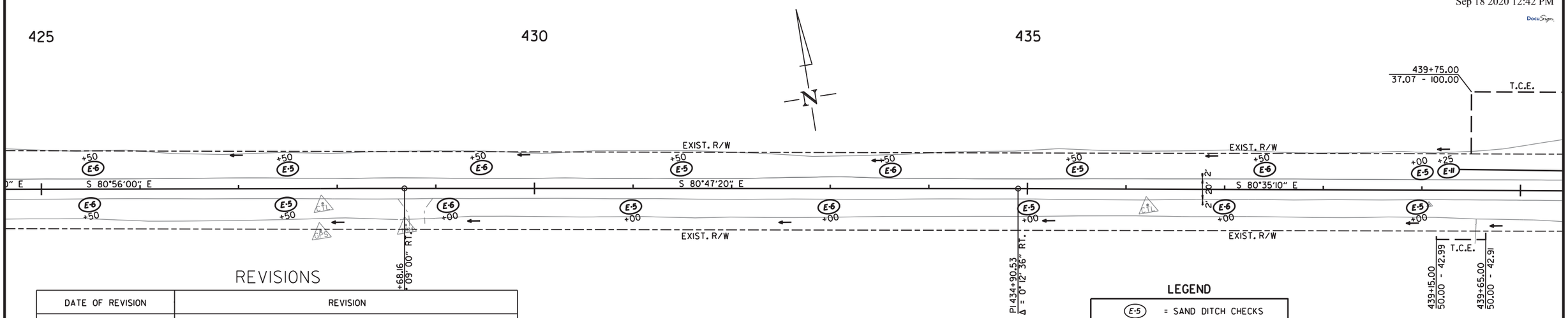

REVISIONS

DATE OF REVISION	REVISION

LEGEND

E-5	= SAND DITCH CHECKS
E-6	= ROCK DITCH CHECKS
E-11	= SILT FENCE

NOTE: PERIMETER CONTROLS SHALL BE PLACED AS CLEARING AND GRUBBING OPERATIONS ARE STARTED. RETAIN ALL EROSION CONTROL DEVICES UNTIL END OF CONSTRUCTION UNLESS OTHERWISE NOTED.

CLEARING AND GRUBBING:

ROCK DITCH CHECKS (E-6)
(4 LOCATIONS = 12 CU. YDS.)

SILT FENCE (E-11)
1900 LIN FT

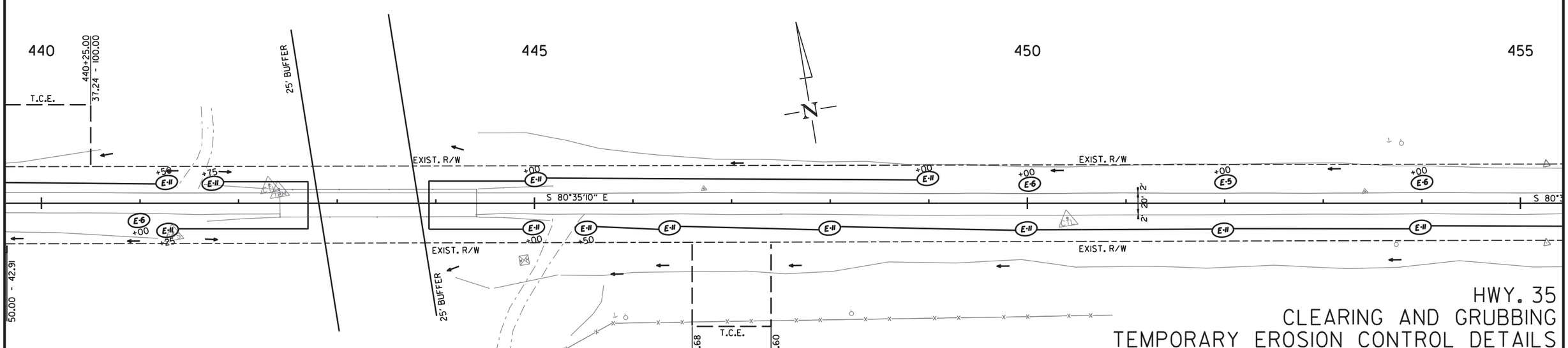

6/17/2020

R020629.DGN

HWY. 35
CLEARING AND GRUBBING
TEMPORARY EROSION CONTROL DETAILS

DATE REVISED	DATE FILMED	DATE REVISED	DATE FILMED	FED.RD. DIST.NO.	STATE	FED.AID PROJ.NO.	SHEET NO.	TOTAL SHEETS
				6	ARK.			
				JOB NO.		020629	21	122

(2) TEMPORARY EROSION CONTROL DETAILS

STATE OF ARKANSAS
LICENSED PROFESSIONAL ENGINEER
No. 11425
TRINITY D. SMITH

Sep 18 2020 12:42 PM

DocuSign

CLEARING AND GRUBBING:

ROCK DITCH CHECKS (E-6)
(12 LOCATIONS = 36 CU. YDS.)

SILT FENCE (E-11)
775 LIN FT

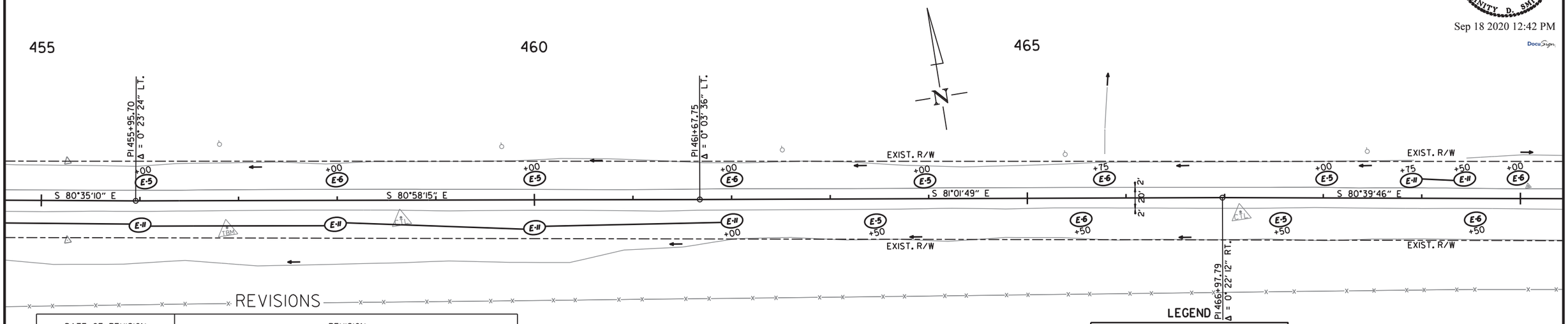

REVISIONS

DATE OF REVISION	REVISION

LEGEND

E-5	= SAND DITCH CHECKS
E-6	= ROCK DITCH CHECKS
E-11	= SILT FENCE

NOTE: PERIMETER CONTROLS SHALL BE PLACED AS CLEARING AND GRUBBING OPERATIONS ARE STARTED. RETAIN ALL EROSION CONTROL DEVICES UNTIL END OF CONSTRUCTION UNLESS OTHERWISE NOTED.

CLEARING AND GRUBBING:

ROCK DITCH CHECKS (E-6)
(16 LOCATIONS = 48 CU. YDS.)

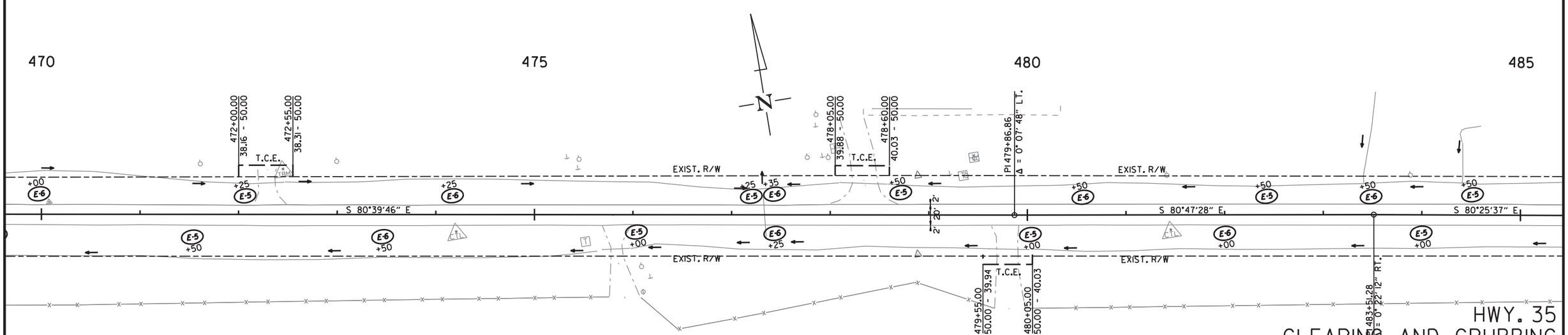

6/17/2020

R020629.DGN

HWY. 35
CLEARING AND GRUBBING
TEMPORARY EROSION CONTROL DETAILS

DATE REVISED	DATE FILMED	DATE REVISED	DATE FILMED	FED.RD. DIST.NO.	STATE	FED.AID PROJ.NO.	SHEET NO.	TOTAL SHEETS
				6	ARK.			
				JOB NO.		020629	22	122

(2) TEMPORARY EROSION CONTROL DETAILS

STATE OF ARKANSAS
LICENSED PROFESSIONAL ENGINEER
No. 11425
TRINITY D. SMITH

Sep 18 2020 12:42 PM

DocuSign

CLEARING AND GRUBBING:

ROCK DITCH CHECKS (E-6)
(8 LOCATIONS = 24 CU. YDS.)

SILT FENCE (E-11)
1325 LIN FT

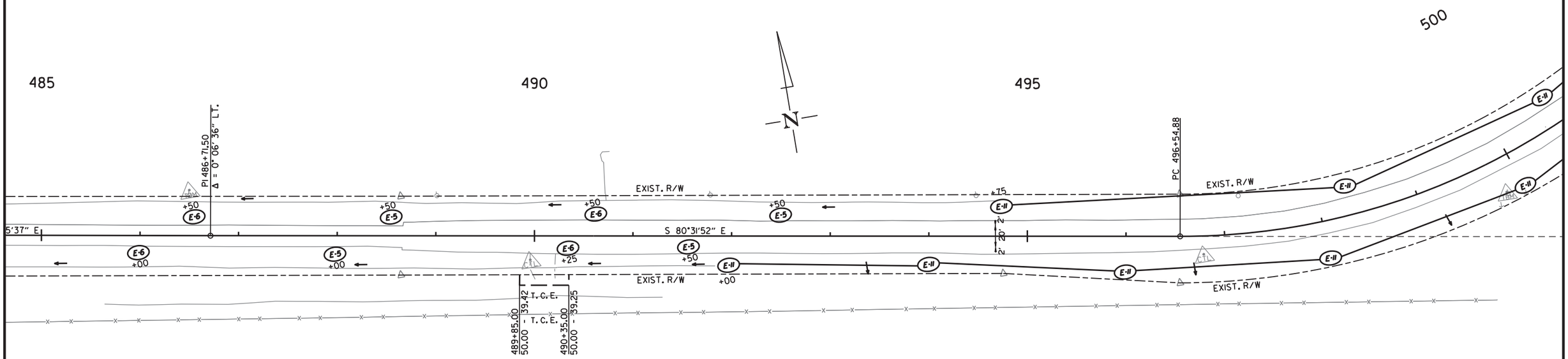

LEGEND

E-5	= SAND DITCH CHECKS
E-6	= ROCK DITCH CHECKS
E-11	= SILT FENCE

NOTE: PERIMETER CONTROLS SHALL BE PLACED AS CLEARING AND GRUBBING OPERATIONS ARE STARTED.
RETAIN ALL EROSION CONTROL DEVICES UNTIL END OF CONSTRUCTION UNLESS OTHERWISE NOTED.

REVISIONS

DATE OF REVISION	REVISION

HWY. 35
CLEARING AND GRUBBING
TEMPORARY EROSION CONTROL DETAILS

6/17/2020

R020629.DGN

DATE REVISED	DATE FILMED	DATE REVISED	DATE FILMED	FED.RD. DIST.NO.	STATE	FED.AID PROJ.NO.	SHEET NO.	TOTAL SHEETS
				6	ARK.			
				JOB NO.		020629	23	122

(2) TEMPORARY EROSION CONTROL DETAILS

STATE OF ARKANSAS
LICENSED PROFESSIONAL ENGINEER
No. 11425
TRINITY D. SMITH

Sep 18 2020 12:42 PM

DocuSign

CLEARING AND GRUBBING:

ROCK DITCH CHECKS (E-6)
(7 LOCATIONS = 21 CU. YDS.)

SILT FENCE (E-11)
1800 LIN FT

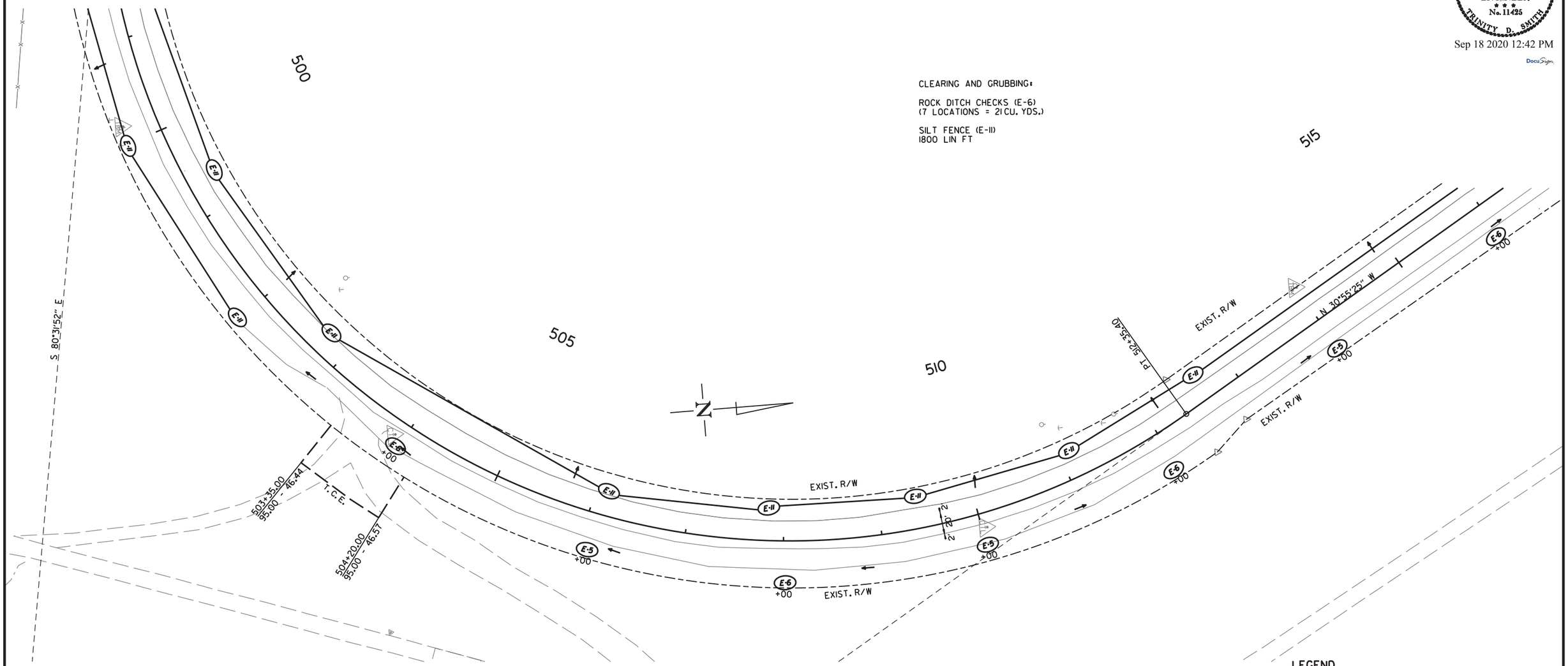

LEGEND

E-5	= SAND DITCH CHECKS
E-6	= ROCK DITCH CHECKS
E-11	= SILT FENCE

NOTE: PERIMETER CONTROLS SHALL BE PLACED AS CLEARING AND GRUBBING OPERATIONS ARE STARTED.
RETAIN ALL EROSION CONTROL DEVICES UNTIL END OF CONSTRUCTION UNLESS OTHERWISE NOTED.

REVISIONS

DATE OF REVISION	REVISION

HWY. 35
CLEARING AND GRUBBING
TEMPORARY EROSION CONTROL DETAILS

6/17/2020

R020629.DGN

DATE REVISED	DATE FILMED	DATE REVISED	DATE FILMED	FED.RD. DIST.NO.	STATE	FED.AID PROJ.NO.	SHEET NO.	TOTAL SHEETS
				6	ARK.			
				JOB NO.		020629	24	122

(2) TEMPORARY EROSION CONTROL DETAILS

STATE OF ARKANSAS
LICENSED PROFESSIONAL ENGINEER
No. 11425
TRINITY D. SMITH

Sep 18 2020 12:43 PM

DocuSign

CLEARING AND GRUBBING:

ROCK DITCH CHECKS (E-6)
(8 LOCATIONS = 24 CU. YDS.)

SILT FENCE (E-11)
1400 LIN FT

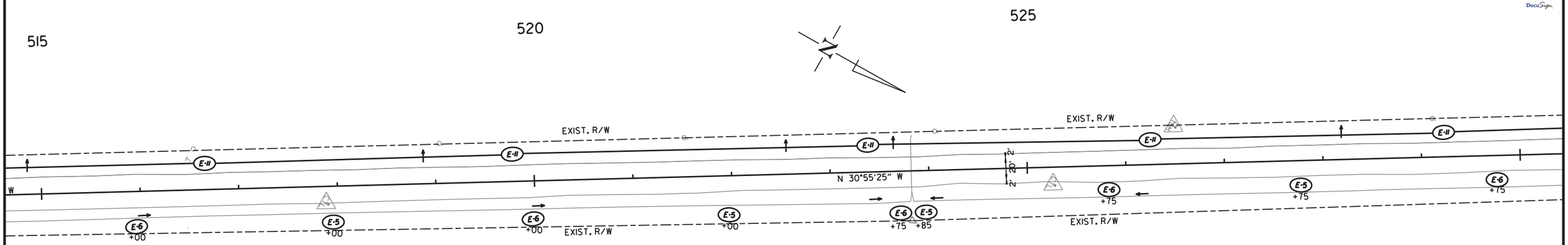

REVISIONS

DATE OF REVISION	REVISION

LEGEND

E-5	= SAND DITCH CHECKS
E-6	= ROCK DITCH CHECKS
E-11	= SILT FENCE

NOTE: PERIMETER CONTROLS SHALL BE PLACED AS CLEARING AND GRUBBING OPERATIONS ARE STARTED. RETAIN ALL EROSION CONTROL DEVICES UNTIL END OF CONSTRUCTION UNLESS OTHERWISE NOTED.

CLEARING AND GRUBBING:

ROCK DITCH CHECKS (E-6)
(7 LOCATIONS = 21 CU. YDS.)

SILT FENCE (E-11)
1500 LIN FT

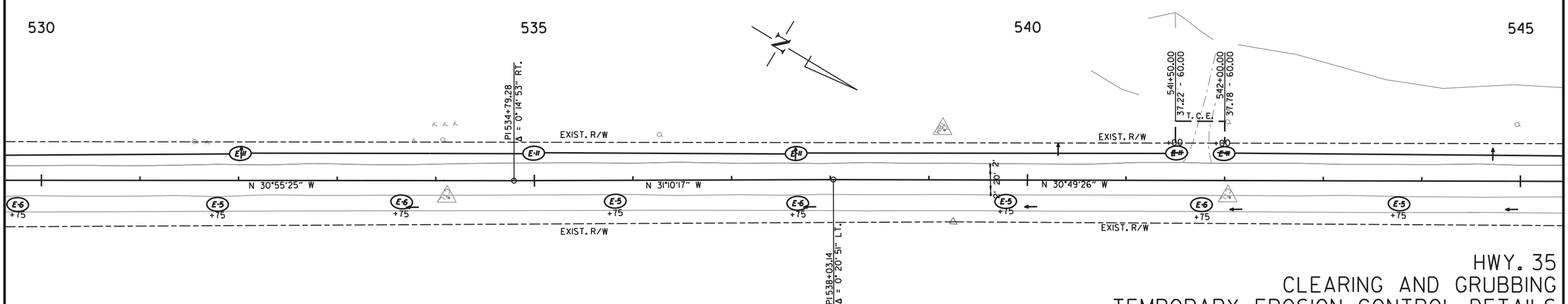

6/17/2020

R020629.DGN

HWY. 35
CLEARING AND GRUBBING
TEMPORARY EROSION CONTROL DETAILS

DATE REVISED	DATE FILMED	DATE REVISED	DATE FILMED	FED.RD. DIST.NO.	STATE	FED.AID PROJ.NO.	SHEET NO.	TOTAL SHEETS
				6	ARK.			
				JOB NO.		020629	25	122

(2) TEMPORARY EROSION CONTROL DETAILS

STATE OF ARKANSAS
LICENSED PROFESSIONAL ENGINEER
No. 11425
TRINITY D. SMITH

Sep 18 2020 12:43 PM

DocuSign

CLEARING AND GRUBBING:

ROCK DITCH CHECKS (E-6)
(9 LOCATIONS = 27 CU. YDS.)

SILT FENCE (E-11)
1500 LIN FT

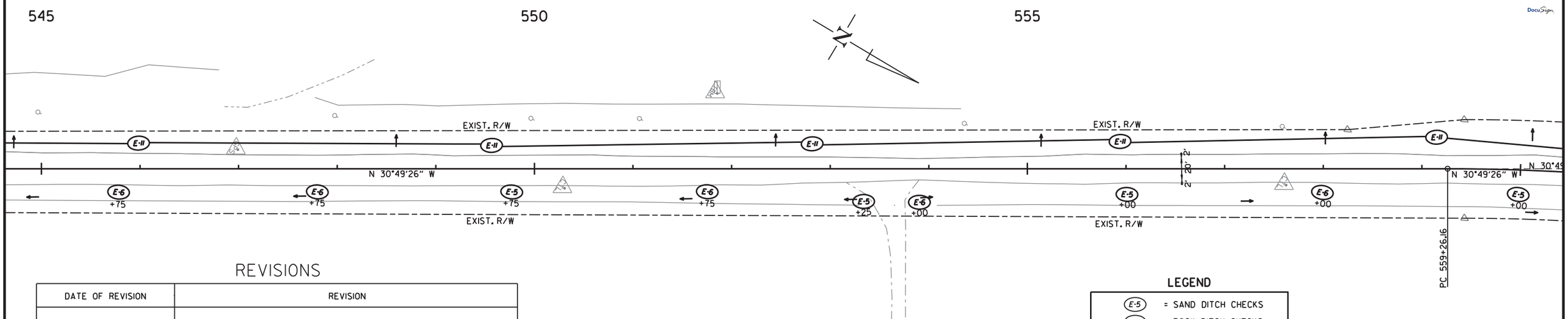

REVISIONS

DATE OF REVISION	REVISION

LEGEND

E-5	= SAND DITCH CHECKS
E-6	= ROCK DITCH CHECKS
E-11	= SILT FENCE

NOTE: PERIMETER CONTROLS SHALL BE PLACED AS CLEARING AND GRUBBING OPERATIONS ARE STARTED. RETAIN ALL EROSION CONTROL DEVICES UNTIL END OF CONSTRUCTION UNLESS OTHERWISE NOTED.

CLEARING AND GRUBBING:

ROCK DITCH CHECKS (E-6)
(6 LOCATIONS = 18 CU. YDS.)

SILT FENCE (E-11)
1575 LIN FT

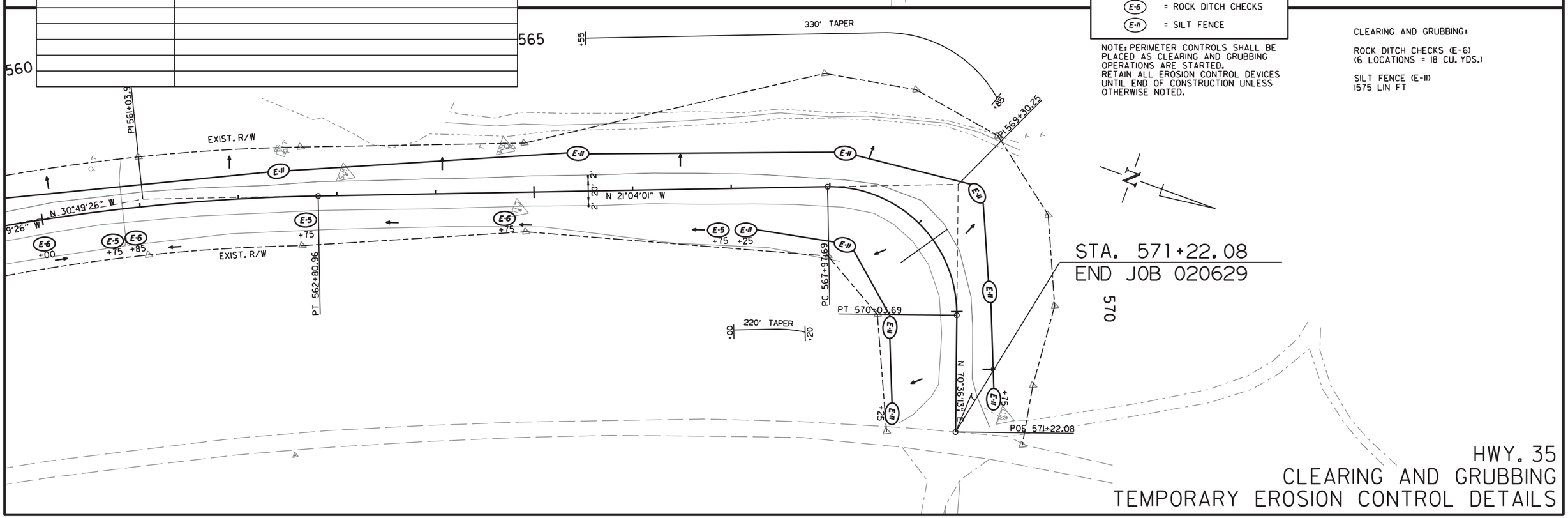

HWY. 35
CLEARING AND GRUBBING
TEMPORARY EROSION CONTROL DETAILS

6/17/2020

R020629.DGN

DATE REVISED	DATE FILMED	DATE REVISED	DATE FILMED	FED.RD. DIST.NO.	STATE	FED.AID PROJ.NO.	SHEET NO.	TOTAL SHEETS
				6	ARK.			
				JOB NO.		020629	26	122

2 TEMPORARY EROSION CONTROL DETAILS

STATE OF ARKANSAS
LICENSED PROFESSIONAL ENGINEER
No. 11425
TRINITY D. SMITH

Sep 18 2020 12:43 PM

DocuSign

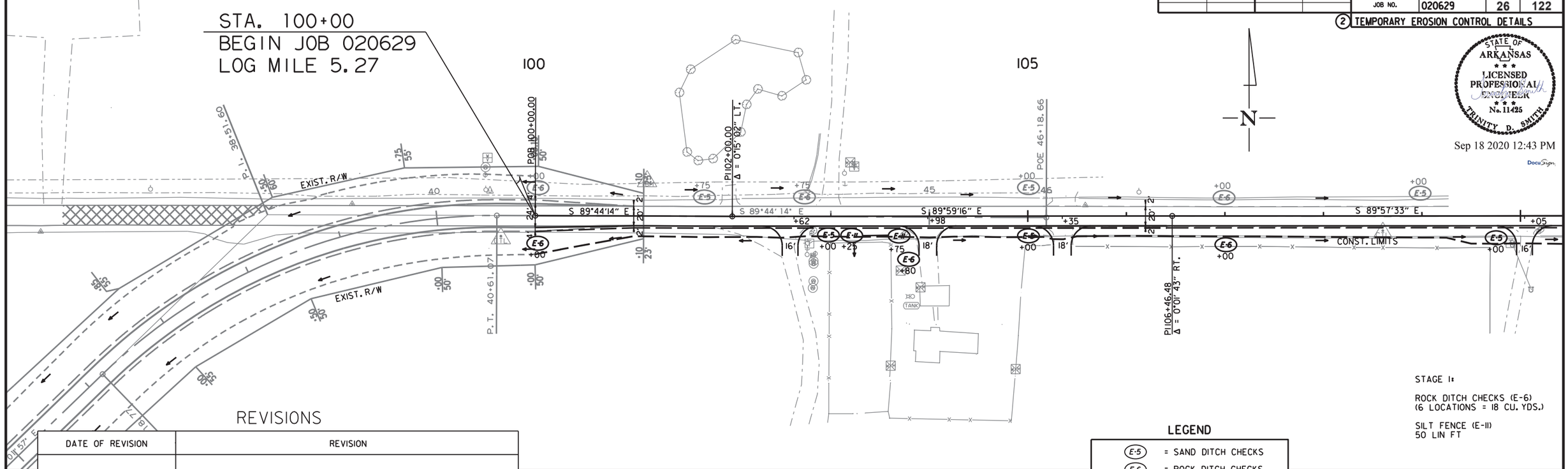

STAGE I:

ROCK DITCH CHECKS (E-6)
(6 LOCATIONS = 18 CU. YDS.)

SILT FENCE (E-11)
50 LIN FT

REVISIONS

DATE OF REVISION	REVISION

LEGEND

E-5	= SAND DITCH CHECKS
E-6	= ROCK DITCH CHECKS
E-11	= SILT FENCE

NOTE: PERIMETER CONTROLS SHALL BE PLACED AS CLEARING AND GRUBBING OPERATIONS ARE STARTED. RETAIN ALL EROSION CONTROL DEVICES UNTIL END OF CONSTRUCTION UNLESS OTHERWISE NOTED.

STAGE I:

ROCK DITCH CHECKS (E-6)
(9 LOCATIONS = 27 CU. YDS.)

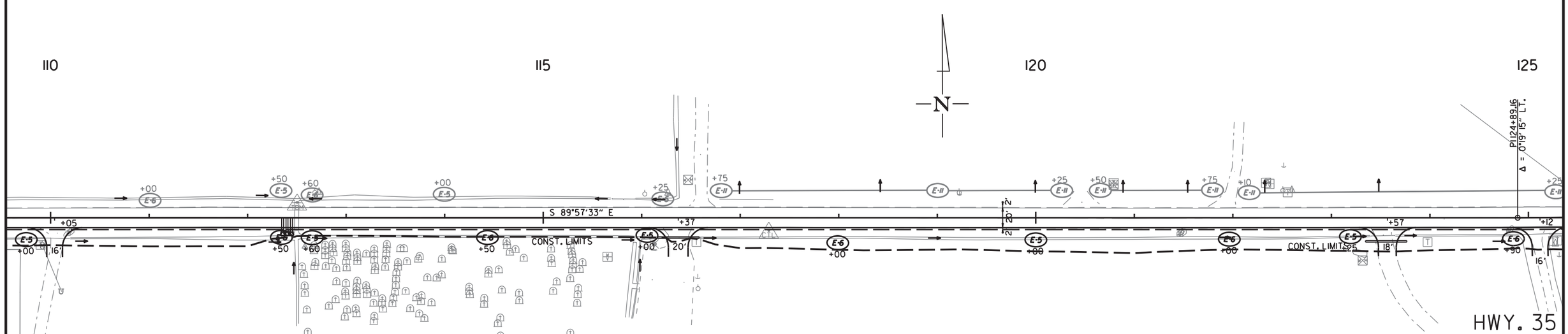

6/17/2020

R020629.DGN

HWY. 35
STAGE I
TEMPORARY EROSION CONTROL DETAILS

DATE REVISED	DATE FILMED	DATE REVISED	DATE FILMED	FED.RD. DIST.NO.	STATE	FED.AID PROJ.NO.	SHEET NO.	TOTAL SHEETS
				6	ARK.			
				JOB NO.		020629	27	122

2 TEMPORARY EROSION CONTROL DETAILS

STATE OF ARKANSAS
LICENSED PROFESSIONAL ENGINEER
No. 11425
TRINITY D. SMITH

Sep 18 2020 12:44 PM

DocuSign

STAGE 1:

ROCK DITCH CHECKS (E-6)
(5 LOCATIONS = 15 CU. YDS.)

SILT FENCE (E-11)
750 LIN FT

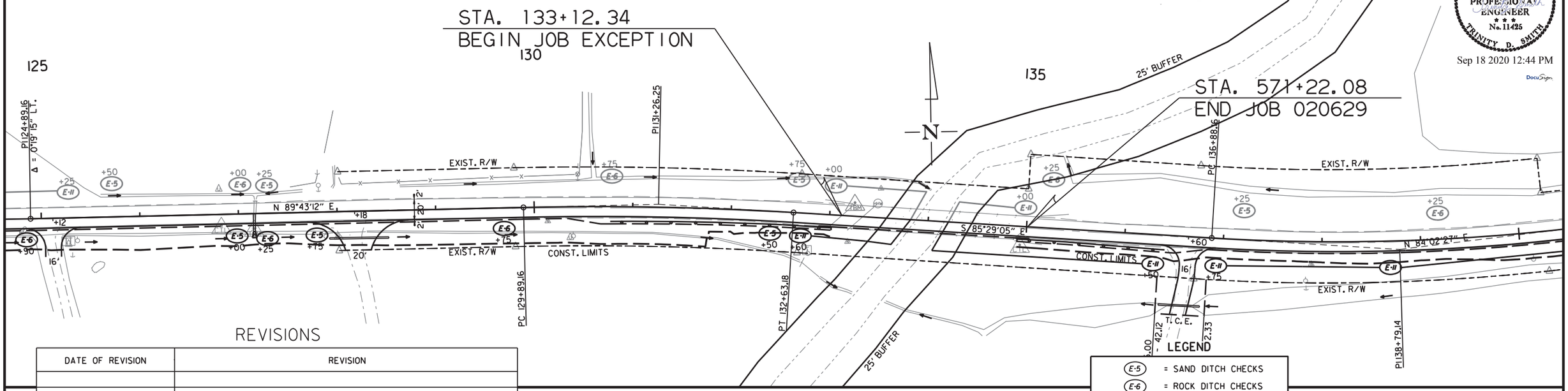

REVISIONS

DATE OF REVISION	REVISION

LEGEND

E-5	= SAND DITCH CHECKS
E-6	= ROCK DITCH CHECKS
E-11	= SILT FENCE

NOTE: PERIMETER CONTROLS SHALL BE PLACED AS CLEARING AND GRUBBING OPERATIONS ARE STARTED. RETAIN ALL EROSION CONTROL DEVICES UNTIL END OF CONSTRUCTION UNLESS OTHERWISE NOTED.

STAGE 1:

ROCK DITCH CHECKS (E-6)
(2 LOCATIONS = 6 CU. YDS.)

SILT FENCE (E-11)
1350 LIN FT

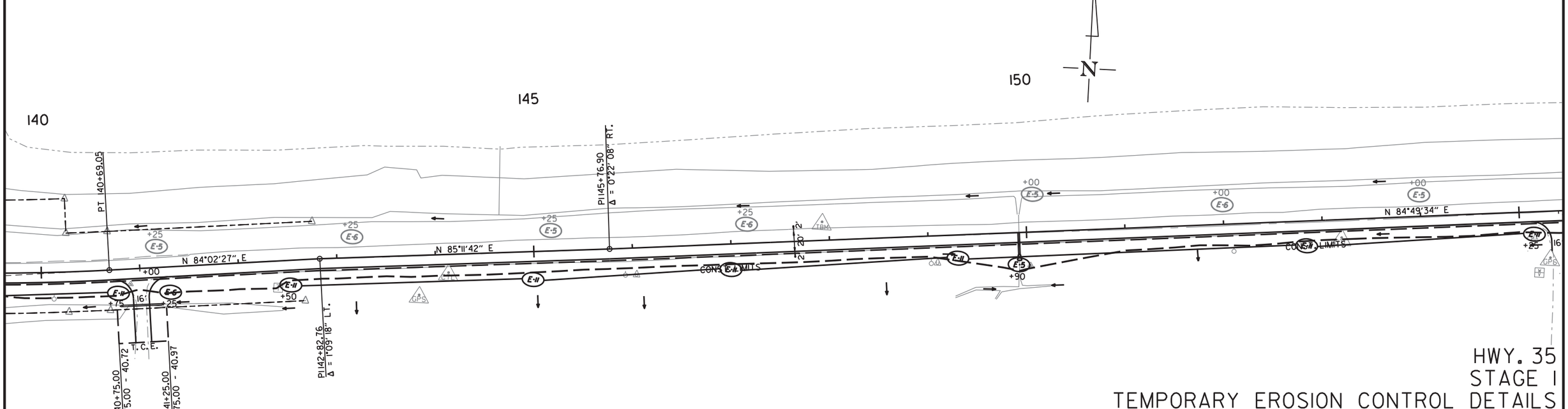

HWY. 35
STAGE 1
TEMPORARY EROSION CONTROL DETAILS

6/17/2020

R020629.DGN

DATE REVISED	DATE FILMED	DATE REVISED	DATE FILMED	FED.RD. DIST.NO.	STATE	FED.AID PROJ.NO.	SHEET NO.	TOTAL SHEETS
				6	ARK.			
				JOB NO.		020629	28	122

(2) TEMPORARY EROSION CONTROL DETAILS

STATE OF ARKANSAS
LICENSED PROFESSIONAL ENGINEER
No. 11425
TRINITY D. SMITH

Sep 18 2020 12:44 PM

DocuSign

STAGE I:

ROCK DITCH CHECKS (E-6)
(9 LOCATIONS = 27 CU. YDS.)

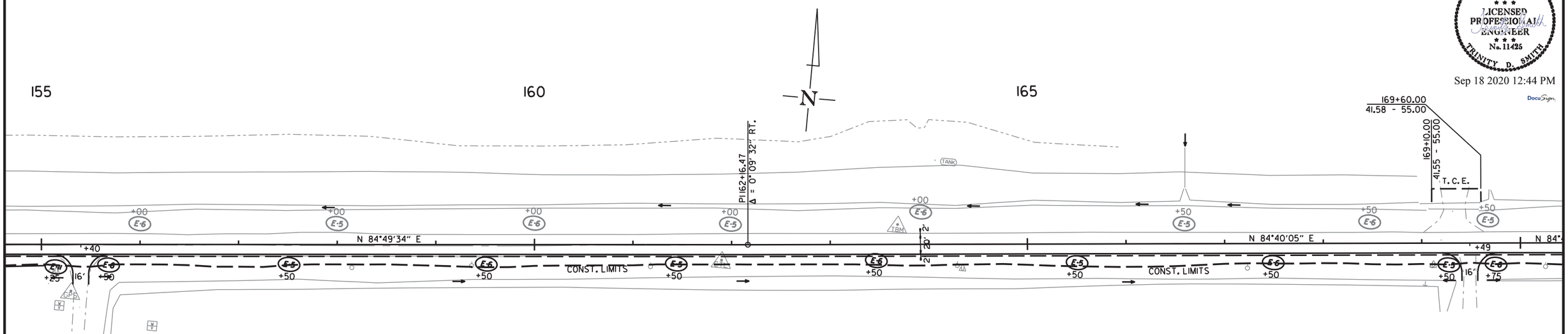

REVISIONS

DATE OF REVISION	REVISION

LEGEND

E-5	= SAND DITCH CHECKS
E-6	= ROCK DITCH CHECKS
E-11	= SILT FENCE

NOTE: PERIMETER CONTROLS SHALL BE PLACED AS CLEARING AND GRUBBING OPERATIONS ARE STARTED. RETAIN ALL EROSION CONTROL DEVICES UNTIL END OF CONSTRUCTION UNLESS OTHERWISE NOTED.

STAGE I:

ROCK DITCH CHECKS (E-6)
(9 LOCATIONS = 27 CU. YDS.)

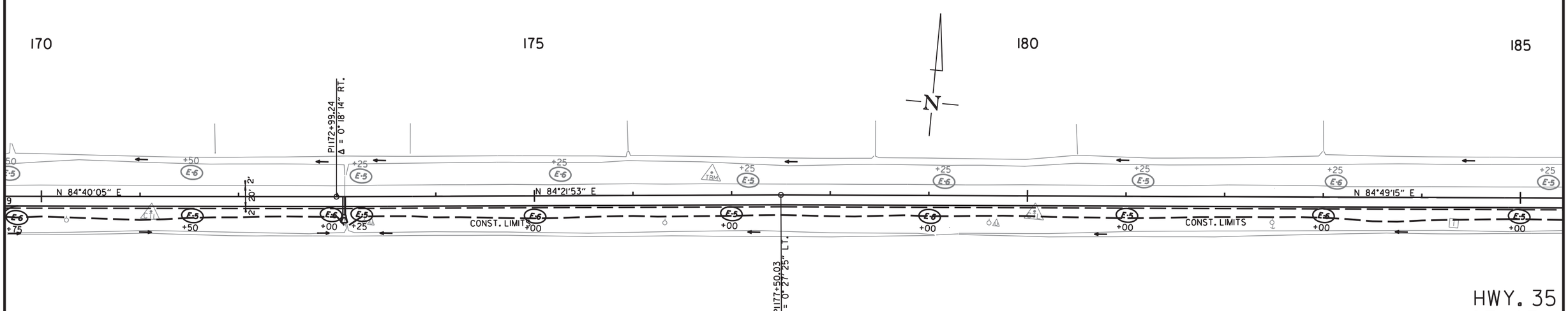

6/17/2020

R020629.DGN

HWY. 35
STAGE I
TEMPORARY EROSION CONTROL DETAILS

DATE REVISED	DATE FILMED	DATE REVISED	DATE FILMED

FED.RD. DIST.NO.	STATE	FED.AID PROJ.NO.	SHEET NO.	TOTAL SHEETS
6	ARK.			
JOB NO.		020629	29	122

2 TEMPORARY EROSION CONTROL DETAILS

STATE OF ARKANSAS
LICENSED PROFESSIONAL ENGINEER
No. 11425
TRINITY D. SMITH

Sep 18 2020 12:46 PM

DocuSign

STAGE I:

ROCK DITCH CHECKS (E-6)
(7 LOCATIONS = 21 CU. YDS.)

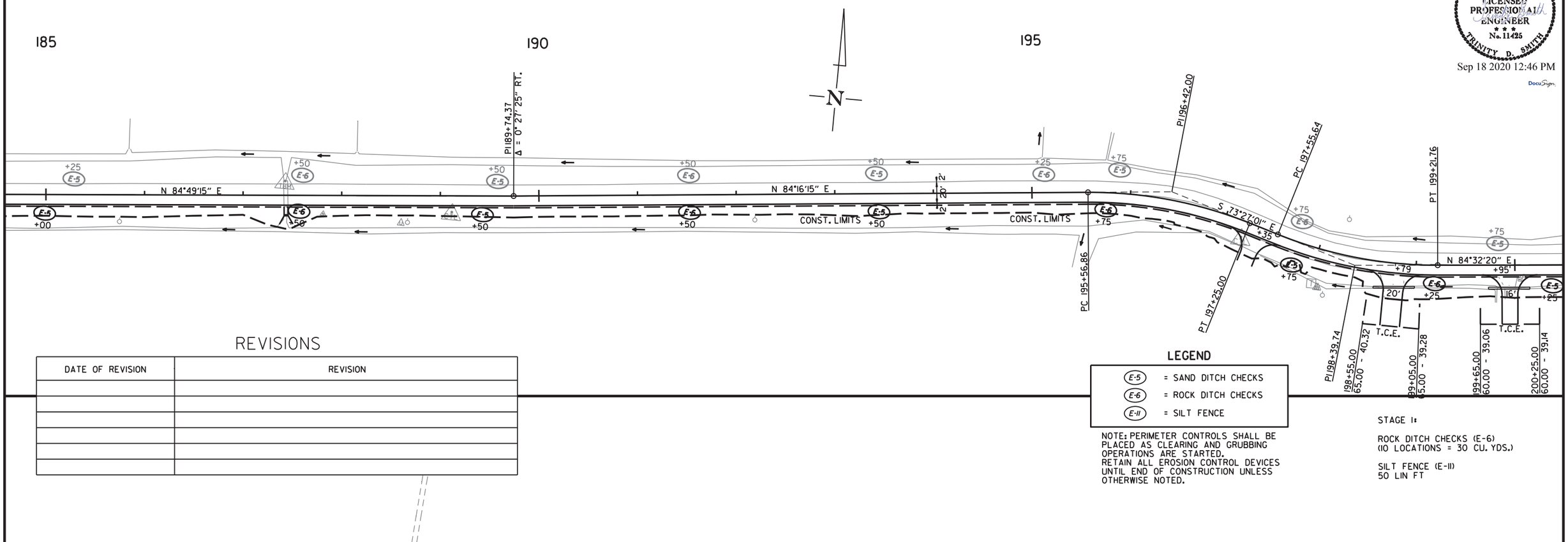

REVISIONS

DATE OF REVISION	REVISION

LEGEND

E-5	= SAND DITCH CHECKS
E-6	= ROCK DITCH CHECKS
E-11	= SILT FENCE

NOTE: PERIMETER CONTROLS SHALL BE PLACED AS CLEARING AND GRUBBING OPERATIONS ARE STARTED. RETAIN ALL EROSION CONTROL DEVICES UNTIL END OF CONSTRUCTION UNLESS OTHERWISE NOTED.

STAGE I:

ROCK DITCH CHECKS (E-6)
(10 LOCATIONS = 30 CU. YDS.)

SILT FENCE (E-11)
50 LIN FT

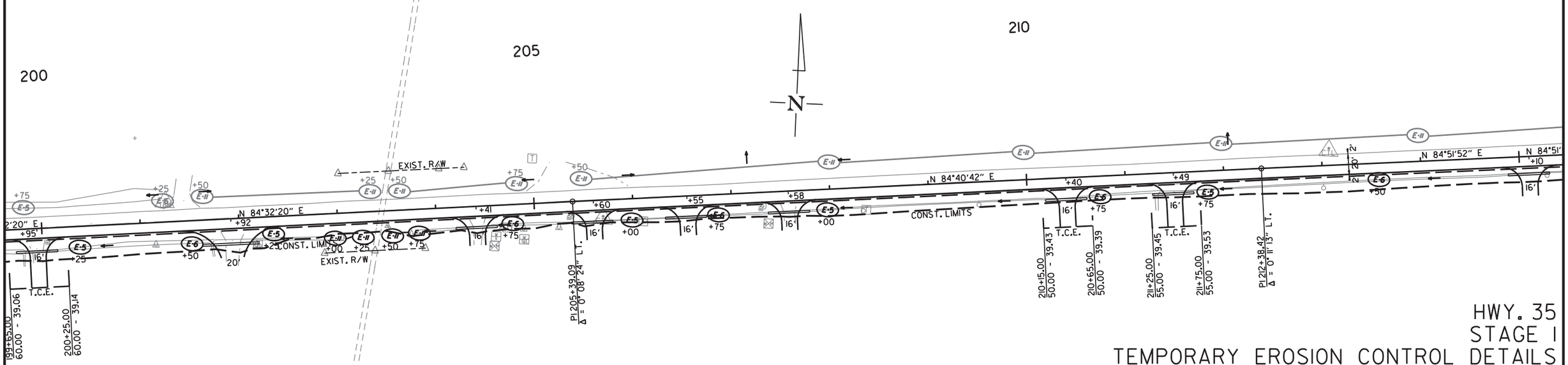

6/17/2020

R020629.DGN

HWY. 35
STAGE I
TEMPORARY EROSION CONTROL DETAILS

DATE REVISED	DATE FILMED	DATE REVISED	DATE FILMED	FED.RD. DIST.NO.	STATE	FED.AID PROJ.NO.	SHEET NO.	TOTAL SHEETS
				6	ARK.			
				JOB NO.		020629	30	122

(2) TEMPORARY EROSION CONTROL DETAILS

STATE OF ARKANSAS
LICENSED PROFESSIONAL ENGINEER
No. 11425
TRINITY D. SMITH

Sep 18 2020 12:46 PM

DocuSign

STAGE I:

ROCK DITCH CHECKS (E-6)
(10 LOCATIONS = 30 CU. YDS.)

SILT FENCE (E-11)
250 LIN FT

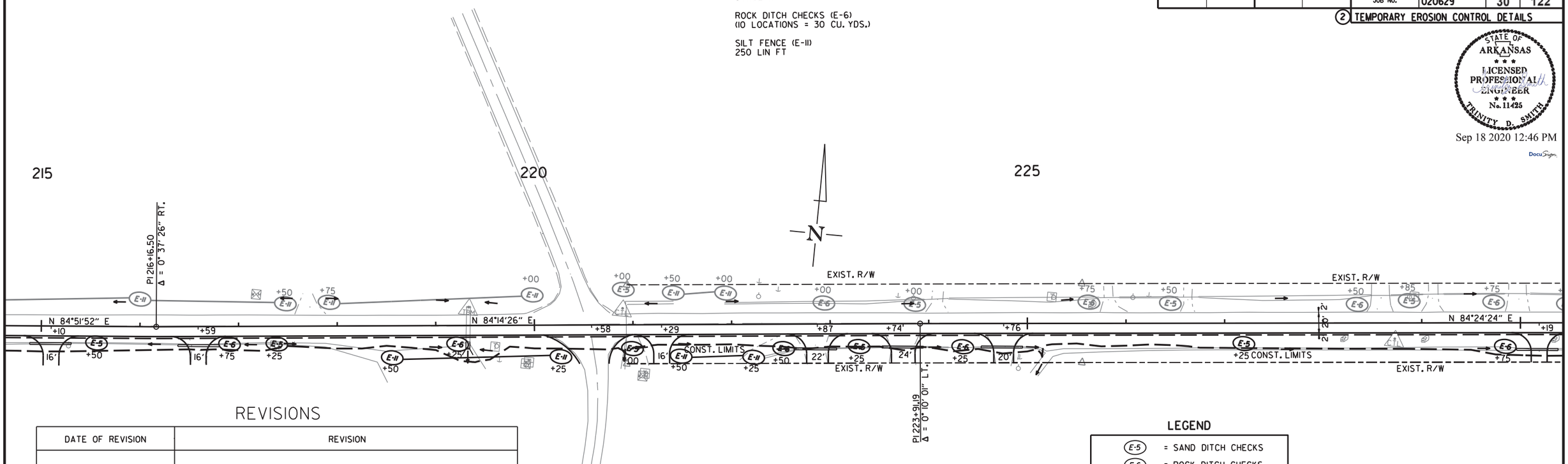

REVISIONS

DATE OF REVISION	REVISION

LEGEND

E-5	= SAND DITCH CHECKS
E-6	= ROCK DITCH CHECKS
E-11	= SILT FENCE

NOTE: PERIMETER CONTROLS SHALL BE PLACED AS CLEARING AND GRUBBING OPERATIONS ARE STARTED. RETAIN ALL EROSION CONTROL DEVICES UNTIL END OF CONSTRUCTION UNLESS OTHERWISE NOTED.

STAGE I:

ROCK DITCH CHECKS (E-6)
(8 LOCATIONS = 24 CU. YDS.)

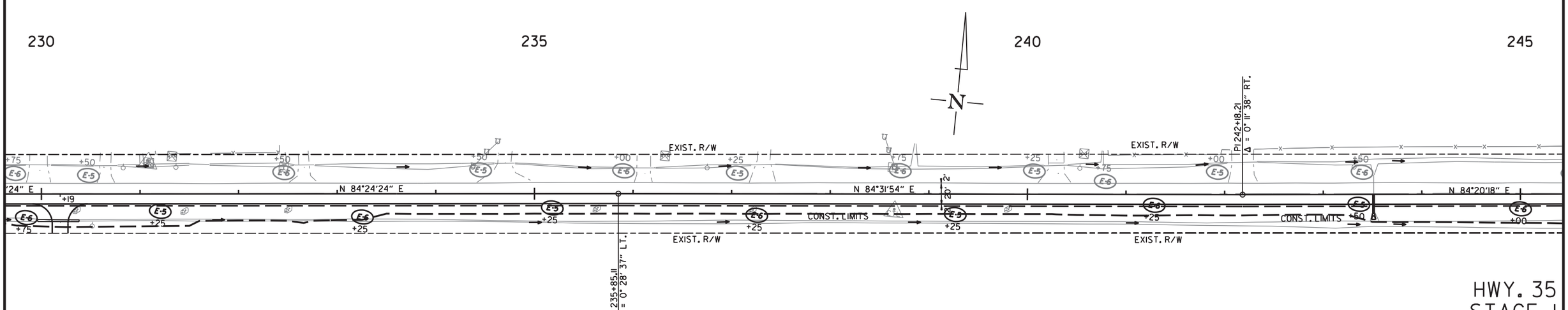

6/17/2020

R020629.DGN

HWY. 35
STAGE I
TEMPORARY EROSION CONTROL DETAILS

DATE REVISED	DATE FILMED	DATE REVISED	DATE FILMED	FED.RD. DIST.NO.	STATE	FED.AID PROJ.NO.	SHEET NO.	TOTAL SHEETS
				6	ARK.			
				JOB NO.		020629	31	122

(2) TEMPORARY EROSION CONTROL DETAILS

STATE OF ARKANSAS
LICENSED PROFESSIONAL ENGINEER
No. 11425
TRINITY D. SMITH

Sep 18 2020 12:46 PM

DocuSign

STAGE I:

ROCK DITCH CHECKS (E-6)
(7 LOCATIONS = 21 CU. YDS.)

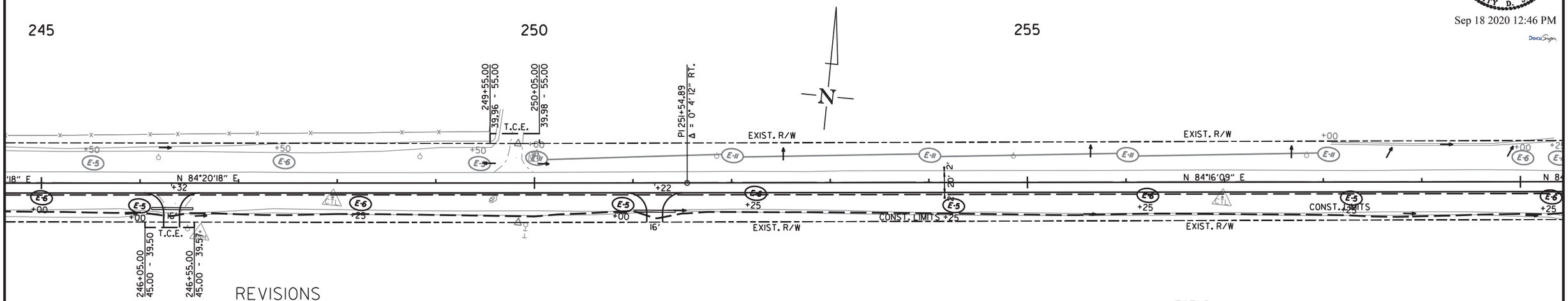

REVISIONS

DATE OF REVISION	REVISION

LEGEND

E-5	= SAND DITCH CHECKS
E-6	= ROCK DITCH CHECKS
E-11	= SILT FENCE

NOTE: PERIMETER CONTROLS SHALL BE PLACED AS CLEARING AND GRUBBING OPERATIONS ARE STARTED. RETAIN ALL EROSION CONTROL DEVICES UNTIL END OF CONSTRUCTION UNLESS OTHERWISE NOTED.

STAGE I:

ROCK DITCH CHECKS (E-6)
(2 LOCATIONS = 6 CU. YDS.)

SILT FENCE (E-11)
1300 LIN FT

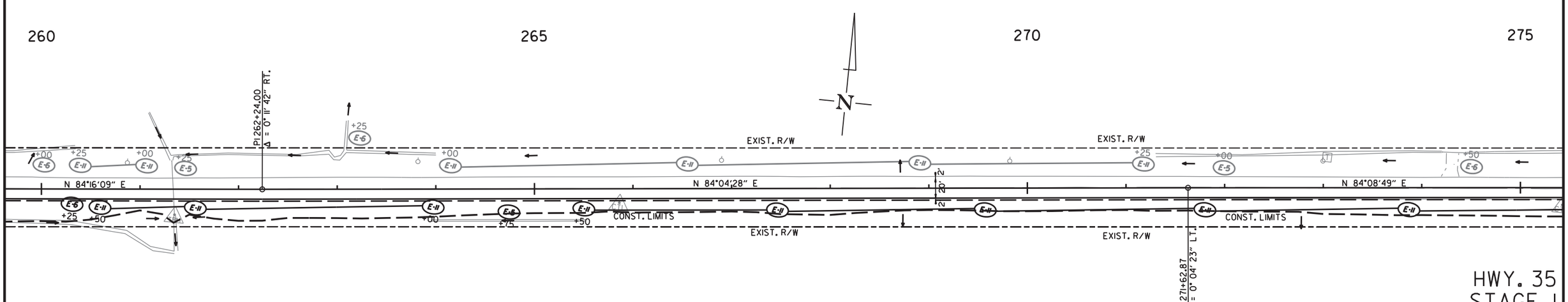

6/17/2020

R020629.DGN

HWY. 35
STAGE I
TEMPORARY EROSION CONTROL DETAILS

DATE REVISED	DATE FILMED	DATE REVISED	DATE FILMED	FED.RD. DIST.NO.	STATE	FED.AID PROJ.NO.	SHEET NO.	TOTAL SHEETS
				6	ARK.			
				JOB NO.		020629	32	122

(2) TEMPORARY EROSION CONTROL DETAILS

STATE OF ARKANSAS
LICENSED PROFESSIONAL ENGINEER
No. 11425
TRINITY D. SMITH

Sep 18 2020 12:47 PM

DocuSign

STAGE I:

ROCK DITCH CHECKS (E-6)
(7 LOCATIONS = 21 CU. YDS.)

SILT FENCE (E-11)
75 LIN FT

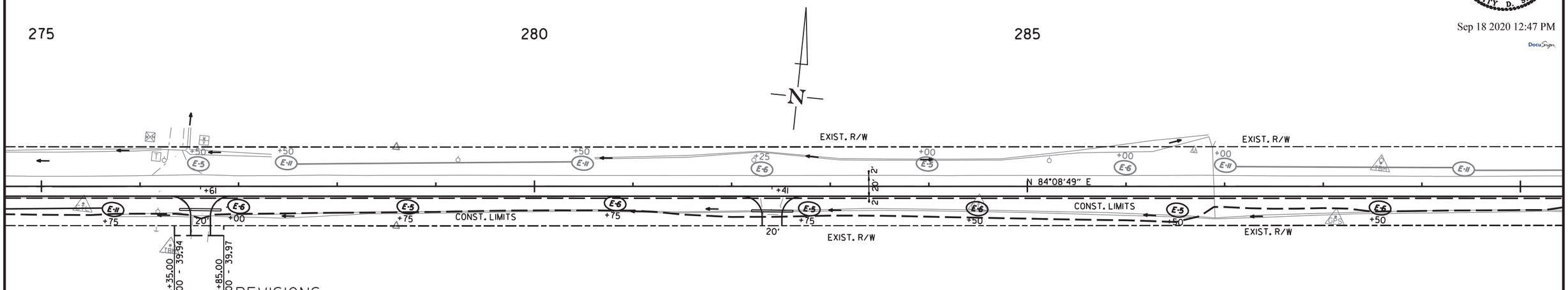

REVISIONS

DATE OF REVISION	REVISION

LEGEND

E-5	= SAND DITCH CHECKS
E-6	= ROCK DITCH CHECKS
E-11	= SILT FENCE

NOTE: PERIMETER CONTROLS SHALL BE PLACED AS CLEARING AND GRUBBING OPERATIONS ARE STARTED. RETAIN ALL EROSION CONTROL DEVICES UNTIL END OF CONSTRUCTION UNLESS OTHERWISE NOTED.

STAGE I:

ROCK DITCH CHECKS (E-6)
(9 LOCATIONS = 27 CU. YDS.)

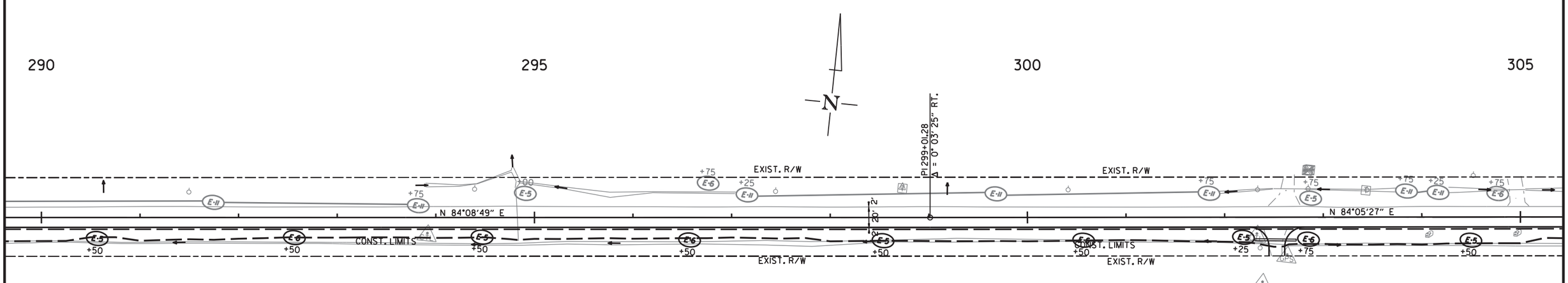

6/17/2020

R020629.DGN

HWY. 35
STAGE I
TEMPORARY EROSION CONTROL DETAILS

DATE REVISED	DATE FILMED	DATE REVISED	DATE FILMED	FED.RD. DIST.NO.	STATE	FED.AID PROJ.NO.	SHEET NO.	TOTAL SHEETS
				6	ARK.			
				JOB NO.		020629	33	122

(2) TEMPORARY EROSION CONTROL DETAILS

STATE OF ARKANSAS
LICENSED PROFESSIONAL ENGINEER
No. 11425
TRINITY D. SMITH

Sep 18 2020 12:47 PM

DocuSign

STAGE I:

ROCK DITCH CHECKS (E-6)
(6 LOCATIONS = 18 CU. YDS.)

SILT FENCE (E-11)
250 LIN FT

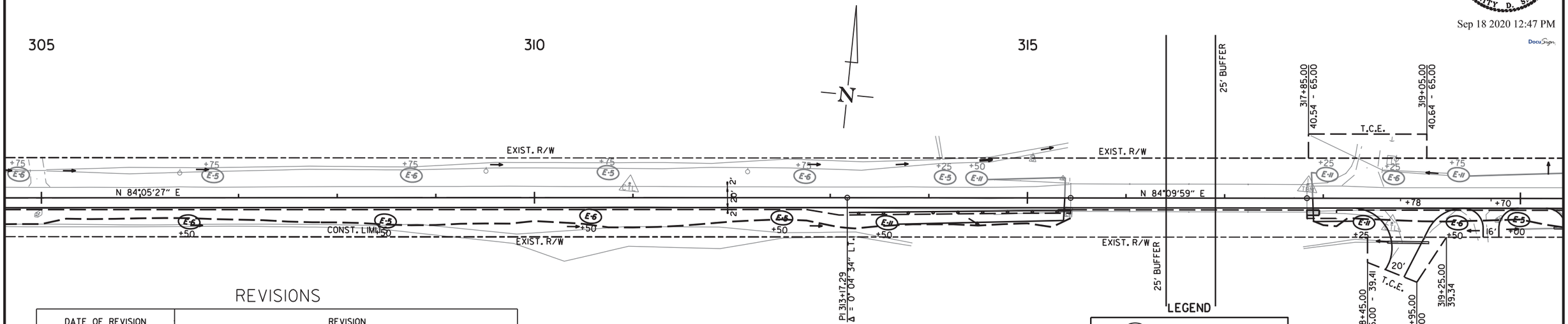

REVISIONS

DATE OF REVISION	REVISION

LEGEND

E-5	= SAND DITCH CHECKS
E-6	= ROCK DITCH CHECKS
E-11	= SILT FENCE

NOTE: PERIMETER CONTROLS SHALL BE PLACED AS CLEARING AND GRUBBING OPERATIONS ARE STARTED. RETAIN ALL EROSION CONTROL DEVICES UNTIL END OF CONSTRUCTION UNLESS OTHERWISE NOTED.

STAGE I:

ROCK DITCH CHECKS (E-6)
(8 LOCATIONS = 24 CU. YDS.)

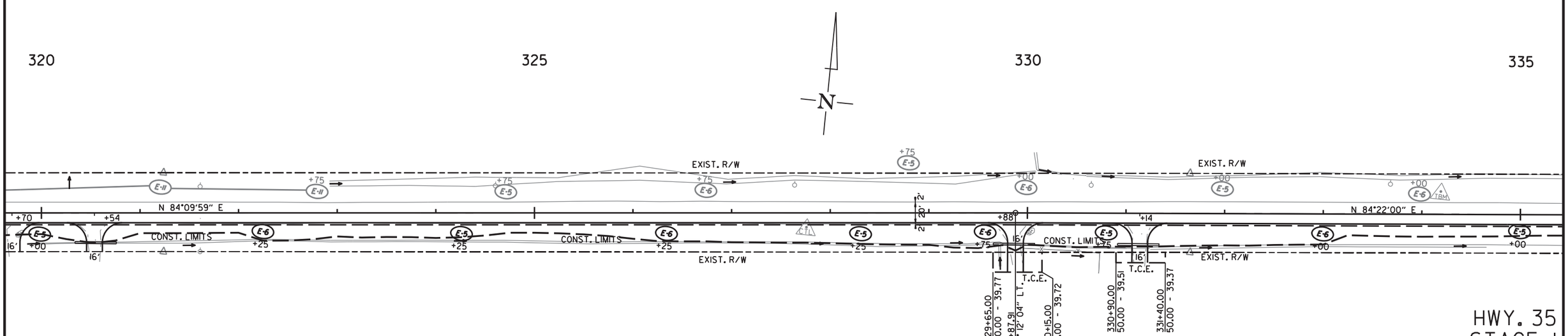

HWY. 35
STAGE I
TEMPORARY EROSION CONTROL DETAILS

6/17/2020

R020629.DGN

DATE REVISED	DATE FILMED	DATE REVISED	DATE FILMED	FED.RD. DIST.NO.	STATE	FED.AID PROJ.NO.	SHEET NO.	TOTAL SHEETS
				6	ARK.			
				JOB NO.		020629	34	122

2 TEMPORARY EROSION CONTROL DETAILS

STATE OF ARKANSAS
LICENSED PROFESSIONAL ENGINEER
No. 11425
TRINITY D. SMITH

Sep 18 2020 12:47 PM

DocuSign

STAGE I:

ROCK DITCH CHECKS (E-6)
(8 LOCATIONS = 24 CU. YDS.)

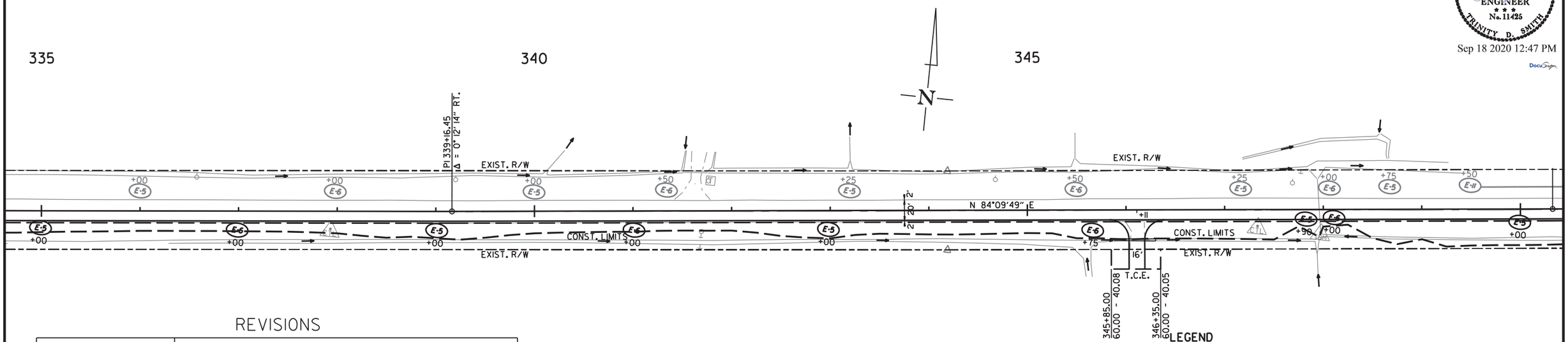

REVISIONS

DATE OF REVISION	REVISION

LEGEND

E-5	= SAND DITCH CHECKS
E-6	= ROCK DITCH CHECKS
E-11	= SILT FENCE

NOTE: PERIMETER CONTROLS SHALL BE PLACED AS CLEARING AND GRUBBING OPERATIONS ARE STARTED. RETAIN ALL EROSION CONTROL DEVICES UNTIL END OF CONSTRUCTION UNLESS OTHERWISE NOTED.

STAGE I:

ROCK DITCH CHECKS (E-6)
(6 LOCATIONS = 18 CU. YDS.)

SILT FENCE (E-11)
315 LIN FT

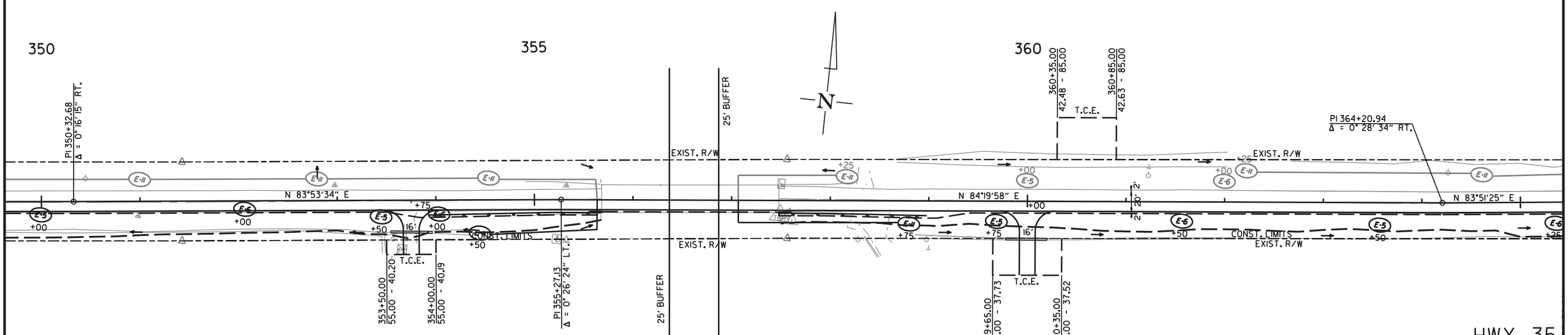

6/17/2020

R020629.DGN

HWY. 35
STAGE I
TEMPORARY EROSION CONTROL DETAILS

DATE REVISED	DATE FILMED	DATE REVISED	DATE FILMED

FED.RD. DIST.NO.	STATE	FED.AID PROJ.NO.	SHEET NO.	TOTAL SHEETS
6	ARK.			
JOB NO.		020629	35	122

2 TEMPORARY EROSION CONTROL DETAILS

STATE OF ARKANSAS
LICENSED PROFESSIONAL ENGINEER
No. 11425
TRINITY D. SMITH

Sep 18 2020 12:49 PM

DocuSign

STAGE I:

ROCK DITCH CHECKS (E-6)
(6 LOCATIONS = 18 CU. YDS.)

SILT FENCE (E-11)
425 LIN FT

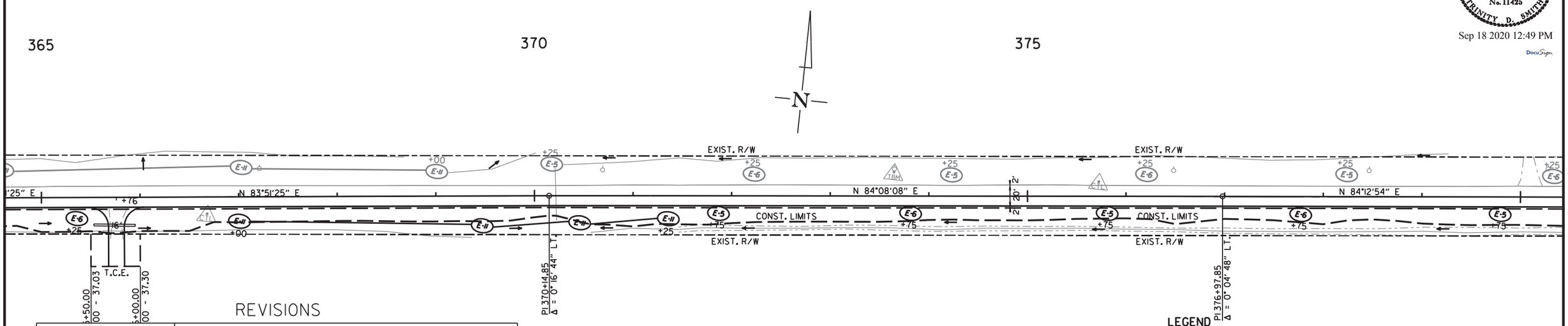

REVISIONS

DATE OF REVISION	REVISION

LEGEND

E-5	= SAND DITCH CHECKS
E-6	= ROCK DITCH CHECKS
E-11	= SILT FENCE

NOTE: PERIMETER CONTROLS SHALL BE PLACED AS CLEARING AND GRUBBING OPERATIONS ARE STARTED. RETAIN ALL EROSION CONTROL DEVICES UNTIL END OF CONSTRUCTION UNLESS OTHERWISE NOTED.

STAGE I:

ROCK DITCH CHECKS (E-6)
(8 LOCATIONS = 24 CU. YDS.)

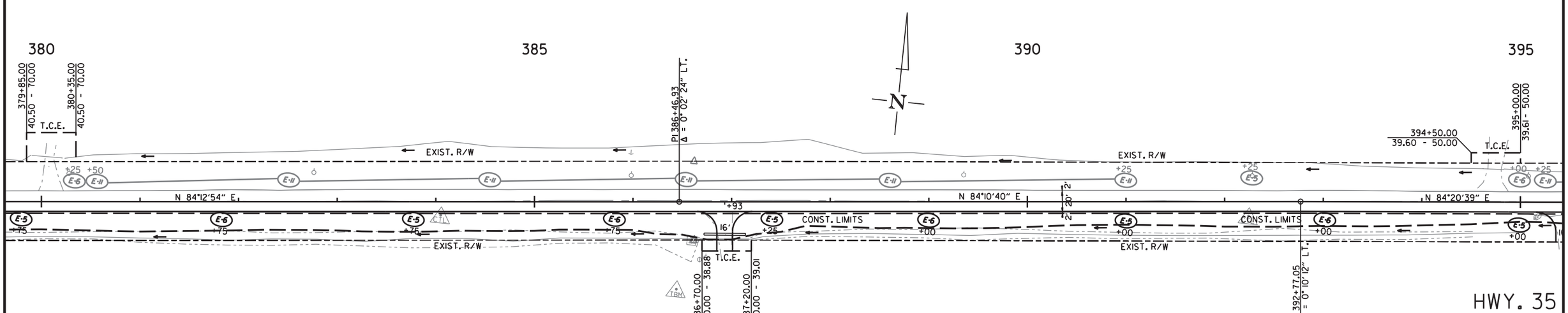

HWY. 35
STAGE I
TEMPORARY EROSION CONTROL DETAILS

6/17/2020

R020629.DGN

DATE REVISED	DATE FILMED	DATE REVISED	DATE FILMED	FED.RD. DIST.NO.	STATE	FED.AID PROJ.NO.	SHEET NO.	TOTAL SHEETS
				6	ARK.			
				JOB NO.		020629	36	122

(2) TEMPORARY EROSION CONTROL DETAILS

STATE OF ARKANSAS
LICENSED PROFESSIONAL ENGINEER
No. 11425
TRINITY D. SMITH

Sep 18 2020 12:49 PM

DocuSign

STAGE I:

ROCK DITCH CHECKS (E-6)
(7 LOCATIONS = 21 CU. YDS.)

SILT FENCE (E-11)
175 LIN FT

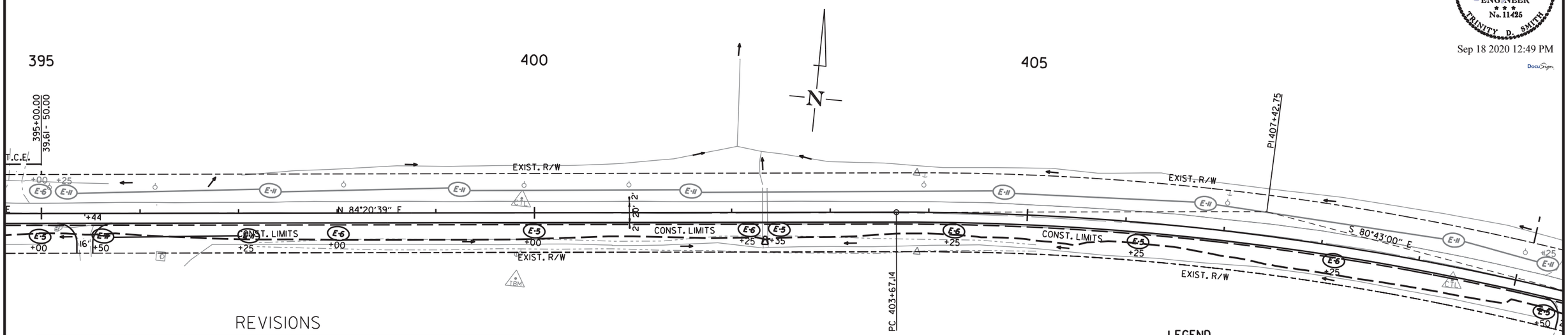

REVISIONS

DATE OF REVISION	REVISION

LEGEND

(E-5)	= SAND DITCH CHECKS
(E-6)	= ROCK DITCH CHECKS
(E-11)	= SILT FENCE

NOTE: PERIMETER CONTROLS SHALL BE PLACED AS CLEARING AND GRUBBING OPERATIONS ARE STARTED. RETAIN ALL EROSION CONTROL DEVICES UNTIL END OF CONSTRUCTION UNLESS OTHERWISE NOTED.

STAGE I:

ROCK DITCH CHECKS (E-6)
(3 LOCATIONS = 9 CU. YDS.)

SILT FENCE (E-11)
1200 LIN FT

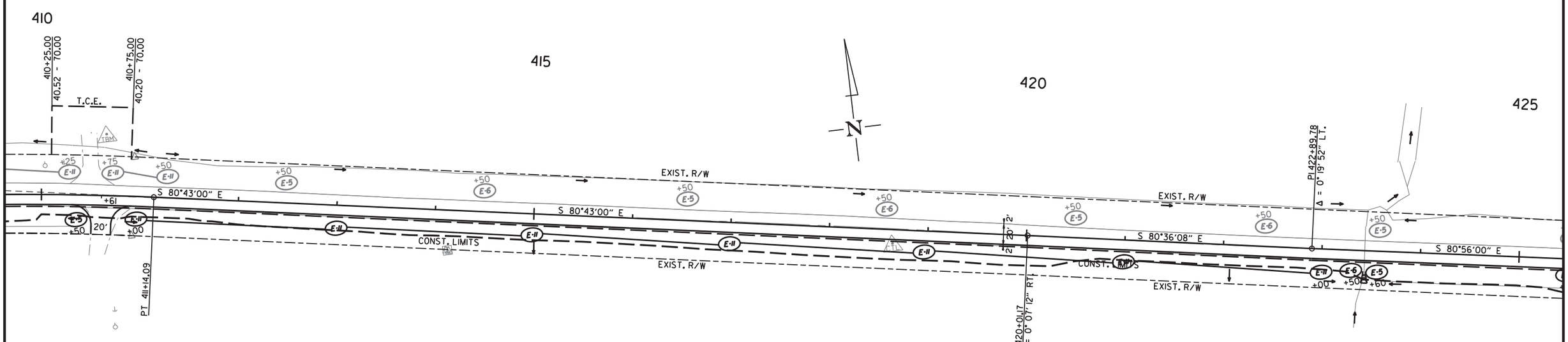

6/17/2020

R020629.DGN

HWY. 35
STAGE I
TEMPORARY EROSION CONTROL DETAILS

DATE REVISED	DATE FILMED	DATE REVISED	DATE FILMED	FED.RD. DIST.NO.	STATE	FED.AID PROJ.NO.	SHEET NO.	TOTAL SHEETS
				6	ARK.			
				JOB NO.		020629	37	122

(2) TEMPORARY EROSION CONTROL DETAILS

STATE OF ARKANSAS
LICENSED PROFESSIONAL ENGINEER
No. 11425
TRINITY D. SMITH

Sep 18 2020 12:49 PM

DocuSign

STAGE I:

ROCK DITCH CHECKS (E-6)
(8 LOCATIONS = 24 CU. YDS.)

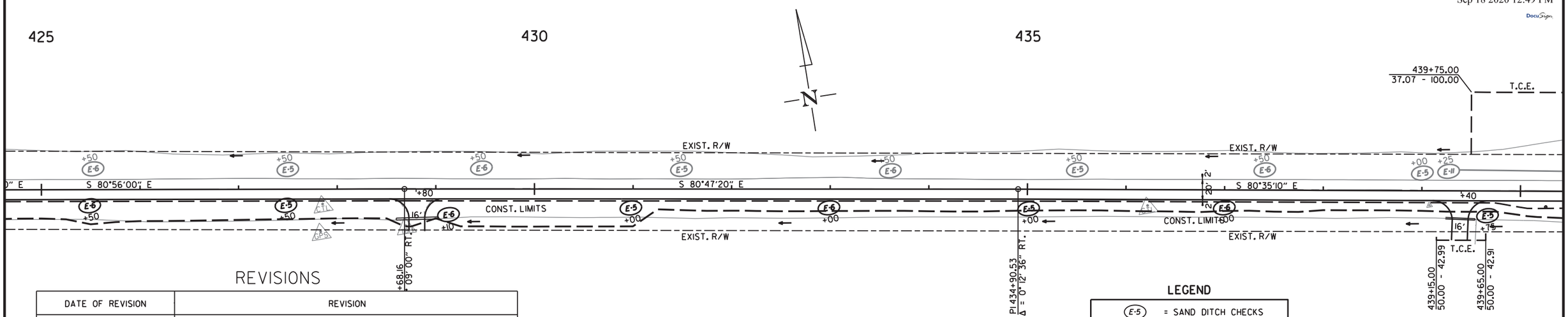

REVISIONS

DATE OF REVISION	REVISION

LEGEND

E-5	= SAND DITCH CHECKS
E-6	= ROCK DITCH CHECKS
E-11	= SILT FENCE

NOTE: PERIMETER CONTROLS SHALL BE PLACED AS CLEARING AND GRUBBING OPERATIONS ARE STARTED. RETAIN ALL EROSION CONTROL DEVICES UNTIL END OF CONSTRUCTION UNLESS OTHERWISE NOTED.

STAGE I:

ROCK DITCH CHECKS (E-6)
(1 LOCATIONS = 3 CU. YDS.)

SILT FENCE (E-11)
1250 LIN FT

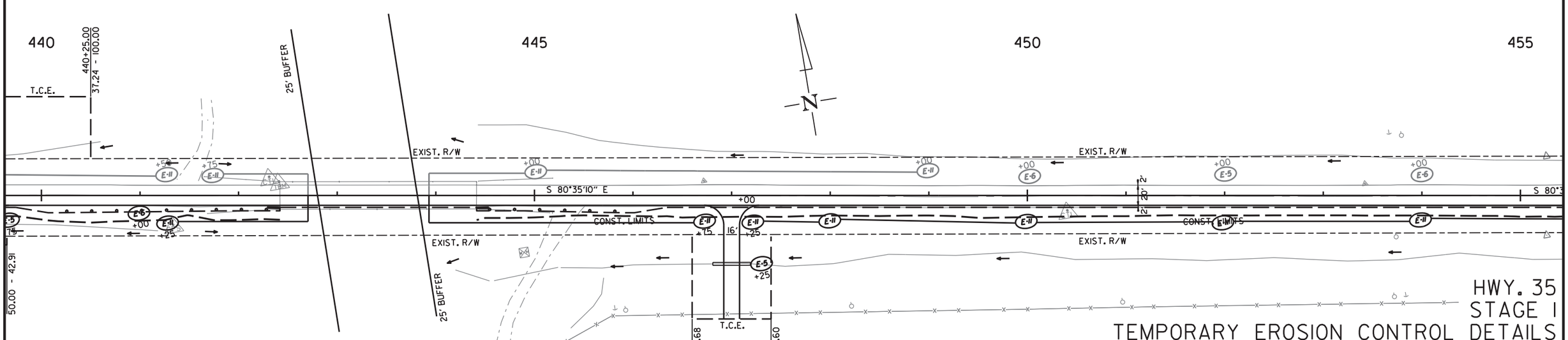

6/17/2020

R020629.DGN

HWY. 35
STAGE I
TEMPORARY EROSION CONTROL DETAILS

DATE REVISED	DATE FILMED	DATE REVISED	DATE FILMED	FED.RD. DIST.NO.	STATE	FED.AID PROJ.NO.	SHEET NO.	TOTAL SHEETS
				6	ARK.			
				JOB NO.		020629	38	122

(2) TEMPORARY EROSION CONTROL DETAILS

STATE OF ARKANSAS
LICENSED PROFESSIONAL ENGINEER
No. 11425
TRINITY D. SMITH

Sep 18 2020 12:49 PM

DocuSign

STAGE I:

ROCK DITCH CHECKS (E-6)
(4 LOCATIONS = 12 CU. YDS.)

SILT FENCE (E-11)
700 LIN FT

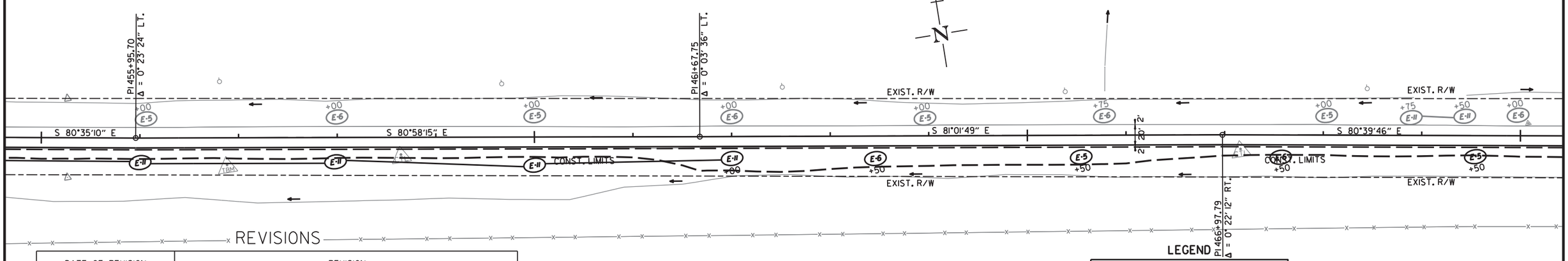

REVISIONS

DATE OF REVISION	REVISION

LEGEND

E-5	= SAND DITCH CHECKS
E-6	= ROCK DITCH CHECKS
E-11	= SILT FENCE

NOTE: PERIMETER CONTROLS SHALL BE PLACED AS CLEARING AND GRUBBING OPERATIONS ARE STARTED. RETAIN ALL EROSION CONTROL DEVICES UNTIL END OF CONSTRUCTION UNLESS OTHERWISE NOTED.

STAGE I:

ROCK DITCH CHECKS (E-6)
(7 LOCATIONS = 21 CU. YDS.)

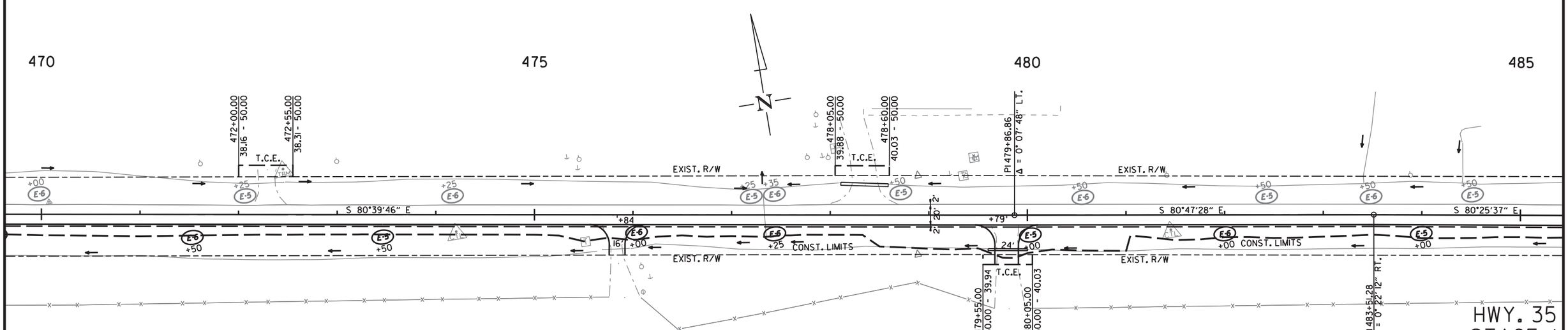

6/17/2020

R020629.DGN

HWY. 35
STAGE I
TEMPORARY EROSION CONTROL DETAILS

DATE REVISED	DATE FILMED	DATE REVISED	DATE FILMED	FED.RD. DIST.NO.	STATE	FED.AID PROJ.NO.	SHEET NO.	TOTAL SHEETS
				6	ARK.			
				JOB NO.		020629	39	122

2 TEMPORARY EROSION CONTROL DETAILS

STATE OF ARKANSAS
LICENSED PROFESSIONAL ENGINEER
No. 11425
TRINITY D. SMITH

Sep 18 2020 12:49 PM

DocuSign

STAGE I:

ROCK DITCH CHECKS (E-6)
(4 LOCATIONS = 12 CU. YDS.)

SILT FENCE (E-11)
800 LIN FT

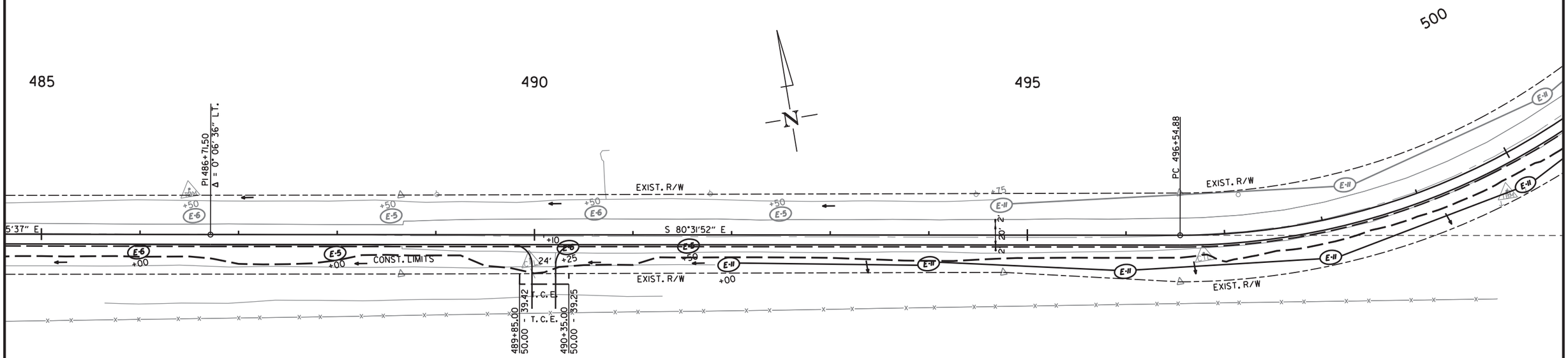

REVISIONS

DATE OF REVISION	REVISION

LEGEND

E-5	= SAND DITCH CHECKS
E-6	= ROCK DITCH CHECKS
E-11	= SILT FENCE

NOTE: PERIMETER CONTROLS SHALL BE PLACED AS CLEARING AND GRUBBING OPERATIONS ARE STARTED.
RETAIN ALL EROSION CONTROL DEVICES UNTIL END OF CONSTRUCTION UNLESS OTHERWISE NOTED.

HWY. 35
STAGE I
TEMPORARY EROSION CONTROL DETAILS

6/17/2020

R020629.DGN

DATE REVISED	DATE FILMED	DATE REVISED	DATE FILMED	FED.RD. DIST.NO.	STATE	FED.AID PROJ.NO.	SHEET NO.	TOTAL SHEETS
				6	ARK.			
				JOB NO.		020629	40	122

(2) TEMPORARY EROSION CONTROL DETAILS

STATE OF ARKANSAS
LICENSED PROFESSIONAL ENGINEER
No. 11425
TRINITY D. SMITH

Sep 18 2020 12:50 PM

DocuSign

STAGE 1:

ROCK DITCH CHECKS (E-6)
(6 LOCATIONS = 18 CU. YDS.)

SILT FENCE (E-11)
200 LIN FT

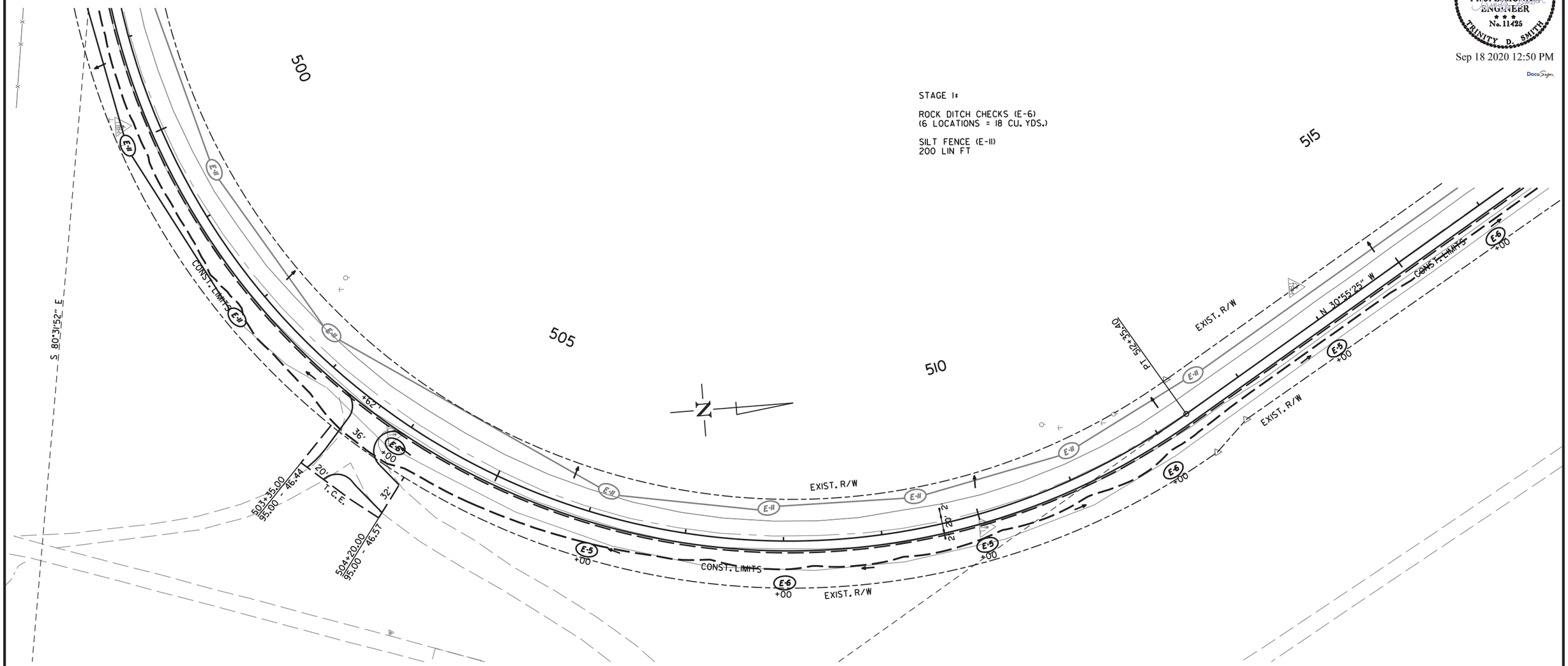

LEGEND

(E-5)	= SAND DITCH CHECKS
(E-6)	= ROCK DITCH CHECKS
(E-11)	= SILT FENCE

NOTE: PERIMETER CONTROLS SHALL BE PLACED AS CLEARING AND GRUBBING OPERATIONS ARE STARTED.
RETAIN ALL EROSION CONTROL DEVICES UNTIL END OF CONSTRUCTION UNLESS OTHERWISE NOTED.

REVISIONS

DATE OF REVISION	REVISION

HWY. 35
STAGE 1
TEMPORARY EROSION CONTROL DETAILS

6/17/2020

R020629.DGN

DATE REVISED	DATE FILMED	DATE REVISED	DATE FILMED	FED.RD. DIST.NO.	STATE	FED.AID PROJ.NO.	SHEET NO.	TOTAL SHEETS
				6	ARK.			
				JOB NO.		020629	41	122

(2) TEMPORARY EROSION CONTROL DETAILS

STATE OF ARKANSAS
LICENSED PROFESSIONAL ENGINEER
No. 11425
TRINITY D. SMITH

Sep 18 2020 12:50 PM

DocuSign

STAGE I:

ROCK DITCH CHECKS (E-6)
(9 LOCATIONS = 27 CU. YDS.)

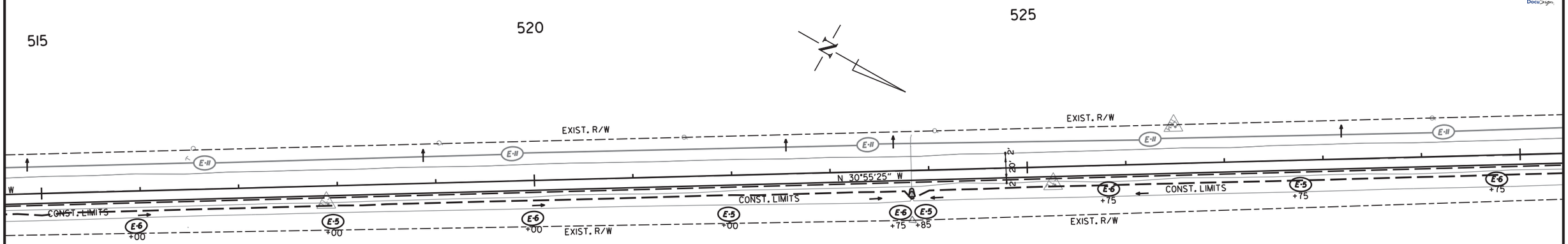

REVISIONS

DATE OF REVISION	REVISION

LEGEND

E-5	= SAND DITCH CHECKS
E-6	= ROCK DITCH CHECKS
E-11	= SILT FENCE

NOTE: PERIMETER CONTROLS SHALL BE PLACED AS CLEARING AND GRUBBING OPERATIONS ARE STARTED. RETAIN ALL EROSION CONTROL DEVICES UNTIL END OF CONSTRUCTION UNLESS OTHERWISE NOTED.

STAGE I:

ROCK DITCH CHECKS (E-6)
(7 LOCATIONS = 21 CU. YDS.)

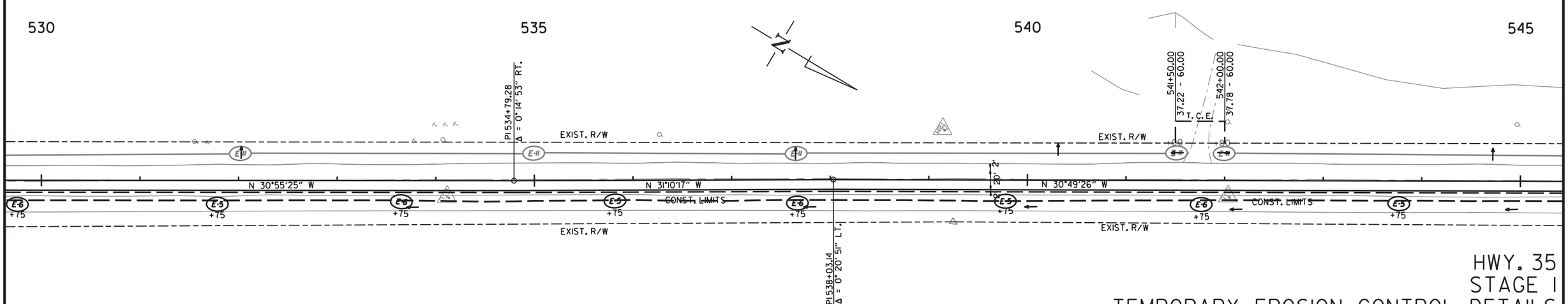

6/17/2020

R020629.DGN

HWY. 35
STAGE I
TEMPORARY EROSION CONTROL DETAILS

DATE REVISED	DATE FILMED	DATE REVISED	DATE FILMED	FED.RD. DIST.NO.	STATE	FED.AID PROJ.NO.	SHEET NO.	TOTAL SHEETS
				6	ARK.			
				JOB NO.		020629	42	122

(2) TEMPORARY EROSION CONTROL DETAILS

STATE OF ARKANSAS
LICENSED PROFESSIONAL ENGINEER
No. 11425
TRINITY D. SMITH

Sep 18 2020 12:50 PM

DocuSign

STAGE I:

ROCK DITCH CHECKS (E-6)
(9 LOCATIONS = 27 CU. YDS.)

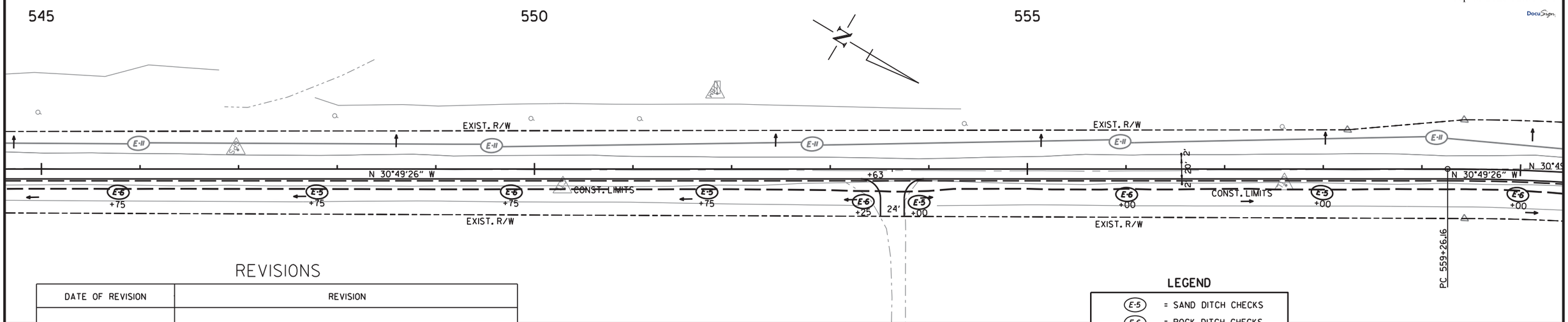

REVISIONS

DATE OF REVISION	REVISION

LEGEND

E-5	= SAND DITCH CHECKS
E-6	= ROCK DITCH CHECKS
E-11	= SILT FENCE

NOTE: PERIMETER CONTROLS SHALL BE PLACED AS CLEARING AND GRUBBING OPERATIONS ARE STARTED. RETAIN ALL EROSION CONTROL DEVICES UNTIL END OF CONSTRUCTION UNLESS OTHERWISE NOTED.

STAGE I:

ROCK DITCH CHECKS (E-6)
(5 LOCATIONS = 15 CU. YDS.)

SILT FENCE (E-11)
400 LIN FT

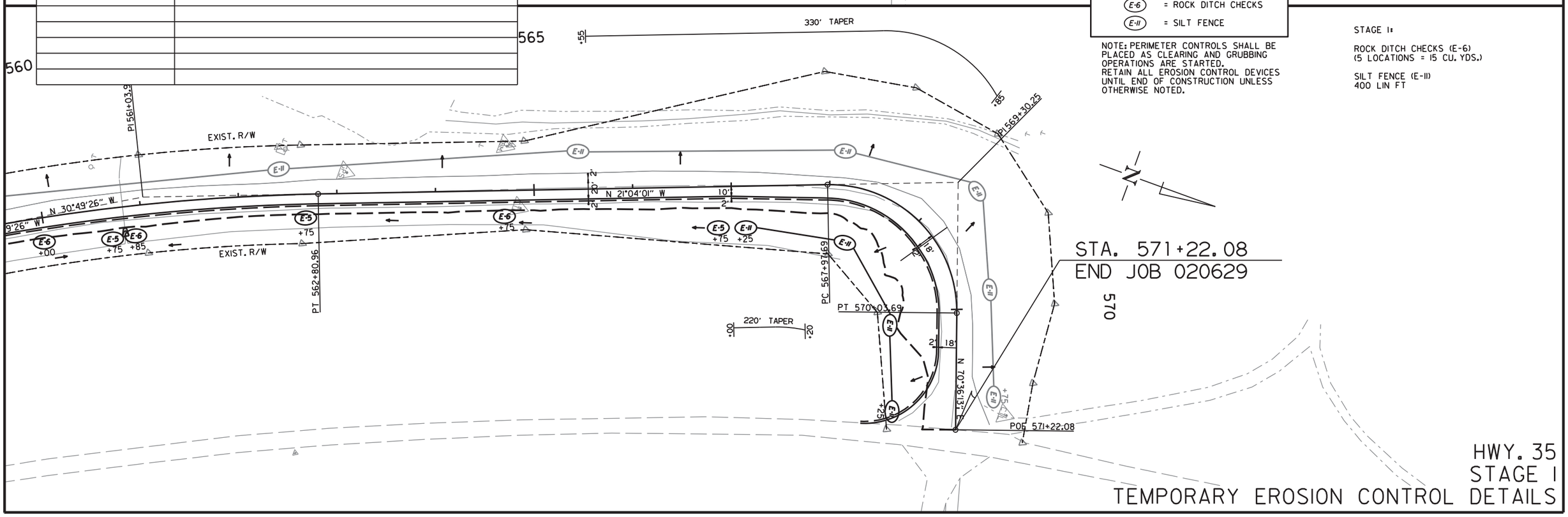

HWY. 35
STAGE I
TEMPORARY EROSION CONTROL DETAILS

6/17/2020

R020629.DGN

DATE REVISED	DATE FILMED	DATE REVISED	DATE FILMED	FED.RD. DIST.NO.	STATE	FED.AID PROJ.NO.	SHEET NO.	TOTAL SHEETS
				6	ARK.			
				JOB NO.		020629	43	122

2 TEMPORARY EROSION CONTROL DETAILS

STATE OF ARKANSAS
LICENSED PROFESSIONAL ENGINEER
No. 11425
TRINITY D. SMITH

Sep 18 2020 12:50 PM

DocuSign

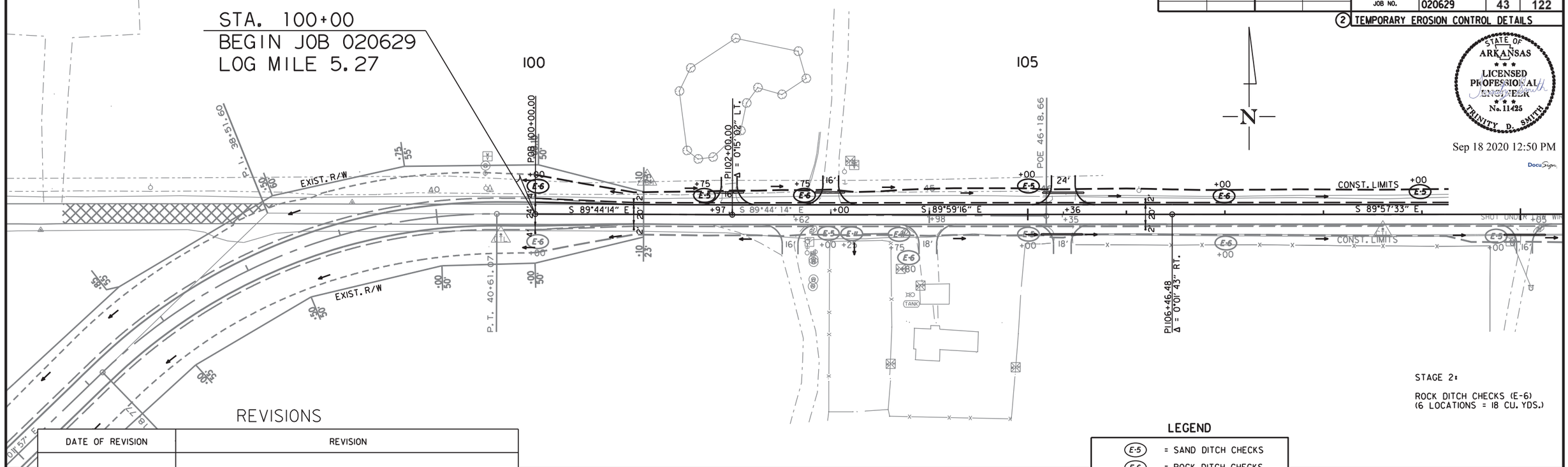

STAGE 2:

ROCK DITCH CHECKS (E-6)
(6 LOCATIONS = 18 CU. YDS.)

REVISIONS

DATE OF REVISION	REVISION

LEGEND

E-5	= SAND DITCH CHECKS
E-6	= ROCK DITCH CHECKS
E-11	= SILT FENCE

NOTE: PERIMETER CONTROLS SHALL BE PLACED AS CLEARING AND GRUBBING OPERATIONS ARE STARTED. RETAIN ALL EROSION CONTROL DEVICES UNTIL END OF CONSTRUCTION UNLESS OTHERWISE NOTED.

STAGE 2:

ROCK DITCH CHECKS (E-6)
(5 LOCATIONS = 15 CU. YDS.)

SILT FENCE (E-11)
890 LIN FT

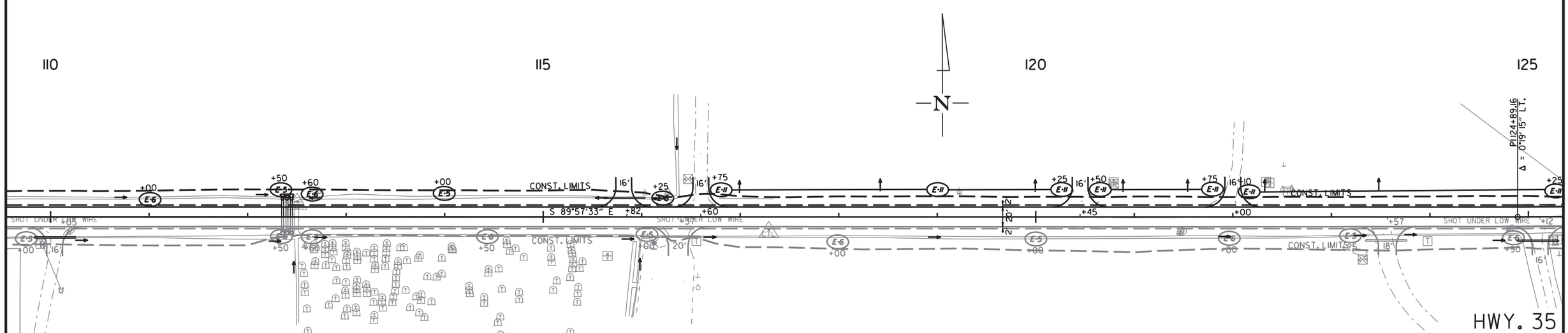

6/17/2020

R020629.DGN

HWY. 35
STAGE 2
TEMPORARY EROSION CONTROL DETAILS

DATE REVISED	DATE FILMED	DATE REVISED	DATE FILMED	FED.RD. DIST.NO.	STATE	FED.AID PROJ.NO.	SHEET NO.	TOTAL SHEETS
				6	ARK.			
				JOB NO.		020629	44	122

2 TEMPORARY EROSION CONTROL DETAILS

STATE OF ARKANSAS
LICENSED PROFESSIONAL ENGINEER
No. 11425
TRINITY D. SMITH

Sep 18 2020 12:50 PM

DocuSign

STAGE 2:

ROCK DITCH CHECKS (E-6)
(8 LOCATIONS = 24 CU. YDS.)

SILT FENCE (E-11)
175 LIN FT

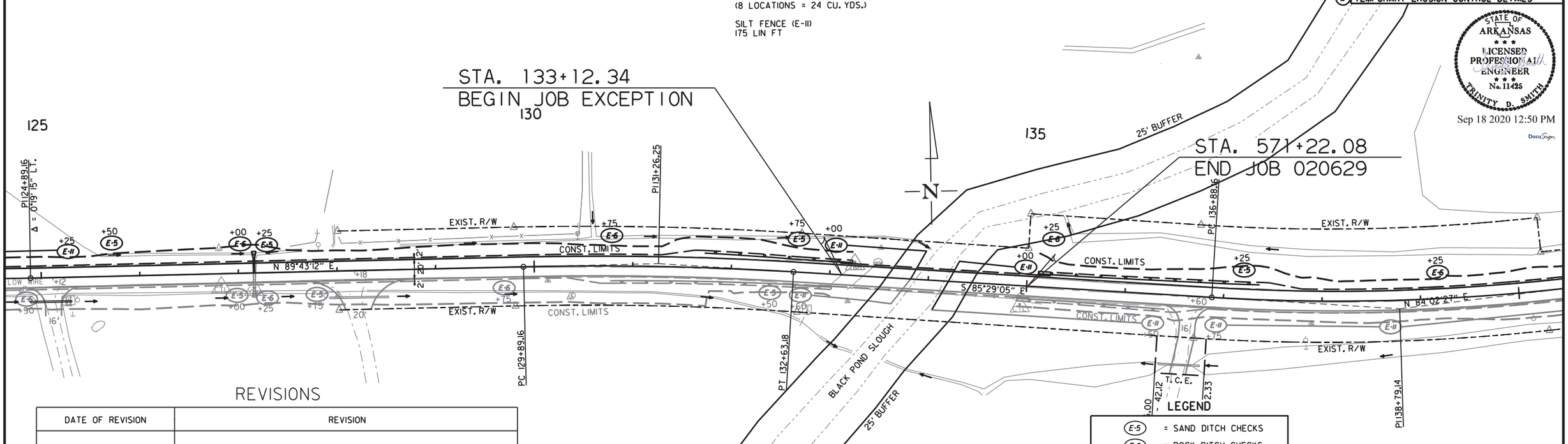

REVISIONS

DATE OF REVISION	REVISION

LEGEND

E-5	= SAND DITCH CHECKS
E-6	= ROCK DITCH CHECKS
E-11	= SILT FENCE

NOTE: PERIMETER CONTROLS SHALL BE PLACED AS CLEARING AND GRUBBING OPERATIONS ARE STARTED. RETAIN ALL EROSION CONTROL DEVICES UNTIL END OF CONSTRUCTION UNLESS OTHERWISE NOTED.

STAGE 2:

ROCK DITCH CHECKS (E-6)
(7 LOCATIONS = 21 CU. YDS.)

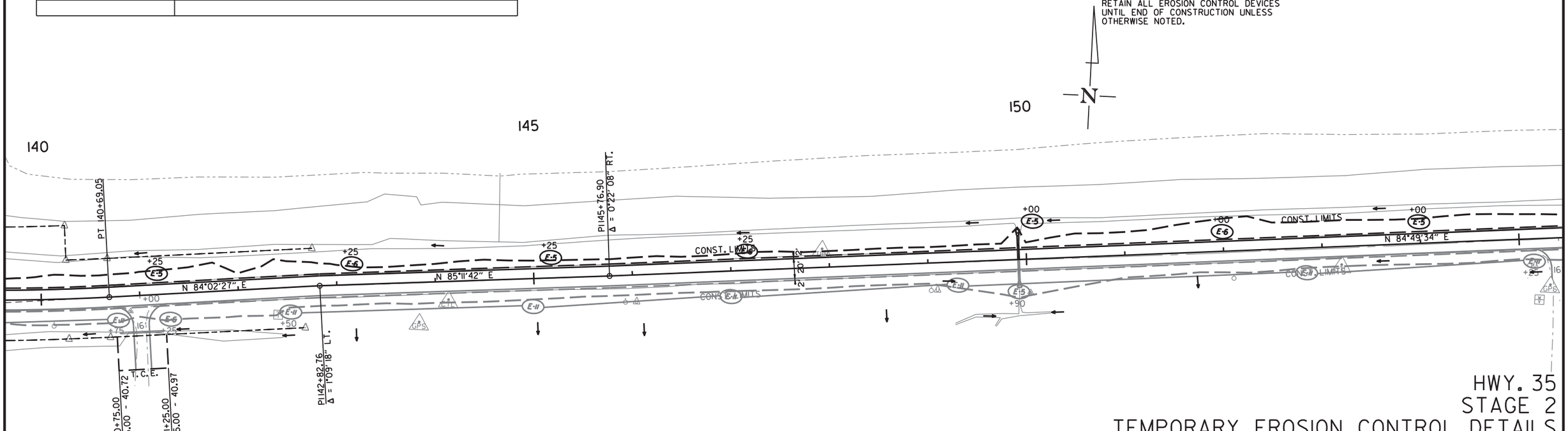

6/17/2020

R020629.DGN

HWY. 35
STAGE 2
TEMPORARY EROSION CONTROL DETAILS

DATE REVISED	DATE FILMED	DATE REVISED	DATE FILMED	FED.RD. DIST.NO.	STATE	FED.AID PROJ.NO.	SHEET NO.	TOTAL SHEETS
				6	ARK.			
				JOB NO.		020629	45	122

(2) TEMPORARY EROSION CONTROL DETAILS

STATE OF ARKANSAS
LICENSED PROFESSIONAL ENGINEER
No. 11425
TRINITY D. SMITH

Sep 18 2020 12:51 PM

DocuSign

STAGE 2:

ROCK DITCH CHECKS (E-6)
(8 LOCATIONS = 24 CU. YDS.)

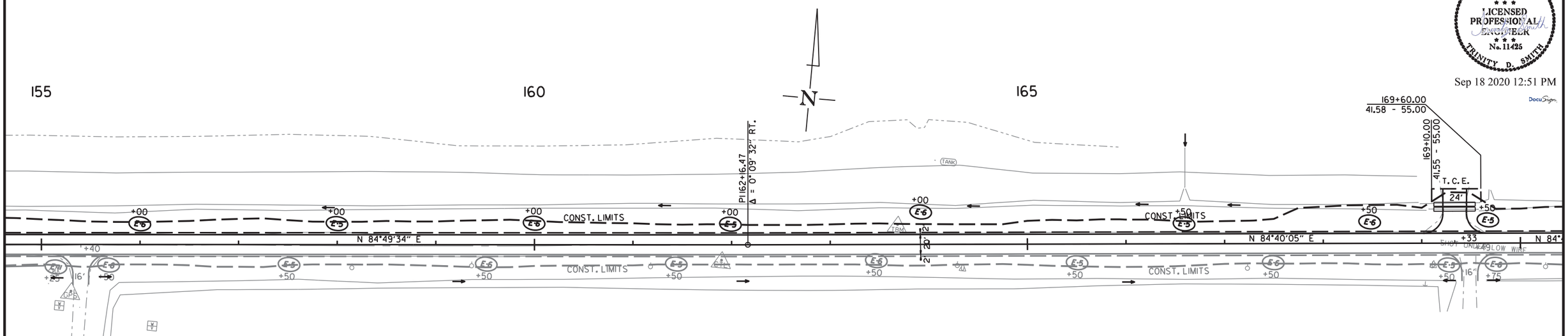

REVISIONS

DATE OF REVISION	REVISION

LEGEND

E-5	= SAND DITCH CHECKS
E-6	= ROCK DITCH CHECKS
E-11	= SILT FENCE

NOTE: PERIMETER CONTROLS SHALL BE PLACED AS CLEARING AND GRUBBING OPERATIONS ARE STARTED. RETAIN ALL EROSION CONTROL DEVICES UNTIL END OF CONSTRUCTION UNLESS OTHERWISE NOTED.

STAGE 2:

ROCK DITCH CHECKS (E-6)
(7 LOCATIONS = 21 CU. YDS.)

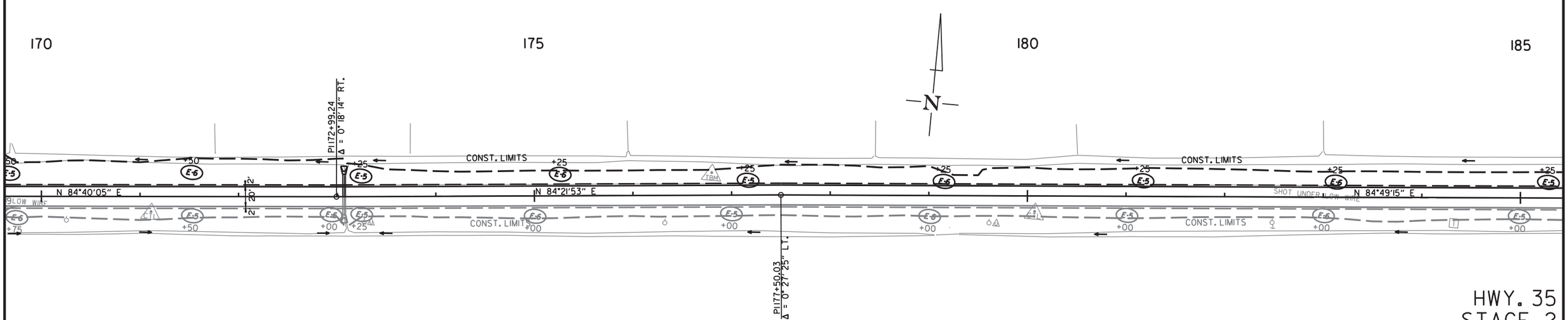

6/17/2020

R020629.DGN

HWY. 35
STAGE 2
TEMPORARY EROSION CONTROL DETAILS

DATE REVISED	DATE FILMED	DATE REVISED	DATE FILMED

FED.RD. DIST.NO.	STATE	FED.AID PROJ.NO.	SHEET NO.	TOTAL SHEETS
6	ARK.			
JOB NO.		020629	46	122

(2) TEMPORARY EROSION CONTROL DETAILS

STATE OF ARKANSAS
LICENSED PROFESSIONAL ENGINEER
No. 11425
TRINITY D. SMITH

Sep 18 2020 12:51 PM

DocuSign

STAGE 2:

ROCK DITCH CHECKS (E-6)
(9 LOCATIONS = 27 CU. YDS.)

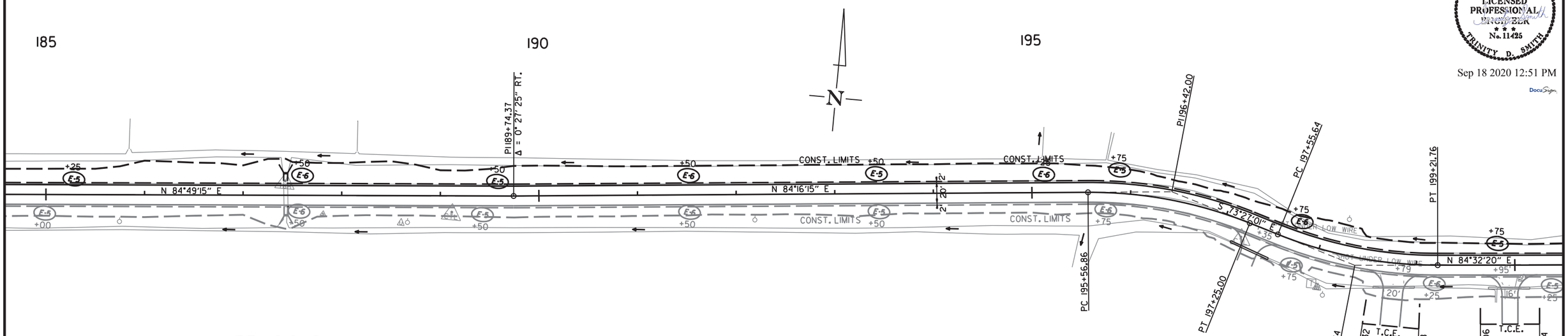

REVISIONS

DATE OF REVISION	REVISION

LEGEND

E-5	= SAND DITCH CHECKS
E-6	= ROCK DITCH CHECKS
E-11	= SILT FENCE

NOTE: PERIMETER CONTROLS SHALL BE PLACED AS CLEARING AND GRUBBING OPERATIONS ARE STARTED. RETAIN ALL EROSION CONTROL DEVICES UNTIL END OF CONSTRUCTION UNLESS OTHERWISE NOTED.

STAGE 2:

ROCK DITCH CHECKS (E-6)
(3 LOCATIONS = 9 CU. YDS.)

SILT FENCE (E-11)
1200 LIN FT

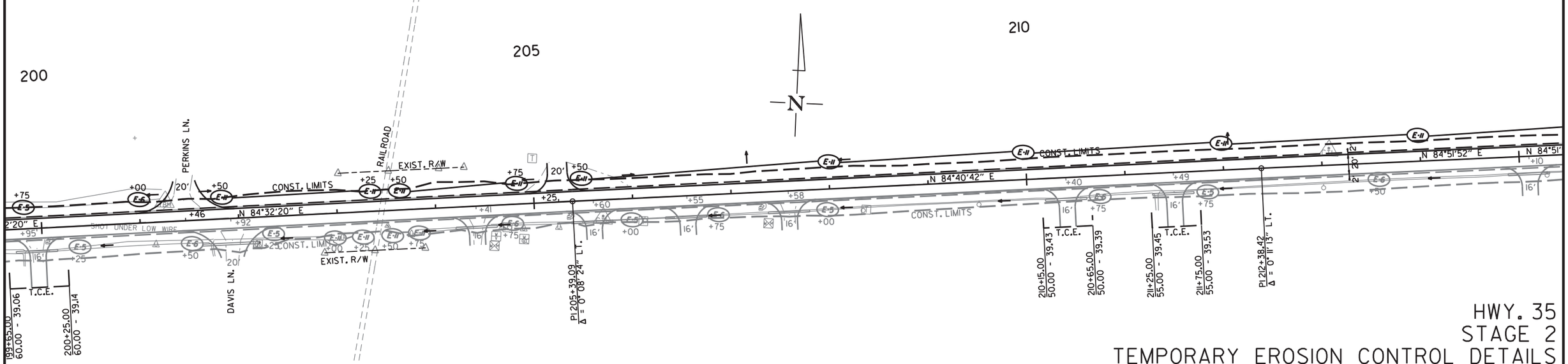

6/17/2020

R020629.DGN

HWY. 35
STAGE 2
TEMPORARY EROSION CONTROL DETAILS

DATE REVISED	DATE FILMED	DATE REVISED	DATE FILMED	FED.RD. DIST.NO.	STATE	FED.AID PROJ.NO.	SHEET NO.	TOTAL SHEETS
				6	ARK.			
				JOB NO.		020629	47	122

(2) TEMPORARY EROSION CONTROL DETAILS

STATE OF ARKANSAS
LICENSED PROFESSIONAL ENGINEER
No. 11425
TRINITY D. SMITH

Sep 18 2020 12:51 PM

DocuSign

STAGE 2:

ROCK DITCH CHECKS (E-6)
(8 LOCATIONS = 24 CU. YDS.)

SILT FENCE (E-11)
525 LIN FT

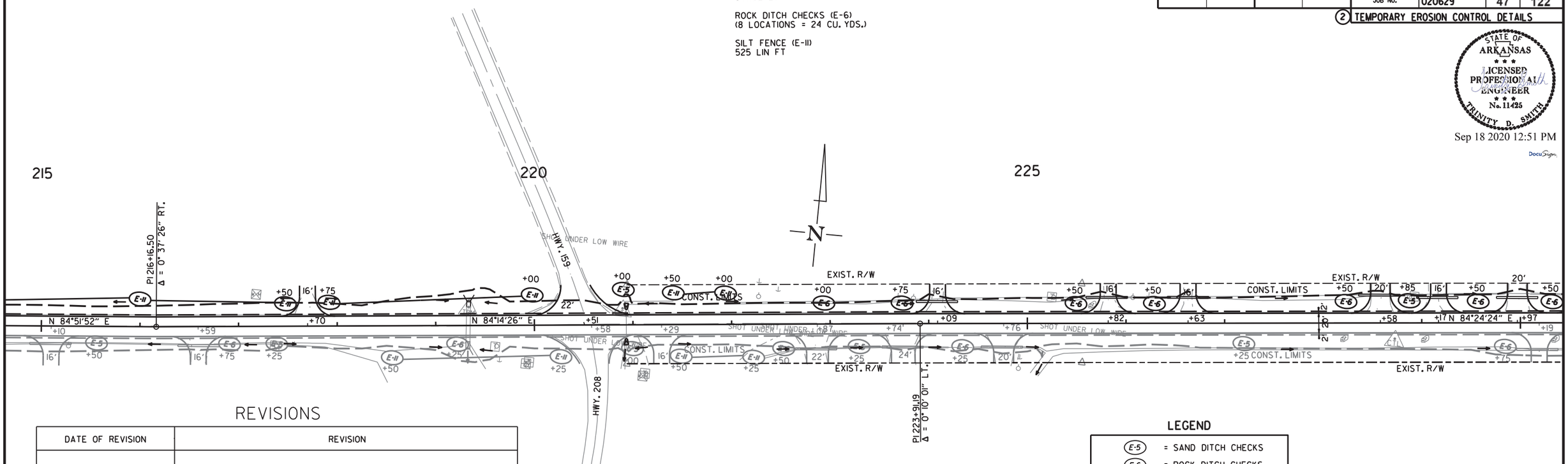

REVISIONS

DATE OF REVISION	REVISION

LEGEND

E-5	= SAND DITCH CHECKS
E-6	= ROCK DITCH CHECKS
E-11	= SILT FENCE

NOTE: PERIMETER CONTROLS SHALL BE PLACED AS CLEARING AND GRUBBING OPERATIONS ARE STARTED. RETAIN ALL EROSION CONTROL DEVICES UNTIL END OF CONSTRUCTION UNLESS OTHERWISE NOTED.

STAGE 2:

ROCK DITCH CHECKS (E-6)
(11 LOCATIONS = 33 CU. YDS.)

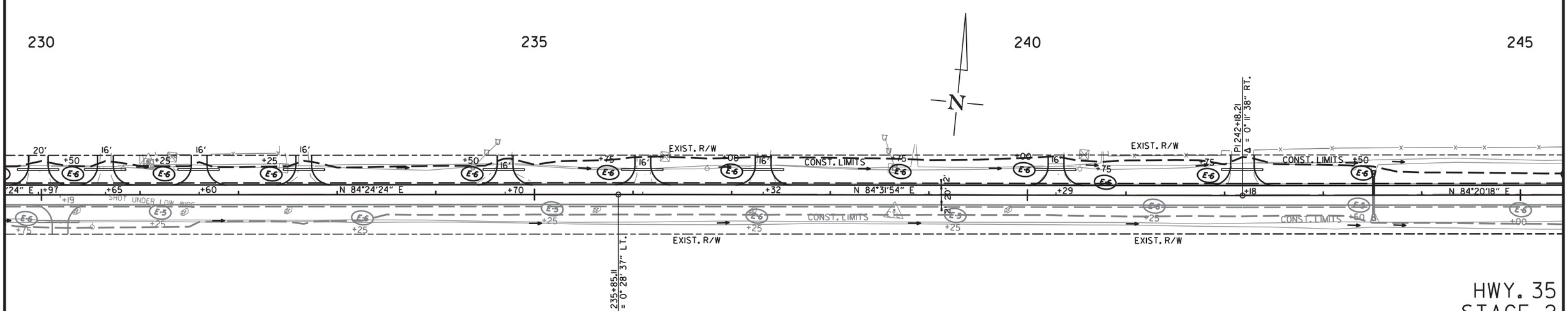

6/17/2020

R020629.DGN

HWY. 35
STAGE 2
TEMPORARY EROSION CONTROL DETAILS

DATE REVISED	DATE FILMED	DATE REVISED	DATE FILMED	FED.RD. DIST.NO.	STATE	FED.AID PROJ.NO.	SHEET NO.	TOTAL SHEETS
				6	ARK.			
				JOB NO.		020629	48	122

(2) TEMPORARY EROSION CONTROL DETAILS

STATE OF ARKANSAS
LICENSED PROFESSIONAL ENGINEER
No. 11425
TRINITY D. SMITH

Sep 18 2020 12:52 PM

DocuSign

STAGE 2:

ROCK DITCH CHECKS (E-6)
(4 LOCATIONS = 12 CU. YDS.)

SILT FENCE (E-11)
700 LIN FT

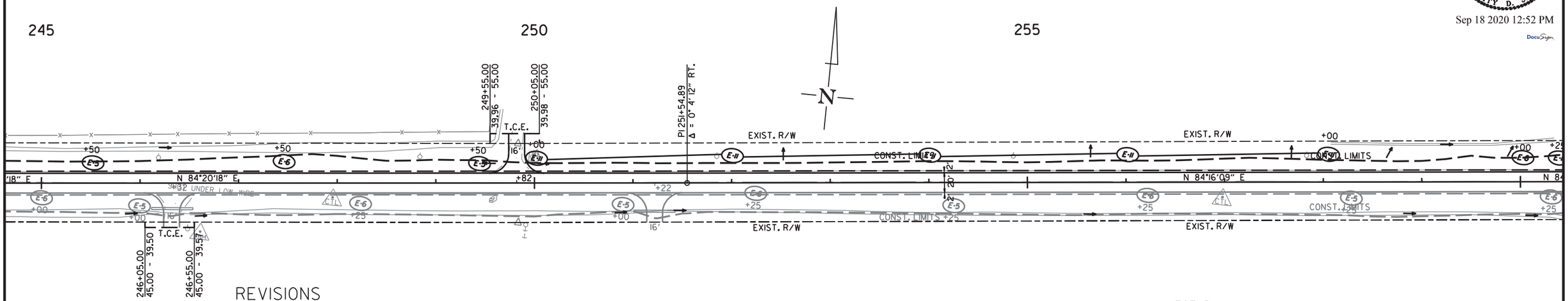

REVISIONS

DATE OF REVISION	REVISION

LEGEND

E-5	= SAND DITCH CHECKS
E-6	= ROCK DITCH CHECKS
E-11	= SILT FENCE

NOTE: PERIMETER CONTROLS SHALL BE PLACED AS CLEARING AND GRUBBING OPERATIONS ARE STARTED. RETAIN ALL EROSION CONTROL DEVICES UNTIL END OF CONSTRUCTION UNLESS OTHERWISE NOTED.

STAGE 2:

ROCK DITCH CHECKS (E-6)
(4 LOCATIONS = 12 CU. YDS.)

SILT FENCE (E-11)
800 LIN FT

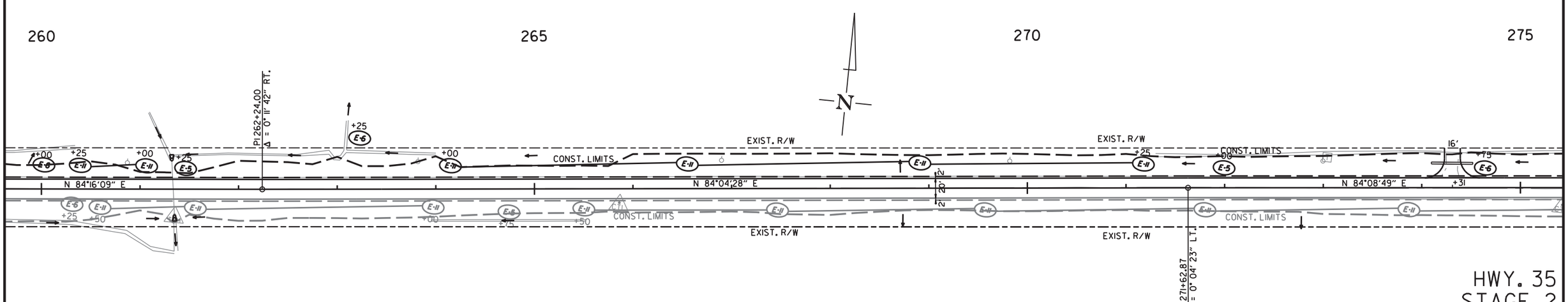

6/17/2020

R020629.DGN

HWY. 35
STAGE 2
TEMPORARY EROSION CONTROL DETAILS

DATE REVISED	DATE FILMED	DATE REVISED	DATE FILMED	FED.RD. DIST.NO.	STATE	FED.AID PROJ.NO.	SHEET NO.	TOTAL SHEETS
				6	ARK.			
				JOB NO.		020629	49	122

(2) TEMPORARY EROSION CONTROL DETAILS

STATE OF ARKANSAS
LICENSED PROFESSIONAL ENGINEER
No. 11425
TRINITY D. SMITH

Sep 18 2020 12:52 PM

DocuSign

STAGE 2:

ROCK DITCH CHECKS (E-6)
(4 LOCATIONS = 12 CU. YDS.)

SILT FENCE (E-11)
650 LIN FT

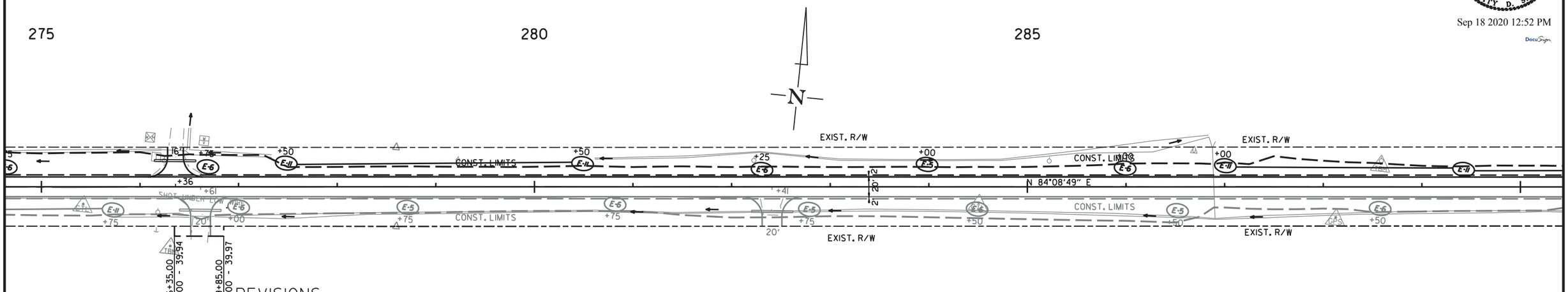

REVISIONS

DATE OF REVISION	REVISION

LEGEND

E-5	= SAND DITCH CHECKS
E-6	= ROCK DITCH CHECKS
E-11	= SILT FENCE

NOTE: PERIMETER CONTROLS SHALL BE PLACED AS CLEARING AND GRUBBING OPERATIONS ARE STARTED. RETAIN ALL EROSION CONTROL DEVICES UNTIL END OF CONSTRUCTION UNLESS OTHERWISE NOTED.

STAGE 2:

ROCK DITCH CHECKS (E-6)
(4 LOCATIONS = 12 CU. YDS.)

SILT FENCE (E-11)
875 LIN FT

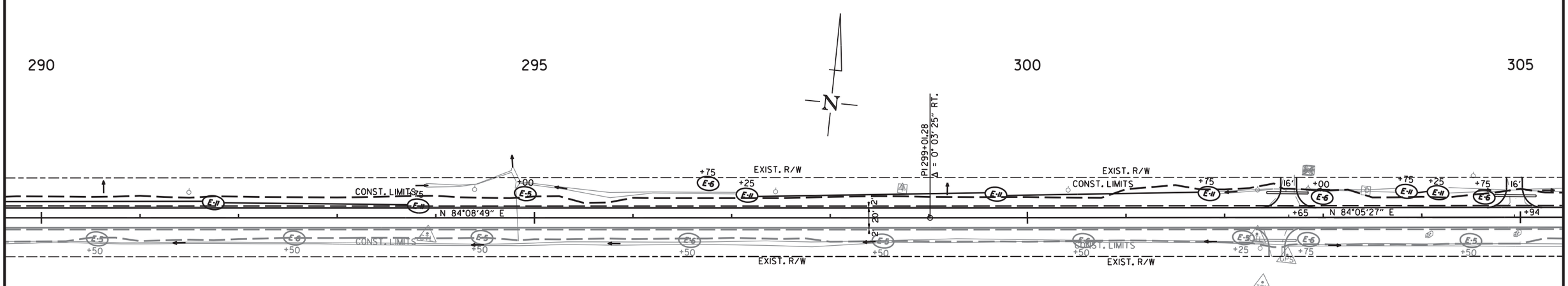

6/17/2020

R020629.DGN

HWY. 35
STAGE 2
TEMPORARY EROSION CONTROL DETAILS

DATE REVISED	DATE FILMED	DATE REVISED	DATE FILMED	FED.RD. DIST.NO.	STATE	FED.AID PROJ.NO.	SHEET NO.	TOTAL SHEETS
				6	ARK.			
				JOB NO.		020629	50	122

(2) TEMPORARY EROSION CONTROL DETAILS

STATE OF ARKANSAS
LICENSED PROFESSIONAL ENGINEER
No. 11425
TRINITY D. SMITH

Sep 18 2020 12:52 PM

DocuSign

STAGE 2:

ROCK DITCH CHECKS (E-6)
(7 LOCATIONS = 21 CU. YDS.)

SILT FENCE (E-11)
185 LIN FT

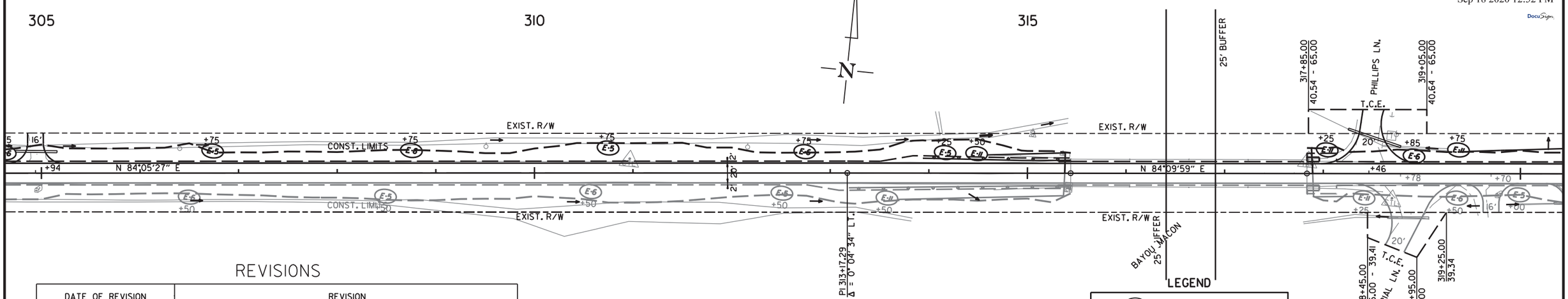

REVISIONS

DATE OF REVISION	REVISION

LEGEND

E-5	= SAND DITCH CHECKS
E-6	= ROCK DITCH CHECKS
E-11	= SILT FENCE

NOTE: PERIMETER CONTROLS SHALL BE PLACED AS CLEARING AND GRUBBING OPERATIONS ARE STARTED. RETAIN ALL EROSION CONTROL DEVICES UNTIL END OF CONSTRUCTION UNLESS OTHERWISE NOTED.

STAGE 2:

ROCK DITCH CHECKS (E-6)
(6 LOCATIONS = 18 CU. YDS.)

SILT FENCE (E-11)
275 LIN FT

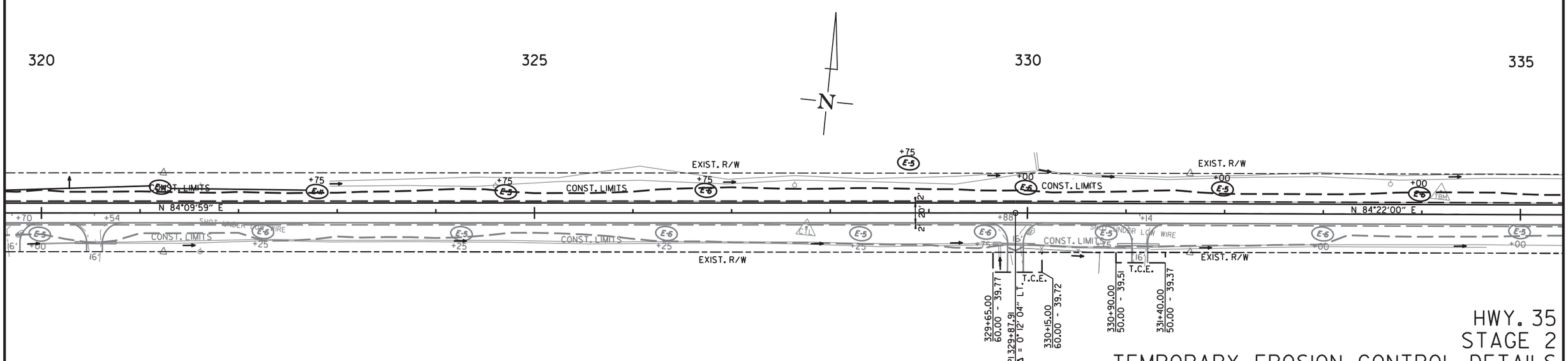

6/17/2020

R020629.DGN

HWY. 35
STAGE 2
TEMPORARY EROSION CONTROL DETAILS

DATE REVISED	DATE FILMED	DATE REVISED	DATE FILMED

FED.RD. DIST.NO.	STATE	FED.AID PROJ.NO.	SHEET NO.	TOTAL SHEETS
6	ARK.			
JOB NO.		020629	51	122

(2) TEMPORARY EROSION CONTROL DETAILS

STATE OF ARKANSAS
LICENSED PROFESSIONAL ENGINEER
No. 11425
TRINITY D. SMITH

Sep 18 2020 12:52 PM

DocuSign

STAGE 2:

ROCK DITCH CHECKS (E-6)
(9 LOCATIONS = 27 CU. YDS.)

SILT FENCE (E-11)
50 LIN FT

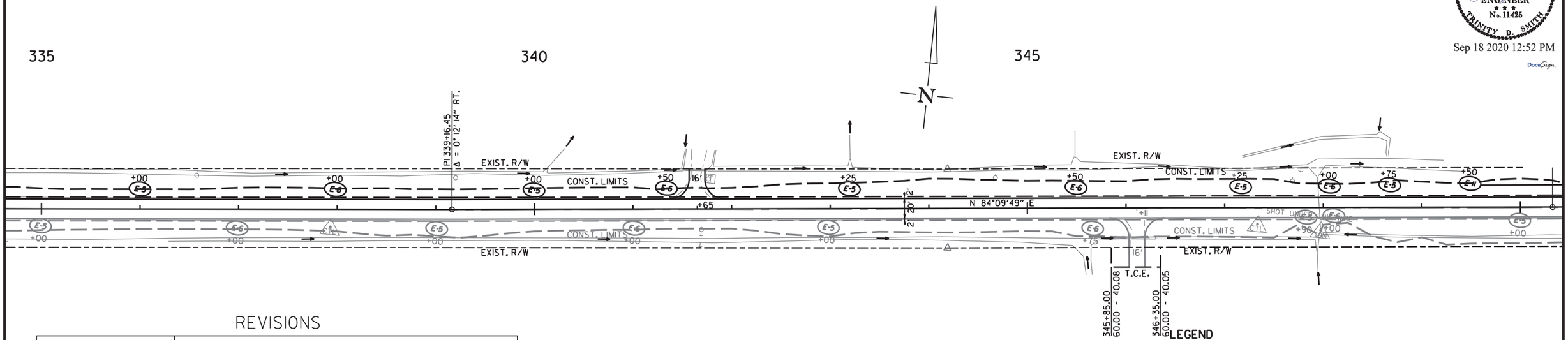

REVISIONS

DATE OF REVISION	REVISION

LEGEND

E-5	= SAND DITCH CHECKS
E-6	= ROCK DITCH CHECKS
E-11	= SILT FENCE

NOTE: PERIMETER CONTROLS SHALL BE PLACED AS CLEARING AND GRUBBING OPERATIONS ARE STARTED. RETAIN ALL EROSION CONTROL DEVICES UNTIL END OF CONSTRUCTION UNLESS OTHERWISE NOTED.

STAGE 2:

ROCK DITCH CHECKS (E-6)
(3 LOCATIONS = 9 CU. YDS.)

SILT FENCE (E-11)
985 LIN FT

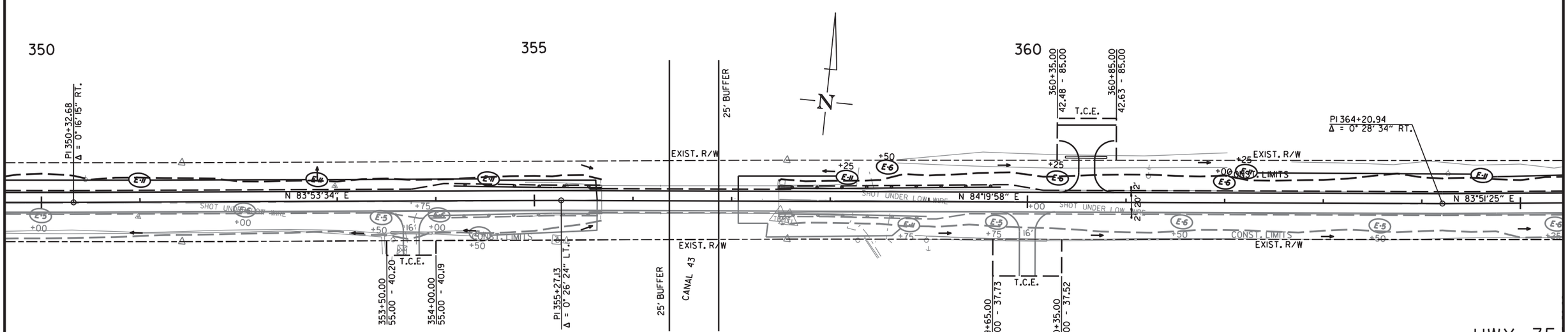

HWY. 35
STAGE 2
TEMPORARY EROSION CONTROL DETAILS

6/17/2020

R020629.DGN

DATE REVISED	DATE FILMED	DATE REVISED	DATE FILMED	FED.RD. DIST.NO.	STATE	FED.AID PROJ.NO.	SHEET NO.	TOTAL SHEETS
				6	ARK.			
				JOB NO.		020629	52	122

(2) TEMPORARY EROSION CONTROL DETAILS

STATE OF ARKANSAS
LICENSED PROFESSIONAL ENGINEER
No. 11425
TRINITY D. SMITH

Sep 18 2020 12:53 PM

DocuSign

STAGE 2:

ROCK DITCH CHECKS (E-6)
(5 LOCATIONS = 15 CU. YDS.)

SILT FENCE (E-11)
400 LIN FT

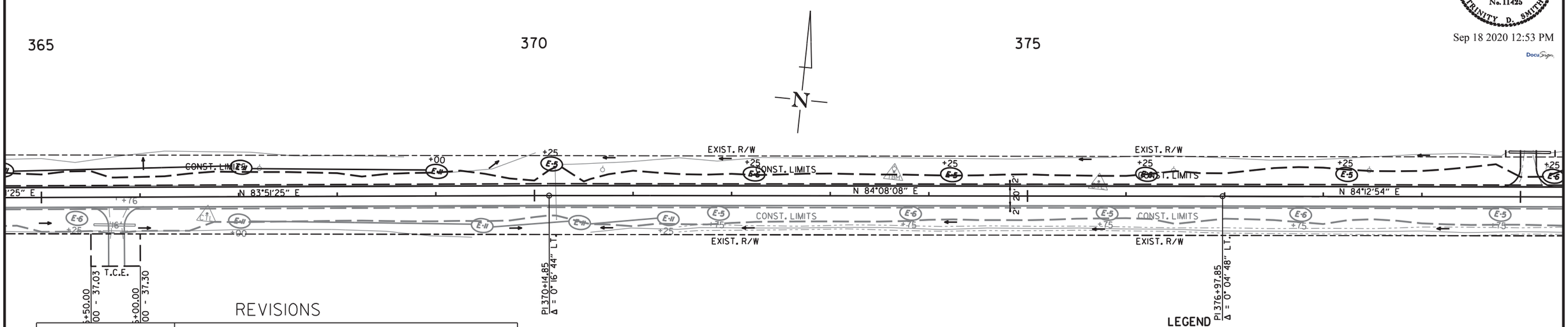

REVISIONS

DATE OF REVISION	REVISION

LEGEND

E-5	= SAND DITCH CHECKS
E-6	= ROCK DITCH CHECKS
E-11	= SILT FENCE

NOTE: PERIMETER CONTROLS SHALL BE PLACED AS CLEARING AND GRUBBING OPERATIONS ARE STARTED. RETAIN ALL EROSION CONTROL DEVICES UNTIL END OF CONSTRUCTION UNLESS OTHERWISE NOTED.

STAGE 2:

ROCK DITCH CHECKS (E-6)
(2 LOCATIONS = 6 CU. YDS.)

SILT FENCE (E-11)
1050 LIN FT

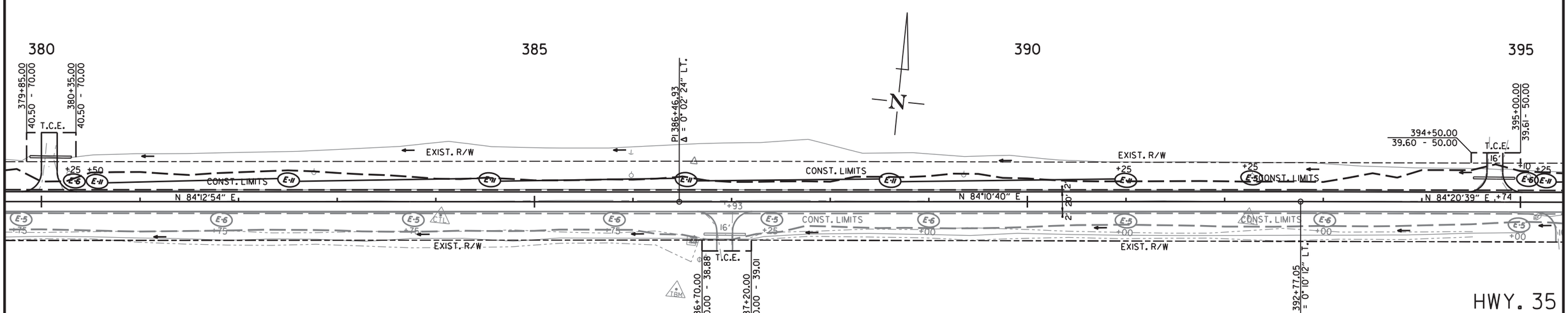

6/17/2020

R020629.DGN

HWY. 35
STAGE 2
TEMPORARY EROSION CONTROL DETAILS

DATE REVISED	DATE FILMED	DATE REVISED	DATE FILMED	FED.RD. DIST.NO.	STATE	FED.AID PROJ.NO.	SHEET NO.	TOTAL SHEETS
				6	ARK.			
				JOB NO.		020629	53	122

(2) TEMPORARY EROSION CONTROL DETAILS

STATE OF ARKANSAS
LICENSED PROFESSIONAL ENGINEER
No. 11425
TRINITY D. SMITH

Sep 18 2020 12:53 PM

DocuSign

STAGE 2:

ROCK DITCH CHECKS (E-6)
(1 LOCATIONS = 3 CU. YDS.)

SILT FENCE (E-11)
1500 LIN FT

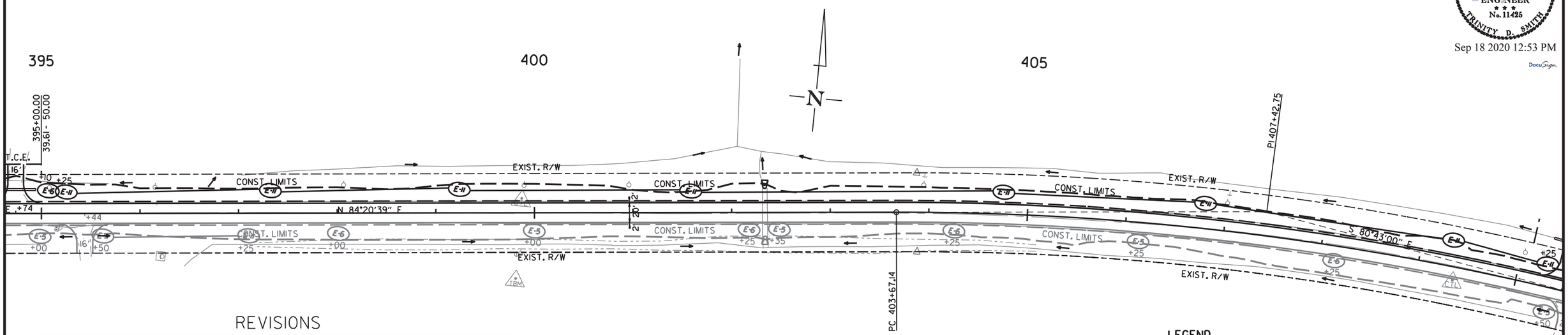

REVISIONS

DATE OF REVISION	REVISION

LEGEND

E-5	= SAND DITCH CHECKS
E-6	= ROCK DITCH CHECKS
E-11	= SILT FENCE

NOTE: PERIMETER CONTROLS SHALL BE PLACED AS CLEARING AND GRUBBING OPERATIONS ARE STARTED. RETAIN ALL EROSION CONTROL DEVICES UNTIL END OF CONSTRUCTION UNLESS OTHERWISE NOTED.

STAGE 2:

ROCK DITCH CHECKS (E-6)
(8 LOCATIONS = 24 CU. YDS.)

SILT FENCE (E-11)
75 LIN FT

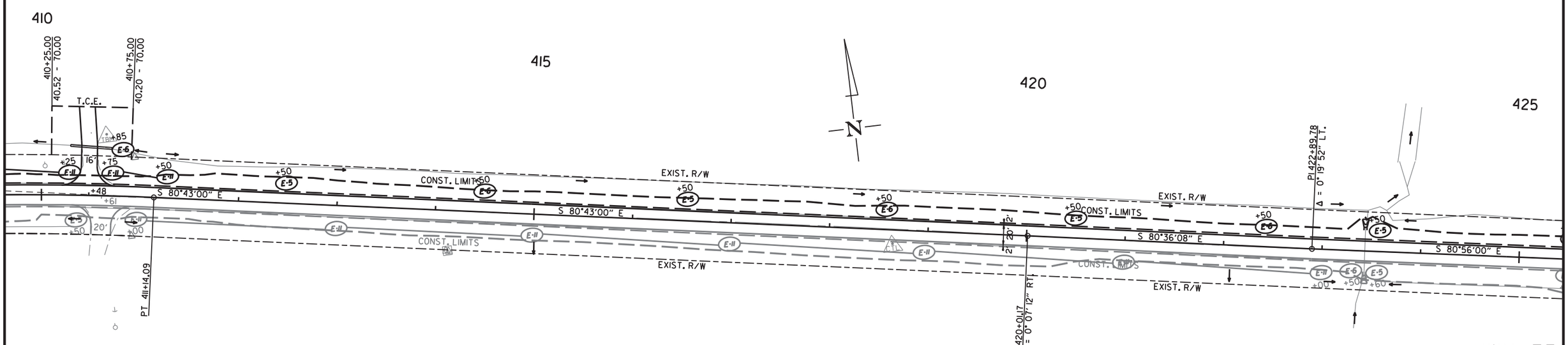

6/17/2020

R020629.DGN

HWY. 35
STAGE 2
TEMPORARY EROSION CONTROL DETAILS

DATE REVISED	DATE FILMED	DATE REVISED	DATE FILMED	FED.RD. DIST.NO.	STATE	FED.AID PROJ.NO.	SHEET NO.	TOTAL SHEETS
				6	ARK.			
				JOB NO.		020629	54	122

(2) TEMPORARY EROSION CONTROL DETAILS

STATE OF ARKANSAS
LICENSED PROFESSIONAL ENGINEER
No. 11425
TRINITY D. SMITH

Sep 18 2020 12:53 PM

DocuSign

STAGE 2:

ROCK DITCH CHECKS (E-6)
(8 LOCATIONS = 24 CU. YDS.)

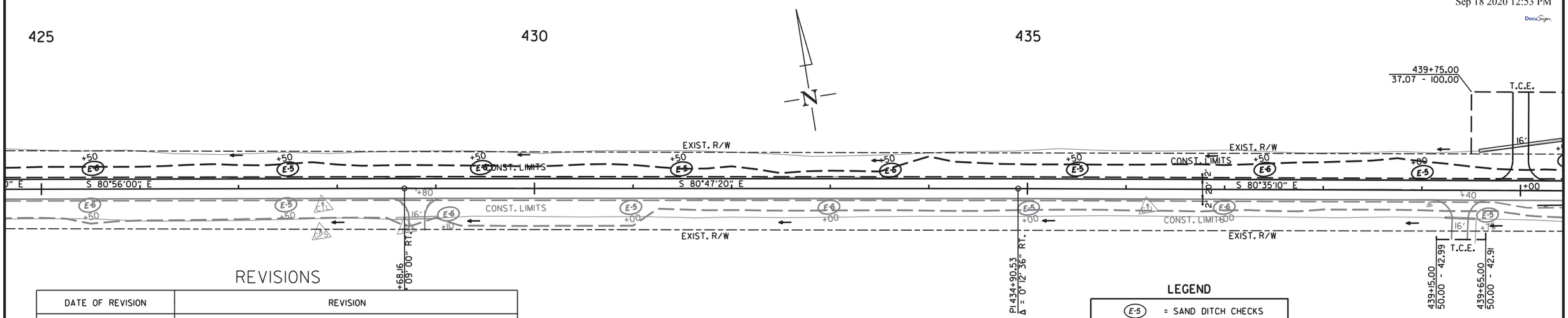

REVISIONS

DATE OF REVISION	REVISION

LEGEND

E-5	= SAND DITCH CHECKS
E-6	= ROCK DITCH CHECKS
E-11	= SILT FENCE

NOTE: PERIMETER CONTROLS SHALL BE PLACED AS CLEARING AND GRUBBING OPERATIONS ARE STARTED. RETAIN ALL EROSION CONTROL DEVICES UNTIL END OF CONSTRUCTION UNLESS OTHERWISE NOTED.

STAGE 2:

ROCK DITCH CHECKS (E-6)
(4 LOCATIONS = 12 CU. YDS.)

SILT FENCE (E-11)
750 LIN FT

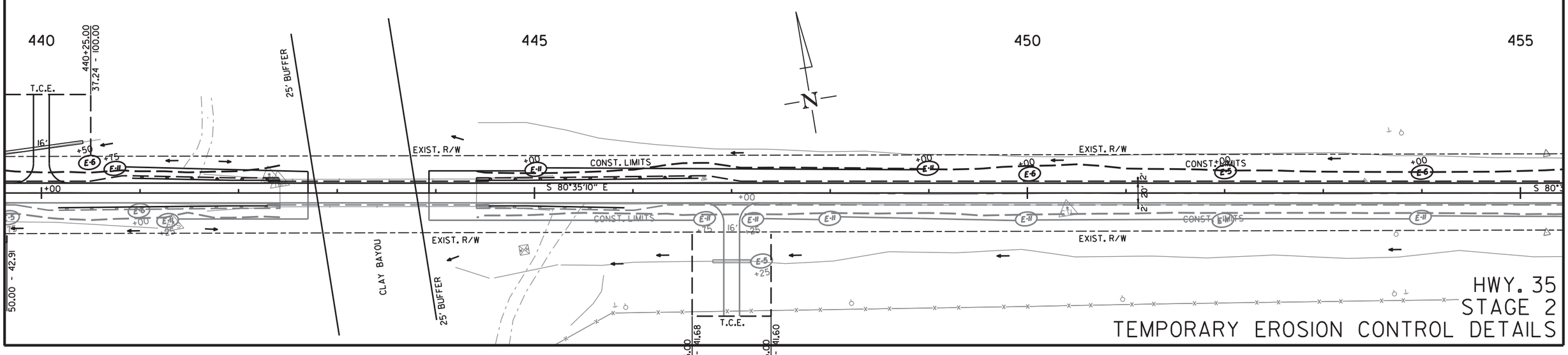

6/17/2020

R020629.DGN

HWY. 35
STAGE 2
TEMPORARY EROSION CONTROL DETAILS

DATE REVISED	DATE FILMED	DATE REVISED	DATE FILMED	FED.RD. DIST.NO.	STATE	FED.AID PROJ.NO.	SHEET NO.	TOTAL SHEETS
				6	ARK.			
				JOB NO.		020629	55	122

(2) TEMPORARY EROSION CONTROL DETAILS

STATE OF ARKANSAS
LICENSED PROFESSIONAL ENGINEER
No. 11425
TRINITY D. SMITH

Sep 18 2020 12:53 PM

DocuSign

STAGE 2:

ROCK DITCH CHECKS (E-6)
(8 LOCATIONS = 24 CU. YDS.)

SILT FENCE (E-11)
75 LIN FT

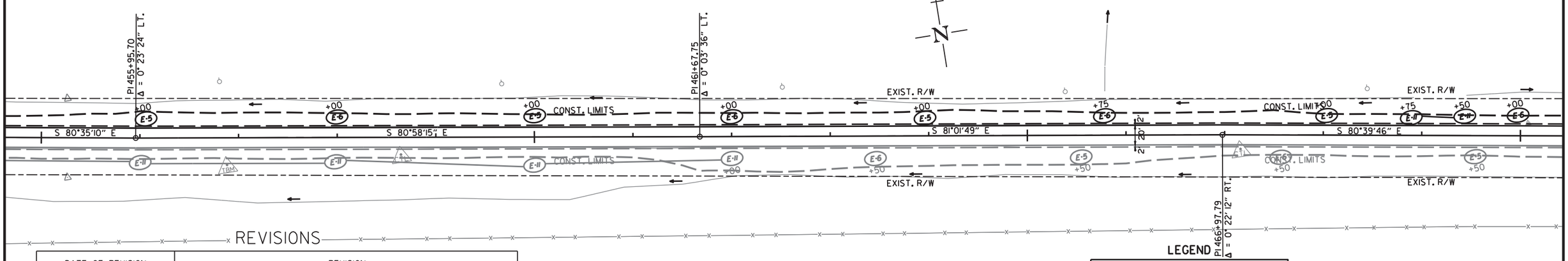

REVISIONS

DATE OF REVISION	REVISION

LEGEND

E-5	= SAND DITCH CHECKS
E-6	= ROCK DITCH CHECKS
E-11	= SILT FENCE

NOTE: PERIMETER CONTROLS SHALL BE PLACED AS CLEARING AND GRUBBING OPERATIONS ARE STARTED. RETAIN ALL EROSION CONTROL DEVICES UNTIL END OF CONSTRUCTION UNLESS OTHERWISE NOTED.

STAGE 2:

ROCK DITCH CHECKS (E-6)
(9 LOCATIONS = 27 CU. YDS.)

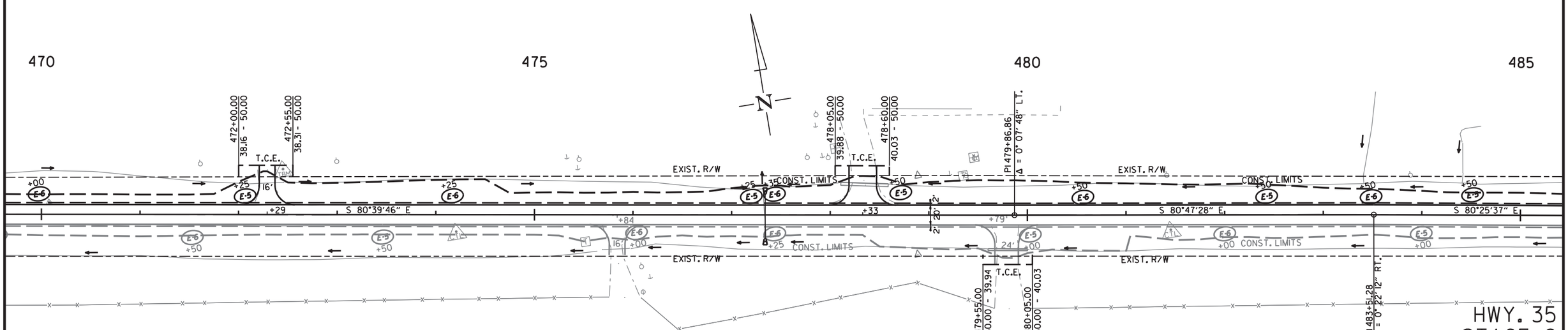

6/17/2020

R020629.DGN

HWY. 35
STAGE 2
TEMPORARY EROSION CONTROL DETAILS

DATE REVISED	DATE FILMED	DATE REVISED	DATE FILMED	FED.RD. DIST.NO.	STATE	FED.AID PROJ.NO.	SHEET NO.	TOTAL SHEETS
				6	ARK.			
				JOB NO.		020629	56	122

(2) TEMPORARY EROSION CONTROL DETAILS

STATE OF ARKANSAS
LICENSED PROFESSIONAL ENGINEER
No. 11425
TRINITY D. SMITH

Sep 18 2020 12:54 PM

DocuSign

STAGE 2:

ROCK DITCH CHECKS (E-6)
(4 LOCATIONS = 12 CU. YDS.)

SILT FENCE (E-11)
525 LIN FT

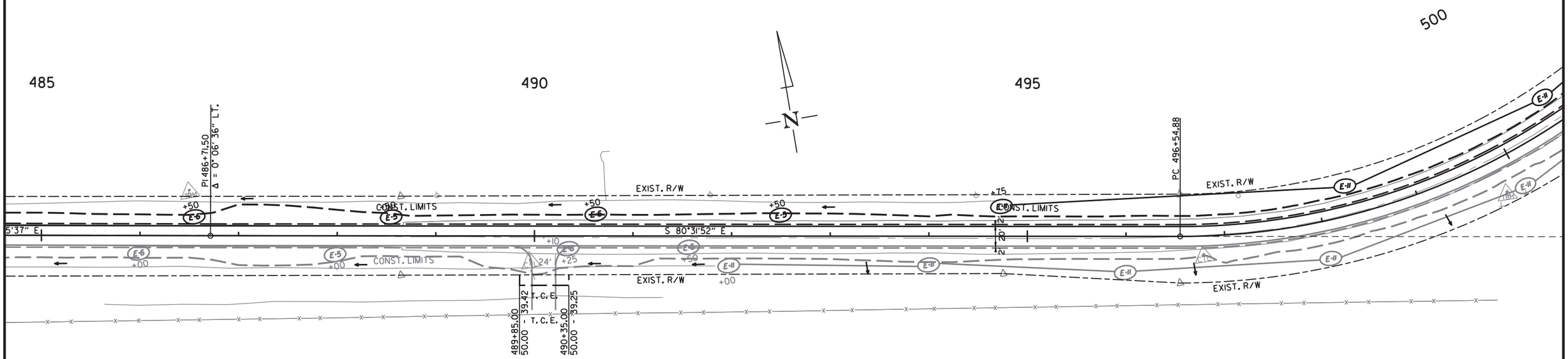

REVISIONS

DATE OF REVISION	REVISION

LEGEND

E-5	= SAND DITCH CHECKS
E-6	= ROCK DITCH CHECKS
E-11	= SILT FENCE

NOTE: PERIMETER CONTROLS SHALL BE PLACED AS CLEARING AND GRUBBING OPERATIONS ARE STARTED. RETAIN ALL EROSION CONTROL DEVICES UNTIL END OF CONSTRUCTION UNLESS OTHERWISE NOTED.

HWY. 35
STAGE 2
TEMPORARY EROSION CONTROL DETAILS

6/17/2020

R020629.DGN

DATE REVISED	DATE FILMED	DATE REVISED	DATE FILMED	FED.RD. DIST.NO.	STATE	FED.AID PROJ.NO.	SHEET NO.	TOTAL SHEETS
				6	ARK.			
				JOB NO.		020629	57	122

(2) TEMPORARY EROSION CONTROL DETAILS

STATE OF ARKANSAS
LICENSED PROFESSIONAL ENGINEER
No. 11425
TRINITY D. SMITH

Sep 18 2020 12:54 PM

DocuSign

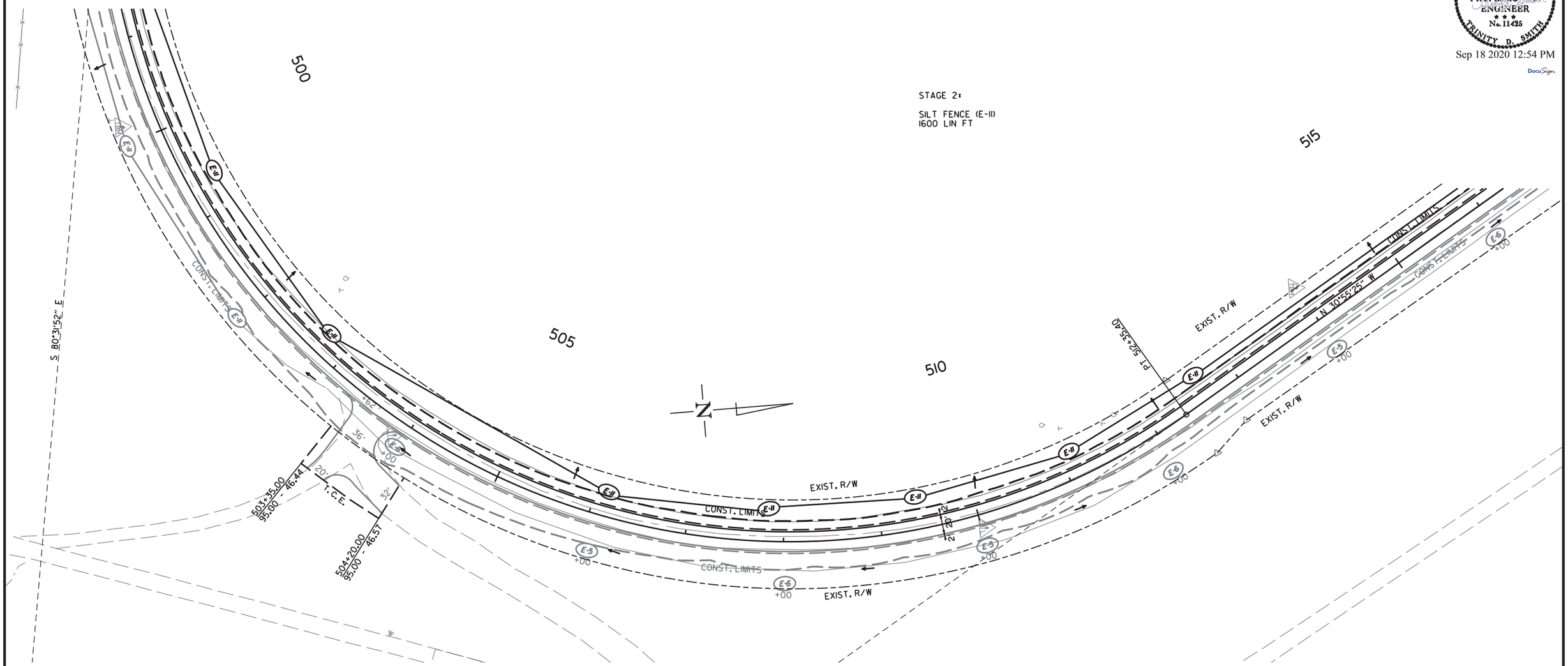

REVISIONS

DATE OF REVISION	REVISION

LEGEND

E-5	= SAND DITCH CHECKS
E-6	= ROCK DITCH CHECKS
E-11	= SILT FENCE

NOTE: PERIMETER CONTROLS SHALL BE PLACED AS CLEARING AND GRUBBING OPERATIONS ARE STARTED.
RETAIN ALL EROSION CONTROL DEVICES UNTIL END OF CONSTRUCTION UNLESS OTHERWISE NOTED.

HWY. 35
STAGE 2
TEMPORARY EROSION CONTROL DETAILS

6/17/2020

R020629.DGN

DATE REVISED	DATE FILMED	DATE REVISED	DATE FILMED	FED.RD. DIST.NO.	STATE	FED.AID PROJ.NO.	SHEET NO.	TOTAL SHEETS
				6	ARK.			
				JOB NO.		020629	58	122

(2) TEMPORARY EROSION CONTROL DETAILS

STATE OF ARKANSAS
LICENSED PROFESSIONAL ENGINEER
No. 11425
TRINITY D. SMITH

Sep 18 2020 12:55 PM

DocuSign

STAGE 2:

SILT FENCE (E-11)
1400 LIN FT

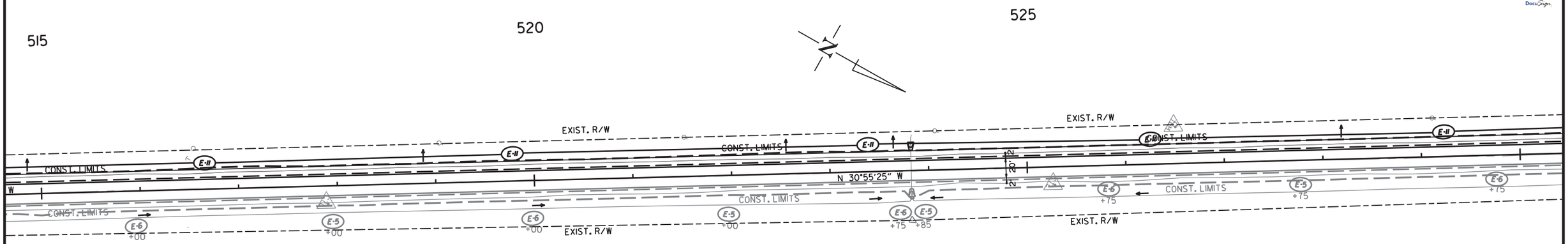

REVISIONS

DATE OF REVISION	REVISION

LEGEND

E-5	= SAND DITCH CHECKS
E-6	= ROCK DITCH CHECKS
E-11	= SILT FENCE

NOTE: PERIMETER CONTROLS SHALL BE PLACED AS CLEARING AND GRUBBING OPERATIONS ARE STARTED. RETAIN ALL EROSION CONTROL DEVICES UNTIL END OF CONSTRUCTION UNLESS OTHERWISE NOTED.

STAGE 2:

SILT FENCE (E-11)
1500 LIN FT

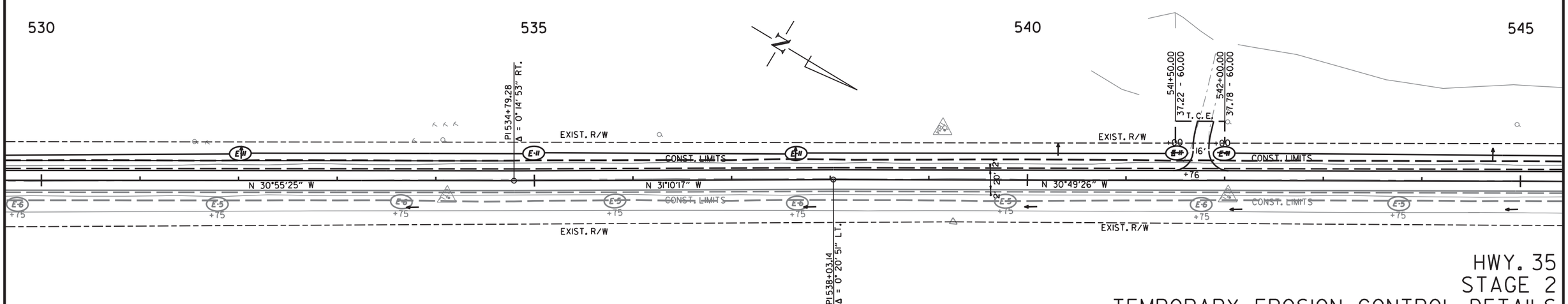

6/17/2020

R020629.DGN

HWY. 35
STAGE 2
TEMPORARY EROSION CONTROL DETAILS

DATE REVISED	DATE FILMED	DATE REVISED	DATE FILMED	FED.RD. DIST.NO.	STATE	FED.AID PROJ.NO.	SHEET NO.	TOTAL SHEETS
				6	ARK.			
				JOB NO.		020629	59	122

(2) TEMPORARY EROSION CONTROL DETAILS

STATE OF ARKANSAS
LICENSED PROFESSIONAL ENGINEER
No. 11425
TRINITY D. SMITH

Sep 18 2020 12:55 PM

DocuSign

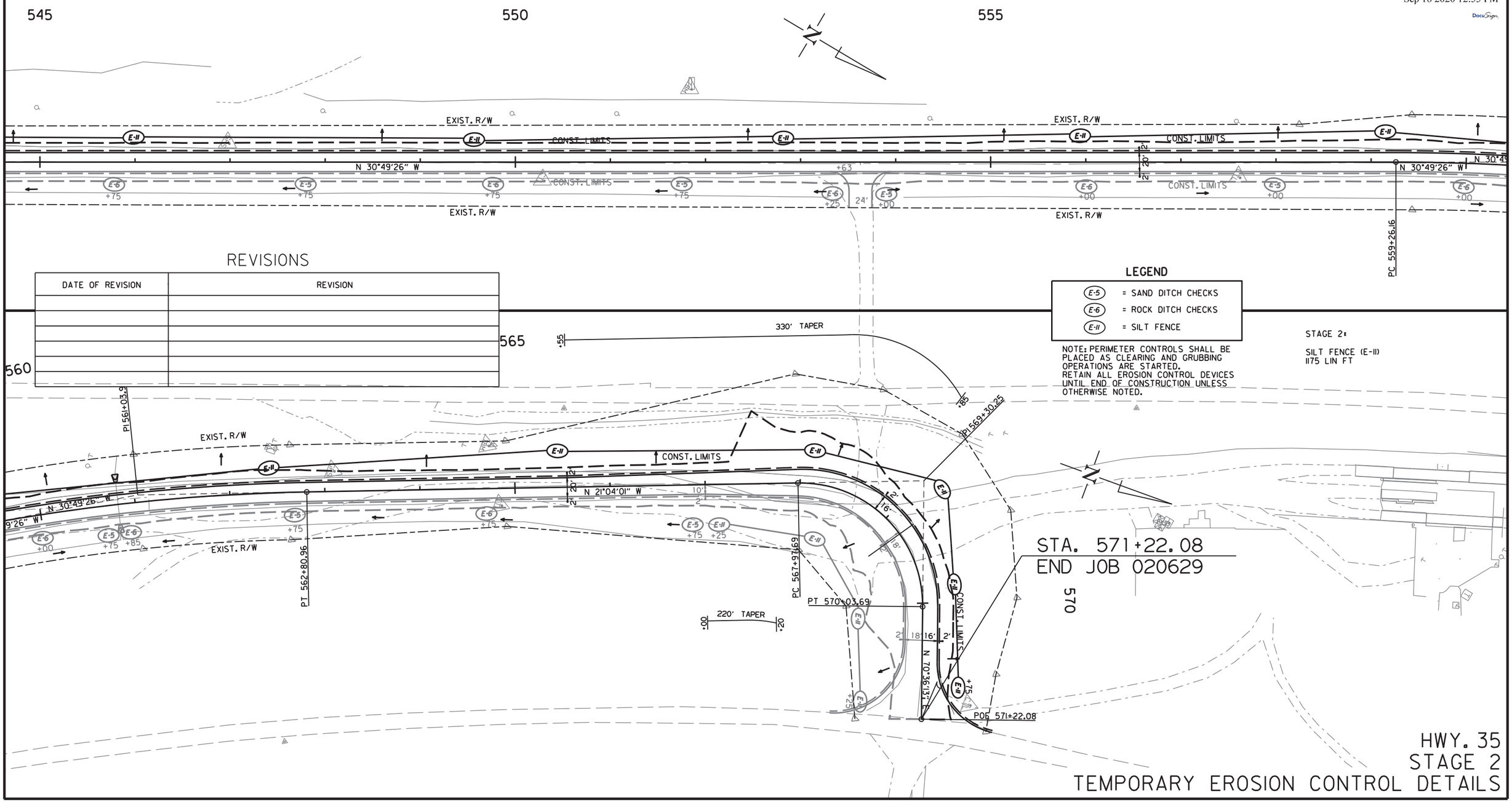

REVISIONS

DATE OF REVISION	REVISION

LEGEND

E-5	= SAND DITCH CHECKS
E-6	= ROCK DITCH CHECKS
E-11	= SILT FENCE

NOTE: PERIMETER CONTROLS SHALL BE PLACED AS CLEARING AND GRUBBING OPERATIONS ARE STARTED. RETAIN ALL EROSION CONTROL DEVICES UNTIL END OF CONSTRUCTION UNLESS OTHERWISE NOTED.

HWY. 35
STAGE 2
TEMPORARY EROSION CONTROL DETAILS

6/17/2020

R020629.DGN

DATE REVISED	DATE FILMED	DATE REVISED	DATE FILMED	FED.RD. DIST.NO.	STATE	FED.AID PROJ.NO.	SHEET NO.	TOTAL SHEETS
				6	ARK.			
				JOB NO.		020629	60	122

(2) MAINTENANCE OF TRAFFIC DETAILS

STATE OF ARKANSAS
LICENSED PROFESSIONAL ENGINEER
No. 11425
TRINITY D. SMITH

Sep 18 2020 12:55 PM

DocuSign

ADVANCE WARNING (ALL STAGES)

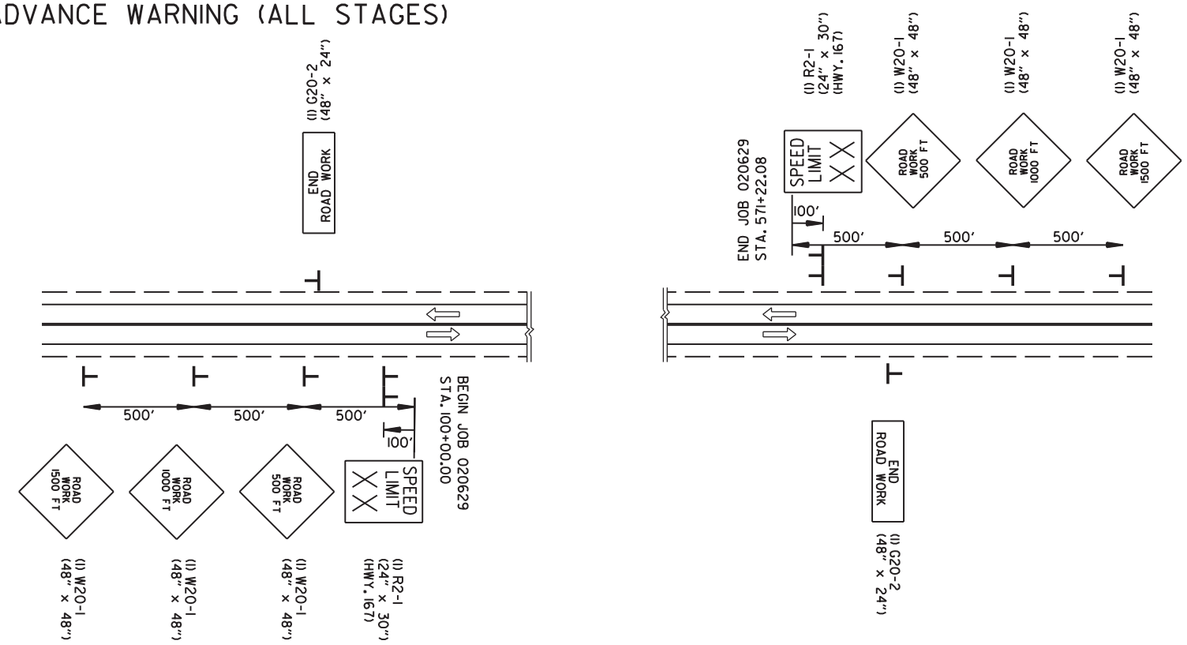

STAGE 1 CONSTRUCTION SEQUENCE

INSTALL ADVANCE WARNING SIGNS, END ROAD WORK SIGNS, AND INSTALL ROAD WORK AHEAD (W20-1) SIGN AS SHOWN ON THE ADVANCE WARNING MAINTENANCE OF TRAFFIC DETAIL.

USE TRAFFIC DRUMS SPACED 45' ON CENTER TO DELINEATE THE WORK ZONE. USE TRAFFIC DRUMS TO DELINEATE DRIVEWAYS.

CONSTRUCT STRUCTURES AND EMBANKMENT ON RT., IN ONE MILE INTERVALS, AS SHOWN ON THE MAINTENANCE OF TRAFFIC DETAILS.

STAGE 2 CONSTRUCTION SEQUENCE

MAINTAIN ADVANCE WARNING SIGNS AS SHOWN ON THE ADVANCE WARNING MAINTENANCE OF TRAFFIC DETAIL.

CONSTRUCT STRUCTURES AND EMBANKMENT ON LT., IN ONE MILE INTERVALS, AS SHOWN IN THE STAGE 2 MAINTENANCE OF TRAFFIC DETAILS.

END OF JOB CONSTRUCTION SEQUENCE

PLACE FINAL 2" ACHM SURFACE COURSE AND TRANSITIONS.
PLACE FINAL STRIPING.

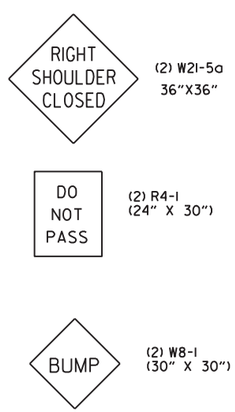

ALL STAGES TO BE USED IF AND WHERE DIRECTED BY THE ENGINEER

ALL STAGES TO BE USED IF AND WHERE DIRECTED BY THE ENGINEER

ALL STAGES TO BE USED IF AND WHERE DIRECTED BY THE ENGINEER

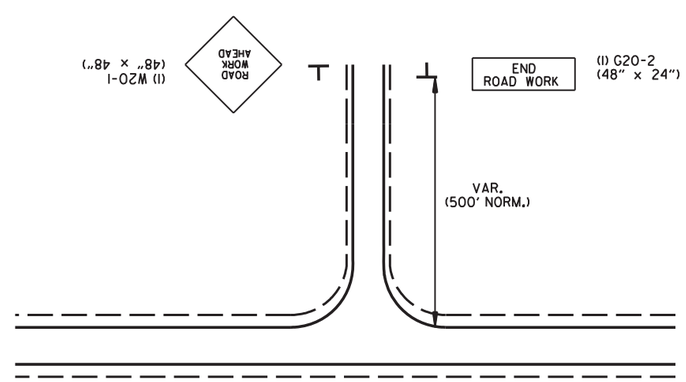

ADVANCE WARNING - SIDE ROADS (ALL STAGES)

COUNTY RD. 51 (BLACK POND RD.)
PERKINS LN.
DAVIS LN.
HWY. 159
HWY. 208

COUNTY RD. 15
COUNTY RD. 4
LEVEE RD.
COUNTY RD. 55

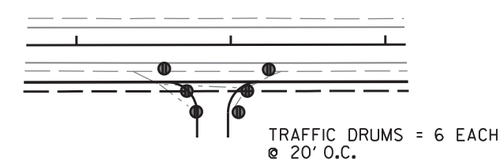

DRIVEWAY/TRAFFIC DRUM DETAIL

7/23/2020

R020629.DGN

ADVANCE WARNING
MAINTENANCE OF TRAFFIC DETAILS

DATE REVISED	DATE FILMED	DATE REVISED	DATE FILMED	FED.RD. DIST.NO.	STATE	FED.AID PROJ.NO.	SHEET NO.	TOTAL SHEETS
				6	ARK.			
				JOB NO.		020629	61	122

(2) MAINTENANCE OF TRAFFIC DETAILS

STATE OF ARKANSAS
LICENSED PROFESSIONAL ENGINEER
No. 11425
TRINITY D. SMITH

Sep 18 2020 12:55 PM

DocuSign

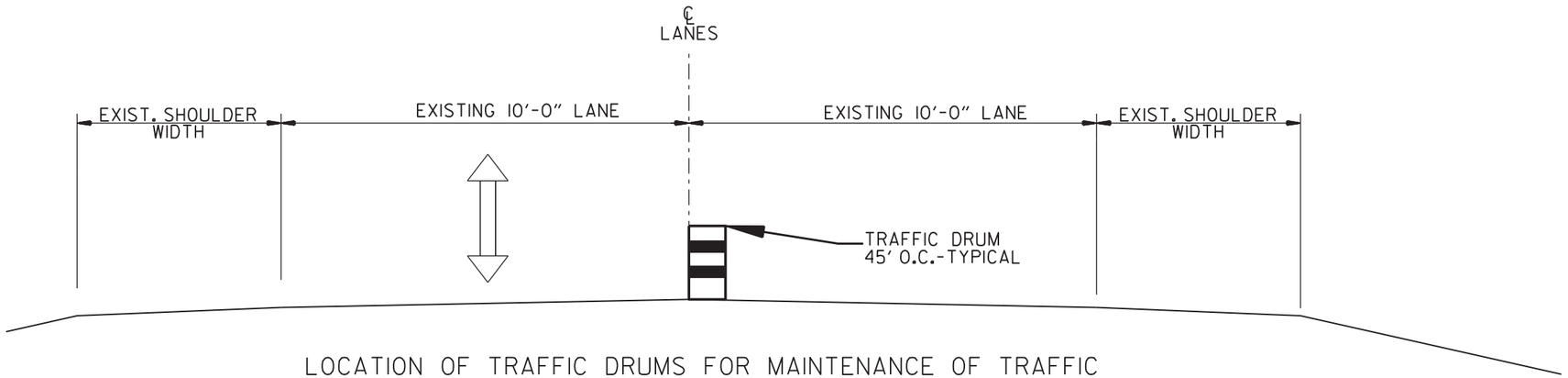

LOCATION OF TRAFFIC DRUMS FOR MAINTENANCE OF TRAFFIC
RIGHT LANE CLOSED
(SHOWN IN DIRECTION OF STATIONING)

STAGE 1
NOTCH & WIDEN,
APPROACH GUTTERS
&
GUARDRAIL INSTALLMENT

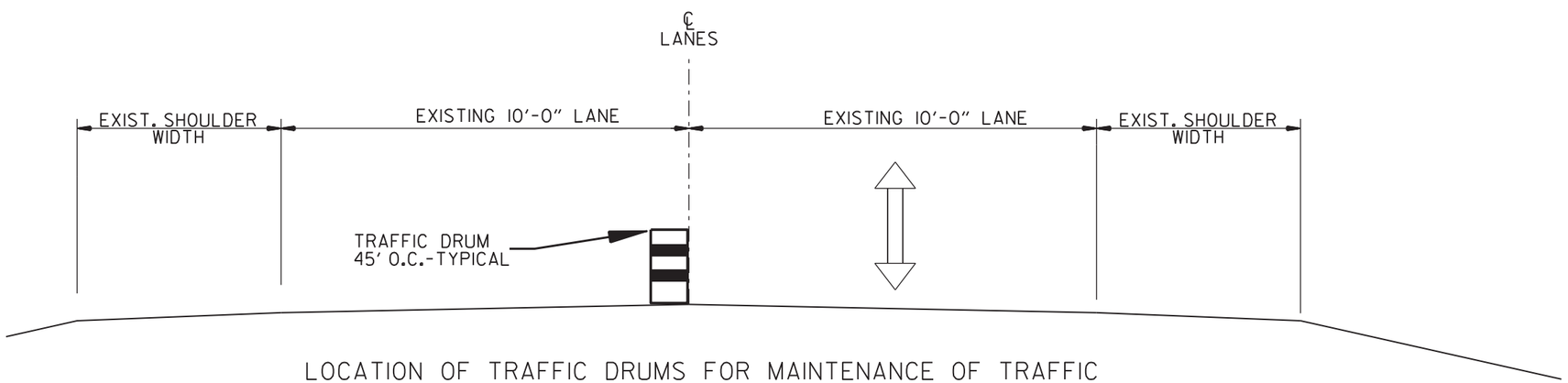

LOCATION OF TRAFFIC DRUMS FOR MAINTENANCE OF TRAFFIC
LEFT LANE CLOSED
(SHOWN IN DIRECTION OF STATIONING)

STAGE 2
NOTCH & WIDEN,
APPROACH GUTTERS
&
GUARDRAIL INSTALLMENT

MAINTENANCE OF TRAFFIC DETAILS

7/23/2020

R020629.DGN

DATE REVISED	DATE FILMED	DATE REVISED	DATE FILMED	FED.RD. DIST.NO.	STATE	FED.AID PROJ.NO.	SHEET NO.	TOTAL SHEETS
				6	ARK.			
				JOB NO.		020629	62	121

2 PERMANENT PAVEMENT MARKING DETAILS

STATE OF ARKANSAS
LICENSED PROFESSIONAL ENGINEER
No. 11425
TRINITY D. SMITH

Sep 18 2020 12:56 PM

DocuSign

PERMANENT PAVEMENT MARKINGS

REFLECTORIZED PAINT PAVEMENT MARKINGS WHITE (6") = 93867 LIN. FT.
REFLECTORIZED PAINT PAVEMENT MARKINGS YELLOW (6") = 93867 LIN. FT.

RAISED PAVEMENT MARKERS (TYPE II)(YELLOW/YELLOW)(80' O.C.) = 587 EACH

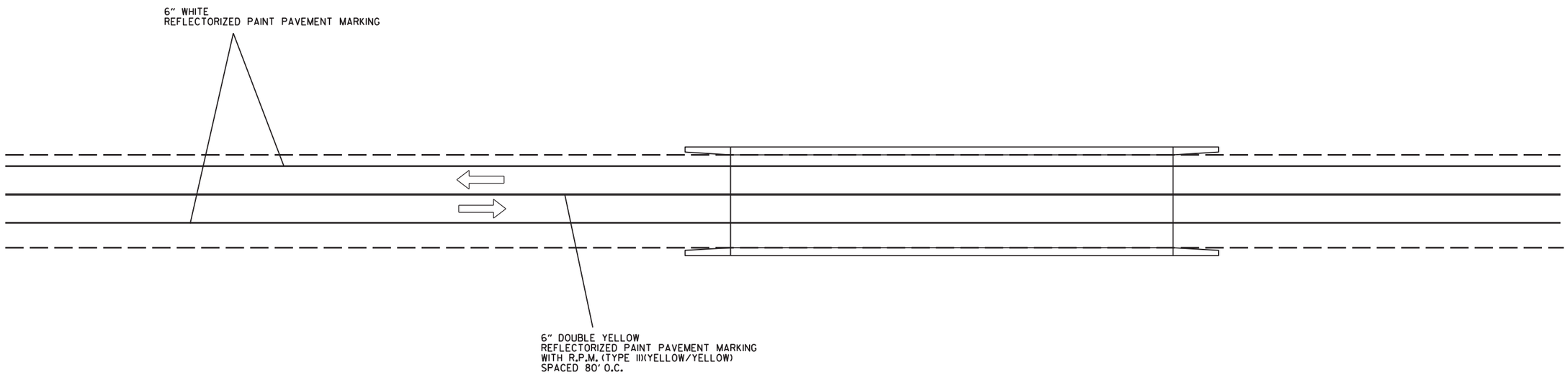

NOTE: THE 6" YELLOW STRIPING QUANTITY HAS BEEN ESTIMATED BASED ON A DOUBLE YELLOW CENTERLINE STRIPE FOR THE ENTIRE PROJECT. THE PROJECT MUST BE MARKED FOR PASSING/NO PASSING ZONES PRIOR TO THE PLACEMENT OF ANY FINAL STRIPING. CONTACT THE MAINTENANCE DIVISION AFTER THE FINAL LIFT OF SURFACE COURSE HAS BEEN PLACED TO SCHEDULE THE ZONING OF THE PROJECT.

7/23/2020

R020629.DGN

PERMANENT PAVEMENT MARKING DETAILS

DATE REVISED	DATE FILMED	DATE REVISED	DATE FILMED	FED.RD. DIST.NO.	STATE	FED.AID PROJ.NO.	SHEET NO.	TOTAL SHEETS
				6	ARK.			
				JOB NO.		020629	63	122

(2) QUANTITIES

STATE OF ARKANSAS
LICENSED PROFESSIONAL ENGINEER
No. 11425
TRINITY D. SMITH

Sep 18 2020 12:56 PM

DocuSign

ADVANCE WARNING SIGNS AND DEVICES

SIGN NUMBER	DESCRIPTION	SIGN SIZE	END OF JOB	MAXIMUM NUMBER REQUIRED	TOTAL SIGNS REQUIRED		TRAFFIC DRUMS	BARRICADES (TYPE III)	
								RIGHT	LEFT
			LIN. FT. - EACH - LUMP SUM		NO.	SQ. FT.	EACH	LIN. FT.	
W20-1	ROAD WORK 1500 FT.	48"x48"	2	2	2	32.0			
W20-1	ROAD WORK 1000 FT.	48"x48"	2	2	2	32.0			
W20-1	ROAD WORK 500 FT.	48"x48"	2	2	2	32.0			
W20-1	ROAD WORK AHEAD	48"x48"	9	9	9	144.0			
G20-2	END ROAD WORK	48"x24"	11	11	11	88.0			
R2-1	SPEED LIMIT	24"x30"	2	2	2	10.0			
R11-2	ROAD CLOSED	48"x30"	2	2	2	20.0			
W1-6	LARGE ARROW	48"x24"	2	2	2	16.0			
R4-1	DO NOT PASS	24"x30"	2	2	2	10.0			
W21-5a	RIGHT SHOULDER CLOSED	36"x36"	2	2	2	18.0			
W8-1	BUMP	30"x30"	2	2	2	12.5			
	TRAFFIC DRUMS		194	194			194		
	TYPE III BARRICADE-RT. (16')		1	1				16	
	TYPE III BARRICADE-LT. (16')		1	1					16
TOTALS:						**414.5**	**194**	**16**	**16**

NOTE: THIS IS A LOW TRAFFIC VOLUME ROAD AS DEFINED IN SECTION604.03, STANDARD SPECIFICATIONS FOR HIGHWAY CONSTRUCTION.

CONSTRUCTION PAVEMENT MARKINGS AND PERMANENT PAVEMENT MARKINGS

DESCRIPTION	END OF JOB	CONSTRUCTION PAVEMENT MARKINGS	RAISED PAVEMENT MARKERS	REFLECTORIZED PAINT PAVEMENT MARKING		
			TYPE II	6"		RAILROAD EMBLEM
			(YELLOW/YELLOW)	WHITE	YELLOW	
	LIN. FT. - EACH	LIN. FT.	EACH	LIN. FT.		EACH
CONSTRUCTION PAVEMENT MARKINGS	141366	141366				
RAISED PAVEMENT MARKERS TYPE II (YELLOW/YELLOW)	587		587			
REFLECTORIZED PAINT PAVEMENT MARKING WHITE (6")	93867			93867		
REFLECTORIZED PAINT PAVEMENT MARKING YELLOW (6")	93867				93867	
REFLECTORIZED PAVEMENT MARKINGS (RAILROAD EMBLEMS)	2					2
TOTALS:		**141366**	**587**	**93867**	**93867**	**2**

NOTE: THIS IS A LOW TRAFFIC VOLUME ROAD AS DEFINED IN SECTION 604.03, STANDARD SPECIFICATIONS FOR HIGHWAY CONSTRUCTION.

NOTE: THE 6" YELLOW STRIPING QUANTITY HAS BEEN ESTIMATED BASED ON A DOUBLE YELLOW CENTERLINE STRIPE FOR THE ENTIRE PROJECT.
THE PROJECT MUST BE MARKED FOR PASSING/NO PASSING ZONES PRIOR TO THE PLACEMENT OF ANY FINAL STRIPING.
CONTACT THE MAINTENANCE DIVISION AFTER THE FINAL LIFT OF SURFACE COURSE HAS BEEN PLACED TO SCHEDULE THE ZONING OF THE PROJECT.

DATE REVISED	DATE FILMED	DATE REVISED	DATE FILMED	FED.RD. DIST.NO.	STATE	FED.AID PROJ.NO.	SHEET NO.	TOTAL SHEETS
				6	ARK.			
				JOB NO.		020629	64	122

(2) QUANTITIES

STATE OF ARKANSAS LICENSED PROFESSIONAL ENGINEER No. 11425 TRINITY D. SMITH

Sep 18 2020 12:56 PM

DocuSign

CLEARING AND GRUBBING

STATION	STATION	LOCATION	CLEARING	GRUBBING
			STATION	
100+00	571+22	HWY. 35 LT. & RT.	472	472
TOTALS:			472	472

REMOVAL AND DISPOSAL OF GUARDRAIL

STATION	STATION	LOCATION	GUARDRAIL
			LIN. FT.
132+68.65	132+99.56	BRIDGE 03600 RT.	31
132+94.99	133+23.99	BRIDGE 03600 LT.	29
134+87.37	135+16.39	BRIDGE 03600 RT.	29
135+11.76	135+41.70	BRIDGE 03600 LT.	30
314+66.17	315+43.85	BRIDGE 05140 RT.	78
314+66.52	315+43.92	BRIDGE 05140 LT.	77
317+83.48	318+60.23	BRIDGE 05140 RT.	77
317+83.49	318+34.54	BRIDGE 05140 LT.	51
354+91.12	355+68.09	BRIDGE 05139 LT.	77
354+94.79	355+68.30	BRIDGE 05139 RT.	74
357+47.89	358+22.13	BRIDGE 05139 LT.	74
357+47.92	358+21.87	BRIDGE 05139 RT.	74
441+65.11	442+41.75	BRIDGE 05138 LT.	77
441+68.47	442+41.92	BRIDGE 05138 RT.	73
444+41.36	445+18.61	BRIDGE 05138 LT.	77
444+41.71	445+15.59	BRIDGE 05138 RT.	74
TOTAL:			1002

NOTE: THE QUANTITY SHOWN ABOVE FOR THE REMOVAL AND DISPOSAL OF GUARDRAIL SHALL INCLUDE THE REMOVAL AND DISPOSAL OF ALL GUARDRAIL TERMINALS AND TERMINAL ANCHOR POSTS.

FLOWABLE SELECT MATERIAL

STATION	LOCATION	CU. YD.
112+50	HWY. 35 LT. & RT.	9
127+16	HWY. 35 LT. & RT.	3
TOTAL:		12

SELECTED PIPE BEDDING

LOCATION	SELECTED PIPE BEDDING
	CU.YD.
ENTIRE PROJECT TO BE USED IF	
AND WHERE DIRECTED BY THE	170
ENGINEER	
TOTAL:	170

NOTE: QUANTITY ESTIMATED.
SEE SECTION 104.03 OF THE STD. SPECS.

CONCRETE DITCH PAVING

STATION	STATION	LOCATION	LENGTH	"W"	CONC. DITCH PAVING (TYPE B)	SOLID SODDING	WATER
			LIN. FT.	FEET	SQ. YD.	SQ. YD.	M. GAL.
149+00.00	149+92.00	HWY. 35 RT.	92.00	4.00	40.89	40.89	0.52
187+00.00	187+35.00	HWY. 35 LT.	35.00	4.00	15.56	15.56	0.20
187+00.00	187+35.00	HWY. 35 RT.	35.00	4.00	15.56	15.56	0.20
187+50.00	187+75.00	HWY. 35 RT.	25.00	4.00	11.11	11.11	0.14
219+00.00	219+25.00	HWY. 35 LT.	25.00	4.00	11.11	11.11	0.14
219+00.00	219+25.00	HWY. 35 RT.	25.00	4.00	11.11	11.11	0.14
219+40.00	219+75.00	HWY. 35 LT.	35.00	4.00	15.56	15.56	0.20
219+40.00	219+75.00	HWY. 35 RT.	35.00	4.00	15.56	15.56	0.20
220+85.00	220+92.00	HWY. 35 LT.	7.00	4.00	3.11	3.11	0.04
220+85.00	220+93.00	HWY. 35 RT.	8.00	4.00	3.56	3.56	0.04
220+95.00	221+00.00	HWY. 35 LT.	5.00	4.00	2.22	2.22	0.03
220+95.00	221+00.00	HWY. 35 RT.	5.00	4.00	2.22	2.22	0.03
TOTALS:					147.57	147.57	1.88

BASIS OF ESTIMATE:
WATER.....12.6 GAL. / SQ. YD. OF SOLID SODDING.

EROSION CONTROL MATTING

STATION	STATION	LOCATION	LENGTH	CLASS 3
			LIN. FT.	SQ. YD.
149+92.00	151+00.00	HWY. 35 RT.	108.00	96.00
202+25.00	202+50.00	HWY. 35 RT.	25.00	22.22
304+25.00	304+75.00	HWY. 35 LT.	50.00	44.44
353+25.00	355+50.00	HWY. 35 RT.	225.00	200.00
489+50.00	491+00.00	HWY. 35 RT.	150.00	133.33
106+00.00	109+25.00	HWY. 35 RT.	325.00	288.89
190+00.00	195+25.00	HWY. 35 LT.	525.00	466.67
204+00.00	204+66.00	HWY. 35 LT.	66.00	58.67
207+58.00	208+25.00	HWY. 35 LT.	67.00	59.56
350+00.00	351+25.00	HWY. 35 LT.	125.00	111.11
TOTAL:				1480.89

NOTE: AVERAGE WIDTH = 8'-0"

CULVERT CLEAN OUT

STATION	LOCATION	EACH
187+43	HWY. 35	1
219+33	HWY. 35	1
220+94	HWY. 35	1
286+89	HWY. 35	1
294+83	HWY. 35	1
347+96	HWY. 35	1
370+22	HWY. 35	1
402+34	HWY. 35	1
423+44	HWY. 35	1
523+82	HWY. 35	1
560+82	HWY. 35	1
TOTAL:		11

GUARDRAIL

STATION	STATION	LOCATION	GUARDRAIL (TYPE A)	THRIE BEAM GUARDRAIL TERMINAL	GUARDRAIL TERMINAL (TYPE 2)	BRIDGE END TERMINAL
			LIN. FT.	EACH		
130+77.22	133+02.22	HWY. 35 RT	225	1	1	
131+72.46	133+22.46	HWY. 35 LT	150	1	1	
134+90.93	136+40.93	HWY. 35 RT	150	1	1	
135+11.17	137+36.17	HWY. 35 LT	225	1	1	
313+18.88	315+43.88	HWY. 35 RT	225	1	1	
313+93.88	315+43.88	HWY. 35 LT	150	1	1	
317+83.49	318+08.49	HWY. 35 RT				1
317+83.49	318+08.49	HWY. 35 LT				1
353+93.21	355+68.21	HWY. 35 RT	175	1	1	
354+18.21	355+68.21	HWY. 35 LT	150	1	1	
357+47.91	358+97.91	HWY. 35 RT	150	1	1	
357+47.91	359+72.91	HWY. 35 LT	225	1	1	
440+16.97	442+41.97	HWY. 35 RT	225	1	1	
440+91.97	442+41.97	HWY. 35 LT	150	1	1	
444+41.34	445+91.35	HWY. 35 RT	150	1	1	
444+41.34	446+66.35	HWY. 35 LT	225	1	1	
TOTALS:			2575	14	14	2

4" PIPE UNDERDRAIN

STATION	STATION	LOCATIONS	4" PIPE UNDERDRAINS	UNDERDRAIN OUTLET PROTECTORS
			LIN. FT.	EACH
* ENTIRE PROJECT TO BE USED IF AND			2000	4
WHERE DIRECTED BY THE ENGINEER				
TOTALS:			2000	4

* NOTE: QUANTITY ESTIMATED.
SEE SECTION 104.03 OF THE STD. SPECS.

7/8/2020

R020629.DGN

QUANTITIES

DATE REVISED	DATE FILMED	DATE REVISED	DATE FILMED	FED.RD. DIST.NO.	STATE	FED.AID PROJ.NO.	SHEET NO.	TOTAL SHEETS
				6	ARK.			
				JOB NO.		020629	65	122

(2) QUANTITIES

STATE OF ARKANSAS
LICENSED PROFESSIONAL ENGINEER
No. 11425
TRINITY D. SMITH

Sep 18 2020 1:00 PM

DocuSign

SOIL LOG

LOG MILE	SECTION	LATITUDE			LONGITUDE			LOCATION	DEPTH	LIQUID LIMIT	PLASTICITY INDEX	AASHTO CLASSIFICATION	COLOR
		DEG	MIN	SEC	DEG	MIN	SEC		FEET				
5.35	9	33	32	3.00	91	21	50.30	5' RT	0-5	34	16	A-6(16)	BROWN
5.35	9	33	32	2.90	91	21	50.40	15' RT	0-5	31	13	A-6(12)	BROWN
5.60	9	33	32	3.00	91	21	34.40	15' LT	0-5	32	14	A-6(10)	BROWN
5.85	9	33	32	2.80	91	21	19.30	5' RT	0-5	39	15	A-6(15)	GRAY
5.85	9	33	32	2.70	91	21	19.30	15' RT	0-5	32	16	A-6(10)	BROWN
6.10	9	33	32	2.40	91	21	3.80	5' LT	0-5	63	38	A-7-6(36)	BROWN
6.10	9	33	32	2.50	91	21	3.80	15' LT	0-5	43	24	A-7-6(16)	BROWN
0.20	10	33	32	3.30	91	20	49.80	15' RT	0-5	60	43	A-7-6(44)	BROWN
0.20	10	33	32	3.30	91	20	49.80	15' LT	0-5	38	22	A-6(9)	BROWN
0.45	10	33	32	4.50	91	20	34.30	5' LT	0-5	64	47	A-7-6(51)	BROWN
0.45	10	33	32	4.60	91	20	34.30	15' LT	0-5	46	24	A-7-6(21)	BROWN
0.70	10	33	32	5.50	91	20	18.80	5' RT	0-5	74	47	A-7-6(39)	BR/GR
0.70	10	33	32	5.50	91	20	18.80	15' RT	0-5	90	57	A-7-5(66)	BROWN
0.95	10	33	32	6.90	91	20	3.20	15' LT	0-5	30	16	A-2-6(0)	BROWN
1.20	10	33	32	7.10	91	19	47.40	5' RT	0-5	27	5	A-4(4)	BROWN
1.20	10	33	32	7.00	91	19	47.40	15' RT	0-5	ND	NP	A-4(0)	BROWN
1.45	10	33	32	8.30	91	19	32.00	5' LT	0-5	ND	NP	A-4(0)	BROWN
1.45	10	33	32	8.40	91	19	32.00	15' LT	0-5	ND	NP	A-4(0)	BROWN
1.70	10	33	32	9.50	91	19	16.50	5' RT	0-5	ND	NP	A-4(0)	BROWN
1.70	10	33	32	9.30	91	19	16.50	15' RT	0-5	ND	NP	A-4(0)	BROWN
1.95	10	33	32	10.70	91	19	1.00	5' LT	0-5	24	4	A-4(2)	BROWN
1.95	10	33	32	10.80	91	19	1.00	15' LT	0-5	32	14	A-6(13)	BROWN
2.20	10	33	32	11.90	91	18	45.40	5' RT	0-5	54	32	A-7-6(34)	BR/GR
2.20	10	33	32	11.80	91	18	45.40	15' RT	0-5	63	45	A-7-6(48)	BR/GR
2.45	10	33	32	13.20	91	18	30.00	5' LT	0-5	36	21	A-6(20)	BR/GR
2.45	10	33	32	13.30	91	18	30.00	15' LT	0-5	37	22	A-6(20)	BR/GR
2.70	10	33	32	14.30	91	18	14.40	5' RT	0-5	34	18	A-6(17)	BROWN
2.70	10	33	32	14.20	91	18	14.40	15' RT	0-5	23	3	A-4(0)	BROWN
2.95	10	33	32	15.70	91	17	58.90	5' LT	0-5	34	17	A-6(15)	BROWN
2.95	10	33	32	15.80	91	17	59.00	15' LT	0-5	34	17	A-6(16)	BROWN
3.20	10	33	32	16.80	91	17	43.20	5' RT	0-5	29	14	A-6(7)	BROWN
3.20	10	33	32	16.80	91	17	43.20	15' RT	0-5	31	13	A-6(9)	BROWN
3.45	10	33	32	18.20	91	17	27.90	5' LT	0-5	26	10	A-4(8)	BROWN
3.95	10	33	32	20.70	91	16	56.80	5' LT	0-5	59	39	A-7-6(36)	BROWN
3.95	10	33	32	20.70	91	16	56.70	15' LT	0-5	36	18	A-6(12)	BROWN
4.20	10	33	32	21.70	91	16	41.40	5' RT	0-5	48	28	A-7-6(25)	BROWN
4.20	10	33	32	21.70	91	16	41.40	15' RT	0-5	43	29	A-7-6(24)	BR/GR
4.45	10	33	32	23.10	91	16	25.90	5' LT	0-5	51	29	A-7-6(32)	BROWN
4.45	10	33	32	23.20	91	16	26.00	15' LT	0-5	56	33	A-7-6(34)	BROWN
4.70	10	33	32	24.20	91	16	10.20	5' RT	0-5	53	32	A-7-6(35)	BR/GR
4.70	10	33	32	24.20	91	16	10.20	15' RT	0-5	45	25	A-7-6(23)	BROWN
4.95	10	33	32	25.50	91	15	54.80	5' LT	0-5	58	36	A-7-6(36)	BROWN
4.95	10	33	32	25.60	91	15	54.80	15' LT	0-5	38	21	A-6(18)	BROWN
5.20	10	33	32	24.30	91	15	39.40	5' RT	0-5	42	22	A-7-6(22)	BR/GR
5.20	10	33	32	24.20	91	15	39.40	15'RT	0-5	63	45	A-7-6(47)	BR/GR
5.45	10	33	32	22.20	91	15	24.10	5' LT	0-5	66	40	A-7-6(46)	BR/GR
5.45	10	33	32	22.30	91	15	24.00	15' LT	0-5	59	33	A-7-6(36)	BR/GR
5.75	10	33	32	19.40	91	15	5.50	5' RT	0-5	56	34	A-7-6(37)	BR/GR
5.75	10	33	32	19.40	91	15	5.50	15' RT	0-5	51	31	A-7-6(28)	BR/GR
5.95	10	33	32	17.80	91	14	53.20	5' LT	0-5	64	44	A-7-6(48)	BR/GR
5.95	10	33	32	17.90	91	14	53.20	15' LT	0-5	58	38	A-7-6(38)	BR/GR
0.30	11	33	32	13.00	91	14	20.00	5' RT	0-5	60	38	A-7-6(39)	BR/GR
0.30	11	33	32	12.90	91	14	20.00	15' RT	0-5	60	35	A-7-6(40)	BR/GR
0.55	11	33	32	11.00	91	14	4.60	5' LT	0-5	63	41	A-7-6(45)	BROWN
0.55	11	33	32	11.10	91	14	4.60	15' LT	0-5	38	20	A-6(17)	BR/GR
0.80	11	33	32	19.90	91	13	56.80	5' RT	0-5	60	39	A-7-6(43)	BR/GR
0.80	11	33	32	20.00	91	13	56.60	15' RT	0-5	59	38	A-7-6(39)	BR/GR
1.05	11	33	32	31.40	91	14	4.80	5' LT	0-5	54	31	A-7-6(34)	BR/GR
1.05	11	33	32	31.30	91	14	4.90	15' LT	0-5	54	34	A-7-6(32)	BR/GR
1.30	11	33	32	42.60	91	14	12.50	5' RT	0-5	38	22	A-6(21)	BR/GR
1.30	11	33	32	42.70	91	14	12.40	15' RT	0-5	50	33	A-7-6(35)	BR/GR
1.55	11	33	32	53.80	91	14	20.50	5' LT	0-5	39	21	A-6(21)	BR/GR
1.55	11	33	32	53.70	91	14	20.60	15' LT	0-5	48	29	A-7-6(30)	BR/GR
1.80	11	33	33	5.30	91	14	27.80	5' RT	0-5	54	31	A-7-6(35)	BR/GR
1.80	11	33	33	5.30	91	14	27.70	15' RT	0-6	37	19	A-6(18)	BR/GR
2.02	11	33	33	11.10	91	14	27.90	5' LT	0-5	55	36	A-7-6(39)	BROWN
2.02	11	33	33	11.20	91	14	28.00	15' LT	0-5	49	30	A-7-6(29)	BROWN

SOIL CHARACTERISTICS TABULATED ABOVE ARE REPRESENTATIVE AT THE LOCATION OF THE SAMPLE, AND FROM SURFACE INDICATIONS ARE TYPICAL FOR THE LIMITS SHOWN. THESE DATA ARE SHOWN FOR INFORMATION ONLY. THE STATE WILL NOT BE RESPONSIBLE FOR VARIATIONS IN THE SOIL CHARACTERISTICS AND/OR EXTENT OF SAME DIFFERING FROM THE ABOVE TABULATIONS.
NP - NON-PLASTIC
ND - NOT DETERMINABLE

MAILBOXES

LOCATION	MAILBOXES	MAILBOX SUPPORTS (SINGLE)	MAILBOX SUPPORTS (DOUBLE)
		EACH	
ENTIRE PROJECT	28	24	2
TOTALS:	**28**	**24**	**2**

EARTHWORK

STATION	STATION	LOCATION / DESCRIPTION	UNCLASSIFIED EXCAVATION	COMPACTED EMBANKMENT	* SOIL STABILIZATION
			CU. YD.		TON
100+00	571+22.08	STAGE 1-MAIN LANES	6661	5770	
100+00	571+22.08	STAGE 2-MAIN LANES	5638	5464	
ENTIRE	PROJECT	APPROACHES	5	3255	
	187+43.00	CHANNEL CHANGE	20		
	219+33.00	CHANNEL CHANGE	10		
* ENTIRE	PROJECT	TO BE USED IN AND WHERE			1000
		DIRECTED BY THE ENGINEER			
TOTALS:			**12334**	**14489**	**1000**

* QUANTITY ESTIMATED.
SEE SECTION 104.03 OF THE STD. SPECS.

COLD MILLING ASPHALT PAVEMENT

STATION	STATION	LOCATION	AVG. WIDTH	COLD MILLING ASPHALT PAVEMENT
			FEET	SQ. YD.
100+00.00	102+00.00	HWY. 35 MAIN LANES	22.00	488.89
569+22.08	571+22.08	HWY. 35 MAIN LANES	VAR.	970.31
TOTAL:				**1459.20**

NOTE: AVERAGE MILLING DEPTH 2".

ASPHALT CONCRETE PATCHING FOR MAINTENANCE OF TRAFFIC

LOCATION	TON	TACK COAT
		GALLON
ENTIRE PROJECT - TO BE USED IF AND WHERE	225	450
DIRECTED BY THE ENGINEER		
TOTALS:	**225**	**450**

BASIS OF ESTIMATE:
ASPHALT CONCRETE PATCHING FOR MAINTENANCE OF TRAFFIC…25 TON/MILE
TACK COAT FOR MAINTENANCE OF TRAFFIC……...50 GAL./MILE

NOTE: QUANTITY ESTIMATED.
SEE SECTION 104.03 OF THE STD. SPECS.

7/8/2020

R020629.DGN

QUANTITIES

DATE REVISED	DATE FILMED	DATE REVISED	DATE FILMED	FED.RD. DIST.NO.	STATE	FED.AID PROJ.NO.	SHEET NO.	TOTAL SHEETS
				6	ARK.			
				JOB NO.		020629	66	122

(2) QUANTITIES

STATE OF ARKANSAS
LICENSED PROFESSIONAL ENGINEER
No. 11425
TRINITY D. SMITH

Sep 18 2020 1:00 PM

DocuSign

BENCH MARKS

STATION	LOCATION	BENCH MARKS
		EACH
187+43	R.C. BOX CULVERT RT.	1
219+33	R.C. BOX CULVERT RT.	1
TOTAL:		2

NOTE: SHOWN FOR INFORMATION ONLY. BENCH MARKS SHALL BE FURNISHED AND PLACED BY STATE FORCES.

EROSION CONTROL

STATION	STATION	LOCATION	PERMANENT EROSION CONTROL					TEMPORARY EROSION CONTROL						
			SEEDING	LIME	MULCH COVER	WATER	SECOND SEEDING APPLICATION	TEMPORARY SEEDING	MULCH COVER	WATER	SAND BAG DITCH CHECKS (E-5)	ROCK DITCH CHECKS (E-6)	SILT FENCE (E-11)	*SEDIMENT REMOVAL & DISPOSAL
			ACRE	TON	ACRE	M.GAL.	ACRE	ACRE	ACRE	M.GAL.	BAG	CU.YD.	LIN. FT.	CU. YD.
ENTIRE	PROJECT	CLEARING AND GRUBBING						63.35	63.35	1292.3	4026	552	27565	1388
ENTIRE	PROJECT	STAGE 1	17.29	34.58	17.29	1763.6	17.29	31.54	31.54	643.4	2332	318	9540	565
ENTIRE	PROJECT	STAGE 2	35.53	71.06	35.53	3624.1	35.53	31.81	31.81	648.9	1782	243	18860	861
*ENTIRE PROJECT TO BE USED IF AND WHERE DIRECTED BY THE ENGINEER.														
TOTALS:			52.82	105.64	52.82	5387.7	52.82	126.70	126.70	2584.6	8140	1113	55965	2814

BASIS OF ESTIMATE:
LIME .....2 TONS / ACRE OF SEEDING
WATER.....102.0 M.G. / ACRE OF SEEDING
WATER.....20.4 M.G. / ACRE OF TEMPORARY SEEDING
SAND BAG DITCH CHECKS.....22 BAGS / LOCATION
ROCK DITCH CHECKS.....3 CU.YD./LOCATION

NOTE: THE TEMPORARY EROSION CONTROL DEVICES SHOWN ABOVE AND ON THE PLANS SHALL BE INSTALLED IN SUCH A SEQUENCE AS TO DETER EROSION AND SEDIMENTATION ON U.S. WATERWAYS AS EXPLAINED BY THE NATIONAL POLLUTANT DISCHARGE ELIMINATION SYSTEM PERMIT.

*QUANTITIES ESTIMATED.
SEE SECTION 104.03 OF THE STD. SPECS.

STRUCTURES

STATION	DESCRIPTION	RENFORCED CONCRETE PIPE CULVERT (CLASS III)		PIPE CULVERT ALTERNATES						FLARED END SECTION ALTERNATES FOR PIPE CULVERT ALTERNATES			SPAN	HEIGHT	LENGTH	CLASS S CONCRETE-ROADWAY	REINF. STEEL-ROADWAY (GRADE 60)	UNCL.EXC. FOR STR.-ROADWAY	SOLID SODDING	WATER	STD DWG. NOS.
				ALT. 1 (CLASS III)	ALT. 2, 3, 4, 5, AND 6	ALT. 1 (CLASS V)		ALT. 2, 3, 4, 5, AND 6													
		24"	36"	24"	24"	24"	36"	24"	36"	24"	30"	36"									
		LIN. FT.								EACH			LIN. FT.			CU.YD.	POUND	CU.YD.	SQ.YD.	M.GAL.	
112+50	TRI. 24" X 30' PIPE CULVERT					90		108		6											FES-1, FES-2, PCC-1, PCM-1, PCP-1, PCP-2, PCP-3
127+16	24" X 34' PIPE CULVERT					34		40		2											FES-1, FES-2, PCC-1, PCM-1, PCP-1, PCP-2, PCP-3
149+92	24" X 46' PIPE CULVERT					46		52		2											FES-1, FES-2, PCC-1, PCM-1, PCP-1, PCP-2, PCP-3
173+07	36" X 42' PIPE CULVERT						42		48		2	2									FES-1, FES-2, PCC-1, PCM-1, PCP-1, PCP-2, PCP-3
187+43	EXTEND 4' X 3' X 26' R.C. BOX CULVERT, EXT. 9' LT. & 10' RT.												4	3	19	11.00	958	7	2	0.03	RCB-1, RCB-2, RCB-3, R-100X-0, W-X003-1
219+33	EXTEND 4' X 3' X 36' R.C. BOX CULVERT, EXT. 4' LT. & 6' RT.												4	3	10	8.00	561	4	2	0.03	RCB-1, RCB-2, RCB-3, R-100X-0, W-X003-1
220+94	24" X 34' R.C. PIPE CULVERT									2											FES-1, FES-2, PCC-1
243+51	24" X 38' PIPE CULVERT					38		44		2											FES-1, FES-2, PCC-1, PCM-1, PCP-1, PCP-2, PCP-3
261+34	EXTEND 24" X 55' R.C. PIPE CULVERT, EXT. 4' RT.	4								2											FES-1, FES-2, PCC-1
402+34	36" X 49' R.C. PIPE CULVERT									2											FES-1, FES-2, PCC-1, PCM-1, PCP-1, PCP-2, PCP-3
423+44	EXTEND 36" X 49' R.C. PIPE CULVERT, EXT. 2' LT. & 5' RT.		7								2										FES-1, FES-2, PCC-1
477+34	24" X 46' PIPE CULVERT			46	52					2											FES-1, FES-2, PCC-1, PCM-1, PCP-1, PCP-2, PCP-3
523+82	36" X 46' CMP PIPE CULVERT									2											FES-1, FES-2, PCM-1
560+82	36" X 49' R.C. PIPE CULVERT, REMOVE 2' LT. & 2' RT.									2											FES-1, FES-2, PCC-1
TOTALS:		4	7	46	52	208	42	244	48	24	4	2				19.00	1519	11	4	0.06	

BASIS OF ESTIMATE:
WATER.....12.6 GAL. / SQ. YD. OF SOLID SODDING

NOTE: FOR R.C. PIPE CULVERT INSTALLATIONS USE TYPE 3 BEDDING UNLESS OTHERWISE SPECIFIED.

NOTE: FOR C.M. PIPE CULVERT INSTALLATIONS USE TYPE 2 BEDDING UNLESS OTHERWISE SPECIFIED.

7/8/2020

R020629.DGN

QUANTITIES

DATE REVISED	DATE FILMED	DATE REVISED	DATE FILMED	FED.RD. DIST.NO.	STATE	FED.AID PROJ.NO.	SHEET NO.	TOTAL SHEETS
				6	ARK.			
				JOB NO.		020629	67	122

(2) QUANTITIES

STATE OF ARKANSAS
LICENSED PROFESSIONAL ENGINEER
No. 11425
TRINITY D. SMITH

Sep 18 2020 1:00 PM

DocuSign

REMOVAL AND DISPOSAL OF CULVERTS

STATION	DESCRIPTION	PIPE CULVERTS	BOX CULVERTS
		EACH	EACH
101+97	18" X 20' SIDE DRAIN LT.	1	
105+35	18" X 24' SIDE DRAIN RT.	1	
105+36	18" X 30' SIDE DRAIN LT.	1	
110+05	18" X 24' SIDE DRAIN RT.	1	
112+50	4' X 2' X 28' BOX CULVERT LT. & RT.		1
115+82	24" X 24' SIDE DRAIN LT.	1	
116+37	24" X 12" X 24' SID DRAIN RT.	1	
123+57	24" X 24' SIDE DRAIN RT.	1	
125+12	24" X 30' SIDE DRAIN RT.	1	
127+16	2' X 1.5' X 18' BOX CULVERT		1
128+18	24" X 32' SIDE DRAIN RT.	1	
136+60	18" X 24' SIDE DRAIN RT.	1	
141+00	18" X 22' SIDE DRAIN RT.	1	
149+92	24" X 64' CROSS DRAIN	1	
169+33	DBL 48" X 61' SIDE DRAIN LT.	2	
173+07	36" X 42' CROSS DRAIN	1	
197+35	18" X 21' SIDE DRAIN RT.	1	
198+79	24" X 30' SIDE DRAIN RT.	1	
199+95	23" X 16" X 24' SIDE DRAIN RT.	1	
201+92	26" X 16" X 40' SIDE DRAIN RT.	1	
204+41	24" X 16" X 24' SIDE DRAIN RT.	1	
205+60	24" X 24' SIDE DRAIN RT.	1	
206+55	12" X 22' SIDE DRAIN RT.	1	
207+58	24" X 22' SIDE DRAIN RT.	1	
210+40	24" X 16" X 23' SIDE DRAIN RT.	1	
211+49	6" X 26' SIDE DRAIN RT.	1	
215+10	18" X 22' SIDE DRAIN RT.	1	
216+59	18" X 24' SIDE DRAIN RT.	1	
222+87	18" X 30' SIDE DRAIN RT.	1	
223+74	18" X 30' SIDE DRAIN RT.	1	
223+74	18" X 24' SIDE DRAIN RT.	1	
224+09	18" X 24' SIDE DRAIN LT.	1	
224+76	18" X 30' SIDE DRAIN RT.	1	
225+82	18" X 20' SIDE DRAIN LT.	1	
226+63	20" X 12" X 20' SIDE DRAIN LT.	1	
228+58	18" X 18' SIDE DRAIN LT.	1	
229+17	24" X 16" X 20' SIDE DRAIN LT	1	
229+97	18" X 25' SIDE DRAIN LT.	1	
230+19	24" X 20' SIDE DRAIN RT.	1	
230+65	18" X 22' SIDE DRAIN LT.	1	
231+60	18" X 20' SIDE DRAIN LT.	1	
232+66	18" X 20' SIDE DRAIN LT.	1	
234+70	18" X 20' SIDE DRAIN LT.	1	
236+10	18" X 24' SIDE DRAIN LT.	1	
237+32	18" X 24' SIDE DRAIN LT.	1	
240+29	18" X 24' SIDE DRAIN LT.	1	
242+18	18" X 30' SIDE DRAIN LT.	1	
243+51	24" X 36' CROSS DRAIN	1	
246+32	24" X 28' SIDE DRAIN RT.	1	
251+22	24" X 20' SIDE DRAIN RT.	1	
274+31	18" X 24' SIDE DRAIN LT.	1	
276+36	18" X 24' SIDE DRAIN LT.	1	
276+61	18" X 24' SIDE DRAIN RT.	1	
282+41	24" X 24' SIDE DRAIN RT.	1	
302+53	18" X 24' SIDE DRAIN RT.	1	
302+65	18" X 32' SIDE DRAIN LT.	1	
304+94	18" X 20' SIDE DRAIN LT.	1	
318+78	18" X 26 SIDE DRAIN RT.	1	
318+46	18" X 82' SIDE DRAIN LT.	1	
320+54	18" X 30' SIDE DRAIN RT.	1	
329+88	20" X 24' SIDE DRAIN RT.	1	
331+14	18" X 24' SIDE DRAIN RT.	1	
346+11	30" X 24' SIDE DRAIN RT.	1	
353+75	18" X 20' SIDE DRAIN RT.	1	
365+76	24" X 25' SIDE DRAIN RT.	1	
380+08	24" X 31' SIDE DRAIN LT.	1	
386+93	24" X 51 SIDE DRAIN RT.	1	
394+74	24" X 20' SIDE DRAIN LT.	1	
410+48	36" X 32' SIDE DRAIN LT.	1	
428+80	24" X 35' SIDE DRAIN RT.	1	
477+34	24" X 43' CROSS DRAIN	1	
478+33	36" X 48' SIDE DRAIN LT.	1	
479+79	24" X 40' SIDE DRAIN RT.	1	
490+10	18" X 30' SIDE DRAIN RT.	1	
503+62	18" X 84' SIDE DRAIN RT.	1	
TOTALS:		**74**	**2**

NOTE: QUANTITIES SHOWN ABOVE SHALL INCLUDE REMOVAL & DISPOSAL OF ALL HEADWALLS AND FLARED END SECTIONS IF APPLICABLE.

DRIVEWAYS & TURNOUTS (BOX 1 OF 2)

STATION	SIDE	LOCATION	WIDTH	PORTLAND CEMENT CONCRETE DRIVEWAY	ACHM SURFACE COURSE (1/2") 220 LBS. PER SQ. YD. (PG 64-22)		AGGREGATE BASE COURSE (CLASS 7)	SIDE DRAINS						STANDARD DRAWINGS
								18"	24"	30"	36"	22"X14"	29"X18"	
			FEET	SQ. YD.	SQ. YD.	TON	TON	LIN. FT.						
101+97.00	LT	HWY. 35	16		59.95	6.59	24.48	28						PCD-1, PCM-1, PCP-1, PCP-2, PCP-3
102+62.00	RT	HWY. 35	16		62.90	6.92	25.68							
103+00.00	LT	HWY. 35	16		62.28	6.85	25.43	28						PCD-1, PCM-1, PCP-1, PCP-2, PCP-3
103+98.00	RT	HWY. 35	18		69.14	7.61	28.23							
105+34.00	RT	HWY. 35	18		69.14	7.61	28.23					28		PCD-1, PCM-1
105+36.00	LT	HWY. 35	24		87.07	9.58	35.55	34						PCD-1, PCM-1, PCP-1, PCP-2, PCP-3
110+05.00	RT	HWY. 35	16		61.58	6.77	25.15	28						PCD-1, PCM-1, PCP-1, PCP-2, PCP-3
115+82.00	LT	HWY. 35	16		63.54	6.99	25.95						28	PCD-1, PCM-1
116+37.00	RT	HWY. 35	20	74.09					34					PCD-1, PCM-1, PCP-1, PCP-2, PCP-3
116+60.00	LT	HWY. 35	16		63.36	6.97	25.87							
120+45.00	LT	HWY. 35	16		63.75	7.01	26.03							
121+94.00	LT	HWY. 35	16		63.91	7.03	26.10							
123+57.00	RT	HWY. 35	18		67.14	7.39	27.42		40					PCD-1, PCM-1, PCP-1, PCP-2, PCP-3
125+12.00	RT	HWY. 35	16		61.21	6.73	24.99		34					PCD-1, PCM-1, PCP-1, PCP-2, PCP-3
128+18.00	RT	HWY. 35	20		52.80	5.81	21.56		40					PCD-1, PCM-1, PCP-1, PCP-2, PCP-3
136+60.00	RT	HWY. 35	16		134.72	14.82	55.01	28						PCD-1, PCM-1, PCP-1, PCP-2, PCP-3
140+99.00	RT	HWY. 35	16		124.80	13.73	50.96	28						PCD-1, PCM-1, PCP-1, PCP-2, PCP-3
155+40.00	RT	HWY. 35	16		63.64	7.00	25.99							
169+31.00	LT	HWY. 35	24		127.47	14.02	52.05		136					PCD-1, PCM-1, PCP-1, PCP-2, PCP-3
169+47.00	RT	HWY. 35	16		59.79	6.58	24.41							
197+35.00	RT	HWY. 35	16		63.09	6.94	25.76		28					PCD-1, PCM-1, PCP-1, PCP-2, PCP-3
198+78.00	RT	HWY. 35	20		131.04	14.41	53.51		40					PCD-1, PCM-1, PCP-1, PCP-2, PCP-3
199+95.00	RT	HWY. 35	16		98.13	10.79	40.07		34					PCD-1, PCM-1, PCP-1, PCP-2, PCP-3
201+46.00	LT	HWY. 35	20		146.69	16.14	59.90							
201+92.00	RT	HWY. 35	20		146.69	16.14	59.90		32					PCD-1, PCM-1, PCP-1, PCP-2, PCP-3
204+41.00	RT	HWY. 35	16		62.15	6.84	25.38						28	PCD-1, PCM-1
205+22.00	LT	HWY. 35	20		75.36	8.29	30.77							
205+60.00	RT	HWY. 35	16		62.35	6.86	25.46						28	PCD-1, PCM-1
206+55.00	RT	HWY. 35	16		62.58	6.88	25.55						28	PCD-1, PCM-1
207+58.00	RT	HWY. 35	16		62.03	6.82	25.33						28	PCD-1, PCM-1
210+40.00	RT	HWY. 35	16		80.36	8.84	32.81						28	PCD-1, PCM-1
211+49.00	RT	HWY. 35	16		89.24	9.82	36.44						28	PCD-1, PCM-1
215+10.00	RT	HWY. 35	16		62.58	6.88	25.55	28						PCD-1, PCM-1, PCP-1, PCP-2, PCP-3
216+61.00	RT	HWY. 35	16		60.46	6.65	24.69					28		PCD-1, PCM-1
217+70.00	LT	HWY. 35	16		64.44	7.09	26.31							
220+51.00	LT	HWY 159 TURNOUT	22		185.57	20.41	75.77							
220+58.00	RT	HWY 208 TURNOUT	18		166.46	18.31	67.97							
221+29.00	RT	HWY. 35	16		61.72	6.79	25.20							
222+87.00	RT	HWY. 35	22		80.66	8.87	32.94					32		PCD-1, PCM-1
223+74.00	RT	HWY. 35	24		87.07	9.58	35.55	34						PCD-1, PCM-1, PCP-1, PCP-2, PCP-3
224+09.00	LT	HWY. 35	16		62.83	6.91	25.66	28						PCD-1, PCM-1, PCP-1, PCP-2, PCP-3
224+75.00	RT	HWY. 35	20		74.58	8.20	30.45	32						PCD-1, PCM-1, PCP-1, PCP-2, PCP-3
225+82.00	LT	HWY. 35	16		63.16	6.95	25.79	28						PCD-1, PCM-1, PCP-1, PCP-2, PCP-3
226+63.00	LT	HWY. 35	16		63.09	6.94	25.76	28						PCD-1, PCM-1, PCP-1, PCP-2, PCP-3
228+58.00	LT	HWY. 35	20	75.51				30						PCD-1, PCM-1, PCP-1, PCP-2, PCP-3
229+11.00	LT	HWY. 35	16		62.93	6.92	25.70						28	PCD-1, PCM-1
229+97.00	LT	HWY. 35	20	75.40				30						PCD-1, PCM-1, PCP-1, PCP-2, PCP-3
230+19.00	RT	HWY. 35	16		62.58	6.88	25.55		28					PCD-1, PCM-1, PCP-1, PCP-2, PCP-3
230+65.00	LT	HWY. 35	16		62.83	6.91	25.66	28						PCD-1, PCM-1, PCP-1, PCP-2, PCP-3
231+60.00	LT	HWY. 35	16		62.77	6.90	25.63	28						PCD-1, PCM-1, PCP-1, PCP-2, PCP-3
232+66.00	LT	HWY. 35	16		62.70	6.90	25.60	28						PCD-1, PCM-1, PCP-1, PCP-2, PCP-3
234+69.00	LT	HWY. 35	16	62.58				28						PCD-1, PCM-1, PCP-1, PCP-2, PCP-3
236+10.00	LT	HWY. 35	16	62.60				28						PCD-1, PCM-1, PCP-1, PCP-2, PCP-3
237+32.00	LT	HWY. 35	16	62.99				30						PCD-1, PCM-1, PCP-1, PCP-2, PCP-3
240+29.00	LT	HWY. 35	16		63.95	7.03	26.11	30						PCD-1, PCM-1, PCP-1, PCP-2, PCP-3
242+18.00	LT	HWY. 35	16		64.50	7.10	26.34	28						PCD-1, PCM-1, PCP-1, PCP-2, PCP-3
246+32.00	RT	HWY. 35	16		71.47	7.86	29.18		32					PCD-1, PCM-1, PCP-1, PCP-2, PCP-3
249+82.00	LT	HWY. 35	16		80.36	8.84	32.81							
251+22.00	RT	HWY. 35	16		62.08	6.83	25.35		40					PCD-1, PCM-1, PCP-1, PCP-2, PCP-3
274+31.00	LT	HWY. 35	16		62.90	6.92	25.68	30						PCD-1, PCM-1, PCP-1, PCP-2, PCP-3
276+36.00	LT	HWY. 35	16		62.70	6.90	25.60	28						PCD-1, PCM-1, PCP-1, PCP-2, PCP-3
276+62.00	RT	HWY. 35	20		97.24	10.70	39.71	36						PCD-1, PCM-1, PCP-1, PCP-2, PCP-3
282+41.00	RT	HWY. 35	20		74.78	8.23	30.54		34					PCD-1, PCM-1, PCP-1, PCP-2, PCP-3
302+53.00	RT	HWY. 35	16		61.32	6.75	25.04	28						PCD-1, PCM-1, PCP-1, PCP-2, PCP-3
302+65.00	LT	HWY. 35	16		63.84	7.02	26.07	28						PCD-1, PCM-1, PCP-1, PCP-2, PCP-3
304+94.00	LT	HWY. 35	16	63.63								28		PCD-1, PCM-1
318+46.00	LT	HWY. 35	20		193.91	21.33	79.18	28						PCD-1, PCM-1, PCP-1, PCP-2, PCP-3
318+78.00	RT	HWY. 35	20		266.71	29.34	108.91	28						PCD-1, PCM-1, PCP-1, PCP-2, PCP-3
319+70.00	RT	HWY. 35	16		61.37	6.75	25.06							
320+54.00	RT	HWY. 35	16		61.23	6.74	25.00	28						PCD-1, PCM-1, PCP-1, PCP-2, PCP-3
329+88.00	RT	HWY. 35	16		98.19	10.80	40.09	36						PCD-1, PCM-1, PCP-1, PCP-2, PCP-3
331+14.00	RT	HWY. 35	16		80.39	8.84	32.83	36						PCD-1, PCM-1, PCP-1, PCP-2, PCP-3
341+65.00	LT	HWY. 35	16		63.57	6.99	25.96							
346+11.00	RT	HWY. 35	16		98.13	10.79	40.07			38				PCD-1, PCM-1, PCP-1, PCP-2, PCP-3
353+72.00	RT	HWY. 35	16		89.24	9.82	36.44	34						PCD-1, PCM-1, PCP-1, PCP-2, PCP-3
360+00.00	RT	HWY. 35	16		124.80	13.73	50.96	46						PCD-1, PCM-1, PCP-1, PCP-2, PCP-3
SUBTOTALS (BOX 1 OF 2):				**476.89**	**5747.01**	**632.18**	**2346.68**	**1026**	**552**	**38**		**116**	**224**	

BASIS OF ESTIMATE:
ACHM SURFACE COURSE (1/2").....94.8% MIN. AGGR.....5.2% ASPHALT BINDER
MAXIMUM NUMBER OF GYRATIONS = 115 FOR PG 64-22

NOTE: FOR R.C. PIPE CULVERT INSTALLATIONS USE TYPE 3 BEDDING UNLESS OTHERWISE SPECIFIED.
NOTE: FOR C.M. PIPE CULVERT INSTALLATIONS USE TYPE 2 BEDDING UNLESS OTHERWISE SPECIFIED.

7/8/2020

R020629.DGN

DATE REVISED	DATE FILMED	DATE REVISED	DATE FILMED	FED.RD. DIST.NO.	STATE	FED.AID PROJ.NO.	SHEET NO.	TOTAL SHEETS
				6	ARK.			
				JOB NO.		020629	68	122

(2) QUANTITIES

STATE OF ARKANSAS LICENSED PROFESSIONAL ENGINEER No. 11425 TRINITY D. SMITH

Sep 18 2020 1:00 PM

DocuSign

DRIVEWAYS & TURNOUTS (BOX 2 OF 2)

STATION	SIDE	LOCATION	WIDTH	PORTLAND CEMENT CONCRETE DRIVEWAY	ACHM SURFACE COURSE (1/2") 220 LBS. PER SQ. YD. (PG 64-22)		AGGREGATE BASE COURSE (CLASS 7)	SIDE DRAINS						STANDARD DRAWINGS
								18"	24"	30"	36"	22"X14"	29"X18"	
			FEET	SQ. YD.	SQ. YD.	TON	TON	LIN. FT.						
360+60.00	LT	HWY. 35	16		126.19	13.88	51.53	50						PCC-1, PCM-1, PCP-1, PCP-2, PCP-3
365+76.00	RT	HWY. 35	16		115.91	12.75	47.33		46					PCC-1, PCM-1, PCP-1, PCP-2, PCP-3
380+08.00	LT	HWY. 35	16		115.91	12.75	47.33		28					PCC-1, PCM-1, PCP-1, PCP-2, PCP-3
386+93.00	RT	HWY. 35	16		80.36	8.84	32.81		44					PCC-1, PCM-1, PCP-1, PCP-2, PCP-3
394+74.00	LT	HWY. 35	16		80.36	8.84	32.81		36					PCC-1, PCM-1, PCP-1, PCP-2, PCP-3
395+44.00	RT	HWY. 35	16		63.24	6.96	25.82							
410+48.00	LT	HWY. 35	16		156.73	17.24	64.00				28			PCC-1, PCM-1, PCP-1, PCP-2, PCP-3
410+61.00	RT	HWY. 35	20		74.20	8.16	30.30							
428+80.00	RT	HWY. 35	16		68.37	7.52	27.92		38					PCC-1, PCM-1, PCP-1, PCP-2, PCP-3
439+40.00	RT	HWY. 35	16		81.65	8.98	33.34	36						PCC-1, PCM-1, PCP-1, PCP-2, PCP-3
440+00.00	LT	HWY. 35	16		169.24	18.62	69.11				78			PCC-1, PCM-1, PCP-1, PCP-2, PCP-3
447+00.00	RT	HWY. 35	16		213.69	23.51	87.26							
472+29.00	LT	HWY. 35	16		81.23	8.94	33.17		54					PCC-1, PCM-1, PCP-1, PCP-2, PCP-3
475+84.00	RT	HWY. 35	16		64.14	7.06	26.19							
478+33.00	LT	HWY. 35	28		131.02	14.41	53.50				54			PCC-1, PCM-1, PCP-1, PCP-2, PCP-3
479+79.00	RT	HWY. 35	24		114.13	12.55	46.60		52					PCC-1, PCM-1, PCP-1, PCP-2, PCP-3
490+10.00	RT	HWY. 35	24		114.13	12.55	46.60	52						PCC-1, PCM-1, PCP-1, PCP-2, PCP-3
503+62.00	RT	HWY. 35	36		348.12	38.29	142.15	78						PCC-1, PCM-1, PCP-1, PCP-2, PCP-3
541+76.00	LT	HWY. 35	16		98.88	10.88	40.38							
553+63.00	RT	HWY. 35	24		108.67	11.95	44.37							
* ENTIRE PROJECT TEMPORARY DRIVES							480.00							
SUBTOTALS (BOX 1 OF 2):				476.80	5747.01	632.18	2346.68	1026	552	38		116	224	
SUBTOTALS (BOX 2 OF 2):					2406.17	264.68	1462.52	216	298		160			
TOTALS:				476.80	8153.18	896.86	3809.20	1242	850	38	160	116	224	

BASIS OF ESTIMATE:
ACHM SURFACE COURSE (1/2").....94.8% MIN. AGGR.....5.2% ASPHALT BINDER
MAXIMUM NUMBER OF GYRATIONS = 115 FOR PG 64-22

* QUANTITY ESTIMATED
SEE SECTION 104.03 OF THE STD. SPECS.
TO BE USED IF AND WHERE DIRECTED BY THE ENGINEER.

NOTE: FOR R.C. PIPE CULVERT INSTALLATIONS USE TYPE 3 BEDDING UNLESS OTHERWISE SPECIFIED.
NOTE: FOR C.M. PIPE CULVERT INSTALLATIONS USE TYPE 2 BEDDING UNLESS OTHERWISE SPECIFIED.

LIME TREATED SUBGRADE

STATION	STATION	LOCATION	LENGTH	WIDTH	LIME TREATED SUBGRADE			
					PROCESS L.T.S. (16" U.T.)	QUICK LIME (DRY)	QUICK LIME (SLURRY)	HYDRATED LIME
			LIN. FT.	FEET	SQ. YD.	TON		
100+00.00	239+25.00	HWY. 35	13925.00	4.00	6188.89	196.47	261.31	261.31
239+25.00	244+50.00	HWY. 35	525.00	14.00	816.67	25.93	34.48	34.48
244+50.00	281+10.00	HWY. 35	3660.00	4.00	1626.67	51.64	68.68	68.68
281+10.00	286+35.00	HWY. 35	525.00	14.00	816.67	25.93	34.48	34.48
286+35.00	296+85.00	HWY. 35	1050.00	4.00	466.67	14.81	19.70	19.70
296+85.00	304+90.00	HWY. 35	805.00	14.00	1252.22	39.75	52.87	52.87
304+90.00	310+30.00	HWY. 35	540.00	24.00	1440.00	45.71	60.80	60.80
310+30.00	312+35.00	HWY. 35	205.00	14.00	318.89	10.12	13.46	13.46
312+35.00	317+90.00	HWY. 35	555.00	4.00	246.67	7.83	10.41	10.41
317+90.00	320+30.00	HWY. 35	240.00	14.00	373.33	11.85	15.76	15.76
320+30.00	323+15.00	HWY. 35	285.00	24.00	760.00	24.13	32.09	32.09
323+15.00	325+60.00	HWY. 35	245.00	14.00	381.11	12.10	16.09	16.09
325+60.00	420+40.00	HWY. 35	9480.00	4.00	4213.33	133.76	177.90	177.90
420+40.00	430+95.00	HWY. 35	1055.00	14.00	1641.11	52.10	69.29	69.29
430+95.00	467+65.00	HWY. 35	3670.00	4.00	1631.11	51.78	68.87	68.87
467+65.00	470+20.00	HWY. 35	255.00	14.00	396.67	12.59	16.75	16.75
470+20.00	472+95.00	HWY. 35	275.00	24.00	733.33	23.28	30.96	30.96
472+95.00	475+50.00	HWY. 35	255.00	14.00	396.67	12.59	16.75	16.75
475+50.00	505+60.00	HWY. 35	3010.00	4.00	1337.78	42.47	56.48	56.48
505+60.00	508+70.00	HWY. 35	310.00	14.00	482.22	15.31	20.36	20.36
508+70.00	510+85.00	HWY. 35	215.00	24.00	573.33	18.20	24.21	24.21
510+85.00	513+90.00	HWY. 35	305.00	14.00	474.44	15.06	20.03	20.03
513+90.00	571+22.08	HWY. 35	5732.08	4.00	2547.59	80.88	107.56	107.56
TOTALS:					**29115.37**	**924.29**	**1229.29**	**1229.29**

BASIS OF ESTIMATE:
HYDRATED LIME.....8% BY WEIGHT
QUICK LIME.....8% BY WEIGHT
DEPTH OF PROCESSING LIME TREATED SUBGRADE.....16" UNIFORM THICKNESS

NOTE: SOIL BASED ON WEIGHT OF 95 POUNDS PER CUBIC FOOT

ACHM PATCHING OF EXISTING ROADWAY

SECTION	DIRECTION	BEGIN STATION	END STATION	LENGTH	WIDTH	THICKNESS	TON
				LIN. FT.	FEET	INCHES	
10	SB	239+25	244+50	525	10	12	385
10	SB	281+10	286+35	525	10	12	385
10	SB	296+85	310+30	1345	10	12	986
10	NB	304+90	312+35	745	10	12	546
10	SB	317+90	323+15	525	10	12	385
10	NB	320+30	325+60	530	10	12	389
10	NB	420+40	430+95	1055	10	12	774
10	NB	467+65	472+95	530	10	12	389
10	SB	470+20	475+50	530	10	12	389
11	SB	505+60	510+85	525	10	12	385
11	NB	508+70	513+90	520	10	12	381
TOTAL:							**5394**

NOTE: APPROXIMATE LOCATIONS USED. EXACT LOCATIONS TO BE DETERMINED BY ENGINEER
SEE SECTION 104.03 OF THE STD. SPECS.

APPROACH GUTTERS

STATION	STATION	LOCATION	APPROACH GUTTER (TYPE AT)	APPROACH GUTTER (TYPE CT)	REINFORCING STEEL-RDWY. (GR. 60)
			CU.YD.		POUND
132+78.34	132+98.34	RT. SIDE		2.09	148
133+06.34	133+26.34	LT. SIDE		2.09	148
134+87.35	135+07.35	RT. SIDE		2.09	148
135+15.35	135+35.35	LT. SIDE		2.09	148
315+07.38	315+43.88	LT. SIDE	9.40		831
315+07.38	315+43.88	RT. SIDE	9.40		831
317+83.49	318+00.49	LT. SIDE	9.40		831
317+83.49	318+00.49	RT. SIDE	9.40		831
355+31.71	355+68.21	LT. SIDE	9.40		831
355+31.71	355+68.21	RT. SIDE	9.40		831
357+47.91	357+84.41	LT. SIDE	9.40		831
357+47.91	357+84.41	RT. SIDE	9.40		831
442+05.47	442+41.97	LT. SIDE	9.40		831
442+05.47	442+41.97	RT. SIDE	9.40		831
444+41.35	444+77.85	LT. SIDE	9.40		831
444+41.35	444+77.85	RT. SIDE	9.40		831
TOTALS:			**112.80**	**8.36**	**10564**

NOTE: USE T =" FOR 2" SHOULDER.

7/8/2020

R020629.DGN

QUANTITIES

DATE REVISED	DATE FILMED	DATE REVISED	DATE FILMED	FED.RD. DIST.NO.	STATE	FED.AID PROJ.NO.	SHEET NO.	TOTAL SHEETS
				6	ARK.			
				JOB NO.		020629	69	122

(2) QUANTITIES

STATE OF ARKANSAS
LICENSED PROFESSIONAL ENGINEER
No. 11425
TRINITY D. SMITH

Sep 18 2020 1:00 PM

DocuSign

BASE AND SURFACING (BOX 1 OF 2)

STATION	STATION	LOCATION	LENGTH	AGGREGATE BASE COURSE (CLASS 7)		TACK COAT							ACHM BINDER COURSE (1")				ACHM SURFACE COURSE (1/2")								
						(0.05 GAL. PER SQ. YD.)			(0.17 GAL. PER SQ. YD.)																
				TON / STATION	TON	TOTAL WID.	SQ.YD.	GALLON	TOTAL WID.	SQ.YD.	GALLON	TOTAL GALLONS	AVG. WID.	SQ.YD.	POUND / SQ.YD.	PG 64-22	AVG. WID.	SQ.YD.	POUND / SQ.YD.	PG 64-22	AVG. WID.	SQ.YD.	POUND / SQ.YD.	PG 64-22	TOTAL PG 64-22
			FEET			FEET			FEET				FEET			TON	FEET			TON	FEET			TON	TON
MAIN LANES																									
100+00.00	101+00.00	TRANSITION	100.00						22.00	244.44	41.55	41.55									VAR.	244.44	220.00	26.89	26.89
101+00.00	133+12.34	HWY. 35 NOTCH & WIDEN	3212.34	11.50	369.42	30.50	8566.24	423.31	20.00	7138.53	1213.55	1641.86	6.50	2320.02	330.00	382.80	24.00	8566.24	220.00	942.29	24.00	8566.24	220.00	942.29	1884.58
135+01.05	203+42.63	HWY. 35 NOTCH & WIDEN	6841.58	11.50	786.78	30.50	18244.21	912.21	20.00	15203.51	2584.60	3496.81	6.50	4941.14	330.00	815.29	24.00	18244.21	220.00	2006.86	24.00	18244.21	220.00	2006.86	4013.72
203+47.73	315+43.88	HWY. 35 NOTCH & WIDEN	11196.15	11.50	1287.56	30.50	29856.40	1492.82	20.00	24880.33	4229.66	5722.48	6.50	8086.11	330.00	1334.21	24.00	29856.40	220.00	3284.20	24.00	29856.40	220.00	3284.20	6568.40
317+83.49	355+68.21	HWY. 35 NOTCH & WIDEN	3784.72	11.50	435.24	30.50	10092.59	504.63	20.00	8410.49	1429.78	1934.41	6.50	2733.41	330.00	451.01	24.00	10092.59	220.00	1110.18	24.00	10092.59	220.00	1110.18	2220.36
357+47.91	442+41.97	HWY. 35 NOTCH & WIDEN	8494.06	11.50	976.82	30.50	22650.83	1132.54	20.00	18875.69	3208.87	4341.41	6.50	6134.60	330.00	1012.21	24.00	22650.83	220.00	2491.59	24.00	22650.83	220.00	2491.59	4983.18
444+41.35	565+55.00	HWY. 35 NOTCH & WIDEN	12113.65	11.50	1393.07	30.50	32303.07	1615.15	20.00	26919.22	4576.27	6191.42	6.50	8748.75	330.00	1443.54	24.00	32303.07	220.00	3553.34	24.00	32303.07	220.00	3553.34	7106.68
565+55.00	568+85.00	HWY. 35 NOTCH & WIDEN TAPER	330.00	11.50	37.95	VAR.	787.86	39.39	20.00	733.33	124.67	164.06	6.50	238.33	330.00	39.32	VAR.	549.53	220.00	60.45	VAR.	651.29	220.00	71.64	132.09
568+85.00	569+20.00	HWY. 35 NOTCH & WIDEN	35.00	11.50	4.03	VAR.	147.33	7.37	20.00	77.78	13.22	20.59	6.50	25.28	330.00	4.17	VAR.	122.05	220.00	13.43	VAR.	144.65	220.00	15.91	29.34
569+20.00	570+39.14	HWY. 35 NOTCH & WIDEN	119.14	11.50	13.70	44.50	503.04	25.15	20.00	264.76	45.01	70.16	6.50	86.05	330.00	14.20	38.00	503.04	220.00	55.33	38.00	503.04	220.00	55.33	110.66
570+39.14	571+22.08	HWY. 35 NOTCH & WIDEN RADIUS	82.94	11.50	9.54	VAR.	614.65	30.73	20.00	184.31	31.33	62.06	6.50	59.90	330.00	9.88	VAR.	554.75	220.00	61.02	VAR.	657.48	220.00	72.32	133.34
ADDITIONAL FOR LEVELING																									
ENTIRE	PROJECT	TO BE USED IF AND WHERE BY THE ENGINEER	16200.00						20.00	36000.00	6120.00	6120.00					20.00	36000.00	220.00	3960.00					3960.00
ADDITIONAL FOR SUPERELEVATION																									
127+64.16	129+37.99	HWY. 35 SUPER TRANSITION	173.83	2.64	4.59								VAR.	135.97	330.00	22.44									
129+37.99	131+26.17	HWY 35 FULL SUPER (.025 '/')	188.18	5.28	9.94								VAR.	158.70	330.00	26.19									
131+26.17	133+00.00	HWY. 35 SUPER TRANSITION	173.83	2.64	4.59								VAR.	135.97	330.00	22.44									
135+20.00	138+20.00	HWY. 35 SUPER TRANSITION	300.00	6.75	20.25								VAR.	263.00	330.00	43.40									
138+20.00	139+82.76	HWY 35 FULL SUPER (.064 '/')	162.76	13.50	21.97								VAR.	167.82	330.00	27.69									
139+82.76	142+82.76	HWY. 35 SUPER TRANSITION	300.00	6.75	20.25								VAR.	263.00	330.00	43.40									
193+31.83	194+31.25	HWY. 35 SUPER TRANSITION	96.42	3.48	3.46								VAR.	79.76	330.00	13.16									
194+31.25	196+40.93	HWY 35 FULL SUPER (.033 '/')	209.68	6.96	14.59								VAR.	184.75	330.00	30.48									
196+40.93	197+40.32	HWY. 35 SUPER TRANSITION	96.39	3.48	3.46								VAR.	79.73	330.00	13.16									
197+40.32	198+40.32	HWY. 35 SUPER TRANSITION	100.00	3.38	3.38								VAR.	80.00	330.00	13.20									
198+40.32	200+48.38	HWY 35 FULL SUPER (.032 '/')	208.06	6.75	14.04								VAR.	182.40	330.00	30.10									
200+48.38	201+46.76	HWY. 35 SUPER TRANSITION	96.38	3.38	3.33								VAR.	78.70	330.00	12.99									
401+42.14	404+42.14	HWY. 35 SUPER TRANSITION	300.00	5.07	15.21								VAR.	251.67	330.00	41.53									
404+42.14	410+39.09	HWY 35 FULL SUPER (.048 '/')	596.95	10.13	60.47								VAR.	569.76	330.00	94.01									
410+39.09	413+39.09	HWY. 35 SUPER TRANSITION	300.00	5.07	15.21								VAR.	251.67	330.00	41.53									
494+29.88	497+29.88	HWY. 35 SUPER TRANSITION	300.00	10.50	31.50								VAR.	289.00	330.00	47.69									
497+29.88	511+60.40	HWY 35 FULL SUPER (.100 '/')	1430.52	21.00	300.41								VAR.	1721.39	330.00	284.03									
511+60.40	514+60.40	HWY. 35 SUPER TRANSITION	300.00	10.50	31.50								VAR.	289.00	330.00	47.69									
557+01.16	560+01.16	HWY. 35 SUPER TRANSITION	300.00	10.50	31.50								VAR.	289.00	330.00	47.69									
560+01.16	562+05.96	HWY 35 FULL SUPER (.100 '/')	204.80	21.00	43.01								VAR.	246.44	330.00	40.66									
562+05.96	565+05.96	HWY. 35 SUPER TRANSITION	300.00	10.50	31.50								VAR.	289.00	330.00	47.69									
566+10.19	568+29.50	HWY. 35 SUPER TRANSITION	219.31	3.38	7.41								VAR.	175.45	330.00	28.95									
568+29.50	569+00.69	HWY 35 FULL SUPER (.032 '/')	71.19	6.75	4.81								VAR.	62.41	330.00	10.30									
569+00.69	571+20.00	HWY. 35 SUPER TRANSITION	219.31	3.38	7.41								VAR.	175.45	330.00	28.95									
SUBTOTALS: (BOX 1 OF 2)					**6017.90**		**123766.22**	**6188.30**		**138932.39**	**23618.51**	**29806.81**		**39793.63**		**6566.00**		**159442.71**		**17538.69**		**123914.24**		**13630.55**	**31169.24**

BASIS OF ESTIMATE:
ACHM SURFACE COURSE (1/2").....94.8% MIN. AGGR.....5.2% ASPHALT BINDER
ACHM BINDER COURSE (1").....95.8% MIN. AGGR.....4.2% ASPHALT BINDER
MAXIMUM NUMBER OF GYRATIONS = 115 FOR PG 64-22
TACK COAT QUANTITIES WERE CALCULATED USING THE EMULSIFIED ASPHALT RATES. REFER TO SS-400-1 FOR THE RESIDUAL ASPHALT APPLICATON RATES.

7/8/2020

R020629.DGN

DATE REVISED	DATE FILMED	DATE REVISED	DATE FILMED	FED.RD. DIST.NO.	STATE	FED.AID PROJ.NO.	SHEET NO.	TOTAL SHEETS
				6	ARK.			
				JOB NO.		020629	70	122

(2) QUANTITIES

STATE OF ARKANSAS
LICENSED PROFESSIONAL ENGINEER
No. 11425
TRINITY D. SMITH

Sep 18 2020 1:01 PM

DocuSign

BASE AND SURFACING (BOX 2 OF 2)

STATION	STATION	LOCATION	LENGTH	AGGREGATE BASE COURSE (CLASS 7)		TACK COAT							ACHM BINDER COURSE (1")				ACHM SURFACE COURSE (1/2")								
						(0.05 GAL. PER SQ. YD.)			(0.17 GAL. PER SQ. YD.)																
				TON / STATION	TON	TOTAL WID.	SQ.YD.	GALLON	TOTAL WID.	SQ.YD.	GALLON	TOTAL GALLONS	AVG. WID.	SQ.YD.	POUND / SQ.YD.	PG 64-22	AVG. WID.	SQ.YD.	POUND / SQ.YD.	PG 64-22	AVG. WID.	SQ.YD.	POUND / SQ.YD.	PG 64-22	TOTAL PG 64-22
			FEET			FEET			FEET				FEET			TON	FEET			TON	FEET			TON	TON
ADDITIONAL FOR GUARDRAIL WIDENING																									
130+34.22	130+67.22	HWY. 35 RT. - TAPER	33.00	23.13	7.63																2.75	10.08	220.00	1.11	1.11
130+67.22	130+77.22	HWY. 35 RT.	10.00	46.25	4.63																4.50	5.00	220.00	0.55	0.55
130+77.22	133+02.22	HWY. 35 RT.	225.00	46.25	104.06																5.50	137.50	220.00	15.13	15.13
131+29.46	131+62.46	HWY. 35 LT. - TAPER	33.00	23.13	7.63																2.75	10.08	220.00	1.11	1.11
131+62.46	131+72.46	HWY. 35 LT.	10.00	46.25	4.63																4.50	5.00	220.00	0.55	0.55
131+72.46	133+22.46	HWY. 35 LT.	150.00	46.25	69.38																5.50	91.67	220.00	10.08	10.08
134+90.93	136+40.93	HWY. 35 RT.	150.00	46.25	69.38																5.50	91.67	220.00	10.08	10.08
136+40.93	136+50.93	HWY. 35 RT.	10.00	46.25	4.63																4.50	5.00	220.00	0.55	0.55
136+50.93	136+83.93	HWY. 35 RT. - TAPER	33.00	23.13	7.63																2.75	10.08	220.00	1.11	1.11
135+11.17	137+36.17	HWY. 35 LT.	225.00	46.25	104.06																5.50	137.50	220.00	15.13	15.13
137+36.17	137+46.17	HWY. 35 LT.	10.00	46.25	4.63																4.50	5.00	220.00	0.55	0.55
137+46.17	137+79.17	HWY. 35 LT. - TAPER	33.00	23.13	7.63																2.75	10.08	220.00	1.11	1.11
312+75.88	313+08.88	HWY. 35 RT. - TAPER	33.00	23.13	7.63																2.75	10.08	220.00	1.11	1.11
313+08.88	313+18.88	HWY. 35 RT.	10.00	46.25	4.63																4.50	5.00	220.00	0.55	0.55
313+18.88	315+43.88	HWY. 35 RT.	225.00	46.25	104.06																5.50	137.50	220.00	15.13	15.13
313+50.88	313+83.88	HWY. 35 LT. - TAPER	33.00	23.13	7.63																2.75	10.08	220.00	1.11	1.11
313+83.88	313+93.88	HWY. 35 LT.	10.00	46.25	4.63																4.50	5.00	220.00	0.55	0.55
313+93.88	315+43.88	HWY. 35 LT.	150.00	46.25	69.38																5.50	91.67	220.00	10.08	10.08
317+83.49	318+13.49	HWY. 35 LT.	30.00	46.25	13.88																5.50	18.33	220.00	2.02	2.02
317+83.49	318+13.49	HWY. 35 RT.	30.00	46.25	13.88																5.50	18.33	220.00	2.02	2.02
353+50.21	353+83.21	HWY. 35 RT. - TAPER	33.00	23.13	7.63																2.75	10.08	220.00	1.11	1.11
353+83.21	353+93.21	HWY. 35 RT.	10.00	46.25	4.63																4.50	5.00	220.00	0.55	0.55
353+93.21	355+68.21	HWY. 35 RT.	175.00	46.25	80.94																5.50	106.94	220.00	11.76	11.76
353+75.21	354+08.21	HWY. 35 LT. - TAPER	33.00	23.13	7.63																2.75	10.08	220.00	1.11	1.11
354+08.21	354+18.21	HWY. 35 LT.	10.00	46.25	4.63																4.50	5.00	220.00	0.55	0.55
354+18.21	355+68.21	HWY. 35 LT.	150.00	46.25	69.38																5.50	91.67	220.00	10.08	10.08
357+47.91	358+97.91	HWY. 35 RT.	150.00	46.25	69.38																5.50	91.67	220.00	10.08	10.08
358+97.91	359+07.91	HWY. 35 RT.	10.00	46.25	4.63																4.50	5.00	220.00	0.55	0.55
359+07.91	359+40.91	HWY. 35 RT. - TAPER	33.00	23.13	7.63																2.75	10.08	220.00	1.11	1.11
357+47.91	359+72.91	HWY. 35 LT.	225.00	46.25	104.06																5.50	137.50	220.00	15.13	15.13
359+72.91	359+82.91	HWY. 35 LT.	10.00	46.25	4.63																4.50	5.00	220.00	0.55	0.55
359+82.91	360+15.91	HWY. 35 LT. - TAPER	33.00	23.13	7.63																2.75	10.08	220.00	1.11	1.11
439+73.97	440+06.97	HWY. 35 RT. - TAPER	33.00	23.13	7.63																2.75	10.08	220.00	1.11	1.11
440+06.97	440+16.97	HWY. 35 RT.	10.00	46.25	4.63																4.50	5.00	220.00	0.55	0.55
440+16.97	442+41.97	HWY. 35 RT.	225.00	46.25	104.06																5.50	137.50	220.00	15.13	15.13
440+48.97	440+81.97	HWY. 35 LT. - TAPER	33.00	23.13	7.63																2.75	10.08	220.00	1.11	1.11
440+81.97	440+91.97	HWY. 35 LT.	10.00	46.25	4.63																4.50	5.00	220.00	0.55	0.55
440+91.97	442+41.97	HWY. 35 LT.	150.00	46.25	69.38																5.50	91.67	220.00	10.08	10.08
444+41.35	445+91.35	HWY. 35 RT.	150.00	46.25	69.38																5.50	91.67	220.00	10.08	10.08
445+91.35	446+01.35	HWY. 35 RT.	10.00	46.25	4.63																4.50	5.00	220.00	0.55	0.55
446+01.35	446+34.35	HWY. 35 RT. - TAPER	33.00	23.13	7.63																2.75	10.08	220.00	1.11	1.11
444+41.35	446+66.35	HWY. 35 LT.	225.00	46.25	104.06																5.50	137.50	220.00	15.13	15.13
446+66.35	446+76.35	HWY. 35 LT.	10.00	46.25	4.63																4.50	5.00	220.00	0.55	0.55
446+76.35	447+09.35	HWY. 35 LT. - TAPER	33.00	23.13	7.63																2.75	10.08	220.00	1.11	1.11
SUBTOTALS (BOX 1 OF 2):					**6017.90**		**123766.22**	**6188.30**		**138932.39**	**23618.51**	**29806.81**		**39793.63**		**6566.00**		**159442.71**		**17538.69**		**123914.24**		**13630.55**	**31169.24**
SUBTOTALS (BOX 2 OF 2):					**1390.36**																	**1821.41**		**200.38**	**200.38**
TOTALS:					**7408.26**		**123766.22**	**6188.30**		**138932.39**	**23618.51**	**29806.81**		**39793.63**		**6566.00**		**159442.71**		**17538.69**		**125735.65**		**13830.93**	**31369.62**

BASIS OF ESTIMATE:
ACHM SURFACE COURSE (1/2").....94.8% MIN. AGGR.....5.2% ASPHALT BINDER
ACHM BINDER COURSE (1").....95.8% MIN. AGGR.....4.2% ASPHALT BINDER
MAXIMUM NUMBER OF GYRATIONS = 115 FOR PG 64-22
TACK COAT QUANTITIES WERE CALCULATED USING THE EMULSIFIED ASPHALT RATES. REFER TO SS-400-1 FOR THE RESIDUAL ASPHALT APPLICATION RATES.

7/8/2020

R020629.DGN

QUANTITIES

DATE REVISED	DATE FILMED	DATE REVISED	DATE FILMED	FED. ROAD DIST. NO.	STATE	FED. AID PROJ. NO.	SHEET NO.	TOTAL SHEETS
				6	ARK.			
				JOB NO.		020629	71	122

(1) SEE REFERENCE TABLE - QUANTITIES - 61736

SCHEDULE OF BRIDGE QUANTITIES - JOB NO. 020629

LOG MILE	UNIT OF STRUCTURE	ITEM NO.	SS & 804	SS & 809	SP JOB 020629	SP JOB 020629
		ITEM	REINFORCING STEEL-BRIDGE (GRADE 60)	SILICONE JOINT SEALANT	POLYMER OVERLAY	BRIDGE DECK REPAIR FOR POLYMER OVERLAYS
		UNIT	LBS.	LIN. FT.	SQ. YD.	SQ. FT.
5.95	EXISTING BRIDGE NO. 03600 (2)					
5.69	EXISTING BRIDGE NO. 05138 (3)		238	143	623	280
4.04	EXISTING BRIDGE NO. 05139 (3)		215	114	560	252
3.28	EXISTING BRIDGE NO. 05140 (3)(4)		286	143	747	336
TOTALS FOR JOB NO. 020629			(1) 739	400	1,930	(1) 868

EXISTING BRIDGE NOS. 05138, 05139, & 05140 HAVE APPROXIMATELY 2" OF ASPHALT OVERLAY.

(1) QUANTITY SHOWN IS FOR ESTIMATING AND BIDDING PURPOSES ONLY. ACTUAL QUANTITIES, IF ANY, WILL BE DETERMINED IN THE FIELD.

(2) FOR BRIDGE NO. 03600 AT ALL FOUR BRIDGE CORNERS CONSTRUCT TYPE 'CT' GUTTERS (W = 2'-0"). SEE STANDARD DRAWING 55039 AND ROADWAY PLANS FOR ADDITIONAL INFORMATION.

(3) FOR BRIDGE NOS. 05138, 05139, AND 05140 AT ALL FOUR BRIDGE CORNERS CONSTRUCT TYPE 'AT' GUTTERS (W = 4'-0"). SEE STANDARD DRAWING 55036 AND ROADWAY PLANS FOR ADDITIONAL INFORMATION.

(4) FOR BRIDGE NO. 05140 MODIFY TYPE 'AT' APPROACH GUTTER CURB SECTIONS AT ONE END TO FIT BRIDGE END TERMINAL. SEE ROADWAY PLANS FOR ADDITIONAL INFORMATION.

REFERENCE TABLE

BRIDGE NO.	EXISTING DWG. NO(S).
03600	11749
05138	13852
05139	13853
05140	13854

STATE OF ARKANSAS
LICENSED PROFESSIONAL ENGINEER
No. 9235
CHARLES R. ELLIS

Ellis, Rick
Sep 14 2020 11:13 AM
DocuSign
BRIDGE ENGINEER

SCHEDULE OF BRIDGE QUANTITIES
HWY. 65 - YELLOW BEND PORT (S)
CHICOT & DESHA COUNTIES

ROUTE 35 SEC. 9, 10

ARKANSAS STATE HIGHWAY COMMISSION

LITTLE ROCK, ARK.

DRAWN BY: DBS DATE: 7-17-2020 FILENAME: b020629_q1.dgn
CHECKED BY: WAC DATE: 7-17-2020 SCALE: NO SCALE
DESIGNED BY: — DATE: —

BRIDGE NOS. SEE REFERENCE TABLE DRAWING NO. 61736

PRINT DATE: 9/14/2020

DATE REVISED	DATE FILMED	DATE REVISED	DATE FILMED	FED.RD. DIST.NO.	STATE	FED.AID PROJ.NO.	SHEET NO.	TOTAL SHEETS
				6	ARK.			
				JOB NO.		020629	72	122

(2) SUMMARY OF QUANTITIES & REVISIONS

STATE OF ARKANSAS
LICENSED PROFESSIONAL ENGINEER
No. 11425
TRINITY D. SMITH

Sep 18 2020 1:01 PM

DocuSign

SUMMARY OF QUANTITIES (BOX 1 OF 2)

	ITEM NUMBER	ITEM		QUANTITY	UNIT
	201	CLEARING		472	STATION
	201	GRUBBING		472	STATION
	202	REMOVAL AND DISPOSAL OF PIPE CULVERTS		74	EACH
	202	REMOVAL AND DISPOSAL OF BOX CULVERTS		2	EACH
	202	REMOVAL AND DISPOSAL OF GUARDRAIL		1002	LIN. FT.
	206	FLOWABLE SELECT MATERIAL		12	CU. YD.
	SS & 210	UNCLASSIFIED EXCAVATION		12334	CU. YD.
	210	COMPACTED EMBANKMENT		14489	CU. YD.
	SP & 210	SOIL STABILIZATION		1000	TON
	301	PROCESSING LIME TREATED SUBGRADE		29115	SQ. YD.
*	301	QUICKLIME (SLURRY) IN TREATED SUBGRADE	(ALTERNATE NO. 1)	1229	TON
*	301	QUICKLIME (DRY) IN TREATED SUBGRADE	(ALTERNATE NO. 2)	924	TON
*	301	HYDRATED LIME IN TREATED SUBGRADE	(ALTERNATE NO. 3)	1229	TON
	SS & 303	AGGREGATE BASE COURSE (CLASS 7)		11217	TON
	SS & 401	TACK COAT		30257	GAL.
	SP, SS, & 406	MINERAL AGGREGATE IN ACHM BINDER COURSE (1")		6290	TON
	SP, SS, & 406	ASPHALT BINDER (PG 64-22) IN ACHM BINDER COURSE (1")		276	TON
	SP, SS, & 407	MINERAL AGGREGATE IN ACHM SURFACE COURSE (1/2")		30589	TON
	SP, SS, & 407	ASPHALT BINDER (PG 64-22) IN ACHM SURFACE COURSE (1/2")		1678	TON
	412	COLD MILLING ASPHALT PAVEMENT		1459	SQ. YD.
	SP, SS, & 414	ASPHALT CONCRETE PATCHING FOR MAINTENANCE OF TRAFFIC		225	TON
	SP, SS, & 415	ACHM PATCHING OF EXISTING ROADWAY		5394	TON
	504	APPROACH GUTTERS		121.16	CU. YD.
	SS & 505	PORTLAND CEMENT CONCRETE DRIVEWAY		476.80	SQ. YD.
	601	MOBILIZATION		1.00	LUMP SUM
	SP & 602	FURNISHING FIELD OFFICE		1	EACH
	SP, SS, & 603	MAINTENANCE OF TRAFFIC		1.00	LUMP SUM
	SS & 604	SIGNS		415	SQ. FT.
	SS & 604	BARRICADES		32	LIN. FT.
	SS & 604	TRAFFIC DRUMS		194	EACH
	604	CONSTRUCTION PAVEMENT MARKINGS		141366	LIN. FT.
	SS & 605	CONCRETE DITCH PAVING (TYPE B)		148	SQ. YD.
	SP	CULVERT CLEAN OUT		11	EACH
	606	24" REINFORCED CONCRETE PIPE CULVERTS (CLASS III)		4	LIN. FT.
*	606	24" REINFORCED CONCRETE PIPE CULVERTS (CLASS III)	(ALTERNATE NO. 1)	46	LIN. FT.
*	606	24" ASPHALT COATED CORRUGATED STEEL PIPE CULVERTS (16 GAUGE)	(ALTERNATE NO. 2)	52	LIN. FT.
*	606	24" ALUMINUM COATED CORRUGATED STEEL PIPE CULVERTS (16 GAUGE)	(ALTERNATE NO. 3)	52	LIN. FT.
*	606	24" POLYMER PRECOATED METALLIC COATED CORRUGATED STEEL PIPE CULVERTS (16 GAUGE)	(ALTERNATE NO. 4)	52	LIN. FT.
*	SP & 606	24" HIGH DENSITY POLYETHYLENE PIPE	(ALTERNATE NO. 5)	52	LIN. FT.
*	SP & 606	24" PVC PIPE	(ALTERNATE NO. 6)	52	LIN. FT.
*	606	24" REINFORCED CONCRETE PIPE CULVERTS (CLASS V)	(ALTERNATE NO. 1)	208	LIN. FT.
*	606	24" ASPHALT COATED CORRUGATED STEEL PIPE CULVERTS (16 GAUGE)	(ALTERNATE NO. 2)	244	LIN. FT.
*	606	24" ALUMINUM COATED CORRUGATED STEEL PIPE CULVERTS (16 GAUGE)	(ALTERNATE NO. 3)	244	LIN. FT.
*	606	24" POLYMER PRECOATED METALLIC COATED CORRUGATED STEEL PIPE CULVERTS (16 GAUGE)	(ALTERNATE NO. 4)	244	LIN. FT.
*	SP & 606	24" HIGH DENSITY POLYETHYLENE PIPE	(ALTERNATE NO. 5)	244	LIN. FT.
*	SP & 606	24" PVC PIPE	(ALTERNATE NO. 6)	244	LIN. FT.
	606	36" REINFORCED CONCRETE PIPE CULVERTS (CLASS III)		7	LIN. FT.
*	606	36" REINFORCED CONCRETE PIPE CULVERTS (CLASS V)	(ALTERNATE NO. 1)	42	LIN. FT.
*	606	36" ASPHALT COATED CORRUGATED STEEL PIPE CULVERTS (14 GAUGE)	(ALTERNATE NO. 2)	48	LIN. FT.
*	606	36" ALUMINUM COATED CORRUGATED STEEL PIPE CULVERTS (14 GAUGE)	(ALTERNATE NO. 3)	48	LIN. FT.
*	606	36" POLYMER PRECOATED METALLIC COATED CORRUGATED STEEL PIPE CULVERT (14 GAUGE)	(ALTERNATE NO. 4)	48	LIN. FT.
*	SP & 606	36" HIGH DENSITY POLYETHYLENE PIPE	(ALTERNATE NO. 5)	48	LIN. FT.
*	SP & 606	36" PVC PIPE	(ALTERNATE NO. 6)	48	LIN. FT.
	SP, SS, & 606	18" SIDE DRAIN		1242	LIN. FT.
	SP, SS, & 606	24" SIDE DRAIN		850	LIN. FT.
	SP, SS, & 606	30" SIDE DRAIN		38	LIN. FT.
	SP, SS, & 606	36" SIDE DRAIN		160	LIN. FT.
	SS & 606	22" X 14" SIDE DRAIN		116	LIN. FT.
	SS & 606	29" X 18" SIDE DRAIN		224	LIN. FT.
*	606	24" FLARED END SECTIONS FOR REINFORCED CONCRETE PIPE CULVERTS	(ALTERNATE NO. 1)	24	EACH
*	606	24" FLARED END SECTIONS FOR CORRUGATED STEEL PIPE CULVERTS	(ALTERNATE NO. 2)	24	EACH
*	606	30" FLARED END SECTIONS FOR REINFORCED CONCRETE PIPE CULVERTS	(ALTERNATE NO. 1)	4	EACH
*	606	30" FLARED END SECTIONS FOR CORRUGATED STEEL PIPE CULVERTS	(ALTERNATE NO. 2)	4	EACH
*	606	36" FLARED END SECTIONS FOR REINFORCED CONCRETE PIPE CULVERTS	(ALTERNATE NO. 1)	2	EACH
*	606	36" FLARED END SECTIONS FOR CORRUGATED STEEL PIPE CULVERTS	(ALTERNATE NO. 2)	2	EACH
	606	SELECTED PIPE BEDDING		170	CU. YD.
	SS & 611	4" PIPE UNDERDRAINS		2000	LIN. FT.
	SS & 611	UNDERDRAIN OUTLET PROTECTORS		4	EACH
	SS & 617	GUARDRAIL (TYPE A)		2575	LIN. FT.
	SS & 617	GUARDRAIL TERMINAL (TYPE 2)		14	EACH
	SS & 617	THRIE BEAM GUARDRAIL TERMINAL		14	EACH
	620	LIME		106	TON
	620	SEEDING		52.82	ACRE
	SS & 620	MULCH COVER		179.52	ACRE
	620	WATER		7974.2	M. GAL.
	621	TEMPORARY SEEDING		126.70	ACRE
	621	SILT FENCE		55965	LIN. FT.
	621	SAND BAG DITCH CHECKS		8140	BAG
	621	SEDIMENT REMOVAL AND DISPOSAL		2814	CU. YD.
	621	ROCK DITCH CHECKS		1113	CU. YD.
	623	SECOND SEEDING APPLICATION		52.82	ACRE
	624	SOLID SODDING		152	SQ. YD.
	626	EROSION CONTROL MATTING (CLASS 3)		1481	SQ. YD.

* DENOTES ALTERNATE BID ITEMS.

SUMMARY OF QUANTITIES (BOX 2 OF 2)

ITEM NUMBER	ITEM	QUANTITY	UNIT
635	ROADWAY CONSTRUCTION CONTROL	1.00	LUMP SUM
637	MAILBOXES	28	EACH
637	MAILBOX SUPPORTS (SINGLE)	24	EACH
637	MAILBOX SUPPORTS (DOUBLE)	2	EACH
718	REFLECTORIZED PAINT PAVEMENT MARKING WHITE (6")	93867	LIN. FT.
718	REFLECTORIZED PAINT PAVEMENT MARKING YELLOW (6")	93867	LIN. FT.
718	REFLECTORIZED PAINT PAVEMENT MARKING (RAILROAD EMBLEMS)	2	EACH
721	RAISED PAVEMENT MARKERS (TYPE II)	587	EACH
SS & 734	BRIDGE END TERMINAL	2	EACH
801	UNCLASSIFIED EXCAVATION FOR STRUCTURES-ROADWAY	11	CU. YD.
SS & 802	CLASS S CONCRETE-ROADWAY	19.00	CU. YD.
SS & 804	REINFORCING STEEL-ROADWAY (GRADE 60)	12083	POUND
	STRUCTURES OVER 20' SPAN		
SS & 804	REINFORCING STEEL-BRIDGE (GRADE 60)	739	POUND
SS & 809	SILICONE JOINT SEALANT	400	LIN. FT.
SP	BRIDGE DECK REPAIR FOR POLYMER OVERLAYS	868	SQ. FT.
SP	POLYMER OVERLAY	1930	SQ. YD.

REVISIONS

DATE	REVISION	SHEET NUMBER

7/8/2020

R020629.DGN

SUMMARY OF QUANTITIES & REVISIONS

SURVEY CONTROL COORDINATES

Project Name: s020629
Date: 2/19/2019
Coordinate System: ARKANSAS STATE PLANE - SOUTH ZONE BASED ON GPS CONTROL, PROJECTED TO GROUND.
Units: U.S. SURVEY FOOT

Point Name	Northing	Easting	Elev	Feature	Description
1	1628173.0634	1505064.2006	134.944	CTL	STD ARDOT CAP STAMPED PN: 1
2	1628667.1637	1506077.5284	134.953	CTL	STD ARDOT CAP STAMPED PN: 2
3	1628671.8679	1506972.6674	134.378	CTL	STD ARDOT CAP STAMPED PN: 3
4	1628673.1100	1507841.4421	135.261	CTL	STD ARDOT CAP STAMPED PN: 4
5	1628675.1011	1508794.9910	134.318	CTL	STD ARDOT CAP STAMPED PN: 5
6	1628641.0304	1509604.0407	135.666	CTL	STD ARDOT CAP STAMPED PN: 6
7	1628664.0615	1510523.0419	134.380	CTL	STD ARDOT CAP STAMPED PN: 7
8	1628744.7905	1511425.9053	134.380	CTL	STD ARDOT CAP STAMPED PN: 8
9	1628826.0665	1512292.6509	134.919	CTL	STD ARDOT CAP STAMPED PN: 9
10	1628911.9467	1513210.1350	134.061	CTL	STD ARDOT CAP STAMPED PN: 10
11	1628996.4929	1514102.2088	134.130	CTL	STD ARDOT CAP STAMPED PN: 11
12	1629077.2418	1515002.8961	133.816	CTL	STD ARDOT CAP STAMPED PN: 12
13	1629126.9253	1515802.2114	134.436	CTL	STD ARDOT CAP STAMPED PN: 13
14	1629162.3020	1516649.6670	135.988	CTL	STD ARDOT CAP STAMPED PN: 14
15	1629264.1660	1517381.7840	137.525	CTL	STD ARDOT CAP STAMPED PN: 15
16	1628541.8065	1518066.5857	140.587	CTL	STD ARDOT CAP STAMPED PN: 16
17	1629338.5997	1518159.8703	140.054	CTL	STD ARDOT CAP STAMPED PN: 17
18	1630069.6986	1517753.9253	139.656	CTL	STD ARDOT CAP STAMPED PN: 18
19	1629383.3059	1518942.3357	139.120	CTL	STD ARDOT CAP STAMPED PN: 19
20	1629480.1506	1519929.9373	137.330	CTL	STD ARDOT CAP STAMPED PN: 20
21	1629571.4781	1520855.9178	135.098	CTL	STD ARDOT CAP STAMPED PN: 21
22	1629660.5885	1521753.9479	134.245	CTL	STD ARDOT CAP STAMPED PN: 22
23	1629751.5250	1522637.6593	134.868	CTL	STD ARDOT CAP STAMPED PN: 23
24	1629846.4076	1523589.2141	135.870	CTL	STD ARDOT CAP STAMPED PN: 24
25	1629940.4432	1524492.5435	137.272	CTL	STD ARDOT CAP STAMPED PN: 25
26	1630036.5770	1525428.4465	136.760	CTL	STD ARDOT CAP STAMPED PN: 26
27	1630121.9742	1526265.3736	138.804	CTL	STD ARDOT CAP STAMPED PN: 27
28	1630241.8811	1527121.4877	138.376	CTL	STD ARDOT CAP STAMPED PN: 28
29	1630281.3310	1527894.6017	136.773	CTL	STD ARDOT CAP STAMPED PN: 29
30	1630384.0430	1528795.0120	135.587	CTL	STD ARDOT CAP STAMPED PN: 30
31	1630481.1588	1529807.4837	131.542	CTL	STD ARDOT CAP STAMPED PN: 31
32	1630577.6336	1530742.9017	130.987	CTL	STD ARDOT CAP STAMPED PN: 32
33	1630684.0568	1531762.2048	135.639	CTL	STD ARDOT CAP STAMPED PN: 33
34	1630775.0303	1532667.4613	131.012	CTL	STD ARDOT CAP STAMPED PN: 34
35	1630900.6694	1533563.5873	131.860	CTL	STD ARDOT CAP STAMPED PN: 35
36	1630956.3892	1534394.8742	134.295	CTL	STD ARDOT CAP STAMPED PN: 36
37	1631038.3332	1535210.0133	133.252	CTL	STD ARDOT CAP STAMPED PN: 37
38	1631142.9083	1535966.2714	133.508	CTL	STD ARDOT CAP STAMPED PN: 38
39	1631152.0558	1536913.7050	132.379	CTL	STD ARDOT CAP STAMPED PN: 39
40	1631007.3687	1537828.6870	133.060	CTL	STD ARDOT CAP STAMPED PN: 40
41	1630859.1064	1538737.3136	129.874	CTL	STD ARDOT CAP STAMPED PN: 41
42	1630723.9578	1539562.9752	130.931	CTL	STD ARDOT CAP STAMPED PN: 42
43	1630658.8046	1540169.6060	134.685	CTL	STD ARDOT CAP STAMPED PN: 43
44	1630492.8574	1540962.6260	134.954	CTL	STD ARDOT CAP STAMPED PN: 44
45	1630357.4407	1541775.7260	134.176	CTL	STD ARDOT CAP STAMPED PN: 45
46	1630227.4374	1542617.2003	135.153	CTL	STD ARDOT CAP STAMPED PN: 46
47	1630110.2566	1543311.9095	134.993	CTL	STD ARDOT CAP STAMPED PN: 47
48	1629995.1819	1544027.4226	135.208	CTL	STD ARDOT CAP STAMPED PN: 48
49	1629846.4776	1544864.7498	135.460	CTL	STD ARDOT CAP STAMPED PN: 49
50	1629740.1354	1545539.4710	139.977	CTL	STD ARDOT CAP STAMPED PN: 50
51	1630002.6043	1546186.1187	144.218	CTL	STD ARDOT CAP STAMPED PN: 51
52	1630593.6294	1546327.3487	143.932	CTL	STD ARDOT CAP STAMPED PN: 52
53	1631289.3855	1545959.2906	139.705	CTL	STD ARDOT CAP STAMPED PN: 53
54	1631922.1226	1545580.6730	138.913	CTL	STD ARDOT CAP STAMPED PN: 54
55	1632681.1280	1545124.5816	138.903	CTL	STD ARDOT CAP STAMPED PN: 55
56	1633360.0033	1544716.7875	139.509	CTL	STD ARDOT CAP STAMPED PN: 56
57	1634070.1322	1544296.2028	139.629	CTL	STD ARDOT CAP STAMPED PN: 57
58	1634696.9020	1543918.4603	139.583	CTL	STD ARDOT CAP STAMPED PN: 58
59	1635345.5359	1543608.5511	140.450	CTL	STD ARDOT CAP STAMPED PN: 59
60	1635880.4842	1543637.3065	159.390	CTL	STD ARDOT CAP STAMPED PN: 60
61	1636588.9660	1543534.3944	159.022	CTL	STD ARDOT CAP STAMPED PN: 61
71	1627577.1381	1503161.7471	133.487	CTL	STD AHDT CAP STAMPED PN: 1 JOB#020595
73	1628516.4443	1502722.5325	135.458	CTL	STD AHDT CAP STAMPED PN: 3 JOB# 020595
100	1633248.2458	1500413.3730	138.092	GPS	ARDOT GPS MON. 090005
101	1632642.8661	1499794.9996	137.868	GPS	ARDOT GPS MON. 090006
103	1633765.6023	1544432.2915	138.799	GPS	ARDOT GPS MON. 090024
104	1635167.7602	1543634.8973	139.115	GPS	ARDOT GPS MON. 090024A
105	1628639.9153	1510494.4365	132.846	GPS	ARDOT GPS MON. 210051
106	1628735.0730	511638.3537	134.993	GPS	ARDOT GPS MON. 210051A
107	1629962.7913	1524854.1803	133.817	GPS	ARDOT GPS MON. 210052
108	1630103.8963	1526298.1532	139.265	GPS	ARDOT GPS MON. 210052A
109	1630831.9281	1538730.8593	129.534	GPS	ARDOT GPS MON. 210053
110	1630626.8430	1540065.4899	133.937	GPS	ARDOT GPS MON. 210053A
900	1628250.8502	1504983.8737	135.002	TBM	X CUT IN BOLT OF FH
901	1628724.9645	1506226.0297	136.350	TBM	X CUT IN BOLT OF FH
902	1628702.1084	1507362.5756	134.993	TBM	SQUARE CUT IN CNTR N HW
903	1628671.6919	1508828.1006	133.767	TBM	SQUARE CUT CNTR S HW
904	1628686.8336	1509437.8386	137.188	TBM	BRONZE DISK IN NW CRNR BR
905	1628734.3800	1510898.8144	133.269	TBM	ARDOT CAP 24" REBAR
906	1628878.1490	1512467.1995	135.205	TBM	ARDOT CAP 24" REBAR
907	1629004.8773	1513772.5376	130.649	TBM	ARDOT CAP 24" REBAR
908	1629092.9176	1514831.7587	134.083	TBM	SQUARE CUT IN CNTR N HW
909	1629159.2539	1516204.9202	133.631	TBM	ARDOT CAP 24" REBAR
910	1629324.8640	1518004.4196	138.198	TBM	SQUARE CUT IN CNTR N HW
911	1629455.9184	1519171.9090	140.060	TBM	X CUT IN BOLT OF FH
912	1629523.7748	1520725.5634	135.646	TBM	SQUARE CUT IN CONC
913	1629693.5761	1522190.0613	127.944	TBM	SQUARE CUT ON S END CU
914	1629813.1200	1523681.3516	135.649	TBM	SQUARE CUT ON CONC
915	1630021.6042	1524894.2002	134.689	TBM	ARDOT CAP 24" REBAR
916	1630073.8778	1526276.0862	139.254	TBM	SQUARE CUT IN CONC
917	1630311.7655	1527805.8344	137.273	TBM	BRONZE DISK IN NE CRNR BR
918	1630485.3060	1529431.4002	130.972	TBM	ARDOT CAP 24" REBAR
919	1630577.7616	1530807.1479	128.172	TBM	SQUARE CUT IN S END CU
920	1630686.3299	1531752.4793	136.573	TBM	BRONZE DISK IN SE CRNR BR
921	1630889.0339	1533356.0611	129.895	TBM	ARDOT CAP 24" REBAR
922	1630905.8537	1534640.2263	130.916	TBM	SQUARE CUT IN CONC
923	1631061.4813	1535968.0005	131.440	TBM	SQUARE CUT IN CONC
924	1631211.3777	1537050.3577	130.612	TBM	SQUARE CUT IN CONC
925	1630823.9117	1538817.1396	130.916	TBM	ARDOT CAP 24" REBAR
926	1630652.5352	1540178.5695	136.606	TBM	BRONZE DISK ON NW CRNR BR
927	1630375.2586	1541599.8893	133.492	TBM	ARDOT CAP 24" REBAR
928	1630201.2201	543148.8205	135.286	TBM	SQUARE CUT IN CONC
929	1629972.9248	1544535.2106	132.629	TBM	ARDOT CAP 24" REBAR
930	1629752.1440	1545852.9584	136.685	TBM	ARDOT CAP 24" REBAR
931	1630925.5837	1546109.9120	137.066	TBM	ARDOT CAP 24" REBAR
932	1631999.4144	1545469.3615	135.926	TBM	ARDOT CAP 24" REBAR
933	1633077.0194	1544807.0850	134.833	TBM	ARDOT CAP 24" REBAR
934	1634153.7903	1544134.2079	134.675	TBM	SQUARE CUT IN CONC
935	1635311.0602	1543554.2094	134.321	TBM	ARDOT CAP 24" REBAR
936	1636713.6091	1543500.0627	158.400	TBM	SQUARE CUT IN CONC
990	1630620.8137	1501735.6360	135.982	TBM	SQUARE CUT IN CONC 65
991	1628388.2990	1502732.1080	135.712	TBM	SQUARE CUT TOP OF CU
999	1612075.6382	1483247.2483	135.649	BM	NGS BM H 243

*Note - Rebar and Cap - Standard - 5/8" Rebar with 2" Aluminum Cap stamped
*(standard markings common to all caps), or as indicated
(other markings indicated in the point description of the individual point).
USE CAF = 1.0 FOR STAKEOUT FOR THIS PROJECT
A PROJECT CAF OF 0.9999508502 HAS BEEN USED TO COMPUTE THE ABOVE GROUND COORDINATES.
THIS CAF IS INTENDED FOR USE WITHIN THE PROJECT LIMITS.
GRID DISTANCE = GROUND DISTANCE X CAF.
GRID COORDINATES ARE STORED UNDER FILE s020629gi.ctl
HORIZONTAL DATUM: NAD 83 (2011)
VERTICAL DATUM: NAVD 88 POSITIONAL ACCURACY THIRD ORDER, UNLESS SPECIFIED OTHERWISE AT A SPECIFIC POINT.

REFERENCE POINTS (1500 SERIES) ARE TO BE USED TO ESTABLISH CONTROL
IF THE PRIMARY CONTROL POINTS LISTED ABOVE HAVE BEEN DESTROYED.
REFERENCE POINTS ARE NOT TO BE USED FOR VERTICAL CONTROL

BASIS OF BEARING:
ARKANSAS STATE PLANE GRID BEARINGS - 0302-SOUTH ZONE
DETERMINED FROM GPS CONTROL POINTS: 090005-090006, 090024-090024A, 210051-210051A, 210052-210052A, 210053-210053A
CONVERGENCE ANGLE: 00-23-40 RIGHT AT LT: N 33-32-17 LG: W 091-17-43
GRID AZIMUTH = ASTRONOMICAL AZIMUTH - CONVERGENCE ANGLE.

HWY. 35

POINT TYPE	POINT NUMBER	STATION	ELEVATION	NORTHING
POB	8000	100+00.00	1628687.9762	1506112.3897
P.I.	8001	102+00.00	1628687.0589	1506312.3875
P.I.	8002	106+46.48	1628686.9637	1506758.8691
P.I.	8003	124+89.16	1628685.6505	1508601.5478
P.C.	8004	129+89.16	1628688.0939	1509101.5418
P.T.	8006	132+63.18	1628677.9716	1509375.2907
P.C.	8007	136+88.16	1628644.5146	1509798.9580
P.T.	8009	140+69.05	1628649.3071	1510179.2865
P.I.	8010	142+82.76	1628671.4940	1510391.8376
P.I.	8011	145+76.90	1628696.1327	1510684.9450
P.I.	8012	162+16.47	1628843.9867	1512317.8320
P.I.	8013	172+99.24	1628944.6040	1513395.9178
P.I.	8014	177+50.03	1628988.8695	1513844.5279
P.I.	8015	189+74.37	1629099.3916	1515063.8738
P.C.	8016	195+56.86	1629157.5392	1515643.4512
P.T.	8018	197+25.00	1629141.7852	1515809.7921
P.C.	8019	197+55.64	1629133.0570	1515839.1643
P.T.	8021	199+21.76	1629117.1058	1516003.4918
P.I.	8022	205+39.09	1629175.8570	1516618.0174
P.I.	8023	212+38.42	1629240.7176	1517314.3310
P.I.	8024	216+16.50	1629274.5607	1517690.8956
P.I.	8025	223+91.19	1629352.3021	1518461.6720
P.I.	8026	235+85.11	1629468.6703	1519649.9100
P.I.	8027	242+18.21	1629529.0017	1520280.1266
P.I.	8028	251+54.89	1629621.4097	1521212.2451
P.I.	8029	262+24.00	1629728.1658	1522276.0106
P.I.	8030	271+62.87	1629825.0912	1523209.8644
P.I.	8031	299+01.28	1630104.3467	1525933.9908
P.I.	8032	313+17.29	1630250.1282	1527342.4857
P.I.	8033	329+87.91	1630419.9295	1529004.4505
P.I.	8034	339+16.45	1630511.0768	1529928.5067
P.I.	8035	350+32.68	1630624.5840	1531038.9493
P.I.	8036	355+27.13	1630677.1881	1531530.5913
P.I.	8037	364+20.94	1630765.4520	1532420.0301
P.I.	8038	370+14.85	1630829.0075	1533010.5340
P.I.	8039	376+97.85	1630898.7929	1533689.9560
P.I.	8040	386+46.93	1630994.4563	1534634.2038
P.I.	8041	392+77.05	1631058.3770	1535261.0726
P.C.	8042	403+67.14	1631165.8081	1536345.8540
P.T.	8044	411+14.09	1631142.2333	1537090.3251
P.I.	8045	420+01.17	1630999.1333	1537965.7812
P.I.	8046	422+89.78	1630952.0062	1538250.5217
P.I.	8047	428+68.16	1630860.8638	1538821.6703
P.I.	8048	434+90.53	1630761.2386	1539436.0201
P.I.	8049	455+95.70	1630416.9065	1541512.8369
P.I.	8050	461+67.75	1630327.1302	1542077.8005
P.I.	8051	466+97.79	1630244.4913	1542601.3526
P.I.	8052	479+86.86	1630035.3460	1543873.3451
P.I.	8053	483+51.28	1629977.0257	1544233.0716
P.I.	8054	486+71.50	1629923.7721	1544548.8291
P.C.	8055	496+54.88	1629761.9935	1545518.8148
P.T.	8057	512+35.40	1630803.9224	1546228.8416
P.I.	8058	534+79.28	1632728.8451	1545075.7215
P.I.	8059	538+03.14	1633005.9467	1544908.0919
P.C.	8060	559+26.16	1634829.0834	1543820.2537
P.T.	8062	562+80.96	1635147.7364	1543665.2119
P.C.	8063	567+97.69	1635629.9258	1543479.4700
P.T.	8065	570+03.69	1635797.6546	1543556.8592
POE	8066	571+22.08	1635836.9727	1543668.5314

STATE OF ARKANSAS
LICENSED PROFESSIONAL ENGINEER
No. 11435
FAITH A. D. SMITH

Sep 18 2020 1:01 PM
DocuSign

DATE REVISED	DATE FILMED	DATE REVISED	DATE FILMED

② SURVEY CONTROL DETAILS

FED.RD. DIST.NO.	STATE	FED.AID PROJ.NO.	SHEET NO.	TOTAL SHEETS
6	ARK.		73	122

JOB NO. 020629

HWY. 35
SURVEY CONTROL DETAILS

DATE REVISED	DATE FILMED	DATE REVISED	DATE FILMED	FED.RD. DIST.NO.	STATE	FED.AID PROJ.NO.	SHEET NO.	TOTAL SHEETS
				6	ARK.			
				JOB NO.		020629	74	122

(2) SURVEY CONTROL DETAILS

STATE OF ARKANSAS
LICENSED PROFESSIONAL ENGINEER
No. 11425
TRINITY D. SMITH

Sep 18 2020 1:01 PM

DocuSign

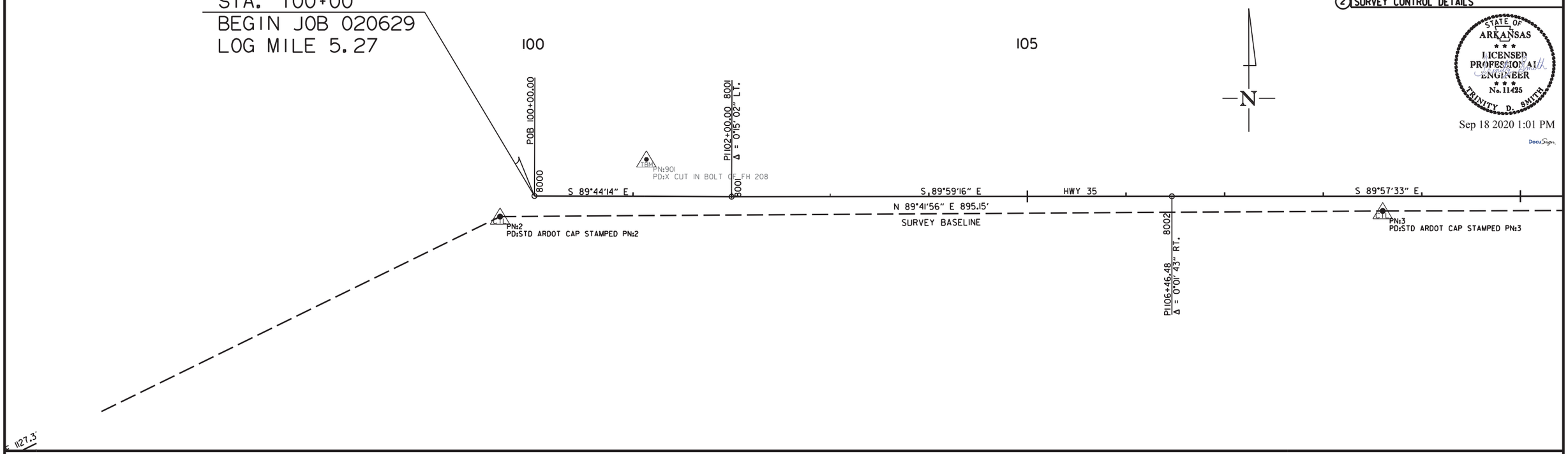

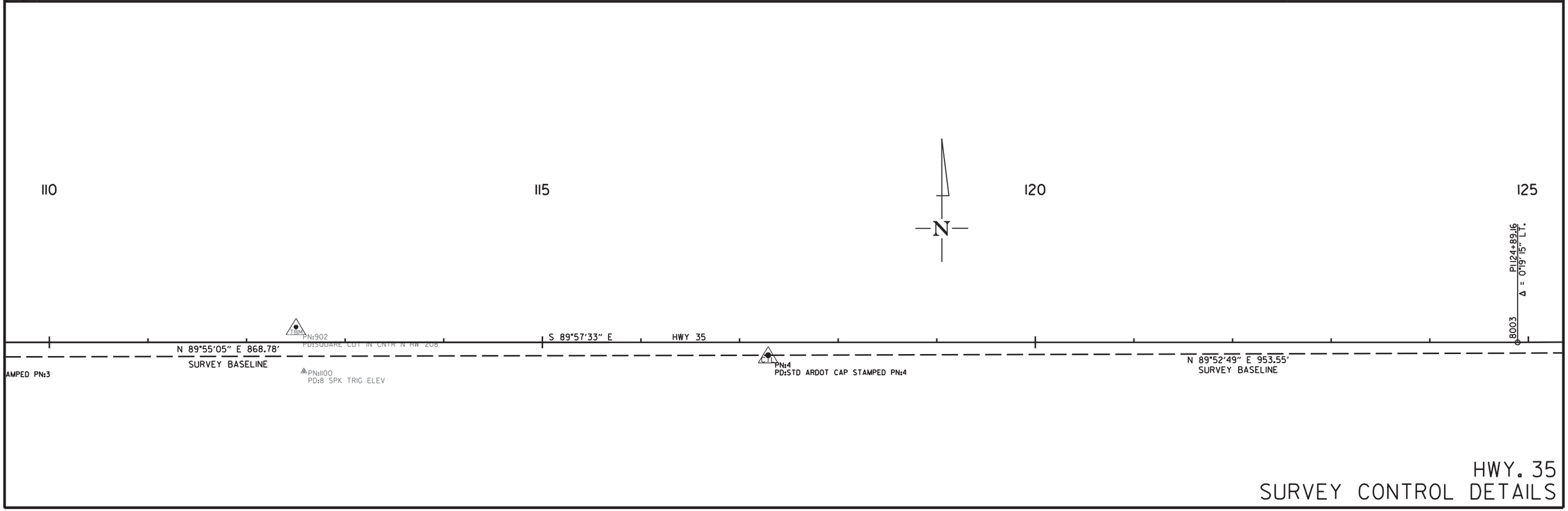

6/17/2020

R020629.DGN

HWY. 35
SURVEY CONTROL DETAILS

DATE REVISED	DATE FILMED	DATE REVISED	DATE FILMED	FED.RD. DIST.NO.	STATE	FED.AID PROJ.NO.	SHEET NO.	TOTAL SHEETS
				6	ARK.			
				JOB NO.		020629	75	122

(2) SURVEY CONTROL DETAILS

STATE OF ARKANSAS
LICENSED PROFESSIONAL ENGINEER
No. 11425
TRINITY D. SMITH

Sep 18 2020 1:02 PM

DocuSign

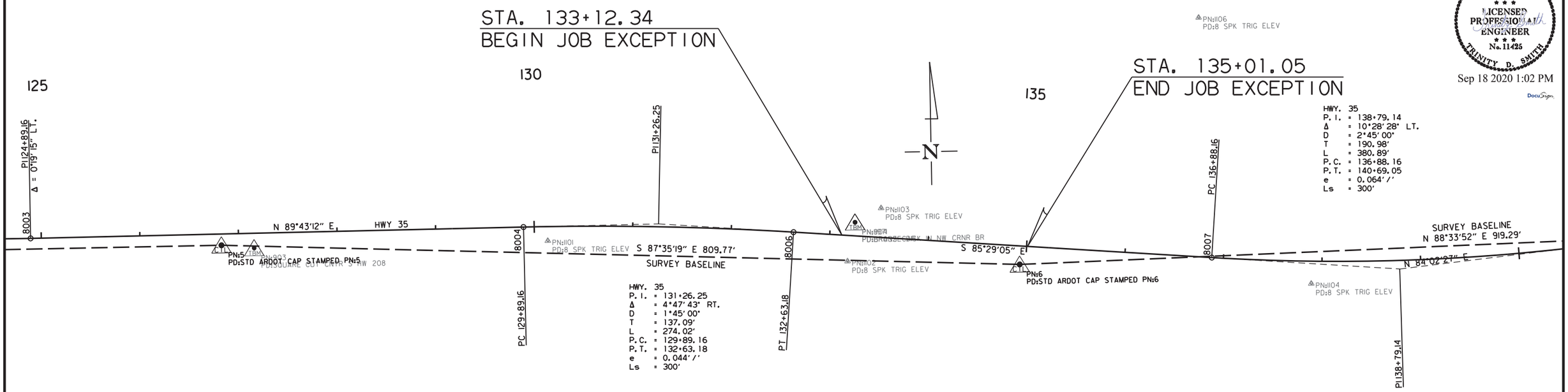

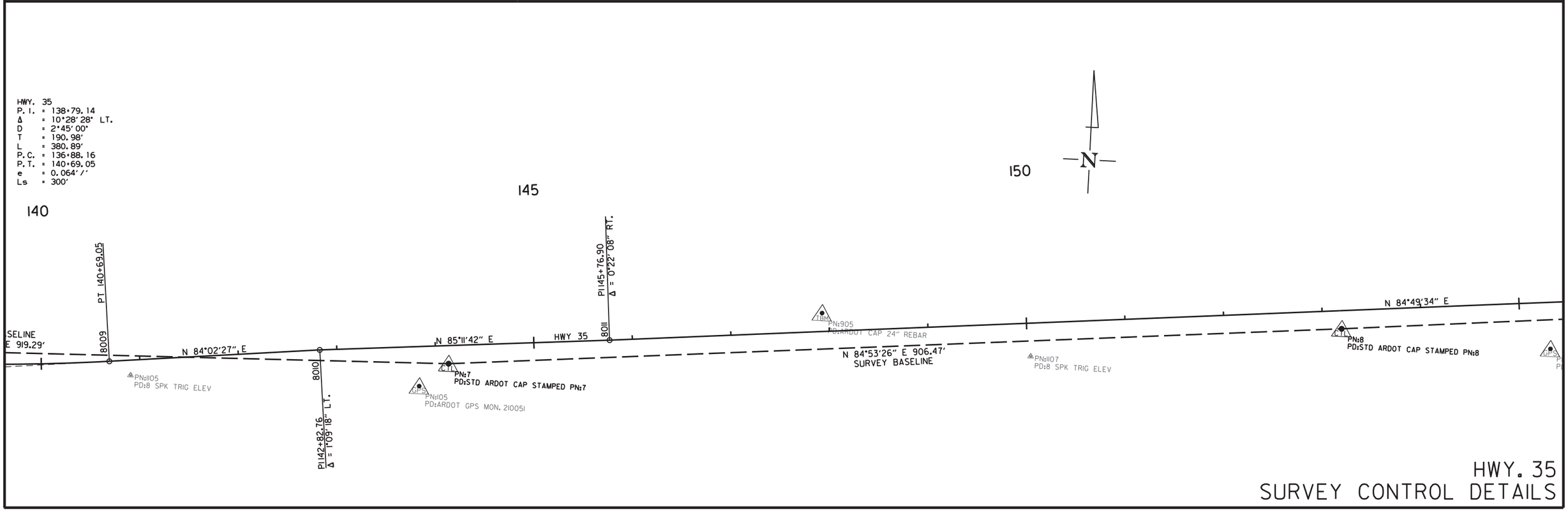

HWY. 35
SURVEY CONTROL DETAILS

6/17/2020

R020629.DGN

DATE REVISED	DATE FILMED	DATE REVISED	DATE FILMED	FED.RD. DIST.NO.	STATE	FED.AID PROJ.NO.	SHEET NO.	TOTAL SHEETS
				6	ARK.			
				JOB NO.		020629	76	122

(2) SURVEY CONTROL DETAILS

STATE OF ARKANSAS
LICENSED PROFESSIONAL ENGINEER
No. 11425
TRINITY D. SMITH

Sep 18 2020 1:02 PM

DocuSign

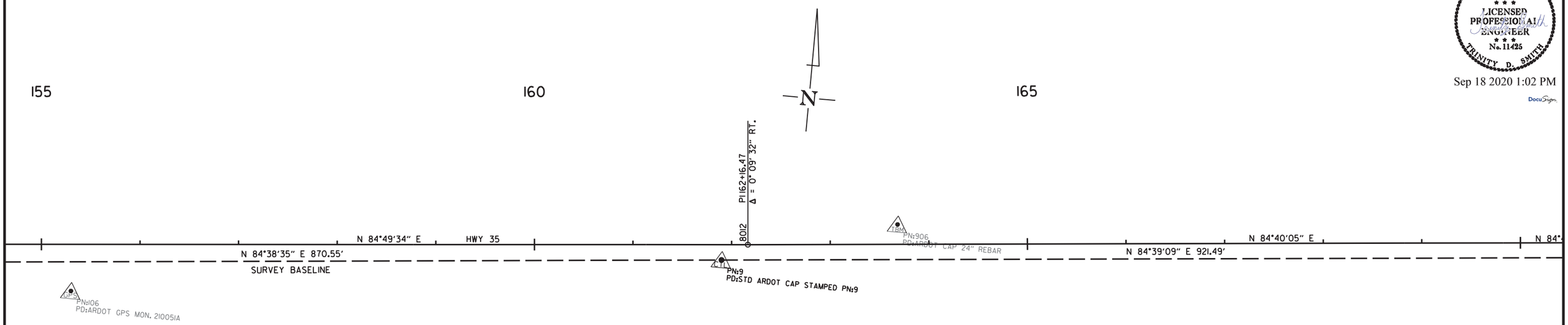

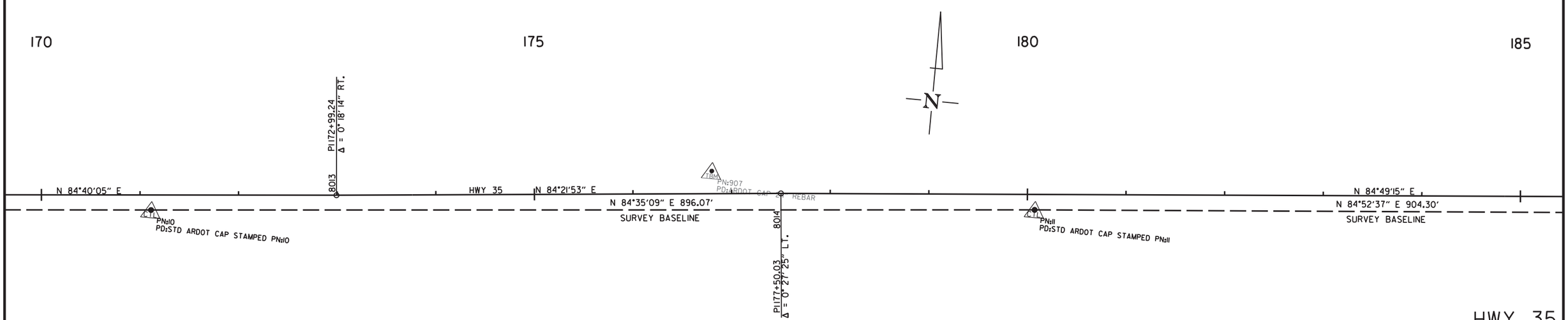

6/17/2020

R020629.DGN

HWY. 35
SURVEY CONTROL DETAILS

DATE REVISED	DATE FILMED	DATE REVISED	DATE FILMED	FED.RD. DIST.NO.	STATE	FED.AID PROJ.NO.	SHEET NO.	TOTAL SHEETS
				6	ARK.			
				JOB NO.		020629	77	122

(2) SURVEY CONTROL DETAILS

STATE OF ARKANSAS
LICENSED PROFESSIONAL ENGINEER
No. 11425
TRINITY D. SMITH

Sep 18 2020 1:02 PM

DocuSign

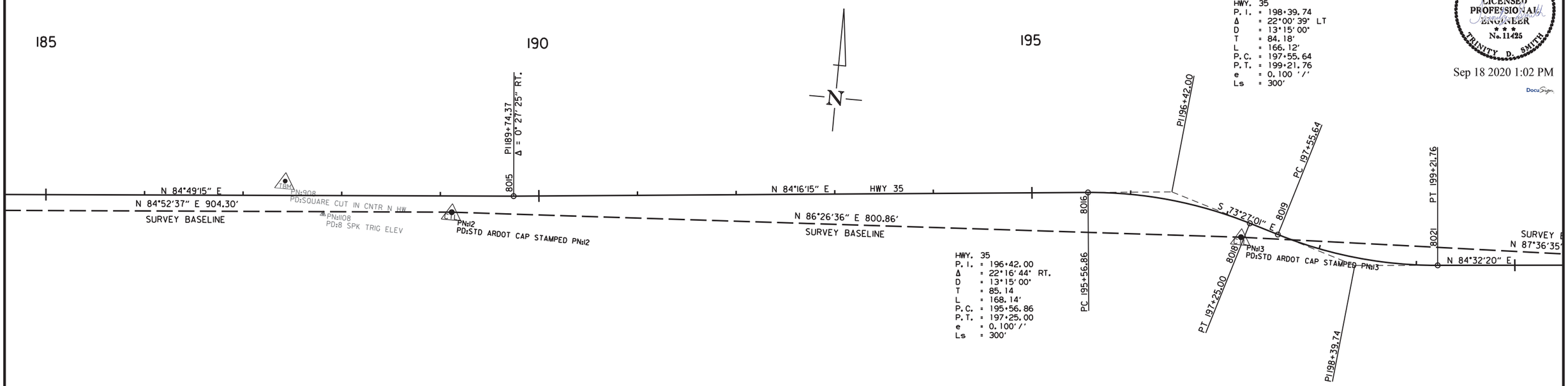

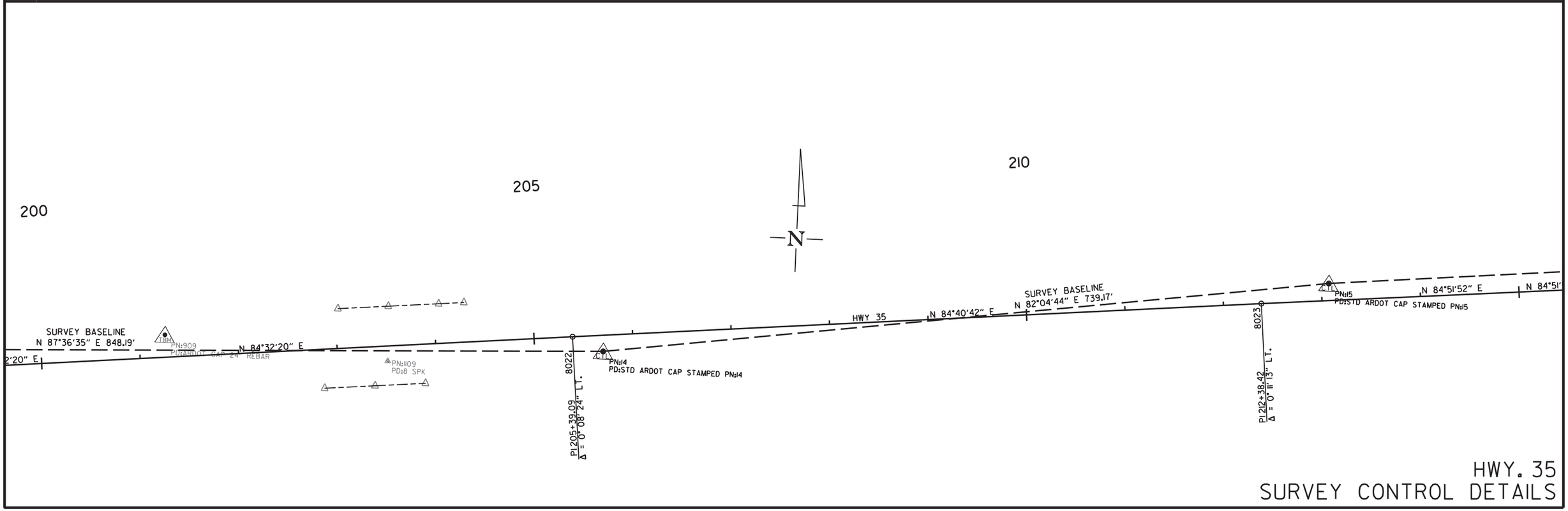

6/17/2020

R020629.DGN

HWY. 35
SURVEY CONTROL DETAILS

DATE REVISED	DATE FILMED	DATE REVISED	DATE FILMED	FED.RD. DIST.NO.	STATE	FED.AID PROJ.NO.	SHEET NO.	TOTAL SHEETS
				6	ARK.			
				JOB NO.		020629	78	122

(2) SURVEY CONTROL DETAILS

STATE OF ARKANSAS
LICENSED PROFESSIONAL ENGINEER
No. 11425
TRINITY D. SMITH

Sep 18 2020 1:02 PM

DocuSign

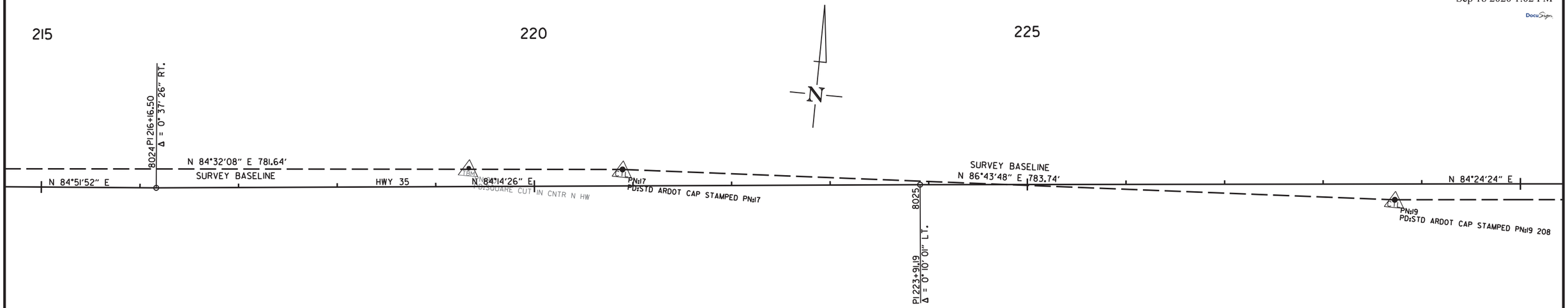

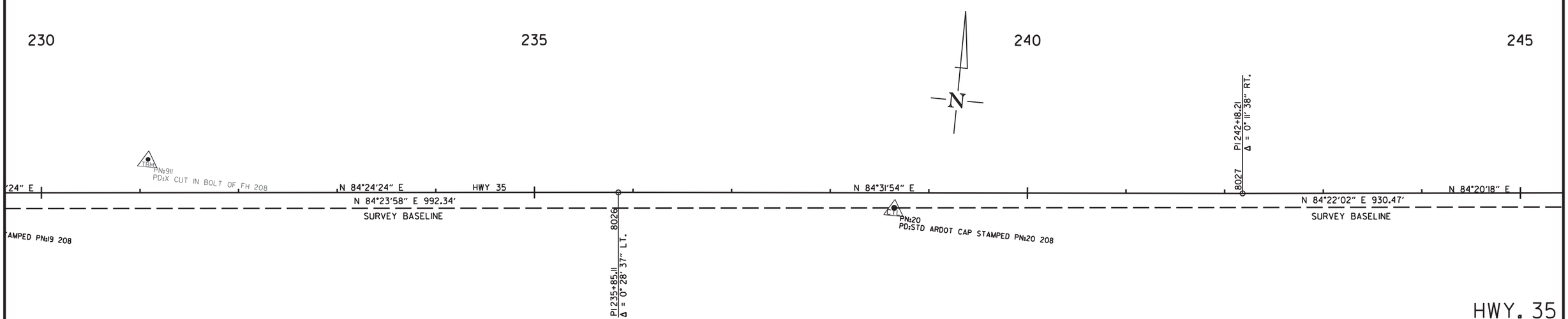

6/17/2020

R020629.DGN

HWY. 35
SURVEY CONTROL DETAILS

DATE REVISED	DATE FILMED	DATE REVISED	DATE FILMED	FED.RD. DIST.NO.	STATE	FED.AID PROJ.NO.	SHEET NO.	TOTAL SHEETS
				6	ARK.			
				JOB NO.		020629	79	122

(2) SURVEY CONTROL DETAILS

STATE OF ARKANSAS
LICENSED PROFESSIONAL ENGINEER
No. 11425
TRINITY D. SMITH

Sep 18 2020 1:02 PM

DocuSign

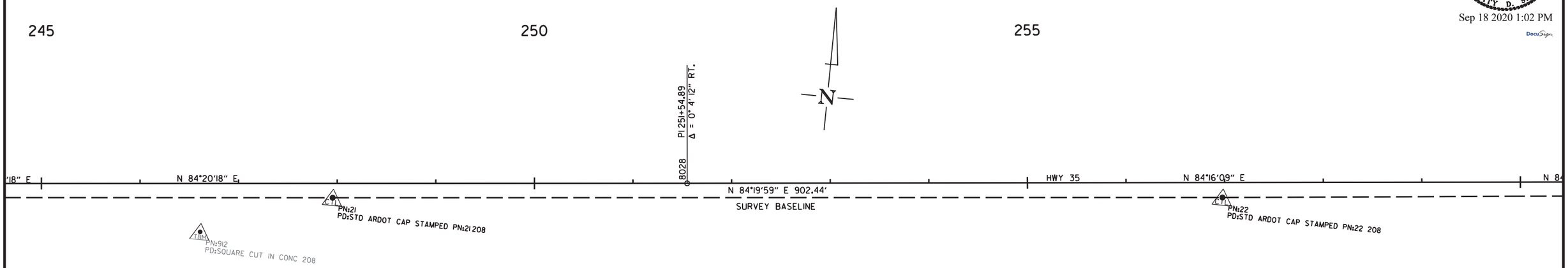

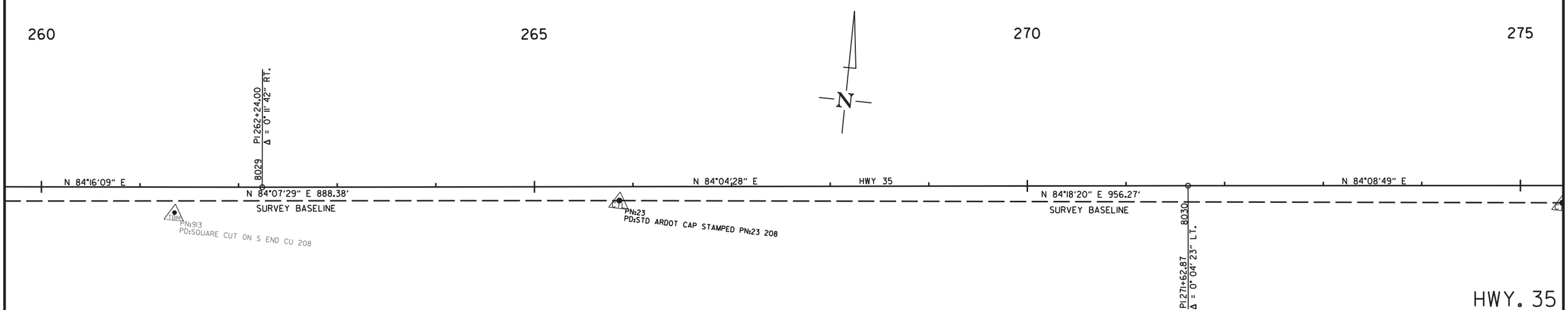

6/17/2020

R020629.DGN

HWY. 35
SURVEY CONTROL DETAILS

DATE REVISED	DATE FILMED	DATE REVISED	DATE FILMED	FED.RD. DIST.NO.	STATE	FED.AID PROJ.NO.	SHEET NO.	TOTAL SHEETS
				6	ARK.			
				JOB NO.		020629	80	122

(2) SURVEY CONTROL DETAILS

STATE OF ARKANSAS
LICENSED PROFESSIONAL ENGINEER
No. 11425
TRINITY D. SMITH

Sep 18 2020 1:03 PM

DocuSign

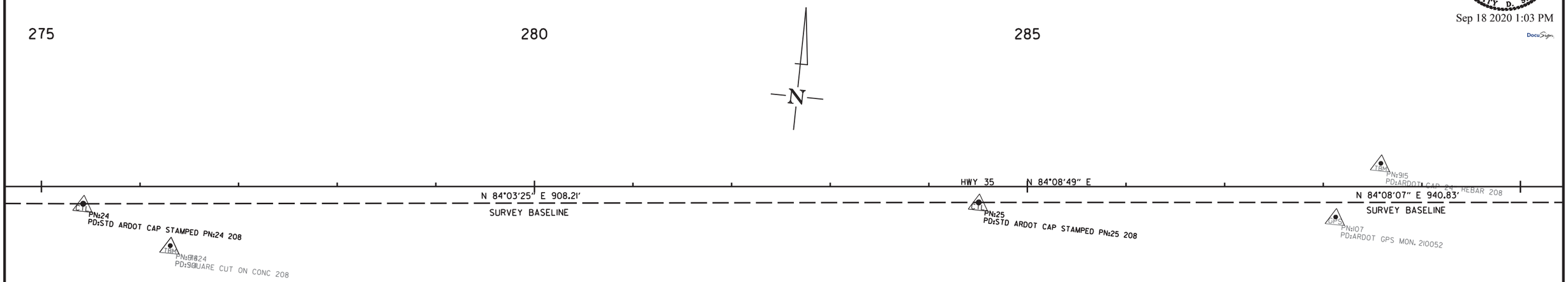

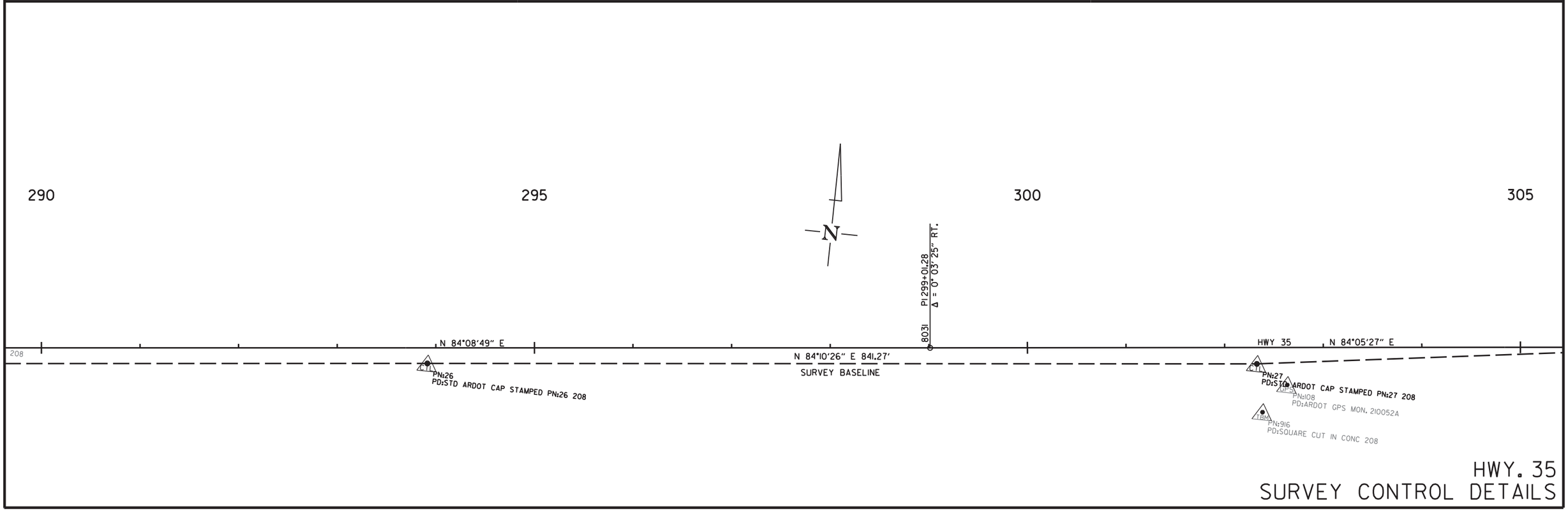

HWY. 35
SURVEY CONTROL DETAILS

6/17/2020

R020629.DGN

DATE REVISED	DATE FILMED	DATE REVISED	DATE FILMED	FED.RD. DIST.NO.	STATE	FED.AID PROJ.NO.	SHEET NO.	TOTAL SHEETS
				6	ARK.			
				JOB NO.		020629	81	122

(2) SURVEY CONTROL DETAILS

STATE OF ARKANSAS
LICENSED PROFESSIONAL ENGINEER
No. 11425
TRINITY D. SMITH

Sep 18 2020 1:03 PM

DocuSign

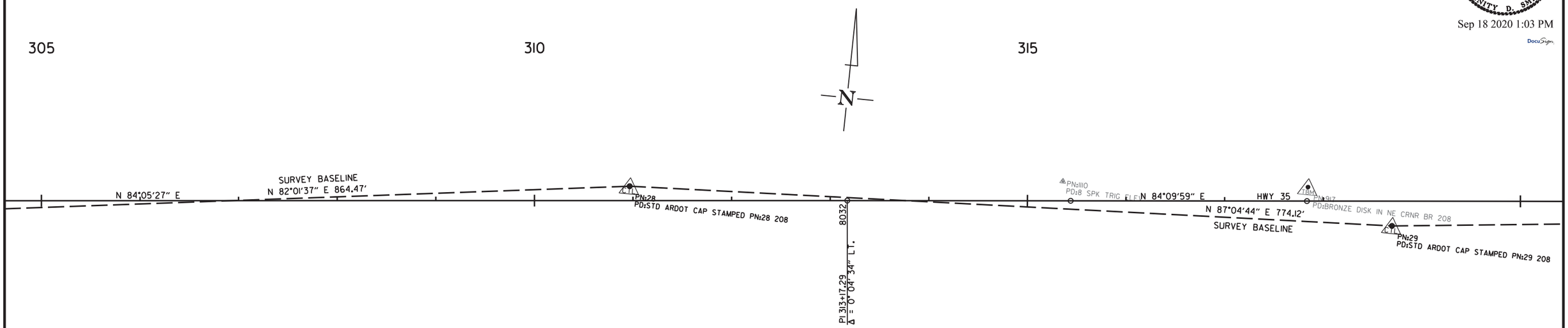

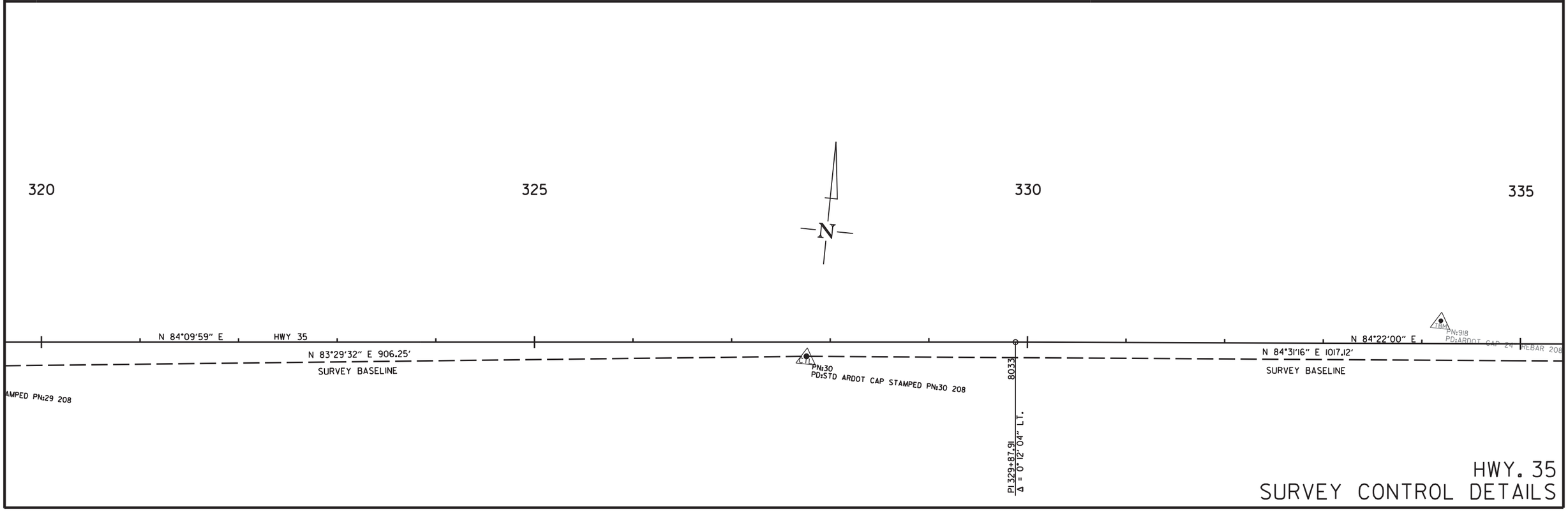

HWY. 35
SURVEY CONTROL DETAILS

6/17/2020

R020629.DGN

DATE REVISED	DATE FILMED	DATE REVISED	DATE FILMED	FED.RD. DIST.NO.	STATE	FED.AID PROJ.NO.	SHEET NO.	TOTAL SHEETS
				6	ARK.			
				JOB NO.		020629	82	122

(2) SURVEY CONTROL DETAILS

STATE OF ARKANSAS
LICENSED PROFESSIONAL ENGINEER
No. 11425
TRINITY D. SMITH

Sep 18 2020 1:03 PM

DocuSign

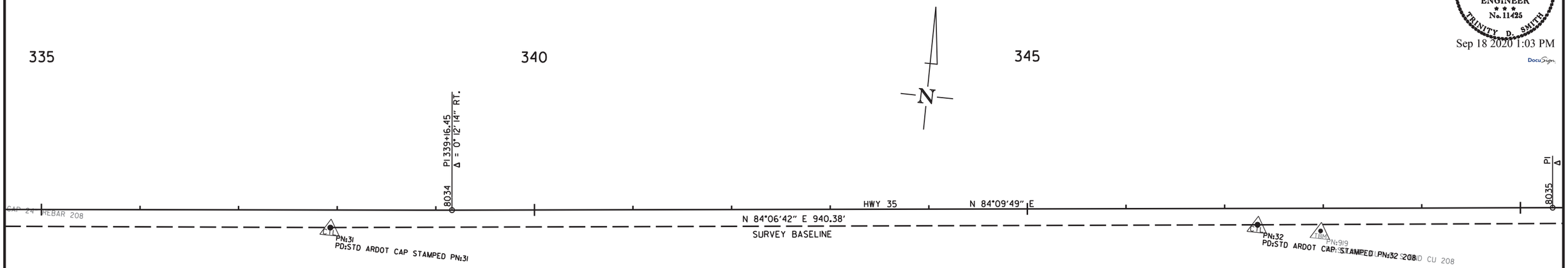

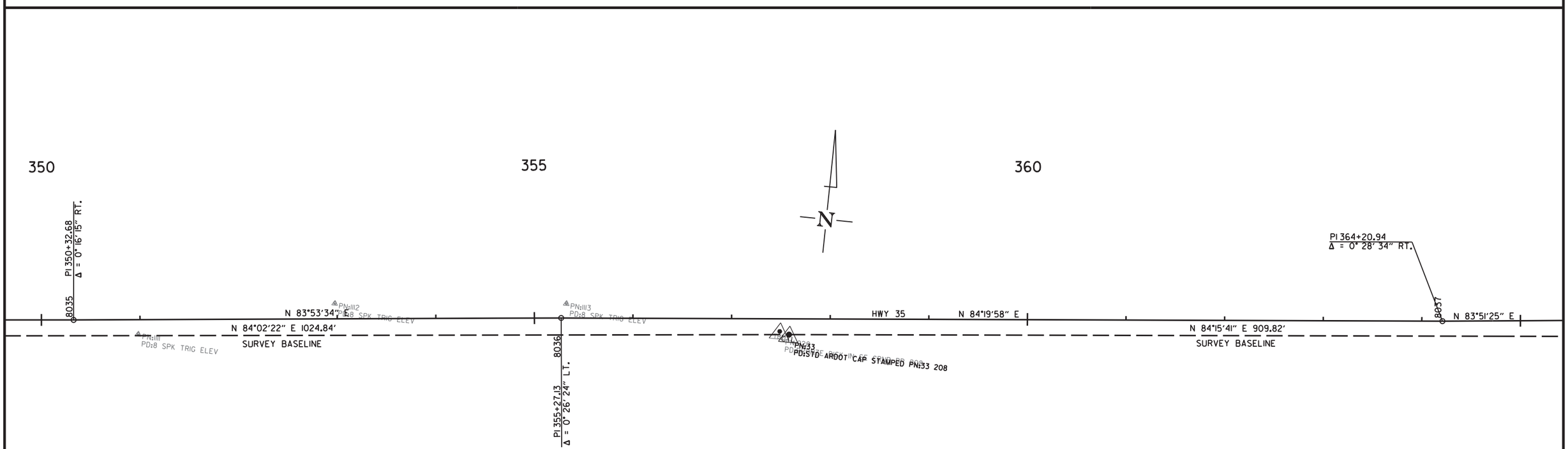

6/17/2020

R020629.DGN

HWY. 35
SURVEY CONTROL DETAILS

DATE REVISED	DATE FILMED	DATE REVISED	DATE FILMED	FED.RD. DIST.NO.	STATE	FED.AID PROJ.NO.	SHEET NO.	TOTAL SHEETS
				6	ARK.			
				JOB NO.		020629	83	122

(2) SURVEY CONTROL DETAILS

STATE OF ARKANSAS
LICENSED PROFESSIONAL ENGINEER
No. 11425
TRINITY D. SMITH

Sep 18 2020 1:03 PM

DocuSign

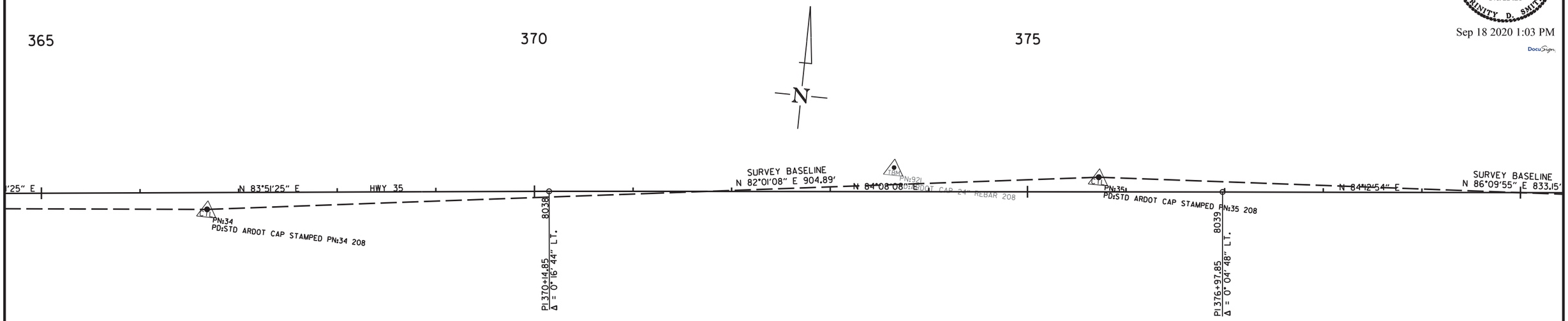

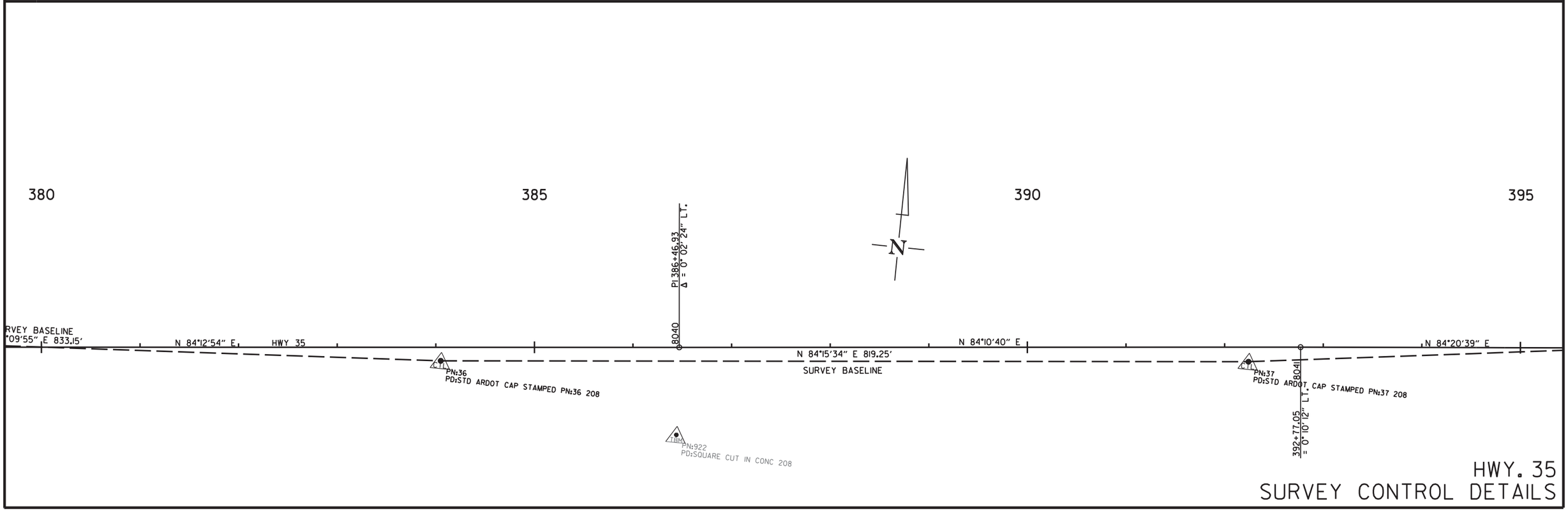

HWY. 35
SURVEY CONTROL DETAILS

6/17/2020

R020629.DGN

DATE REVISED	DATE FILMED	DATE REVISED	DATE FILMED	FED.RD. DIST.NO.	STATE	FED.AID PROJ.NO.	SHEET NO.	TOTAL SHEETS
				6	ARK.			
				JOB NO.		020629	84	122

(2) SURVEY CONTROL DETAILS

STATE OF ARKANSAS
LICENSED PROFESSIONAL ENGINEER
No. 11425
TRINITY D. SMITH

Sep 18 2020 1:03 PM

DocuSign

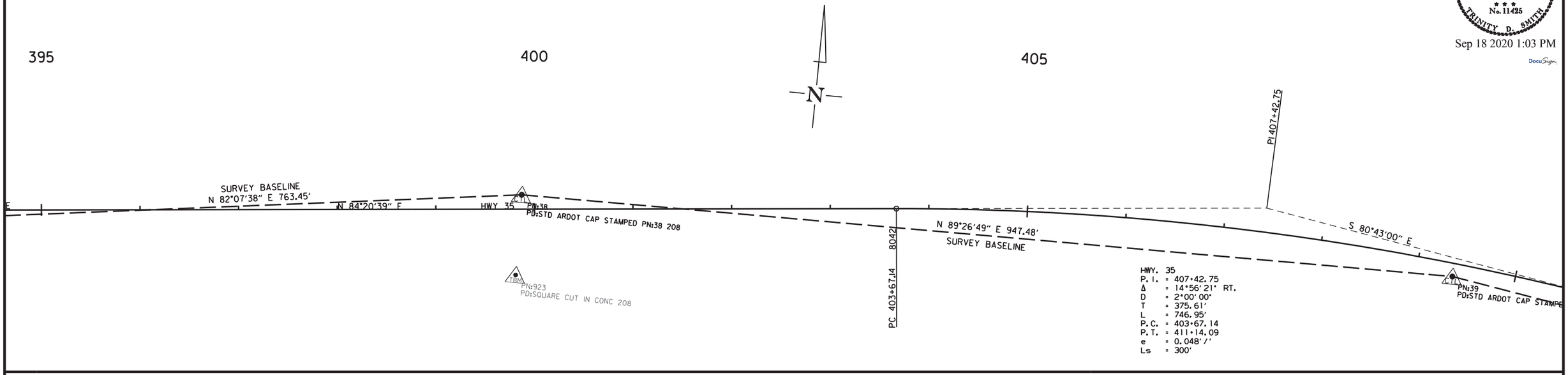

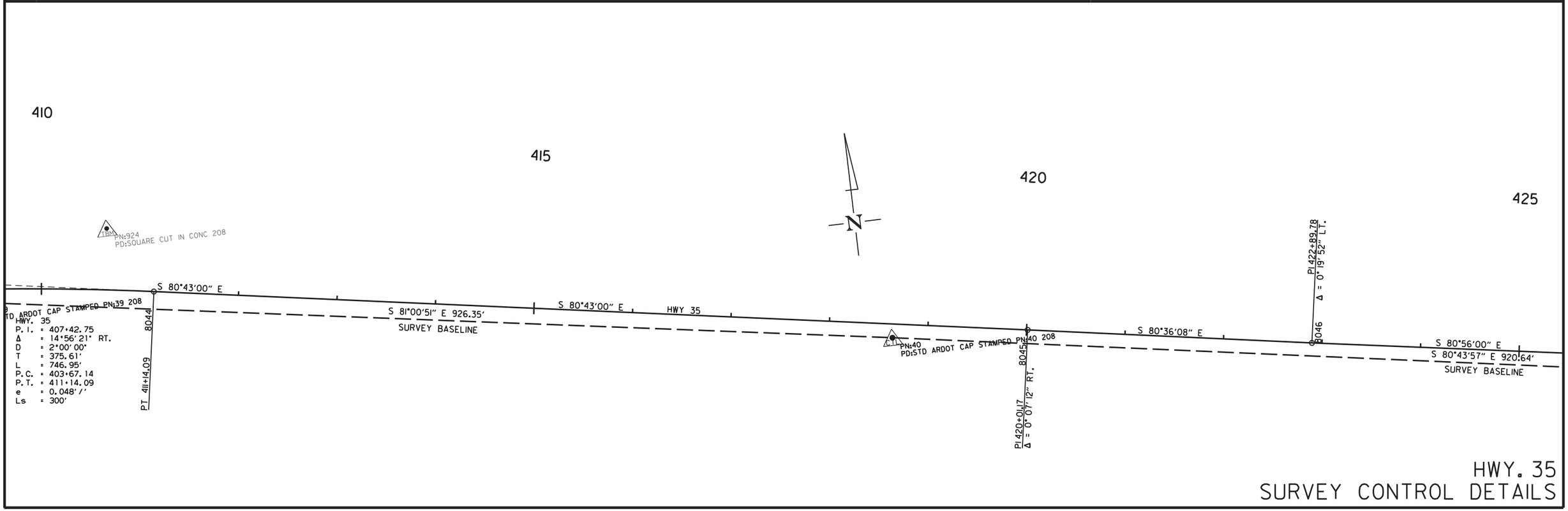

HWY. 35
SURVEY CONTROL DETAILS

6/17/2020

R020629.DGN

DATE REVISED	DATE FILMED	DATE REVISED	DATE FILMED	FED.RD. DIST.NO.	STATE	FED.AID PROJ.NO.	SHEET NO.	TOTAL SHEETS
				6	ARK.			
				JOB NO.		020629	85	122

(2) SURVEY CONTROL DETAILS

STATE OF ARKANSAS
LICENSED PROFESSIONAL ENGINEER
No. 11425
TRINITY D. SMITH

Sep 18 2020 1:04 PM

DocuSign

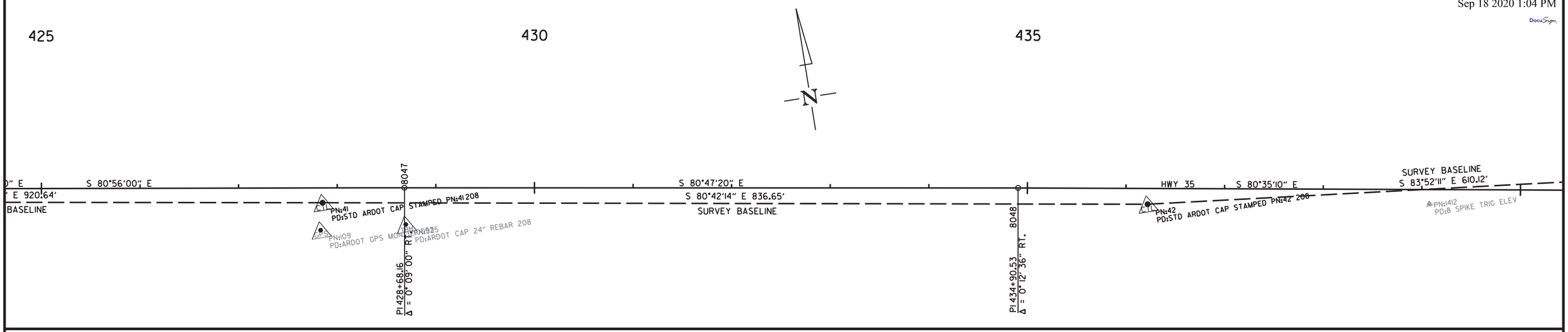

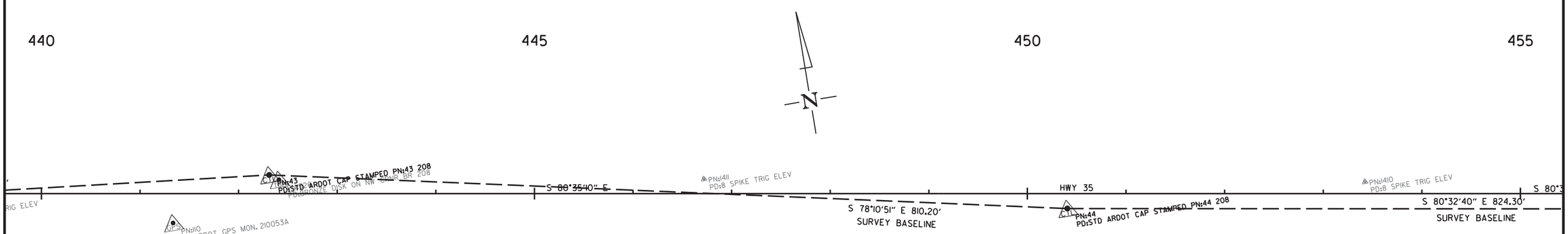

6/17/2020

R020629.DGN

HWY. 35
SURVEY CONTROL DETAILS

DATE REVISED	DATE FILMED	DATE REVISED	DATE FILMED	FED.RD. DIST.NO.	STATE	FED.AID PROJ.NO.	SHEET NO.	TOTAL SHEETS
				6	ARK.			
				JOB NO.		020629	86	122

(2) SURVEY CONTROL DETAILS

STATE OF ARKANSAS
LICENSED PROFESSIONAL ENGINEER
No. 11425
TRINITY D. SMITH

Sep 18 2020 1:04 PM

DocuSign

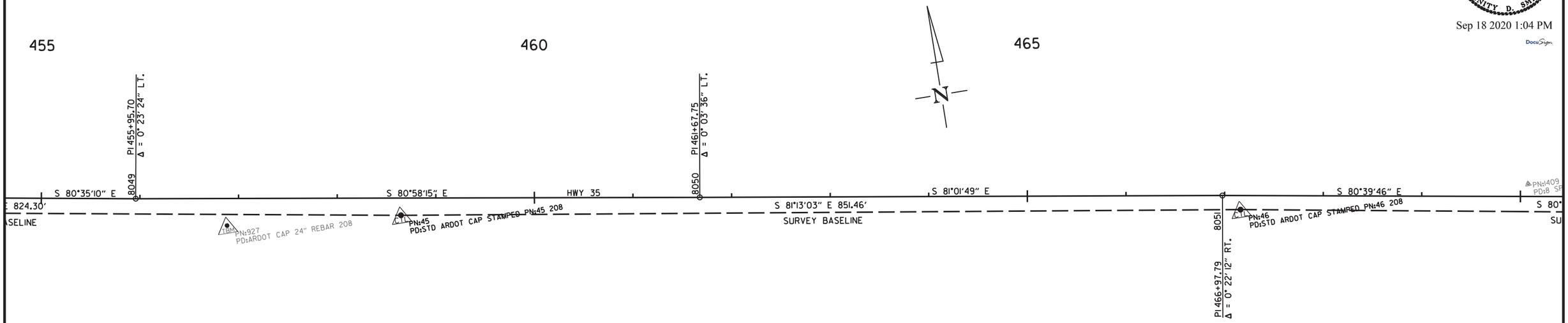

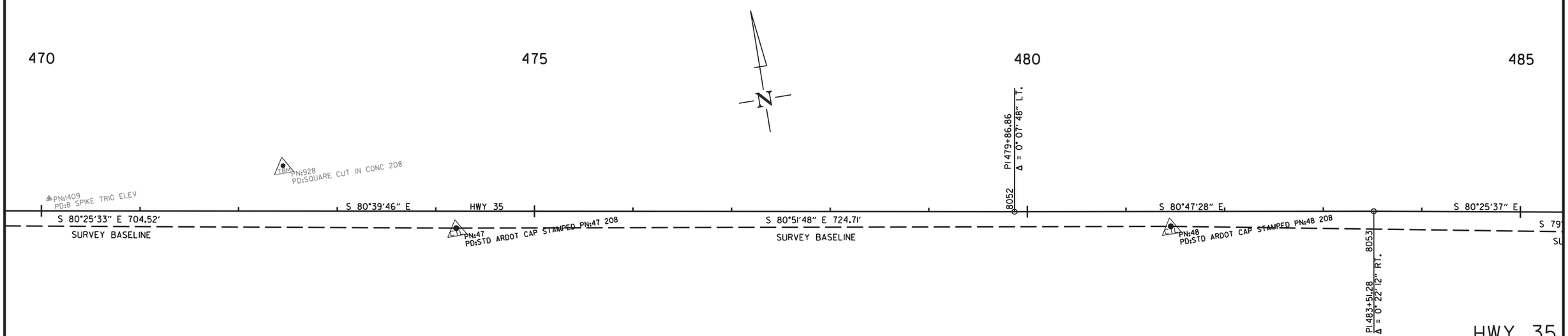

HWY. 35
SURVEY CONTROL DETAILS

6/17/2020

R020629.DGN

DATE REVISED	DATE FILMED	DATE REVISED	DATE FILMED	FED.RD. DIST.NO.	STATE	FED.AID PROJ.NO.	SHEET NO.	TOTAL SHEETS
				6	ARK.			
				JOB NO.		020629	87	122

(2) SURVEY CONTROL DETAILS

STATE OF ARKANSAS
LICENSED PROFESSIONAL ENGINEER
No. 11425
TRINITY D. SMITH

Sep 18 2020 1:04 PM

DocuSign

HWY. 35
P.I. = 511+57.65
Δ = 130°23'33" LT.
D = 8°15'00"
T = 1502.77'
L = 1580.52'
P.C. = 496+54.88
P.T. = 512+35.40
e = 0.100'/'
Ls = 300'

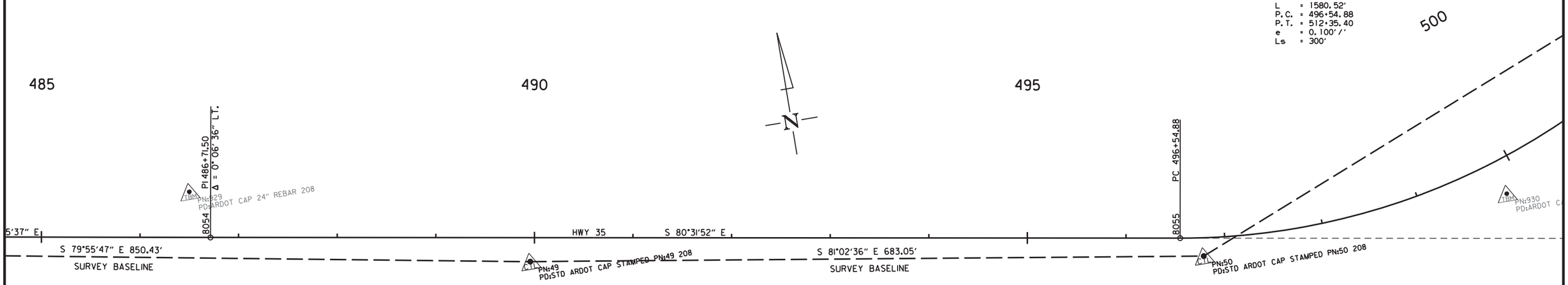

6/17/2020

R020629.DGN

HWY. 35
SURVEY CONTROL DETAILS

DATE REVISED	DATE FILMED	DATE REVISED	DATE FILMED	FED.RD. DIST.NO.	STATE	FED.AID PROJ.NO.	SHEET NO.	TOTAL SHEETS
				6	ARK.			
				JOB NO.		020629	88	122

(2) SURVEY CONTROL DETAILS

STATE OF ARKANSAS
LICENSED PROFESSIONAL ENGINEER
No. 11425
TRINITY D. SMITH

Sep 18 2020 1:04 PM

DocuSign

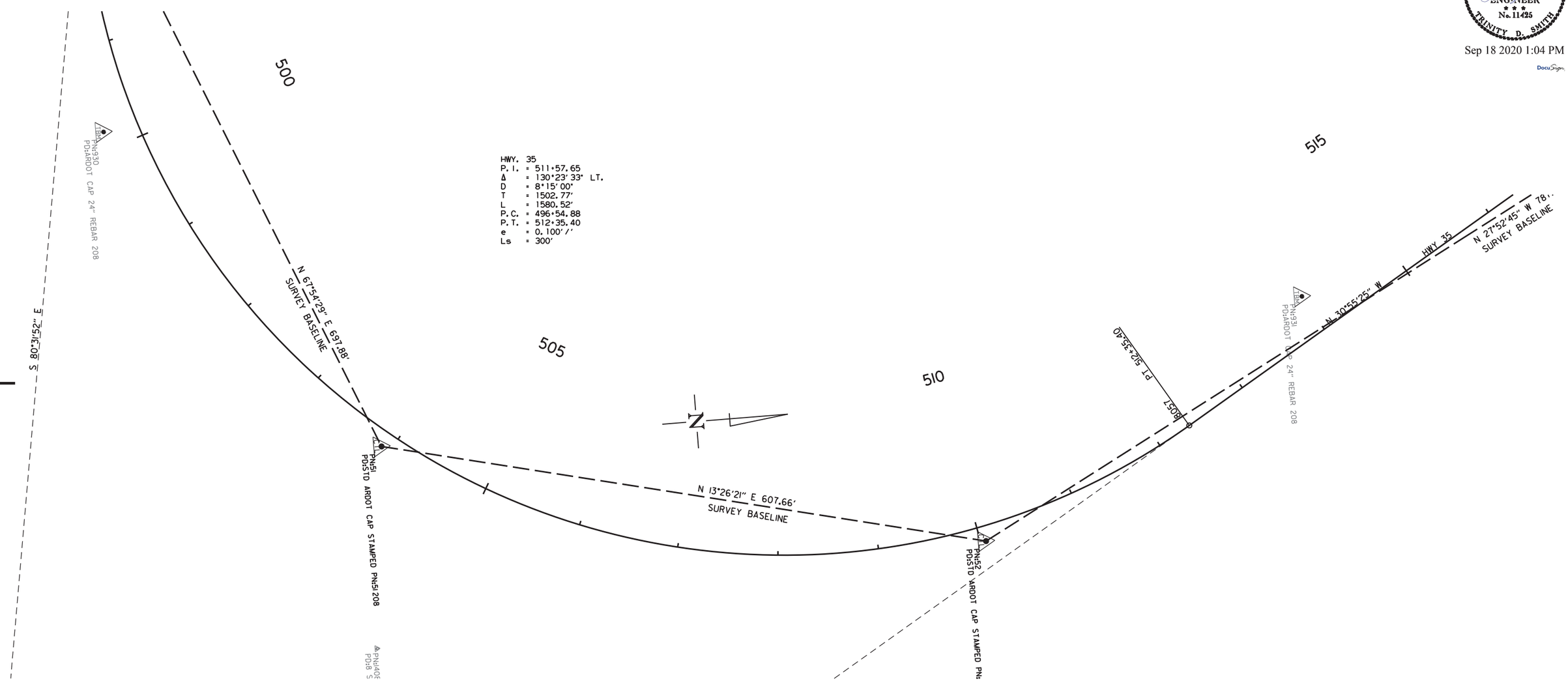

HWY. 35
SURVEY CONTROL DETAILS

6/17/2020

R020629.DGN

DATE REVISED	DATE FILMED	DATE REVISED	DATE FILMED	FED.RD. DIST.NO.	STATE	FED.AID PROJ.NO.	SHEET NO.	TOTAL SHEETS
				6	ARK.			
				JOB NO.		020629	89	122

(2) SURVEY CONTROL DETAILS

STATE OF ARKANSAS
LICENSED PROFESSIONAL ENGINEER
No. 11425
TRINITY D. SMITH

Sep 18 2020 1:05 PM

DocuSign

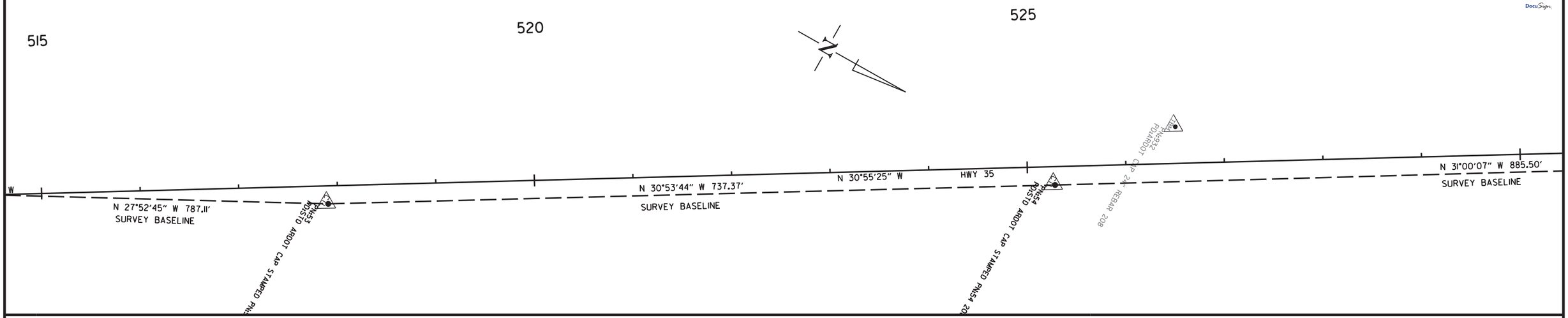

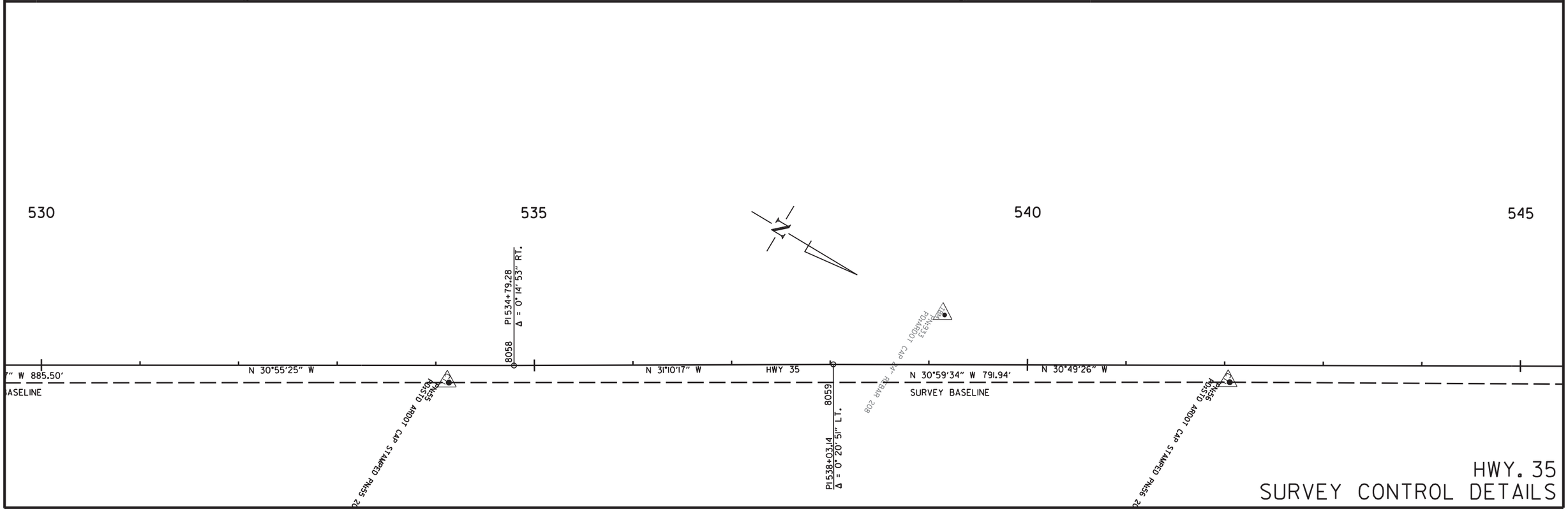

HWY. 35
SURVEY CONTROL DETAILS

6/17/2020

R020629.DGN

DATE REVISED	DATE FILMED	DATE REVISED	DATE FILMED	FED.RD. DIST.NO.	STATE	FED.AID PROJ.NO.	SHEET NO.	TOTAL SHEETS
				6	ARK.			
				JOB NO.		020629	90	122

(2) SURVEY CONTROL DETAILS

STATE OF ARKANSAS
LICENSED PROFESSIONAL ENGINEER
No. 11425
TRINITY D. SMITH

Sep 18 2020 1:05 PM

DocuSign

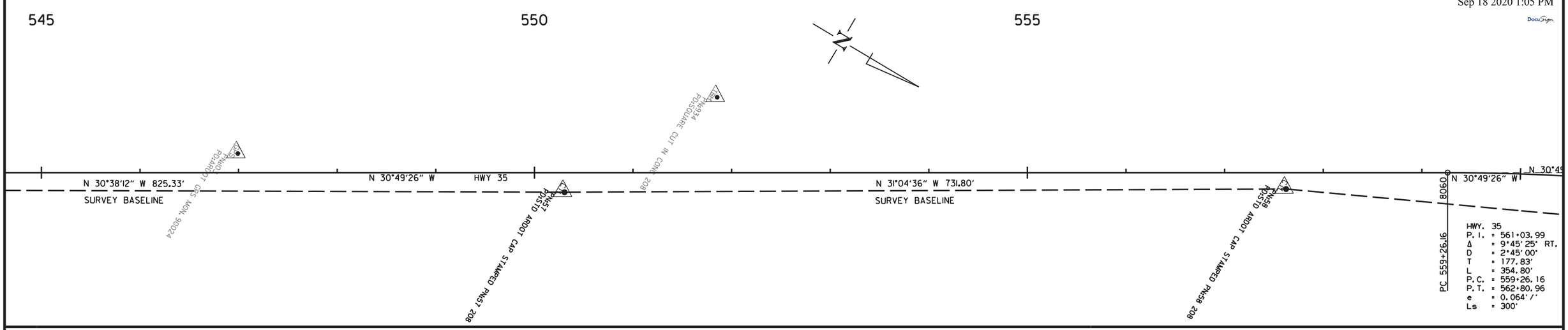

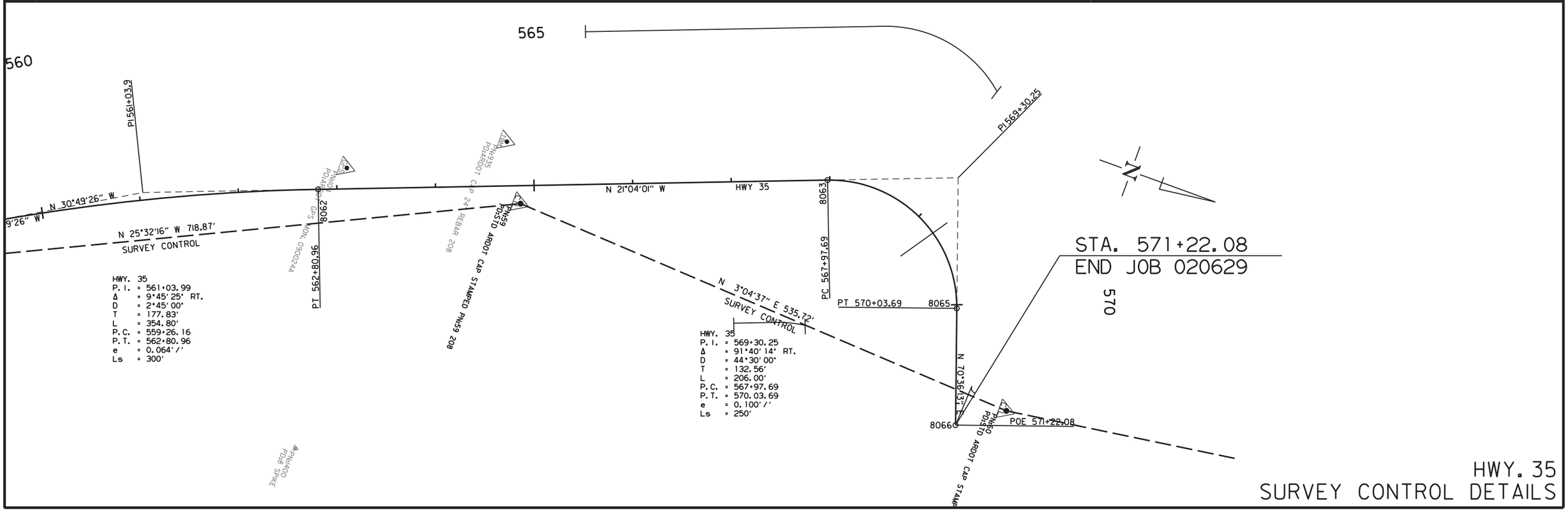

HWY. 35
SURVEY CONTROL DETAILS

6/17/2020

R020629.DGN

DATE REVISED	DATE FILMED	DATE REVISED	DATE FILMED	FED.RD. DIST.NO.	STATE	FED.AID PROJ.NO.	SHEET NO.	TOTAL SHEETS
				6	ARK.			
				JOB NO.		020629	91	122

2 PLAN AND PROFILE SHEETS

STATE OF ARKANSAS
LICENSED PROFESSIONAL ENGINEER
No. 11425
TRINITY D. SMITH

Sep 18 2020 1:05 PM

DocuSign

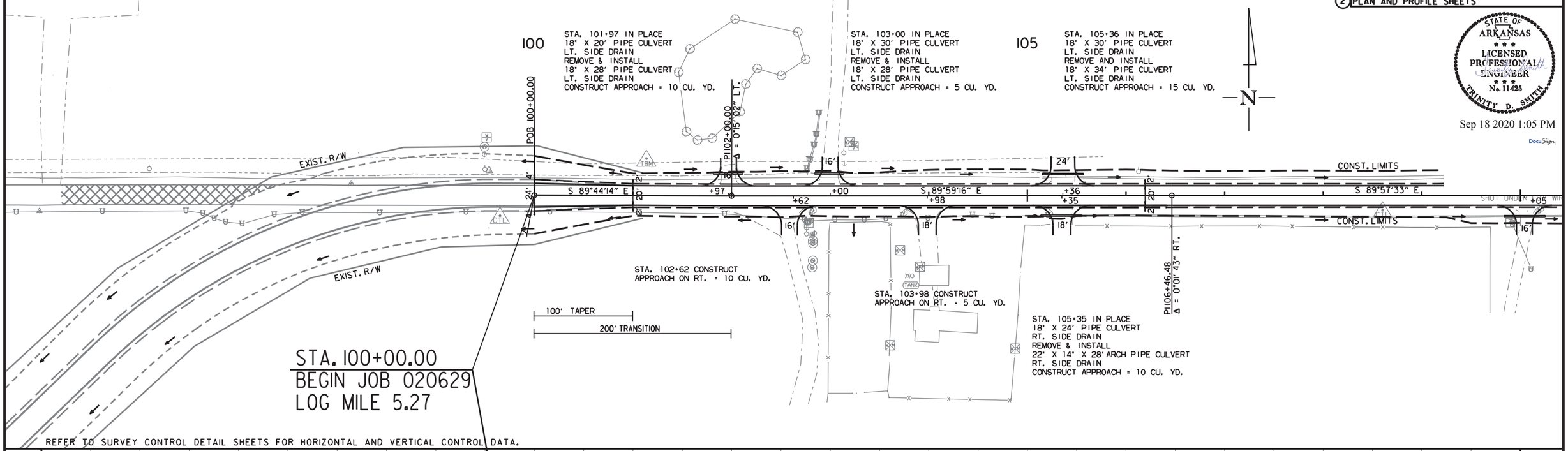

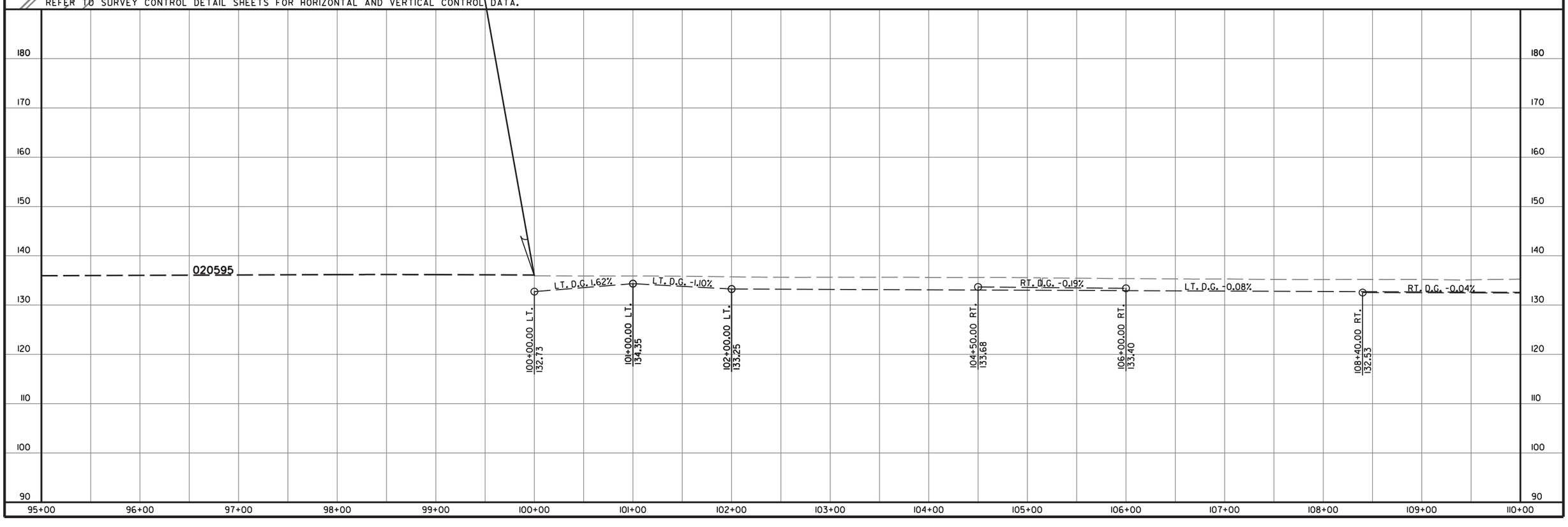

bh38527 10/28/2019
R020629.DGN

DATE REVISED	DATE FILMED	DATE REVISED	DATE FILMED	FED.RD. DIST.NO.	STATE	FED.AID PROJ.NO.	SHEET NO.	TOTAL SHEETS
				6	ARK.			
				JOB NO.		020629	92	122

(2) PLAN AND PROFILE SHEETS

STATE OF ARKANSAS
LICENSED PROFESSIONAL ENGINEER
No. 11425
TRINITY D. SMITH

Sep 18 2020 1:05 PM

DocuSign

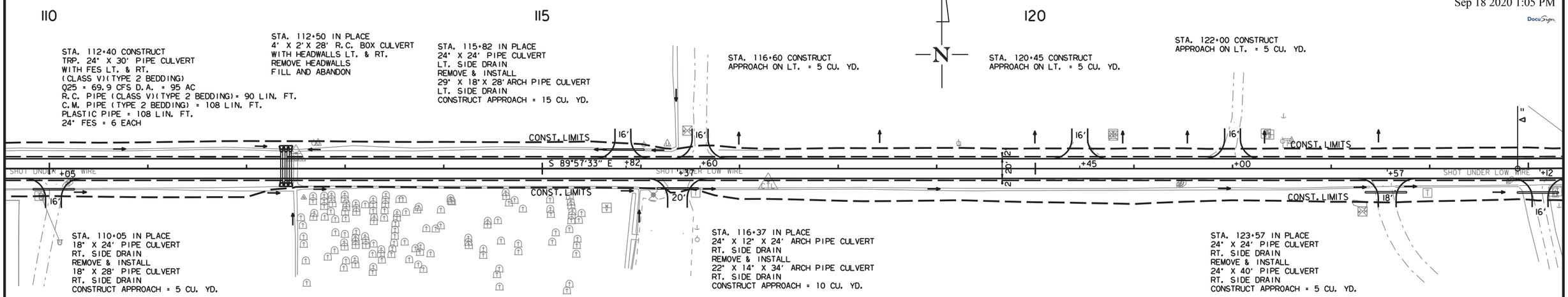

REFER TO SURVEY CONTROL DETAIL SHEETS FOR HORIZONTAL AND VERTICAL CONTROL DATA.

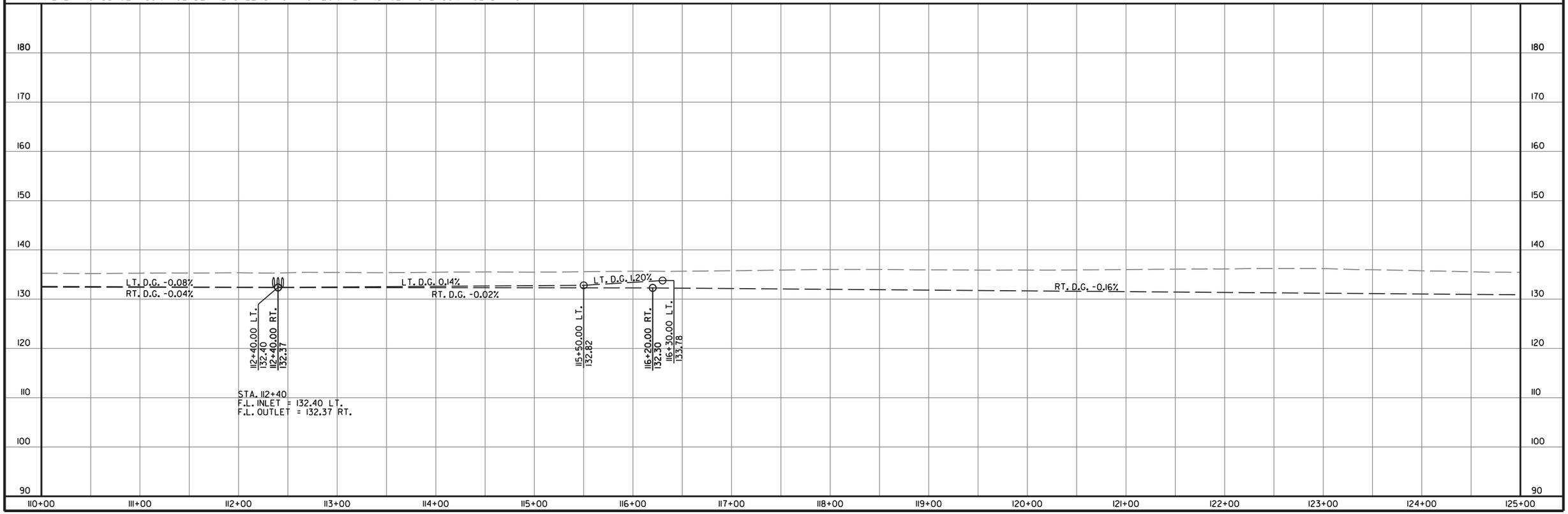

bh38527 10/28/2019
R020629.DGN

DATE REVISED	DATE FILMED	DATE REVISED	DATE FILMED	FED.RD. DIST.NO.	STATE	FED.AID PROJ.NO.	SHEET NO.	TOTAL SHEETS
				6	ARK.			
				JOB NO.		020629	93	122

(2) PLAN AND PROFILE SHEETS

STATE OF ARKANSAS
LICENSED PROFESSIONAL ENGINEER
No. 11425
TRINITY D. SMITH

Sep 18 2020 1:05 PM

DocuSign

GUARDRAIL

STA.	STA.	SIDE	GUARDRAIL (TYPE A) LIN. FT.	GUARDRAIL TERMINAL (TYPE 2) EACH	THRIE BEAM GUARDRAIL TERMINAL EACH
130+77.22	133+02.22	RT.	225	1	1
131+72.46	133+22.46	LT.	150	1	1
134+90.93	136+40.93	RT.	150	1	1
135+11.17	137+36.17	LT.	225	1	1

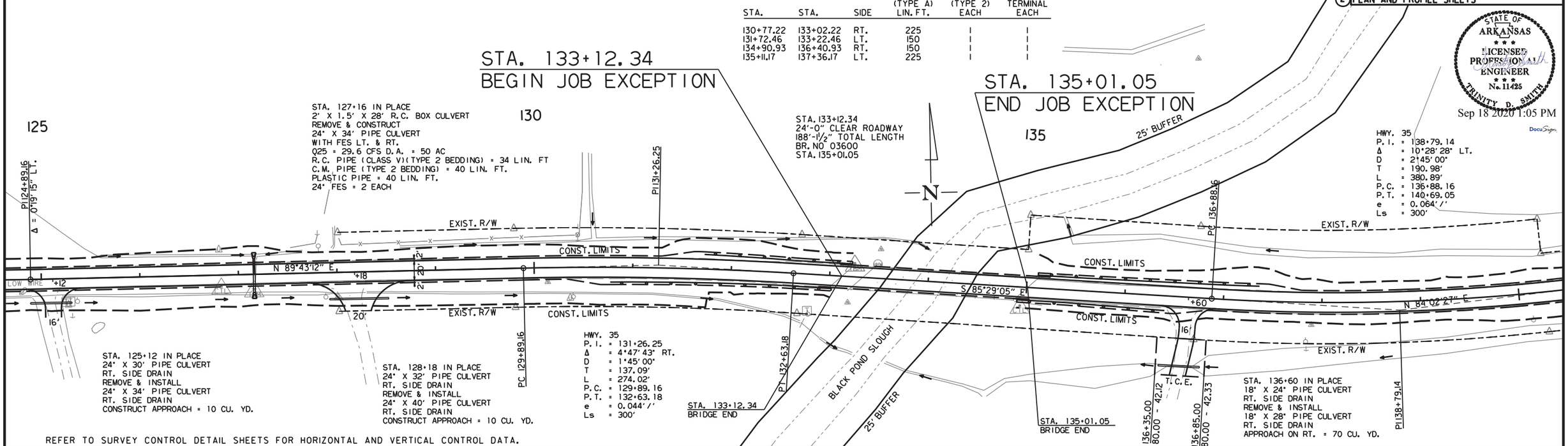

REFER TO SURVEY CONTROL DETAIL SHEETS FOR HORIZONTAL AND VERTICAL CONTROL DATA.

STA. 127+64.16 BEGIN SUPERELEVATION
STA. 129+37.99 MAX SUPERELEVATION (0.025'/')
STA. 131+26.17 MAX SUPERELEVATION (0.025'/')
STA. 133+00.00 END SUPERELEVATION

STA. 135.20.00 BEGIN SUPERELEVATION
STA. 138+20.00 MAX SUPERELEVATION (0.064'/')
STA. 139+82.76 MAX SUPERELEVATION (0.064'/')
STA. 142+82.76 END SUPERELEVATION

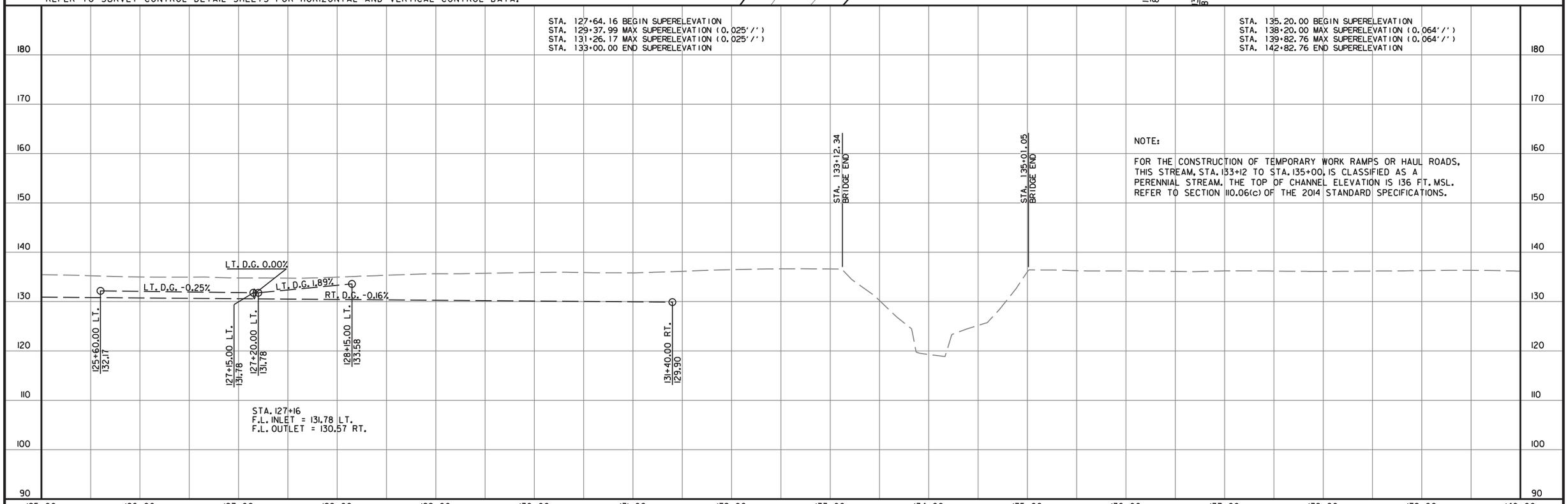

NOTE:

FOR THE CONSTRUCTION OF TEMPORARY WORK RAMPS OR HAUL ROADS, THIS STREAM, STA. 133+12 TO STA. 135+00, IS CLASSIFIED AS A PERENNIAL STREAM. THE TOP OF CHANNEL ELEVATION IS 136 FT. MSL. REFER TO SECTION 110.06(c) OF THE 2014 STANDARD SPECIFICATIONS.

bh38527 10/28/2019
R020629.DGN

DATE REVISED	DATE FILMED	DATE REVISED	DATE FILMED	FED.RD. DIST.NO.	STATE	FED.AID PROJ.NO.	SHEET NO.	TOTAL SHEETS
				6	ARK.			
				JOB NO.		020629	94	122

(2) PLAN AND PROFILE SHEETS

STATE OF ARKANSAS
LICENSED PROFESSIONAL ENGINEER
No. 11425
TRINITY D. SMITH

Sep 18 2020 1:06 PM

DocuSign

HWY. 35
P.I. = 138+79.14
Δ = 10°28'28" LT.
D = 2°45'00"
T = 190.98'
L = 380.89'
P.C. = 136+88.16
P.T. = 140+69.05
e = 0.064'/'
Ls = 300'

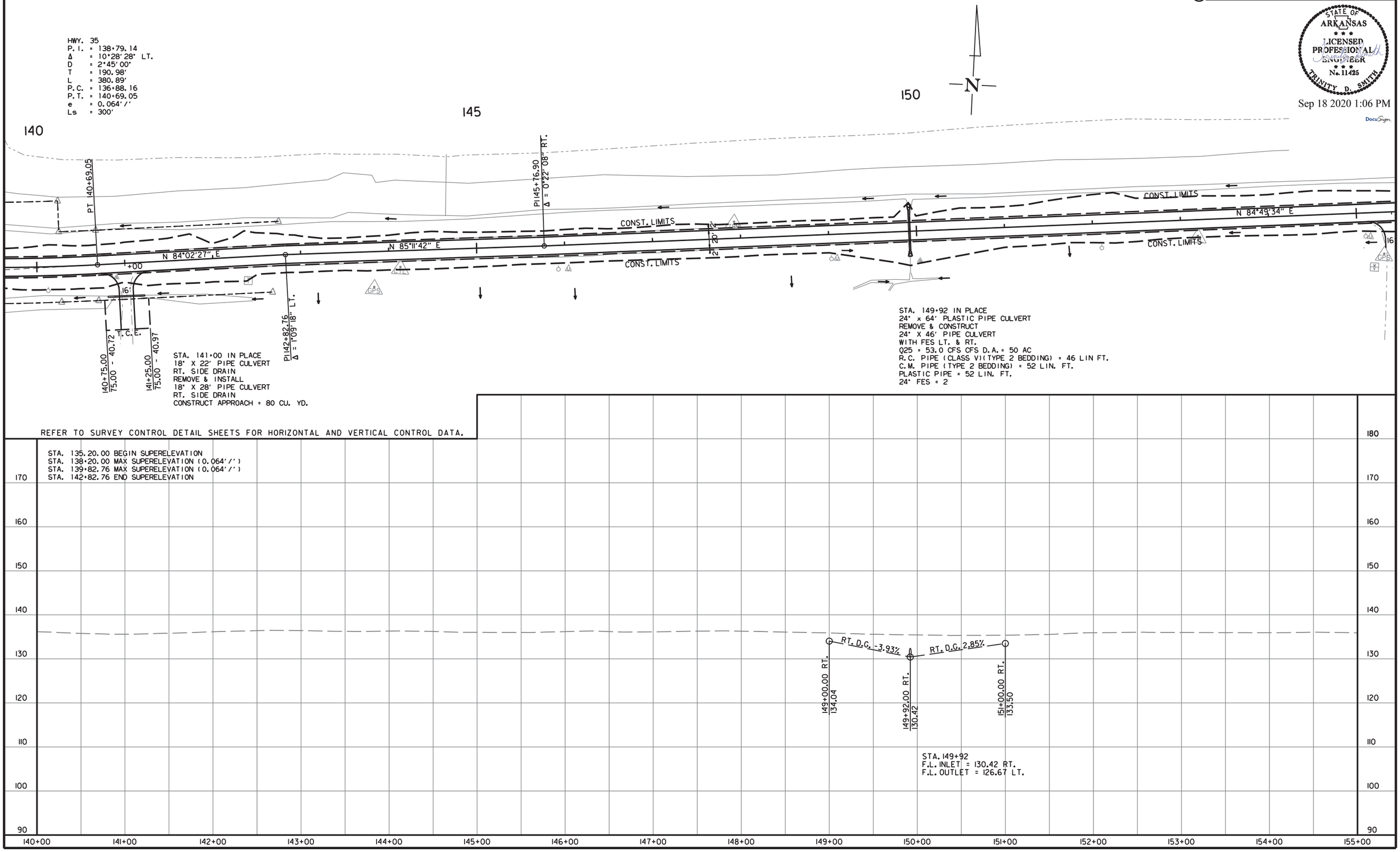

bh38527 10/28/2019
R020629.DGN

DATE REVISED	DATE FILMED	DATE REVISED	DATE FILMED	FED.RD. DIST.NO.	STATE	FED.AID PROJ.NO.	SHEET NO.	TOTAL SHEETS
				6	ARK.			
				JOB NO.		020629	95	122

(2) PLAN AND PROFILE SHEETS

STATE OF ARKANSAS
LICENSED PROFESSIONAL ENGINEER
No. 11425
TRINITY D. SMITH

Sep 18 2020 1:06 PM

DocuSign

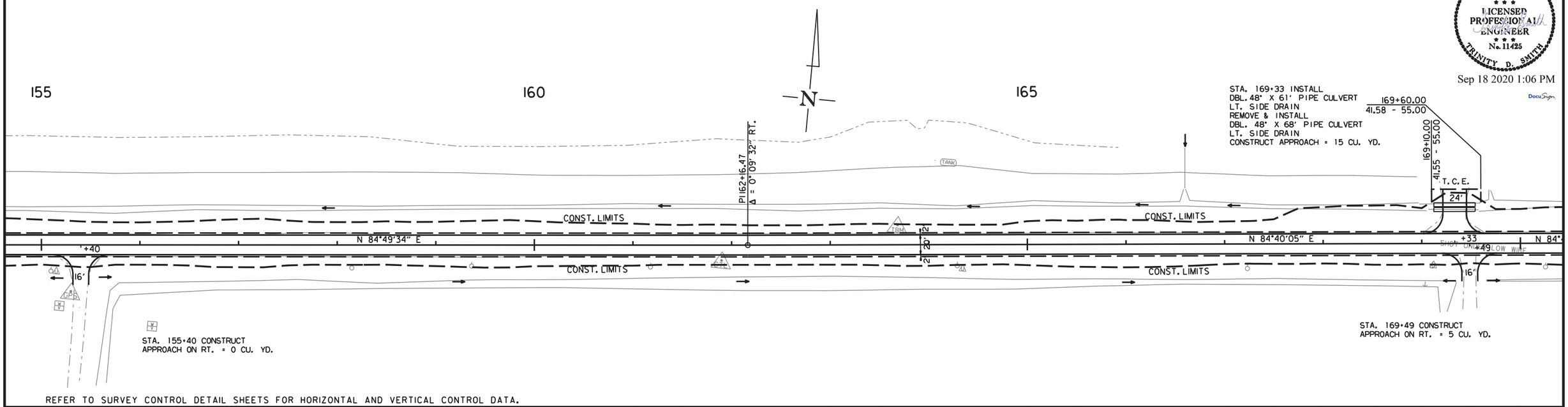

REFER TO SURVEY CONTROL DETAIL SHEETS FOR HORIZONTAL AND VERTICAL CONTROL DATA.

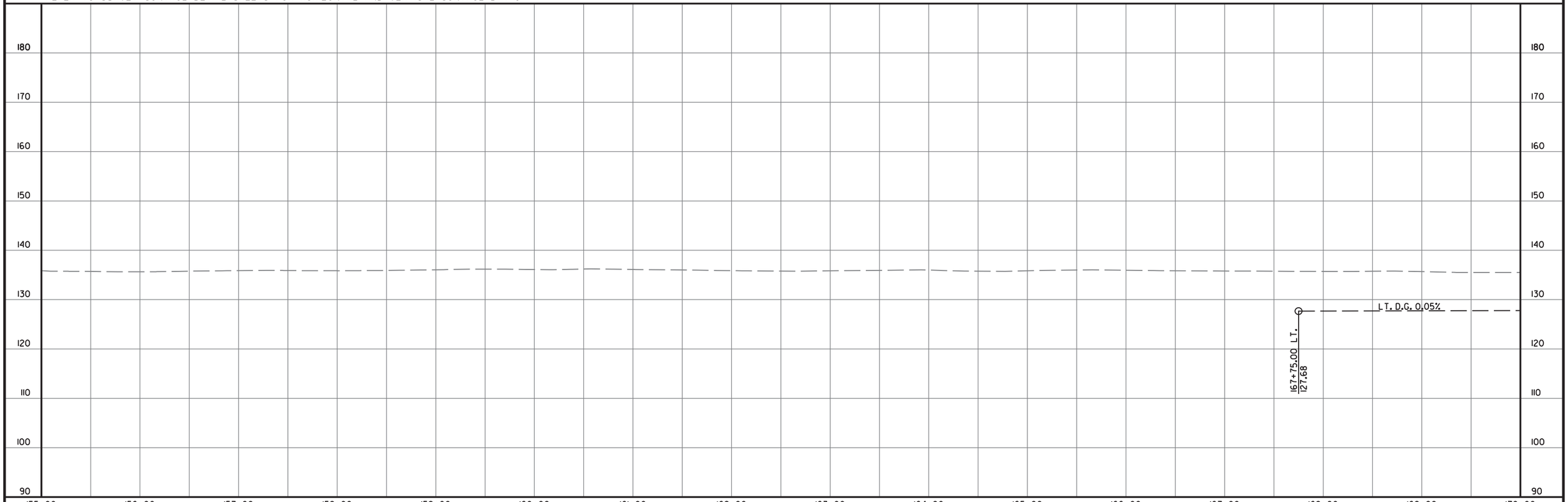

bh38527 10/28/2019
R020629.DGN

DATE REVISED	DATE FILMED	DATE REVISED	DATE FILMED	FED.RD. DIST.NO.	STATE	FED.AID PROJ.NO.	SHEET NO.	TOTAL SHEETS
				6	ARK.			
				JOB NO.		020629	96	122

(2) PLAN AND PROFILE SHEETS

STATE OF ARKANSAS
LICENSED PROFESSIONAL ENGINEER
No. 11425
TRINITY D. SMITH

Sep 18 2020 1:06 PM

DocuSign

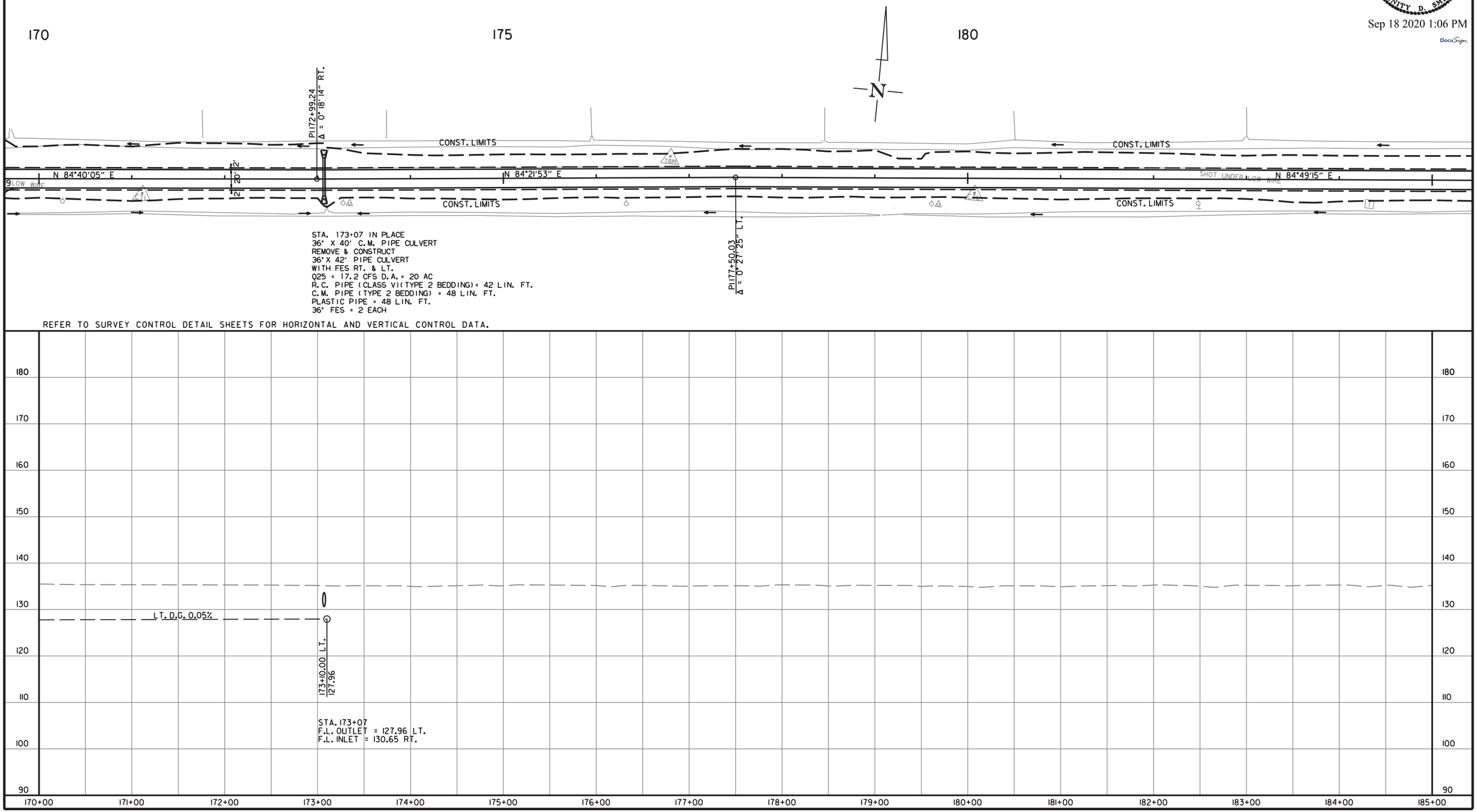

bh38527 10/28/2019
R020629.DGN

DATE REVISED	DATE FILMED	DATE REVISED	DATE FILMED	FED.RD. DIST.NO.	STATE	FED.AID PROJ.NO.	SHEET NO.	TOTAL SHEETS
				6	ARK.			
				JOB NO.		020629	97	122

(2) PLAN AND PROFILE SHEETS

STATE OF ARKANSAS
LICENSED PROFESSIONAL ENGINEER
No. 11425
TRINITY D. SMITH

Sep 18 2020 1:06 PM

DocuSign

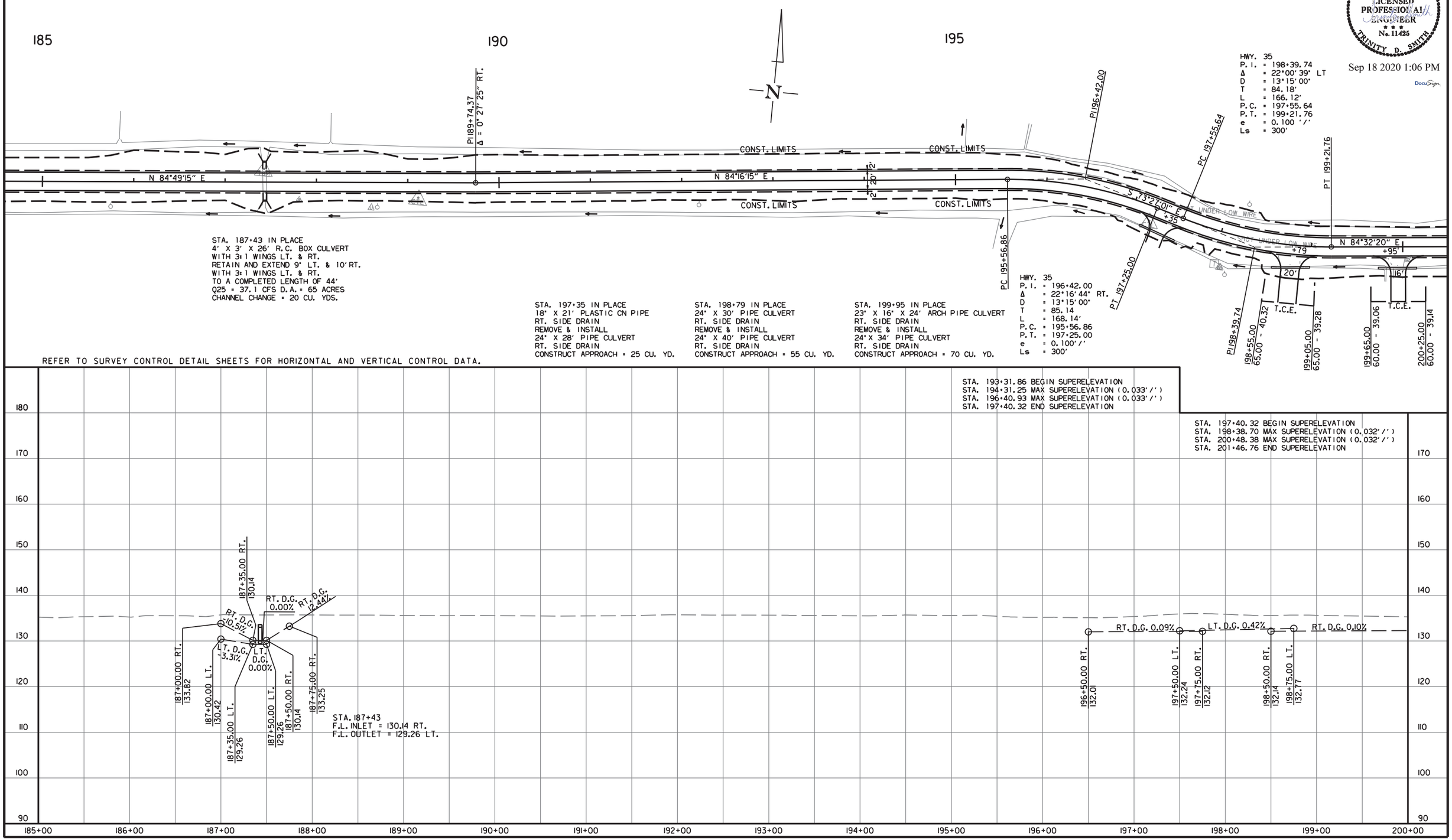

bh38527 10/28/2019
R020629.DGN

DATE REVISED	DATE FILMED	DATE REVISED	DATE FILMED	FED.RD. DIST.NO.	STATE	FED.AID PROJ.NO.	SHEET NO.	TOTAL SHEETS
				6	ARK.			
				JOB NO.		020629	98	122

2 PLAN AND PROFILE SHEETS

STATE OF ARKANSAS
LICENSED PROFESSIONAL ENGINEER
No. 11425
TRINITY D. SMITH

Sep 18 2020 1:06 PM

DocuSign

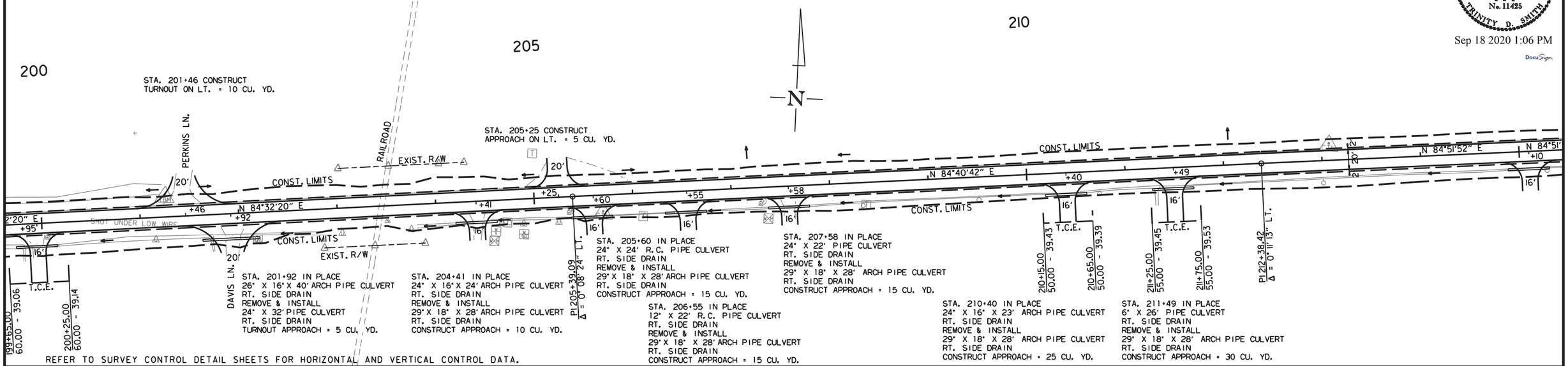

bh38527 10/28/2019
R020629.DGN

DATE REVISED	DATE FILMED	DATE REVISED	DATE FILMED	FED.RD. DIST.NO.	STATE	FED.AID PROJ.NO.	SHEET NO.	TOTAL SHEETS
				6	ARK.			
				JOB NO.		020629	99	122

(2) PLAN AND PROFILE SHEETS

STATE OF ARKANSAS
LICENSED PROFESSIONAL ENGINEER
No. 11425
TRINITY D. SMITH

Sep 18 2020 1:07 PM

DocuSign

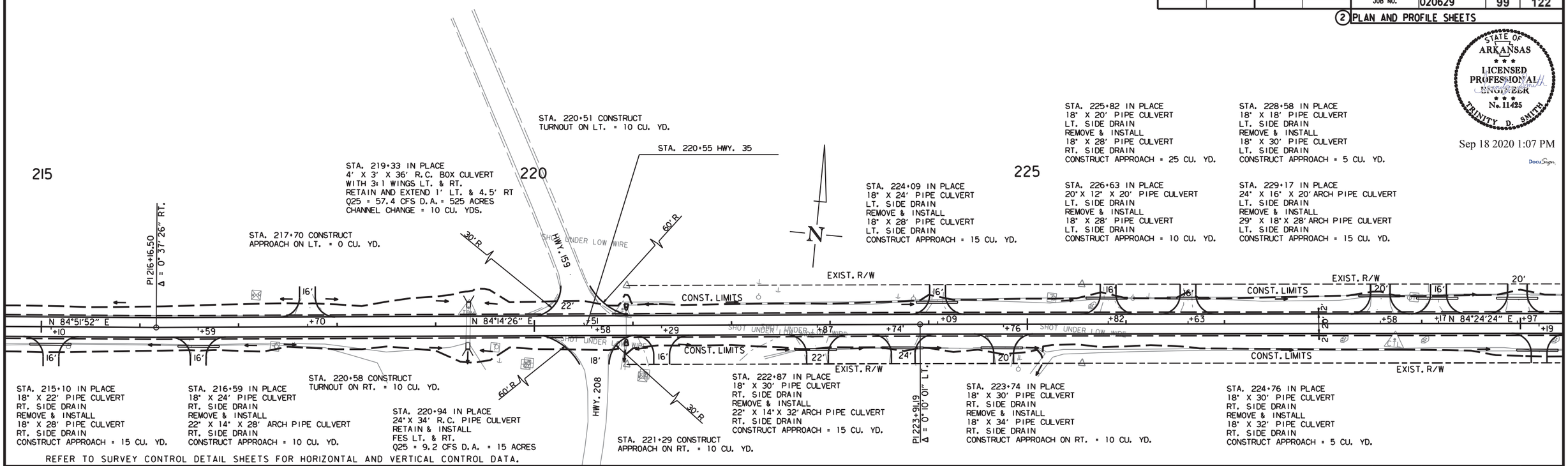

REFER TO SURVEY CONTROL DETAIL SHEETS FOR HORIZONTAL AND VERTICAL CONTROL DATA.

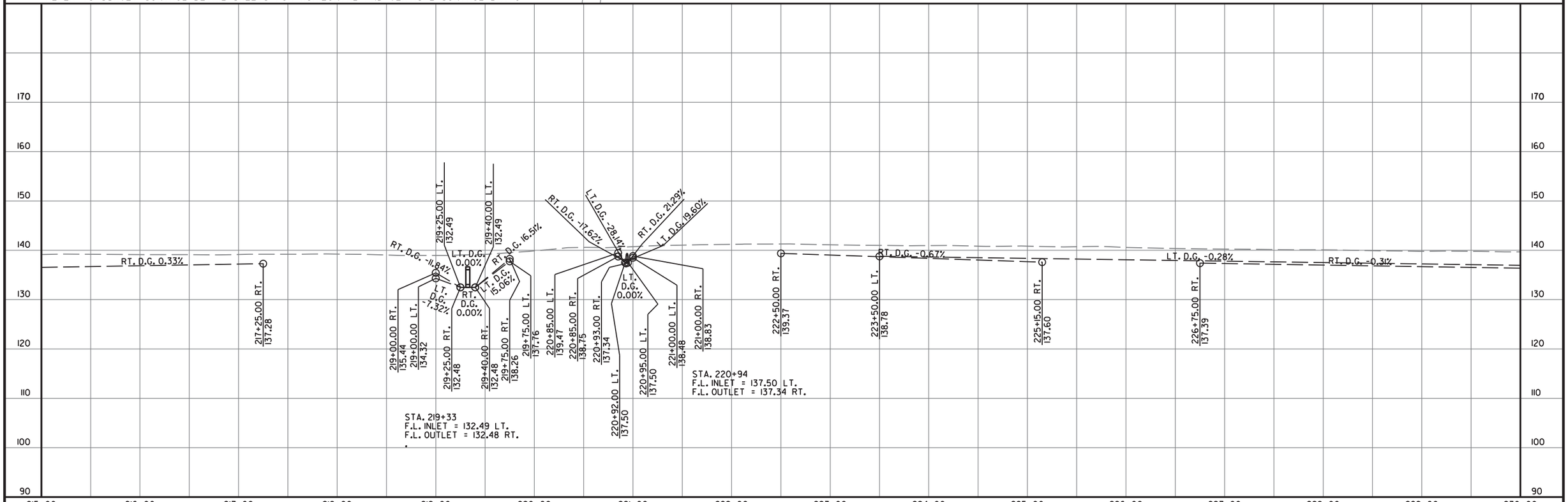

bh38527 10/28/2019
R020629.DGN

DATE REVISED	DATE FILMED	DATE REVISED	DATE FILMED	FED.RD. DIST.NO.	STATE	FED.AID PROJ.NO.	SHEET NO.	TOTAL SHEETS
				6	ARK.			
				JOB NO.		020629	100	122

2 PLAN AND PROFILE SHEETS

STATE OF ARKANSAS
LICENSED PROFESSIONAL ENGINEER
No. 11425
TRINITY D. SMITH

Sep 18 2020 1:07 PM

DocuSign

STA. 229+97 IN PLACE
18" X 25' PIPE CULVERT
LT. SIDE DRAIN
REMOVE & INSTALL
18" X 30' PIPE CULVERT
LT. SIDE DRAIN
CONSTRUCT APPROACH = 5 CU. YD.

STA. 231+60 IN PLACE
18" X 20' PIPE CULVERT
LT. SIDE DRAIN
REMOVE & INSTALL
18" X 28' PIPE CULVERT
LT. SIDE DRAIN
CONSTRUCT APPROACH = 5 CU. YD.

STA. 234+70 IN PLACE
18" X 20' PIPE CULVERT
LT. SIDE DRAIN
REMOVE & INSTALL
18" X 28' PIPE CULVERT
LT. SIDE DRAIN
CONSTRUCT APPROACH = 5 CU. YD.

230

STA. 230+65 IN PLACE
18" X 22' PIPE CULVERT
LT. SIDE DRAIN
REMOVE & INSTALL
18" X 28' PIPE CULVERT
LT. SIDE DRAIN
CONSTRUCT APPROACH = 5 CU. YD.

STA. 232+66 IN PLACE
18" X 20' PIPE CULVERT
LT. SIDE DRAIN
REMOVE & INSTALL
18" X 28' PIPE CULVERT
LT. SIDE DRAIN
CONSTRUCT APPROACH = 5 CU. YD.

235

STA. 236+10 IN PLACE
18" X 24' PIPE CULVERT
LT. SIDE DRAIN
REMOVE & INSTALL
18" X 28' PIPE CULVERT
LT. SIDE DRAIN
CONSTRUCT APPROACH = 10 CU. YD.

STA. 237+32 IN PLACE
18" X 24' PIPE CULVERT
LT. SIDE DRAIN
REMOVE & INSTALL
18" X 30' PIPE CULVERT
LT. SIDE DRAIN
CONSTRUCT APPROACH = 5 CU. YD.

240

STA. 240+29 INSTALL
18" X 24' PIPE CULVERT
LT. SIDE DRAIN
REMOVE & INSTALL
18" X 30' PIPE CULVERT
LT. SIDE DRAIN
CONSTRUCT APPROACH = 5 CU. YD.

STA. 242+18 IN PLACE
18" X 30' PIPE CULVERT
LT. SIDE DRAIN
REMOVE & INSTALL
18" X 28' PIPE CULVERT
LT. SIDE DRAIN
CONSTRUCT APPROACH = 20 CU. YD.

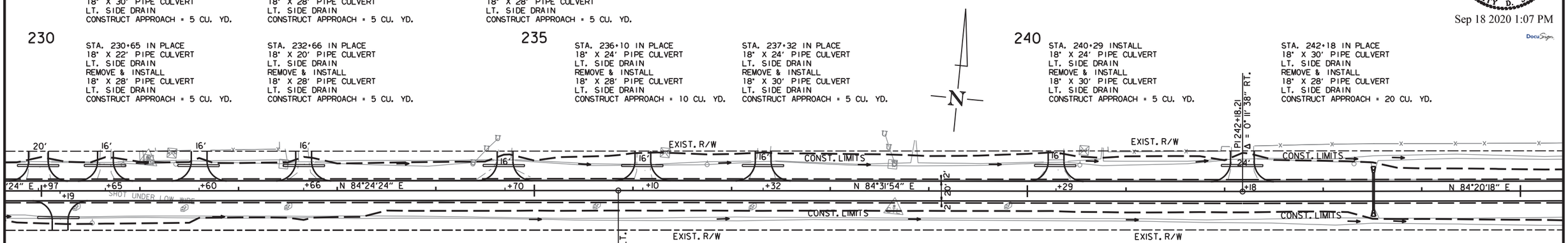

STA. 230+19 IN PLACE
24" X 20' PIPE CULVERT
RT. SIDE DRAIN
REMOVE & INSTALL
24" X 28' PIPE CULVERT
RT. SIDE DRAIN
CONSTRUCT APPROACH = 15 CU. YD.

STA. 243+51 IN PLACE
24" X 36' C.M. PIPE CULVERT
REMOVE & CONSTRUCT
24" X 38' PIPE CULVERT
WITH FES RT. & LT.
Q25 = 30.2 CFS D.A. = 50 AC
R.C. PIPE (CLASS V)(TYPE 2 BEDDING) = 38 LIN FT.
C.M. PIPE (TYPE 2 BEDDING) = 44 LIN. FT.
PLASTIC PIPE = 44 LIN. FT.
24" FES = 2 EACH

REFER TO SURVEY CONTROL DETAIL SHEETS FOR HORIZONTAL AND VERTICAL CONTROL DATA.

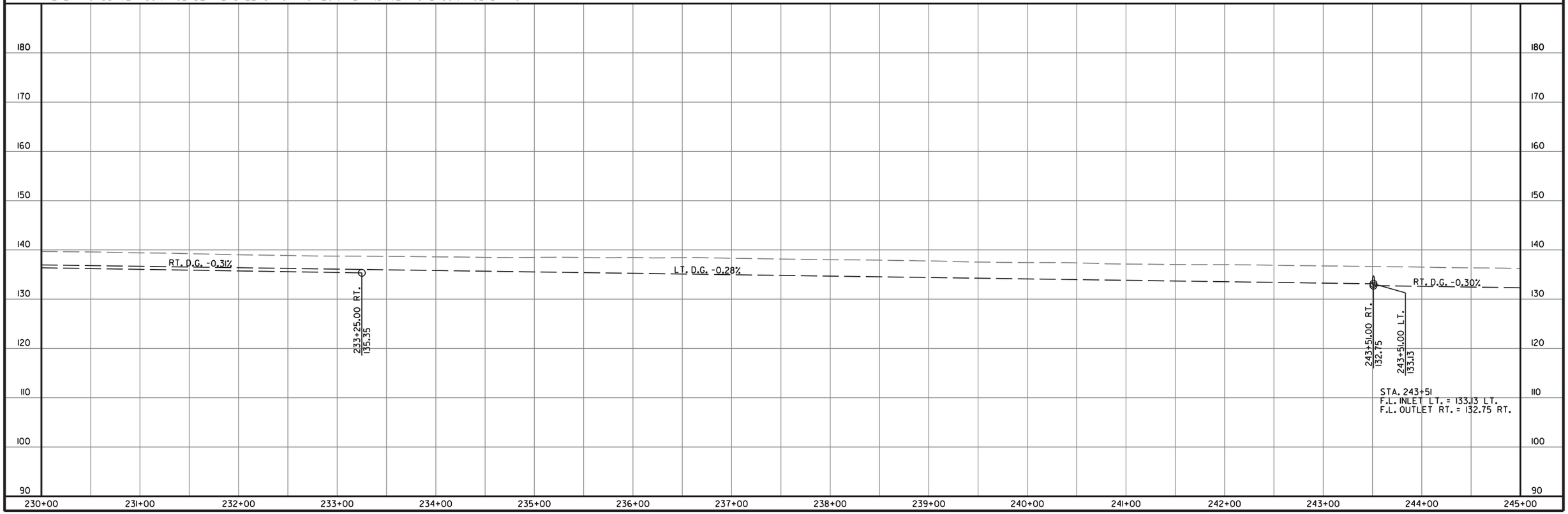

bh38527 10/28/2019
R020629.DGN

DATE REVISED	DATE FILMED	DATE REVISED	DATE FILMED	FED.RD. DIST.NO.	STATE	FED.AID PROJ.NO.	SHEET NO.	TOTAL SHEETS
				6	ARK.			
				JOB NO.		020629	101	122

(2) PLAN AND PROFILE SHEETS

STATE OF ARKANSAS
LICENSED PROFESSIONAL ENGINEER
No. 11425
TRINITY D. SMITH

Sep 18 2020 1:07 PM

DocuSign

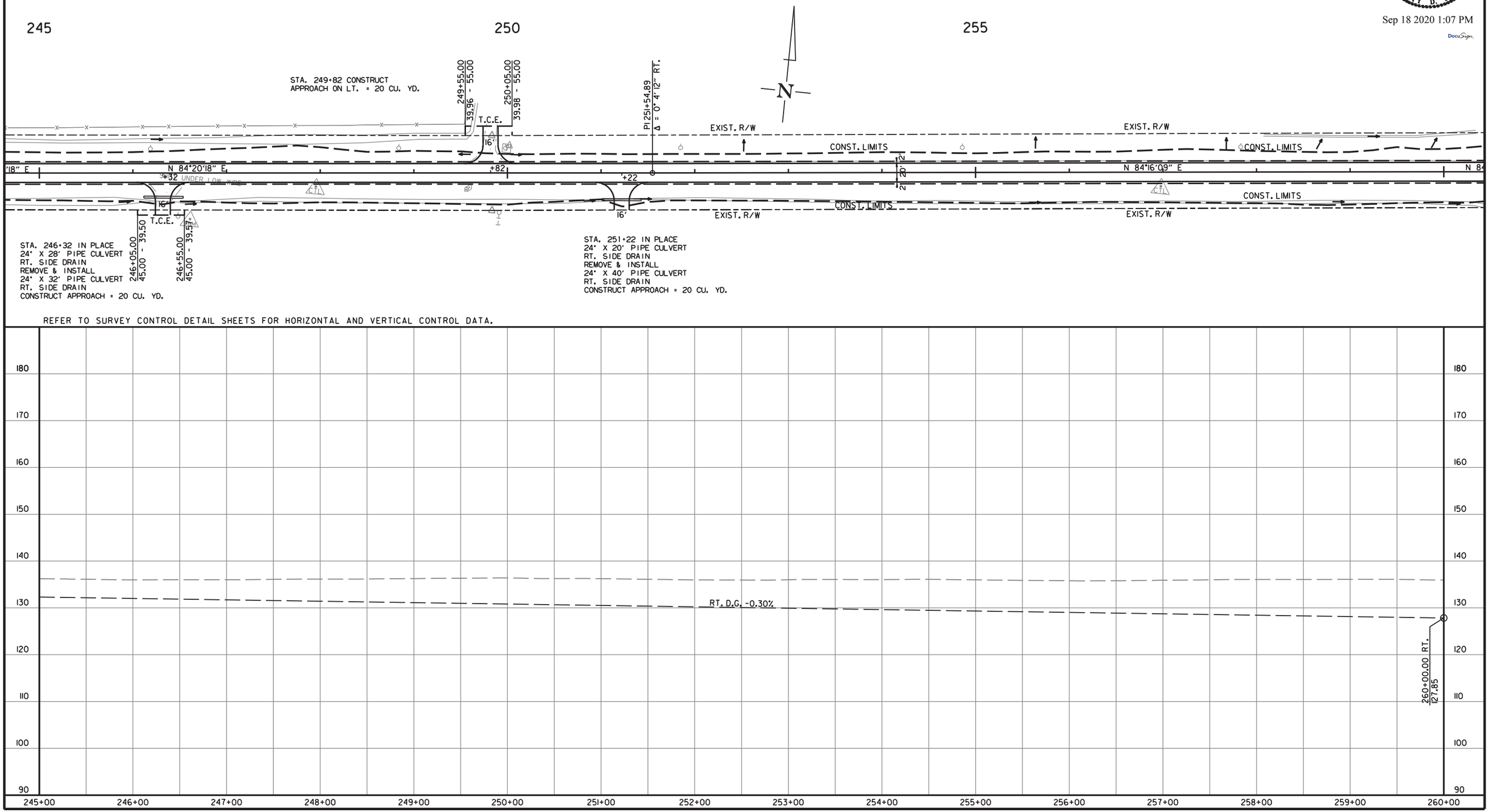

bh38527 10/28/2019
R020629.DGN

DATE REVISED	DATE FILMED	DATE REVISED	DATE FILMED	FED.RD. DIST.NO.	STATE	FED.AID PROJ.NO.	SHEET NO.	TOTAL SHEETS
				6	ARK.			
				JOB NO.		020629	102	122

(2) PLAN AND PROFILE SHEETS

STATE OF ARKANSAS
LICENSED PROFESSIONAL ENGINEER
No. 11425
TRINITY D. SMITH

Sep 18 2020 1:07 PM

DocuSign

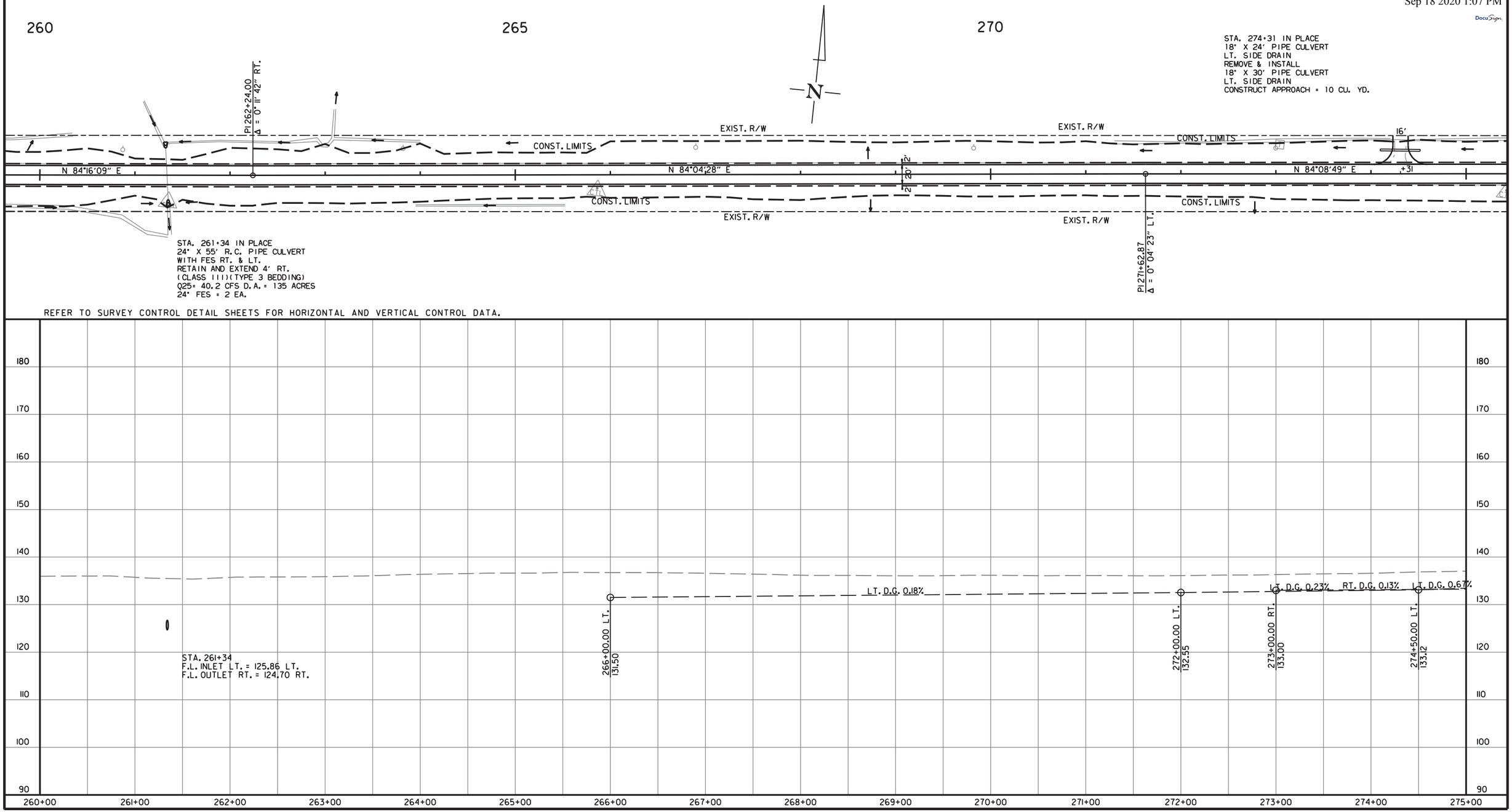

bh38527 10/28/2019
R020629.DGN

DATE REVISED	DATE FILMED	DATE REVISED	DATE FILMED	FED.RD. DIST.NO.	STATE	FED.AID PROJ.NO.	SHEET NO.	TOTAL SHEETS
				6	ARK.			
				JOB NO.		020629	103	122

(2) PLAN AND PROFILE SHEETS

STATE OF ARKANSAS
LICENSED PROFESSIONAL ENGINEER
No. 11425
TRINITY D. SMITH

Sep 18 2020 1:08 PM

DocuSign

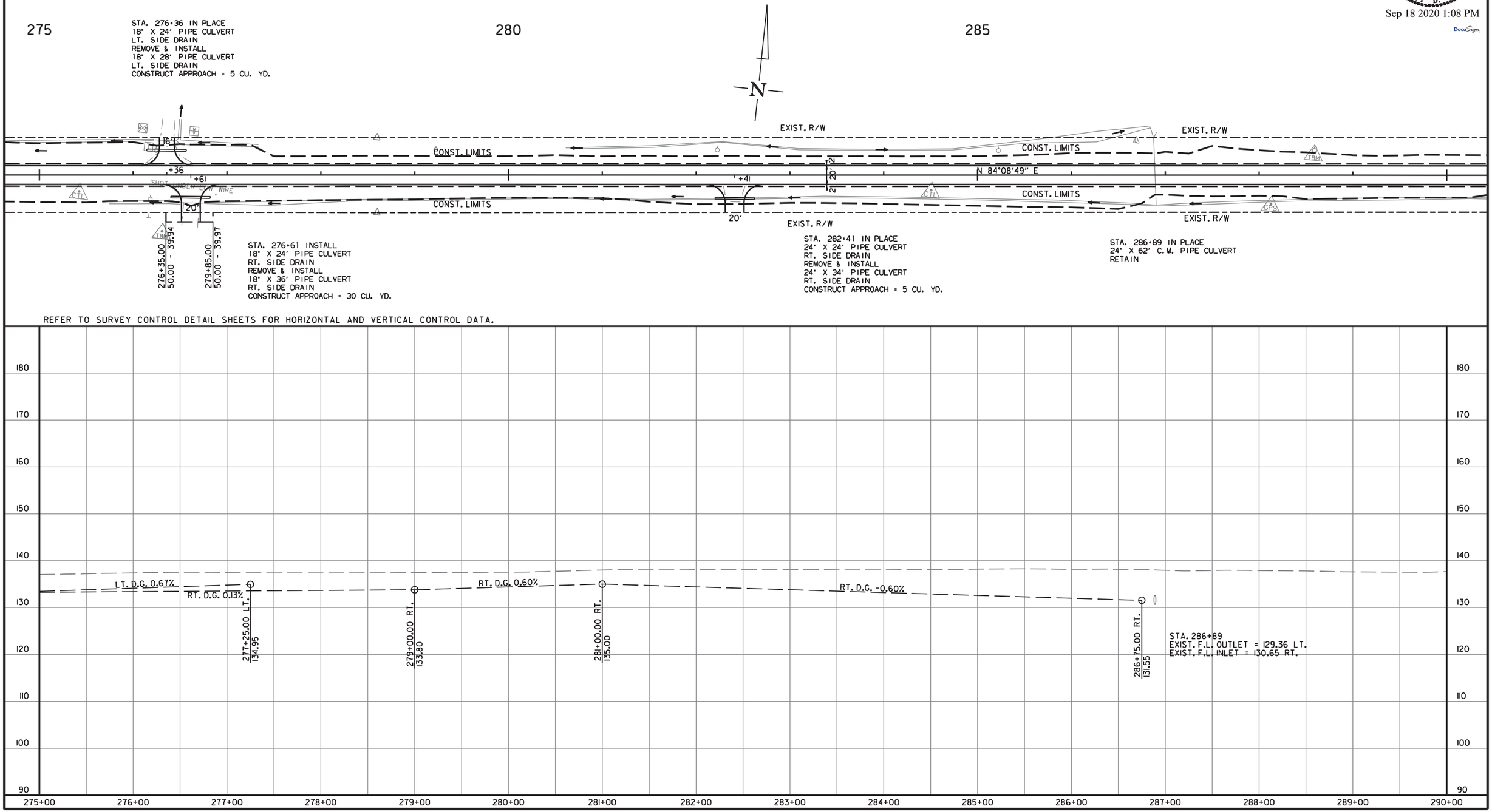

bh38527 10/28/2019
R020629.DGN

DATE REVISED	DATE FILMED	DATE REVISED	DATE FILMED	FED.RD. DIST.NO.	STATE	FED.AID PROJ.NO.	SHEET NO.	TOTAL SHEETS
				6	ARK.			
				JOB NO.		020629	104	122

(2) PLAN AND PROFILE SHEETS

STATE OF ARKANSAS
LICENSED PROFESSIONAL ENGINEER
No. 11425
TRINITY D. SMITH

Sep 18 2020 1:08 PM

DocuSign

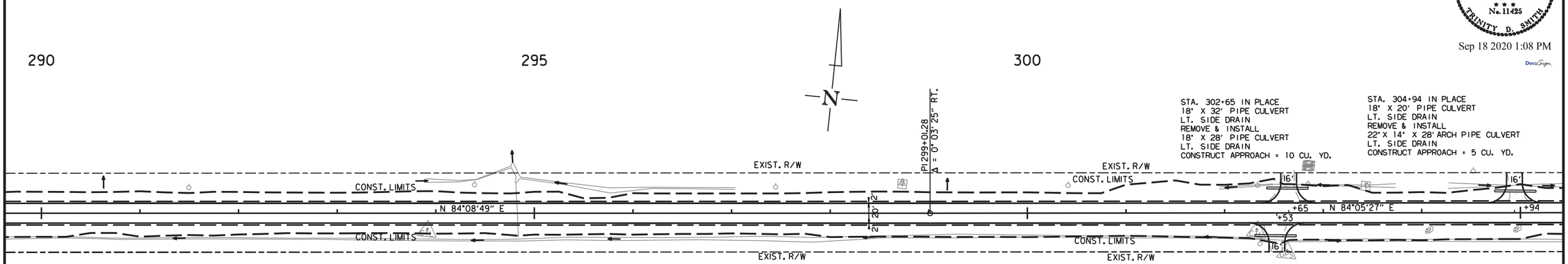

REFER TO SURVEY CONTROL DETAIL SHEETS FOR HORIZONTAL AND VERTICAL CONTROL DATA.

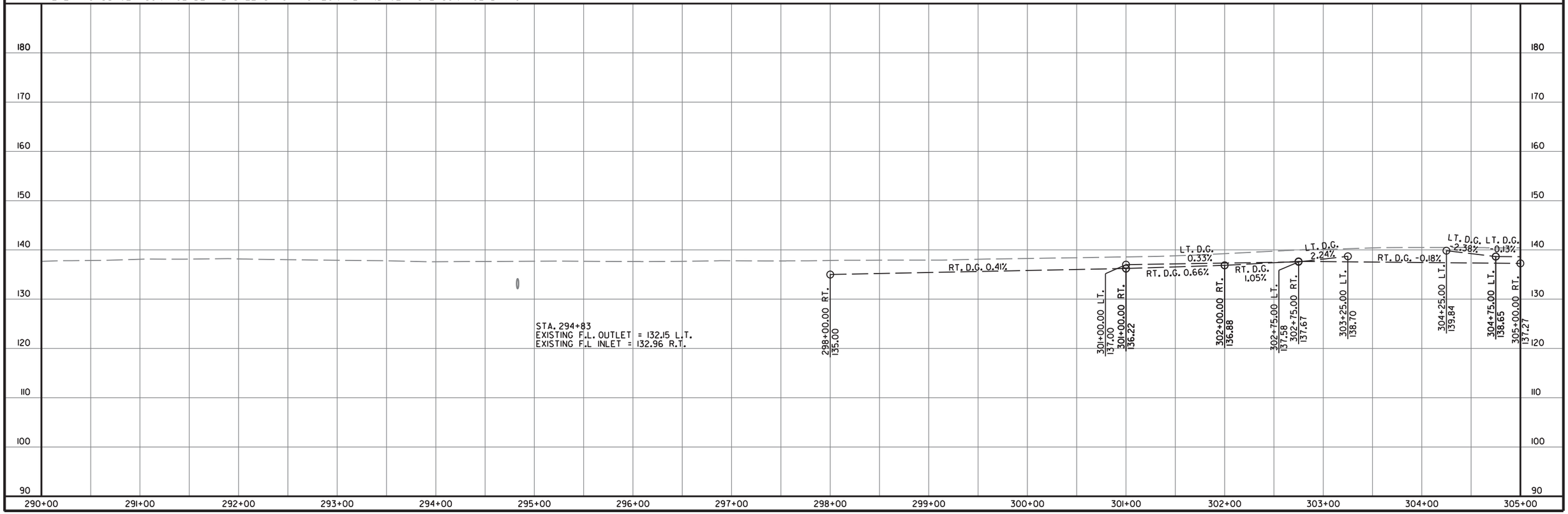

bh38527 10/28/2019
R020629.DGN

DATE REVISED	DATE FILMED	DATE REVISED	DATE FILMED	FED.RD. DIST.NO.	STATE	FED.AID PROJ.NO.	SHEET NO.	TOTAL SHEETS
				6	ARK.			
				JOB NO.		020629	105	122

(2) PLAN AND PROFILE SHEETS

STATE OF ARKANSAS
LICENSED PROFESSIONAL ENGINEER
No. 11425
TRINITY D. SMITH

Sep 18 2020 1:08 PM

DocuSign

GUARDRAIL

STA.	STA.	SIDE	GUARDRAIL (TYPE A) LIN. FT.	GUARDRAIL TERMINAL (TYPE 2) EACH	THRIE BEAM GUARDRAIL TERMINAL EACH	BRIDGE END TERMINAL EACH
313+18.88	315+43.88	RT.	225	1	1	
313+93.88	315+43.88	LT.	150	1	1	
317+83.49	318+08.49	RT.				1
317+83.49	318+08.49	LT.				1

STA. 315+43.88
28'-0" CLEAR ROADWAY
242'-1" TOTAL LENGTH
BR. NO 05140
STA. 317+83.49
POLYMER OVERLAY

STA. 318+46 IN PLACE
18" X 82' PIPE CULVERT
LT. SIDE DRAIN
REMOVE & INSTALL
18" X 28' PIPE CULVERT
LT. SIDE DRAIN
CONSTRUCT APPROACH = 0 CU. YD.

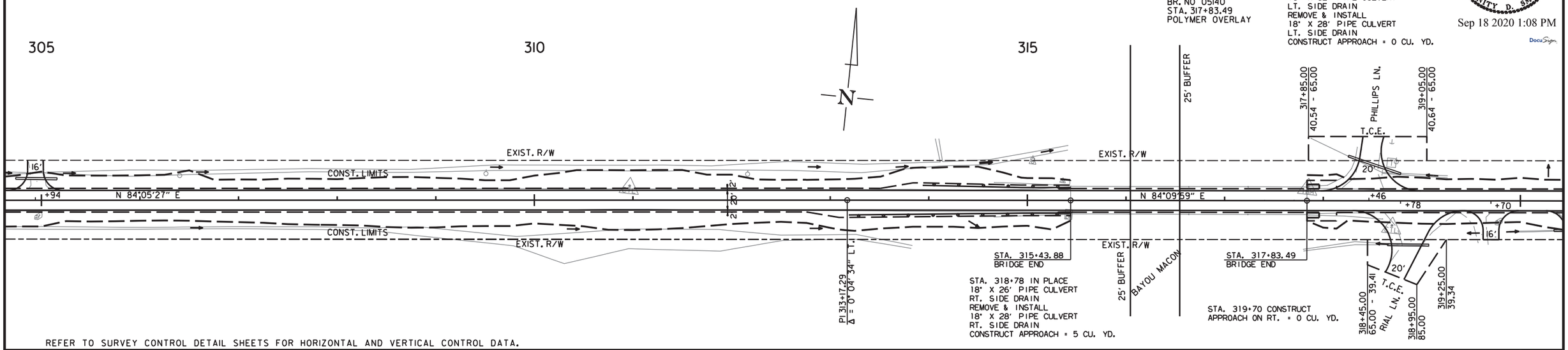

REFER TO SURVEY CONTROL DETAIL SHEETS FOR HORIZONTAL AND VERTICAL CONTROL DATA.

NOTE:

FOR THE CONSTRUCTION OF TEMPORARY WORK RAMPS OR HAUL ROADS, THIS STREAM, STA. 315+50 TO STA. 317+80, IS CLASSIFIED AS A PERENNIAL STREAM. THE TOP OF CHANNEL ELEVATION IS 137 FT. MSL. REFER TO SECTION 110.06(c) OF THE 2014 STANDARD SPECIFICATIONS.

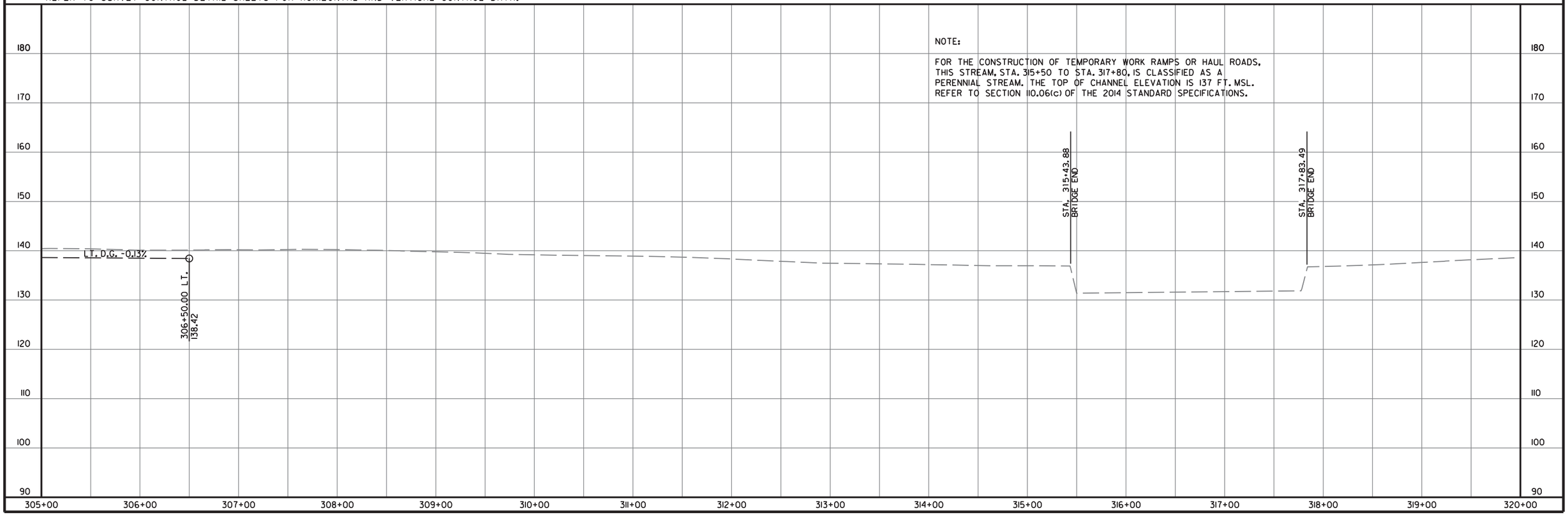

bh38527 10/28/2019
R020629.DGN

DATE REVISED	DATE FILMED	DATE REVISED	DATE FILMED	FED.RD. DIST.NO.	STATE	FED.AID PROJ.NO.	SHEET NO.	TOTAL SHEETS
				6	ARK.			
				JOB NO.		020629	106	122

2 PLAN AND PROFILE SHEETS

STATE OF ARKANSAS
LICENSED PROFESSIONAL ENGINEER
No. 11425
TRINITY D. SMITH

Sep 18 2020 1:08 PM

DocuSign

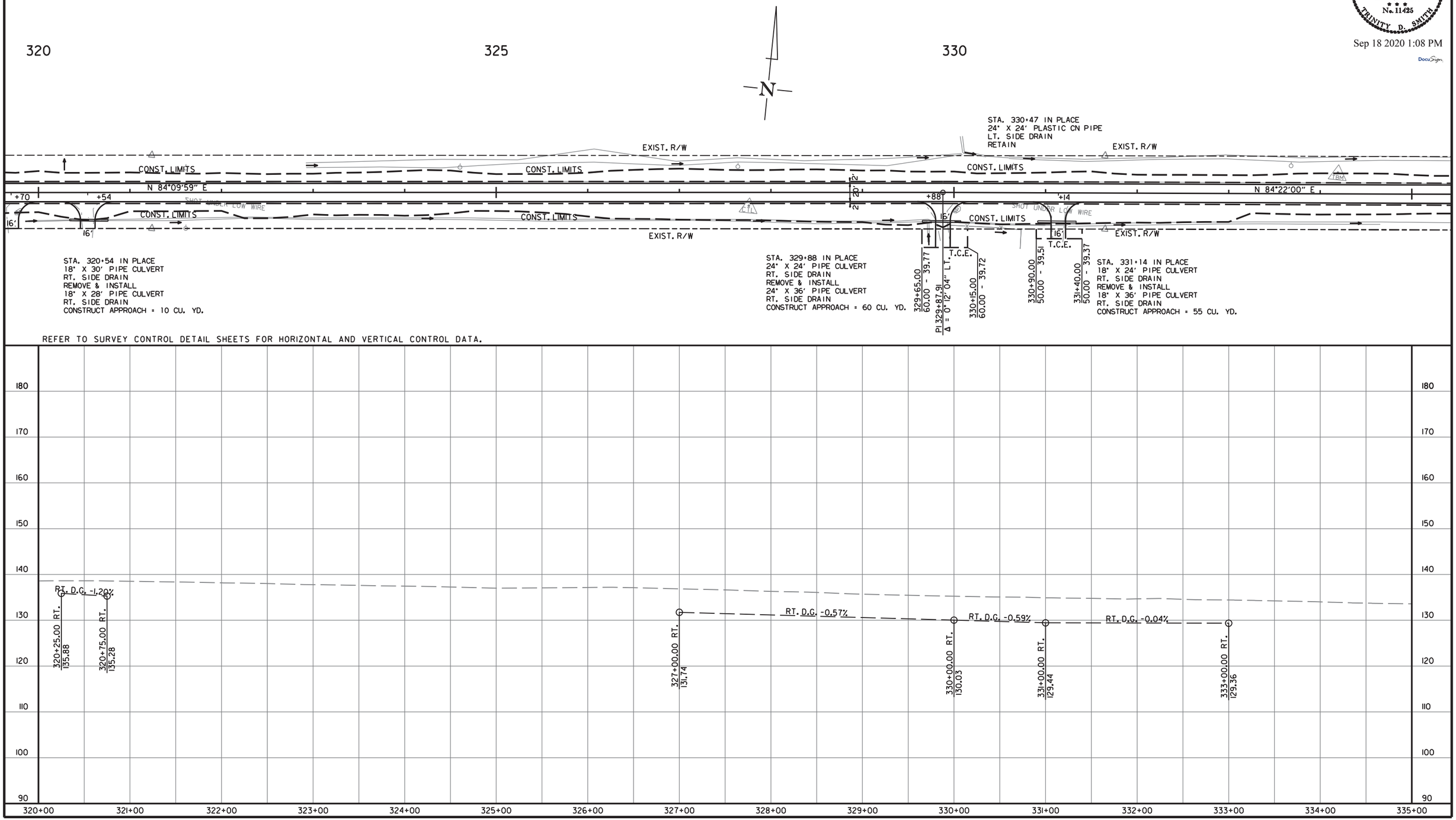

bh38527 10/28/2019
R020629.DGN

DATE REVISED	DATE FILMED	DATE REVISED	DATE FILMED	FED.RD. DIST.NO.	STATE	FED.AID PROJ.NO.	SHEET NO.	TOTAL SHEETS
				6	ARK.			
				JOB NO.		020629	107	122

(2) PLAN AND PROFILE SHEETS

STATE OF ARKANSAS
LICENSED PROFESSIONAL ENGINEER
No. 11425
TRINITY D. SMITH

Sep 18 2020 1:09 PM

DocuSign

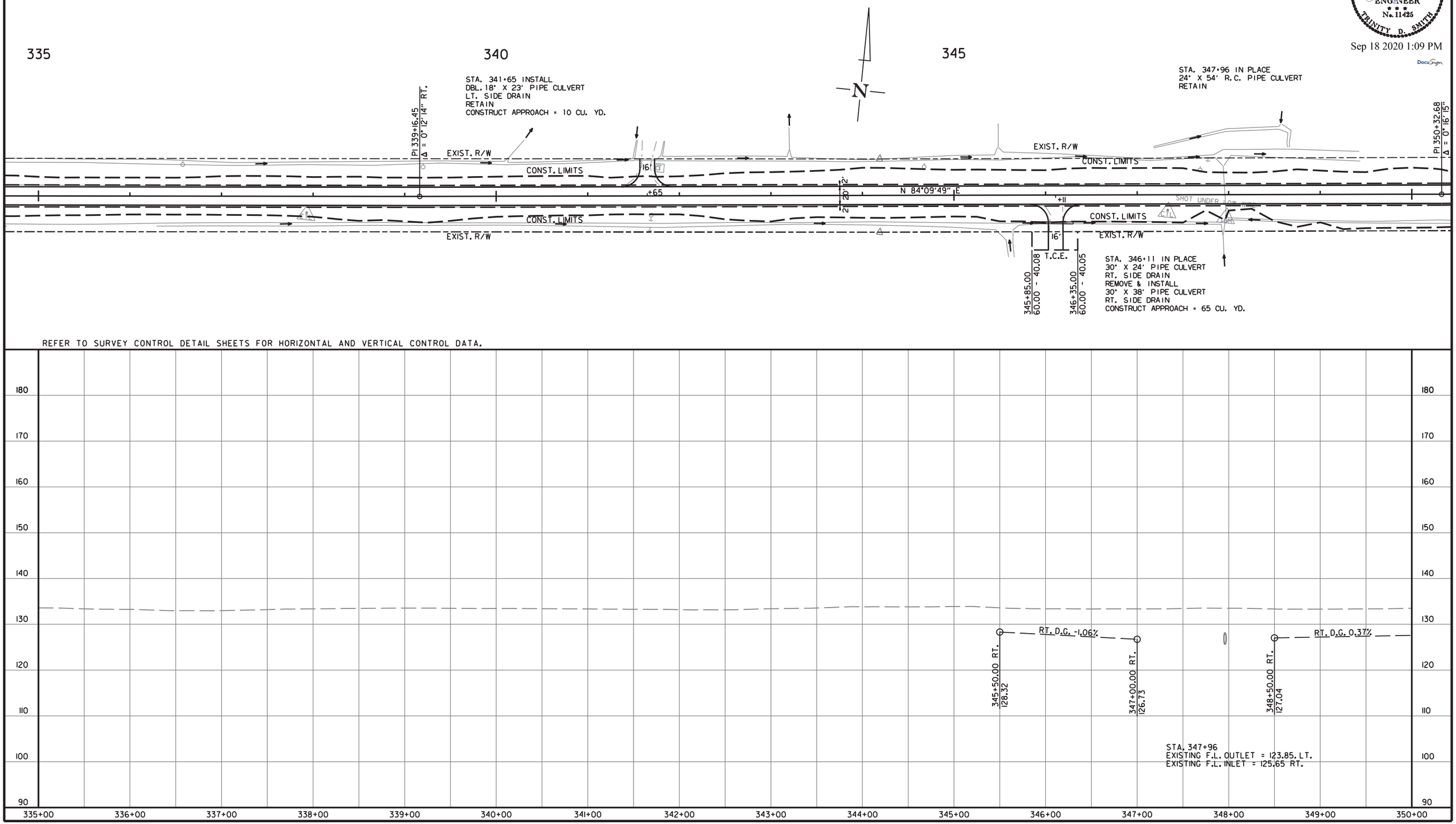

bh38527 10/28/2019
R020629.DGN

DATE REVISED	DATE FILMED	DATE REVISED	DATE FILMED	FED.RD. DIST.NO.	STATE	FED.AID PROJ.NO.	SHEET NO.	TOTAL SHEETS
				6	ARK.			
				JOB NO.		020629	108	122

(2) PLAN AND PROFILE SHEETS

STATE OF ARKANSAS
LICENSED PROFESSIONAL ENGINEER
No. 11425
TRINITY D. SMITH

Sep 18 2020 1:09 PM

DocuSign

GUARDRAIL

STA.	STA.	SIDE	GUARDRAIL (TYPE A) LIN. FT.	GUARDRAIL TERMINAL (TYPE 2) EACH	THRIE BEAM GUARDRAIL TERMINAL EACH
353+93.21	355+68.21	RT.	175	1	1
354+18.21	355+68.21	LT.	150	1	1
357+47.91	358+97.91	RT.	150	1	1
357+47.91	359+72.91	LT.	225	1	1

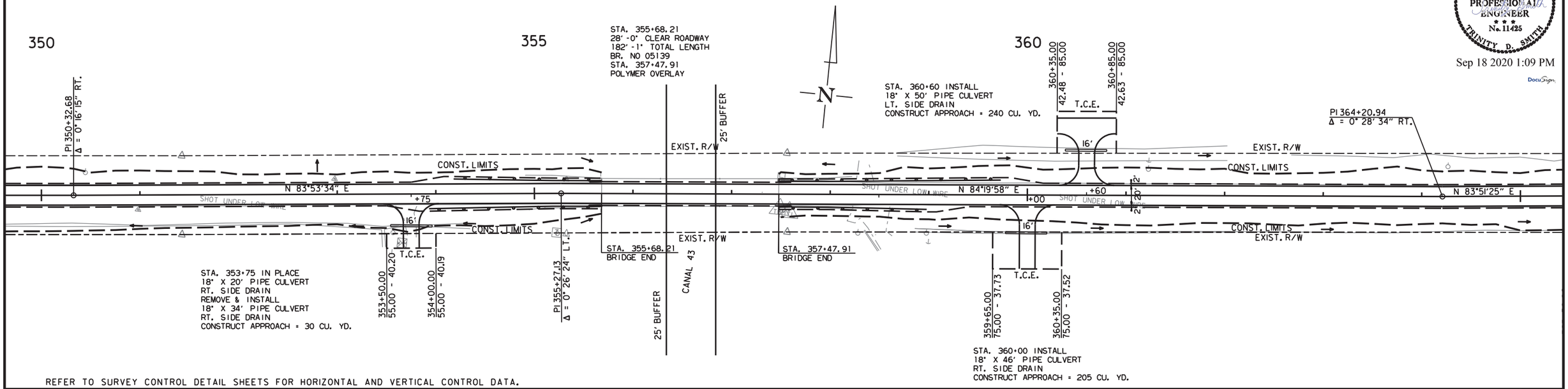

REFER TO SURVEY CONTROL DETAIL SHEETS FOR HORIZONTAL AND VERTICAL CONTROL DATA.

NOTE:

FOR THE CONSTRUCTION OF TEMPORARY WORK RAMPS OR HAUL ROADS, THIS STREAM, STA. 355+68 TO STA. 357+48, IS CLASSIFIED AS A PERENNIAL STREAM. THE TOP OF CHANNEL ELEVATION IS 135 FT. MSL. REFER TO SECTION 110.06(c) OF THE 2014 STANDARD SPECIFICATIONS.

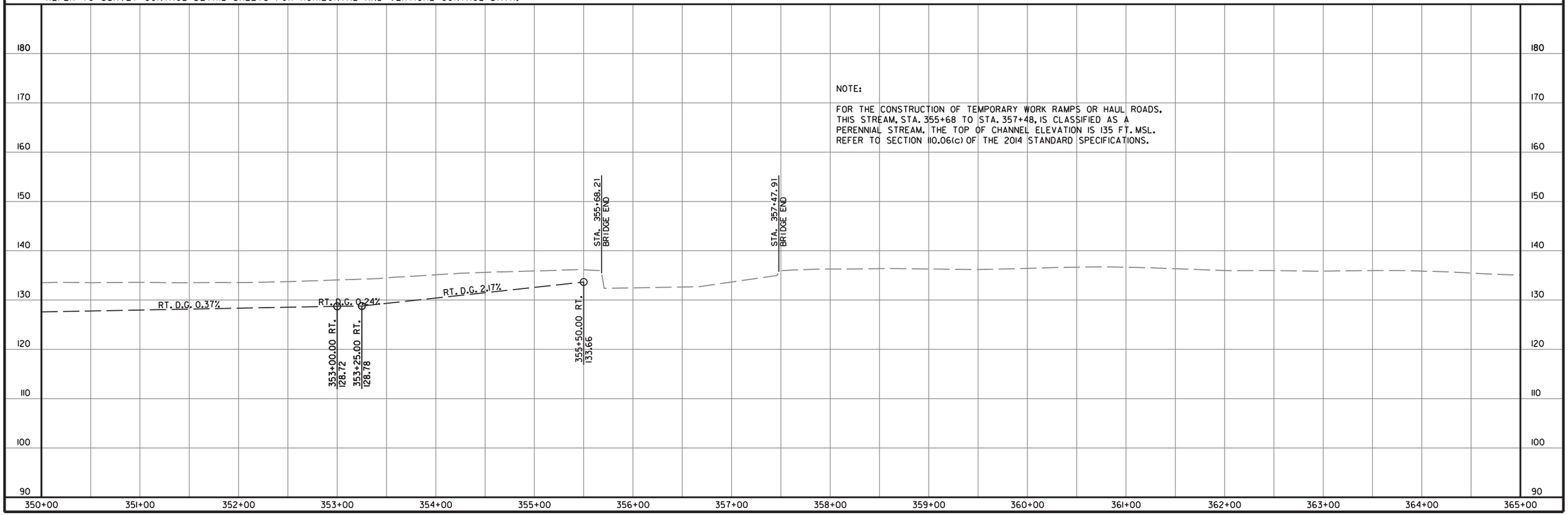

bh38527 10/28/2019
R020629.DGN

DATE REVISED	DATE FILMED	DATE REVISED	DATE FILMED	FED.RD. DIST.NO.	STATE	FED.AID PROJ.NO.	SHEET NO.	TOTAL SHEETS
				6	ARK.			
				JOB NO.		020629	109	122

(2) PLAN AND PROFILE SHEETS

STATE OF ARKANSAS
LICENSED PROFESSIONAL ENGINEER
No. 11425
TRINITY D. SMITH

Sep 18 2020 1:09 PM

DocuSign

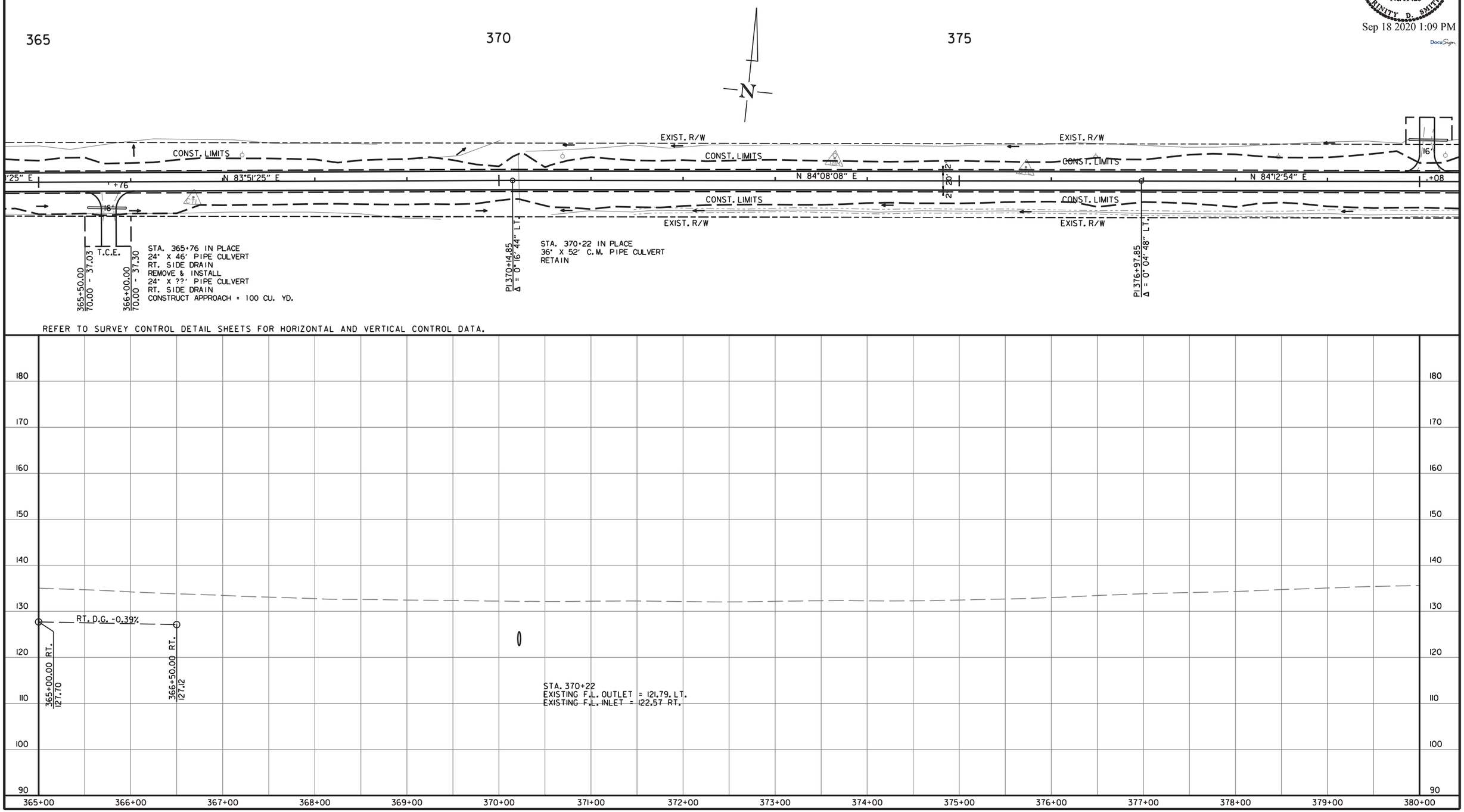

bh38527 10/28/2019
R020629.DGN

DATE REVISED	DATE FILMED	DATE REVISED	DATE FILMED	FED.RD. DIST.NO.	STATE	FED.AID PROJ.NO.	SHEET NO.	TOTAL SHEETS
				6	ARK.			
				JOB NO.		020629	110	122

2 PLAN AND PROFILE SHEETS

STATE OF ARKANSAS
LICENSED PROFESSIONAL ENGINEER
No. 11425
TRINITY D. SMITH

Sep 18 2020 1:09 PM

DocuSign

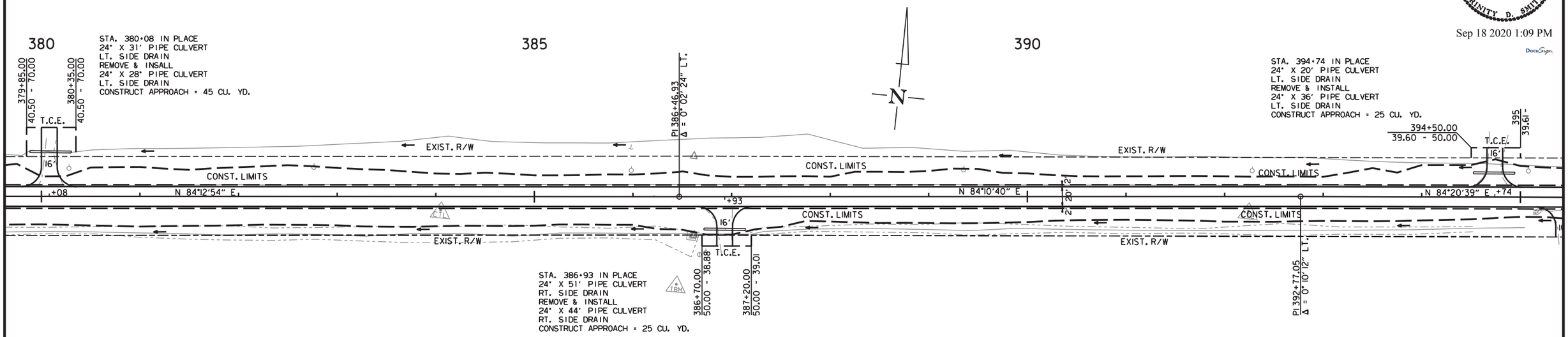

REFER TO SURVEY CONTROL DETAIL SHEETS FOR HORIZONTAL AND VERTICAL CONTROL DATA.

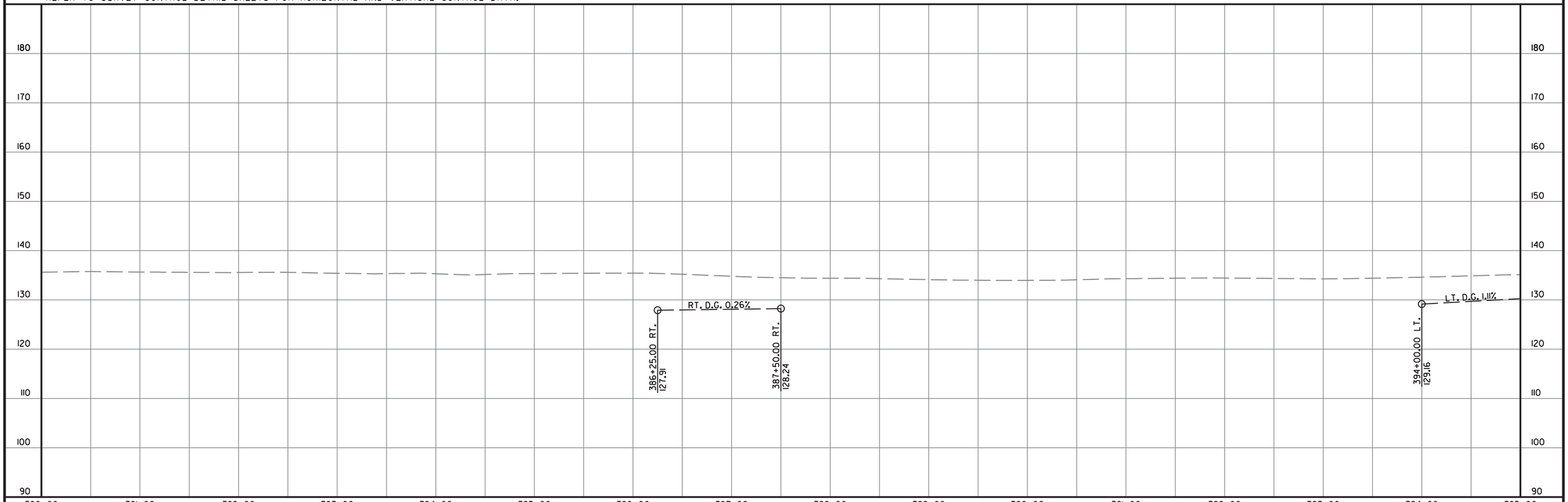

bh38527 10/28/2019
R020629.DGN

DATE REVISED	DATE FILMED	DATE REVISED	DATE FILMED	FED.RD. DIST.NO.	STATE	FED.AID PROJ.NO.	SHEET NO.	TOTAL SHEETS
				6	ARK.			
				JOB NO.		020629	111	122

(2) PLAN AND PROFILE SHEETS

STATE OF ARKANSAS
LICENSED PROFESSIONAL ENGINEER
No. 11425
TRINITY D. SMITH

Sep 18 2020 1:10 PM

DocuSign

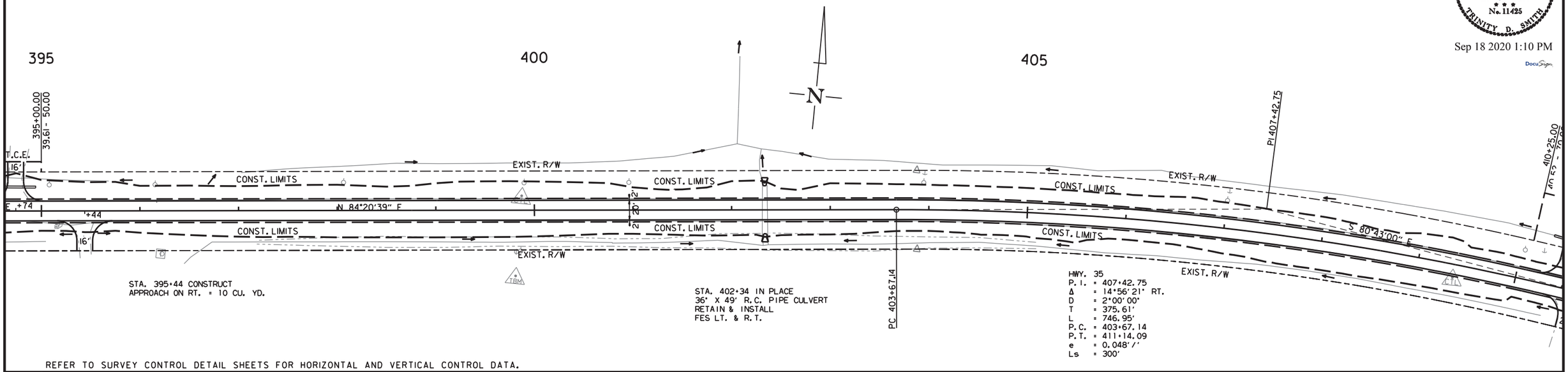

REFER TO SURVEY CONTROL DETAIL SHEETS FOR HORIZONTAL AND VERTICAL CONTROL DATA.

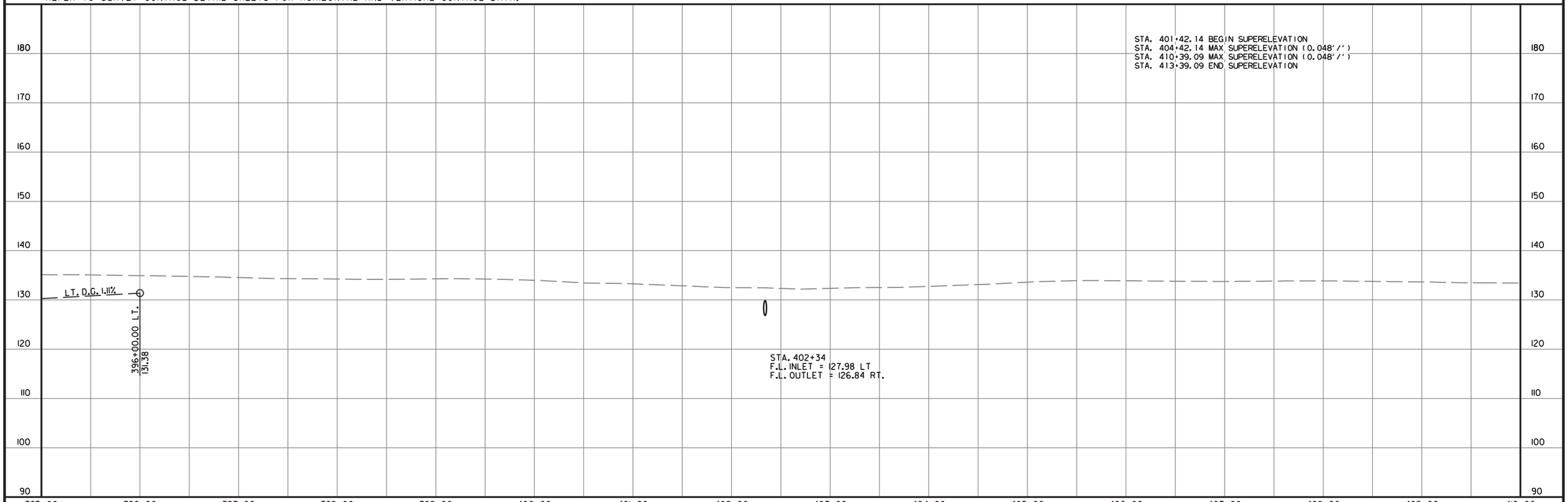

bh38527 10/28/2019
R020629.DGN

DATE REVISED	DATE FILMED	DATE REVISED	DATE FILMED	FED.RD. DIST.NO.	STATE	FED.AID PROJ.NO.	SHEET NO.	TOTAL SHEETS
				6	ARK.			
				JOB NO.		020629	112	122

2 PLAN AND PROFILE SHEETS

STATE OF ARKANSAS
LICENSED PROFESSIONAL ENGINEER
No. 11425
TRINITY D. SMITH

Sep 18 2020 1:10 PM

DocuSign

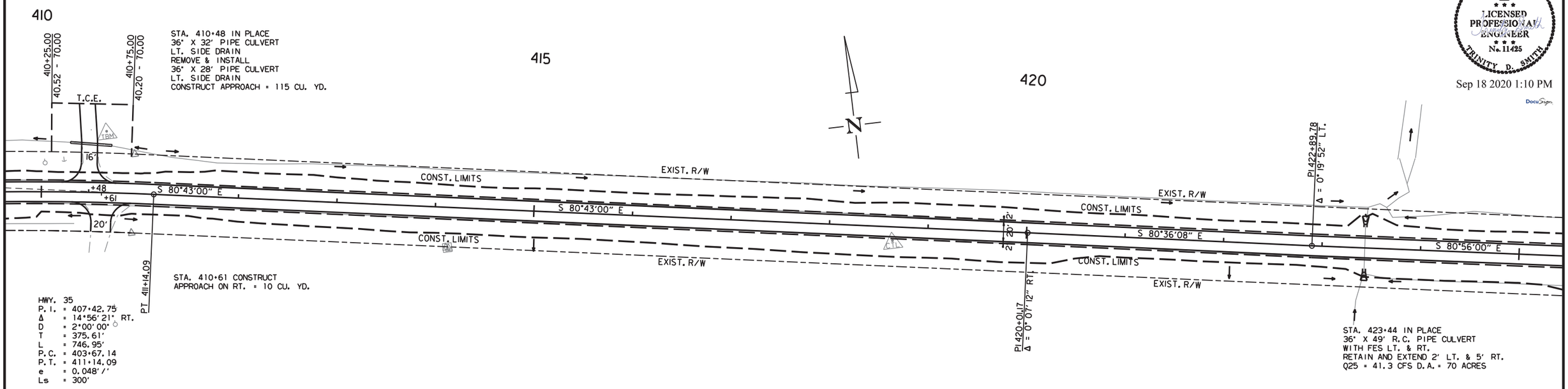

REFER TO SURVEY CONTROL DETAIL SHEETS FOR HORIZONTAL AND VERTICAL CONTROL DATA.

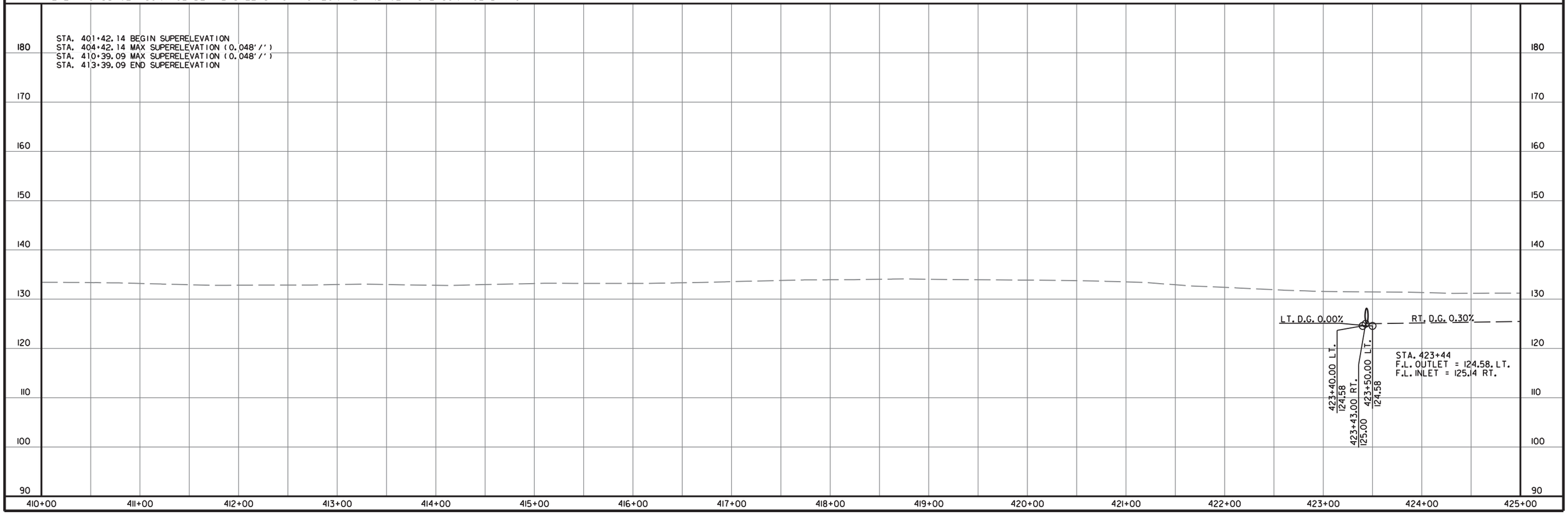

bh38527 10/28/2019
R020629.DGN

DATE REVISED	DATE FILMED	DATE REVISED	DATE FILMED	FED.RD. DIST.NO.	STATE	FED.AID PROJ.NO.	SHEET NO.	TOTAL SHEETS
				6	ARK.			
				JOB NO.		020629	113	122

(2) PLAN AND PROFILE SHEETS

STATE OF ARKANSAS
LICENSED PROFESSIONAL ENGINEER
No. 11425
TRINITY D. SMITH

Sep 18 2020 1:10 PM

DocuSign

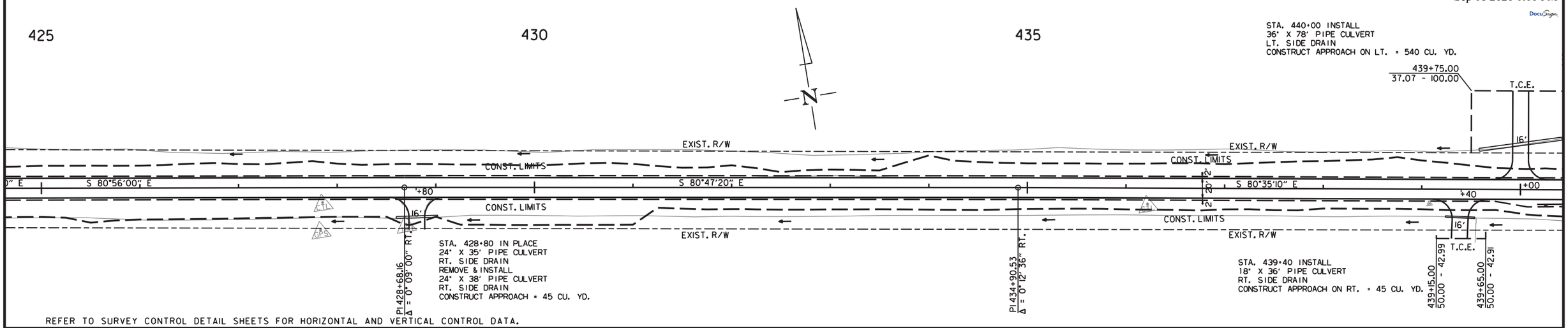

bh38527 10/28/2019
R020629.DGN

DATE REVISED	DATE FILMED	DATE REVISED	DATE FILMED	FED.RD. DIST.NO.	STATE	FED.AID PROJ.NO.	SHEET NO.	TOTAL SHEETS
				6	ARK.			
				JOB NO.		020629	114	122

(2) PLAN AND PROFILE SHEETS

STATE OF ARKANSAS
LICENSED PROFESSIONAL ENGINEER
No. 11425
TRINITY D. SMITH

Sep 18 2020 1:10 PM

DocuSign

GUARDRAIL

STA.	STA.	SIDE	GUARDRAIL (TYPE A) LIN. FT.	GUARDRAIL TERMINAL (TYPE 2) EACH	THRIE BEAM GUARDRAIL TERMINAL EACH
440+16.97	442+41.97	RT.	225	1	1
440+91.97	442+41.97	LT.	150	1	1
444+41.34	445+91.35	RT.	150	1	1
444+41.34	445+66.35	LT.	225	1	1

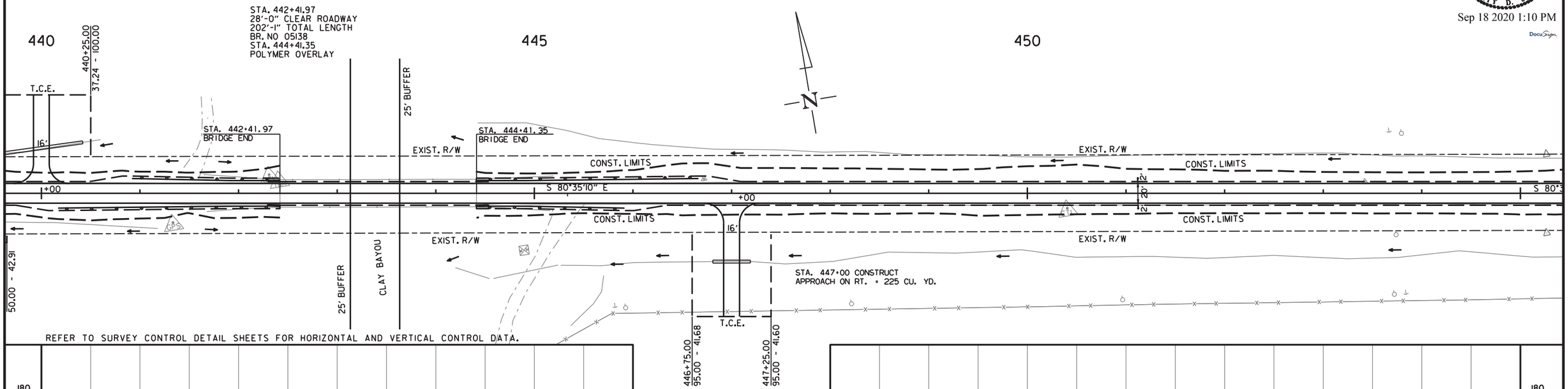

REFER TO SURVEY CONTROL DETAIL SHEETS FOR HORIZONTAL AND VERTICAL CONTROL DATA.

NOTE:

FOR THE CONSTRUCTION OF TEMPORARY WORK RAMPS OR HAUL ROADS, THIS STREAM, STA. 442+40 TO STA. 444+40, IS CLASSIFIED AS A PERENNIAL STREAM. THE TOP OF CHANNEL ELEVATION IS 136 FT. MSL. REFER TO SECTION 110.06(c) OF THE 2014 STANDARD SPECIFICATIONS.

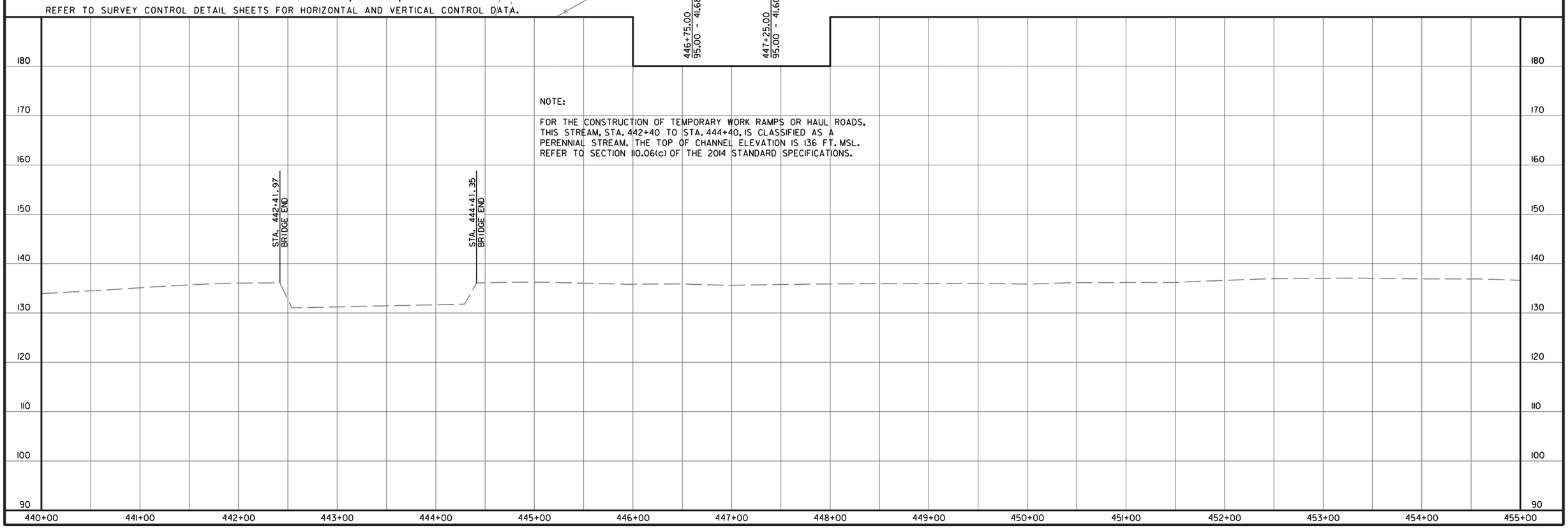

bh38527 10/28/2019
R020629.DGN

DATE REVISED	DATE FILMED	DATE REVISED	DATE FILMED	FED.RD. DIST.NO.	STATE	FED.AID PROJ.NO.	SHEET NO.	TOTAL SHEETS
				6	ARK.			
				JOB NO.		020629	115	122

2 PLAN AND PROFILE SHEETS

STATE OF ARKANSAS
LICENSED PROFESSIONAL ENGINEER
No. 11425
TRINITY D. SMITH

Sep 18 2020 1:10 PM

DocuSign

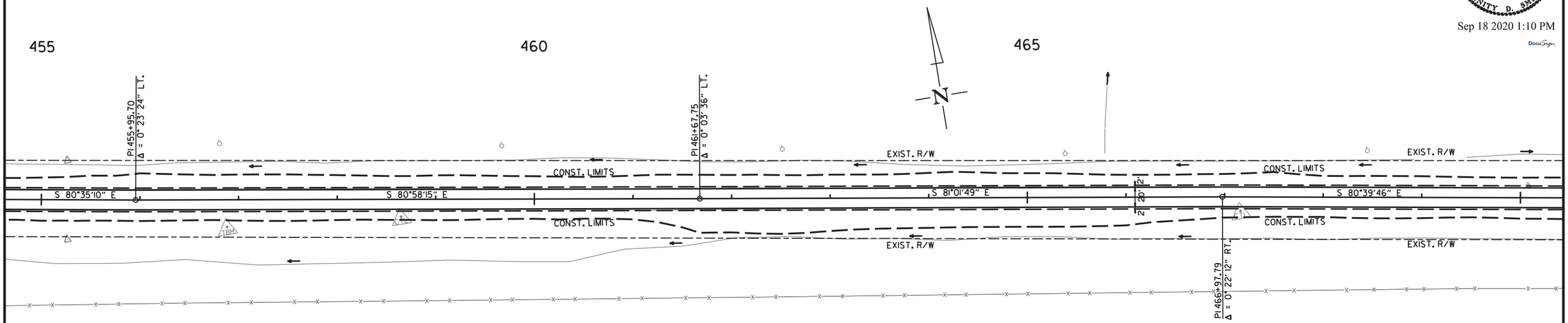

REFER TO SURVEY CONTROL DETAIL SHEETS FOR HORIZONTAL AND VERTICAL CONTROL DATA.

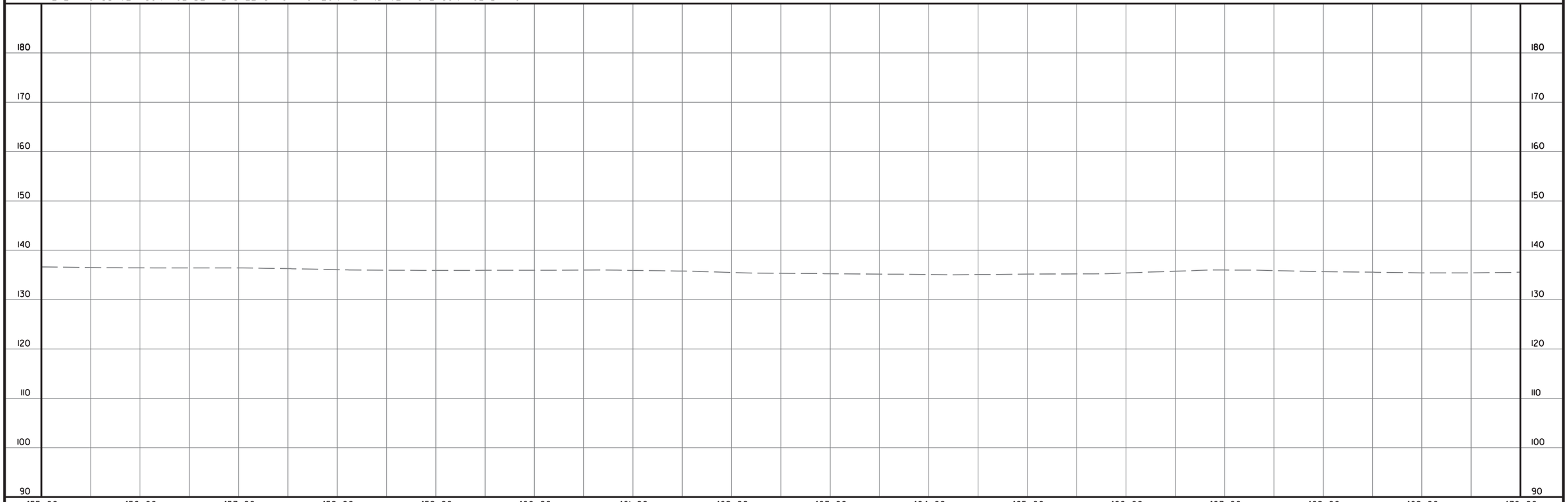

bh38527 10/28/2019
R020629.DGN

DATE REVISED	DATE FILMED	DATE REVISED	DATE FILMED	FED.RD. DIST.NO.	STATE	FED.AID PROJ.NO.	SHEET NO.	TOTAL SHEETS
				6	ARK.			
				JOB NO.		020629	116	122

(2) PLAN AND PROFILE SHEETS

STATE OF ARKANSAS
LICENSED PROFESSIONAL ENGINEER
No. 11425
TRINITY D. SMITH

Sep 18 2020 1:11 PM

DocuSign

470

STA. 472+29 IN PLACE
24" X 35' PIPE CULVERT
LT. SIDE DRAIN
REMOVE & INSTALL
24" X 54' PIPE CULVERT
LT. SIDE DRAIN
CONSTRUCT APPROACH = 25 CU. YD.

475

STA. 477+34 IN PLACE
24" X 43' R.C. PIPE CULVERT
REMOVE AND CONSTRUCT
24" X 46' PIPE CULVERT
WITH FES LT.& RT.
Q25= 32.2 CFS D.A.= 130 ACRES
R.C. PIPE (CLASS III) (TYPE 3 BEDDING) = 46 LIN. FT.
C.M. PIPE (TYPE 2 BEDDING) = 52 LIN. FT.
PLASTIC PIPE = 52 LIN. FT.
24" FES = 2 EA.

STA. 478+33 IN PLACE
36" X 48' PIPE CULVERT
LT. SIDE DRAIN
REMOVE & INSTALL
36" X 54' PIPE CULVERT
LT. SIDE DRAIN
CONSTRUCT APPROACH = 10 CU. YD.

480

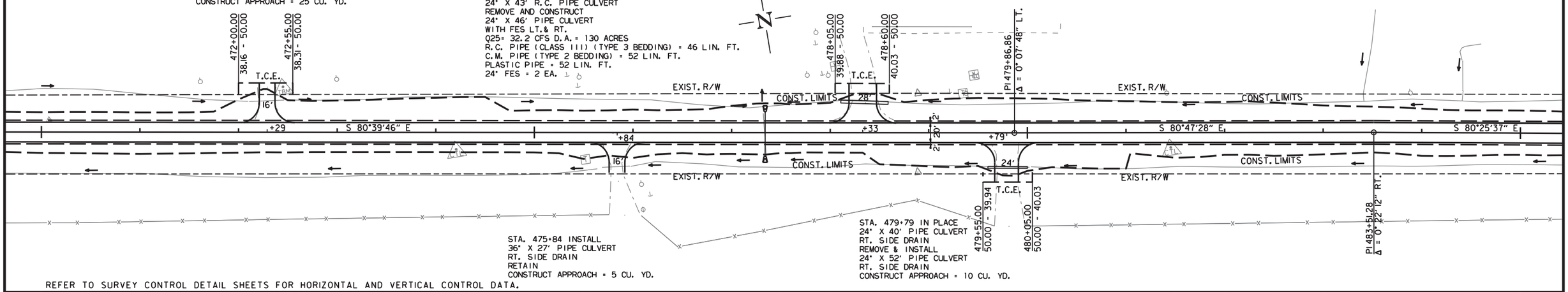

STA. 475+84 INSTALL
36" X 27' PIPE CULVERT
RT. SIDE DRAIN
RETAIN
CONSTRUCT APPROACH = 5 CU. YD.

STA. 479+79 IN PLACE
24" X 40' PIPE CULVERT
RT. SIDE DRAIN
REMOVE & INSTALL
24" X 52' PIPE CULVERT
RT. SIDE DRAIN
CONSTRUCT APPROACH = 10 CU. YD.

REFER TO SURVEY CONTROL DETAIL SHEETS FOR HORIZONTAL AND VERTICAL CONTROL DATA.

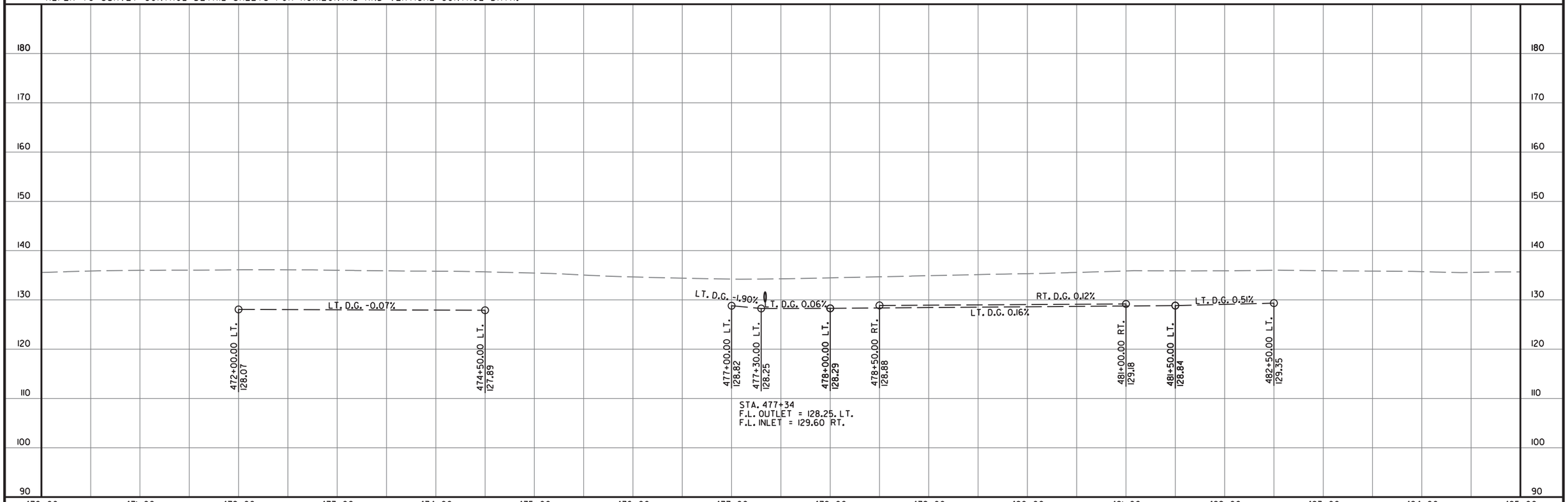

STA. 477+34
F.L. OUTLET = 128.25. LT.
F.L. INLET = 129.60 RT.

bh38527 10/28/2019
R020629.DGN

DATE REVISED	DATE FILMED	DATE REVISED	DATE FILMED	FED.RD. DIST.NO.	STATE	FED.AID PROJ.NO.	SHEET NO.	TOTAL SHEETS
				6	ARK.			
				JOB NO.		020629	117	122

(2) PLAN AND PROFILE SHEETS

STATE OF ARKANSAS
LICENSED PROFESSIONAL ENGINEER
No. 11425
TRINITY D. SMITH

Sep 18 2020 1:11 PM

DocuSign

HWY. 35
P.I. = 511+57.65
Δ = 130°23'33" LT.
D = 8°15'00"
T = 1502.77'
L = 1580.52'
P.C. = 496+54.88
P.T. = 512+35.40
e = 0.100'/'
Ls = 300'

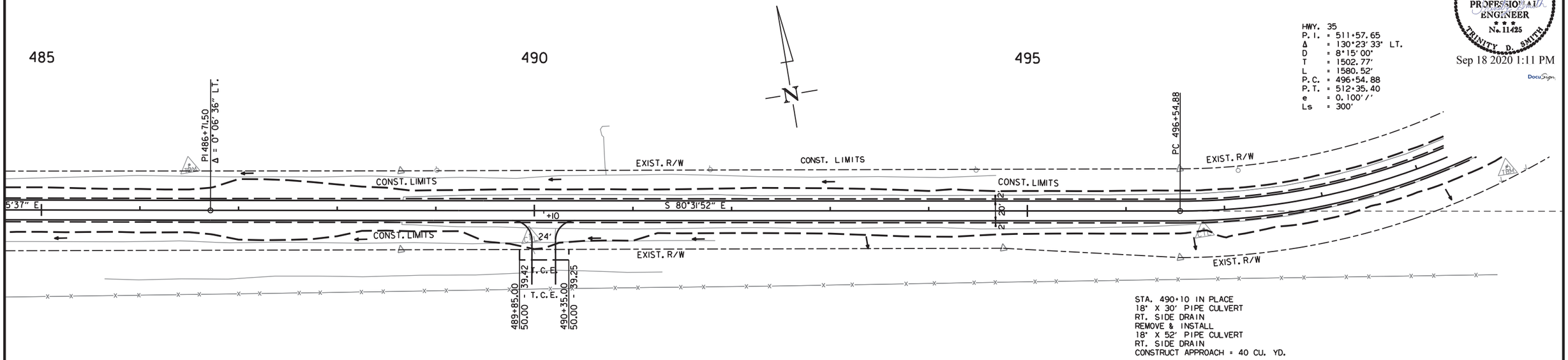

REFER TO SURVEY CONTROL DETAIL SHEETS FOR HORIZONTAL AND VERTICAL CONTROL DATA.

STA. 494+29.88 BEGIN SUPERELEVATION
STA. 497+29.88 MAX SUPERELEVATION (0.100'/')
STA. 511+60.40 MAX SUPERELEVATION (0.100'/')
STA. 514+60.40 END SUPERELEVATION

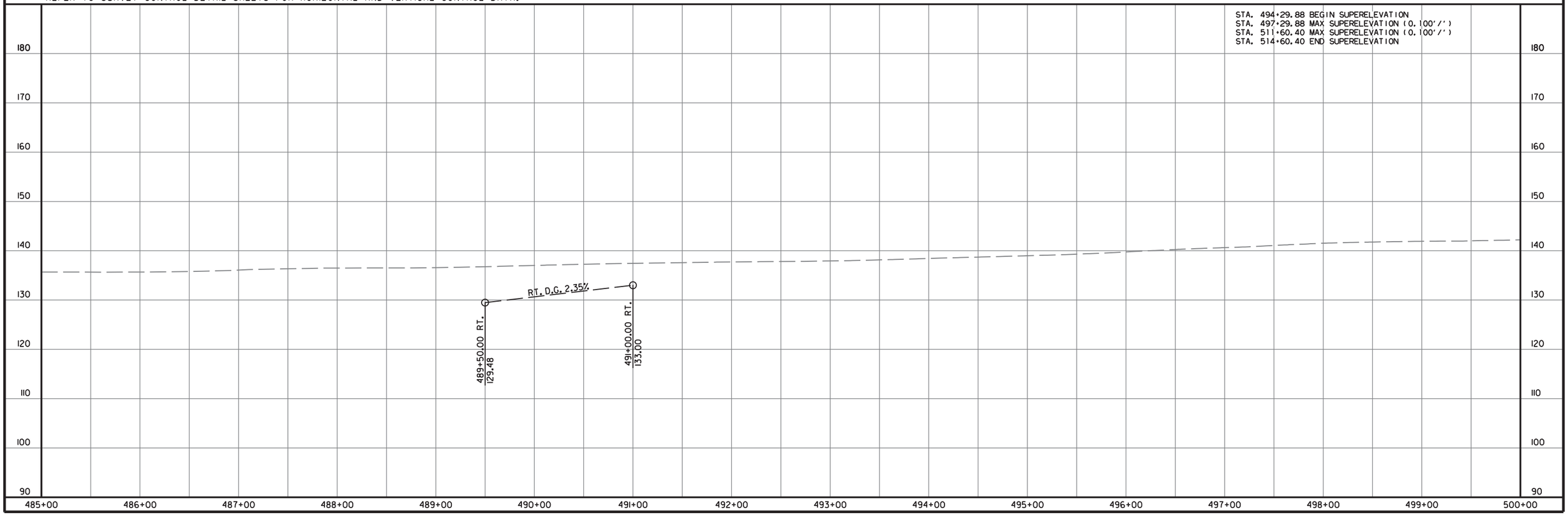

bh38527 10/28/2019
R020629.DGN

DATE REVISED	DATE FILMED	DATE REVISED	DATE FILMED	FED.RD. DIST.NO.	STATE	FED.AID PROJ.NO.	SHEET NO.	TOTAL SHEETS
				6	ARK.			
				JOB NO.		020629	118	122

2 PLAN AND PROFILE SHEETS

STATE OF ARKANSAS
LICENSED PROFESSIONAL ENGINEER
No. 11425
TRINITY D. SMITH

Sep 18 2020 1:11 PM

DocuSign

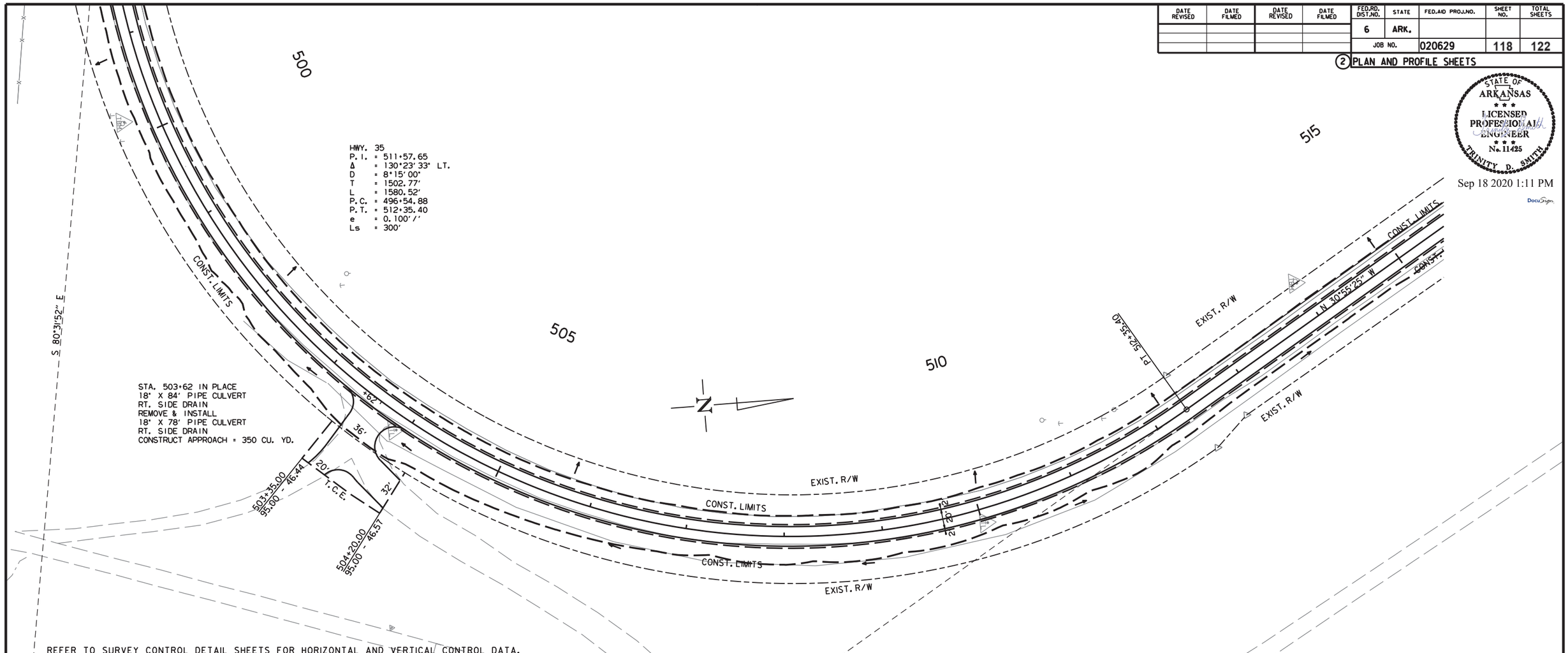

REFER TO SURVEY CONTROL DETAIL SHEETS FOR HORIZONTAL AND VERTICAL CONTROL DATA.

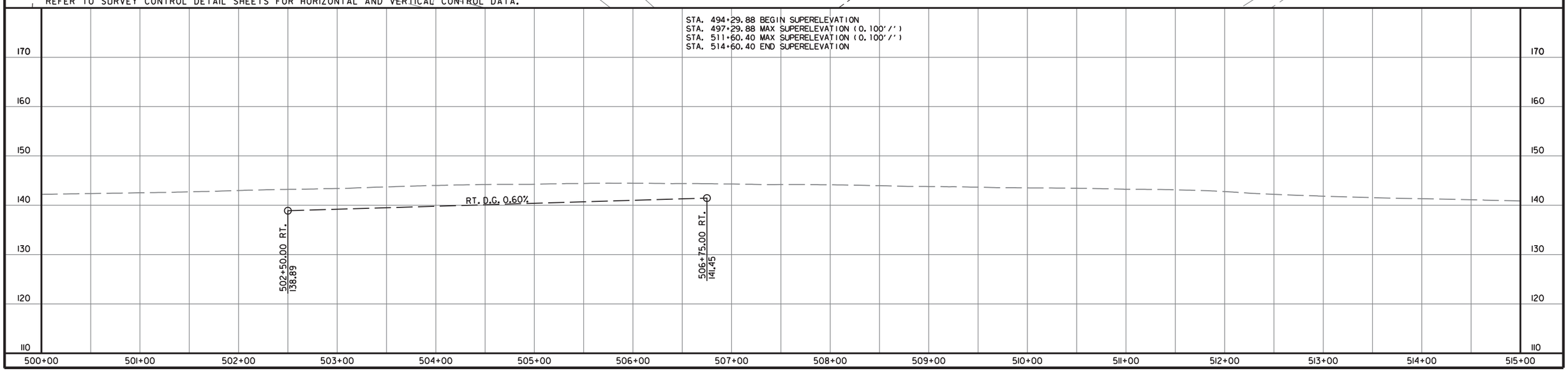

bh38527 10/28/2019
R020629.DGN

DATE REVISED	DATE FILMED	DATE REVISED	DATE FILMED	FED.RD. DIST.NO.	STATE	FED.AID PROJ.NO.	SHEET NO.	TOTAL SHEETS
				6	ARK.			
				JOB NO.		020629	119	122

(2) PLAN AND PROFILE SHEETS

STATE OF ARKANSAS
LICENSED PROFESSIONAL ENGINEER
No. 11425
TRINITY D. SMITH

Sep 18 2020 1:11 PM

DocuSign

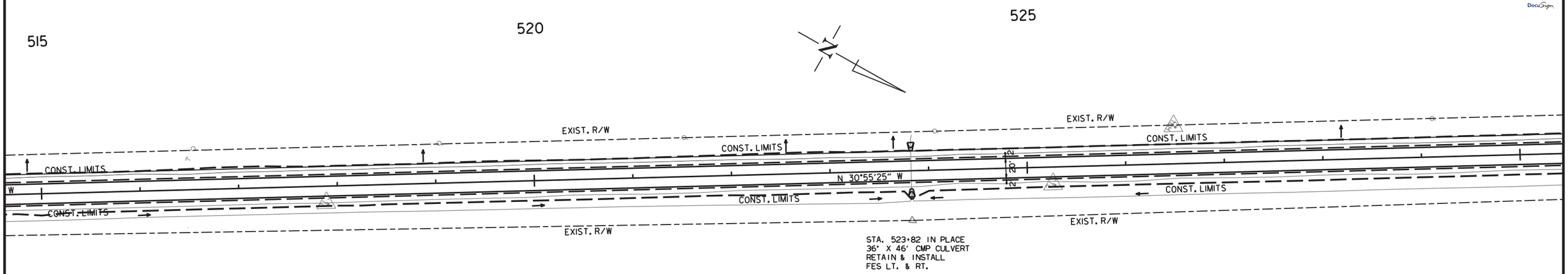

REFER TO SURVEY CONTROL DETAIL SHEETS FOR HORIZONTAL AND VERTICAL CONTROL DATA.

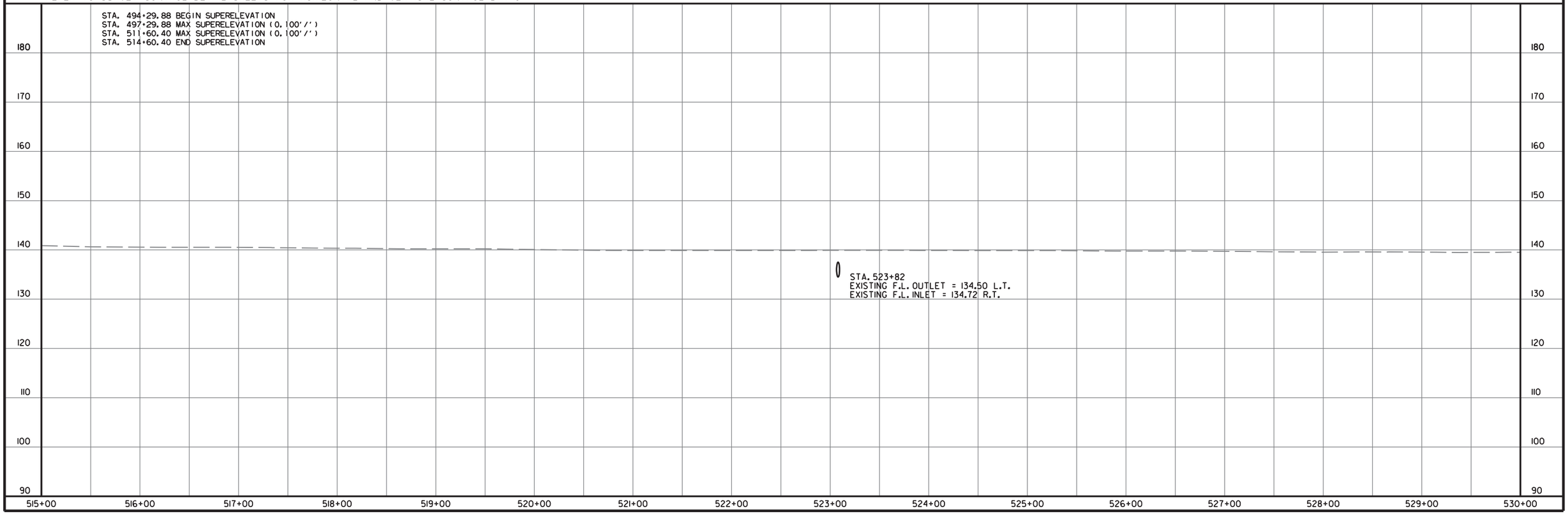

bh38527 10/28/2019
R020629.DGN

DATE REVISED	DATE FILMED	DATE REVISED	DATE FILMED	FED.RD. DIST.NO.	STATE	FED.AID PROJ.NO.	SHEET NO.	TOTAL SHEETS
				6	ARK.			
				JOB NO.		020629	120	122

2 PLAN AND PROFILE SHEETS

STATE OF ARKANSAS
LICENSED PROFESSIONAL ENGINEER
No. 11425
TRINITY D. SMITH

Sep 18 2020 1:12 PM

DocuSign

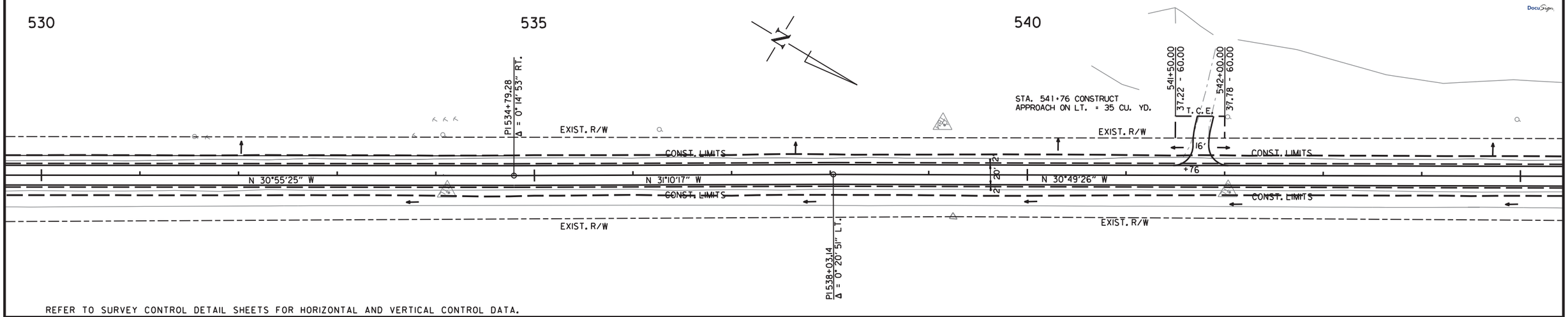

REFER TO SURVEY CONTROL DETAIL SHEETS FOR HORIZONTAL AND VERTICAL CONTROL DATA.

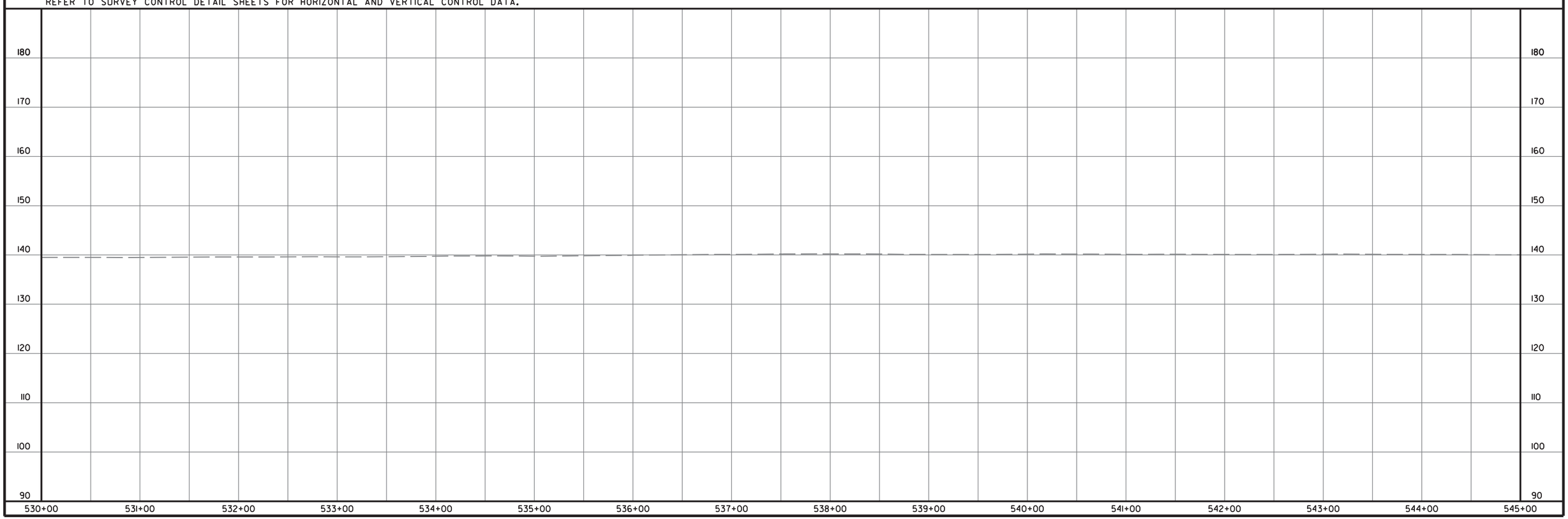

bh38527 10/28/2019
R020629.DGN

DATE REVISED	DATE FILMED	DATE REVISED	DATE FILMED	FED.RD. DIST.NO.	STATE	FED.AID PROJ.NO.	SHEET NO.	TOTAL SHEETS
				6	ARK.			
				JOB NO.		020629	121	122

(2) PLAN AND PROFILE SHEETS

STATE OF ARKANSAS
LICENSED PROFESSIONAL ENGINEER
No. 11425
TRINITY D. SMITH

Sep 18 2020 1:12 PM

DocuSign

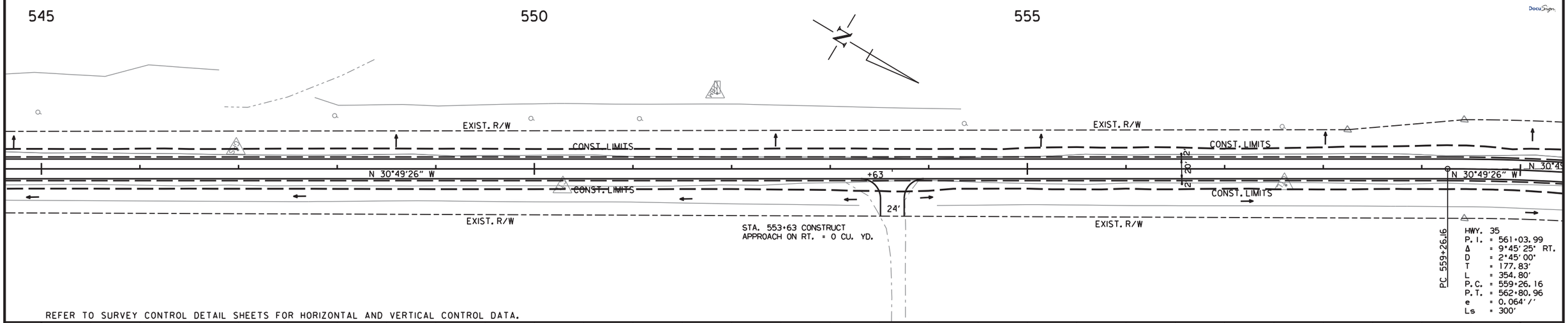

REFER TO SURVEY CONTROL DETAIL SHEETS FOR HORIZONTAL AND VERTICAL CONTROL DATA.

STA. 557+01.16 BEGIN SUPERELEVATION
STA. 560+01.16 MAX SUPERELEVATION (0.064'/')
STA. 562+05.96 MAX SUPERELEVATION (0.064'/')
STA. 565+05.96 END SUPERELEVATION

180 170 160 150 140 130 120 110 100 90

545+00 546+00 547+00 548+00 549+00 550+00 551+00 552+00 553+00 554+00 555+00 556+00 557+00 558+00 559+00 560+00

bh38527 10/28/2019
R020629.DGN

DATE REVISED	DATE FILMED	DATE REVISED	DATE FILMED	FED.RD. DIST.NO.	STATE	FED.AID PROJ.NO.	SHEET NO.	TOTAL SHEETS
				6	ARK.			
				JOB NO.		020629	122	122

(2) PLAN AND PROFILE SHEETS

STATE OF ARKANSAS
LICENSED PROFESSIONAL ENGINEER
No. 11425
TRINITY D. SMITH

Sep 18 2020 1:12 PM

DocuSign

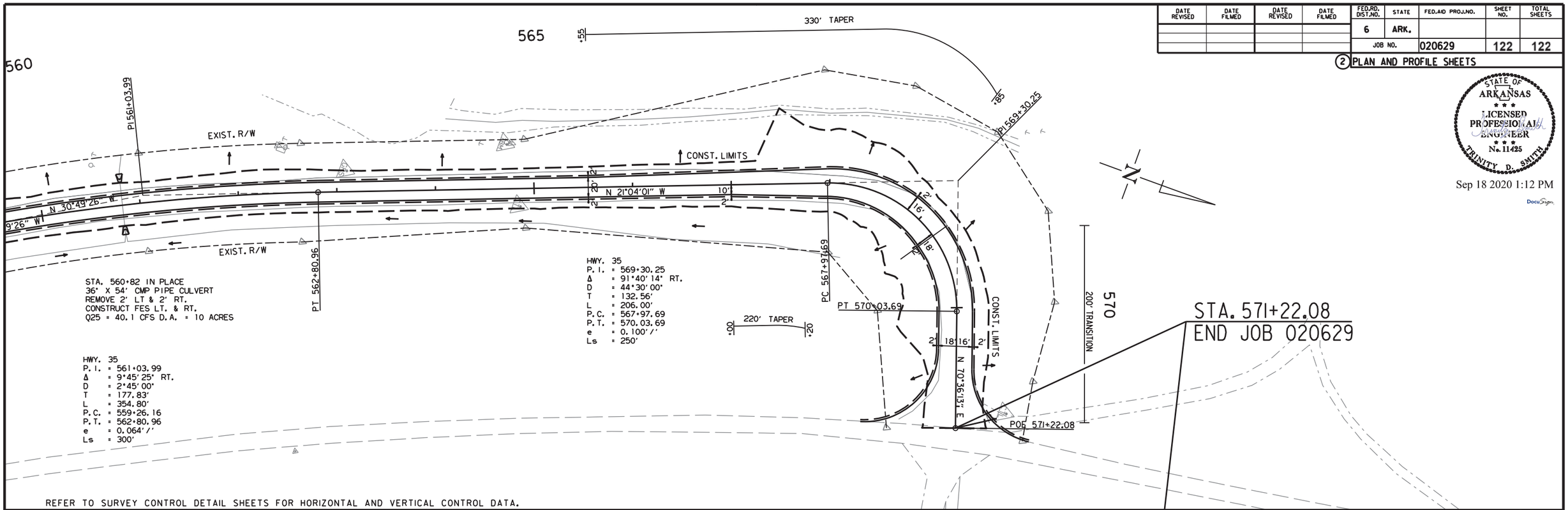

REFER TO SURVEY CONTROL DETAIL SHEETS FOR HORIZONTAL AND VERTICAL CONTROL DATA.

STA. 557+01.16 BEGIN SUPERELEVATION
STA. 560+01.16 MAX SUPERELEVATION (0.064'/')
STA. 562+05.96 MAX SUPERELEVATION (0.064'/')
STA. 565+05.96 END SUPERELEVATION

STA. 566+10.19 BEGIN SUPERELEVATION
STA. 568+29.50 MAX SUPERELEVATION (0.087'/')
STA. 569+00.69 MAX SUPERELEVATION (0.087'/')
STA. 571+20.00 END SUPERELEVATION

STA. 560+82
EXIST. F.L. INLET = 134.67 RT.
EXIST. F.L. OUTLET = 134.43 LT.

180 170 160 150 140 130 120 110 100 90

560+00 561+00 562+00 563+00 564+00 565+00 566+00 567+00 568+00 569+00 570+00 571+00 572+00 573+00 574+00 575+00

bh38527 10/28/2019
R020629.DGN

DATE REVISED	DATE FILMED	DATE REVISED	DATE FILMED	FED. ROAD DIST. NO.	STATE	FED. AID PROJ. NO.	SHEET NO.	TOTAL SHEETS
11/7/19				6	ARK.			
				JOB NO.				

1 - TYPE AT GUTTERS - 55036

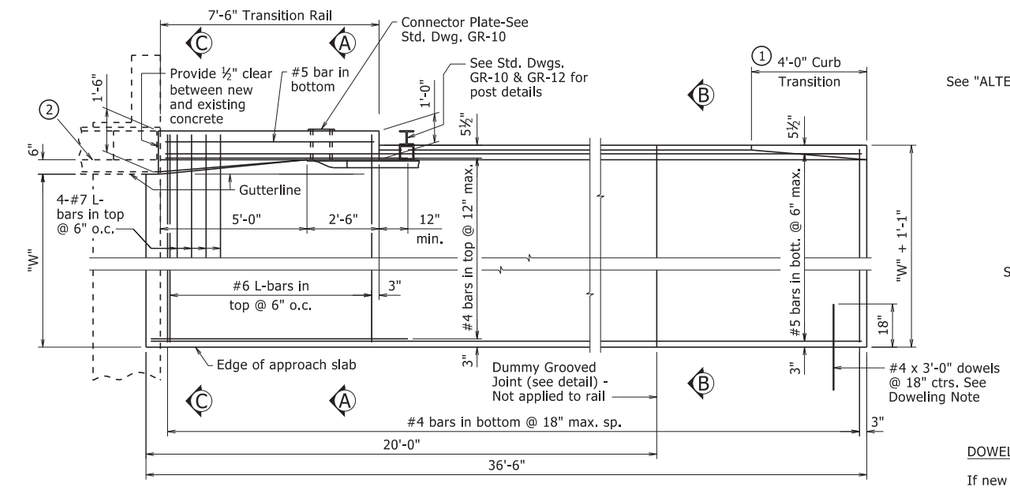

PLAN - SQUARE BRIDGES

⅜" = 1'-0"

2 Front face of concrete wall (Type A Rail) or front face of metal pipe or tubing (Types B, C, D or E Rail).

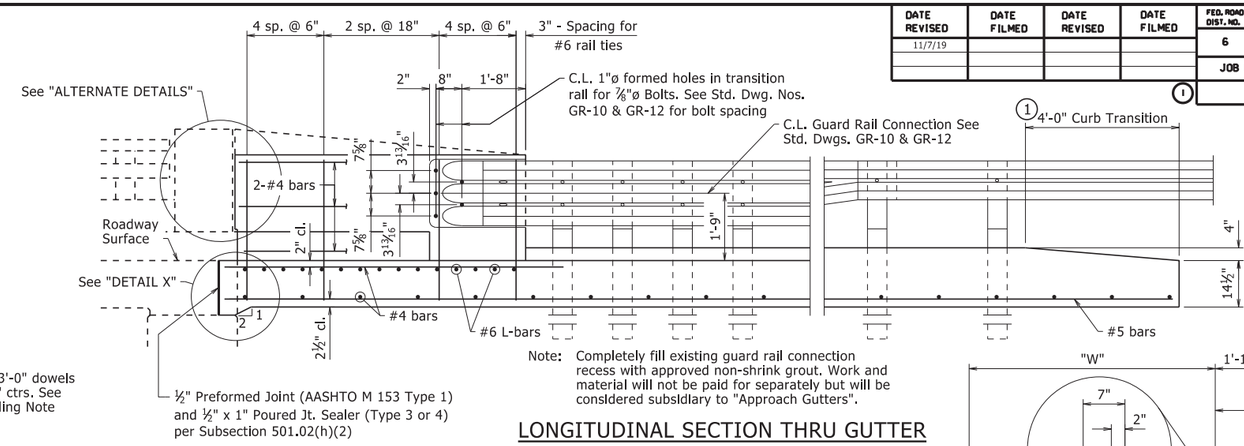

Note: Completely fill existing guard rail connection recess with approved non-shrink grout. Work and material will not be paid for separately but will be considered subsidiary to "Approach Gutters".

LONGITUDINAL SECTION THRU GUTTER

½" = 1'-0"

1 Construct curb with height-transition as shown if drop inlet is not used at end of gutter.

Construct curb full height (no height-transition) if drop inlet is used at end of gutter. Curb height transition placed on drop inlet. See drop inlet details.

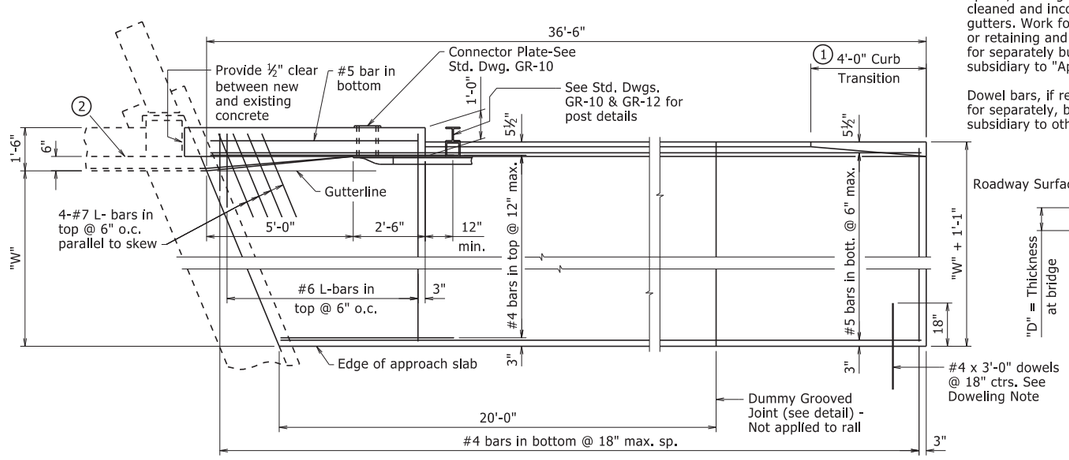

DOWELING NOTES

If new approach slab is used: Place dowels into approach slab using 18" embedment.

If existing approach slab is retained: Dowels shall be drilled and grouted 18" into existing slab. At the Contractor's option, existing dowels may be retained, cleaned and incorporated into new gutters. Work for drilling and grouting, or retaining and cleaning will not be paid for separately but will be considered subsidiary to "Approach Gutters".

Dowel bars, if required, will not be paid for separately, but will be considered subsidiary to other pay items.

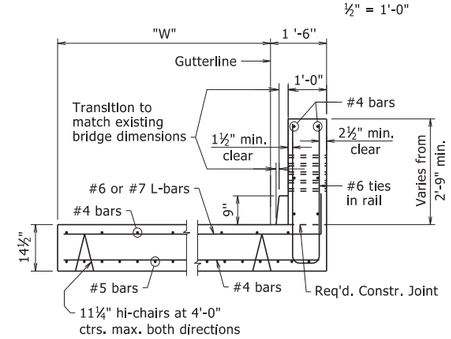

SECTION A-A

½" = 1'-0"

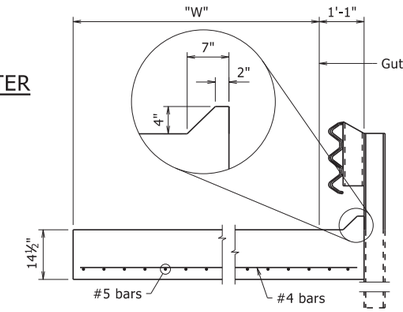

SECTION B-B

½" = 1'-0"

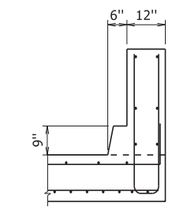

SECTION C-C

At End of Transition Rail

½" = 1'-0"

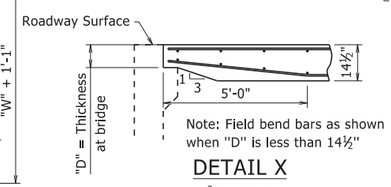

DETAIL X

⅜" = 1'-0"

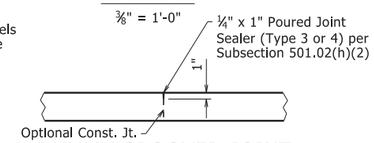

DUMMY GROOVED JOINT

No Scale

BENDING DIAGRAMS

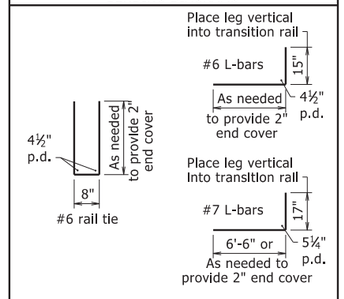

Dimensions are out to out of bars.

GENERAL NOTES

Concrete shall be Class S or S(AE) or mixture used for Portland Cement Concrete Pavement.

Reinforcing steel shall be Grade 60 (fy = 60,000 psi.) conforming to AASHTO M 31 or M 322, Type A, with mill test reports. Fabricate bar lengths to provide 2" minimum cover at each end.

Approach gutters will be measured and paid for in accordance with Section 504.

Preformed Joint and Poured Joint Sealer included in the item "Approach Gutters".

All longitudinal lines within the limits of horizontal curves shall be on curves concentric to C.L. Bridge. Adjustment to longitudinal bar lengths may be required. Transverse reinforcing shall be placed on radial lines to C.L. Bridge.

When this Standard Drawing is used as a retrofit for an existing bridge and an existing drop inlet is located within the Plan of the approach gutter, adjust the reinforcing as needed to facilitate construction of the approach gutter, unless otherwise noted.

APPROX. QUANTITIES FOR ONE SQUARE 36'-6" APPROACH GUTTER

(For Information Only)

Concrete (cu. yd.)	("W" x 1.65) + 2.80
Reinforcing Steel (lb.)	("W" x 128.1) + 318.5

Variables: Units of "W" are in feet.

"W" = Distance from gutterline to edge of shoulder or edge of approach slab. "W" shall not be less than 3'-0" unless approach gutter is doweled into an approach slab or concrete pavement.

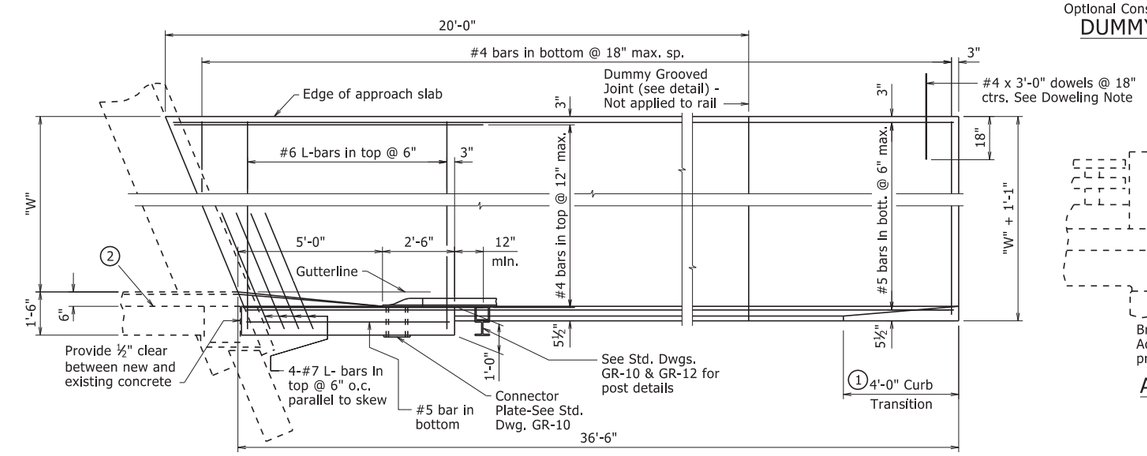

PLAN - SKEWED BRIDGES

⅜" = 1'-0"

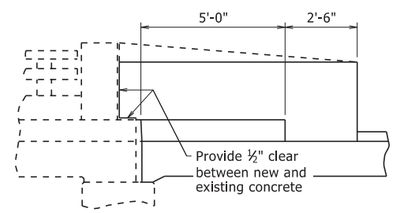

Bridge end may vary from that shown. Adjust gutter details as required to provide similar railing transition.

ALTERNATE DETAILS

NO SCALE

1 Revised and Redrawn. By: TMG
Checked By: CRE 11/7/2019

STATE OF ARKANSAS
LICENSED PROFESSIONAL ENGINEER
No. 9235
CHARLES R. ELLIS

BRIDGE ENGINEER

This document was originally issued and sealed by Charles R. Ellis, PE No. 9235, on November 7, 2019. This copy is not a signed and sealed document.

STANDARD DETAILS FOR TYPE 'AT' APPROACH GUTTERS (BRIDGES WITH 6" CURBS & TYPE A, B, C, D OR E RAILING)

ROUTE SEC.

ARKANSAS STATE HIGHWAY COMMISSION

LITTLE ROCK, ARK.

DRAWN BY:	KDH	DATE:	2/27/2014	FILENAME:	b55036.dgn
CHECKED BY:	KWY	DATE:	2/27/2014	SCALE:	AS NOTED
DESIGNED BY:	STD.	DATE:	-		

DRAWING NO. 55036

PRINT DATE: 11/20/2019

DATE REVISED	DATE FILMED	DATE REVISED	DATE FILMED	FED. ROAD DIST. NO.	STATE	FED. AID PROJ. NO.	SHEET NO.	TOTAL SHEETS
				6	ARK.			
				JOB NO.				

(1) - TYPE CT GUTTERS - 55039

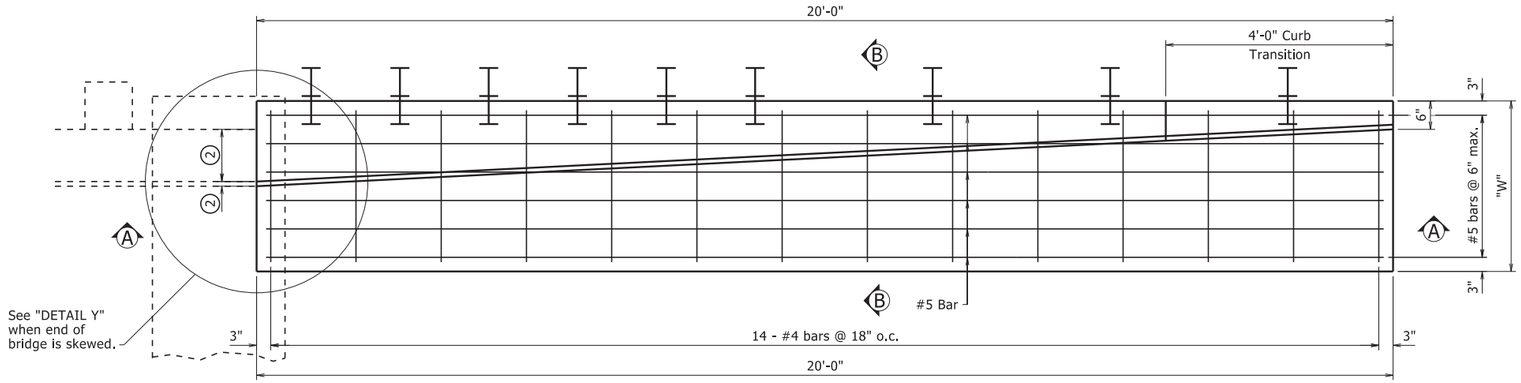

PLAN OF APPROACH GUTTER (1)

¾" = 1'-0"

Remove the existing terminal section as needed and attach a new guard rail to the existing guard rail on the bridge.

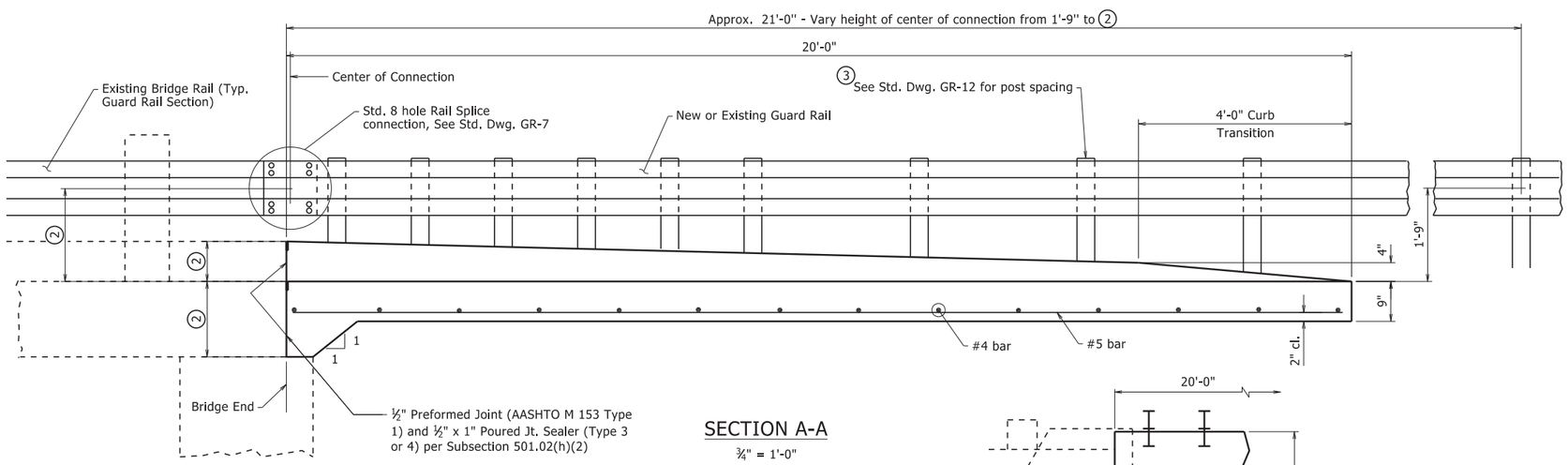

SECTION A-A

¾" = 1'-0"

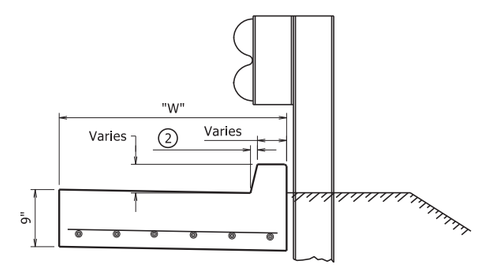

SECTION B-B

1" = 1'-0"

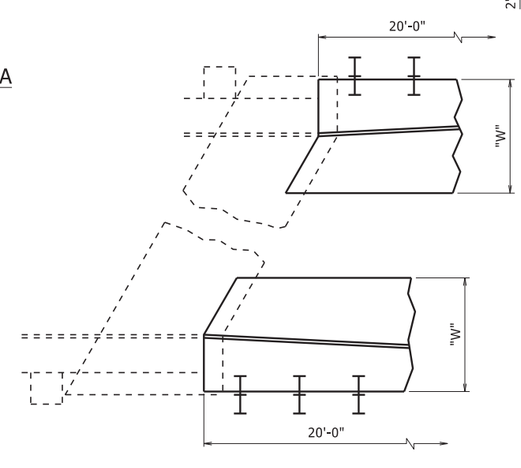

DETAIL Y

No Scale

(1) Square approach gutter is shown. Modify approach gutter as necessary to accommodate a bridge on a skew. See "DETAIL Y."

(2) Match existing conditions at bridge end.

(3) Vary post height, as necessary, to match height of existing w-beam bridge rail.

GENERAL NOTES

This drawing shall only be used as a retrofit of an existing bridge end where an existing curb creates a snag point.

Concrete shall be Class S or S(AE) or mixture used for Portland Cement Concrete Pavement.

Reinforcing steel shall be Grade 60 (fy = 60,000 psi.) conforming to AASHTO M 31 or M 322, Type A, with mill test reports. Fabricate bar lengths to provide 2" minimum cover at each end.

Approach gutters will be measured and paid for in accordance with Section 504.

Preformed Joint and Poured Joint Sealer included in the item "Approach Gutters".

All longitudinal lines within the limits of horizontal curves shall be on curves concentric to C.L. Bridge. Adjustment to longitudinal bar lengths may be required. Transverse reinforcing shall be placed on radial lines to C.L. Bridge.

If an existing drop inlet is located within the Plan of the approach gutter, adjust the reinforcing as needed to facilitate construction of the approach gutter, unless otherwise noted.

APPROXIMATE QUANTITIES FOR ONE SQUARE 20'-0" APPROACH GUTTER

Concrete (Cu. Yd.)	("W" x 0.56) + 0.41
Reinforcing Steel (lb.)	("W" x 50.38) - 3.11

Variables: Units of "W" are in feet.

This document was originally issued and sealed by Charles R. Ellis, PE No. 9235, on November 7, 2019. This copy is not a signed and sealed document.

STATE OF ARKANSAS
LICENSED PROFESSIONAL ENGINEER
No. 9235
CHARLES R. ELLIS

BRIDGE ENGINEER

STANDARD DETAILS FOR TYPE 'CT' APPROACH GUTTERS (BRIDGES WITH CURB)

ROUTE SEC.

ARKANSAS STATE HIGHWAY COMMISSION

LITTLE ROCK, ARK.

DRAWN BY:	TMG	DATE:	11/7/2019	FILENAME:	b55039.dgn
CHECKED BY:	CRE	DATE:	11/7/2019	SCALE:	AS NOTED
DESIGNED BY:	STD.	DATE:	-		

DRAWING NO. 55039

PRINT DATE: 7/17/2020

DATE REVISED	DATE FILMED	DATE REVISED	DATE FILMED	FED. ROAD DIST. NO.	STATE	FED. AID PROJ. NO.	SHEET NO.	TOTAL SHEETS
				6	ARK.			
				JOB NO.				
				1	JOINT REPAIR - 55064			

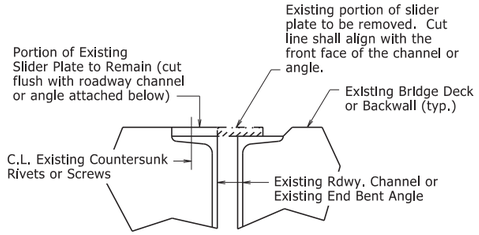

REMOVAL DETAILS AT EXISTING SLIDER PLATE JOINTS

At the direction of the Engineer, the portion of existing slider plate shown shall be removed and replaced with a new plate as shown in "SLIDER PLATE JOINT MODIFICATION". The portion of existing slider plate shall be removed and disposed of in accordance with Section 821. The cut face shall be ground square and flush with the face of the existing angle or channel. Removal and disposal of existing slider plate material will not be paid for directly, but shall be considered subsidiary to the item "Silicone Joint Sealant". Properly functioning slider plates need not be modified.

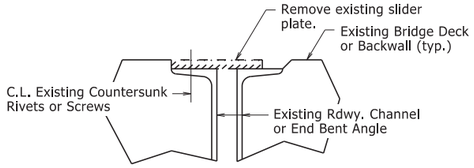

REMOVAL DETAILS AT EXISTING SLIDER PLATE JOINTS WITH GRADE RAISE

The existing slider plate shown shall be removed and replaced with new plates as shown in "JOINT MODIFICATION WITH GRADE RAISE". The existing slider plate shall be removed and disposed of in accordance with Section 821. Removal and disposal of existing slider plate material will not be paid for directly, but shall be considered subsidiary to the item "Silicone Joint Sealant".

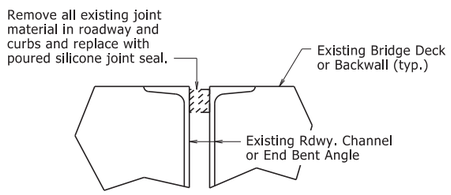

REMOVAL DETAILS AT EXISTING FILLED JOINTS

The existing joint material shall be removed and disposed of in accordance with Section 821. Removal and disposal of existing joint material will not be paid for directly, but shall be considered subsidiary to the item "Silicone Joint Sealant".

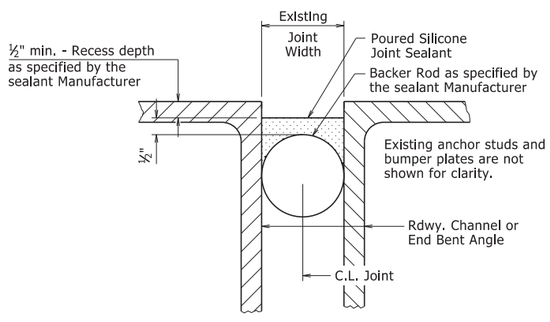

POURED SILICONE JOINT SEAL DETAILS

Existing Joint Seal shall be completely removed, backer rods placed, and Silicone Joint Sealant installed across the entire width of the bridge deck in accordance with these details, Section 809, and the Manufacturer's recommendations. Removal of existing Joint Seal will not be paid for directly, but shall be considered incidental to the item "Silicone Joint Sealant".

Backer rods shall be extended beyond the length of the poured joint in the initial joint repair area so that the two pieces can be properly spliced together prior to installing sealant for the adjacent joint repair. Manufacturer's recommendations shall be followed to prevent sealant leakage during repair work.

Backer rods shall be appropriately sized and set to the depth shown in the Manufacturer's literature based on the joint width at the time of sealing. Except as noted, do not install more backer rod than can be sealed in the same day. The Contractor shall verify separation of the backer rod from the joint material after joint material has set.

Backer rod shall be notched or otherwise fit around any existing seal supports or bumper plates to maintain its proper depth as defined above.

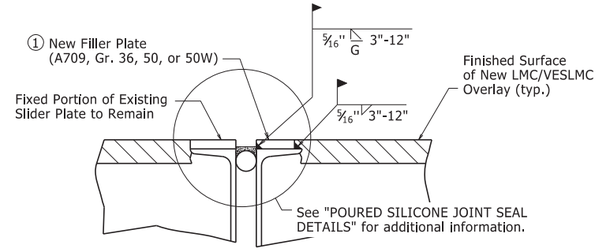

SLIDER PLATE JOINT MODIFICATION

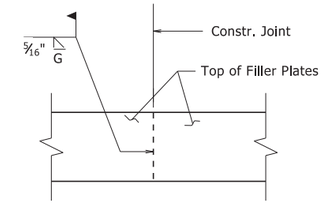

PLAN VIEW OF FILLER PLATE

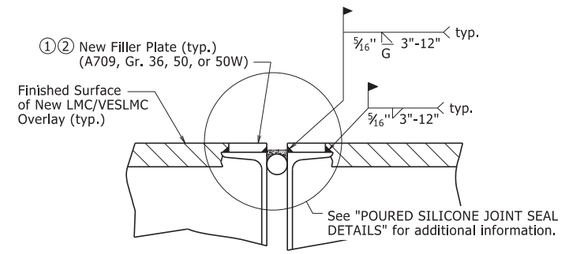

JOINT MODIFICATION WITH GRADE RAISE

① New field attached plates atop existing roadway channels or angles are required. The plate thickness shall be adjusted as necessary to match surface of finished surface of LMC/VESLMC Overlay and the width shall be ⅜" less than the existing channel flange or angle width to allow for fillet weld as shown.

All new Structural Steel shall be ASTM A709 (Gr. 36, 50, or 50W). The surfaces not in contact with concrete shall be cleaned and painted in accordance with Section 638. Only one coat of paint is required and shall be applied in the fabricator's shop. Grade 50W steel shall not be painted, but shall be cleaned in accordance with Subsection 807.84(e). Structural Steel and Painting will not be paid for directly, but shall be subsidiary to the item "Silicone Joint Sealant".

② Details shown are for an expansion joint where two bridge units meet. Eliminate filler plate on backwall and proceed with backwall repair in accordance with "BACKWALL REPAIR REMOVAL DETAIL" and "BACKWALL REPAIR INSTALLATION DETAIL" at end bents for bridge decks with grade raise, see Standard Drawing Number 55065.

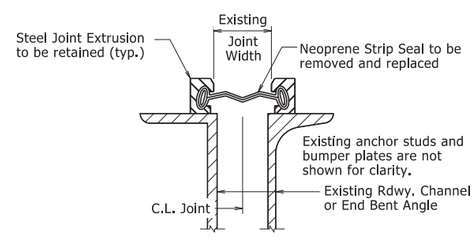

STRIP SEAL JOINT DETAILS

Existing neoprene strip seal joint material shall be completely removed and new neoprene strip seal joint material shall be installed across the entire width of the steel extrusions in accordance with these details, Section 809, and the Manufacturer's recommendations. Prior to installing the new joint material, the Contractor shall clean the steel extrusion at the Engineer's direction and in accordance with the new strip seal joint material Manufacturer's recommendations.

Removal and replacement of the existing neoprene strip seal joint material will require the removal of the parapet slider plates, where present. Parapet slider plates removed for this work shall be reinstalled after installation of the new neoprene strip seal joint material.

The new neoprene strip seal joint material shall provide a movement rating of four inches. The repaired expansion joint shall be capable of sealing the deck surface and parapet area to prevent moisture and other contaminants from descending through the joint.

All work and material associated with removing the existing joint material, cleaning the extrusions, removal and reinstallation of parapet slider plates, and installation of new joint material shall be paid for under the item "Modification of Existing Bridge Structure (Bridge No. _)".

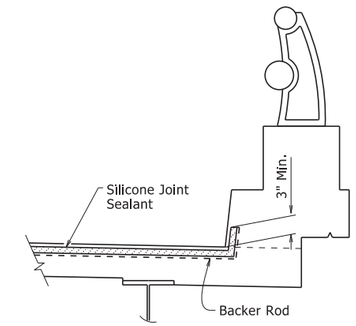

SILICONE JOINT SEAL PLACEMENT AT CURB

Vertical joints may require forming. The clearance from deck surface to joint material shall be maintained.

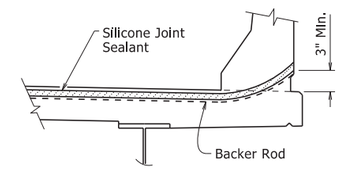

SILICONE JOINT SEAL PLACEMENT AT RAIL

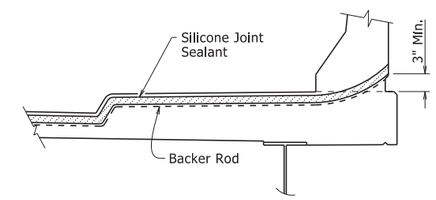

SILICONE JOINT SEAL PLACEMENT AT SIDEWALK

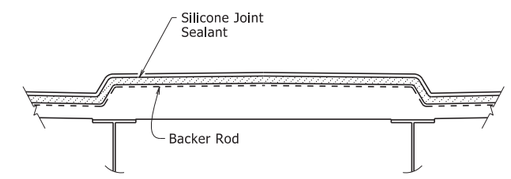

SILICONE JOINT SEAL PLACEMENT AT MEDIAN

STATE OF ARKANSAS
LICENSED PROFESSIONAL ENGINEER
No. 9235
CHARLES R. ELLIS

BRIDGE ENGINEER

This document was originally issued and sealed by Charles R. Ellis, PE No. 9235, on November 7, 2019. This copy is not a signed and sealed document.

STANDARD DETAILS FOR JOINT REPAIRS & MODIFICATIONS

ROUTE SEC.

ARKANSAS STATE HIGHWAY COMMISSION

LITTLE ROCK, ARK.

DRAWN BY:	KWY	DATE:	11/7/2019	FILENAME:	b55064.dgn
CHECKED BY:	SWP	DATE:	11/7/2019	SCALE:	None
DESIGNED BY:	STD.	DATE:	-------		

DRAWING NO. 55064

PRINT DATE: 11/7/2019

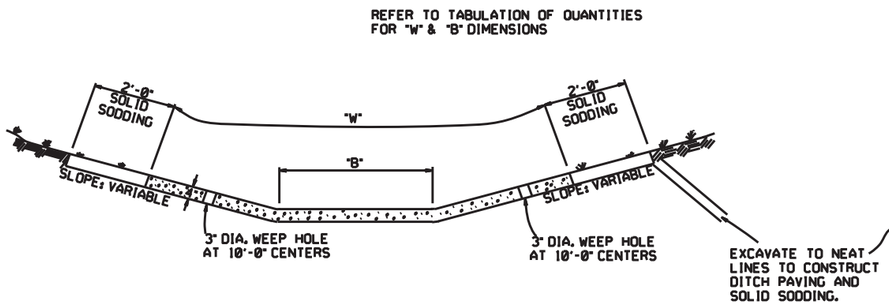

TYPE A

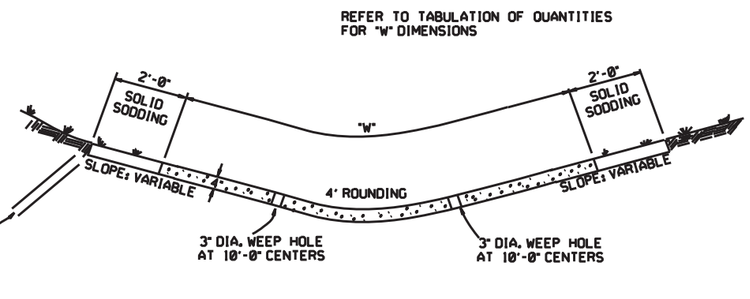

EXCAVATE TO NEAT LINES TO CONSTRUCT DITCH PAVING AND SOLID SODDING.

TYPE B

THE STEEL AND ADDITIONAL CONCRETE FOR THE WALLS SHALL NOT BE PAID FOR DIRECTLY, BUT SHALL BE CONSIDERED TO BE INCLUDED IN THE PRICE BID FOR "CONCRETE DITCH PAVING."

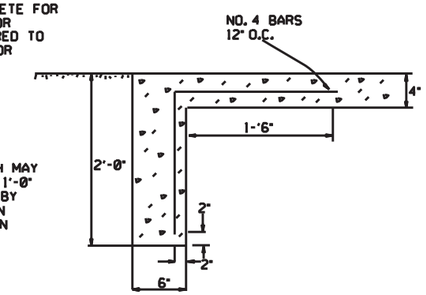

TOE WALL DEPTH MAY BE ALTERED TO 1'-0" WHEN DIRECTED BY THE ENGINEER IN ROCK EXCAVATION

TOE WALL DETAIL FOR CONCRETE DITCH PAVING

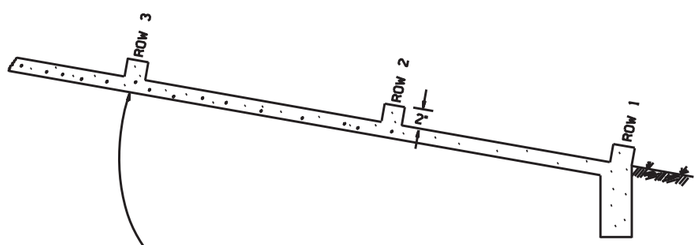

NUMBER OF ELEMENTS PER ROW VARIES WITH WIDTH OF PAVING SPECIFIED

ENERGY DISSIPATORS TO BE USED FOR THE ENTIRE LENGTH OF DITCH WHEN SLOPE OF DITCH PAVING EXCEEDS 7%. THE DISSIPATORS WILL NOT BE PAID FOR DIRECTLY, BUT SHALL BE CONSIDERED TO BE INCLUDED IN THE PRICE BID FOR CONCRETE DITCH PAVING.

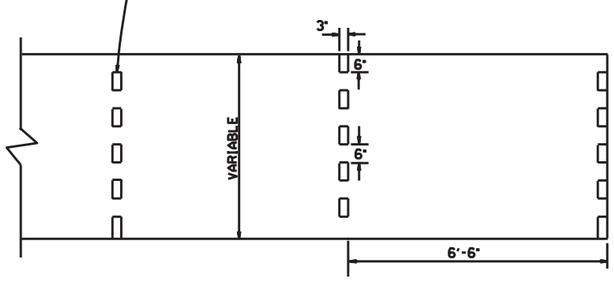

ENERGY DISSIPATORS
(NO SCALE)

GENERAL NOTES:

THE FULL WIDTH OF EACH SECTION SHALL BE POURED MONOLITHICALLY.

TOE WALLS TO BE CONSTRUCTED FULL WIDTH AT EACH END OF DITCH PAVING, AND POURED MONOLITHICALLY.

SOLID SOD ALONG DITCH PAVING TO BE PLACED WITHIN 14 DAYS OF DITCH PAVING CONSTRUCTION.

1" WIDE TRANSVERSE EXPANSION JOINTS SHALL BE PLACED IN CONCRETE DITCH PAVING AT 45' INTERVALS. THE SPACE SHALL BE FILLED WITH APPROVED JOINT FILLER COMPLYING WITH AASHTO M213.

DATE	REVISION	DATE FILMED
12-8-16	CORRECTED ENERGY DISSIPATOR DRAWING AND NOTE	
11-17-10	ADDED GENERAL NOTE	
6-2-94	ADDED GENERAL NOTE ABOUT SOLID SODDING	
11-30-8	ELIMINATED MIN. ROWS OF ELEMENTS	111-30-89
7-15-88	REVISED DISSIPATOR NOTE	653-7-15-88
4-3-87	REVISED ENERGY DISSIPATOR	671-4-3-87
1-9-87	MODIFIED NOTE ON ENERGY DISS.	532-1-9-87
11-3-86	ADDED NOTE TO ENERGY DISS.	599-12-1-86
11-1-84	ENERGY DISSIPATOR DETAILS ADDED	508-11-1-84
11-1-84	EXCAVATION DETAILS ADDED TYPED A & B	
10-2-72	REVISED AND REDRAWN	508-10-2-72

ARKANSAS STATE HIGHWAY COMMISSION

CONCRETE DITCH PAVING

STANDARD DRAWING CDP-1

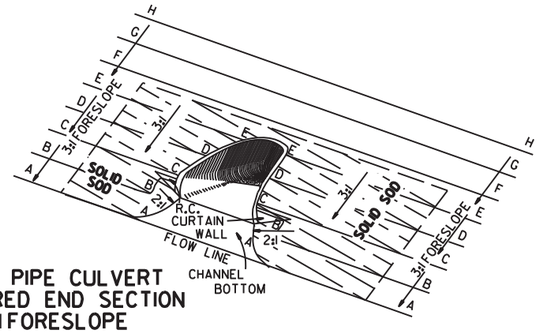

TYPICAL PIPE CULVERT
WITH FLARED END SECTION
& 3:1 FORESLOPE

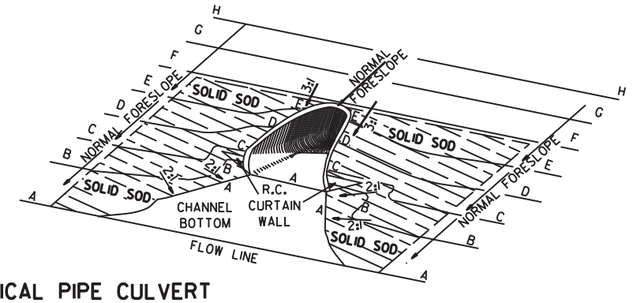

TYPICAL PIPE CULVERT
WITH FLARED END SECTION
& FLATTENED ADJACENT SLOPES

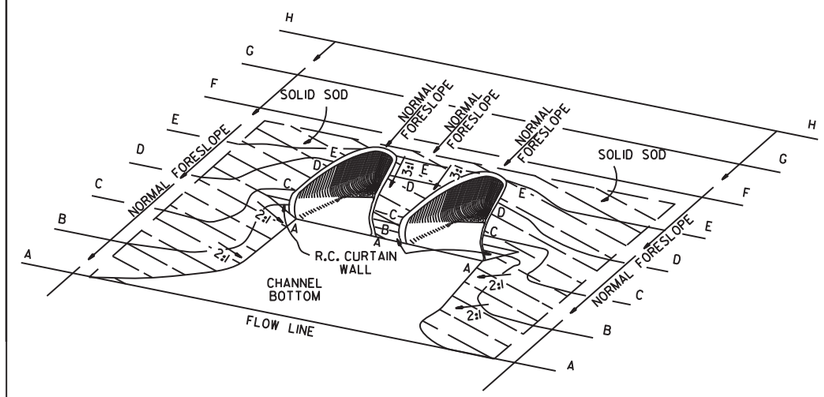

TYPICAL MULTIPLE PIPE CULVERT
WITH FLARED END SECTIONS
& FLATTENED ADJACENT SLOPES

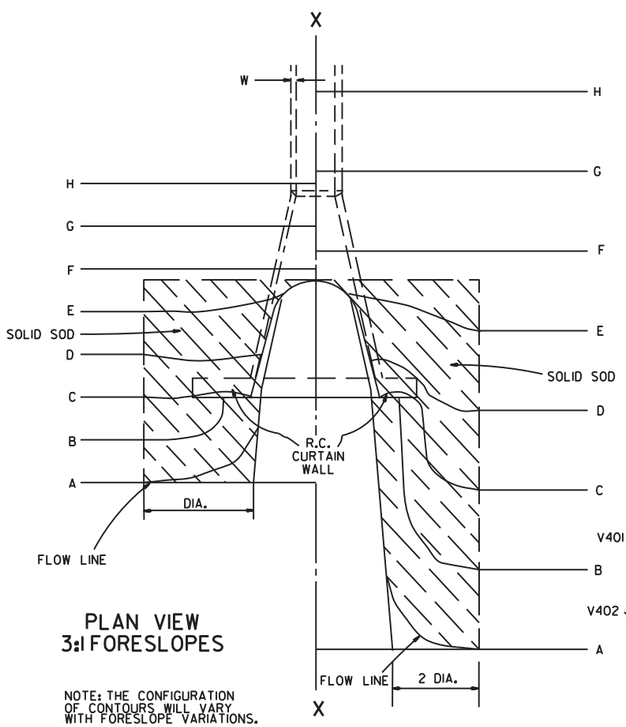

PLAN VIEW
3:1 FORESLOPES

NOTE: THE CONFIGURATION OF CONTOURS WILL VARY WITH FORESLOPE VARIATIONS.

PLAN VIEW
FLATTENED FORESLOPES

R.C. CURTAIN WALL DIMENSIONS & QUANTITIES

PIPE DIA.	H_1	L_1	L	L (DBL.)/2	SINGLE R.C.P.C. CONC.	SINGLE R.C.P.C. REINF. STEEL	DOUBLE R.C.P.C. CONC.	DOUBLE R.C.P.C. REINF. STEEL
					CU. YDS.	LBS.	CU. YDS.	LBS.
18"	11½"	3'-5"	8'-0"	6'-3"	0.31	27.7	0.45	39.5
24"	1'-0½"	4'-6"	9'-6"	7'-6"	0.37	33.4	0.53	48.0
30"	1'-3½"	5'-7"	11'-0"	9'-0"	0.45	39.0	0.67	59.0
36"	1'-7"	6'-8"	13'-0"	10'-6"	0.58	52.6	0.83	73.9
42"	2'-1½"	7'-3"	15'-6"	12'-0"	0.82	77.1	1.10	100.7
48"	2'-5"	7'-10"	17'-0"	13'-0"	0.98	94.9	1.27	120.4
54"	2'-9½"	8'-5"	18'-6"	14'-0"	1.16	115.8	1.47	143.7
60"	3'-4"	9'-0"	20'-6"	15'-6"	1.47	149.7	1.84	180.3
72"	4'-5"	10'-2"	25'-6"	18'-6"	2.31	232.6	2.73	271.0

NOTE: QUANTITIES SHOWN ARE FOR ONE (1) CURTAIN WALL.

REINFORCING STEEL SCHEDULE

PIPE DIA.	SINGLE R.C. PIPE CULVERT H401 L	H401 NO.	H402 L	H402 NO.	V401 L	V401 NO.	V402 L	V402 NO.	DOUBLE R.C. PIPE CULVERT H401 L	H401 NO.	H402 L	H402 NO.	H403 L	H403 NO.	V401 L	V401 NO.	V402 L	V402 NO.
18"	7'-8"	2	1'-11½"	4	1'-7½"	8	8"	8	12'-2"	2	1'-11½"	4	8"	2	1'-7½"	10	8"	14
24"	9'-2"	2	2'-2"	4	1'-8½"	10	8"	9	14'-8"	2	2'-2"	4	8"	2	1'-8½"	12	8"	18
30"	10'-8"	2	2'-4½"	4	1'-11½"	10	8"	12	17'-8"	2	2'-4½"	4	8"	2	1'-11½"	14	8"	22
36"	12'-8"	2	2'-10"	6	2'-3"	12	8"	14	20'-8"	2	2'-10"	6	8"	3	2'-3"	14	8"	28
42"	15'-2"	2	3'-9½"	8	2'-9½"	16	8"	15	23'-8"	2	3'-9½"	8	8"	4	2'-9½"	18	8"	30
48"	16'-8"	2	4'-3"	10	3'-1"	18	8"	16	25'-8"	2	4'-3"	10	8"	5	3'-1"	20	8"	32
54"	18'-2"	2	4'-8½"	12	3'-5½"	20	8"	17	27'-8"	2	4'-9"	12	8"	6	3'-5½"	22	8"	34
60"	20'-2"	2	5'-5"	14	4'-0"	24	8"	18	30'-8"	2	5'-5"	14	8"	7	4'-0"	26	8"	36
72"	25'-2"	2	7'-4"	18	5'-1"	30	8"	20	36'-8"	2	7'-4"	18	8"	9	5'-1"	33	8"	40

ALL REINFORCING STEEL #4 BARS @ 6" O.C.

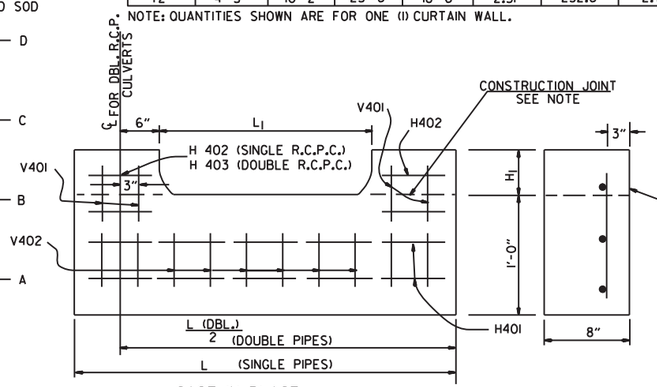

CAST-IN-PLACE

NOTE: THE PORTION OF THE R.C. CURTAIN WALL BENEATH THE FLARED END SECTION (LOWER 1'-0") SHALL BE PLACED MONOLITHICALLY. THE FLARED END SECTION SHALL THEN BE SET IN PLACE & THE REMAINING PORTIONS OF THE R.C. CURTAIN WALL PLACED.

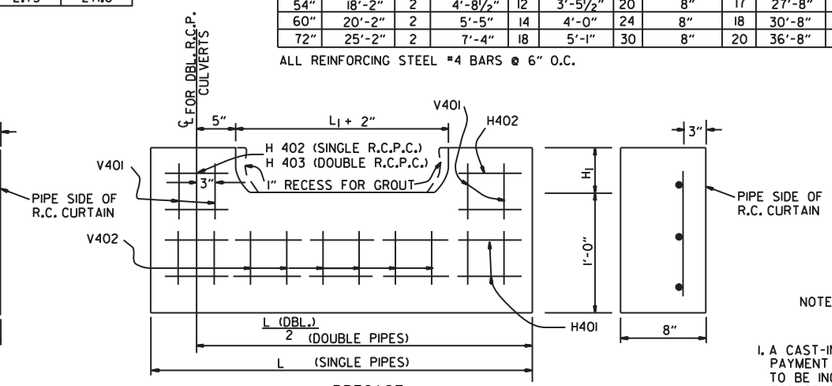

PRECAST

NOTE: THE PRECAST CURTAIN WALL WILL BE SET AND BACKFILLED WITH COMPACTED MATERIAL. THE FLARED END SECTION SHALL THEN BE SET IN PLACE AND THE 1" RECESS FILLED WITH GROUT. WHERE "L" EXCEEDS 11' THE CURTAIN WALL MAY BE CAST IN TWO (2) OR MORE SECTIONS. THE METHOD OF JOINING THE SECTIONS FOR INSTALLATION SHALL BE APPROVED BY THE ENGINEER.

R.C. CURTAIN WALL DETAILS

SOLID SODDING

PIPE DIA.	SINGLE R.C.P.C. 3:1	SINGLE R.C.P.C. 4:1	SINGLE R.C.P.C. 6:1	DOUBLE R.C.P.C. 3:1	DOUBLE R.C.P.C. 4:1	DOUBLE R.C.P.C. 6:1
	SQ. YDS.			SQ. YDS.		
18"	5	7	12	6	8	13
24"	8	12	19	9	13	20
30"	13	18	29	14	19	30
36"	17	26	41	18	28	43
42"	23	35	55	25	37	57
48"	29	46	68	31	48	70
54"	35	57	85	37	59	87
60"	45	62	104	48	65	107
72"	64	92	156	67	95	159

NOTE: QUANTITIES SHOWN ABOVE ARE FOR ONE (1) END OF F.E.S.

GENERAL NOTES

1. A CAST-IN-PLACE OR PRECAST CURTAIN WALL MAY BE USED. PAYMENT FOR THE CURTAIN WALL SHALL BE CONSIDERED TO BE INCLUDED IN THE UNIT PRICE BID EACH FOR FLARED END SECTIONS OF THE SEVERAL SIZES, WHICH PRICE SHALL BE FULL COMPENSATION FOR FURNISHING ALL MATERIALS INCLUDING REINFORCING STEEL AND CONCRETE; FOR FORMS, MIXING AND PLACING; FOR EXCAVATION AND BACKFILL, AND FOR ALL LABOR, TOOLS, EQUIPMENT AND INCIDENTALS NECESSARY TO COMPLETE THE WORK.
2. ALL EXPOSED EDGES SHALL BE CHAMFERED ¾".
3. CONCRETE FOR CURTAIN WALL SHALL MEET THE REQUIREMENTS FOR CLASS A OR S CONCRETE AS PROVIDED IN SECTION 802 OF THE STANDARD SPECIFICATIONS OR FOR PAVING CONCRETE AS PROVIDED IN SECTION 501 OF THE STANDARD SPECIFICATIONS.
4. WELDED WIRE MESH 3 x 3 W/10 x W10 MAY BE USED IN LIEU OF REINFORCING BARS.

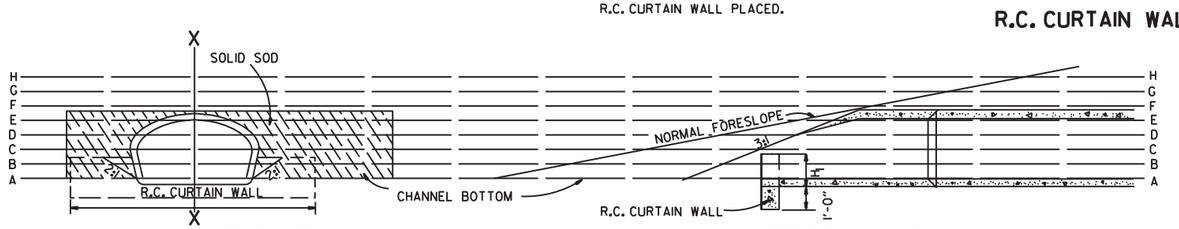

END VIEW

SECTIONAL VIEW "X-X"

DATE	REVISION	FILMED
10-18-96	ADDED NOTE TO SOLID SODDING	
10-12-95	CORRECTED SPELLING	
11-3-94	ADDED GENERAL NOTE NO. 4	
8-15-91	REV. CURTAIN WALL QUANT. STEEL SCH. & SOLID SOD QUANT.	
3-2-81	ALLOW PRECAST IN 2 OR MORE PIECES CHAMFER EDGES	
5-15-80	ADDED PRECAST WALL & GENERAL NOTES	
10-2-72	REVISED AND REDRAWN	

ARKANSAS STATE HIGHWAY COMMISSION

FLARED END SECTION

STANDARD DRAWING FES-1

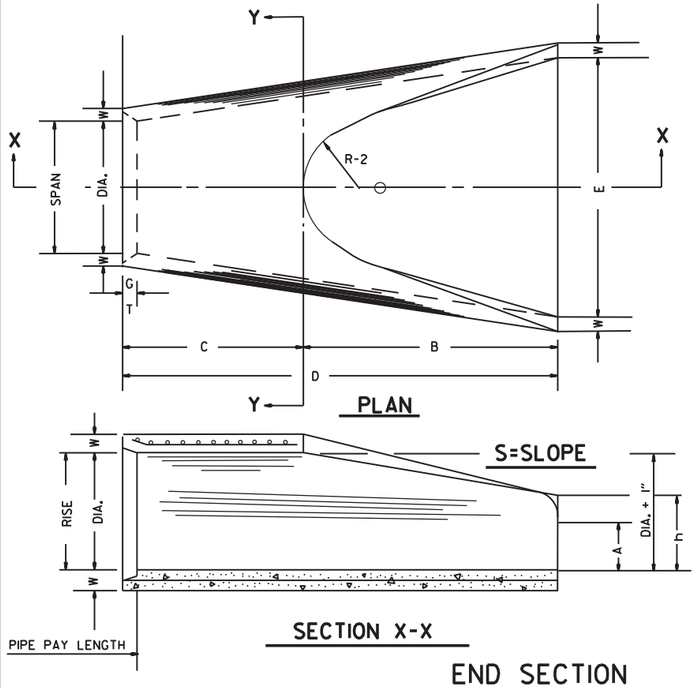

TABLE OF DIMENSIONS

DIA.	WALL	A	B	C	D	E	S	DIA. + 1"	P	R-1	R-2	G-T	WT.	h
18"	2½"	9"	2'-3"	3'-10"	6'-1"	3'-0"	3:1	19"	29"	15½"	12"	2"	1000	1'-0½"
24"	3"	9½"	3'-7½"	2'-6"	6'-1½"	4'-0"	3:1	25"	33 3/16"	16 13/16"	14"	2½"	1600	1'-1½"
30"	3½"	1'-0"	4'-6"	1'-7¾"	6'-1¾"	5'-0"	3:1	31"	37"	18½"	15"	3¼"	1940	1'-4⅝"
36"	4"	1'-3"	5'-3"	2'-10¾"	8'-1¾"	6'-0"	3:1	37"	47 13/16"	24 5/16"	20"	3½"	4100	1'-8"
42"	4½"	1'-9"	5'-3"	2'-11"	8'-2"	6'-6"	3:1	43"	53⅛"	27½"	22"	3½"	5380	2'-2½"
48"	5"	2'-0"	6'-0"	2'-2"	8'-2"	7'-0"	3:1	49"	56½"	28½"	22"	3½"	6550	2'-6"
54"	5½"	2'-4"	6'-6"	1'-10"	8'-4"	7'-6"	3:1	55"	65½"	33⅛"	24"	4"	8750	2'-10½"
60"	6"	2'-10"	6'-6"	1'-10"	8'-4"	8'-0"	3:1	61"	72½"	36 11/16"	24"	4"	9270	3'-5"
72"	7"	3'-10"	6'-6"	1'-10"	8'-4"	9'-0"	3:1	73"	77 13/16"	38 15/16"	24"	5"	13250	4'-6"

ARCH PIPE

EQUIV. DIA.	• SPAN AASHTO M 206	• SPAN AHD NOMINAL	• RISE AASHTO M 206	• RISE AHD NOMINAL	W	A	B	C	D	E	P	R2	G-T	S
INCHES														
15	18	18	11	11	2"	4"	2'-0"	4'-0"	6'-0"	3'-0"	29"	12"	1½"	2½:1
18	22	22	13½	14	2½"	5"	2'-0"	4'-1"	6'-1"	3'-6"	32⅛"	13"	2½"	2½:1
21	26	26	15½	16	2¾"	7"	2'-3"	3'-10"	6'-1"	4'-0"	34⅛"	14"	2½"	2½:1
24	28½	29	18	18	3"	9"	2'-3"	3'-10"	6'-1"	5'-0"	36 13/16"	15"	2½"	2½:1
30	36¼	36	22½	23	3½"	10"	3'-1"	3'-0½"	6'-1½"	6'-0"	47 13/16"	20"	3"	2½:1
36	43¾	44	26⅝	27	4"	10½"	4'-0"	2'-1½"	6'-1½"	6'-6"	54 9/16"	22"	3½"	2½:1
42	51⅛	51	31 5/16	31	4½"	11½"	4'-7"	1-10¼"	6'-5¼"	7'-2"	59½"	23"	3¾"	2½:1
48	58½	59	36	36	5"	1'-3"	5'-3"	2'-10¾"	8'-1¾"	7'-10"	70 5/16"	24"	4¼"	2½:1
54	65	65	40	40	5½"	1'-7"	5'-3"	2'-11"	8'-2"	8'-6"	72 1/16"	24"	4¾"	2¼:1
60	73	73	45	45	6"	1'-10"	5'-6"	2'-8"	8'-2"	9'-0"	77 13/16"	24"	5"	2¼:1

• THE MEASURED SPAN AND RISE SHALL NOT VARY MORE THAN ± 2 PER CENT FROM THE VALUES SPECIFIED BY AASHTO M 206.

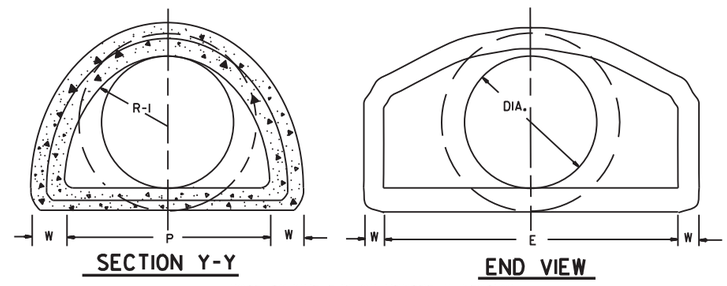

NOTE: TONGUE END ON UPSTREAM SECTION
GROOVE END ON DOWNSTREAM SECTION

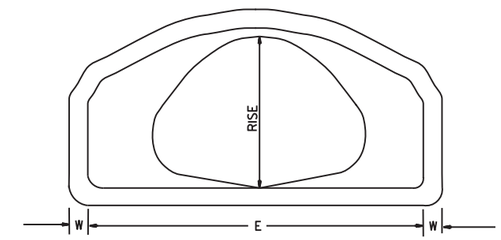

END VIEW
CONCRETE ARCH PIPE

END SECTION FOR REINFORCED CONCRETE PIPE CULVERTS

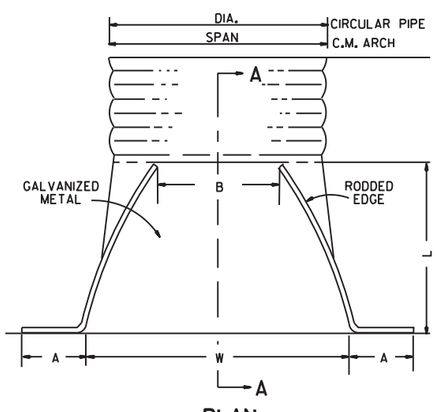

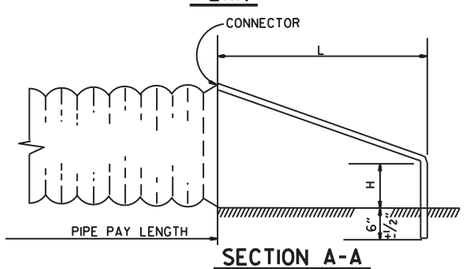

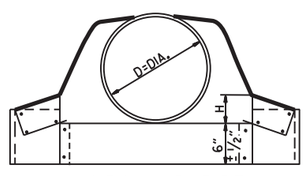

CIRCULAR PIPE

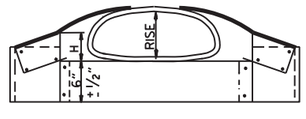

C.M. ARCH PIPE

CIRCULAR PIPE

D. DIA.	GAUGE	A 1" ±	B. MAX.	H 1" ±	L 1½" ±	W 2" ±	S
		INCHES					
12	16	6	6	6	21	24	2½:1
15	16	7	8	6	26	30	2½:1
18	16	8	10	6	31	36	2½:1
21	16	9	12	6	36	42	2½:1
24	16	10	13	6	41	48	2½:1
30	14	12	16	8	51	60	2½:1
36	14	14	19	9	60	72	2½:1
42	12	16	22	11	69	84	2½:1
48	12	18	27	12	78	90	2½:1
54	12	18	30	12	84	102	2:1
60	12	18	33	12	87	114	1¾:1
66	12	18	36	12	87	120	1½:1
72	12	18	39	12	87	126	1 1/3:1

C.M. ARCH PIPE

EQUIV. DIA.	SPAN	RISE	A 1" ±	B MAX.	H 1" ±	L 1½" ±	W 2" ±	S	GAUGE
	INCHES								
15"	17	13	7	9	6	19	30	2½:1	16
18"	21	15	7	10	6	23	36	2½:1	16
21"	24	18	8	12	6	28	42	2½:1	16
24"	28	20	9	14	6	32	48	2½:1	16
30"	35	24	10	16	6	39	60	2½:1	14
36"	42	29	12	18	8	46	75	2½:1	14
42"	49	33	13	21	9	53	85	2½:1	12
48"	57	38	18	26	12	63	90	2½:1	12
54"	64	43	18	30	12	70	102	2¼:1	12
60"	71	47	18	33	12	77	114	2¼:1	12

NOTE: ALTERNATE CONNECTIONS TO THE PIPE CULVERTS, IN ACCORDANCE WITH MANUFACTURER'S STANDARD PRACTICES, MAY BE MADE SUBJECT TO THE APPROVAL OF THE ENGINEER.

END SECTIONS FOR CORRUGATED METAL PIPE CULVERTS

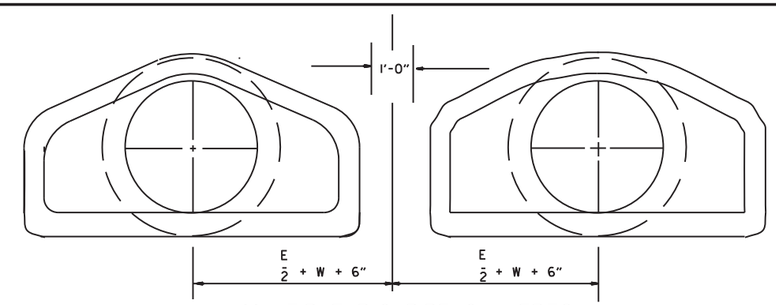

MULTIPLE R.C. PIPE CULVERTS

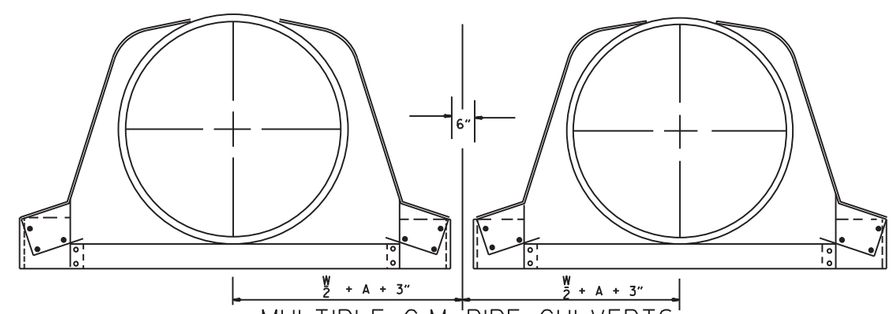

MULTIPLE C.M. PIPE CULVERTS

DATE	REVISION	FILMED
10-18-96	REVISED ASTM REF. TO AASHTO	
5-15-80	REVISED DISTANCE BETWEEN MULTIPLE R.C.P. F.E.S.	664-5-15-80
7-14-78	C.M. ARCH SIZES TO CONFORM WITH AASHTO SIZES	752-7-14-78
8-22-75	ADDED MULTIPLE PIPE CULVERTS	517-8-22-75
12-5-74	REMOVED NOTE RE REINF. FOR R.C. F.E.S.	500-12-5-74
5-24-73	CMP END SECTION, SHOW PIPE PAY LENGTH	627-5-24-73
10-2-72	REVISED AND REDRAWN	760-10-2-72

ARKANSAS STATE HIGHWAY COMMISSION

FLARED END SECTION

STANDARD DRAWING FES-2

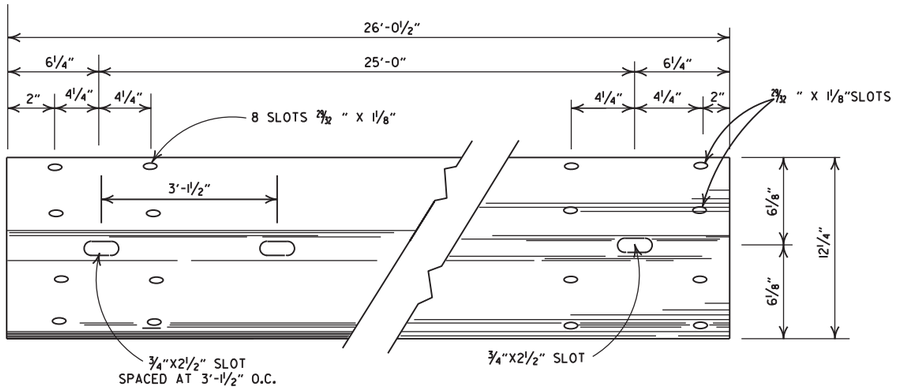

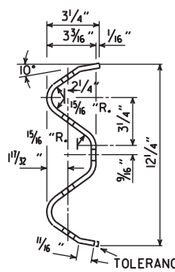

DETAILS OF W-BEAM GUARDRAIL

RAIL SECTION OF CLOSELY SIMILAR DIMENSIONS AND COMPARABLE STRENGTH MAY BE SUBSTITUTED IF APPROVED BY THE ENGINEER.

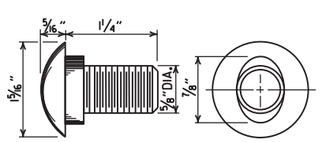

SPLICE BOLT
POST BOLT - SAME EXCEPT LENGTH

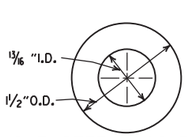

CUT STEEL WASHER

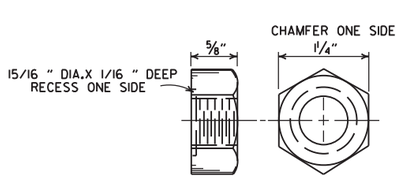

NUT

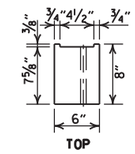

WOOD BLOCKOUT USED WITH WOOD POSTS SHALL BE 6"x8"x1'-2" WITH NO NOTCH REQUIRED.

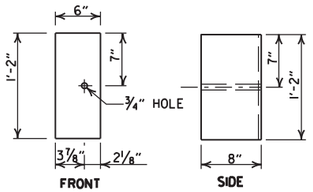

WOOD BLOCKOUT (W-BEAM)

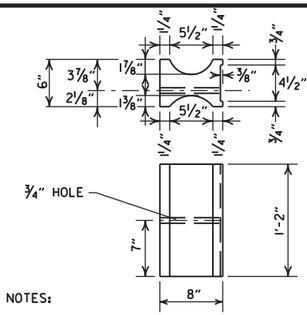

NOTES:

1. SIMILAR SHAPED PLASTIC BLOCKOUTS MAY BE USED AS LONG AS THEY MEET REQUIREMENTS FOR MANUAL FOR ASSESSING SAFETY HARDWARE (MASH).
2. DIMENSIONS ARE SUBJECT TO MANUFACTURERS TOLERANCES.

PLASTIC BLOCKOUT (W-BEAM)

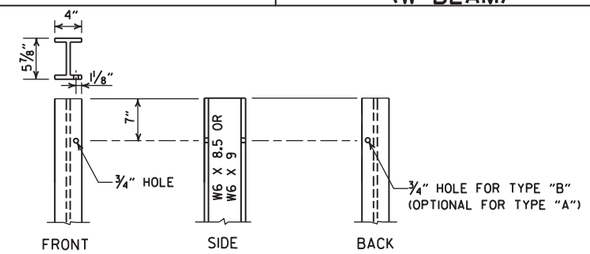

STEEL POST

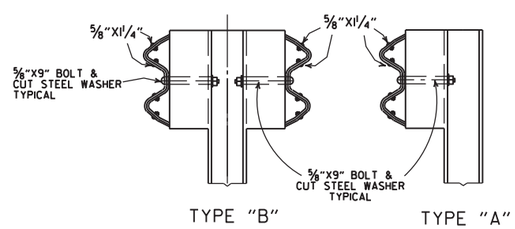

DETAILS OF STEEL LINE POST CONNECTIONS (W-BEAM)

HOLES IN POSTS AND BLOCKS TO BE ¾" DIA.

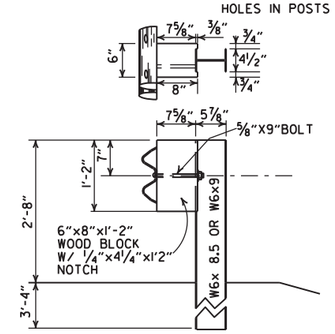

WOOD BLOCKOUT CONNECTIONS

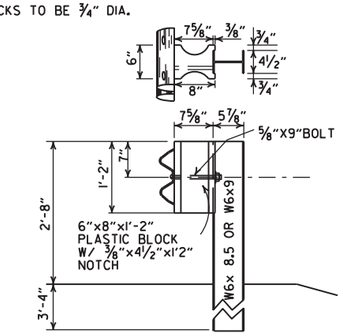

PLASTIC BLOCKOUT CONNECTIONS

DETAILS OF STEEL LINE POST CONNECTIONS (W-BEAM)

HOLES IN POSTS AND BLOCKS TO BE ¾" DIA.

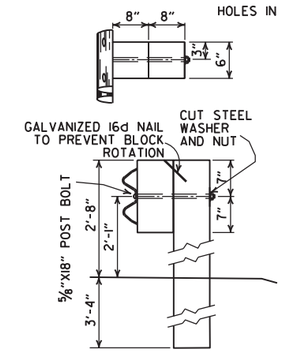

POSTS AND BLOCKS TO BE ROUGH SAWN 6"X8" WITH A TOLERANCE OF + OR - ¼".

WOOD BLOCKOUT CONNECTIONS

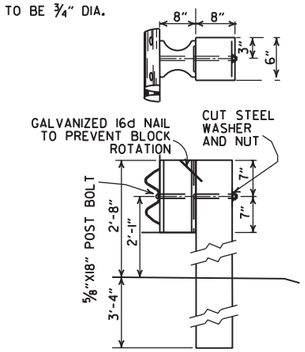

PLASTIC BLOCKOUT CONNECTIONS

DETAILS OF WOOD LINE POST CONNECTIONS (W-BEAM)

-GENERAL NOTES-

ALL BOLTS SHALL BE SUFFICIENT LENGTH TO EXTEND THROUGH THE FULL THICKNESS OF THE NUT AND NO MORE THAN ¾" BEYOND IT.

WHERE W-BEAM GUARDRAIL CONTINUES, THE INTERMEDIATE SECTIONS SHALL HAVE A POST SPACING OF 6'-3" UNLESS OTHERWISE NOTED.

W-BEAM GUARDRAIL REPRESENTING INTERMEDIATE SECTIONS WILL BE MEASURED ALONG THE ROADWAY FACE FROM CENTERLINE OF POST TO CENTERLINE OF POST.

USE W-BEAM GUARDRAIL COMPONENTS OF SAME MATERIAL FOR ENTIRE JOB. FOR EXTENSIONS OR MODIFICATION OF EXISTING GUARDRAIL, W-BEAM GUARDRAIL COMPONENTS OF THE SAME TYPE AS THOSE EXISTING SHALL BE USED.

ANY BACKFILLING UNDER OR AROUND POST SHALL BE DAMP SAND THOROUGHLY TAMPED IN PLACE.

WOOD POSTS & WOOD BLOCKS SHALL BE EITHER DENSE NO. 1 STRUCTURAL OR BETTER 9.7f (1400 f) OR NO. 1 1350 f SOUTHERN PINE.

CONTRACTOR SHALL HAVE THE OPTION OF USING WOOD BLOCKOUTS FOR W-BEAM GUARDRAIL OR PLASTIC BLOCKOUTS, AS LONG AS BLOCKOUT USED MEETS REQUIREMENTS FOR MANUAL FOR ASSESSING SAFETY HARDWARE (MASH) FOR W-BEAM GUARDRAIL.

DATE	REVISION	FILMED
11-07-19	RENUMBERED AND RENAMED	
11-16-17	REVISED GENERAL NOTES AND RAISED GUARDRAIL HEIGHT 3"	
07-14-10	RAISED HEIGHT OF GUARDRAIL 1"	
10-15-09	ADDED REFERENCE TO MASH	
04-10-03	REVISED GENERAL NOTES	
08-22-02	REVISED DIMENSION ON WOOD & PLASTIC BLOCKOUT CONNECTIONS & STEEL POST	
11-16-01	REVISED WOOD BLOCKOUT & DETAILS OF WOOD LINE POST CONNECTIONS	
03-30-00	REMOVED GUARDRAIL AT BRIDGE ENDS	
01-12-00	ADDED PLASTIC BLOCKOUT	
08-12-98	REV. BLOCKOUTS TO WOOD, DELETED CONC. POST & REV. GENERAL NOTE, DELETED DET. OF GUARDRAIL REPLACE. BEHIND CURB & DET. OF POST PLACE. IN SOLID ROCK, & ADDED DETAILS OF STEEL LINE POST CONN. REMOVED BACK-UP PLATE, REVISED HOLES IN STEEL POLES	
04-03-97	REMOVED "LAP IN DIRECTION OF TRAFFIC" NOTE & PLACED ARROWS ON WASHERS	
10-18-96	REVISED WOOD POST NOTE	
06-02-94	ADDED ALT. STEEL POST SIZE	
08-05-93	REVISED STEEL POST SIZE	8-5-93
10-01-92	REDRAWN & REVISED	10-1-92
08-15-91	REVISED WASHER NOTE	8-15-91
08-02-90	REV. GEN. NOTE & DEPTH OF ANC. POST IN ROCK	8-2-90
07-15-88	REVISED SECTION 3 & GENERAL NOTES	
03-04-88	REV. ANCHOR POST, ELEV. NOTES & POST IN ROCK	780-3-4-88
10-30-87	REVISED WOOD LINE POST DETAIL	546-10-30-87
10-09-87	REDRAWN & REVISED	802-10-9-87

ARKANSAS STATE HIGHWAY COMMISSION

GUARDRAIL DETAILS

STANDARD DRAWING GR-6

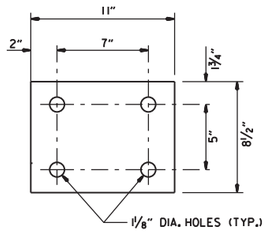

WASHER PLATE

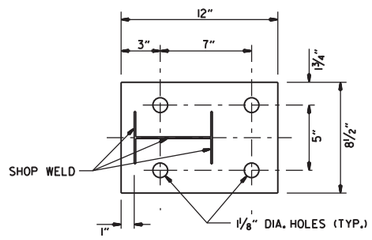

BASE PLATE

Note: Bolts, nuts, washers and plates shall be galvanized in accordance with Section 807 of the Standard Specifications.

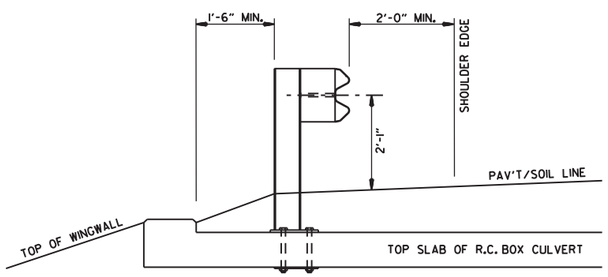

SECTION A-A

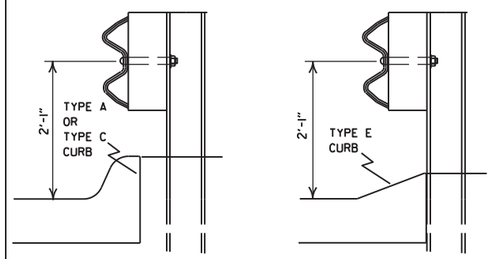

FOR DESIGN SPEEDS OF 50 MPH OR LESS

ALIGN FACE OF GUARDRAIL WITH FACE OF CURB.

FOR DESIGN SPEEDS OF 55 MPH OR MORE

PLACE GUARDRAIL POSTS AGAINST BACK OF CURB.

DETAIL OF GUARDRAIL PLACEMENT BEHIND CURB (W-BEAM)

FOR DESIGN SPEEDS OF 50 MPH OR LESS ALL CURB FACES, AS SHOWN ON STD. DRWG. CG-1, MAY BE USED. FOR DESIGN SPEEDS OF 55 MPH OR MORE TYPE "E" CURB FACE SHALL BE USED.

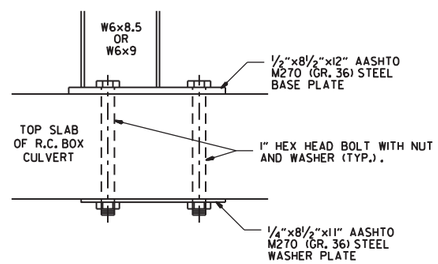

DETAIL OF CONNECTION

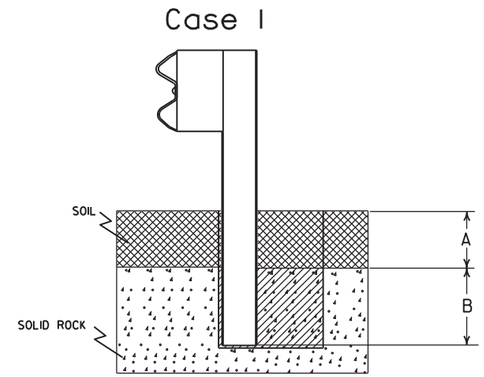

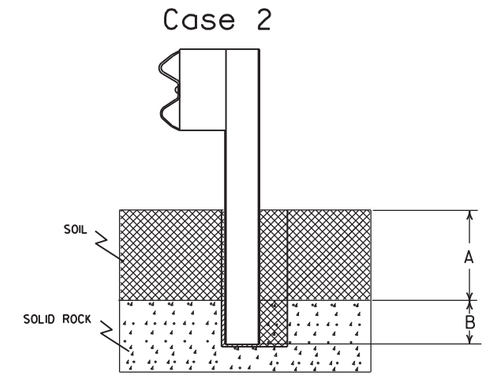

Plan View Steel Posts

Either hole configuration acceptable

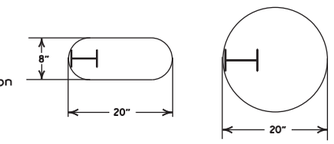

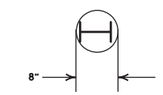

Plan View Wood Posts

Either hole configuration acceptable

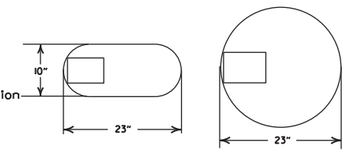

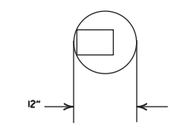

Notes: For overlying soil depths (A) ranging from 0 to 18", the depth of required drilling (B) is equal to 24".

Zone A:
Backfill according to Section 617.03(a).

Zone B:
Backfill hole in 6" lifts with material meeting the requirements of Section 802.02(c) - Alternate gradation. Compact to 95% maximum dry density per ASTM D-698.

Notes: For overlying soil depths (A) ranging from 18" to 44", the depth of required drilling (B) is equal to either 12" or 44" minus the depth of soil whichever is less.

Zone A & B:
Backfill according to Section 617.03(a).

DETAIL OF POST PLACEMENT IN SOLID ROCK (W-BEAM)

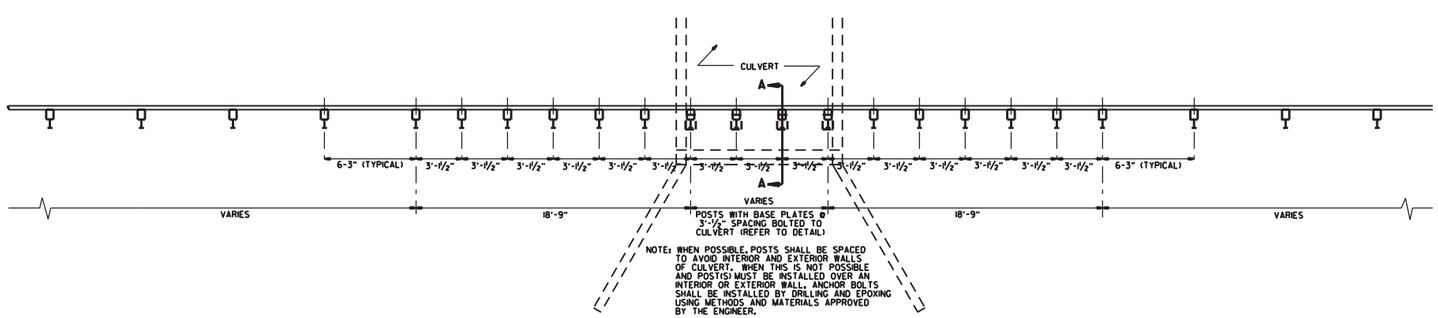

PLAN LAYOUT OF TYPE A GUARDRAIL AT LOW-FILL CULVERTS

NOTE: THIS DETAIL IS TO BE USED ONLY WHEN THE COVER OVER THE CULVERT DOES NOT PERMIT FULL EMBEDMENT OF GUARDRAIL POSTS AS SHOWN ON STD. DWG. GR-6.

DATE	REVISION	FILMED
11-07-19	RENUMBERED, RENAMED, REVISED REFERENCE	
11-16-17	REVISED GUARDRAIL HEIGHT	
07-14-10	RAISED HEIGHT OF GUARDRAIL 1"	
04-12-07	REVISED DETAIL OF GUARDRAIL PLACEMENT BEHIND CURB	
11-10-05	ADDED GUARDRAIL PLACEMENT BEHIND CURB; REVISED DETAIL OF CONNECTION	
11-18-04	REVISED POST PLACEMENT IN ROCK & CULVERT CONNECTION DETAILS. ADDED DETAIL FOR GUARDRAIL PLACEMENT AT LOW-FILL CULVERTS	
03-30-00	REMOVED CONCRETE INSERT ANCHOR	
08-12-98	CHANGED STEEL SPACER BLOCK TO WOOD BLOCKOUT. ADDED DET. OF GUARDRAIL CONNECTION TO R.C. BOX CULV'T., DELETED DET. OF STEEL LINE POST CONN. & ADDED DET. OF GUARDRAIL PLACE. BEHIND CURB & DET. OF POSTPLACE. IN SOLID ROCK	
04-03-96	PLACED ARROWS AT CUT STEEL WASHERS	4-3-96
10-18-96	REV. ASTM REF. TO AASHTO	
11-22-95	ADDED OPTIONAL HOLES	
06-02-94	REVISED ALTERNATE POST SIZE	
08-05-93	REVISED STEEL POST SIZE	
10-01-92	REDRAWN & REVISED	10-1-92
08-02-90	DEL. WASHER ON ANCHOR ASSEMBLY	8-2-90
07-15-88	CONFORMED TO 1988 SPECS	
03-04-88	REVISED ANCHOR NOTE	
10-30-87	REVISED ANCHOR ASSEMBLY	712-10-30-87
10-30-87	REVISED PLACEMENT BEHIND CURB	547-10-30-87
10-09-87	REDRAWN & REVISED	803-10-9-87

ARKANSAS STATE HIGHWAY COMMISSION

GUARDRAIL DETAILS

STANDARD DRAWING GR-7

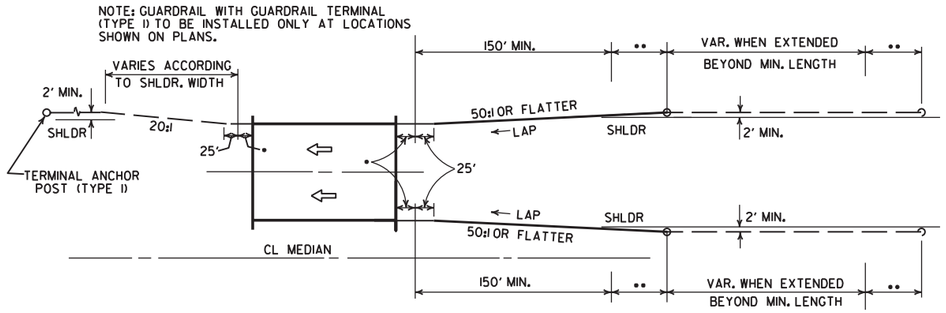

ONE-WAY TRAFFIC

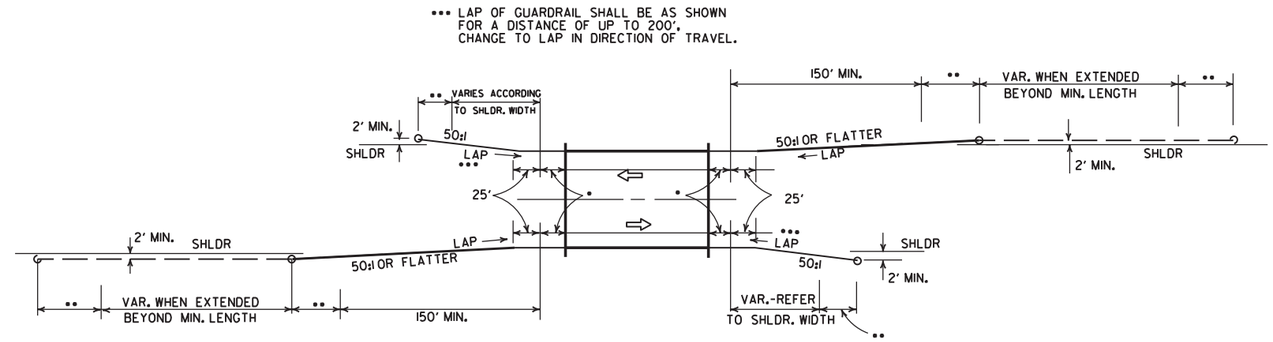

TWO-WAY TRAFFIC

METHODS OF INSTALLATION OF GUARDRAIL AT LESS THAN FULL SHOULDER WIDTH BRIDGES USING GUARDRAIL TERMINAL (TYPE 2)

••• LAP OF GUARDRAIL SHALL BE AS SHOWN FOR A DISTANCE OF UP TO 200'. CHANGE TO LAP IN DIRECTION OF TRAVEL.

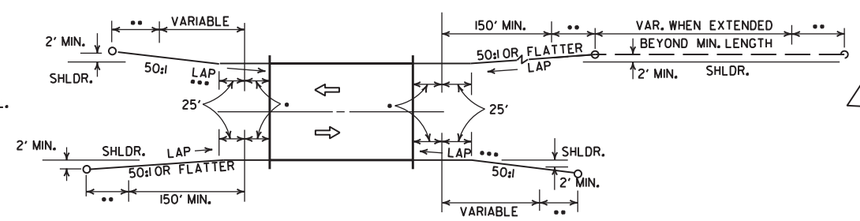

TWO-WAY TRAFFIC

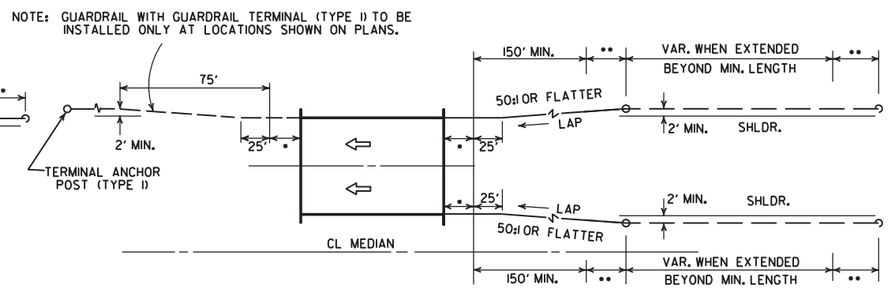

ONE-WAY TRAFFIC

METHOD OF INSTALLATION OF GUARDRAIL AT FULL SHOULDER WIDTH BRIDGES USING GUARDRAIL TERMINAL (TYPE 2)

••• LAP OF GUARDRAIL SHALL BE AS SHOWN FOR A DISTANCE OF UP TO 200'. CHANGE TO LAP IN DIRECTION OF TRAVEL.

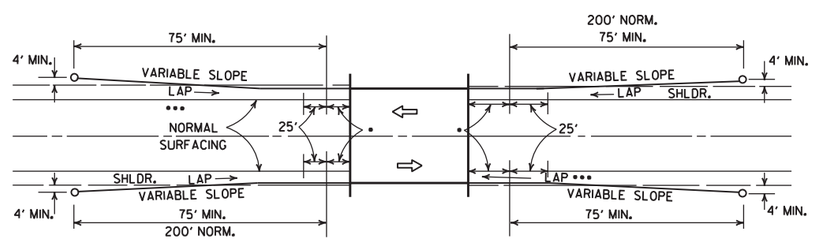

LEGEND

- • THRIE BEAM GUARDRAIL TERMINAL
- •• GUARDRAIL TERMINAL (TYPE 2)

METHOD OF INSTALLATION OF GUARDRAIL USING GUARDRAIL TERMINAL (TYPE I) (FULL SHOULDER WIDTH OR LESS BRIDGES)

DATE	REVISION	DATE FILM
11-07-19	RENUMBERED AND RENAMED	
4-17-08	REVISED LAYOUTS	
11-10-05	REMOVED GUARDRAIL NOTES AND DETAILS	
11-16-01	DELETED NOTE-METHOD OF INSTALLATION OF GUARDRAIL USING GUARDRAIL TERM. (TY. I)	
1-12-00	ADDED CONSTRUCTION NOTE	1-12-00
6-26-97	REVISED LAYOUT	
10-1-92	REDRAWN & REVISED	10-1-92
	ADDED NOTE	
10-9-87	REDRAWN & REVISED	

ARKANSAS STATE HIGHWAY COMMISSION

GUARDRAIL DETAILS

STANDARD DRAWING GR-8

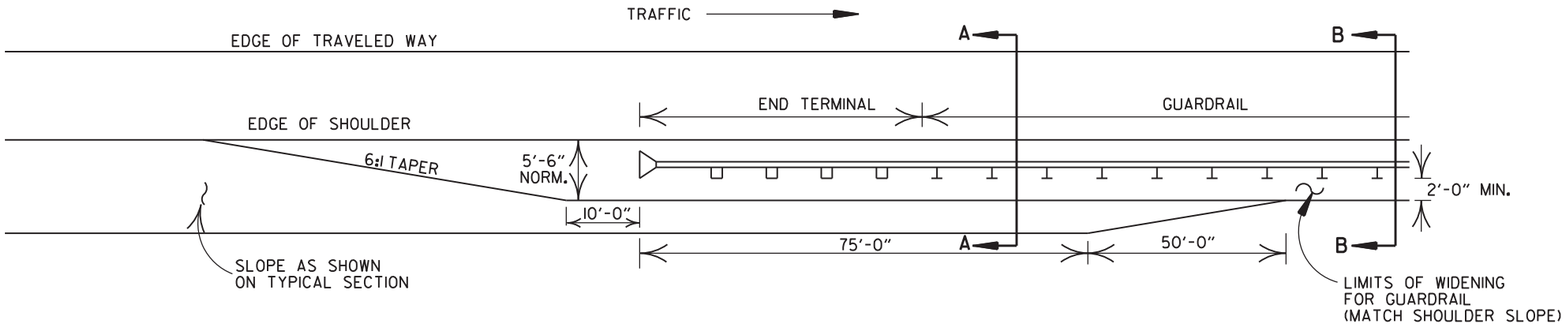

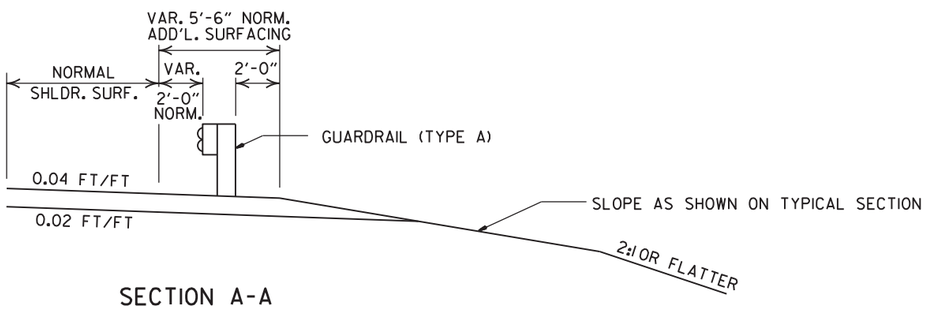

SECTION A-A

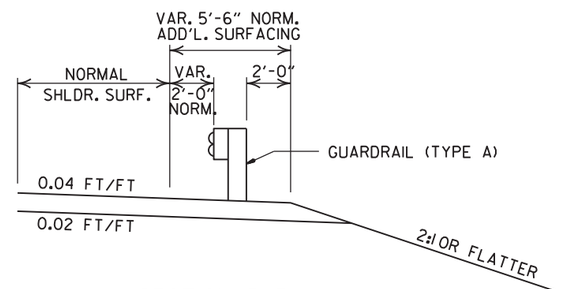

SECTION B-B

DETAILS OF WIDENING FOR GUARDRAIL

NOTE: NORMAL SECTION TO BE WIDENED APPROX. 5'-6" EACH SIDE TO SUPPORT GUARDRAIL.

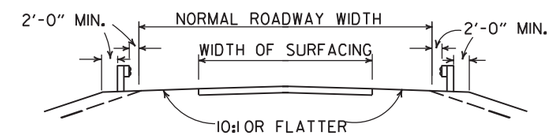

SECTION ON TANGENT

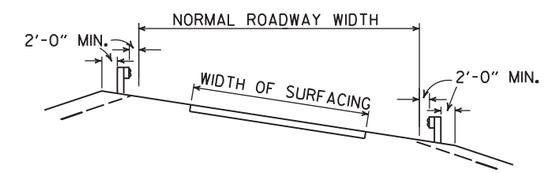

SECTION ON CURVE

DETAILS SHOWING POSITION OF GUARDRAIL ON HIGHWAY

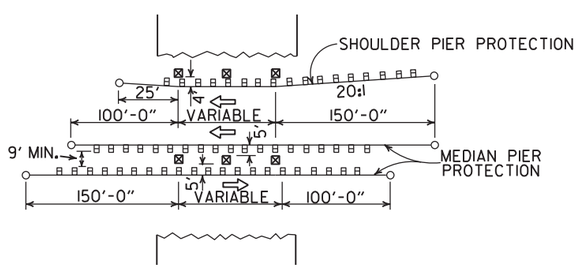

METHOD OF INSTALLATION OF GUARDRAIL AT FIXED OBSTACLE

DATE	REVISION	DATE FILM
11-07-19	RENUMBERED AND RENAMED	
4-17-08	MINOR REVISION	
11-10-05	DRAWN	

ARKANSAS STATE HIGHWAY COMMISSION

GUARDRAIL DETAILS

STANDARD DRAWING GR-9

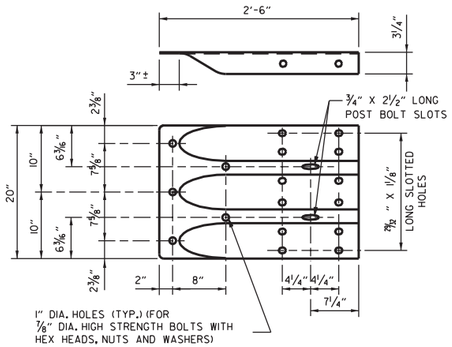

SPECIAL END SHOE

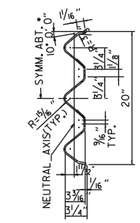

SECTION THRU THRIE BEAM RAIL

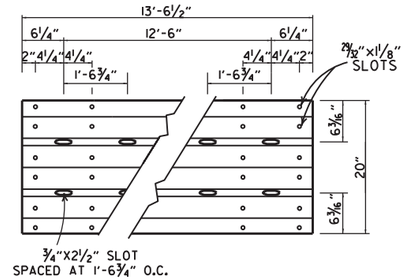

THRIE BEAM RAIL

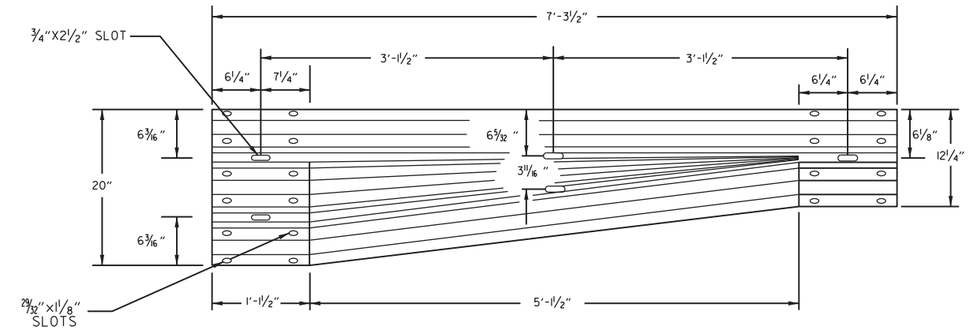

TRANSITION SECTION

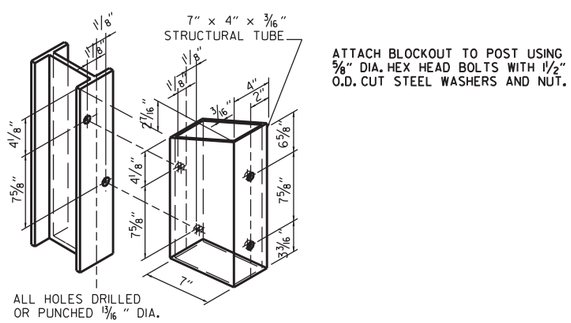

STRUCTURAL STEEL TUBING BLOCKOUT DETAIL

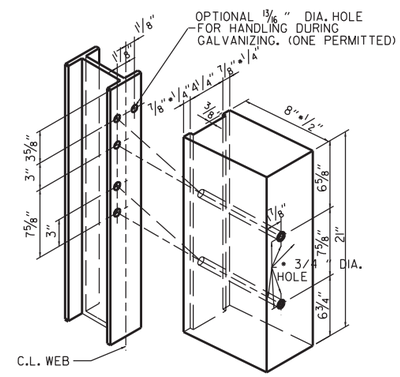

ALL HOLES 13/16" DIAMETER EXCEPT AS NOTED

HOLE PUNCHING DETAIL FOR STEEL POST & WOOD OR PLASTIC BLOCKOUTS

NOTE: BLOCKS SHALL BE THE SAME TYPE THROUGHOUT THE PROJECT LIMITS.

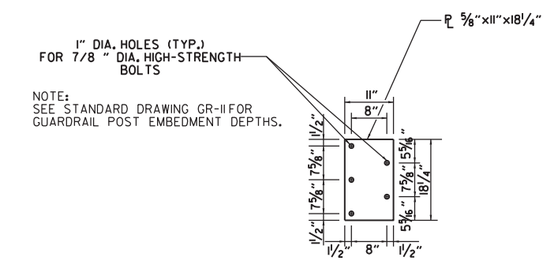

NOTE:
SEE STANDARD DRAWING GR-11 FOR GUARDRAIL POST EMBEDMENT DEPTHS.

CONNECTOR PLATE

CONNECTOR PLATE SHALL BE AASHTO M270, GR. 36 AND SHALL BE GALVANIZED AFTER FABRICATION. GALVANIZING SHALL CONFORM TO SUBSECTION 807.19 OF THE STANDARD SPECIFICATIONS. CONNECTOR PLATE TO BE BOLTED TO SPECIAL END SHOE USING 7/8" DIA. HIGH STRENGTH BOLTS, WITH THE HEADS PLACED ON THE TRAFFIC FACE. WASHERS SHALL BE USED UNDER THE HEAD AND NUT. BOLTS, NUTS AND WASHERS SHALL BE GALVANIZED AND SHALL CONFORM TO SUBSECTION 807.06.

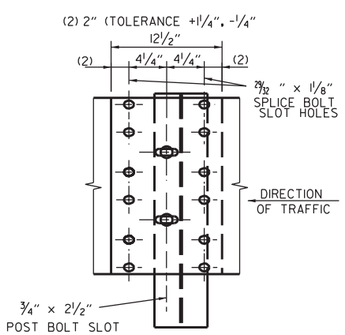

THRIE BEAM RAIL SPLICE AT POST

GENERAL NOTES:

THE THRIE BEAM RAIL, SPECIAL END SHOE, AND THE TRANSITION SECTION SHALL BE MADE OF STEEL AND SHALL BE 12 GAGE. ZINC COATING SHALL BE TYPE I.

RAIL POSTS SHALL BE SET PERPENDICULAR TO THE ROADWAY PROFILE GRADE AND VERTICALLY IN CROSS SECTION.

ALL BOLTS SHALL BE SUFFICIENT LENGTH TO EXTEND THROUGH THE FULL THICKNESS OF THE NUT AND NO MORE THAN 3*4" BEYOND IT.

ALL LAP SPLICES, INCLUDING SPECIAL END SHOES, SHALL BE MADE IN THE DIRECTION SHOWN ON STANDARD DRAWINGS GR-8 & GR-13.

REFER TO STD. DRWG. GR-11 FOR POST DETAILS.

USE THRIE BEAM GUARDRAIL COMPONENTS OF SAME MATERIAL FOR ENTIRE JOB.

THRIE BEAM POSTS SHALL BE SAME MATERIAL AS W-BEAM POSTS FOR ENTIRE JOB.

WOOD POSTS & WOOD BLOCKS SHALL BE EITHER DENSE NO. 1 STRUCTURAL OR BETTER 9.7f (1400 f) OR NO. 1 1350 f SOUTHERN PINE.

DATE	REVISION	FILMED
11-07-19	RENAMED AND REVISED REFERENCES	
11-16-17	REVISED TRANSITION SECTION, GUARD RAIL HEIGHT, AND GENERAL NOTES; MOVED THRIE BEAM GUARD RAIL CONNECTIONS AT BRIDGES ENDS TO STD. DRWG. GR-12	
07-14-10	RAISED HEIGHT OF W-BEAM 1"	
11-29-07	ADDED PLASTIC BLOCKOUTS	
11-10-05	ADDED NOTE FOR ATTACHING STEEL BLOCKOUT	
11-18-04	REVISED GENERAL NOTES	
10-9-03	REVISED GENERAL NOTES	
04-10-03	REVISED GENERAL NOTES	
08-22-02	REVISED NOTE (2)	
06-29-00	MOVED DIMENSION LINES	
05-18-00	ADDED NOTE	
03-30-00	DRAWN & ISSUED	

ARKANSAS STATE HIGHWAY COMMISSION

GUARDRAIL DETAILS

STANDARD DRAWING GR-10

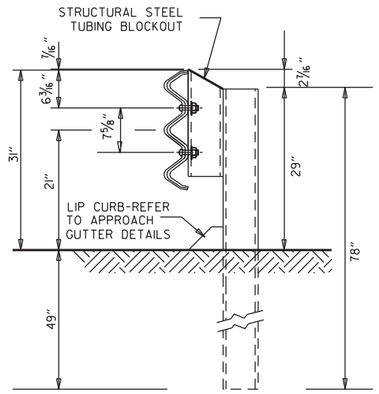

THRIE BEAM RAIL WITH STEEL TUBING BLOCKOUT
AND STEEL POST
POSTS 1-7

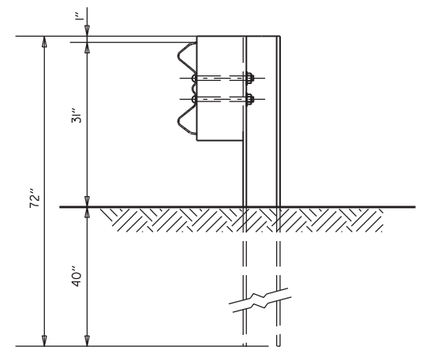

W-BEAM TO THRIE BEAM TRANSITION RAIL
WITH WOOD OR PLASTIC BLOCKOUT AND STEEL POST
POST 8

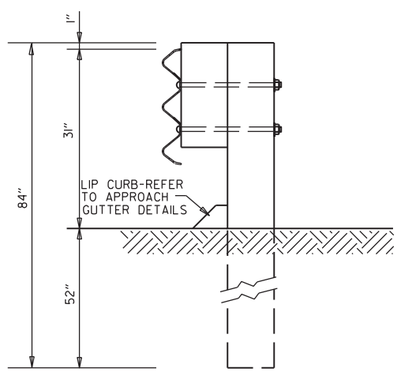

THRIE BEAM RAIL
WITH WOOD OR PLASTIC
BLOCKOUTS & WOOD POSTS
POSTS 1-6

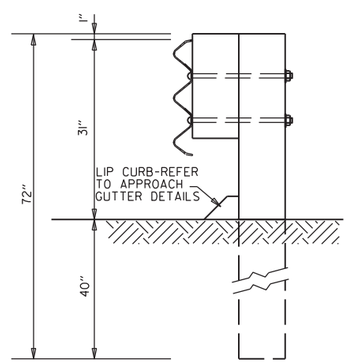

THRIE BEAM RAIL
WITH WOOD OR PLASTIC
BLOCKOUT & WOOD POST
POST 7

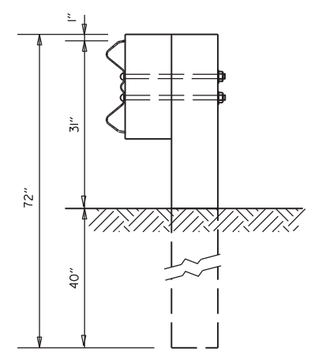

W-BEAM TO THRIE BEAM
TRANSITION RAIL WITH WOOD OR
PLASTIC BLOCKOUT & WOOD POST
POST 8

GENERAL NOTES:

RAIL POSTS SHALL BE SET PERPENDICULAR TO THE ROADWAY PROFILE GRADE AND VERTICALLY IN CROSS SECTION.

WOOD POSTS & WOOD BLOCKS SHALL BE EITHER DENSE NO. 1 STRUCTURAL OR BETTER 9.7f (1400 f) OR NO. 1 1350 f SOUTHERN PINE.

DATE	REVISION	FILMED
11-07-19	RENAMED	
11-16-17	REVISED GUARDRAIL HEIGHT, CHANGED STD. DWG. NUMBER FROM GR-10A TO GR-11	
07-14-10	REVISED POST 8 DIMENSIONS	
11-29-07	ADDED PLASTIC BLOCKOUTS	
08-22-02	REVISED LIP CURB NOTE	
03-30-00	DRAWN & ISSUED	

ARKANSAS STATE HIGHWAY COMMISSION

GUARDRAIL DETAILS

STANDARD DRAWING GR-11

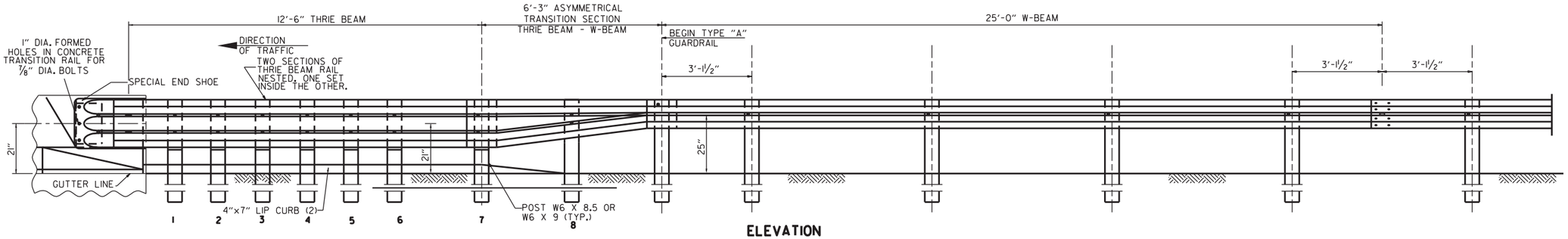

ELEVATION

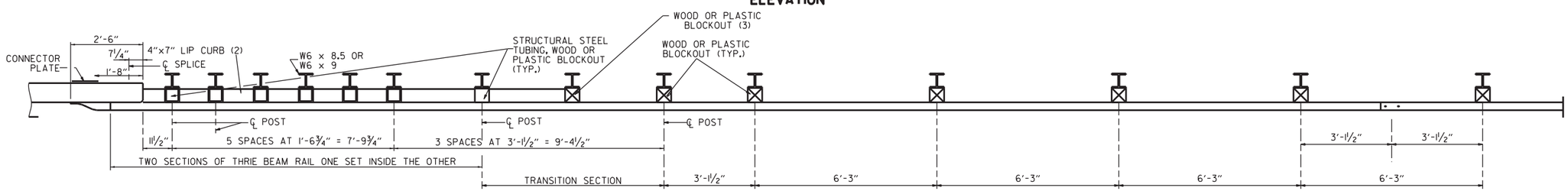

PLAN

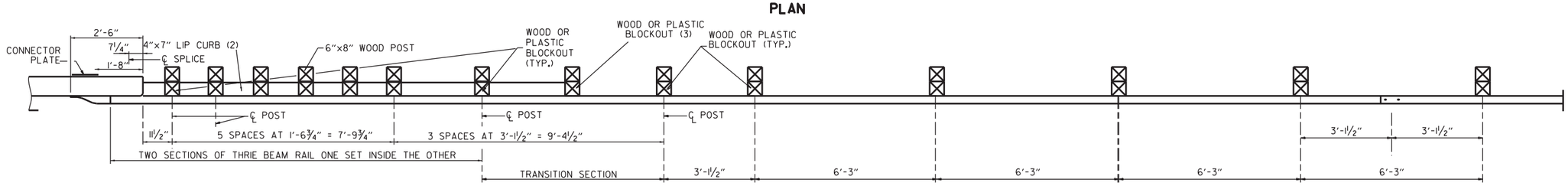

PLAN

(1) VERIFY BOLT SPACING FROM RAIL TRANSITION PRODUCER.
(2) REFER TO APPROACH GUTTER DETAILS.
(3) LENGTH OF BLOCKOUT ON POST 8 TO BE MODIFIED TO FIT RAIL WIDTH.

THRIE BEAM GUARDRAIL CONNECTION AT BRIDGE ENDS

GENERAL NOTES:

THE THRIE BEAM RAIL, SPECIAL END SHOE, AND THE TRANSITION SECTION SHALL BE MADE OF STEEL AND SHALL BE 12 GAGE. ZINC COATING SHALL BE TYPE I.

RAIL POSTS SHALL BE SET PERPENDICULAR TO THE ROADWAY PROFILE GRADE AND VERTICALLY IN CROSS SECTION.

ALL BOLTS SHALL BE SUFFICIENT LENGTH TO EXTEND THROUGH THE FULL THICKNESS OF THE NUT AND NO MORE THAN 3/4" BEYOND IT.

ALL LAP SPLICES, INCLUDING SPECIAL END SHOES, SHALL BE MADE IN THE DIRECTION SHOWN ON STANDARD DRAWINGS GR-8 & GR-13.

REFER TO STD. DRWG. GR-11 FOR POST DETAILS.

USE THRIE BEAM GUARDRAIL COMPONENTS OF SAME MATERIAL FOR ENTIRE JOB.

THRIE BEAM POSTS SHALL BE SAME MATERIAL AS W-BEAM POSTS FOR ENTIRE JOB.

POSTS SHALL NOT BE PLACED AT SPLICE LOCATIONS ALONG W-BEAM RAILS.

WOOD POSTS & WOOD BLOCKS SHALL BE EITHER DENSE NO. 1 STRUCTURAL OR BETTER 9.7f (1400 f) OR NO. 1 1350 f SOUTHERN PINE.

DATE	REVISION	FILMED
05-14-20	REVISED NOTES	
11-07-19	RENAMED & REVISED REFERENCES	
11-16-17	RE-DRAWN FROM STD. DWG. GR-10 & ISSUED	

ARKANSAS STATE HIGHWAY COMMISSION

GUARDRAIL DETAILS

STANDARD DRAWING GR-12

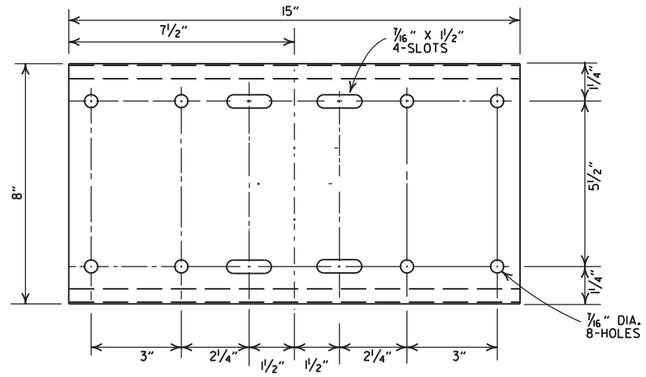

SHELF

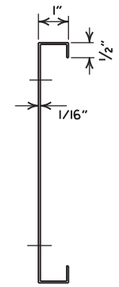

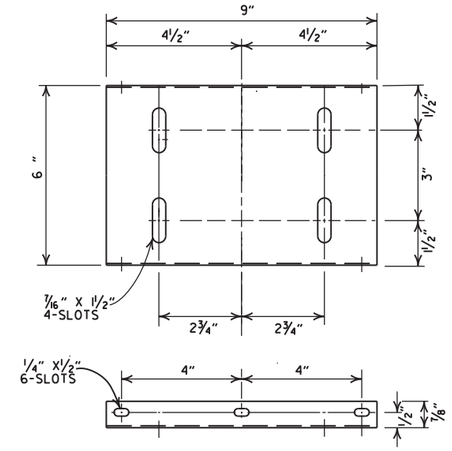

PLATFORM

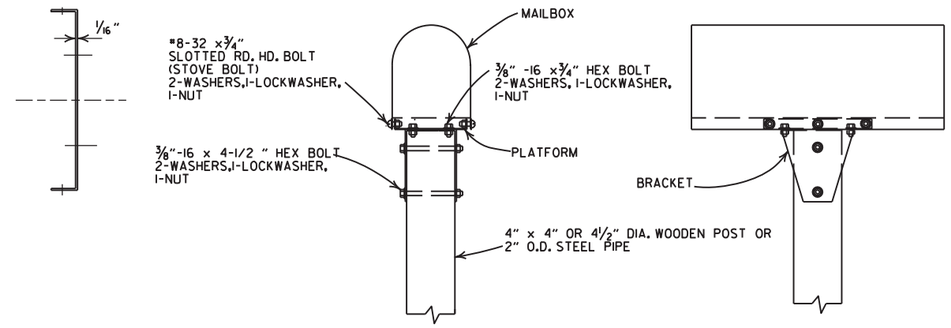

SINGLE INSTALLATION

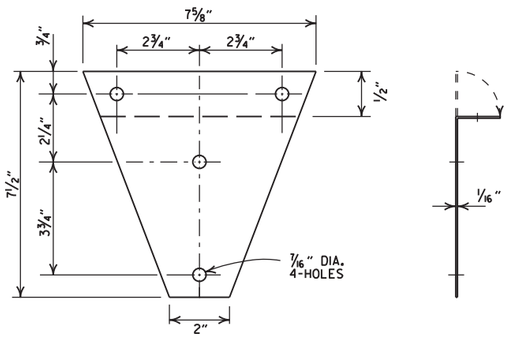

BRACKET

GENERAL NOTES

1. MAILBOX POSTS MAY BE WOOD OR METAL. WOOD POSTS SHALL BE PRESSURE TREATED FOR GROUND CONTACT IN ACCORDANCE WITH SECTION 637.02 OF THE STANDARD SPECIFICATIONS.
2. ANTI-TWIST PLATES SHALL BE USED ONLY ON METAL POSTS.
3. MAILBOX SHELF, BRACKET & PLATFORM SHALL BE GALVANIZED OR PAINTED STEEL, HOWEVER TREATED WOOD MAY BE USED WITH WOODEN POSTS. THE WOODEN SHELF, BRACKET & PLATFORM SHALL BE A MINIMUM OF ¾" THICK AND SHALL BE ASSEMBLED WITH BOLTS OF THE APPROPRIATE LENGTH WITH SIX 8 X ¾" FLATHEAD WOOD SCREWS USED TO ATTACH THE MAILBOX TO THE PLATFORM.
4. THE MAILBOX SHELF AND PLATFORM THAT IS SHOWN IS FOR STANDARD SIZE MAILBOXES. THE SHELF AND PLATFORM SIZE SHALL BE MODIFIED TO FIT MAILBOXES OF A DIFFERENT SIZE.
5. METAL PIPE FOR MAILBOX SUPPORT SHALL BE 2" OUTSIDE DIAMETER STEEL WITH A WALL THICKNESS OF 0.145" AND A WEIGHT OF 2.72 LBS PER FT. OUTSIDE DIAMETER AND WEIGHT SHALL HAVE A TOLERANCE OF +/- 5% ACCORDING TO AASHTO M 181.
6. MAILBOX SUPPORT SYSTEM DIFFERING FROM THOSE SHOWN MAY BE USED, PROVIDED THEY ARE ON THE ARDOT QUALIFIED PRODUCTS LIST FOR MAILBOX SUPPORTS.

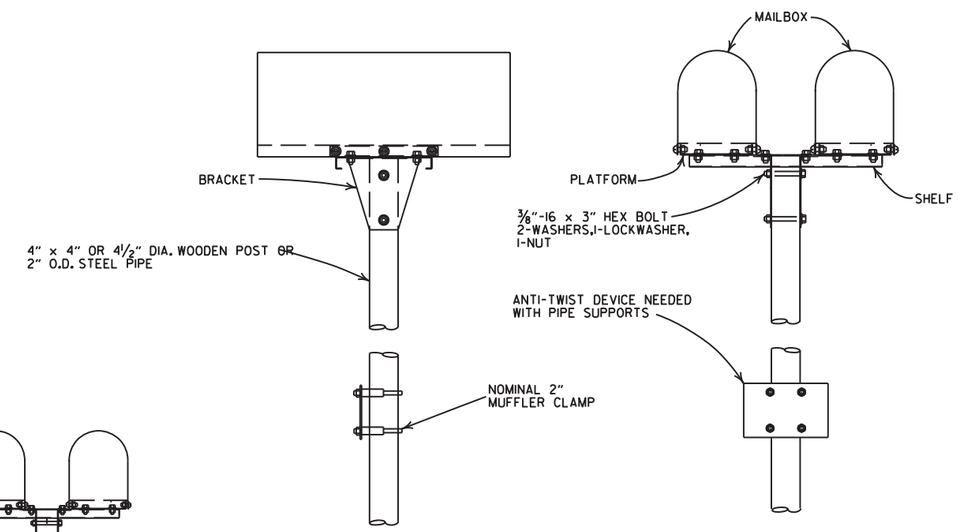

DOUBLE INSTALLATION

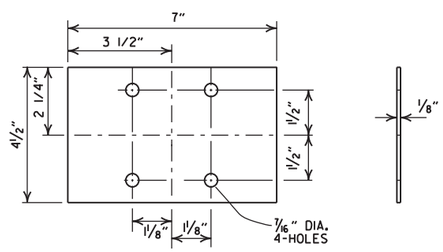

ANTI-TWIST PLATE

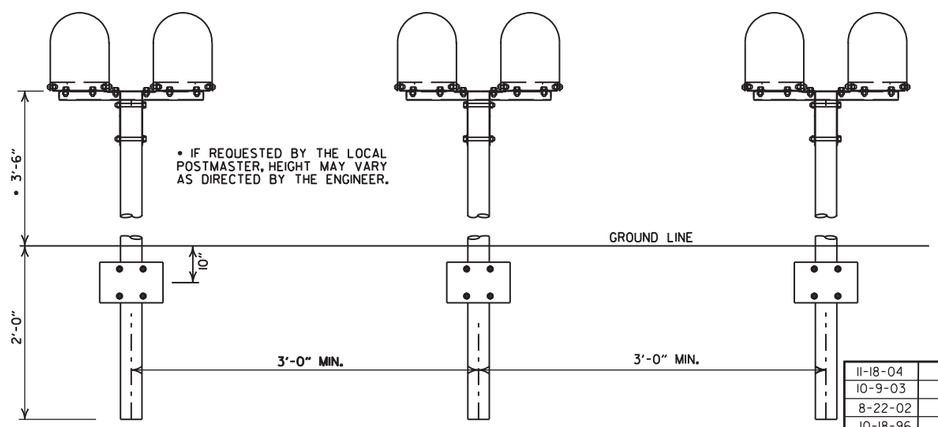

SPACING FOR MULTIPLE POST INSTALLATION

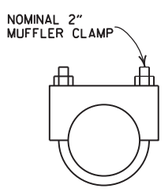

CLAMP

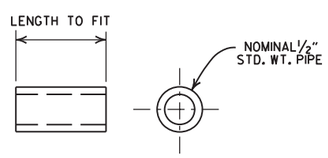

SPACER

DATE	FILMED	REVISION
11-18-04		REVISED NOTES
10-9-03		REVISED NOTE 6
8-22-02		REVISED NOTE 6
10-18-96		CORRECTED AASHTO
10-1-92		CORRECTED SPELLING
9-26-91		NEW PHONE NUMBER
8-15-91		ADDED NOTE
11-30-89		ADJUSTED HEIGHT & ADDED NOTE
2-16-89		DELETED SLOTS FROM SHELF & PLTF
11-17-88	10-1-92	ADJUSTED DIMENSIONS OF STEEL POSTS
7-15-88	20-7-15-88	ISSUED

ARKANSAS STATE HIGHWAY COMMISSION

MAILBOX DETAILS

STANDARD DRAWING MB-1

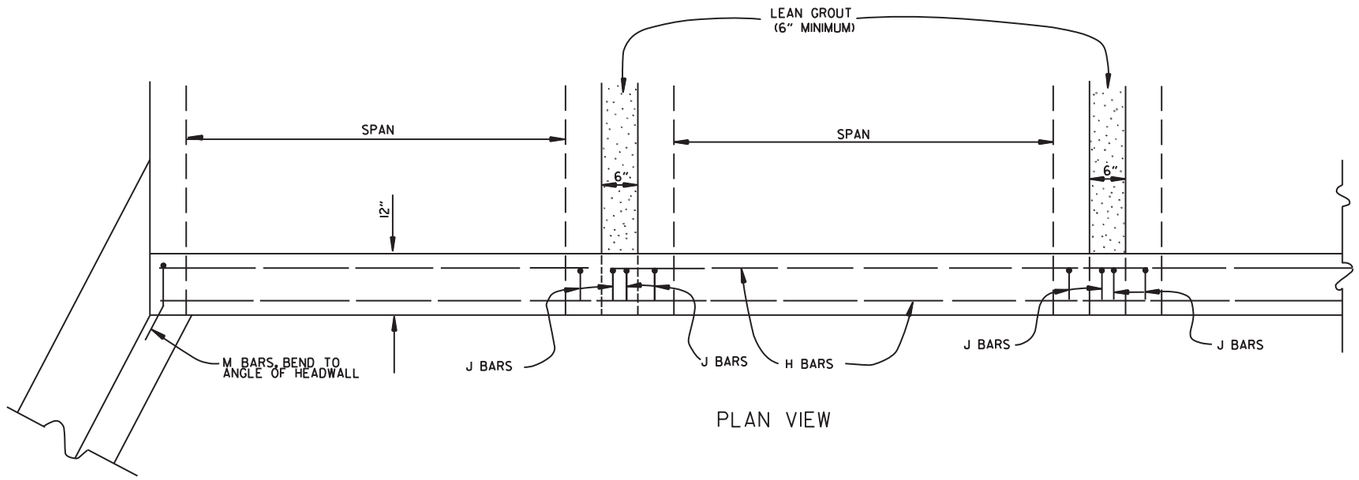

PLAN VIEW

BAR LIST

BAR	NO.	SIZE	LENGTH	BAR BENDING DIAGRAM
H	2	#4	•	
I	•	#4	•	
J	•	#4	1'-5"	
L	•	#4	3'-2"	
M	•	#4	1'-8"	

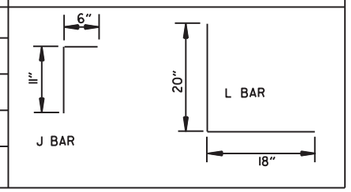

• NOTE: LENGTH AND NUMBER OF BARS VARIES WITH SIZE OF CULVERT

GENERAL NOTES

WINGS, CURTAIN WALLS AND APRONS SHALL BE TIED TO THE PRECAST CULVERT SECTION BY CASTING BARS IN CULVERT END SECTIONS AS SHOWN OR BY DOWELING AND GROUTING. J BARS AND M BARS SHALL BE EMBEDDED A MINIMUM OF 10" IN PRECAST BOX.

WINGS, FOOTINGS, APRONS AND CURTAIN WALLS SHALL BE CONSTRUCTED IN ACCORDANCE WITH THE APPLICABLE WING DRAWING. STEEL AND CONCRETE QUANTITIES WILL BE ADJUSTED TO FIT THE IN-PLACE WIDTH & HEIGHT OF THE PRECAST CONCRETE BOX CULVERTS.

ALL EXPOSED CORNERS TO HAVE ¾" CHAMFERS.

WINGWALLS AND FOOTINGS MAY BE ADJUSTED IN THE FIELD AS DIRECTED BY THE ENGINEER.

ALL CONCRETE, REINFORCING STEEL, LEAN GROUT, MEMBRANE WATERPROOFING, DRAINAGE FILL MATERIAL, GEOTEXTILE FILTER FABRIC, LABOR, MATERIALS AND EQUIPMENT REQUIRED FOR INSTALLING PRECAST BOX CULVERTS WILL NOT BE PAID FOR DIRECTLY BUT WILL BE CONSIDERED TO BE INCLUDED IN THE PRICE BID FOR THE ITEMS AS SPECIFIED IN SECTION 607 OF THE STANDARD SPECIFICATIONS.

LEAN GROUT SHALL CONSIST OF A SAND CEMENT MIXTURE MEETING THE FOLLOWING REQUIREMENTS:
PORTLAND CEMENT SHALL BE TYPE I AND SHALL MEET THE REQUIREMENTS OF AASHTO M 85.
SAND SHALL MEET THE REQUIREMENTS OF FINE AGGREGATE AS SPECIFIED IN SECTION 802.02 OF THE STANDARD SPECIFICATIONS.
THE SAND CEMENT MIXTURE SHALL CONSIST OF NOT LESS THAN 1.5 SACKS OF PORTLAND CEMENT PER TON OF MATERIAL MIXTURE.
THE MIXTURE SHALL CONTAIN SUFFICIENT WATER TO HYDRATE THE CEMENTS. THE SAND CEMENT MIXTURE SHALL BE PLACED IN MAXIMUM 8 INCH THICK LIFTS, LOOSE MEASURE, AND THOROUGHLY RODDED AND TAMPED AROUND BOX TO THOROUGHLY FILL ALL VOIDS.

MEMBRANE WATERPROOFING CONFORMING TO THE REQUIREMENTS OF SECTION 815 OF THE STANDARD SPECIFICATIONS SHALL BE APPLIED TO ALL BOX CULVERT JOINTS.

THE MEMBRANE WATERPROOFING WILL BE REQUIRED ON THE TOP EXTERNAL JOINT AND SHALL EXTEND 1 FOOT DOWN THE SIDES OF THE CULVERT.

IN OUTER BARRELS, ONE WEEP HOLE IS REQUIRED IN EXTERIOR WALLS OF EACH PRECAST CULVERT SECTION. WEEP HOLES SHALL HAVE A MAXIMUM HORIZONTAL SPACING OF 10'-0" IN THE ASSEMBLED CULVERT AND SHALL BE SPACED TO CLEAR ALL REINFORCING STEEL. THE DRAIN OPENING SHALL BE 4" DIAMETER AND SHALL BE PLACED 12" ABOVE THE TOP OF THE BOTTOM SLAB.

DRAINAGE FILL MATERIAL WITH GEOTEXTILE FABRIC IS REQUIRED AT THE EXTERIOR WALLS OF THE ASSEMBLED CULVERT, SEE DETAILS ON THIS DRAWING.

MINIMUM WIDTH SHALL BE 12" (6" ON EACH SIDE OF JOINT). ON MULTIPLE BARREL CULVERTS, MEMBRANE WATERPROOFING SHALL BE APPLIED TO EACH BARREL AS DESCRIBED ABOVE.

WITH THE APPROVAL OF THE ENGINEER, THE CONTRACTOR WILL BE ALLOWED TO SUBSTITUTE, AT NO ADDITIONAL COST TO THE DEPARTMENT, FLOWABLE SELECT MATERIAL CONFORMING TO SECTION 206 OF THE STANDARD SPECIFICATIONS IN LIEU OF LEAN GROUT.

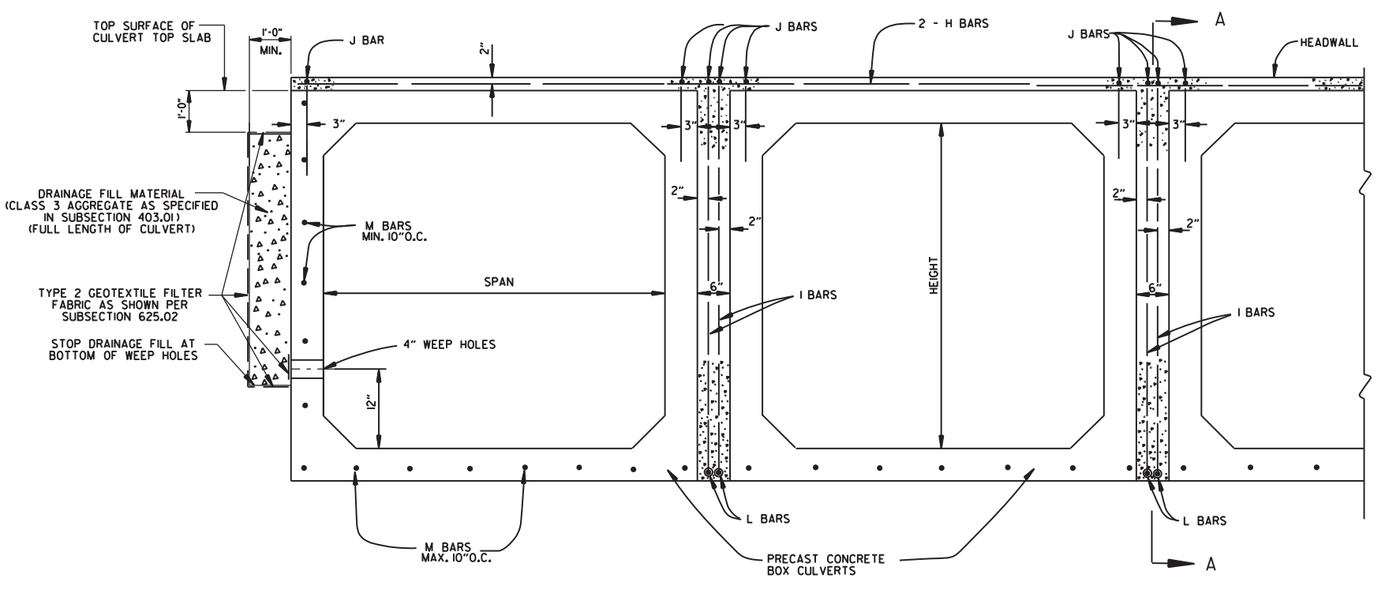

END VIEW

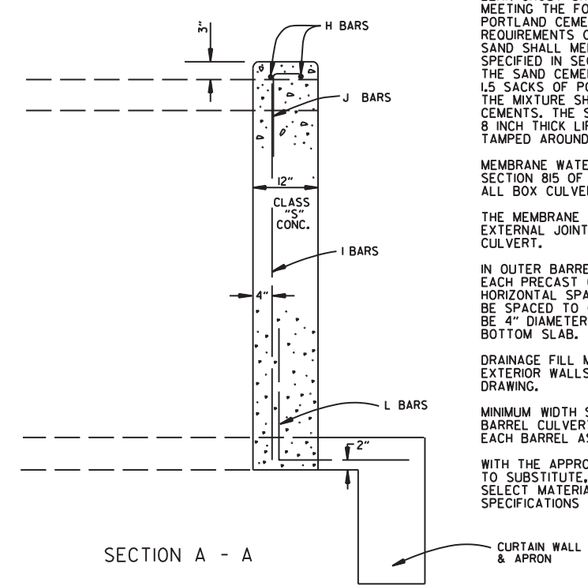

SECTION A - A

DATE	REVISION	DATE FILMED
1-28-15	REVISED GEOTEXTILE FABRIC PLACEMENT	
12-15-11	ADDED NOTE & DTLS FOR WEEP HOLE AND DRAINAGE FILL	
10-15-09	ADDED GENERAL NOTE	
11-10-05	REVISED SPACING OF "M" BARS	
4-10-03	REVISED GENERAL NOTES	
10-18-96	CORRECTED AASHTO REF.	
10-1-92	ADDED NOTE FOR MEMBRANE WATERPROOFING	
8-15-91	ADDED NOTE FOR LEAN GROUT	
11- 8-90	REVISED FOR 1991 SPECS	
11-30-89	ISSUED: JABE	

ARKANSAS STATE HIGHWAY COMMISSION

PRECAST CONCRETE BOX CULVERTS

STANDARD DRAWING PBC-1

REINFORCED CONCRETE ARCH PIPE DIMENSIONS

EQUIV. DIA.	SPAN		RISE	
	AASHTO M 206	ARDOT NOMINAL	AASHTO M 206	ARDOT NOMINAL
INCHES	INCHES			
15	18	18	11	11
18	22	22	13½	14
21	26	26	15½	16
24	28½	29	18	18
30	36¼	36	22½	23
36	43⅜	44	26 5/16	27
42	51⅛	51	31 5/16	31
48	58½	59	36	36
54	65	65	40	40
60	73	73	45	45
72	88	88	54	54
84	102	102	62	62
90	115	115	72	72
96	122	122	77½	77
108	138	138	87⅛	87
120	154	154	96⅞	97
132	168¾	169	106½	107

THE MEASURED SPAN AND RISE SHALL NOT VARY MORE THAN ± 2 PERCENT FROM THE VALUES SPECIFIED BY AASHTO M206.

REINFORCED CONCRETE HORIZONTAL ELLIPTICAL PIPE DIMENSIONS

EQUIV. DIA.	AASHTO M 207	
	SPAN	RISE
INCHES	INCHES	
18	23	14
24	30	19
27	34	22
30	38	24
33	42	27
36	45	29
39	49	32
42	53	34
48	60	38
54	68	43
60	76	48
66	83	53
72	91	58
78	98	63
84	106	68

THE MEASURED SPAN AND RISE SHALL NOT VARY MORE THAN ± 2 PERCENT FROM THE VALUES SPECIFIED BY AASHTO M207.

CONSTRUCTION SEQUENCE

1. PLACE STRUCTURAL BEDDING MATERIAL TO GRADE. DO NOT COMPACT.
2. INSTALL PIPE TO GRADE.
3. COMPACT STRUCTURAL BEDDING OUTSIDE THE MIDDLE THIRD OF THE PIPE.
4. PLACE AND COMPACT THE HAUNCH AREA UP TO THE MIDDLE OF THE PIPE.
5. COMPLETE BACKFILL ACCORDING TO SUBSECTION 606.03.(f)(1).

NOTE: HAUNCH AND STRUCTURAL BEDDING MATERIAL WILL NOT BE PAID FOR SEPARATELY, BUT COMPENSATION WILL BE CONSIDERED TO BE INCLUDED IN THE PRICE BID PER LINEAR FOOT OF CONCRETE PIPE.

- LEGEND -

D_i = NORMAL INSIDE DIAMETER OF PIPE
D_o = OUTSIDE DIAMETER OF PIPE
H = FILL COVER HEIGHT OVER PIPE (FEET)
MIN. = MINIMUM
= UNDISTURBED SOIL

INSTALLATION TYPE	MATERIAL REQUIREMENTS FOR HAUNCH AND STRUCTURAL BEDDING
TYPE 1	AGGREGATE BASE COURSE (CLASS 5 OR CLASS 7)
TYPE 2	SELECTED MATERIALS (CLASS SM-1, SM-2, OR SM-4) OR TYPE 1 INSTALLATION MATERIAL*
TYPE 3**	AASHTO CLASSIFICATION A-1 THRU A-6 SOIL OR TYPE 1 OR 2 INSTALLATION MATERIAL

* SM-3 WILL NOT BE ALLOWED.

** MATERIALS SHALL NOT INCLUDE ORGANIC MATERIALS OR STONES LARGER THAN 3 INCHES.

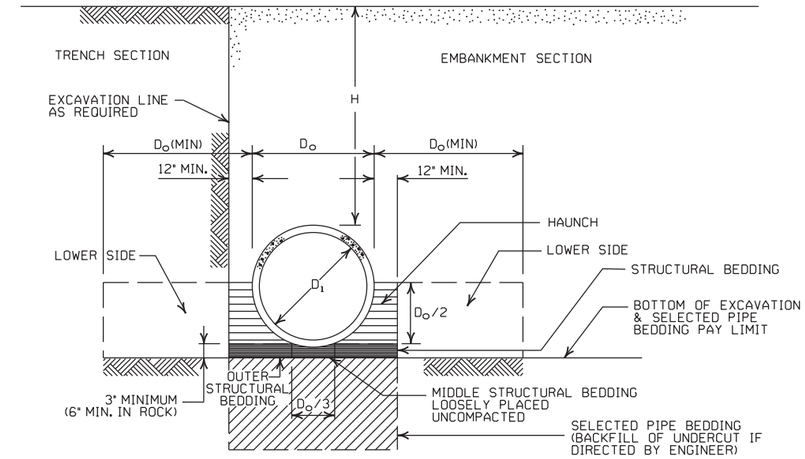

EMBANKMENT AND TRENCH INSTALLATIONS

1. MATERIAL IN THE HAUNCH AND OUTER STRUCTURAL BEDDING SHALL BE COMPACTED TO 95% OF THE MAXIMUM DENSITY ACCORDING TO THE TYPE OR CLASS OF MATERIAL USED.
2. FOR TRENCHES WITH WALLS OF NATURAL SOIL, THE DENSITY OF THE SOIL IN THE LOWER SIDE ZONE SHALL BE AS FIRM AS THE 95% DENSITY REQUIRED FOR THE HAUNCH. IF THE EXISTING SOIL DOES NOT MEET THIS CRITERIA, IT SHALL BE REMOVED AND RECOMPACTED TO 95% OF THE MAXIMUM DENSITY ACCORDING TO THE TYPE OF MATERIAL USED.
3. FOR EMBANKMENTS, THE MATERIAL IN THE LOWER SIDE ZONE SHALL BE COMPACTED TO 95% OF THE MAXIMUM DENSITY ACCORDING TO THE TYPE OR CLASS OF MATERIAL USED.

MINIMUM HEIGHT OF FILL "H" OVER CIRCULAR R.C. PIPE CULVERTS

	CLASS OF PIPE			
	CLASS III		CLASS IV	CLASS V
INSTALLATION TYPE	TYPE 1 OR 2	TYPE 3	ALL	ALL
PIPE ID (IN.)	FEET			
12-15	2	2.5	2	1
18-24	2.5	3	2	1
27-33	3	4	2	1
36-42	3.5	5	2	1
48	4.5	5.5	2	1
54-60	5	7	2	1
66-78	6	8	2	1
84-108	7.5	8	2	1

NOTE: FOR MINIMUM COVER VALUES, "H" SHALL INCLUDE A MINIMUM OF 12" OF PAVEMENT AND/OR BASE.

MAXIMUM HEIGHT OF FILL "H" OVER CIRCULAR R.C. PIPE CULVERTS

INSTALLATION TYPE	CLASS OF PIPE		
	CLASS III	CLASS IV	CLASS V
	FEET		
TYPE 1	21	32	50
TYPE 2	16	25	39
TYPE 3	12	20	30

NOTE: IF FILL HEIGHT EXCEEDS 50 FEET, A SPECIAL DESIGN CONCRETE PIPE WILL BE REQUIRED USING TYPE 1 INSTALLATION.

GENERAL NOTES

1. CONCRETE PIPE CULVERT CONSTRUCTION SHALL CONFORM TO ARKANSAS DEPARTMENT OF TRANSPORTATION STANDARD SPECIFICATIONS FOR HIGHWAY CONSTRUCTION (CURRENT EDITION), WITH APPLICABLE SUPPLEMENTAL SPECIFICATIONS AND SPECIAL PROVISIONS. UNLESS OTHERWISE NOTED IN THE PLANS, SECTION AND SUBSECTION REFER TO THE STANDARD CONSTRUCTION SPECIFICATIONS.
2. CONCRETE PIPE CULVERT DESIGN SHALL CONFORM TO AASHTO LRFD BRIDGE DESIGN SPECIFICATIONS, FIFTH EDITION (2010) WITH 2010 INTERIMS.
3. ALL PIPE SHALL CONFORM TO SECTION 606. CIRCULAR R.C. PIPE CULVERTS SHALL CONFORM TO AASHTO M170. R.C. ARCH PIPE CULVERTS SHALL CONFORM TO AASHTO M206 AND HORIZONTAL ELLIPTICAL PIPE CULVERTS SHALL CONFORM TO AASHTO M207.
4. ALL PIPE SHALL BE PROTECTED DURING CONSTRUCTION BY A COVER SUFFICIENT TO PREVENT DAMAGE FROM PASSAGE OF EQUIPMENT.
5. THE MINIMUM TRENCH WIDTH SHALL BE THE OUTSIDE DIAMETER OF THE PIPE PLUS 24 INCHES. THE MAXIMUM ALLOWABLE TRENCH WIDTH SHALL BE THE MINIMUM WIDTH PRACTICABLE FOR WORKING CONDITIONS.
6. MULTIPLE PIPE CULVERTS SHALL BE INSTALLED WITH A MINIMUM CLEARANCE OF 24 INCHES BETWEEN STRINGS OF PIPE. REFER TO STD. DWG. FES-2 FOR MINIMUM CLEARANCE WHERE FLARED END SECTIONS ARE USED.
7. IMPERVIOUS MATERIAL SHOULD BE PLACED AS DIRECTED BY THE ENGINEER AT THE ENDS OF THE CULVERT TO PREVENT LOSS OF STRUCTURAL BEDDING WHEN PERVIOUS MATERIAL IS USED FOR STRUCTURAL BEDDING AND/OR BACKFILL.
8. NOT MORE THAN ONE LIFTING HOLE MAY BE PROVIDED IN CONCRETE PIPE TO FACILITATE HANDLING. HOLE MAY BE CAST IN PLACE, CUT INTO THE FRESH CONCRETE AFTER FORMS ARE REMOVED, OR DRILLED. THE HOLE SHALL NOT BE MORE THAN TWO INCHES IN DIAMETER OR TWO INCHES SQUARE. CUTTING OR DISPLACEMENT OF REINFORCEMENT WILL NOT BE PERMITTED. SPALLED AREAS AROUND THE HOLE SHALL BE REPAIRED IN A WORKMANLIKE MANNER. LIFTING HOLE SHALL BE FILLED WITH MORTAR, CONCRETE, OR OTHER METHOD AS APPROVED BY THE ENGINEER.
9. WHEN DIRECTED BY THE ENGINEER, UNSUITABLE MATERIAL THAT IS ENCOUNTERED AT THE BOTTOM OF THE EXCAVATED TRENCH (BELOW THE AREA IDENTIFIED AS "STRUCTURAL BEDDING" ABOVE) WILL BE EXCAVATED AND REPLACED WITH SELECTED PIPE BEDDING. THE QUANTITY OF MATERIAL REQUIRED TO BACKFILL THE UNDERCUT AREA UP TO THE SELECTED PIPE BEDDING PAY LIMIT DESIGNATED ABOVE WILL BE MEASURED AND PAID FOR AS "SELECTED PIPE BEDDING."
10. WHEN THE EXISTING MATERIAL EXCAVATED FOR THE PIPE TRENCH IS DETERMINED BY THE ENGINEER TO BE UNSUITABLE FOR BACKFILLING THE PIPE (ABOVE THE AREA IDENTIFIED ABOVE AS THE HAUNCH), BORROW MATERIAL OR MATERIAL FROM THE ROADWAY EXCAVATION WILL BE USED TO BACKFILL THE PIPE. IF SUITABLE MATERIAL IS NOT AVAILABLE, THE ENGINEER MAY AUTHORIZE THE USE OF "SELECTED PIPE BACKFILL."

MINIMUM HEIGHT OF FILL "H" OVER R.C. ARCH & HORIZONTAL ELLIPTICAL PIPE CULVERTS

INSTALLATION TYPE	CLASS OF PIPE	
	CLASS III	CLASS IV
	FEET	
TYPE 2 OR TYPE 3	2.5	1.5

NOTE: TYPE 1 INSTALLATION WILL NOT BE ALLOWED FOR ARCH & HORIZONTAL ELLIPTICAL PIPE CULVERTS.

NOTE: FOR MINIMUM COVER VALUES, "H" SHALL INCLUDE A MINIMUM OF 12" OF PAVEMENT AND/OR BASE.

MAXIMUM HEIGHT OF FILL "H" OVER R.C. ARCH & HORIZONTAL ELLIPTICAL PIPE CULVERTS

INSTALLATION TYPE	CLASS OF PIPE	
	CLASS III	CLASS IV
	FEET	
TYPE 2	13	21
TYPE 3	10	16

NOTE: TYPE 1 INSTALLATION WILL NOT BE ALLOWED FOR ARCH & HORIZONTAL ELLIPTICAL PIPE CULVERTS.

DATE	REVISION	DATE FILMED
2-27-14	REVISED GENERAL NOTE 1.	
12-15-11	REVISED FOR LRFD DESIGN SPECIFICATIONS	
5-18-00	REVISED TYPE 3 BEDDING & ADDED NOTE	
3-30-00	REVISED INSTALLATIONS	
11-06-97	ISSUED	

ARKANSAS STATE HIGHWAY COMMISSION

CONCRETE PIPE CULVERT FILL HEIGHTS & BEDDING

STANDARD DRAWING PCC-1

CORRUGATED STEEL PIPE (ROUND)

PIPE DIAMETER (INCHES)	① MINUMUM COVER TOP OF PIPE TO TOP OF GROUND "H" (FEET)	MAX. FILL HEIGHT "H" ABOVE TOP OF PIPE (FEET)				
		METAL THICKNESS (INCHES)				
		0.064	0.079	0.109	0.138	0.168
2⅔ INCH BY ½ INCH CORRUGATION RIVETED, WELDED, OR HELICAL LOCK-SEAM						
12	1	84	91			
15	1	67	73			
18	1	56	61			
24	1	42	46	59		
30	2	34	36	47		
36	2		30	39	41	
42	2		43	67	70	73
48	2		37	58	61	64
② 3 INCH BY 1 INCH OR 5 INCH BY 1 INCH CORRUGATION RIVETED, WELDED, BOLTED, OR HELICAL LOCK-SEAM						
36	1	48	60	88	111	118
42	1	41	51	72	90	102
48	1	36	45	64	77	85
54	2	32	40	59	71	79
60	2	29	36	53	64	71
66	2	26	33	47	58	64
72	2	24	30	44	53	59
78	2		28	41	49	54
84	2		26	38	45	51
90	2		24	35	43	45
96	2		22	33	40	44
102	2			31	38	42
108	2			30	35	39
114	2			28	34	37
120	2			27	32	35

CORRUGATED ALUMINUM PIPE (ROUND)

PIPE DIAMETER (INCHES)	① MINUMUM COVER TOP OF PIPE TO TOP OF GROUND "H" (FEET)	MAX. FILL HEIGHT "H" ABOVE TOP OF PIPE (FEET)				
		METAL THICKNESS IN INCHES				
		0.060	0.075	0.105	0.135	0.164
		2 ⅔ INCH BY ½ INCH CORRUGATION RIVETED OR HELICAL LOCK-SEAM				
12	1	45	45			
18	2	30	30	52		
24	2	22	22	39	41	
30	2		18	31	32	34
36	2.5		15	26	27	28
42	2			43	43	44
48	2			40	41	43
54	2			35	37	38
60	2				33	34
66	2					31
72	2					29

CORRUGATED METAL PIPE ARCHES

EQUIV. DIA. (INCHES)	PIPE DIMENSION SPAN X RISE (INCHES)	MINUMUM CORNER RADIUS (INCHES)	STEEL				ALUMINUM		
			MIN. THICKNESS REQUIRED INCHES	① MIN. HEIGHT OF FILL, "H" (FT.) INSTALLATION TYPE 1		MAX. HEIGHT OF FILL, "H" (FT.) INSTALLATION TYPE 1	MIN. THICKNESS REQUIRED INCHES	① MIN. HEIGHT OF FILL, "H" (FT.) INSTALLATION TYPE 1	MAX. HEIGHT OF FILL, "H" (FT.) INSTALLATION TYPE 1
			2 ⅔ INCH BY ½ INCH CORRUGATION RIVETED, WELDED, OR HELICAL LOCK-SEAM				2 ⅔ INCH BY ½ INCH CORRUGATION RIVETED OR HELICAL LOCK-SEAM		
15	17x13	3	0.064	2		15	0.060	2	15
18	21x15	3	0.064	2		15	0.060	2	15
21	24x18	3	0.064	2.25		15	0.060	2.25	15
24	28x20	3	0.064	2.5		15	0.075	2.5	15
30	35x24	3	0.079	3		12	0.075	3	12
36	42x29	3½	0.079	3		12	0.105	3	12
42	49x33	4	0.079	3		12	0.105	3	12
48	57x38	5	0.109	3		13	0.135	3	13
54	64x43	6	0.109	3		14	0.135	3	14
60	71x47	7	0.138	3		15	0.164	3	15
66	77x52	8	0.168	3		15			
72	83x57	9	0.168	3		15			
			② 3 INCH BY 1 INCH OR 5 INCH BY 1 INCH CORRUGATION RIVETED, WELDED, OR HELICAL LOCK-SEAM						
				INSTALLATION TYPE 2	INSTALLATION TYPE 1	INSTALLATION TYPE 2 / TYPE 1			
36	40x31	5	0.079	3	2	12 / 15			
42	46x36	6	0.079	3	2	13 / 15			
48	53x41	7	0.079	3	2	13 / 15			
54	60x46	8	0.079	3	2	13 / 15			
60	66x51	9	0.079	3	2	13 / 15			
66	73x55	12	0.079	3	2	15 / 15			
72	81x59	14	0.079	3	2	15 / 15			
78	87x63	14	0.079	3	2	15 / 15			
84	95x67	16	0.109	3	2	15 / 15			
90	103x71	16	0.109	3	2	15 / 15			
96	112x75	18	0.109	3	2	15 / 15			
102	117x79	18	0.109	3	2	15 / 15			
108	128x83	18	0.138	3	2	15 / 15			

CONSTRUCTION SEQUENCE

1. PLACE STRUCTURAL BEDDING MATERIAL TO GRADE. DO NOT COMPACT.
2. INSTALL PIPE TO GRADE.
3. COMPACT STRUCTURAL BEDDING OUTSIDE THE MIDDLE THIRD OF THE PIPE.
4. COMPLETE STRUCTURAL BACKFILL OPERATION BY WORKING FROM SIDE TO SIDE OF THE PIPE. THE SIDE TO SIDE STRUCTURAL BACKFILL DIFFERENTIAL SHALL NOT EXCEED 24 INCHES OR 1/3 THE SIZE OF THE PIPE, WHICHEVER IS LESS.

NOTE: STRUCTURAL BACKFILL AND STRUCTURAL BEDDING MATERIAL WILL NOT BE PAID FOR SEPARATELY, BUT COMPENSATION WILL BE CONSIDERED TO BE INCLUDED IN THE PRICE BID PER LINEAR FOOT OF METAL PIPE.

INSTALLATION TYPE	MATERIAL REQUIREMENTS FOR STRUCTURAL BACKFILL AND STRUCTURAL BEDDING
TYPE 1	AGGREGATE BASE COURSE (CLASS 4, 5, 6, OR 7)
TYPE 2	SELECTED MATERIALS (CLASS SM-1, SM-2, OR SM-4) OR TYPE 1 INSTALLATION MATERIAL ③

③ SM-3 WILL NOT BE ALLOWED.

EQUIVALENT METAL THICKNESSES AND GAUGES

METAL THICKNESS IN INCHES			GAUGE NUMBER
STEEL			
ZINC COATED	UNCOATED	ALUMINUM	
0.064	0.0598	0.060	16
0.079	0.0747	0.075	14
0.109	0.1046	0.105	12
0.138	0.1345	0.135	10
0.168	0.1644	0.164	8

① FOR MINIMUM COVER VALUES, "H" SHALL INCLUDE A MINIMUM 12" OF PAVEMENT AND/OR BASE.

② WHERE THE STANDARD 2 2/3" x ½" CORRUGATION AND GAUGE IS SPECIFIED FOR A GIVEN DIAMETER, A PIPE OF THE SAME DIAMETER WITH A 3" x 1" OR 5" x 1" CORRUGATION MAY BE SUBSTITUTED, PROVIDING IT IS GAUGED FOR A FILL HEIGHT CONDITION EQUAL TO OR GREATER THAN THE MAXIMUM FILL HEIGHT CONDITION FOR THE SPECIFIED GAUGE AND CORRUGATION.

- LEGEND -

D_o = OUTSIDE DIAMETER OF PIPE
MAX. = MAXIMUM
MIN. = MINIMUM
= STRUCTURAL BACKFILL MATERIAL
= UNDISTURBED SOIL
EQUIV. DIA. = EQUIVALENT DIAMETER
H = FILL COVER HEIGHT OVER PIPE (FEET)

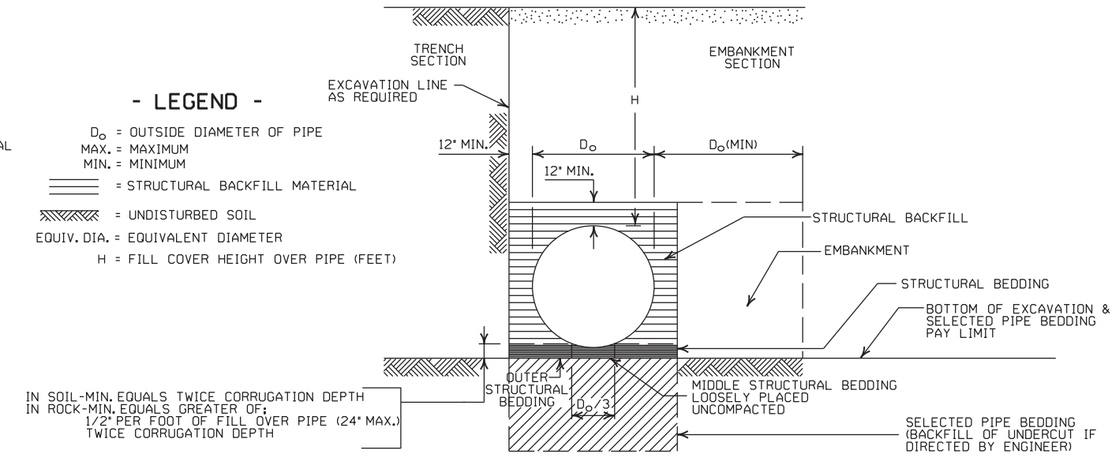

EMBANKMENT AND TRENCH INSTALLATIONS

1. STRUCTURAL BACKFILL, EMBANKMENT, AND OUTER STRUCTURAL BEDDING MATERIAL SHALL BE COMPACTED TO 95% OF THE MAXIMUM DENSITY ACCORDING TO THE TYPE OR CLASS OF MATERIAL USED.
2. INSTALLATION TYPE 1 OR 2 MAY BE USED FOR CORRUGATED STEEL OR ALUMINUM PIPE (ROUND).
3. INSTALALTION TYPE 1 SHALL BE USED FOR CORRUGATED STEEL OR ALUMINUM PIPE ARCHES WITH 2⅔" X ½" CORRUGATION.
4. INSTALLATION TYPE 1 OR 2 MAY BE USED FOR CORRUGATED STEEL OR ALUMINUM PIPE ARCHES WITH 3" X 1" OR 5" X 1" CORRUGATION.

GENERAL NOTES

1. METAL PIPE CULVERT CONSTRUCTION SHALL CONFORM TO ARKANSAS DEPARTMENT OF TRANSPORTATION STANDARD SPECIFICATIONS FOR HIGHWAY CONSTRUCTION (CURRENT EDITION), WITH APPLICABLE SUPPLEMENTAL SPECIFICATIONS AND SPECIAL PROVISIONS. UNLESS OTHERWISE NOTED IN THE PLANS, SECTION AND SUBSECTION REFER TO THE STANDARD CONSTRUCTION SPECIFICATIONS.
2. METAL PIPE CULVERT DESIGN SHALL CONFORM TO AASHTO LRFD BRIDGE DESIGN SPECIFICATIONS, FIFTH EDITION (2010) WITH 2010 INTERIMS.
3. METAL PIPE CULVERT MATERIALS AND INSTALLATIONS SHALL CONFORM TO SECTION 606 AND JOB SPECIAL PROVISION "METAL PIPE".
4. ALL PIPE SHALL BE PROTECTED DURING CONSTRUCTION BY A COVER SUFFICIENT TO PREVENT DAMAGE FROM PASSAGE OF EQUIPMENT.
5. THE MINIMUM TRENCH WIDTH SHALL BE THE OUTSIDE DIAMETER OF THE PIPE PLUS 24 INCHES. THE MAXIMUM ALLOWABLE TRENCH WIDTH SHALL BE THE MINIMUM WIDTH PRACTICABLE FOR WORKING CONDITIONS.
6. MULTIPLE PIPE CULVERTS SHALL BE INSTALLED WITH A MINIMUM CLEARANCE OF 24 INCHES BETWEEN STRINGS OF PIPE. REFER TO STD. DWG. FES-2 FOR MINIMUM CLEARANCE WHERE FLARED END SECTIONS ARE USED.
7. IMPERVIOUS MATERIAL SHOULD BE PLACED AS DIRECTED BY THE ENGINEER AT THE ENDS OF THE CULVERT TO PREVENT LOSS OF STRUCTURAL BEDDING WHEN PERVIOUS MATERIAL IS USED FOR STRUCTURAL BEDDING AND/OR BACKFILL.
8. WHEN DIRECTED BY THE ENGINEER, UNSUITABLE MATERIAL THAT IS ENCOUNTERED AT THE BOTTOM OF THE EXCAVATED TRENCH (BELOW THE AREA IDENTIFIED AS "STRUCTURAL BEDDING" ABOVE) WILL BE EXCAVATED AND REPLACED WITH SELECTED PIPE BEDDING. THE QUANTITY OF MATERIAL REQUIRED TO BACKFILL THE UNDERCUT AREA UP TO THE SELECTED PIPE BEDDING PAY LIMIT DESIGNATED ABOVE WILL BE MEASURED AND PAID FOR AS "SELECTED PIPE BEDDING."
9. WHEN THE EXISTING MATERIAL EXCAVATED FOR THE PIPE TRENCH IS DETERMINED BY THE ENGINEER TO BE UNSUITABLE FOR BACKFILLING THE PIPE (ABOVE THE AREA IDENTIFIED AS STRUCTURAL BACKFILL), BORROW MATERIAL OR MATERIAL FROM THE ROADWAY EXCAVATION WILL BE USED TO BACKFILL THE PIPE. IF SUITABLE MATERIAL IS NOT AVAILABLE, THE ENGINEER MAY AUTHORIZE THE USE OF "SELECTED PIPE BACKFILL."

DATE	REVISION	DATE FILMED
2-27-14	REVISED GENERAL NOTE 1.	
12-15-11	REVISED FOR LRFD DESIGN SPECS	
3-30-00	REVISED INSTALLATIONS	
11-06-97	ISSUED	

ARKANSAS STATE HIGHWAY COMMISSION

METAL PIPE CULVERT FILL HEIGHTS & BEDDING

STANDARD DRAWING PCM-1

INSTALLATION TYPE	•• MATERIAL REQUIREMENTS FOR STRUCTURAL BACKFILL AND STRUCTURAL BEDDING
TYPE 2	•SELECTED MATERIALS (CLASS SM-1, SM-2 OR SM-4)

• AGGREGATE BASE COURSE (CLASS 4, 5, 6, OR 7) MAY BE USED IN LIEU OF SELECTED MATERIAL.

SM3 WILL NOT BE ALLOWED.

•• STRUCTURAL BEDDING MATERIAL SHALL HAVE A MAXIMUM PARTICLE SIZE OF 1 INCH. STRUCTURAL BACKFILL MATERIAL SHALL BE FREE OF ORGANIC MATERIAL, STONES LARGER THAN 1.50 INCH IN GREATEST DIMENSION, OR FROZEN LUMPS.

STRUCTURAL BACKFILL AND STRUCTURAL BEDDING MATERIAL WILL NOT BE PAID FOR SEPARATELY, BUT COMPENSATION WILL BE CONSIDERED TO BE INCLUDED IN THE PRICE BID PER LINEAR FOOT OF HDPE PIPE.

MULTIPLE INSTALLATION OF HIGH DENSITY POLYETHYLENE PIPES

PIPE DIAMETER	CLEAR DISTANCE BETWEEN PIPES
18"	1'-6"
24"	2'-0"
30"	2'-6"
36"	3'-0"
42"	3'-6"
48"	4'-0"

MINIMUM TRENCH WIDTH BASED ON FILL HEIGHT "H"

PIPE DIAMETER	TRENCH WIDTH (FEET)	
	"H" < 10'-0"	"H" >OR= 10'-0"
18"	4'-6"	4'-6"
24"	5'-0"	6'-0"
30"	5'-6"	7'-6"
36"	6'-0"	9'-0"
42"	7'-0"	10'-6"
48"	8'-0"	12'-0"

①NOTE:
18" MIN. (18" - 30" DIAMETERS)
24" MIN. (36" - 48" DIAMETERS)

MINIMUM COVER VALUES, "H" SHALL INCLUDE A MINIMUM 12" OF PAVEMENT AND/OR BASE.

MINIMUM COVER FOR CONSTRUCTION LOADS

PIPE DIAMETER	② MIN. COVER (FEET) FOR INDICATED CONSTRUCTION LOADS			
	18.0-50.0 (KIPS)	50.0-75.0 (KIPS)	75.0-110.0 (KIPS)	110.0-175.0 (KIPS)
36" OR LESS	2'-0"	2'-6"	3'-0"	3'-0"
42" OR GREATER	3'-0"	3'-0"	3'-6"	4'-0"

②MINIMUM COVER SHALL BE MEASURED FROM TOP OF PIPE TO TOP OF THE MAINTAINED CONSTRUCTION ROADWAY SURFACE. THE SURFACE SHALL BE MAINTAINED.

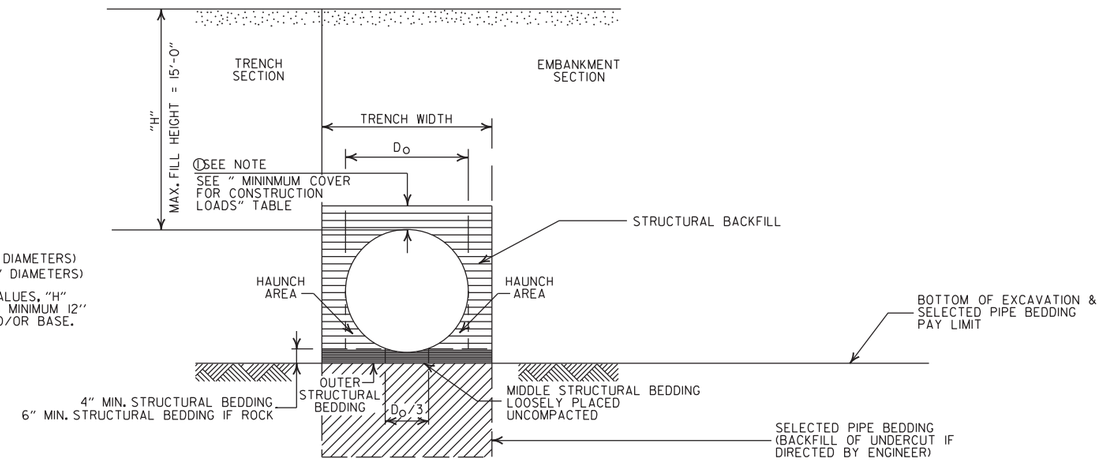

TYPE 2 EMBANKMENT AND TRENCH INSTALLATIONS

1. STRUCTURAL BACKFILL, EMBANKMENT, AND OUTER STRUCTURAL BEDDING MATERIAL SHALL BE COMPACTED TO 95% OF THE MAXIMUM DENSITY ACCORDING TO THE TYPE OR CLASS OF MATERIAL USED.

CONSTRUCTION SEQUENCE

1. PLACE STRUCTURAL BEDDING MATERIAL TO GRADE. DO NOT COMPACT.
2. INSTALL PIPE TO GRADE.
3. COMPACT STRUCTURAL BEDDING OUTSIDE THE MIDDLE THIRD OF THE PIPE.
4. THE STRUCTURAL BACKFILL SHALL BE PLACED AND COMPACTED IN LAYERS NOT EXCEEDING 8". THE LAYERS SHALL BE BROUGHT UP EVENLY AND SIMULTANEOUSLY TO THE ELEVATION OF THE MINIMUM COVER.
5. PIPE INSTALLATION MAY REQUIRE THE USE OF RESTRAINTS, WEIGHTING OR OTHER APPROVED METHODS IN ORDER TO HELP MAINTAIN GRADE AND ALIGNMENT.

GENERAL NOTES

1. PIPE SHALL CONFORM TO AASHTO M294, TYPE S. INSTALLATION SHALL CONFORM TO JOB SPECIAL PROVISION "PLASTIC PIPE" AND SECTION 606 OF THE STANDARD SPECIFICIATIONS FOR HIGHWAY CONSTRUCTION (CURRENT EDITION).
2. PLASTIC PIPE CULVERT DESIGN SHALL CONFORM TO AASHTO LRFD BRIDGE DESIGN SPECIFICATIONS, FIFTH EDITION (2010) WITH 2010 INTERIMS.
3. THE MAXIMUM ALLOWABLE TRENCH WIDTH SHALL BE THE MINIMUM WIDTH PLUS A SUFFICIENT WIDTH TO ENSURE WORKING ROOM TO PROPERLY AND SAFELY PLACE AND COMPACT HAUNCHING AND OTHER BACKFILL MATERIAL.
4. IMPERVIOUS MATERIAL SHOULD BE PLACED AS DIRECTED BY THE ENGINEER AT THE ENDS OF THE CULVERT TO PREVENT LOSS OF STRUCTURAL BEDDING WHEN PERVIOUS MATERIAL IS USED FOR STRUCTURAL BEDDING AND/OR BACKFILL.
5. WHEN DIRECTED BY THE ENGINEER, UNSUITABLE MATERIAL THAT IS ENCOUNTERED AT THE BOTTOM OF THE EXCAVATED TRENCH (BELOW THE AREA IDENTIFIED AS "STRUCTURAL BEDDING" ABOVE) WILL BE EXCAVATED AND REPLACED WITH SELECTED PIPE BEDDING. THE QUANTITY OF MATERIAL REQUIRED TO BACKFILL THE UNDERCUT AREA UP TO THE SELECTED PIPE BEDDING PAY LIMIT DESIGNATED ABOVE WILL BE MEASURED AND PAID FOR AS "SELECTED PIPE BEDDING."
6. WHEN THE EXISTING MATERIAL EXCAVATED FOR THE PIPE TRENCH IS DETERMINED BY THE ENGINEER TO BE UNSUITABLE FOR BACKFILLING THE PIPE (ABOVE THE AREA IDENTIFIED ABOVE AS STRUCTURAL BACKFILL), BORROW MATERIAL OR MATERIAL FROM THE ROADWAY EXCAVATION WILL BE USED TO BACKFILL THE PIPE. IF SUITABLE MATERIAL IS NOT AVAILABLE, THE ENGINEER MAY AUTHORIZE THE USE OF "SELECTED PIPE BACKFILL."
7. FOR PIPE TYPES THAT ARE NOT SMOOTH ON THE OUTSIDE (CORRUGATED OR PROFILE WALLS), BACKFILL GRADATIONS SHOULD BE SELECTED THAT WILL PERMIT THE FILLING OF THE CORRUGATION OR PROFILE VALLEY.
8. HIGH DENSITY POLYETHYLENE PIPES OF DIAMETERS OTHER THAN SHOWN WILL NOT BE ALLOWED.
9. JOINTS FOR HDPE PIPE SHALL MEET THE REQUIREMENTS FOR SOIL TIGHTNESS AS SPECIFIED IN AASHTO SECTION 26.4.2.4 AND 30.4.2 "AASHTO LRFD BRIDGE CONSTRUCTION SPECIFICATIONS." JOINTS SHALL BE INSTALLED PER MANUFACTURER'S RECOMMENDATIONS.

- LEGEND -

H = FILL HEIGHT (FT.)
Ø = OUTSIDE DIAMETER OF PIPE
MAX. = MAXIMUM
MIN. = MINIMUM

= STRUCTURAL BACKFILL MATERIAL

= UNDISTURBED SOIL

DATE	REVISION	DATE FILMED
2-27-14	REVISED GENERAL NOTE 1.	
12-15-11	REVISED GENERAL NOTES & MINIMUM COVER NOTE	
11-17-10	ISSUED	

ARKANSAS STATE HIGHWAY COMMISSION

PLASTIC PIPE CULVERT (HIGH DENSITY POLYETHYLENE)

STANDARD DRAWING PCP-1

INSTALLATION TYPE	•• MATERIAL REQUIREMENTS FOR STRUCTURAL BACKFILL AND STRUCTURAL BEDDING
TYPE 2	•SELECTED MATERIALS (CLASS SM-1, SM-2, OR SM-4)

• AGGREGATE BASE COURSE (CLASS 4, 5, 6, OR 7) MAY BE USED IN LIEU OF SELECTED MATERIAL.

SM3 WILL NOT BE ALLOWED.

•• STRUCTURAL BEDDING MATERIAL SHALL HAVE A MAXIMUM PARTICLE SIZE OF 1INCH. STRUCTURAL BACKFILL MATERIAL SHALL BE FREE OF ORGANIC MATERIAL, STONES LARGER THAN 1.50 INCH IN GREATEST DIMENSION, OR FROZEN LUMPS.

STRUCTURAL BACKFILL AND STRUCTURAL BEDDING MATERIAL WILL NOT BE PAID FOR SEPARATELY, BUT COMPENSATION WILL BE CONSIDERED TO BE INCLUDED IN THE PRICE BID PER LINEAR FOOT OF PVC PIPE.

MINIMUM TRENCH WIDTH BASED ON FILL HEIGHT "H"

PIPE DIAMETER	TRENCH WIDTH (FEET) "H" < 10'-0"	TRENCH WIDTH (FEET) "H" >OR= 10'-0"
18"	4'-6"	4'-6"
24"	5'-0"	6'-0"
30"	5'-6"	7'-6"
36"	6'-0"	9'-0"

MULTIPLE INSTALLATION OF PVC PIPES

PIPE DIAMETER	CLEAR DISTANCE BETWEEN PIPES
18"	1'-6"
24"	2'-0"
30"	2'-6"
36"	3'-0"

MAXIMUM FILL HEIGHT BASED ON STRUCTURAL BACKFILL

PIPE DIAMETER	"H"
18"	45'-0"
24"	45'-0"
30"	40'-0"
36"	40'-0"

① NOTE:
12" MIN. (18" - 36" DIAMETERS)
MINIMUM COVER VALUE, "H" SHALL INCLUDE A MINIMUM 12" OF PAVEMENT AND/OR BASE.

MINIMUM COVER FOR CONSTRUCTION LOADS

PIPE DIAMETER	② MIN. COVER (FEET) FOR INDICATED CONSTRUCTION LOADS 18.0-50.0 (KIPS)	50.0-75.0 (KIPS)	75.0-110.0 (KIPS)	110.0-175.0 (KIPS)
18" THRU 36"	2'-0"	2'-6"	3'-0"	3'-0"

②MINIMUM COVER SHALL BE MEASURED FROM TOP OF PIPE TO TOP OF THE MAINTAINED CONSTRUCTION ROADWAY SURFACE. THE SURFACE SHALL BE MAINTAINED.

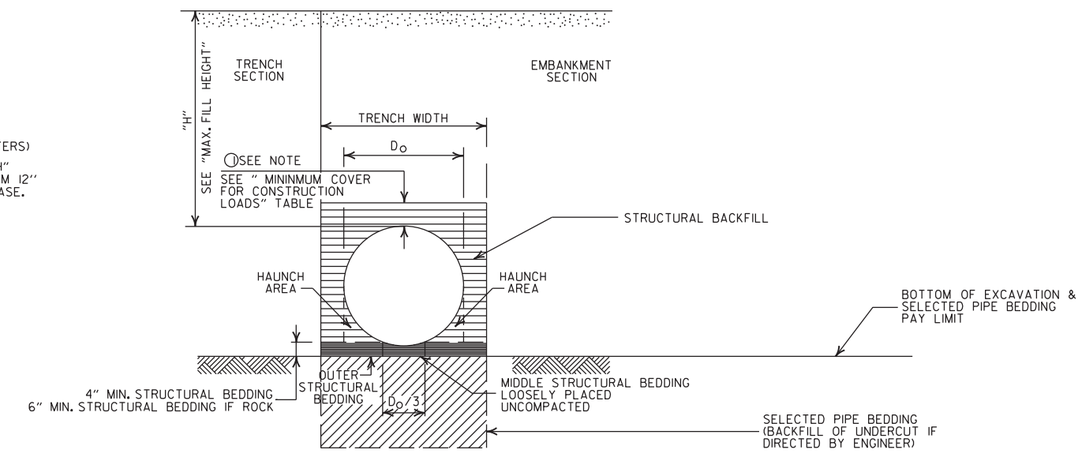

TYPE 2 EMBANKMENT AND TRENCH INSTALLATIONS

1. STRUCTURAL BACKFILL, EMBANKMENT, AND OUTER STRUCTURAL BEDDING MATERIAL SHALL BE COMPACTED TO 95% OF THE MAXIMUM DENSITY ACCORDING TO THE TYPE OR CLASS OF MATERIAL USED.

CONSTRUCTION SEQUENCE

1. PLACE STRUCTURAL BEDDING MATERIAL TO GRADE. DO NOT COMPACT.
2. INSTALL PIPE TO GRADE.
3. COMPACT STRUCTURAL BEDDING OUTSIDE THE MIDDLE THIRD OF THE PIPE.
4. THE STRUCTURAL BACKFILL SHALL BE PLACED AND COMPACTED IN LAYERS NOT EXCEEDING 8". THE LAYERS SHALL BE BROUGHT UP EVENLY AND SIMULTANEOUSLY TO THE ELEVATION OF THE MINIMUM COVER.
5. PIPE INSTALLATION MAY REQUIRE THE USE OF RESTRAINTS, WEIGHTING OR OTHER APPROVED METHODS IN ORDER TO HELP MAINTAIN GRADE AND ALIGNMENT.

GENERAL NOTES

1. PIPE SHALL CONFORM TO ASTM F949, CELL CLASS 12454. INSTALLATION SHALL CONFORM TO JOB SPECIAL PROVISION "PLASTIC PIPE" AND SECTION 606 OF THE STANDARD SPECIFICATIONS FOR HIGHWAY CONSTRUCTION (CURRENT EDITION).
2. PLASTIC PIPE CULVERT DESIGN SHALL CONFORM TO AASHTO LRFD BRIDGE DESIGN SPECIFICATIONS, FIFTH EDITION (2010) WITH 2010 INTERIMS.
3. THE MAXIMUM ALLOWABLE TRENCH WIDTH SHALL BE THE MINIMUM WIDTH PLUS A SUFFICIENT WIDTH TO ENSURE WORKING ROOM TO PROPERLY AND SAFELY PLACE AND COMPACT HAUNCHING AND OTHER BACKFILL MATERIAL.
4. IMPERVIOUS MATERIAL SHOULD BE PLACED AS DIRECTED BY THE ENGINEER AT THE ENDS OF THE CULVERT TO PREVENT LOSS OF STRUCTURAL BEDDING WHEN PERVIOUS MATERIAL IS USED FOR STRUCTURAL BEDDING AND/OR BACKFILL.
5. WHEN DIRECTED BY THE ENGINEER, UNSUITABLE MATERIAL THAT IS ENCOUNTERED AT THE BOTTOM OF THE EXCAVATED TRENCH (BELOW THE AREA IDENTIFIED AS "STRUCTURAL BEDDING" ABOVE) WILL BE EXCAVATED AND REPLACED WITH SELECTED PIPE BEDDING. THE QUANTITY OF MATERIAL REQUIRED TO BACKFILL THE UNDERCUT AREA UP TO THE SELECTED PIPE BEDDING PAY LIMIT DESIGNATED ABOVE WILL BE MEASURED AND PAID FOR AS "SELECTED PIPE BEDDING."
6. WHEN THE EXISTING MATERIAL EXCAVATED FOR THE PIPE TRENCH IS DETERMINED BY THE ENGINEER TO BE UNSUITABLE FOR BACKFILLING THE PIPE (ABOVE THE AREA IDENTIFIED ABOVE AS STRUCTURAL BACKFILL), BORROW MATERIAL OR MATERIAL FROM THE ROADWAY EXCAVATION WILL BE USED TO BACKFILL THE PIPE. IF SUITABLE MATERIAL IS NOT AVAILABLE, THE ENGINEER MAY AUTHORIZE THE USE OF "SELECTED PIPE BACKFILL."
7. FOR PIPE TYPES THAT ARE NOT SMOOTH ON THE OUTSIDE (CORRUGATED OR PROFILE WALLS), BACKFILL GRADATIONS SHOULD BE SELECTED THAT WILL PERMIT THE FILLING OF THE CORRUGATION OR PROFILE VALLEY.
8. PVC PIPES OF DIAMETERS OTHER THAN SHOWN WILL NOT BE ALLOWED.
9. JOINTS FOR PVC PIPE SHALL MEET THE REQUIREMENTS FOR SOIL TIGHTNESS AS SPECIFIED IN AASHTO SECTION 26.4.2.4 AND 30.4.2 "AASHTO LRFD BRIDGE CONSTRUCTION SPECIFICATIONS." JOINTS SHALL BE INSTALLED PER MANUFACTURER'S RECOMMENDATIONS.

- LEGEND -

H = FILL HEIGHT (FT.)
D_O = OUTSIDE DIAMETER OF PIPE
MAX. = MAXIMUM
MIN. = MINIMUM

= STRUCTURAL BACKFILL MATERIAL
= UNDISTURBED SOIL

DATE	REVISION	DATE FILMED
2-27-14	REVISED GENERAL NOTE 1.	
12-15-11	REV GENERAL NOTES & MINIMUM COVER NOTE; DELETED SM3 MATERIAL	
11-17-10	ISSUED	

ARKANSAS STATE HIGHWAY COMMISSION

PLASTIC PIPE CULVERT (PVC F949)

STANDARD DRAWING PCP-2

INSTALLATION TYPE	**MATERIAL REQUIREMENTS FOR STRUCTURAL BACKFILL AND STRUCTURAL BEDDING
TYPE 1	AGGREGATE BASE COURSE (CLASS 4, 5, 6, OR 7)
TYPE 2	*SELECTED MATERIALS (CLASS SM-1, SM-2 OR SM-4) OR TYPE 1 INSTALLATION MATERIAL

*SM3 WILL NOT BE ALLOWED.

** STRUCTURAL BEDDING MATERIAL SHALL HAVE A MAXIMUM PARTICLE SIZE OF 1INCH. STRUCTURAL BACKFILL MATERIAL SHALL BE FREE OF ORGANIC MATERIAL, STONES LARGER THAN 1.50 INCH IN GREATEST DIMENSION, OR FROZEN LUMPS.

STRUCTURAL BACKFILL AND STRUCTURAL BEDDING MATERIAL WILL NOT BE PAID FOR SEPARATELY, BUT COMPENSATION WILL BE CONSIDERED TO BE INCLUDED IN THE PRICE BID PER LINEAR FOOT OF POLYPROPYLENE PIPE.

MINIMUM TRENCH WIDTH BASED ON FILL HEIGHT "H"

PIPE DIAMETER	TRENCH WIDTH (FEET) "H" < 10'-0"	"H" >OR= 10'-0"
18"	4'-6"	4'-6"
24"	5'-0"	6'-0"
30"	5'-6"	7'-6"
36"	6'-0"	9'-0"
42"	7'-0"	10'-6"
48"	8'-0"	12'-0"
60"	10'-0"	15'-0"

(1)NOTE:
12" MIN. (18" - 42" DIAMETERS)
24" MIN. (60" DIAMETER)

MINIMUM COVER VALUES, "H" SHALL INCLUDE A MINIMUM 12" OF PAVEMENT AND/OR BASE.

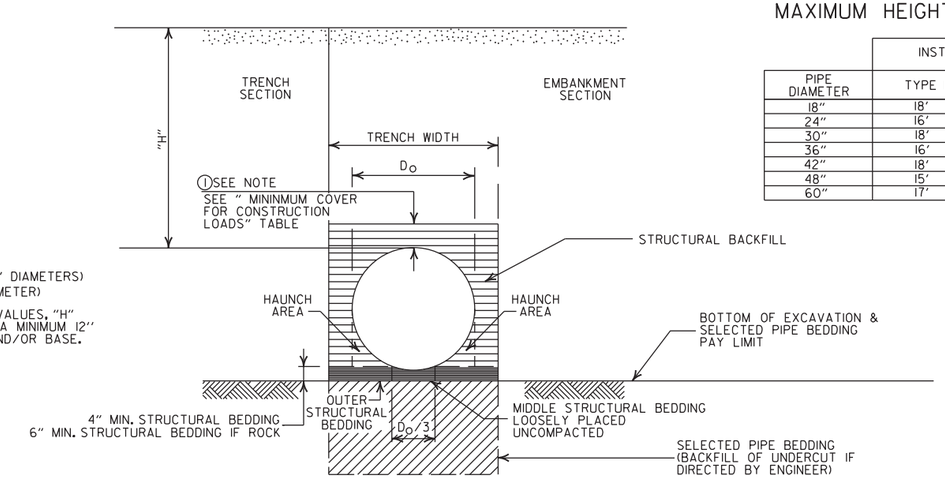

MAXIMUM HEIGHT OF FILL "H"

PIPE DIAMETER	INSTALLATION TYPE TYPE 1	TYPE 2
18"	18'	14'
24"	16'	12'
30"	18'	14'
36"	16'	12'
42"	18'	13'
48"	15'	11'
60"	17'	12'

MULTIPLE INSTALLATION OF POLYPROPYLENE PIPES

PIPE DIAMETER	CLEAR DISTANCE BETWEEN PIPES
18"	1'-6"
24"	2'-0"
30"	2'-6"
36"	3'-0"
42"	3'-6"
48"	4'-0"
60"	5'-0"

MINIMUM COVER FOR CONSTRUCTION LOADS

PIPE DIAMETER	(2) MIN. COVER (FEET) FOR INDICATED CONSTRUCTION LOADS 18.0-50.0 (KIPS)	50.0-75.0 (KIPS)	75.0-110.0 (KIPS)	110.0-150.0 (KIPS)
36" OR LESS	2'-0"	2'-6"	3'-0"	3'-0"
42" OR GREATER	3'-0"	3'-0"	3'-6"	4'-0"

(2)MINIMUM COVER SHALL BE MEASURED FROM TOP OF PIPE TO TOP OF THE MAINTAINED CONSTRUCTION ROADWAY SURFACE. THE SURFACE SHALL BE MAINTAINED.

EMBANKMENT AND TRENCH INSTALLATIONS

1. STRUCTURAL BACKFILL, EMBANKMENT, AND OUTER STRUCTURAL BEDDING MATERIAL SHALL BE COMPACTED TO 95% OF THE MAXIMUM DENSITY ACCORDING TO THE TYPE OR CLASS OF MATERIAL USED.

CONSTRUCTION SEQUENCE

1. PLACE STRUCTURAL BEDDING MATERIAL TO GRADE. DO NOT COMPACT.
2. INSTALL PIPE TO GRADE.
3. COMPACT STRUCTURAL BEDDING OUTSIDE THE MIDDLE THIRD OF THE PIPE.
4. THE STRUCTURAL BACKFILL SHALL BE PLACED AND COMPACTED IN LAYERS NOT EXCEEDING 8". THE LAYERS SHALL BE BROUGHT UP EVENLY AND SIMULTANEOUSLY TO THE ELEVATION OF THE MINIMUM COVER.
5. PIPE INSTALLATION MAY REQUIRE THE USE OF RESTRAINTS, WEIGHTING OR OTHER APPROVED METHODS IN ORDER TO HELP MAINTAIN GRADE AND ALIGNMENT.

GENERAL NOTES

1. PIPE SHALL CONFORM TO AASHTO M330, TYPE S. INSTALLATION SHALL CONFORM TO JOB SPECIAL PROVISION "PLASTIC PIPE" AND SECTION 606 OF THE STANDARD SPECIFICIATIONS FOR HIGHWAY CONSTRUCTION (CURRENT EDITION).
2. PLASTIC PIPE CULVERT DESIGN SHALL CONFORM TO AASHTO LRFD BRIDGE DESIGN SPECIFICATIONS, SIXTH EDITION (2012) WITH 2013 INTERIMS.
3. THE MAXIMUM ALLOWABLE TRENCH WIDTH SHALL BE THE MINIMUM WIDTH PLUS A SUFFICIENT WIDTH TO ENSURE WORKING ROOM TO PROPERLY AND SAFELY PLACE AND COMPACT HAUNCHING AND OTHER BACKFILL MATERIAL.
4. IMPERVIOUS MATERIAL SHOULD BE PLACED AS DIRECTED BY THE ENGINEER AT THE ENDS OF THE CULVERT TO PREVENT LOSS OF STRUCTURAL BEDDING WHEN PERVIOUS MATERIAL IS USED FOR STRUCTURAL BEDDING AND/OR BACKFILL.
5. WHEN DIRECTED BY THE ENGINEER, UNSUITABLE MATERIAL THAT IS ENCOUNTERED AT THE BOTTOM OF THE EXCAVATED TRENCH (BELOW THE AREA IDENTIFIED AS "STRUCTURAL BEDDING" ABOVE) WILL BE EXCAVATED AND REPLACED WITH SELECTED PIPE BEDDING. THE QUANTITY OF MATERIAL REQUIRED TO BACKFILL THE UNDERCUT AREA UP TO THE SELECTED PIPE BEDDING PAY LIMIT DESIGNATED ABOVE WILL BE MEASURED AND PAID FOR AS "SELECTED PIPE BEDDING."
6. WHEN THE EXISTING MATERIAL EXCAVATED FOR THE PIPE TRENCH IS DETERMINED BY THE ENGINEER TO BE UNSUITABLE FOR BACKFILLING THE PIPE (ABOVE THE AREA IDENTIFIED ABOVE AS STRUCTURAL BACKFILL), BORROW MATERIAL OR MATERIAL FROM THE ROADWAY EXCAVATION WILL BE USED TO BACKFILL THE PIPE. IF SUITABLE MATERIAL IS NOT AVAILABLE, THE ENGINEER MAY AUTHORIZE THE USE OF "SELECTED PIPE BACKFILL."
7. FOR PIPE TYPES THAT ARE NOT SMOOTH ON THE OUTSIDE (CORRUGATED OR PROFILE WALLS), BACKFILL GRADATIONS SHOULD BE SELECTED THAT WILL PERMIT THE FILLING OF THE CORRUGATION OR PROFILE VALLEY.
8. POLYPROPYLENE PIPES OF DIAMETERS OTHER THAN SHOWN WILL NOT BE ALLOWED.
9. JOINTS FOR POLYPROPYLENE PIPE SHALL MEET THE REQUIREMENTS FOR SOIL TIGHTNESS AS SPECIFIED IN SECTION 26.4.2.4 AND 30.4.2 OF THE AASHTO LRFD BRIDGE CONSTRUCTION SPECIFICATIONS 3RD EDITION (2010) WITH 2012 INTERIMS. JOINTS SHALL BE INSTALLED PER MANUFACTURER'S RECOMMENDATIONS.

- LEGEND -

H = FILL HEIGHT (FT.)
Do = OUTSIDE DIAMETER OF PIPE
MAX. = MAXIMUM
MIN. = MINIMUM

= STRUCTURAL BACKFILL MATERIAL
= UNDISTURBED SOIL

DATE	REVISION	DATE FILMED
02-27-20	REVISED	
11-07-19	ISSUED	

ARKANSAS STATE HIGHWAY COMMISSION

PLASTIC PIPE CULVERT (POLYPROPYLENE)

STANDARD DRAWING PCP-3

NOTES:

1. REFER TO THE STRIPING DETAILS FOR PAVEMENT MARKING LINE WIDTHS.
2. THIS DRAWING SHALL BE USED IN CONJUNCTION WITH THE LATEST REVISED ADDITION OF THE "MANUAL ON UNIFORM TRAFFIC CONTROL DEVICES."
3. RAISED PAVEMENT MARKERS SHALL BE PLACED ON AN 80 FEET SPACING UNLESS OTHERWISE SHOWN IN THE PLANS.

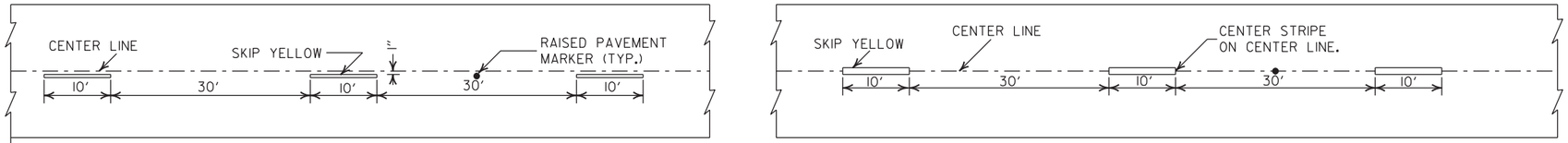

CONCRETE PAVEMENT

ASPHALT PAVEMENT

BROKEN LINE STRIPING

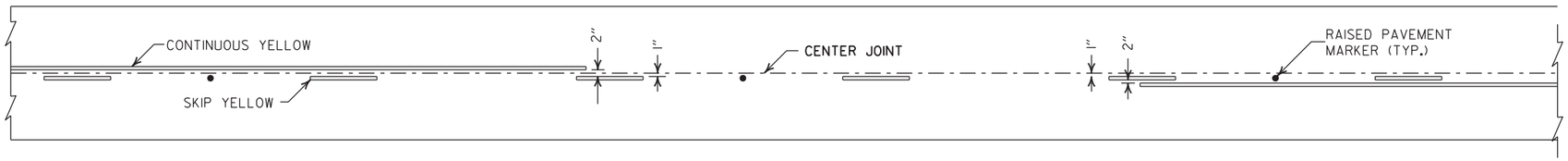

SOLID LINE STRIPING ON CONCRETE PAVEMENT

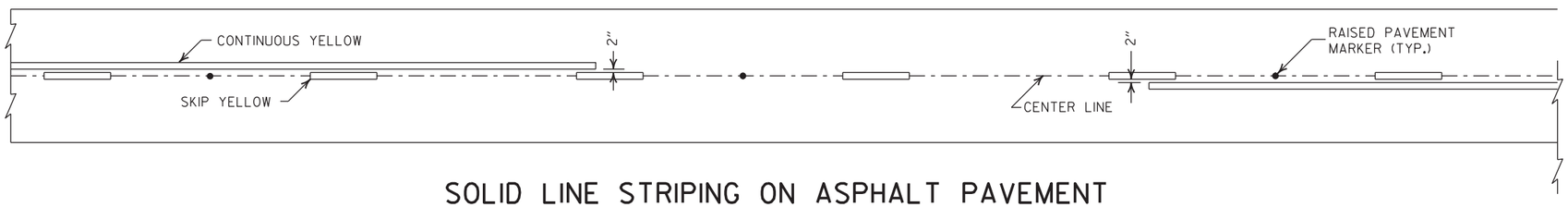

SOLID LINE STRIPING ON ASPHALT PAVEMENT

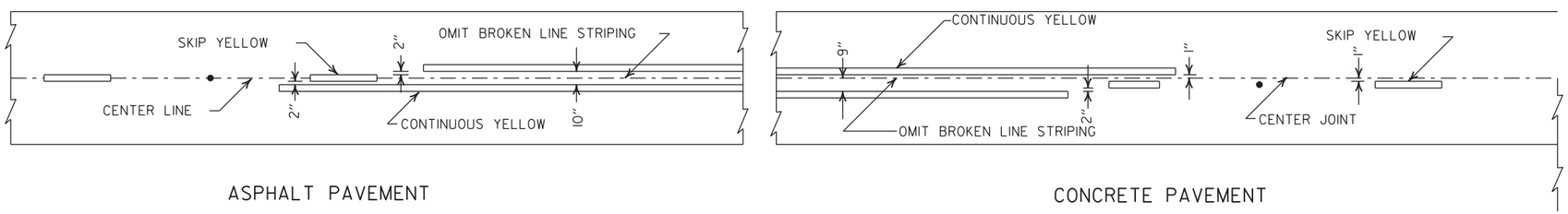

ASPHALT PAVEMENT

CONCRETE PAVEMENT

STRIPING AT ADJACENT NO PASSING LANES

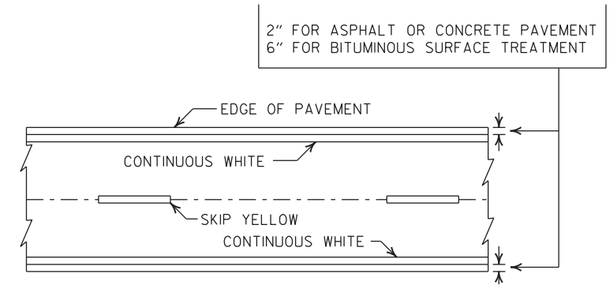

PAVEMENT EDGE LINE MARKING

NOTE:
THE RED LENS OF THE TYPE II R.P.M. SHALL FACE THE INCORRECT TRAFFIC MOVEMENT.

NOTE:
DIMENSIONS SHOWN FOR RAISED PAVEMENT MARKERS ARE TYPICAL. THE CONTRACTOR MAY SUBSTITUTE SIMILAR MARKERS WITH THE APPROVAL OF THE ENGINEER. REQUESTING APPROVAL FOR SIMILAR MARKERS MAY BE MADE BY REFERRING TO THE ARDOT QUALIFIED PRODUCTS LIST.

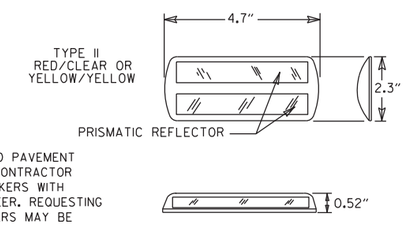

DETAIL OF STANDARD RAISED PAVEMENT MARKERS

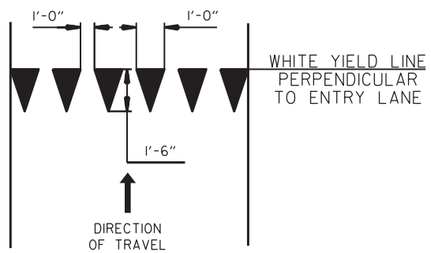

YIELD LINE DETAIL

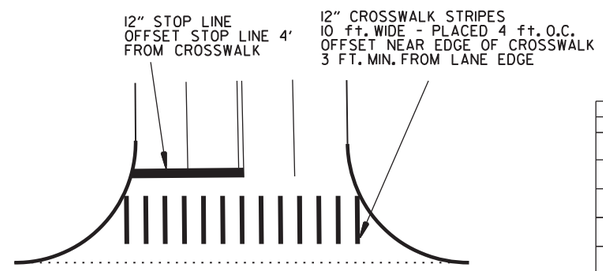

CROSSWALK AND STOP LINE DETAILS

DATE	REVISION	FILMED
2-27-20	REVISED STOP LINE DETAILS	
6-1-17	ADDED YIELD LINE DETAIL	
5-12-16	REVISED LINE WIDTHS, SPACING, & NOTES	
9-12-13	REVISED DETAIL OF STANDARD RAISED PAVEMENT MARKERS	
11-17-10	REVISED GENERAL NOTES & REMOVED PLOWABLE PVMT MRKRS	
11-18-04	REVISED NOTE 2 & GENERAL NOTES	
8-22-02	ADDED CROSSWALK & STOPBAR DTLS.	
7-02-98	ADDED DETAILS OF STD. RAISED PAV'T. MARKERS	
4-26-96	REV. NOTES 3&4; ADDED R.P.M.	
9-30-80	DRAWN	1-9-30-80

ARKANSAS STATE HIGHWAY COMMISSION

PAVEMENT MARKING DETAILS

STANDARD DRAWING PM-1

NOTE:

1. UNLESS OTHERWISE SPECIFIED ON THE PLANS, THE UNDERDRAIN COVER SHALL BE THOROUGHLY COMPACTED EARTH AND SHALL BE SUBSIDIARY TO PIPE UNDERDRAIN.

2. GRANULAR MATERIAL SHALL BE WRAPPED WITH GEOTEXTILE FABRIC. LAP FABRIC 12" OR THE WIDTH OF THE TRENCH AT THE TOP.

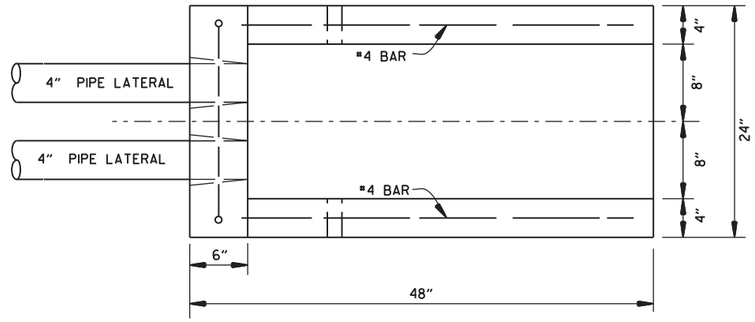

PLAN VIEW

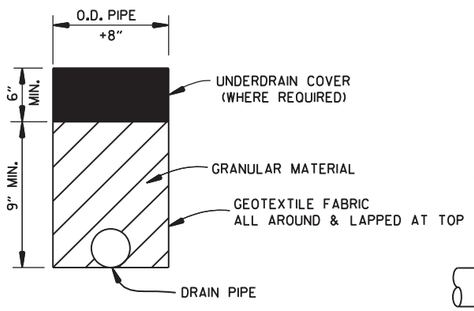

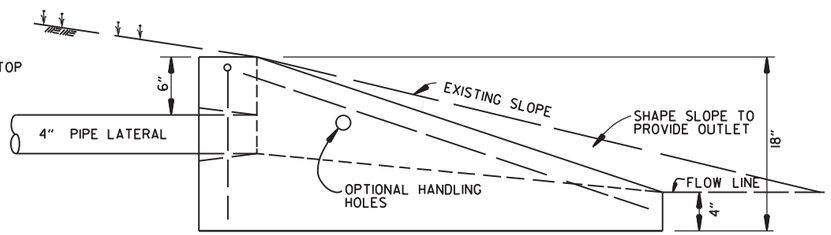

SIDE VIEW

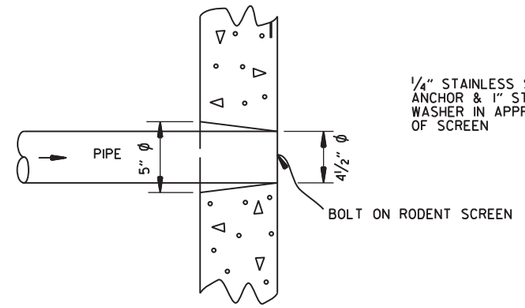

DETAIL OF HOLE
FOR 4" PIPE

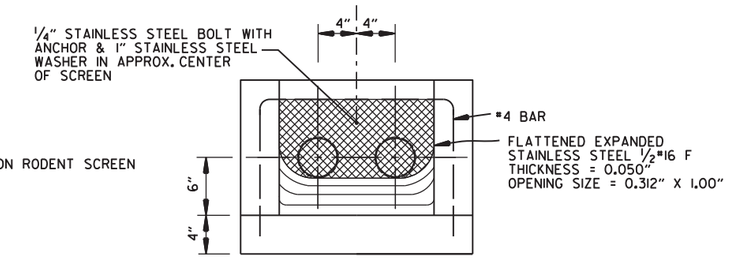

FRONT VIEW
(DETAIL OF RODENT SCREEN)

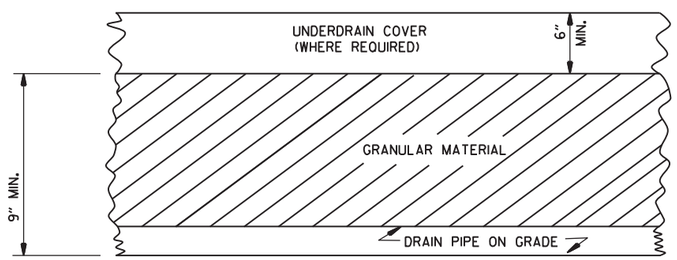

DETAILS OF PIPE UNDERDRAIN

UNDERDRAIN OUTLET PROTECTORS

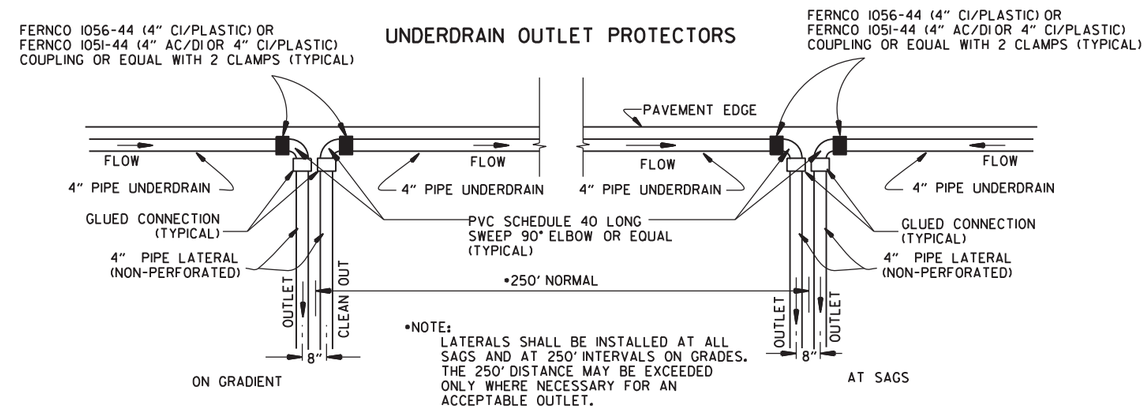

DETAIL OF PIPE UNDERDRAIN LATERALS WHEN PLACED ALONG PAVEMENT EDGE

NOTE: PVC PIPE FOR LATERALS SHALL MEET THE REQUIREMENTS OF ASTM D 1785 (LATEST REVISION) FOR SCHEDULE 40 PIPE.

NOTES FOR PIPE UNDERDRAINS

1. GEOTEXTILE FABRIC SHALL MEET THE REQUIREMENTS OF SECTION 625 FOR TYPE 1. PAYMENT FOR GEOTEXTILE FABRIC AND GRANULAR FILTER MATERIAL SHALL BE INCLUDED IN THE PRICE BID PER LIN. FT. FOR "4" PIPE UNDERDRAINS" IN ACCORDANCE WITH SECTION 611 OF THE STANDARD SPECIFICATIONS.

2. 4" NON-PERFORATED SCHEDULE 40 PVC PIPE LATERALS WITH OUTLET PROTECTORS SHALL BE INSTALLED AS SHOWN HEREON. LATERALS WILL BE MEASURED AND PAID FOR AS "4" PIPE UNDERDRAINS." UNDERDRAIN OUTLET PROTECTORS WILL BE MEASURED AND PAID FOR BY THE UNIT IN ACCORDANCE WITH SECTION 611 OF THE STANDARD SPECIFICATIONS.

3. EXISTING 4" PIPE UNDERDRAINS MAY BE CONNECTED TO PROPOSED DROP INLETS OR EXTENDED WHERE DIRECTED BY THE ENGINEER. PAYMENT FOR CONNECTING TO DROP INLETS SHALL BE CONSIDERED INCLUDED IN THE PRICE BID FOR "4" PIPE UNDERDRAINS."

4. THE LOCATION OF ALL LATERALS SHALL BE MARKED WITH 4" X 12" PERMANENT PAVEMENT MARKING TAPE (TYPE III WHITE) AT THE OUTSIDE EDGE OF THE SHOULDER, PLACED TRANSVERSE TO TRAFFIC. PAYMENT FOR THIS WORK SHALL BE INCLUDED IN THE PRICE BID FOR THE VARIOUS CONTRACT ITEMS.

5. PAYMENT FOR THE RODENT SCREEN SHALL BE INCLUDED IN THE PRICE BID PER EACH FOR "UNDERDRAIN OUTLET PROTECTORS."

6. ANY EXISTING UNDERDRAINS THAT INTERFERE WITH INSTALLATION OF THE NEW UNDERDRAIN SYSTEM SHALL BE REMOVED AND DISPOSED OF AS DIRECTED BY THE ENGINEER. PAYMENT WILL BE CONSIDERED INCLUDED IN THE PRICE BID FOR THE VARIOUS CONTRACT ITEMS. EXISTING UNDERDRAIN OUTLET PROTECTORS SHALL BE REMOVED UNDER THE ITEM "REMOVAL AND DISPOSAL OF UNDERDRAIN OUTLET PROTECTORS."

7. AT LOCATIONS WHERE A SINGLE LATERAL IS USED THE CONTRACTOR SHALL HAVE THE FOLLOWING OPTIONS: 1. INSTALL OUTLET PROTECTOR AS SHOWN ON STANDARD DRAWING PU-1 AND GROUT THE UNUSED HOLE OR 2. INSTALL AN OUTLET PROTECTOR WITH A SINGLE HOLE.

DATE	REVISION	DATE FILMED
12-8-16	ADDED NOTES FOR PIPE UNDERDRAINS, REVISED RODENT SCREEN DETAIL AND NOTES, REMOVED NOTE 1 FOR GRANULAR MATERIAL, ADDED NOTE FOR GEOTEXTILE FABRIC	
4-10-03	REVISED NOTE 3	
1-12-00	REVISED DETAIL OF UNDERDRAIN LATERALS	
11-18-98	REVISED NOTE	
10-18-96	REVISED MIN. DEPTH & GEOTEXTILE FABRIC	
4-26-96	ADDED LATERAL NOTE; 5 1/2" TO 5"	
11-22-95	REVISED LATERALS	
7-20-95	REVISED LATERALS & ADDED NOTE	
11- 3-94	REVISED FOR DUAL LATERALS	11- 3-94
10- 1-92	SUBSTITUTED GEOTEXTILE	10- 1-92
8-15-91	ADDED POLYEDTHYLENE PIPE	8-15-91
11- 8-90	DELETED ALTERNATE NOTE	11- 8-90
1-25-90	ADDED 4" SNAP ADAPTER	1-25-90
11-30-89	DEL. (SUBGRADE); ADDED (WHERE REQUIRED)	11-30-89
7-15-88	ISSUED P.L.M.	647-7-15-88

ARKANSAS STATE HIGHWAY COMMISSION

DETAILS OF PIPE UNDERDRAIN

STANDARD DRAWING PU-1

STEEL FABRICATION: REINFORCING STEEL FABRICATION SHALL CONFORM TO THE DIMENSIONS LISTED IN THE TABLE BELOW:

BAR SIZE	PIN DIAMETER	HOOK EXTENSION "K"
3	2¼"	4"
4	3 "	4½"
5	3¾"	5"
6	4½"	6"
7	5¼"	7"
8	6"	8"

IF THE OVERALL HEIGHT OF THE HOOK (SEE DIAGRAM BELOW) FOR A "b", "b1", "b2" or "b3" BENT BAR IS GREATER THAN THE CORRESPONDING TOP OR BOTTOM SLAB THICKNESS, LESS 2¾ INCHES, EACH BENT BAR SHALL BE REPLACED WITH ONE HOOKED BAR AND ONE STRAIGHT BAR, USING LENGTHS AS SHOWN IN THE TABLE BELOW. THE TWO BARS SHALL BE THE SAME DIAMETER AS, AND PLACED AT THE SAME SPACING AS, THE "b", "b1", "b2" OR "b3" BENT BARS THEY REPLACE.

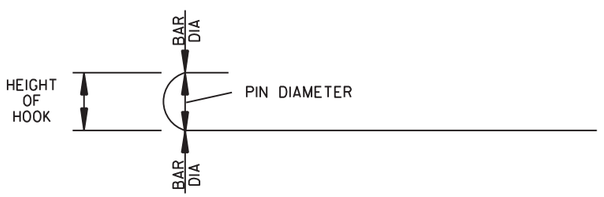

NOTE: DIMENSIONS OF BARS ARE MEASURED OUT TO OUT OF BARS.

OVERALL HEIGHT OF HOOKED BAR DIAGRAM

THE HOOKED BARS SHALL BE PLACED IN THE BOTTOM OF THE TOP SLAB AND THE TOP OF THE BOTTOM SLAB. THE STRAIGHT BARS SHALL BE PLACED IN THE TOP OF THE TOP SLAB AND THE BOTTOM OF THE BOTTOM SLAB. SEE TABLE BELOW FOR LENGTHS OF REPLACEMENT HOOKED AND STRAIGHT BARS.

FOR SKEWED CULVERTS, THE REPLACEMENT STRAIGHT BAR MAY HAVE TO BE CUT IN FIELD TO FIT.

REPLACEMENT BAR LENGTHS TABLE

BAR SIZE: "b", "b1", "b2" OR "b3"	LENGTH OF HOOKED BAR	LENGTH OF STRAIGHT BAR
#4	L + 1' - 0"	SEE "c" BAR LENGTH
#5	L + 1' - 2"	SEE "c" BAR LENGTH
#6	L + 1' - 4"	SEE "c" BAR LENGTH
#7	L + 1' - 8"	SEE "c" BAR LENGTH
#8	L + 1' - 10"	SEE "c" BAR LENGTH
#9	L + 2' - 6"	SEE "c" BAR LENGTH

L = "OW" - 3 INCHES

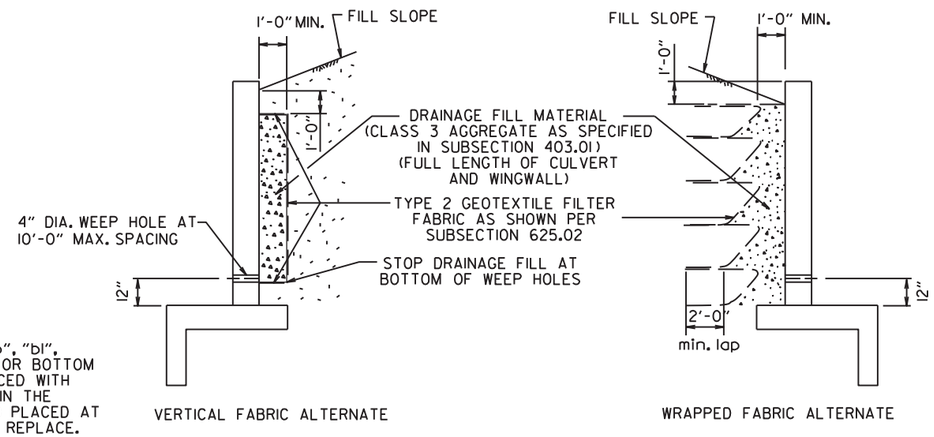

WINGWALL & CULVERT DRAINAGE DETAIL

REINFORCED CONCRETE BOX CULVERT GENERAL NOTES

CONCRETE SHALL BE CLASS S WITH A MINIMUM 28 DAY COMPRESSIVE STRENGTH OF 3500 PSI.

REINFORCING STEEL SHALL BE AASHTO M 31 OR M 53, GRADE 60.

CONSTRUCTION AND MATERIALS FOR WINGWALL & CULVERT DRAINAGE, INCLUDING WEEP HOLES AND GRANULAR MATERIAL, SHALL BE SUBSIDIARY TO THE BID ITEM, "CLASS S CONCRETE".

MEMBRANE WATERPROOFING SHALL CONFORM TO THE REQUIREMENTS OF SECTION 815 OF THE STANDARD SPECIFICATIONS.

MEMBRANE WATERPROOFING SHALL BE APPLIED TO ALL CONSTRUCTION JOINTS IN THE TOP SLAB AND THE SIDEWALLS OF R.C. BOX CULVERTS AS DIRECTED BY THE ENGINEER. NO PAYMENT SHALL BE MADE FOR THIS ITEM, BUT PAYMENT WILL BE CONSIDERED TO BE INCLUDED IN THE VARIOUS ITEMS BID FOR THE R.C. BOX CULVERT.

REINFORCING STEEL TOLERANCES: THE TOLERANCES FOR REINFORCING STEEL SHALL MEET THOSE LISTED IN "MANUAL OF STANDARD PRACTICE" PUBLISHED BY CONCRETE REINFORCING STEEL INSTITUTE (CRSI) EXCEPT THAT THE TOLERANCE FOR TRUSS BARS SUCH AS FIGURE 3 ON PAGE 7-4 OF THE CRSI MANUAL SHALL BE MINUS ZERO TO PLUS ½ INCH.

WEEP HOLES IN BOX CULVERT WALLS SHALL HAVE A MAXIMUM HORIZONTAL SPACING OF 10'-0" AND SHALL BE SPACED TO CLEAR ALL REINFORCING STEEL. THE DRAIN OPENING SHALL BE 4" DIAMETER AND SHALL BE PLACED 12" ABOVE THE TOP OF THE BOTTOM SLAB.

WEEP HOLES IN WINGWALLS SHALL HAVE A MAXIMUM HORIZONTAL SPACING OF 10'-0" AND SHALL BE SPACED TO CLEAR ALL REINFORCING STEEL. THERE SHALL BE A MINIMUM OF TWO (2) WEEP HOLES IN EACH WINGWALL. THE DRAIN OPENING SHALL BE 4" DIAMETER AND SHALL BE PLACED 12" ABOVE THE TOP OF THE WINGWALL FOOTING.

THE REQUIREMENTS SHOWN ON THIS DRAWING SHALL SUPERCEDE THE CORRESPONDING REQUIREMENTS ON ALL REINFORCED CONCRETE BOX CULVERT STANDARD DRAWINGS.

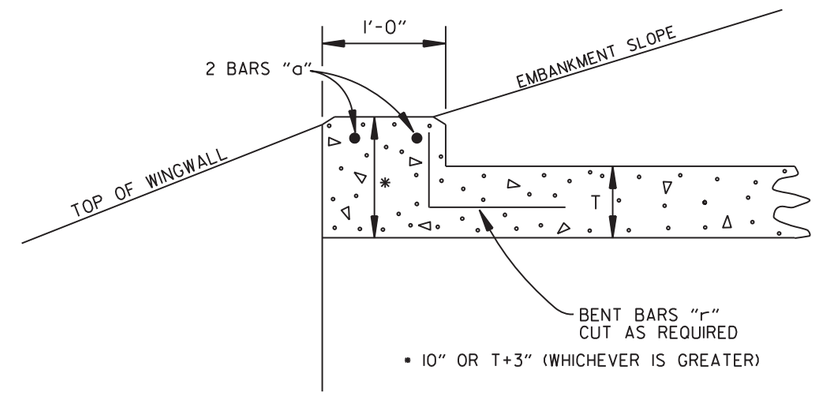

NOTE: FOR ALL SKEWED R.C. BOX CULVERTS THE LENGTH "K" OF THE MODIFIED HEADWALL SHALL BE EQUAL TO THE ROADWAY LENGTH "RL". THE ENDS OF THE HEADWALL SHALL BE CONSTRUCTED PARALLEL TO THE SKEW ANGLE OF THE BOX CULVERT.

R.C. BOX CULVERT HEADWALL MODIFICATIONS

DATE	REVISION	DATE FILMED
7/26/12	REV. DRAINAGE FILL MATERIAL & DETAIL	
12/15/11	REQUIRE WEEP HOLES IN BOX CULVERT WALLS	
5-25-06	REV. GEN. NOTES AND DETAILS FOR WEEP HOLES; BAR DIAGRAM	
11-16-01	ADDED WINGWALL DRAINAGE DETAIL/EDITED GEN. NOTES	
10-18-96	REV. ASTM REF. TO AASHTO & ADDED BAR DIAGRAM	
10-12-95	MOVED SOLID SODDING DETAIL TO RCB-2	
6-2-94	ADDED SOLID SODDING PLAN DETAIL	
8-5-93	REVISED PIN DIAMETER TO SPECS.	
8-15-91	DRAWN AND ISSUED	

ARKANSAS STATE HIGHWAY COMMISSION

REINFORCED CONCRETE BOX CULVERT DETAILS

STANDARD DRAWING RCB-1

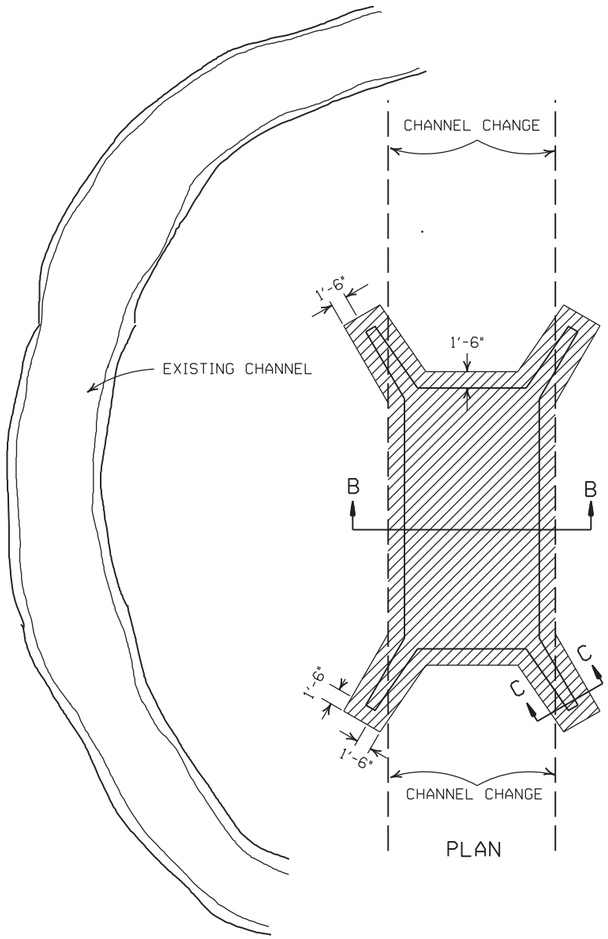

PLAN

SOLID SODDING

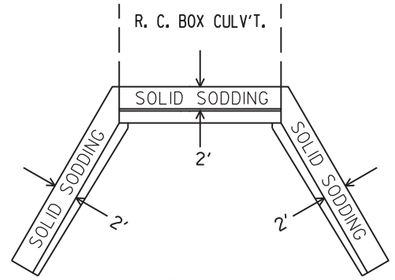

PLAN

PARTIAL SECTION SHOWING SOLID SODDING AT HEADWALLS AND WING WALLS

NOTE: LENGTH MEASURED ALONG THE CENTER OF 2' STRIP OF SOLID SODDING.

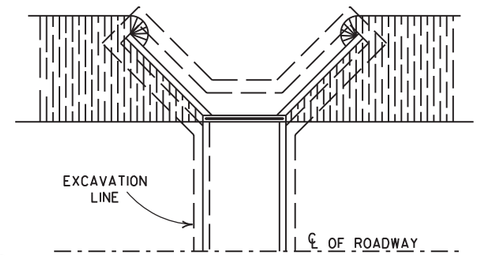

PLAN

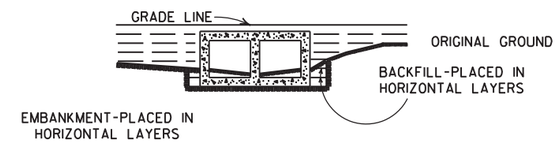

LONGITUDINAL SECTION

BACKFILL DETAILS FOR BOX CULVERT

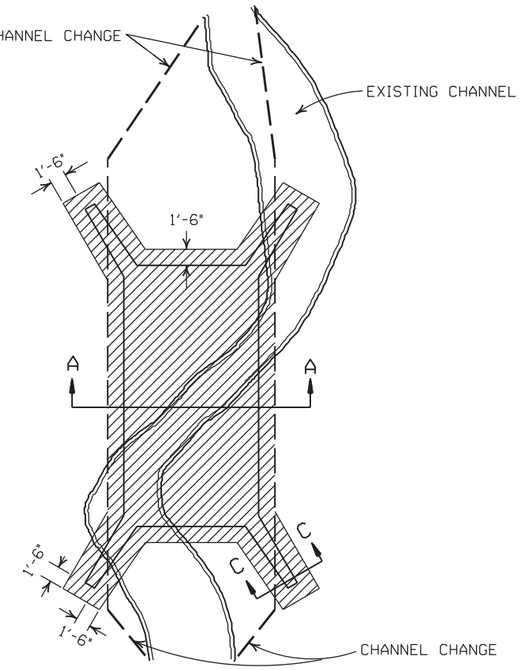

PLAN

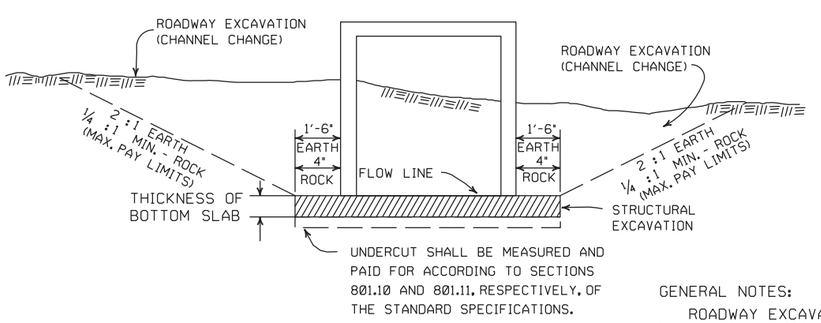

SECTION B-B

DETAILS FOR NEW CHANNELS

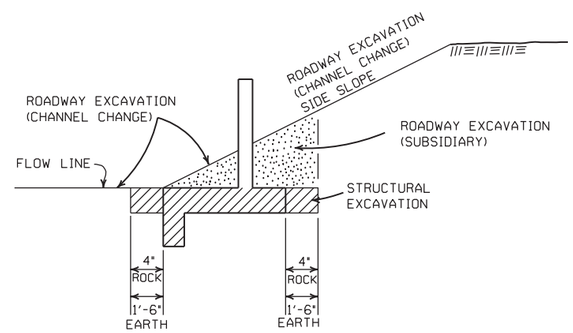

SECTION C-C

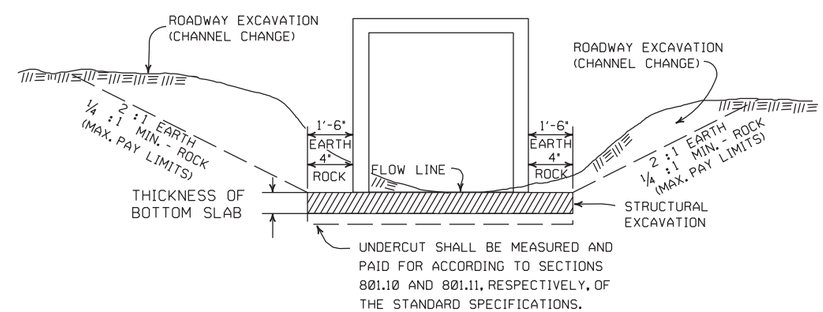

SECTION A-A

DETAILS THROUGH EXISTING CHANNELS

GENERAL NOTES:

ROADWAY EXCAVATION (CHANNEL CHANGE) WILL BE PAID FOR AT R.C. BOX CULVERT LOCATIONS. IT WILL BE PAID TO THE LIMITS ACTUALLY CUT AND WILL BE CONFINED TO THAT PORTION OF THE INDICATED AREA THAT IS ABOVE THE FLOW LINE. ROADWAY EXCAVATION (CHANNEL CHANGE) SHALL BE MEASURED BY CROSS SECTIONS AND VOLUMES COMPUTED BY AVERAGE END AREA METHOD. ALL CHANNEL CHANGES SHALL BE BROUGHT TO GRADE PRIOR TO MAKING ANY EXCAVATION FOR STRUCTURES.

EXCAVATION FOR STRUCTURES WILL BE PAID FOR AT ALL R.C. BOX CULVERT LOCATIONS. IT WILL BE PAID TO THE LIMITS SHOWN AND SHALL BE CONFINED TO THAT PORTION OF THE INDICATED AREA THAT IS BELOW THE CHANNEL FLOW LINE.

ROADWAY EXCAVATION SHOWN IN SECTION C-C ABOVE AS SUBSIDIARY WILL NOT BE MEASURED OR PAID FOR DIRECTLY, BUT PAYMENT WILL BE CONSIDERED TO BE INCLUDED IN THE VARIOUS ITEMS OF EXCAVATION.

DATE	REVISION	FILMED
11-20-03	REVISED SECTION A-A NOTE	
8-22-02	REVISED SECTION B-B NOTE	
10-12-95	COMBINED 1891B AND 1888A	
1-4-83	REVISED GENERAL NOTES	674-1-4-83
	AND ADDED MAXIMUM PAY	
	LIMIT NOTES.	
2-2-76	EXCAV. PAY LIMITS	917-2-2-76
10-2-72	REVISED AND REDRAWN	564-10-16-72

ARKANSAS STATE HIGHWAY COMMISSION

EXCAVATION PAY LIMITS, BACKFILL, & SOLID SODDING FOR BOX CULVERTS

STANDARD DRAWING RCB-2

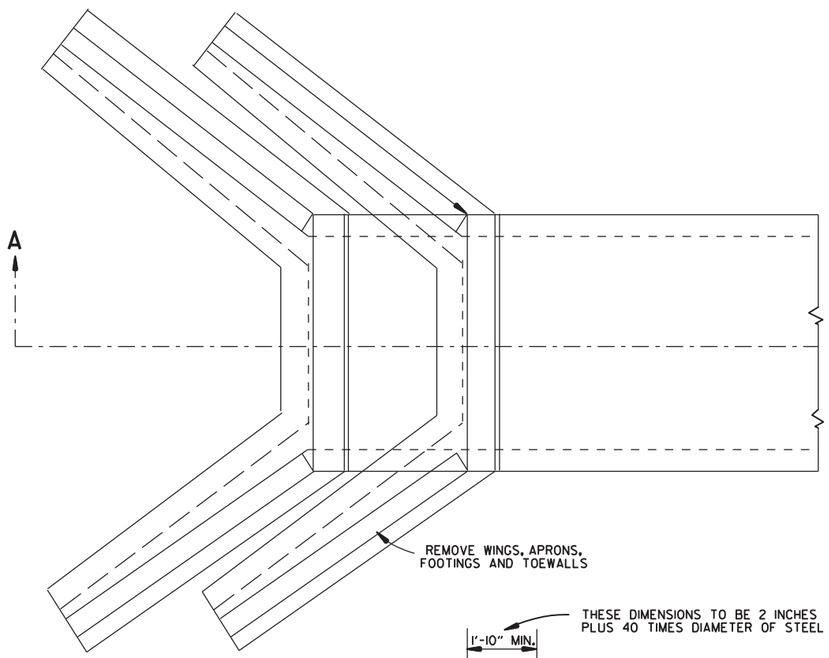

TOP VIEW
R.C. BOX CULVERT

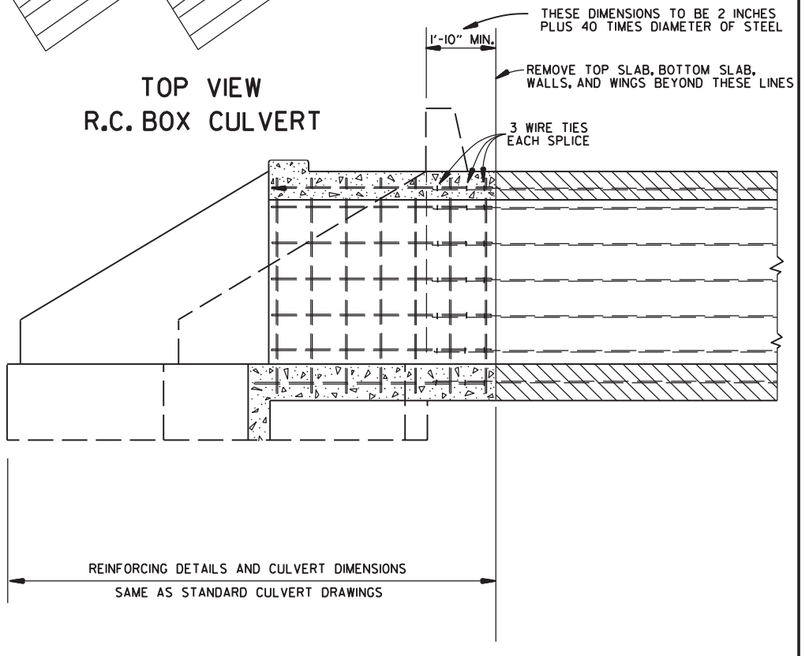

SECTION A-A

METHOD 1

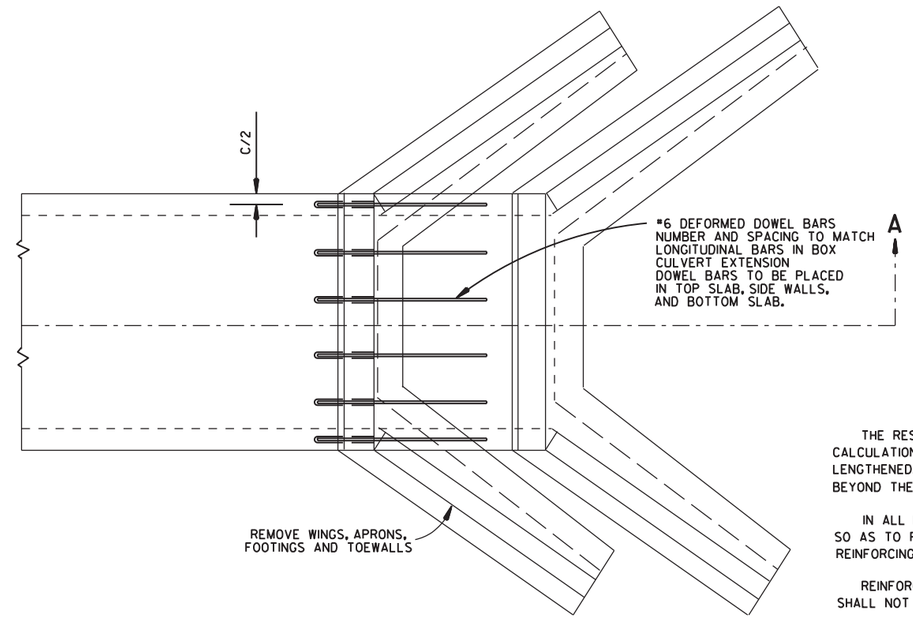

TOP VIEW
R.C. BOX CULVERT

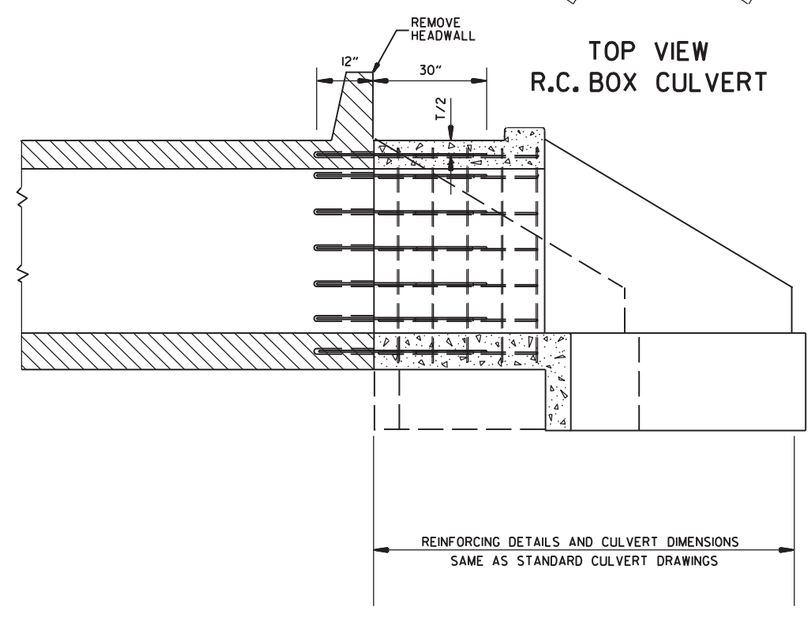

SECTION A-A

METHOD 2

GENERAL NOTES

	USE FOR METHOD
THE RESIDENT ENGINEER WILL MAKE INDIVIDUAL CALCULATIONS OF QUANTITIES FOR EACH STRUCTURE LENGTHENED, MAKING NO ALLOWANCE FOR OVERBREAKAGE BEYOND THE LINES INDICATED.	1
IN ALL INSTANCES CONCRETE SHALL BE REMOVED SO AS TO PERMIT FULL 40 DIAMETER SPLICE OF REINFORCING STEEL.	1
REINFORCING STEEL REMOVED FROM EXISTING STRUCTURE SHALL NOT BE REUSED IN CONSTRUCTING EXTENSION.	1&2
ON R.C. BOX CULVERTS THAT HAVE AN EXISTING CONCRETE APRON; THE CONCRETE APRON SHALL BE REMOVED WITH THE WINGS. THE COST OF REMOVING ALL OLD CONCRETE WILL BE INCLUDED IN THE PRICE BID PER CUBIC YARD FOR NEW CONCRETE OF THE CLASS SPECIFIED AND NO ADDITIONAL COMPENSATION WILL BE ALLOWED.	1&2
MATERIALS FOR SECURING DOWEL BARS SHALL MEET THE REQUIREMENTS OF SECTION 507.02 OF THE STANDARD SPECIFICATIONS.	2
DOWEL BARS SHALL BE INSTALLED AS FOLLOWS: THE DRILLING PROCEDURE SHALL BE APPROVED BY THE ENGINEER. THE FILLING SYSTEM SHALL BE APPROVED BY THE ENGINEER, AND SHALL BE AN INJECTION-TYPE SYSTEM WHICH WILL INSURE THAT SUFFICIENT MATERIAL IS INJECTED SO IT COMPLETELY SURROUNDS THE BARS AND FILLS THE HOLES.	2
THE CONTRACTOR SHALL HAVE THE OPTION OF USING EITHER METHOD 1 OR METHOD 2. REGARDLESS OF WHICH METHOD IS USED, PAY QUANTITIES WILL BE CALCULATED BASED ON METHOD 1.	1&2

NOTE:
NO PART OF THIS STANDARD IS TO BE USED FOR ANY DETAILS RELATIVE TO NEW CONSTRUCTION.

SEE STANDARD DRAWING LISTED IN TABULATION OF STRUCTURES FOR ALL NEW CONSTRUCTION DETAILS.

DATE	REVISION	DATE FILM
10-12-95	CHANGED DRAWING # FROM 144-A	
4-1-93	ADDED GENERAL NOTE	
10-1-92	ADDED ALT. METHOD OF EXTENSION	
11-30-89	REDRAWN	
1-4-83	ELIMINATED CONCRETE CLASS	
12-20-56	RETRACED	

ARKANSAS STATE HIGHWAY COMMISSION

METHOD OF EXTENDING EXISTING R.C. BOX CULVERTS

STANDARD DRAWING RCB-3

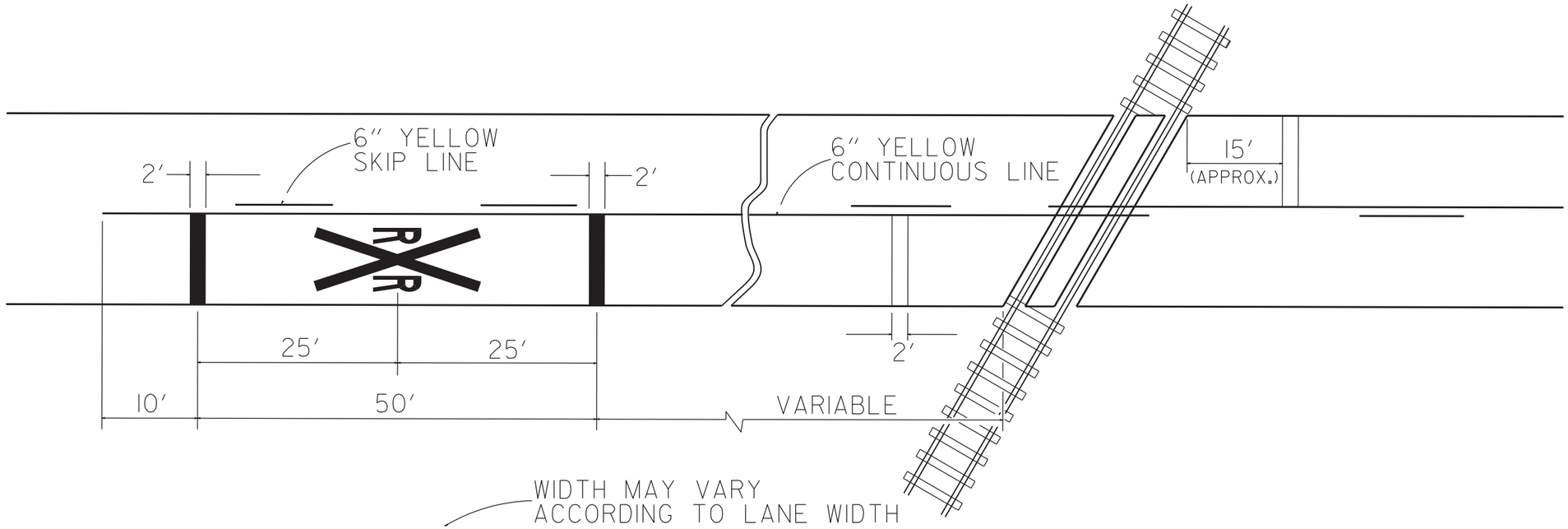

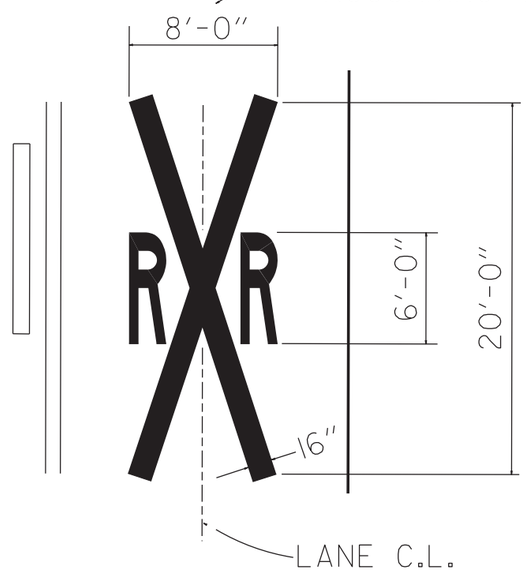

DETAIL OF PAVEMENT MARKINGS FOR RAILROAD CROSSING

PAVEMENT MARKING TO BE SYMMETRICAL ABOUT RAILROAD

NOTES:
THE DISTANCE FROM THE RAILROAD CROSSING MARKING TO THE NEAREST TRACK WILL VARY ACCORDING TO THE APPROACH SPEED AND THE SIGHT DISTANCE OF THE VEHICULAR TRAFFIC APPROACHING, BUT PROBABLY SHOULD BE NOT LESS THAN 50 FEET.

A THREE LANE ROADWAY SHOULD BE MARKED WITH A CENTERLANE FOR TWO-LANE APPROACH OPERATION ON THE APPROACH TO A CROSSING.

ON MULTI-LANE ROADS THE TRANSVERSE BANDS SHOULD EXTEND ACROSS ALL APPROACH LANES, AND INDIVIDUAL RXR SYMBOLS SHOULD BE USED IN EACH APPROACH LANE.

REFER TO STANDARD ALPHABET FOR HIGHWAY SIGNS AND MARKINGS FOR RXR SYMBOLS DETAILS.

DATE	REVISION	DATE FILMED
12-8-16	REVISED CENTERLINE LABELS	
11-20-08	CORRECTED SPELLING	
4-10-03	REVISED NOTES	
3-2-81	DELETED LETTER & ADDED NOTE	684-3-2-81
7-20-79	STOP LINE CHGD. TO PERP.	636-8-30-79
4-23-75	SHEET RENUMBER	697-4-20-79
4-23-75	REDRAWN	860-4-23-75

ARKANSAS STATE HIGHWAY COMMISSION

PAVEMENT MARKING
FOR RAILROAD CROSSING

STANDARD DRAWING RRS-1

SUPERELEVATION TABLE FOR TWO - WAY TRAFFIC

DEGREE OF CURVE	30 MPH			35 MPH			40 MPH			45 MPH			50 MPH			55 MPH			60 MPH			65 MPH			70 MPH			75 MPH		
	e	Ls (FT)		e	Ls (FT)		e	Ls (FT)		e	Ls (FT)		e	Ls (FT)		e	Ls (FT)		e	Ls (FT)		e	Ls (FT)		e	Ls (FT)		e	Ls (FT)	
		MINIMUM	DESIRABLE		MINIMUM	DESIRABLE		MINIMUM	DESIRABLE		MINIMUM	DESIRABLE		MINIMUM	DESIRABLE		MINIMUM	DESIRABLE		MINIMUM	DESIRABLE		MINIMUM	DESIRABLE		MINIMUM	DESIRABLE		MINIMUM	DESIRABLE
0° 15'	NC			NC			NC			NC			NC			NC			NC			NC			NC			NC		
0° 30'	NC			NC			NC			NC			NC			NC			RC	96		RC	96		RC	96		0.022	101	
0° 45'	NC			NC			NC			NC			RC	96		RC	96		0.024	106		0.026	110		0.030	120		0.032	125	
1° 00'	NC			NC			NC			RC	90		0.022	101		0.026	110		0.030	120		0.034	130		0.038	139		0.042	149	300
1° 15'	NC			NC			RC	84		0.022	95		0.028	115		0.032	125		0.038	139		0.042	149		0.046	158	300	0.052	173	
1° 30'	NC			RC	78		0.022	88		0.028	108		0.032	125		0.038	139		0.044	154		0.050	168		0.056	182		0.062	197	
1° 45'	RC	72		RC	78		0.026	97		0.030	113		0.036	134		0.044	154		0.050	168		0.056	182		0.064	202		0.070	216	
2° 00'	RC	72		0.024	86		0.028	101		0.034	122		0.042	149		0.048	163		0.056	182		0.064	202		0.070	216		0.080	240	
2° 15'	RC	72		0.026	90		0.032	109		0.038	131		0.046	158		0.054	178		0.062	197		0.070	216		0.078	235		0.088	259	350
2° 30'	0.022	75		0.028	94		0.034	113		0.042	140		0.050	168		0.058	187		0.068	211		0.076	230		0.086	254	350	0.096	278	
2° 45'	0.024	79		0.030	98		0.038	122		0.046	149	200	0.054	178		0.064	202		0.072	221		0.082	245		0.092	269		0.100	288	400
3° 00'	0.026	83		0.034	105		0.040	126		0.050	158		0.058	187		0.068	211		0.078	235		0.088	259		0.098	283				
3° 15'	0.028	86		0.036	109		0.044	134	200	0.052	162		0.062	197		0.072	221		0.082	245		0.092	269		0.100	288				
3° 30'	0.030	90		0.038	113		0.046	139		0.056	171		0.066	206		0.076	230		0.086	254		0.096	278	350						
3° 45'	0.032	93		0.040	117		0.050	147		0.058	176		0.070	216		0.080	240		0.090	264		0.098	283							
4° 00'	0.034	97		0.042	121	200	0.052	151		0.062	185		0.072	221		0.084	250		0.094	274		0.100	288							
4° 15'	0.036	100		0.044	125		0.054	155		0.064	189		0.076	230		0.086	254		0.096	278	350									
4° 30'	0.036	100		0.046	129		0.056	160		0.068	198		0.078	235		0.090	264		0.098	283										
4° 45'	0.038	104	200	0.048	133		0.060	168		0.070	203		0.082	245		0.092	269	350	0.100	288										
5° 00'	0.040	108		0.050	137		0.062	172		0.072	207	250	0.084	250		0.094	274													
5° 30'	0.044	115		0.054	144		0.066	181		0.078	221		0.088	259		0.098	283													
6° 00'	0.046	119		0.058	152		0.070	189		0.082	230		0.092	269		0.100	288													
6° 30'	0.050	126		0.062	160		0.074	198		0.086	239		0.096	278	300															
7° 00'	0.052	130		0.064	164		0.078	206		0.090	248		0.098	283																
7° 30'	0.054	133		0.068	172		0.080	210		0.092	252		0.100	288																
8° 00'	0.058	140		0.070	176		0.084	219		0.094	257	300																		
8° 30'	0.060	144		0.072	179		0.086	223	250	0.096	261																			
9° 00'	0.062	148		0.076	187		0.088	227		0.098	266																			
9° 30'	0.064	151		0.078	191		0.092	235		0.100	270																			
10° 00'	0.066	155		0.080	195		0.094	240																						
11° 00'	0.070	162		0.084	203		0.096	244																						
12° 00'	0.074	169		0.088	211	250	0.098	248																						
13° 00'	0.076	173		0.090	215		0.100	252	300																					
14° 00'	0.080	180		0.094	222																									
15° 00'	0.082	184		0.096	226																									
16° 00'	0.086	191		0.098	230																									
17° 00'	0.088	194		0.100	234																									
18° 00'	0.090	198	250																											
19° 00'	0.092	202																												
20° 00'	0.094	205																												
21° 00'	0.096	209																												
22° 00'	0.096	209																												
23° 00'	0.098	212																												
24° 00'	0.098	212																												
25° 00'	0.100	216																												
	D MAX = 28° 30'			D MAX = 19° 30'			D MAX = 13° 45'			D MAX = 10° 30'			D MAX = 8° 25'			D MAX = 6° 30'			D MAX = 5° 15'			D MAX = 4° 15'			D MAX = 3° 30'			D MAX = 2° 45'		

ABBREVIATIONS

NC - NORMAL CROWN
RC - REVERSE CROWN, SUPERELEVATION AT NORMAL CROWN SLOPE
e - RATE OF SUPERELEVATION (FT. PER FT.)
Ls - LENGTH OF SUPERELEVATION TRANSITION (FT.)
L - DISTANCE FROM BEGINNING OF SUPERELEVATION TRANSITION TO ANY POINT (FT.)
d - WIDTH OF PAVEMENT (FT.) OR WIDTH OF SUBGRADE (FT.)
C - NORMAL CROWN (FT.)

GENERAL NOTES

1. ON PAVEMENT WITH TWO-WAY TRAFFIC, THE SUPERELEVATION SHALL BE REVOLVED ON THE INSIDE PAVEMENT EDGE UNLESS OTHERWISE NOTED ON THE PLANS
2. SUPERELEVATION VALUES SHOWN ON THE CROSS SECTIONS ARE VALUES (+) OR (-) TO BE ADDED TO OR SUBTRACTED FROM THE POINT OF CONTROL.
3. LENGTHS FOR L MAY BE ROUNDED IN MULTIPLES OF 25 FT. OR 50 FT. TO PERMIT SIMPLER CALCULATIONS.
4. PAVEMENTS WIDER THAN 2 LANES SHALL HAVE ADDITIONAL TRANSITION LENGTHS AS FOLLOWS:

3 LANE UNDIVIDED - - - - - +20%
4 LANE UNDIVIDED - - - - - +50%
5 LANE UNDIVIDED - - - - - +80%
6 LANE UNDIVIDED - - - - - +100%

NOTE: MAINTAIN NORMAL CROWN ON INSIDE UNTIL SUPERELEVATION EXCEEDS 2C.

RATE OF SUPERELEVATION SHALL BE COMPUTED ON STRAIGHT LINE METHOD USING APPLICABLE Ls.

SUPERELEVATION FORMULA $= \frac{Lde}{Ls}$

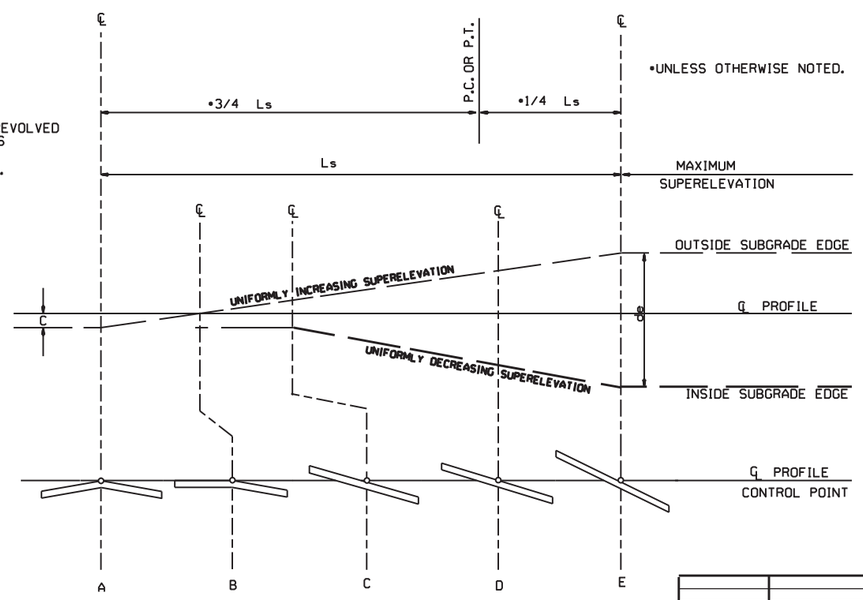

STANDARD METHOD WHEN SUPERELEVATION REVOLVES AROUND CENTER LINE

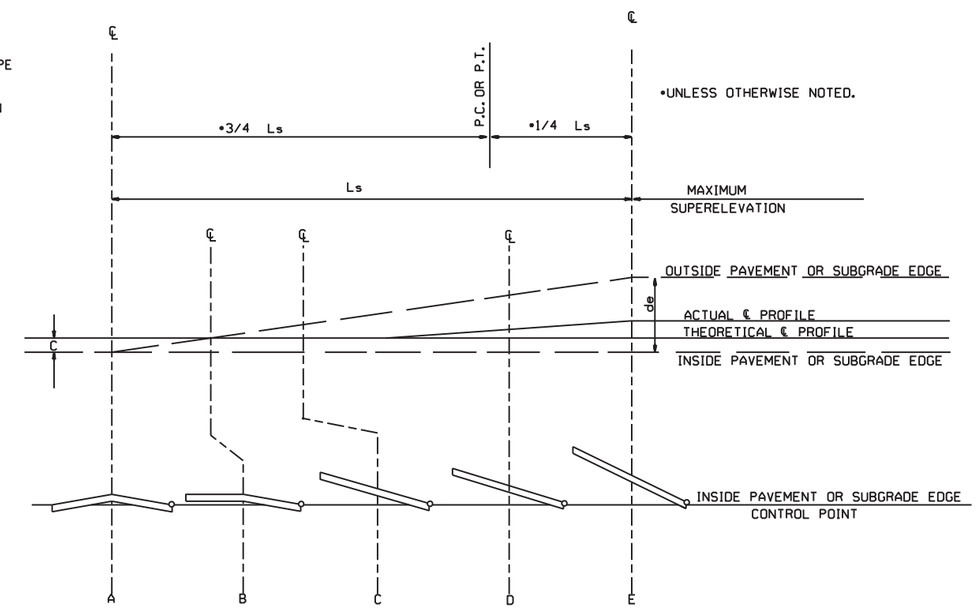

STANDARD METHOD WHEN SUPERELEVATION REVOLVES AROUND INNER SUBGRADE POINT OR INNER PAVEMENT EDGE

NOTE: MAINTAIN NORMAL CROWN ON INSIDE UNTIL SUPERELEVATION EXCEEDS 2C.

DATE	REVISION	DATE FILMED
11-07-19	REVISED SUPERELEVATION TABLE	
10-18-96	ADDED FORMULA	
01-09-87	ISSUED	534-1-9-87

ARKANSAS STATE HIGHWAY COMMISSION

TABLES AND METHOD OF SUPERELEVATION FOR TWO-WAY TRAFFIC

STANDARD DRAWING SE-2

R1-1

STANDARD 30"X30"
EXPRESSWAY 36"X36"
SPECIAL 48"X48"

R1-2

STD. 36"X36"X36"
EXPWY. 48"X48"X48"
FWY. 60"X60"X60"

R2-1

STD. 24"X30"
EXPWY. 36"X48"
FWY. 48"X60"

W3-5

STD. 36"X36"
EXPWY. 48"X48"
FWY. 48"X48"

W3-5a

STD. 36"X36"
EXPWY. 48"X48"
FWY. 48"X48"

R4-1

STD. 24"X30"
EXPWY. 36"X48"
FWY. 48"X60"

R4-2

STD. 24"X30"
EXPWY. 36"X48"
FWY. 48"X60"

R5-1

STD. 30"X30"
EXPWY. 36"X36"
SPECIAL 48"X48"

R11-2

48"X30"

R11-3A

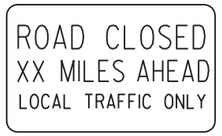

60"X30"

R11-4

60"X30"

W21-5a

STD. 36"X36"
FWY. 48"X48"

W1-1

STD. 36"X36"
FWY. 48"X48"

W1-2

STD. 36"X36"
FWY. 48"X48"

W1-3

STD. 48"X48"

W1-4

STD. 48"X48"

W1-6

STD. 48"X24"
SPECIAL 60"X30"

W1-8

STD. 18"X24"
SPECIAL 24"X30"
EXPWY. 30"X36"
FWY. 36"X48"

W3-1

STD. 36"X36"
SPECIAL 48"X48"

W3-2

STD. 36"X36"
SPECIAL 48"X48"

W4-2

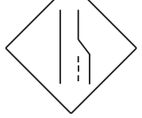

STD. 36"X36"
FWY. 48"X48"

W5-1

STD. 36"X36"
SPECIAL 48"X48"

W6-3

EXPWY. 36"X36"
SPECIAL 48"X48"

W8-7

EXPWY. 36"X36"
FWY. 48"X48"

W9-2

STD. 36"X36"
FWY. 48"X48"

W13-1

STD. 24"X24"

W20-1

STD. 48"X48"

W20-2

STD. 48"X48"

W20-3

STD. 48"X48"

W20-4

STD. 48"X48"

W20-5

STD. 48"X48"

W20-7a

STD. 36"X36"
FWY. 48"X48"

W21-2

STD. 30"X30"
SPECIAL 36"X36"

W21-5

STD. 30"X30"
SPECIAL 36"X36"

W24-1

STD. 36"X36"

W1-4b

STD. 48"X48"

R56-1

STD. 18"X18"

W8-11

STD. 36"X36"
FWY. 48"X48"

W8-9

STD. 36"X36"
FWY. 48"X48"

G20-1

60"X24"

G20-2

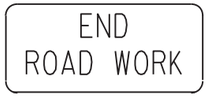

48"X24"

OM-3L OM-3R

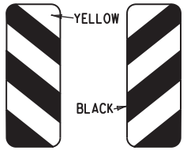

12"X36"

M4-9

STD. 30"X24"
SPECIAL 48"X36"
SPECIAL 60"X48"

M4-10

48"X18"

R55-1

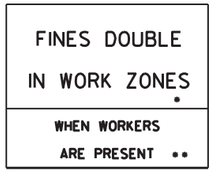

36"X60"

• USE 6" C LETTERS
•• USE 4" D LETTERS

ADVANCE DISTANCES
(XXXX)

500 FT	½ MILE
1000 FT	¾ MILE
1500 FT	1 MILE
	AHEAD

GENERAL NOTES:

1. ALL TRAFFIC CONTROL DEVICES USED ON ROAD CONSTRUCTION SHALL CONFORM TO THE MANUAL ON UNIFORM TRAFFIC CONTROL DEVICES, LATEST EDITION, AND TO THE STANDARD HIGHWAY SIGNS, LATEST EDITION, OR AS APPROVED BY THE FEDERAL HIGHWAY ADMINISTRATION.

2. TRAFFIC CONTROL DEVICES SHALL BE SET UP JUST BEFORE THE START OF CONSTRUCTION OPERATIONS AND SHALL BE PROPERLY MAINTAINED DURING THE TIME SUCH CONDITIONS EXIST. THEY SHALL REMAIN IN PLACE ONLY AS LONG AS NEEDED AND REMOVED THEREAFTER.

3. EXISTING SIGNS AND CONSTRUCTION SIGNS SHALL BE KEPT IN PROPER POSITION, AND BE CLEAN AND LEGIBLE AT ALL TIMES. SIGNS THAT DO NOT APPLY TO EXISTING CONDITIONS SHALL BE REMOVED. SIGNS THAT ARE DAMAGED, DEFACED, OR THAT ACCUMULATE DIRT DURING CONSTRUCTION SHALL BE CLEANED, REPAIRED, OR REPLACED.

• 4. SIGNS ARE USUALLY MOUNTED ON A SINGLE POST, ALTHOUGH THOSE WIDER THAN 36" OR LARGER THAN 10 SQ. FT. SHALL BE MOUNTED ON TWO POSTS OR ABOVE A TYPE III BARRICADE.

• 5. SIGN POSTS DIRECT BURIED IN SOIL SHALL BE 2 LB. MINIMUM CHANNEL POST OR 4"x4" WOOD POSTS. CHANNEL POSTS SHALL BE PAINTED GREEN. WOOD POSTS SHALL BE PAINTED WHITE. ALL POSTS SHALL BE NEATLY CONSTRUCTED, AND SHALL BE REPLUMBED, CLEANED, OR REPAIRED AS NEEDED FOR THE DURATION OF THE JOB. THERE SHALL NOT BE MORE THAN 2 POSTS IN A 7' PATH FOR WOOD OR CHANNEL POSTS. ANY CHANNEL POST SPLICE SHALL BE IN ACCORDANCE WITH STANDARD DRAWING TC-3.

6. POST MOUNTED SIGNS IN RURAL AREAS SHALL BE CONSTRUCTED WITH THE NEAR EDGE OF THE SIGN FROM 6 TO 12 FEET FROM THE PAVEMENT EDGE. SIGNS IN URBAN AREAS AND BARRICADE MOUNTED SIGNS SHALL BE MOUNTED A MINIMUM OF 2 FEET FROM THE PAVEMENT EDGE.

7. ALL POST AND BARRICADE MOUNTED SIGNS MOUNTED IN URBAN AREAS SHALL BE MOUNTED A MINIMUM DISTANCE OF 7' FROM THE BOTTOM OF THE SIGN TO THE ROADWAY SURFACE. ALL POST AND BARRICADE MOUNTED SIGNS MOUNTED IN RURAL AREAS SHALL BE MOUNTED A MINIMUM DISTANCE OF 7' FROM THE BOTTOM OF THE SIGN TO THE ROADWAY SURFACE, EXCEPT A MINIMUM OF 6' SHALL BE USED WHEN MOUNTING AN ADVISORY SIGN BELOW A WARNING SIGN. TEMPORARY SIGNS MAY BE MOUNTED ON PORTABLE SUPPORTS FOR INTERMEDIATE TERM STATIONARY WORK CONDITIONS. THE SIGNS MINIMUM MOUNTING HEIGHT SHALL BE 5'. RETROREFLECTIVE DEVICES SHALL BE USED. TEMPORARY SIGNS MAY BE MOUNTED ON PORTABLE SUPPORTS FOR SHORT-TERM, SHORT DURATION, AND MOBILE CONDITIONS. THEY SHALL BE NO LESS THAN ONE (1) FOOT ABOVE THE TRAVELED WAY. LONG-TERM STATIONARY SIGNS SHALL BE DIRECT BURIED IN SOIL, UNLESS CONDITIONS NECESSITATE THE USE OF PORTABLE SIGNS, OR AS APPROVED BY THE ENGINEER. CONCRETE PADS, CONCRETE OR ROCK BALLAST, OR OTHER SOLID MATERIALS SHALL NOT BE UTILIZED WITH PORTABLE SIGN SUPPORTS.

8. FLAGGERS SHALL USE REFLECTORIZED STOP-SLOW PADDLES. FLAGS MAY BE USED ONLY FOR EMERGENCY SITUATIONS.

9. MOST OF THE SIGNS SHOWN ARE ORIENTED TO THE RIGHT. HOWEVER, THIS DOES NOT PRECLUDE THE USE OF MIRROR IMAGES OF THESE SIGNS WHERE THE REVERSE ORIENTATION MIGHT BETTER CONVEY TO MOTORISTS THE PROPER DIRECTION OF MOVEMENT.

10. R55-1 SIGNS SHALL BE PLACED AT LEAST 1500' BUT NOT MORE THAN 1 MILE IN ADVANCE OF THE WORK ZONE. IF A SPEED LIMIT REDUCTION IS IN EFFECT, THE SIGN SHALL BE PLACED A MINIMUM OF 500' IN ADVANCE OF THE "REDUCED SPEED AHEAD" SIGN.

• NOTE: SUPPORTS FOR SIGNS, BARRICADES, AND VERTICAL PANELS THAT ARE DIFFERENT FROM THE REQUIREMENTS SHOWN IN NOTES 4 & 5, BUT MEET THE REQUIREMENTS OF MANUAL FOR ASSESSING SAFETY HARDWARE (MASH), WILL BE ACCEPTED. COMPLIANCE WITH THE REQUIREMENTS OF MANUAL FOR ASSESSING SAFETY HARDWARE (MASH) IS REQUIRED FOR ALL PROJECTS.

DATE	REVISION	FILMED
11-07-19	REVISED FOR MASH	
4-13-17	DELETED RSP-1 & ADDED W21-5a	
9-2-15	REVISED REDUCED SPEED LIMIT AHEAD SIGNS REVISED ROAD WORK NEXT XX MILES	
12-15-11	REVISED W24-1	
11-17-10	DELETED W8-9a & ADDED W8-9	
10-15-09	ADDED REFERENCE TO MASH & ADDED SIGN W24-1	
4-17-08	REVISED SIGN DESIGNATIONS	
11-18-04	REVISED NOTES	
10-9-03	REVISED NOTE 1	
11-16-01	REVISED NOTE 7	
9-28-00	REVISED NOTE	
11-18-98	ADDED NOTE	
6-26-97	REVISED NOTE 5	
4-03-97	REVISED NOTE 5	
10-18-96	ADDED CONTROLLED ACCESS HWY. SIGN & TO NOTE 7	
10-12-95	ADDED R55-1	
6-8-95	REVISED TO CORRECT SIGN ILLUSTRATIONS	6-8-95
2-2-95	REVISED PER PART VI, MUTCD SEPT. 3, 1993	
8-15-91	DRAWN AND PLACED IN USE	

ARKANSAS STATE HIGHWAY COMMISSION

STANDARD TRAFFIC CONTROLS FOR HIGHWAY CONSTRUCTION

STANDARD DRAWING TC-1

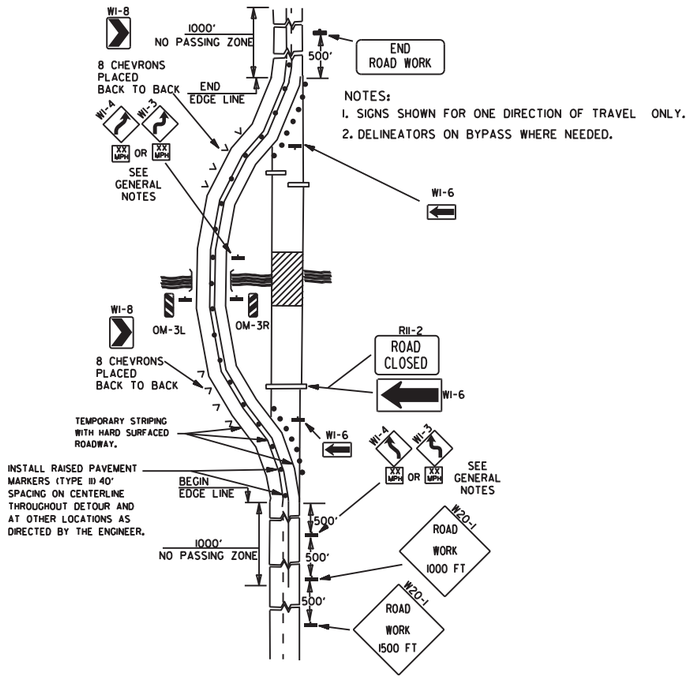

NOTES:
1. SIGNS SHOWN FOR ONE DIRECTION OF TRAVEL ONLY.
2. DELINEATORS ON BYPASS WHERE NEEDED.

(A) TYPICAL APPLICATION OF TRAFFIC CONTROL DEVICES ON A 2-LANE HIGHWAY WHERE THE ENTIRE ROADWAY IS CLOSED AND A BYPASS DETOUR IS PROVIDED.

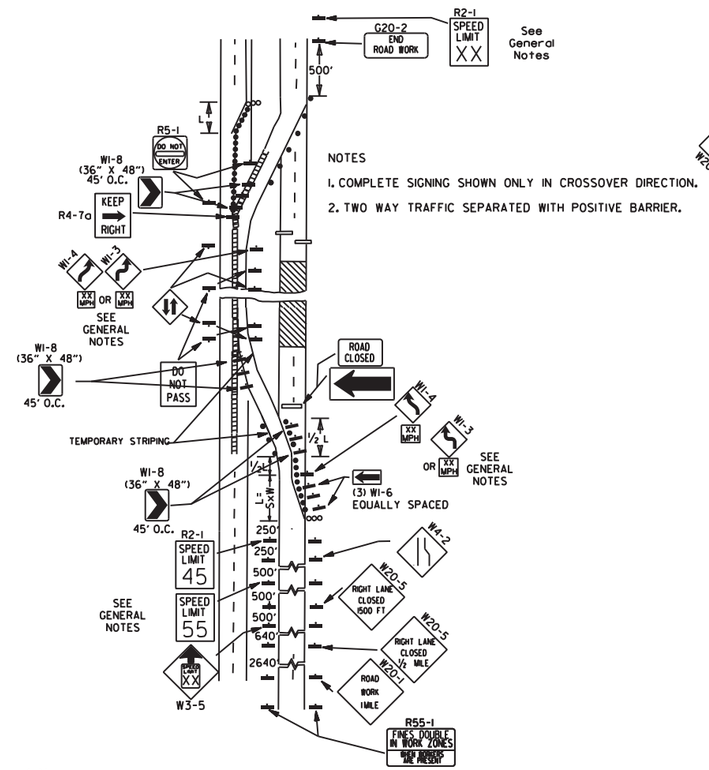

NOTES
1. COMPLETE SIGNING SHOWN ONLY IN CROSSOVER DIRECTION.
2. TWO WAY TRAFFIC SEPARATED WITH POSITIVE BARRIER.

(B) TYPICAL APPLICATION - 4-LANE DIVIDED ROADWAY WHERE ONE ROADWAY IS CLOSED.

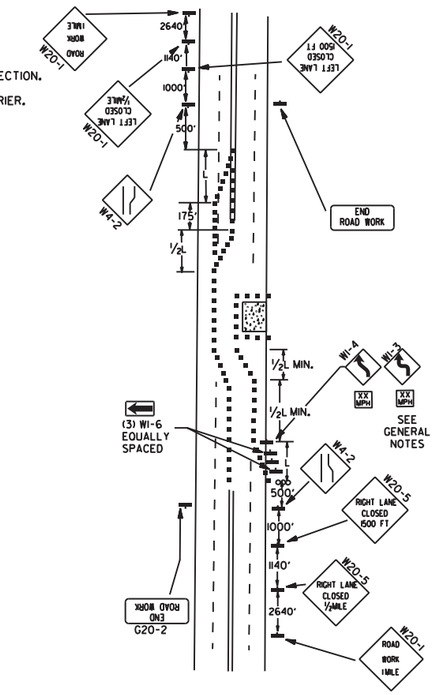

(C) TYPICAL APPLICATION - 4-LANE UNDIVIDED ROADWAY WHERE HALF OF THE ROADWAY IS CLOSED.

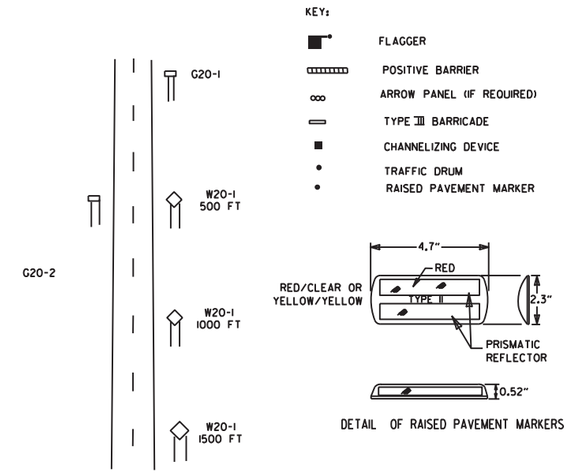

TYPICAL ADVANCE WARNING SIGN PLACEMENT

TAPER FORMULAE:

L=SXW FOR SPEEDS OF 45MPH OR MORE.

$L = \frac{WS^2}{60}$ FOR SPEEDS OF 40MPH OR LESS.

WHERE:

L= MINIMUM LENGTH OF TAPER.

S= NUMERICAL VALUE OF POSTED SPEED LIMIT PRIOR TO WORK OR 85TH PERCENTILE SPEED.

W= WIDTH OF OFFSET.

GENERAL NOTES:

1. THE MAINTENANCE DIVISION SHALL CONDUCT A BALL BANK STUDY TO DETERMINE THE ADVISORY SPEED LIMIT PRIOR TO OPENING TO TRAFFIC. THE ADVISORY SPEED WILL BE POSTED ON W1-3 OR W1-4 CURVE WARNING SIGNS. USE W1-4 WHEN SPEED IS GREATER THAN 30MPH AND W1-3 WHEN 30MPH OR LESS
2. WHEN THE EXISTING SPEED LIMIT IS 55MPH AND THE PLANS REQUIRE A SPEED LIMIT OF 45MPH, THE R2-1(55) SHALL BE OMITTED AND THE W3-5 SHALL BE INSTALLED AT THAT LOCATION. ADDITIONAL R2-1 45MPH SPEED LIMIT SIGNS SHALL BE INSTALLED AT A MAXIMUM OF 1MILE INTERVALS. AT THE END OF THE WORK AREA A R2-1(XX) SHALL BE INSTALLED TO MATCH ORIGINAL SPEED LIMIT.
3. WHEN THE EXISTING SPEED LIMIT IS 65MPH AND THE PLANS REQUIRE A SPEED LIMIT OF 55MPH, THE R2-1(45) SHALL BE OMITTED. ADDITIONAL R2-1 55MPH SPEED LIMIT SIGNS SHALL BE INSTALLED AT A MAXIMUM OF 1MILE INTERVALS. AT THE END OF THE WORK AREA A R2-1(XX) SHALL BE INSTALLED TO MATCH ORIGINAL SPEED LIMIT.
4. THE MAXIMUM SPACING BETWEEN CHANNELIZING DEVICES IN A TAPER SHOULD BE APPROXIMATELY EQUAL IN FEET TO THE SPEED LIMIT. BEYOND THE TAPER, MAXIMUM SPACING SHALL BE TWO TIMES THE SPEED LIMIT, OR AS DIRECTED BY THE ENGINEER.
5. WARNING LIGHTS AND/OR FLAGS MAY BE MOUNTED TO SIGNS OR CHANNELIZING DEVICES AT NIGHT AS NEEDED.
6. PAVEMENT MARKINGS NO LONGER APPLICABLE WHICH MIGHT CREATE CONFUSION IN THE MINDS OF VEHICLE OPERATORS SHALL BE REMOVED OR OBLITERATED AS SOON AS PRACTICABLE.
7. TRAILER MOUNTED DEVICES SUCH AS ARROW PANELS AND PORTABLE CHANGEABLE MESSAGE SIGNS SHALL BE DELINEATED BY AFFIXING CONSPICUITY MATERIAL IN A CONTINUOUS LINE ON THE FACE OF THE TRAILER. WHEN PLACED ON OR ADJACENT TO THE SHOULDER AND NOT BEHIND A POSITIVE BARRIER, THESE DEVICES SHALL BE DELINEATED BY PLACING FIVE (5) TRAFFIC DRUMS, EQUALLY SPACED ALONG THE TRAFFIC SIDE OF THE DEVICE.
8. DIMENSIONS SHOWN FOR RAISED PAVEMENT MARKERS ARE TYPICAL. THE CONTRACTOR MAY SUBSTITUTE SIMILAR MARKERS WITH THE APPROVAL OF THE ENGINEER. REQUESTING APPROVAL FOR SIMILAR MARKERS MAY BE MADE BY REFERRING TO THE ARDOT QUALIFIED PRODUCTS LIST.
9. ALL TRAILER MOUNTED DEVICES SUCH AS ARROW PANELS AND PORTABLE CHANGEABLE MESSAGE SIGNS SHALL MEET THE REQUIREMENTS OF THE MANUAL FOR ASSESSING SAFETY HARDWARE (MASH).

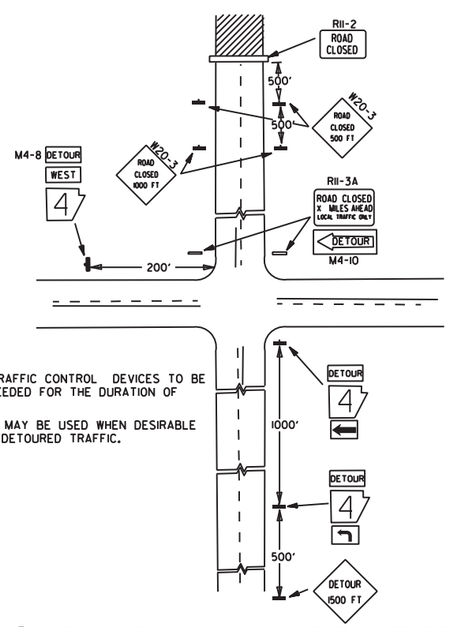

NOTES:
1. REGULATORY TRAFFIC CONTROL DEVICES TO BE MODIFIED AS NEEDED FOR THE DURATION OF THE DETOUR.
2. STREET NAMES MAY BE USED WHEN DESIRABLE FOR DIRECTING DETOURED TRAFFIC.

(D) TYPICAL APPLICATION - ROADWAY CLOSED BEYOND DETOUR POINT.

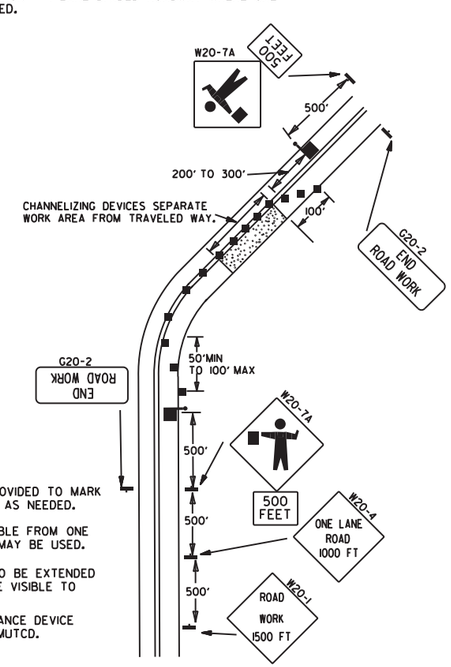

NOTES:
1. FLOOD LIGHTS SHOULD BE PROVIDED TO MARK FLAGGER STATIONS AT NIGHT AS NEEDED.
2. IF ENTIRE WORK AREA IS VISIBLE FROM ONE STATION, A SINGLE FLAGGER MAY BE USED.
3. CHANNELIZING DEVICES ARE TO BE EXTENDED TO A POINT WHERE THEY ARE VISIBLE TO APPROACHING TRAFFIC.
4. AUTOMATED FLAGGER ASSISTANCE DEVICE (AFAD) OPTIONAL. REFER TO MUTCD.

(E) TYPICAL APPLICATION OF TRAFFIC CONTROL DEVICES ON 2-LANE HIGHWAY WHERE ONE LANE IS CLOSED AND FLAGGING IS PROVIDED.

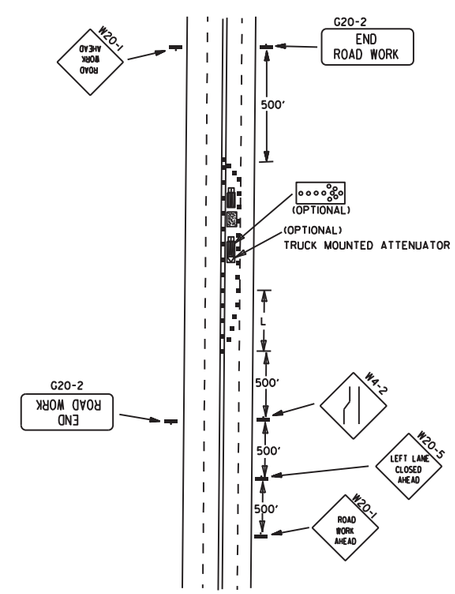

(F) TYPICAL APPLICATION - 4-LANE UNDIVIDED ROADWAY WITH INSIDE LANE CLOSED.

DATE	REVISION	FILMED
11-07-19	REVISED NOTE 1, ADDED NOTE 9	
9-2-15	REVISED NOTE 2, ADDED NOTE 8, REVISED DRAWING (A) & REPLACED R2-5A WITH W3-5	
9-12-13	REVISED DETAIL OF RAISED PAVEMENT MARKERS	
3-11-10	ADDED (AFAD)	
11-20-08	REVISED SIGN DESIGNATIONS	
11-18-04	ADDED GENERAL NOTE	
10-18-96	ADDED R55-1	
4-26-96	CORRECTED (a) BEHIND G20-2	
6-8-95	CORRECTED SIGN IDENT. ON W1-4A	6-8-95
2-2-95	REVISED PER PART VI, MUTCD, SEPT. 3, 1993	
8-15-91	DRAWN AND PLACED IN USE	

ARKANSAS STATE HIGHWAY COMMISSION

STANDARD TRAFFIC CONTROLS FOR HIGHWAY CONSTRUCTION

STANDARD DRAWING TC-2

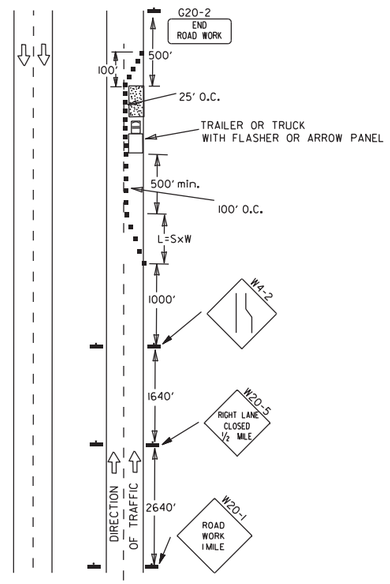

(A) TYPICAL APPLICATION - DAYTIME MAINTENANCE OPERATIONS OF SHORT DURATION ON A 4-LANE DIVIDED ROADWAY WHERE HALF OF THE ROADWAY IS CLOSED.

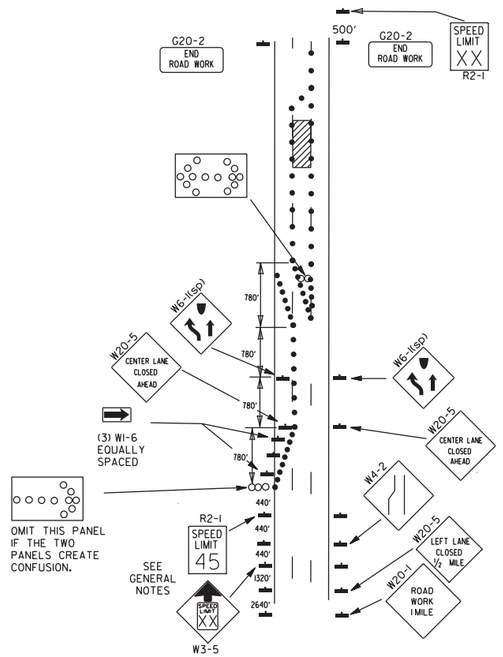

(B) TYPICAL APPLICATION - 3-LANE ONEWAY ROADWAY WHERE CENTER LANE IS CLOSED.

KEY:

ooo ARROW PANEL (IF REQUIRED)

■ CHANNELIZING DEVICE

● TRAFFIC DRUM

GENERAL NOTES:

1. A SPEED LIMIT REDUCTION MAY BE IMPLEMENTED ONLY WHEN DESIGNATED IN THE PLAN OR WHEN RECOMMENDED BY THE ROADWAY DESIGN DIVISION.
2. WHEN THE EXISTING SPEED LIMIT IS 55MPH AND THE PLANS REQUIRE A SPEED LIMIT OF 45MPH, THE R2-1(55) SHALL BE OMITTED AND THE W3-5 SHALL BE INSTALLED AT THAT LOCATION. ADDITIONAL R2-1 45MPH SPEED LIMIT SIGNS SHALL BE INSTALLED AT A MAXIMUM OF 1MILE INTERVALS. AT THE END OF THE WORK AREA A R2-1(XX) SHALL BE INSTALLED TO MATCH ORIGINAL SPEED LIMIT.
3. WHEN THE EXISTING SPEED LIMIT IS 65MPH AND THE PLANS REQUIRE A SPEED LIMIT OF 55MPH, THE R2-1(45) SHALL BE OMITTED. ADDITIONAL R2-1 55MPH SPEED LIMIT SIGNS SHALL BE INSTALLED AT A MAXIMUM OF 1MILE INTERVALS. AT THE END OF THE WORK AREA A R2-1(XX) SHALL BE INSTALLED TO MATCH ORIGINAL SPEED LIMIT.
4. THE MAXIMUM SPACING BETWEEN CHANNELIZING DEVICES IN A TAPER SHOULD BE APPROXIMATELY EQUAL IN FEET TO THE SPEED LIMIT. BEYOND THE TAPER, MAXIMUM SPACING SHALL BE TWO TIMES THE SPEED LIMIT OR AS DIRECTED BY THE ENGINEER.
5. WARNING LIGHTS AND/OR FLAGS MAY BE MOUNTED TO SIGNS OR CHANNELIZING DEVICES AT NIGHT AS NEEDED.
6. PAVEMENT MARKINGS NO LONGER APPLICABLE WHICH MIGHT CREATE CONFUSION IN THE MINDS OF VEHICLE OPERATORS SHALL BE REMOVED OR OBLITERATED AS SOON AS PRACTICABLE.
7. THE G20-1 SIGN WILL BE REQUIRED ON JOBS OF OVER TWO MILES IN LENGTH. WHEN THE LANE CLOSURE IS NOT AT THE BEGINNING OF THE PROJECT, THE G20-1 SIGN SHALL BE ERECTED 125' IN ADVANCE OF THE JOB LIMIT. ADDITIONAL W20-1 (1 MILE) SIGNS ARE NOT REQUIRED IN ADVANCE OF LANE CLOSURES THAT BEGIN INSIDE THE PROJECT LIMITS.
8. FLAGGERS SHALL USE STOP/SLOW PADDLES FOR CONTROLLING TRAFFIC THROUGH WORK ZONES. FLAGS MAY BE USED ONLY FOR EMERGENCY SITUATIONS.
9. ALL PLASTIC DRUMS AND CONES SHALL MEET THE REQUIREMENTS OF MANUAL FOR ASSESSING SAFETY HARDWARE (MASH).
10. TRAILER MOUNTED DEVICES SUCH AS ARROW PANELS AND PORTABLE CHANGEABLE MESSAGE SIGNS SHALL BE DELINEATED BY AFFIXING CONSPICUITY MATERIAL IN A CONTINUOUS LINE ON THE FACE OF THE TRAILER. WHEN PLACED ON OR ADJACENT TO THE SHOULDER AND NOT BEHIND A POSITIVE BARRIER, THESE DEVICES SHALL BE DELINEATED BY PLACING FIVE (5) TRAFFIC DRUMS, EQUALLY SPACED ALONG THE TRAFFIC SIDE OF THE DEVICE.
11. ALL TRAILER MOUNTED DEVICES SUCH AS ARROW PANELS AND PORTABLE CHANGEABLE MESSAGE SIGNS SHALL MEET THE REQUIREMENTS OF THE MANUAL FOR ASSESSING SAFETY HARDWARE (MASH).

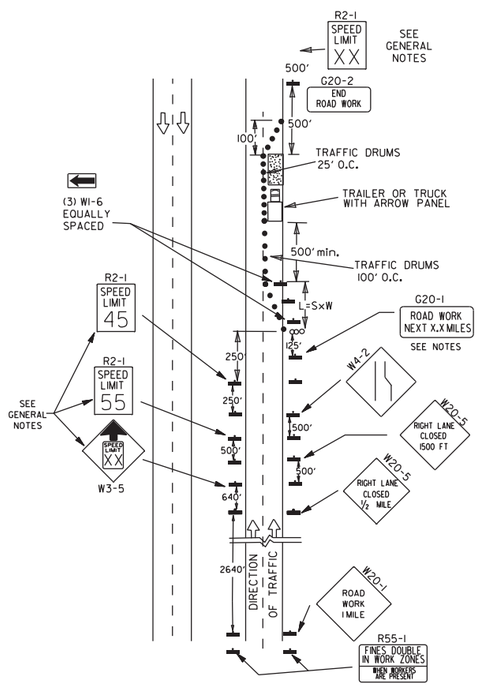

(C) TYPICAL APPLICATION - CONSTRUCTION OPERATIONS OF INTERMEDIATE TO LONG TERM DURATION ON A 4-LANE DIVIDED ROADWAY WHERE HALF OF THE ROADWAY IS CLOSED.

CHANNELIZING DEVICES

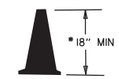

* WHEN CONES ARE USED ON FREEWAYS AND MULTI-LANE HIGHWAYS, THEY SHALL BE 28" MIN. DURING HOURS OF DARKNESS, 28" CONES SHALL BE USED ON ALL ROADWAYS, AND SHALL BE REFLECTORIZED IN ACCORDANCE WITH THE M.U.T.C.D.

CONES

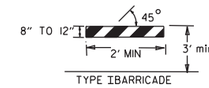

TYPE I BARRICADE

PLASTIC DRUM

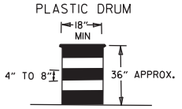

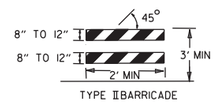

TYPE II BARRICADE

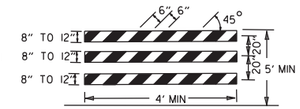

TYPE III BARRICADE

NOTE:
FOR ALL ROAD CLOSURES, THE TYPE III BARRICADES SHALL BE OF SUFFICIENT LENGTH TO EXTEND ACROSS ENTIRE ROADWAY.

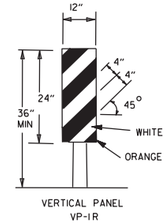

VERTICAL PANEL
VP-1R

VERTICAL PANEL PLACEMENT

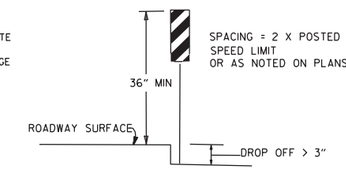

FLAG

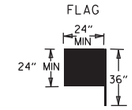

FLAG SHALL BE OF GOOD GRADE RED MATERIAL

TRAFFIC CONTROL DEVICES

NON-INTERSTATE			
VERTICAL DIFFERENTIAL	LOCATION	TRAFFIC CONTROL	
		≤ 45 MPH	> 45 MPH
≤ 2"	CENTERLINE	W8-11 AND LANE STRIPING	W8-11 AND LANE STRIPING
> 2"	CENTERLINE	STANDARD LANE CLOSURE	STANDARD LANE CLOSURE
≤ 3"	EDGE OF TRAVELED LANE OR EDGE OF SHOULDER	W8-9, EDGE LINE STRIPING, AND VERTICAL PANELS	W8-9, EDGE LINE STRIPING, AND VERTICAL PANELS
> 3" ≤ 6"	EDGE OF TRAVELED LANE OR EDGE OF SHOULDER	W8-17, EDGE LINE STRIPING, AND VERTICAL PANELS	W8-17, EDGE LINE STRIPING, AND VERTICAL PANELS
> 6" ≤ 18"	EDGE OF TRAVELED LANE OR EDGE OF SHOULDER	W8-17, EDGE LINE STRIPING, AND TRAFFIC DRUMS(1)	W8-17, EDGE LINE STRIPING, AND TRAFFIC DRUMS(2)
> 18" ≤ 24"	EDGE OF TRAVELED LANE OR EDGE OF SHOULDER	W8-17, EDGE LINE STRIPING, AND TRAFFIC DRUMS(1)	A STABILIZED WEDGE, W8-17, EDGE LINE STRIPING AND TRAFFIC DRUMS(3)
> 24"	EDGE OF TRAVELED LANE OR EDGE OF SHOULDER	PRECAST CONCRETE BARRIER(4) & EDGE LINES	PRECAST CONCRETE BARRIER(4) & EDGE LINES

INTERSTATE		
VERTICAL DIFFERENTIAL	LOCATION	TRAFFIC CONTROL
≤ 2"	CENTERLINE	W8-11 AND LANE STRIPING
≤ 2"	EDGE OF TRAVELED LANE OR EDGE OF SHOULDER	W8-9, EDGE LINE STRIPING, AND TRAFFIC DRUMS(2)
> 2" ≤ 6"	EDGE OF TRAVELED LANE OR EDGE OF SHOULDER	W8-17, EDGE LINE STRIPING, AND TRAFFIC DRUMS(2)
> 6"	EDGE OF TRAVELED LANE OR EDGE OF SHOULDER	PRECAST CONCRETE BARRIER & EDGE LINES

INTERSTATE AND NON-INTERSTATE		
FORESLOPE	HEIGHT	TRAFFIC CONTROL
1:1	> 2 FT	PRECAST CONCRETE BARRIER
2:1	≤ 5 FT	TRAFFIC DRUMS
2:1	> 5 FT	PRECAST CONCRETE BARRIER
Flatter than 2:1	N/A	TRAFFIC DRUMS

GENERAL NOTES:

1. WHEN THE SHOULDER AREA IS USED AS PART OF THE TRAVELED LANE AND THERE IS INSUFFICIENT WIDTH TO PLACE TRAFFIC DRUMS ON THE REMAINING SHOULDER WIDTH, THEN VERTICAL PANELS SHALL BE USED.
2. WHEN THERE IS INSUFFICIENT WIDTH TO PLACE TRAFFIC DRUMS ON THE REMAINING SHOULDER WIDTH, A STABILIZED WEDGE SHALL BE USED.
3. PRECAST CONCRETE BARRIER WALL CAN BE USED IN LIEU OF A STABILIZED WEDGE, W8-17 SIGN, EDGE LINE STRIPING, AND TRAFFIC DRUMS, IF AND WHERE DIRECTED BY THE ENGINEER.
4. A STABILIZED WEDGE, W8-17 SIGN, EDGE LINE STRIPING, AND TRAFFIC DRUMS CAN BE USED IN LIEU OF PRECAST CONCRETE BARRIER WALL, IF AND WHERE DIRECTED BY THE ENGINEER.
5. W21-5, W21-5a, AND/OR W21-5b SIGNS SHALL BE USED WHERE THE ROADWAY IS UNOBSTRUCTED IF AND WHERE DIRECTED BY THE ENGINEER.

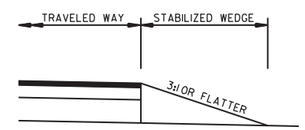

STABILIZED WEDGE

NOTE:
MATERIALS FOR THE STABILIZED WEDGE SHALL MEET THE REQUIREMENTS PROVIDED IN SECTION 603.02 OF THE STANDARD SPECIFICATIONS.

STOP SLOW PADDLE

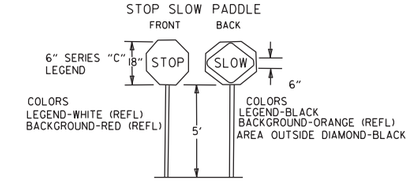

DETAIL OF SPLICES

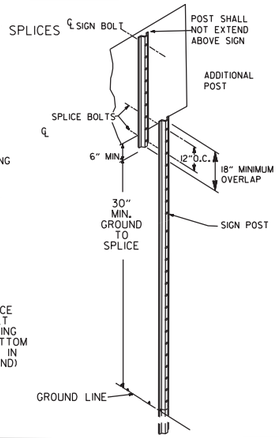

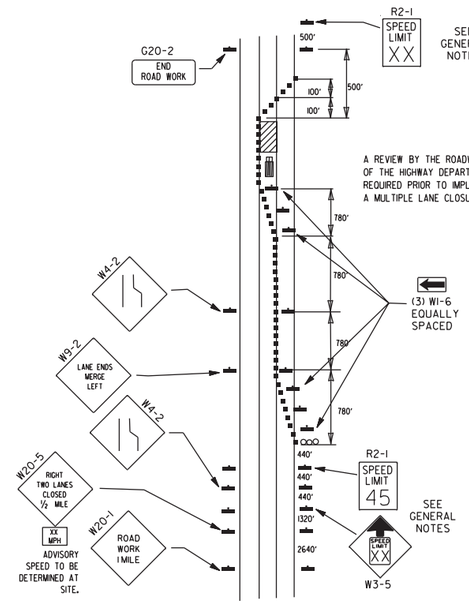

A REVIEW BY THE ROADWAY DESIGN DIVISION OF THE HIGHWAY DEPARTMENT WILL BE REQUIRED PRIOR TO IMPLEMENTING A MULTIPLE LANE CLOSURE.

(D) TYPICAL APPLICATION - CLOSING MULTIPLE LANES OF A MULTILANE HIGHWAY.

NOTES: USE SPLICES ONLY WHEN NECESSARY FOR INSTALLATION. TYPICAL INSTALLATION SHOULD HAVE NO SPLICES (SEE STD. DRAWING NO. SHS-2)

NORMAL INSTALLATIONS WILL REQUIRE 1/4" DIA. BOLTS TO MOUNT SIGNS TO POST AND 5/16" DIA. BOLTS TO ASSEMBLE THE VARIOUS POST SUPPORTS. EACH OF THESE BOLTS SHALL BE CARRIAGE BOLTS.

SIGN POSTS SHALL BE PAINTED GREEN; SIGNS SHALL NOT BE PAINTED, AND ALL SIGN POSTS SHALL BE PLUMB.

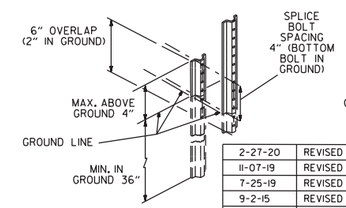

DATE	REVISION	FILMED
2-27-20	REVISED TRAFFIC CONTROL DEVICES DETAILS	
11-07-19	REVISED NOTE 9, ADDED NOTE 11	
7-25-19	REVISED TRAFFIC CONTROL DEVICES DETAILS	
9-2-15	REVISED NOTE 2 & REPLACED R2-5A WITH W3-5	
10-15-09	ADDED REFERENCE TO MASH	
11-20-08	REVISED SIGN DESIGNATIONS	
11-18-04	ADDED NOTE	
10-1-98	ADDED NOTE	
4-03-97	ADDED (SP) TO W6-1 & REVISED TRAFFIC CONTROL DEVICES NOTE	
10-18-96	ADDED R55-1	
10-12-95	MOVED UPPER SPLICE	
6-8-95	REVISED SPLICE DETAIL, TEXT	6-8-95
2-2-95	REVISED PER PART VI, MUTCD, SEPT. 3, 1993	
8-15-91	DRAWN AND PLACED IN USE	

ARKANSAS STATE HIGHWAY COMMISSION

STANDARD TRAFFIC CONTROLS FOR HIGHWAY CONSTRUCTION

STANDARD DRAWING TC-3

GENERAL NOTES

INSTALL A MINIMUM OF 2 UPSLOPE STAKES AND 4 DOWNSLOPE STAKES AT AN ANGLE TO WEDGE WATTLE TO BOTTOM OF DITCH.

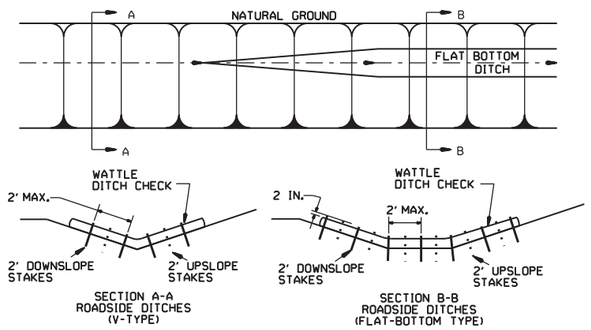

WATTLE DITCH CHECK (E-1)

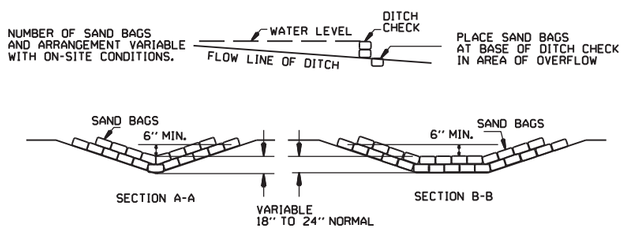

SAND BAG DITCH CHECK (E-5)

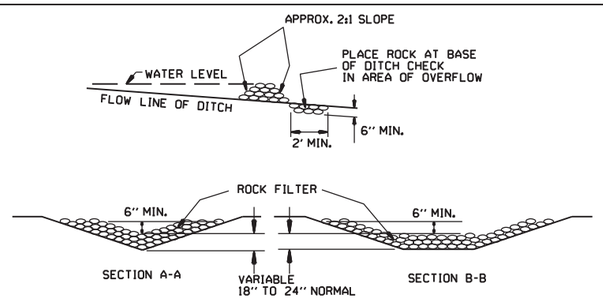

ROCK DITCH CHECK (E-6)

GENERAL NOTES

GEOTEXTILE FABRIC (TYPE 4) IN ACCORDANCE WITH SECTION 625

GEOTEXTILE FABRIC SHALL BE SPLICED TOGETHER WITH A SEWN SEAM ONLY AT A SUPPORT POST OR TWO SECTIONS OF FENCE MAY BE OVERLAPPED INSTEAD. PAYMENT OF ADDITIONAL MATERIAL FOR OVERLAP WILL NOT BE MADE.

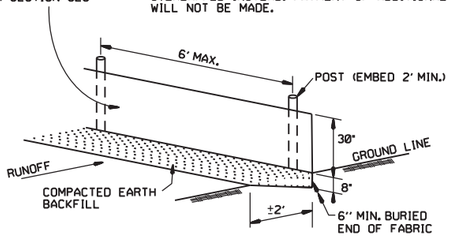

SILT FENCE (E-11)

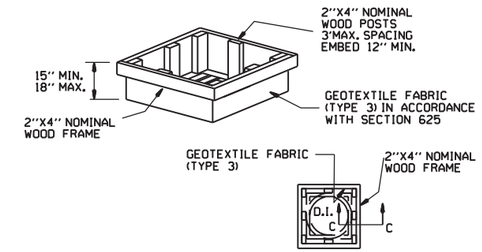

DROP INLET SILT FENCE (E-7)

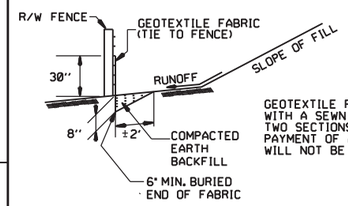

GENERAL NOTES

GEOTEXTILE FABRIC SHALL BE SPLICED TOGETHER WITH A SEWN SEAM ONLY AT A SUPPORT POST, OR TWO SECTIONS OF FENCE MAY BE OVERLAPPED INSTEAD. PAYMENT OF ADDITIONAL MATERIAL FOR OVERLAP WILL NOT BE MADE.

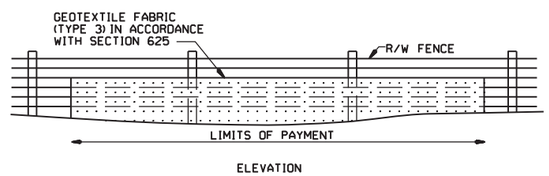

SILT FENCE ON R/W FENCE (E-4)

GENERAL NOTES

1. STRAW BALES SHALL BE INSTALLED SO THAT THE BINDINGS ARE ORIENTED AROUND THE SIDES RATHER THAN ALONG THE TOPS AND BOTTOMS OF THE BALES. THE BALES SHALL BE A MINIMUM OF 30 INCHES IN LENGTH.

2. NO GAPS SHALL BE LEFT BETWEEN BALES.

3. BALED STRAW FILTER BARRIERS COMPLETED AND ACCEPTED WILL BE MEASURED BY THE BALE IN PLACE AS AUTHORIZED BY THE ENGINEER AND WILL BE PAID FOR AT THE CONTRACT UNIT PRICE BID PER BALE FOR BALED STRAW DITCH CHECKS.

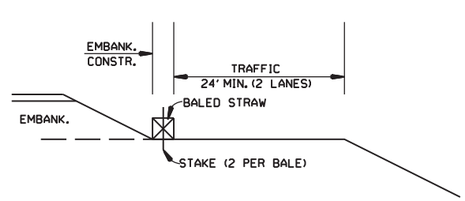

BALED STRAW FILTER BARRIER (E-2)

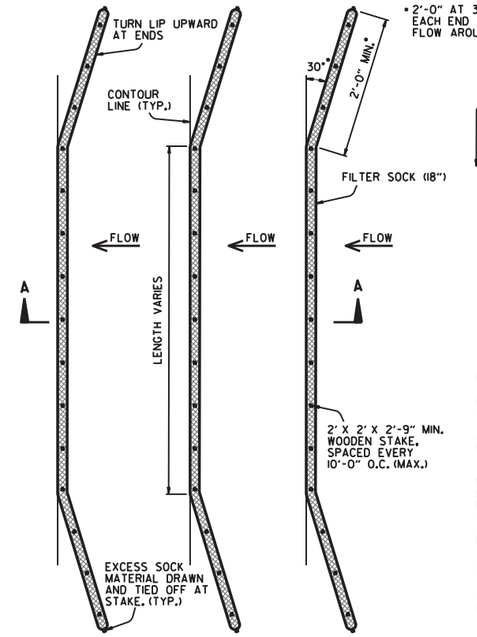

PLAN VIEW
N.T.S.

* 2'-0" AT 30° ANGLE EACH END TO PREVENT FLOW AROUND (TYP.)

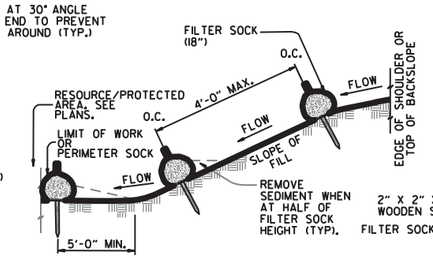

SECTION A-A
N.T.S.

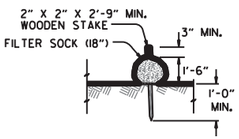

STAKING DETAIL
N.T.S.

NOTES:

1. FILTER SOCKS CAN BE PLACED AT THE TOP, ON THE FACE, AND AT THE TOE OF SLOPES AS SEDIMENT-TRAPPING DEVICES FOR SHEET FLOW RUNOFF.

2. FILTER SOCKS ARE TYPICALLY SUPPLIED AND INSTALLED WITH 18 INCH DIAMETERS. DIAMETER TOLERANCE IS 2 INCHES. AS FILTER SOCKS TEND TO FLATTEN OUT WHEN PLACED.

3. STEEL POSTS MAY BE USED AND SHALL BE ROLLED FROM HIGH CARBON STEEL AND HAVE A MINIMUM OF 1.25 LB./FT. POSTS SHALL BE HOT-DIPPED GALVANIZED OR PAINTED WITH HIGH-GRADE WEATHER RESISTANT BROWN OR BLACK STEEL PAINT. STEEL POSTS SHALL BE EQUIPPED WITH ANCHOR PLATE HAVING A MINIMUM AREA OF 14 SQUARE INCHES. POSTS SHALL BE STUDDED, EMBOSSED, OR PUNCHED. POSTS AND ANCHOR PLATES SHALL CONFORM TO THE REQUIREMENTS OF ASTM A702. NO ADDITIONAL PAYMENT WILL BE PROVIDED FOR STEEL POSTS, BUT PRICE WILL BE CONSIDERED SUBIDIARY TO "FILTER SOCK (18")."

4. FILTER SOCKS MAY BE UP TO 250 FEET LONG. WHEN USED ON LONG SLOPES, FILTER SOCKS MAY BE JOINTED OR STAGGERED AS SHOWN IN DETAILS.

5. INSPECT FILTER SOCKS AFTER EACH RUNOFF EVENT. REMOVE AND REPLACE IF SIGNS OF UNDERCUTTING OR DOWNSTREAM RILLS ARE OBSERVED.

FILTER SOCK ALONG SLOPE (E-3)

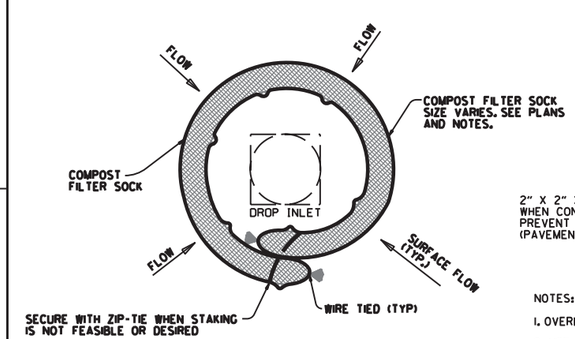

DROP INLET PLAN VIEW
N.T.S.

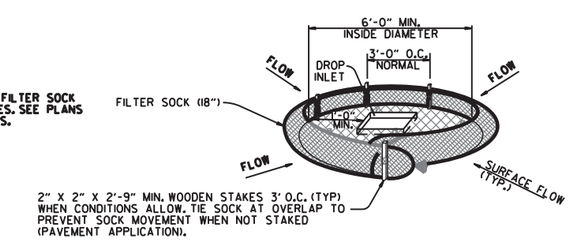

DROP INLET PERSPECTIVE VIEW
N.T.S.

NOTES:

1. OVERLAP ENDS OF SOCK (1' MIN. 3' MAX.).

2. USE 18" DIA. SOCK IN NON-TRAFFIC AREAS OR AREAS WHERE SAFETY IS NOT A CONCERN.

COMPOST FILTER SOCK DROP INLET PROTECTION (E-13)

DATE	REVISION	FILMED
11-16-17	ADDED FILTER SOCK E-3 AND E-13	
12-15-11	DELETED BALED STRAW DITCH CHECK & ADDED WATTLE DITCH CHECK	
11-18-98	ADDED NOTES	
07-02-98	ADDED BALED STRAW FILTER BARRIER (E-2)	
07-20-95	REVISED SILT FENCE E-4 AND E-11	7-20-95
07-15-94	REV. E-4 & E-11 MIN. 13" BURIED END OF FABRIC	
06-02-94	REVISED E-1,4,7 & 11; DELETED E-2 & 3	6-2-94
04-01-93	REDRAWN	
10-01-92	REDRAWN	
08-02-76	ISSUED R.D.M.	298-7-28-76

ARKANSAS STATE HIGHWAY COMMISSION

TEMPORARY EROSION CONTROL DEVICES

STANDARD DRAWING TEC-1

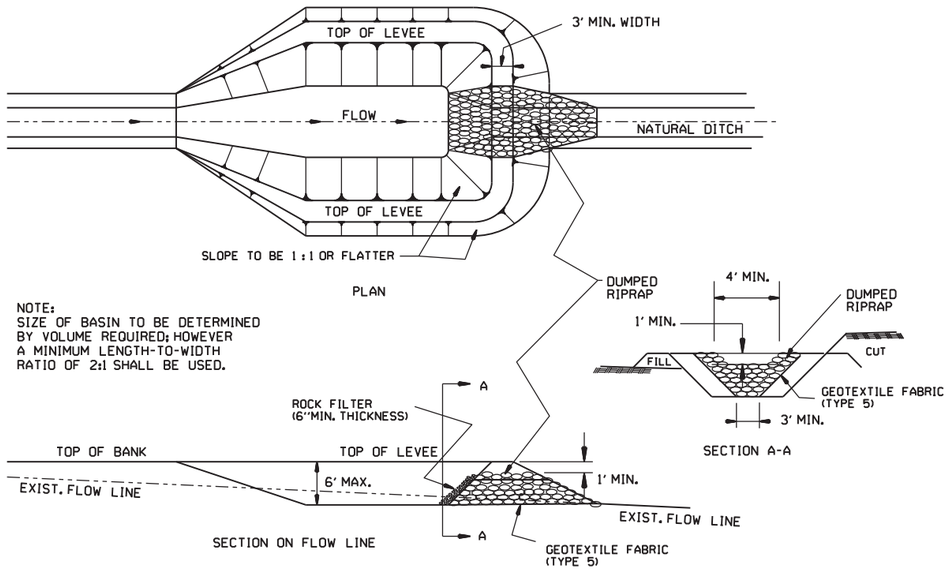

SEDIMENT BASIN WITH RIPRAP OUTLET (E-9)

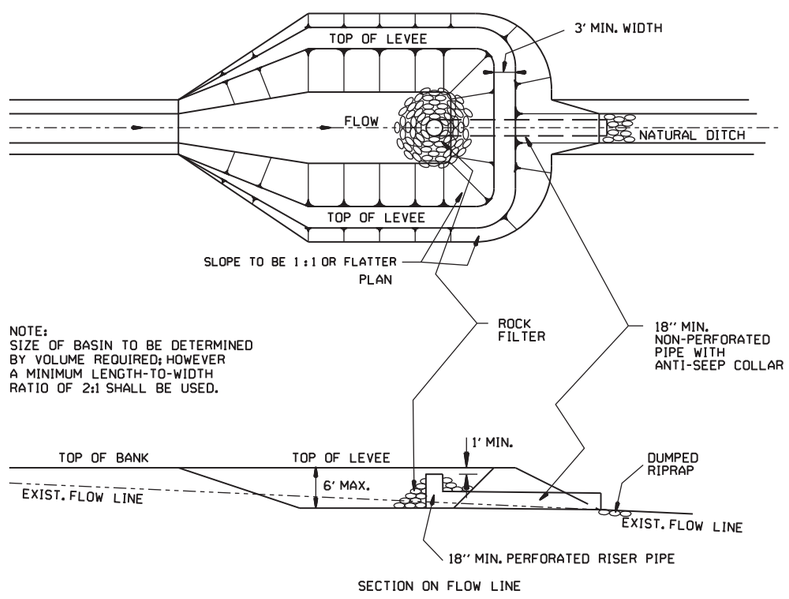

SEDIMENT BASIN WITH PIPE OUTLET (E-10)

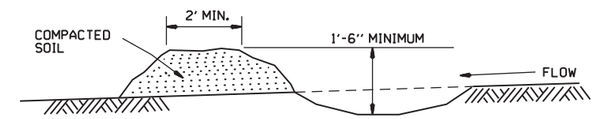

DIVERSION DITCH (E-8)

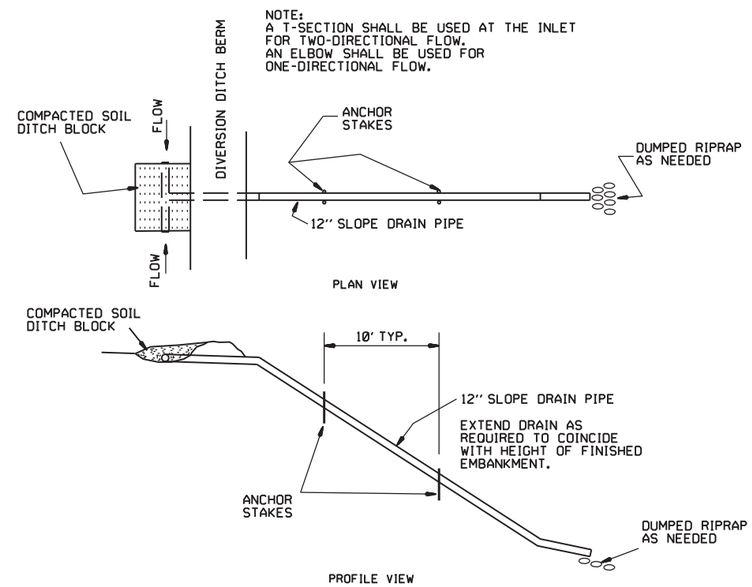

SLOPE DRAIN (E-12)

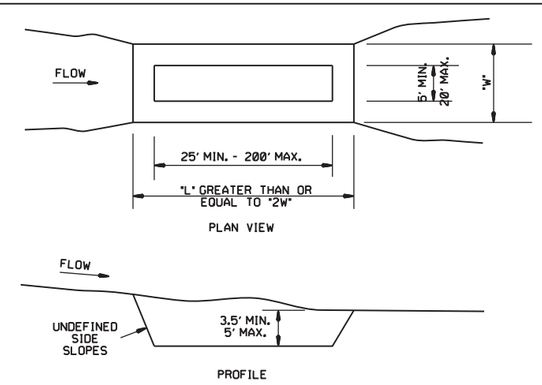

SEDIMENT BASIN (E-14)

DATE	REVISION	FILMED
6-2-94	Revised E-8 & E-12; Added E-14 & Deleted E-13	
4-1-93	ISSUED	

ARKANSAS STATE HIGHWAY COMMISSION

TEMPORARY EROSION CONTROL DEVICES

STANDARD DRAWING TEC-2

CLEARING AND GRUBBING

CONSTRUCTION SEQUENCE

1. PLACE PERIMETER CONTROLS (I.E. SILT FENCES , DIVERSION DITCHES, SEDIMENT BASINS, ETC.)
2. PERFORM CLEARING AND GRUBBING OPERATION.

EXCAVATION

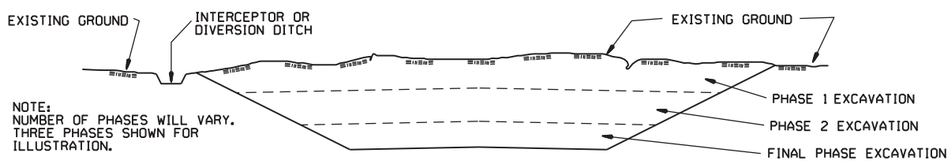

NOTE:
NUMBER OF PHASES WILL VARY.
THREE PHASES SHOWN FOR ILLUSTRATION.

GENERAL NOTE

ALL CUT SLOPES SHALL BE DRESSED, PREPARED, SEEDED, AND MULCHED AS THE WORK PROGRESSES. SLOPES SHALL BE EXCAVATED AND STABILIZED IN EQUAL INCREMENTS NOT TO EXCEED 25 FEET, MEASURED VERTICALLY.

CONSTRUCTION SEQUENCE

1. EXCAVATE AND STABILIZE INTERCEPTOR AND/OR DIVERSION DITCHES.
2. PERFORM PHASE 1 EXCAVATION. PLACE PERMANENT OR TEMPORARY SEEDING.
3. PERFORM PHASE 2 EXCAVATION. PLACE PERMANENT OR TEMPORARY SEEDING.
4. PERFORM FINAL PHASE OF EXCAVATION. PLACE PERMANENT OR TEMPORARY SEEDING. STABILIZE DITCHES. CONSTRUCT DITCH CHECKS, DIVERSION DITCHES, SEDIMENT BASINS, OR OTHER EROSION CONTROL DEVICES AS REQUIRED.

EMBANKMENT

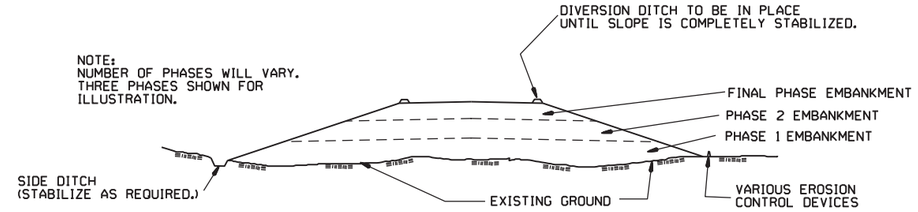

NOTE:
NUMBER OF PHASES WILL VARY.
THREE PHASES SHOWN FOR ILLUSTRATION.

GENERAL NOTE

ALL EMBANKMENT SLOPES SHALL BE DRESSED, PREPARED, SEEDED, AND MULCHED AS THE WORK PROGRESSES. SLOPES SHALL BE CONSTRUCTED AND STABILIZED IN EQUAL INCREMENTS NOT TO EXCEED 25 FEET, MEASURED VERTICALLY.

CONSTRUCTION SEQUENCE

1. CONSTRUCT DIVERSION DITCHES, DITCH CHECKS, SEDIMENT BASINS, SILT FENCES, OR OTHER EROSION CONTROL DEVICES AS SPECIFIED.
2. PLACE PHASE 1 EMBANKMENT WITH PERMANENT OR TEMPORARY SEEDING. PROVIDE DIVERSION DITCHES AND SLOPE DRAINS IF EMBANKMENT CONSTRUCTION IS TO BE TEMPORARILY ABANDONED FOR A PERIOD OF GREATER THAN 21 DAYS.
3. PLACE PHASE 2 EMBANKMENT WITH PERMANENT OR TEMPORARY SEEDING. PROVIDE DIVERSION DITCHES AND SLOPE DRAINS IF EMBANKMENT CONSTRUCTION IS TO BE TEMPORARILY ABANDONED FOR A PERIOD OF GREATER THAN 21 DAYS.
4. PLACE FINAL PHASE OF EMBANKMENT WITH PERMANENT OR TEMPORARY SEEDING. PLACE DIVERSION DITCHES AND SLOPE DRAINS AND MAINTAIN UNTIL ENTIRE SLOPE IS STABILIZED.

DATE	REVISION	FILMED
11-03-94	CORRECTED SPELLING	
6-2-94	Drawn & Issued	6-2-94

ARKANSAS STATE HIGHWAY COMMISSION

TEMPORARY EROSION CONTROL DEVICES

STANDARD DRAWING TEC-3

FED. ROAD Div.	STATE	FED. AID PROJECT	FISCAL YEAR	SHEET No.	TOTAL SHEETS
6	ARK.				
JOB No.					

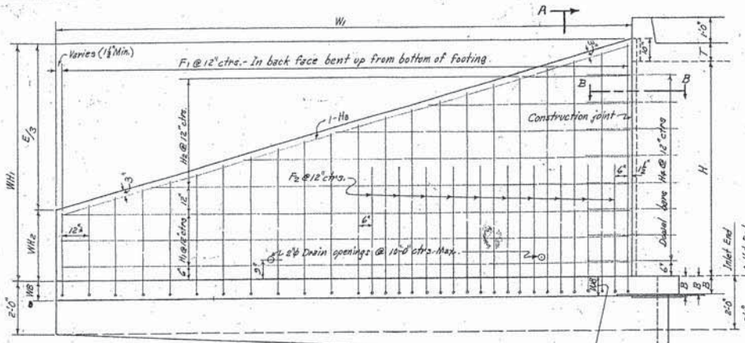

REAR ELEVATION OF WING - SHOWING BACK FACE REINF.

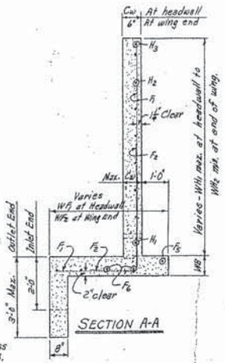

SECTION A-A

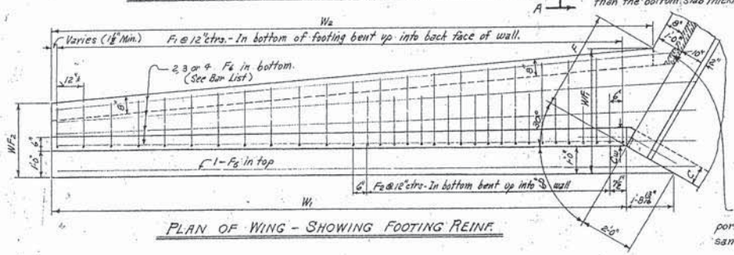

PLAN OF WING - SHOWING FOOTING REINF.

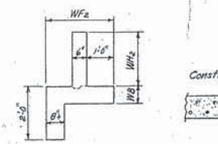

END VIEW OF WING

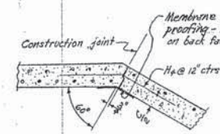

SECTION B-B THRU CONSTRUCTION JOINT

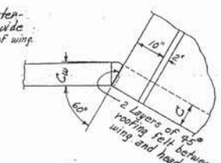

DETAIL AT TOP OF WING

NOTE:- Payment for membrane waterproofing and roofing felt to be included in the price bid for Class S Concrete.

WING DIMENSIONS

CLEAR HEIGHT OF BOX H	THICKNESS OF WING FOOTING WB	THICKNESS OF WING AT HEADWALL = C Cw	WINGWALL HEIGHTS AT HEADWALL WH1	WINGWALL HEIGHTS AT END OF WING WH2	WIDTHS OF WING FOOTINGS AT HEADWALL W1	WIDTHS OF WING FOOTINGS AT END OF WING W2	PERPENDICULAR FOOTING DIMENSION F	PERPENDICULAR DIST. FROM HEAD, TO END OF WING E	LENGTH OF WING WALLS W1	INSIDE FOOTING DIMENSION W2	* QUANTITY PER WING CLASS S CONCRETE INLET END CU.YD.	* QUANTITY PER WING CLASS S CONCRETE OUTLET END CU.YD.
2'	7"	6"	2'-10"	0'-8"	2'-4"	2'-0"	0'-10⅝"	6'-6"	7'-6"	7'-1½"	0.889	0.986
3'	7"	6"	3'-10"	1'-0"	2'-8"	2'-1½"	1'-4⅜"	8'-6"	9'-9⅜"	9'-2⅝"	1.338	1.466
4'	7"	6"	4'-10"	1'-9"	3'-0"	2'-3"	1'-9"	10'-6"	12'-1⅝"	12'-1⅝"	1.868	2.027
5'	7"	6"	5'-10"	1'-8"	3'-4"	2'-4½"	2'-1⅞"	12'-6"	14'-5⅝"	14'-7½"	2.478	2.668
		7"	5'-10"	1'-8"	3'-4"	2'-4½"	2'-1⅞"	12'-6"	14'-5⅝"	14'-7½"	2.582	2.772
6'	8"	7"	6'-10"	2'-0"	3'-8"	2'-6"	2'-6⅜"	14'-6"	16'-9"	17'-1⅝"	3.490	3.661
		7½"	6'-10"	2'-0"	3'-8"	2'-6"	2'-6⅜"	14'-6"	16'-9"	17'-1½"	3.511	3.732
		8"	6'-10"	2'-0"	3'-8"	2'-6"	2'-6⅜"	14'-6"	16'-9"	17'-1½"	3.582	3.803
7'	8½"	7½"	7'-10"	2'-8"	4'-2"	2'-7½"	3'-1⅞"	16'-6"	19'-0½"	19'-8⅝"	4.505	4.758
		8"	7'-10"	2'-8"	4'-2"	2'-7½"	3'-1⅞"	16'-6"	19'-0½"	19'-8⅝"	4.597	4.851
8'	9"	8"	8'-10"	2'-8"	4'-8"	2'-9"	3'-8"	18'-6"	21'-9⅝"	22'-9"	5.761	6.097

* Quantity per wing does not include headwall or that portion of apron or toewall for the length W3.

APRON DIMENSION W3

W3 = (OW - 2F)

CLEAR SPAN S	CLEAR HEIGHT H	2 x FOOTING DIMENSION 2F	SINGLE BARREL CULVERT OW	SINGLE BARREL CULVERT W3	DOUBLE BARREL CULVERT OW	DOUBLE BARREL CULVERT W3	TRIPLE BARREL CULVERT OW	TRIPLE BARREL CULVERT W3	QUADRUPLE BARREL CULVERT OW	QUADRUPLE BARREL CULVERT W3	QUINTUPLE BARREL CULVERT OW	QUINTUPLE BARREL CULVERT W3
4'	2'	1'-11⅛"	5'-0"	3'-0⅛"	9'-8"	7'-8⅛"	14'-4"	12'-4⅛"	19'-0"	17'-0⅛"	23'-8"	21'-8⅛"
	3'	2'-8⅜"	5'-0"	2'-3⅜"	9'-8"	6'-11⅜"	14'-4"	11'-7⅜"	19'-0"	16'-3⅜"	23'-8"	20'-11⅜"
	4'	3'-6"	5'-0"	1'-6"	9'-8"	6'-2"	14'-4"	10'-10"	19'-0"	15'-6"	23'-8"	20'-2"
	5'	4'-3⅜"	5'-0"	0'-8⅜"	9'-8"	5'-4⅜"	14'-4"	10'-0⅜"	19'-0"	14'-10⅜"	23'-8"	19'-2⅜"
	6'	5'-0⅞"	5'-2"	0'-1⅞"	9'-11"	4'-11⅞"	14'-8"	9'-7⅞"	19'-5"	14'-2⅞"	24'-2"	19'-1⅞"
5'	3'	2'-8⅜"	6'-0"	3'-3⅜"	11'-8"	8'-11⅜"	17'-4"	14'-7⅜"	23'-0"	20'-3⅜"	28'-8"	25'-11⅜"
	4'	3'-6"	6'-0"	2'-6"	11'-8"	8'-2"	17'-4"	13'-10"	23'-0"	19'-6"	28'-8"	25'-2"
	5'	4'-3⅜"	6'-0"	1'-8⅜"	11'-8"	7'-4⅜"	17'-4"	13'-0⅜"	23'-0"	18'-8⅜"	28'-8"	24'-4⅜"
	6'	5'-0⅞"	6'-2"	1'-1⅞"	11'-11"	6'-10⅞"	17'-8"	12'-7⅞"	23'-5"	18'-2⅞"	29'-2"	24'-1⅞"
	7'	6'-2⅝"	6'-5"	0'-0⅝"	12'-1"	5'-10⅝"	17'-11"	11'-8⅝"	23'-9"	17'-1⅝"	29'-7"	23'-6⅝"
6'	3'	2'-8⅜"	7'-0"	4'-3⅜"	13'-8"	10'-11⅜"	20'-4"	17'-7⅜"	27'-0"	24'-3⅜"	33'-8"	30'-11⅜"
	4'	3'-6"	7'-0"	3'-6"	13'-8"	10'-2"	20'-4"	16'-10"	27'-0"	23'-6"	33'-8"	30'-2"
	5'	4'-3⅜"	7'-0"	2'-8⅜"	13'-8"	9'-4⅜"	20'-4"	16'-0⅜"	27'-0"	22'-8⅜"	33'-8"	29'-4⅜"
	6'	5'-0⅞"	7'-2"	2'-1⅞"	13'-11"	8'-10⅞"	20'-8"	15'-7⅞"	27'-5"	22'-2⅞"	34'-2"	29'-1⅞"
	7'	6'-2⅝"	7'-5"	1'-0⅝"	14'-1"	7'-10⅝"	20'-11"	14'-8⅝"	27'-9"	21'-1⅝"	34'-7"	28'-6⅝"
	8'	7'-4"	7'-8"	0'-0"	14'-4"	6'-10"	21'-0"	13'-8"	27'-10"	20'-6"	34'-8"	27'-10"
7'	4'	3'-6"	8'-0"	4'-6"	15'-8"	11'-2"	23'-4"	19'-10"	31'-0"	27'-6"	38'-8"	35'-2"
	5'	4'-9⅜"	8'-0"	3'-8⅜"	15'-8"	10'-4⅜"	23'-4"	19'-0⅜"	31'-0"	26'-8⅜"	38'-8"	34'-4⅜"
	6'	5'-0⅞"	8'-2"	3'-1⅞"	15'-11"	10'-0⅞"	23'-8"	18'-7⅞"	31'-5"	26'-1⅞"	39'-2"	34'-1⅞"
	7'	6'-2⅝"	8'-5"	2'-0⅝"	16'-1"	9'-0⅝"	23'-11"	17'-8⅝"	31'-9"	25'-0⅝"	39'-7"	33'-6⅝"
	8'	7'-4"	8'-8"	1'-0"	16'-2"	8'-10"	24'-0"	16'-8"	31'-10"	24'-6"	39'-8"	32'-10"
8'	4'	3'-6"	9'-0"	5'-6"	17'-8"	14'-2"	26'-4"	22'-10"	35'-0"	31'-6"	43'-8"	40'-2"
	5'	4'-9⅜"	9'-2"	4'-10⅜"	17'-11"	13'-2⅜"	26'-8"	22'-0⅜"	35'-5"	31'-1⅜"	44'-2"	39'-10⅜"
	6'	5'-0⅞"	9'-2"	4'-1⅞"	17'-11"	12'-10⅞"	26'-8"	21'-7⅞"	35'-5"	30'-10⅞"	44'-2"	39'-1⅞"
	7'	6'-2⅝"	9'-5"	3'-0⅝"	18'-1"	11'-10⅝"	26'-11"	20'-8⅝"	35'-9"	29'-11⅝"	44'-7"	38'-6⅝"
	8'	7'-4"	9'-9"	2'-0"	18'-2"	10'-10"	27'-0"	19'-8"	35'-10"	28'-6"	44'-8"	37'-10"
9'	5'	4'-9⅜"	10'-2"	5'-10⅜"	19'-11"	15'-2⅜"	29'-8"	25'-4⅜"	39'-5"	35'-1⅜"	49'-2"	44'-10⅜"
	6'	5'-0⅞"	10'-3"	5'-2⅞"	20'-1"	15'-0⅞"	29'-11"	24'-10⅞"	39'-9"	34'-10⅞"	49'-7"	44'-1⅞"
	7'	6'-2⅝"	10'-3"	4'-0⅝"	20'-1"	13'-10⅝"	29'-11"	23'-9⅝"	39'-9"	33'-6⅝"	49'-7"	43'-6⅝"
	8'	7'-4"	10'-6"	3'-0"	20'-2"	12'-10"	30'-0"	22'-8"	39'-10"	32'-6"	49'-8"	42'-10"
10'	5'	4'-9⅜"	11'-2"	6'-10⅜"	21'-11"	17'-2⅜"	32'-8"	28'-4⅜"	43'-5"	39'-1⅜"	54'-2"	49'-10⅜"
	6'	5'-0⅞"	11'-3"	6'-2⅞"	22'-1"	17'-0⅞"	32'-11"	27'-10⅞"	43'-9"	38'-10⅞"	54'-7"	49'-1⅞"
	7'	6'-2⅝"	11'-3"	5'-0⅝"	22'-1"	15'-10⅝"	32'-11"	26'-8⅝"	43'-9"	37'-6⅝"	54'-7"	48'-6⅝"
	8'	7'-4"	11'-6"	4'-0"	22'-2"	14'-10"	33'-0"	25'-8"	43'-10"	36'-6"	54'-8"	47'-10"
11'	6'	5'-0⅞"	12'-4"	7'-3⅞"	24'-2"	19'-7⅞"	36'-0"	30'-11⅞"	47'-10"	42'-9⅞"		
	7'	6'-2⅝"	12'-4"	6'-1⅝"	24'-2"	17'-11⅝"	36'-0"	29'-9⅝"	47'-10"	41'-7⅝"		
	8'	7'-4"	12'-8"	5'-0"	24'-3"	16'-10"	36'-0"	28'-8"	47'-10"	40'-6"		
12'	6'	5'-0⅞"	13'-6"	8'-3⅞"	26'-2"	21'-1⅞"	39'-0"	33'-7⅞"	51'-10"	44'-9⅞"		
	7'	6'-2⅝"	13'-6"	7'-1⅝"	26'-2"	19'-11⅝"	39'-0"	32'-5⅝"	51'-10"	43'-7⅝"		
	8'	7'-4"	13'-6"	6'-0"	26'-2"	18'-10"	39'-0"	31'-8"	51'-10"	42'-6"		

QUANTITIES

CLEAR SPAN S	CLEAR HEIGHT H	THICKNESS OF WING AT HEADWALL Cw	THICKNESS OF WING FOOTING WB	REINFORCING STEEL ⊛ FOR 4 WINGS LB.	CLASS S CONCRETE - 4 WINGS - HEADWALLS, WINGWALLS, FOOTINGS, TOEWALLS AND APRONS: SINGLE BARREL CULVERT CU.YD.	DOUBLE BARREL CULVERT CU.YD.	TRIPLE BARREL CULVERT CU.YD.	QUADRUPLE BARREL CULVERT CU.YD.	QUINTUPLE BARREL CULVERT CU.YD.
4'	2'	6"	7"	108.0	4.50	5.96	6.42	7.38	8.34
	3'	6"	7"	164.4	6.26	7.81	8.17	9.13	10.09
	4'	6"	7"	259.6	8.33	9.28	10.24	11.20	12.16
	5'	6"	7"	357.8	10.72	11.68	12.64	13.60	14.56
	6'	7"	8"	583.1	14.55	15.53	16.52	17.51	18.49
5'	3'	6"	7"	164.4	6.97	7.63	8.79	9.36	11.12
	4'	6"	7"	259.6	8.54	9.70	10.87	10.03	12.20
	5'	6"	7"	357.8	10.94	12.10	13.26	14.43	15.59
	6'	7"	8"	583.1	14.77	15.96	17.15	18.34	19.54
	7'	7½"	8½"	1139.6	18.94	20.15	21.37	22.59	23.80
6'	3'	6"	7"	164.4	6.68	8.06	9.42	10.80	12.18
	4'	6"	7"	259.6	8.75	10.14	11.49	12.87	14.25
	5'	6"	7"	357.8	11.15	12.53	13.89	15.27	16.65
	6'	7"	8"	583.1	14.98	16.39	17.78	19.18	20.59
	7'	7½"	8½"	1139.6	19.15	20.58	22.00	23.43	24.86
	8'	8"	9"	1925.6	24.09	25.53	26.96	28.39	29.83
7'	4'	6"	7"	259.6	8.97	10.58	12.15	13.76	15.35
	5'	6"	7"	357.8	11.36	12.97	14.59	16.15	17.75
	6'	7"	8"	583.1	15.20	16.82	18.42	20.04	21.66
	7'	7½"	8½"	1139.6	19.38	21.02	22.69	24.28	25.92
	8'	8"	9"	1925.6	24.32	25.97	27.60	29.25	30.89
8'	4'	6"	7"	259.6	9.19	11.03	12.82	14.65	16.45
	5'	7"	7"	357.8	12.03	13.89	15.70	17.55	19.34
	6'	7"	8"	583.1	15.92	17.27	19.09	20.93	22.75
	7'	7½"	8½"	1139.6	19.59	21.46	23.30	25.16	26.99
	8'	8"	9"	1925.6	24.54	26.41	28.29	30.11	31.96
9'	5'	7"	7"	357.8	12.26	14.39	16.37	18.45	20.47
	6'	7½"	8"	583.1	15.94	18.04	20.09	22.19	24.23
	7'	7½"	8½"	1139.6	19.81	21.91	23.96	26.06	28.10
	8'	8"	9"	1925.6	24.76	26.86	28.91	31.00	33.05
10'	5'	7"	7"	357.8	12.49	14.80	17.05	19.26	21.52
	6'	7½"	8"	583.1	16.17	18.50	20.77	22.99	25.28
	7'	7½"	8½"	1139.6	20.04	22.37	24.64	26.87	29.15
	8'	8"	9"	1925.6	24.98	27.31	29.58	31.81	34.10
11'	6'	8"	8"	583.1	16.69	19.27	21.76	24.23	
	7'	8"	8½"	1139.6	20.64	23.22	25.71	28.18	
	8'	8"	9"	1925.6	25.19	27.77	30.27	32.74	
12'	6'	8"	8"	583.1	16.92	19.75	22.45	25.18	
	7'	8"	8½"	1139.6	20.87	23.69	26.40	29.15	
	8'	8"	9"	1925.6	25.42	28.25	30.96	33.69	

⊛ For reinforcing steel in Headwalls and Aprons, See Details of Standard Barrel Sections for R.C. Box Culverts for the desired Span and Height.

GENERAL NOTES:-

CONCRETE:- All concrete to be Class S, and shall be poured in the dry. All exposed corners to have ¾" chamfers.

REINFORCING STEEL:- Reinforcing steel to be deformed bars of intermediate or hard grade.

CONSTRUCTION JOINTS:- Construction joints between wingwall, footings and sidewalls shall be only where shown on plans.

SPECIFICATIONS:- Arkansas State Highway Commission Standard Specifications for Highway Construction and applicable Special Provisions.

UNIT STRESSES:-
Class S Concrete (n=10) 1200#/□"
Reinforcing Steel 20,000#/□"

NOTE:- This drawing to be used in conjunction with Standard Barrel Sections, Drawing Nos. as listed below.

SINGLES	DOUBLES	TRIPLES	QUADRUPLES	QUINTUPLES
R-100X-0	R-200X-0	R-300X-0	R-400X-0	R-500X-0
R-100X-X1	R-200X-X1	R-300X-X1	R-400X-X1	R-500X-X1
R-100X-X2	R-200X-X2	R-300X-X2	R-400X-X2	
	R-200X-X3	R-300X-X3		

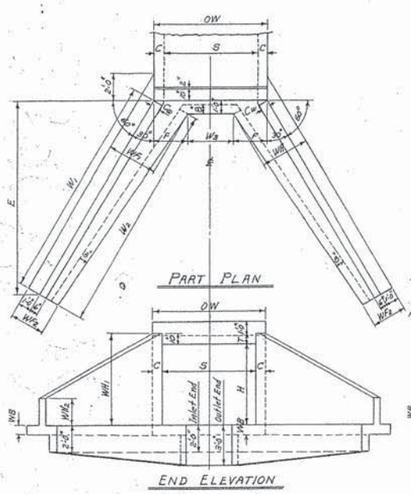

SINGLE BARREL CULVERT

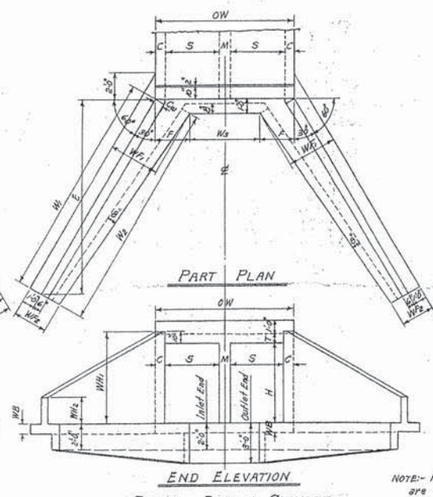

DOUBLE BARREL CULVERT

NOTE:- Plans and Elevations are not to scale.

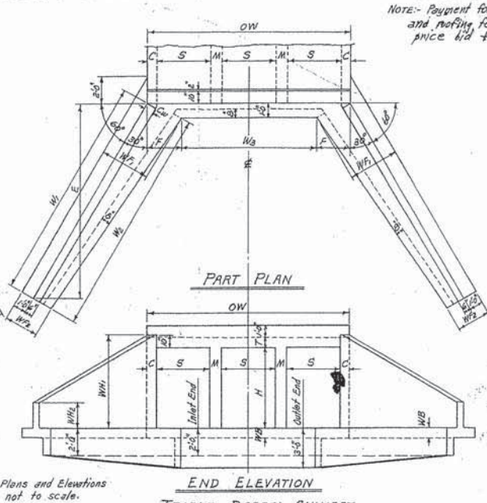

TRIPLE BARREL CULVERT

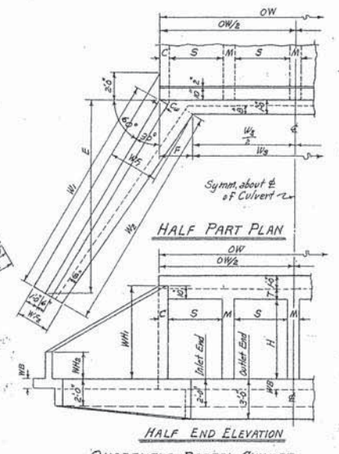

QUADRUPLE BARREL CULVERT

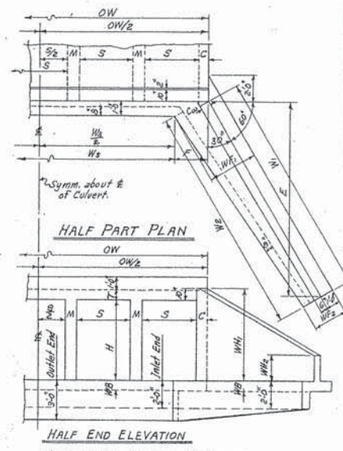

QUINTUPLE BARREL CULVERT

MEMBRANE:- A membrane waterproofing 12" wide, consisting of three mopings of waterproofing asphalt and two alternate layers of treated cotton fabric shall be applied to the back face of wing to cover the construction joints in wings.

BAR LIST FOR ONE WING - 4 REQUIRED

CLEAR HEIGHT H	F1 Bent (In bottom of footing, bent up into back face of wing. One bar of each length.): SIZE	SPACING	NO. REQD	LENGTHS VARY MIN.	LENGTHS VARY MAX.	X MIN.	X MAX.	Y MIN.	Y MAX.	F2 Bent (In bottom of footing, bent up into back face of wing. Alt. with F1 bars.): SIZE	SPACING	NO. REQD	LENGTH	X	Y
2'	#3	12"	8	1'-6"	3'-10"	0'-8"	1'-0"	0'-11"	2'-11"	—	—	—	—	—	—
3'	#3	12"	10	2'-2"	5'-2"	0'-10"	1'-3"	1'-5"	4'-0"	—	—	—	—	—	—
4'	#3	12"	13	2'-9"	6'-6"	0'-11"	1'-7"	1'-6"	5'-0"	—	—	—	—	—	—
5'	#3	12"	15	2'-11"	7'-10"	1'-1"	1'-11"	1'-11"	6'-0"	#3	12"	4	3'-6"	1'-1"	2'-6"
6'	#4	12"	17	3'-6"	9'-3"	1'-2"	2'-3"	2'-5"	7'-1"	#3	12"	4	4'-6"	1'-4"	3'-3"
7'	#4	12"	20	3'-9"	10'-9"	1'-3"	2'-9"	2'-7"	8'-1"	#4	12"	7	5'-6"	1'-7"	4'-0"
8'	#4	12"	22	4'-9"	12'-3"	1'-5"	3'-2"	3'-0"	9'-2"	#4	12"	10	6'-6"	1'-10"	4'-9"

CLEAR HEIGHT H	F5 Straight (Longitudinal in top of wing footing heel.): SIZE	NO. REQD	LENGTH	F6 Straight (Longitudinal in bottom of wing footing toe.): SIZE	NO. REQD	LENGTH	H1 Straight (Horizontal in back face of wing.): SIZE	SPACING	NO. REQD	LENGTH	H2 Straight (Horizontal in back face of wing. One bar of each length.): SIZE	SPACING	NO. REQD	LENGTHS VARY MAX.	LENGTHS VARY MIN.
2'	#3	1	9'-8"	#3	2	8'-6"	#3	12"	1	7'-2"	#3	12"	1	—	9'-6"
3'	#3	1	12'-0"	#3	2	11'-0"	#3	12"	1	9'-6"	#3	12"	2	7'-6"	9'-6"
4'	#3	1	14'-4"	#3	3	13'-6"	#3	12"	1	11'-10"	#3	12"	3	10'-11"	9'-6"
5'	#3	1	16'-8"	#3	3	16'-0"	#3	12"	2	14'-2"	#3	12"	3	10'-11"	9'-6"
6'	#3	1	19'-0"	#3	3	18'-6"	#3	12"	2	16'-6"	#3	12"	4	14'-6"	9'-6"
7'	#4	1	21'-4"	#4	4	21'-0"	#4	12"	2	18'-9"	#4	12"	5	17'-9"	9'-6"
8'	#4	1	23'-8"	#4	4	23'-9"	#4	12"	3	21'-1"	#4	12"	5	17'-9"	9'-6"

CLEAR HEIGHT H	H3 Straight (In back face of wing at top-on slope.): SIZE	NO. REQD	LENGTH	H4 Bent (Dowels thru construction joint at headwall.): SIZE	SPACING	NO. REQD	LENGTH	X	QUANTITY REINFORCING STEEL PER WING LB.
2'	#8	1	7'-9"	#3	12"	2	2'-8"	1'-9"	27.0
3'	#8	1	9'-9"	#3	12"	3	2'-8"	1'-9"	41.1
4'	#3	1	12'-2"	#3	12"	4	2'-8"	1'-9"	63.7
5'	#3	1	14'-7"	#3	12"	5	2'-8"	1'-9"	89.5
6'	#3	1	17'-0"	#3	12"	6	2'-8"	1'-9"	145.8
7'	#3	1	19'-5"	#4	12"	7	3'-6"	1'-9"	283.7
8'	#3	1	21'-10"	#4	12"	8	3'-6"	1'-9"	356.4

BAR BENDING DIAGRAMS

REVISIONS:- Membrane added. 5-10-66 W.C.H.

Designed By:- W.C.H. 8-20-62. Checked By:- RHS - 1-9-63
Drawn By:- W.C.H. 12-4-62. Checked By:- RHS - 1-31-63
Quantities By:- W.C.H. 12-11-62. Checked By:- RHS - 3-29-63
Rechecked By:-

CLASS S CONCRETE

ARKANSAS STATE HIGHWAY COMMISSION

DETAILS OF STANDARD WINGS FOR REINFORCED CONCRETE BOX CULVERTS

4', 5', 6', 7', 8', 9', 10', 11' & 12' SPANS — 3:1 SLOPES

SINGLES, DOUBLES, TRIPLES, QUADRUPLES & QUINTUPLES. — ALL DEPTHS OF COVER FOR H = 8'-0" OR LESS

STANDARD DRAWING NO. W-X003-1

MYLAR

BAR LIST FOR BARREL SECTION 60'-0" IN LENGTH

"a" bars — STRAIGHT — In Top and Bottom Slabs of Barrel. 2 Add'l in Apron and Headwall - Each.
"b" bars — BENT - See Diagram below. — In Top and Bottom Slabs of Barrel. Alternate with "a" bars.
"d" bars — STRAIGHT — Longitudinal in Top Slab of Barrel. Length: 2 @ 30'-8" for 60'-0" Length Barrel. (1'-8" Lap)
"d₁" bars — STRAIGHT — Longitudinal in Sidewalls. Length: 2 @ 30'-6" for 60'-0" Length Barrel. (1'-3" Lap)
"e" bars — STRAIGHT — Longitudinal in Bottom Slab of Barrel. Length: 2 @ 31'-6" for 60'-0" Length Barrel. (1'-3" Lap)
"f" bars — STRAIGHT — Verticals in Side walls

DEPTH OF COVER D	CLEAR SPAN S	CLEAR HEIGHT H	"a" Size	"a" Spacing	"a" No. Req'd 3:1	"a" No. Req'd 4:1	"a" Length	"b" Size	"b" Spacing	"b" No. Req'd 3:1	"b" No. Req'd 4:1	"b" Length	"b" X	"d" Size	"d" Spacing	"d" No. Req'd	"d₁" Size	"d₁" Spacing	"d₁" No. Req'd	"e" Size	"e" Spacing	"e" No. Req'd	"f" Size	"f" Spacing	"f" No. Req'd 3:1	"f" No. Req'd 4:1	"f" Length
0'-0" TO 5'-0" MAXIMUM	1 @ 4'	2'	#5	13"	120	120	4'-9"	#6	13"	110	110	5'-10"	4'-8"	#5	10½"	6	#4	12"	4	#4	12"	5	#4	12"	120	120	2'-11"
		3'			120	120	4'-9"			110	110	5'-10"	4'-8"			6			6			5			120	120	3'-11"
		4'			120	120	4'-9"			110	110	5'-10"	4'-8"			6			8			5			120	120	4'-11"
		5'			120	120	4'-9"			110	110	5'-10"	4'-8"			6			10			5			120	120	5'-11"
		6'			120	120	4'-11"			110	110	6'-0"	4'-10"			6			12			5			120	120	6'-11"
	1 @ 5'	3'	#6	13"	120	120	5'-9"	#6	13"	110	110	6'-10"	5'-8"	#5	10½"	7	#4	12"	6	#4	12"	6	#4	12"	120	120	4'-0"
		4'			120	120	5'-9"			110	110	6'-10"	5'-8"			7			8			6			120	120	5'-0"
		5'			120	120	5'-9"			110	110	6'-10"	5'-8"			7			10			6			120	120	6'-0"
		6'			120	120	5'-11"			110	110	7'-0"	5'-10"			7			12			6			120	120	7'-0"
		7'			120	120	6'-0"			110	110	7'-1"	5'-11"			7			14			6			120	120	8'-0"
	1 @ 6'	3'	#6	12"	128	126	6'-9"	#6	12"	118	118	7'-10"	6'-8"	#5	10½"	8	#4	12"	6	#4	12"	7	#4	12"	120	120	4'-1"
		4'			128	128	6'-9"			118	118	7'-10"	6'-8"			8			8			7			120	120	5'-1"
		5'			128	128	6'-9"			118	118	7'-10"	6'-8"			8			10			7			120	120	6'-1"
		6'			128	128	6'-11"			118	118	8'-0"	6'-10"			8			12			7			120	120	7'-1"
		7'			128	128	7'-0"			118	118	8'-1"	6'-11"			8			14			7			120	120	8'-1"
		8'			128	128	7'-1"			118	118	8'-2"	7'-0"			8			16			7	#5	12"	120	120	9'-1"
	1 @ 7'	4'	#6	11"	140	140	7'-9"	#6	11"	130	130	8'-10"	7'-8"	#5	10½"	9	#4	12"	8	#4	12"	8	#4	12"	120	120	5'-2"
		5'			140	140	7'-9"			130	130	8'-10"	7'-8"			9			10			8			120	120	6'-2"
		6'			140	140	7'-11"			130	130	9'-0"	7'-10"			9			12			8			120	120	7'-2"
		7'			140	140	8'-0"			130	130	9'-1"	7'-11"			9			14			8			120	120	8'-2"
		8'			140	140	8'-1"			130	130	9'-2"	8'-0"			9			16			8		10"	144	144	9'-2"
		9'			140	140	8'-3"			130	130	9'-4"	8'-2"			9			18			8	#5	12"	120	120	10'-2"
	1 @ 8'	4'	#7	12"	128	128	8'-9"	#6	12"	118	118	9'-10"	8'-8"	#5	10"	11	#4	12"	8	#4	12"	9	#4	12"	120	120	5'-4"
		5'			128	128	8'-11"			118	118	10'-0"	8'-10"			11			10			9			120	120	6'-4"
		6'			128	128	8'-11"			118	118	10'-0"	8'-10"			11			12			9			120	120	7'-4"
		7'			128	128	9'-0"			118	118	10'-1"	8'-11"			11			14			9			120	120	8'-4"
		8'			128	128	9'-1"			118	118	10'-2"	9'-0"			11			16			9		10"	144	144	9'-4"
		9'			128	128	9'-3"			118	118	10'-4"	9'-2"			11			18			9	#5	12"	120	120	10'-4"
		10'			128	128	9'-5"			118	118	10'-6"	9'-4"			11			20			9		11"	132	132	11'-4"
	1 @ 9'	5'	#7	11"	140	140	9'-11"	#6	11"	130	130	11'-0"	9'-10"	#5	10"	12	#4	12"	10	#4	12"	10	#4	12"	120	120	6'-5"
		6'			140	140	10'-0"			130	130	11'-1"	9'-11"			12			12			10			120	120	7'-5"
		7'			140	140	10'-0"			130	130	11'-1"	9'-11"			12			14			10			120	120	8'-5"
		8'			140	140	10'-1"			130	130	11'-2"	10'-0"			12			16			10		10"	144	144	9'-5"
		9'			140	140	10'-3"			130	130	11'-4"	10'-2"			12			18			10	#5	12"	120	120	10'-5"
		10'			140	140	10'-5"			130	130	11'-6"	10'-4"			12			20			10		11"	132	132	11'-5"
		11'			140	140	10'-7"			130	130	11'-8"	10'-6"			12			22			10		10"	144	144	12'-5"
	1 @ 10'	5'	#7	12"	128	128	10'-11"	#7	12"	118	118	12'-2"	10'-10"	#5	10"	13	#4	12"	10	#4	12"	11	#4	12"	120	120	6'-6"
		6'			128	128	11'-0"			118	118	12'-3"	10'-11"			13			12			11			120	120	7'-6"
		7'			128	128	11'-0"			118	118	12'-3"	10'-11"			13			14			11			120	120	8'-6"
		8'			128	128	11'-1"			118	118	12'-4"	11'-0"			13			16			11		10"	144	144	9'-6"
		9'			128	128	11'-3"			118	118	12'-6"	11'-2"			13			18			11	#5	12"	120	120	10'-6"
		10'			128	128	11'-5"			118	118	12'-8"	11'-4"			13			20			11		11"	132	132	11'-6"
		11'			128	128	11'-7"			118	118	12'-10"	11'-6"			13			22			11		10"	144	144	12'-6"
		12'			128	128	11'-9"			118	118	13'-0"	11'-8"			13			24			11	#6	12"	120	120	13'-6"
	1 @ 11'	6'	#7	11"	140	140	12'-1"	#7	11"	130	130	13'-4"	12'-0"	#5	9½"	15	#4	12"	12	#4	12"	12	#4	12"	120	120	7'-7"
		7'			140	140	12'-1"			130	130	13'-4"	12'-0"			15			14			12			120	120	8'-7"
		8'			140	140	12'-1"			130	130	13'-4"	12'-0"			15			16			12		10"	144	144	9'-7"
		9'			140	140	12'-3"			130	130	13'-6"	12'-2"			15			18			12	#5	12"	120	120	10'-7"
		10'			140	140	12'-5"			130	130	13'-8"	12'-4"			15			20			12		11"	132	132	11'-7"
		11'			140	140	12'-7"			130	130	13'-10"	12'-6"			15			22			12		10"	144	144	12'-7"
		12'			140	140	12'-9"			130	130	14'-0"	12'-8"			15			24			12	#6	12"	120	120	13'-7"
	1 @ 12'	6'	#8	12"	128	128	13'-1"	#7	12"	118	118	14'-4"	13'-0"	#5	9½"	16	#4	12"	12	#4	12"	13	#4	12"	120	120	7'-9"
		7'			128	128	13'-1"			118	118	14'-4"	13'-0"			16			14			13			120	120	8'-9"
		8'			128	128	13'-1"			118	118	14'-4"	13'-0"			16			16			13		10"	144	144	9'-9"
		9'			128	128	13'-3"			118	118	14'-6"	13'-2"			16			18			13	#5	12"	120	120	10'-9"
		10'			128	128	13'-5"			118	118	14'-8"	13'-4"			16			20			13		11"	132	132	11'-9"
		11'			128	128	13'-7"			118	118	14'-10"	13'-6"			16			22			13		10"	144	144	12'-9"
		12'			128	128	13'-9"			118	118	15'-0"	13'-8"			16			24			13	#6	12"	120	120	13'-9"

DIMENSIONS — QUANTITIES

MAX. DESIGN DEPTH OF COVER D	CLEAR SPAN S	CLEAR HEIGHT H	SQ. FT. OPENING A	OVERALL WIDTH OW	THICKNESS OF TOP SLAB T	THICKNESS OF SIDEWALLS C	THICKNESS OF BOTTOM SLAB B	OVERALL HEIGHT OH	CLASS S CONC. PER LIN. FT. OF BARREL CU.YD.	REINFORCING STEEL PER LIN. FT. OF BARREL LB.	ADDITIONAL PER LAP LB.	ADDITIONAL TWO HEADWALLS & APRONS LB.
5'-0"	1 @ 4'	2'	8	5'-0"	7"	6"	6½"	3'-1½"	0.282	41.49	17.95	66.35
		3'	12	5'-0"		6"		4'-1½"	0.319	44.16	19.62	66.35
		4'	16	5'-0"		6"		5'-1½"	0.356	46.83	21.29	66.35
		5'	20	5'-0"		6"		6'-1½"	0.394	49.50	22.96	66.35
		6'	24	5'-2"		7"		7'-1½"	0.474	52.96	24.63	67.75
	1 @ 5'	3'	15	6'-0"	7½"	6"	7"	4'-2½"	0.380	55.55	22.19	101.27
		4'	20	6'-0"		6"		5'-2½"	0.417	58.23	23.86	101.27
		5'	25	6'-0"		6"		6'-2½"	0.454	60.90	25.53	101.27
		6'	30	6'-2"		7"		7'-2½"	0.535	64.49	27.20	103.27
		7'	35	6'-3"		7½"		8'-2½"	0.604	67.63	28.87	104.27
	1 @ 6'	3'	18	7'-0"	8"	6"	7½"	4'-3½"	0.446	66.29	24.76	118.96
		4'	24	7'-0"		6"		5'-3½"	0.483	68.96	26.43	118.96
		5'	30	7'-0"		6"		6'-3½"	0.520	71.64	28.10	118.96
		6'	36	7'-2"		7"		7'-3½"	0.602	75.31	29.77	120.96
		7'	42	7'-3"		7½"		8'-3½"	0.671	78.98	31.44	121.97
		8'	48	7'-4"		8"		9'-3½"	0.746	88.47	33.11	122.97
	1 @ 7'	4'	28	8'-0"	8½"	6"	8½"	5'-5"	0.568	81.32	29.01	136.88
		5'	35	8'-0"		6"		6'-5"	0.605	84.00	30.68	136.88
		6'	42	8'-2"		7"		7'-5"	0.688	87.76	32.35	138.88
		7'	49	8'-3"		7½"		8'-5"	0.757	90.98	34.02	139.88
		8'	56	8'-4"		8"		9'-5"	0.832	96.65	35.69	140.88
		9'	63	8'-6"		9"		10'-5"	0.946	105.59	37.36	142.89
	1 @ 8'	4'	32	9'-0"	9½"	6"	9½"	5'-7"	0.676	95.26	33.32	194.07
		5'	40	9'-2"		7"		6'-7"	0.754	99.12	34.99	196.80
		6'	48	9'-2"		7"		7'-7"	0.797	101.79	36.66	196.80
		7'	56	9'-3"		7½"		8'-7"	0.867	105.05	38.33	198.16
		8'	64	9'-4"		8"		9'-7"	0.942	110.81	40.00	199.52
		9'	72	9'-6"		9"		10'-7"	1.057	119.92	41.67	202.25
		10'	80	9'-8"		10"		11'-7"	1.184	126.67	43.34	204.97
	1 @ 9'	5'	45	10'-2"	10"	7"	10"	6'-8"	0.849	114.72	37.56	219.61
		6'	54	10'-3"		7½"		7'-8"	0.910	118.04	39.23	220.97
		7'	63	10'-3"		7½"		8'-8"	0.957	120.71	40.90	220.97
		8'	72	10'-4"		8"		9'-8"	1.033	126.54	42.57	222.33
		9'	81	10'-6"		9"		10'-8"	1.148	135.80	44.24	225.06
		10'	90	10'-8"		10"		11'-8"	1.276	142.68	45.91	227.78
		11'	99	10'-10"		11"		12'-8"	1.416	150.40	47.58	230.51
	1 @ 10'	5'	50	11'-2"	10½"	7"	11"	6'-9½"	0.957	130.64	40.13	242.64
		6'	60	11'-3"		7½"		7'-9½"	1.024	133.99	41.80	244.00
		7'	70	11'-3"		7½"		8'-9½"	1.071	136.66	43.47	244.00
		8'	80	11'-4"		8"		9'-9½"	1.147	142.55	45.14	245.36
		9'	90	11'-6"		9"		10'-9½"	1.263	151.92	46.81	248.09
		10'	100	11'-8"		10"		11'-9½"	1.391	158.89	48.48	250.81
		11'	110	11'-10"		11"		12'-9½"	1.532	166.71	50.15	253.54
		12'	120	12'-0"		12"		13'-9½"	1.685	178.67	51.82	256.26
	1 @ 11'	6'	66	12'-4"	11"	8"	11½"	7'-10½"	1.153	155.16	46.12	268.62
		7'	77	12'-4"		8"		8'-10½"	1.202	157.83	47.79	268.62
		8'	88	12'-4"		8"		9'-10½"	1.252	163.06	49.46	268.62
		9'	99	12'-6"		9"		10'-10½"	1.368	172.60	51.13	271.34
		10'	110	12'-8"		10"		11'-10½"	1.497	179.70	52.80	274.07
		11'	121	12'-10"		11"		12'-10½"	1.638	187.67	54.47	276.79
		12'	132	13'-0"		12"		13'-10½"	1.792	199.79	56.14	279.52
	1 @ 12'	6'	72	13'-4"	11¾"	8"	12¼"	8'-0"	1.284	172.20	48.69	357.62
		7'	84	13'-4"		8"		9'-0"	1.333	174.87	50.36	357.62
		8'	96	13'-4"		8"		10'-0"	1.383	180.15	52.03	357.62
		9'	108	13'-6"		9"		11'-0"	1.500	189.85	58.70	361.18
		10'	120	13'-8"		10"		12'-0"	1.630	197.07	55.37	364.74
		11'	132	13'-10"		11"		13'-0"	1.772	205.16	57.04	368.30
		12'	144	14'-0"		12"		14'-0"	1.926	217.45	58.71	371.86

Note-For details of wings and bar lists, see Drawing Nos. W-X002-1 or W-X002-2, W-X003-1 or W-X003-2, and W-X004-1 or W-X004-2.

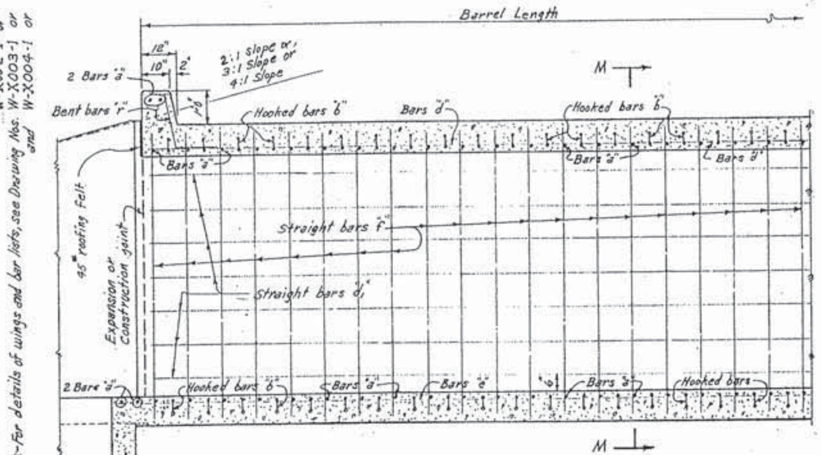

PART LONGITUDINAL SECTION

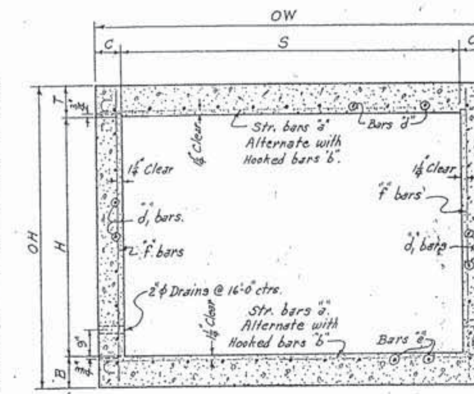

TYPICAL SECTION M-M

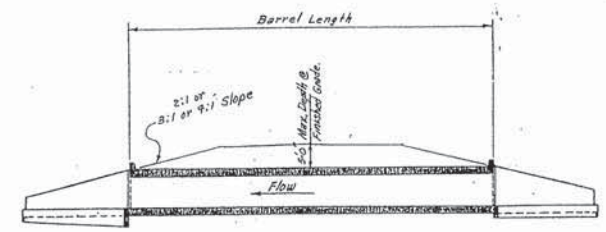

LONGITUDINAL SECTION

BAR SIZE	PIN DIAM.	K	ADD FOR 2 HOOKS
#6	3"	5"	1'-2"
#7	3½"	5¾"	1'-4"

BENDING DIAGRAM Bars "b".

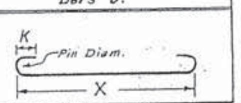

NOTE:- Dimensions are to centers of bars.

DOWEL BARS FOR TWO HEADWALLS

SPAN	SIZE	SPACING	NO. REQ'D	LENGTH	X
4'	#4	11"	12	2'-6"	1'-3"
5'	#4	11"	14	2'-7"	1'-3½"
6'	#4	11"	16	2'-8"	1'-4"
7'	#4	11"	18	2'-9"	1'-4½"
8'	#4	11½"	20	2'-11"	1'-5½"
9'	#4	11½"	22	3'-0"	1'-6"
10'	#4	11½"	24	3'-1"	1'-6½"
11'	#4	12"	26	3'-2"	1'-7"
12'	#4	12"	28	3'-3"	1'-7½"

Bars "r" Dowel bars in Headwalls.

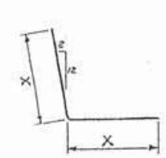

GENERAL NOTES:-

CONCRETE:- All concrete to be Class S, and shall be poured in the dry. All exposed corners to have ¾" chamfers.
REINFORCING STEEL:- Reinforcing to be deformed bars of intermediate or hard grade.
BAR LAP:- In computing the quantities of steel from the tables add one lap for each additional 33'-0" length of barrel over 32'-0". Lap longitudinal bars 30 diameters.
CONSTRUCTION JOINTS:- Construction joints between wingwalls, sidewalls and slabs shall be only where shown on plans.
SPECIFICATIONS:- Arkansas State Highway Commission Standard Specifications for Highway Construction and applicable Special Provisions.

DESIGN LIVE LOAD

H20-S16 LOADING A.A.S.H.O. 1961
AND
SPECIAL MILITARY LOADING
Two 24,000 Lb. Axles @ 4'-0" ctrs.

UNIT STRESSES:-
Class S Concrete (n=10) 1200#/□"
Reinforcing Steel 20,000#/□"

NOTE:- This drawing to be used in conjunction with Standard Drawing Nos. W-X003-1 or W-X003-2 and W-X004-1 or W-X004-2. Also Drawing Nos. W-X002-1 or W-X002-2.

CLASS S CONCRETE

ARKANSAS STATE HIGHWAY COMMISSION

DETAILS OF STANDARD BARREL SECTIONS
FOR
REINFORCED CONCRETE BOX CULVERTS

4,5,6,7,8,9,10,11 & 12' SPANS — 3:1 OR 4:1 SLOPES
SINGLES — UNDER 5'-0" COVER

STANDARD DRAWING NO. R-100X-0

Designed By:- W.C.H. 1-23-63. Checked By:- B.H.S. 5-8-63
Drawn By:- W.C.H. 2-8-63. Checked By:- B.H.S. 5-24-63
Quantities By:- W.C.H. 2-12-63. Checked By:- B.H.S. 5-24-63