DATE REVISED	DATE FILMED	DATE REVISED	DATE FILMED	FED. ROAD DIST. NO.	STATE	FED. AID PROJ. NO.	SHEET NO.	TOTAL SHEETS
				6	ARK.			
				JOB NO.		BB0407	242	464
				1 B6879		LAYOUT DIAGRAM		48537

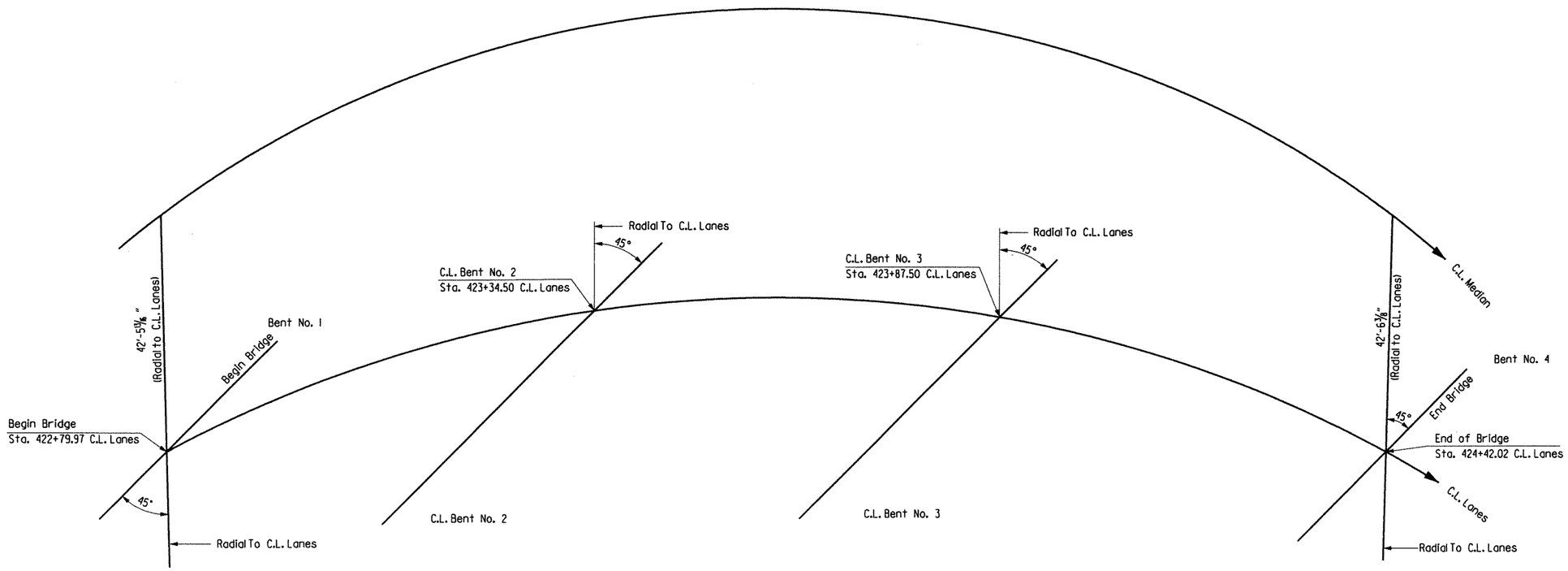

BRIDGE LAYOUT

Not to Scale

C.L. MEDIAN CURVE DATA	C.L. LANES CURVE DATA (Bridge B6879)
P.I. 424+35.68	P.I. 424+29.09
Δ = 17°51' Rt.	Δ = 17°51' Rt.
D = 1°30'	D = 1°30'
T = 599.86'	T = 599.86'
L = 1190.0'	L = 1190.00'
	P.C. 418+29.22
	P.T. 430+32.40

Station Equation:
430+19.22 Back =
430+32.40 Ahead

STATE OF ARKANSAS
REGISTERED PROFESSIONAL ENGINEER
No. 10339
LARRY E. MILLER

Larry E. Miller 8-11-12

BRIDGE ENGINEER

LAYOUT DIAGRAM
BRIDGE OVER CLAYTON BRANCH
(BR. B6879)

ROUTE I-540 SEC. 1
ARKANSAS STATE HIGHWAY COMMISSION
LITTLE ROCK, ARK.

DRAWN BY: TAR DATE: Mar 02
CHECKED BY: EMB/ETH DATE: April 02
DESIGNED BY: BCG/JLH DATE: Feb 02
FILENAME: bBB0407b3 112.dgn
SCALE: As Shown

BRIDGE NO. B6879 DRAWING NO. 48537

$$$$date$$$

$$$$dgnspec$$$$$*

...\b040468b3_112.dgn 8/10/2012 3:49:43 PM

DATE REVISED	DATE FILMED	DATE REVISED	DATE FILMED	FED. ROAD DIST. NO.	STATE	FED. AID PROJ. NO.	SHEET NO.	TOTAL SHEETS
				6	ARK.			
				JOB NO.		BB0407	243	464
				1 B6879		BENT DTLS.		48538

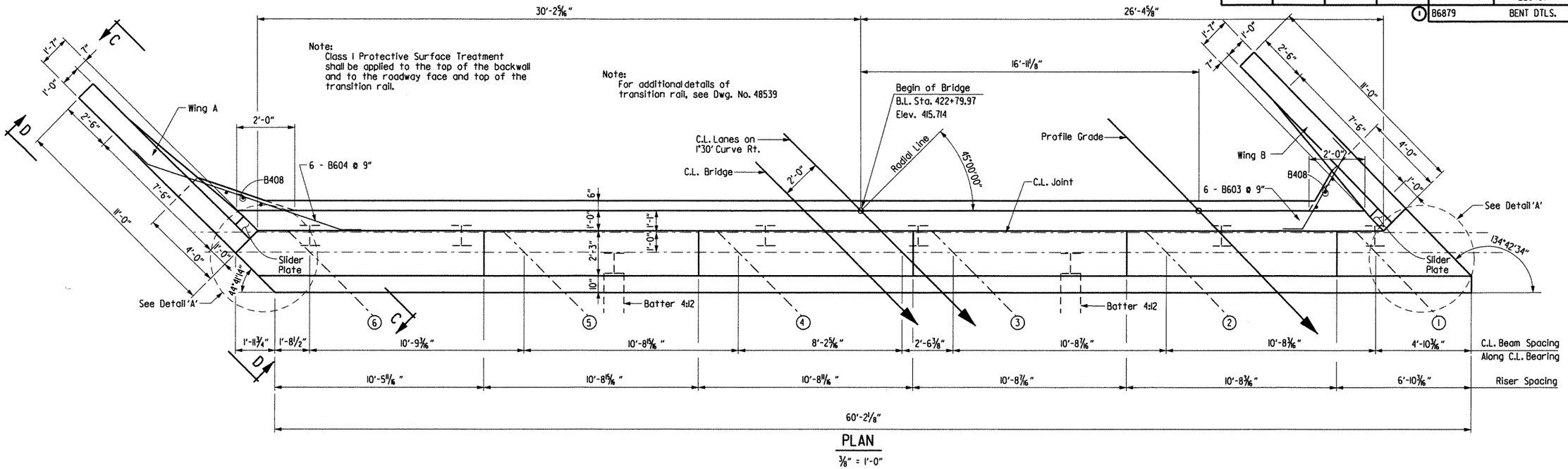

PLAN

3/8" = 1'-0"

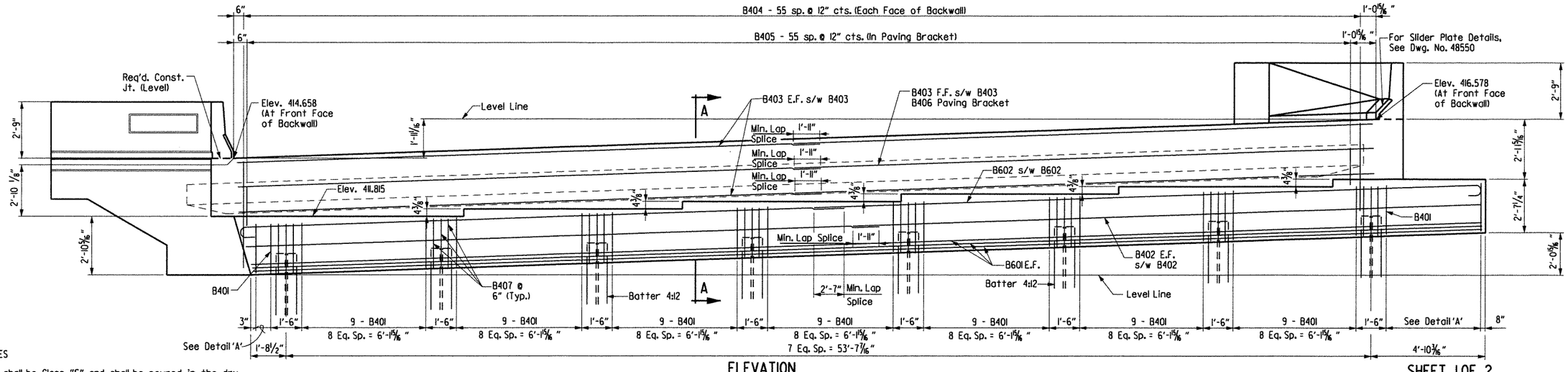

ELEVATION

(Looking Back)

3/8" = 1'-0"

GENERAL NOTES

All concrete shall be Class "S" and shall be poured in the dry. All exposed corners shall be chamfered 3/4" unless otherwise noted.

All reinforcing steel shall conform to AASHTO M31 or M53, Gr. 60.

End Bent backwall shall not be poured before girders are in place. Backwall to be placed after concrete span placement.

Structural steel in end bents shall be AASHTO M270, Gr. 50W and shall be paid for as "Structural Steel in Beam Spans (M270, Gr. 50W)".

If anchor bolts are drilled into cap, top reinforcing bars shall be properly spaced to avoid damage.

For additional information, see Layout.

The parapet slider plates shall be cleaned in accordance with subsection 807.84(b) and painted in accordance with subsection 807.75. The color of paint shall be Gray and shall match Fed. Std. 595B, Color Chip 26176. Cleaning and painting will not be paid for directly but will be considered subsidiary to "Structural Steel in Beam Spans (Gr. 50W)".

ANCHOR BOLT LAYOUT TABLE

Beam	BI
1	44°42'12"
2	44°48'57"
3	44°55'44"
4	45°02'33"
5	45°09'25"
6	45°16'20"

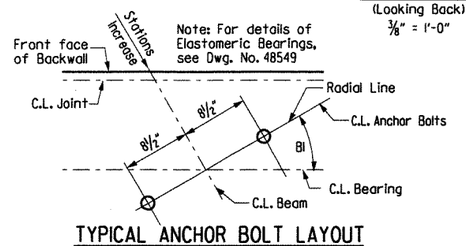

TYPICAL ANCHOR BOLT LAYOUT

No Scale

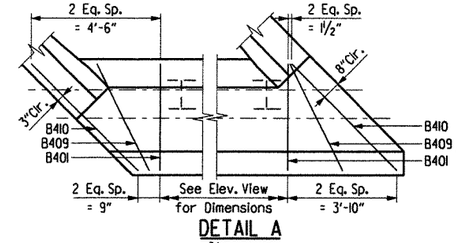

DETAIL A

3/8" = 1'-0"

STATE OF ARKANSAS REGISTERED PROFESSIONAL ENGINEER No. 11339 LARRY W. MILLER

8-11-12

BRIDGE ENGINEER

SHEET 1 OF 2

DETAILS OF BENT NO. 1

BRIDGE OVER CLAYTON BRANCH

(BR. B6879)

CRAWFORD & SEBASTIAN COUNTIES

ROUTE I-540 SEC. 1

ARKANSAS STATE HIGHWAY COMMISSION

LITTLE ROCK, ARK.

DRAWN BY: TAR	DATE: March 02	FILENAME: bBB0407b3 b11.dgn			
CHECKED BY: EMB/ETH	DATE: April 02	SCALE: As Shown			
DESIGNED BY: BCG/JLH	DATE: Feb 02				

BRIDGE NO. B6879 DRAWING NO. 48538

$$$$date$$$$

$$$$dgnspec$$$$

...\b040468b3_b11.dgn 8/10/2012 3:49:43 PM

DATE REVISED	DATE FILMED	DATE REVISED	DATE FILMED

FED. ROAD DIST. NO.	STATE	FED. AID PROJ. NO.	SHEET NO.	TOTAL SHEETS
6	ARK.			
JOB NO.		BB0407	244	464
① B6879		BENT DTLS.		48539

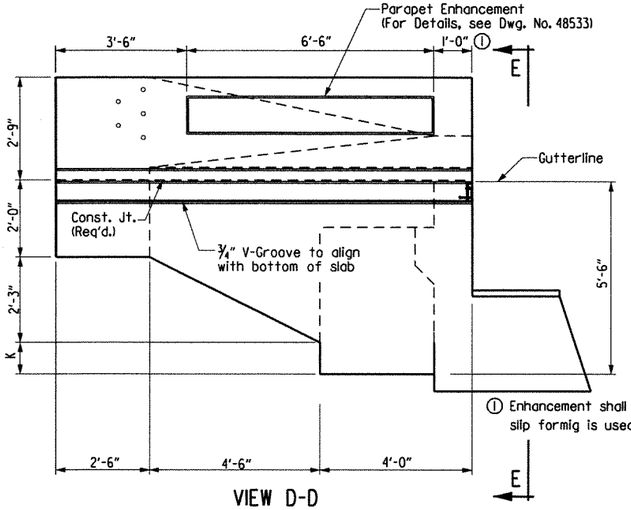

① Enhancement shall be continuous if slip formig is used on bridge parapet.

VIEW D-D

1/2" = 1'-0"

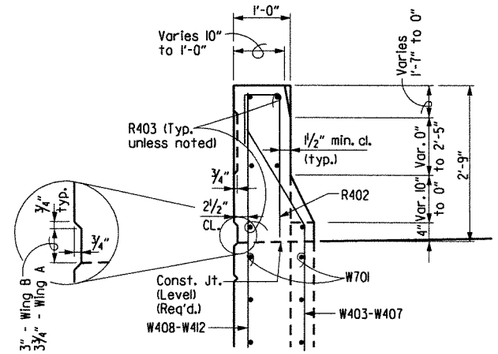

SECTION F-F

Scale: 3/4" = 1'-0"

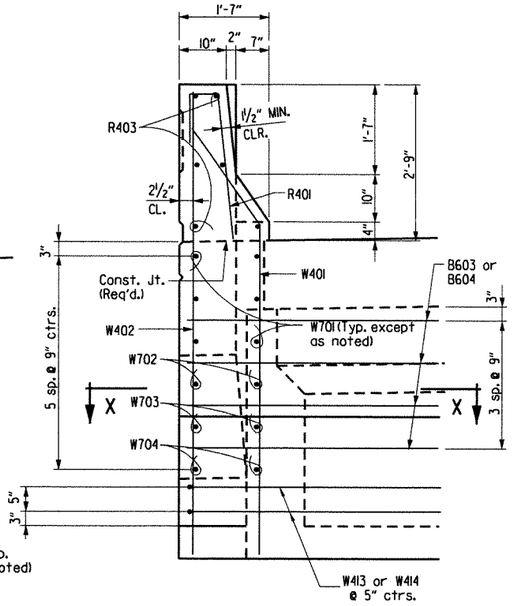

VIEW E-E

Scale: 3/4" = 1'-0"

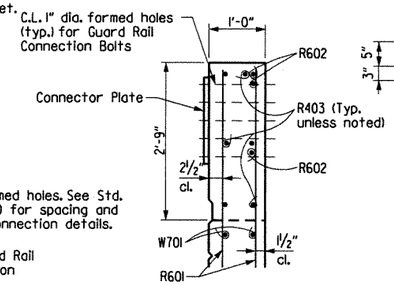

SECTION G-G

Scale: 3/4" = 1'-0"

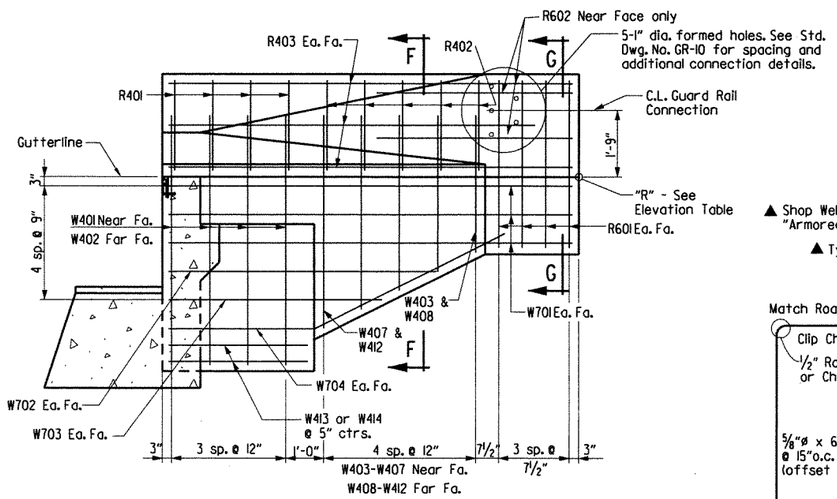

VIEW C-C

1/2" = 1'-0"

▲ Shop Weld - See SP Job BB0407 "Armored Joint With Neoprene Strip Seal"

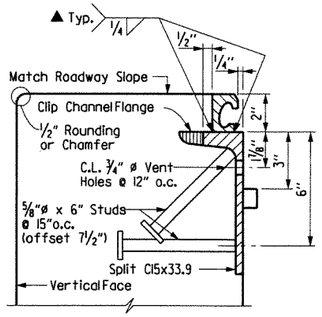

Note: Concrete shall be hand packed under the joint armor in the backwall.

For additional details, See Dwg. No. 48550.

DETAIL Z

3"= 1'-0"

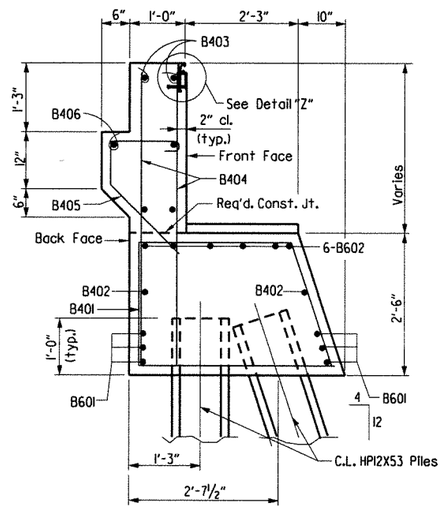

SECTION A-A

3/4" = 1'-0"

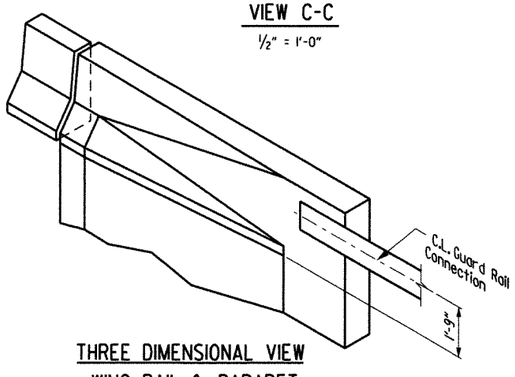

THREE DIMENSIONAL VIEW WING RAIL & PARAPET

No Scale

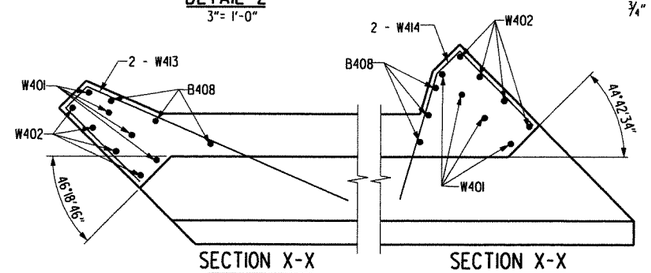

SECTION X-X

Wing A

SECTION X-X

Wing B

BAR LIST

Mark	No. Req'd.	Length	"A"	"B"	Pin Dia.
B401	65	11'-6"	2'-11"	3'-9"	2"
B402	4	31'-0"			STR.
B403	10	29'-1"			STR.
B404	112	5'-2"			STR.
B405	56	3'-11"	1'-2"	4 1/2"	3"
B406	2	29'-1"			STR.
B407	24	7'-3"	2'-11"	3'-9"	2"
B408	6	4'-0"			STR.
B409	2	13'-3"	3'-3"	4'-2"	2"
B410	2	14'-5"	4'-2"	5'-4"	2"
B601	6	59'-10"			STR.
B602	12	31'-11"	31'-3"		4 1/2"
B603	4	6'-5"			4 1/2"
B604	4	12'-2"			4 1/2"
R401	8	3'-11"			2"
R402	8	3'-11"			2"
R403	12	9'-8"			STR.
R601	16	4'-5"			STR.
R602	6	5'-0"			STR.
W401	8	6'-6"	5'-4"	1'-2"	2"
W402	8	7'-8"			STR.
W403-W407	2 ea.	Varies 3'-4" to 5'-4"	Varies 2'-2" to 4'-2"	1'-2"	2"
W408-W412	2 ea.	Varies 4'-5" to 6'-5"			STR.
W413	2	14'-8"			2"
W414	2	9'-2"			2"
W701	12	9'-8"			STR.
W702	4	6'-0"			STR.
W703	4	4'-6"			STR.
W704	4	8'-4"	2'-9"	5'-7"	5 1/4"

Bending Diagrams (Dimensions are out to out of bars.)

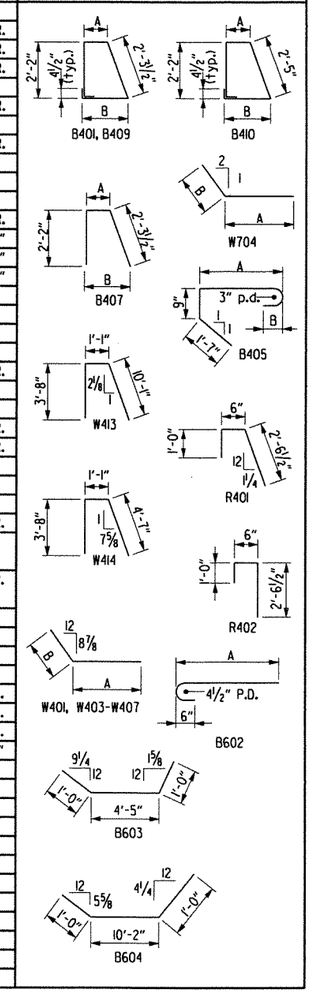

Bent No.	Wing	Elev. "R"	K
1	A	415.220	1'-9 3/4"
1	B	416.600	1'-3 1/4"

SHEET 2 OF 2
DETAILS OF BENT NO. 1
BRIDGE OVER CLAYTON BRANCH
(BR. B6879)
CRAWFORD & SEBASTIAN COUNTIES
ROUTE I-540 SEC. 1
ARKANSAS STATE HIGHWAY COMMISSION
LITTLE ROCK, ARK.

STATE OF ARKANSAS REGISTERED PROFESSIONAL ENGINEER No. 11339 LARRY W. MILLER

8-11-12

BRIDGE ENGINEER

DRAWN BY: TAR DATE: March 02
CHECKED BY: EMB DATE: May 02
DESIGNED BY: BCG/JLH DATE: Feb 02
FILENAME: bBB0407b3 b12.dgn
SCALE: As Shown

BRIDGE NO. B6879 DRAWING NO. 48539

$$$$date$$$

$$$$dgnspec$$$$$

...\b040468b3_b12.dgn 8/10/2012 3:49:44 PM

DATE REVISED	DATE FILMED	DATE REVISED	DATE FILMED	FED. ROAD DIST. NO.	STATE	FED. AID PROJ. NO.	SHEET NO.	TOTAL SHEETS
				6	ARK.			
				JOB NO.		BB0407	245	464
				(1) B6879		BENT DTLS.		48540

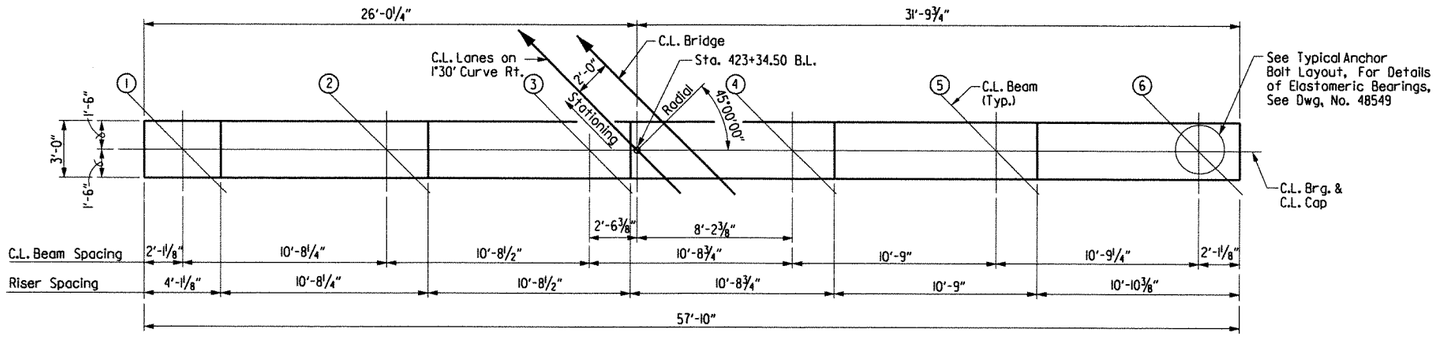

PLAN

¼" = 1'-0"

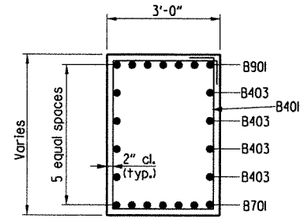

SECTION B-B

½" = 1'-0"

BAR LIST

Mark	No. Req'd.	Length	Pin Dia.	Bending Diagrams (Dimensions are out to out of bars.)
B401	54	14'-0"	2"	
B402	9	10'-10"	2"	
B403	16	29'-9"	STR.	
B701	7	57'-6"	STR.	
B901	7	59'-2"	9"	
C401	57	7'-7"	3"	
C701	36	18'-11"	STR.	
C702	36	6'-8"	5¼"	
F701	21	7'-4"	5¼"	
F702	18	8'-4"	5¼"	

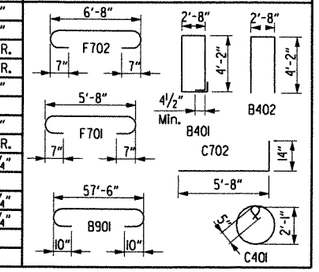

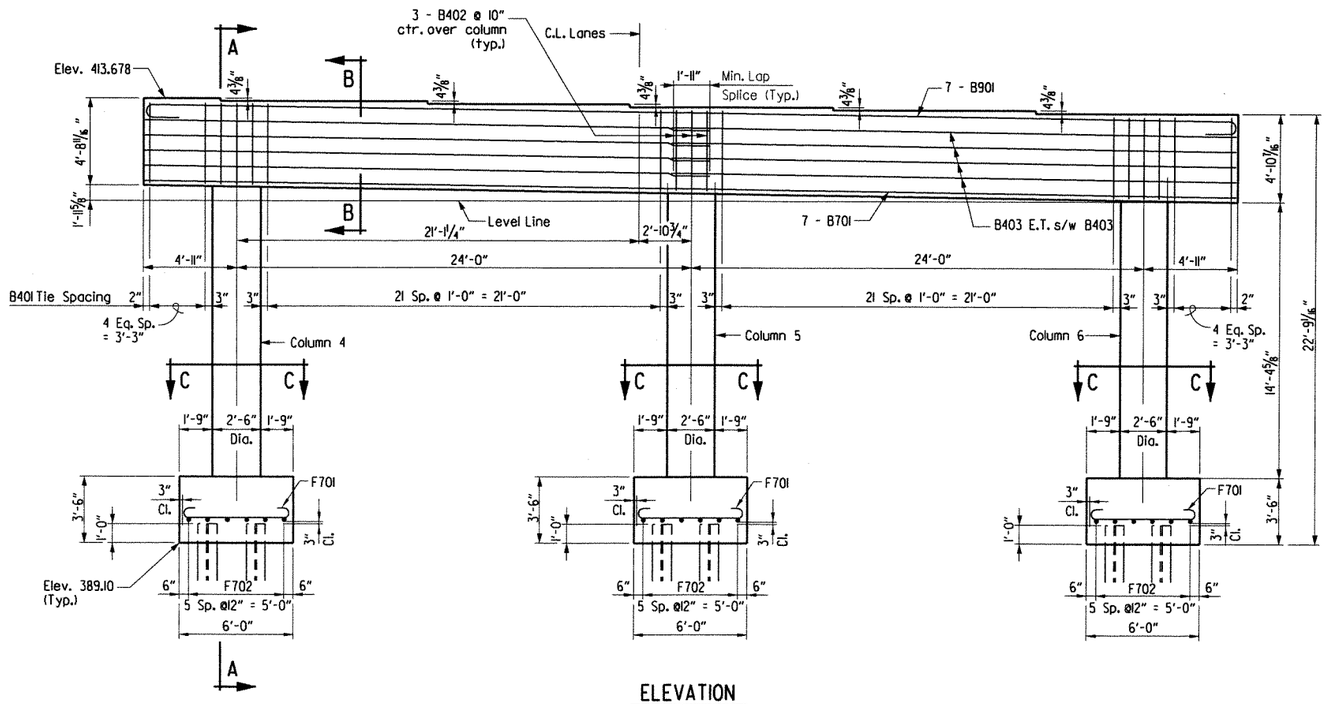

ELEVATION

Looking Ahead

¼" = 1'-0"

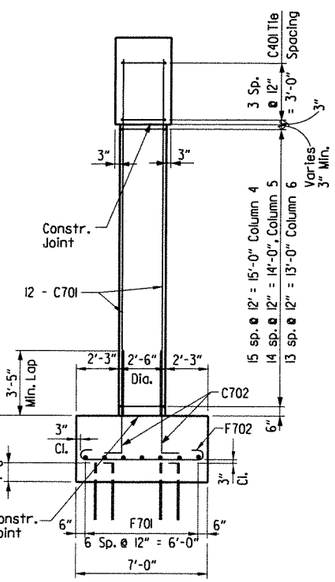

SECTION A-A

¼" = 1'-0"

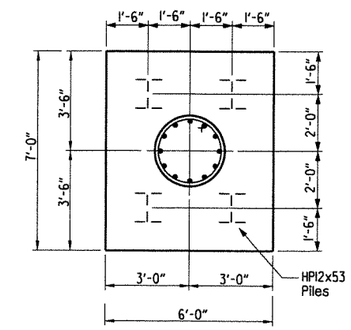

PLAN OF FOOTING

⅜" = 1'-0"

ANCHOR BOLT LAYOUT TABLE

Beam	B2
1	45°15'10"
2	45°08'25"
3	45°01'37"
4	44°54'47"
5	44°47'54"
6	44°40'59"

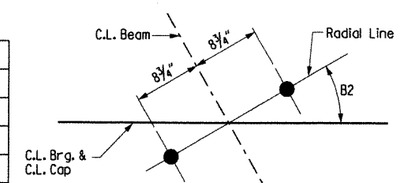

TYPICAL ANCHOR BOLT LAYOUT

No Scale

Notes:

All concrete shall be Class "S" and shall be poured in the dry. All exposed corners shall be chamfered ¾" unless otherwise noted.

All reinforcing steel shall conform to AASHTO M31 or M53, Grade 60.

If anchor bolts are drilled into cap, top reinforcing bars shall be properly placed to avoid damage.

For additional information, see Layout.

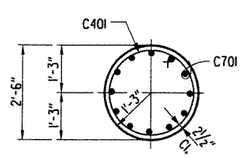

SECTION C-C

½" = 1'-0"

BRIDGE ENGINEER

DETAILS OF BENT NO. 2
BRIDGE OVER CLAYTON BRANCH
(BR. B6879)
CRAWFORD & SEBASTIAN COUNTIES

ROUTE I-540 SEC. 1

ARKANSAS STATE HIGHWAY COMMISSION

LITTLE ROCK, ARK.

DRAWN BY: TAR	DATE: April 02	FILENAME: bBB0407b3 b2.dgn			
CHECKED BY: EMB/ETH	DATE: May 02	SCALE: As Shown			
DESIGNED BY: BCG/JLH	DATE: Feb 02				
BRIDGE NO. B6879	DRAWING NO. 48540				

$$$$date$$$

$$$$dgnspec$$$$$

...\b040468b3_b2.dgn 8/10/2012 3:49:44 PM

DATE REVISED	DATE FILMED	DATE REVISED	DATE FILMED	FED. ROAD DIST. NO.	STATE	FED. AID PROJ. NO.	SHEET NO.	TOTAL SHEETS
				6	ARK.			
				JOB NO.		BB0407	246	464
				(1) B6879		BENT DTLS.		48541

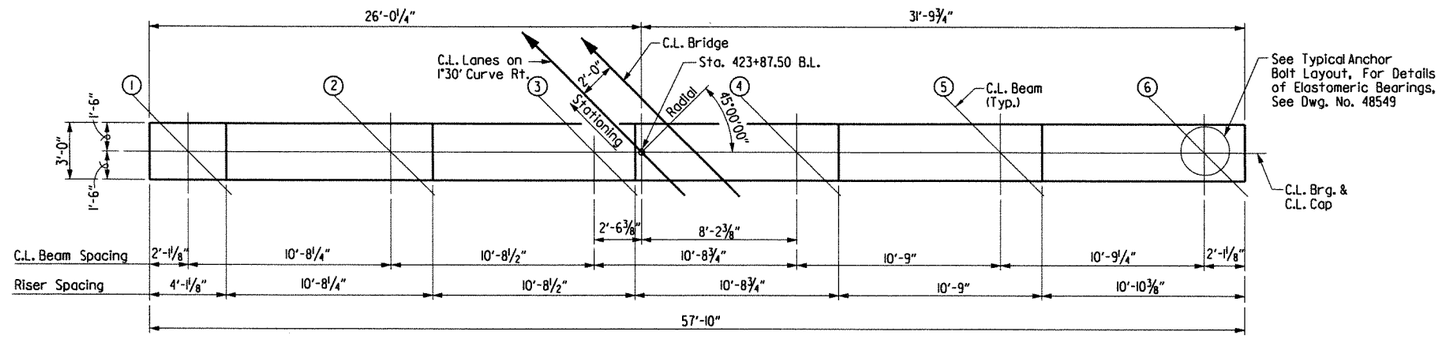

PLAN

¼" = 1'-0"

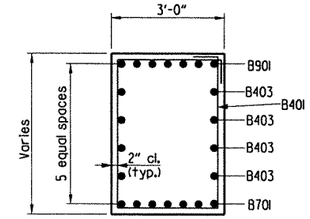

SECTION B-B

½" = 1'-0"

BAR LIST

Mark	No. Req'd.	Length	Pin Dia.
B401	54	14'-0"	2"
B402	9	10'-10"	2"
B403	16	29'-9"	STR.
B701	7	57'-6"	STR.
B901	7	59'-2"	9"
C401	57	7'-7"	3"
C701	36	18'-11"	STR.
C702	36	6'-8"	5¼"
F701	21	7'-4"	5¼"
F702	18	8'-4"	5¼"

Bending Diagrams (Dimensions are out to out of bars.)

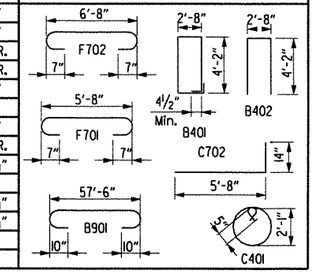

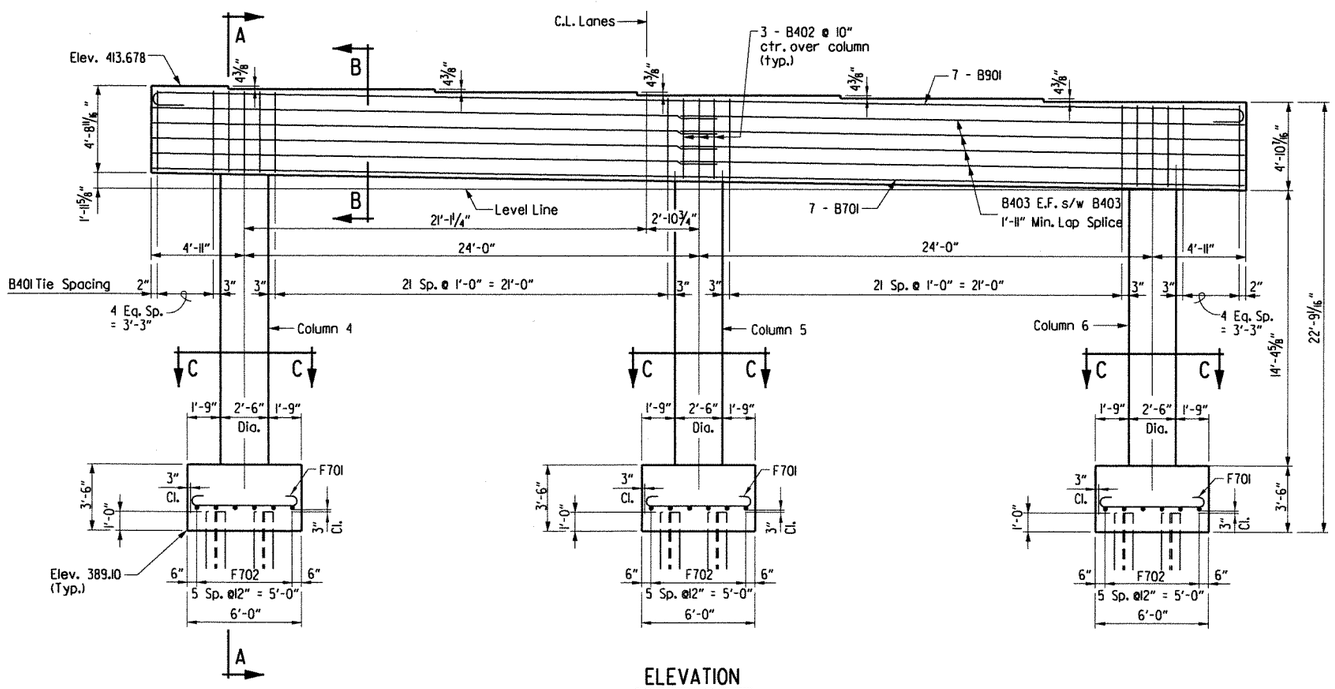

ELEVATION

Looking Ahead

¼" = 1'-0"

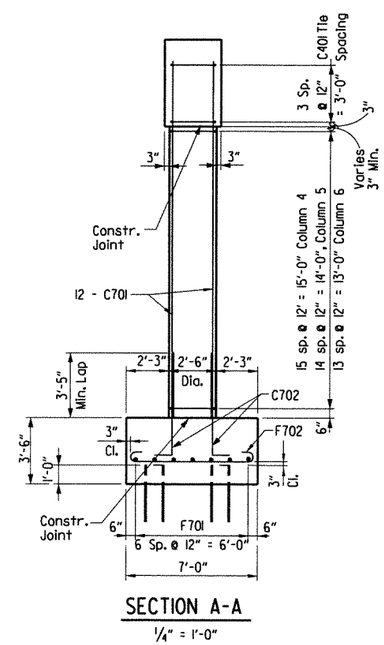

SECTION A-A

¼" = 1'-0"

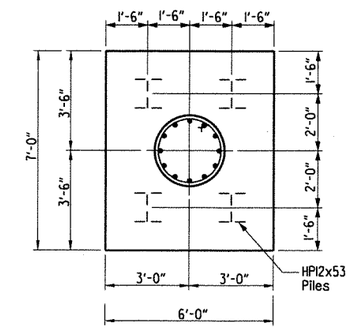

PLAN OF FOOTING

⅜" = 1'-0"

ANCHOR BOLT LAYOUT TABLE

Beam	B3
1	45°15'10"
2	45°08'25"
3	45°01'37"
4	44°54'47"
5	44°47'54"
6	44°40'59"

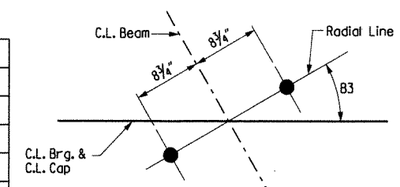

TYPICAL ANCHOR BOLT LAYOUT

No Scale

Notes:

All concrete shall be Class "S" and shall be poured in the dry. All exposed corners shall be chamfered ¾" unless otherwise noted.

All reinforcing steel shall conform to AASHTO M31 or M53, Grade 60.

If anchor bolts are drilled into cap, top reinforcing bars shall be properly placed to avoid damage.

For additional information, see Layout.

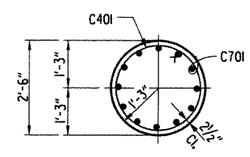

SECTION C-C

¼" = 1'-0"

STATE OF ARKANSAS REGISTERED PROFESSIONAL ENGINEER No. 11339 LARRY D. MILLER

Larry D. Miller 8-11-12

BRIDGE ENGINEER

DETAILS OF BENT NO. 3
BRIDGE OVER CLAYTON BRANCH
(BR. B6879)
CRAWFORD & SEBASTIAN COUNTIES

ROUTE I-540 SEC. 1

ARKANSAS STATE HIGHWAY COMMISSION

LITTLE ROCK, ARK.

DRAWN BY: TAR	DATE: April 02	FILENAME: bBB0407b3 b3.dgn			
CHECKED BY: EMB/ETH	DATE: May 02	SCALE: As Shown			
DESIGNED BY: BCG/JLH	DATE: Feb 02				

BRIDGE NO. B6879 DRAWING NO. 48541

$$$$dgnspec$$$$$

$$$$date$$$$

...\b040468b3_b3.dgn 8/10/2012 3:49:45 PM

DATE REVISED	DATE FILMED	DATE REVISED	DATE FILMED	FED. ROAD DIST. NO.	STATE	FED. AID PROJ. NO.	SHEET NO.	TOTAL SHEETS
				6	ARK.			
				JOB NO.		BB0407	247	464
				1 B6879		BENT DTLS.		48542

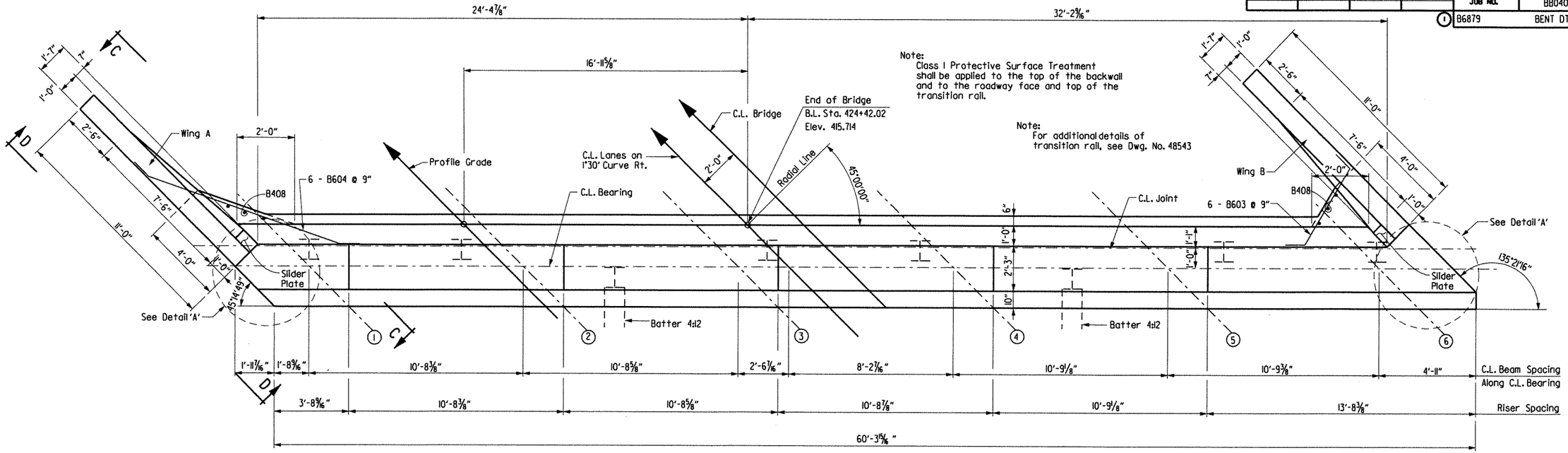

PLAN

3/8" = 1'-0"

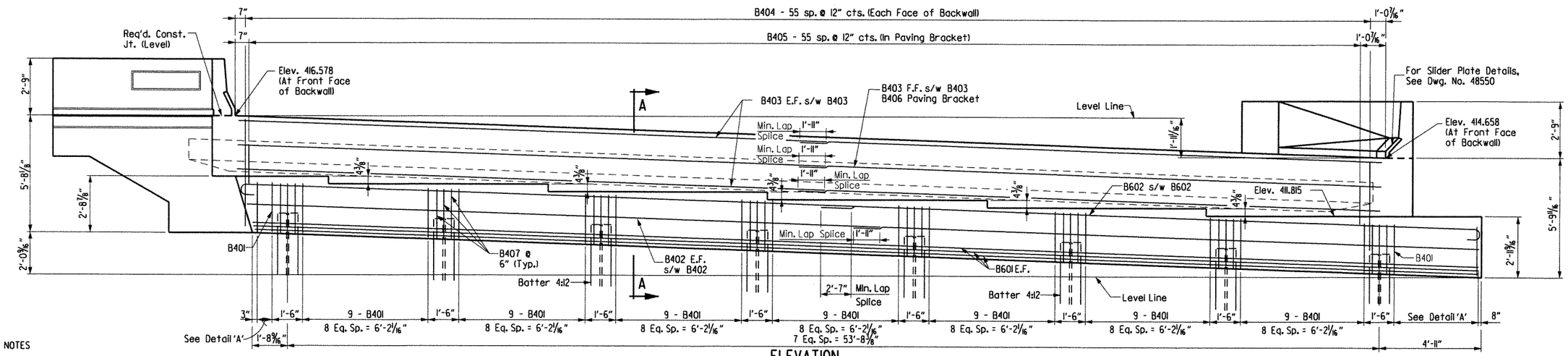

ELEVATION

(Looking Ahead)

3/8" = 1'-0"

GENERAL NOTES

All concrete shall be Class "S" and shall be poured in the dry.
All exposed corners shall be chamfered 3/4" unless otherwise noted.

All reinforcing steel shall conform to AASHTO M31 or M53, Gr. 60.

End Bent backwall shall not be poured before girders are in place. Backwall to be placed after concrete span placement.

Structural steel in end bents shall be AASHTO M270, Gr. 50W and shall be paid for as "Structural Steel in Beam Spans (M270, Gr. 50W)".

If anchor bolts are drilled into cap, top reinforcing bars shall be properly spaced to avoid damage.

For additional information, see Layout.

The parapet slider plates shall be cleaned in accordance with subsection 807.84(b) and painted in accordance with subsection 807.75. The color of paint shall be Gray and shall match Fed. Std. 595B, Color Chip 26176. Cleaning and painting will not be paid for directly but will be considered subsidiary to "Structural Steel in Beam Spans (Gr. 50W)".

ANCHOR BOLT LAYOUT TABLE

Beam	B4
1	44°47'28"
2	44°54'13"
3	45°01'02"
4	45°07'53"
5	45°14'46"
6	45°21'42"

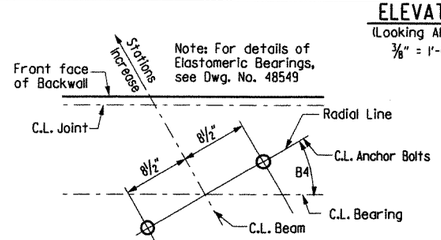

TYPICAL ANCHOR BOLT LAYOUT

No Scale

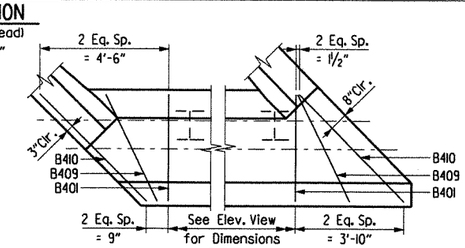

DETAIL A

3/8" = 1'-0"

STATE OF ARKANSAS REGISTERED PROFESSIONAL ENGINEER No. 13339 LARRY W. MILLER

Larry W. Miller 8-11-12

BRIDGE ENGINEER

SHEET 1 OF 2
DETAILS OF BENT NO. 4
BRIDGE OVER CLAYTON BRANCH
(BR. B6879)

CRAWFORD & SEBASTIAN COUNTIES
ROUTE I-540 SEC. 1
ARKANSAS STATE HIGHWAY COMMISSION
LITTLE ROCK, ARK.

DRAWN BY: TAR	DATE: March 02	FILENAME: bBB0407b3 b41.dgn	
CHECKED BY: EMB/ETH	DATE: April 02	SCALE: As Shown	
DESIGNED BY: BCG/JLH	DATE: Feb 02		
BRIDGE NO. B6879		DRAWING NO. 48542	

$$$$date$$$$

$$$$dgnspec$$$$

...\b040468b3_b41.dgn 8/10/2012 3:49:45 PM

DATE REVISED	DATE FILMED	DATE REVISED	DATE FILMED	FED. ROAD DIST. NO.	STATE	FED. AID PROJ. NO.	SHEET NO.	TOTAL SHEETS
				6	ARK.			
				JOB NO.		BB0407	248	464
				① B6879		BENT DTLS.		48543

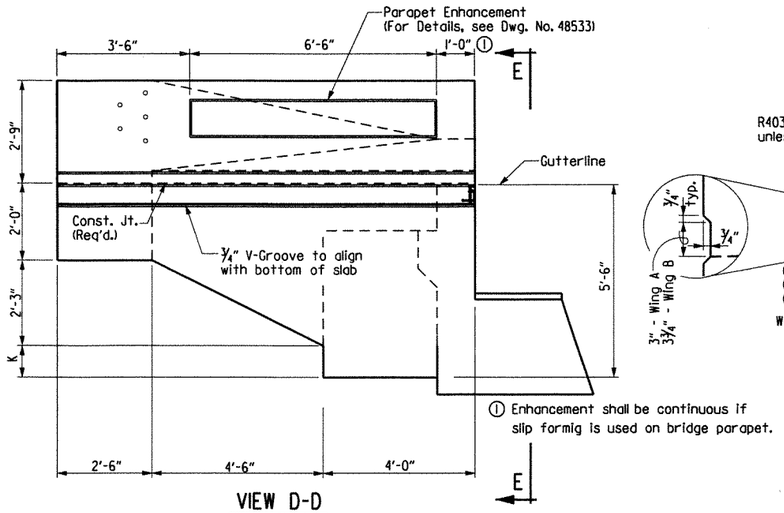

① Enhancement shall be continuous if slip formig is used on bridge parapet.

VIEW D-D

1/2" = 1'-0"

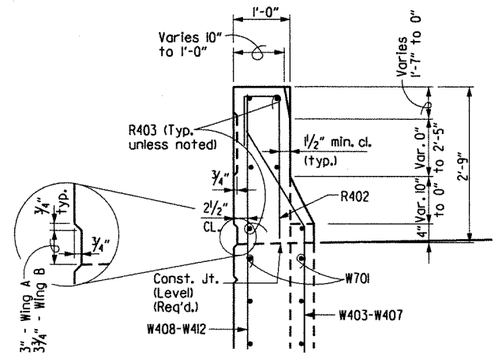

SECTION F-F

Scale: 3/4" = 1'-0"

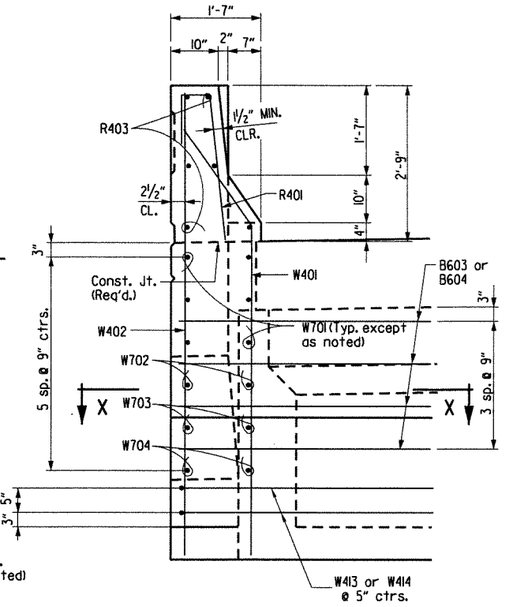

VIEW E-E

Scale: 3/4" = 1'-0"

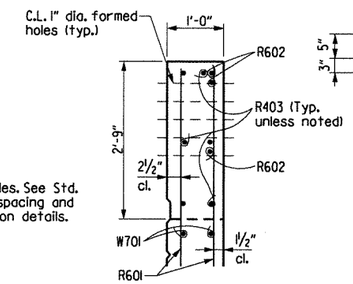

SECTION G-G

Scale: 3/4" = 1'-0"

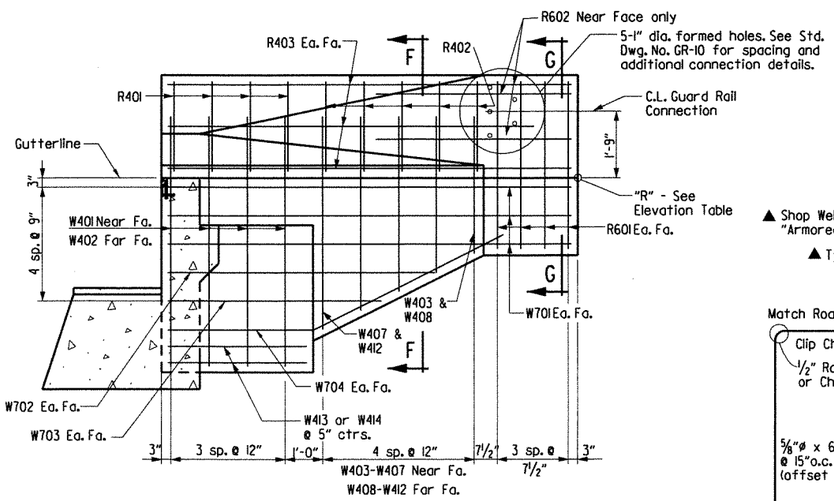

VIEW C-C

1/2" = 1'-0"

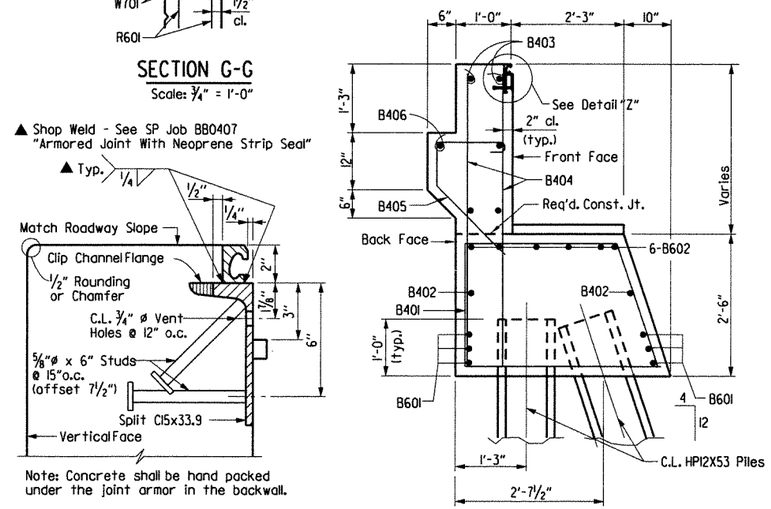

SECTION A-A

3/4" = 1'-0"

Note: Concrete shall be hand packed under the joint armor in the backwall.

For additional details, See Dwg. No. 48550.

DETAIL Z

3"= 1'-0"

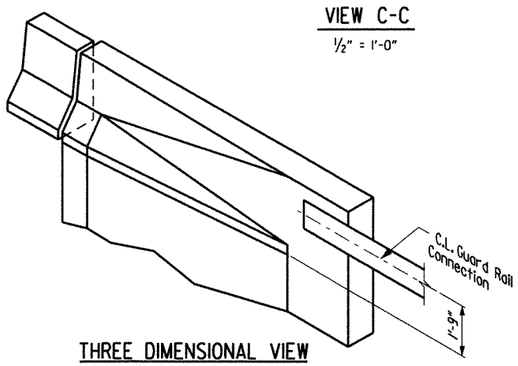

THREE DIMENSIONAL VIEW
WING RAIL & PARAPET

No Scale

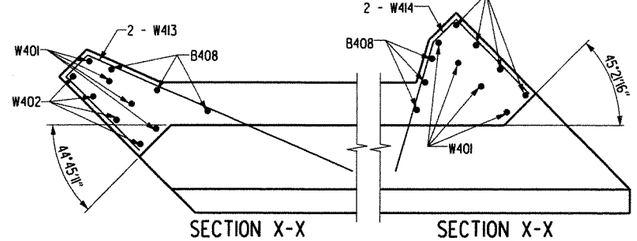

SECTION X-X

Wing A

SECTION X-X

Wing B

BAR LIST

Mark	No. Req'd.	Length	"A"	"B"	Pin Dia.
B401	65	11'-6"	2'-11"	3'-9"	2"
B402	4	31'-0"			STR.
B403	10	29'-1"			STR.
B404	112	5'-4"			STR.
B405	56	3'-11"	1'-2"	4 1/2"	3"
B406	2	29'-1"			STR.
B407	24	7'-3"	2'-11"	3'-9"	2"
B408	6	4'-0"			STR.
B409	2	13'-3"	3'-3"	4'-2"	2"
B410	2	14'-5"	4'-2"	5'-4"	2"
B601	6	59'-11"			STR.
B602	12	31'-11"	31'-3"		4 1/2"
B603	4	6'-5"			4 1/2"
B604	4	12'-2"			4 1/2"
R401	8	3'-11"			2"
R402	8	3'-11"			2"
R403	12	9'-8"			STR.
R601	16	4'-5"			STR.
R602	6	5'-0"			STR.
W401	8	6'-6"	5'-4"	1'-2"	2"
W402	8	7'-8"			STR.
W403-W407	2 ea.	Varies 3'-4" to 5'-4"	Varies 2'-2" to 4'-2"	1'-2"	2"
W408-W412	2 ea.	Varies 4'-5" to 6'-5"			STR.
W413	2	14'-10"			2"
W414	2	9'-4"			2"
W701	12	9'-8"			STR.
W702	4	6'-0"			STR.
W703	4	4'-6"			STR.
W704	4	8'-4"	2'-9"	5'-7"	5 1/4"

Bending Diagrams (Dimensions are out to out of bars.)

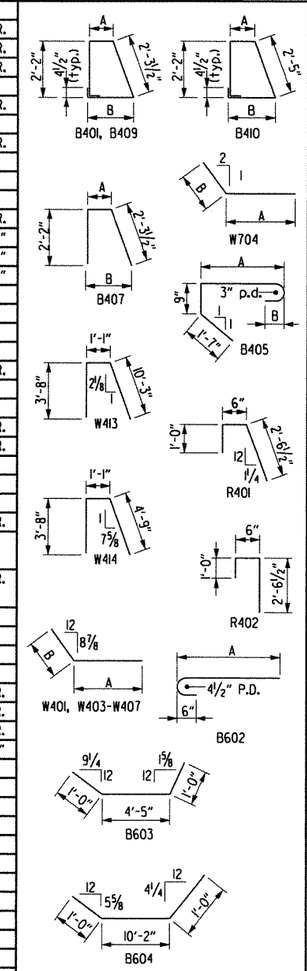

Bent No.	Wing	Elev. "R"	K
4	A	416.600	1'-3 1/4"
4	B	415.270	1'-10 5/16"

SHEET 2 OF 2
DETAILS OF BENT NO. 4
BRIDGE OVER CLAYTON BRANCH
(BR. B6879)
CRAWFORD & SEBASTIAN COUNTIES
ROUTE I-540 SEC. 1
ARKANSAS STATE HIGHWAY COMMISSION
LITTLE ROCK, ARK.

STATE OF ARKANSAS REGISTERED PROFESSIONAL ENGINEER No. 13339 LARRY E. MILLER
8-11-12
BRIDGE ENGINEER

DRAWN BY: TAR DATE: March 02
CHECKED BY: EMB/ETH DATE: April 02
DESIGNED BY: BCG/JLH DATE: Feb 02
FILENAME: bBB0407b3 b42.dgn
SCALE: As Shown
BRIDGE NO. B6879
DRAWING NO. 48543

$$$$date$$$

$$$$dgnspec$$$$$

...\b040468b3_b42.dgn 8/10/2012 3:49:46 PM

DATE REVISED	DATE FILMED	DATE REVISED	DATE FILMED	FED. ROAD DIST. NO.	STATE	FED. AID PROJ. NO.	SHEET NO.	TOTAL SHEETS
				6	ARK.			
				JOB NO.		BB0407	249	464
				(1) B6879		SPAN DTLS.		48544

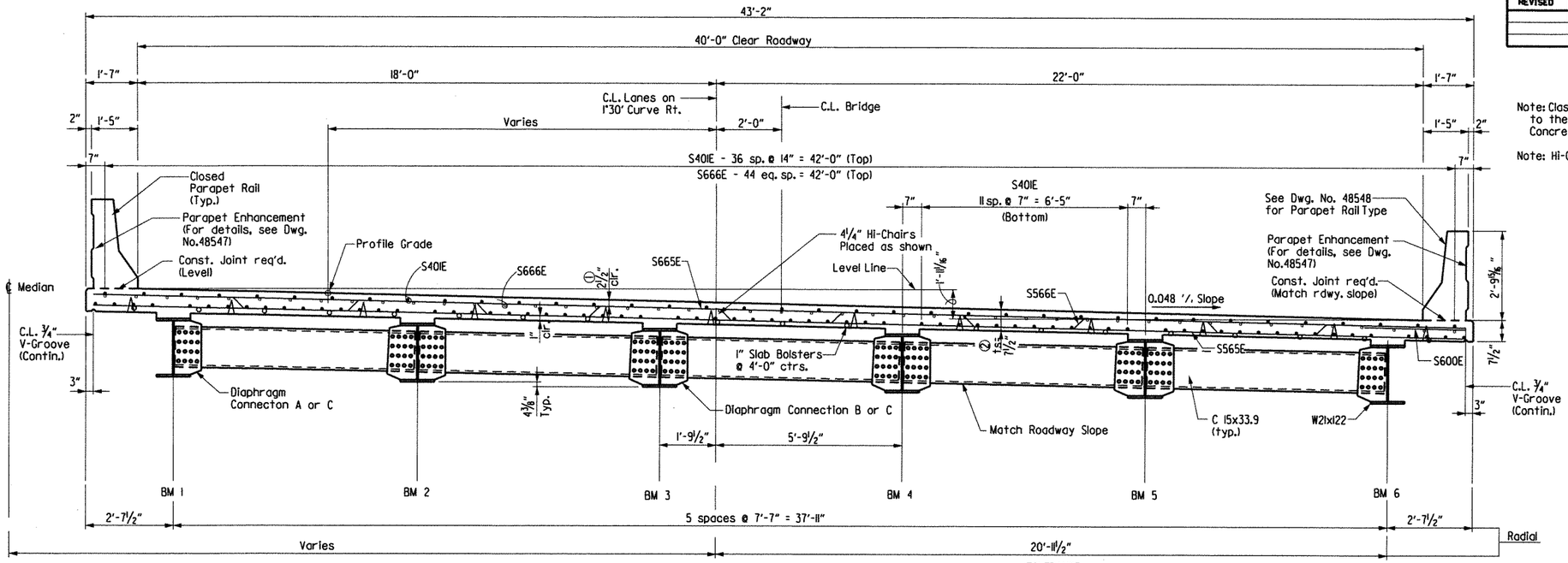

TYPICAL SECTION

(Looking Ahead)

TOLERANCE:

(1) Minus = ¼"
Plus = Equal to amount of slab thickening used to meet slab thickness tolerance - see "ADJUSTMENT FOR SLAB THICKNESS TOLERANCE WHEN REMOVABLE DECK FORMING IS USED".

(2) See "ADJUSTMENT FOR SLAB THICKNESS TOLERANCE WHEN REMOVABLE DECK FORMING IS USED".

Note: Class I Protective Surface Treatment shall be applied to the Roadway Surface and the Roadway Face and Top of Concrete Parapet Rail.

Note: Hi-Chairs to be placed on 4'-0" long centers.

SLAB REINFORCING:

Transverse:
- S600E @ 7½" centers (top)
- S601E thru S664E @ 7½" centers (top)
- S501E thru S564E @ 7½" centers (bottom)
- S665E @ 15" centers (top directly above S565E)
- S565E @ 15" centers (bottom)
- S566E @ 15" centers bent up over beams

Longitudinal:
- S401E (top & bottom) placed as shown
- S666E (top) placed as shown over int. supports

Note: Reinf. bars with "E" suffix (S401E, S501E, etc.) are epoxy coated bars. For additional reinforcing details, see Dwg. No. 48548

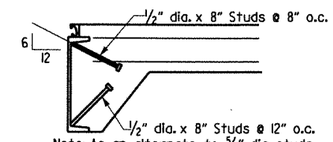

Note: As an alternate to ⅝" dia. studs, ½" dia. x 8" studs spaced as shown may be used. Use weight of ⅝" dia. stud as basis of measurement of structural steel in anchors.

DETAIL OF ALTERNATE ANCHORS

No Scale

EXPANSION DEVICE:

Roadway Channel C15x33.9
Conn ∠s 7"x4"x½"
Detail Device ⅛" high and provide ¼" shims using two 1/16" and one ⅛" plates

For additional details of Expansion Device, See Dwg. No. 48550

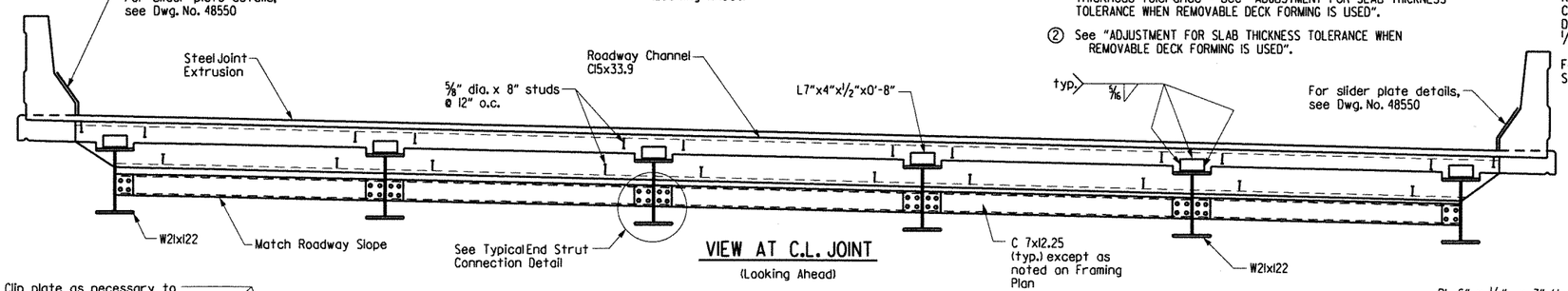

VIEW AT C.L. JOINT

(Looking Ahead)

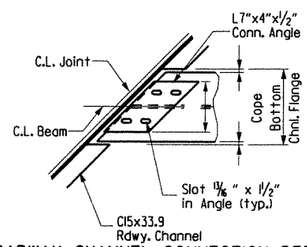

ROADWAY CHANNEL CONNECTION DETAIL

No Scale

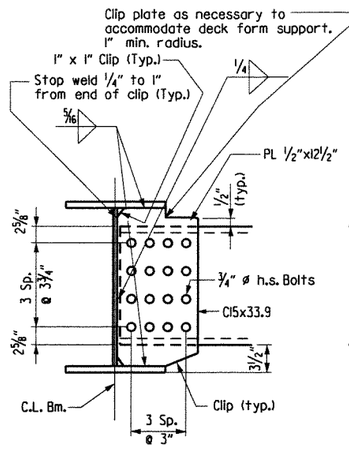

DIAPHRAGM CONNECTION A

No Scale
Typical for Exterior Beams

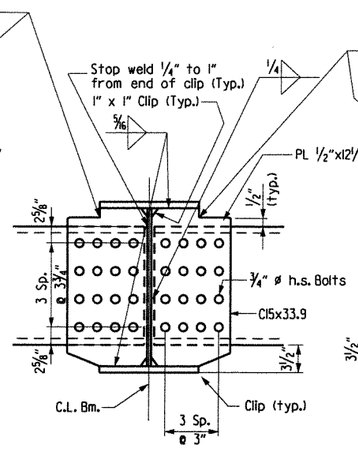

DIAPHRAGM CONNECTION B

No Scale

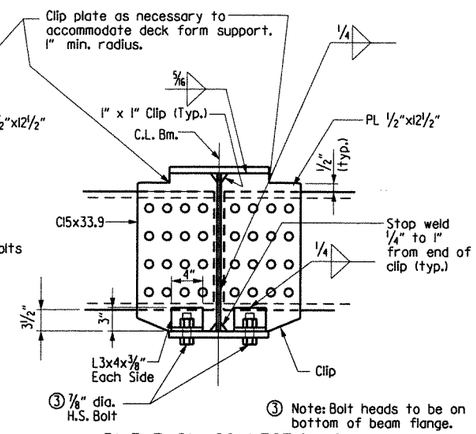

(3) Note: Bolt heads to be on bottom of beam flange.

DIAPHRAGM CONNECTION C

No Scale
Interior Girder Shown
(Exterior Similar)

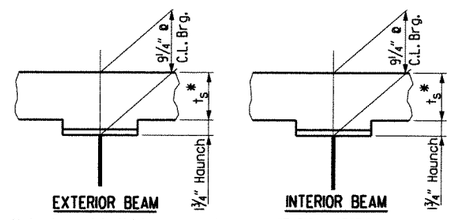

Note: ts = slab thickness as shown on "TYPICAL SECTION".
*Tolerance when removable deck forming is used is +½", -¼".
Haunch forming is required and shall be adjusted to maintain slab thickness tolerance.

ADJUSTMENT FOR SLAB THICKNESS TOLERANCE WHEN REMOVABLE DECK FORMING IS USED

No Scale

Haunch dimension may vary within the following limits to maintain the grade and slab thickness tolerance; Minimum - occurs when the top flange contacts the bottom reinforcing steel; Maximum - top flange thickness plus 1". No increase in concrete and structural steel quantities will be made to maintain tolerances.

Tolerances shown are applicable only when removable deck forming is used. See Std. Dwg. No. 14991 for tolerances when permanent steel deck forms are used. Payment for concrete shall be based on removable deck forming.

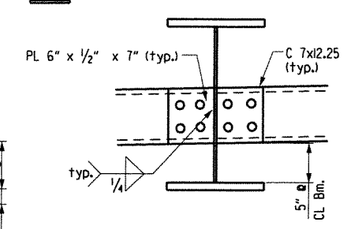

END STRUT CONNECTION

No Scale

STATE OF ARKANSAS REGISTERED PROFESSIONAL ENGINEER No. 11339 LARRY W. MILLER

Larry W. Miller 8-11-12

BRIDGE ENGINEER

SHEET 1 OF 5
DETAILS OF
159'-0" CONT. COMP. W-BEAM UNIT
(BR. B6879)
ROUTE I-540 SEC. 1

ARKANSAS STATE HIGHWAY COMMISSION
LITTLE ROCK, ARK.

DRAWN BY: TAR	DATE: Feb 02	FILENAME: bBB0407b3 s11.dgn			
CHECKED BY: EMB	DATE: May 02	SCALE: As Shown			
DESIGNED BY: BCG/JLH	DATE: Jan 02				

BRIDGE NO. B6879 DRAWING NO. 48544

$$$$date$$$$

$$$$dgnspec$$$$$

...\b040468b3_s11.dgn 8/10/2012 3:49:46 PM

DATE REVISED	DATE FILMED	DATE REVISED	DATE FILMED	FED. ROAD DIST. NO.	STATE	FED. AID PROJ. NO.	SHEET NO.	TOTAL SHEETS
				6	ARK.			
				JOB NO.		BB0407	250	464
				(1) B6879		SPAN DTLS.		48545

For Diaphragm Connection Details, See Dwg. No. 48544.

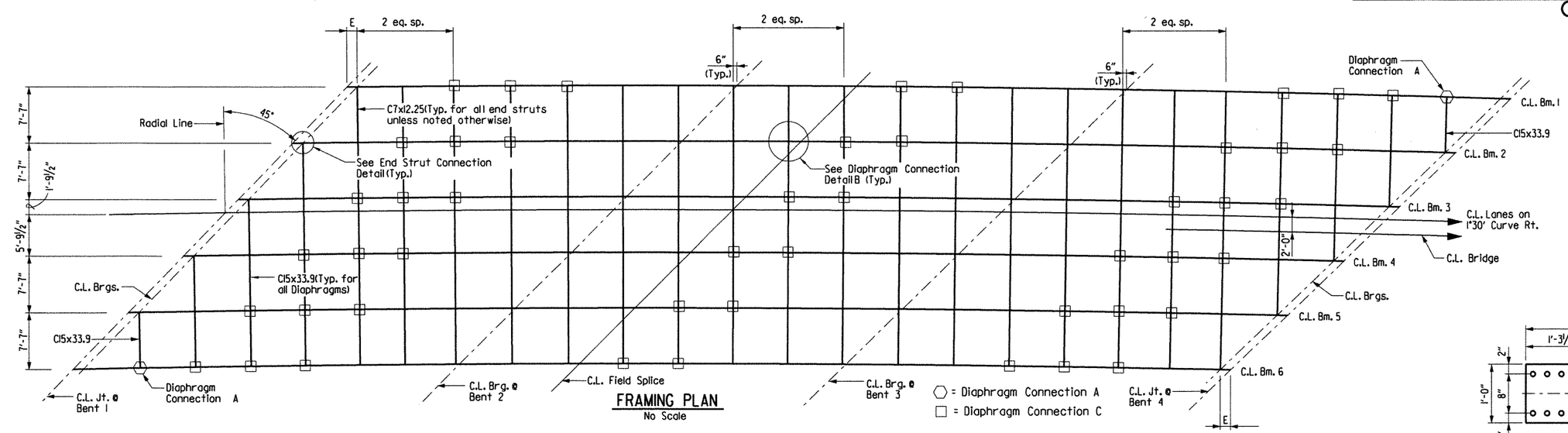

FRAMING PLAN

No Scale

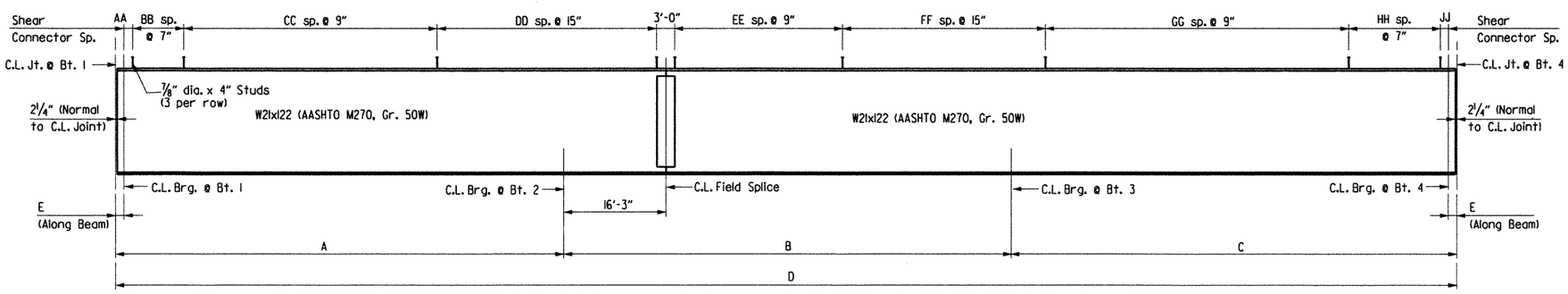

Note:
For details of Elastomeric Fixed and Expansion Bearings, see Dwg. No. 48549

Note:
Beams are concentric to 1°30' curve at C.L. Lanes and diaphragms are on radial lines.

TYPICAL BEAM ELEVATION

No Scale

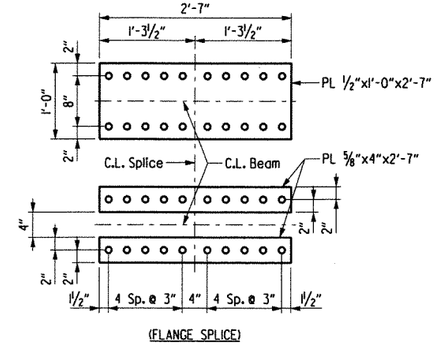

(FLANGE SPLICE)

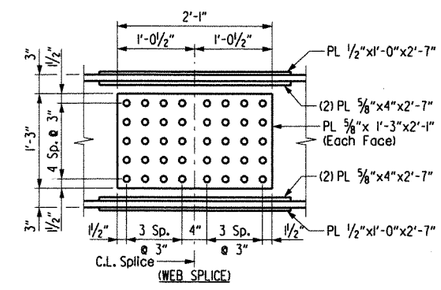

(WEB SPLICE)

TYPICAL FIELD SPLICE DETAILS

1" = 1'-0"

Note: All field splice bolts shall be ⅞" dia. H.S. bolts.
All field splice plates shall be AASHTO M270, Gr. 50W steel.

TABLE FOR WELD

Material Thickness of Thicker Part Joined (Inches)	Minimum Size of Fillet Weld (Inches)	Single Pass Weld Must Be Used
To ¾" Inclusive	¼"	
Over ¾"	5/16"	

NOTE: When a fillet weld size, as shown on the plans, is larger than the minimum, the first pass shall be that specified for minimum size of fillet weld.

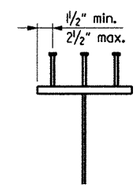

Stud Shear Connectors shown shall be ⅞" dia. x 4" long, granular flux filled, solid fluxed or equal, and automatically end welded to the beam flange in accordance with the recommendations of the Manufacturer. ¾" dia. studs may be used in place of the ⅞" dia. stud shown, at the ratio of 1.361-¾" dia. studs in place of one ⅞" dia. stud. ⅞" dia. studs will be used as basis for measurement of structural steel in shear connectors. Maximum stud spacing = 24".

SHEAR CONNECTOR DETAIL

No Scale

TABLE OF DIMENSIONS

Beam	Radius	DIMENSIONS (ALONG ARC)				
		A	B	C	D	E
1	3836'-8⅛"	53'-2 15/16"	53'-2 15/16"	53'-2 15/16"	159'-8 3/16"	1'-4⅞"
2	3829'-1⅛"	53'-1 5/16"	53'-1 5/16"	53'-1½"	159'-4 9/16"	1'-4⅞"
3	3821'-6⅛"	53'-0 5/16"	53'-0 5/16"	53'-0 3/16"	159'-0 13/16"	1'-5"
4	3813'-11⅛"	52'-10 5/16"	52'-11 1/16"	52'-10 13/16"	158'-8 13/16"	1'-5"
5	3806'-4⅛"	52'-9 5/16"	52'-9¾"	52'-9½"	158'-4⅞"	1'-5⅛"
6	3798'-9⅛"	52'-8 5/16"	52'-8½"	52'-8 3/16"	158'-1"	1'-5⅛"

SHEAR CONNECTOR SPACING TABLE

Beam	DIMENSIONS AND SPACES								
	AA	BB	CC	DD	EE	FF	GG	HH	JJ
1	0"	10	49	19	29	18	49	11	13/16"
2	9/16"	11	48	19	29	18	48	12	1 1/16"
3	1 5/16"	12	47	19	28	18	48	13	9/16"
4	0"	12	47	19	28	18	47	14	0"
5	1⅝"	15	46	18	29	17	48	13	15/16"
6	1 5/16"	15	46	18	29	17	47	14	⅝"

STATE OF ARKANSAS
REGISTERED PROFESSIONAL ENGINEER
No. 11339
LARRY W. MILLER
Larry W. Miller 8-11-12
BRIDGE ENGINEER

SHEET 2 OF 5
DETAILS OF
159'-0" CONT. COMP. W-BEAM UNIT
(BR. B6879)
ROUTE I-540 SEC. 1
ARKANSAS STATE HIGHWAY COMMISSION
LITTLE ROCK, ARK.

DRAWN BY: TAR DATE: April 02 FILENAME: bBB0407b3 s12.dgn
CHECKED BY: EMB/JGM DATE: May 02 SCALE: As Shown
DESIGNED BY: BCG/JLH/ETH/GMS DATE: April 02
BRIDGE NO. B6879 DRAWING NO. 48545

$$$$date$$$$
$$$$dgnspec$$$$

...\b040468b3_s12.dgn 8/10/2012 3:49:47 PM

DATE REVISED	DATE FILMED	DATE REVISED	DATE FILMED	FED. ROAD DIST. NO.	STATE	FED. AID PROJ. NO.	SHEET NO.	TOTAL SHEETS
				6	ARK.			
				JOB NO.		BB0407	251	464
				1 B6879		SPAN DTLS.		48546

TABLE OF DEAD LOAD DEFLECTIONS (INCHES)

Camber for Dead Load Deflection plus vertical curve +/- 1/4" tolerance.
Deflections shown are along the C.L. of beam from the plane perpendicular to the web extending from C.L. Brg. to C.L. Brg.
Negative sign (-) indicates upward deflection.

SPAN NO.	POINT OF DEFLECTION	Structural Steel		Structural Steel (+) Slab		Structural Steel (+) Slab (+) Para. Rail	
		Bms. 1 & 6	Bms. 2-5	Bms. 1 & 6	Bms. 2-5	Bms. 1 & 6	Bms. 2-5
1	1.00	0.00	0.00	0.00	0.00	0.00	0.00
	1.10	0.05	0.05	0.28	0.34	0.32	0.39
	1.20	0.09	0.09	0.51	0.63	0.58	0.72
	1.30	0.11	0.12	0.68	0.84	0.78	0.96
	1.40	0.13	0.13	0.77	0.94	0.89	1.07
	1.50	0.13	0.13	0.76	0.93	0.87	1.06
	1.60	0.11	0.12	0.67	0.82	0.76	0.94
	1.70	0.09	0.09	0.52	0.63	0.59	0.72
	1.80	0.05	0.06	0.32	0.40	0.37	0.46
	1.90	0.02	0.02	0.13	0.16	0.15	0.18
	2.00	0.00	0.00	0.00	0.00	0.00	0.00
2	2.10	-0.01	-0.01	-0.04	-0.04	-0.05	-0.05
	2.20	0.00	0.00	0.00	0.00	0.00	0.00
	2.30	0.01	0.01	0.05	0.06	0.06	0.07
	2.40	0.02	0.02	0.10	0.12	0.11	0.14
	2.50	0.02	0.02	0.112	0.14	0.14	0.16
	2.60	0.02	0.02	0.10	0.12	0.11	0.14
	2.70	0.01	0.01	0.05	0.06	0.06	0.07
	2.80	0.00	0.00	0.00	0.00	0.00	0.00
	2.90	-0.01	-0.01	-0.04	-0.04	-0.05	-0.05
	3.00	0.00	0.00	0.00	0.00	0.00	0.00
3	3.10	0.02	0.02	0.13	0.16	0.151	0.18
	3.20	0.05	0.05	0.32	0.40	0.37	0.46
	3.30	0.09	0.09	0.52	0.63	0.59	0.72
	3.40	0.11	0.12	0.67	0.82	0.76	0.94
	3.50	0.13	0.13	0.76	0.93	0.87	1.06
	3.60	0.13	0.13	0.77	0.94	0.88	1.07
	3.70	0.11	0.12	0.68	0.84	0.78	0.96
	3.80	0.09	0.09	0.51	0.63	0.58	0.72
	3.90	0.05	0.05	0.28	0.34	0.32	0.39
	4.00	0.00	0.00	0.00	0.00	0.00	0.00

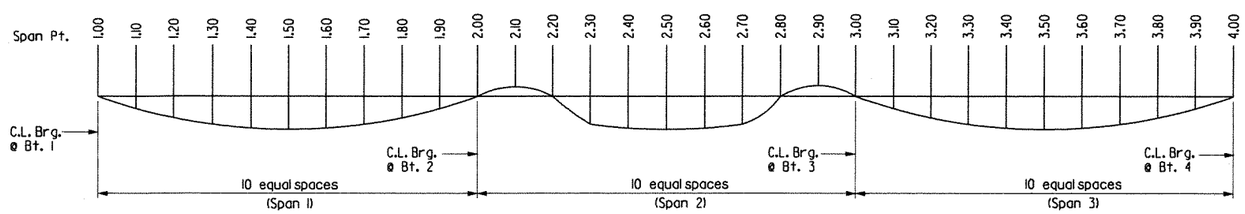

DEAD LOAD DEFLECTION DIAGRAM

No Scale

SHEET 3 OF 5
DETAILS OF
159'-0" CONT. COMP. W-BEAM UNIT
(BR. B6879)

ROUTE I-540 SEC. 1
ARKANSAS STATE HIGHWAY COMMISSION
LITTLE ROCK, ARK.

STATE OF ARKANSAS REGISTERED PROFESSIONAL ENGINEER No. 13339 LARRY D. MILLER
8-11-12
BRIDGE ENGINEER

DRAWN BY: TAR DATE: May 02
CHECKED BY: JLH DATE: May 02
DESIGNED BY: EMB DATE: May 02
FILENAME: bBB0407b3 s13.dgn
SCALE: N.T.S.

BRIDGE NO. B6879 DRAWING NO. 48546

$$$$date$$$

$$$$dgnspec$$$$$*

...\b040468b3_s13.dgn 8/10/2012 3:49:47 PM

DATE REVISED	DATE FILMED	DATE REVISED	DATE FILMED	FED. ROAD DIST. NO.	STATE	FED. AID PROJ. NO.	SHEET NO.	TOTAL SHEETS
				6	ARK.			
				JOB NO.		BB0407	252	464
				1 B6879		SPAN DTLS.		48547

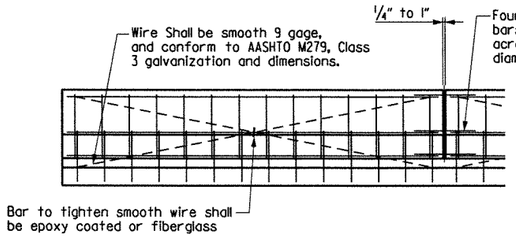

All panels shall be braced as shown to prevent racking. All open joints shall be sawed as soon as practical to a min. width of 1/4". To control cracking before sawing, all joints must be grooved before the concrete is set. Sawing of the joints must be controlled so it will follow the grooved joint.

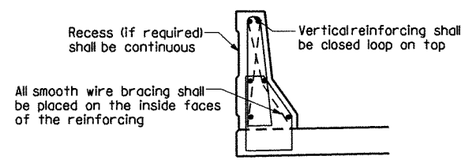

The extruded parapet shall conform to the horizontal and vertical lines shown in the plans or as directed by the Engineer and shall present a smooth uniform appearance and texture. Exposed surfaces may be given a light brush finish or a Class 3 Textured Finish in place of Class 2, Rubbed Finish.

DETAILS OF OPTIONAL SLIPFORMING OF CONCRETE PARAPET

No Scale

Place Type D Bridge Name Plate on right parapet rail at beginning of Bridge B. (Right is defined when facing direction of travel).

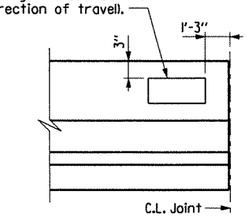

NAME PLATE DETAIL

No Scale

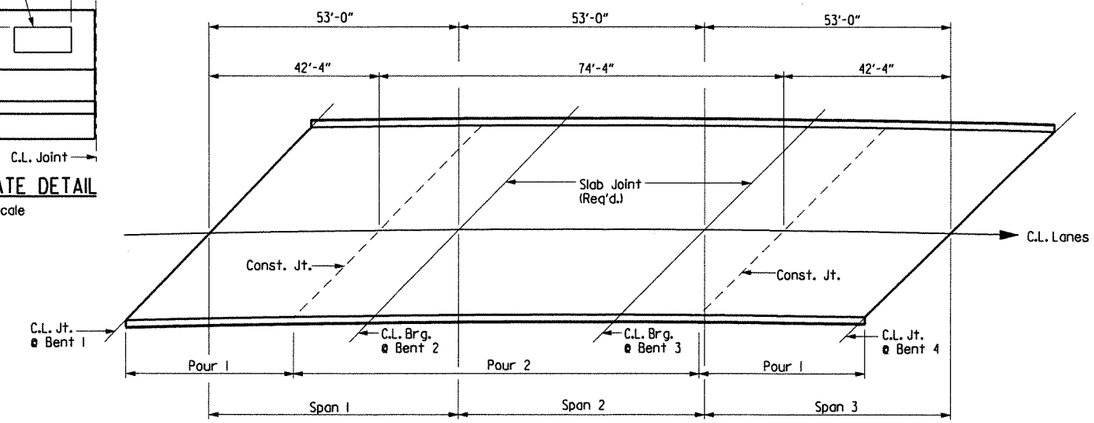

POURING SEQUENCE

No Scale

Note: Pours with the same number may be poured separately or simultaneously. Pour (1) must be placed before Pour (2) can be placed. 48 hours shall elapse betweenthe end of a pour and the start of the adjacent pour. Any railing pours made before the entire slab unit has been placed must be approved by the Engineer. Concrete in bridge superstructure shall be consolidated for the entire pour before any concrete has taken its initial set. This may require the use of a retarding agent.

The contractor must obtain approval from the Engineer for any deviatons from the pouring sequences shown.

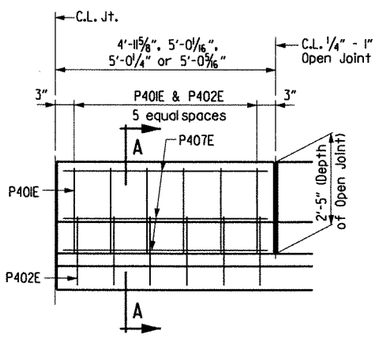

(4'-11 5/8" to 5'-0 5/16" PANEL)

See Dwg. No. 48548

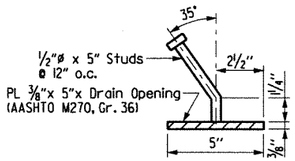

DETAIL Z

No Scale

Note:

Parapet Studs shall be 5" long, granular flux filled, solid fluxed, or equal, and automatically end welded to the plate. Studs and plate shall meet the requirements of Section 807. Studs and plate shall be measured and paid for as Structural Steel in Beam Spans (M270, Gr. 50W)

The surfaces of the 3/8" Plates which will not be in contact with concrete shall be painted in accordance with Section 638, or as approved by the Engineer. Only one coat is required and shall be applied in the fabricator's shop. Painting will not be paid for directly, but will be considered subsidiary to Structural Steel in Beam Spans (M270, Gr. 50W)

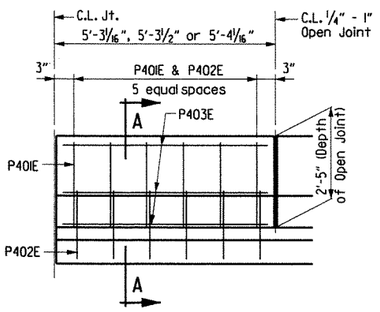

(5'-3 1/16" to 5'-4 1/16" PANEL)

See Dwg. No. 48548

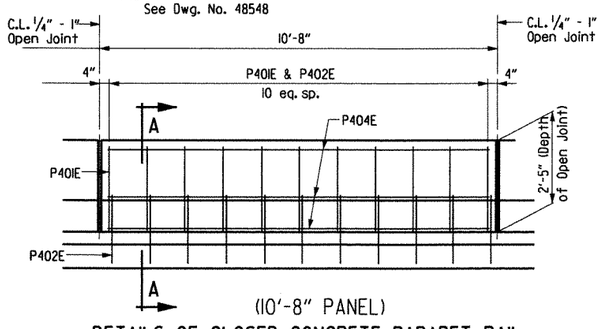

(10'-8" PANEL)

DETAILS OF CLOSED CONCRETE PARAPET RAIL

No Scale

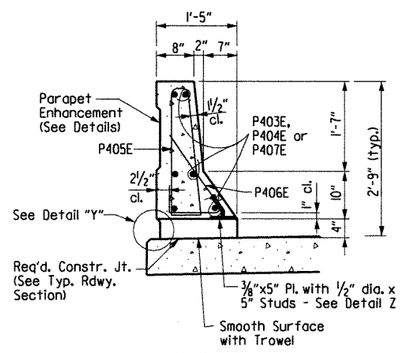

SECTION B-B

Scale: 3/4" = 1'-0"

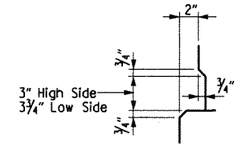

DETAIL "Y"

No Scale

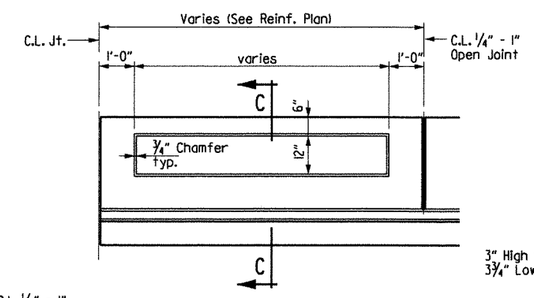

DETAILS OF PARAPET ENHANCEMENT

No Scale

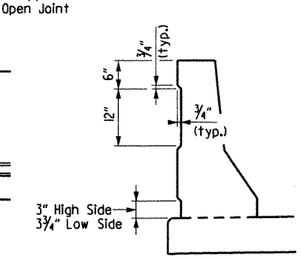

SECTION C-C

No Scale

(10'-8" PANEL)

DETAILS OF CLOSED CONCRETE PARAPET RAIL

No Scale

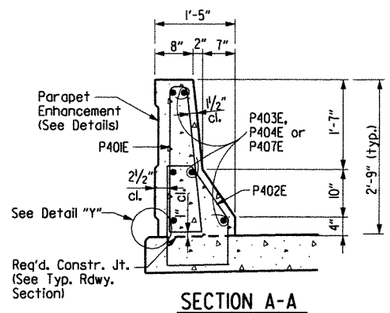

SECTION A-A

Scale: 3/4" = 1'-0"

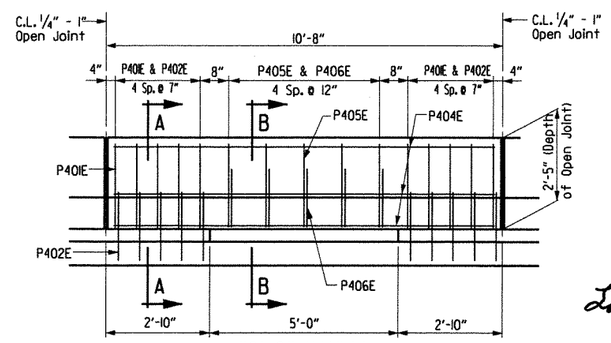

(10'-8" PANEL)

DETAILS OF OPEN CONCRETE PARAPET RAIL

No Scale

STATE OF ARKANSAS REGISTERED PROFESSIONAL ENGINEER No. 13398 LARRY E. MILLER

Larry E. Miller 8-11-12

BRIDGE ENGINEER

SHEET 4 OF 5

DETAILS OF

159'-0" CONT. COMP. W-BEAM UNIT

(BR. B6879)

ROUTE I-540 SEC. 1

ARKANSAS STATE HIGHWAY COMMISSION

LITTLE ROCK, ARK.

DRAWN BY: TAR	DATE: Jan 02	FILENAME: bBB0407b3 sl4.dgn			
CHECKED BY: EMB	DATE: May 02	SCALE: As Shown			
DESIGNED BY: BCG/JLH	DATE: Jan 02				

BRIDGE NO. B6879 DRAWING NO. 48547

$$$$date$$$

$$$$dgnspec$$$$$

...\b040468b3_s14.dgn 8/10/2012 3:49:47 PM

DATE REVISED	DATE FILMED	DATE REVISED	DATE FILMED	FED. ROAD DIST. NO.	STATE	FED. AID PROJ. NO.	SHEET NO.	TOTAL SHEETS
				6	ARK.			
				JOB NO.		BB0407	253	464
				(1) B6879		SPAN DTLS.		48548

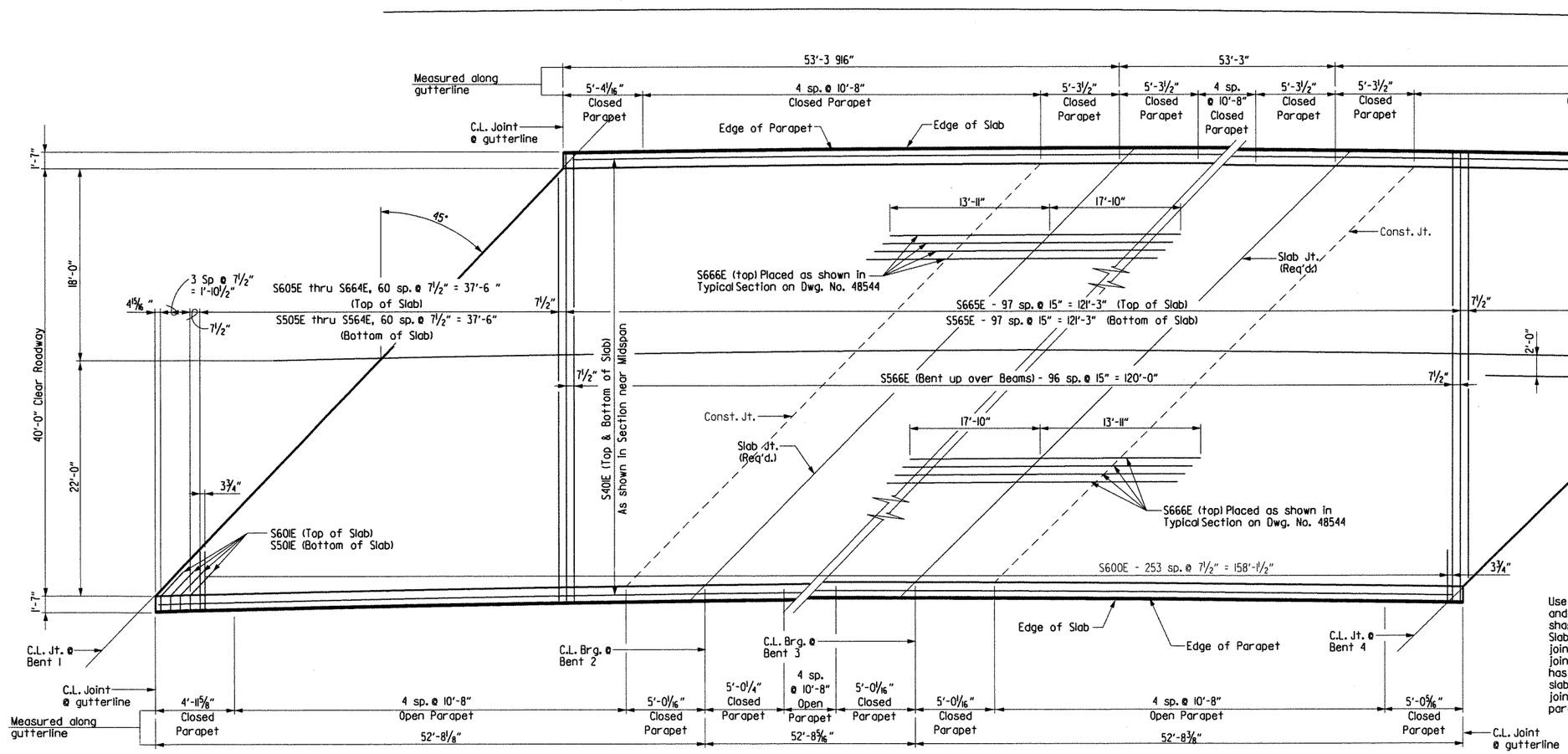

Note:
Slab Joints shall align with parapet joints at gutterline.

REINFORCING PLAN

No Scale

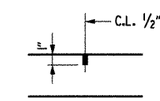

Use Type 3, 4, or 6 Joint Sealer. See subsections 501.02 (h) and 501.05 (j). Backer Rod filler will not be required. Joint Sealer shall be measured and paid for as Class S(AE) Concrete-Bridge. Slab joints shall extend to the outside edge of the deck slab. Slab joints shall be installed before the parapet railing is poured. If slab joints are to be sawed, they shall be sawed as soon as the concrete has sufficiently set to allow sawing of the joint without damage to the slab. Slab joints shall be placed at all pouring sequence construction joints and required slab joint locations. Slab joints shall align with parapet open joints.

SLAB JOINT DETAIL

No Scale

BAR LIST

Mark	No. Req'd.	Length	Pin Dia.	Mark	No. Req'd.	Length	Pin Dia.
S40IE	525	33'-5"	STR.	P40IE	236	6'-4"	2"
				P402E	236	5'-7"	2"
S50IE	8	4'-4"	3 3/4"	P403E	12	4'-7"	STR.
S502E	Not Used			P404E	162	10'-2"	STR.
S503E	Not Used			P405E	95	5'-10"	2"
S504E	Not Used			P406E	95	3'-2"	2"
S505E to	2 Ea.	4'-1" to	STR.	P407E	12	4'-6"	STR.
S564E		41'-9"					
S565E	98	42'-10"	STR.				
S566E	97	43'-10"	3"				
S600E	254	6'-4"	STR.				
S60IE	8	4'-4"	4 1/2"				
S602E	Not Used						
S603E	Not Used						
S604E	Not Used						
S605E to	2 Ea.	4'-1" to	STR.				
S664E		41'-9"					
S665E	98	42'-10"	STR.				
S666E	90	31'-9"	STR.				

Bending Diagrams
(Dimensions are out to out of bars.)

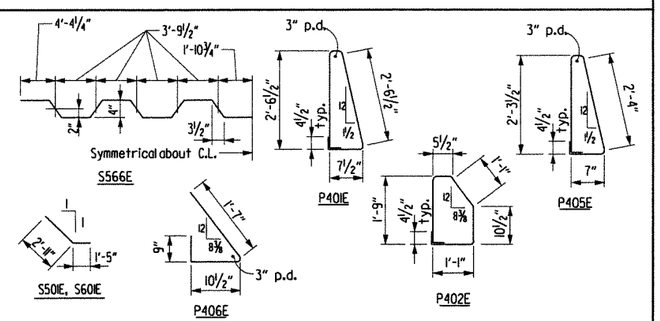

Note: All bars designated with an "E" suffix are to be epoxy coated.

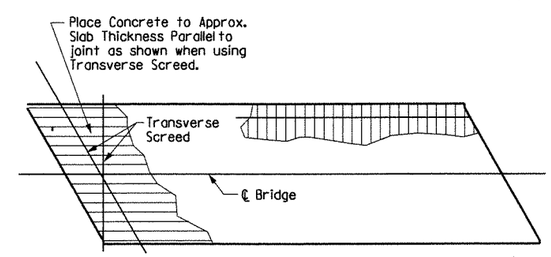

Note: At the Contractor's option, the Transverse Screed may be placed parallel to the skew or perpendicular to C.L. Bridge

CONCRETE PLACEMENT PROCEDURE

No Scale

Note: At the Contractor's option, two straight epoxy coated #5 bars may be substituted for the S566E bar. Payment for reinforcing will be based on the S566E bars.

Notes:

All longitudinal lines and longitudinal reinforcing steel shall be on curves concentric to C.L. Lanes.

Transverse slab reinforcing shall be placed on radial lines and are spaced along C.L. Lanes.

Parapets and outside edges of deck are concentric to C.L. Lanes.

STATE OF ARKANSAS REGISTERED PROFESSIONAL ENGINEER No. 10339 LARRY W. MILLER

Larry W. Miller 8-11-12

BRIDGE ENGINEER

SHEET 5 OF 5
DETAILS OF
159'-0" CONT. COMP. W-BEAM UNIT
(BR. B6879)
ROUTE I-540 SEC. 1
ARKANSAS STATE HIGHWAY COMMISSION
LITTLE ROCK, ARK.

DRAWN BY: TAR	DATE: Jan 02	FILENAME: bBB0407b3 sl5.dgn			
CHECKED BY: EMB	DATE: May 02	SCALE: As Shown			
DESIGNED BY: BCG/JLH	DATE: Jan 02				

BRIDGE NO. B6879 DRAWING NO. 48548

$$$$date$$$

$$$$dgnspec$$$$$

...\b040468b3_s15.dgn 8/10/2012 3:49:48 PM

DATE REVISED	DATE FILMED	DATE REVISED	DATE FILMED	FED. ROAD DIST. NO.	STATE	FED. AID PROJ. NO.	SHEET NO.	TOTAL SHEETS
				6	ARK.			
				JOB NO.		BB0407	254	464
				(1) A6879, B6879		ELASTO. BRGS.		48549

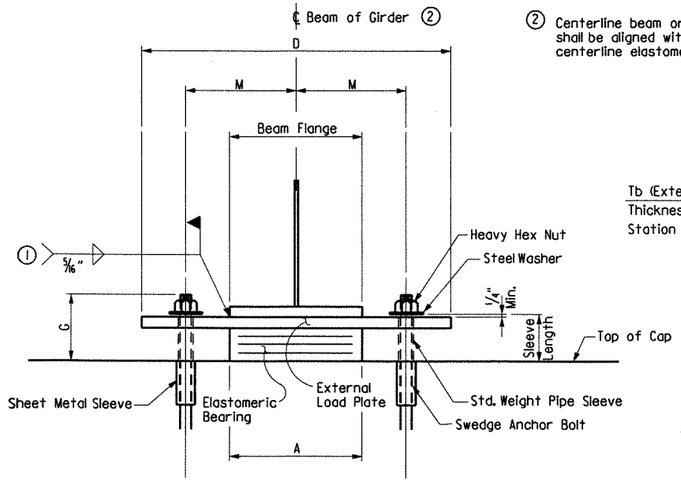

(2) Centerline beam or girder shall be aligned with centerline elastomeric pad.

FRONT VIEW

(1) Care shall be taken to ensure that the external load plate is in full and complete contact with the beam or girder flange before welding begins.

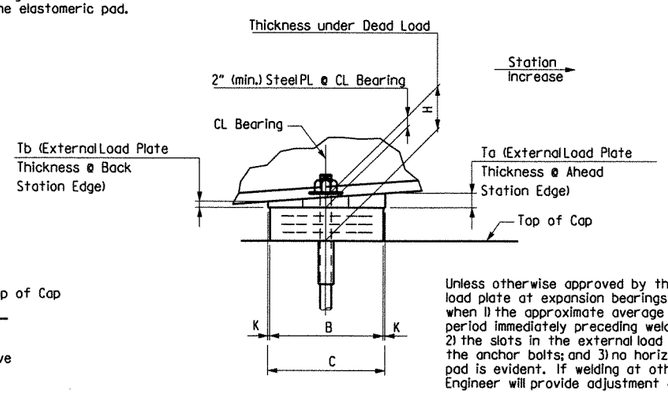

SIDE VIEW

Unless otherwise approved by the Engineer, welding of the external load plate at expansion bearings to the girder will be allowed only when 1) the approximate average air temperature during the 24 hour period immediately preceding welding is between 40°F and 80°F; and 2) the slots in the external load plate are positioned to center on the anchor bolts; and 3) no horizontal deformation of the elastomeric pad is evident. If welding at other temperatures is required, the Engineer will provide adjustment data.

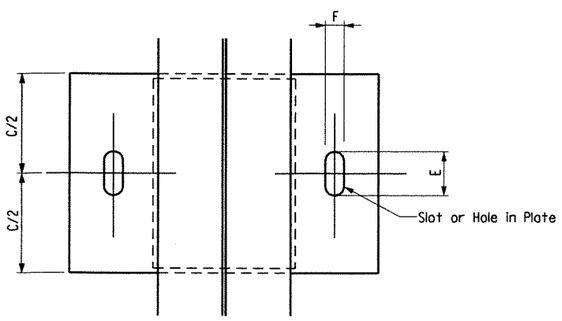

PLAN VIEW

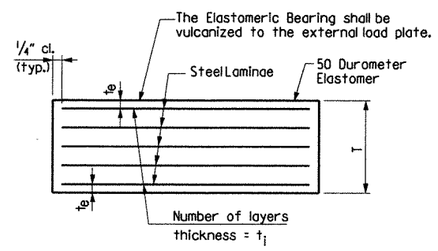

t_e = thickness of elastomer cover on top and bottom of pad

t_i = thickness of elastomer between steel laminae

N = number of elastomer layers of thickness t_i

ELASTOMERIC BEARING

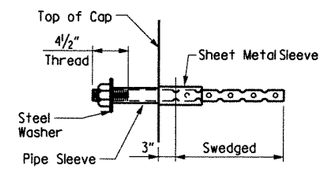

ANCHOR BOLT DETAIL

NOTE:
Anchor Bolts may be cast in place or drilled and grouted into place. If Anchor Bolts are to be cast in place, the Galvanized Sheet Metal Sleeves will not be required.

If Anchor Bolts are to be drilled and grouted in place, the Galvanized Sheet Metal Sleeves shall be cast in place as shown. Sleeves shall be dry packed with styrofoam, urethane foam or approved equal prior to pouring of concrete. After pouring of the cap and prior to erection of Structural Steel, the dry pack shall be removed and holes for the anchor bolts shall be accurately drilled into the masonry. Bolts placed in drilled holes shall be accurately set and fixed using a OPL approved epoxy or non-shrink grout that completely fills the holes. Galvanized Sheet Metal Sleeves will not be paid for directly, but will be considered subsidiary to the item "Structural Steel in Beam Spans, (M 270, Gr. 50W)"

TABLE OF FABRICATOR VARIABLES

BRIDGE NO.	LOCATION: BENT NO(S).	LOCATION: UNIT	LOCATION: BEAM OR GIRDER NO.	BEARING TYPE	NO. of BEARINGS EACH BENT	• MAXIMUM DESIGN LOAD (KIPS)	G	H	ELASTOMERIC PAD: A	B	N	t_i	t_e	NO. & THICKNESS OF STEEL LAMINAE	T	EXTERNAL LOAD PLATE: C	D	E	F	K	M	T_a	T_b	ANCHOR BOLT: ANCHOR BOLT (ø x L)	GRADE	PIPE SLEEVE SIZE (ø x L)	SHEET METAL SLEEVE SIZE (ø x L)	STEEL WASHER SIZE (O.D.)
A6879 & B6879	1 & 4	159'	ALL	EXP	6	72.46	7 1/4"	4 3/4"	11"	11"	4	7/16"	1/4"	5 @ 12 Ga.	2 3/4"	12"	22"	3 1/4"	2"	1/2"	8 1/2"	2.00"	2.00"	1 1/4" x 20"	55	1 1/4" x 5"	3" x 9"	2 1/2"
	2 & 3	159'	ALL	FIX	6	123.28	7 1/2"	4 1/4"	12 3/4"	12 3/4"	3	7/16"	1/4"	4 @ 12 Ga.	2 1/4"	13 3/4"	25"	3 1/8"	3 1/8"	1/2"	9 1/4"	2.00"	2.00"	2 " x 30"	55	2 1/2" x 4 1/2"	4" x 10"	3 3/4"

•Maximum Design Load = Service Load

GENERAL NOTES

Elastomeric Bearings shall conform to Special Provision Job BB0407 "Elastomeric Bearings" and Section 808 of the Standard Specifications and shall be paid for at the unit price bid for "Elastomeric Bearings." Long-duration testing of random lot samples specified in subsection 808.05 is not required.

External load plates shall conform to AASHTO M 270, Grade 50W. Pipe sleeves shall be ASTM A53, Grade B, and shall be galvanized to conform to AASHTO M 232, Class C or AASHTO M 298, Class 50.

External load plates shall be completely fabricated (including bevel and bolt holes) and shall be cleaned before vulcanizing to the elastomeric bearing. The surface in contact with the elastomeric bearing shall be cleaned in accordance with Section 808. Other surfaces shall be blast cleaned in accordance with subsection 807.84(b) for painted steel or 807.84(e) for unpainted Grade 50W steel.

Anchor Bolts, Washers and Nuts shall conform to subsection 807.07 of the Standard Specifications. The anchor bolt grade of steel shall be as specified in the "Table of Fabricator Variables". Indentations shall be circular with rounded bottoms and staggered as shown in the details.

Pipe Sleeves, Anchor Bolts, Washers and Nuts shall be paid for at the unit price bid for "Structural Steel in Beam Spans (M270, Gr. 50W)". External load plates will not be measured or paid for seperately but will be considered included in the unit price bid for "Elastomeric Bearings".

Tabular Data by: TAR Date: March 02
Checked by: JLH Date: Feb 02
Designed by: BCG/JLH Date: Feb 02

STATE OF ARKANSAS REGISTERED PROFESSIONAL ENGINEER No. 13339 LARRY D. MALLEY
8-11-12
BRIDGE ENGINEER

DETAILS OF ELASTOMERIC BEARINGS

ROUTE I-540 SEC. 1
ARKANSAS STATE HIGHWAY COMMISSION
LITTLE ROCK, ARK.

DRAWN BY: TAR DATE: March 02 FILENAME: bBB0407m3 el.dgn
CHECKED BY: EMB DATE: May 02 SCALE: N.T.S.
DESIGNED BY: BCG/JLH DATE: Feb 02
BRIDGE NO. A6879, B6879 DRAWING NO. 48549

$$$$dgnspec$$$$$*
$$$$date$$$$

DATE REVISED	DATE FILMED	DATE REVISED	DATE FILMED	FED. ROAD DIST. NO.	STATE	FED. AID PROJ. NO.	SHEET NO.	TOTAL SHEETS
				6	ARK.			
				JOB NO.		BB0407	255	464
				(1) A6879, B6879		JOINT DETAILS		48550

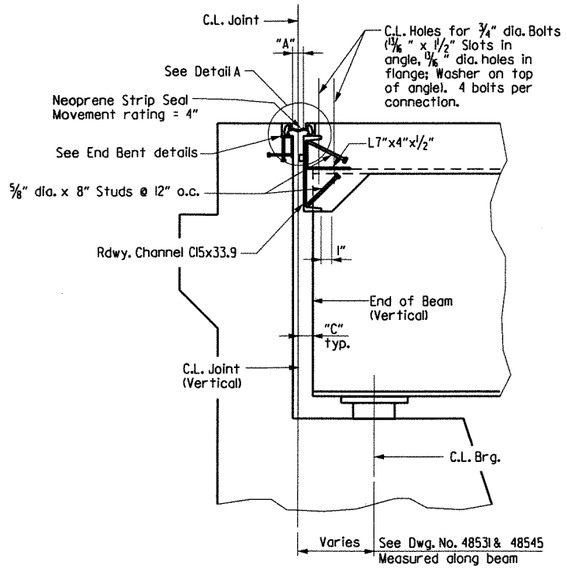

SECTION THRU JOINT AT END BENTS

Note: Sections thru Joints are taken normal to C.L. Joints

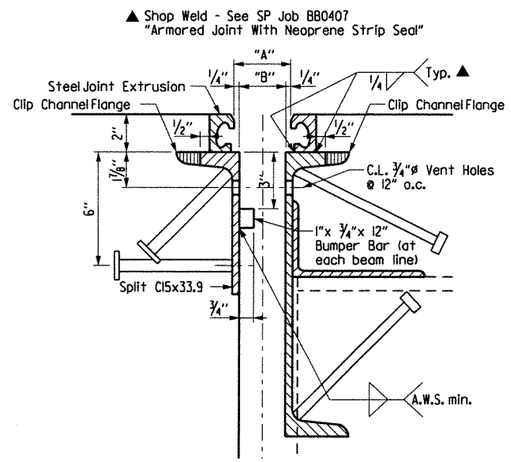

DETAIL A

3" = 1'-0"

Note: Concrete shall be hand packed under the joint armor in the backwall and in the span.

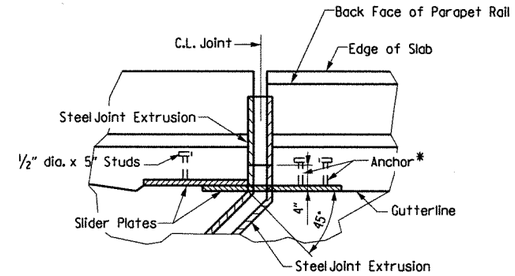

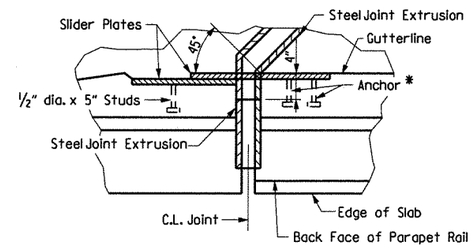

SECTION C-C AT END BENTS

The method of attachment of the cover slider plate assembly or similar device must be such that it may be removed in order to provide for future replacement of the neoprene seal.

Anchors will not be paid for directly but will be considered subsidiary to "STRUCTURAL STEEL IN BEAM SPANS (M 270, GRADE 50W)".

GENERAL NOTES

EXPANSION NEOPRENE STRIP SEAL: The expansion device shall provide a movement of 4" as shown in the "STRIP SEAL JOINT DATA" table. The expansion joint shall be capable of sealing the deck surface and parapet area to prevent moisture and other contaminants from descending through the joint.

Details of proposed slider plate assembly shall be submitted to and approved by the Engineer prior to the fabrication of any structural steel at the expansion device.

All structural steel shall be AASHTO M270, Grade 50W unless otherwise noted. All exposed steel surfaces except parapet slider plates are to be cleaned in accordance with subsection 807.84(e). The parapet slider plates shall be cleaned in accordance with subsection 807.84(b) and painted in accordance with subsection 807.75. The color of paint shall be Gray and shall match Fed. Std. 595B, Color Chip 26176. Cleaning and painting will not be paid for directly but will be considered subsidiary to "Structural Steel in Beam Spans (Gr. 50W)".

All structural steel, except for the steel extrusion for the strip seal, shall be paid for as "STRUCTURAL STEEL IN BEAM SPANS (M 270, Grade 50W)". The steel extrusion and neoprene strip seal shall be paid for in accordance with Special Provision Job BB0407 "ARMORED JOINT WITH NEOPRENE STRIP SEAL".

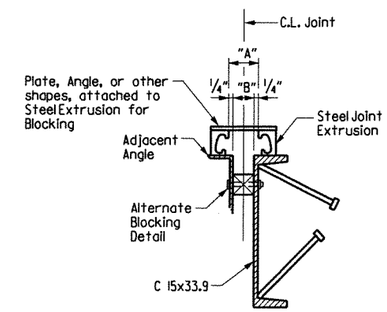

Note:
Each Expansion Joint device shall be blocked in the shop by the Fabricator to the dimension shown for 60° F and the blocking details shall be shown on the Shop Drawings. Blocking shall be placed within 2 feet of each end of the device and with a maximum spacing of 8 feet.

DETAILS FOR BLOCKING EXPANSION JOINT DEVICE

EXPANSION DEVICE INSTALLATION AT END BENTS:
The concrete span pour shall be placed before the end bent backwall concrete is placed. After beams or girders are erected the blocked expansion device shall be installed and adjusted for grade. All connection bolts shall be fully tightened prior to placing the deck concrete adjacent to the bent. Immediately prior to pouring the backwall concrete, the blocking shall be removed, the opening adjusted for temperature and grade, and the backwall constructed.

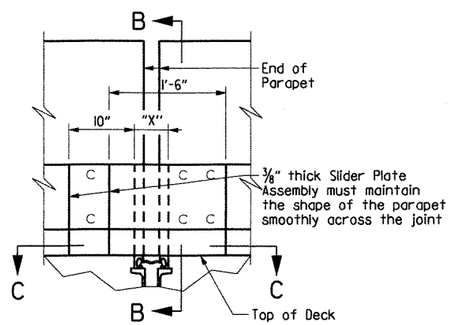

DETAIL OF NEOPRENE SEAL AT GUTTERLINE

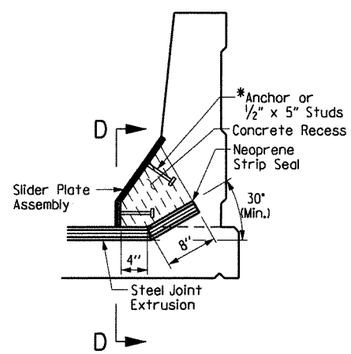

SECTION B-B

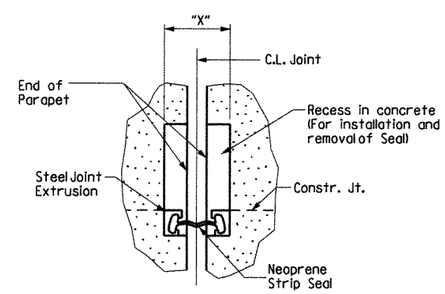

SECTION D-D

Note:
Dimension "X" equals the width of opening in parapet at curb to allow for removal or repair of joint.

STRIP SEAL JOINT DATA

Bent No.(s)	Movement Rating (inch)	"A" Width Perpendicular to Joint at 24 Hour Average Temperature ** of:			"B" Width Perpendicular to Joint at 24 Hour Average Temperature ** of:			"C" Perpendicular to Joint at 24 Hour Average Temperature of 60° F
		40° F	60° F	80° F	40° F	60° F	80° F	
1 and 4	4"	2 5/8"	2 1/2"	2 3/8"	2 1/8"	2"	1 7/8"	2 1/4"

**The temperature used to set the joint opening shall be the approximate average air temperature during the 24 hour period immediately before the bolts are tightened. The Engineer shall establish the temperature. Interpolation of the table may be necessary.

STATE OF ARKANSAS REGISTERED PROFESSIONAL ENGINEER No. 11339 LARRY E. MILLER
8-11-12
BRIDGE ENGINEER

DETAILS OF
ARMORED JOINT WITH
NEOPRENE STRIP SEAL
HWY. 22 - I-40(F)
CRAWFORD & SEBASTIAN COUNTIES
ROUTE I-540 SEC. 1
ARKANSAS STATE HIGHWAY COMMISSION
LITTLE ROCK, ARK.

DRAWN BY: TAR DATE: March 02 FILENAME: bBB0407m3 j1.dgn
CHECKED BY: EMB DATE: May 02 SCALE: N.T.S.
DESIGNED BY: BCG/JLH DATE: Jan 02
BRIDGE NO. A6879, B6879 DRAWING NO. 48550

$$$$date$$$$
$$$$dgnspec$$$$
...\b040468m3_j1.dgn 8/10/2012 3:49:49 PM

DATE REVISED	DATE FILMED	DATE REVISED	DATE FILMED	FED. ROAD DIST. NO.	STATE	FED. AID PROJ. NO.	SHEET NO.	TOTAL SHEETS
				6	ARK.			
				JOB NO.		BB0407	256	464
				(1) A6879, B6879		GENERAL NOTES		48551

SUPERSTRUCTURE GENERAL NOTES

CONSTRUCTION SPECIFICATIONS: Arkansas State Highway and Transportation Department Standard Specifications for Highway Construction, 2003 edition, with applicable special provisions.

DESIGN SPECIFICATIONS: AASHTO Standard Specifications for Highway Bridges, 1996 with current interim specifications.

LIVE LOADING: HS20 - 44 + Military Loading METHOD OF DESIGN: Load Factor

MATERIALS AND STRENGTHS:

Concrete: All concrete shall be Class S(AE) with minimum 28 day compressive strength f'c = 4000 psi.

Reinforcing Steel: Reinforcing steel shall conform to AASHTO M31 or M53, Grade 60 (Yield Strength = 60,000 psi.)

Structural Steel: Structural Steel shall conform to AASHTO M270, Gr. 50W (Fy = 50,000 psi.) and AASHTO M270, Gr. 36 (Fy = 36,000 psi.).

Elastomeric Bearings: For Elastomeric Bearings, see Dwg. No. 48549

STRUCTURAL STEEL:

All structural steel shall be AASHTO M270, Gr. 50W unless otherwise noted and shall be paid for as Structural Steel in Beam Spans (M270, Gr. 50W). M270, Gr. 50W steel shall not be painted, unless otherwise noted. See Dwg. No. 48550 for cleaning and painting requirements of the parapet slider plates. All exposed surfaces to be cleaned in accordance with subsection 807.84(e) of the standard specifications unless noted otherwise See Dwg. No. 48549 for cleaning requirements of external load plates on elastomeric bearings.. Structural steel completely embedded in concrete may be AASHTO M270, Gr. 36.

Requests for substitution of structural steel shapes shown with shapes of greater size must be submitted by the Contractor to the Engineer for approval. Steels of equal or greater strengths will be accepted only when shown on the approved shop drawings. Shapes and materials shown in the plans will be the basis of payment and no additional compensation will be made for any adjustments due to substitutions.

Longitudinal beams, all field splice plates, diaphragms, and diaphragm connection plates are considered main load carrying members and shall meet the Longitudinal Charpy V-Notch Test specified in Section 807.05 of the Standard Specifications. This work and material will not be paid for directly but are considered subsidary to the item "Structural Steel in Beam Spans (M270, Gr. 50W)".

Flange field splice plates shall be cut and fabricated so that the primary direction of rolling is parallel to the direction of the main tensile and/or compressive stresses.
All beams shall be blocked in their true position in the shop in groups of a minimum of three sections. Beams shall be blocked with webs horizontal. See Section 807.54 (b)(2) of the Standard Specifications. The camber, length of sections, distance between bearings, and openings of joints shall be measured with the beams in their true position. This information shall become a part of the permanent records of this job. The component parts shall be match-marked in this assembly and these marks shall be shown on the erection diagram. All beam dimensions are based on a temperature of 60°F. A tolerance of plus or minus 1/4" is allowed for camber.

Anchor bolts shall be galvanized according to subsection 807.07 and shall be Grade 55.

Elastomeric Bearings shall be firmly seated in accordance with subsection 808.08 of the specifications. This work to be considered subsidiary to the item "Elastomeric Bearings" and will not be paid for directly.

Field connections to be bolted with high strength bolts. For 3/4" dia. bolts: Open holes = 13/16" unless otherwise noted. Bolt spacing = 2 1/2" unless otherwise noted. Minimum edge distance = 1 1/4" unless otherwise noted. For 7/8" dia. bolts: Open holes = 15/16" unless otherwise noted. Bolt spacing 3" unless otherwise noted. Minimum edge distance = 1 1/2" unless otherwise noted. Bolts shall be placed with heads on the outside face of the exterior beam webs and on bottom of beam flanges.

Holes for 3/4" dia. high strength bolts in diaphragms may be 15/16" dia. if a washer is supplied for use under both the nut and the head of the bolt.

Diaphragms shall be installed as beams are erected. All bolts in Diaphragms shall be installed and completely tightened prior to pouring of floor slabs.

All welding that is to be done during fabrication of structural steel, including temporary welds, shall be detailed on the shop drawings and submitted for approval. If additional welds are required, whether permanent or temporary, a formal request with detailed drawings shall be submitted to the Engineer for approval; however, additional welds used for attaching falsework support devices or screed rail supports to the structural steel that do not exceed the limitations of subsection 802.13 will not require approval prior to construction. All welding shall conform to subsection 807.26.

Drawings show general features of design only. Shop drawings shall be made in accordance with the specifications, submitted, and approval secured before fabrication is begun.

All stud shear connectors shall be granular flux filled, solid fluxed, or equal and shall be automatically end welded in accordance with the recommendations of the manufacturer.

REINFORCING STEEL:

The reinforcing steel shall be accurately located in the forms and firmly held in place by steel wire supports sufficient in size and number to prevent displacement during the course of construction. The wire supports will not be paid for directly but will be considered subsidiary to the item of "Epoxy Coated Reinforcing Steel (Grade 60)".

CONCRETE:

Concrete shall be poured in the dry and all exposed corners to be chamfered 3/4" unless otherwise noted. All concrete shall be Class S(AE) with a minimum 28 day compressive strength f'c = 4,000 psi.

The superstructure details shown are for use when removable deck forming is used and are the basis for measurement of Class S(AE) Concrete. See Standard Drawing No. 14991 for allowable modifications and for tolerances when Permanent Steel Bridge Deck Forms are used.

Concrete in bridge superstructure shall be placed, consolidated and screeded off for the entire pour before any concrete has taken its initial set. This may require the use of a retarding agent. The use of a longitudinal screed is prohibited.

The concrete deck shall be given a tine finish in accordance with subsection 802.19 for Class 5 Tined Bridge Roadway Surface Finish. Movement of the finishing machine across new concrete shall be on planks placed on the surface and shall be prohibited for 72 hours after finishing the pour. Sufficient concrete must be placed ahead of the strike-off to fully load the beam. If a longitudinal strike-off is used, a vertical camber adjustment must be made in the strike-off to account for the future dead load deflection due to the railing. A minimum of 72 hours shall elapse between completion of the slab and the pouring of the parapet railing.

LOAD DISTRIBUTION TO BEAMS:

	Beam 1, 6	Beams 2-5
Dead Load:		
To W-Beam	777 PLF + 1.3(wt./ft. of W-Bm.)	837 PLF + 1.3(wt./ft. of W-Bm.)
To Composite Beam	282 PLF*	311 PLF*

*includes 182 PLF(Int.), 154 PLF(Ext.) Future Wearing Surface

Live Load:

To each Composite Beam — Int. Bm. = 1.379 wheels (+) impact
Ext. Bm. = 1.214 wheels (+) impact

GENERAL NOTES AND MISC. DETAILS
FOR CONTINUOUS COMP. W-BEAM UNITS
(BR. A6879, B6879)

STATE OF ARKANSAS REGISTERED PROFESSIONAL ENGINEER No. 11539 LARRY E. MILLER
8-11-12
BRIDGE ENGINEER

ROUTE SEC.
ARKANSAS STATE HIGHWAY COMMISSION
LITTLE ROCK, ARK.

DRAWN BY: TAR DATE: Feb 02 FILENAME: bBB0407m3 sl.dgn
CHECKED BY: EMB DATE: May 02 SCALE: N.T.S.
DESIGNED BY: BCG/JLH DATE: Jan 02
BRIDGE NO. A6879, B6879 DRAWING NO. 48551

$$$$date$$$$

$$$$dgnspec$$$$$•

...\b040468m3_s1.dgn 8/10/2012 3:49:49 PM

DATE REVISED	DATE FILMED	DATE REVISED	DATE FILMED	FED. ROAD DIST. NO.	STATE	FED. AID PROJ. NO.	SHEET NO.	TOTAL SHEETS
11-21-12				6	ARK.			
				JOB NO.		BB0407	257	464
				1	06880	LAYOUT		48552

For R/W Data, see Rdwy. Plans

Note:
Existing approach slabs and gutters to be removed and replaced with new Approach Slabs, Type Special 2 Approach Gutters at edge of roadway (T=14½") and Type Special 3 Approach Gutters at Median of roadway. See Dwg. Nos. 2018, 48573 and 48574.

Note: The existing berms shall be extended to the face of the new end bent caps and shall provide a 1'-3" minimum clearance to the new beams. Approximately 400 cubic yards of excavation required.

Arkansas River Relief

The existing dumped riprap in the immediate vicinity of the bridge shall be removed to the extent directed by the Engineer and properly disposed. Payment for the removal and disposal of the existing riprap shall be subsidary to "Removal of Existing Bridge Structure (Site No. 1). New dumped riprap 1'-6" thick with filter blanket is to be placed as shown or as directed by the Engineer and joined with any existing riprap on the spur dikes. The top of riprap shall extend to face of end bent cap. See Dwg. 1891F for additional details.

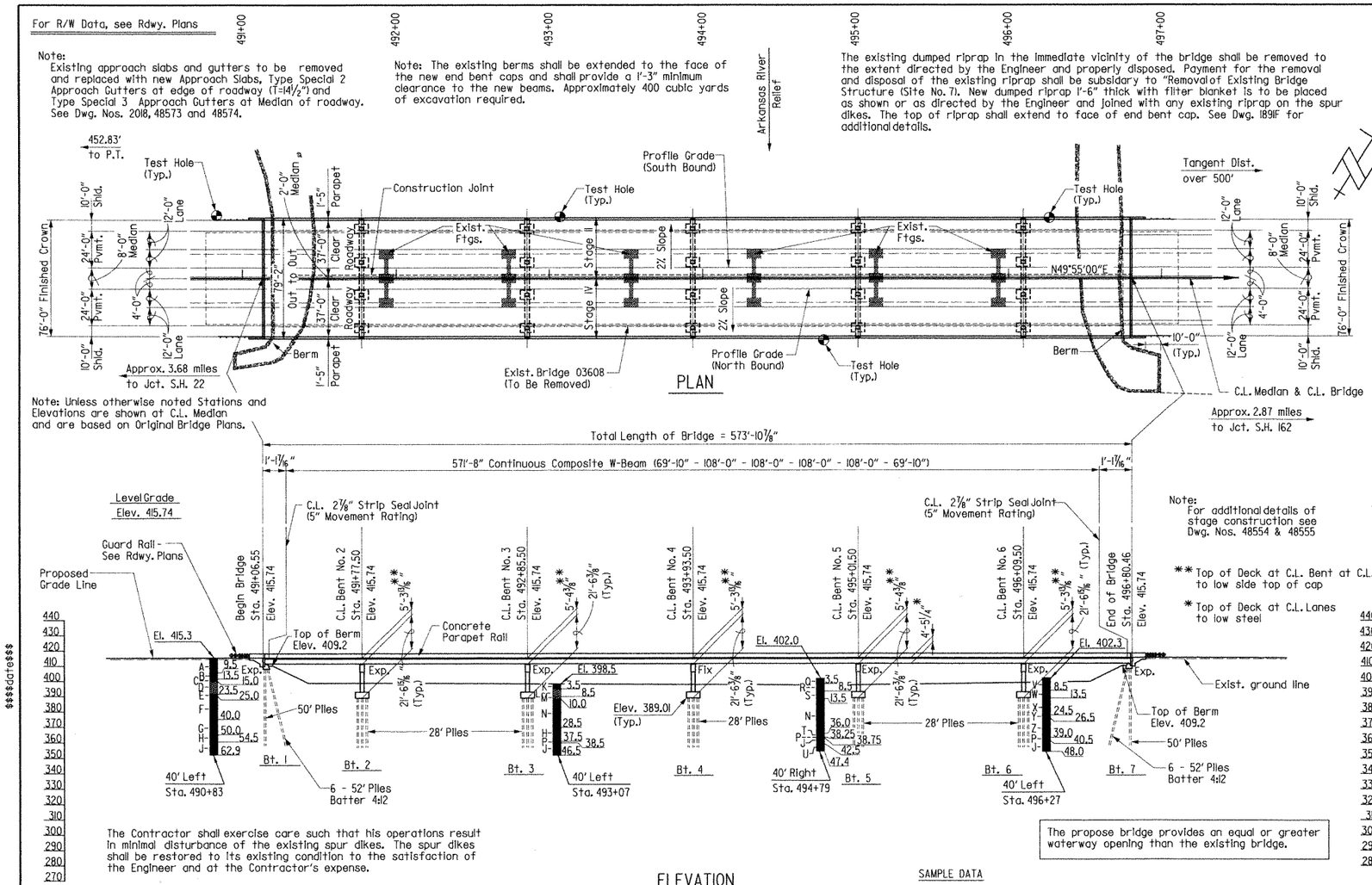

Note: Unless otherwise noted Stations and Elevations are shown at C.L. Median and are based on Original Bridge Plans.

Note: For additional details of stage construction see Dwg. Nos. 48554 & 48555

** Top of Deck at C.L. Bent at C.L. Median to low side top of cap

* Top of Deck at C.L. Lanes to low steel

The Contractor shall exercise care such that his operations result in minimal disturbance of the existing spur dikes. The spur dikes shall be restored to its existing condition to the satisfaction of the Engineer and at the Contractor's expense.

The propose bridge provides an equal or greater waterway opening than the existing bridge.

ELEVATION
(Along C.L. Lanes)

GENERAL NOTES

BENCH MARK: Elevations and stations are assumed to be the same as shown on the original plans. The original layout shows the elevation at the top of the deck and centerline of existing bridge to be at 414.68 at Sta. 491+12.42 (Beg. of Br. 3608).

CONSTRUCTION SPECIFICATIONS: Arkansas State Highway and Transportation Department Standard Specifications for Highway Construction (2003 edition), with applicable supplemental specifications and special provisions. Unless otherwise noted on the plans, section and subsection refer to the Standard Construction Specifications.

DESIGN SPECIFICATIONS: AASHTO Standard Specifications for Highway Bridges (1996 edition), with current interim specifications.

LIVE LOAD: HS20 + Military Loading METHOD OF DESIGN: Load Factor
SEISMIC PERFORMANCE CATEGORY: A

MATERIALS AND STRENGTHS:
Class S(AE) Concrete (superstructure) f'c = 4,000 psi
Class S Concrete (substructure) f'c = 3,500 psi
Reinforcing Steel (AASHTO M31 or M53, Gr. 60) fy = 60,000 psi
Structural Steel (AASHTO M270, Gr. 50W) Fy = 50,000 psi
Structural Steel (AASHTO M270, Gr. 36) Fy = 36,000 psi

BORING LOGS: Boring Logs may be obtained from the Programs and Contracts Division.

BRIDGE DECK: The concrete bridge deck shall be given a tine finish as specified for final finishing in Subsection 802.19 for Class 5 Tined Bridge Roadway Surface Finish.

CLASS I PROTECTIVE SURFACE TREATMENT: Class I Protective Surface Treatment shall be applied to the roadway surface and to the face and top of the concrete parapet rail.

FOOTINGS: The top of all footings shall have a minimum cover of 2'-0". Foundations for all footings shall be prepared in accordance with Section 801.04.

STEEL PILING: Piling in Bents 1 thru 7 shall be HP12x53 and shall be driven with an approved air, steam, or diesel hammer to a minimum safe bearing capacity of 70 tons per pile and into the material designated as medium hard, dark gray weathered shale on the boring legend. Lengths of piling shown are for estimating quantities and for use in determining payment for cut-off and build-up in accordance with the Standard Specifications. Piles in end bents to be driven after embankment to bottom of cap is in place.
⚠1 On all piles the contractor shall use approved steel H-pile driving point.

DETAIL DRAWINGS:	DRAWING NO.
End Bents	48556-48448, 48561-48563
Intermediate Bents	48559, 48560
571'-8" Cont. Comp. W-Beam Unit	48564-48569
Steel Piling	14995A
Approach Slab	2018
Type Special1 Approach Gutter	48573
Type Special3 Median Approach Gutters	48574

REMOVAL AND SALVAGE: The existing bridge , shall be removed in accordance with Section 205. All material from existing bridge shall become the property of the contractor.

EXISTING BRIDGE: Existing Bridge No. 03608 is 67'-0" wide and 562'-2" long and consists of 7 composite 80'-0" simple spans supported by substructures consisting of 6-4 column interior bents and 2 pile end bents. Plans for existing bridge will be made available to the Contractor upon request to Programs and Contracts Division. Existing Dwg. Nos. 12834 thru 12837, 12839, 14992, 14998.

MAINTENANCE OF TRAFFIC: See Roadway Plans.

TEMPORARY SHORING: Temporary shoring may be required. See Special Provision Job No. BB0407 "Shoring".

NOTE: The contractor shall check measurements of the existing bridge. Any adjustments necessary to fit the new work to the existing bridge location shall be submitted for the Engineer's approval.

Boring Legend

A - Moist, Medium Dense, Brown to Reddish Brown Silty Sand
B - Moist, Medium Dense, Brown Silty Sand with some Clay Seams
C - Moist, Medium Dense, Brown Sand with Clay Seams and Sandstone and Shale Fragments
D - Moist, Medium Stiff, Brown Silty Clay
E - Wet, Loose, Brown Silty Sand
F - Wet, Medium Dense to Dense, Brown Sand
G - Wet, Medium Dense, Brown Sand
H - Wet, Medium Dense, Brown Sand and Gravel
J - Hard, Dark Gray Shale
K - Moist, Soft, Brown Sandy Clay
L - Wet, Very Soft, Brown Silty Clay
M - Wet, Very Loose, Brown Clayey Silt
N - Wet, Very Loose, Brown Sand
P - Medium Hard, Dark Gray Weathered Shale
Q - Moist, Medium Dense, Brown and Gray Sand
R - Moist, Loose, Brown Silty Sand
S - Wet, Soft, Brown Sandy, Silty Clay
T - Wet, Loose, Brown Sand and Gravel
U - Hard, Dark Gray Shale with some Fractured Seams
V - Wet, Very Soft, Brown Sandy, Silty Clay
W - Wet, Very Loose, Brown Clayey, Silty Sand
X - Wet, Very Loose to Loose, Brown Silty Sand
Y - Wet, Medium Dense, Gray Sand with some Gravel
Z - Wet, Medium Dense, Gray Sand and Gravel

SAMPLE DATA

Sta. 490+83 - 40' Left of Centerline of Median I-540

4.0 - 5.0, N = 16	29.0 - 30.0, N = 14	55.0 - 58.0, SCR% = 99, RQD% = 24
9.0 - 10.0, N = 11	35.5 - 36.5, N = 45	58.0 - 62.9, SCR% = 99, RQD% = 58
14.0 - 15.0, N = 16	40.5 - 41.5, N = 15	
19.0 - 20.0, N = 8	45.5 - 46.5, N = 29	
24.0 - 25.0, N = 5	50.5 - 51.5, N = 11	

Sta. 493+07 - 40' Left of Centerline of Median I-540

3.5 - 5.0, N = 0	30.5 - 31.5, N = 25	38.5 - 41.5, SCR% = 99, RQD% = 22
9.0 - 10.0, N = 1	35.5 - 36.5, N = 18	41.5 - 46.5, SCR% = 99, RQD% = 40
14.0 - 15.0, N = 4		

Sta. 494+79 - 40' Right of Centerline of Median I-540

4.0 - 5.0, N = 6	39.0 - 42.5, SCR% = 99, RQD% = 22
9.0 - 10.0, N = 3	42.5 - 47.4, SCR% = 99, RQD% = 9
14.0 - 15.0, N = 2	

Sta. 496+27 - 40' Left of Centerline of Median I-540

4.0 - 5.0, N = 1	25.5 - 26.5, N = 13	40.0 - 43.0, SCR% = 99, RQD% = 6
8.5 - 10.0, N = 0	30.5 - 31.5, N = 14	43.0 - 48.0, SCR% = 94, RQD% = 78
14.0 - 15.0, N = 4		

⚠1 Revised piling note KDH 11-21-12

STATE OF ARKANSAS REGISTERED PROFESSIONAL ENGINEER No. 13339 LARRY W. MILLER 11/21/12
BRIDGE ENGINEER

LAYOUT OF BRIDGE OVER ARKANSAS RIVER RELIEF (BR. 06880)

HWY. 22 - I-40 (F)
CRAWFORD & SEBASTIAN COUNTIES
ROUTE I-540 SEC. 1
ARKANSAS STATE HIGHWAY COMMISSION
LITTLE ROCK, ARK.

DRAWN BY: TAR DATE: March 02 FILENAME: bBB0407m4 ill.dgn
CHECKED BY: JLH DATE: March 02 SCALE: 1" = 40'
DESIGNED BY: BCG DATE: March 02
BRIDGE NO. 06880 DRAWING NO. 48552

$$$$date$$$
$$$$dgnspec$$$$$

FED. ROAD DIST. NO.	STATE	FED. AID PROJ. NO.	SHEET NO.	TOTAL SHEETS
6	ARK.			
JOB NO.		BB0407	258	261
03608 - LAYOUT - 48553				

(1)

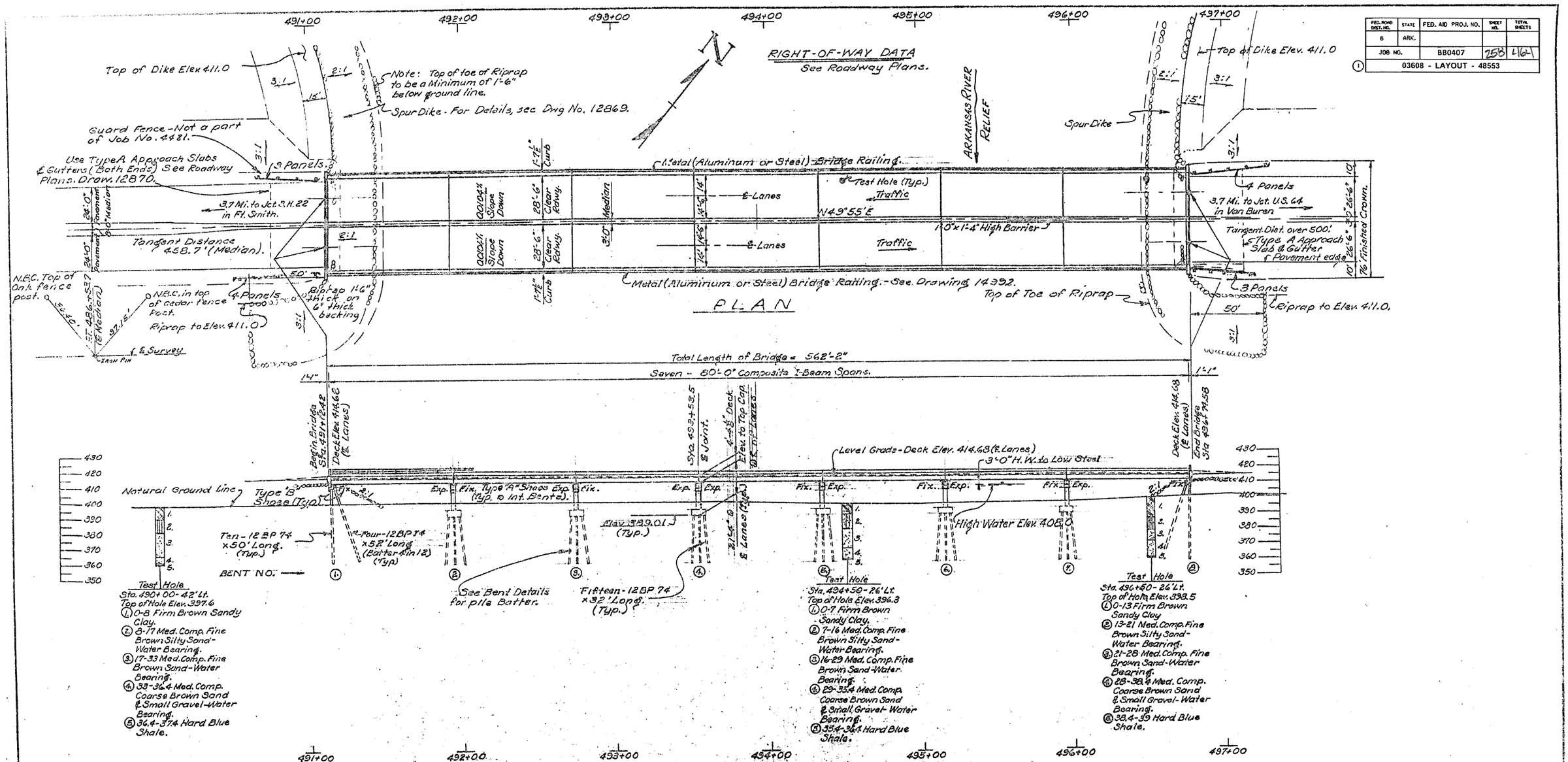

GENERAL NOTES:

All concrete to be poured in the dry. All exposed corners shall be chamfered 3/4" unless otherwise noted.

All piling shall be 12-BP-74 and shall be driven with an approved air, steam or diesel hammer to a minimum capacity of 60 tons per pile and to the material designated as shale in the boring logs. Lengths of piling shown are for estimating quantities only. Order lengths shown; cut-off or build-up, if necessary, to be paid for in accordance with the Standard Specifications.

In general, all construction joints in bents shall be horizontal and shall be provided with keys not less than 12" high covering the middle third of all dimensions.

Piles in end bents shall be driven after embankment is in place.

For Details of Bents see Drawings 12036 and 12037.
For Details of Superstructure see Drawings 12038 & 12039 & 14992.
For Details of Spur Dike see Drawing 12869.

SPECIFICATIONS: Arkansas State Highway Commission Standard Specifications for Highway Construction, Edition of 1960, and applicable Special Provisions.

DESIGN SPECIFICATIONS: AASHO 1961
Design Live Load: H20-S16 and Special Interstate loading of sub 24,000 axles 430" on centers.

Unit Stresses:	Class S Concrete (fc=1.0)	1,200 psi
	Class A Concrete (fc=1.0)	900 psi
	Reinforcing Steel	20,000 psi
	Structural Steel (M 96)	20,000 psi

Revisions: Layout Dated 1-8-63 & Traced 7-19-63 - Re-drawn with change in Spans, Length, Deck Elev. and Type of Bents. 10-30-69.

L. P. Carlson
BRIDGE ENGINEER

FOR INFORMATION ONLY

LAYOUT OF BRIDGE OVER
ARKANSAS RIVER RELIEF
ARKANSAS R. & RELIEF BR. & APPR.
SEBASTIAN COUNTY
INT. ROUTE 540 SEC. 1

ARKANSAS STATE HIGHWAY COMMISSION
LITTLE ROCK, ARK.

DRAWN BY: LP DATE: 10-30-69
TRACED BY: DATE:
CHECKED BY: DATE: 5-7-64
SCALE: 1" = 30'

BRIDGE NO. 03608 DRAWING NO. 48553

DATE REVISED	DATE FILMED	DATE REVISED	DATE FILMED	FED. ROAD DIST. NO.	STATE	FED. AID PROJ. NO.	SHEET NO.	TOTAL SHEETS
				6	ARK.			
				JOB NO.		BB0407	259	464
				(1) 06880		STAGE CONST.		48554

Note:
In Stage II Demolition existing End Bents to be removed to within 1'-0" max. of C.L. Median.

In Stage II Demolition existing Int. Bent Caps to be removed flush with left side of center column, looking ahead. Center column and footing to remain undisturbed.

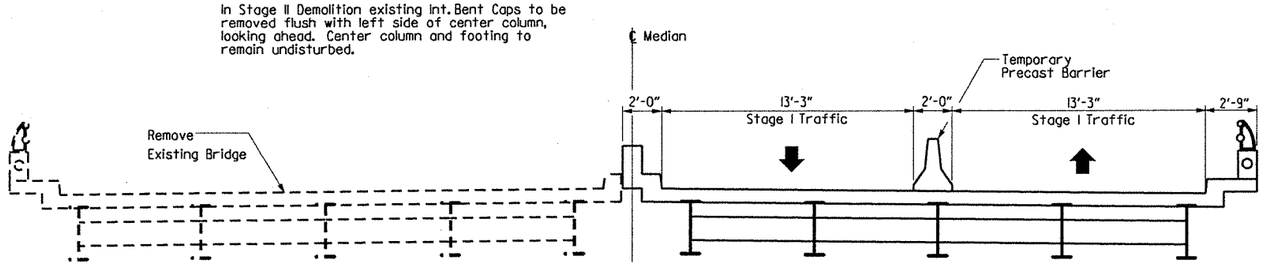

STAGE II DEMOLITION

Notes:

Sections are taken looking Ahead.

See Roadway Plans for complete list of construction stages.

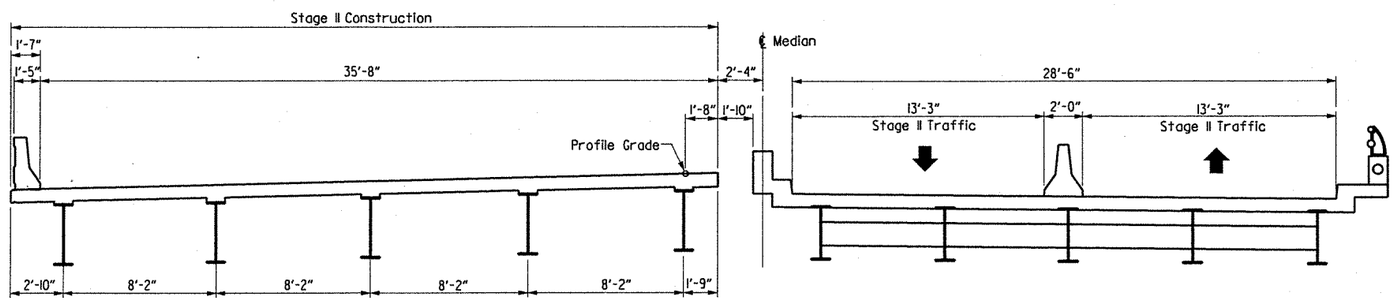

STAGE II CONSTRUCTION

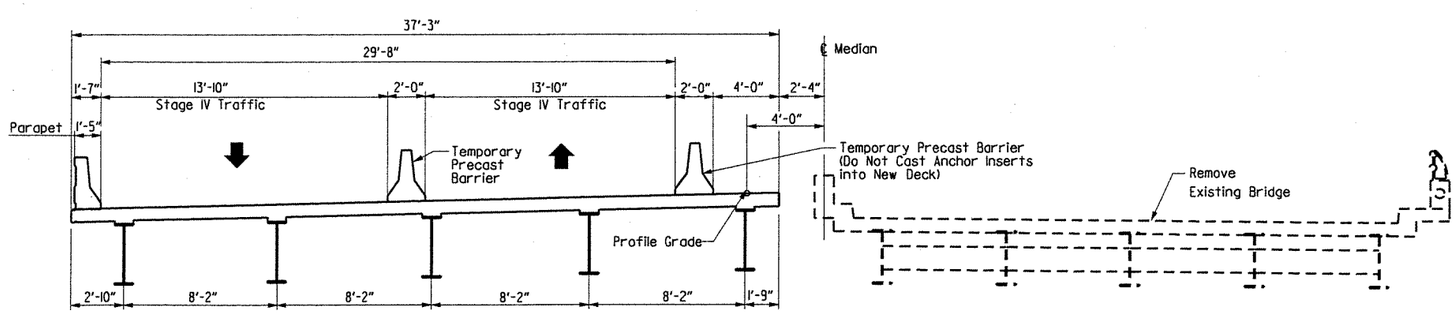

STAGE IV DEMOLITION

STATE OF ARKANSAS REGISTERED PROFESSIONAL ENGINEER No. 10378 LARRY D. MILLER
8-11-12
BRIDGE ENGINEER

SHEET 1 OF 2
DETAILS OF STAGE CONSTRUCTION
(BR. 06880)
OVER ARKANSAS RIVER RELIEF
HWY. 22 - I-40 (F)
CRAWFORD & SEBASTIAN COUNTIES
ROUTE I-540 SEC. 1
ARKANSAS STATE HIGHWAY COMMISSION
LITTLE ROCK, ARK.

DRAWN BY: TAR DATE: March 02 FILENAME: bBB0407m4 112.dgn
CHECKED BY: JLH DATE: March 02 SCALE: N.T.S.
DESIGNED BY: BCG DATE: Jan02
BRIDGE NO. 06880 DRAWING NO. 48554

$$$$date$$$

$$$$dgnspec$$$$$

...\b040468m4 112.dgn 8/10/2012 3:49:51 PM

DATE REVISED	DATE FILMED	DATE REVISED	DATE FILMED	FED. ROAD DIST. NO.	STATE	FED. AID PROJ. NO.	SHEET NO.	TOTAL SHEETS
				6	ARK.			
				JOB NO.		BB0407	260	464
				1 06880		STAGE CONST.		48555

Notes:

Sections are taken looking Ahead.

See Roadway Plans for complete list of construction stages.

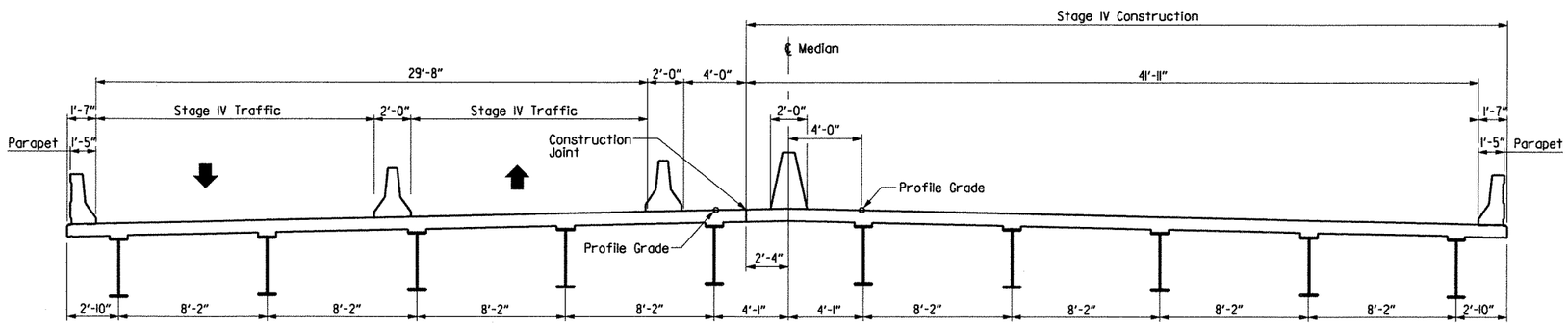

STAGE IV CONSTRUCTION

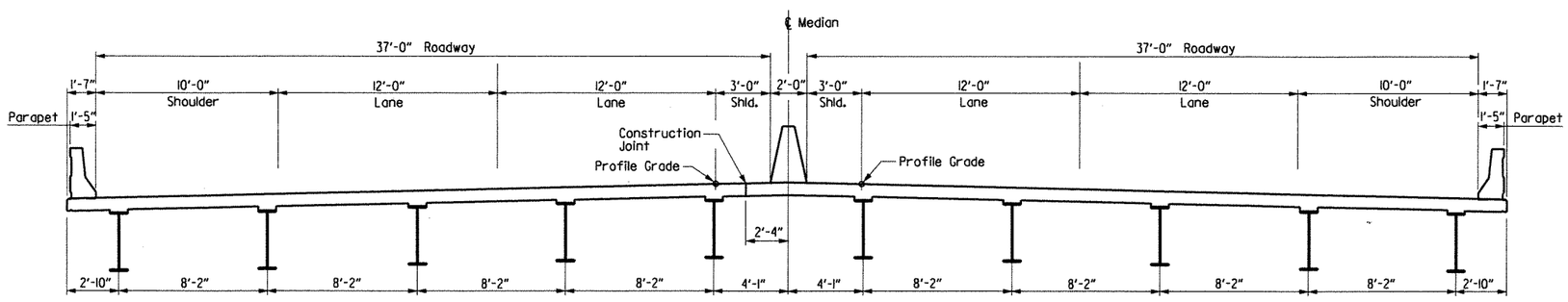

CONSTRUCTION COMPLETE SKETCH

STATE OF ARKANSAS REGISTERED PROFESSIONAL ENGINEER No. 10319 LARRY D. MILLER

Larry D. Miller 8-11-12

BRIDGE ENGINEER

SHEET 2 OF 2
DETAILS OF STAGE CONSTRUCTION
(BR. 06880)
OVER ARKANSAS RIVER RELIEF
HWY. 22 - I-40 (F)
CRAWFORD & SEBASTIAN COUNTIES
ROUTE I-540 SEC. 1
ARKANSAS STATE HIGHWAY COMMISSION
LITTLE ROCK, ARK.

DRAWN BY: TAR DATE: March 02 FILENAME: bBB0407m4 113.dgn
CHECKED BY: JLH DATE: March 02 SCALE: N.T.S.
DESIGNED BY: BCG DATE: Jan02

BRIDGE NO. 06880 DRAWING NO. 48555

$$$$date$$$

$$$$dgnspec$$$$$

...\b040468m4_113.dgn 8/10/2012 3:49:51 PM

DATE REVISED	DATE FILMED	DATE REVISED	DATE FILMED	FED. ROAD DIST. NO.	STATE	FED. AID PROJ. NO.	SHEET NO.	TOTAL SHEETS
				6	ARK.			
				JOB NO.		BB0407	261	464
				(1) 06880		BENT DTLS.		48556

Note:
Class I Protective Surface Treatment shall be applied to the top of the backwall and to the roadway face and top of transition rail.

Note:
For additional details of transition rail, see Dwg. No. 48558

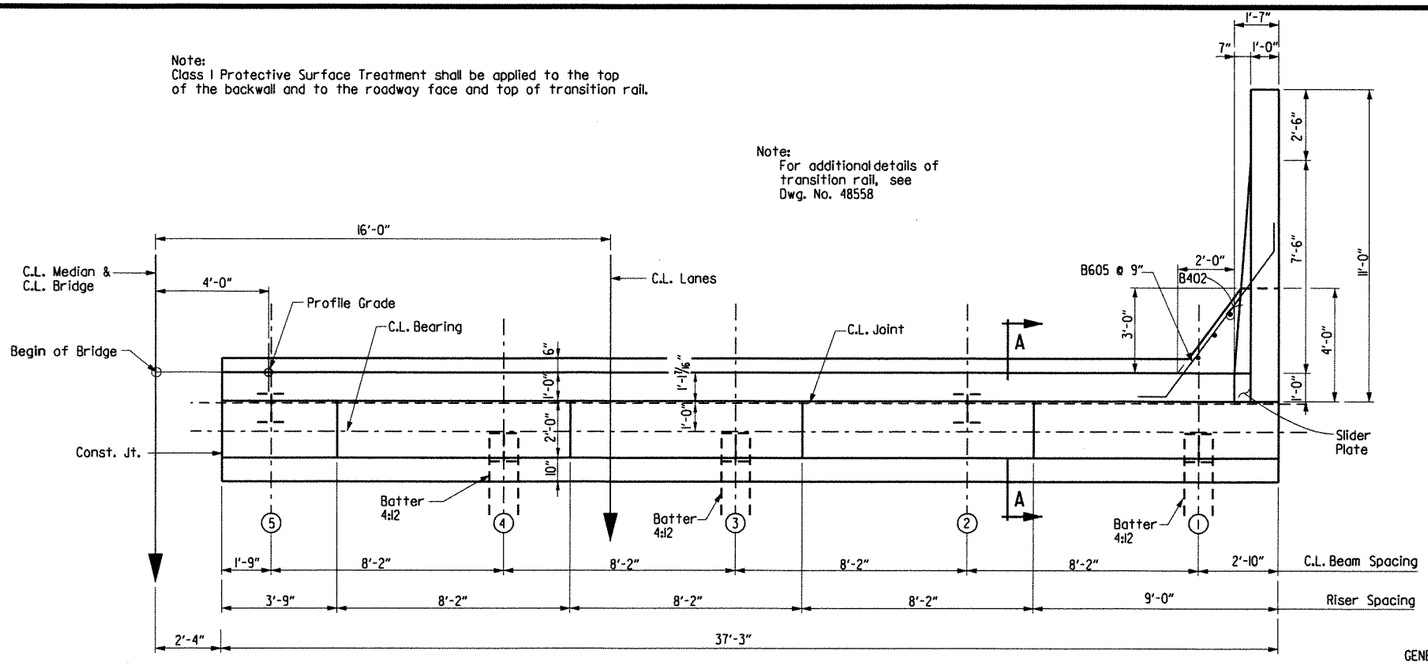

PLAN - STAGE II

3/8" = 1'-0"

▲ Shop Weld - See SP Job BB0407 "Armored Joint With Neoprene Strip Seal"

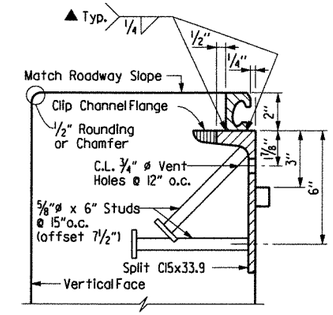

Note: Concrete shall be hand packed under the joint armor in the backwall.

For additional details, See Dwg. No. 48571.

DETAIL Z

3"= 1'-0"

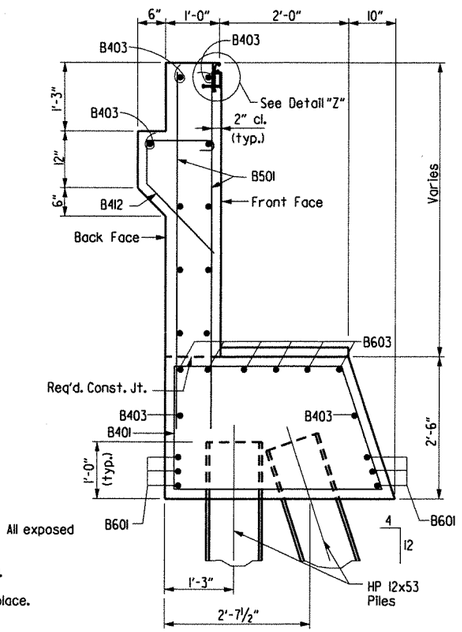

SECTION A-A

3/4" = 1'-0"

GENERAL NOTES

All concrete shall be Class "S" and shall be poured in the dry. All exposed corners shall be chamfered 3/4" unless otherwise noted.

All reinforcing steel shall conform to AASHTO M31 or M53, Gr. 60.

End Bent backwall shall not be poured before girders are in place. Backwall to be placed after concrete span placement.

Structural steel in end bents shall be AASHTO M270, Gr. 50W and shall be paid for as "Structural Steel in Beam Spans (M270, Gr. 50W)".

If anchor bolts are drilled into cap, top reinforcing bars shall be properly spaced to avoid damage.

For additional information, see Layout.

The parapet slider plates shall be cleaned in accordance with subsection 807.84(b) and painted in accordance with subsection 807.75. The color of paint shall be Gray and shall match Fed. Std. 595B, Color Chip 26176. Cleaning and painting will not be paid for directly but will be considered subsidiary to "Structural Steel in Beam Spans (Gr. 50W)".

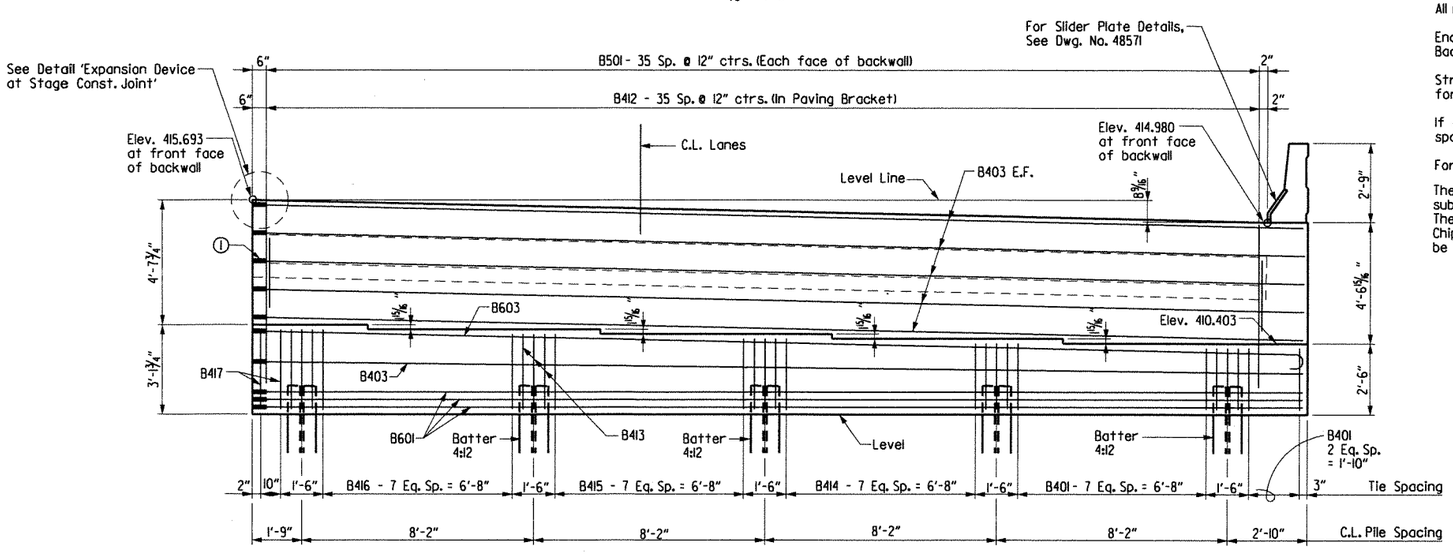

ELEVATION - STAGE II

(Looking Back)
3/8" = 1'-0"

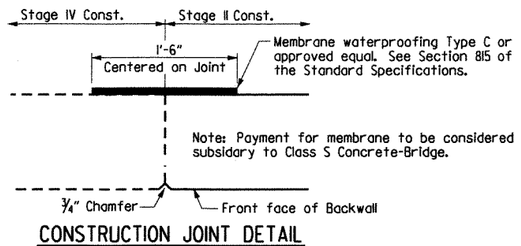

CONSTRUCTION JOINT DETAIL

No Scale

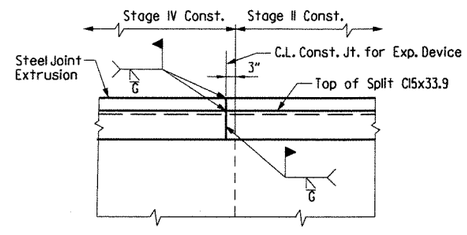

EXPANSION DEVICE AT STAGE CONST. JOINT

No Scale
(Looking Back)

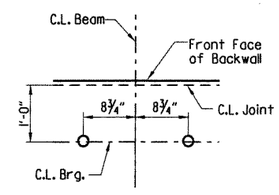

Note: For details of Elastomeric Bearings, See Dwg. No. 48570

TYPICAL ANCHOR BOLT LAYOUT

No Scale

Note:
Payment for mechanical rebar splice will be included in item 804 "Reinforcing Steel Bridge." (Grade 60)

(1) Denotes: Mechanical Couplers shall be from the Qualified Products List, and shall maintain minimum clearances shown, and their payment is subsidiary to the item "Reinforcing Steel - Bridge". The couplers shall develop at least 125% of the specified yield strength of the bar.

STATE OF ARKANSAS REGISTERED PROFESSIONAL ENGINEER No. 11339 LARRY D. MILLER
8-11-12
BRIDGE ENGINEER

SHEET 1 OF 3
DETAILS OF BENT NO. 1
BRIDGE OVER ARKANSAS RIVER RELIEF
(BR. 06880)
CRAWFORD & SEBASTIAN COUNTIES
ROUTE I-540 SEC. 1
ARKANSAS STATE HIGHWAY COMMISSION
LITTLE ROCK, ARK.

DRAWN BY: TAR DATE: March 02 FILENAME: bBB0407m4 bll.dgn
CHECKED BY: EMB/BJS/ETH DATE: April 02 SCALE: As Shown
DESIGNED BY: JLH DATE: March 02
BRIDGE NO. 06880 DRAWING NO. 48556

$$$$dgnspec$$$$$ $$$$date$$$$

...\b040468m4_b11.dgn 8/10/2012 3:49:51 PM

DATE REVISED	DATE FILMED	DATE REVISED	DATE FILMED	FED. ROAD DIST. NO.	STATE	FED. AID PROJ. NO.	SHEET NO.	TOTAL SHEETS
				6	ARK.			
				JOB NO.		BB0407	262	464
				(1) 06880		BENT DTLS.		48557

Note:
Class I Protective Surface Treatment shall be applied to the top of the backwall and to the roadway face and top of transition rail.

Note:
For additional details of transition rail, see Dwg. No. 48558

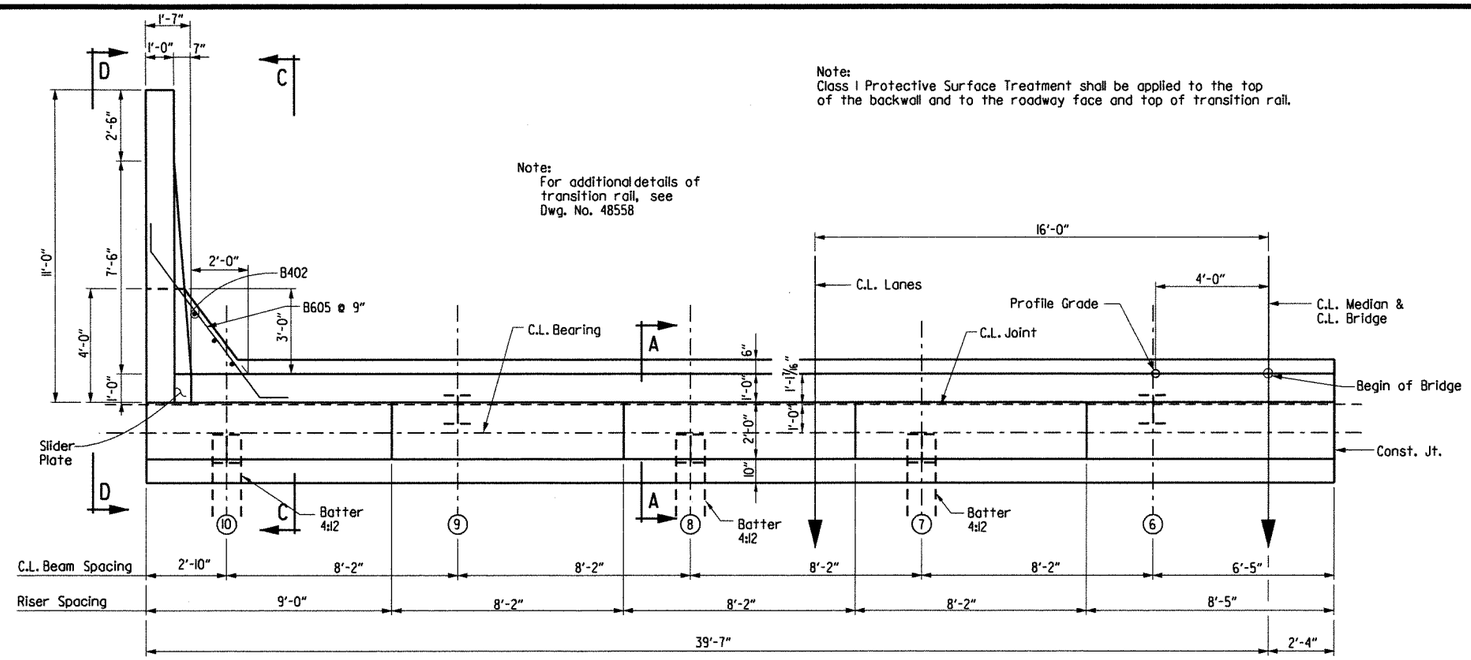

PLAN - STAGE IV

3/8" = 1'-0"

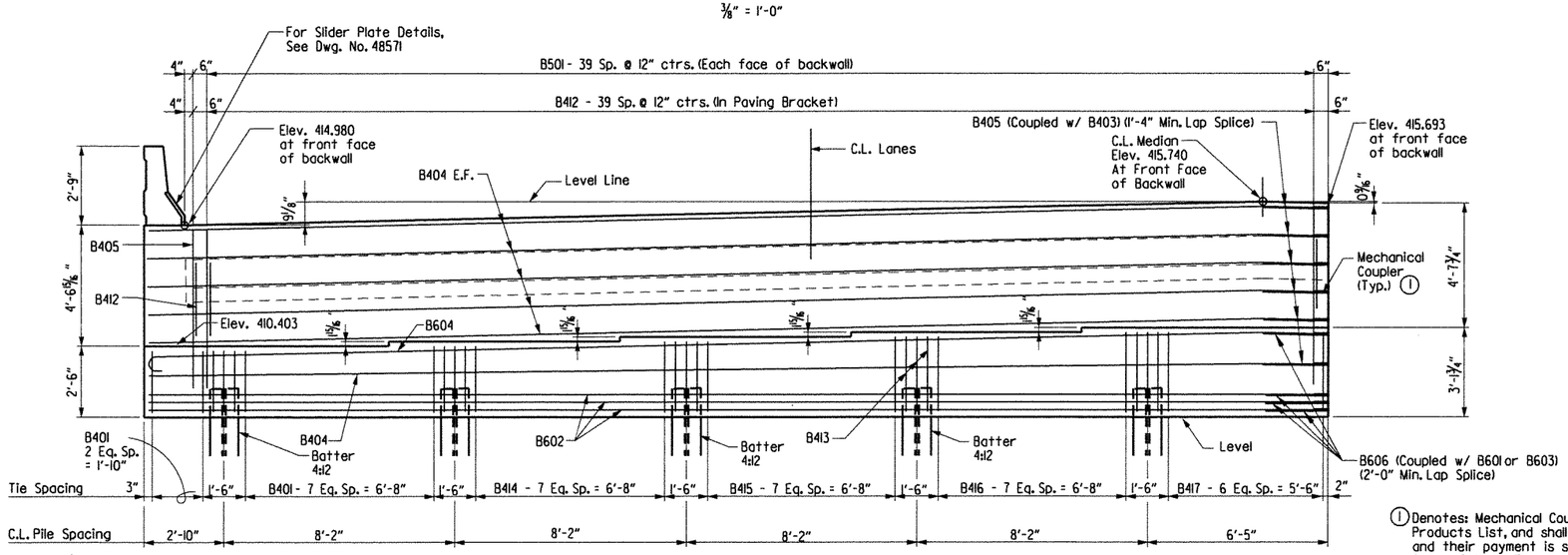

ELEVATION - STAGE IV

(Looking Back)
3/8" = 1'-0"

(1) Denotes: Mechanical Couplers shall be from the Qualified Products List, and shall maintain minimum clearances shown, and their payment is subsidiary to the item "Reinforcing Steel - Bridge". The couplers shall develop at least 125% of the specified yield strength of the bar.

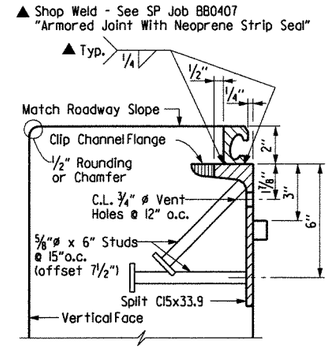

Note: Concrete shall be hand packed under the joint armor in the backwall.

For additional details, See Dwg. No. 48571.

DETAIL Z

3" = 1'-0"

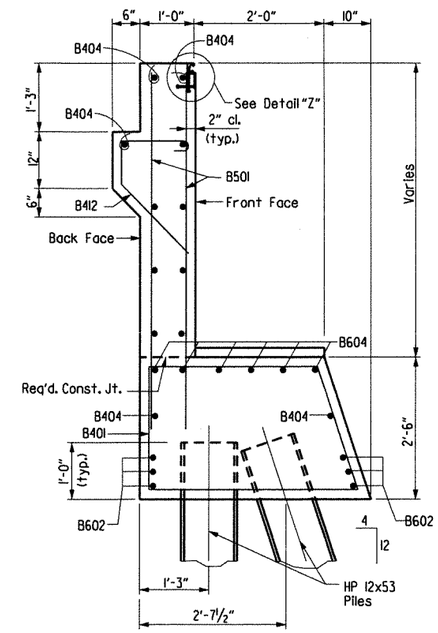

SECTION A-A

3/4" = 1'-0"

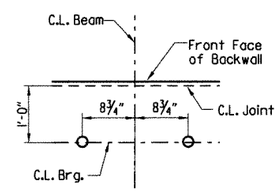

Note: For details of Elastomeric Bearings, See Dwg. No. 48570

TYPICAL ANCHOR BOLT LAYOUT

No Scale

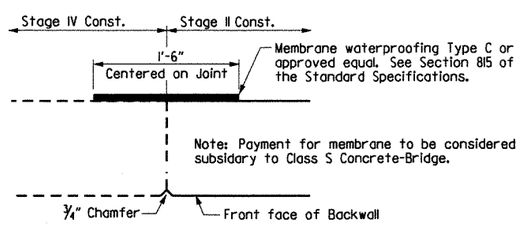

CONSTRUCTION JOINT DETAIL

No Scale

Note:
See Dwg. No. 48565 for Expansion Device at Stage Construction Joint

STATE OF ARKANSAS REGISTERED PROFESSIONAL ENGINEER No. 11339 LARRY D. MILLER

Larry D. Miller 8-11-12

BRIDGE ENGINEER

SHEET 2 OF 3
DETAILS OF BENT NO. 1
BRIDGE OVER ARKANSAS RIVER RELIEF
(BR. 06880)
CRAWFORD & SEBASTIAN COUNTIES
ROUTE I-540 SEC. 1

ARKANSAS STATE HIGHWAY COMMISSION
LITTLE ROCK, ARK.

DRAWN BY: TAR DATE: March 02 FILENAME: bBB0407m4 bl2.dgn
CHECKED BY: EMB/BJS/ETH DATE: April 02 SCALE: As Shown
DESIGNED BY: JLH DATE: March 02
BRIDGE NO. 06880 DRAWING NO. 48557

$$$$date$$$$
$$$$dgnspec$$$$
...\b040468m4_b12.dgn 8/10/2012 3:49:52 PM

DATE REVISED	DATE FILMED	DATE REVISED	DATE FILMED

FED. ROAD DIST. NO.	STATE	FED. AID PROJ. NO.	SHEET NO.	TOTAL SHEETS
6	ARK.			
JOB NO.		BB0407	263	464
① 06880		BENT DTLS.		48558

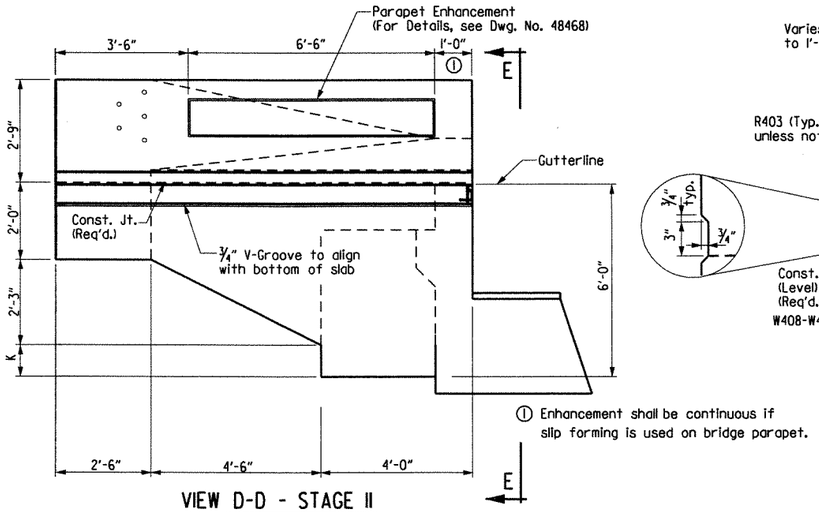

① Enhancement shall be continuous if slip forming is used on bridge parapet.

VIEW D-D - STAGE II

(Stage IV Similar)
Scale: ½" = 1'-0"

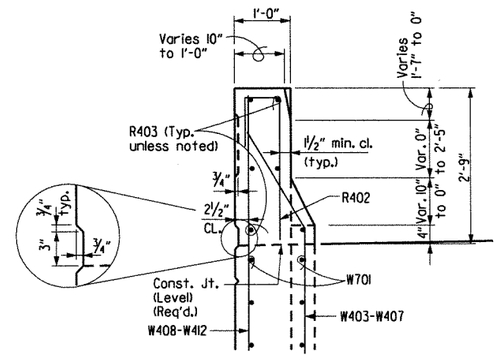

SECTION F-F

Scale: ¾" = 1'-0"

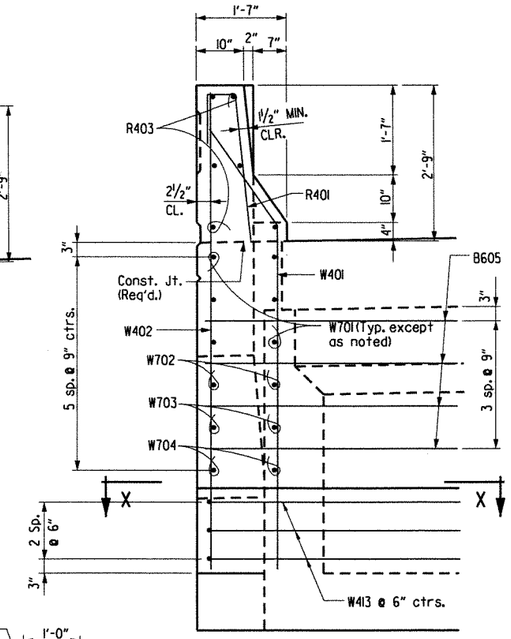

VIEW E-E

Scale: ¾" = 1'-0"

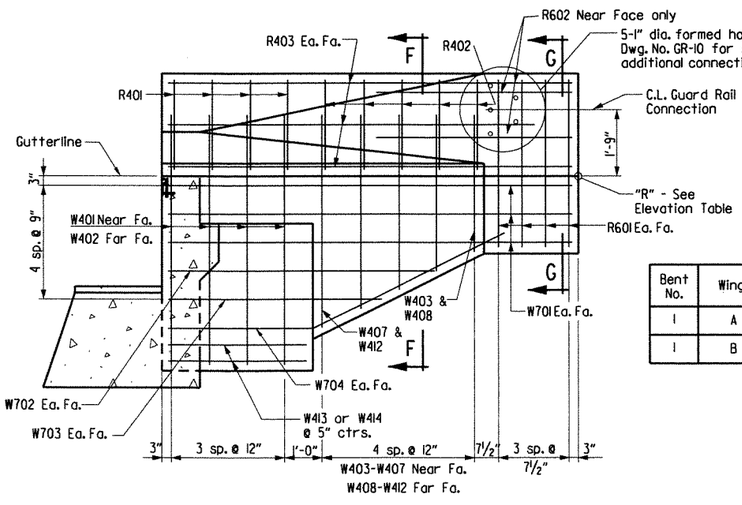

Bent No.	Wing	Elev. "R"	K
1	A	414.980	1'-9"
1	B	414.980	1'-9"

SECTION C-C - STAGE II

(Stage IV Similar)
Scale: ½" = 1'-0"

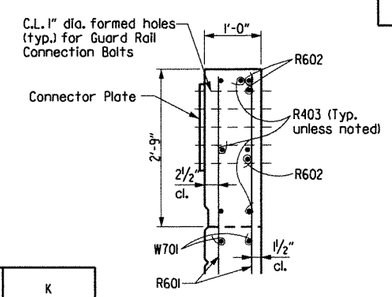

SECTION G-G

Scale: ¾" = 1'-0"

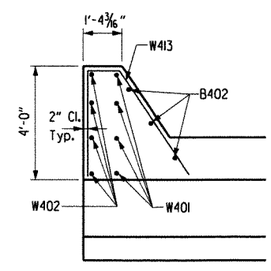

SECTION X-X

N.T.S.

BAR LIST

Mark	No. Req'd.	Length	"A"	"B"	Pin Dia.
B401	22	11'-0"			2"
B402	6	4'-0"			STR.
B403	12	37'-1"			STR.
B404	12	41'-9"			STR.
B405	12	2'-0"			STR.
B412	76	3'-11"	1'-2"	4½"	3"
B413	30	7'-0"	2'-8"	3'-6"	2"
B414	16	11'-3"	2'-4"	2'-5"	2"
B415	16	11'-8"	2'-6"	2'-8⅛"	2"
B416	16	12'-0"	2'-8"	2'-10¼"	2"
B417	9	12'-4"	2'-10"	3'-0½"	2"
B501	152	5'-8"			STR.
B601	6	37'-1"			STR.
B602	6	41'-9"			STR.
B603	6	37'-9"	37'-1"		4½"
B604	6	42'-5"	41'-9"		4½"
B605	8	8'-5"			4½"
B606	12	3'-0"			STR.
R401	8	3'-11"			2"
R402	8	4'-0"			2"
R403	12	9'-8"			STR.
R601	16	4'-5"			STR.
R602	6	5'-0"			STR.
W401	8	7'-0"	5'-10"	1'-2"	3"
W402	8	8'-2"			STR.
W403 - W407	2 ea.	Varies 3'-4" to 5'-4"	Varies 2'-2" to 4'-2"	1'-2"	2"
W408 - W412	2 ea.	Varies 4'-6" to 6'-6"			STR.
W413	6	8'-11"			3"
W701	12	9'-8"			STR.
W702	4	6'-0"			STR.
W703	4	4'-6"			STR.
W704	4	8'-0"			5¼"

Bending Diagrams
(Dimensions are out to out of bars.)

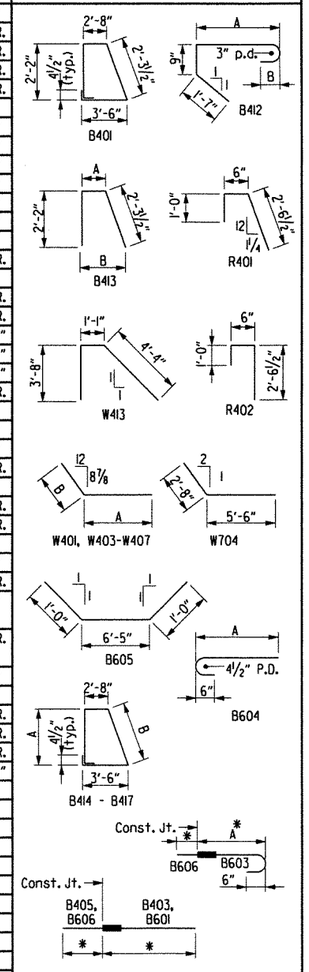

* Denotes: Individual lengths shall be determined by the Contractor based on the type of mechanical coupler used.

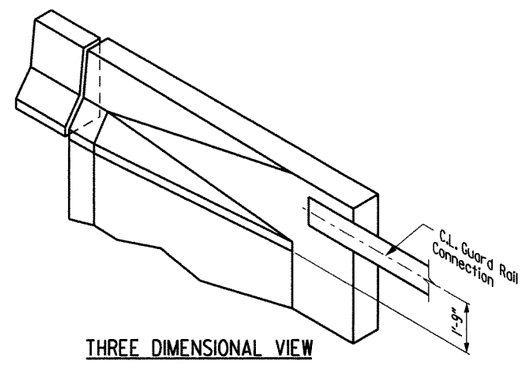

THREE DIMENSIONAL VIEW
WING RAIL & PARAPET

No Scale

STATE OF ARKANSAS
REGISTERED PROFESSIONAL ENGINEER
No. 10339
LARRY W. MILLER
8-11-12
BRIDGE ENGINEER

SHEET 3 OF 3
DETAILS OF BENT NO. 1
BRIDGE OVER ARKANSAS RIVER RELIEF
(BR. 06880)
CRAWFORD & SEBASTIAN COUNTIES
ROUTE I-540 SEC. 1
ARKANSAS STATE HIGHWAY COMMISSION
LITTLE ROCK, ARK.

DRAWN BY: TAR DATE: March 02 FILENAME: bBB0407m4 bl3.dgn
CHECKED BY: EMB/BJS DATE: April 02 SCALE: As Shown
DESIGNED BY: JLH DATE: Jan 02

BRIDGE NO. 06880 DRAWING NO. 48558

$$$$dgnspec$$$$$ $$$$date$$$$

...\b040468m4_b13.dgn 8/10/2012 3:49:52 PM

DATE REVISED	DATE FILMED	DATE REVISED	DATE FILMED	FED. ROAD DIST. NO.	STATE	FED. AID PROJ. NO.	SHEET NO.	TOTAL SHEETS
				6	ARK.			
				JOB NO.		BB0407	264	464
				(1) 06880		BENT DTLS.		48559

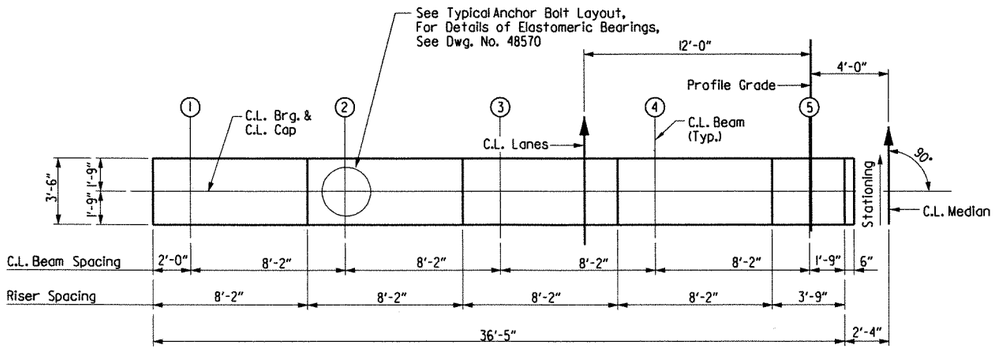

PLAN - STAGE II

Scale: 1/4" = 1'-0"

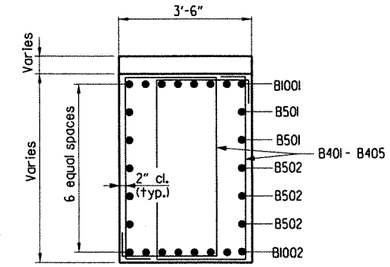

SECTION B-B

Scale: 1/2" = 1'-0"

(1) Denotes: Mechanical Couplers shall be from the Qualified Products List, and shall maintain minimum clearances shown, and their payment is subsidiary to the item "Reinforcing Steel - Bridge". The couplers shall develop at least 125% of the specified yield strength of the bar.

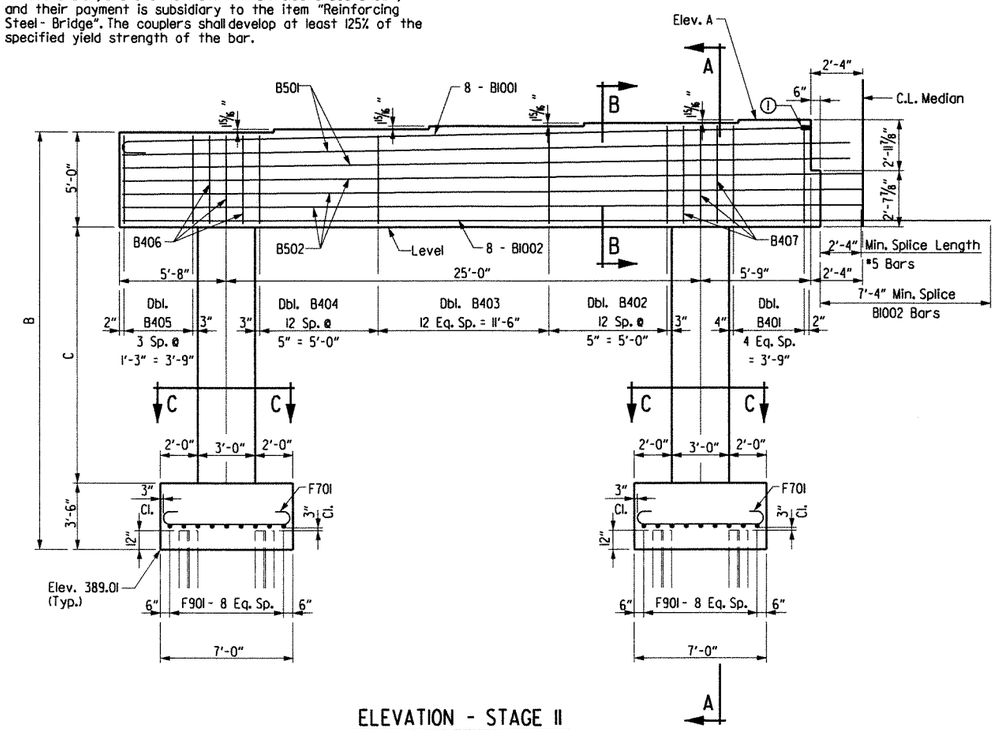

ELEVATION - STAGE II

(Looking Ahead)
1/4" = 1'-0"

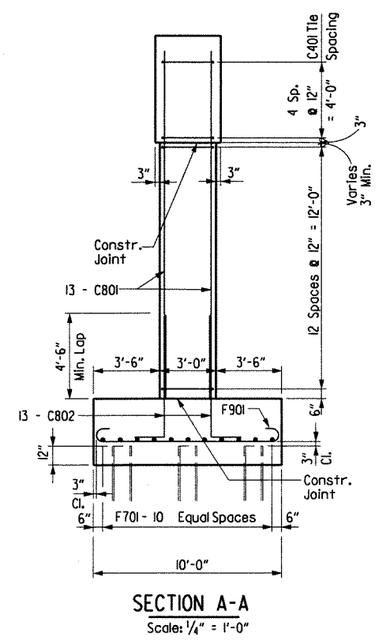

SECTION A-A

Scale: 1/4" = 1'-0"

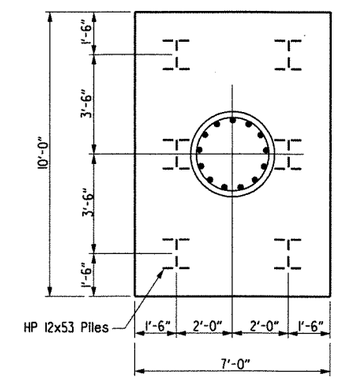

PLAN OF FOOTING

Scale: 3/8" = 1'-0"

BENT	ELEV. A	B	C
2 & 6	411.233	21'-6 15/16"	13' 0 5/16"
3 - 5	411.188	21'- 6 3/8"	13'-0 3/8"

Notes:

All concrete shall be Class "S" and shall be poured in the dry. All exposed corners shall be chamfered 3/4" unless otherwise noted.

All reinforcing steel shall conform to AASHTO M31 or M53, Grade 60.

If anchor bolts are drilled into cap, top reinforcing bars shall be properly placed to avoid damage.

For additional information, see Layout.

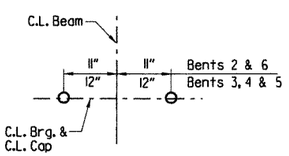

Note: For details of Elastomeric Bearings, See Dwg. No. 48570

TYPICAL ANCHOR BOLT LAYOUT

No Scale

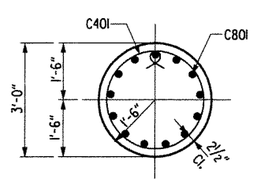

SECTION C-C

Scale: 1/2" = 1'-0"

DETAILS OF BENT NO. 2, 3, 4, 5, & 6
STAGE II CONSTRUCTION
BRIDGE OVER ARKANSAS RIVER RELIEF
(BR. 06880)
CRAWFORD & SEBASTIAN COUNTIES
ROUTE I-540 SEC. 1

ARKANSAS STATE HIGHWAY COMMISSION
LITTLE ROCK, ARK.

STATE OF ARKANSAS REGISTERED PROFESSIONAL ENGINEER No. 11339 LARRY R. MILLER
8-11-12
BRIDGE ENGINEER

DRAWN BY: TAR DATE: March 02 FILENAME: bBB0407m4 b21.dgn
CHECKED BY: EMB/BJS/ETH DATE: May 02 SCALE: As Shown
DESIGNED BY: JLH DATE: Feb 02
BRIDGE NO. 06880 DRAWING NO. 48559

$$$$date$$$

$$$$dgnspec$$$$$+

...\b040468m4_b21.dgn 8/11/2012 12:19:56 PM

DATE REVISED	DATE FILMED	DATE REVISED	DATE FILMED	FED. ROAD DIST. NO.	STATE	FED. AID PROJ. NO.	SHEET NO.	TOTAL SHEETS
				6	ARK.			
				JOB NO.		BB0407	265	464
				(1) 06880		BENT DTLS.		48560

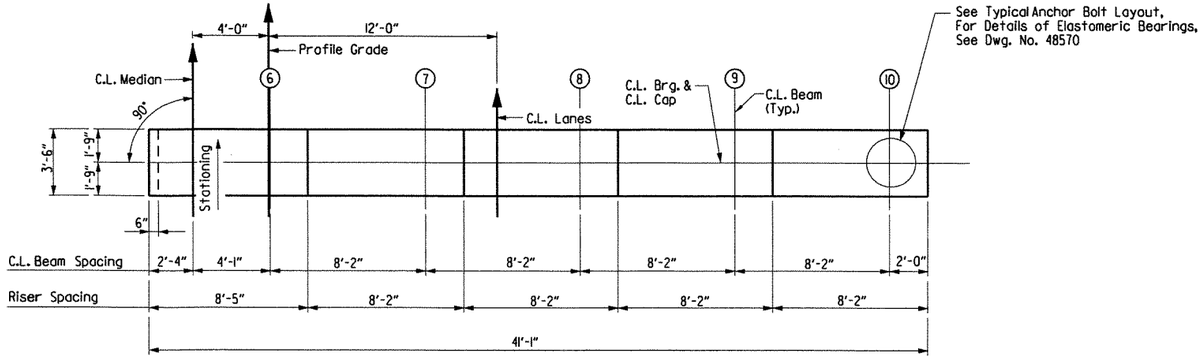

PLAN - STAGE IV

Scale: 1/4" = 1'-0"

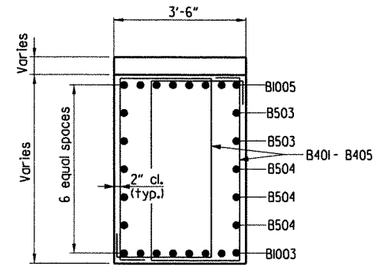

SECTION B-B

Scale: 1/2" = 1'-0"

BAR LIST (EACH BENT)

Mark	No. Req'd.	Length	A	Pin Dia.
B401	28	15'-6"	5'-4"	2"
B402	52	15'-2"	5'-2"	2"
B403	44	14'-11"	5'-0"	2"
B404	52	14'-6"	4'-10"	2"
B405	16	14'-2"	4'-8"	2"
B406	6	12'-4"	4'-8"	2"
B407	6	13'-4"	5'-2"	2"
B501	4	38'-7"		STR.
B502	6	39'-2"		STR.
B503	4	40'-11"		STR.
B504	6	40'-5"		STR.
B1001	8	37'-8"	36'-3"	10"
B1002	8	44'-1"		STR.
B1003	8	40'-5"		STR.
B1004	8	10'-3"		STR.
B1005	8	42'-4"	40'-11"	10"
C401	72	9'-4"		3"
C801	52	15'-9"		STR.
C802	52	7'-11"		6"
F701	44	8'-2"		5 1/4"
F901	36	12'-0"		9"

Bending Diagrams (Dimensions are out to out of bars.)

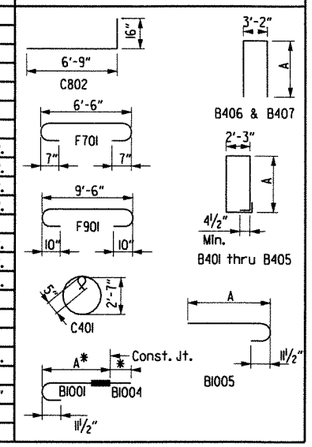

* Denotes: Individual lengths shall be determined by the Contractor based on the type of mechanical coupler used.

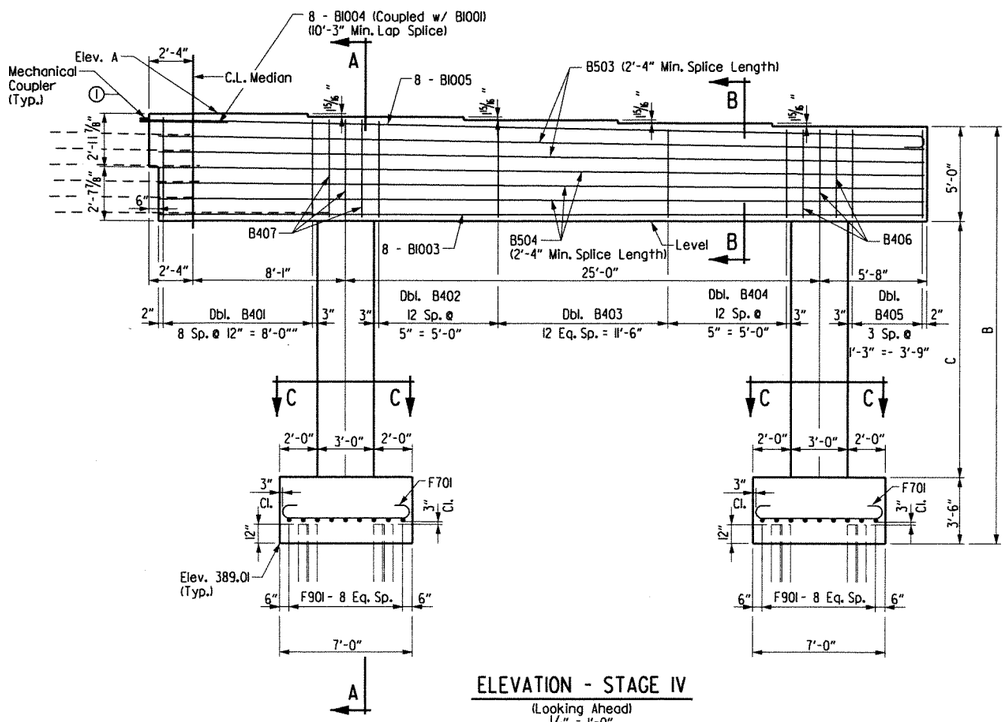

ELEVATION - STAGE IV

(Looking Ahead)
1/4" = 1'-0"

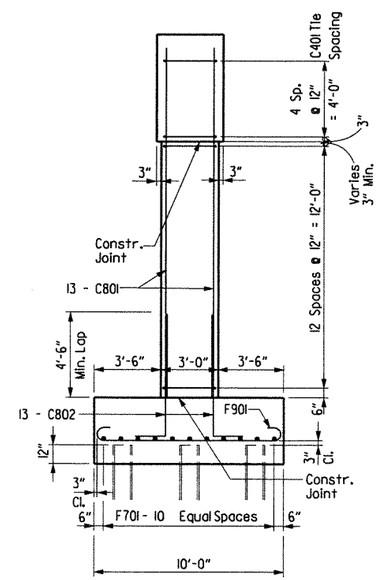

SECTION A-A

Scale: 1/4" = 1'-0"

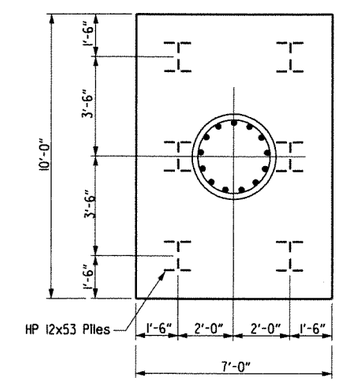

PLAN OF FOOTING

Scale: 3/8" = 1'-0"

(1) Denotes: Mechanical Couplers shall be from the Qualified Products List, and shall maintain minimum clearances shown, and their payment is subsidiary to the item "Reinforcing Steel - Bridge". The couplers shall develop at least 125% of the specified yield strength of the bar.

BENT	ELEV. A	B	C
2 & 6	411.233	21'-6 15/16"	13' 0 5/16"
3 - 5	411.188	21'- 6 3/8"	13'-0 3/8"

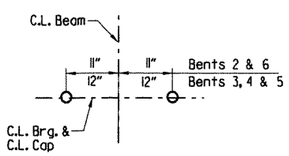

Note: For details of Elastomeric Bearings, See Dwg. No. 48570

TYPICAL ANCHOR BOLT LAYOUT

No Scale

Notes:

All concrete shall be Class "S" and shall be poured in the dry. All exposed corners shall be chamfered 3/4" unless otherwise noted.

All reinforcing steel shall conform to AASHTO M31 or M53, Grade 60.

If anchor bolts are drilled into cap, top reinforcing bars shall be properly placed to avoid damage.

For additional information, see Layout.

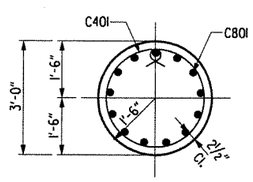

SECTION C-C

Scale: 1/2" = 1'-0"

STATE OF ARKANSAS REGISTERED PROFESSIONAL ENGINEER No. 11339 LARRY W. MILLER

8-11-12

BRIDGE ENGINEER

DETAILS OF BENT NO. 2, 3, 4, 5, & 6
STAGE IV CONSTRUCTION
BRIDGE OVER ARKANSAS RIVER RELIEF
(BR. 06880)
CRAWFORD & SEBASTIAN COUNTIES
ROUTE I-540 SEC. 1
ARKANSAS STATE HIGHWAY COMMISSION
LITTLE ROCK, ARK.

DRAWN BY: TAR DATE: March 02 FILENAME: bBB0407m4 b22.dgn
CHECKED BY: EWB/BJS/ETH DATE: May 02 SCALE: As Shown
DESIGNED BY: JLH DATE: Feb 02
BRIDGE NO. 06880 DRAWING NO. 48560

$$$$dgnspec$$$$$

$$$$date$$$$

...\b040468m4_b22.dgn 8/10/2012 3:49:53 PM

DATE REVISED	DATE FILMED	DATE REVISED	DATE FILMED	FED. ROAD DIST. NO.	STATE	FED. AID PROJ. NO.	SHEET NO.	TOTAL SHEETS
				6	ARK.			
				JOB NO.		BB0407	266	464
				(1) 06880		BENT DTLS.		48561

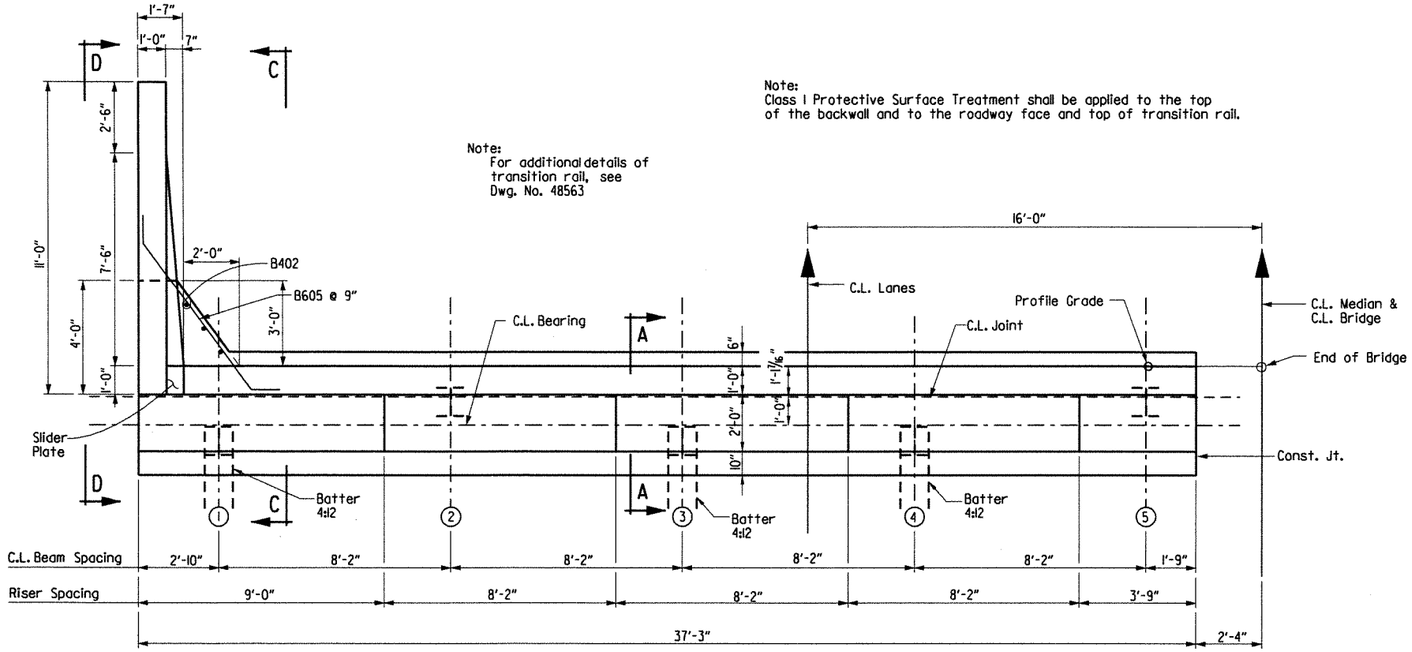

PLAN - STAGE II

3/8" = 1'-0"

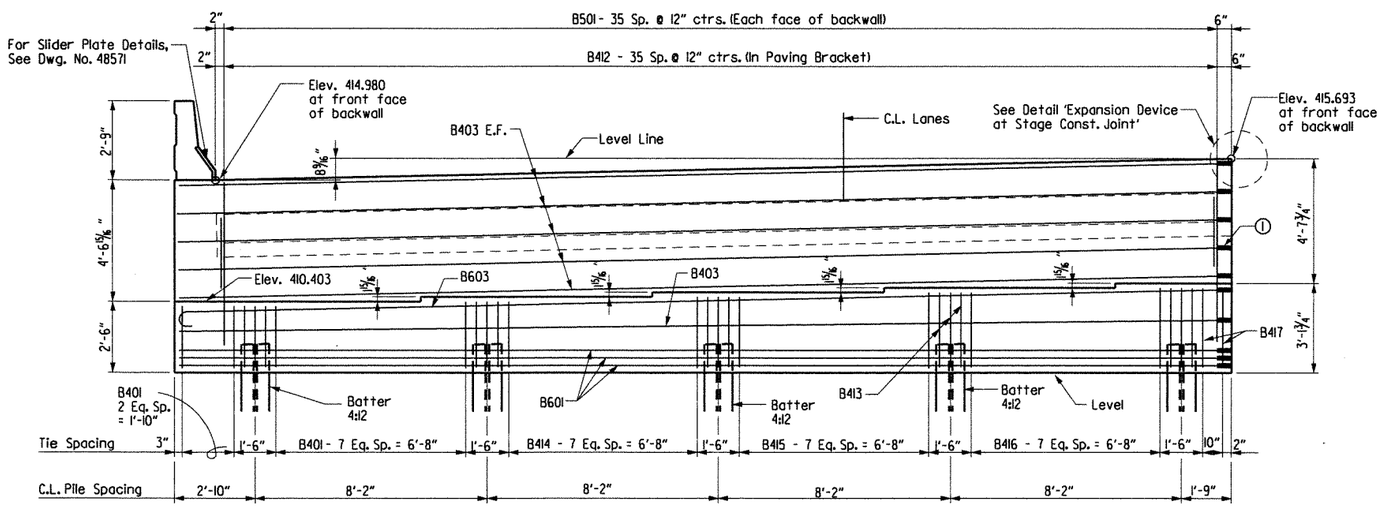

ELEVATION - STAGE II

(Looking Ahead)
3/8" = 1'-0"

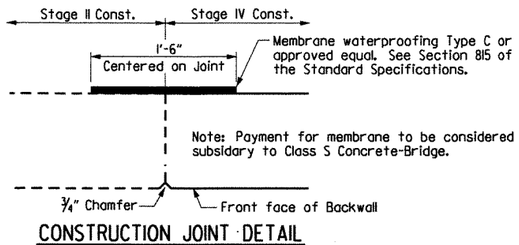

CONSTRUCTION JOINT DETAIL

No Scale

Note:
Payment for mechanical rebar splice will be included in Item 804 "Reinforcing Steel Bridge." (Grade 60)

(1) Denotes: Mechanical Couplers shall be from the Qualified Products List, and shall maintain minimum clearances shown, and their payment is subsidiary to the item "Reinforcing Steel - Bridge". The couplers shall develop at least 125% of the specified yield strength of the bar.

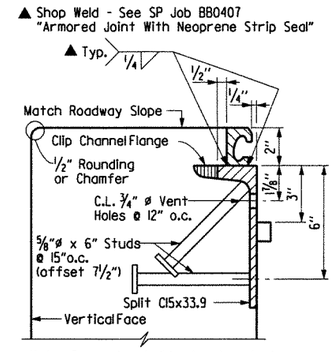

Note: Concrete shall be hand packed under the joint armor in the backwall.

For additional details, See Dwg. No. 48571.

DETAIL Z

3" = 1'-0"

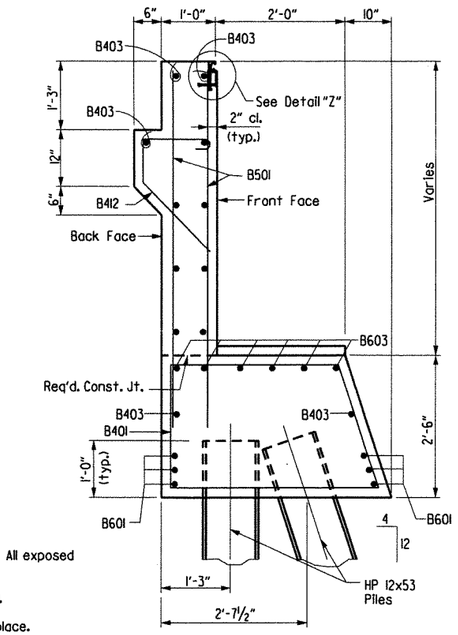

SECTION A-A

3/4" = 1'-0"

GENERAL NOTES

All concrete shall be Class "S" and shall be poured in the dry. All exposed corners shall be chamfered 3/4" unless otherwise noted.

All reinforcing steel shall conform to AASHTO M31 or M53, Gr. 60.

End Bent backwall shall not be poured before girders are in place. Backwall to be placed after concrete span placement.

Structural steel in end bents shall be AASHTO M270, Gr. 50W and shall be paid for as "Structural Steel in Beam Spans (M270, Gr. 50W)".

If anchor bolts are drilled into cap, top reinforcing bars shall be properly spaced to avoid damage.

For additional information, see Layout.

The parapet slider plates shall be cleaned in accordance with subsection 807.84(b) and painted in accordance with subsection 807.75. The color of paint shall be Gray and shall match Fed. Std. 595B, Color Chip 26176. Cleaning and painting will not be paid for directly but will be considered subsidiary to "Structural Steel in Beam Spans (Gr. 50W)".

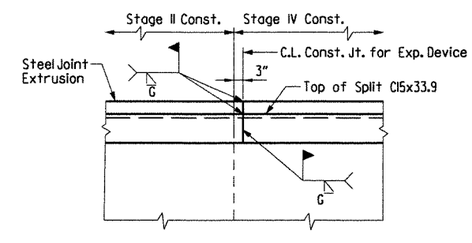

EXPANSION DEVICE AT STAGE CONST. JOINT

No Scale
(Looking Ahead)

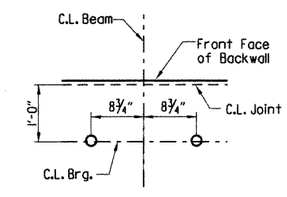

Note: For details of Elastomeric Bearings, See Dwg. No. 48570

TYPICAL ANCHOR BOLT LAYOUT

No Scale

STATE OF ARKANSAS REGISTERED PROFESSIONAL ENGINEER No. 11539 LARRY W. MILLER

Larry W. Miller 8-11-12

BRIDGE ENGINEER

SHEET 1 OF 3
DETAILS OF BENT NO. 7
BRIDGE OVER ARKANSAS RIVER RELIEF
(BR. 06880)
CRAWFORD & SEBASTIAN COUNTIES

ROUTE I-540 SEC. 1

ARKANSAS STATE HIGHWAY COMMISSION

LITTLE ROCK, ARK.

DRAWN BY: TAR	DATE: March 02	FILENAME: bBB0407m4 b71.dgn			
CHECKED BY: EMB/BJS/ETH	DATE: May 02	SCALE: As Shown			
DESIGNED BY: JLH	DATE: March 02				

BRIDGE NO. 06880 DRAWING NO. 48561

$$$$date$$$

$$$$dgnspec$$$$

...\b040468m4_b71.dgn 8/10/2012 3:49:54 PM

DATE REVISED	DATE FILMED	DATE REVISED	DATE FILMED	FED. ROAD DIST. NO.	STATE	FED. AID PROJ. NO.	SHEET NO.	TOTAL SHEETS
				6	ARK.			
				JOB NO.		BB0407	267	464
				(1) 06880		BENT DTLS.		48562

Note:
Class I Protective Surface Treatment shall be applied to the top of the backwall and to the roadway face and top of transition rail.

Note:
For additional details of transition rail, see Dwg. No. 48563

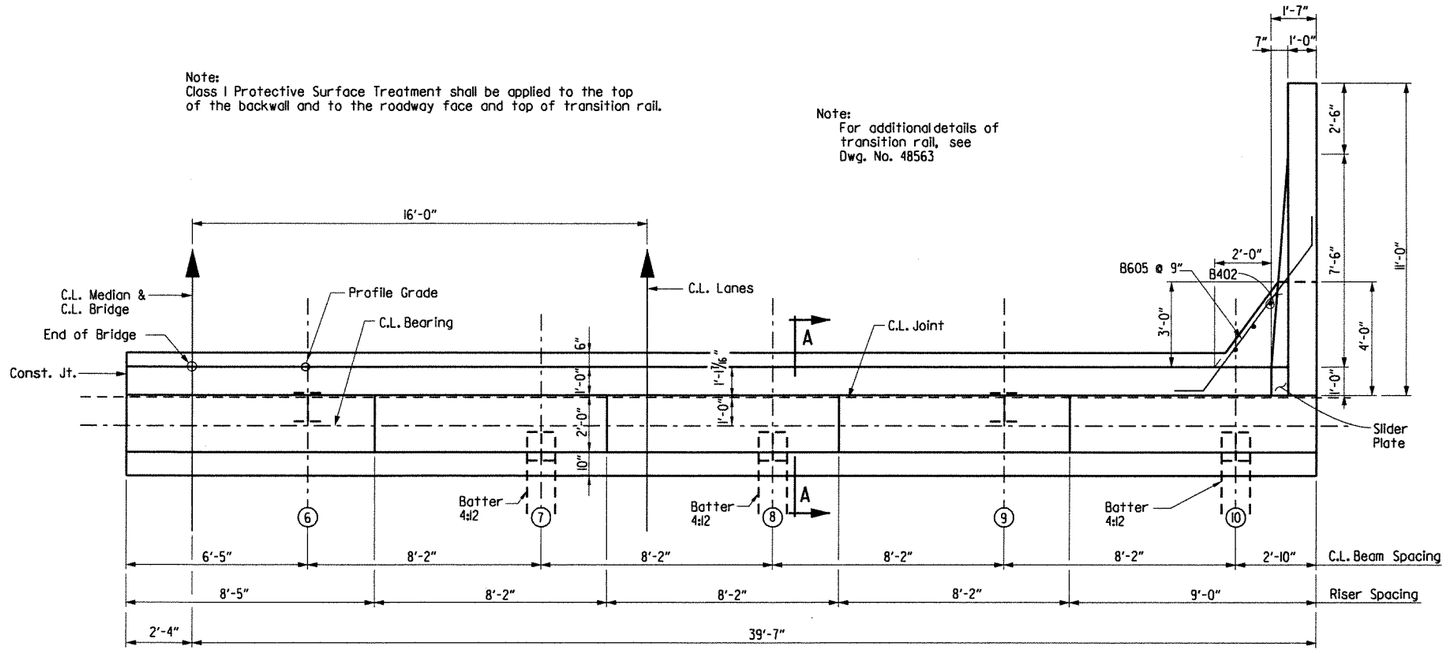

PLAN - STAGE IV

3/8" = 1'-0"

▲ Shop Weld - See SP Job BB0407 "Armored Joint With Neoprene Strip Seal"

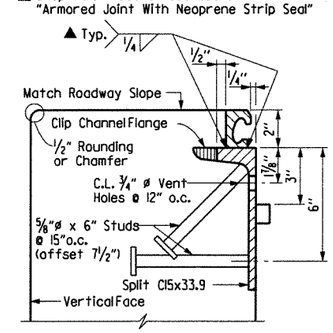

Note: Concrete shall be hand packed under the joint armor in the backwall.

For additional details, See Dwg. No. 48571.

DETAIL Z

3"= 1'-0"

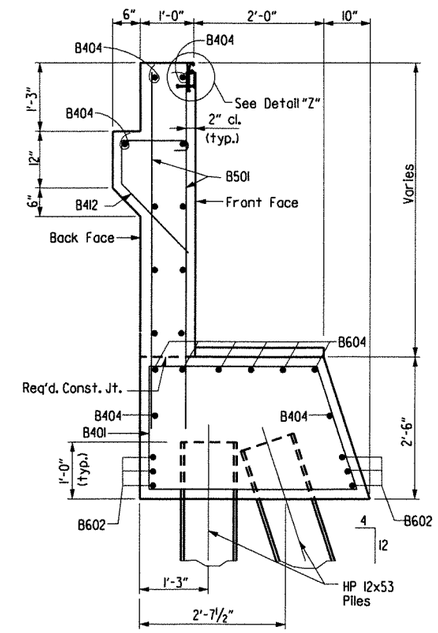

SECTION A-A

3/4" = 1'-0"

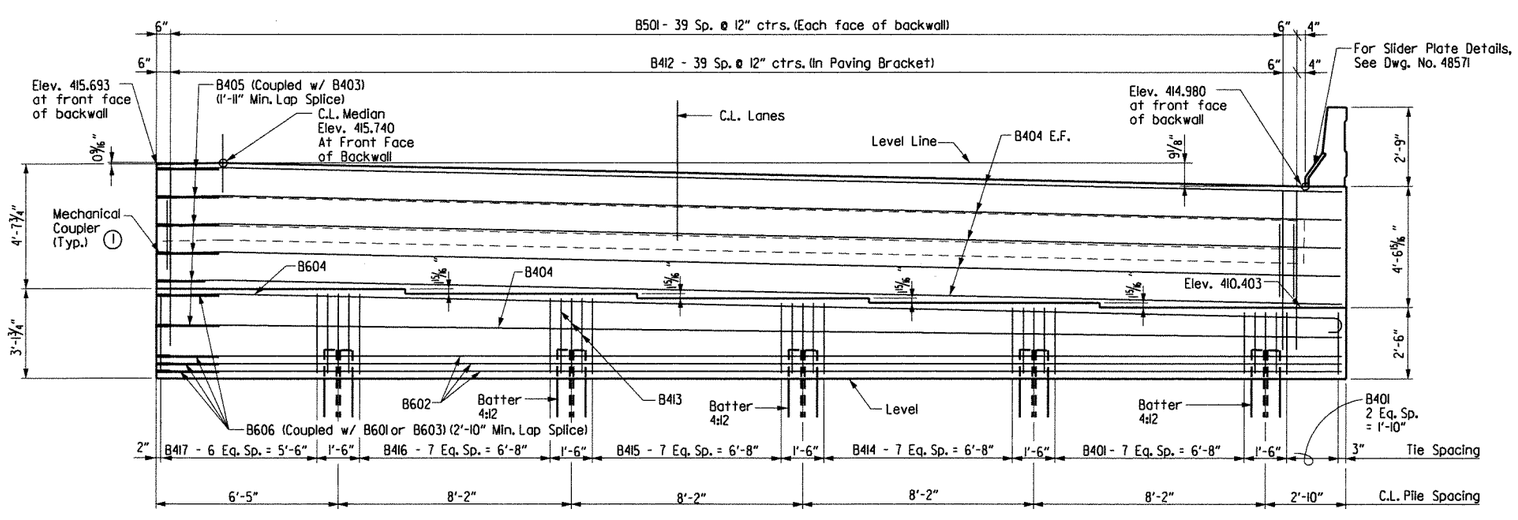

ELEVATION - STAGE IV

(Looking Ahead)
3/8" = 1'-0"

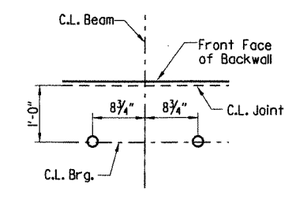

Note: For details of Elastomeric Bearings, See Dwg. No. 48570

TYPICAL ANCHOR BOLT LAYOUT

No Scale

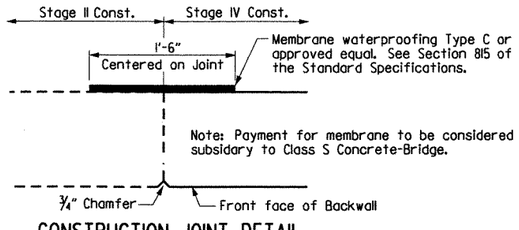

CONSTRUCTION JOINT DETAIL

No Scale

(1) Denotes: Mechanical Couplers shall be from the Qualified Products List, and shall maintain minimum clearances shown, and their payment is subsidiary to the item "Reinforcing Steel - Bridge". The couplers shall develop at least 125% of the specified yield strength of the bar.

Note:
See Dwg. No. 48565 for Expansion Device at Stage Construction Joint

SHEET 2 OF 3
DETAILS OF BENT NO. 7
BRIDGE OVER ARKANSAS RIVER RELIEF
(BR. 06880)
CRAWFORD & SEBASTIAN COUNTIES
ROUTE I-540 SEC. 1

ARKANSAS STATE HIGHWAY COMMISSION
LITTLE ROCK, ARK.

STATE OF ARKANSAS REGISTERED PROFESSIONAL ENGINEER No. 10339 LARRY D. MILLER
8-11-12
BRIDGE ENGINEER

DRAWN BY: TAR DATE: March 02
CHECKED BY: EMB/BJS/ETH DATE: May 02
DESIGNED BY: JLH DATE: March 02
FILENAME: bBB0407m4 b72.dgn
SCALE: As Shown
BRIDGE NO. 06880 DRAWING NO. 48562

$$$$dgnspec$$$$*
$$$$date$$$$

...\b040468m4_b72.dgn 8/10/2012 3:49:54 PM

DATE REVISED	DATE FILMED	DATE REVISED	DATE FILMED

FED. ROAD DIST. NO.	STATE	FED. AID PROJ. NO.	SHEET NO.	TOTAL SHEETS
6	ARK.			
JOB NO.		BB0407	268	464
① 06880		BENT DTLS.		48563

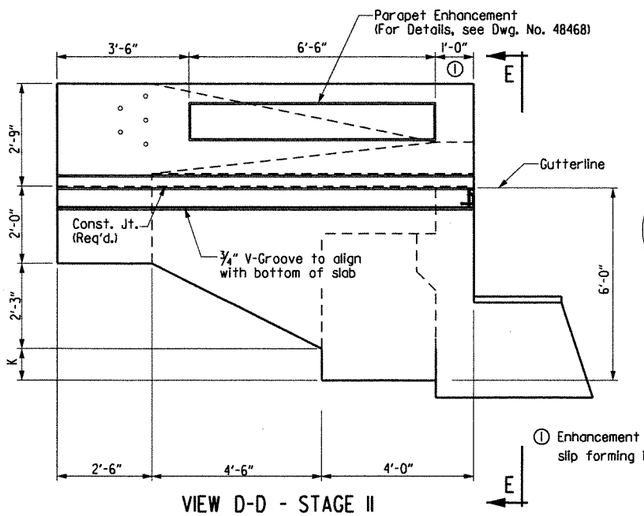

① Enhancement shall be continuous if slip forming is used on bridge parapet.

VIEW D-D - STAGE II

(Stage IV Similar)
Scale: ½" = 1'-0"

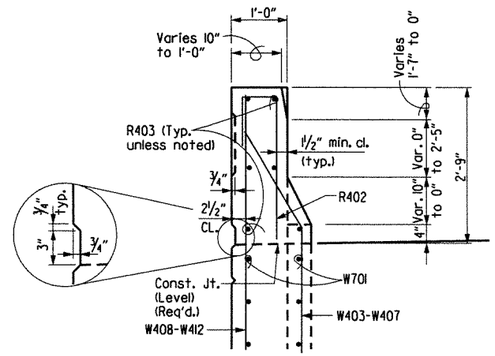

SECTION F-F

Scale: ¾" = 1'-0"

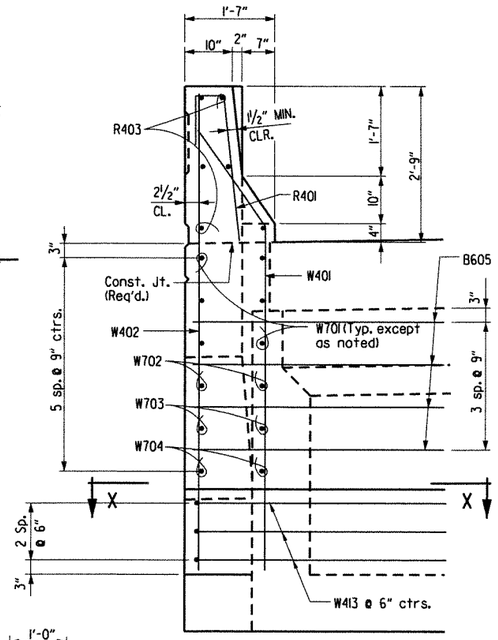

VIEW E-E

Scale: ¾" = 1'-0"

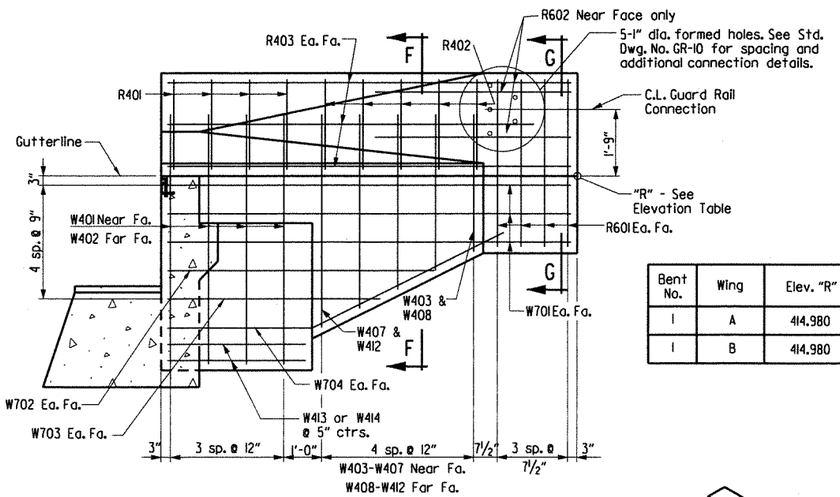

Bent No.	Wing	Elev. "R"	K
1	A	414.980	1'-9"
1	B	414.980	1'-9"

SECTION C-C - STAGE II

(Stage IV Similar)
Scale: ½" = 1'-0"

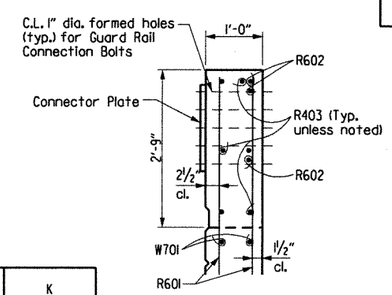

SECTION G-G

Scale: ¾" = 1'-0"

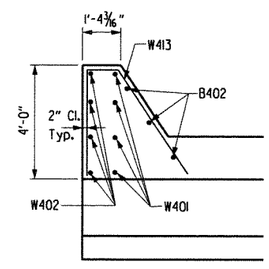

SECTION X-X

N.T.S.

BAR LIST

Mark	No. Req'd.	Length	"A"	"B"	Pin Dia.
B401	22	11'-0"			2"
B402	6	4'-0"			STR.
B403	12	37'-1""			STR.
B404	12	41'-9"			STR.
B405	12	2'-0"			STR.
B412	76	3'-11"	1'-2"	4½"	3"
B413	30	7'-0"	2'-8"	3'-6"	2"
B414	16	11'-3"	2'-4"	2'-5"	2"
B415	16	11'-8"	2'-6"	2'-8⅛"	2"
B416	16	12'-0"	2'-8"	2'-10¼"	2"
B417	9	12'-4"	2'-10"	3'-0½"	2"
B501	152	5'-8"			STR.
B601	6	37'-1"			STR.
B602	6	41'-9"			STR.
B603	6	37'-9"	37'-1"		4½"
B604	6	42'-5"	41'-9"		4½"
B605	8	8'-5"			4½"
B606	12	3'-0"			STR.
R401	8	3'-11"			2"
R402	8	4'-0"			2"
R403	12	9'-8"			STR.
R601	16	4'-5"			STR.
R602	6	5'-0"			STR.
W401	8	7'-0"	5'-10"	1'-2"	3"
W402	8	8'-2"			STR.
W403 - W407	2 ea.	Varies 3'-4" to 5'-4"	Varies 2'-2" to 4'-2"	1'-2"	2"
W408 - W412	2 ea.	Varies 4'-5" to 6'-6"			STR.
W413	6	8'-11"			3"
W701	12	9'-8"			STR.
W702	4	6'-0"			STR.
W703	4	4'-6"			STR.
W704	4	8'-0"			5¼"

Bending Diagrams
(Dimensions are out to out of bars.)

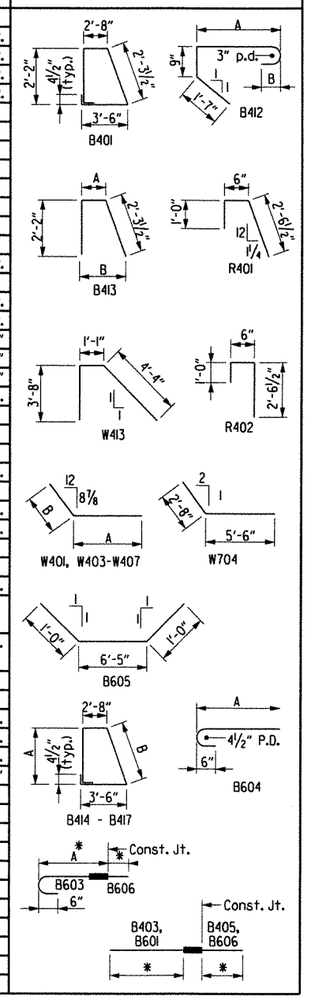

* Denotes: Individual lengths shall be determined by the Contractor based on the type of mechanical coupler used.

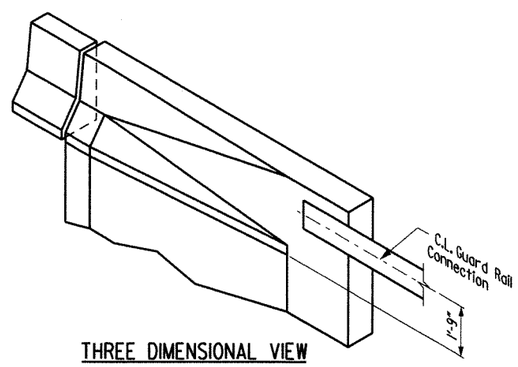

THREE DIMENSIONAL VIEW
WING RAIL & PARAPET

No Scale

STATE OF ARKANSAS
REGISTERED PROFESSIONAL ENGINEER
NO. 11339
LARRY W. MILLER

Larry W. Miller 8-11-12
BRIDGE ENGINEER

SHEET 3 OF 3
DETAILS OF BENT NO. 7
BRIDGE OVER ARKANSAS RIVER RELIEF
(BR. 06880)
CRAWFORD & SEBASTIAN COUNTIES
ROUTE I-540 SEC. 1
ARKANSAS STATE HIGHWAY COMMISSION
LITTLE ROCK, ARK.

DRAWN BY: TAR DATE: March 02
CHECKED BY: EMB DATE: May 02
DESIGNED BY: JLH DATE: March 02
FILENAME: bBB0407m4 b73.dgn
SCALE: As Shown

BRIDGE NO. 06880 DRAWING NO. 48563

$$$$dgnspec$$$$$

$$$$date$$$$

...\b040468m4_b73.dgn 8/10/2012 3:49:55 PM

DATE REVISED	DATE FILMED	DATE REVISED	DATE FILMED	FED. ROAD DIST. NO.	STATE	FED. AID PROJ. NO.	SHEET NO.	TOTAL SHEETS
				6	ARK.			
				JOB NO.		BB0407	269	464
				(1) 06880		SPAN DTLS.		48564

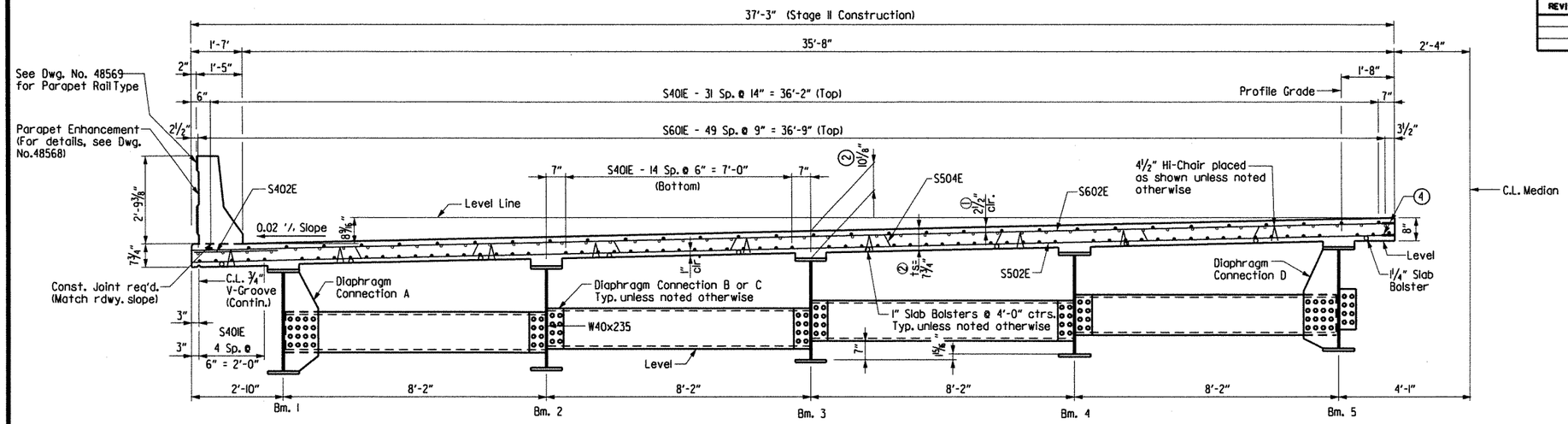

Note: Hi-Chairs to be placed on 4'-0" long centers.

TYPICAL SECTION - STAGE II (MIDSPAN)

(Looking Ahead)
½" = 1'-0"

Note: Class I Protective Surface Treatment shall be applied to the Roadway Surface and the Roadway Face and Top of Concrete Parapet Rail.

TOLERANCE:
(1) Minus = ¼"
Plus = Equal to amount of slab thickening used to meet slab thickness tolerance - see "ADJUSTMENT FOR SLAB THICKNESS TOLERANCE WHEN REMOVABLE DECK FORMING IS USED".

(2) See "ADJUSTMENT FOR SLAB THICKNESS TOLERANCE WHEN REMOVABLE DECK FORMING IS USED".

SLAB REINFORCING:
Transverse:
S402E @ 6" centers (top)
S602E & S603E, S606E, S507E @ 12" centers (Top)
S502E & S503E, S506E @ 12" centers (Bottom)
S504E & S505E @ 12" centers bent up over beams
Longitudinal:
S40IE (Top & Bottom) placed as shown
S60IE (Top) placed as shown over int. supports
Additional Longitudinal: (Not shown in section)
S604E (Top) (See Reinforcing Plan)
S605E (Top) (See Reinforcing Plan)

Note: Reinf. bars with "E" suffix (S40IE, S50IE, etc.) are epoxy coated bars. For additional reinforcing details, see Dwg. No. 48569

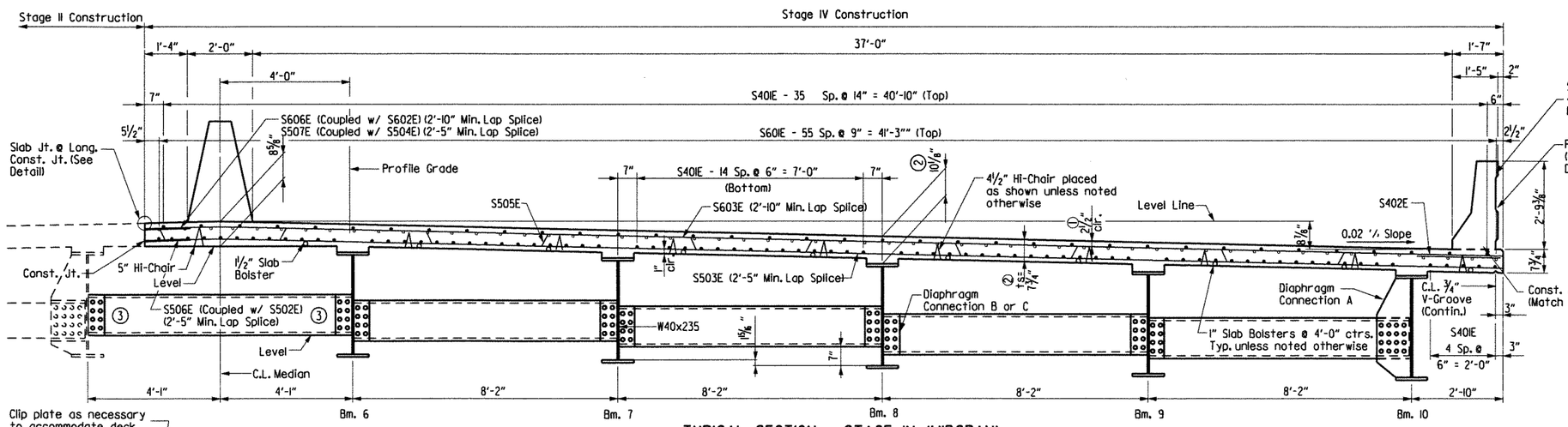

TYPICAL SECTION - STAGE IV (MIDSPAN)

(Looking Ahead)
½" = 1'-0"

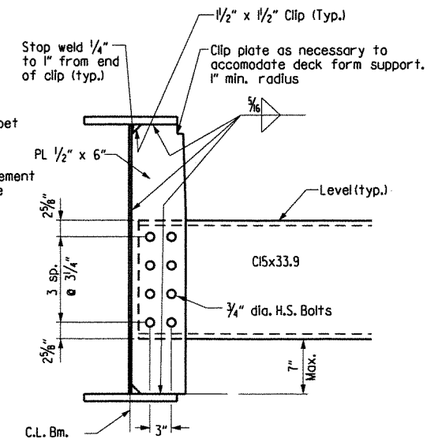

DIAPHRAGM CONNECTION C

No Scale

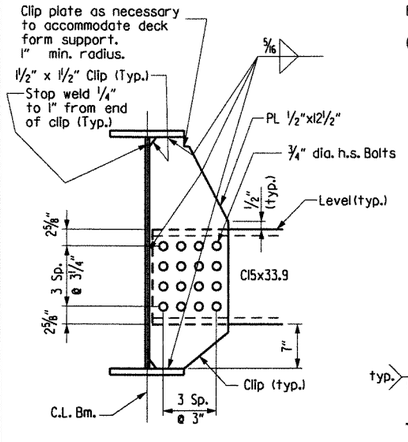

DIAPHRAGM CONNECTION A

No Scale
Typical for Exterior Beams.

(3) At this connection, tighten bolts after concrete deck has been poured in Stage IV.

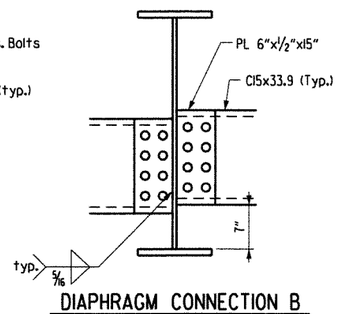

DIAPHRAGM CONNECTION B

No Scale

Note: Bolts in Diaphragm Connections shall be properly installed and tightened in accordance with subsection 807.71.

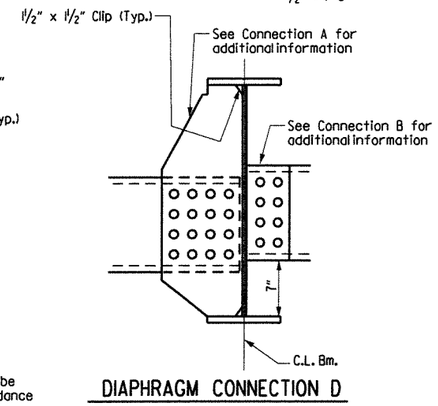

DIAPHRAGM CONNECTION D

No Scale

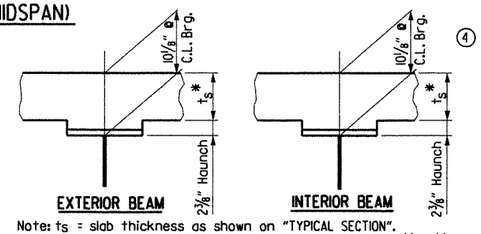

Note: ts = slab thickness as shown on "TYPICAL SECTION".
* Tolerance when removable deck forming is used is +½", -¼".
Haunch forming is required and shall be adjusted to maintain slab thickness tolerance.

ADJUSTMENT FOR SLAB THICKNESS TOLERANCE WHEN REMOVABLE DECK FORMING IS USED

No Scale

Haunch dimension may vary within the following limits to maintain the grade and slab thickness tolerance; Minimum - occurs when the top flange contacts the bottom reinforcing steel; Maximum - top flange thickness plus 1". No increase in concrete and structural steel quantities will be made to maintain tolerances.

Tolerances shown are applicable only when removable deck forming is used. See Std. Dwg. No. 14991 for tolerances when permanent steel deck forms are used. Payment for concrete shall be based on removable deck forming.

(4) Denotes: Epoxy coated threaded type mechanical couplers shall be from the Qualified Products List and shall maintain a minimum 2" clearance from the top of deck and a minimum 1" clearance from the bottom of deck. The couplers shall develop at least 125% of the specified yield strength of the bar. Their payment is subsidiary to the item "Epoxy Coated Reinforcing Steel (Grade 60)". Epoxy coated mechanical bar couplers and epoxy coated reinforcing steel that is damaged by the mechanical splicing operations shall be repaired in accordance with Section 804 of the Standard Specifications.

STATE OF ARKANSAS
Larry E. Miller
REGISTERED PROFESSIONAL ENGINEER
No. 13339
8-11-12
BRIDGE ENGINEER

SHEET 1 OF 6
DETAILS OF
571'-8" CONT. COMP. W-BEAM UNIT
(BR. 06880)
ROUTE I-540 SEC. 1
ARKANSAS STATE HIGHWAY COMMISSION
LITTLE ROCK, ARK.

DRAWN BY: TAR	DATE: March 02	FILENAME:	bBB0407m4 sil.dgn
CHECKED BY: EMB/BJS	DATE: May 02	SCALE:	As Shown
DESIGNED BY: BCG/JLH	DATE: Feb 02		
BRIDGE NO. 06880		DRAWING NO.	48564

$$$$date$$$

$$$$dgnspec$$$$$

...\b040468m4_s11.dgn 8/10/2012 3:49:55 PM

DATE REVISED	DATE FILMED	DATE REVISED	DATE FILMED	FED. ROAD DIST. NO.	STATE	FED. AID PROJ. NO.	SHEET NO.	TOTAL SHEETS
				6	ARK.			
				JOB NO.		BB0407	270	464
				1 06880		SPAN DTLS.		48565

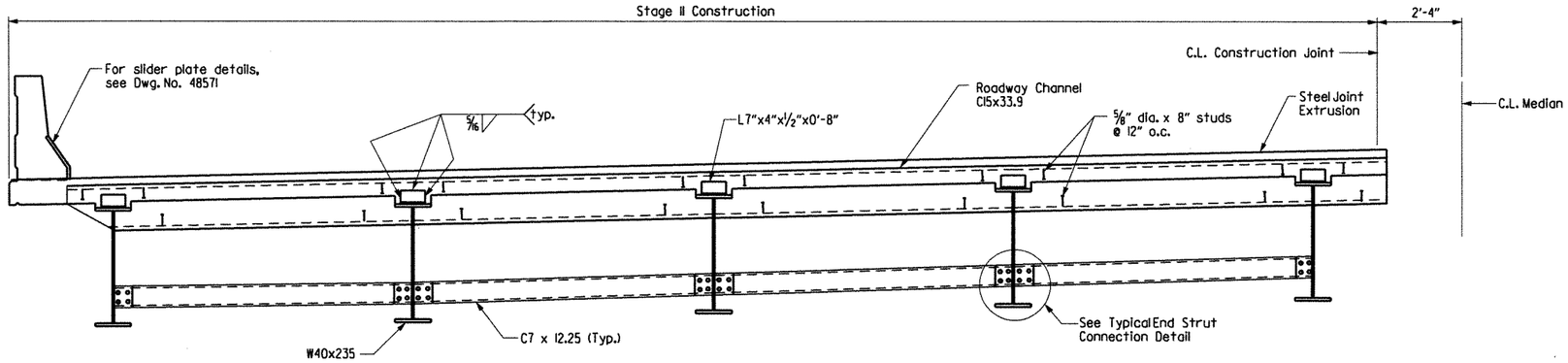

VIEW AT C.L. JOINT - STAGE II

(Looking Ahead)
1/2" = 1'-0"

EXPANSION DEVICE:

Roadway Channel C15x33.9
Conn ∠s 7"x4"x1/2"
Detail Device 1/8" high and provide
1/4" shims using two 1/16" and one 1/8" plates

Note: For additional details of Neoprene Strip Seal, see Dwg. No. 48571

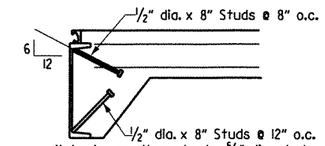

Note: As an alternate to 5/8" dia. studs, 1/2" dia. x 8" studs spaced as shown may be used. Use weight of 5/8" dia. stud as basis of measurement of structural steel in anchors.

DETAIL OF ALTERNATE ANCHORS

No Scale

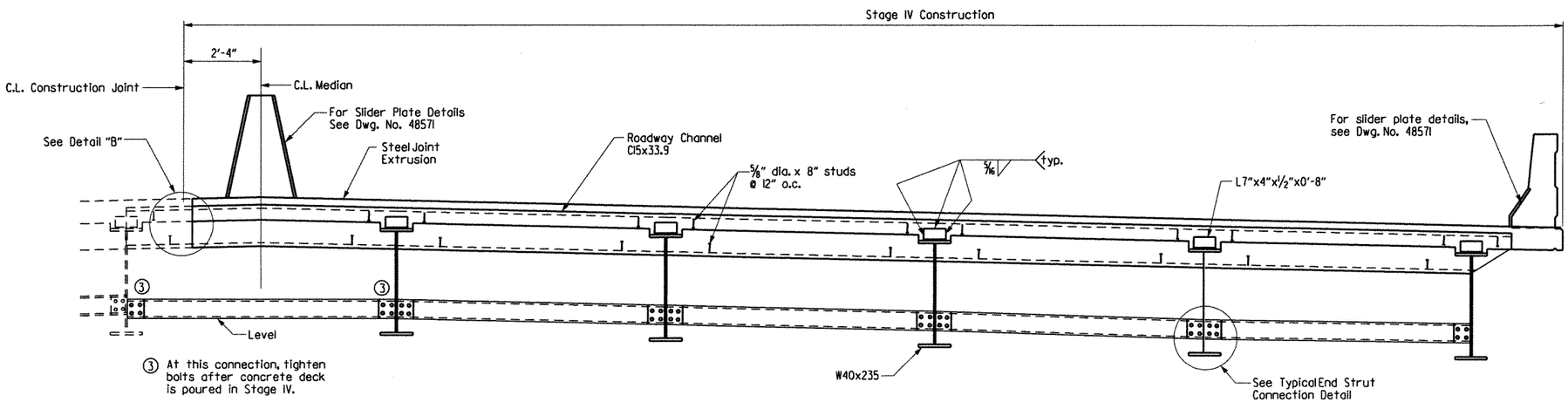

VIEW AT C.L. JOINT - STAGE IV

(Looking Ahead)
1/2" = 1'-0"

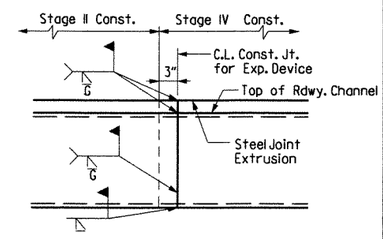

DETAIL "B" (EXPANSION DEVICE AT STAGE CONST. JOINT)

No Scale
(Looking Ahead)

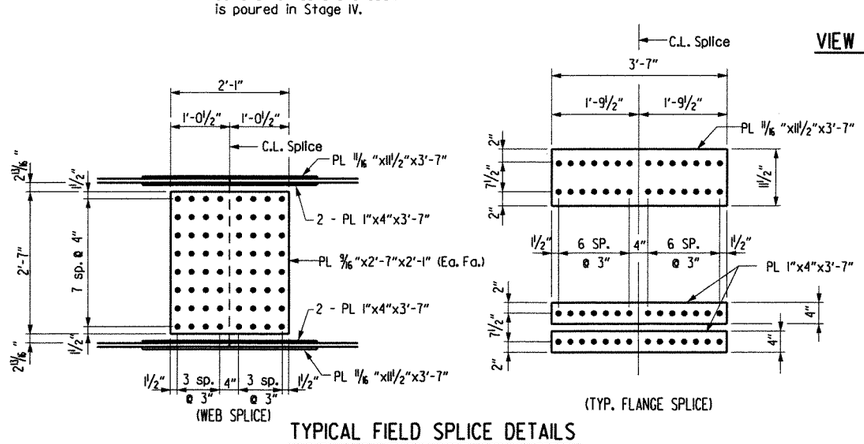

TYPICAL FIELD SPLICE DETAILS

No Scale

Note: All field splice bolts shall be 7/8" dia. H.S. bolts.
All field splice plates shall be AASHTO M270, Gr. 50W steel.

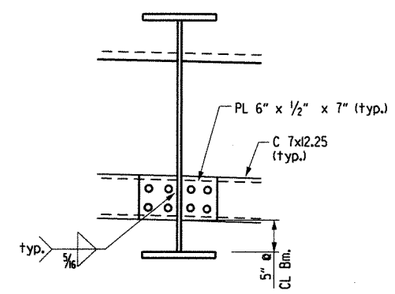

END STRUT CONNECTION

No Scale

STATE OF ARKANSAS REGISTERED PROFESSIONAL ENGINEER No. 11338 LARRY D. MILLER

Larry D. Miller 8-11-12

BRIDGE ENGINEER

SHEET 2 OF 6
DETAILS OF
571'-8" CONT. COMP. W-BEAM UNIT
(BR. 06880)

ROUTE I-540 SEC. 1

ARKANSAS STATE HIGHWAY COMMISSION

LITTLE ROCK, ARK.

DRAWN BY: TAR	DATE: March 02	FILENAME:	bBB0407m4 s12.dgn
CHECKED BY: EMB/JGM	DATE: April 02	SCALE:	As Shown
DESIGNED BY: BCG/GMS	DATE: Feb 02		

BRIDGE NO. 06880 DRAWING NO. 48565

$$$$date$$$$

$$$$dgnspec$$$$$

...\b040468m4_s12.dgn 8/10/2012 3:49:56 PM

DATE REVISED	DATE FILMED	DATE REVISED	DATE FILMED	FED. ROAD DIST. NO.	STATE	FED. AID PROJ. NO.	SHEET NO.	TOTAL SHEETS
				6	ARK.			
				JOB NO.		BB0407	271	464
				1 06880		SPAN DTLS.		48566

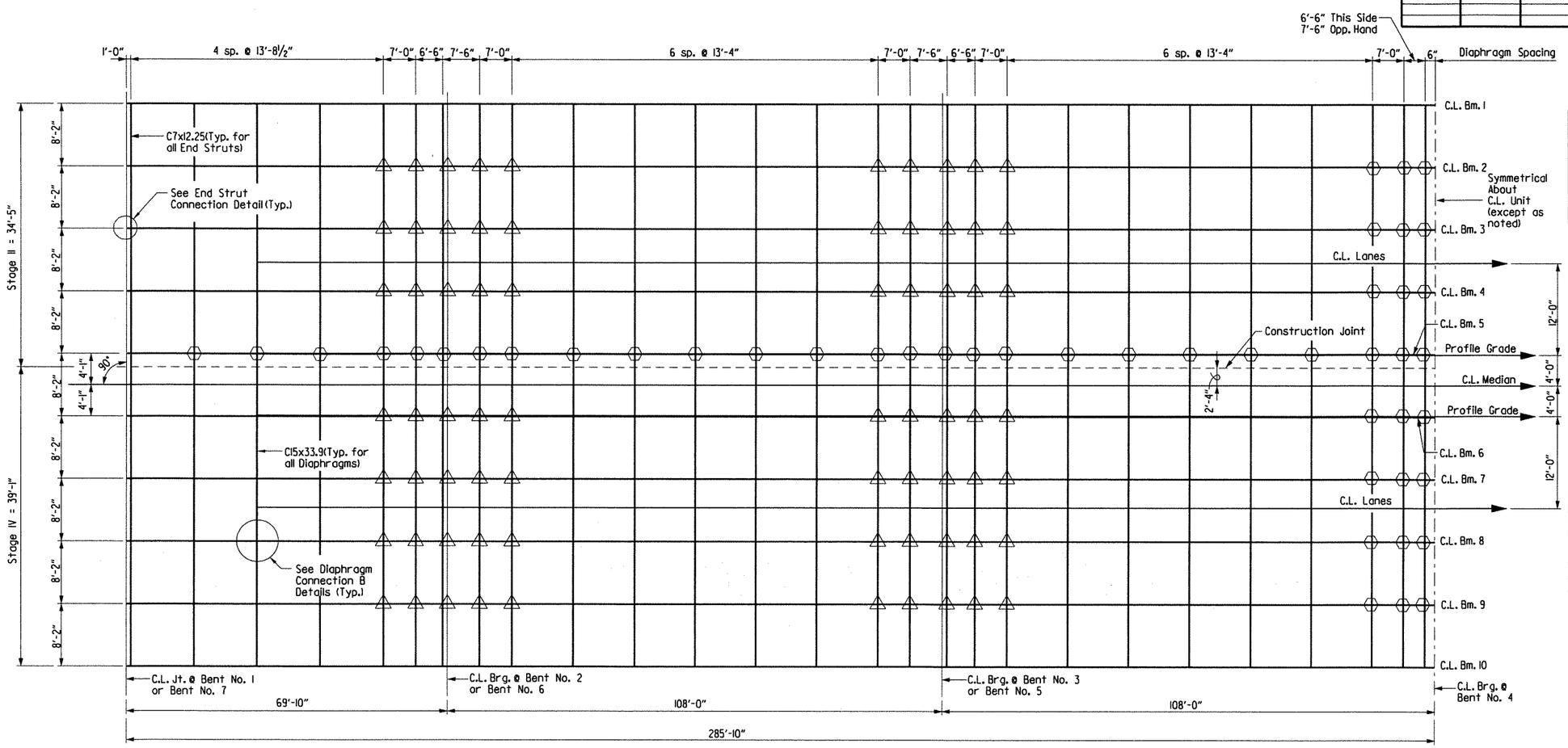

For Diaphragm Connections, See Dwg. Nos. 48564 & 48565.

FRAMING PLAN

No Scale

⬡ = Diaphragm Connection D △ = Diaphragm Connection C

TABLE FOR WELD

Material Thickness of Thicker Part Joined (Inches)	Minimum Size of Fillet Weld (Inches)	Single Pass Weld Must Be Used
To ¾" Inclusive	¼"	
Over ¾"	5/16"	

NOTE: When a fillet weld size, as shown on the plans, is larger than the minimum, the first pass shall be that specified for minimum size of fillet weld.

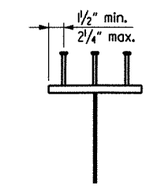

Stud Shear Connectors shown shall be ⅞" dia. x 4" long, granular flux filled, solid fluxed or equal, and automatically end welded to the beam flange in accordance with the recommendations of the Manufacturer. ¾" dia. studs may be used in place of the ⅞" dia. stud shown, at the ratio of 1.361-¾" dia. studs in place of one ⅞" dia. stud. ⅞" dia. studs will be used as basis for measurement of structural steel in shear connectors. Maximum stud spacing = 24".

SHEAR CONNECTOR DETAIL

No Scale

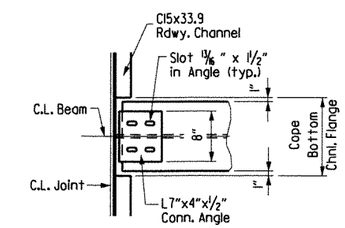

ROADWAY CHANNEL CONNECTION DETAIL

No Scale

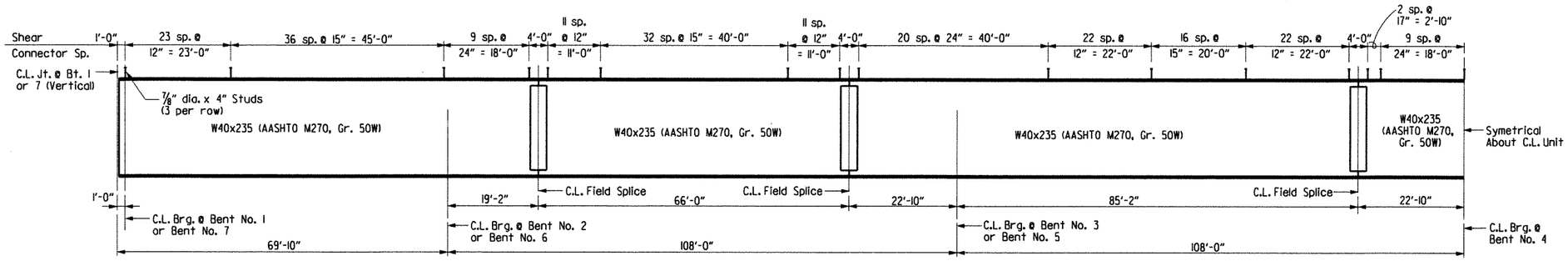

Note: For details of Elastomeric Fixed and Expansion Bearings, see Dwg. No. 48570

TYPICAL BEAM ELEVATION

No Scale

Note:
For Typical Field Splice Details See Dwg. No. 48564

STATE OF ARKANSAS
REGISTERED PROFESSIONAL ENGINEER
No. 11339
LARRY E. MILLER

Larry E. Miller 8-11-12

BRIDGE ENGINEER

SHEET 3 OF 6
DETAILS OF
571'-8" CONT. COMP. W-BEAM UNIT
(BR. 06880)

ROUTE I-540 SEC. 1

ARKANSAS STATE HIGHWAY COMMISSION

LITTLE ROCK, ARK.

DRAWN BY: TAR	DATE: Feb 02	FILENAME: bBB0407m4 s13.dgn			
CHECKED BY: EMB	DATE: April 02	SCALE: As Shown			
DESIGNED BY: BCG	DATE: Jan 02				

BRIDGE NO. 06880 DRAWING NO. 48566

$$$$date$$$

$$$$dgnspec$$$$$

...\b040468m4_s13.dgn 8/10/2012 3:49:56 PM

DATE REVISED	DATE FILMED	DATE REVISED	DATE FILMED	FED. ROAD DIST. NO.	STATE	FED. AID PROJ. NO.	SHEET NO.	TOTAL SHEETS
				6	ARK.			
				JOB NO.		BB0407	212	464
				1 06880		SPAN DTLS.		48567

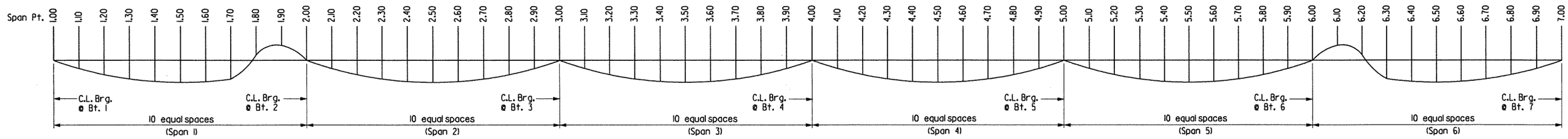

DEAD LOAD DEFLECTION DIAGRAM

No Scale

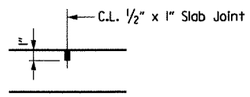

Use Type 3, 4, or 6 Joint Sealer. See subsections 501.02 (h) and 501.05 (j). Backer Rod filler will not be required. Joint Sealer shall be measured and paid for as Class S(AE) Concrete-Bridge. Slab joints shall extend to the outside edge of the deck slab. Slab joints shall be installed before the parapet railing is poured. If slab joints are to be sawed, they shall be sawed as soon as the concrete has sufficiently set to allow sawing of the joint without damage to the slab. Slab joints shall be placed at all pouring sequence construction joints and required slab joint locations. Slab joints shall align with parapet open joints.

SLAB JOINT DETAIL

No Scale

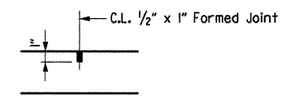

Use ½" x 1" Type 3, 4, or 6 Joint Sealer. See subsections 501.02 (h) and 501.05 (j). Backer Rod filler will not be required. Joint sealer shall be measured and paid for as Class S(AE) Concrete-Bridge. This joint shall be formed. Seal must be gray or other color similar to concrete.

LONGITUDINAL CONSTRUCTION JOINT DETAIL

TABLE OF DEAD LOAD DEFLECTIONS (INCHES)

Camber for Dead Load Deflection plus vertical curve +/- ¼" tolerance.
Deflections shown are off a chord from C.L. Brg. to C.L. Brg.
Negative sign (-) indicates upward deflection.

SPAN NO.	POINT OF DEFLECTION	Structural Steel Bms. 1 & 10	Structural Steel Bms. 2-9	Structural Steel (+) Slab Bms. 1 & 10	Structural Steel (+) Slab Bms. 2-9	Structural Steel (+) Slab (+) Para. Rail Bms. 1 & 10	Structural Steel (+) Slab (+) Para. Rail Bms. 2-9
1 or 6	1.00	0.00	0.00	0.00	0.00	0.00	0.00
	1.10	0.02	0.02	0.10	0.11	0.12	0.14
	1.20	0.04	0.04	0.18	0.20	0.22	0.25
	1.30	0.05	0.05	0.22	0.25	0.27	0.31
	1.40	0.05	0.05	0.22	0.25	0.27	0.31
	1.50	0.04	0.04	0.18	0.21	0.22	0.26
	1.60	0.02	0.02	0.11	0.13	0.14	0.16
	1.70	0.00	0.00	0.03	0.03	0.04	0.04
	1.80	-0.01	-0.01	-0.04	-0.05	-0.05	-0.06
	1.90	-0.02	-0.02	-0.06	-0.07	-0.07	-0.09
2 or 5	2.00	0.00	0.00	0.00	0.00	0.00	0.00
	2.10	0.08	0.09	0.33	0.37	0.41	0.45
	2.20	0.20	0.21	0.78	0.90	0.96	1.10
	2.30	0.30	0.32	1.21	1.39	1.49	1.71
	2.40	0.37	0.40	1.49	1.71	1.84	2.10
	2.50	0.39	0.42	1.57	1.80	1.94	2.21
	2.60	0.36	0.38	1.43	1.63	1.76	2.00
	2.70	0.27	0.29	1.09	1.25	1.34	1.53
	2.80	0.16	0.17	0.65	0.74	0.80	0.91
	2.90	0.06	0.06	0.22	0.26	0.27	0.32
	3.00	0.00	0.00	0.00	0.00	0.00	0.00
3 or 4	3.10	0.03	0.03	0.12	0.14	0.15	0.17
	3.20	0.11	0.11	0.45	0.52	0.56	0.64
	3.30	0.19	0.21	0.81	0.93	1.00	1.15
	3.40	0.26	0.28	1.09	1.25	1.35	1.54
	3.50	0.29	0.31	1.19	1.37	1.47	1.69
	3.60	0.27	0.29	1.11	1.28	1.37	1.57
	3.70	0.21	0.22	0.86	0.98	1.06	1.21
	3.80	0.12	0.13	0.50	0.57	0.62	0.70
	3.90	0.04	0.04	0.16	0.18	0.20	0.22
	4.00	0.00	0.00	0.00	0.00	0.00	0.00

C.L. Unit

Table is symmetrical about centerline unit.

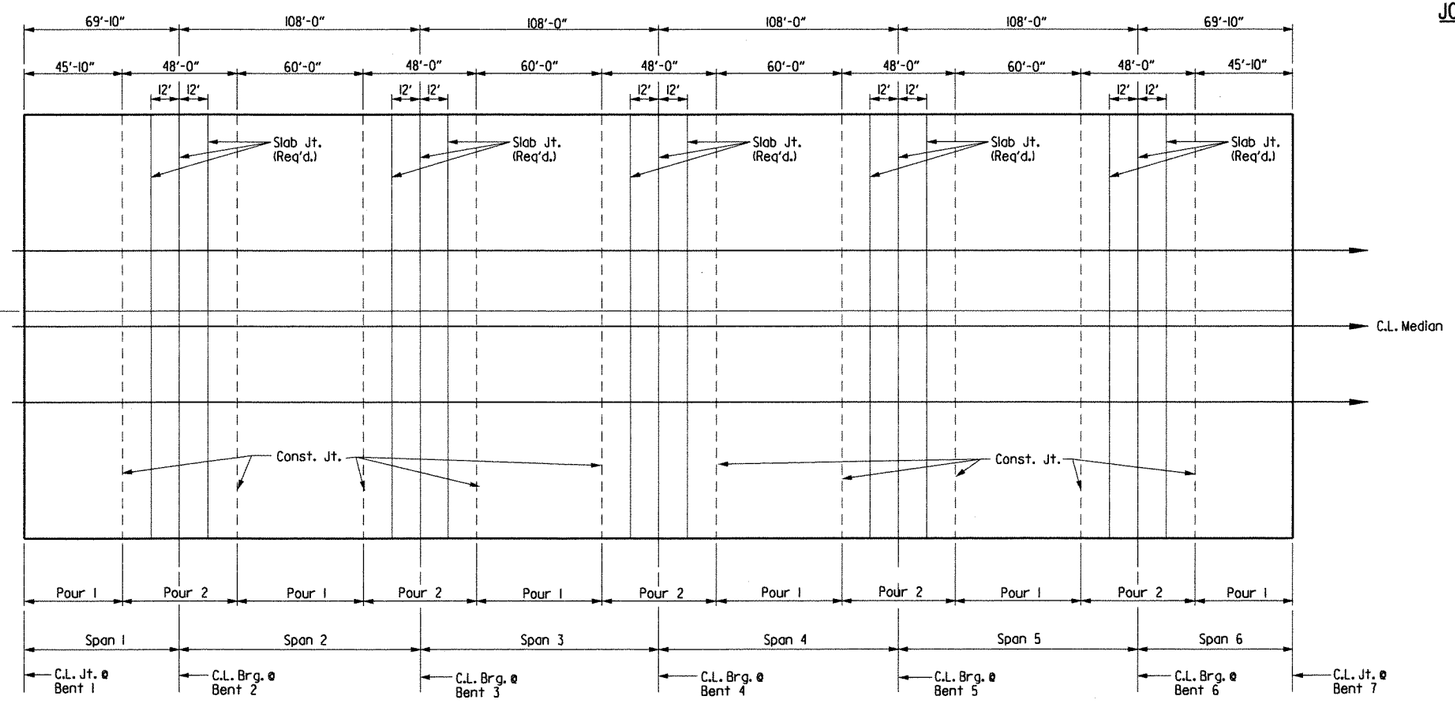

POURING SEQUENCE

No Scale

Note: Pours within the same number may be poured simultaneously or seperate. All Pour (1) must be placed before Pour (2) can be placed. 48 hours shall elapse between pours that are not adjacent and 72 hours shall elapse between the end of a pour and the start of the adjacent pour. Any railing pours made before the entire slab unit has been placed must be approved by the Engineer. Concrete in bridge superstructure shall be consolidated for the entire pour before any concrete has taken its initial set. This may require the use of a retarding agent.

The Contractor must obtain approval from the Engineer for any deviations from the pouring sequence shown.

SHEET 4 OF 6
DETAILS OF
571'-8" CONT. COMP. W-BEAM UNIT
(BR. 06880)

STATE OF ARKANSAS REGISTERED PROFESSIONAL ENGINEER No. 13339 LARRY W. MILLER
Larry W. Miller 8-11-12
BRIDGE ENGINEER

ROUTE I-540 SEC. 1
ARKANSAS STATE HIGHWAY COMMISSION
LITTLE ROCK, ARK.

DRAWN BY: TAR DATE: April 02 FILENAME: bBB0407m4 sl4.dgn
CHECKED BY: EMB DATE: May 02 SCALE: N.T.S.
DESIGNED BY: JLH DATE: March 02
BRIDGE NO. 06880 DRAWING NO. 48567

$$$$date$$$$
$$$$dgnspec$$$$$

...\b040468m4_s14.dgn 8/10/2012 3:49:57 PM

DATE REVISED	DATE FILMED	DATE REVISED	DATE FILMED	FED. ROAD DIST. NO.	STATE	FED. AID PROJ. NO.	SHEET NO.	TOTAL SHEETS
				6	ARK.			
				JOB NO.		BB0407	273	464
				(1) 06880		SPAN DTLS.		48568

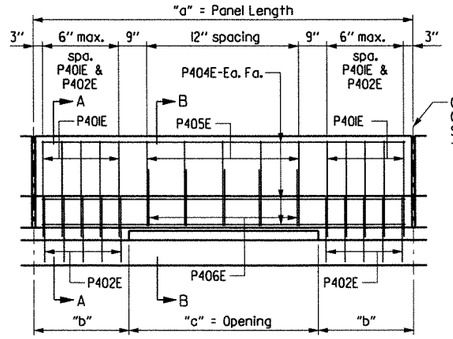

DETAILS OF OPEN PARAPET RAIL

Scale: 1/2" = 1'-0"

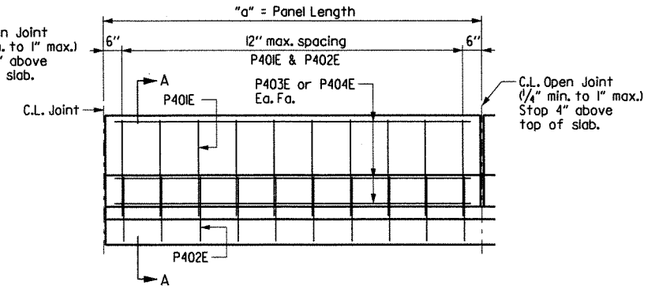

DETAILS OF CLOSED PARAPET RAIL

Scale: 1/2" = 1'-0"

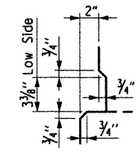

DETAIL X

No Scale

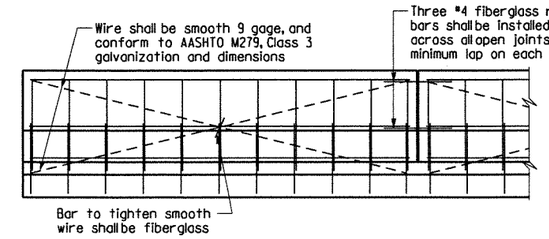

All panels shall be braced as shown to prevent racking. All open joints shall be sawed as soon as practical to a minimum width of 1/4". To control cracking before sawing all joints must be grooved before the concrete is set. Sawing of the joints must be controlled so it will follow the grooved joint.

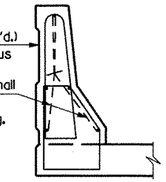

The extruded parapet shall conform to the horizontal and vertical lines shown on the plans or as directed by the Engineer and shall present a smooth, uniform appearance and texture. Exposed surfaces may be given a light brush finish or a Class 3 Textured Coating Finish in place of Class 2, Rubbed Finish.

DETAILS OF OPTIONAL SLIPFORMING OF CONCRETE PARAPET RAIL AND MEDIAN RAIL

Note: Details shown are for concrete parapet rail. Details for median rail are similar.

No Scale

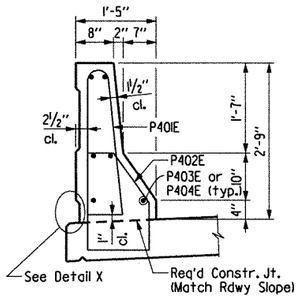

SECTION A-A

Scale: 3/4" = 1'-0"

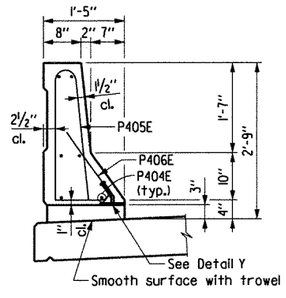

SECTION B-B

Scale: 3/4" = 1'-0"

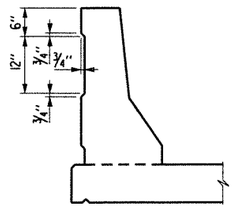

SECTION C-C

Scale: 3/4" = 1'-0"

** Panel Inset may be made continuous if slip forms are used.

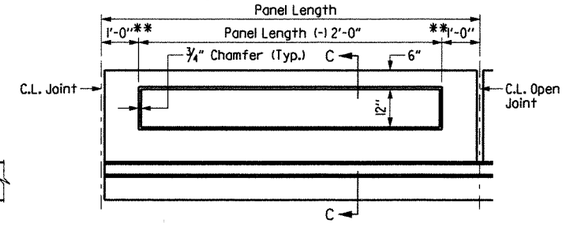

PARAPET ENHANCEMENT DETAILS

Scale: 1/2" = 1'-0"

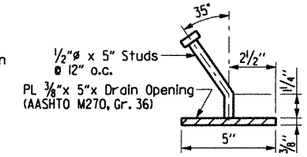

DETAIL Y

No Scale

Note:

Parapet Studs shall be 5" long, granular flux filled, solid fluxed, or equal, and automatically end welded to the plate. Studs and plate shall meet the requirements of Section 807. Studs and plate shall be measured and paid for as Structural Steel in Beam Spans (M270, Gr. 50W)

The surfaces of the 3/8" Plates which will not be in contact with concrete shall be painted in accordance with Section 638, or as approved by the Engineer. Only one coat is required and shall be applied in the fabricator's shop. Painting will not be paid for directly, but will be considered subsidiary to Structural Steel in Beam Spans (M270, Gr. 50W)

Place Type D Bridge Name Plate on right parapet rail at beginning of bridge.

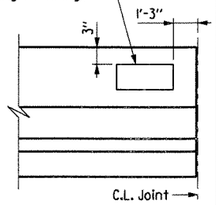

NAME PLATE DETAIL

No Scale

MEDIAN BARRIER RAIL VARIABLES

Parapet Type	"d"	Longitudinal Reinforcing
Closed	9'-10"	P403E
Closed	12'-0"	P404E

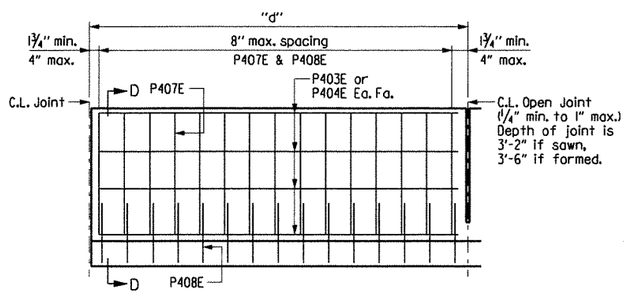

DETAILS OF MEDIAN BARRIER RAIL

Scale: 1/2" = 1'-0"

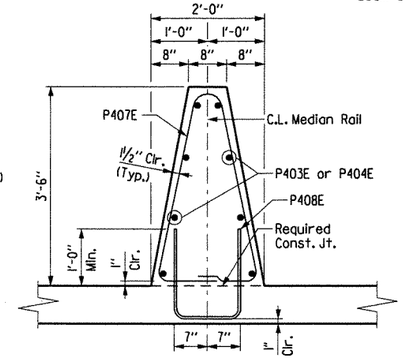

SECTION D-D

3/4" = 1'-0"

PARAPET RAIL VARIABLES

Parapet Type	"a"	"b"	"c"	Longitudinal Reinforcing
Closed	9'-10"	---	---	P403E
Closed	12'-0"	---	---	P404E
Open	12'-0"	3'-6"	5'-0"	P404E

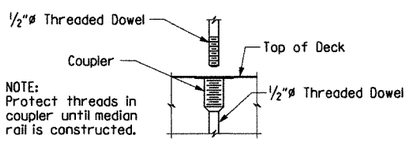

NOTE:
Protect threads in coupler until median rail is constructed.

THREADED DOWEL AND COUPLER ASSEMBLY

NOTES:
The Contractor may at his option substitute the Threaded Dowel and Coupler Assembly for bar P408E. The Threaded Dowel and Coupler Assembly shall consist of a OPL approved mechanical splice with protective cap and threaded dowel bars as shown and shall develop at least 125% of the yield strength of the dowel bars. Payment shall be based upon the weight of the P408E bars.

Dowel bars shall be of minimum 60 ksi yield strength and threaded as required. Threaded Dowel and Coupler Assembly, except mating surfaces, shall be epoxy coated in accordance with the requirements of Section 804.

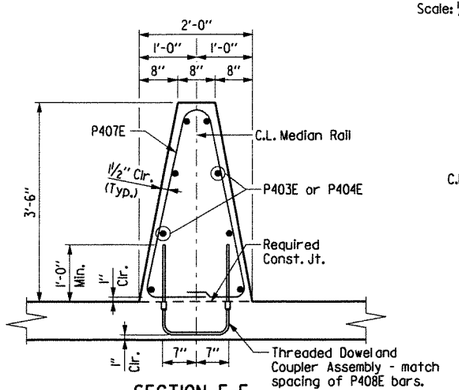

SECTION E-E

3/4" = 1'-0"

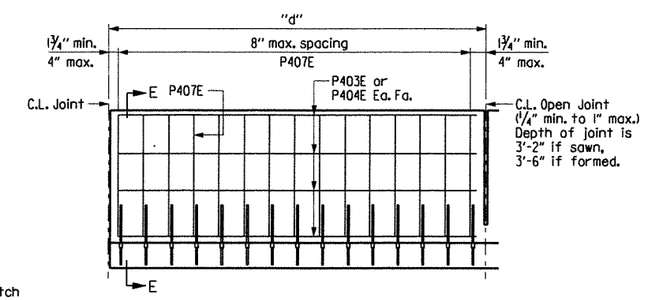

DETAILS OF ALTERNATE MEDIAN BARRIER RAIL

Scale: 1/2" = 1'-0"

STATE OF ARKANSAS REGISTERED PROFESSIONAL ENGINEER No. 13339 LARRY W. MILLER

Larry W. Miller 8-11-12

BRIDGE ENGINEER

SHEET 5 OF 6
DETAILS OF
571'-8" CONT. COMP. W-BEAM UNIT
(BR. 06880)
ROUTE I-540 SEC. 1
ARKANSAS STATE HIGHWAY COMMISSION
LITTLE ROCK, ARK.

DRAWN BY: TAR DATE: April 02 FILENAME: bBB0407m4 sl5.dgn
CHECKED BY: EMB DATE: May 02 SCALE: As Shown
DESIGNED BY: BCG/JLH DATE: March 02
BRIDGE NO. 06880 DRAWING NO. 48568

$$$$date$$$$

$$$$dgnspec$$$$$+

...\b040468m4_s15.dgn 8/10/2012 3:49:57 PM

DATE REVISED	DATE FILMED	DATE REVISED	DATE FILMED	FED. ROAD DIST. NO.	STATE	FED. AID PROJ. NO.	SHEET NO.	TOTAL SHEETS
				6	ARK.			
				JOB NO.		BB0407	274	464
				(1) 06880		SPAN DTLS.		48569

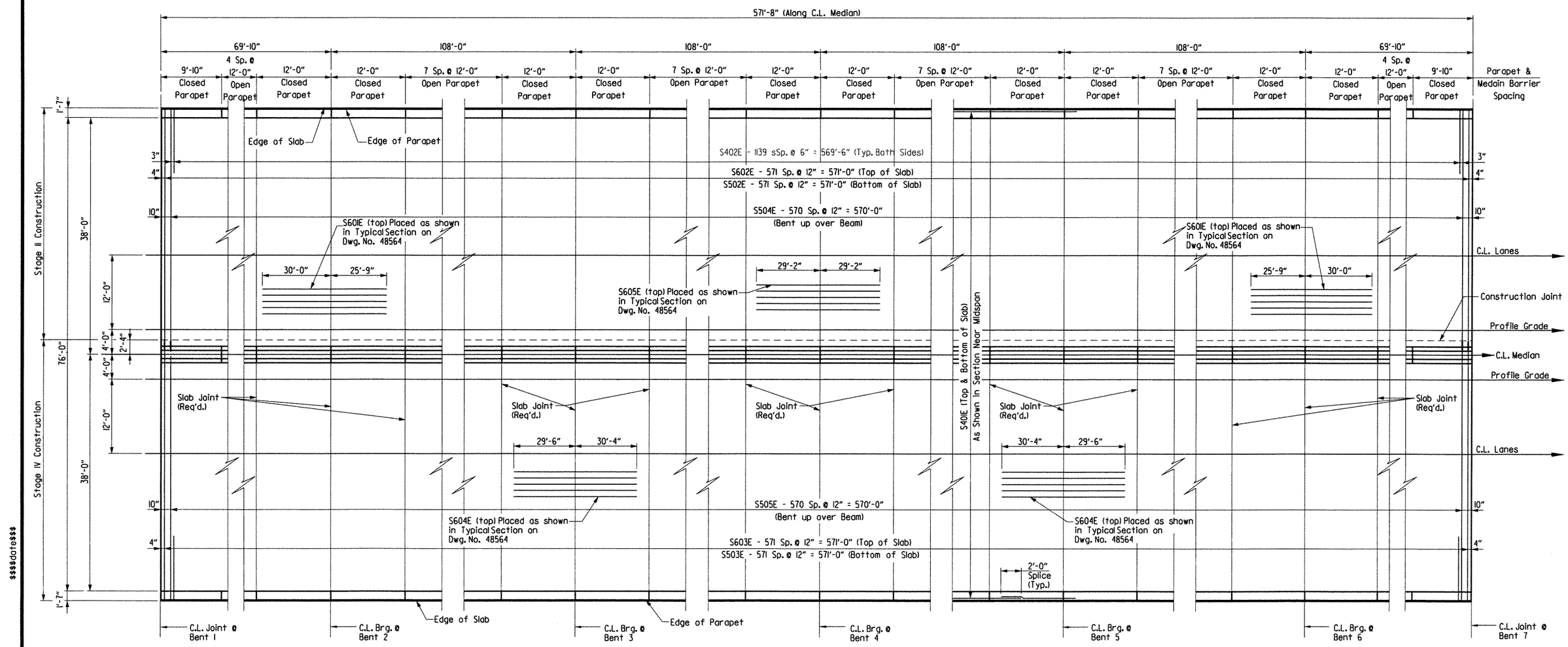

Note: Slab joints shall align with joints in parapets and median barrier.

BAR LIST

Mark	No. Req'd.	Length	Pin Dia.	Mark	No. Req'd.	Length	Pin Dia.
S401E	3195	40'-0"	STR.	P401E	732	6'-4"	2"
S402E	2280	5'-2"	STR.	P402E	732	5'-7"	2"
S502E	572	37'-7"	STR.	P403E	40	9'-5"	STR.
S503E	572	41'-3"	STR.	P404E	920	11'-7"	STR.
S504E	571	37'-11"	3"	P405E	504	5'-10"	2"
S505E	571	42'-9"	3"	P406E	504	3'-2"	2"
S506E	572	2'-0"	STR.	P407E	904	8'-11"	2"
S507E	571	5'-9"	STR.	P408E (1)	904	4'-4"	2"
S601E	212	55'-9"	STR.				
S602E	572	37'-7"	STR.				
S603E	572	41'-3"	STR.				
S604E	212	59'-10"	STR.				
S605E	106	58'-4"	STR.				
S606E	572	2'-4"	STR.				

* Denotes: Individual lengths shall be determined by the Contractor based on the type of mechanical coupler used.

Bending Diagrams (Dimensions are out to out of bars.)

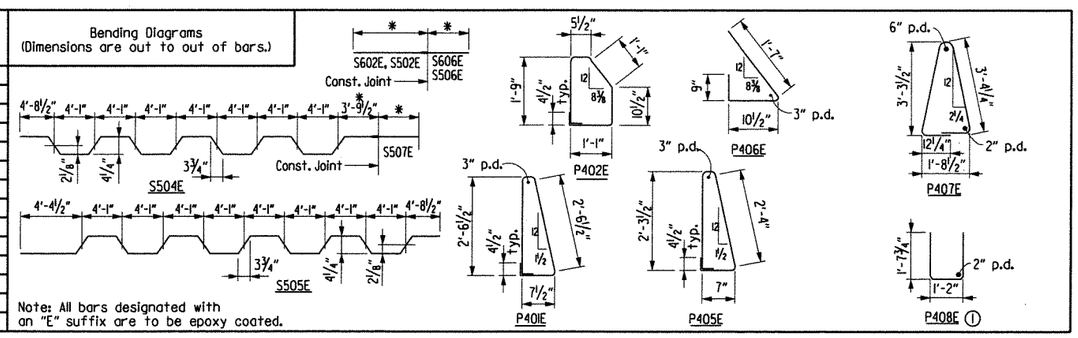

Note: All bars designated with an "E" suffix are to be epoxy coated.

REINFORCING PLAN

No Scale

Note: At the Contractor's option, two straight epoxy coated #5 bars may be substituted for the S504E and S505E bars. Payment for reinforcing will be based on the S504E and S505E bars.

(1) The Contractor may at his option substitute the Threaded Dowel and Coupler Asssembly for bar P408E. Payment shall be based on the weight of the P408E bars.

SHEET 6 OF 6
DETAILS OF
571'-8" CONT. COMP. W-BEAM UNIT
(BR. 06880)

ROUTE I-540 SEC. 1

ARKANSAS STATE HIGHWAY COMMISSION

LITTLE ROCK, ARK.

STATE OF ARKANSAS REGISTERED PROFESSIONAL ENGINEER No. 11339 LARRY W. MILLER

Larry W. Miller 8-11-12

BRIDGE ENGINEER

DRAWN BY: TAR	DATE: March 02	FILENAME:	bBB0407m4 s16.dgn
CHECKED BY: EMB	DATE: May 02	SCALE:	As Shown
DESIGNED BY: BCG/JLH	DATE: Feb 02		

BRIDGE NO. 06880 DRAWING NO. 48569

$$$$dgnspec$$$$$ $$$$date$$$$

...\b040468m4_s16.dgn 8/10/2012 3:49:58 PM

DATE REVISED	DATE FILMED	DATE REVISED	DATE FILMED	FED. ROAD DIST. NO.	STATE	FED. AID PROJ. NO.	SHEET NO.	TOTAL SHEETS
				6	ARK.			
				JOB NO.		BB0407	275	464
				(1) 06880		ELASTO. BRGS.		48570

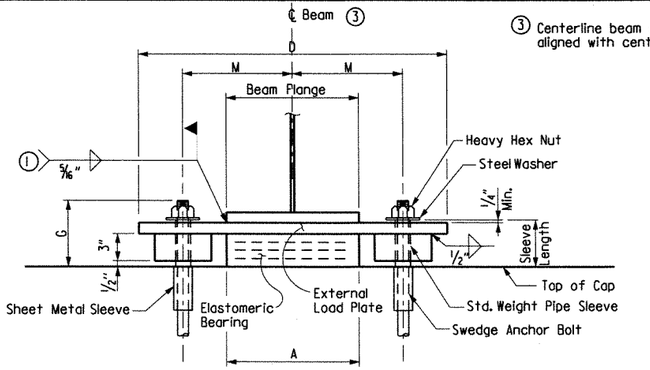

FRONT VIEW - BENT 4

(3) Centerline beam or girder shall be aligned with centerline elastomeric pad.

(1) Care shall be taken to ensure that the external load plate is in full and complete contact with the beam or girder flange before welding begins.

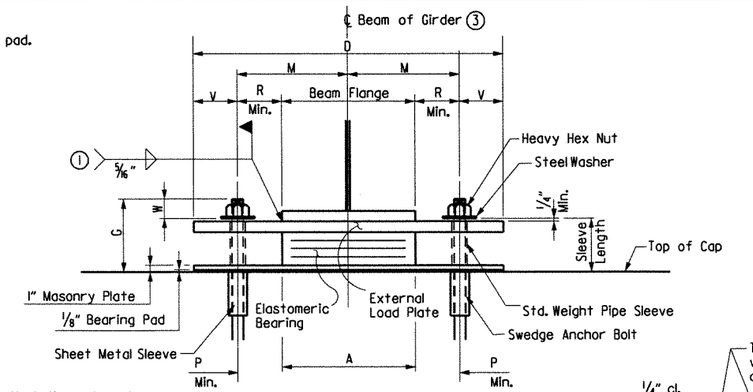

FRONT VIEW - BENTS 1-3 & 5-7

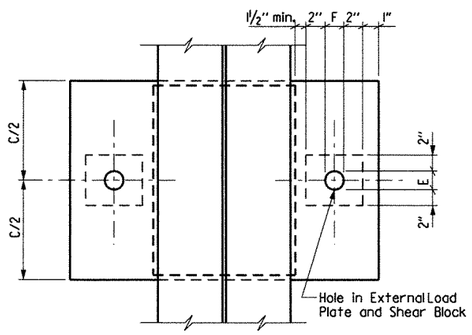

PLAN VIEW - BENT 4

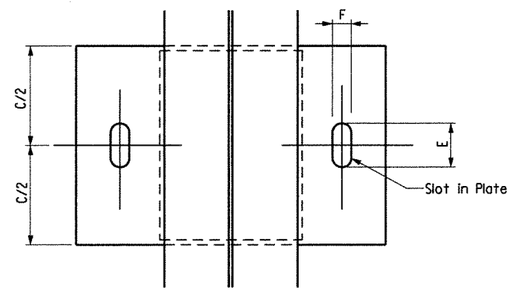

PLAN VIEW - BENTS 1-3 & 5-7

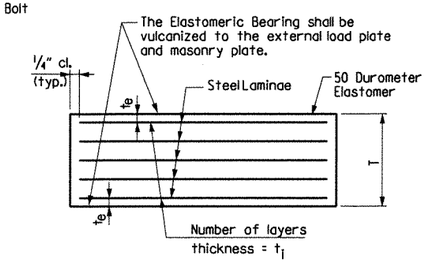

t_e = thickness of elastomer cover on top and bottom of pad

t_i = thickness of elastomer between steel laminae

N = number of elastomer layers of thickness t_i

ELASTOMERIC BEARING

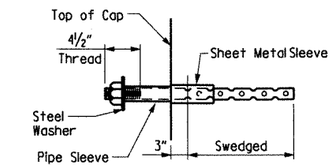

ANCHOR BOLT DETAIL

NOTE:
Anchor Bolts may be cast in place or drilled and grouted into place. If Anchor Bolts are to be cast in place, the Galvanized Sheet Metal Sleeves will not be required.

If Anchor Bolts are to be drilled and grouted in place, the Galvanized Sheet Metal Sleeves shall be cast in place as shown. Sleeves shall be dry packed with styrofoam, urethane foam or approved equal prior to pouring of concrete. After pouring of the cap and prior to erection of Structural Steel, the dry pack shall be removed and holes for the anchor bolts shall be accurately drilled into the masonry. Bolts placed in drilled holes shall be accurately set and fixed using a QPL approved epoxy or non-shrink grout that completely fills the holes. Galvanized Sheet Metal Sleeves will not be paid for directly, but will be considered subsidiary to the item "Structural Steel in Beam Spans, (M 270, Gr. 50W)"

Unless otherwise approved by the Engineer, welding of the external load plate at expansion bearings to the girder will be allowed only when 1) the approximate average air temperature during the 24 hour period immediately preceding welding is between 40°F and 80°F; and 2) the slots in the external load plate are positioned to center on the anchor bolts; and 3) no horizontal deformation of the elastomeric pad is evident. If welding at other temperatures is required, the Engineer will provide adjustment data.

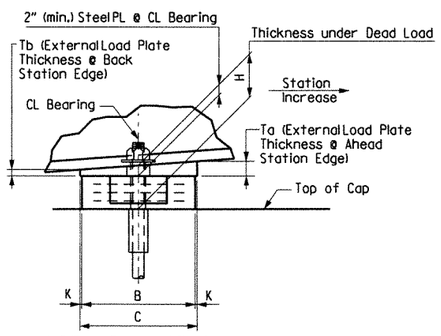

SIDE VIEW - BENT 4

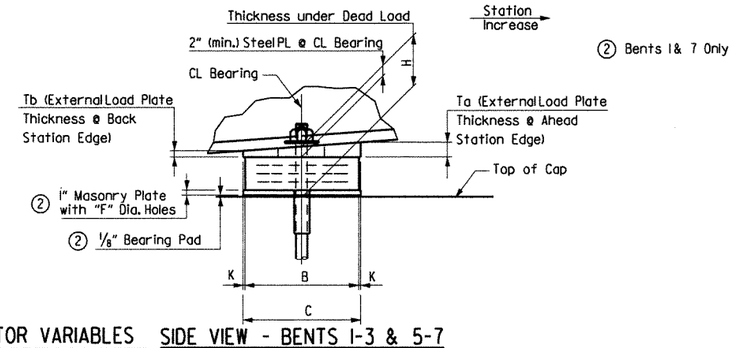

(2) Bents 1 & 7 Only

SIDE VIEW - BENTS 1-3 & 5-7

GENERAL NOTES

Elastomeric Bearings shall conform to Special Provision Job BB0407 "Elastomeric Bearings" and Section 808 of the Standard Specifications and shall be paid for at the unit price bid for "Elastomeric Bearings." Long-duration testing of random lot samples specified in subsection 808.05 is not required.

External load plates and masonry plates shall conform to AASHTO M 270, Grade 50W. Pipe sleeves shall be ASTM A53, Grade B, and shall be galvanized to conform to AASHTO M 232, Class C or AASHTO M 298, Class 50.

External load plates and masonry plates shall be completely fabricated (including bevel and bolt holes) and shall be cleaned before vulcanizing to the elastomeric bearing. The surface in contact with the elastomeric bearing shall be cleaned in accordance with Section 808. Other surfaces shall be blast cleaned in accordance with subsection 807.84(b) for painted steel or 807.84(e) for unpainted Grade 50W steel.

Anchor Bolts, Washers and Nuts shall conform to subsection 807.07 of the Standard Specifications. The anchor bolt grade of steel shall be as specified in the "Table of Fabricator Variables". Indentations shall be circular with rounded bottoms and staggered as shown in the details.

Pipe Sleeves, Anchor Bolts, Washers and Nuts shall be paid for at the unit price bid for "Structural Steel in Beam Spans (M270, Gr. 50W)". External load plates, masonry plates, and 1/8" thick bearing pads will not be measured or paid for seperately but will be included in the unit price bid for "Elastomeric Bearings".

TABLE OF FABRICATOR VARIABLES

LOCATION							ELASTOMERIC PAD						EXTERNAL LOAD PLATE								ANCHOR BOLT				
BENT NO(S).	BEAM OR GIRDER NO.	BEARING TYPE	NO. of BEARINGS EACH BENT	* MAXIMUM DESIGN LOAD (KIPS)	G	H	A	B	N	t_i	t_e	NO. & THICKNESS OF STEEL LAMINAE	T	C	D	** E	F	K	M	T_a	T_b	ANCHOR BOLT (ø x L)	ANCHOR BOLT GRADE	PIPE SLEEVE SIZE (ø x L)	SHEET METAL SLEEVE SIZE (ø x L)	STEEL WASHER SIZE (O.D.)
2 & 6	All	Exp.	10	186.62	8"	4 3/4"	16 1/2	16 1/2	4	7/16	1/4	5 @ 12 Ga.	2 3/4"	17 1/2"	28 1/2"	6 1/2"	3 1/8"	1/2"	11"	2.00"	2.00"	2" x 28"	55	2 1/2" x 5"	4" x 8"	3 3/4"
3 & 5	All	Exp.	10	215.10	8 13/16"	5 5/16"	18 1/2	18 1/2	5	7/16	1/4	6 @ 12 Ga.	3 5/16"	19 1/2"	30 1/2"	5"	3 1/8"	1/2"	12"	2.00"	2.00"	2 1/4" x 32"	55	2 1/2" x 5 1/4"	4" x 8"	4"
4	All	Fix	10	215.10	8 3/4"	5 5/16"	18 1/2	18 1/2	5	7/16	1/4	6 @ 12 Ga.	3 5/16"	19 1/2"	37 3/4"	3 1/8"	3 1/8"	1/2"	14 1/2"	2.00"	2.00"	2 1/4" x 30 3/4"	55	2 1/2" x 5 5/8"	4" x 8"	3 3/4"
1 & 7	All	Exp.	10	94.23	10"	7"	12	12	6	7/16	1/4	7 @ 12 Ga.	3 7/8"	13"	23 1/2"	7"	2 5/8"	1/2"	8 3/4"	2.00"	2.00"	1 3/4" x 28"	55	2" x 7 1/4"	4" x 6"	3 3/8"

*Maximum Design Load = Service Load

** Dimension "E" does not apply to masonry plates. See Side View - Bents 1 & 7

Tabular Data by: TAR Date: March 02
Checked by: JLH Date: Feb 02
Designed by: BCG Date: Feb 02

DETAILS OF ELASTOMERIC BEARINGS

ROUTE I-540 SEC. 1
ARKANSAS STATE HIGHWAY COMMISSION
LITTLE ROCK, ARK.

STATE OF ARKANSAS REGISTERED PROFESSIONAL ENGINEER No. 13339 LARRY W. MILLER 8-11-12
BRIDGE ENGINEER

DRAWN BY: TAR DATE: March 02
CHECKED BY: EMB DATE: May 02
DESIGNED BY: BCG/JLH DATE: Feb 02
FILENAME: bBB0407m4 el.dgn
SCALE: N.T.S.

BRIDGE NO. 06880 DRAWING NO. 48570

$$$$date$$$$
$$$$dgnspec$$$$$
...\b040468m4_e1.dgn 8/10/2012 3:49:58 PM

DATE REVISED	DATE FILMED	DATE REVISED	DATE FILMED	FED. ROAD DIST. NO.	STATE	FED. AID PROJ. NO.	SHEET NO.	TOTAL SHEETS
				6	ARK.			
				JOB NO.		BB0407	276	464
				(1) 06880		Joint Details		48571

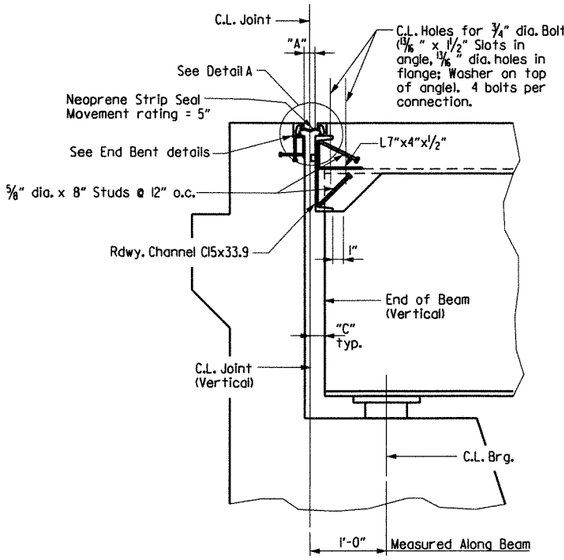

SECTION THRU JOINT AT END BENTS

Note: Sections thru Joints are taken normal to C.L. Joints

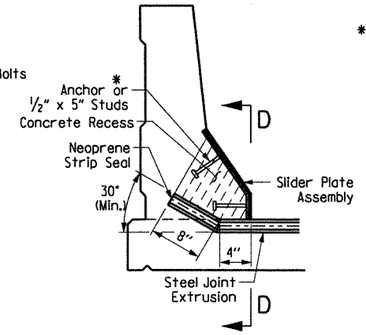

LOW SIDE OF BRIDGE

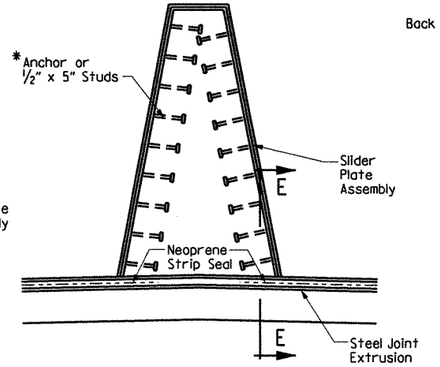

MEDIAN BARRIER

SECTION B-B

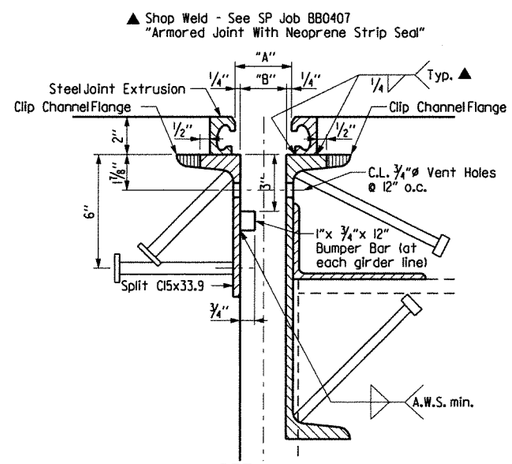

DETAIL A

3" = 1'-0"

Note: Concrete shall be hand packed under the joint armor in the backwall and in the span.

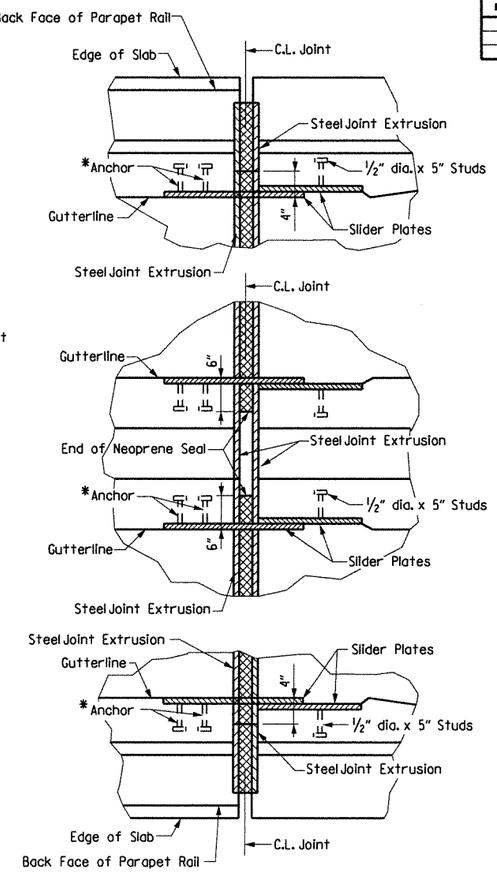

PLAN VIEW OF JOINT

* The method of attachment of the cover slider plate assembly or similar device must be such that it may be removed in order to provide for future replacement of the neoprene seal.

Anchors will not be paid for directly but will be considered subsidiary to "STRUCTURAL STEEL IN BEAM SPANS (M 270, GRADE 50W)".

GENERAL NOTES

EXPANSION NEOPRENE STRIP SEAL: The expansion device shall provide a movement of 4" as shown in the "STRIP SEAL JOINT DATA" table. The expansion joint shall be capable of sealing the deck surface and parapet area to prevent moisture and other contaminants from descending through the joint.

Details of proposed slider plate assembly shall be submitted to and approved by the Engineer prior to the fabrication of any structural steel at the expansion device.

All structural steel shall be AASHTO M270, Grade 50W unless otherwise noted. All exposed steel surfaces except parapet slider plates are to be cleaned in accordance with subsection 807.84(e). The parapet slider plates shall be cleaned in accordance with subsection 807.84(b) and painted in accordance with subsection 807.75. The color of paint shall be Gray and shall match Fed. Std. 595B, Color Chip 26176. Cleaning and painting will not be paid for directly but will be considered subsidiary to "Structural Steel in Beam Spans (Gr. 50W)".

All structural steel, except for the steel extrusion for the strip seal, shall be paid for as "STRUCTURAL STEEL IN BEAM SPANS (M 270, Grade 50W)". The steel extrusion and neoprene strip seal shall be paid for in accordance with Special Provision Job BB0407 "ARMORED JOINT WITH NEOPRENE STRIP SEAL".

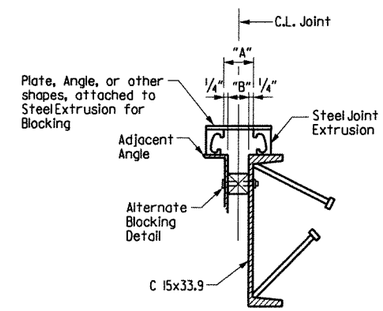

Note:
Each Expansion Joint device shall be blocked in the shop by the Fabricator to the dimension shown for 60° F and the blocking details shall be shown on the Shop Drawings. Blocking shall be placed within 2 feet of each end of the device and with a maximum spacing of 8 feet.

DETAILS FOR BLOCKING EXPANSION JOINT DEVICE

EXPANSION DEVICE INSTALLATION AT END BENTS:
The concrete span pour shall be placed before the end bent backwall concrete is placed. After beams or girders are erected the blocked expansion device shall be installed and adjusted for grade. All connection bolts shall be fully tightened prior to placing the deck concrete adjacent to the bent. Immediately prior to pouring the backwall concrete, the blocking shall be removed, the opening adjusted for temperature and grade, and the backwall constructed.

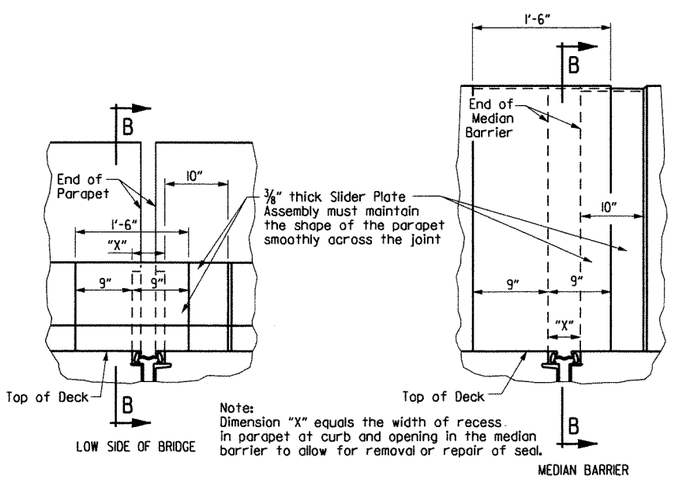

LOW SIDE OF BRIDGE

Note:
Dimension "X" equals the width of recess in parapet at curb and opening in the median barrier to allow for removal or repair of seal.

MEDIAN BARRIER

ELEVATION VIEW OF SLIDER PLATE ASSEMBLY

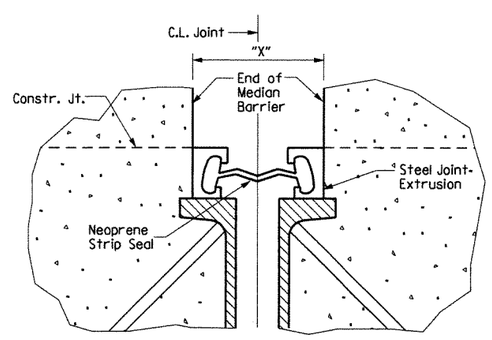

SECTION E-E

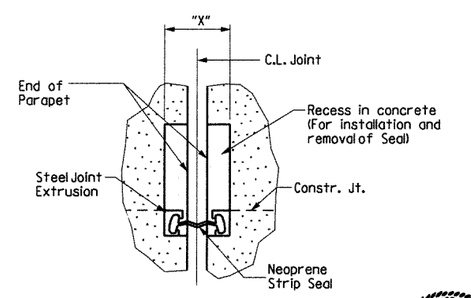

SECTION D-D

STRIP SEAL JOINT DATA

Bent No.(s)	Movement Rating (inch)	"A" Width Perpendicular to Joint at 24 Hour Average Temperature ** of:			"B" Width Perpendicular to Joint at 24 Hour Average Temperature ** of:			"C" Perpendicular to Joint at 24 Hour Average Temperature of 60° F
		40° F	60° F	80° F	40° F	60° F	80° F	
1 and 7	5"	3 11/16"	3 3/8"	2 15/16"	3 5/16"	2 7/8"	2 7/16"	2 11/16"

** The temperature used to set the joint opening shall be the approximate average air temperature during the 24 hour period immediately before the bolts are tightened. The Engineer shall establish the temperature. Interpolation of the table may be necessary.

STATE OF ARKANSAS REGISTERED PROFESSIONAL ENGINEER No. 10339 LARRY E. MILLER

8-11-12

BRIDGE ENGINEER

DETAILS OF
ARMORED JOINT WITH
NEOPRENE STRIP SEAL
HWY. 22 - I-40(F)
CRAWFORD & SEBASTIAN COUNTIES

ROUTE I-540 SEC. 1

ARKANSAS STATE HIGHWAY COMMISSION

LITTLE ROCK, ARK.

DRAWN BY: TAR	DATE: May 02	FILENAME: bBB0407m4 j1.dgn			
CHECKED BY: EMB	DATE: May 02	SCALE: N.T.S.			
DESIGNED BY: BCG	DATE: May 02				

BRIDGE NO. 06880 DRAWING NO. 48571

$$$$date$$$$

$$$$dgnspec$$$$$

...\b040468m4_j1.dgn 8/10/2012 3:49:59 PM

DATE REVISED	DATE FILMED	DATE REVISED	DATE FILMED	FED. ROAD DIST. NO.	STATE	FED. AID PROJ. NO.	SHEET NO.	TOTAL SHEETS
				6	ARK.			
				JOB NO.		BB0407	277	464
				(1) 06880		GENERAL NOTES		48572

SUPERSTRUCTURE GENERAL NOTES

CONSTRUCTION SPECIFICATIONS: Arkansas State Highway and Transportation Department Standard Specifications for Highway Construction, 2003 edition, with applicable special provisions.

DESIGN SPECIFICATIONS: AASHTO Standard Specifications for Highway Bridges, 1996 with current interim specifications.

LIVE LOADING: HS20 - 44 + Military Loading METHOD OF DESIGN: Load Factor

MATERIALS AND STRENGTHS:

Concrete: All concrete shall be Class S(AE) with minimum 28 day compressive strength f'c = 4000 psi.

Reinforcing Steel: Reinforcing steel shall conform to AASHTO M31 or M53, Grade 60 (Yield Strength = 60,000 psi.)

Structural Steel: Structural Steel shall conform to AASHTO M270, Gr. 50W (Fy = 50,000 psi.) and AASHTO M270, Gr. 36 (Fy = 36,000 psi.).

Elastomeric Bearings: For Elastomeric Bearings, see Dwg. No. 48570

STRUCTURAL STEEL:

All structural steel shall be AASHTO M270, Gr. 50W unless otherwise noted and shall be paid for as Structural Steel in Beam Spans (M270, Gr. 50W). M270, Gr. 50W steel shall not be painted unless otherwise noted. See Dwg. No. 48571 for cleaning and painting requirements of the parapet slider plates. All exposed surfaces to be cleaned in accordance with subsection 807.84(e) of the standard specifications unless noted otherwise. See Dwg. No. 48570 for cleaning requirements of external load plates on elastomeric bearings. Structural steel completely embedded in concrete may be AASHTO M270, Gr. 36.

Requests for substitution of structural steel shapes shown with shapes of greater size must be submitted by the Contractor to the Engineer for approval. Steels of equal or greater strengths will be accepted only when shown on the approved shop drawings. Shapes and materials shown in the plans will be the basis of payment and no additional compensation will be made for any adjustments due to substitutions.

Longitudinal beams and all field splice plate are considered main load carrying members and shall meet the Longitudinal Charpy V-Notch Test specified in Section 807.05 of the Standard Specifications. This work and material will not be paid for directly but are considered subsidary to the item "Structural Steel in Beam Spans (M270, Gr. 50W)".

Flange field splice plates shall be cut and fabricated so that the primary direction of rolling is parallel to the direction of the main tensile and/or compressive stresses.

All beams shall be blocked in their true position in the shop in groups of a minimum of three sections. Beams shall be blocked with webs horizontal. See Section 807.54 (b)(2) of the Standard Specifications. The camber, length of sections, distance between bearings, and openings of joints shall be measured with the beams in their true position. This information shall become a part of the permanent records of this job. The component parts shall be match-marked in this assembly and these marks shall be shown on the erection diagram. All beam dimensions are based on a temperature of 60°F. A tolerance of plus or minus 1/4" is allowed for camber.

Anchor bolts shall be galvanized according to subsection 807.07 and shall be Grade 55.

Elastomeric Bearings shall be firmly seated in accordance with subsection 808.08 of the specifications. This work to be considered subsidiary to the item "Elastomeric Bearings" and will not be paid for directly.

Field connections to be bolted with high strength bolts. For 3/4" dia. bolts: Open holes = 13/16" unless otherwise noted. Bolt spacing = 2 1/2" unless otherwise noted. Minimum edge distance = 1 1/4" unless otherwise noted. For 7/8" dia. bolts: Open holes = 15/16" unless otherwise noted. Bolt spacing 3" unless otherwise noted. Minimum edge distance = 1 1/2" unless otherwise noted. Bolts shall be placed with heads on the outside face of the exterior beam webs and on bottom of beam flanges.

Holes for 3/4" dia. high strength bolts in diaphragms may be 15/16" dia. if a washer is supplied for use under both the nut and the head of the bolt.

Diaphragms shall be installed as beams are erected. All bolts in Diaphragms and field splices shall be installed and completely tightened prior to pouring of floor slabs, except as noted.

All welding that is to be done during fabrication of structural steel, including temporary welds, shall be detailed on the shop drawings and submitted for approval. If additional welds are required, whether permanent or temporary, a formal request with detailed drawings shall be submitted to the Engineer for approval; however, additional welds used for attaching falsework support devices or screed rail supports to the structural steel that do not exceed the limitations of subsection 802.13 will not require approval prior to construction. All welding shall conform to subsection 807.26.

Drawings show general features of design only. Shop drawings shall be made in accordance with the specifications, submitted, and approval secured before fabrication is begun.

All stud shear connectors shall be granular flux filled, solid fluxed, or equal and shall be automatically end welded in accordance with the recommendations of the manufacturer.

REINFORCING STEEL:

The reinforcing steel shall be accurately located in the forms and firmly held in place by steel wire supports sufficient in size and number to prevent displacement during the course of construction. The wire supports will not be paid for directly but will be considered subsidiary to the item of "Epoxy Coated Reinforcing Steel (Grade 60)".

CONCRETE:

Concrete shall be poured in the dry and all exposed corners to be chamfered 3/4" unless otherwise noted. All concrete shall be Class S(AE) with a minimum 28 day compressive strength f'c = 4,000 psi.

The superstructure details shown are for use when removable deck forming is used and are the basis for measurement of Class S(AE) Concrete. See Standard Drawing No. for allowable modifications and for tolerances when Permanent Steel Bridge Deck Forms are used.

Concrete in bridge superstructure shall be placed, consolidated and screeded off for the entire pour before any concrete has taken its initial set. This may require the use of a retarding agent.

The concrete deck shall be given a tine finish in accordance with subsection 802.19 for Class 5 Tined Bridge Roadway Surface Finish. Movement of the finishing machine across new concrete shall be on planks placed on the surface and shall be prohibited for 72 hours after finishing the pour. Sufficient concrete must be placed ahead of the strike-off to fully load the beam. If a longitudinal strike-off is used, a vertical camber adjustment must be made in the strike-off to account for the future dead load deflection due to the railing. A minimum of 72 hours shall elapse between completion of the slab and the pouring of the parapet railing.

LOAD DISTRIBUTION TO BEAMS:

	Beam 1, 10	Beams 2-9
Dead Load:		
To W-Beam	774 PLF + 1.3(wt./ft. of W-Bm.)	924 PLF + 1.3(wt./ft. of W-Bm.)
To Composite Beam	243 PLF*	273 PLF*

*includes 196 PLF(Int.), 166 PLF(Ext.) Future Wearing Surface

Live Load:

To each Composite Beam — Int. Bm. = 1.485 wheels (+) impact
Ext. Bm. = 1.296 wheels (+) impact

GENERAL NOTES AND MISC. DETAILS
FOR CONTINUOUS COMP. W-BEAM UNITS
(BR. 06880)

STATE OF ARKANSAS REGISTERED PROFESSIONAL ENGINEER No. 10339 LARRY W. MILLER

Larry W. Miller 8-11-12
BRIDGE ENGINEER

ROUTE I-540 SEC. 1
ARKANSAS STATE HIGHWAY COMMISSION
LITTLE ROCK, ARK.

DRAWN BY: TAR DATE: March 02 FILENAME: bBB0407m4 s17.dgn
CHECKED BY: EMB DATE: May 02 SCALE: N.T.S.
DESIGNED BY: BCG DATE: Dec 01
BRIDGE NO. 06880 DRAWING NO. 48572

$$$$date$$$

$$$$dgnspec$$$$$

...\b040468m4_s17.dgn 8/10/2012 3:49:59 PM

DATE REVISED	DATE FILMED	DATE REVISED	DATE FILMED	FED. ROAD DIST. NO.	STATE	FED. AID PROJ. NO.	SHEET NO.	TOTAL SHEETS
				6	ARK.			
				JOB NO.		BB0407	278	464
				① 06880		APPR. GUTTER		48573

① Construct gutter curb with height-transition as shown if drop inlet is not placed at end of gutter.

Construct gutter curb full height (no height-transition) if drop inlet is placed at end of gutter. Curb height transition placed on drop inlet. See drop inlet details.

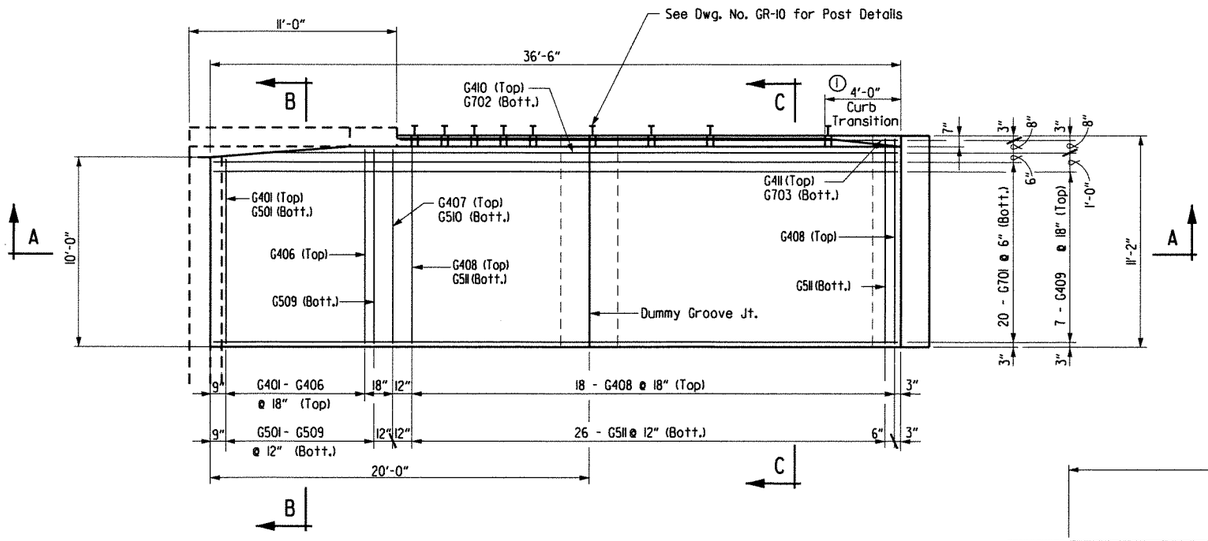

PLAN OF APPROACH GUTTER

N.T.S.

GENERAL NOTES FOR APPROACH GUTTERS

Concrete shall be Class S or Class S(AE)

Reinforcing Steel shall conform to AASHTO M31 or M53, Grade 60 (fy = 60,000 p.s.i.).

Approach Gutters shall be measured and paid for in accordance with Section 504 of the Standard Specifications.

BAR LISTS (ONE APPROACH GUTTER)

Mark	No. Req'd.	Length	Pin. Dia.	Mark	No. Req'd.	Length	Pin. Dia.
G401 to G406	1 ea.	9'-8" to 10'-3"	Str.	G701	20	36'-2"	Str.
				G702	1	33'-0"	Str.
G407	1	10'-3"	Str.	G703	1	26'-3"	Str.
G408	18	10'-10"	Str.				
G409	7	36'-2"	Str.	F401	8	10'-10"	Str.
G410	1	33'-0"	Str.	F402	22	2'-8"	Str.
G411	1	26'-3"	Str.				
G501 to G509	1 ea.	9'-8" to 10'-3"	Str.				
G510	1	10'-3"	Str.				
G511	26	10'-10"	Str.				

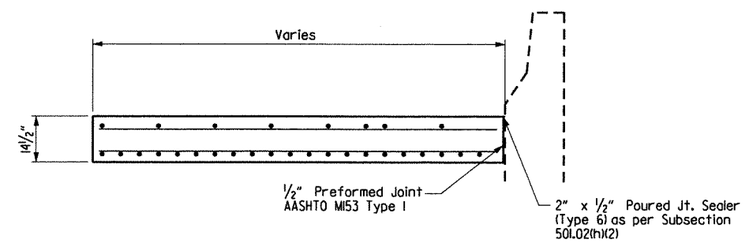

SECTION B-B

N.T.S.

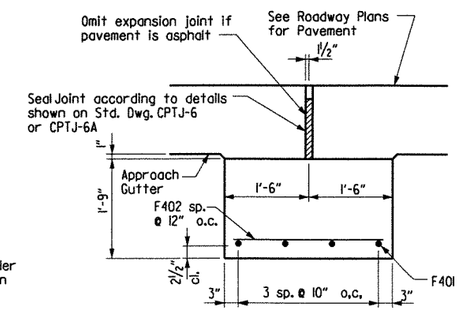

DETAILS OF EXPANSION JOINT SUPPORT

Scale: ¾" = 1'-0"

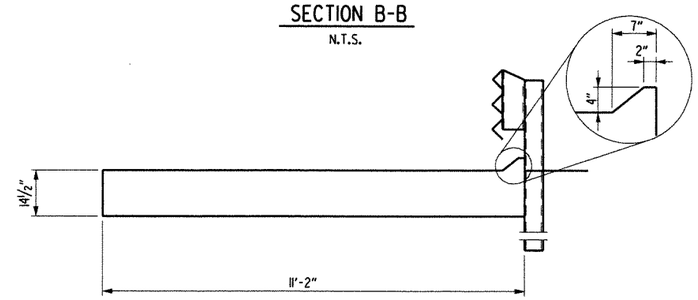

SECTION C-C

N.T.S.

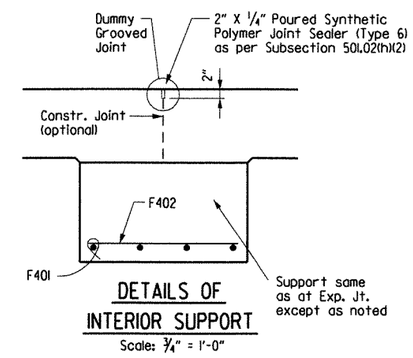

DETAILS OF INTERIOR SUPPORT

Scale: ¾" = 1'-0"

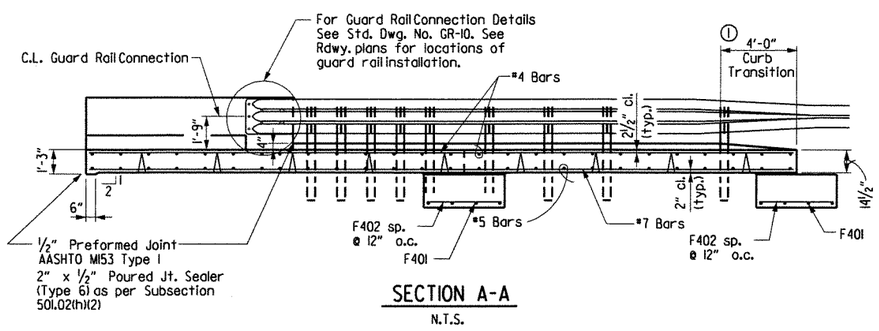

SECTION A-A

N.T.S.

QUANTITIES (PER GUTTER)
(FOR INFORMATION ONLY)

Concrete	Reinforcing Steel
Cu. Yds.	Lbs.
23.00	2,482

STATE OF ARKANSAS REGISTERED PROFESSIONAL ENGINEER No. 13339 LARRY W. MILLER

Larry W. Miller 8-11-12

BRIDGE ENGINEER

DETAILS OF TYPE SPECIAL 2 APPROACH GUTTER (BR. 06880)

ROUTE I-540 SEC. 1

ARKANSAS STATE HIGHWAY COMMISSION

LITTLE ROCK, ARK.

DRAWN BY: TAR DATE: FILENAME: bBB0407m4 g1.dgn

CHECKED BY: DATE: SCALE: As Shown

DESIGNED BY: DATE:

BRIDGE NO. 06880 DRAWING NO. 48573

$$$$date$$$

$$$$dgnspec$$$$$

...\b040468m4_g1.dgn 8/10/2012 3:50:00 PM

DATE REVISED	DATE FILMED	DATE REVISED	DATE FILMED	FED. ROAD DIST. NO.	STATE	FED. AID PROJ. NO.	SHEET NO.	TOTAL SHEETS
				6	ARK.			
				JOB NO.		BB0407	279	464
				(1) 06880		SPECIAL GUTTER		48574

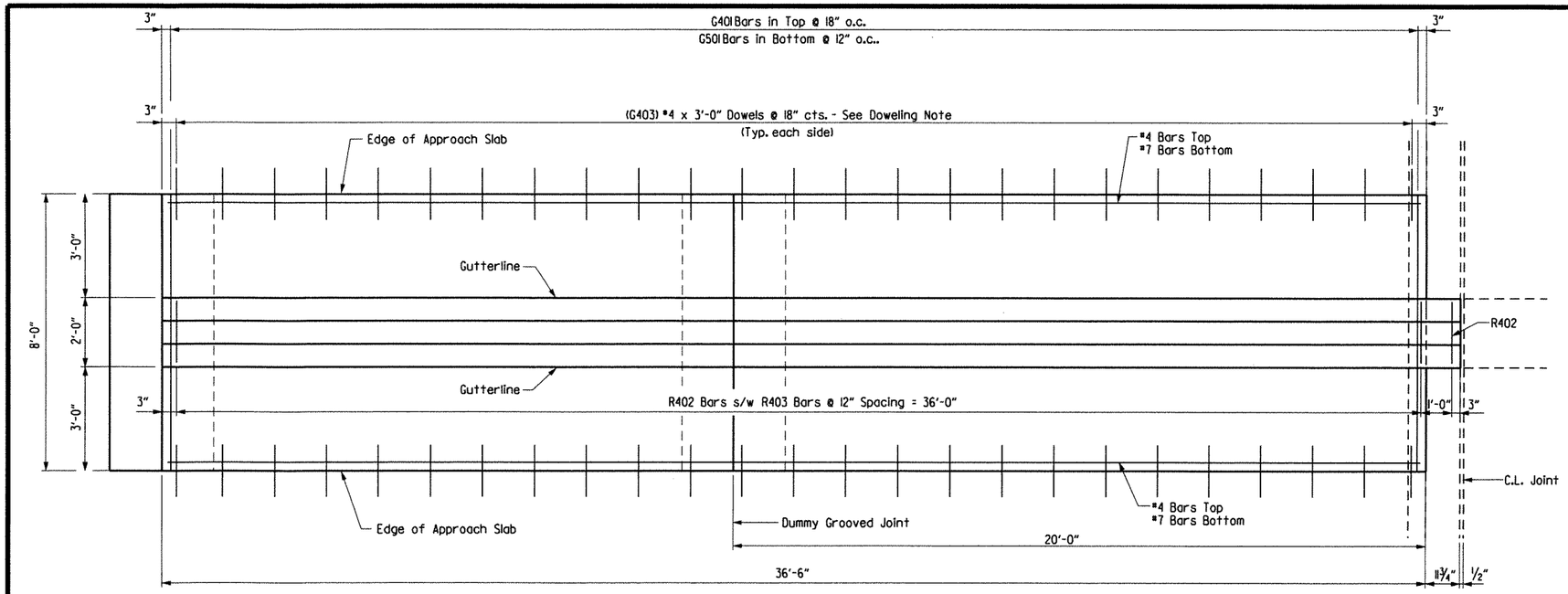

MEDIAN APPROACH GUTTER PLAN

No Scale

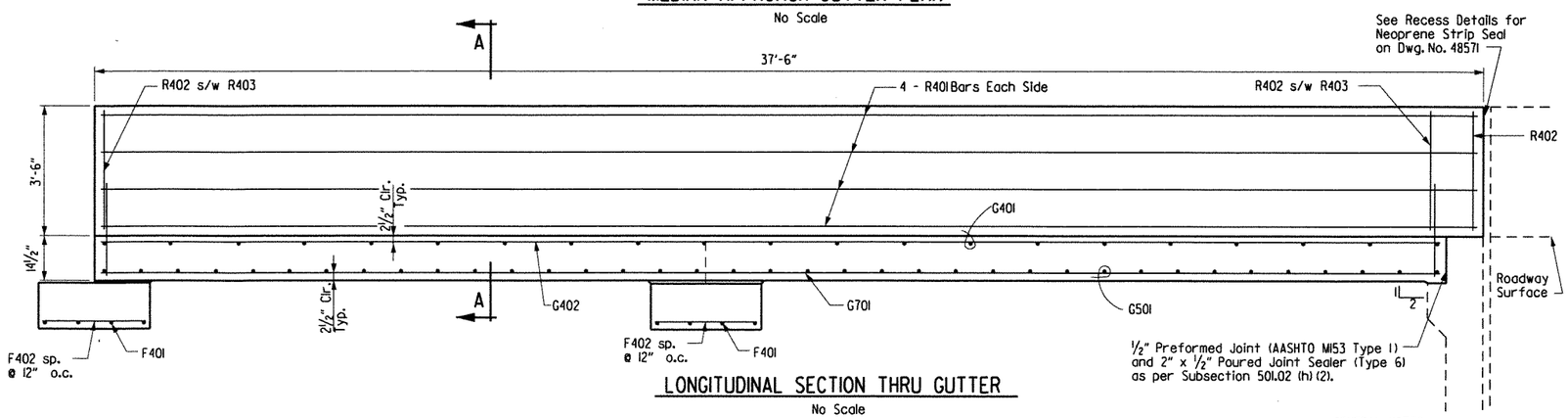

LONGITUDINAL SECTION THRU GUTTER

No Scale

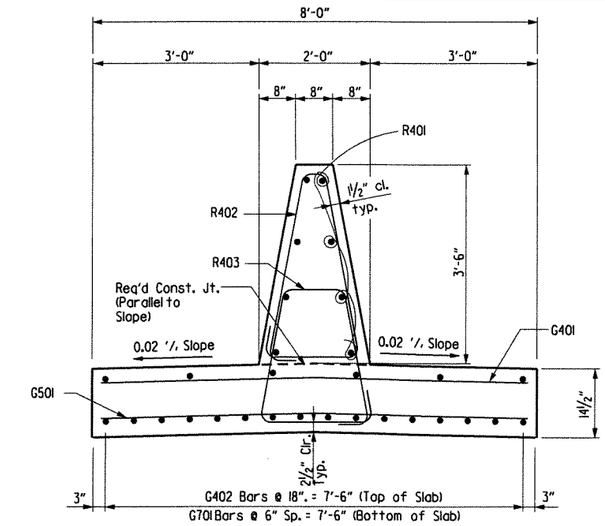

SECTION A-A

No Scale

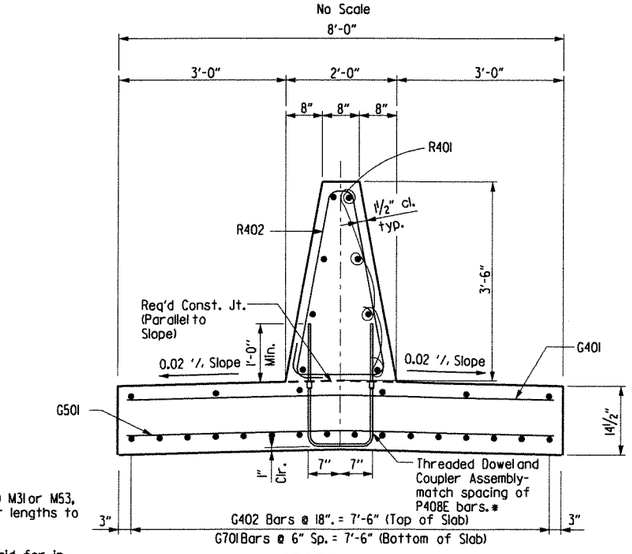

SECTION A-A

(Alternate Connection Detail)
No Scale

* See Dwg. No. 48568

BAR LISTS (ONE MEDIAN APPROACH GUTTER)

Mark	No. Req'd.	Length	Pin. Dia.
R401	8	37'-2"	Str.
R402	37	9'-0"	2"
R403	37	8'-6"	2"
G401	25	7'-8"	Str.
G402	6	36'-2"	Str.
G403	50	3'-0"	Str.
G501	37	7'-8"	Str.
G701	16	36'-2"	Str.
F401	8	7'-8"	Str.
F402	16	2'-8"	Str.

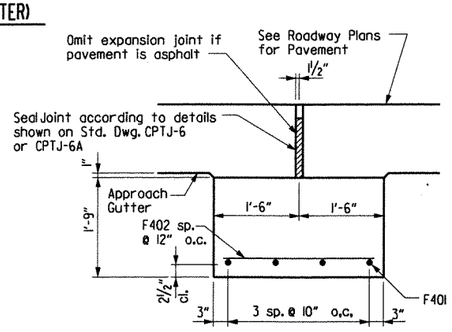

DETAILS OF EXPANSION JOINT SUPPORT

Scale: ¾" = 1'-0"

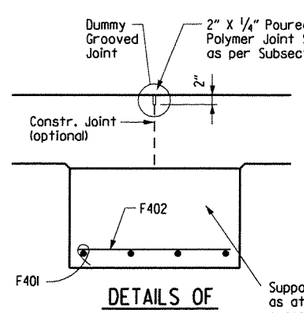

DETAILS OF INTERIOR SUPPORT

Scale: ¾" = 1'-0"

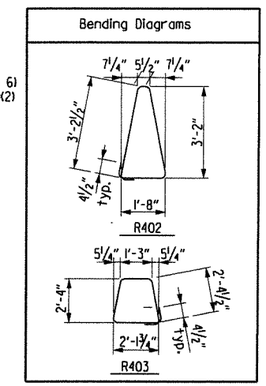

GENERAL NOTES

Concrete shall be Class S or S(AE)

Reinforcing steel shall conform to AASHTO M31 or M53, Grade 60 (fy = 60,000 psi). Fabricate bar lengths to provide 2" minimum cover at each end.

Approach gutters will be measured and paid for in accordance with Section 504 of the Standard Specifications.

Doweling Note: Drill and grout dowels 18" into approach slabs. Work for drilling and grouting will not be paid for separately but will be considered subsidiary to 'Approach Gutter (Type Special 3)'.

QUANTITIES FOR EACH MEDIAN APROACH GUTTER (FOR INFORMATION ONLY)

Reinforcing Steel (Lbs.)	Concrete (C.Y.)
2,553	22.66

STATE OF ARKANSAS REGISTERED PROFESSIONAL ENGINEER No. 11339 LARRY E. MILLER

Larry E. Miller 8-11-12

BRIDGE ENGINEER

DETAILS OF TYPE SPECIAL 3 APPROACH GUTTER (BR. 06880)

ROUTE I-540 SEC. 1

ARKANSAS STATE HIGHWAY COMMISSION

LITTLE ROCK, ARK.

DRAWN BY: TAR DATE: May 02 FILENAME: bBB0407m4 g2.dgn
CHECKED BY: EMB DATE: May 02 SCALE: N.T.S.
DESIGNED BY: JLH/EMB DATE: May 02

BRIDGE NO. 06880 DRAWING NO. 48574

DATE REVISED	DATE FILMED	DATE REVISED	DATE FILMED	FED. ROAD DIST. NO.	STATE	FED. AID PROJ. NO.	SHEET NO.	TOTAL SHEETS
				6	ARK.			
				JOB NO.		BB0407	280	464
				A6881		LAYOUT		48575

For R/W Data, see Rdwy. Plans

Note: Unless otherwise noted Stations and Elevations are shown at C.L. Lanes and are based on Original Bridge Plans.

Note:
Existing approach slabs and gutters to be removed and replaced with new Approach Slabs and Type C Approach Gutters ("w" = 10'-0" & "w" = 6'-0"). See Dwg. Nos. 2018 & 2016C.

Note: The existing slopes shall be excavated as shown to produce 3'-0" wide berms to the front of the new end bent caps and shall provide a 1'-3" min. vertical clearance to the new beams. Approximately 1,750 cubic yards of excavation required. This work shall be paid for as UNCLASSIFIED EXCAVATION FOR STRUCTURES - BRIDGE.

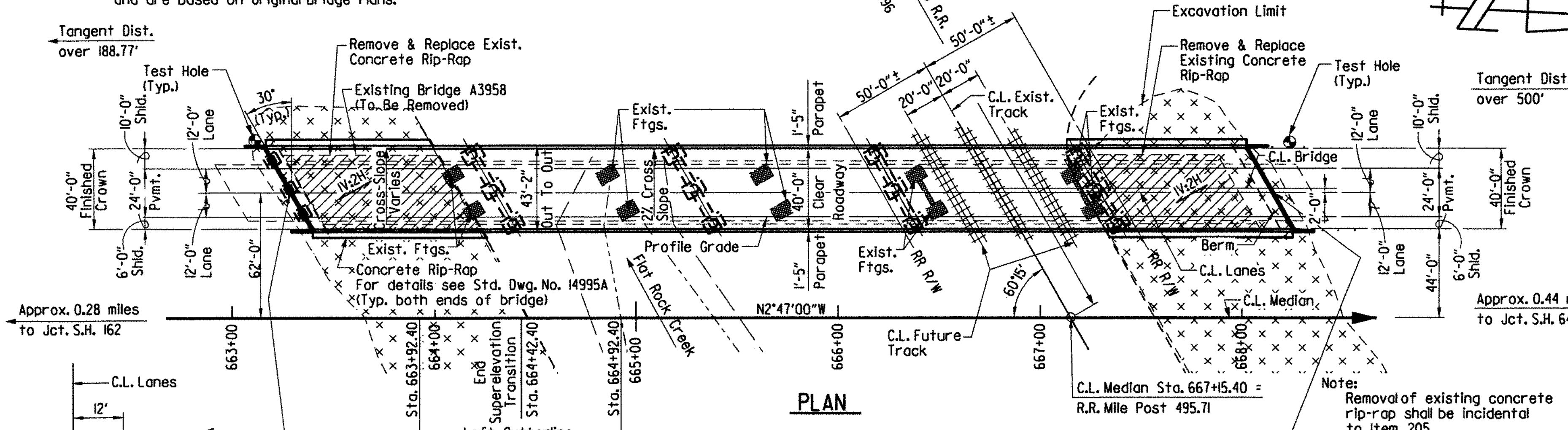

Note:
Removal of existing concrete rip-rap shall be incidental to Item 205.

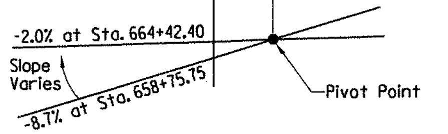

Transition Length = 400' for Equation:
Back Station 659+75.75 = 661+42.40 Ahead Station

SUPERELEVATION TRANSITION SKETCH

Looking Ahead

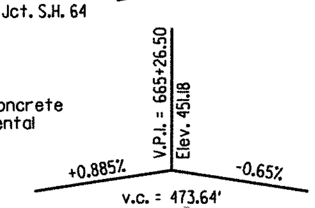

VERTICAL CURVE DATA

(Along Profile Grade)

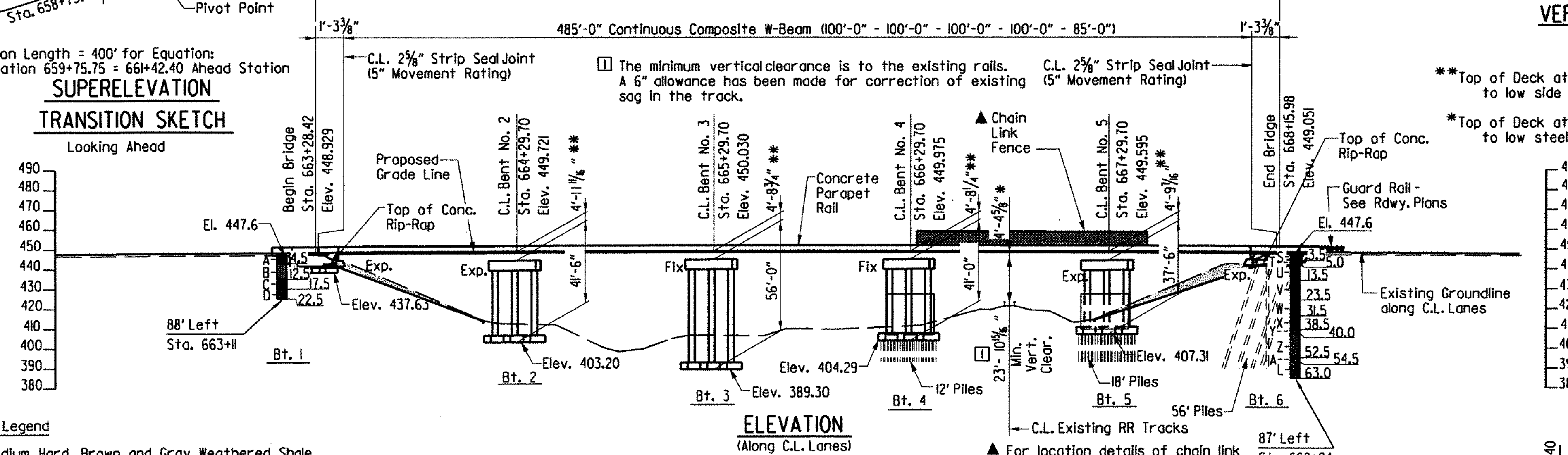

① The minimum vertical clearance is to the existing rails. A 6" allowance has been made for correction of existing sag in the track.

**Top of Deck at C.L. Bent at C.L. Lanes to low side top of cap

*Top of Deck at C.L. Lanes to low steel

ELEVATION

(Along C.L. Lanes)

▲ For location details of chain link fence, see Dwg. No. 48577
For fence details, see Dwg. No. 48613

Boring Legend

A - Medium Hard, Brown and Gray Weathered Shale
B - Hard, Gray Fractured Sandstone with Weathered Shale and some Shale Seams
C - Hard, Dark Gray Shale with Thin Gray Sandstone and some Highly Weathered Shale Seams
D - Hard, Dark Gray Shale with Thin Gray Sandstone Seams
E - Moist, Very Dense, Brown and Gray Sand and Sandstone Fragments
F - Medium Hard, Brown and Gray Weathered Shale with some Sandstone Fragments
G - Hard, Gray Fractured Sandstone with Shale and Weathered Shale Seams
H - Hard, Fractured Dark Gray Shale with Thin Gray Sandstone Seams
J - Medium Hard, Gray Weathered Shale with Gray Sandstone Seams
K - Hard, Dark Gray Fractured Shale
L - Hard, Dark Gray Shale
M - Moist, Medium Dense, Brown Gravel
N - Wet, Very Loose, Brown Sand and Gravel
P - Wet, Loose, Brown Sand and Gravel with Traces of Clay Seams
Q - Wet, Medium Stiff, Brown and Gray Sandy Clay with Gravel
R - Medium Hard, Gray Weathered Shale
S - Moist, Medium Stiff, Brown Sandy Clay with Gravel
T - Moist, Medium Stiff, Brown and Gray Sandy, Silty Clay
U - Moist, Medium Stiff, Brown and Gray Sandy, Silty Clay with Sandstone Fragments
V - Moist, Stiff to Medium Stiff, Brown and Gray Sandy, Silty Clay with Sandstone Fragments and Traces of Weathered Shale
W - Moist, Medium Stiff, Brown and Gray Sandy Clay with Sandstone Fragments and some Weathered Shale
X - Moist, Stiff, Brown and Gray Sandy Clay with Sandstone Fragments and some Weathered Shale
Y - Wet, Stiff, Brown and Gray Silty Clay
Z - Wet, Medium Stiff to Stiff, Brown Silty Clay with some Organic Matter
AA - Moist, Loose, Brown Sand and Gravel (Fill Material)
BB - Moist, Medium Stiff, Brown Silty Clay with Sandstone and Shale Fragments
CC - Moist, Medium Stiff, Reddish Brown Silty Clay with Shale Fragments
DD - Moist, Medium Stiff, Reddish Brown Silty Clay with some Highly Weathered Shale
EE - Moist, Stiff, Reddish Brown Silty Clay with Sandstone and Shale Fragments
FF - Moist, Stiff, Reddish Brown Silty Clay with some Highly Weathered Shale
GG - Moist, Stiff, Reddish Brown Silty Clay with Sandstone Fragments
HH - Moist, Stiff, Reddish Brown Silty Clay with some Weathered Shale
JJ - Wet, Medium Stiff, Brown and Gray Silty Clay with some Organic Matter
KK - Moist, Stiff, Reddish Brown and Gray Silty Clay
LL - Soft, Gray Highly Weathered Shale

NOTE: The contractor shall check measurements of the existing bridge. Any adjustments necessary to fit the new work to the existing bridge location shall be submitted for the Engineer's approval.

The proposed bridge provides an equal or greater waterway opening than the existing bridge.

SAMPLE DATA

Sta. 663+11 - 88' Left of Centerline of Median I-540

3.5 - 3.9, N = 60
4.5 - 7.5, SCR% = 29, ROD% = 0
7.5 - 12.5, SCR% = 20, ROD% = 0-
12.5 - 17.5, SCR% = 97, ROD% = 0
17.5 - 22.5, SCR% = 99, ROD% = 0

Sta. 668+24 - 87' Left of Centerline of Median I-540

4.0 - 5.0, N = 7
9.0 - 10.0, N = 7
14.0 - 15.0, N = 10
19.0 - 20.0, N = 8
24.0 - 25.0, N = 8
29.0 - 30.0, N = 8
34.0 - 35.0, N = 12
39.0 - 40.0, N = 9
44.0 - 45.0, N = 7
49.0 - 50.0, N = 9
53.25 - 53.65, N = 60
54.5 - 58.0, SCR% = 98, ROD% = 61
58.0 - 63.0, SCR% = 99, ROD% = 51

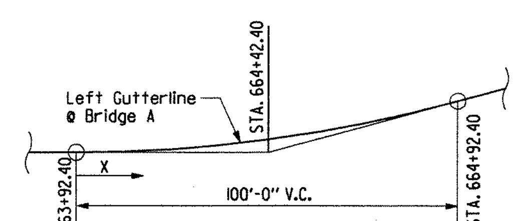

Left is defined when facing direction of increasing station.

The left gutterline of Bridge 'A' has been smoothed with a correction equation between the stations shown. The roadway cross slope at any station is a straight line between the left and right gutterlines.

Elev. = $448.85 + 0.0112(X) - 0.00004366(X^2)$

X is the distance in feet along centerline lanes from beginning station shown. Elevation is at gutterline.

LEFT GUTTER CORRECTION CURVE

No Scale

GENERAL NOTES

BENCH MARK: Elevations and stations are assumed to be the same as shown on the original plans. The original layout shows the elevation at the top of the deck and centerline of existing bridge to be at 447.39 at Sta. 663+36.12 (Beg. of Br. A3958).

CONSTRUCTION SPECIFICATIONS: Arkansas State Highway and Transportation Department Standard Specifications for Highway Construction (2003 edition), with applicable supplemental specifications and special provisions. Unless otherwise noted on the plans, section and subsection refer to the Standard Construction Specifications.

DESIGN SPECIFICATIONS: AASHTO Standard Specifications for Highway Bridges (1996 edition), with current interim specifications.

LIVE LOAD: HS20 + Military Loading   METHOD OF DESIGN: Load Factor
SEISMIC PERFORMANCE CATEGORY: A

MATERIALS AND STRENGTHS:
Class S(AE) Concrete (superstructure) f'c = 4,000 psi
Class S Concrete (substructure) f'c = 3,500 psi
Reinforcing Steel (AASHTO M31 or M53, Gr. 60) fy = 60,000 psi
Structural Steel (AASHTO M270, Gr. 50W) Fy = 50,000 psi
Structural Steel (AASHTO M270, Gr. 36) Fy = 36,000 psi

BORING LOGS: Boring Logs may be obtained from the Programs and Contracts Division.

BRIDGE DECK: The concrete bridge deck shall be given a tine finish as specified for final finishing in Subsection 802.19 for Class 5 Tined Bridge Roadway Surface Finish.

CLASS I PROTECTIVE SURFACE TREATMENT: Class I Protective Surface Treatment shall be applied to the roadway surface and the face and top of the concrete parapet rail.

STEEL PILING: Piling in Bents 4, 5 and 6 shall be HP12x53 and shall be driven with an approved air, steam or diesel hammer to a minimum safe bearing capacity of 70 tons per pile and into the material designated as medium hard, shale on the boring legend. Lengths of piling shown are for estimating quantities and for use in determining payment for cut-off and build-up in accordance with the Standard Specifications. Piles in end bents to be driven after embankment to bottom of cap is in place. On all piles the contractor shall use approved steel H-Pile driving points.

FOOTINGS: Footings for Bents 1 thru 3 shall be set a minimum of 1'-6" in hard sandstone or hard shale. Footings shall not be at a higher elevation than the existing footing and shall have a minimum cover above top of footings of 2'-0". Foundations for all footings shall be prepared in accordance with Section 801.04 of the Standard Specifications. Rock excavations shall be made to neat lines of the concrete footings. Care shall be exercised to avoid shattering of rock faces by excessive blasting. Concrete in footings shall be poured directly against excavated surfaces of rock.

DETAIL DRAWINGS:	DRAWING NO.
End Bents	48580-48582, 48587, 48588
Intermediate Bents	48583-48586A
485'-0" Cont. Comp. W-Beam Unit	48589-48593
Steel Piling	14995A
Approach Slab	2018
Type C Approach Gutter	2016C

REMOVAL AND SALVAGE: The existing bridge shall be removed in accordance with Section 205. All material from existing bridge shall become the property of the contractor.

EXISTING BRIDGE: Existing Bridge No. A3958 is 33'-6" wide and 462'-6" long and consists of 6 composite I-beam 76'-8" simple spans supported by substructures consisting of 5 dual column bents and 1 pile end bent and 1 spread footing end bent. Plans for existing bridge will be made available to the Contractor upon request to Programs and Contracts Division. Existing Dwg. Nos. 13337, 13339 thru 13344.

MAINTENANCE OF TRAFFIC: See Roadway Plans.

LAYOUT OF BRIDGE OVER UNION PACIFIC RAILROAD (BR. A6881)

HWY. 22 - I-40 (F)
CRAWFORD & SEBASTIAN COUNTIES
ROUTE I-540 SEC. 2
ARKANSAS STATE HIGHWAY COMMISSION
LITTLE ROCK, ARK.

STATE OF ARKANSAS REGISTERED PROFESSIONAL ENGINEER No. 11339 LARRY W. MILLER
Larry W. Miller 8-11-12
BRIDGE ENGINEER

DRAWN BY: TAR DATE: March 02 FILENAME: bBB0407a5 lll.dgn
CHECKED BY: JLH DATE: March 02 SCALE: 1" = 40'
DESIGNED BY: BCG DATE: March 02
BRIDGE NO. A6881 DRAWING NO. 48575

$$$$date$$$
$$$$dgnspec$$$$$•

...\b040468a5_l11.dgn 8/10/2012 3:50:01 PM

FED. ROAD DIST. NO.	STATE	FED. AID PROJ. NO.	SHEET NO.	TOTAL SHEETS
6	ARK.			
JOB NO.		BB0407	281	464
A3958 - LAYOUT - 48576				

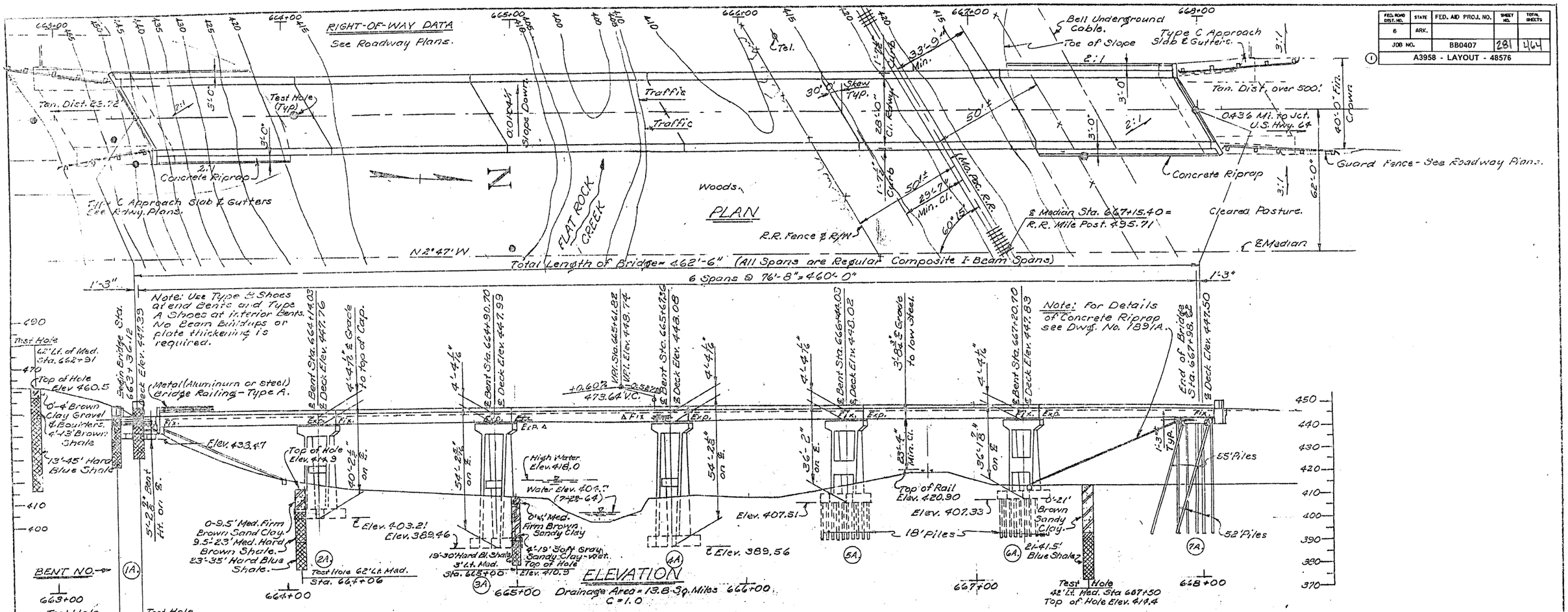

GENERAL NOTES

All concrete to be poured in the dry. Exposed corners to be chamfered 3/4" unless otherwise noted.

Rock excavations shall be made to neat lines of concrete footings. Care shall be exercised to avoid shattering of rock faces by excessive blasting. Concrete in footings shall be poured directly against excavated surfaces of rock. Excavate a minimum of 2'-0" into hard shale.

In general, all construction joints in bents shall be horizontal and shall be provided with keys not less than 12" high covering the middle third of both dimensions.

All piling shall be 10" BP 42# and shall be driven with an approved air, steam or diesel hammer to a minimum capacity of 80 tons per pile and to the material designated on plans on the boring logs. Lengths of pile shown are for estimating quantities only. Order lengths without cut-off or build-up, if necessary, to be paid for in accordance with the Standard Specifications.

Pile in end bents to be driven after embankment is in place, to subgrade.

Provide roadway drains at low side of roadway approximately 12' from bridge ends. Cull drains in opens over Railroad.

For Details of End Bents see Dwg. No. 13980 & 13980.
For Details of Intermediate Bents see Dwg. No. 13981 & 15942.
For Details of Composite I-Beam Spans see Dwg. Nos. 14990 thru 15943, 15944 & 14002.

SPECIFICATIONS: Arkansas State Highway Commission Standard Specifications for Highway Construction, Edition of 1960, the 1966 Supplemental Specifications thereto and the designated Special Provisions.

DESIGN SPECIFICATIONS: AASHO 1961

Live Loading: HS20 and Special Interstate Loading of two 24,000 axles spaced 4'0" on center.

Unit Stresses:

Class A Concrete (n=18)	840 psi
Class S Concrete (n=10)	1,200 psi
Reinforcing Steel	20,000 psi
Structural Steel (A 36)	20,000 psi

Maximum Foundation Pressure (Calculated) 11.05 T/ft² Gp. III.

Rev. Fnt Exp. to Agree with Dr. 3958-B
FZR 11-29-66

Revised Span Lts. & deleted channel excavation 7-12-65 FZR

L P Cochran
Bridge Engineer

FOR INFORMATION ONLY

(LEFT LANES)

LAYOUT OF BRIDGE OVER
MO. PAC. R.R & FLAT ROCK CREEK
ARK. RIVER BR. - JCT. I-40

CRAWFORD COUNTY

INT. ROUTE 540 SEC. 1

ARKANSAS STATE HIGHWAY COMMISSION
LITTLE ROCK, ARK.

DRAWN BY: KP DATE: 10-23-64
TRACED BY: DATE:
CHECKED BY: TK DATE: 9-27-65
SCALE: 1" = 20'

BRIDGE NO. A3958 DRAWING NO. 48576

DATE REVISED	DATE FILMED	DATE REVISED	DATE FILMED	FED. ROAD DIST. NO.	STATE	FED. AID PROJ. NO.	SHEET NO.	TOTAL SHEETS
				6	ARK.			
				JOB NO.		BB0407	282	464
				(1) A6881		EXHIBIT A		48577

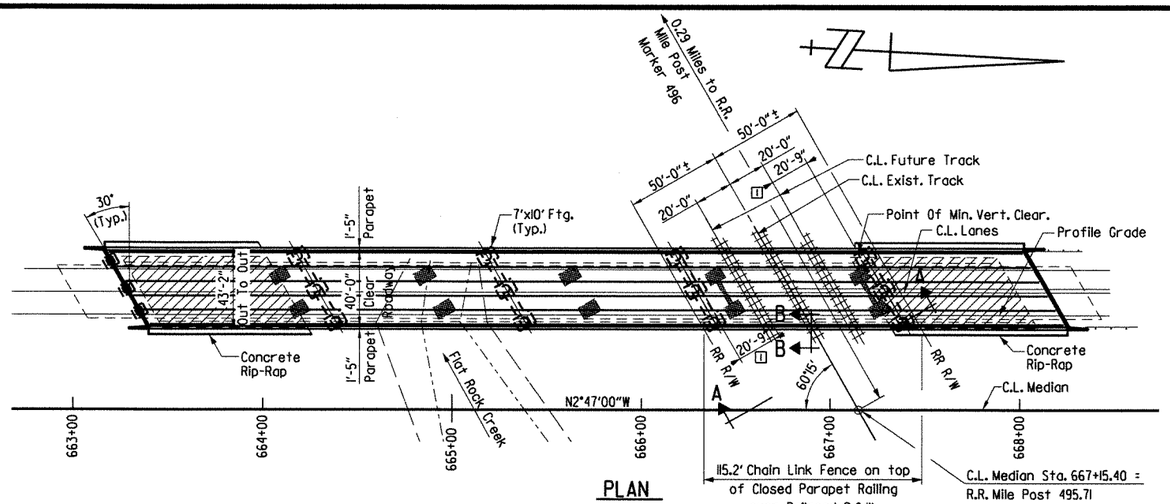

PLAN

[1] Minimum clear from centerline of future tracks to face of crash wall.

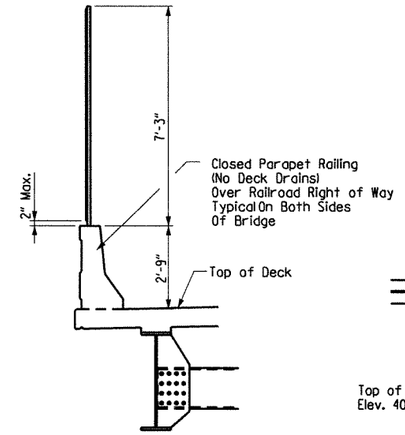

SECTION B-B

N.T.S.

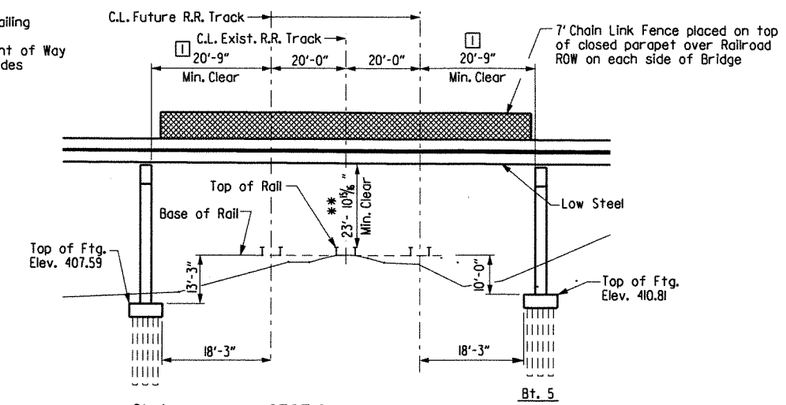

SECTION A-A

(Normal to Railroad Track)
N.T.S.

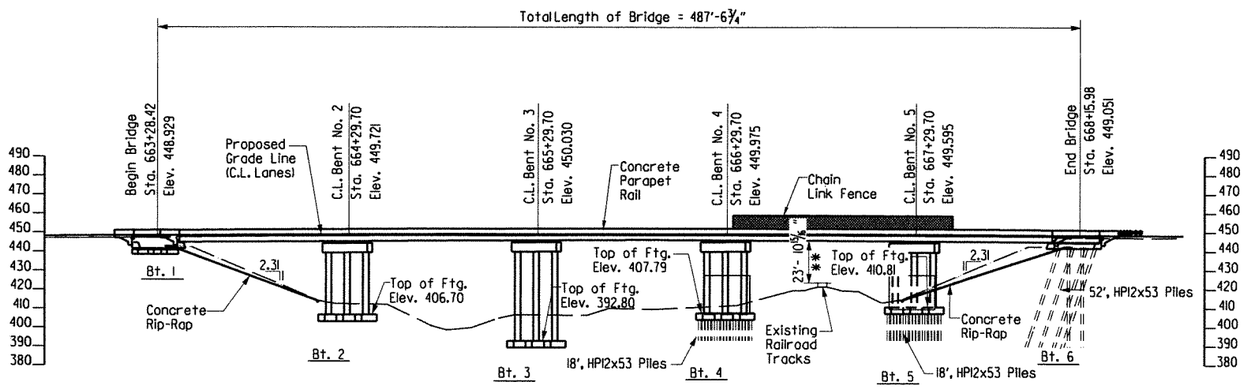

ELEVATION ALONG PROFILE GRADE

**Clearance from top of existing rail to low steel. A 6" allowance has been made for correction of existing sag in the track.

GENERAL NOTES

1. All demolition within the Railroad's right-of-way and/or demolition that may impact the Railroad's track(s) or operations shall comply with the Railroad's demolition requirements.
2. Erection over the Railroad's right-of-way shall be designed to cause no interruption to the Railroad's operation. Erection over the Railroad's track(s) shall be developed such that it enables the track(s) to remain open to traffic per the Railroad's requirements.
3. The Contractor must submit a proposed method of erosion and sediment control and have the method approved by the Railroad prior to beginning of grading on the project site.
4. Railroad requirements do not allow work within 50 feet of track centerline when a train passes the work site and all personnel must clear the area within 25 feet of the track centerline and secure all equipment when trains are present.
5. The State shall not plow ice, snow or sleet over the sides of the structure. In consideration of this practice, the Carrier waives its request for the State to attach splash boards to sides of the structure. This statement is in the State Railroad Agreement.
6. The proposed bridge structure will not significantly change the quantity and/or characteristic of the flow in the railway's ditches and/or drainage structures.
7. Closed parapet railing (no deck drains) shall be used over the Railroad's right-of-way on both sides of the bridge.
8. Construction shall comply with Union Pacific Railroad requirements noted in Job BB0407 Special Provision "Insurance, Construction, and Flagging Requirements on Railroad Property (Union Pacific Railroad)". Any shoring shall comply with UPRR requirements.
9. Railroad review and approval of shoring, erection, and falsework is required. Allow a minimum of four weeks for the review and approval of each submittal.
10. For Railroad coordination, refer to the Railroad Minimum Requirements of Job BB0407 Special Provision "Insurance, Construction, and Flagging Requirements on Railroad Property (Union Pacific Railroad)".
11. All permanent clearances shall be verified before project closing.

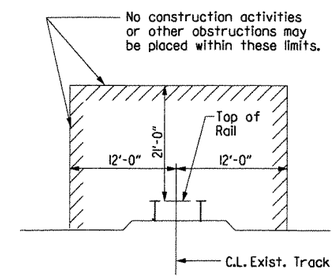

MINIMUM CONSTRUCTION CLEARANCES

(Normal to Railroad)
N.T.S.

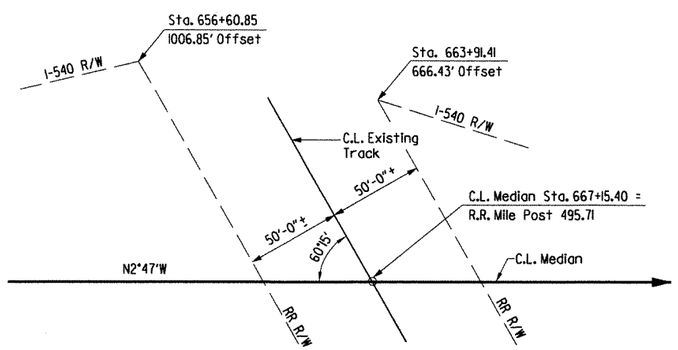

RIGHT OF WAY SKETCH

Utility Note:
Utilities within the construction area of span 4 include, but may not be limited to, systems owned by AT&T, Digital Teleport, and Contel. At least two working days prior to construction, the contractor shall call "Arkansas One-Call" @ 800-482-8998 to confirm the locations of these and any other utilities within the work area.

STATE OF ARKANSAS REGISTERED PROFESSIONAL ENGINEER No. 13339 LARRY W. MILLER
8-11-12
BRIDGE ENGINEER

EXHIBIT A
SHEET 1 OF 3
LAYOUT OF
BRIDGE OVER UNION PACIFIC RAILROAD
(BR. A6881)
HWY. 22 - I-40 (F)
CRAWFORD & SEBASTIAN COUNTIES
ROUTE I-540 SEC. 2
ARKANSAS STATE HIGHWAY COMMISSION
LITTLE ROCK, ARK.

DRAWN BY: TAR DATE: March 02 FILENAME: bBB0407m5_xl.dgn
CHECKED BY: JLH DATE: March 02 SCALE: N.T.S.
DESIGNED BY: BCG DATE: March 02
BRIDGE NO. A6881 DRAWING NO. 48577

$$$$date$$$

$$$$dgnspec$$$$$

...\b040468m5_x1.dgn 8/10/2012 3:50:03 PM

DATE REVISED	DATE FILMED	DATE REVISED	DATE FILMED	FED. ROAD DIST. NO.	STATE	FED. AID PROJ. NO.	SHEET NO.	TOTAL SHEETS
				6	ARK.			
				JOB NO.		BB0407	283	464
				(1) B6881		EXHIBIT A		48578

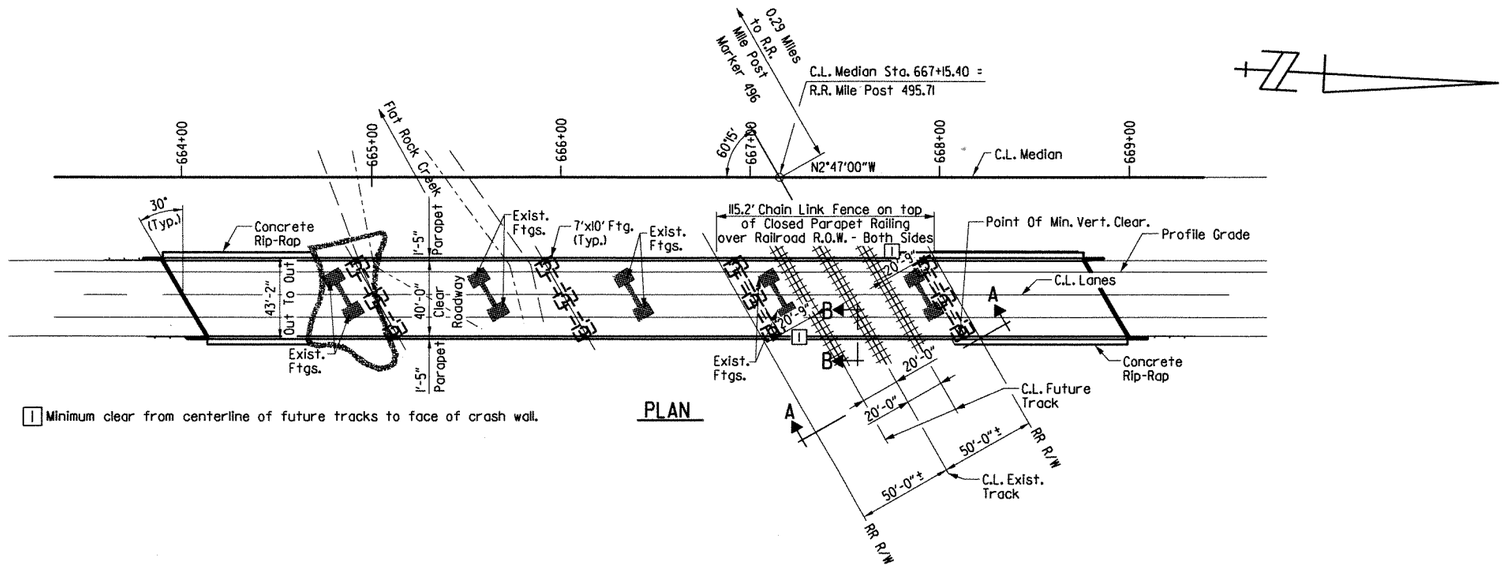

[1] Minimum clear from centerline of future tracks to face of crash wall.

PLAN

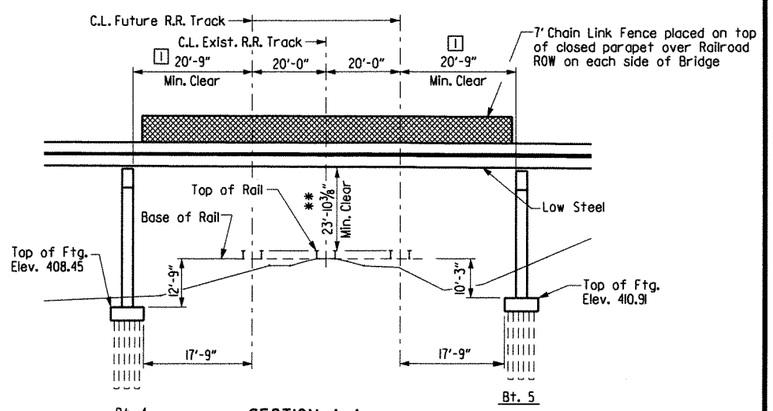

SECTION A-A

(Normal to Railroad Track)
N.T.S.

Note:
The proposed bridge structure will not change the quantity and/or charateristic of the flow in the railway's ditches and/or drainage structures.

Note:
The State shall not plow ice, snow or sleet over the sides of the structure. This statement is in the State-Railroad Agreement.

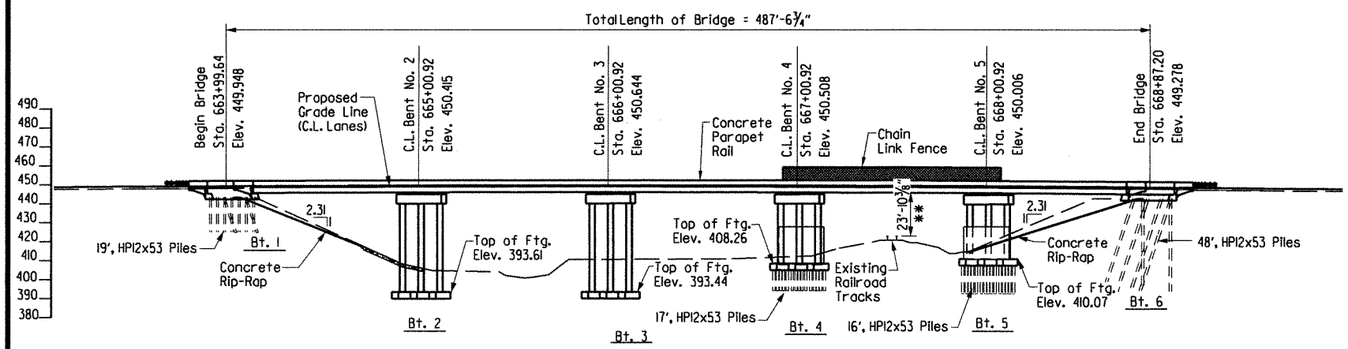

ELEVATION ALONG PROFILE GRADE

** Clearance from top of existing rail to low steel. A 6" allowance has been made for correction of existing sag in the track.

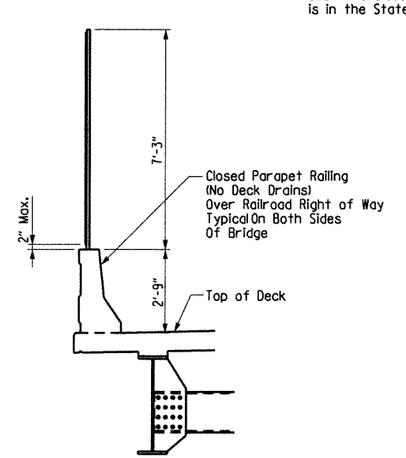

SECTION B-B

N.T.S.

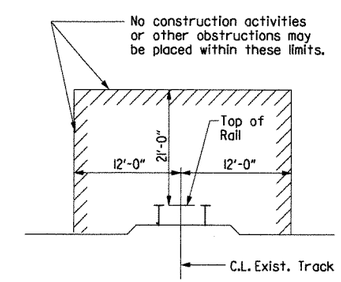

MINIMUM CONSTRUCTION CLEARANCES

(Normal to Railroad)
N.T.S.

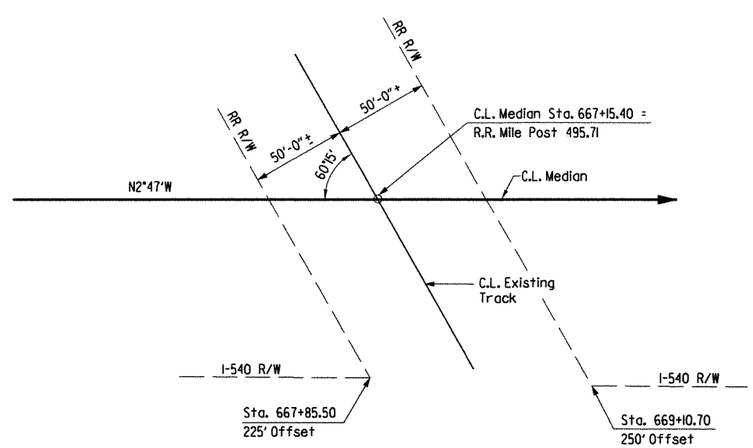

RIGHT OF WAY SKETCH

NOTE: The contractor shall check measurements of the existing bridge. Any adjustments necessary to fit the new work to the existing bridge location shall be submitted for the Engineer's approval.

STATE OF ARKANSAS REGISTERED PROFESSIONAL ENGINEER No. 11339 LARRY W. MILLER

Larry W. Miller 8-11-12

BRIDGE ENGINEER

EXHIBIT A
SHEET 2 OF 3
LAYOUT OF
BRIDGE OVER UNION PACIFIC RAILROAD
(BR. B6881)
HWY. 22 - I-40 (F)
CRAWFORD & SEBASTIAN COUNTIES
ROUTE I-540 SEC. 2
ARKANSAS STATE HIGHWAY COMMISSION
LITTLE ROCK, ARK.

DRAWN BY: TAR	DATE: March 02	FILENAME: bBB0407m5_x2.dgn	
CHECKED BY: JLH	DATE: March 02	SCALE: N.T.S.	
DESIGNED BY: BCG	DATE: March 02		
BRIDGE NO. B6881	DRAWING NO. 48578		

$$$$date$$$$

$$$$dgnspec$$$$$

...\b040468m5_x2.dgn 8/10/2012 3:50:03 PM

DATE REVISED	DATE FILMED	DATE REVISED	DATE FILMED	FED. ROAD DIST. NO.	STATE	FED. AID PROJ. NO.	SHEET NO.	TOTAL SHEETS
				6	ARK.			
				JOB NO.		BB0407	284	464
				(1) A6881, B6881		EXHIBIT A		48579

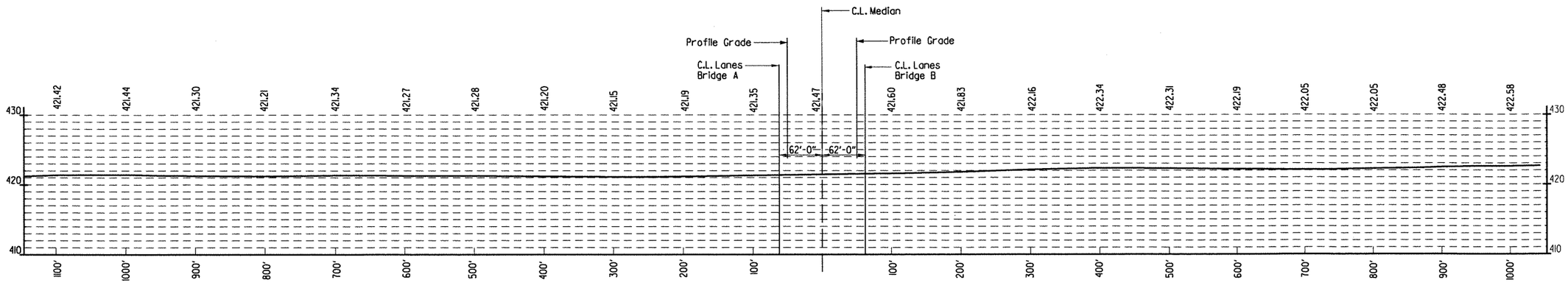

EXISTING PROFILE ALONG TOP OF SOUTH RAIL

N.T.S.

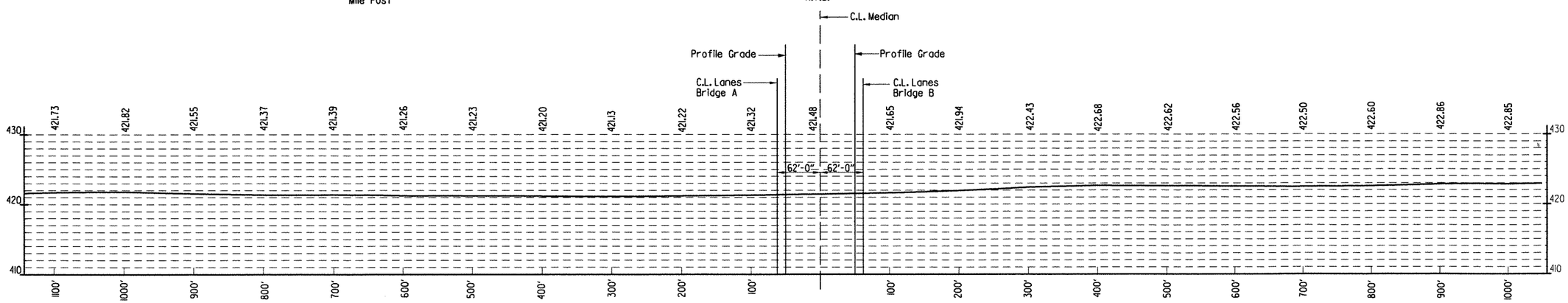

EXISTING PROFILE ALONG TOP OF NORTH RAIL

N.T.S.

The elevations of the existing top-of-rail profile shall be verified prior to beginning construction.

EXHIBIT A
SHEET 3 OF 3
LAYOUT OF
BRIDGE OVER UNION PACIFIC RAILROAD
(BR. A6881)
HWY. 22 - I-40 (F)
CRAWFORD & SEBASTIAN COUNTIES
ROUTE I-540 SEC. 2
ARKANSAS STATE HIGHWAY COMMISSION
LITTLE ROCK, ARK.

STATE OF ARKANSAS REGISTERED PROFESSIONAL ENGINEER No. 10339 LARRY D. MILLER

Larry D. Miller 8-11-12
BRIDGE ENGINEER

DRAWN BY: TAR DATE: March 02 FILENAME: bBB0407m5_x3.dgn
CHECKED BY: JLH DATE: March 02 SCALE: N.T.S.
DESIGNED BY: BCG DATE: March 02
BRIDGE NO. A6881 & B6881 DRAWING NO. 48579

$$$$dgnspec$$$$$*

$$$$date$$$$

...\b040468m5_x3.dgn 8/10/2012 3:50:04 PM

DATE REVISED	DATE FILMED	DATE REVISED	DATE FILMED	FED. ROAD DIST. NO.	STATE	FED. AID PROJ. NO.	SHEET NO.	TOTAL SHEETS
				6	ARK.			
				JOB NO.		BB0407	285	464
				(1) A6881		BENT DTLS.		48580

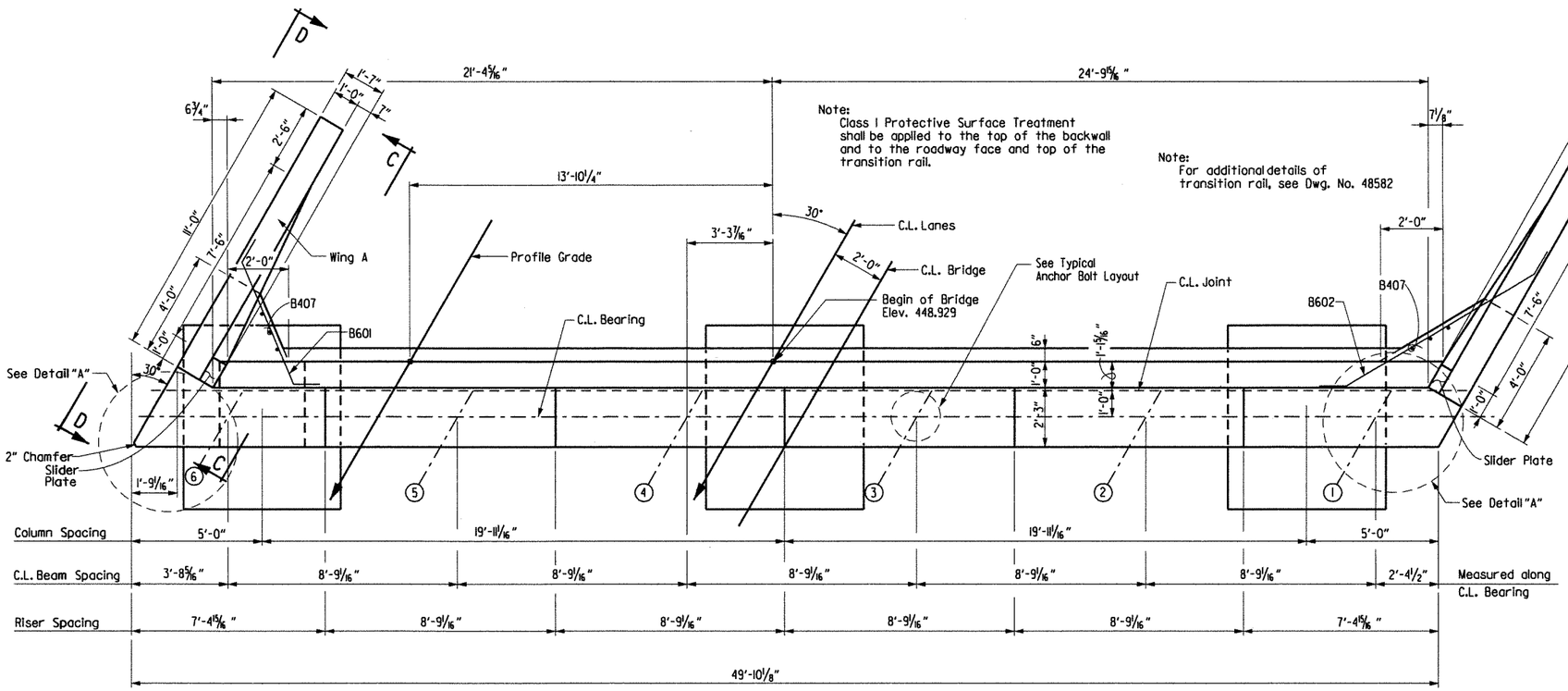

PLAN

3/8" = 1'-0"

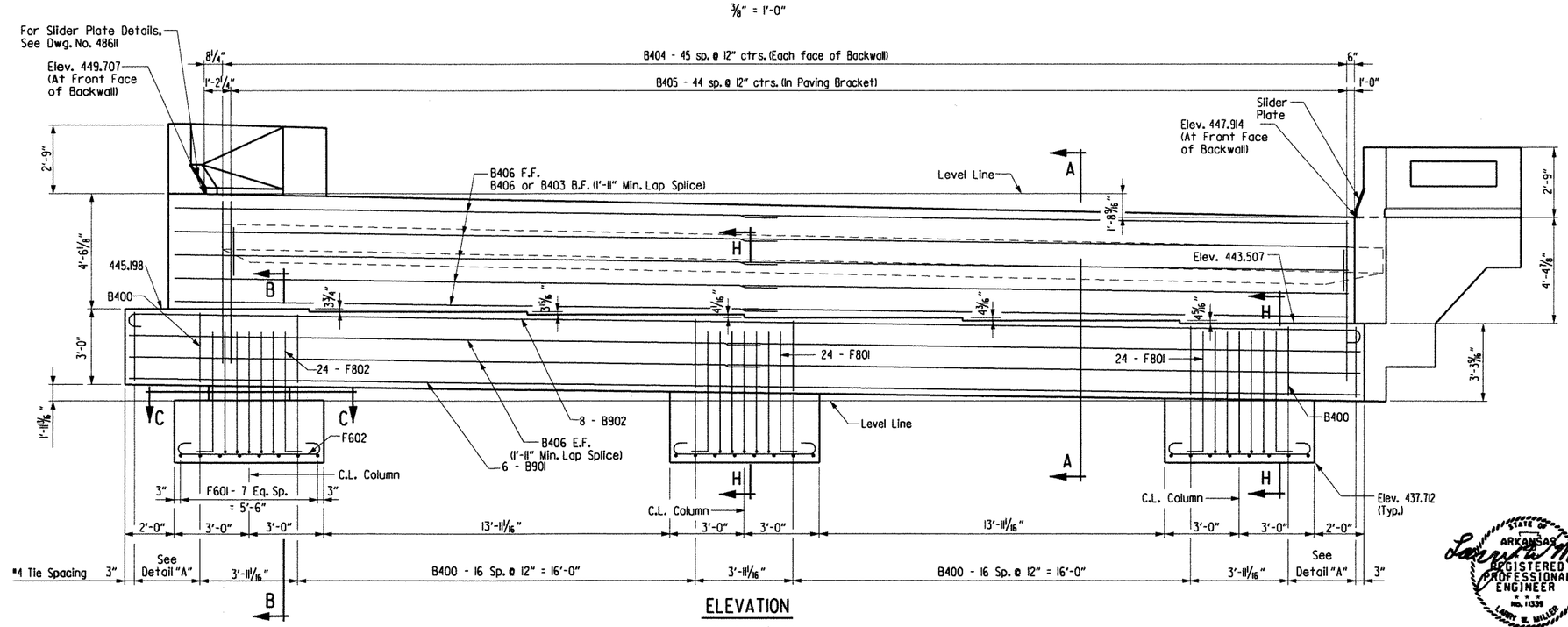

ELEVATION

(Looking Back)

3/8" = 1'-0"

SUBSTRUCTURE GENERAL NOTES

All concrete shall be Class "S" and shall be poured in the dry. All exposed corners shall be chamfered 3/4" unless otherwise noted.

All reinforcing steel shall conform to AASHTO M31 or M53, Gr. 60.

End Bent backwall shall not be poured before girders are in place. Backwall to be placed after concrete span placement.

Structural steel in end bents shall be AASHTO M270, Gr. 50W and shall be paid for as "Structural Steel in Beam Spans (M270, Gr. 50W)".

If anchor bolts are drilled into cap, top reinforcing bars shall be properly spaced to avoid damage.

For additional information, see Layout.

The parapet slider plates shall be cleaned in accordance with subsection 807.84(b) and painted in accordance with subsection 807.75. The color of paint shall be Gray and shall match Fed. Std. 595B, Color Chip 26176. Cleaning and painting will not be paid for directly but will be considered subsidiary to "Structural Steel in Beam Spans (Gr. 50W)".

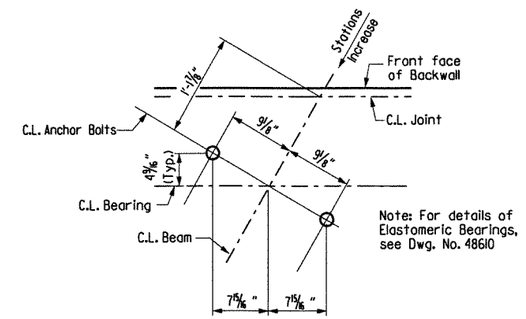

TYPICAL ANCHOR BOLT LAYOUT

No Scale

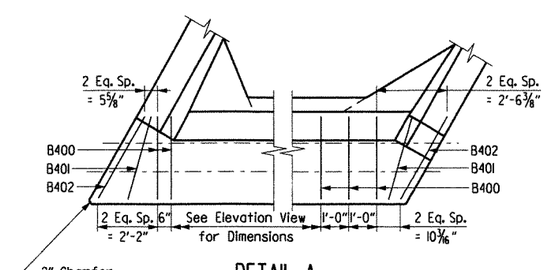

DETAIL A

3/8" = 1'-0"

SHEET 1 OF 3

DETAILS OF BENT NO. 1

BRIDGE OVER UNION PACIFIC RAILROAD

(BR. A6881)

CRAWFORD & SEBASTIAN COUNTIES

ROUTE I-540 SEC. 2

ARKANSAS STATE HIGHWAY COMMISSION

LITTLE ROCK, ARK.

STATE OF ARKANSAS REGISTERED PROFESSIONAL ENGINEER No. 11339 LARRY W. MILLER

8-11-12

BRIDGE ENGINEER

DRAWN BY: TAR	DATE: April 02	FILENAME: bBB0407a5 bll.dgn			
CHECKED BY: EMB/ETH	DATE: April 02	SCALE: As Shown			
DESIGNED BY: JLH	DATE: Jan 02				

BRIDGE NO. A6881 DRAWING NO. 48580

$$$$date$$$

$$$$dgnspec$$$$$

...\b040468a5_b11.dgn 8/10/2012 3:50:04 PM

DATE REVISED	DATE FILMED	DATE REVISED	DATE FILMED	FED. ROAD DIST. NO.	STATE	FED. AID PROJ. NO.	SHEET NO.	TOTAL SHEETS
				6	ARK.			
				JOB NO.		BB0407	286	464
				1 A6881		BENT DTLS.		48581

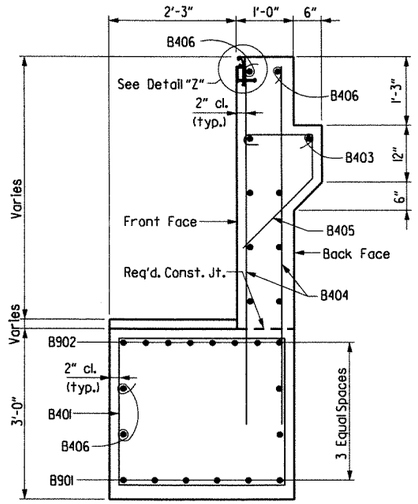

SECTION A-A

3/4" = 1'-0"

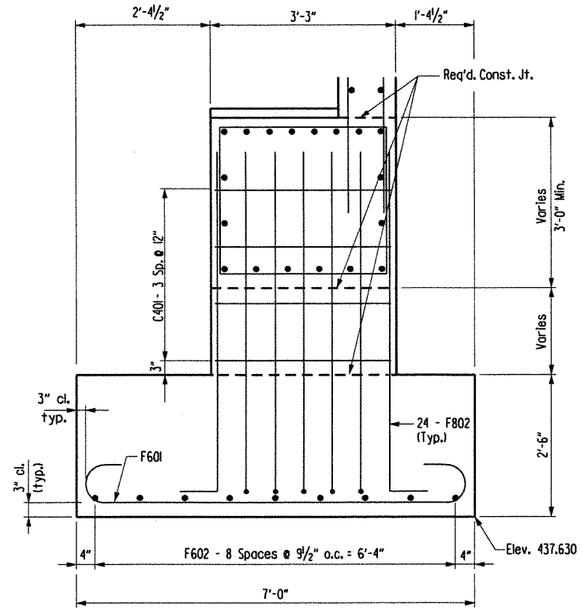

SECTION B-B

3/4" = 1'-0"

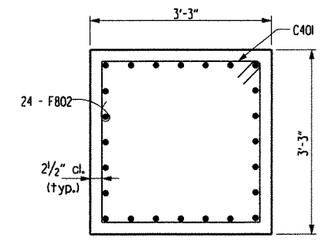

SECTION C-C

3/4" = 1'-0"

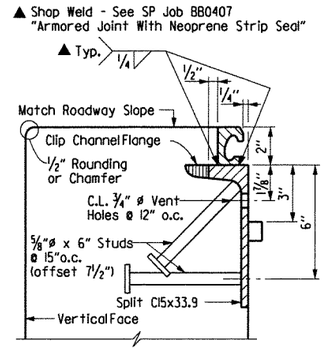

Note: Concrete shall be hand packed under the joint armor in the backwall.

For additional details, See Dwg. No. 48611.

DETAIL Z

3"= 1'-0"

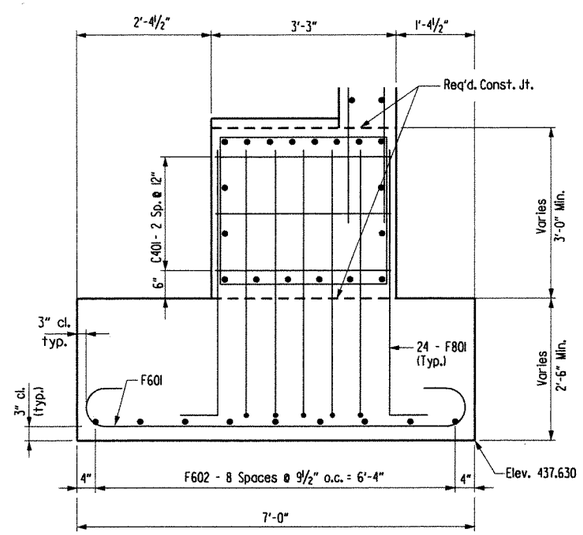

SECTION H-H

3/4" = 1'-0"

SHEET 2 OF 3

DETAILS OF BENT NO. 1

BRIDGE OVER UNION PACIFIC RAILROAD

(BR. A6881)

CRAWFORD & SEBASTIAN COUNTIES

ROUTE I-540 SEC. 2

ARKANSAS STATE HIGHWAY COMMISSION

LITTLE ROCK, ARK.

STATE OF ARKANSAS REGISTERED PROFESSIONAL ENGINEER No. 10339 LARRY E. MILLER

8-11-12

BRIDGE ENGINEER

DRAWN BY:	TAR	DATE:	April 02	FILENAME:	bBB0407a5 b12.dgn
CHECKED BY:	EMB	DATE:	April 02	SCALE:	As Shown
DESIGNED BY:	JLH	DATE:	Jan 02		

BRIDGE NO. A6881 DRAWING NO. 48581

$$$$date$$$$

$$$$dgnspec$$$$$

...\b040468a5_b12.dgn 8/10/2012 3:50:05 PM

DATE REVISED	DATE FILMED	DATE REVISED	DATE FILMED

FED. ROAD DIST. NO.	STATE	FED. AID PROJ. NO.	SHEET NO.	TOTAL SHEETS
6	ARK.			
JOB NO.		BB0407	287	464
A6881		BENT DTLS.		48582

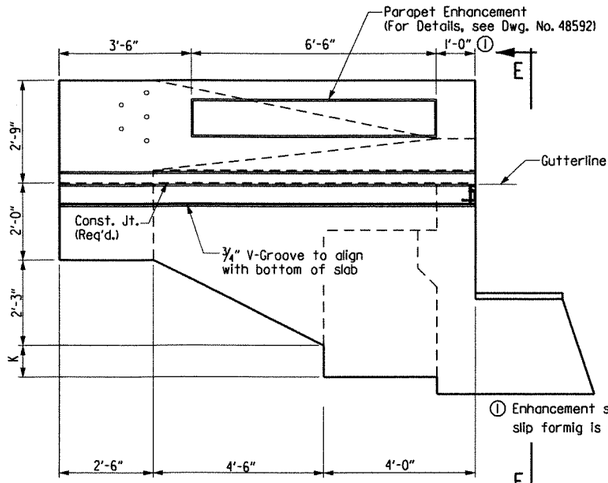

① Enhancement shall be continuous if slip formig is used on bridge parapet.

VIEW D-D - STAGE II

(Stage IV Similar)
Scale: 1/2" = 1'-0"

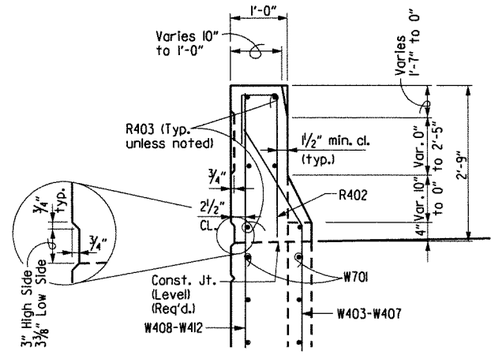

SECTION F-F

Scale: 3/4" = 1'-0"

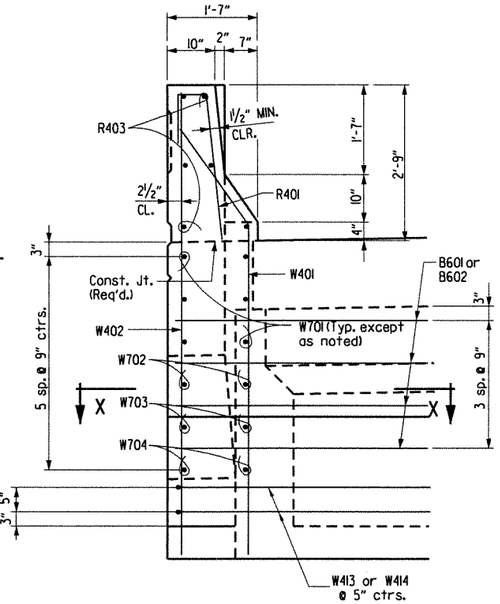

VIEW E-E

Scale: 3/4" = 1'-0"

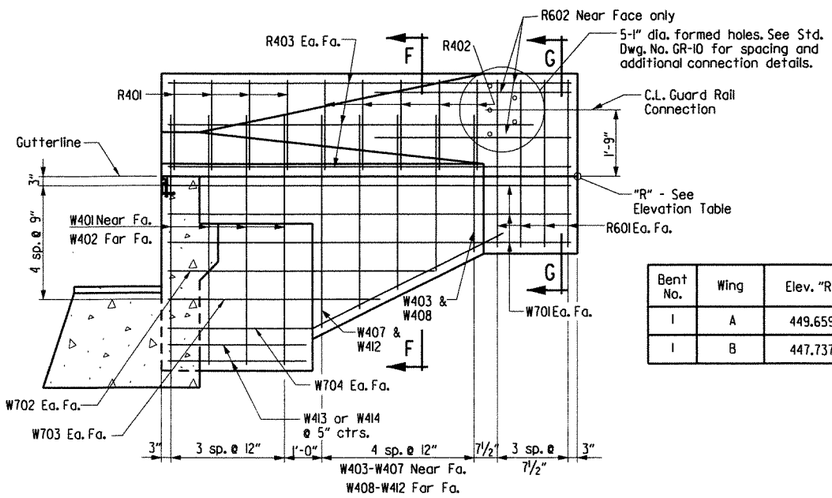

Bent No.	Wing	Elev. "R"	K
1	A	449.659	1'-8 3/4"
1	B	447.737	1'-7 7/16"

SECTION C-C - STAGE II

(Stage IV Similar)
Scale: 1/2" = 1'-0"

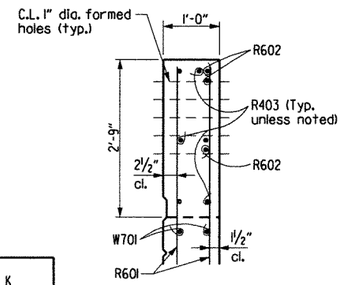

SECTION G-G

Scale: 3/4" = 1'-0"

BAR LIST

Mark	No. Req'd.	Length	"A"	"B"	Pin Dia.
B400	39	11'-6"	2'-8"	2'-11"	2"
B401	2	11'-8"	2'-8"	3'-0"	2"
B402	2	12'-6"	2'-8"	3'-5"	2"
B403	2	24'-1"			STR.
B404	92	6'-0"			STR.
B405	45	3'-11"	1'-2"	4 1/2"	3"
B406	26	25'-9"			STR.
B407	6	4'-0"			STR.
B601	4	7'-1"	5'-1"	1'-0"	4 1/2"
B602	4	10'-4"	8'-4"	1'-0"	4 1/2"
B901	6	49'-6"			STR.
B902	8	52'-0"			9"
C401	9	11'-10"	2'-10"	2'-10"	3"
F601	24	7'-10"			4 1/2"
F602	27	6'-10"			4 1/2"
F801	48	6'-4"			6"
F802	24	8'-0"			6"
R401	8	3'-11"			2"
R402	8	3'-11"			2"
R403	12	9'-8"			STR.
R601	16	4'-5"			STR.
R602	6	5'-0"			STR.
W401	8	7'-3"	6'-1"	1'-2"	2"
W402	8	8'-4"			STR.
W403 - W407	2 ea.	Varies 3'-4 to 5'-4"	Varies 2'-2 to 4'-2"	1'-2"	2"
W408 - W412	2 ea.	Varies 4'-5" to 6'-5"			STR.
W413	2	10'-0"			2"
W414	2	13'-3"			2"
W701	12	9'-8"			STR.
W702	4	6'-0"			STR.
W703	4	4'-6"			STR.
W704	4	8'-4"	2'-9"	5'-7"	5 1/2

Bending Diagrams (Dimensions are out to out of bars.)

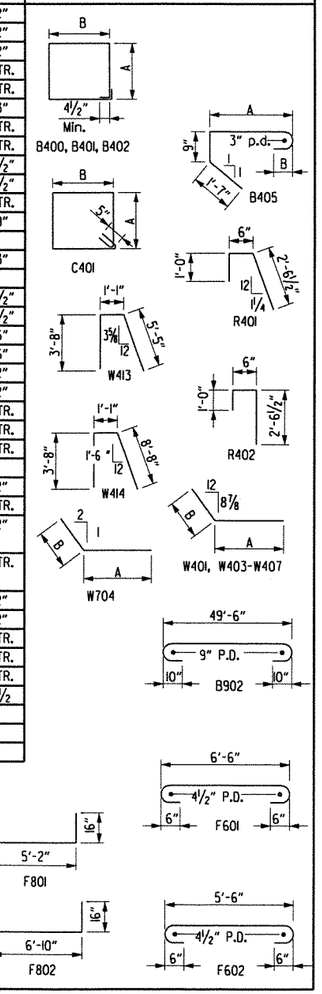

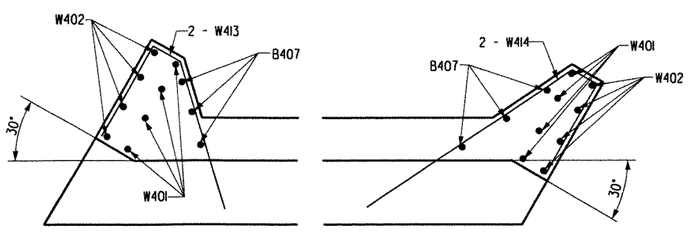

SECTION X-X

Wing A

SECTION X-X

Wing B

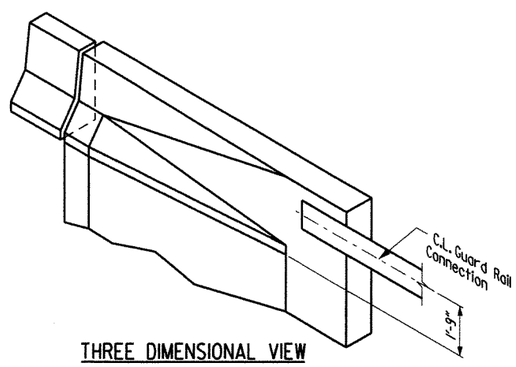

THREE DIMENSIONAL VIEW WING RAIL & PARAPET

No Scale

STATE OF ARKANSAS
LARRY W. MILLER
REGISTERED PROFESSIONAL ENGINEER
No. 11039
8-11-12
BRIDGE ENGINEER

SHEET 3 OF 3
DETAILS OF BENT NO. 1
BRIDGE OVER UNION PACIFIC RAILROAD
(BR. A6881)
CRAWFORD & SEBASTIAN COUNTIES
ROUTE I-540 SEC. 2
ARKANSAS STATE HIGHWAY COMMISSION
LITTLE ROCK, ARK.

DRAWN BY: TAR DATE: April 02 FILENAME: bBB0407a5 b13.dgn
CHECKED BY: EWB/ETH DATE: April 02 SCALE: As Shown
DESIGNED BY: BCG DATE: Dec 01
BRIDGE NO. A6881 DRAWING NO. 48582

$$$$date$$$$
$$$$dgnspec$$$$$

...\b040468a5_b13.dgn 8/10/2012 3:50:05 PM

DATE REVISED	DATE FILMED	DATE REVISED	DATE FILMED	FED. ROAD DIST. NO.	STATE	FED. AID PROJ. NO.	SHEET NO.	TOTAL SHEETS
				6	ARK.			
				JOB NO.		BB0407	288	464
				(1) A6881		BENT DTLS.		48583

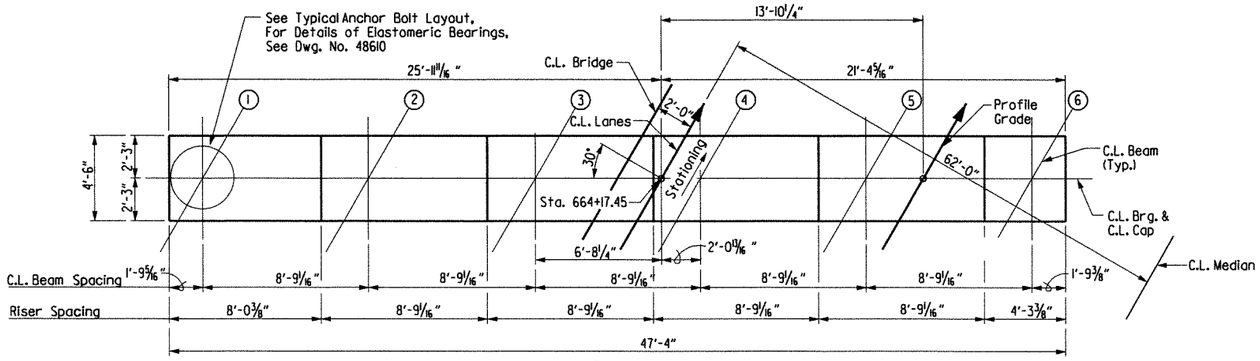

PLAN

Scale: ¼" = 1'-0"

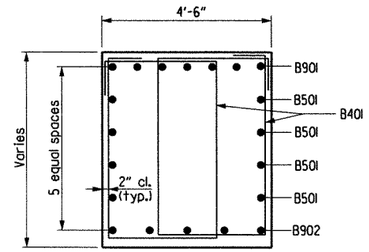

SECTION B-B

Scale: ½" = 1'-0"

BAR LIST

Mark	No. Req'd.	Length	Pin Dia.
B401	56	15'-6"	2"
B402	9	13'-6"	2"
B501	8	47'-0"	STR.
B901	7	49'-6"	9"
B902	5	47'-0"	STR.
C401	116	12'-4"	3"
C801	81	36'-8"	STR.
C802	81	10'-11"	6"
F701	24	8'-2"	5¼"
F901	24	12'-0"	9"

Bending Diagrams (Dimensions are out to out of bars.)

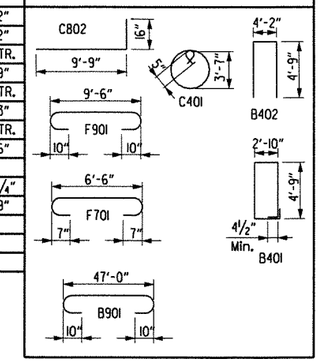

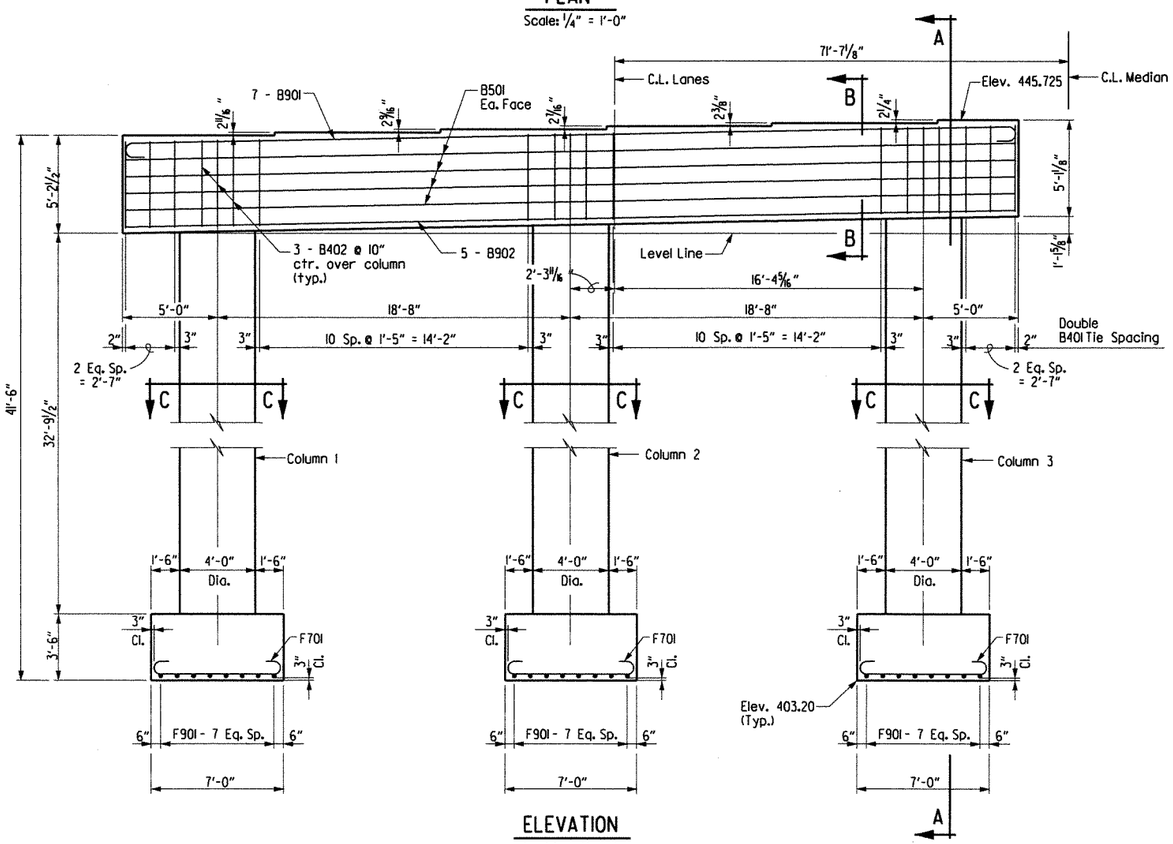

ELEVATION

Looking Ahead
Scale: ¼" = 1'-0"

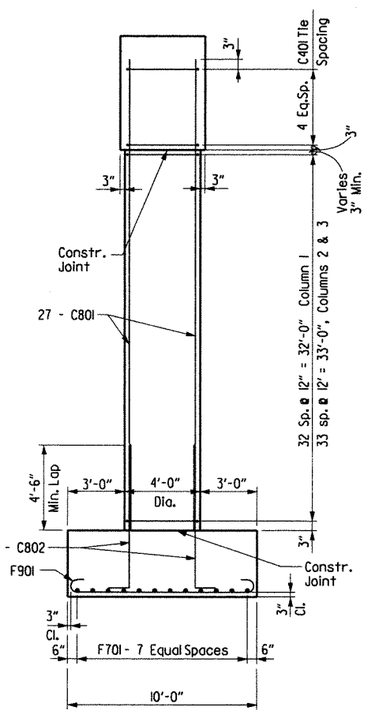

SECTION A-A

Scale: ¼" = 1'-0"

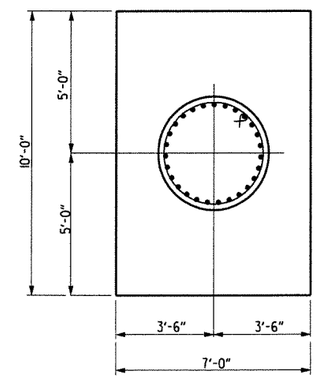

PLAN OF FOOTING

Scale: ⅜" = 1'-0"

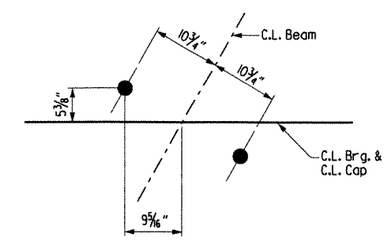

TYPICAL ANCHOR BOLT LAYOUT

No Scale

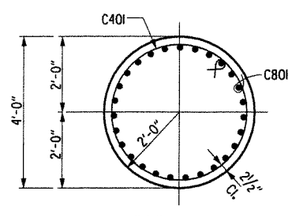

SECTION C-C

Scale: ½" = 1'-0"

Notes:

All concrete shall be Class "S" and shall be poured in the dry. All exposed corners shall be chamfered ¾" unless otherwise noted.

All reinforcing steel shall conform to AASHTO M31 or M53, Grade 60.

If anchor bolts are drilled into cap, top reinforcing bars shall be properly placed to avoid damage.

For additional information, see Layout.

DETAILS OF BENT NO. 2
BRIDGE OVER UNION PACIFIC RAILROAD
(BR. A6881)
CRAWFORD & SEBASTIAN COUNTIES

ROUTE I-540 SEC. 2

ARKANSAS STATE HIGHWAY COMMISSION
LITTLE ROCK, ARK.

STATE OF ARKANSAS REGISTERED PROFESSIONAL ENGINEER No. 10339 LARRY W. MILLER
8-11-12
BRIDGE ENGINEER

DRAWN BY: TAR	DATE: Feb 02	FILENAME:	bBB0407a5 b2.dgn
CHECKED BY: EMB/ETH	DATE: April 02	SCALE:	As Shown
DESIGNED BY: JLH	DATE: Jan 02		

BRIDGE NO. A6881 DRAWING NO. 48583

$$$$date$$$

$$$$dgnspec$$$$$

...\b040468a5_b2.dgn 8/10/2012 3:50:05 PM

DATE REVISED	DATE FILMED	DATE REVISED	DATE FILMED	FED. ROAD DIST. NO.	STATE	FED. AID PROJ. NO.	SHEET NO.	TOTAL SHEETS
				6	ARK.			
				JOB NO.		BB0407	259	464
				1 A6881		BENT DTLS.		48584

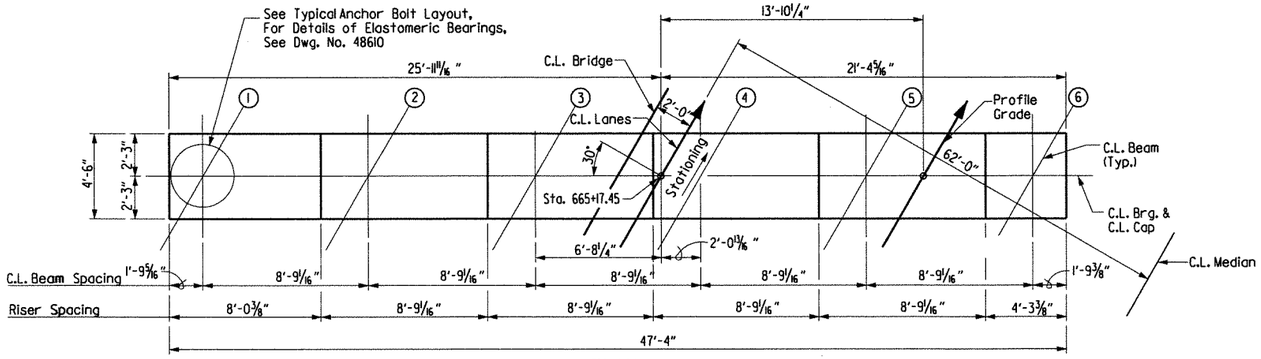

PLAN

Scale: ¼" = 1'-0"

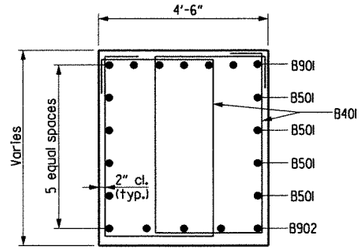

SECTION B-B

Scale: ½" = 1'-0"

BAR LIST

Mark	No. Req'd.	Length	Pin Dia.
B401	56	15'-6"	2"
B402	9	13'-6"	2"
B501	8	47'-0"	STR.
B901	7	49'-6"	9"
B902	5	47'-0"	STR.
C401	158	12'-4"	3"
C801	81	50'-9"	STR.
C802	81	10'-11"	6"
F701	24	8'-2"	5¼"
F901	24	12'-0"	9"

Bending Diagrams (Dimensions are out to out of bars.)

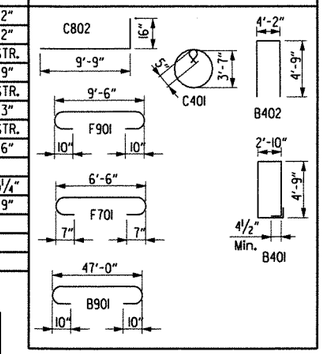

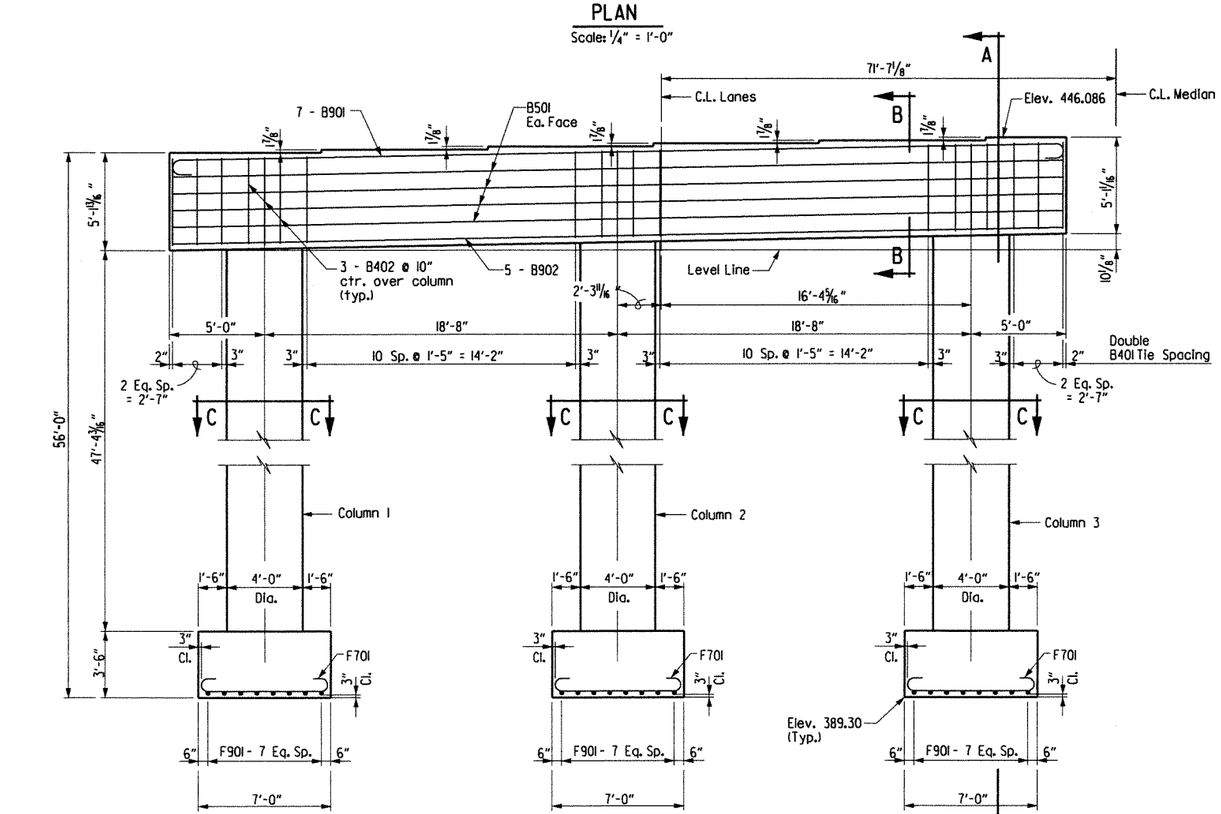

ELEVATION

Looking Ahead
Scale: ¼" = 1'-0"

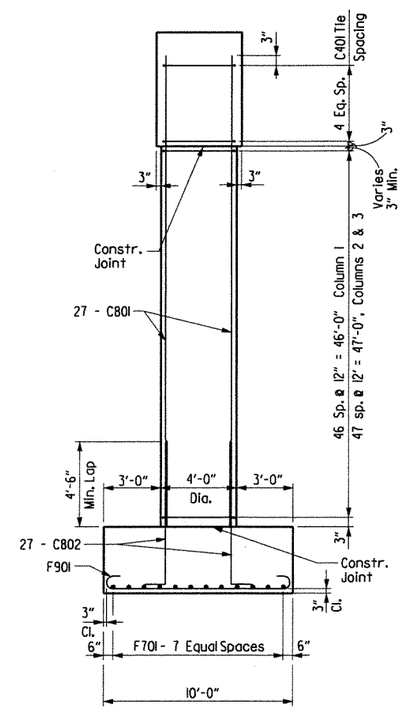

SECTION A-A

Scale: ¼" = 1'-0"

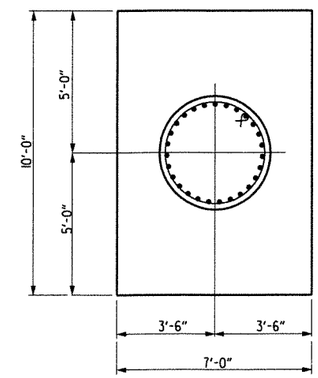

PLAN OF FOOTING

Scale: ⅜" = 1'-0"

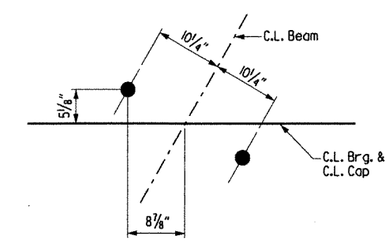

TYPICAL ANCHOR BOLT LAYOUT

No Scale

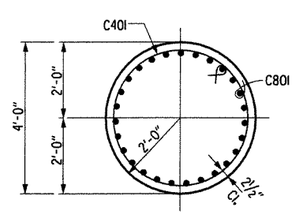

SECTION C-C

Scale: ½" = 1'-0"

Notes:

All concrete shall be Class "S" and shall be poured in the dry. All exposed corners shall be chamfered ¾" unless otherwise noted.

All reinforcing steel shall conform to AASHTO M31 or M53, Grade 60.

If anchor bolts are drilled into cap, top reinforcing bars shall be properly placed to avoid damage.

For additional information, see Layout.

STATE OF ARKANSAS REGISTERED PROFESSIONAL ENGINEER No. 13339 LARRY E. MILLER

Larry E. Miller 8-11-12

BRIDGE ENGINEER

DETAILS OF BENT NO. 3
BRIDGE OVER UNION PACIFIC RAILROAD
(BR. A6881)
CRAWFORD & SEBASTIAN COUNTIES

ROUTE I-540 SEC. 2

ARKANSAS STATE HIGHWAY COMMISSION

LITTLE ROCK, ARK.

DRAWN BY: TAR	DATE: Feb 02	FILENAME: bBB0407a5 b3.dgn			
CHECKED BY: EMB/ETH	DATE: April 02	SCALE: As Shown			
DESIGNED BY: JLH	DATE: Jan 02				

BRIDGE NO. A6881 DRAWING NO. 48584

$$$$dgnspec$$$$$

$$$$date$$$$

...\b040468a5_b3.dgn 8/10/2012 3:50:06 PM

DATE REVISED	DATE FILMED	DATE REVISED	DATE FILMED	FED. ROAD DIST. NO.	STATE	FED. AID PROJ. NO.	SHEET NO.	TOTAL SHEETS
				6	ARK.			
				JOB NO.		BB0407	290	464
				(1) A6881		BENT DTLS.		48585

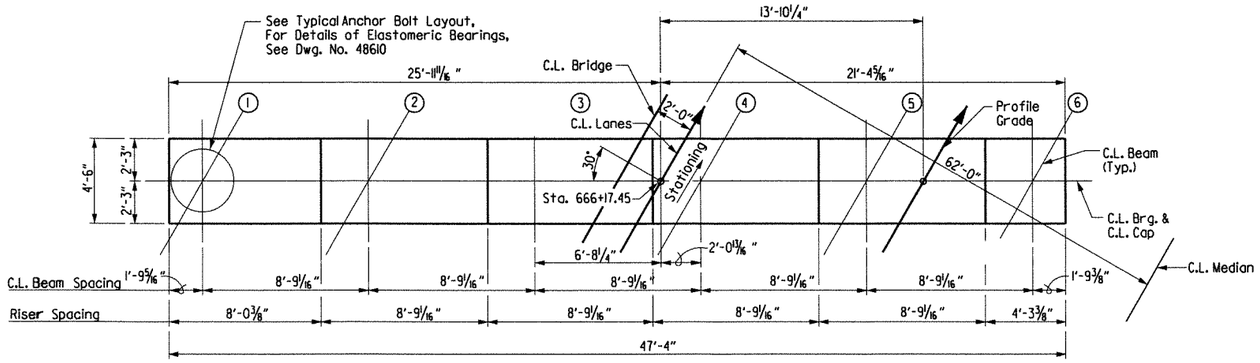

PLAN

Scale: ¼" = 1'-0"

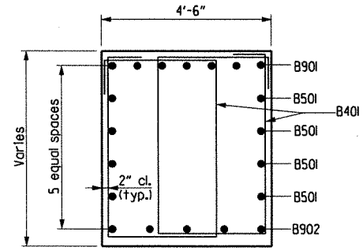

SECTION B-B

Scale: ½" = 1'-0"

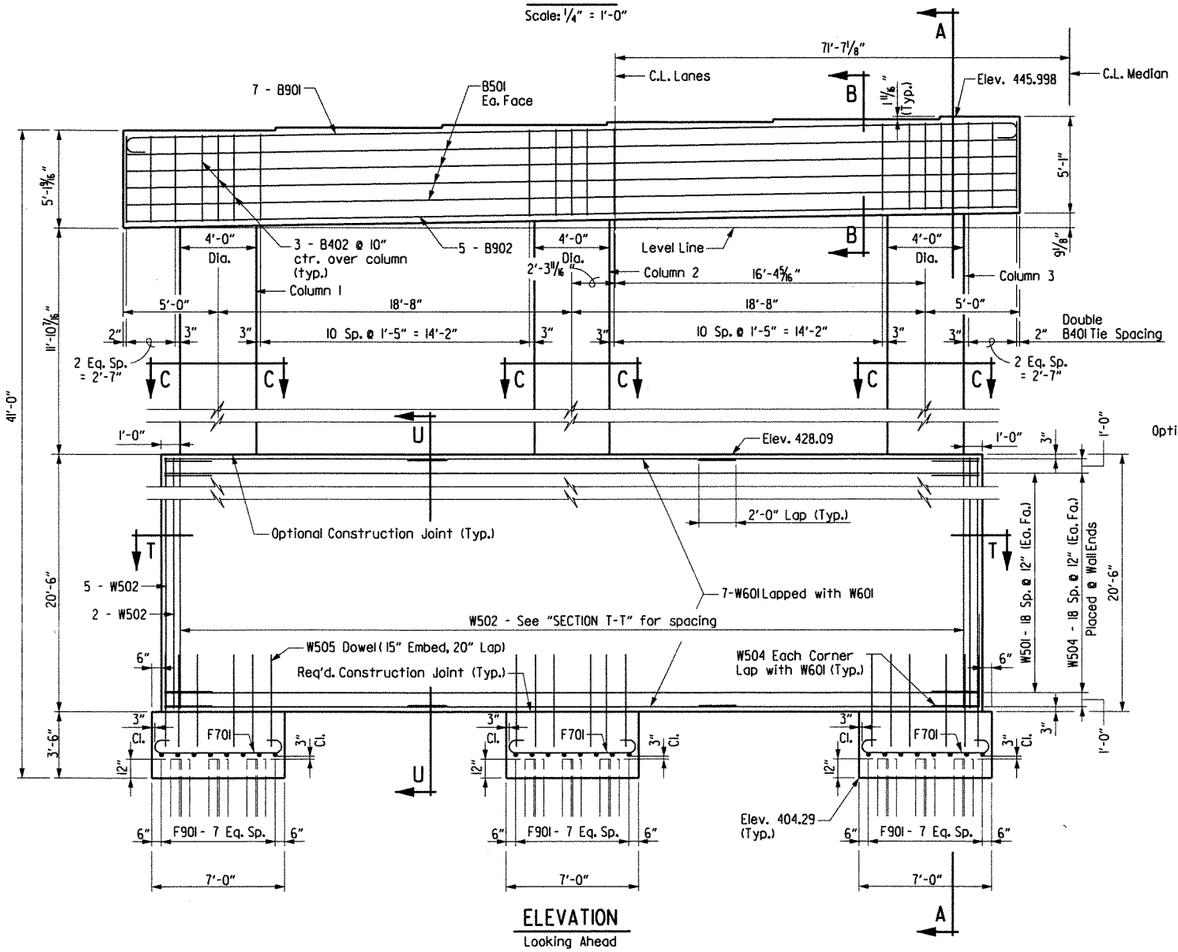

ELEVATION

Looking Ahead

Scale: ¼" = 1'-0"

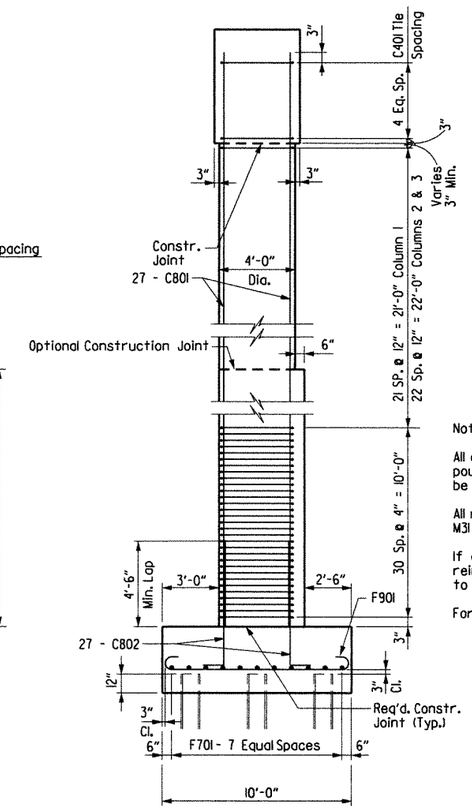

SECTION A-A

Scale: ¼" = 1'-0"

BAR LIST

Mark	No. Req'd.	Length	Pin Dia.
B401	56	15'-6"	2"
B402	9	13'-6"	2"
B501	8	47'-0"	STR.
B901	7	49'-6"	9"
B902	5	47'-0"	STR.
C401	173	12'-4"	3"
C801	81	36'-0"	STR.
C802	81	7'-11"	6"
F701	24	8'-2"	5¼"
F901	24	12'-0"	9"
W501	38	42'-2"	STR.
W502	90	20'-2"	STR.
W503	68	8'-10"	2"
W504	42	8'-11"	2"
W505	42	3'-3"	STR.
W601	42	15'-5"	STR.

Bending Diagrams (Dimensions are out to out of bars.)

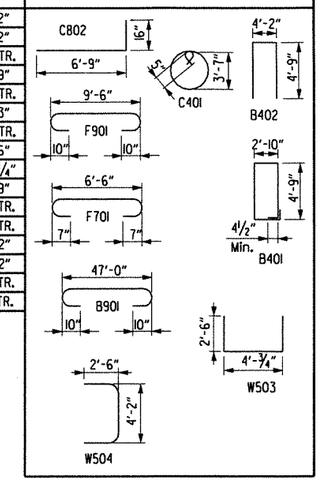

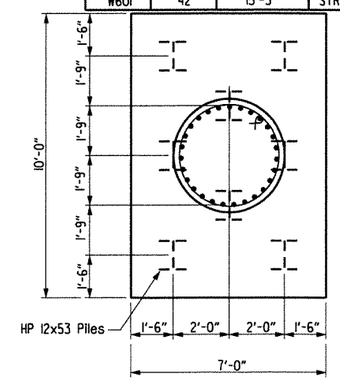

PLAN OF FOOTING

Scale: ⅜" = 1'-0"

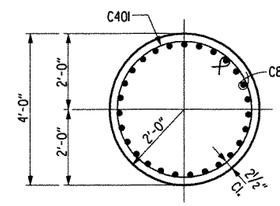

SECTION C-C

Scale: ½" = 1'-0"

Notes:

All concrete shall be Class "S" and shall be poured in the dry. All exposed corners shall be chamfered ¾" unless otherwise noted.

All reinforcing steel shall conform to AASHTO M31 or M53, Grade 60.

If anchor bolts are drilled into cap, top reinforcing bars shall be properly placed to avoid damage.

For additional information, see Layout.

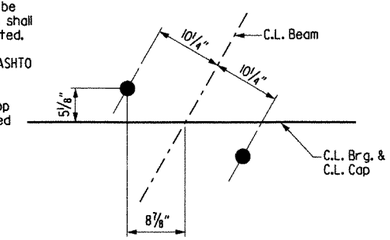

TYPICAL ANCHOR BOLT LAYOUT

No Scale

SHEET 1 OF 2

DETAILS OF BENT NO. 4

BRIDGE OVER UNION PACIFIC RAILROAD

(BR. A6881)

CRAWFORD & SEBASTIAN COUNTIES

ROUTE I-540 SEC. 2

ARKANSAS STATE HIGHWAY COMMISSION

LITTLE ROCK, ARK.

STATE OF ARKANSAS REGISTERED PROFESSIONAL ENGINEER No. 11339 LARRY W. MILLER

8-11-12

BRIDGE ENGINEER

DRAWN BY: TAR	DATE: Feb 02	FILENAME: bBB0407a5 b4.dgn			
CHECKED BY: EMB/ETH	DATE: April 02	SCALE: As Shown			
DESIGNED BY: JLH	DATE: Jan 02				
BRIDGE NO. A6881	DRAWING NO. 48585				

$$$$date$$$$

$$$$dgnspec$$$$$

...\b040468a5_b4.dgn 8/10/2012 3:50:06 PM

DATE REVISED	DATE FILMED	DATE REVISED	DATE FILMED	FED. ROAD DIST. NO.	STATE	FED. AID PROJ. NO.	SHEET NO.	TOTAL SHEETS
				6	ARK.			
				JOB NO.		BB0407	291	464
				(1) A6881		BENT DTLS.		48585A

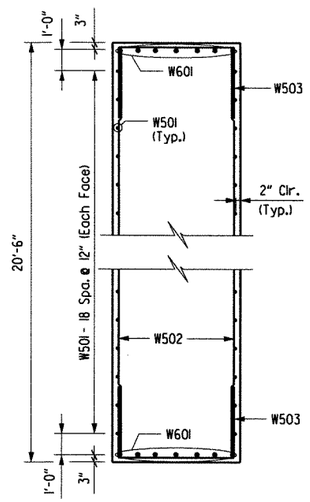

SECTION U-U
Scale: 3/8" = 1'-0"

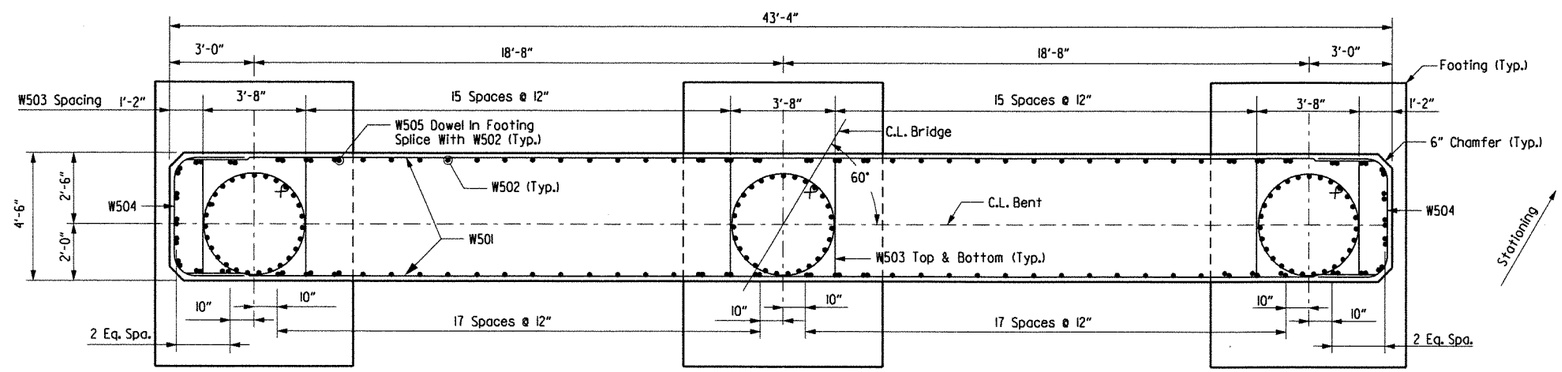

SECTION T-T
Scale: 3/8" = 1'-0"

SHEET 2 OF 2
DETAILS OF BENT NO. 4
BRIDGE OVER UNION PACIFIC RAILROAD
(BR. A6881)
CRAWFORD & SEBASTIAN COUNTIES
ROUTE I-540 SEC. 2
ARKANSAS STATE HIGHWAY COMMISSION
LITTLE ROCK, ARK.

STATE OF ARKANSAS REGISTERED PROFESSIONAL ENGINEER No. 11339 LARRY W. MILLER
Larry W. Miller 8-11-12
BRIDGE ENGINEER

DRAWN BY: TAR DATE: Feb 02 FILENAME: bBB0407a5 b4a.dgn
CHECKED BY: EMB/ETH DATE: April 02 SCALE: As Shown
DESIGNED BY: JLH DATE: Jan 02
BRIDGE NO. A6881 DRAWING NO. 48585A

$$$$date$$$$
$$$$dgnspec$$$$*

...\B040468A5_B4a.dgn 8/10/2012 3:50:07 PM

DATE REVISED	DATE FILMED	DATE REVISED	DATE FILMED	FED. ROAD DIST. NO.	STATE	FED. AID PROJ. NO.	SHEET NO.	TOTAL SHEETS
				6	ARK.			
				JOB NO.		BB0407	292	464
				(1) A6881		BENT DTLS.		48586

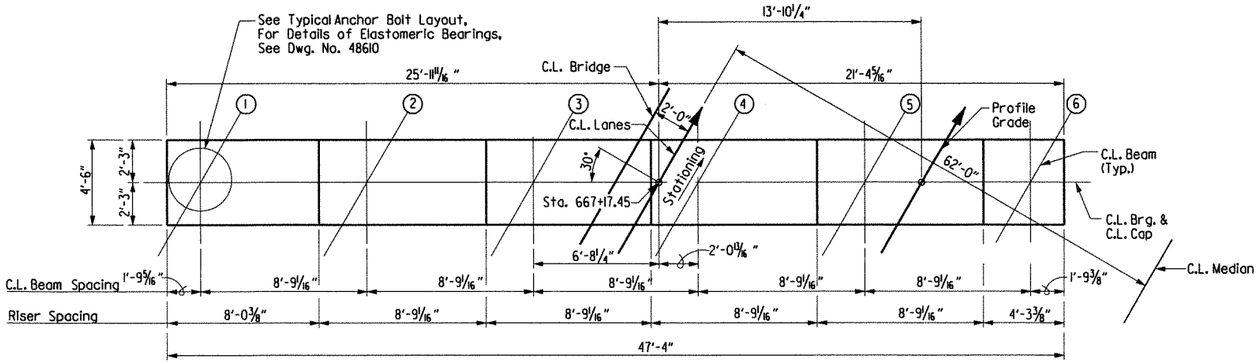

PLAN

Scale: ¼" = 1'-0"

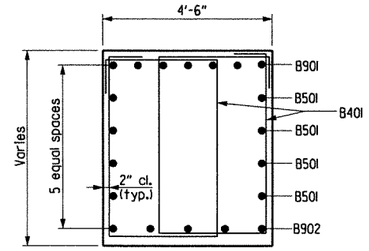

SECTION B-B

Scale: ½" = 1'-0"

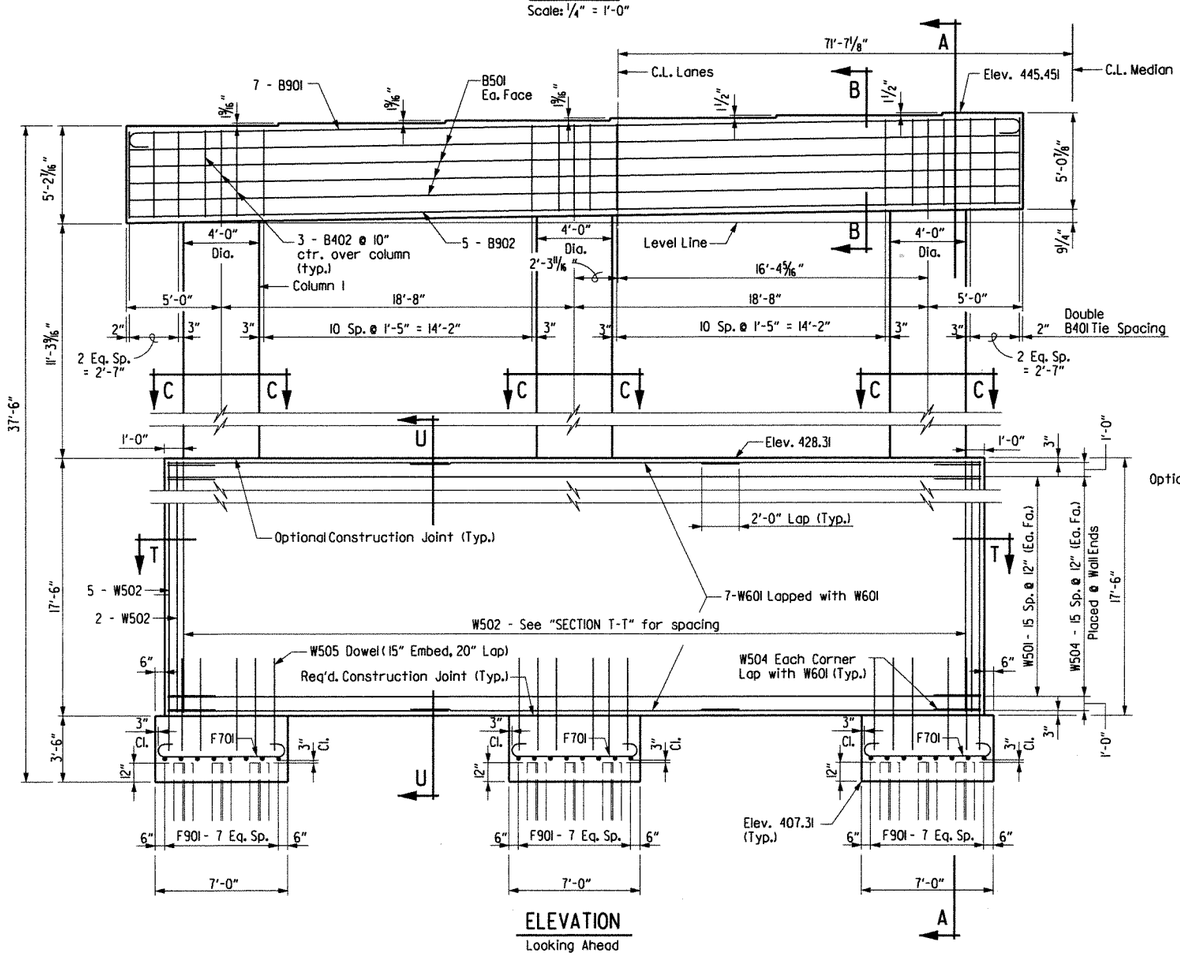

ELEVATION

Looking Ahead

Scale: ¼" = 1'-0"

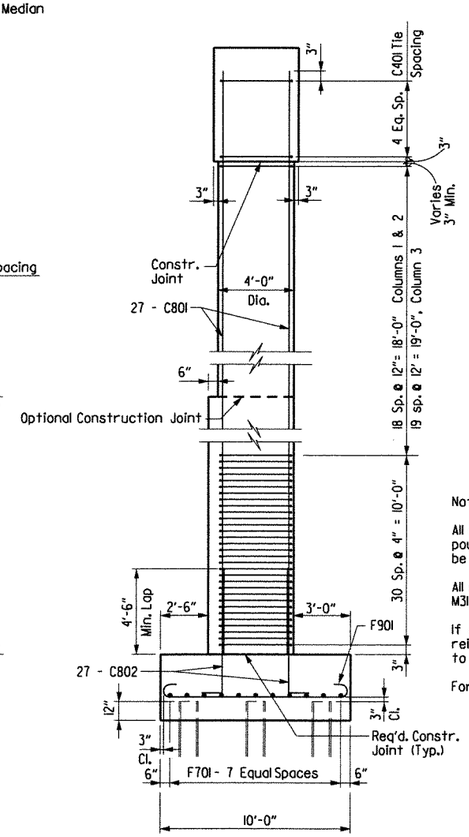

SECTION A-A

Scale: ¼" = 1'-0"

BAR LIST

Mark	No. Req'd.	Length	Pin Dia.
B401	56	15'-6"	2"
B402	9	13'-6"	2"
B501	8	47'-0"	STR.
B901	7	49'-6"	9"
B902	5	47'-0"	STR.
C401	163	12'-4"	3"
C801	81	32'-3"	STR.
C802	81	7'-11"	6"
F701	24	8'-2"	5¼"
F901	24	12'-0"	9"
W501	32	42'-2"	STR.
W502	90	17'-2"	STR.
W503	68	8'-10"	2"
W504	36	8'-11"	2"
W505	42	3'-3"	STR.
W601	42	15'-5"	STR.

Bending Diagrams (Dimensions are out to out of bars.)

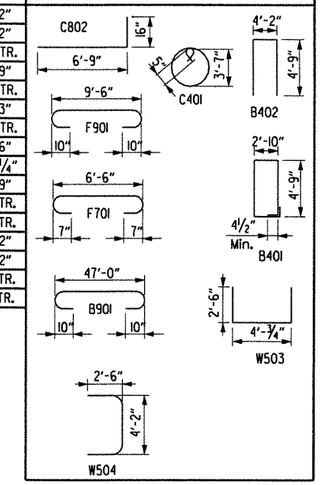

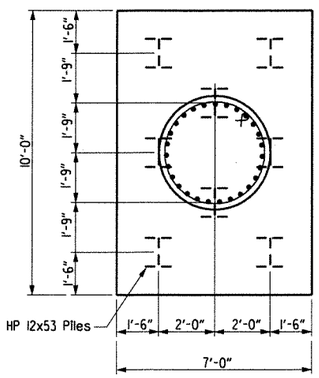

PLAN OF FOOTING

Scale: ⅜" = 1'-0"

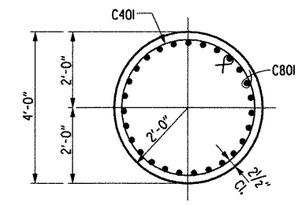

SECTION C-C

Scale: ½" = 1'-0"

Notes:

All concrete shall be Class "S" and shall be poured in the dry. All exposed corners shall be chamfered ¾" unless otherwise noted.

All reinforcing steel shall conform to AASHTO M31 or M53, Grade 60.

If anchor bolts are drilled into cap, top reinforcing bars shall be properly placed to avoid damage.

For additional information, see Layout.

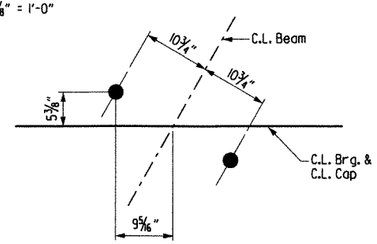

TYPICAL ANCHOR BOLT LAYOUT

No Scale

STATE OF ARKANSAS REGISTERED PROFESSIONAL ENGINEER No. 10338 LARRY D. MILLER

Larry D. Miller 8-11-12

BRIDGE ENGINEER

SHEET 1 OF 2

DETAILS OF BENT NO. 5

BRIDGE OVER UNION PACIFIC RAILROAD

(BR. A6881)

CRAWFORD & SEBASTIAN COUNTIES

ROUTE I-540 SEC. 2

ARKANSAS STATE HIGHWAY COMMISSION

LITTLE ROCK, ARK.

DRAWN BY: TAR DATE: Feb 02 FILENAME: bBB0407a5 b5.dgn

CHECKED BY: EMB/ETH DATE: April 02 SCALE: As Shown

DESIGNED BY: JLH DATE: Jan 02

BRIDGE NO. A6881 DRAWING NO. 48586

$$$$date$$$$

$$$$dgnspec$$$$$

...\b040468a5_b5.dgn 8/10/2012 3:50:07 PM

DATE REVISED	DATE FILMED	DATE REVISED	DATE FILMED	FED. ROAD DIST. NO.	STATE	FED. AID PROJ. NO.	SHEET NO.	TOTAL SHEETS
				6	ARK.			
				JOB NO.		BB0407	293	464
				(1) A6881		BENT DTLS.		48586A

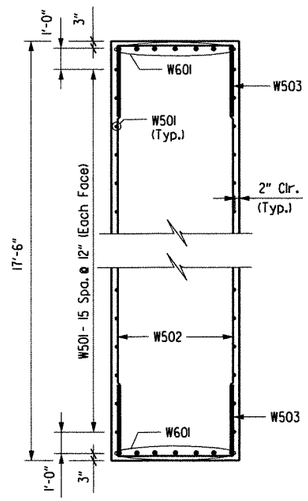

SECTION U-U
Scale: 3/8" = 1'-0"

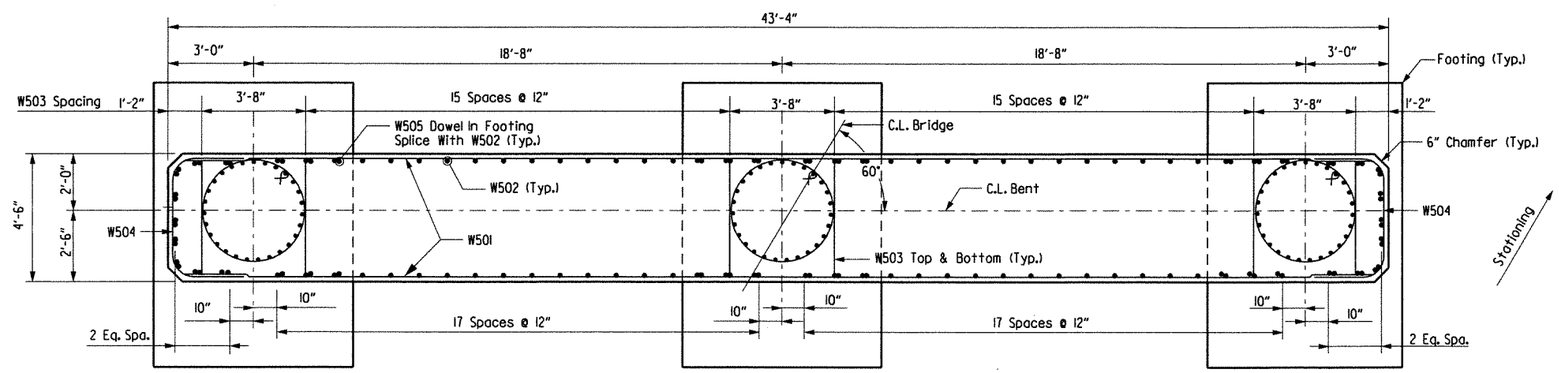

SECTION T-T
Scale: 3/8" = 1'-0"

SHEET 2 OF 2
DETAILS OF BENT NO. 5
BRIDGE OVER UNION PACIFIC RAILROAD
(BR. A6881)
CRAWFORD & SEBASTIAN COUNTIES
ROUTE I-540 SEC. 2
ARKANSAS STATE HIGHWAY COMMISSION
LITTLE ROCK, ARK.

STATE OF ARKANSAS REGISTERED PROFESSIONAL ENGINEER No. 11339 LARRY E. MILLER
8-11-12
BRIDGE ENGINEER

DRAWN BY: TAR DATE: Feb 02 FILENAME: bBB0407a5 b5a.dgn
CHECKED BY: EMB/ETH DATE: April 02 SCALE: As Shown
DESIGNED BY: JLH DATE: Jan 02
BRIDGE NO. A6881 DRAWING NO. 48586A

$$$$date$$$$
$$$$dgnspec$$$$$

...\B040468A5_B5a.dgn 8/10/2012 3:50:08 PM

DATE REVISED	DATE FILMED	DATE REVISED	DATE FILMED	FED. ROAD DIST. NO.	STATE	FED. AID PROJ. NO.	SHEET NO.	TOTAL SHEETS
				6	ARK.			
				JOB NO.		BB0407	294	464
				(1) A6881		BENT DTLS.		48587

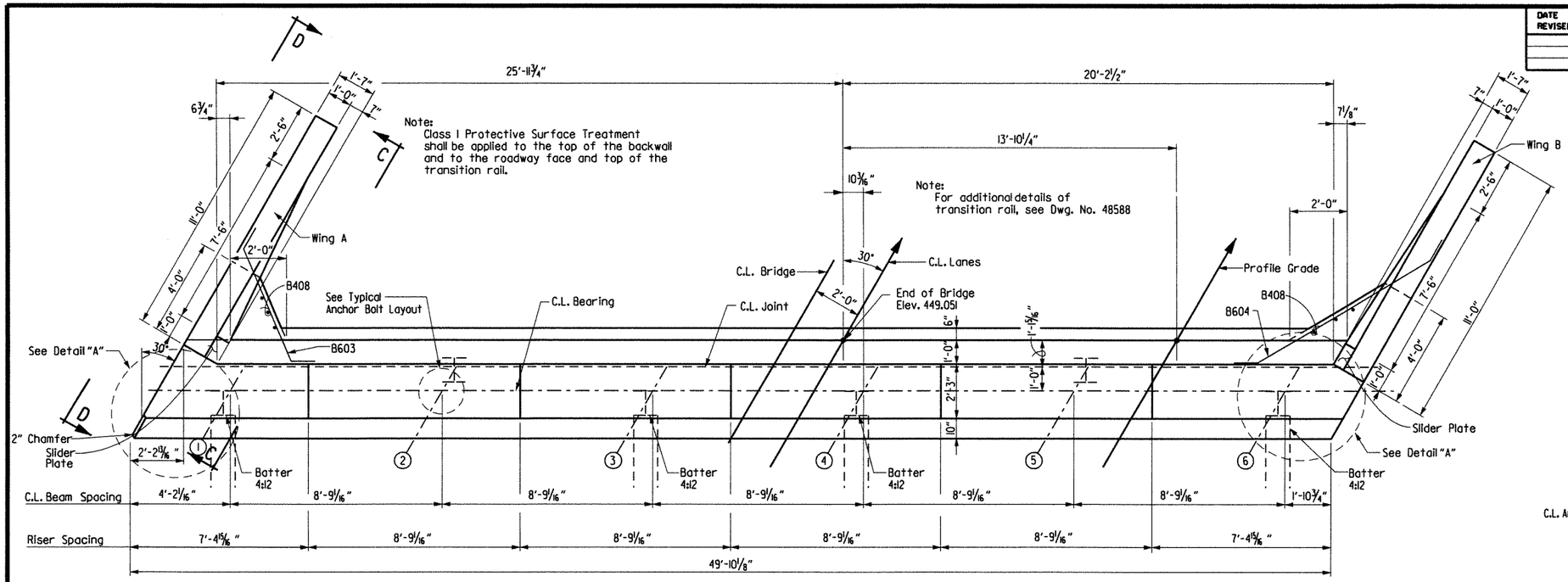

PLAN

⅜" = 1'-0"

SUBSTRUCTURE GENERAL NOTES

All concrete shall be Class "S" and shall be poured in the dry. All exposed corners shall be chamfered ¾" unless otherwise noted.

All reinforcing steel shall conform to AASHTO M31 or M53, Gr. 60.

End Bent backwall shall not be poured before girders are in place. Backwall to be placed after concrete span placement.

Structural steel in end bents shall be AASHTO M270, Gr. 50W and shall be paid for as "Structural Steel in Beam Spans (M270, Gr. 50W)".

If anchor bolts are drilled into cap, top reinforcing bars shall be properly spaced to avoid damage.

For additional information, see Layout.

The parapet slider plates shall be cleaned in accordance with subsection 807.84(b) and painted in accordance with subsection 807.75. The color of paint shall be Gray and shall match Fed. Std. 595B, Color Chip 26176. Cleaning and painting will not be paid for directly but will be considered subsidiary to "Structural Steel in Beam Spans (Gr. 50W)".

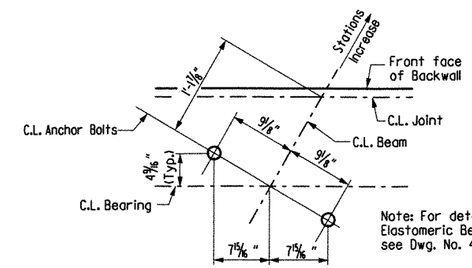

TYPICAL ANCHOR BOLT LAYOUT

No Scale

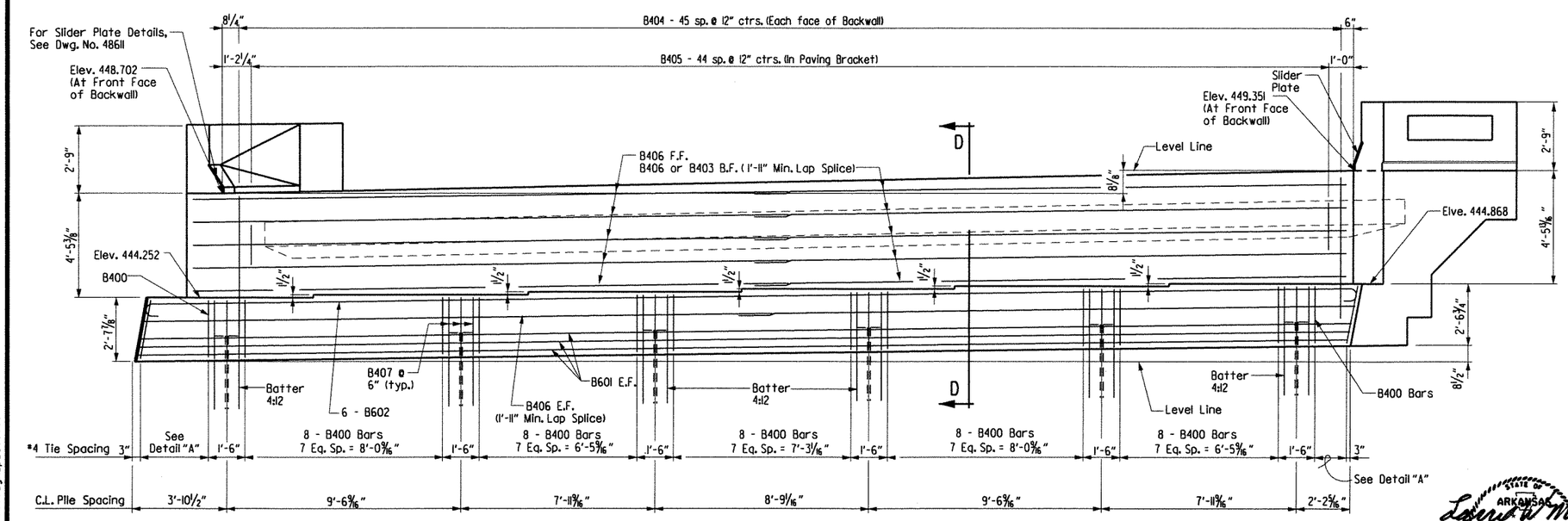

ELEVATION

(Looking Ahead)
⅜" = 1'-0"

Note:
E.F. = Each Face
F.F. = Front Face
B.F. = Back Face

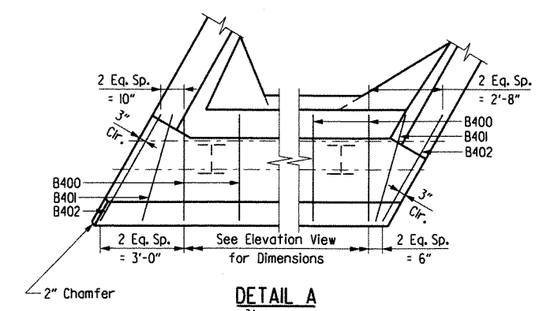

DETAIL A

⅜" = 1'-0"

STATE OF ARKANSAS REGISTERED PROFESSIONAL ENGINEER No. 13339 LARRY W. MILLER

8-11-12

BRIDGE ENGINEER

SHEET 1 OF 2
DETAILS OF BENT NO. 6
BRIDGE OVER UNION PACIFIC RAILROAD
(BR. A6881)
CRAWFORD & SEBASTIAN COUNTIES
ROUTE I-540 SEC. 2
ARKANSAS STATE HIGHWAY COMMISSION
LITTLE ROCK, ARK.

DRAWN BY: TAR DATE: March 02 FILENAME: bBB0407a5 b61.dgn
CHECKED BY: EMB/ETH DATE: April 02 SCALE: As Shown
DESIGNED BY: JLH DATE: Feb 02
BRIDGE NO. A6881 DRAWING NO. 48587

$$$$date$$$

$$$$dgnspec$$$$$

...\b040468a5_b61.dgn 8/10/2012 3:50:08 PM

DATE REVISED	DATE FILMED	DATE REVISED	DATE FILMED	FED. ROAD DIST. NO.	STATE	FED. AID PROJ. NO.	SHEET NO.	TOTAL SHEETS
				6	ARK.			
				JOB NO.		BB0407	295	464
				① A6881		BENT DTLS.		48588

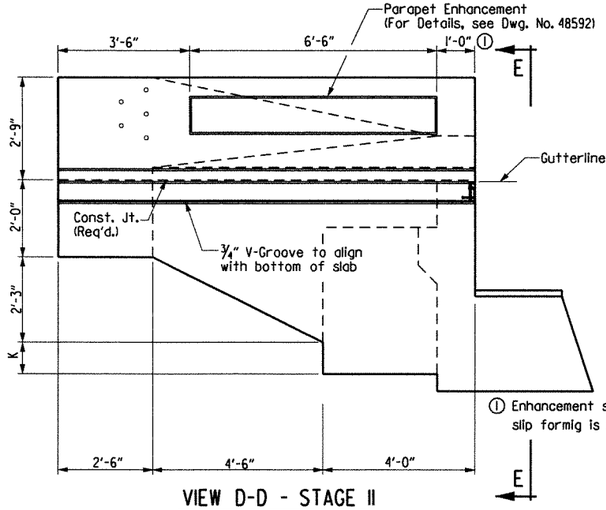

① Enhancement shall be continuous if slip formig is used on bridge parapet.

VIEW D-D - STAGE II

(Stage IV Similar)
Scale: 1/2" = 1'-0"

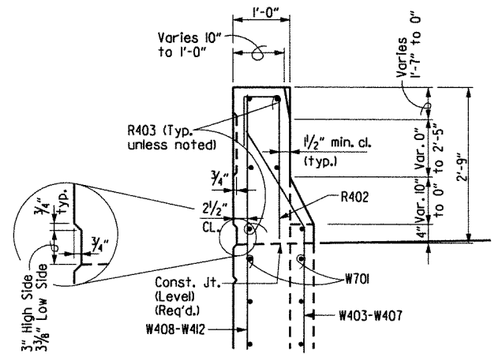

SECTION F-F

Scale: 3/4" = 1'-0"

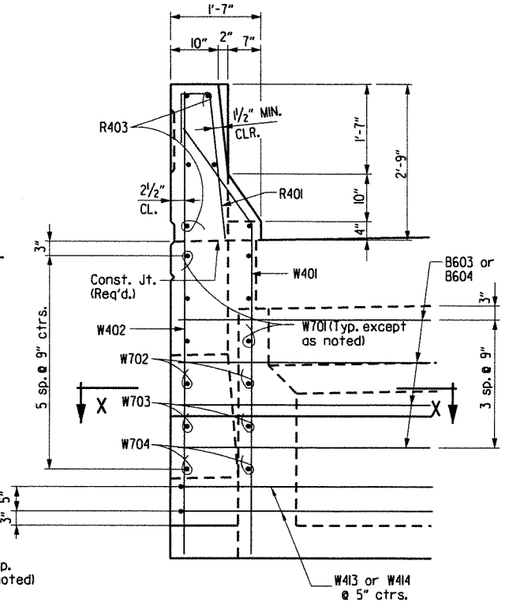

VIEW E-E

Scale: 3/4" = 1'-0"

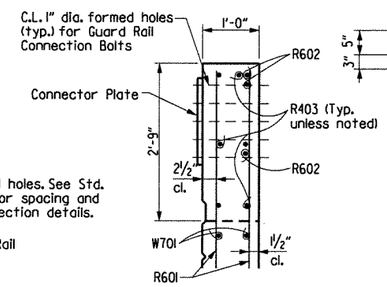

SECTION G-G

Scale: 3/4" = 1'-0"

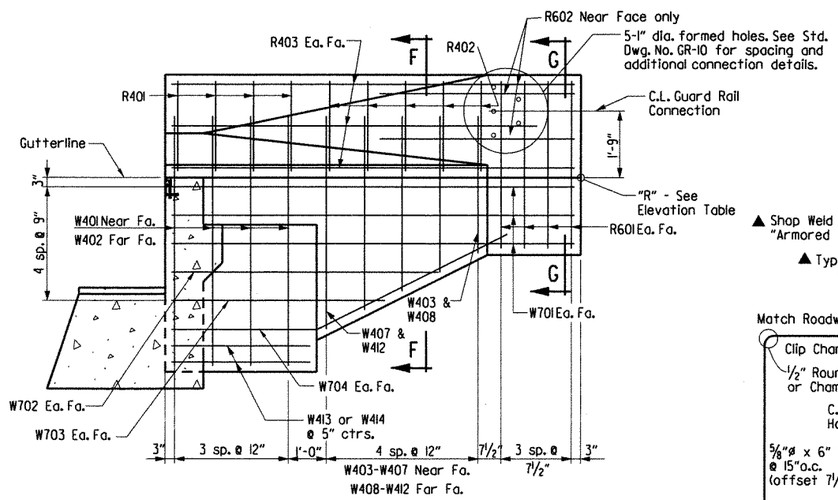

SECTION C-C - STAGE II

(Stage IV Similar)
Scale: 1/2" = 1'-0"

▲ Shop Weld - See SP Job BB0407 "Armored Joint With Neoprene Strip Seal"

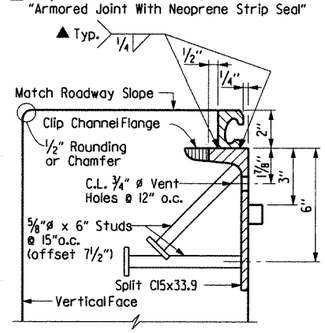

Note: Concrete shall be hand packed under the joint armor in the backwall.

For additional details, See Dwg. No. 48611.

DETAIL Z

3" = 1'-0"

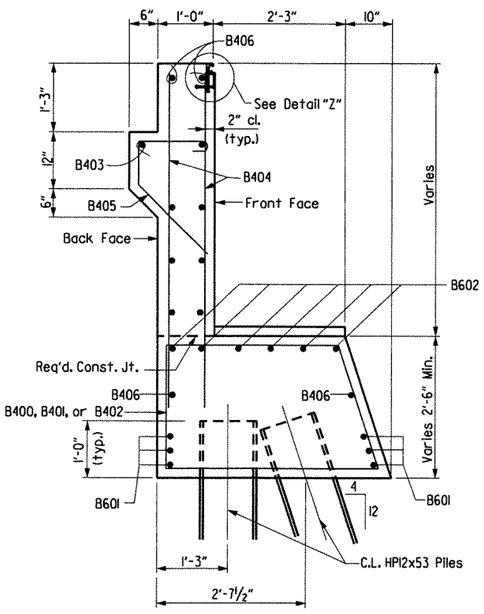

SECTION D-D

3/4" = 1'-0"

BAR LIST

Mark	No. Req'd.	Length	"A"	"B"	Pin Dia.
B400	42	11'-5"	2'-11"	3'-8"	2"
B401	2	11'-8"	3'-0"	3'-10"	2"
B402	2	12'-6"	3'-5"	4'-3"	2"
B403	2	24'-1"			STR.
B404	92	6'-0"			STR.
B405	45	3'-11"	1'-2"	4 1/2"	3"
B406	22	25'-9"			STR.
B407	18	7'-3"	2'-11"	3'-9"	STR.
B408	6	4'-0"			STR.
B601	6	49'-6"			STR.
B602	6	50'-10"			4 1/2"
B603	4	7'-1"	5'-1"	1'-0"	4 1/2"
B604	4	10'-4"	8'-4"	1'-0"	4 1/2"
R401	8	3'-11"			2"
R402	8	3'-11"			2"
R403	12	9'-8"			STR.
R601	16	4'-5"			STR.
R602	6	5'-0"			STR.
W401	8	7'-3"	6'-1"	1'-2"	2"
W402	8	8'-4"			STR.
W403 to W407	2 ea.	3'-4" to 5'-4"	2'-2" to 4'-2"	1'-2"	2"
W408 to W412	2 ea.	4'-5" to 6'-5"			STR.
W413	2	10'-0"			2"
W414	2	13'-3"			2"
W701	12	9'-8"			STR.
W702	4	6'-0"			STR.
W703	4	4'-6"			STR.
W704	4	8'-4"	2'-9"	5'-7"	5/2

Bending Diagrams (Dimensions are out to out of bars.)

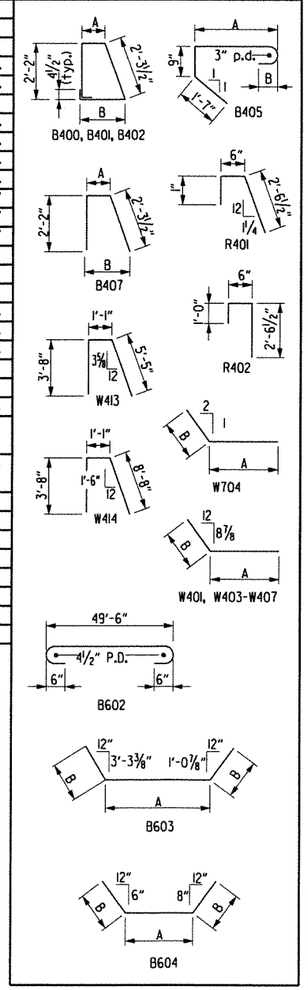

Bent No.	Wing	Elev. "R"	K
6	A	448.618	1'-8 1/4"
6	B	449.291	1'-8 3/8"

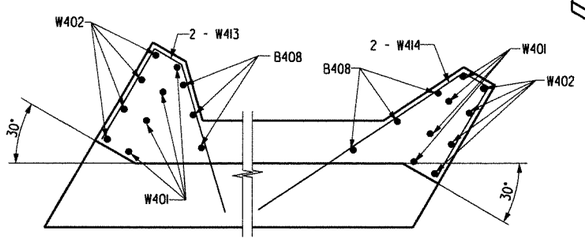

SECTION X-X

Wing A

SECTION X-X

Wing B

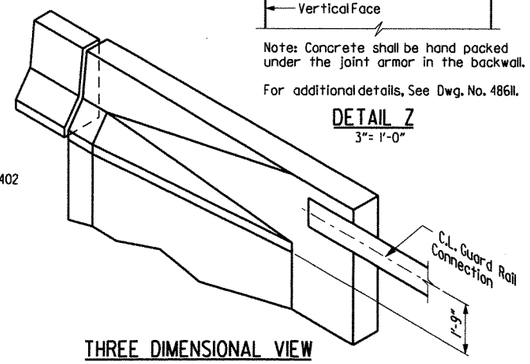

THREE DIMENSIONAL VIEW WING RAIL & PARAPET

No Scale

SHEET 2 OF 2
DETAILS OF BENT NO. 6
BRIDGE OVER UNION PACIFIC RAILROAD
(BR. A6881)
CRAWFORD & SEBASTIAN COUNTIES

ROUTE I-540 SEC. 2
ARKANSAS STATE HIGHWAY COMMISSION
LITTLE ROCK, ARK.

STATE OF ARKANSAS REGISTERED PROFESSIONAL ENGINEER No. 11339 LARRY W. MILLER
8-11-12
BRIDGE ENGINEER

DRAWN BY: TAR	DATE: April 02	FILENAME: b04068a5 b62.dgn
CHECKED BY: EMB/ETH	DATE: April 02	SCALE: As Shown
DESIGNED BY: JLH	DATE: Dec 01	

BRIDGE NO. A6881 DRAWING NO. 48588

$$$$date$$$

$$$$dgnspec$$$$$

...\b040468a5_b62.dgn 8/10/2012 3:50:09 PM

DATE REVISED	DATE FILMED	DATE REVISED	DATE FILMED	FED. ROAD DIST. NO.	STATE	FED. AID PROJ. NO.	SHEET NO.	TOTAL SHEETS
				6	ARK.			
				JOB NO.		BB0407	296	464
				(1) A6881		SPAN DTLS.		48589

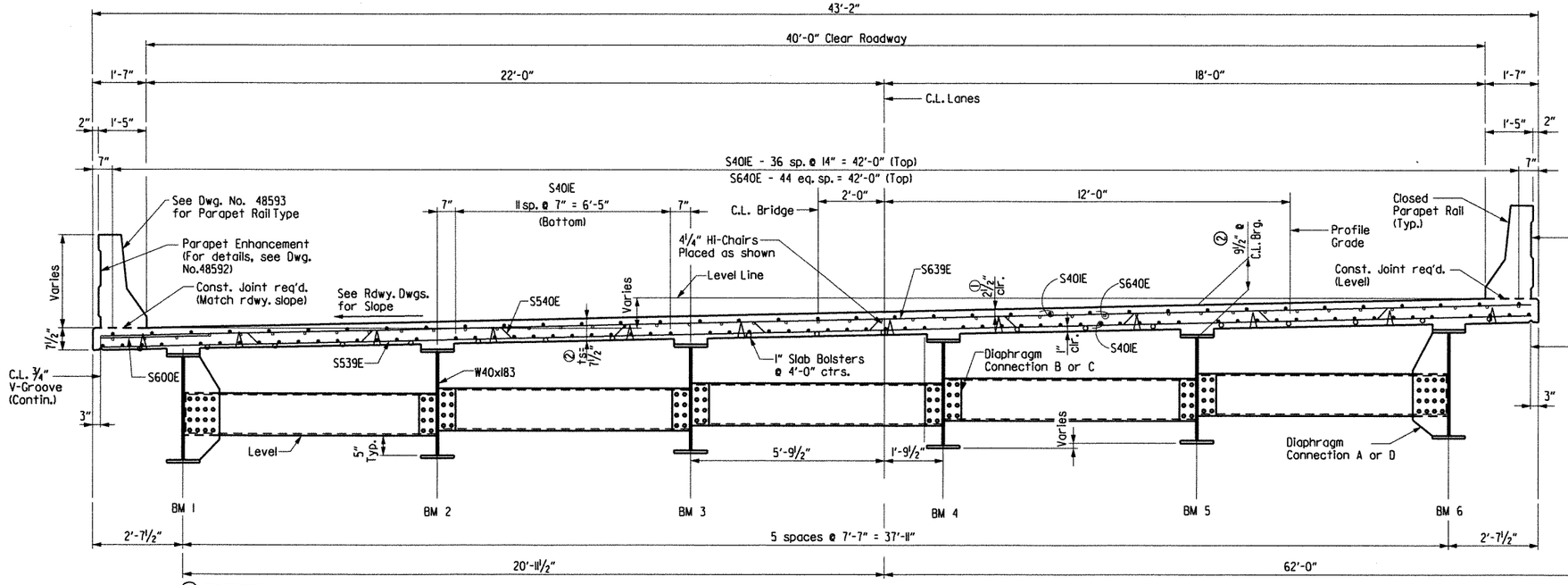

Note: Class I Protective Surface Treatment shall be applied to the Roadway Surface and the Face and Top of Concrete Parapet Rail.

Note: Hi-Chairs to be placed on 4'-0" long centers.

SLAB REINFORCING:
Transverse:
S600E @ 7½" centers (top)
S601E thru S637E @ 7½" centers (top)
S501E thru S537E @ 7½" centers (bottom)
S639E @ 15" centers (top directly above S539E)
S539E @ 15" centers (bottom)
S540E @ 15" centers bent up over beams
Longitudinal:
S40IE (top & bottom) placed as shown
S640E (top) placed as shown over int. supports

Note: Reinf. bars with "E" suffix (S40IE, S50IE, etc.) are epoxy coated bars. For additional reinforcing details, see Dwg. No. 48593

TYPICAL SECTION AT MIDSPAN
(Looking Ahead)

(1) TOLERANCE:
Minus: ¼"
Plus: Equal to amount of slab thickness used to meet slab thickness tolerance. See "ADJUSTMENT FOR SLAB THICKNESS TOLERANCE WHEN REMOVABLE DECK FORMING IS USED".

(2) See "ADJUSTMENT FOR SLAB THICKNESS TOLERANCE WHEN REMOVABLE DECK FORMING IS USED".

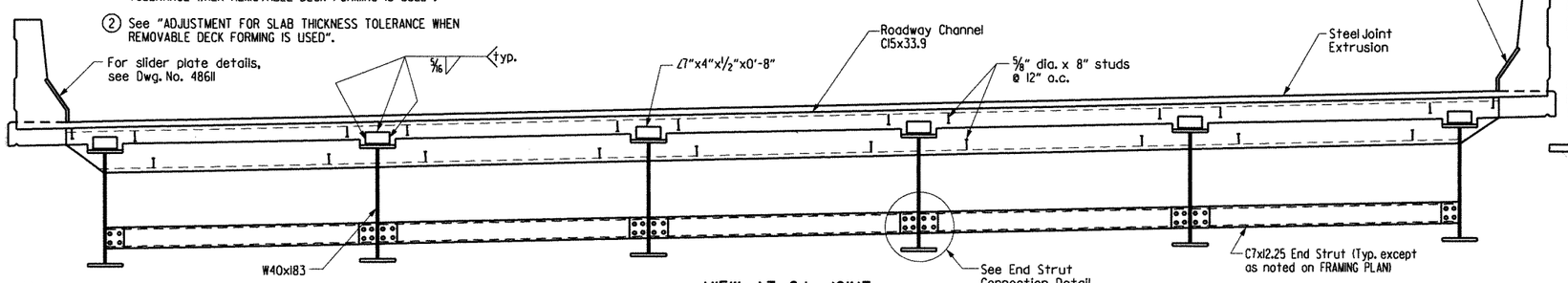

VIEW AT C.L. JOINT
(Looking Ahead)

EXPANSION DEVICE:
Roadway Channel C15x33.9
Conn ∠s 7"x4"x½"
Detail Device ⅛" high and provide ¼" shims using two 1/16" and one ⅛" plates

For additional details of Expansion Device, See Dwg. No. 48611

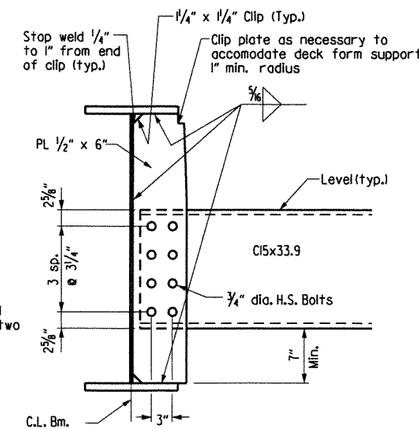

DIAPHRAGM CONNECTION C
No Scale

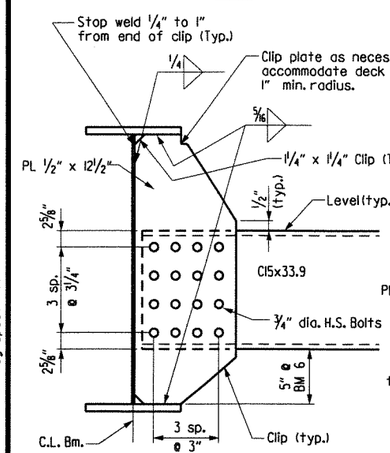

DIAPHRAGM CONNECTION A
No Scale
Typical for exterior beam.

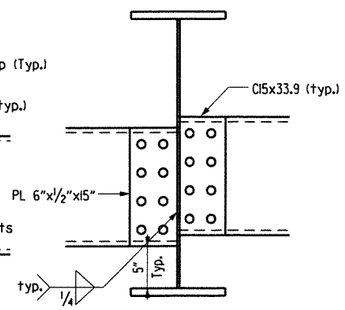

DIAPHRAGM CONNECTION B
No Scale

Note: Bolts in Diaphragm Connections shall be properly installed and tightened in accordance with subsection 807.71.

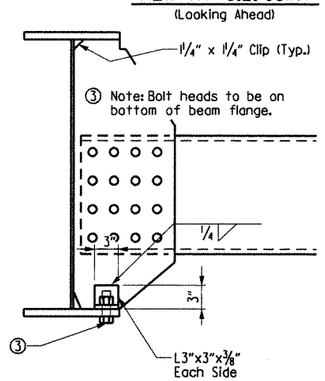

DIAPHRAGM CONNECTION D
No Scale
Information not shown is same as for Connection A.

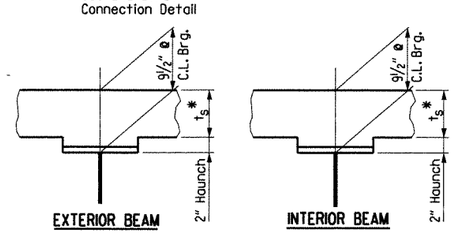

Note: ts = slab thickness as shown on "TYPICAL SECTION".
*Tolerance when removable deck forming is used is +½", -¼". Haunch forming is required and shall be adjusted to maintain slab thickness tolerance.

ADJUSTMENT FOR SLAB THICKNESS TOLERANCE WHEN REMOVABLE DECK FORMING IS USED
No Scale

Haunch dimension may vary within the following limits to maintain the grade and slab thickness tolerance: Minimum - occurs when the top flange contacts the bottom reinforcing steel; Maximum - top flange thickness plus 1½". No increase in concrete and structural steel quantities will be made to maintain tolerances.

Tolerances shown are applicable only when removable deck forming is used. See Std. Dwg. No. 14991 for tolerances when permanent steel deck forms are used. Payment for concrete shall be based on removable deck forming.

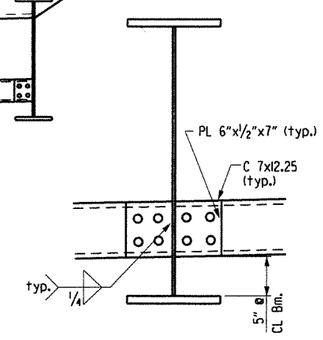

END STRUT CONNECTION
No Scale

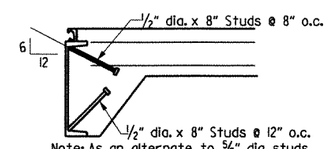

Note: As an alternate to ⅝" dia. studs, ½" dia. x 8" studs spaced as shown may be used. Use weight of ⅝" dia. stud as basis of measurement of structural steel in anchors.

DETAIL OF ALTERNATE ANCHORS
No Scale

STATE OF ARKANSAS REGISTERED PROFESSIONAL ENGINEER No. 11339 LARRY W. MILLER
8-11-12
BRIDGE ENGINEER

SHEET 1 OF 6
DETAILS OF
485'-0" CONT. COMP. W-BEAM UNIT
(BR. A6881)
ROUTE I-540 SEC. 2
ARKANSAS STATE HIGHWAY COMMISSION
LITTLE ROCK, ARK.

DRAWN BY: TAR	DATE: Jan 02	FILENAME: bBB0407a5 sll.dgn			
CHECKED BY: EMB/BCG	DATE: Jan 02	SCALE: As Shown			
DESIGNED BY: JLH	DATE: Dec 01				

BRIDGE NO. A6881 DRAWING NO. 48589

$$$$date$$$

$$$$dgnspec$$$$

...\b040468a5_s11.dgn 8/10/2012 3:50:09 PM

DATE REVISED	DATE FILMED	DATE REVISED	DATE FILMED	FED. ROAD DIST. NO.	STATE	FED. AID PROJ. NO.	SHEET NO.	TOTAL SHEETS
				6	ARK.			
				JOB NO.		BB0407	297	464
				(1) A6881		SPAN DTLS.		48590

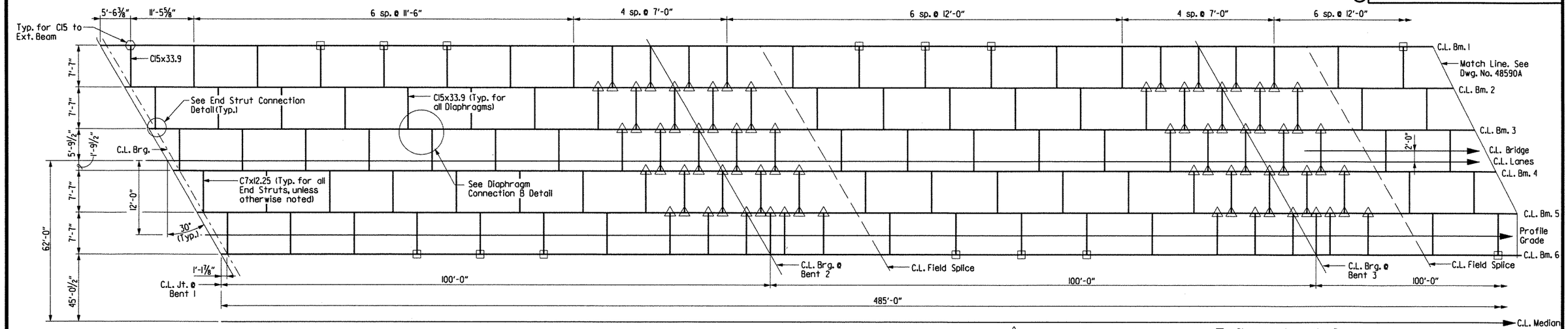

For diaphragm connections, see Dwg. No. 48589. ⬡ = Diaphragm Connection A △ = Diaphragm Connection C □ = Diaphragm Connection D

FRAMING PLAN

No Scale

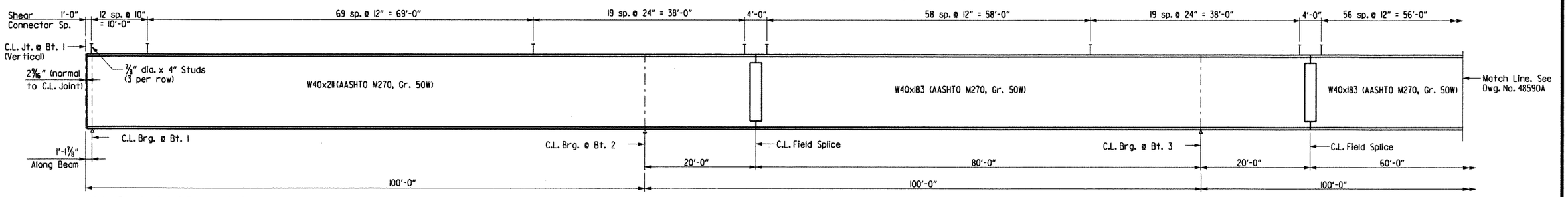

Note: For details of Elastomeric Fixed and Expansion Bearings, see Dwg. No. 48610

TYPICAL BEAM ELEVATION

No Scale

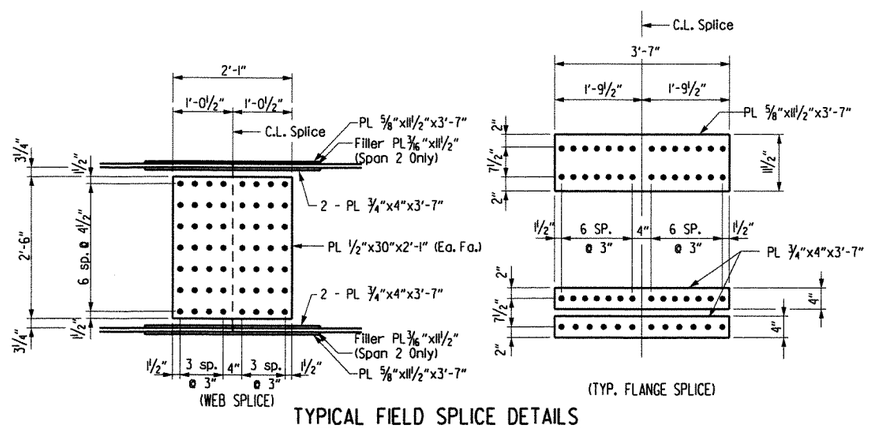

TYPICAL FIELD SPLICE DETAILS

No Scale

Note: All field splice bolts shall be ⅞" ø H.S. bolts.
All field splice plates shall be AASHTO M270, Gr. 50W steel.

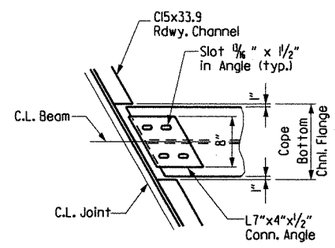

ROADWAY CHANNEL CONNECTION DETAIL

No Scale

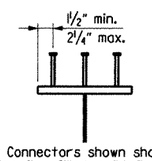

Stud Shear Connectors shown shall be ⅞" dia. x 4" long, granular flux filled, solid fluxed or equal, and automatically end welded to the beam flange in accordance with the recommendations of the Manufacturer. ¾" dia. studs may be used in place of the ⅞" dia. stud shown, at the ratio of 1.361-¾" dia. studs in place of one ⅞" dia. stud. ⅞" dia. studs will be used as basis for measurement of structural steel in shear connectors. Maximum stud spacing = 24".

SHEAR CONNECTOR DETAIL

No Scale

TABLE FOR WELD

Material Thickness of Thicker Part Joined (Inches)	Minimum Size of Fillet Weld (Inches)	Single Pass Weld Must Be Used
To ¾" Inclusive	¼"	
Over ¾"	5/16"	

NOTE: When a fillet weld size, as shown on the plans, is larger than the minimum, the first pass shall be that specified for minimum size of fillet weld.

SHEET 2 OF 6
DETAILS OF
485'-0" CONT. COMP. W-BEAM UNIT
(BR. A6881)

ROUTE I-540 SEC. 2
ARKANSAS STATE HIGHWAY COMMISSION
LITTLE ROCK, ARK.

STATE OF ARKANSAS REGISTERED PROFESSIONAL ENGINEER No. 11339 LARRY D. MILLER
Larry D. Miller 8-11-12
BRIDGE ENGINEER

DRAWN BY: TAR DATE: April 02 FILENAME: bBB0407a5 sl2.dgn
CHECKED BY: EMB/JGM DATE: April 02 SCALE: As Shown
DESIGNED BY: BCG/GMS/EMB DATE: April 02
BRIDGE NO. A6881 DRAWING NO. 48590

$$$$date$$$$
$$$$dgnspec$$$$
...\b040468a5_s12.dgn 8/10/2012 3:50:10 PM

DATE REVISED	DATE FILMED	DATE REVISED	DATE FILMED	FED. ROAD DIST. NO.	STATE	FED. AID PROJ. NO.	SHEET NO.	TOTAL SHEETS
				6	ARK.			
				JOB NO.		BB0407	298	464
				(1) A6881		SPAN DTLS.		48590A

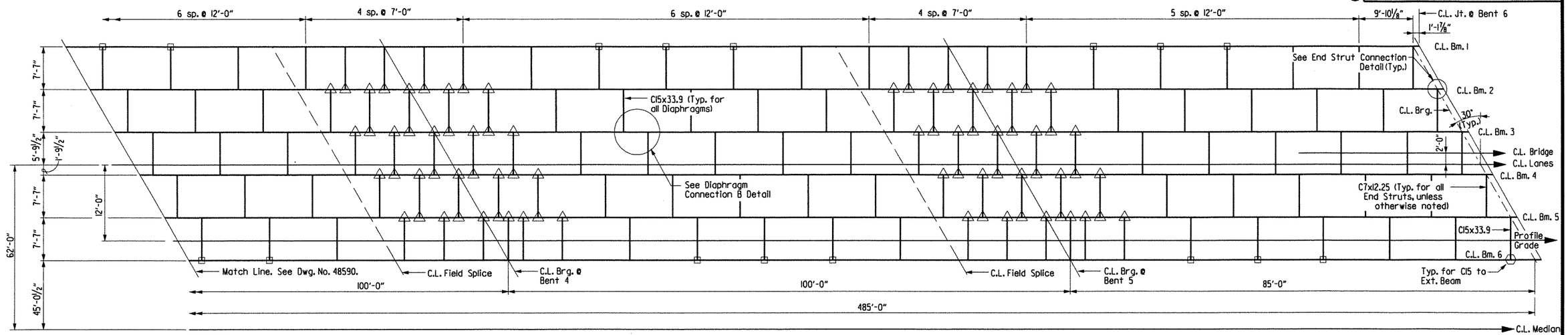

For diaphragm connections, see Dwg. No. 48589. ⬡ = Diaphragm Connection A △ = Diaphragm Connection C □ = Diaphragm Connection D

FRAMING PLAN

No Scale

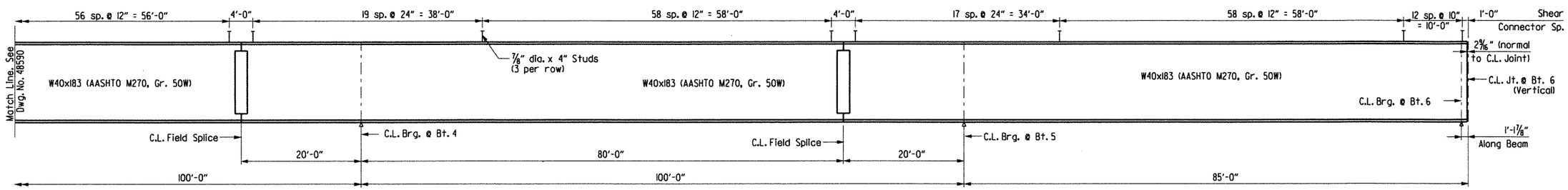

Note: For details of Elastomeric Fixed and Expansion Bearings, see Dwg. No. 48610

TYPICAL BEAM ELEVATION

No Scale

SHEET 3 OF 6
DETAILS OF
485'-0" CONT. COMP. W-BEAM UNIT
(BR. A6881)

ROUTE I-540 SEC. 2

ARKANSAS STATE HIGHWAY COMMISSION

LITTLE ROCK, ARK.

STATE OF ARKANSAS REGISTERED PROFESSIONAL ENGINEER No. 13339 LARRY W. MILLER

8-11-12

BRIDGE ENGINEER

DRAWN BY: TAR DATE: April 02 FILENAME: bBB0407a5_s12a.dgn
CHECKED BY: EMB/JGM DATE: April 02 SCALE: As Shown
DESIGNED BY: BCG/GMS/EMB DATE: April 02

BRIDGE NO. A6881 DRAWING NO. 48590A

$$$$dgnspec$$$$$*

$$$$date$$$$

...\b040468a5_s12a.dgn 8/10/2012 3:50:10 PM

DATE REVISED	DATE FILMED	DATE REVISED	DATE FILMED	FED. ROAD DIST. NO.	STATE	FED. AID PROJ. NO.	SHEET NO.	TOTAL SHEETS
				6	ARK.			
				JOB NO.		BBO407	299	464
				(1) A6881		SPAN DTLS.		48591

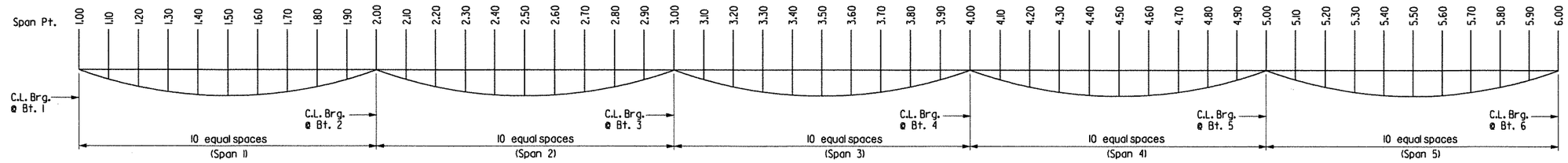

DEAD LOAD DEFLECTION DIAGRAM

No Scale

TABLE OF DEAD LOAD DEFLECTIONS (INCHES)

Camber for Dead Load Deflection plus vertical curve +/- 1/4" tolerance.
Deflections shown are off a chord from C.L. Brg. to C.L. Brg.
Vertical curve corrections not included. Negative sign (-) indicates upward deflection.

SPAN NO.	POINT OF DEFLECTION	Structural Steel		Structural Steel (+) Slab		Structural Steel (+) Slab (+) Para. Rail	
		Bms. 1 & 6	Bms. 2-5	Bms. 1 & 6	Bms. 2-5	Bms. 1 & 6	Bms. 2-5
1	1.0	0.00	0.00	0.00	0.00	0.00	0.00
	1.1	0.21	0.23	0.81	0.86	0.87	0.92
	1.2	0.40	0.42	1.49	1.59	1.62	1.72
	1.3	0.52	0.56	1.95	2.12	2.13	2.28
	1.4	0.58	0.63	2.19	2.37	2.38	2.55
	1.5	0.58	0.63	2.18	2.34	2.37	2.52
	1.6	0.50	0.55	1.90	2.05	2.07	2.21
	1.7	0.37	0.42	1.44	1.56	1.57	1.68
	1.8	0.23	0.26	0.90	0.96	0.97	1.03
	1.9	0.11	0.11	0.36	0.38	0.39	0.41
2	2.0	0.00	0.00	0.00	0.00	0.00	0.00
	2.1	-0.02	-0.02	-0.05	-0.06	-0.06	-0.06
	2.2	0.01	0.01	0.10	0.11	0.12	0.12
	2.3	0.06	0.07	0.34	0.36	0.37	0.39
	2.4	0.11	0.12	0.54	0.59	0.59	0.63
	2.5	0.14	0.15	0.65	0.70	0.71	0.76
	2.6	0.14	0.15	0.63	0.68	0.68	0.73
	2.7	0.10	0.11	0.48	0.52	0.52	0.56
	2.8	0.05	0.06	0.26	0.28	0.28	0.30
	2.9	0.01	0.01	0.05	0.06	0.06	0.07
3	3.0	0.00	0.00	0.00	0.00	0.00	0.00
	3.1	0.05	0.05	0.20	0.21	0.22	0.23
	3.2	0.13	0.14	0.53	0.58	0.58	0.62
	3.3	0.21	0.23	0.88	0.94	0.95	1.01
	3.4	0.27	0.29	1.11	1.19	1.21	1.28
	3.5	0.28	0.31	1.19	1.28	1.29	1.37
	3.6	0.26	0.28	1.09	1.17	1.18	1.26
	3.7	0.20	0.22	0.84	0.90	0.91	0.96
	3.8	0.12	0.13	0.49	0.53	0.53	0.57
	3.9	0.04	0.04	0.17	0.18	0.18	0.19
4	4.0	0.00	0.00	0.00	0.00	0.00	0.00
	4.1	0.03	0.03	0.12	0.12	0.13	0.13
	4.2	0.09	0.10	0.39	0.42	0.42	0.45
	4.3	0.16	0.18	0.70	0.74	0.75	0.80
	4.4	0.22	0.23	0.91	0.98	0.99	1.05
	4.5	0.23	0.25	0.99	1.07	1.08	1.15
	4.6	0.22	0.23	0.91	0.98	0.99	1.05
	4.7	0.16	0.18	0.69	0.74	0.75	0.79
	4.8	0.09	0.10	0.39	0.42	0.42	0.45
	4.9	0.03	0.03	0.11	0.12	0.12	0.13
5	5.0	0.00	0.00	0.00	0.00	0.00	0.00
	5.1	0.03	0.03	0.13	0.14	0.14	0.15
	5.2	0.09	0.10	0.39	0.42	0.42	0.45
	5.3	0.16	0.18	0.69	0.73	0.74	0.79
	5.4	0.22	0.24	0.94	1.01	1.02	1.09
	5.5	0.25	0.28	1.10	1.19	1.20	1.27
	5.6	0.27	0.29	1.14	1.22	1.24	1.31
	5.7	0.24	0.26	1.03	1.10	1.12	1.19
	5.8	0.18	0.20	0.78	0.84	0.84	0.90
	5.9	0.11	0.11	0.43	0.46	0.46	0.49

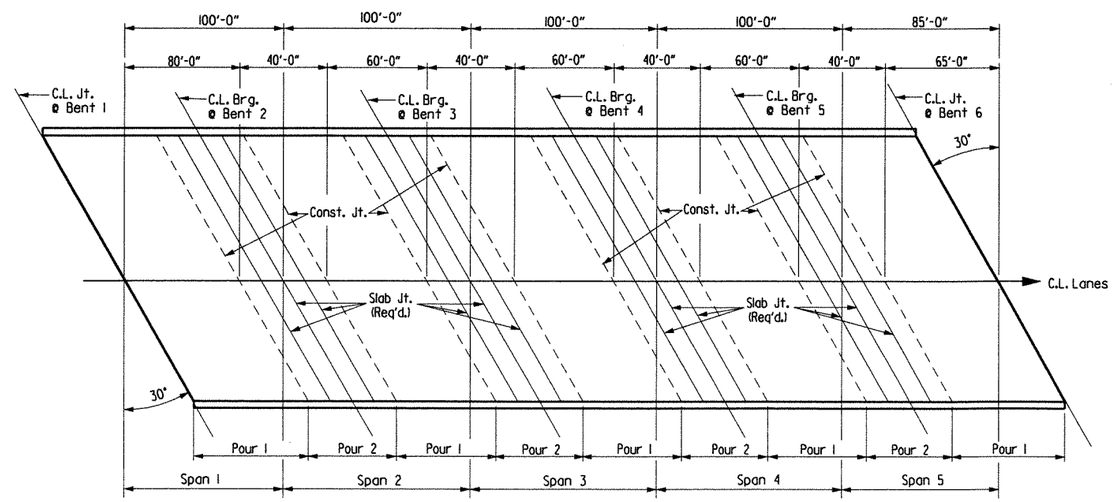

POURING SEQUENCE

No Scale

Note: Pours within the same number may be poured simultaneously or seperate. All Pour (1) must be placed before Pour (2) can be placed. 48 hours shall elapse between pours that are not adjacent and 72 hours shall elapse between the end of a pour and the start of the adjacent pour. Any railing pours made before the entire slab unit has been placed must be approved by the Engineer. Concrete in bridge superstructure shall be consolidated for the entire pour before any concrete has taken its initial set. This may require the use of a retarding agent.

The Contractor must obtain approval from the Engineer for any deviations from the pouring sequence shown.

SHEET 4 OF 6
DETAILS OF
485'-0" CONT. COMP. W-BEAM UNIT
(BR. A6881)

STATE OF ARKANSAS REGISTERED PROFESSIONAL ENGINEER No. 11339 LARRY D. MILLER
Larry D. Miller 8-11-12
BRIDGE ENGINEER

ROUTE I-540 SEC. 2
ARKANSAS STATE HIGHWAY COMMISSION
LITTLE ROCK, ARK.

DRAWN BY: TAR DATE: April 02
CHECKED BY: EMB DATE: May 02
DESIGNED BY: JLH DATE: March 02
FILENAME: bBB0407a5 s13.dgn
SCALE: N.T.S.

BRIDGE NO. A6881 DRAWING NO. 48591

$$$$dgnspec$$$$$ $$$$date$$$

...\b040468a5_s13.dgn 8/10/2012 3:50:11 PM

DATE REVISED	DATE FILMED	DATE REVISED	DATE FILMED	FED. ROAD DIST. NO.	STATE	FED. AID PROJ. NO.	SHEET NO.	TOTAL SHEETS
				6	ARK.			
				JOB NO.		BB0407	300	464
				1	A6881	SPAN DTLS.		48592

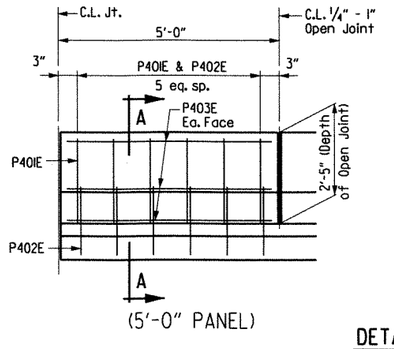

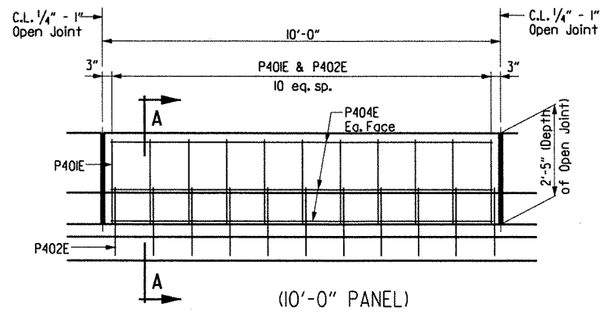

DETAILS OF CONCRETE PARAPET RAIL

No Scale

Place Type D Bridge Name Plate on right parapet rail at end of Bridge A. (Right is defined when facing direction of travel).

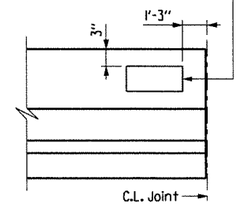

NAME PLATE DETAIL

No Scale

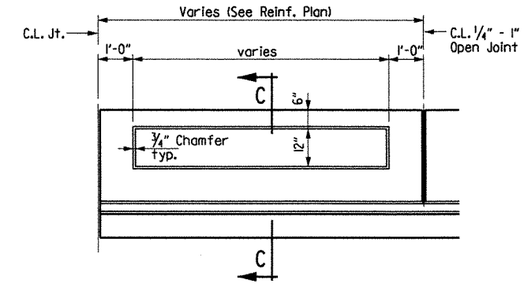

DETAILS OF PARAPET ENHANCEMENT

No Scale

Note: Enhancement required for concrete parapet rail only.

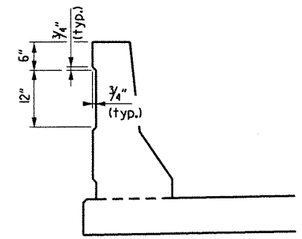

SECTION C-C

No Scale

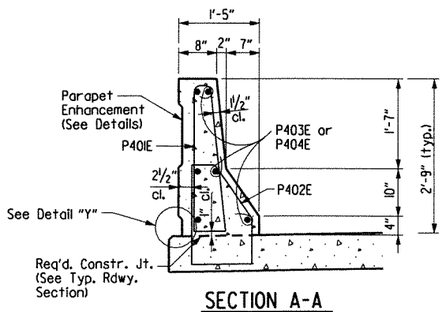

SECTION A-A

Scale: 3/4" = 1'-0"

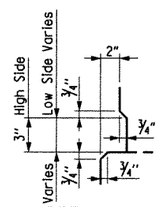

DETAIL Y

No Scale

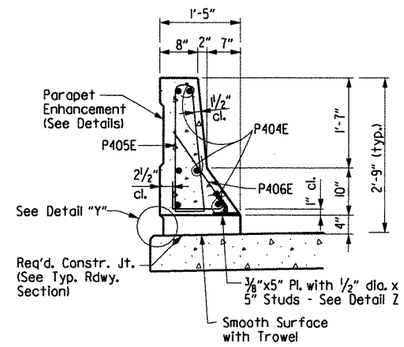

SECTION B-B

Scale: 3/4" = 1'-0"

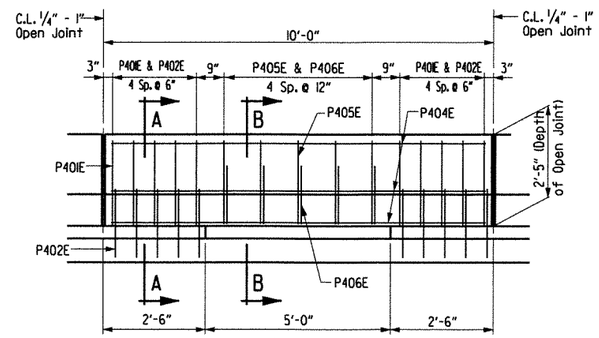

(10'-0" PANEL)

DETAILS OF OPEN CONCRETE PARAPET RAIL

No Scale

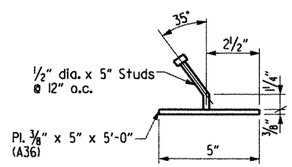

DETAIL "Z"

No Scale

Note: The surfaces of the 3/8" Plates which will not be in contact with concrete shall be painted in accordance with Section 638, or as approved by the Engineer. Only one coat is required and shall be applied in the fabricators shop. Painting will not be paid for directly, but will be considered subsidiary to Structural Steel or Class S(AE) Concrete Bridge.

Note: Parapet studs shall be 5" long, granular flux filled, soild fluxed, or equal and automatically end weldd to the plate. Studs and plate shall meet the requirements of Section 807 and shall be measured and paid for as Structural Steel in Beam Spans (M270, Gr. 50W).

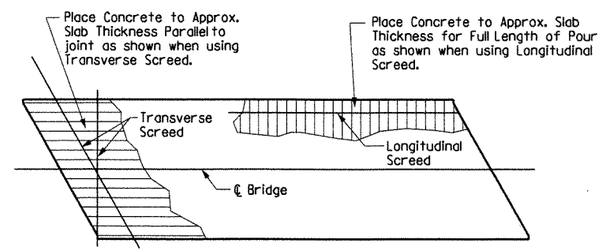

Note: At the Contractor's option, the Transverse Screed may be placed parallel to the skew or perpendicular to C.L. Bridge

CONCRETE PLACEMENT PROCEDURE

No Scale

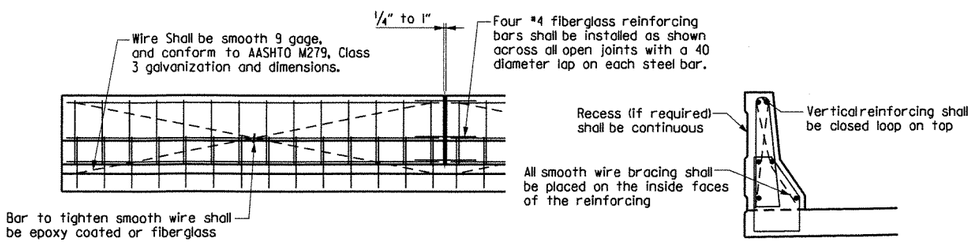

All panels shall be braced as shown to prevent racking. All open joints shall be sawed as soon as practical to a min. width of 1/4". To control cracking before sawing, all joints must be grooved before the concrete is set. Sawing of the joints must be controlled so it will follow the grooved joint.

The extruded parapet shall conform to the horizontal and vertical lines shown in the plans or as directed by the Engineer and shall present a smooth uniform appearance and texture. Exposed surfaces may be given a light brush finish or a Class 3 Textured Coating Finish in place of Class 2, Rubbed Finish.

DETAILS OF OPTIONAL SLIPFORMING OF CONCRETE PARAPET

No Scale

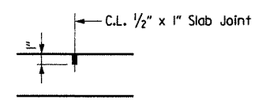

Use Type 3, 4, or 6 Joint Sealer. See subsections 501.02 (h) and 501.05 (j). Backer Rod filler will not be required. Joint Sealer shall be measured and paid for as Class S(AE) Concrete-Bridge. Slab joints shall extend to the outside edge of the deck slab. Slab joints shall be installed before the parapet railing is poured. If slab joints are to be sawed, they shall be sawed as soon as the concrete has sufficiently set to allow sawing of the joint without damage to the slab. Slab joints shall be placed at all pouring sequence construction joints and required slab joint locations. Slab joints shall align with parapet open joints.

SLAB JOINT DETAIL

No Scale

SHEET 5 OF 6
DETAILS OF
485'-0" CONT. COMP. W-BEAM UNIT
(BR. A6881)

ROUTE I-540 SEC. 2
ARKANSAS STATE HIGHWAY COMMISSION
LITTLE ROCK, ARK.

STATE OF ARKANSAS REGISTERED PROFESSIONAL ENGINEER No. 11339 LARRY W. MILLER

Larry W. Miller 8-11-12
BRIDGE ENGINEER

DRAWN BY:	TAR	DATE:	Jan 02	FILENAME:	bBB0407a5 sl4.dgn
CHECKED BY:	EMB	DATE:	May 02	SCALE:	As Shown
DESIGNED BY:	JLH	DATE:	Dec 01		

BRIDGE NO. A6881 DRAWING NO. 48592

$$$$date$$$

$$$$dgnspec$$$$$

...\b040468a5_s14.dgn 8/10/2012 3:50:11 PM

Notes:

For Details of Concrete Parapet Railing & Reinforcing, See Dwg. No. 48592

For Additional Details & Notes, See Dwg. No. 48589

Slab Joints shall align with Parapet Joints at gutterline.

DATE REVISED	DATE FILMED	DATE REVISED	DATE FILMED	FED. ROAD DIST. NO.	STATE	FED. AID PROJ. NO.	SHEET NO.	TOTAL SHEETS
				6	ARK.			
				JOB NO.		BB0407	301	464
				1 A6881		SPAN DTLS.		48593

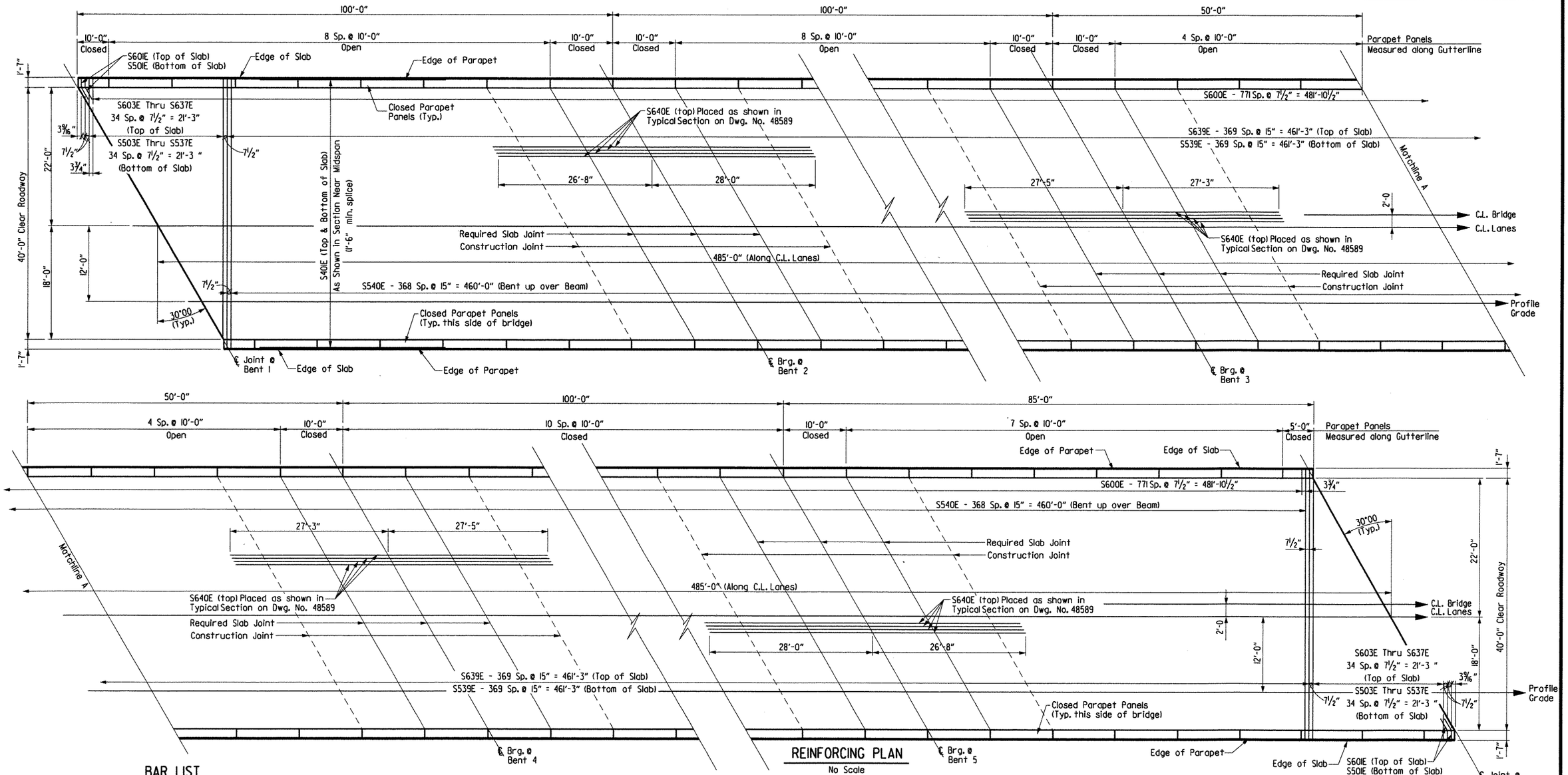

REINFORCING PLAN

No Scale

BAR LIST

Mark	No. Req'd.	Length	Pin Dia.	Mark	No. Req'd.	Length	Pin Dia.
S401E	1365	38'-10"	Str.	S603E to S637E	2 ea.	3'-6" to 40'-4"	Str.
S501E	2	3'-10"	3¾"				
	Not Used			S638E	Not Used		
S503E to S537E	2 ea.	3'-6" to 40'-4"	Str.	S639E	370	42'-10"	Str.
				S640E	180	54'-8"	Str.
S538E	Not Used						
S539E	370	42'-10"	Str.	P401E	1037	6'-4"	2"
S540E	369	43'-10"	3"	P402E	1037	5'-7"	2"
S600E	772	6'-4"	Str.	P403E	12	4'-8"	Str.
S601E	2	3'-10"	4½"	P404E	576	9'-8"	Str.
S602E	Not Used			P405E	155	5'-10"	2"
				P406E	155	3'-2"	2"

Bending Diagrams
(Dimensions are out to out of bars.)

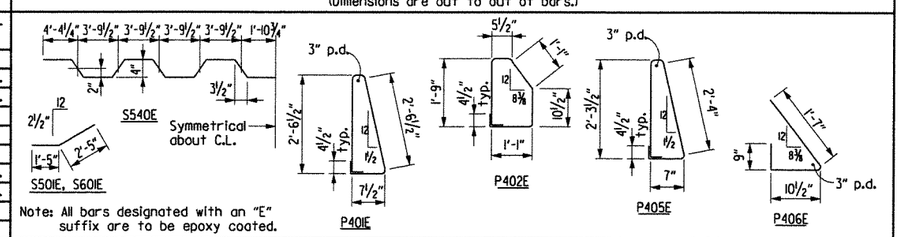

Note: All bars designated with an "E" suffix are to be epoxy coated.

Note: At the Contractor's option, two straight epoxy coated #5 bars may be substituted for the S540E bars. Payment for reinforcing will be based on the S540E bars.

STATE OF ARKANSAS
Larry E. Miller
REGISTERED PROFESSIONAL ENGINEER
No. 13539
LARRY E. MILLER
8-11-12
BRIDGE ENGINEER

SHEET 6 OF 6
DETAILS OF
485'-0" CONT. COMP. W-BEAM UNIT
(BR. A6881)

ROUTE I-540 SEC. 2
ARKANSAS STATE HIGHWAY COMMISSION
LITTLE ROCK, ARK.

DRAWN BY: TAR	DATE: Jan 02	FILENAME: bBB0407a5 s15.dgn			
CHECKED BY: EMB	DATE: May 02	SCALE: As Shown			
DESIGNED BY: JLH	DATE: Dec 01				
BRIDGE NO. A6881	DRAWING NO. 48593				

$$$$date$$$$

$$$$dgnspec$$$$

...\b040468a5_s15.dgn 8/10/2012 3:50:12 PM

DATE REVISED	DATE FILMED	DATE REVISED	DATE FILMED	FED. ROAD DIST. NO.	STATE	FED. AID PROJ. NO.	SHEET NO.	TOTAL SHEETS
				6	ARK.			
				JOB NO.		BB0407	302	464
				(1) B6881		LAYOUT		48594

For R/W Data, see Rdwy. Plans

Note: Existing approach slabs and gutters to be removed and replaced with new Approach Slabs and Type C Approach Gutters ("w" = 10'-0" & "w" = 6'-0"). See Dwg. Nos. 2018 & 2016C.

Note: The existing slopes shall be excavated as shown to produce 3'-0" wide berms to the front of the new end bent caps and shall provide a 1'-3" min. vertical clearance to the new beams. Approximately 1,750 cubic yards of excavation required. This work shall be paid for as UNCLASSIFIED EXCAVATION FOR STRUCTURES - BRIDGE.

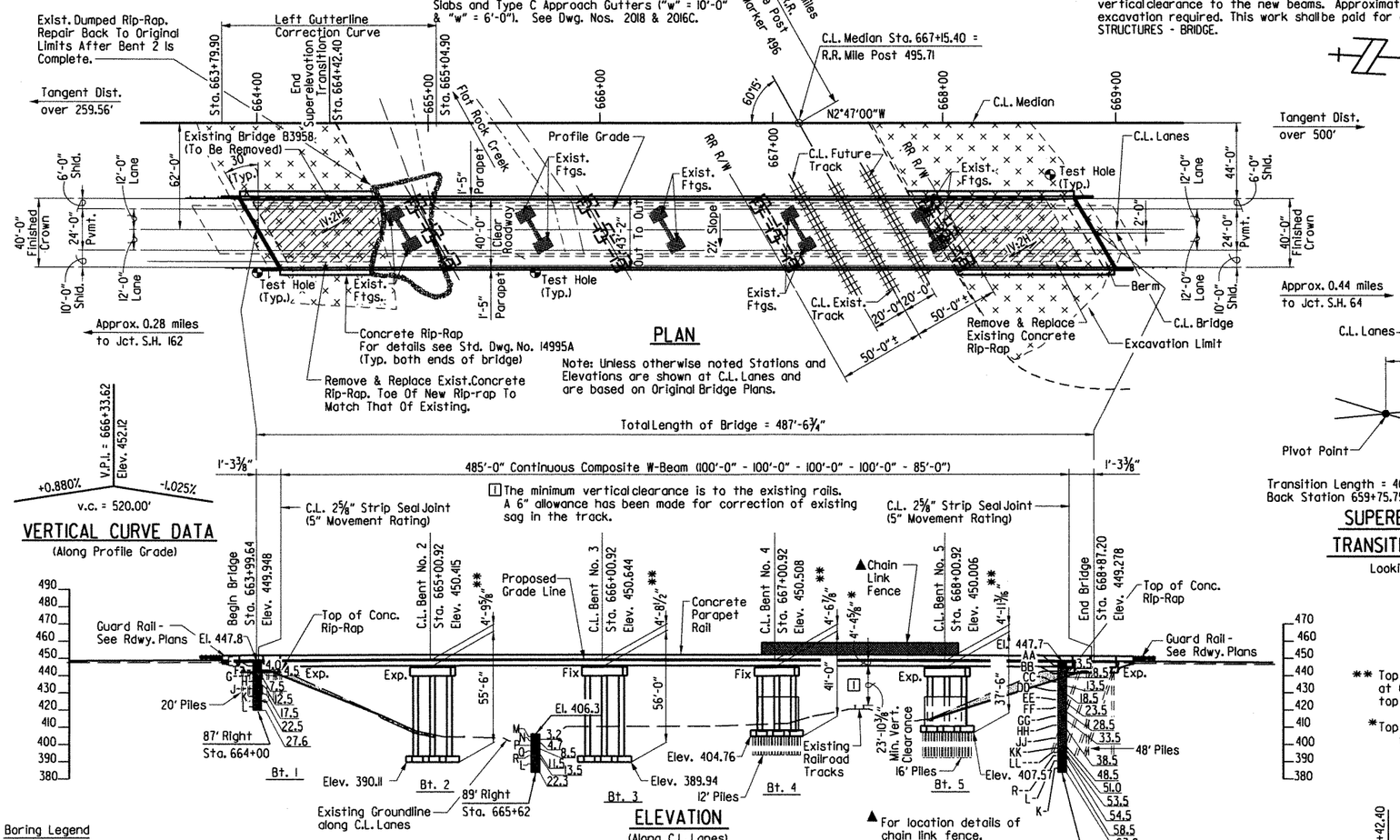

PLAN

Note: Unless otherwise noted Stations and Elevations are shown at C.L. Lanes and are based on Original Bridge Plans.

[1] The minimum vertical clearance is to the existing rails. A 6" allowance has been made for correction of existing sag in the track.

VERTICAL CURVE DATA

(Along Profile Grade)

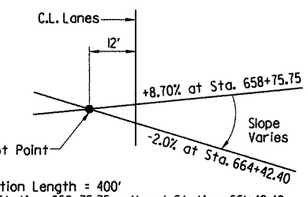

Transition Length = 400'
Back Station 659+75.75 = Ahead Station 661+42.40

SUPERELEVATION TRANSITION SKETCH

Looking Ahead

** Top of Deck at C.L. Bent at C.L. Lanes to low side top of cap

* Top of Deck at C.L. Lanes to low steel

ELEVATION

(Along C.L. Lanes)

▲ For location details of chain link fence, see Dwg. No. 48578. For fence details, see Dwg. No. 48613

The proposed bridge provides an equal or greater waterway opening than the existing bridge.

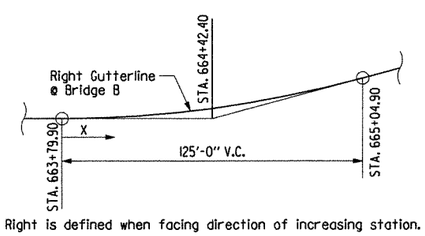

Right is defined when facing direction of increasing station.

The right gutterline of Bridge 'B' has been smoothed with a correction equation between the stations shown. The roadway cross slope at any station is a straight line between the left and right gutterlines.

Elev. = 449.77 - 0.0005(X) + 0.0000183(X^2)

X is the distance in feet along centerline lane from beginning station shown. Elevation is at gutterline.

RIGHT GUTTER CORRECTION CURVE

No Scale

Boring Legend

A - Medium Hard, Brown and Gray Weathered Shale
B - Hard, Gray Fractured Sandstone with Weathered Shale and some Shale Seams
C - Hard, Dark Gray Shale with Thin Gray Sandstone and some Highly Weathered Shale Seams
D - Hard, Dark Gray Shale with Thin Gray Sandstone Seams
E - Moist, Very Dense, Brown and Gray Sand and Sandstone Fragments
F - Medium Hard, Brown and Gray Weathered Shale with some Sandstone Fragments
G - Hard, Gray Fractured Sandstone with Shale and Weathered Shale Seams
H - Hard, Fractured Dark Gray Shale with Thin Gray Sandstone Seams
J - Medium Hard, Gray Weathered Shale with Gray Sandstone Seams
K - Hard, Dark Gray Fractured Shale
L - Hard, Dark Gray Shale
M - Moist, Medium Dense, Brown Gravel
N - Wet, Very Loose, Brown Sand and Gravel
P - Wet, Loose, Brown Sand and Gravel with Traces of Clay Seams
Q - Wet, Medium Stiff, Brown and Gray Sandy Clay with Gravel
R - Medium Hard, Gray Weathered Shale
S - Moist, Medium Stiff, Brown Sandy Clay with Gravel
T - Moist, Medium Stiff, Brown and Gray Sandy, Silty Clay
U - Moist, Medium Stiff, Brown and Gray Sandy, Silty Clay with Sandstone Fragments
V - Moist, Stiff to Medium Stiff, Brown and Gray Sandy, Silty Clay with Sandstone Fragments and Traces of Weathered Shale
W - Moist, Medium Stiff, Brown and Gray Sandy Clay with Sandstone Fragments and some Weathered Shale
X - Moist, Stiff, Brown and Gray Sandy Clay with Sandstone Fragments and some Weathered Shale
Y - Wet, Stiff, Brown and Gray Silty Clay
Z - Wet, Medium Stiff to Stiff, Brown Silty Clay with some Organic Matter
AA - Moist, Loose, Brown Sand and Gravel (Fill Material)
BB - Moist, Medium Stiff, Brown Silty Clay with Sandstone and Shale Fragments
CC - Moist, Medium Stiff, Reddish Brown Silty Clay with Shale Fragments
DD - Moist, Medium Stiff, Reddish Brown Silty Clay with some Highly Weathered Shale
EE - Moist, Stiff, Reddish Brown Silty Clay with Sandstone and Shale Fragments
FF - Moist, Stiff, Reddish Brown Silty Clay with some Highly Weathered Shale
GG - Moist, Stiff, Reddish Brown Silty Clay with Sandstone Fragments
HH - Moist, Stiff, Reddish Brown Silty Clay with some Weathered Shale
JJ - Wet, Medium Stiff, Brown and Gray Silty Clay with some Organic Matter
KK - Moist, Stiff, Reddish Brown and Gray Silty Clay
LL - Soft, Gray Highly Weathered Shale

SAMPLE DATA

Sta. 664+00 - 87' Right of Centerline of Median I-540

4.0 - 4.5, N = 60
4.5 - 7.5, SCR% = 30, RQD% = 0
7.5 - 12.5, SCR% = 48, RQD% = 0
12.5 - 17.5, SCR% = 5, RQD% = 0
17.5 - 22.5, SCR% = 66, RQD% = 28
22.5 - 27.5, SCR% = 99, RQD% = 78

Sta. 665+62 - 89' Right of Centerline of Median I-540

3.7 - 4.7, N = 4
9.0 - 10.0, N = 5
13.5 - 17.5, SCR% = 99, RQD% = 48
17.5 - 22.5, SCR% = 99, RQD% = 30

Sta. 668+69 - 30' Right of Centerline of Median I-540

4.0 - 5.0, N = 6
9.0 - 10.0, N = 7
14.0 - 15.0, N = 8
19.0 - 20.0, N = 10
24.0 - 25.0, N = 11
29.0 - 30.0, N = 14
34.0 - 35.0, N = 14
39.0 - 40.0, N = 8
44.0 - 45.0, N = 7
49.0 - 50.0, N = 11
53.5 - 54.0, N = 60
54.5 - 58.5, SCR% = 88, RQD% = 44
58.5 - 63.5, SCR = 99, RQD% = 0

NOTE: For Exhibit A See Dwg. Nos. 48577, 48578 and 48579.

GENERAL NOTES

BENCH MARK: Elevations and stations are assumed to be the same as shown on the original plans. The original layout shows the elevation at the top of the deck and centerline of existing bridge to be at 448.14 at Sta. 664+06.91 (Beg. of Br. B3958).

CONSTRUCTION SPECIFICATIONS: Arkansas State Highway and Transportation Department Standard Specifications for Highway Construction (2003 edition), with applicable supplemental specifications and special provisions. Unless otherwise noted on the plans, section and subsection refer to the Standard Construction Specifications.

DESIGN SPECIFICATIONS: AASHTO Standard Specifications for Highway Bridges (1996 edition), with current interim specifications.

LIVE LOAD: HS20 + Military Loading METHOD OF DESIGN: Load Factor
SEISMIC PERFORMANCE CATEGORY: A

MATERIALS AND STRENGTHS:
Class S(AE) Concrete (superstructure) f'c = 4,000 psi
Class S Concrete (substructure) f'c = 3,500 psi
Reinforcing Steel (AASHTO M31 or M53, Gr. 60) fy = 60,000 psi
Structural Steel (AASHTO M270, Gr. 50W) Fy = 50,000 psi
Structural Steel (AASHTO M270, Gr. 36) Fy = 36,000 psi

BORING LOGS: Boring Logs may be obtained from the Programs and Contracts Division.

BRIDGE DECK: The concrete bridge deck shall be given a tine finish as specified for final finishing in Subsection 802.19 for Class 5 Tined Bridge Roadway Surface Finish.

CLASS I PROTECTIVE SURFACE TREATMENT: Class I Protective Surface Treatment shall be applied to the roadway surface and the face and top of the concrete parapet rail.

STEEL PILING: Piling in Bents 1, 4, 5 and 6 shall be HP12x53 and shall be driven with an approved air, steam or diesel hammer to a minimum safe bearing capacity of 70 tons per pile and into the material designated as medium hard shale on the boring legend. Lengths of piling shown are for estimating quantities and for use in determining payment for cut-off and build-up in accordance with the Standard Specifications. Piles in end bents to be driven after embankment to bottom of cap is in place. On all piles the contractor shall use approved steel H-Pile driving points.

PREBORING: Preboring will be required at all piles in Bent 1 to obtain minimum penetration requirement. Quantities of preboring shown are for bidding purposes only. Actual size and depths to be determined in the field by the Engineer. The Contractor shall be responsible for keeping prebored holes free from debris prior to backfilling which may require the use of temporary casings or other methods. Temporary casing, if necessary, will not be paid for directly but will be considered subsidiary to the pay item "PREBORING".

FOOTINGS: Footings for Bents 2 and 3 shall be set a minimum of 1'-6" in top of hard sandstone or hard dark shale. Footings shall not be at a higher elevation than the existing footing and shall have a minimum cover above top of footings of 2'-0". Foundations for all footings shall be prepared in accordance with Section 801.04 of the Standard Specifications. Rock excavations shall be made to neat lines of the concrete footings. Care shall be exercised to avoid shattering of rock faces by excessive blasting. Concrete in footings shall be poured directly against excavated surfaces of rock.

DETAIL DRAWINGS:	DRAWING NO.
End Bents	48596, 48597, 48603, 48604
Intermediate Bents	48598-48602A
485'-0" Cont. Comp. W-Beam Unit	48605-48609
Steel Piling	14995A
Approach Slab	2018
Type C Approach Gutter	2016C

REMOVAL AND SALVAGE: The existing bridge shall be removed in accordance with Section 205 All material from existing bridge shall become the property of the contractor.

EXISTING BRIDGE: Existing Bridge No. B3958 is 33'-6" wide and 462'-6" long and consists of 6 composite I-beam 76'-8" simple spans supported by substructures consisting of 5 dual column bents and 2 pile end bents. Plans for existing bridge will be made available to the Contractor upon request to Programs and Contracts Division. Existing Dwg. Nos. 13338 thru 13344.

MAINTENANCE OF TRAFFIC: See Roadway Plans.

NOTE: The contractor shall check measurements of the existing bridge. Any adjustments necessary to fit the new work to the existing bridge location shall be submitted for the Engineer's approval.

STATE OF ARKANSAS REGISTERED PROFESSIONAL ENGINEER No. 13339 LARRY D. MILLER

Larry D. Miller 8-11-12

BRIDGE ENGINEER

LAYOUT OF BRIDGE OVER UNION PACIFIC RAILROAD (BR. B6881) HWY. 22 - I-40 (F) CRAWFORD & SEBASTIAN COUNTIES ROUTE I-540 SEC. 2

ARKANSAS STATE HIGHWAY COMMISSION

LITTLE ROCK, ARK.

DRAWN BY: TAR DATE: March 02 FILENAME: bBB0407b5 11.dgn
CHECKED BY: JLH DATE: March 02 SCALE: 1" = 40'
DESIGNED BY: BCG DATE: March 02

BRIDGE NO. B6881 DRAWING NO. 48594

$$$$date$$$

$$$$dgnspec$$$$

...\b040468b5_l11.dgn 8/10/2012 3:50:13 PM

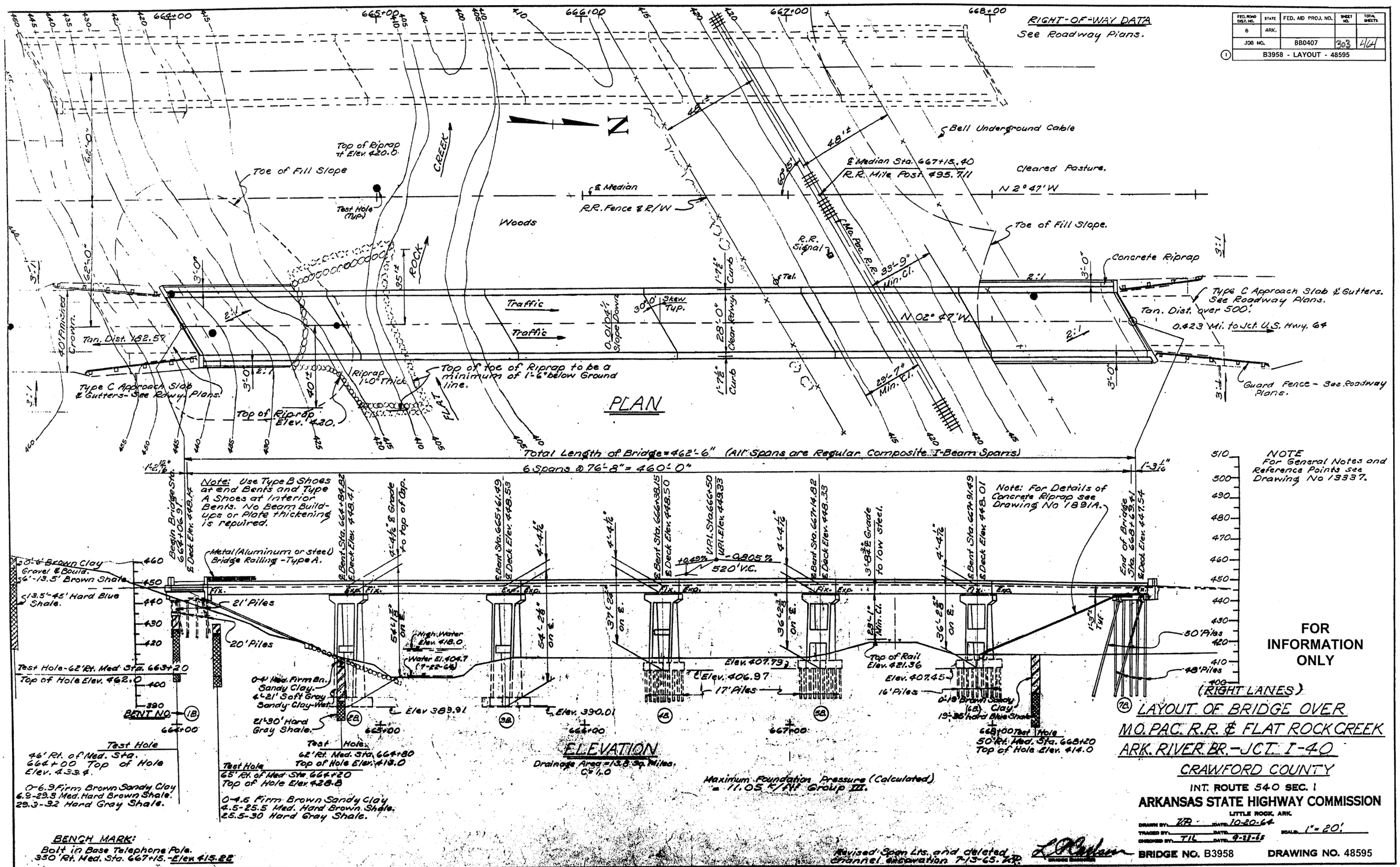

FOR INFORMATION ONLY

LAYOUT OF BRIDGE OVER
MO. PAC. R.R. & FLAT ROCK CREEK
ARK. RIVER BR. - JCT. I-40
CRAWFORD COUNTY
INT. ROUTE 540 SEC. 1
ARKANSAS STATE HIGHWAY COMMISSION
LITTLE ROCK, ARK.

DRAWN BY: V.P. DATE: 10-20-64
TRACED BY: DATE:
CHECKED BY: TIL DATE: 9-23-65
SCALE: 1" = 20'

BRIDGE NO. B3958 DRAWING NO. 48595

DATE REVISED	DATE FILMED	DATE REVISED	DATE FILMED	FED. ROAD DIST. NO.	STATE	FED. AID PROJ. NO.	SHEET NO.	TOTAL SHEETS
				6	ARK.			
				JOB NO.		BB0407	304	464
				(1) B6881		BENT DTLS.		48596

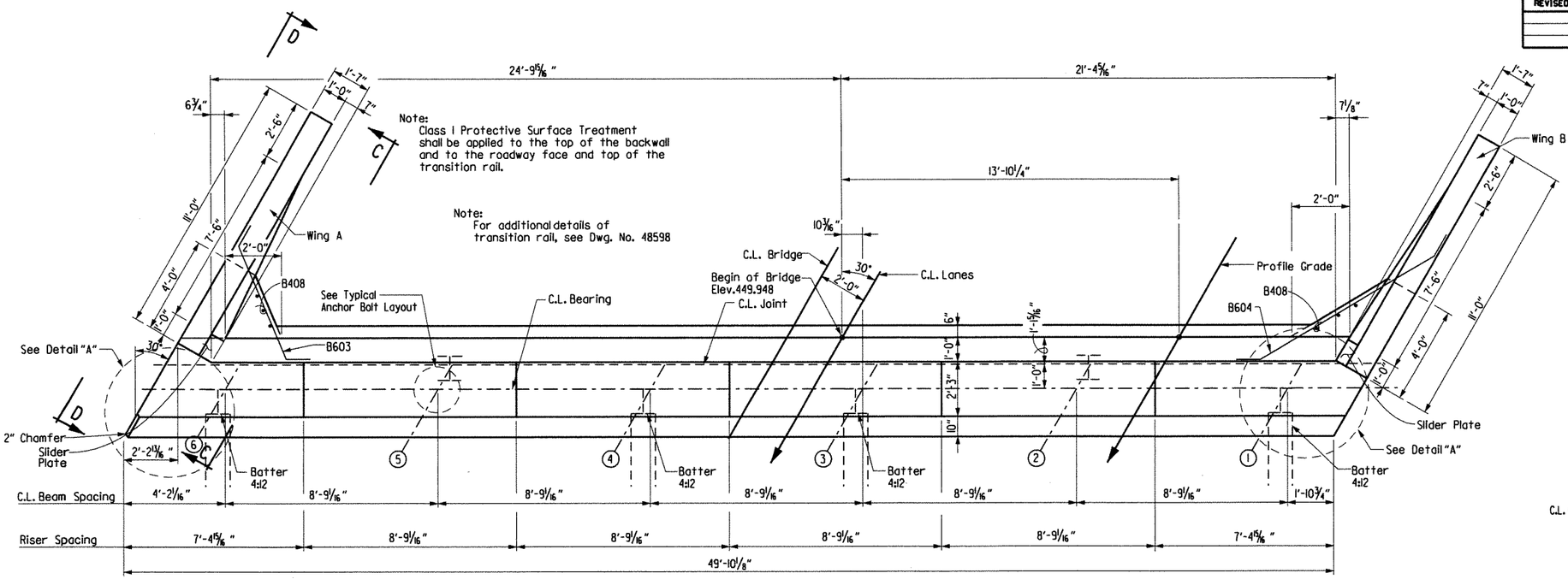

PLAN

3/8" = 1'-0"

SUBSTRUCTURE GENERAL NOTES

All concrete shall be Class "S" and shall be poured in the dry. All exposed corners shall be chamfered 3/4" unless otherwise noted.

All reinforcing steel shall conform to AASHTO M31 or M53, Gr. 60.

End Bent backwall shall not be poured before girders are in place. Backwall to be placed after concrete span placement.

Structural steel in end bents shall be AASHTO M270, Gr. 50W and shall be paid for as "Structural Steel in Beam Spans (M270, Gr. 50W)".

If anchor bolts are drilled into cap, top reinforcing bars shall be properly spaced to avoid damage.

For additional information, see Layout.

The parapet slider plates shall be cleaned in accordance with subsection 807.84(b) and painted in accordance with subsection 807.75. The color of paint shall be Gray and shall match Fed. Std. 595B, Color Chip 26176. Cleaning and painting will not be paid for directly but will be considered subsidiary to "Structural Steel in Beam Spans (Gr. 50W)".

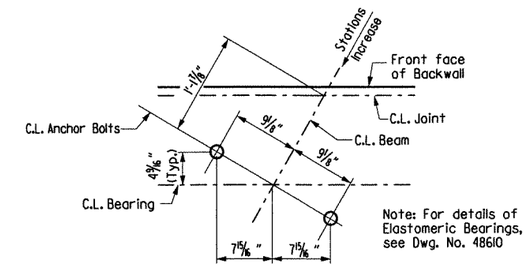

TYPICAL ANCHOR BOLT LAYOUT

No Scale

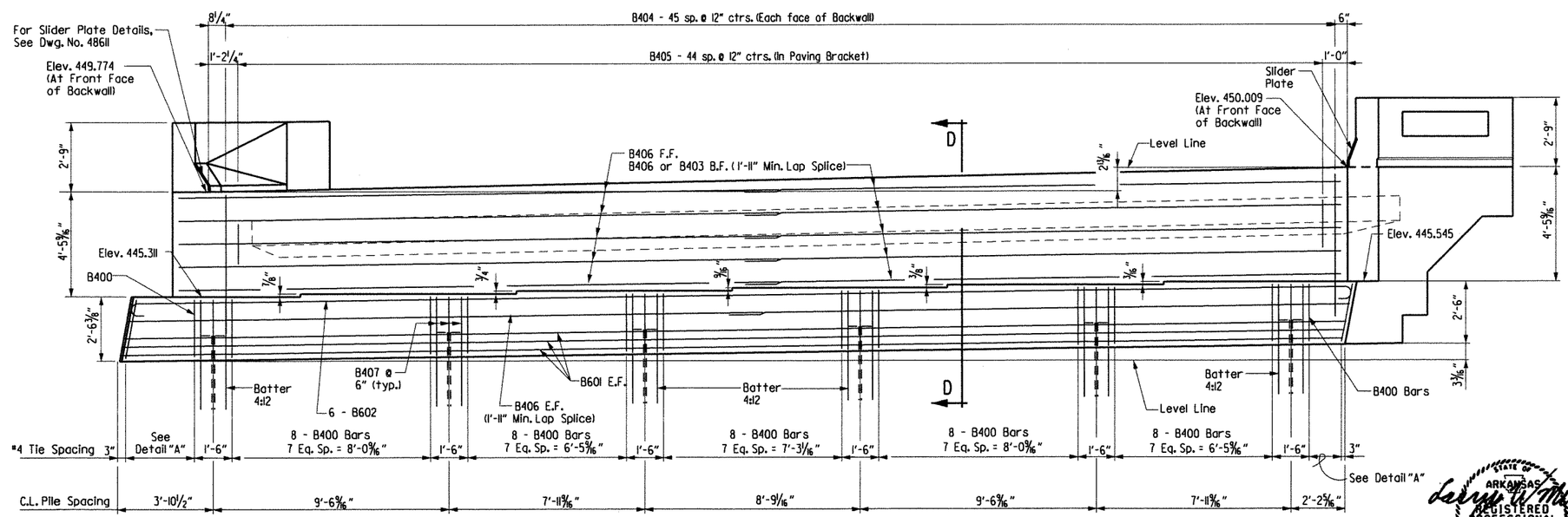

ELEVATION

(Looking Ahead)
3/8" = 1'-0"

Note:
E.F. = Each Face
F.F. = Front Face
B.F. = Back Face

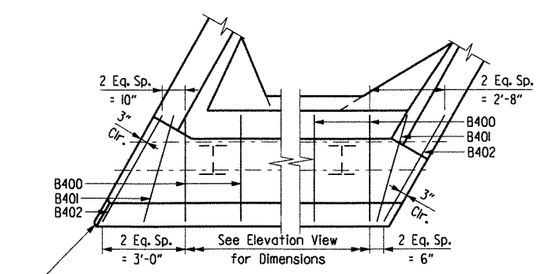

DETAIL A

3/8" = 1'-0"

STATE OF ARKANSAS REGISTERED PROFESSIONAL ENGINEER No. 13339 LARRY W. MILLER

Larry W. Miller 8-11-12

BRIDGE ENGINEER

SHEET 1 OF 2
DETAILS OF BENT NO. 1
BRIDGE OVER UNION PACIFIC RAILROAD
(BR. B6881)
CRAWFORD & SEBASTIAN COUNTIES

ROUTE I-540 SEC. 2

ARKANSAS STATE HIGHWAY COMMISSION

LITTLE ROCK, ARK.

DRAWN BY: TAR DATE: April 02 FILENAME: bBB0407b5 bll.dgn
CHECKED BY: EMB/ETH DATE: April 02 SCALE: N.T.S.
DESIGNED BY: JLH DATE: Jan 02

BRIDGE NO. B6881 DRAWING NO. 48596

$$$$date$$$$

$$$$dgnspec$$$$

...\b040468b5_b11.dgn 8/10/2012 3:50:14 PM

DATE REVISED	DATE FILMED	DATE REVISED	DATE FILMED	FED. ROAD DIST. NO.	STATE	FED. AID PROJ. NO.	SHEET NO.	TOTAL SHEETS
				6	ARK.			
				JOB NO.		BB0407	305	464
				① B6881		BENT DTLS.		48597

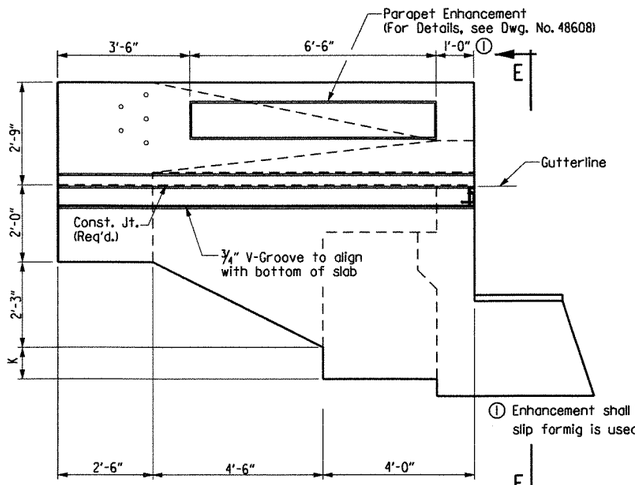

① Enhancement shall be continuous if slip formig is used on bridge parapet.

VIEW D-D - STAGE II

(Stage IV Similar)
Scale: 1/2" = 1'-0"

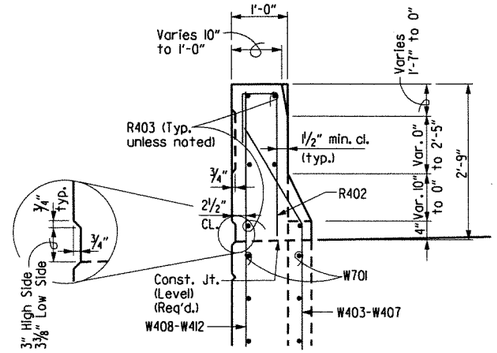

SECTION F-F

Scale: 3/4" = 1'-0"

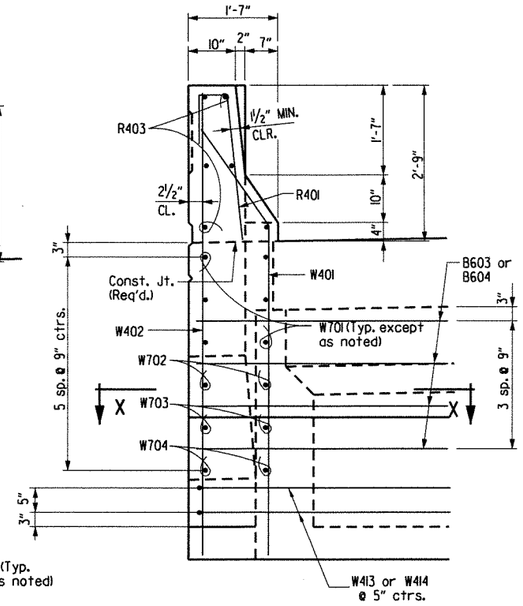

VIEW E-E

Scale: 3/4" = 1'-0"

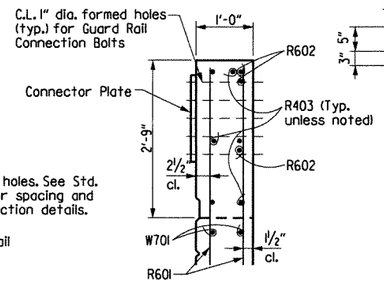

SECTION G-G

Scale: 3/4" = 1'-0"

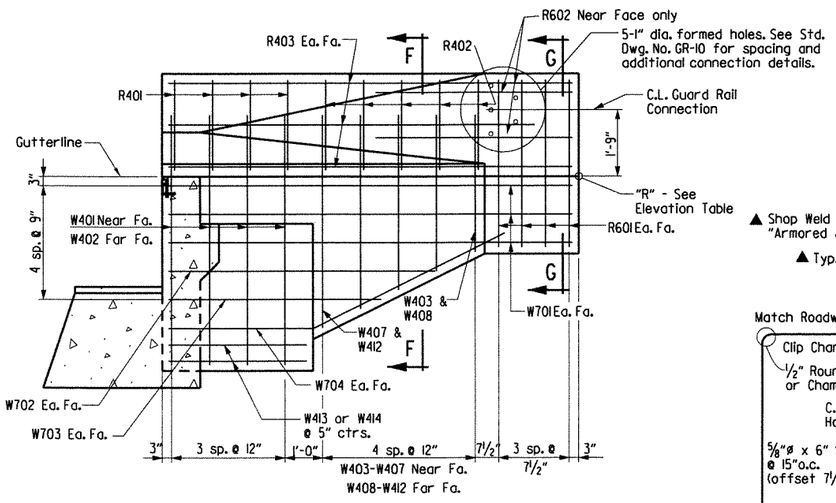

SECTION C-C - STAGE II

(Stage IV Similar)
Scale: 1/2" = 1'-0"

▲ Shop Weld - See SP Job BB0407 "Armored Joint With Neoprene Strip Seal"

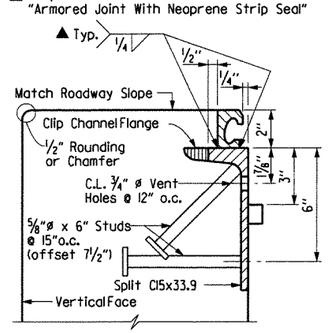

Note: Concrete shall be hand packed under the joint armor in the backwall.

For additional details, See Dwg. No. 48611.

DETAIL Z

3"= 1'-0"

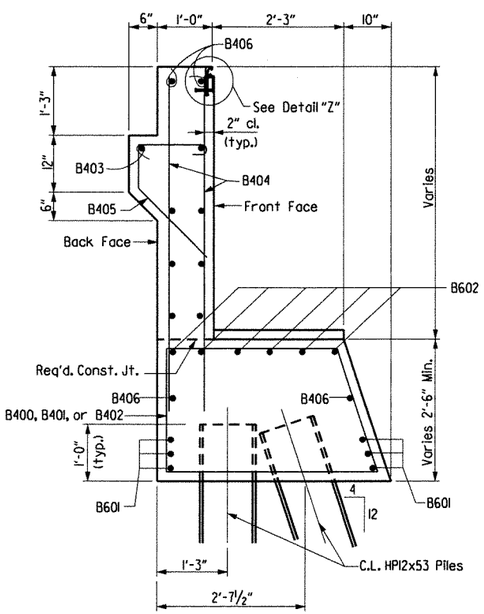

SECTION D-D

3/4" = 1'-0"

BAR LIST

Mark	No. Req'd.	Length	"A"	"B"	Pin Dia.
B400	42	11'-5"	2'-11"	3'-8"	2"
B401	2	11'-8"	3'-0"	3'-10"	2"
B402	2	12'-6"	3'-5"	4'-3"	2"
B403	2	24'-1"			STR.
B404	92	6'-0"			STR.
B405	45	3'-11"	1'-2"	4 1/2"	3"
B406	22	25'-9"			STR.
B407	18	7'-3"	2'-11"	3'-9"	STR.
B408	6	4'-0"			STR.
B601	6	49'-6"			STR.
B602	6	50'-10"			4 1/2"
B603	4	7'-1"	5'-1"	1'-0"	4 1/2"
B604	4	10'-4"	8'-4"	1'-0"	4 1/2"
R401	8	3'-11"			2"
R402	8	3'-11"			2"
R403	12	9'-8"			STR.
R601	16	4'-5"			STR.
R602	6	5'-0"			STR.
W401	8	7'-3"	6'-1"	1'-2"	2"
W402	8	8'-4"			STR.
W403 to W407	2 ea.	3'-4" to 5'-4"	2'-2" to 4'-2"	1'-2"	2"
W408 to W412	2 ea.	4'-5" to 6'-5"			STR.
W413	2	10'-0"			2"
W414	2	13'-3"			2"
W701	12	9'-8"			STR.
W702	4	6'-0"			STR.
W703	4	4'-6"			STR.
W704	4	8'-4"	2'-9"	5'-7"	5 1/2

Bending Diagrams (Dimensions are out to out of bars.)

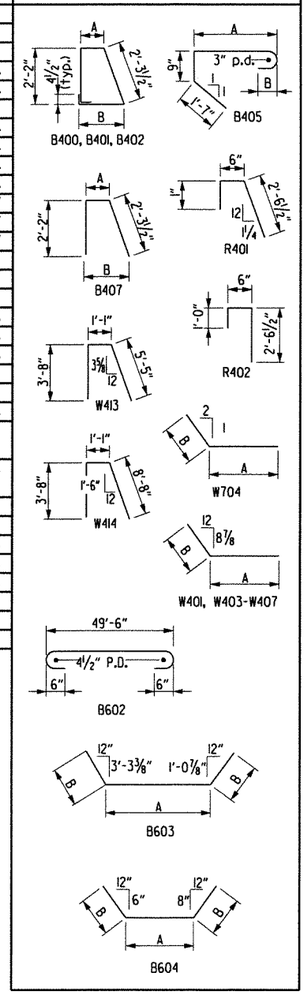

Bent No.	Wing	Elev. "R"	K
1	A	449.764	1'-9 1/8"
1	B	449.900	1'-8 1/16"

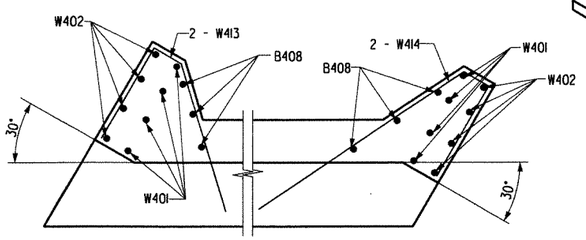

SECTION X-X

Wing A

SECTION X-X

Wing B

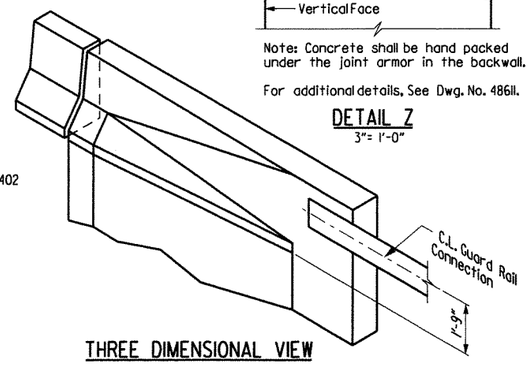

THREE DIMENSIONAL VIEW WING RAIL & PARAPET

No Scale

STATE OF ARKANSAS
REGISTERED PROFESSIONAL ENGINEER
No. 11339
LARRY W. MILLER

Larry W. Miller 8-11-12
BRIDGE ENGINEER

SHEET 2 OF 2
DETAILS OF BENT NO. 1
BRIDGE OVER UNION PACIFIC RAILROAD
(BR. B6881)
CRAWFORD & SEBASTIAN COUNTIES
ROUTE I-540 SEC. 2
ARKANSAS STATE HIGHWAY COMMISSION
LITTLE ROCK, ARK.

DRAWN BY:	TAR	DATE:	April 02	FILENAME:	bBB0407b5 bl2.dgn
CHECKED BY:	EMB/ETH	DATE:	April 02	SCALE:	As Shown
DESIGNED BY:	BCG	DATE:	Dec 01		

BRIDGE NO. B6881 DRAWING NO. 48597

$$$$date$$$$

$$$$dgnspec$$$$$

...\b040468b5_b12.dgn 8/10/2012 3:50:14 PM

DATE REVISED	DATE FILMED	DATE REVISED	DATE FILMED

FED. ROAD DIST. NO.	STATE	FED. AID PROJ. NO.	SHEET NO.	TOTAL SHEETS
6	ARK.			
JOB NO.		BB0407	3de	464
(1) B6881		BENT DTLS.		48598

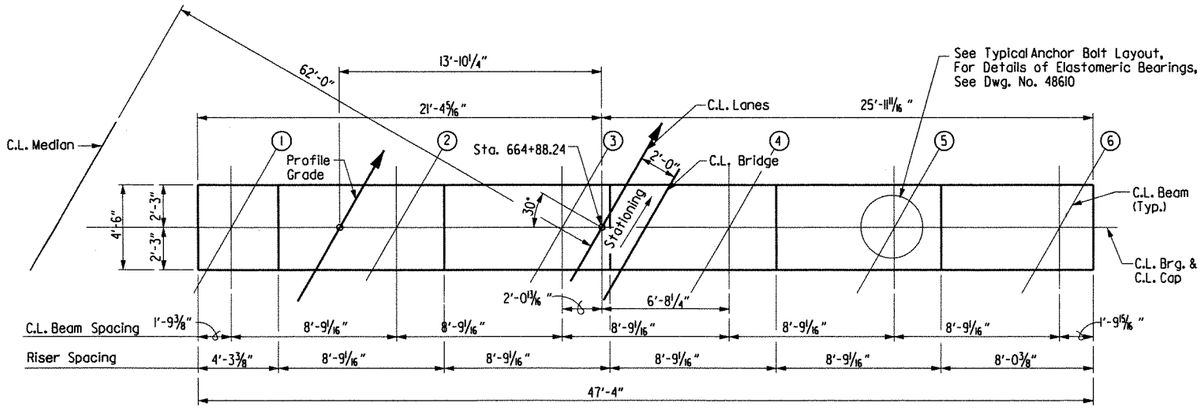

PLAN

Scale: ¼" = 1'-0"

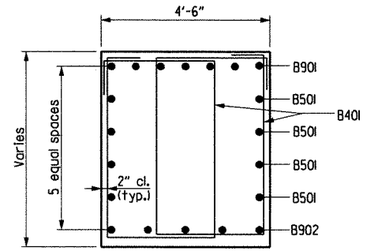

SECTION B-B

Scale: ½" = 1'-0"

BAR LIST

Mark	No. Req'd.	Length	Pin Dia.
B401	56	15'-6"	2"
B402	9	13'-6"	2"
B501	8	47'-0"	STR.
B901	7	49'-6"	9"
B902	5	47'-0"	STR.
C401	157	12'-4"	3"
C801	81	50'-4"	STR.
C802	81	10'-11"	6"
F701	24	8'-2"	5¼"
F901	24	12'-0"	9"

Bending Diagrams (Dimensions are out to out of bars.)

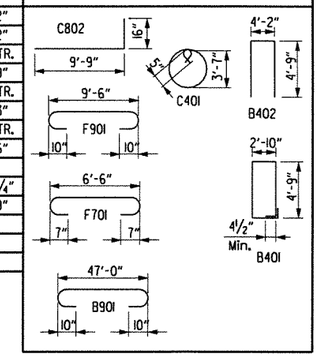

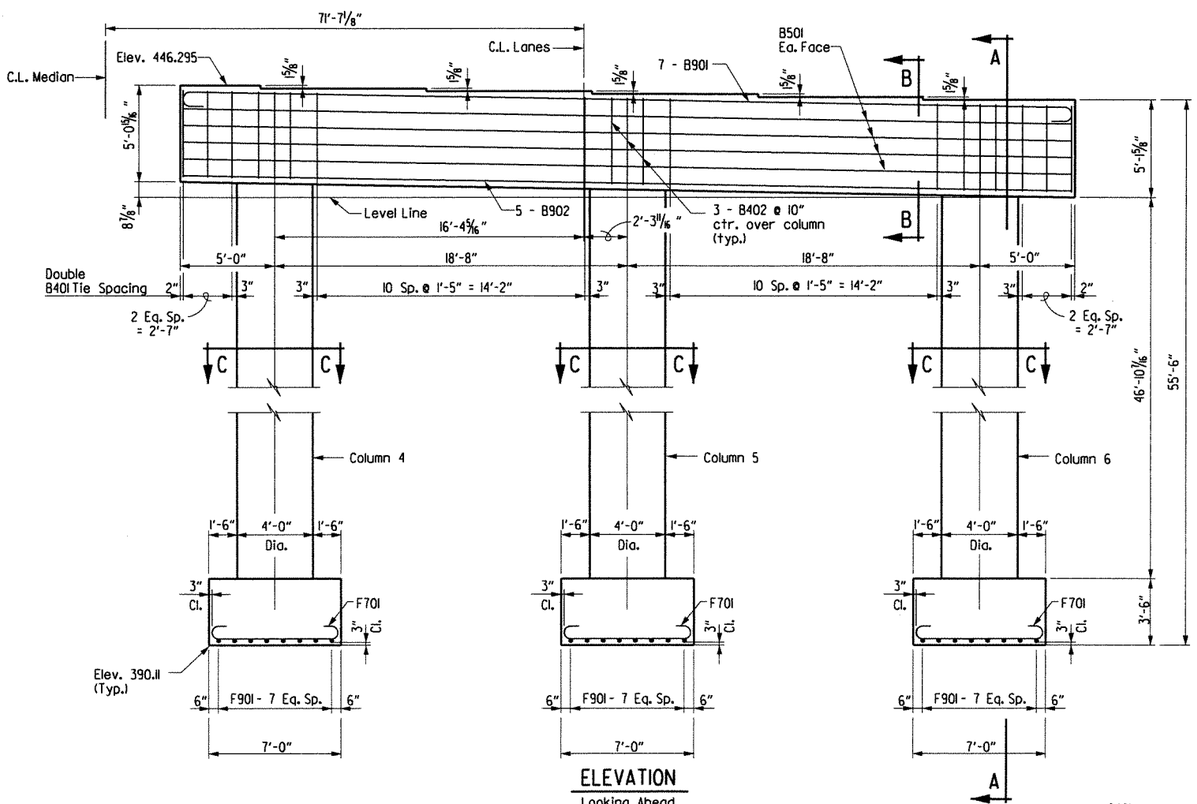

ELEVATION

Looking Ahead

Scale: ¼" = 1'-0"

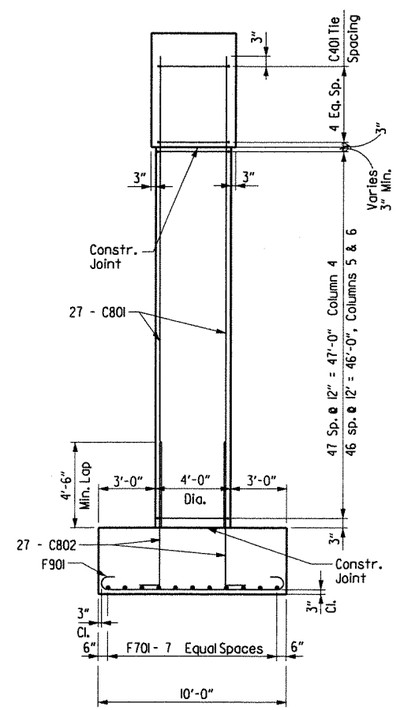

SECTION A-A

Scale: ¼" = 1'-0"

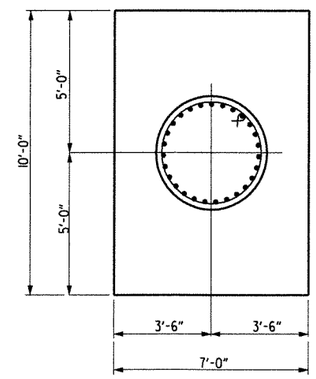

PLAN OF FOOTING

Scale: ⅜" = 1'-0"

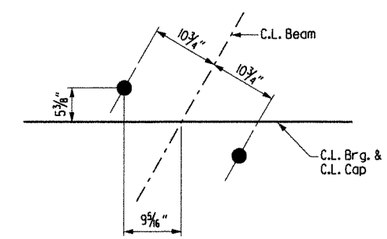

TYPICAL ANCHOR BOLT LAYOUT

No Scale

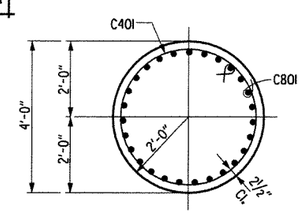

SECTION C-C

Scale: ½" = 1'-0"

Notes:

All concrete shall be Class "S" and shall be poured in the dry. All exposed corners shall be chamfered ¾" unless otherwise noted.

All reinforcing steel shall conform to AASHTO M31 or M53, Grade 60.

If anchor bolts are drilled into cap, top reinforcing bars shall be properly placed to avoid damage.

For additional information, see Layout.

STATE OF ARKANSAS REGISTERED PROFESSIONAL ENGINEER No. 11339 LARRY W. MILLER

Larry W. Miller 8-11-12

BRIDGE ENGINEER

DETAILS OF BENT NO. 2
BRIDGE OVER UNION PACIFIC RAILROAD
(BR. B6881)
CRAWFORD & SEBASTIAN COUNTIES

ROUTE I-540 SEC. 2

ARKANSAS STATE HIGHWAY COMMISSION

LITTLE ROCK, ARK.

DRAWN BY:	TAR	DATE:	Feb 02	FILENAME:	bBB0407b5 b2.dgn
CHECKED BY:	EMB/ETH	DATE:	April 02	SCALE:	As Shown
DESIGNED BY:	JLH	DATE:	Jan 02		

BRIDGE NO. B6881 DRAWING NO. 48598

$$$$date$$$

$$$$dgnspec$$$$$

...\b040468b5_b2.dgn 8/10/2012 3:50:15 PM

DATE REVISED	DATE FILMED	DATE REVISED	DATE FILMED

FED. ROAD DIST. NO.	STATE	FED. AID PROJ. NO.	SHEET NO.	TOTAL SHEETS
6	ARK.			
JOB NO.		B80407	307	464
1 B6881		BENT DTLS.		48599

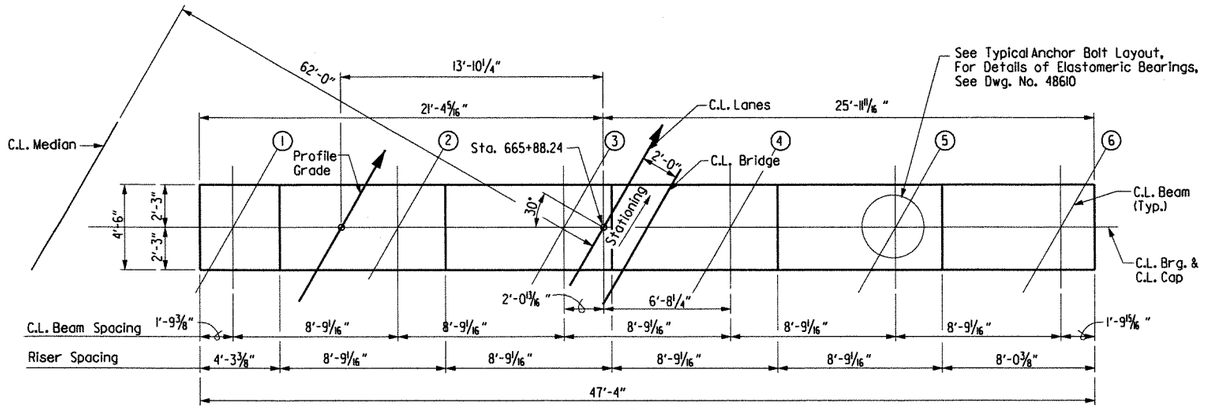

PLAN

Scale: ¼" = 1'-0"

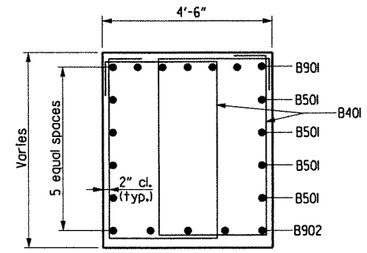

SECTION B-B

Scale: ½" = 1'-0"

BAR LIST

Mark	No. Req'd.	Length	Pin Dia.
B401	56	15'-6"	2"
B402	9	13'-6"	2"
B501	8	47'-0"	STR.
B901	7	49'-6"	9"
B902	5	47'-0"	STR.
C401	158	12'-4"	3"
C801	81	50'-6"	STR.
C802	81	10'-11"	6"
F701	24	8'-2"	5¼"
F901	24	12'-0"	9"

Bending Diagrams (Dimensions are out to out of bars.)

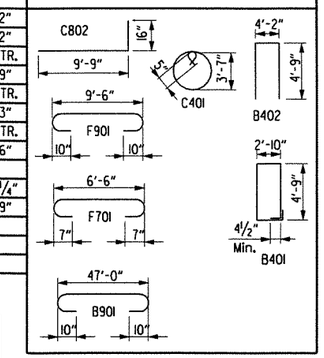

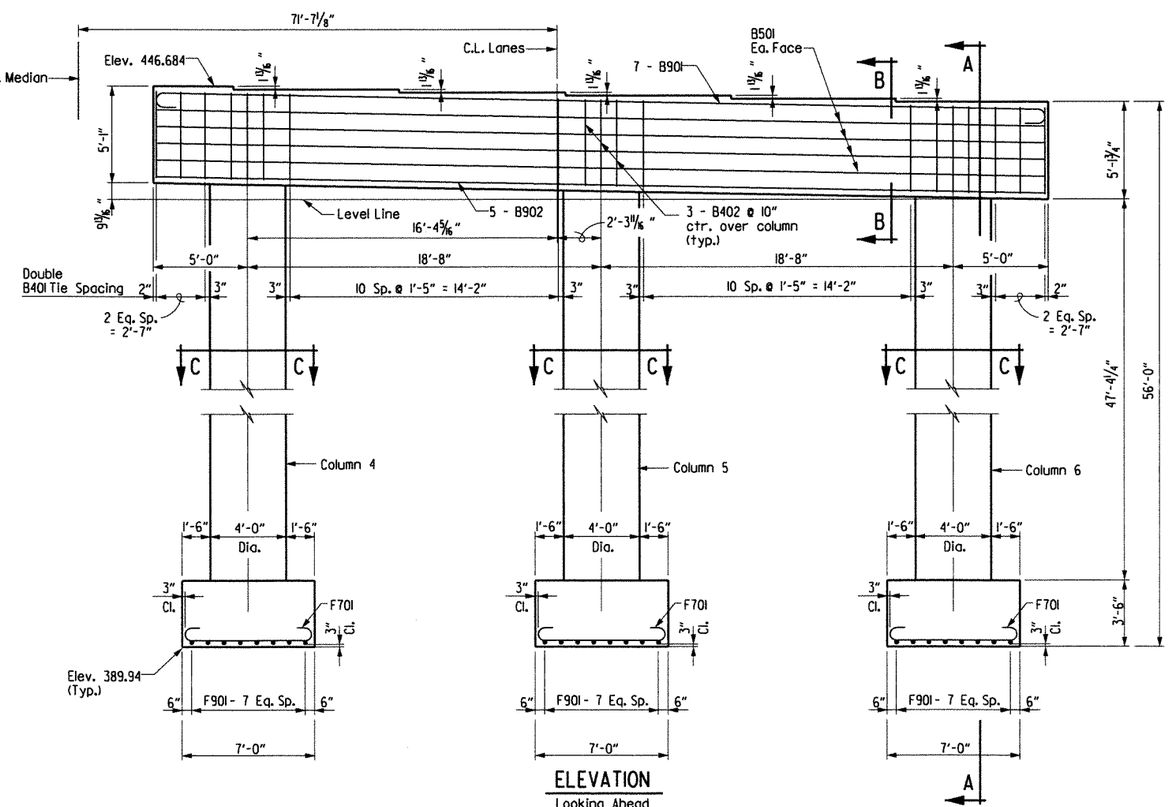

ELEVATION

Looking Ahead

Scale: ¼" = 1'-0"

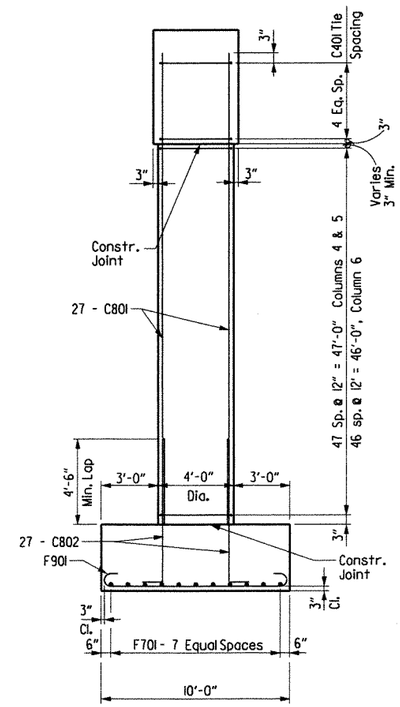

SECTION A-A

Scale: ¼" = 1'-0"

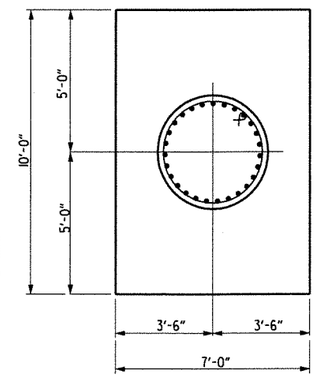

PLAN OF FOOTING

Scale: ⅜" = 1'-0"

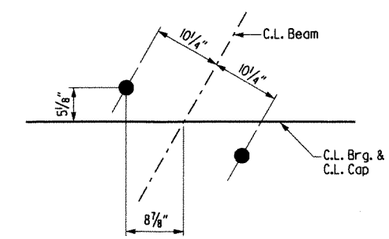

TYPICAL ANCHOR BOLT LAYOUT

No Scale

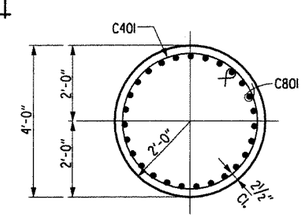

SECTION C-C

Scale: ½" = 1'-0"

Notes:

All concrete shall be Class "S" and shall be poured in the dry. All exposed corners shall be chamfered ¾" unless otherwise noted.

All reinforcing steel shall conform to AASHTO M31 or M53, Grade 60.

If anchor bolts are drilled into cap, top reinforcing bars shall be properly placed to avoid damage.

For additional information, see Layout.

STATE OF ARKANSAS REGISTERED PROFESSIONAL ENGINEER No. 13339 LARRY E. MILLER

8-11-12

BRIDGE ENGINEER

DETAILS OF BENT NO. 3
BRIDGE OVER UNION PACIFIC RAILROAD
(BR. B6881)
CRAWFORD & SEBASTIAN COUNTIES

ROUTE I-540 SEC. 2
ARKANSAS STATE HIGHWAY COMMISSION
LITTLE ROCK, ARK.

DRAWN BY: TAR	DATE: Feb 02	FILENAME: bBB0407b5 b3.dgn
CHECKED BY: EMB	DATE: April 02	SCALE: As Shown
DESIGNED BY: JLH	DATE: Jan 02	
BRIDGE NO. B6881	DRAWING NO. 48599	

$$$$dgnspec$$$$$

...\b040468b5_b3.dgn 8/10/2012 3:50:15 PM

DATE REVISED	DATE FILMED	DATE REVISED	DATE FILMED	FED. ROAD DIST. NO.	STATE	FED. AID PROJ. NO.	SHEET NO.	TOTAL SHEETS
				6	ARK.			
				JOB NO.		BB0407	308	464
				(1) B6881		BENT DTLS.		48600

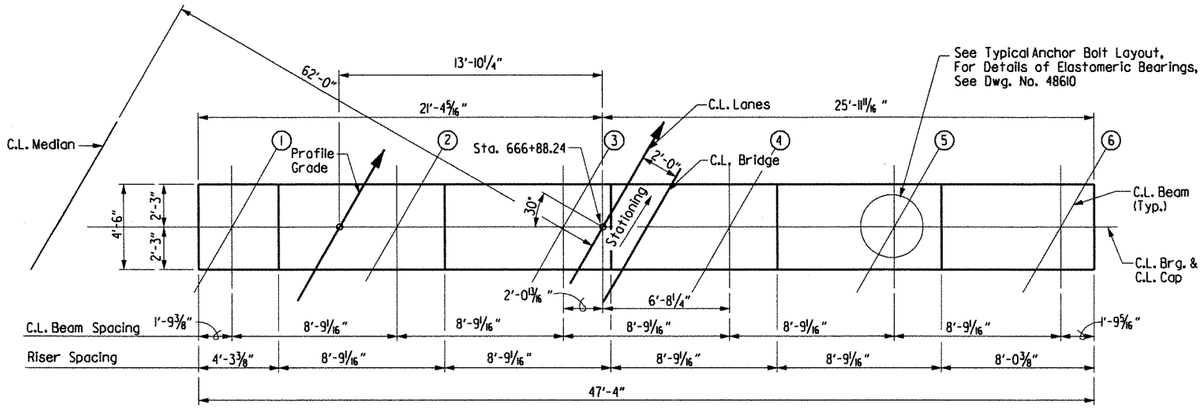

PLAN
Scale: ¼" = 1'-0"

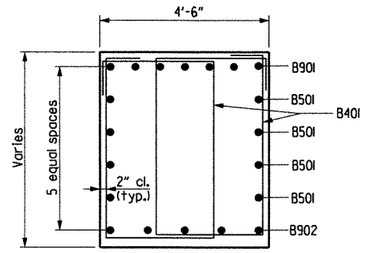

SECTION B-B
Scale: ½" = 1'-0"

BAR LIST

Mark	No. Req'd.	Length	Pin Dia.
B401	56	15'-6"	2"
B402	9	13'-6"	2"
B501	8	47'-0"	STR.
B901	7	49'-6"	9"
B902	5	47'-0"	STR.
C401	173	12'-4"	3"
C801	81	35'-5"	STR.
C802	81	7'-11"	6"
F701	24	8'-2"	5¼"
F901	24	12'-0"	9"
W501	32	42'-2"	STR.
W502	90	17'-2"	STR.
W503	68	8'-10"	2"
W504	36	8'-11"	2"
W505	42	3'-3"	STR.
W601	42	15'-5"	STR.

Bending Diagrams (Dimensions are out to out of bars.)

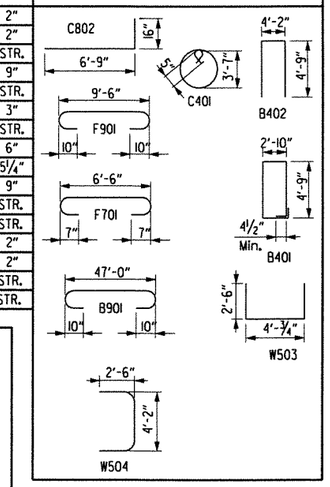

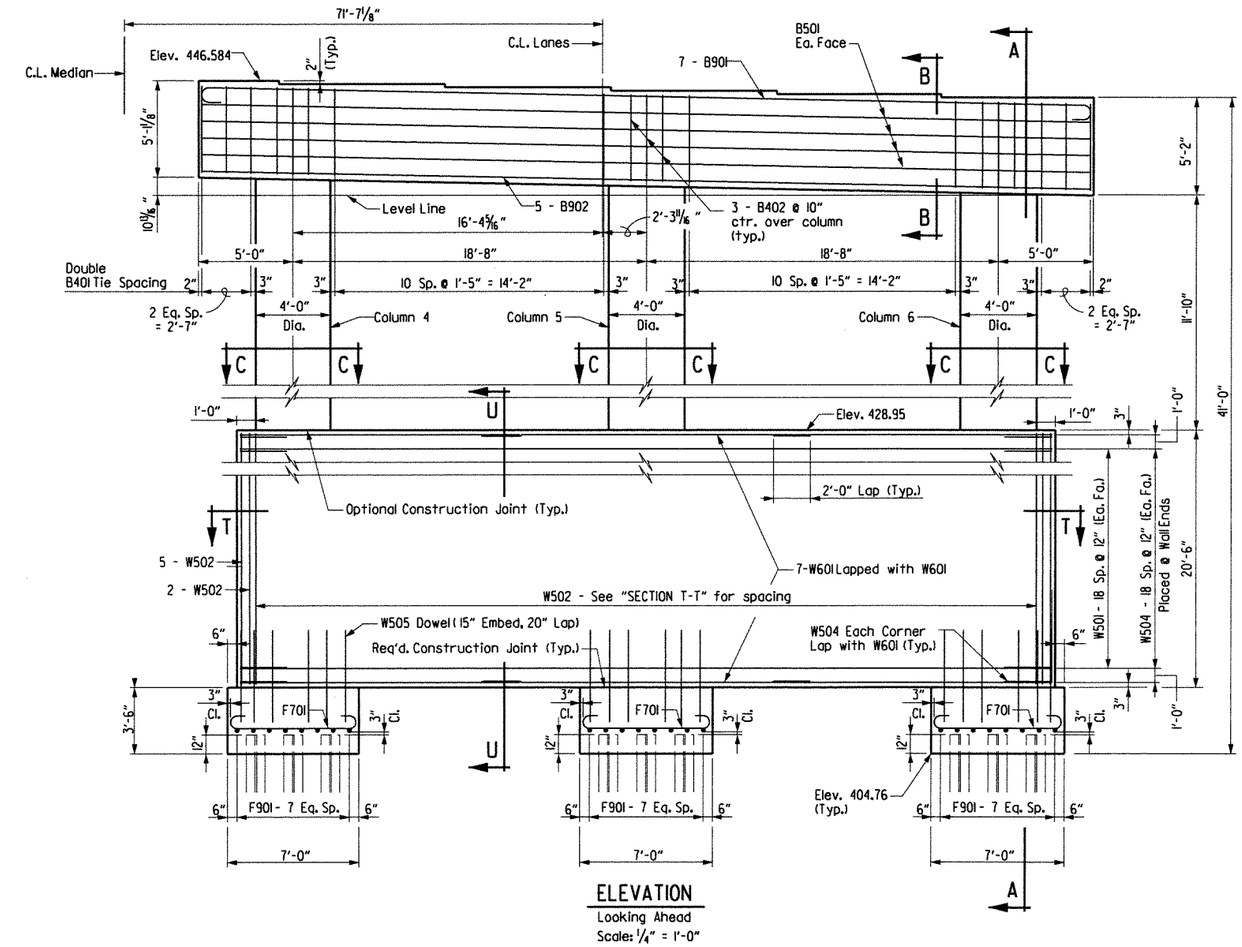

ELEVATION
Looking Ahead
Scale: ¼" = 1'-0"

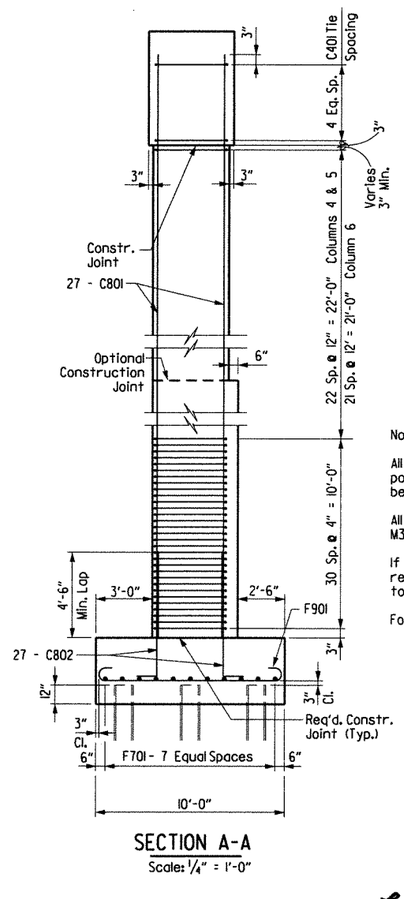

SECTION A-A
Scale: ¼" = 1'-0"

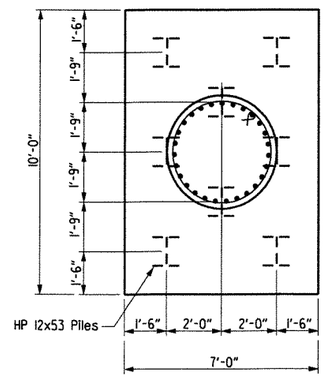

PLAN OF FOOTING
Scale: ⅜" = 1'-0"

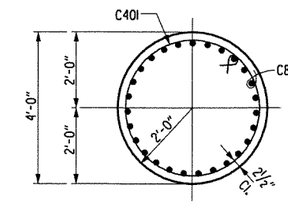

SECTION C-C
Scale: ½" = 1'-0"

Notes:

All concrete shall be Class "S" and shall be poured in the dry. All exposed corners shall be chamfered ¾" unless otherwise noted.

All reinforcing steel shall conform to AASHTO M31 or M53, Grade 60.

If anchor bolts are drilled into cap, top reinforcing bars shall be properly placed to avoid damage.

For additional information, see Layout.

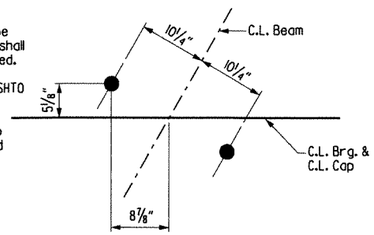

TYPICAL ANCHOR BOLT LAYOUT
No Scale

SHEET 1 OF 2
DETAILS OF BENT NO. 4
BRIDGE OVER UNION PACIFIC RAILROAD
(BR. B6881)
CRAWFORD & SEBASTIAN COUNTIES
ROUTE I-540 SEC. 2
ARKANSAS STATE HIGHWAY COMMISSION
LITTLE ROCK, ARK.

STATE OF ARKANSAS REGISTERED PROFESSIONAL ENGINEER No. 10339 LARRY W. MILLER
8-11-12
BRIDGE ENGINEER

DRAWN BY: TAR	DATE: Feb 02	FILENAME:	bBB0407b5 b4.dgn
CHECKED BY: EMB/ETH	DATE: April 02	SCALE:	As Shown
DESIGNED BY: JLH	DATE: Jan 02		
BRIDGE NO. B6881		DRAWING NO.	48600

$$$$date$$$

$$$$dgnspec$$$$$

...\b040468b5_b4.dgn 8/10/2012 3:50:16 PM

DATE REVISED	DATE FILMED	DATE REVISED	DATE FILMED	FED. ROAD DIST. NO.	STATE	FED. AID PROJ. NO.	SHEET NO.	TOTAL SHEETS
				6	ARK.			
				JOB NO.		BB0407	309	464
				(1) B6881		BENT DTLS.		48601

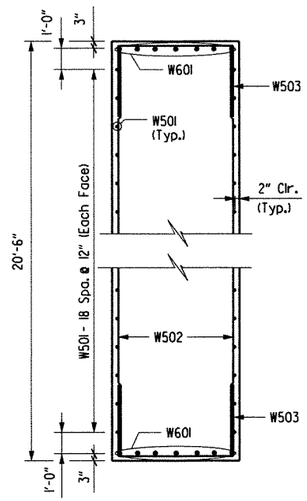

SECTION U-U

Scale: 3/8" = 1'-0"

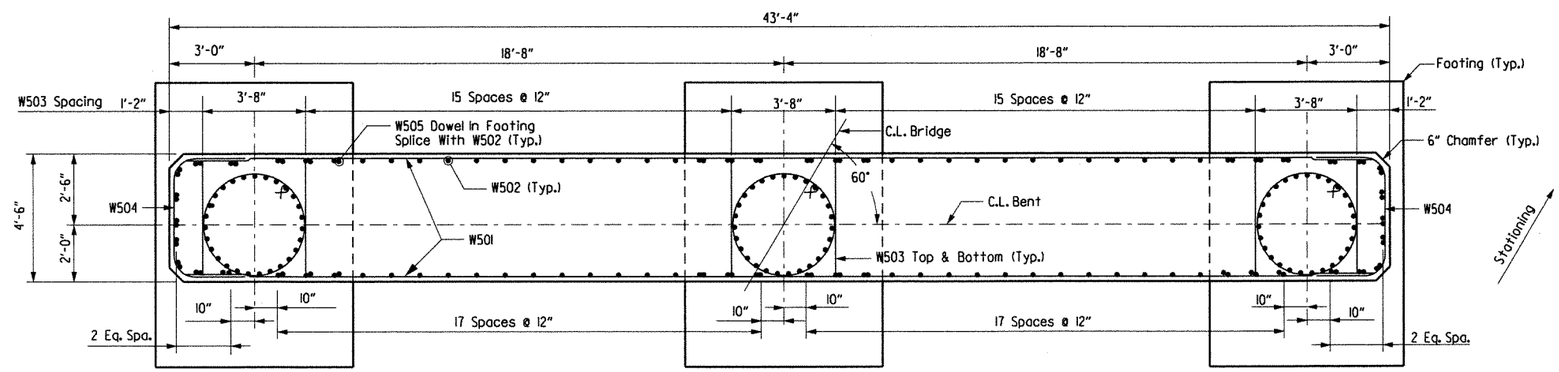

SECTION T-T

Scale: 3/8" = 1'-0"

$$$$date$$$$

$$$$dgnspec$$$$$*

SHEET 2 OF 2

DETAILS OF BENT NO. 4

BRIDGE OVER UNION PACIFIC RAILROAD

(BR. B6881)

CRAWFORD & SEBASTIAN COUNTIES

ROUTE I-540 SEC. 2

ARKANSAS STATE HIGHWAY COMMISSION

LITTLE ROCK, ARK.

STATE OF ARKANSAS REGISTERED PROFESSIONAL ENGINEER No. 13391 LARRY D. MILLER

Larry D. Miller 8-11-12

BRIDGE ENGINEER

DRAWN BY: TAR DATE: Feb 02 FILENAME: bBB0407b5 b4a.dgn

CHECKED BY: EMB/ETH DATE: April 02 SCALE: As Shown

DESIGNED BY: JLH DATE: Jan 02

BRIDGE NO. B6881 DRAWING NO. 48601

...\B040468B5_B4a.dgn 8/10/2012 3:50:16 PM

DATE REVISED	DATE FILMED	DATE REVISED	DATE FILMED	FED. ROAD DIST. NO.	STATE	FED. AID PROJ. NO.	SHEET NO.	TOTAL SHEETS
				6	ARK.			
				JOB NO.		B80407	310	464
				(1) B6881		BENT DTLS.		48602

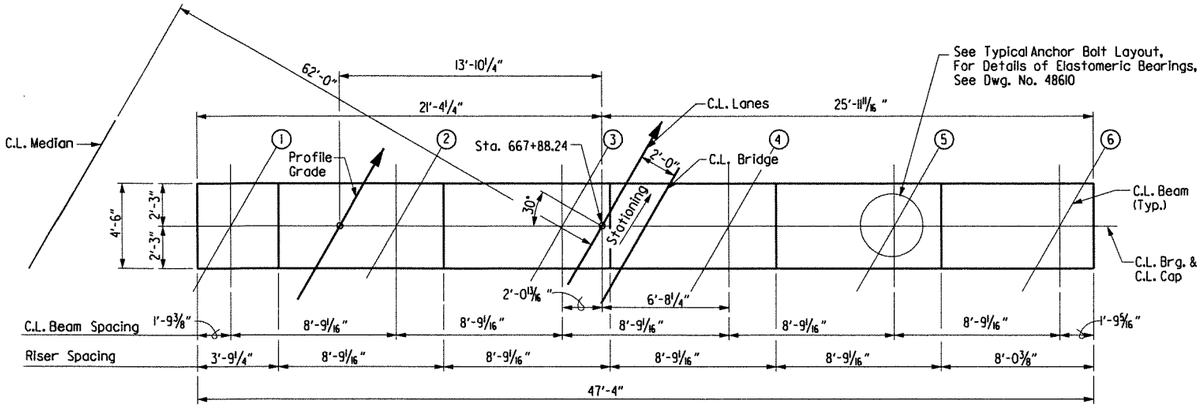

PLAN

Scale: ¼" = 1'-0"

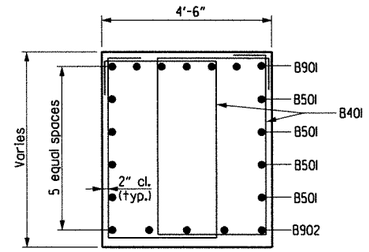

SECTION B-B

Scale: ½" = 1'-0"

BAR LIST

Mark	No. Req'd.	Length	Pin Dia.
B401	56	15'-6"	2"
B402	9	13'-6"	2"
B501	8	47'-0"	STR.
B901	7	49'-6"	9"
B902	5	47'-0"	STR.
C401	163	12'-4"	3"
C801	81	32'-6"	STR.
C802	81	7'-11"	6"
F701	24	8'-2"	5¼"
F901	24	12'-0"	9"
W501	32	42'-2"	STR.
W502	90	17'-2"	STR.
W503	68	8'-10"	2"
W504	36	8'-11"	2"
W505	42	3'-3"	STR.
W601	42	15'-5"	STR.

Bending Diagrams (Dimensions are out to out of bars.)

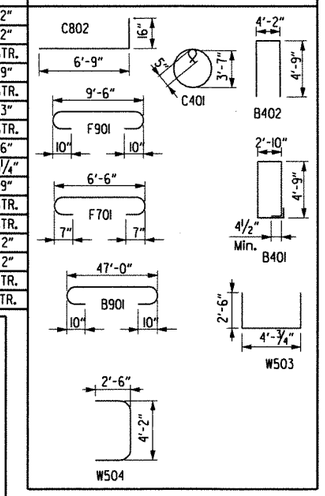

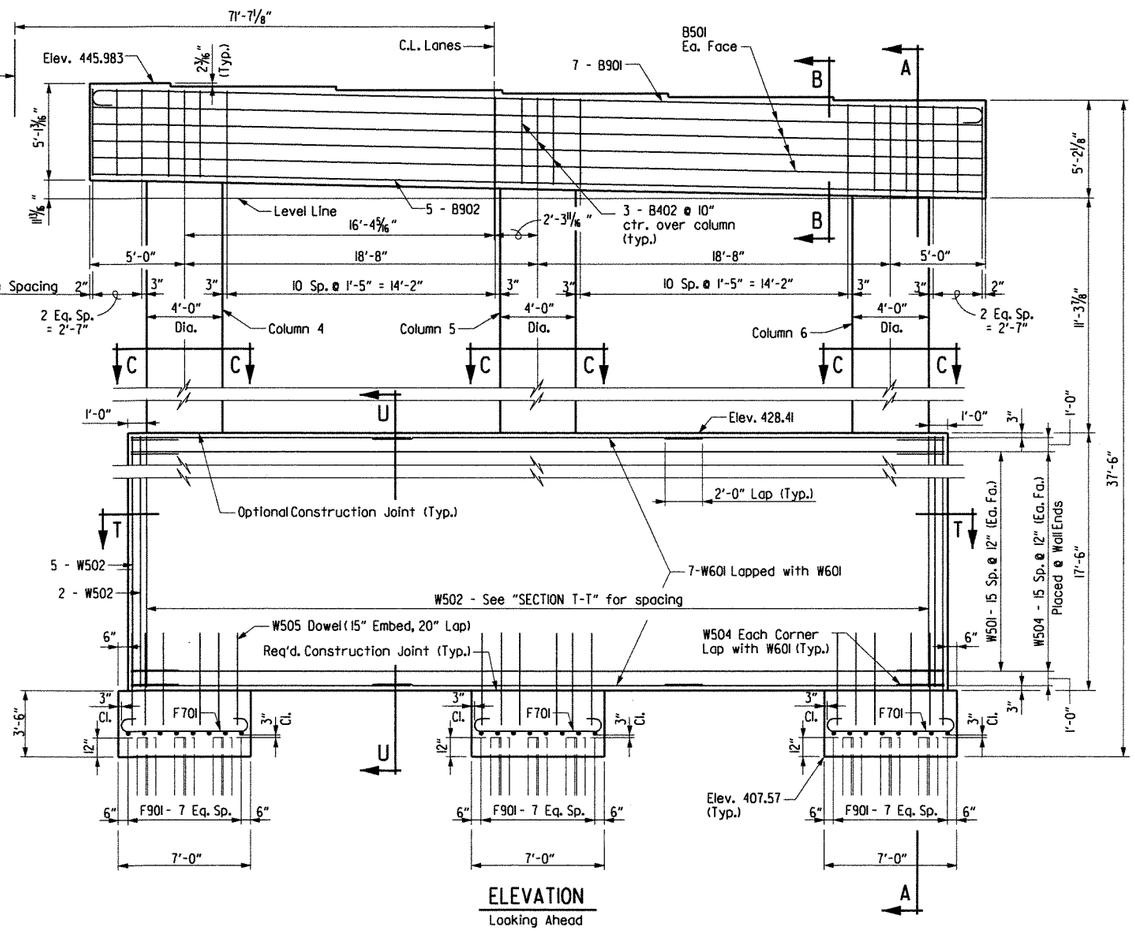

ELEVATION

Looking Ahead

Scale: ¼" = 1'-0"

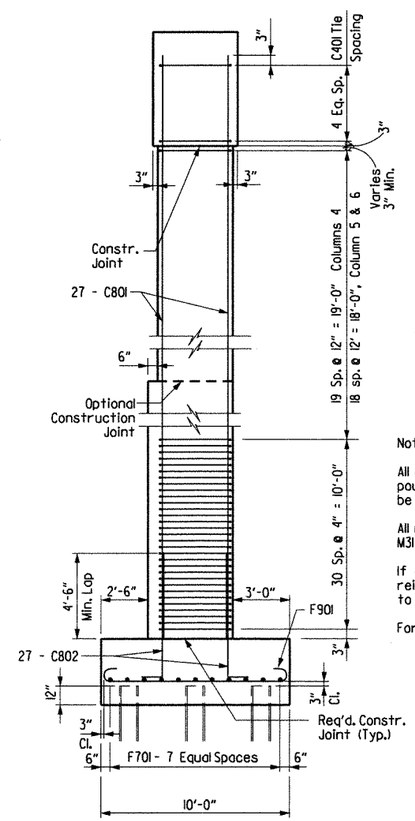

SECTION A-A

Scale: ¼" = 1'-0"

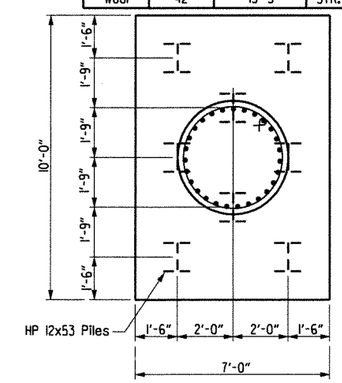

PLAN OF FOOTING

Scale: ⅜" = 1'-0"

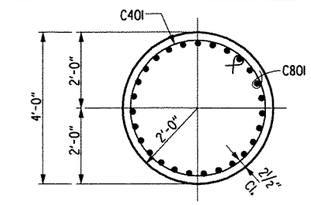

SECTION C-C

Scale: ½" = 1'-0"

Notes:

All concrete shall be Class "S" and shall be poured in the dry. All exposed corners shall be chamfered ¾" unless otherwise noted.

All reinforcing steel shall conform to AASHTO M31 or M53, Grade 60.

If anchor bolts are drilled into cap, top reinforcing bars shall be properly placed to avoid damage.

For additional information, see Layout.

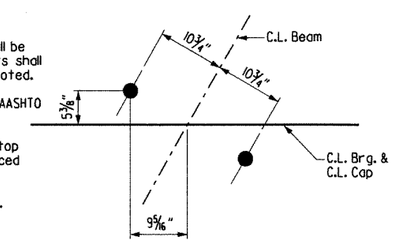

TYPICAL ANCHOR BOLT LAYOUT

No Scale

SHEET 1 OF 2

DETAILS OF BENT NO. 5

BRIDGE OVER UNION PACIFIC RAILROAD

(BR. B6881)

CRAWFORD & SEBASTIAN COUNTIES

ROUTE I-540 SEC. 2

ARKANSAS STATE HIGHWAY COMMISSION

LITTLE ROCK, ARK.

STATE OF ARKANSAS — LARRY H. MILLER — REGISTERED PROFESSIONAL ENGINEER — No. 11339

8-11-12

BRIDGE ENGINEER

DRAWN BY: TAR	DATE: Feb 02	FILENAME: bBB0407b5 b5.dgn			
CHECKED BY: EMB/ETH	DATE: April 02	SCALE: As Shown			
DESIGNED BY: JLH	DATE: Jan 02				
BRIDGE NO. B6881	DRAWING NO. 48602				

$$$$date$$$$

$$$$dgnspec$$$$

...\b040468b5_b5.dgn 8/10/2012 3:50:17 PM

DATE REVISED	DATE FILMED	DATE REVISED	DATE FILMED	FED. ROAD DIST. NO.	STATE	FED. AID PROJ. NO.	SHEET NO.	TOTAL SHEETS
				6	ARK.			
				JOB NO.		BB0407	311	464
				(1) B6881		BENT DTLS.		48602A

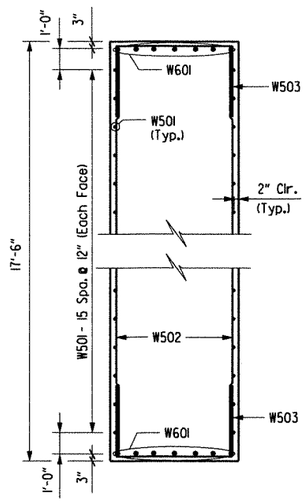

SECTION U-U
Scale: 3/8" = 1'-0"

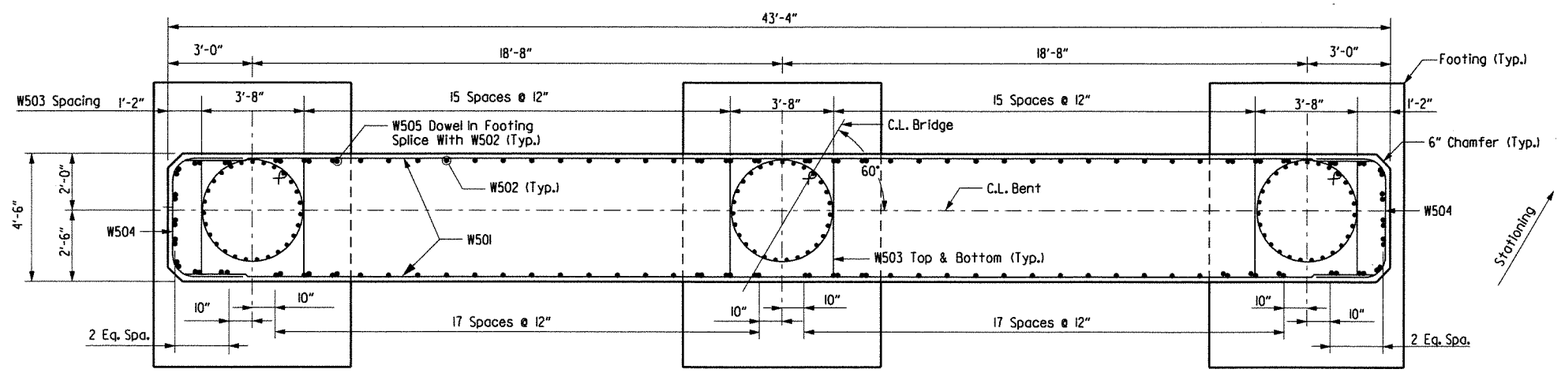

SECTION T-T
Scale: 3/8" = 1'-0"

SHEET 2 OF 2
DETAILS OF BENT NO. 5
BRIDGE OVER UNION PACIFIC RAILROAD
(BR. B6881)
CRAWFORD & SEBASTIAN COUNTIES
ROUTE I-540 SEC. 2
ARKANSAS STATE HIGHWAY COMMISSION
LITTLE ROCK, ARK.

STATE OF ARKANSAS REGISTERED PROFESSIONAL ENGINEER No. 13339 LARRY W. MILLER
Larry W. Miller 8-11-12
BRIDGE ENGINEER

DRAWN BY: TAR DATE: Feb 02 FILENAME: bBB0407b5 b5a.dgn
CHECKED BY: EMB/ETH DATE: April 02 SCALE: As Shown
DESIGNED BY: JLH DATE: Jan 02
BRIDGE NO. B6881 DRAWING NO. 48602A

$$$$dgnspec$$$$$ $$$$date$$$$

...\B040468B5_B5a.dgn 8/10/2012 3:50:17 PM

DATE REVISED	DATE FILMED	DATE REVISED	DATE FILMED	FED. ROAD DIST. NO.	STATE	FED. AID PROJ. NO.	SHEET NO.	TOTAL SHEETS
				6	ARK.			
				JOB NO.		BB0407	312	464
				(1) B6881		BENT DTLS.		48603

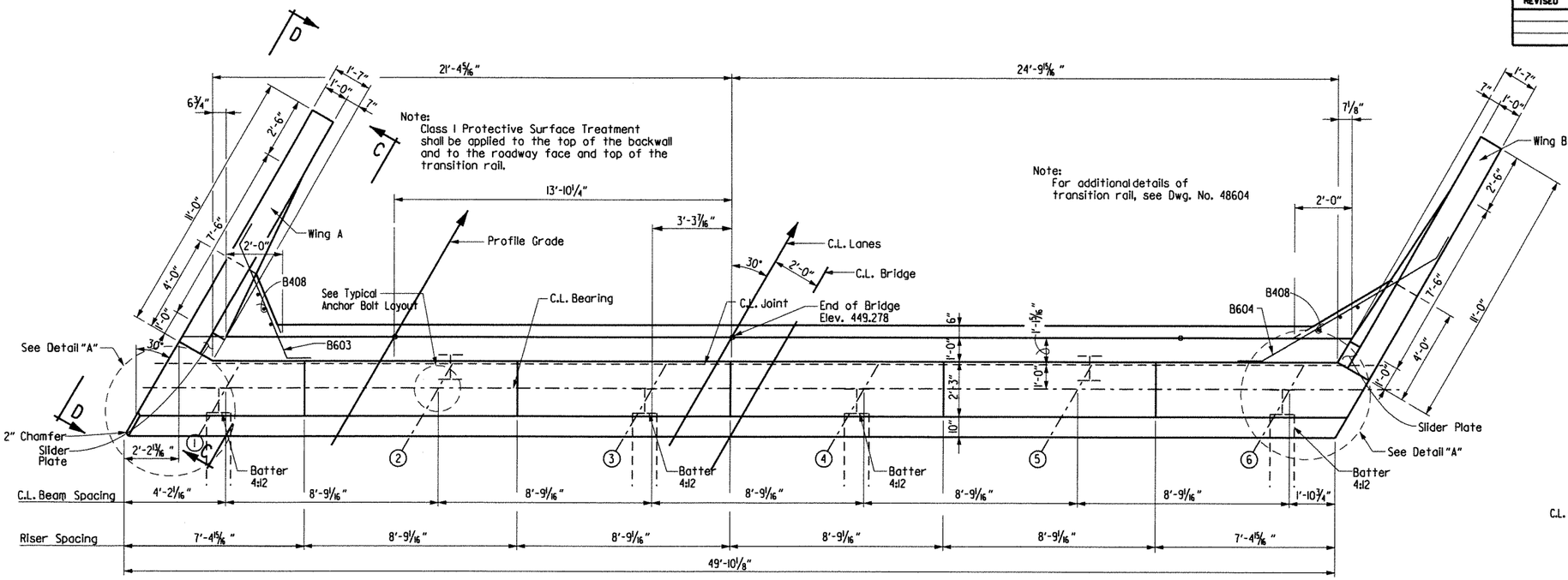

PLAN

3/8" = 1'-0"

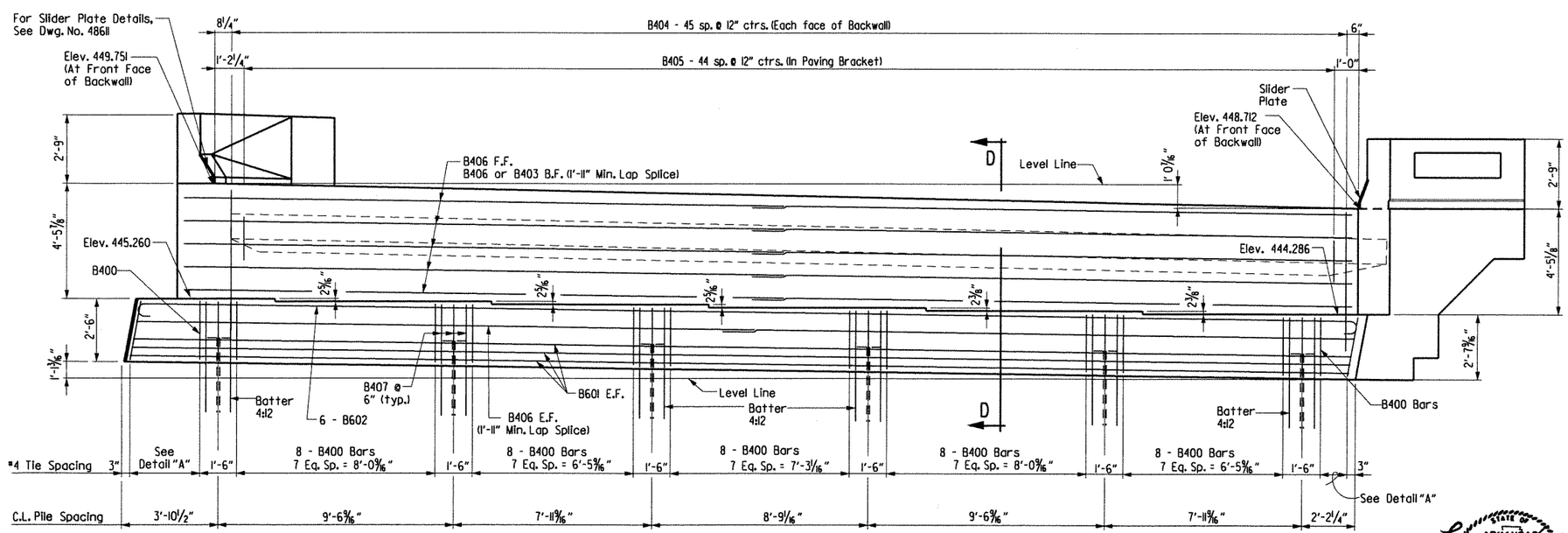

ELEVATION

(Looking Up Ahead)

3/8" = 1'-0"

SUBSTRUCTURE GENERAL NOTES

All concrete shall be Class "S" and shall be poured in the dry. All exposed corners shall be chamfered 3/4" unless otherwise noted.

All reinforcing steel shall conform to AASHTO M31 or M53, Gr. 60.

End Bent backwall shall not be poured before girders are in place. Backwall to be placed after concrete span placement.

Structural steel in end bents shall be AASHTO M270, Gr. 50W and shall be paid for as "Structural Steel in Beam Spans (M270, Gr. 50W)".

If anchor bolts are drilled into cap, top reinforcing bars shall be properly spaced to avoid damage.

For additional information, see Layout.

The parapet slider plates shall be cleaned in accordance with subsection 807.84(b) and painted in accordance with subsection 807.75. The color of paint shall be Gray and shall match Fed. Std. 595B, Color Chip 26176. Cleaning and painting will not be paid for directly but will be considered subsidiary to "Structural Steel in Beam Spans (Gr. 50W)".

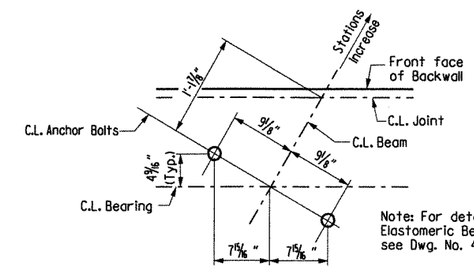

TYPICAL ANCHOR BOLT LAYOUT

No Scale

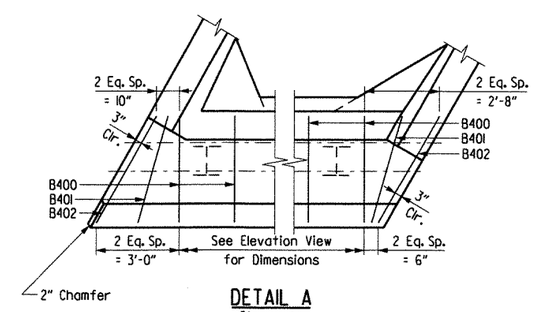

DETAIL A

3/8" = 1'-0"

STATE OF ARKANSAS
LARRY W. MILLER
REGISTERED PROFESSIONAL ENGINEER
No. 13339

8-11-12

BRIDGE ENGINEER

SHEET 1 OF 2

DETAILS OF BENT NO. 6

BRIDGE OVER UNION PACIFIC RAILROAD

(BR. B6881)

CRAWFORD & SEBASTIAN COUNTIES

ROUTE I-540 SEC. 2

ARKANSAS STATE HIGHWAY COMMISSION

LITTLE ROCK, ARK.

DRAWN BY: TAR	DATE: March 02	FILENAME: bBB0407b5 b61.dgn			
CHECKED BY: EWB/ETH	DATE: April 02	SCALE: As Shown			
DESIGNED BY: JLH	DATE: Feb 02				
BRIDGE NO. B6881	DRAWING NO. 48603				

$$$$date$$$$

$$$$dgnspec$$$$

...\b040468b5_b61.dgn 8/10/2012 3:50:18 PM

DATE REVISED	DATE FILMED	DATE REVISED	DATE FILMED

FED. ROAD DIST. NO.	STATE	FED. AID PROJ. NO.	SHEET NO.	TOTAL SHEETS
6	ARK.			
JOB NO.		BB0407	313	464
① B6881		BENT DTLS.		48604

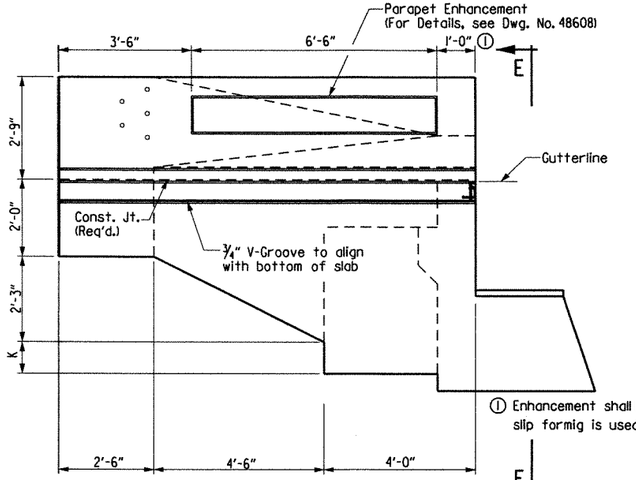

① Enhancement shall be continuous if slip formig is used on bridge parapet.

VIEW D-D - STAGE II

(Stage IV Similar)
Scale: 1/2" = 1'-0"

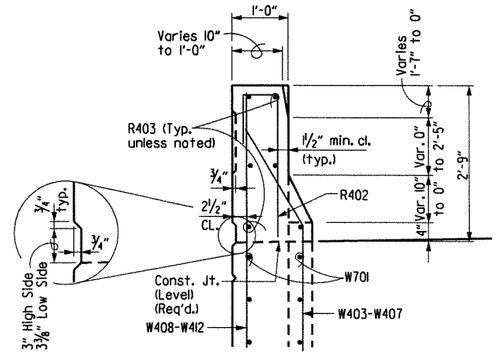

SECTION F-F

Scale: 3/4" = 1'-0"

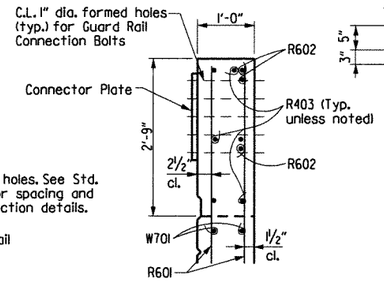

SECTION G-G

Scale: 3/4" = 1'-0"

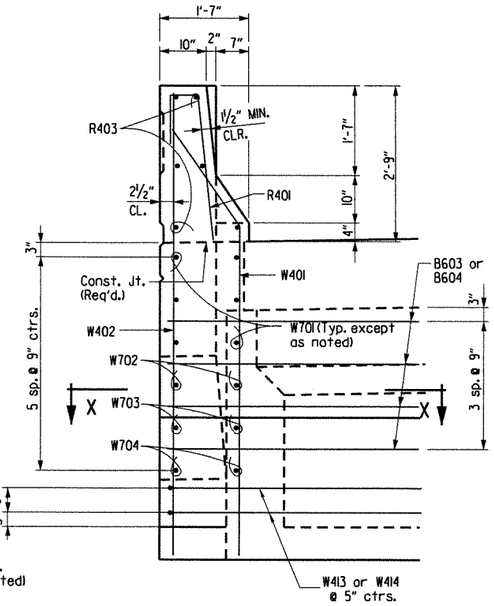

VIEW E-E

Scale: 3/4" = 1'-0"

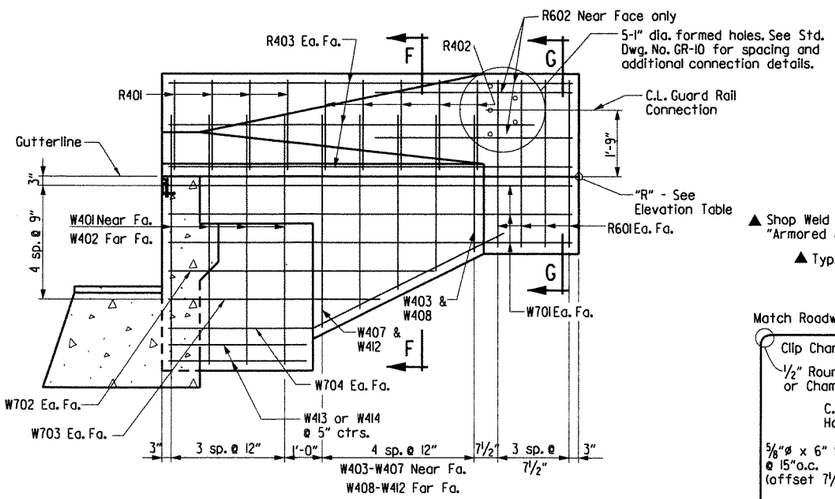

SECTION C-C - STAGE II

(Stage IV Similar)
Scale: 1/2" = 1'-0"

▲ Shop Weld - See SP Job BB0407
"Armored Joint With Neoprene Strip Seal"

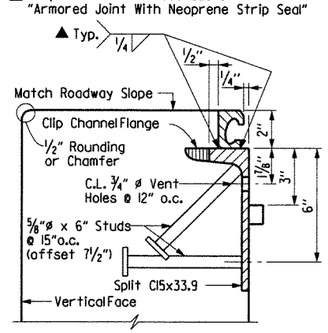

Note: Concrete shall be hand packed under the joint armor in the backwall.

For additional details, See Dwg. No. 48611.

DETAIL Z

3"= 1'-0"

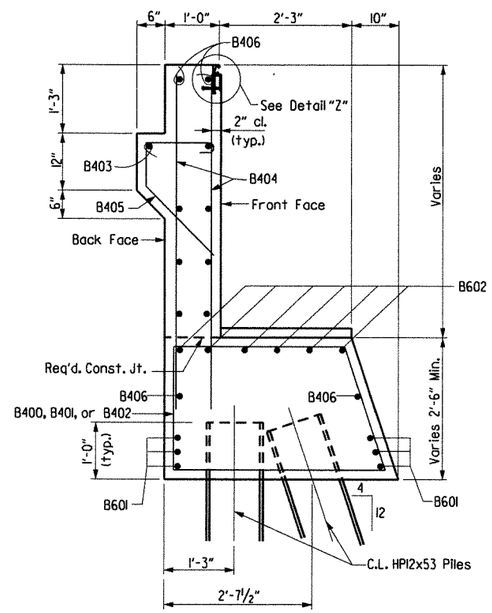

SECTION D-D

3/4" = 1'-0"

BAR LIST

Mark	No. Req'd.	Length	"A"	"B"	Pin Dia.
B400	42	11'-5"	2'-11"	3'-8"	2"
B401	2	11'-8"	3'-0"	3'-10"	2"
B402	2	12'-6"	3'-5"	4'-3"	2"
B403	2	24'-1"			STR.
B404	92	6'-0"			STR.
B405	45	3'-11"	1'-2"	4 1/2"	3"
B406	22	25'-9"			STR.
B407	18	7'-3"	2'-11"	3'-9"	STR.
B408	6	4'-0"			STR.
B601	6	49'-6"			STR.
B602	6	50'-10"			4 1/2"
B603	4	7'-1"	5'-1"	1'-0"	4 1/2"
B604	4	10'-4"	8'-4"	1'-0"	4 1/2"
R401	8	3'-11"			2"
R402	8	3'-11"			2"
R403	12	9'-8"			STR.
R601	16	4'-5"			STR.
R602	6	5'-0"			STR.
W401	8	7'-3"	6'-1"	1'-2"	2"
W402	8	8'-4"			STR.
W403 to W407	2 ea.	3'-4" to 5'-4"	2'-2" to 4'-2"	1'-2"	2"
W408 to W412	2 ea.	4'-5" to 6'-5"			STR.
W413	2	10'-0"			2"
W414	2	13'-3"			2"
W701	12	9'-8"			STR.
W702	4	6'-0"			STR.
W703	4	4'-6"			STR.
W704	4	8'-4"	2'-9"	5'-7"	5 1/2

Bending Diagrams
(Dimensions are out to out of bars.)

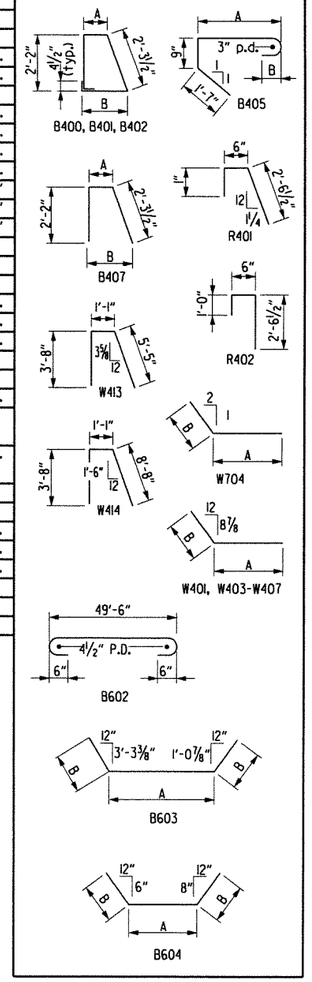

Bent No.	Wing	Elev. "R"	K
1	A	449.652	1'-8 1/8"
1	B	448.599	1'-7 7/8"

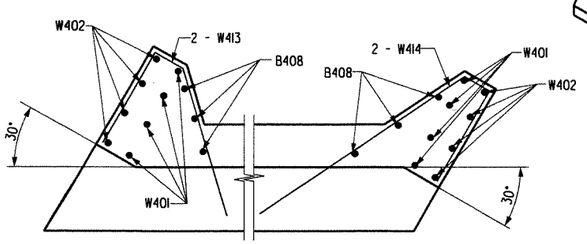

SECTION X-X

Wing A

SECTION X-X

Wing B

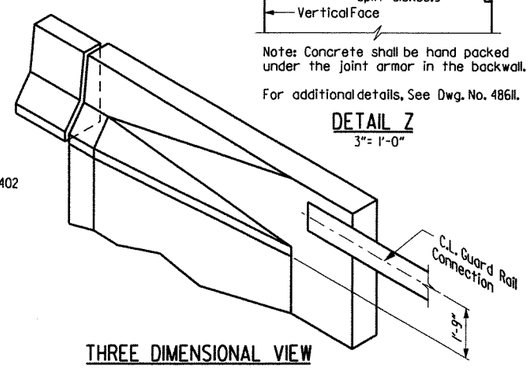

THREE DIMENSIONAL VIEW
WING RAIL & PARAPET

No Scale

SHEET 2 OF 2
DETAILS OF BENT NO. 6
BRIDGE OVER UNION PACIFIC RAILROAD
(BR. B6881)
CRAWFORD & SEBASTIAN COUNTIES
ROUTE I-540 SEC. 2
ARKANSAS STATE HIGHWAY COMMISSION
LITTLE ROCK, ARK.

ARKANSAS STATE OF REGISTERED PROFESSIONAL ENGINEER No. 11339 LARRY W. MILLER
Larry W. Miller 8-11-12
BRIDGE ENGINEER

DRAWN BY: TAR	DATE: April 02	FILENAME: bBB0407b5 b62.dgn			
CHECKED BY: EMB/ETH	DATE: April 02	SCALE: As Shown			
DESIGNED BY: BCG	DATE: Dec 01				
BRIDGE NO. B6881	DRAWING NO. 48604				

$$$$date$$$$
$$$$dgnspec$$$$$
...\b040468b5_b62.dgn 8/10/2012 3:50:18 PM

DATE REVISED	DATE FILMED	DATE REVISED	DATE FILMED	FED. ROAD DIST. NO.	STATE	FED. AID PROJ. NO.	SHEET NO.	TOTAL SHEETS
				6	ARK.			
				JOB NO.		BB0407	314	464
				(1) B6881		SPAN DTLS.		48605

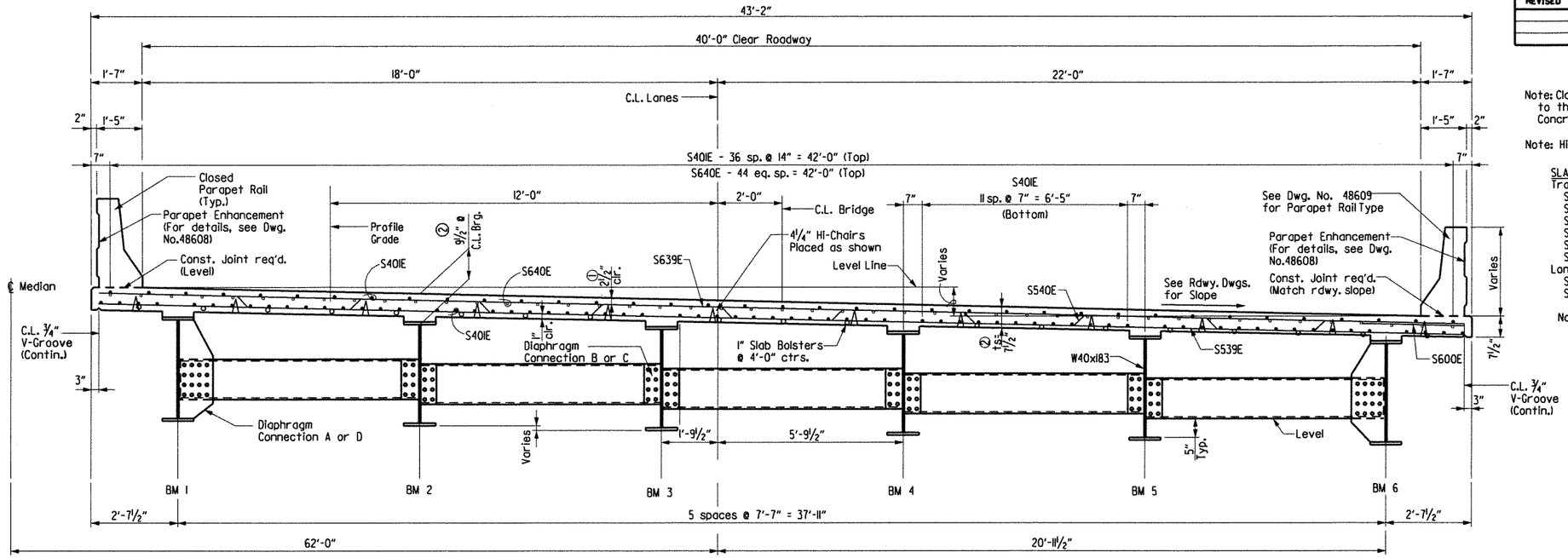

TYPICAL SECTION AT MIDSPAN

(Looking Ahead)

Note: Class I Protective Surface Treatment shall be applied to the Roadway Surface and the Face and Top of Concrete Parapet Rail.

Note: Hi-Chairs to be placed on 4'-0" long centers.

SLAB REINFORCING:

Transverse:
- S600E @ 7½" centers (top)
- S601E thru S637E @ 7½" centers (top)
- S501E thru S537E @ 7½" centers (bottom)
- S639E @ 15" centers (top directly above S539E)
- S539E @ 15" centers (bottom)
- S540E @ 15" centers bent up over beams

Longitudinal:
- S401E (top & bottom) placed as shown
- S640E (top) placed as shown over int. supports

Note: Reinf. bars with "E" suffix (S401E, S501E, etc.) are epoxy coated bars. For additional reinforcing details, see Dwg. No. 48609

(1) TOLERANCE:
Minus: ¼"
Plus: Equal to amount of slab thickening used to meet slab thickness tolerance. See "ADJUSTMENT FOR SLAB THICKNESS TOLERANCE WHEN REMOVABLE DECK FORMING IS USED".

(2) See "ADJUSTMENT FOR SLAB THICKNESS TOLERANCE WHEN REMOVABLE DECK FORMING IS USED".

EXPANSION DEVICE:
Roadway Channel C15x33.9
Conn ∠s 7"x4"x½"
Detail Device ⅛" high and provide ¼" shims using two 1/16" and one ⅛" plates

For additional details of Expansion Device, See Dwg. No. 48611

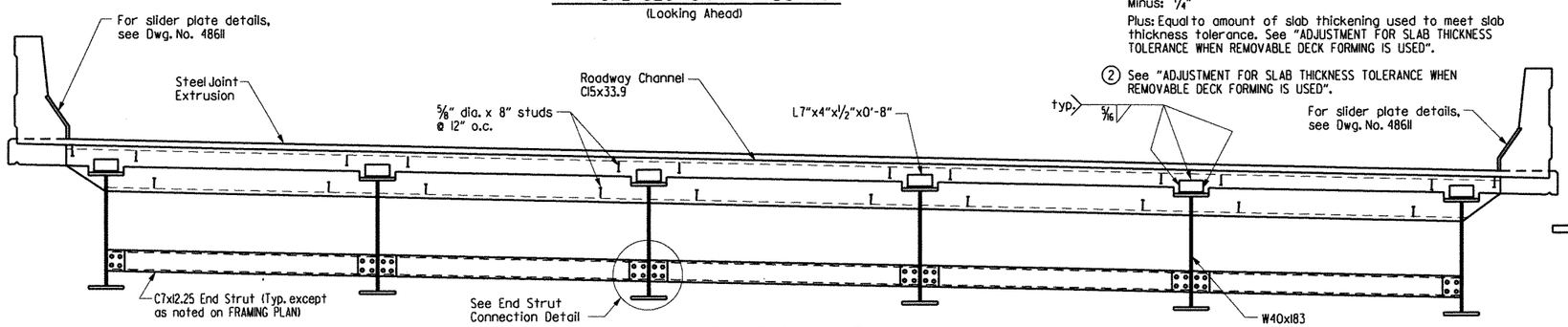

VIEW AT C.L. JOINT

(Looking Ahead)

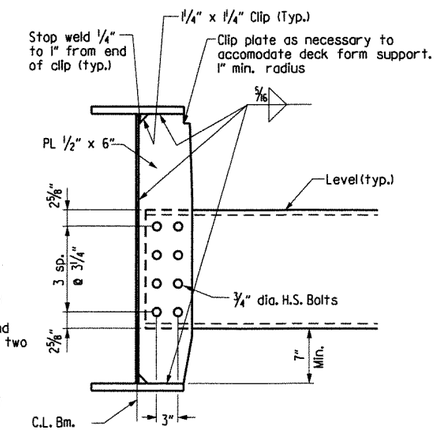

DIAPHRAGM CONNECTION C

No Scale

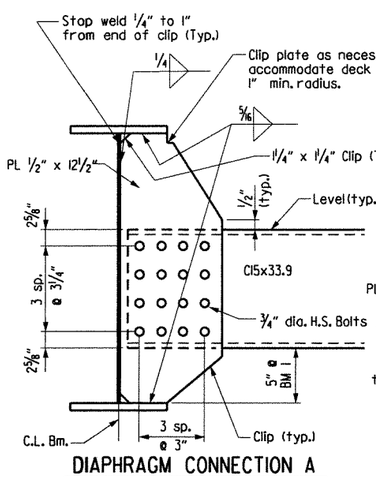

DIAPHRAGM CONNECTION A

No Scale
Typical for exterior beams.

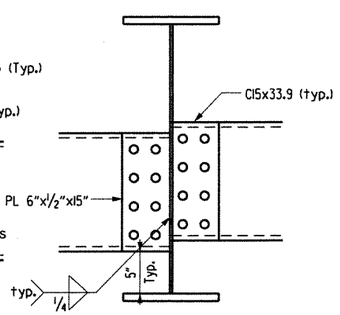

DIAPHRAGM CONNECTION B

No Scale

Note: Bolts in Diaphragm Connections shall be properly installed and tightened in accordance with subsection 807.71.

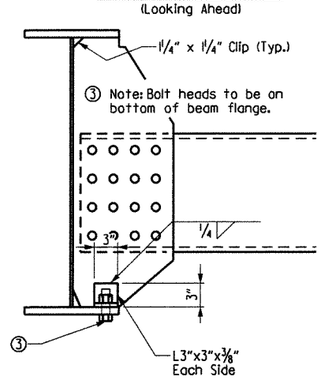

DIAPHRAGM CONNECTION D

No Scale
Information not shown is same as for Connection A.

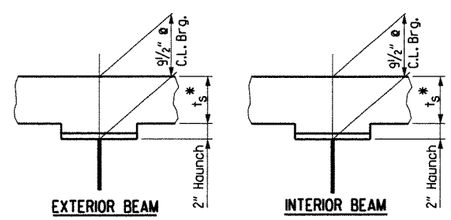

Note: t_s = slab thickness as shown on "TYPICAL SECTION".
*Tolerance when removable deck forming is used is +½", -¼". Haunch forming is required and shall be adjusted to maintain slab thickness tolerance.

ADJUSTMENT FOR SLAB THICKNESS TOLERANCE WHEN REMOVABLE DECK FORMING IS USED

No Scale

Haunch dimension may vary within the following limits to maintain the grade and slab thickness tolerance; Minimum - occurs when the top flange contacts the bottom reinforcing steel; Maximum - top flange thickness plus 1½". No increase in concrete and structural steel quantities will be made to maintain tolerances.

Tolerances shown are applicable only when removable deck forming is used. See Std. Dwg. No. 14991 for tolerances when permanent steel deck forms are used. Payment for concrete shall be based on removable deck forming.

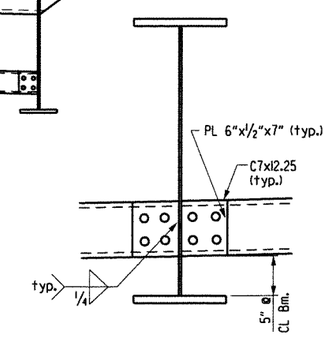

END STRUT CONNECTION

No Scale

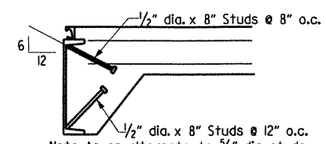

Note: As an alternate to ⅝" dia. studs, ½" dia. x 8" studs spaced as shown may be used. Use weight of ⅝" dia. stud as basis of measurement of structural steel in anchors.

DETAIL OF ALTERNATE ANCHORS

No Scale

STATE OF ARKANSAS
Larry D. Miller
REGISTERED PROFESSIONAL ENGINEER
No. 13339
LARRY D. MILLER
8-11-12
BRIDGE ENGINEER

SHEET 1 OF 6
DETAILS OF
485'-0" CONT. COMP. W-BEAM UNIT
(BR. B6881)

ROUTE I-540 SEC. 2

ARKANSAS STATE HIGHWAY COMMISSION
LITTLE ROCK, ARK.

DRAWN BY: TAR	DATE: Jan 02	FILENAME: bBB0407b5 sll.dgn			
CHECKED BY: EMB/BCG	DATE: Jan 02	SCALE: As Shown			
DESIGNED BY: JLH	DATE: Dec 01				

BRIDGE NO. B6881 DRAWING NO. 48605

$$$$date$$$

$$$$dgnspec$$$$

...\b040468b5_s11.dgn 8/10/2012 3:50:19 PM

DATE REVISED	DATE FILMED	DATE REVISED	DATE FILMED	FED. ROAD DIST. NO.	STATE	FED. AID PROJ. NO.	SHEET NO.	TOTAL SHEETS
				6	ARK.			
				JOB NO.		BB0407	35	464
				(1) B6881		SPAN DTLS.		48606

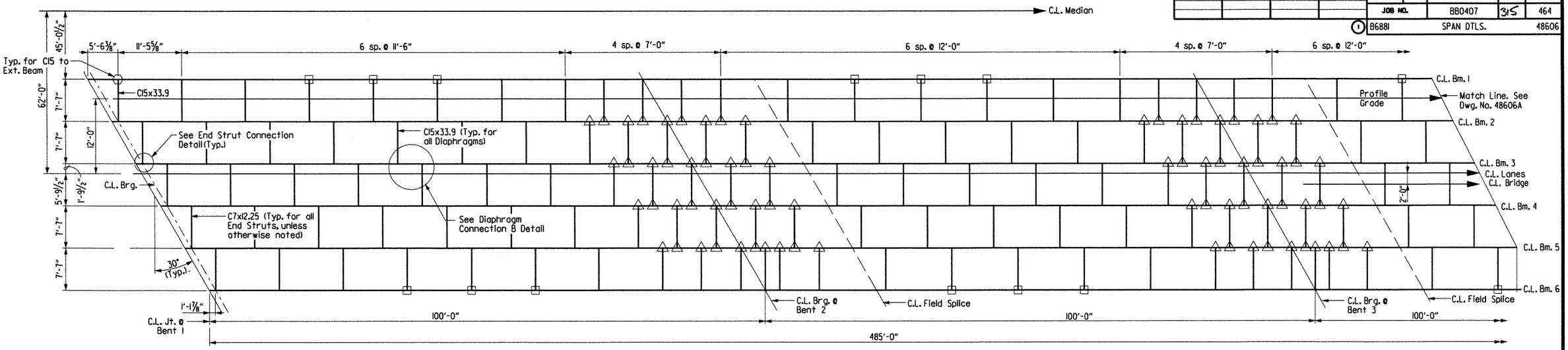

For diaphragm connections, see Dwg. No. 48605. ⬡ = Diaphragm Connection A △ = Diaphragm Connection C □ = Diaphragm Connection D

FRAMING PLAN

No Scale

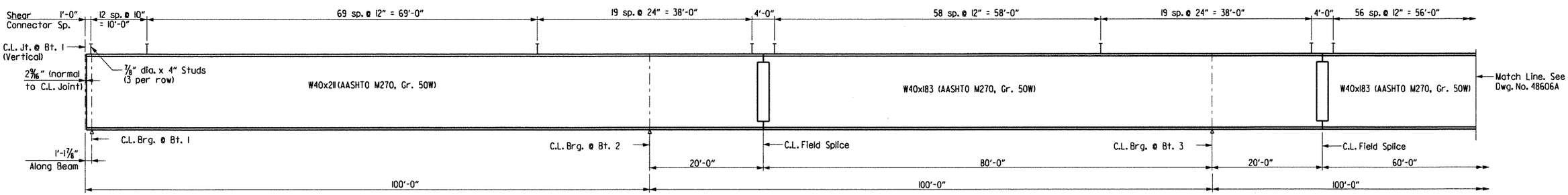

Note: For details of Elastomeric Fixed and Expansion Bearings, see Dwg. No. 48610

TYPICAL BEAM ELEVATION

No Scale

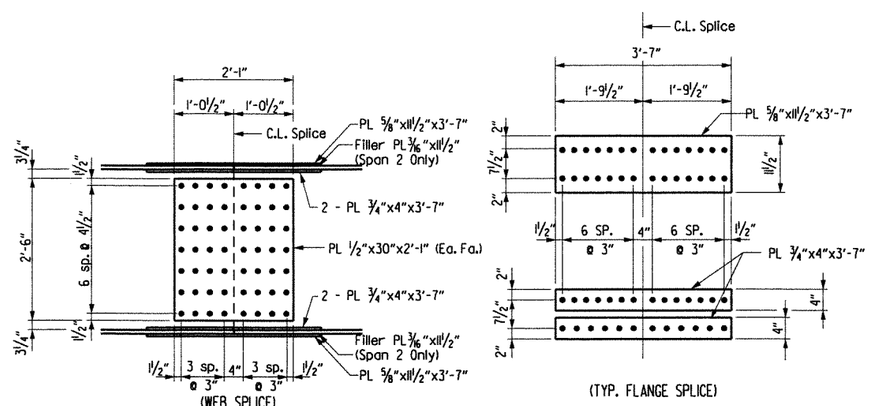

TYPICAL FIELD SPLICE DETAILS

No Scale

Note: All field splice bolts shall be ⅞" ø H.S. bolts.
All field splice plates shall be AASHTO M270, Gr. 50W steel.

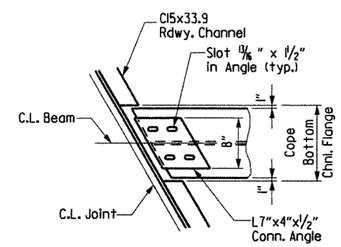

ROADWAY CHANNEL CONNECTION DETAIL

No Scale

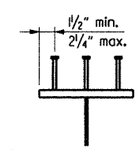

Stud Shear Connectors shown shall be ⅞" dia. x 4" long, granular flux filled, solid fluxed or equal, and automatically end welded to the beam flange in accordance with the recommendations of the Manufacturer. ¾" dia. studs may be used in place of the ⅞" dia. stud shown, at the ratio of 1.361-¾" dia. studs in place of one ⅞" dia. stud. ⅞" dia. studs will be used as basis for measurement of structural steel in shear connectors. Maximum stud spacing = 24".

SHEAR CONNECTOR DETAIL

No Scale

TABLE FOR WELD

Material Thickness of Thicker Part Joined (Inches)	Minimum Size of Fillet Weld (Inches)	Single Pass Weld Must Be Used
To ¾" Inclusive	¼"	
Over ¾"	5/16"	

NOTE: When a fillet weld size, as shown on the plans, is larger than the minimum, the first pass shall be that specified for minimum size of fillet weld.

SHEET 2 OF 6
DETAILS OF
485'-0" CONT. COMP. W-BEAM UNIT
(BR. B6881)

ROUTE I-540 SEC. 2
ARKANSAS STATE HIGHWAY COMMISSION
LITTLE ROCK, ARK.

STATE OF ARKANSAS REGISTERED PROFESSIONAL ENGINEER No. 10339 LARRY W. MILLER
8-11-12
BRIDGE ENGINEER

DRAWN BY: TAR DATE: April 02 FILENAME: BB0407b5 sl2.dgn
CHECKED BY: EMB/JGM DATE: April 02 SCALE: As Shown
DESIGNED BY: BCG/GMS/EMB DATE: April 02
BRIDGE NO. B6881 DRAWING NO. 48606

$$$$date$$$

$$$$dgnspec$$$$$

...\b040468b5_s12.dgn 8/10/2012 3:50:19 PM

DATE REVISED	DATE FILMED	DATE REVISED	DATE FILMED	FED. ROAD DIST. NO.	STATE	FED. AID PROJ. NO.	SHEET NO.	TOTAL SHEETS
				6	ARK.			
				JOB NO.		BB0407	315A	464
				(1) B6881		SPAN DTLS.		48606A

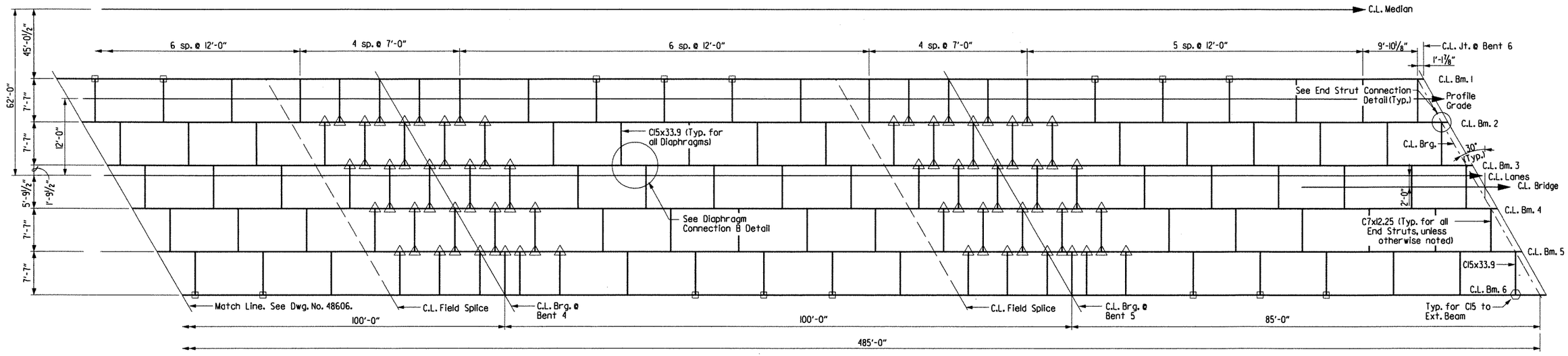

For diaphragm connections, see Dwg. No. 48605. ⬡ = Diaphragm Connection A △ = Diaphragm Connection C □ = Diaphragm Connection D

FRAMING PLAN

No Scale

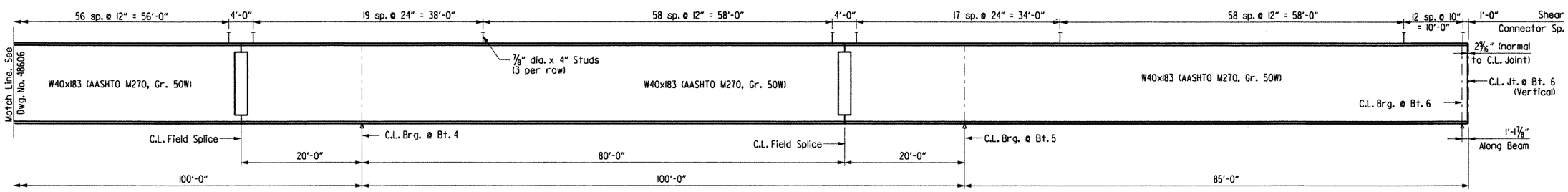

Note: For details of Elastomeric Fixed and Expansion Bearings, see Dwg. No. 48610

TYPICAL BEAM ELEVATION

No Scale

SHEET 3 OF 6
DETAILS OF
485'-0" CONT. COMP. W-BEAM UNIT
(BR. B6881)

STATE OF ARKANSAS REGISTERED PROFESSIONAL ENGINEER No. 10339 LARRY D. MILLER

Larry D. Miller 8-11-12

BRIDGE ENGINEER

ROUTE I-540 SEC. 2

ARKANSAS STATE HIGHWAY COMMISSION

LITTLE ROCK, ARK.

DRAWN BY: TAR DATE: April 02 FILENAME: bBB0407b5 sl2a.dgn
CHECKED BY: EMB/JGM DATE: April 02 SCALE: As Shown
DESIGNED BY: BCG/GMS/EMB DATE: April 02
BRIDGE NO. B6881 DRAWING NO. 48606A

$$$$date$$$$

$$$$dgnspec$$$$$

...\b040468b5_s12a.dgn 8/10/2012 3:50:20 PM

DATE REVISED	DATE FILMED	DATE REVISED	DATE FILMED	FED. ROAD DIST. NO.	STATE	FED. AID PROJ. NO.	SHEET NO.	TOTAL SHEETS
				6	ARK.			
				JOB NO.		BB0407	316	464
				(1) B6881		SPAN DTLS.		48607

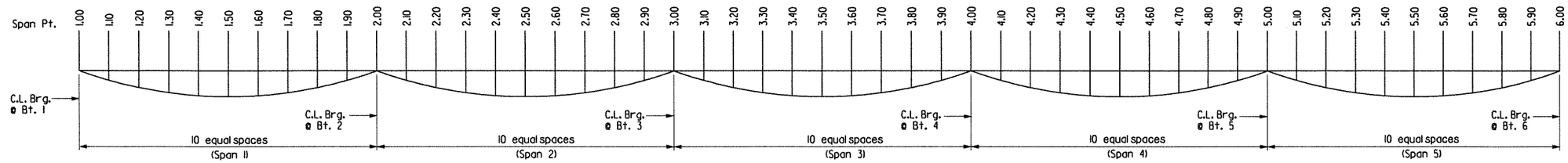

DEAD LOAD DEFLECTION DIAGRAM

No Scale

TABLE OF DEAD LOAD DEFLECTIONS (INCHES)

Camber for Dead Load Deflection plus vertical curve +/- 1/4" tolerance. Deflections shown are off a chord from C.L. Brg. to C.L. Brg. Vertical curve corrections not included. Negative sign (-) indicates upward deflection.

SPAN NO.	POINT OF DEFLECTION	Structural Steel		Structural Steel (+) Slab		Structural Steel (+) Slab (+) Para. Rail	
		Bms. 1 & 6	Bms. 2-5	Bms. 1 & 6	Bms. 2-5	Bms. 1 & 6	Bms. 2-5
1	1.0	0.00	0.00	0.00	0.00	0.00	0.00
	1.1	0.21	0.23	0.81	0.86	0.87	0.92
	1.2	0.40	0.42	1.49	1.59	1.62	1.72
	1.3	0.52	0.56	1.95	2.12	2.13	2.28
	1.4	0.58	0.63	2.19	2.37	2.38	2.55
	1.5	0.58	0.63	2.18	2.34	2.37	2.52
	1.6	0.50	0.55	1.90	2.05	2.07	2.21
	1.7	0.37	0.42	1.44	1.56	1.57	1.68
	1.8	0.23	0.26	0.90	0.96	0.97	1.03
	1.9	0.11	0.11	0.36	0.38	0.39	0.41
2	2.0	0.00	0.00	0.00	0.00	0.00	0.00
	2.1	-0.02	-0.02	-0.05	-0.06	-0.06	-0.06
	2.2	0.01	0.01	0.10	0.11	0.12	0.12
	2.3	0.06	0.07	0.34	0.36	0.37	0.39
	2.4	0.11	0.12	0.54	0.59	0.59	0.63
	2.5	0.14	0.15	0.65	0.70	0.71	0.76
	2.6	0.14	0.15	0.63	0.68	0.68	0.73
	2.7	0.10	0.11	0.48	0.52	0.52	0.56
	2.8	0.05	0.06	0.26	0.28	0.28	0.30
	2.9	0.01	0.01	0.05	0.06	0.06	0.07
3	3.0	0.00	0.00	0.00	0.00	0.00	0.00
	3.1	0.05	0.05	0.20	0.21	0.22	0.23
	3.2	0.13	0.14	0.53	0.58	0.58	0.62
	3.3	0.21	0.23	0.88	0.94	0.95	1.01
	3.4	0.27	0.29	1.11	1.19	1.21	1.28
	3.5	0.28	0.31	1.19	1.28	1.29	1.37
	3.6	0.26	0.28	1.09	1.17	1.18	1.26
	3.7	0.20	0.22	0.84	0.90	0.91	0.96
	3.8	0.12	0.13	0.49	0.53	0.53	0.57
	3.9	0.04	0.04	0.17	0.18	0.18	0.19
4	4.0	0.00	0.00	0.00	0.00	0.00	0.00
	4.1	0.03	0.03	0.12	0.12	0.13	0.13
	4.2	0.09	0.10	0.39	0.42	0.42	0.45
	4.3	0.16	0.18	0.70	0.74	0.75	0.80
	4.4	0.22	0.23	0.91	0.98	0.99	1.05
	4.5	0.23	0.25	0.99	1.07	1.08	1.15
	4.6	0.22	0.23	0.91	0.98	0.99	1.05
	4.7	0.16	0.18	0.69	0.74	0.75	0.79
	4.8	0.09	0.10	0.39	0.42	0.42	0.45
	4.9	0.03	0.03	0.11	0.12	0.12	0.13
5	5.0	0.00	0.00	0.00	0.00	0.00	0.00
	5.1	0.03	0.03	0.13	0.14	0.14	0.15
	5.2	0.09	0.10	0.39	0.42	0.42	0.45
	5.3	0.16	0.18	0.69	0.73	0.74	0.79
	5.4	0.22	0.24	0.94	1.01	1.02	1.09
	5.5	0.25	0.28	1.10	1.19	1.20	1.27
	5.6	0.27	0.29	1.14	1.22	1.24	1.31
	5.7	0.24	0.26	1.03	1.10	1.12	1.19
	5.8	0.18	0.20	0.78	0.84	0.84	0.90
	5.9	0.11	0.11	0.43	0.46	0.46	0.49

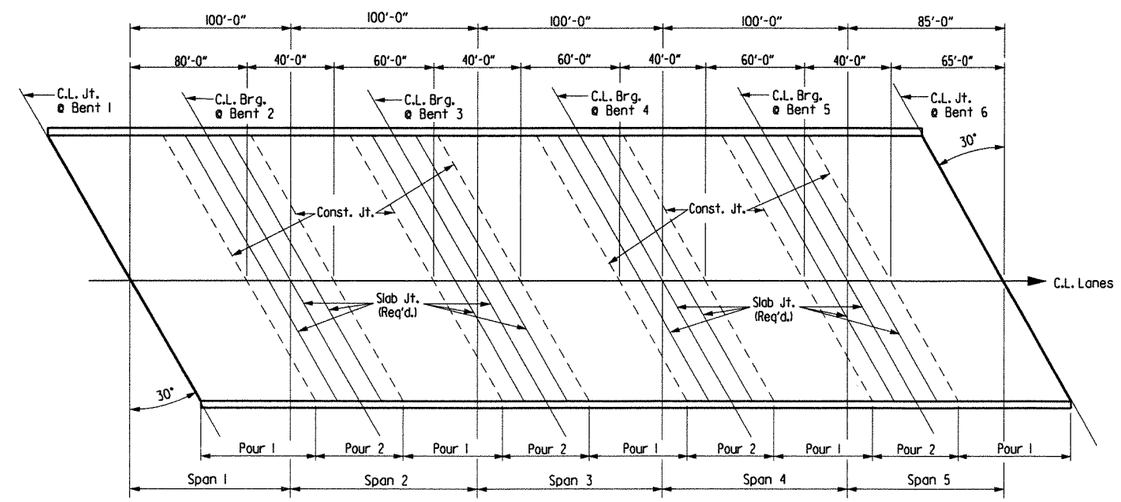

POURING SEQUENCE

No Scale

Note: Pours within the same number may be poured simultaneously or seperate. All Pour (1) must be placed before Pour (2) can be placed. 48 hours shall elapse between pours that are not adjacent and 72 hours shall elapse between the end of a pour and the start of the adjacent pour. Any railing pours made before the entire slab unit has been placed must be approved by the Engineer. Concrete in bridge superstructure shall be consolidated for the entire pour before any concrete has taken its initial set. This may require the use of a retarding agent.

The Contractor must obtain approval from the Engineer for any deviations from the pouring sequence shown.

SHEET 4 OF 6
DETAILS OF
485'-0" CONT. COMP. W-BEAM UNIT
(BR. B6881)

STATE OF ARKANSAS REGISTERED PROFESSIONAL ENGINEER No. 10339 LARRY E. MILLER
8-11-12
BRIDGE ENGINEER

ROUTE I-540 SEC. 2
ARKANSAS STATE HIGHWAY COMMISSION
LITTLE ROCK, ARK.

DRAWN BY: TAR DATE: April 02 FILENAME: bBB0407b5 s13.dgn
CHECKED BY: EMB DATE: May 02 SCALE: N.T.S.
DESIGNED BY: JLH DATE: May 02
BRIDGE NO. B6881 DRAWING NO. 48607

$$$$dgnspec$$$$$ $$$$date$$$

...\b040468b5_s13.dgn 8/10/2012 3:50:20 PM

DATE REVISED	DATE FILMED	DATE REVISED	DATE FILMED	FED. ROAD DIST. NO.	STATE	FED. AID PROJ. NO.	SHEET NO.	TOTAL SHEETS
				6	ARK.			
				JOB NO.		BB0407	317	464
				1 B6881		SPAN DTLS.		48608

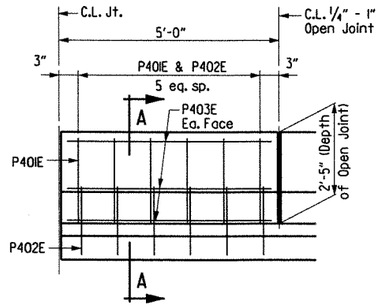

(5'-0" PANEL)

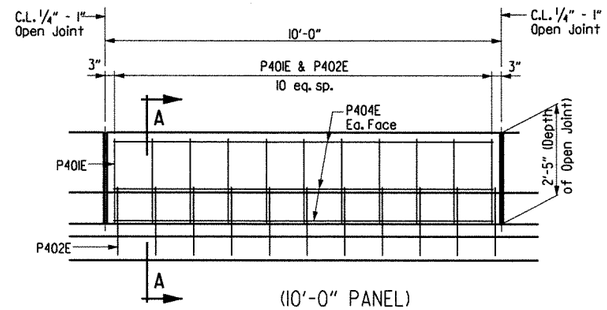

(10'-0" PANEL)

DETAILS OF CONCRETE PARAPET RAIL

No Scale

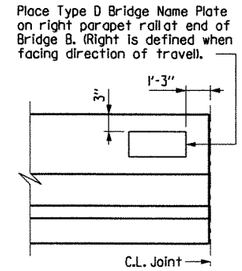

NAME PLATE DETAIL

No Scale

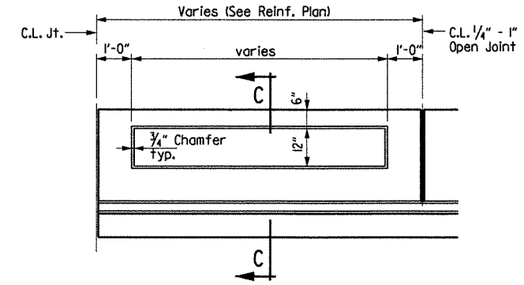

DETAILS OF PARAPET ENHANCEMENT

No Scale

Note: Enhancement required for concrete parapet rail only.

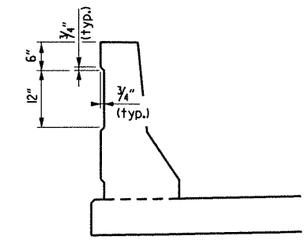

SECTION C-C

No Scale

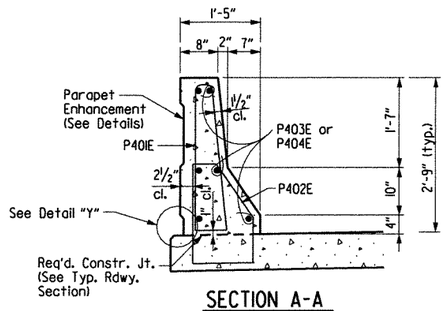

SECTION A-A

Scale: 3/4" = 1'-0"

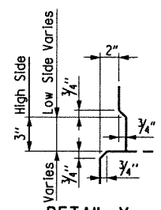

DETAIL Y

No Scale

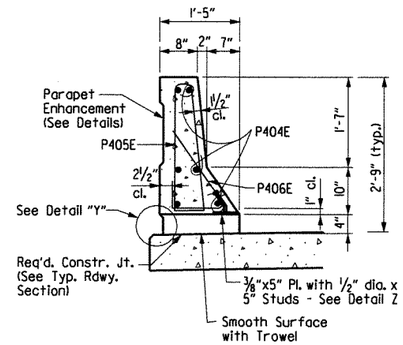

SECTION B-B

Scale: 3/4" = 1'-0"

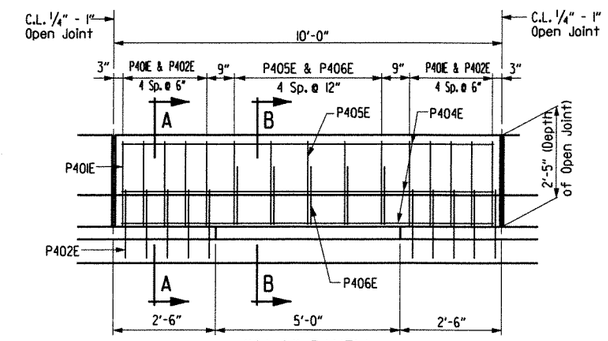

(10'-0" PANEL)

DETAILS OF OPEN CONCRETE PARAPET RAIL

No Scale

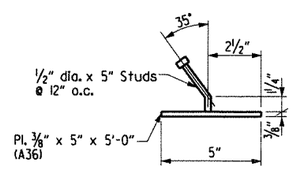

DETAIL "Z"

No Scale

Note: The surfaces of the 3/8" Plates which will not be in contact with concrete shall be painted in accordance with Section 638, or as approved by the Engineer. Only one coat is required and shall be applied in the fabricators shop. Painting will not be paid for directly, but will be considered subsidiary to Structural Steel or Class S(AE) Concrete Bridge.

Note: Parapet studs shall be 5" long, granular flux filled, solid fluxed, or equal and automatically end weldd to the plate. Studs and plate shall meet the requirements of Section 807 and shall be measured and paid for as Structural Steel in Beam Spans (M270, Gr. 50W).

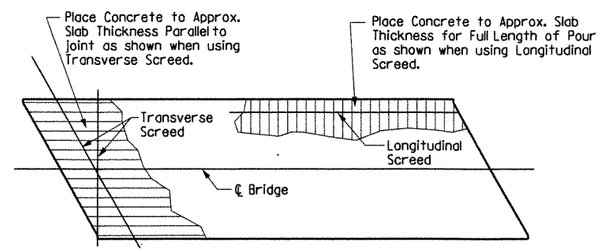

Note: At the Contractor's option, the Transverse Screed may be placed parallel to the skew or perpendicular to C.L. Bridge

CONCRETE PLACEMENT PROCEDURE

No Scale

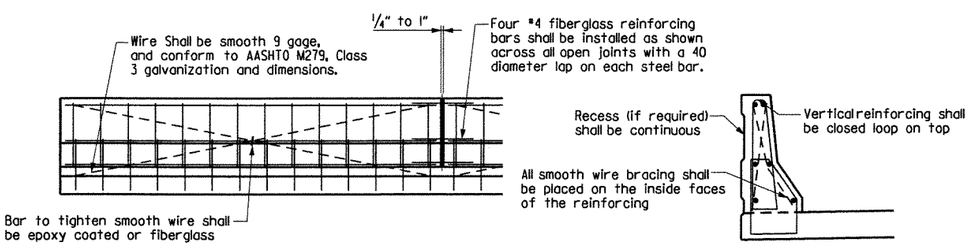

All panels shall be braced as shown to prevent racking. All open joints shall be sawed as soon as practical to a min. width of 1/4". To control cracking before sawing, all joints must be grooved before the concrete is set. Sawing of the joints must be controlled so it will follow the grooved joint.

The extruded parapet shall conform to the horizontal and vertical lines shown in the plans or as directed by the Engineer and shall present a smooth uniform appearance and texture. Exposed surfaces may be given a light brush finish or a Class 3 Textured Coating Finish in place of Class 2, Rubbed Finish.

DETAILS OF OPTIONAL SLIPFORMING OF CONCRETE PARAPET

No Scale

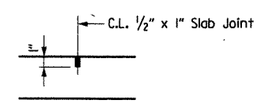

Use Type 3, 4, or 6 Joint Sealer. See subsections 501.02 (h) and 501.05 (j). Backer Rod filler will not be required. Joint Sealer shall be measured and paid for as Class S(AE) Concrete-Bridge. Slab joints shall extend to the outside edge of the deck slab. Slab joints shall be installed before the parapet railing is poured. If slab joints are to be sawed, they shall be sawed as soon as the concrete has sufficiently set to allow sawing of the joint without damage to the slab. Slab joints shall be placed at all pouring sequence construction joints and required slab joint locations. Slab joints shall align with parapet open joints.

SLAB JOINT DETAIL

No Scale

SHEET 5 OF 6
DETAILS OF
485'-0" CONT. COMP. W-BEAM UNIT
(BR. B6881)

ROUTE I-540 SEC. 2
ARKANSAS STATE HIGHWAY COMMISSION
LITTLE ROCK, ARK.

STATE OF ARKANSAS REGISTERED PROFESSIONAL ENGINEER No. 11339 LARRY E. MILLER
Larry E. Miller 8-11-12
BRIDGE ENGINEER

DRAWN BY: TAR	DATE: Jan 02	FILENAME: bBB0407b5 sl4.dgn			
CHECKED BY: EMB	DATE: May 02	SCALE: As Shown			
DESIGNED BY: JLH	DATE: Dec 01				

BRIDGE NO. B6881 DRAWING NO. 48608

$$$$dgnspec$$$$$ $$$$date$$$

...\b040468b5_s14.dgn 8/10/2012 3:50:21 PM

Notes:
For Details of Concrete Parapet Railing & Reinforcing, See Dwg. No. 48608
For Additional Details & Notes, See Dwg. No. 48605
Slab Joints shall align with Parapet Joints at gutterline.

DATE REVISED	DATE FILMED	DATE REVISED	DATE FILMED	FED. ROAD DIST. NO.	STATE	FED. AID PROJ. NO.	SHEET NO.	TOTAL SHEETS
				6	ARK.			
				JOB NO.		BB0407	318	464
				1 B6881		SPAN DTLS.		48609

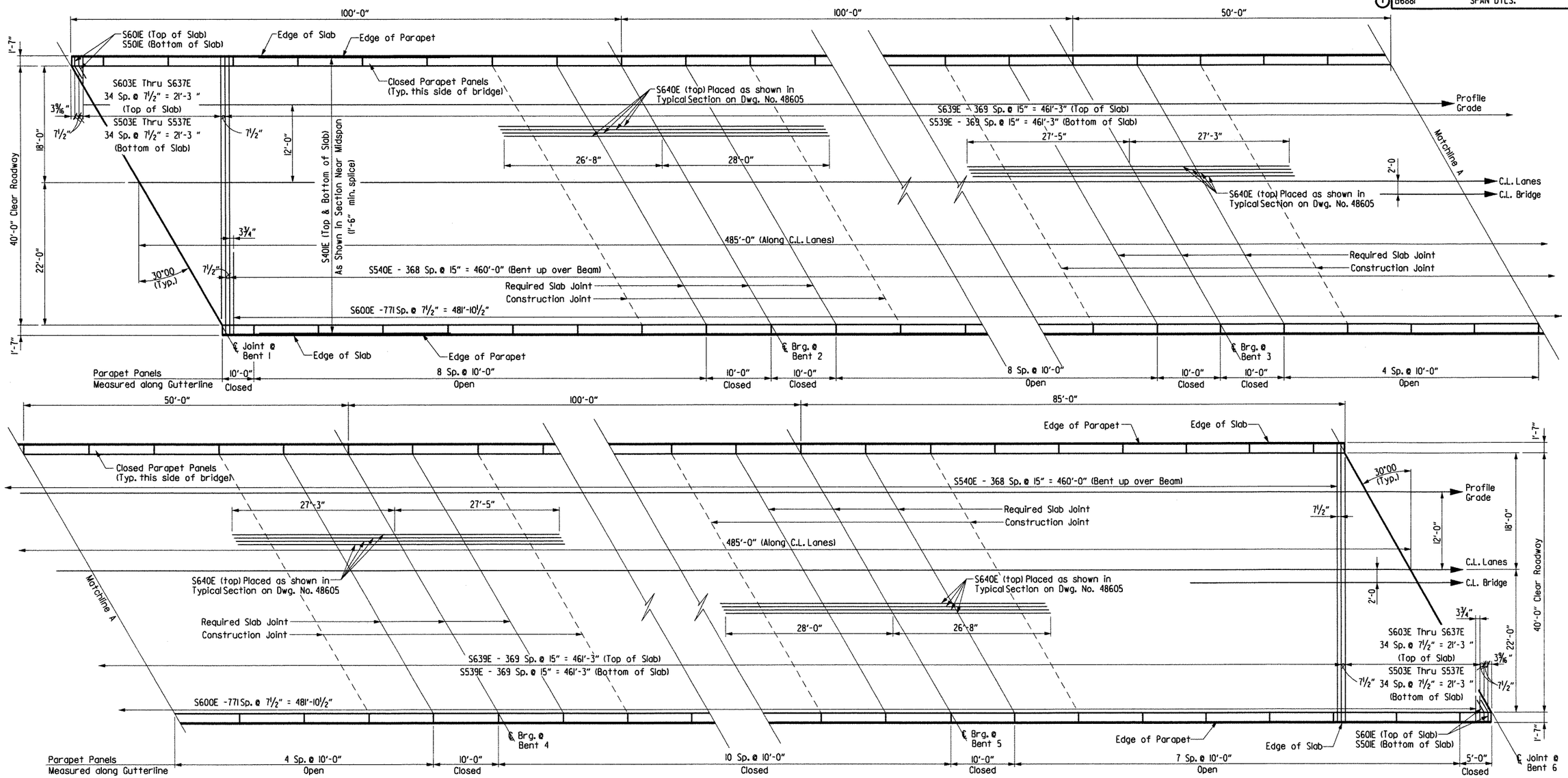

REINFORCING PLAN

No Scale

BAR LIST

Mark	No. Req'd.	Length	Pin Dia.	Mark	No. Req'd.	Length	Pin Dia.
S401E	1365	38'-10"	Str.	S603E to S637E	2 ea.	3'-6" to 40'-4"	Str.
S501E	2	3'-10"	3¾"				
	Not Used			S638E	Not Used		
S503E to S537E	2 ea.	3'-6" to 40'-4"	Str.	S639E	370	42'-10"	Str.
				S640E	180	54'-8"	Str.
S538E	Not Used						
S539E	370	42'-10"	Str.	P401E	1037	6'-4"	2"
S540E	369	43'-10"	3"	P402E	1037	5'-7"	2"
S600E	771	6'-4"	Str.	P403E	12	4'-8"	Str.
S601E	2	3'-10"	4½"	P404E	576	9'-8"	Str.
S602E	Not Used			P405E	155	5'-10"	2"
				P406E	155	3'-2"	2"

Bending Diagrams
(Dimensions are out to out of bars.)

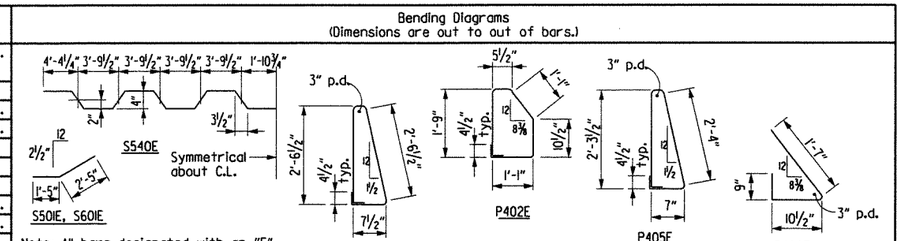

Note: All bars designated with an "E" suffix are to be epoxy coated.

Note: At the Contractor's option, two straight epoxy coated #5 bars may be substituted for the S540E bars. Payment for reinforcing will be based on the S540E bars.

SHEET 6 OF 6
DETAILS OF
485'-0" CONT. COMP. W-BEAM UNIT
(BR. B6881)

ROUTE I-540 SEC. 2
ARKANSAS STATE HIGHWAY COMMISSION
LITTLE ROCK, ARK.

STATE OF ARKANSAS REGISTERED PROFESSIONAL ENGINEER No. 11339 LARRY W. MILLER
8-11-12
BRIDGE ENGINEER

DRAWN BY: TAR DATE: Jan 02 FILENAME: bBB0407b5 s15.dgn
CHECKED BY: EMB DATE: May 02 SCALE: As Shown
DESIGNED BY: JLH DATE: Dec 01
BRIDGE NO. B6881 DRAWING NO. 48609

$$$$date$$$
$$$$dgnspec$$$$$
...\b040468b5_s15.dgn 8/10/2012 3:50:21 PM

DATE REVISED	DATE FILMED	DATE REVISED	DATE FILMED	FED. ROAD DIST. NO.	STATE	FED. AID PROJ. NO.	SHEET NO.	TOTAL SHEETS
				6	ARK.			
				JOB NO.		BB0407	319	464
				(1) A6881, B6881		ELASTO. BRGS.		48610

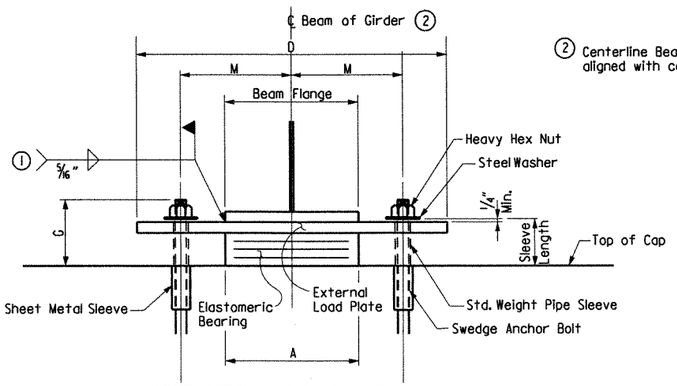

(2) Centerline Beam or Girder shall be aligned with centerline Elastomeric Pad.

FRONT VIEW - BENTS 2, 3, 4 & 5

(1) Care shall be taken to ensure that the external load plate is in full and complete contact with the beam or girder flange before welding begins.

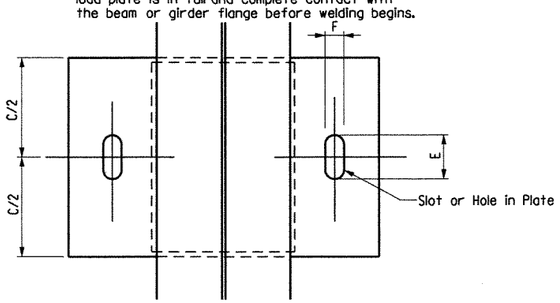

PLAN VIEW - BENTS 2, 3, 4 & 5

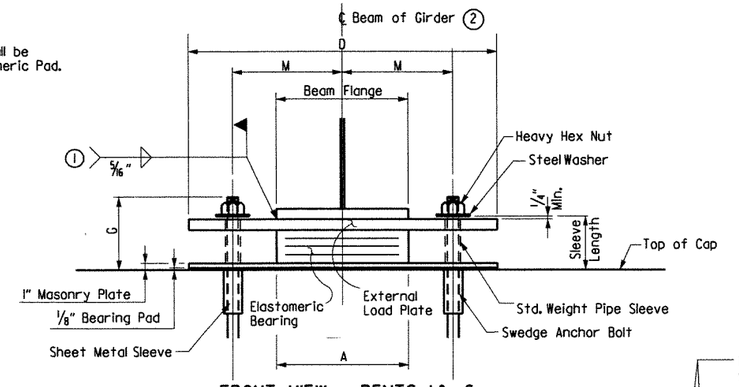

FRONT VIEW - BENTS 1 & 6

(1) Care shall be taken to ensure that the external load plate is in full and complete contact with the beam or girder flange before welding begins.

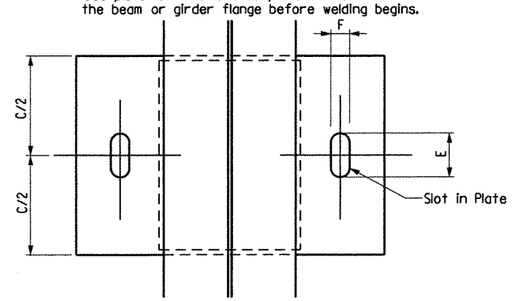

PLAN VIEW - BENTS 1 & 6

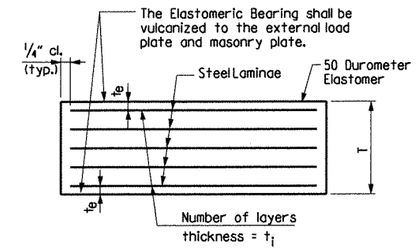

t_e = thickness of elastomer cover on top and bottom of pad

t_i = thickness of elastomer between steel laminae

N = number of elastomer layers of thickness t_i

ELASTOMERIC BEARING

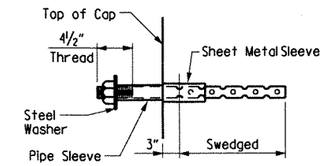

ANCHOR BOLT DETAIL

NOTE:
Anchor Bolts may be cast in place or drilled and grouted into place. If Anchor Bolts are to be cast in place, the Galvanized Sheet Metal Sleeves will not be required.

If Anchor Bolts are to be drilled and grouted in place, the Galvanized Sheet Metal Sleeves shall be cast in place as shown. Sleeves shall be dry packed with styrofoam, urethane foam or approved equal prior to pouring of concrete. After pouring of the cap and prior to erection of Structural Steel, the dry pack shall be removed and holes for the anchor bolts shall be accurately drilled into the masonry. Bolts placed in drilled holes shall be accurately set and fixed using a QPL approved epoxy or non-shrink grout that completely fills the holes. Galvanized Sheet Metal Sleeves will not be paid for directly, but will be considered subsidiary to the item "Structural Steel in Beam Spans, (M 270, Gr. 50W)"

The direction of bevel of the external load plate as shown is for Bents 1 - 2. Bevel for Bents 4 - 6 will be in the opposite direction. See Table of Fabricator Variables for dimensions.

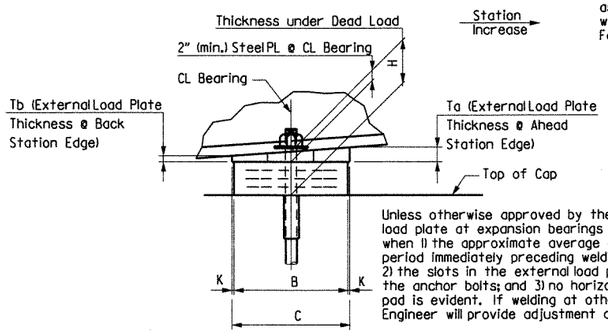

Unless otherwise approved by the Engineer, welding of the external load plate at expansion bearings to the girder will be allowed only when 1) the approximate average air temperature during the 24 hour period immediately preceding welding is between 40°F and 80°F; and 2) the slots in the external load plate are positioned to center on the anchor bolts; and 3) no horizontal deformation of the elastomeric pad is evident. If welding at other temperatures is required, the Engineer will provide adjustment data.

SIDE VIEW - BENTS 2, 3, 4 & 5

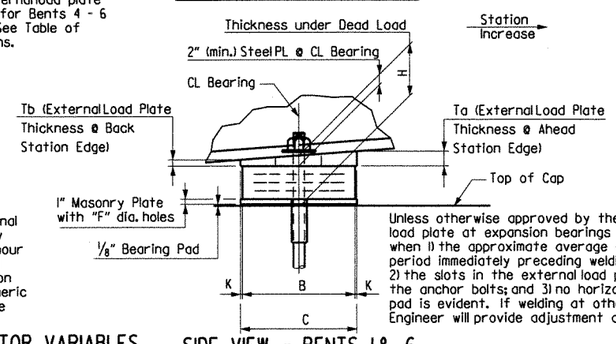

Unless otherwise approved by the Engineer, welding of the external load plate at expansion bearings to the girder will be allowed only when 1) the approximate average air temperature during the 24 hour period immediately preceding welding is between 40°F and 80°F; and 2) the slots in the external load plate are positioned to center on the anchor bolts; and 3) no horizontal deformation of the elastomeric pad is evident. If welding at other temperatures is required, the Engineer will provide adjustment data.

SIDE VIEW - BENTS 1 & 6

TABLE OF FABRICATOR VARIABLES

BRIDGE NO.	LOCATION: BENT NO(S).	LOCATION: UNIT	LOCATION: BEAM OR GIRDER NO.	BEARING TYPE	NO. of BEARINGS EACH BENT	* MAXIMUM DESIGN LOAD (KIPS)	G	H	ELASTOMERIC PAD: A	B	N	t_i	t_e	NO. & THICKNESS OF STEEL LAMINAE	T	EXTERNAL LOAD PLATE: C	D	** E	F	K	M	T_a	T_b	ANCHOR BOLT: ANCHOR BOLT (ø x L)	GRADE	PIPE SLEEVE SIZE (ø x L)	SHEET METAL SLEEVE SIZE (ø x L)	STEEL WASHER SIZE (O.D.)
A6881 & B6881	1	470'	All	EXP.	6	102.1	9 1/2"	5 5/16"	13"	12"	5	7/16"	1/4"	6 @ 12 Ga.	3 5/16"	13"	24"	6 1/4"	2 5/8"	1/2"	9"	2.03"	1.97"	1 3/4" x 30"	55	2" x 5 5/8"	4" x 10"	3 3/8"
	2	470'	All	EXP.	6	235.8	9 5/8"	5 13/16"	18 1/2"	18"	6	7/16"	1/4"	7 @ 12 Ga.	3 7/8"	16 1/2"	31 1/2"	6 1/8"	3 3/4"	1/2"	12 1/4"	2.02"	1.98"	2 1/2" x 37"	55	3" x 6 1/8"	4" x 8 1/2"	4 1/2"
	3	470'	All	FIX	6	206.0	8 1/2"	4 3/16"	15"	15"	3	7/16"	1/4"	4 @ 12 Ga.	2 1/4"	16"	28"	3 3/4"	3 3/4"	1/2"	10 1/2"	2.00"	2.00"	2 3/4" x 39"	55	3" x 4 1/2"	5" x 7 1/2"	5"
	4	470'	All	FIX	6	206.0	8 1/2"	4 3/16"	15"	15"	3	7/16"	1/4"	4 @ 12 Ga.	2 1/4"	16"	28"	3 3/4"	3 3/4"	1/2"	10 1/2"	1.98"	2.02"	2 3/4" x 39"	55	3" x 4 1/2"	5" x 7 1/2"	5"
	5	470'	All	EXP.	6	196.3	9 5/8"	5 13/16"	15 1/2'	15 1/2'	6	7/16"	1/4"	7 @ 12 Ga.	3 7/8"	16 1/2"	28 1/2"	6 1/8"	3 3/4"	1/2"	10 3/4"	1.96"	2.04"	2 1/2" x 37"	55	3" x 6 1/8"	4" x 8 1/2"	4 1/2"
	6	470'	All	EXP.	6	94.8	9 1/2"	5 5/16"	12"	12"	5	7/16"	1/4"	6 @ 12 Ga.	3 5/16"	13"	23 1/2"	6 1/4"	2 5/8"	1/2"	8 3/4"	1.96"	2.04"	1 3/4" x 29"	55	2" x 5 5/8"	4" x 10"	3 3/8"

*Maximum Design Load = Service Load

** Dimension "E" does not apply to masonry plates. See Side View - Bents 1 & 6

GENERAL NOTES

Elastomeric Bearings shall conform to Special Provision Job BB0407 "Elastomeric Bearings" and Section 808 of the Standard Specifications and shall be paid for at the unit price bid for "Elastomeric Bearings." Long-duration testing of random lot samples specified in subsection 808.05 is not required.

External load plates and masonry plates shall conform to AASHTO M270, Grade 50W. Pipe sleeves shall be ASTM A53, Grade B, and shall be galvanized to conform to AASHTO M232, Class C or AASHTO M298, Class 50.

External load plates and masonry plates shall be completely fabricated (including bevel and bolt holes) and shall be cleaned before vulcanizing to the elastomeric bearing. The surface in contact with the elastomeric bearing shall be cleaned in accordance with Section 808. Other surfaces shall be blast cleaned in accordance with subsection 807.84(b) for painted steel or 807.84(e) for unpainted Grade 50W steel.

Anchor Bolts, Washers and Nuts shall conform to subsection 807.07 of the Standard Specifications. The anchor bolt grade of steel shall be as specified in the "Table of Fabricator Variables". Indentations shall be circular with rounded bottoms and staggered as shown in the details.

Pipe Sleeves, Anchor Bolts, Washers and Nuts shall be paid for at the unit price bid for "Structural Steel in Beam Spans (M270, Gr. 50W)". External load plates and masonry plates will not be measured or paid for seperately but will be considered included in the unit price bid for "Elastomeric Bearings".

Tabular Data by: TAR Date: 1/22/01
Checked by: JLH Date: 1/22/01
Designed by: BCG Date: 1/22/01

STATE OF ARKANSAS
Larry H. Miller
REGISTERED PROFESSIONAL ENGINEER
No. 13339
LARRY H. MILLER
8-11-12
BRIDGE ENGINEER

DETAILS OF ELASTOMERIC BEARINGS

ROUTE I-540 SEC. 2
ARKANSAS STATE HIGHWAY COMMISSION
LITTLE ROCK, ARK.

DRAWN BY: TAR DATE: Jan 02 FILENAME: bBB0407m5 el.dgn
CHECKED BY: EMB DATE: May 02 SCALE: N.T.S.
DESIGNED BY: BCG/JLH DATE: Jan 02
BRIDGE NO. A6881, B6881 DRAWING NO. 48610

$$$$dgnspec$$$$$
$$$$date$$$$

...\b040468m5_e1.dgn 8/10/2012 3:50:22 PM

DATE REVISED	DATE FILMED	DATE REVISED	DATE FILMED	FED. ROAD DIST. NO.	STATE	FED. AID PROJ. NO.	SHEET NO.	TOTAL SHEETS
				6	ARK.			
				JOB NO.		BB0407	320	464
				(1) A6881, B6881		JOINT DETAILS		48611

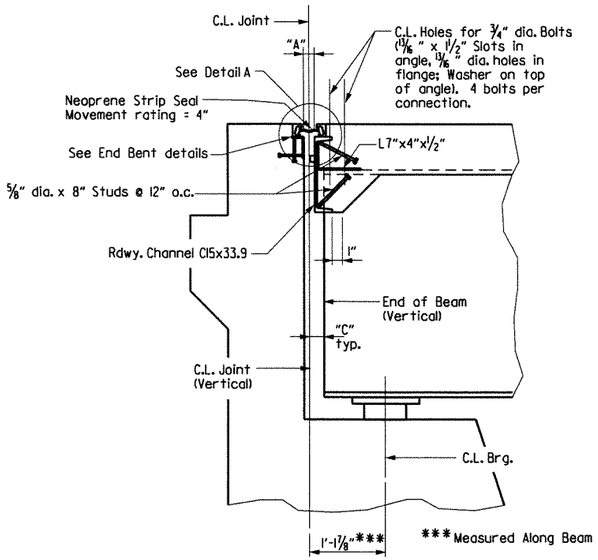

SECTION THRU JOINT AT END BENTS

Note: Sections thru Joints are taken normal to C.L. Joints

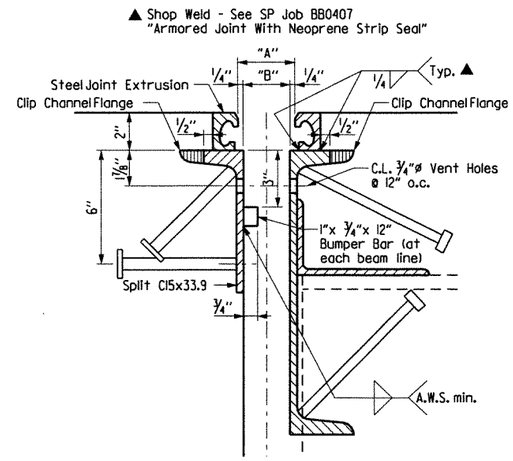

DETAIL A

3" = 1'-0"

Note: Concrete shall be hand packed under the joint armor in the backwall and in the span.

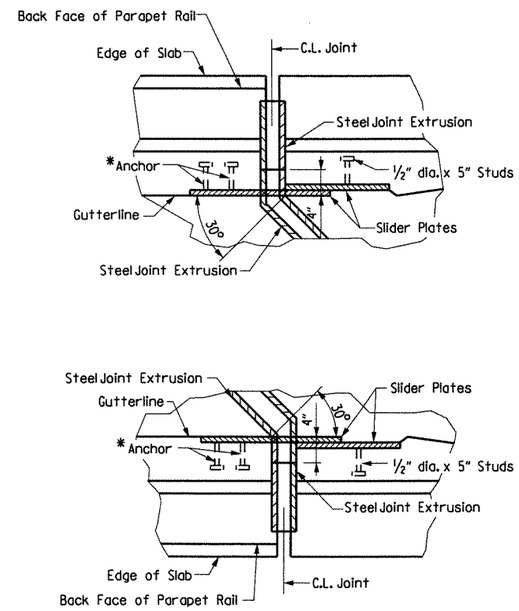

SECTION C-C AT END BENTS

* The method of attachment of the cover slider plate assembly or similar device must be such that it may be removed in order to provide for future replacement of the neoprene seal.

Anchors will not be paid for directly but will be considered subsidiary to "STRUCTURAL STEEL IN BEAM SPANS (M 270, GRADE 50W)".

GENERAL NOTES

EXPANSION NEOPRENE STRIP SEAL: The expansion device shall provide a movement of 4" as shown in the "STRIP SEAL JOINT DATA" table. The expansion joint shall be capable of sealing the deck surface and parapet area to prevent moisture and other contaminants from descending through the joint.

Details of proposed slider plate assembly shall be submitted to and approved by the Engineer prior to the fabrication of any structural steel at the expansion device.

All structural steel shall be AASHTO M270, Grade 50W unless otherwise noted. All exposed steel surfaces except parapet slider plates are to be cleaned in accordance with subsection 807.84(e). The parapet slider plates shall be cleaned in accordance with subsection 807.84(b) and painted in accordance with subsection 807.75. The color of paint shall be Gray and shall match Fed. Std. 595B, Color Chip 26176. Cleaning and painting will not be paid for directly but will be considered subsidiary to "Structural Steel in Beam Spans (Gr. 50W)".

All structural steel, except for the steel extrusion for the strip seal, shall be paid for as "STRUCTURAL STEEL IN BEAM SPANS (M 270, Grade 50W)". The steel extrusion and neoprene strip seal shall be paid for in accordance with Special Provision Job BB0407 "ARMORED JOINT WITH NEOPRENE STRIP SEAL".

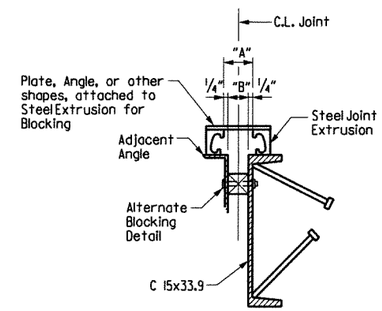

Note:
Each Expansion Joint device shall be blocked in the shop by the Fabricator to the dimension shown for 60° F and the blocking details shall be shown on the Shop Drawings. Blocking shall be placed within 2 feet of each end of the device and with a maximum spacing of 8 feet.

DETAILS FOR BLOCKING EXPANSION JOINT DEVICE

EXPANSION DEVICE INSTALLATION AT END BENTS:
The concrete span pour shall be placed before the end bent backwall concrete is placed. After beams or girders are erected the blocked expansion device shall be installed and adjusted for grade. All connection bolts shall be fully tightened prior to placing the deck concrete adjacent to the bent. Immediately prior to pouring the backwall concrete, the blocking shall be removed, the opening adjusted for temperature and grade, and the backwall constructed.

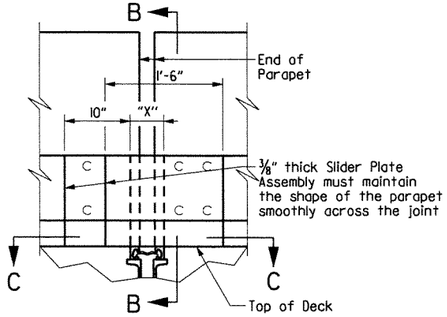

DETAIL OF NEOPRENE SEAL AT GUTTERLINE

Note: Dimension "X" equals the width of opening in parapet at curb to allow for removal or repair of joint.

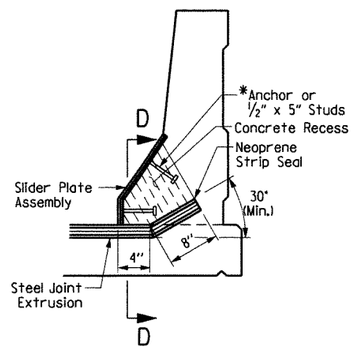

SECTION B-B

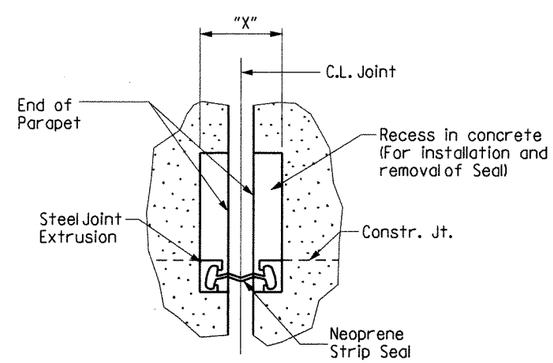

SECTION D-D

STRIP SEAL JOINT DATA

Bent No.(s)	Movement Rating (inch)	"A" Width Perpendicular to Joint at 24 Hour Average Temperature **of:			"B" Width Perpendicular to Joint at 24 Hour Average Temperature **of:			"C" Perpendicular to Joint at 24 Hour Average Temperature of 60° F
		40° F	60° F	80° F	40° F	60° F	80° F	
1 and 6	5"	3½"	3⅛"	2¾"	3"	2⅝"	2¼"	2 9/16"

** The temperature used to set the joint opening shall be the approximate average air temperature during the 24 hour period immediately before the bolts are tightened. The Engineer shall establish the temperature. Interpolation of the table may be necessary.

STATE OF ARKANSAS REGISTERED PROFESSIONAL ENGINEER No. 13339 LARRY E. MILLER
8-11-12
BRIDGE ENGINEER

DETAILS OF
ARMORED JOINT WITH
NEOPRENE STRIP SEAL
HWY. 22 - I-40(F)
CRAWFORD & SEBASTIAN COUNTIES
ROUTE I-540 SEC. 2
ARKANSAS STATE HIGHWAY COMMISSION
LITTLE ROCK, ARK.

DRAWN BY: TAR DATE: Jan 02 FILENAME: bBB0407m5_j1.dgn
CHECKED BY: EMB DATE: May 02 SCALE: N.T.S.
DESIGNED BY: BCG DATE: Dec 01
BRIDGE NO. A6881, B6881 DRAWING NO. 48611

$$$$date$$$

$$$$dgnspec$$$$$

...\b040468m5_j1.dgn 8/10/2012 3:50:22 PM

DATE REVISED	DATE FILMED	DATE REVISED	DATE FILMED	FED. ROAD DIST. NO.	STATE	FED. AID PROJ. NO.	SHEET NO.	TOTAL SHEETS
				6	ARK.			
				JOB NO.		BB0407	321	464
				1 A6881, B6881		GENERAL NOTES		48612

SUPERSTRUCTURE GENERAL NOTES

CONSTRUCTION SPECIFICATIONS: Arkansas State Highway and Transportation Department Standard Specifications for Highway Construction, 2003 edition, with applicable special provisions.

DESIGN SPECIFICATIONS: AASHTO Standard Specifications for Highway Bridges, 1996 with current interim specifications.

LIVE LOADING: HS20 - 44 + Military Loading METHOD OF DESIGN: Load Factor

MATERIALS AND STRENGTHS:

Concrete: All concrete shall be Class S(AE) with minimum 28 day compressive strength f'c = 4000 psi.

Reinforcing Steel: Reinforcing steel shall conform to AASHTO M31 or M53, Grade 60 (Yield Strength = 60,000 psi.)

Structural Steel: Structural Steel shall conform to AASHTO M270, Gr. 50W (Fy = 50,000 psi.) and AASHTO M270, Gr. 36 (Fy = 36,000 psi.).

Elastomeric Bearings: For Elastomeric Bearings, see Dwg. No. 48610

STRUCTURAL STEEL:

All structural steel shall be AASHTO M270, Gr. 50W unless otherwise noted and shall be paid for as Structural Steel in Beam Spans (M270, Gr. 50W). M270, Gr. 50W steel shall not be painted, unless noted otherwise. See Dwg. No. 48611 for cleaning and painting requirements of the parapet slider plates. All exposed surfaces to be cleaned in accordance with subsection 807.84(e) of the standard specifications unless noted otherwise. See Dwg. No. 48610 for cleaning requirements of external load plates on elastomeric bearings. Structural steel completely embedded in concrete may be AASHTO M270, Gr. 36.

Requests for substitution of structural steel shapes shown with shapes of greater size must be submitted by the Contractor to the Engineer for approval. Steels of equal or greater strengths will be accepted only when shown on the approved shop drawings. Shapes and materials shown in the plans will be the basis of payment and no additional compensation will be made for any adjustments due to substitutions.

Longitudinal beams and all field splice plates are considered main load carrying members and shall meet the Longitudinal Charpy V-Notch Test specified in Section 807.05 of the Standard Specifications. This work and material will not be paid for directly but are considered subsidary to the item "Structural Steel in Beam Spans (M270, Gr. 50W)".

Flange field splice plates shall be cut and fabricated so that the primary direction of rolling is parallel to the direction of the main tensile and/or compressive stresses.
All beams shall be blocked in their true position in the shop in groups of a minimum of three sections. Beams shall be blocked with webs horizontal. See Section 807.54 (b)(2) of the Standard Specifications. The camber, length of sections, distance between bearings, and openings of joints shall be measured with the beams in their true position. This information shall become a part of the permanent records of this job. The component parts shall be match-marked in this assembly and these marks shall be shown on the erection diagram. All beam dimensions are based on a temperature of 60°F. A tolerance of plus or minus 1/4" is allowed for camber.

Anchor bolts shall be galvanized according to subsection 807.07 and shall be Grade 55.

Elastomeric Bearings shall be firmly seated in accordance with subsection 808.08 of the specifications. This work to be considered subsidiary to the item "Elastomeric Bearings" and will not be paid for directly.

Field connections to be bolted with high strength bolts. For 3/4" dia. bolts: Open holes = 13/16" unless otherwise noted. Bolt spacing = 2 1/2" unless otherwise noted. Minimum edge distance = 1 1/4" unless otherwise noted. For 7/8" dia. bolts: Open holes = 15/16" unless otherwise noted. Bolt spacing 3" unless otherwise noted. Minimum edge distance = 1 1/2" unless otherwise noted. Bolts shall be placed with heads on the outside face of the exterior beam webs and on bottom of beam flanges.

Holes for 3/4" dia. high strength bolts in diaphragms may be 15/16" dia. if a washer is supplied for use under both the nut and the head of the bolt.

Diaphragms shall be installed as beams are erected. All bolts in diaphragms and field splices shall be installed and completely tightened prior to pouring of floor slabs.

All welding that is to be done during fabrication of structural steel, including temporary welds, shall be detailed on the shop drawings and submitted for approval. If additional welds are required, whether permanent or temporary, a formal request with detailed drawings shall be submitted to the Engineer for approval; however, additional welds used for attaching falsework support devices or screed rail supports to the structural steel that do not exceed the limitations of subsection 802.13 will not require approval prior to construction. All welding shall conform to subsection 807.26.

Drawings show general features of design only. Shop drawings shall be made in accordance with the specifications, submitted, and approval secured before fabrication is begun.

All stud shear connectors shall be granular flux filled, solid fluxed, or equal and shall be automatically end welded in accordance with the recommendations of the manufacturer.

REINFORCING STEEL:

The reinforcing steel shall be accurately located in the forms and firmly held in place by steel wire supports sufficient in size and number to prevent displacement during the course of construction. The wire supports will not be paid for directly but will be considered subsidiary to the item of "Epoxy Coated Reinforcing Steel (Grade 60)".

CONCRETE:

Concrete shall be poured in the dry and all exposed corners to be chamfered 3/4" unless otherwise noted. All concrete shall be Class S(AE) with a minimum 28 day compressive strength f'c = 4,000 psi.

The superstructure details shown are for use when removable deck forming is used and are the basis for measurement of Class S(AE) Concrete. See Standard Drawing No. 14991 for allowable modifications and for tolerances when Permanent Steel Bridge Deck Forms are used.

Concrete in bridge superstructure shall be placed, consolidated and screeded off for the entire pour before any concrete has taken its initial set. This may require the use of a retarding agent.

The concrete deck shall be given a tine finish in accordance with subsection 802.19 for Class 5 Tined Bridge Roadway Surface Finish. Movement of the finishing machine across new concrete shall be on planks placed on the surface and shall be prohibited for 72 hours after finishing the pour. Sufficient concrete must be placed ahead of the strike-off to fully load the beam. If a longitudinal strike-off is used, a vertical camber adjustment must be made in the strike-off to account for the future dead load deflection due to the railing. A minimum of 72 hours shall elapse between completion of the slab and the pouring of the parapet railing.

LOAD DISTRIBUTION TO BEAMS:

	Beam 1, 6	Beams 2-5
Dead Load:		
To W-Beam	777 PLF + 1.3(wt./ft. of W-Bm.)	837 PLF + 1.3(wt./ft. of W-Bm.)
To Composite Beam	282 PLF*	311 PLF*

*includes 182 PLF(Int.), 154 PLF(Ext.) Future Wearing Surface

Live Load:

To each Composite Beam — Int. Bm. = 1.379 wheels (+) impact
Ext. Bm. = 1.214 wheels (+) impact

GENERAL NOTES AND MISC. DETAILS
FOR CONTINUOUS COMP. W-BEAM UNITS
(BR. A6881, B6881)

STATE OF ARKANSAS REGISTERED PROFESSIONAL ENGINEER No. 11339 LARRY E. MILLER

Larry E. Miller 8-11-12
BRIDGE ENGINEER

ROUTE I-540 SEC. 2
ARKANSAS STATE HIGHWAY COMMISSION
LITTLE ROCK, ARK.

DRAWN BY: TAR DATE: Jan 02 FILENAME: bBB0407m5 s1.dgn
CHECKED BY: EMB DATE: May 02 SCALE: N.T.S.
DESIGNED BY: BCG DATE: Dec 01
BRIDGE NO. A6881, B6881 DRAWING NO. 48612

$$$$date$$$

$$$$dgnspec$$$$$*

...\b040468m5_s1.dgn 8/10/2012 3:50:23 PM

DATE REVISED	DATE FILMED	DATE REVISED	DATE FILMED	FED. ROAD DIST. NO.	STATE	FED. AID PROJ. NO.	SHEET NO.	TOTAL SHEETS
				6	ARK.			
				JOB NO.		BB0407	322	464
				(1) A6881, B6881		CHAIN LINK FENCE		48613

*Sta. 666+08.70 (Bridge A, Left)
*Sta. 666+33.20 (Bridge A, Right)
*Sta. 666+82.20 (Bridge B, Left)
*Sta. 667+06.60 (Bridge B, Right)

* Stations and post spacing are shown along C.L. Median. For parapet open joint spacing along face of parapet, see "Reinforcing Plan" on Dwg. No. 48593 & 48609.

* Sta. 667+23.90 (Bridge A, Left)
* Sta. 667+48.40 (Bridge A, Right)
* Sta. 667+97.40 (Bridge B, Left)
* Sta. 668+21.80 (Bridge B, Right)

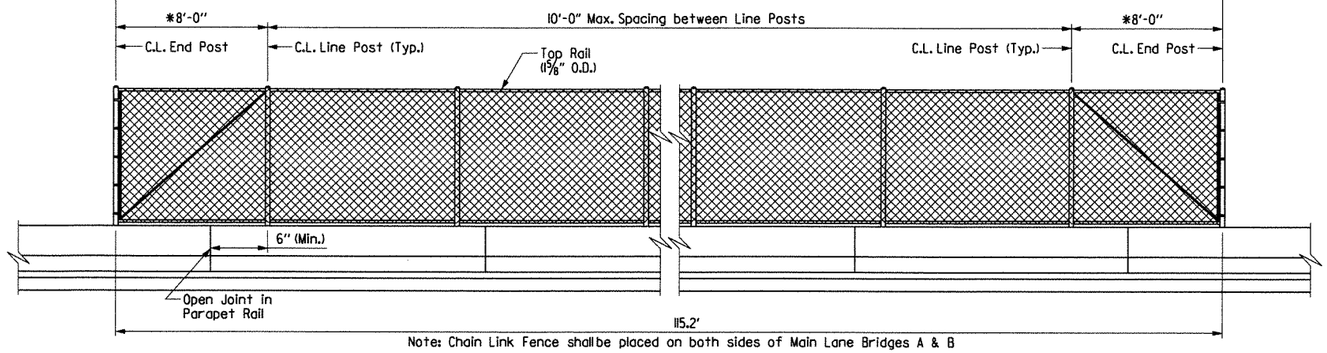

Note: Chain Link Fence shall be placed on both sides of Main Lane Bridges A & B

LONGITUDINAL VIEW OF CHAIN LINK FENCE

Notes:

Fence layout shall conform to the vertical and horizontal bridge alignments. Fence posts shall be set plumb (true vertical position). Parapet rail concrete shall be at least 7 days old before stretching and securing fabric to posts.

Cast in place anchor bolts shall be of stainless steel or high strength steel. Stainless steel anchor bolts shall conform to ASTM A193 or A320-Grade B8 with a minimum yield strength of 80,000 psi. High strength steel anchor bolts shall conform to AASHTO M164 or ASTM A354-Grade BC Galvanized in accordance with AASHTO M232.

Nuts shall conform to ASTM A194-Grade 8 (Stainless Steel) or AASHTO M164 galvanized in accordance with AASHTO M232.

Threads on bolts, screws and nuts shall conform to American Standard Coarse Series, Class 2 Fit, ASA Specification B1.1.

Washers shall be of high strength steel conforming to AASHTO M270, Grade 36 galvanized in accordance with AASHTO M232 or of stainless steel conforming to ASTM A276 or A167-Type 3.

Base plates shall not be placed upon areas that are improperly finished, deformed, or irregular.

Neoprene pad and template plates shall not be paid for directly, but shall be considered incidental to the unit price bid for item "7' Steel Chain Link Fence".

Note: Chain Link fabric to be placed on inside face of posts.

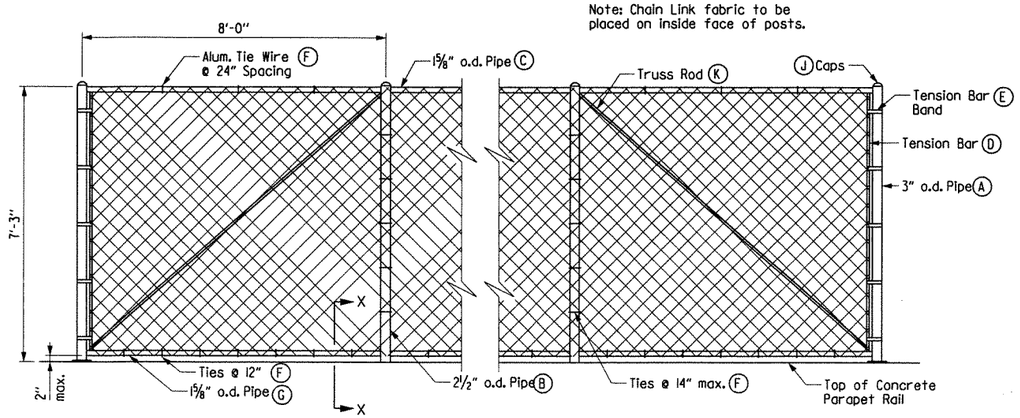

DETAIL OF CHAIN LINK FENCE

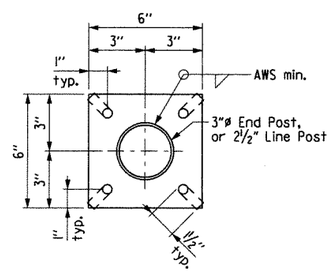

SECTION Y-Y

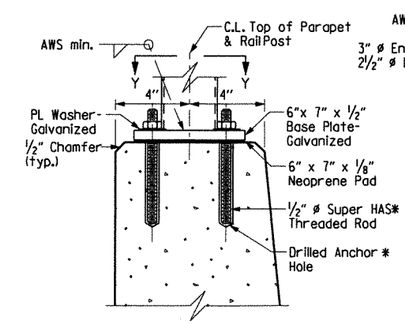

SECTION X-X

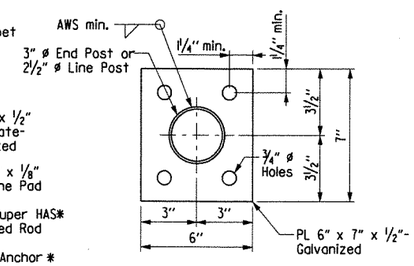

SECTION Y-Y

* HILTI HIT RE500 Adhesive Anchor System with 4 1/2" embedment.

The HILTI Adhesive Anchor System shall be installed in accordance with Manufacturer's recommendations.

(A) END POST: 3" O.D.
(B) LINE POST: 2 1/2" O.D.
(C) TOP RAIL: 1 5/8" O.D.
(D) TENSION BAR: 3/16"x 3/4" Bar
(E) TENSION BAR BAND: 3/4"x .074 w/5/16"ø x 1 1/4" Bolt (1 Band Top & Bottom w/15" max. spaces)
(F) TIE WIRE: 9 Ga. Aluminum
(G) BOTTOM RAIL: 1 5/8" O.D.
(H) FABRIC: 9 Ga. 2" Mesh w/Knocklug or Twisting Selvage
(J) CAPS: All Posts shall be Capped & Shall Conform to ASTM F626-84
(K) TRUSS ROD: Min. of 5/16" Round with Tighteners and Fittings

Note: Chain Link Fence attached to Bridge shall be paid for as "7' Steel Chain Link Fence". For additional details of Chain Link Fence, See Standard Drawing WF-3.

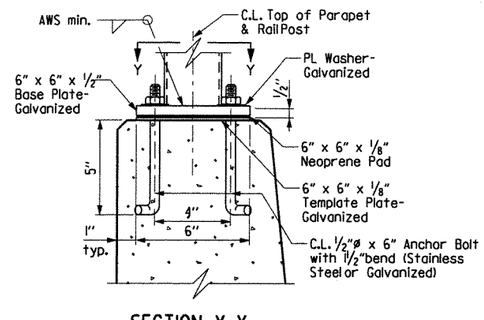

SECTION X-X

DETAILS OF ALTERNATE POST ANCHOR SYSTEM

DETAILS OF
CHAIN LINK FENCE
BRIDGE OVER UNION PACIFIC RAILROAD
(BR. A6881, B6881)
HWY. 22 - I-40 (F)
CRAWFORD & SEBASTIAN COUNTIES

ROUTE I-540 SEC. 2
ARKANSAS STATE HIGHWAY COMMISSION
LITTLE ROCK, ARK.

STATE OF ARKANSAS REGISTERED PROFESSIONAL ENGINEER No. 14339 LARRY W. MILLER
8-11-12
BRIDGE ENGINEER

DRAWN BY: JE DATE: 1-06 FILENAME: bBB0407m5 s2.dgn
CHECKED BY: DATE:
DESIGNED BY: DM DATE: 1-06 SCALE: AS SHOWN

BRIDGE NO. A6881 & B6881 DRAWING NO. 48613

$$$$date$$$$
$$$$dgnspec$$$$$

...\b040468m5_s2.dgn 8/10/2012 3:50:23 PM

DATE REVISED	DATE FILMED	DATE REVISED	DATE FILMED	FED. ROAD DIST. NO.	STATE	FED. AID PROJ. NO.	SHEET NO.	TOTAL SHEETS
				6	ARK.			
				JOB NO.		BB0407	323	464
				1	03453	Special Gutter		48614

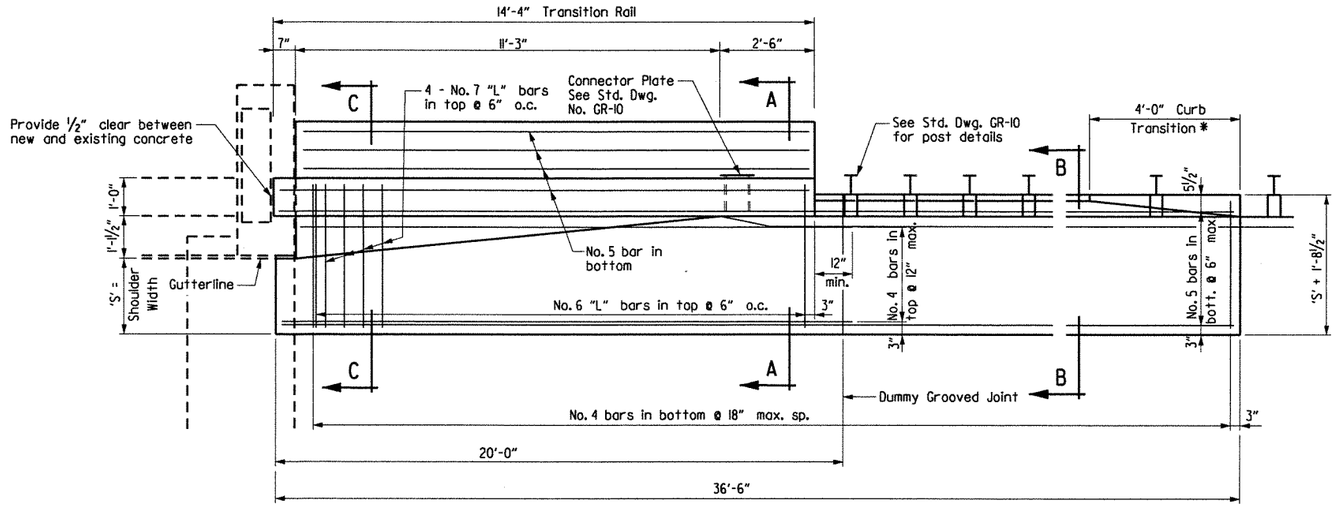

PLAN

No Scale

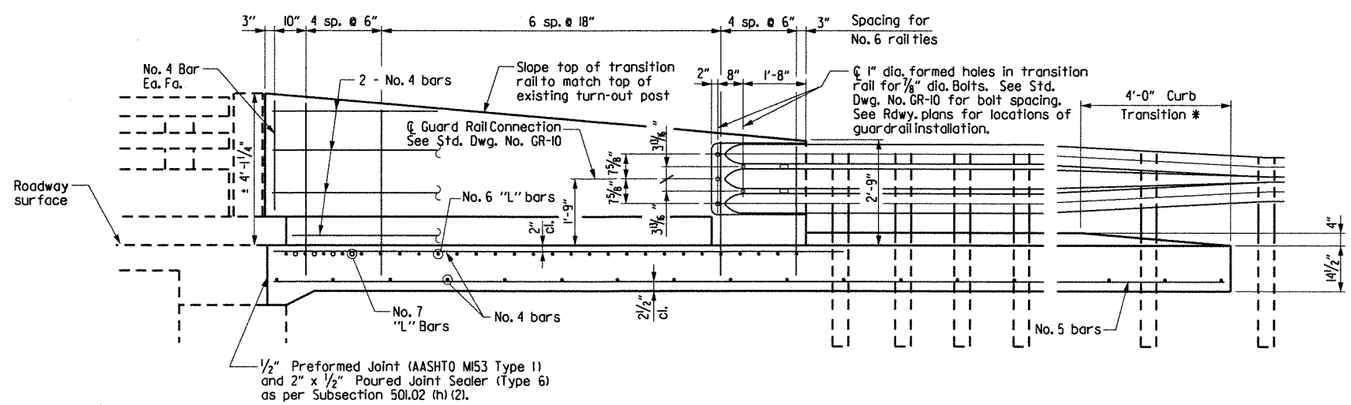

LONGITUDINAL SECTION THRU GUTTER

No Scale

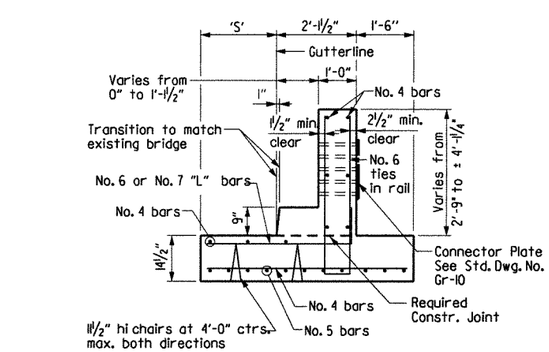

SECTION A-A

Scale: 1/2" = 1'-0"

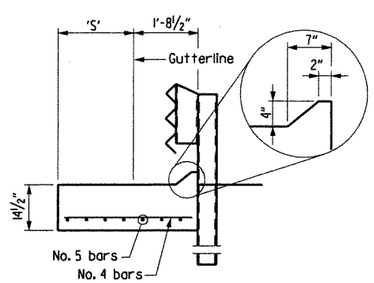

SECTION B-B

Scale: 1/2" = 1'-0"

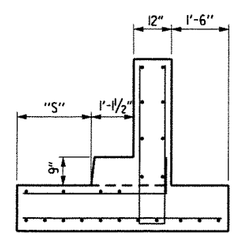

SECTION C-C

At end of Transition Rail
Scale: 1/2" = 1'-0"

GENERAL NOTES

Concrete shall be Class S or S(AE) or mixture used for Portland Cement Concrete Pavement.

Reinforcing steel shall conform to AASHTO M31 or M53, Grade 60 (fy = 60,000 psi.) Fabricate bar lengths to provide 2" minimum cover at each end.

Approach gutters will be measured and paid for in accordance with Section 504 of the Standard Specifications.

QUANTITIES FOR ONE GUTTER

Bridge No.	"S" Shoulder Width (Ft.)	Reinforcing Steel (Lbs.)	Concrete (C.Y.)
03453	2'-6"	1061	10.20

BENDING DIAGRAMS

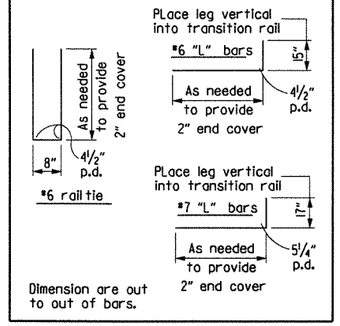

Note: Approach gutter to be built on an arc concentric to centerline bridge. See Dwg. No. 48614A of Existing Drawings for horizontal curve information.

* Construct curb with height-transition as shown if drop inlet is not used at end of gutter.

Construct curb full height (no height-transition) if drop inlet is used at end of gutter. Curb height transition placed on drop inlet. See drop inlet details.

NOTE: The contractor shall make check measurments and make any adjustments necessary to fit the new work to the existing bridge location.

DETAILS OF TYPE SPECIAL 4 APPROACH GUTTERS (1'-1 1/2" CURB WIDTH)

ROUTE SEC.

ARKANSAS STATE HIGHWAY COMMISSION

LITTLE ROCK, ARK.

STATE OF ARKANSAS REGISTERED PROFESSIONAL ENGINEER No. 11339 LARRY W. MILLER

8-11-12

BRIDGE ENGINEER

DRAWN BY: TAR DATE: 4/02 FILENAME: bBB0407_gl.dgn

CHECKED BY: EMB DATE: 4/02 SCALE: As Shown

DESIGNED BY: BCG DATE: 4/02

BRIDGE NO. 03453 DRAWING NO. 48614

FED. ROAD DIST. NO.	STATE	FED. AID PROJ. NO.	SHEET NO.	TOTAL SHEETS
6	ARK.			
JOB NO.		BB0407	324	464
03453 - LAYOUT - 48614A				

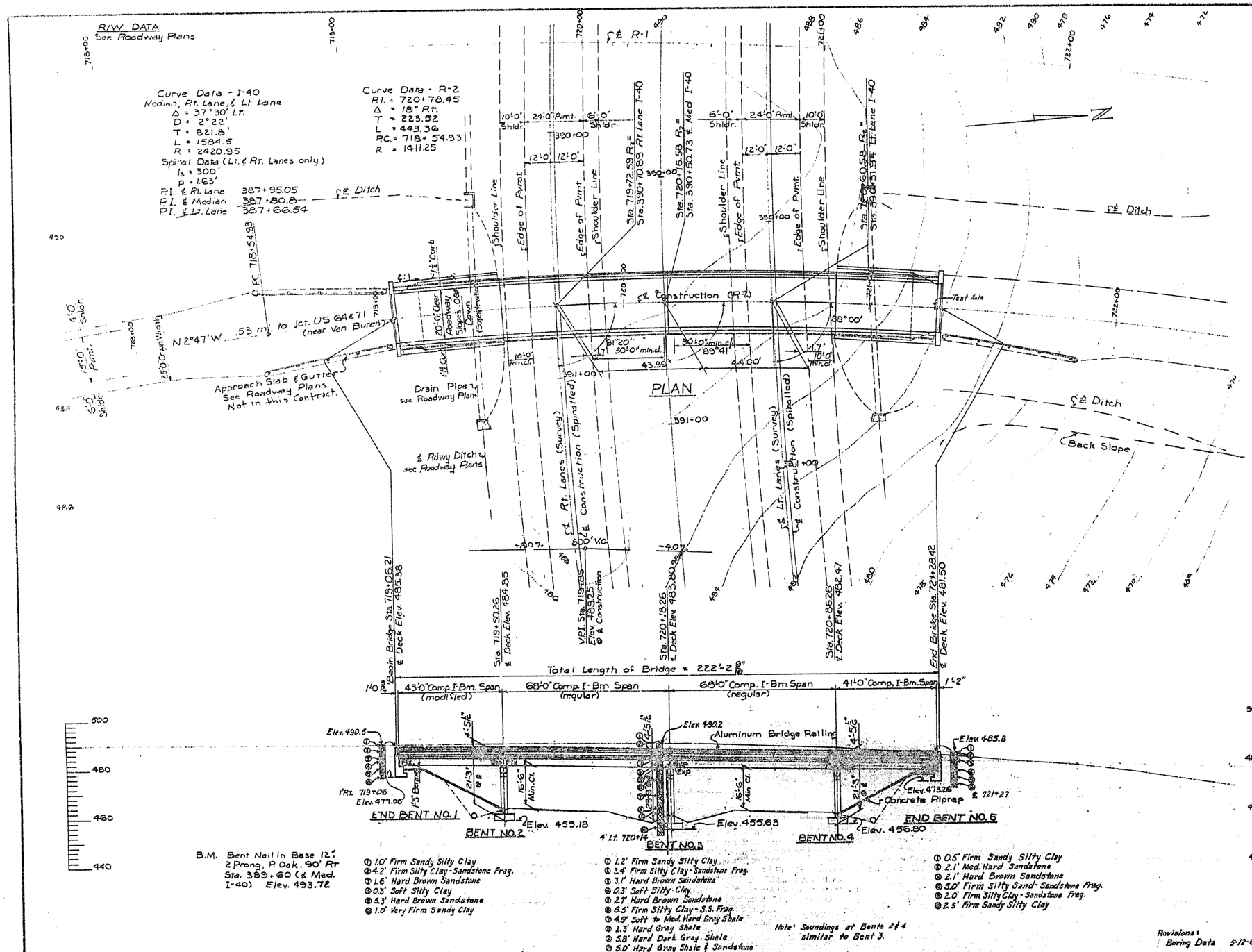

GENERAL NOTES

All concrete to be poured in the dry. All exposed corners to be chamfered 3/4" unless otherwise noted.

Rock excavation shall be made to neat lines of concrete footings. Care shall be exercised to avoid shattering of rock faces by excessive blasting. Concrete in footings shall be poured directly against excavated surfaces of rock.

In general, all construction joints in abutments and bents shall be horizontal and shall be provided with keys not less than 1½" high covering the middle third of both dimensions.

For Details of End Bents 1 and 5 see Drawing No. 11517.

For Details of Bents 2, 3, and 4 see Drawing No. 11518.

For Details of Superstructure see Drawings No. 5462, 5430, 11519 & 11520.

SPECIFICATIONS: Arkansas State Highway Commission Standard Specifications for Highway Construction, Edition of 1959 and designated Special Provisions.

DESIGN SPECIFICATIONS: AASHO , 1957

Live Loading: H20-S16 and Special Interstate Loading of 2 24,000# axles spaced 4'0" on centers.

Unit Stresses:	Class A Concrete (n=15)	840 psi
	Class S Concrete (n=10)	1,200 psi
	Structural Steel	18,000 psi
	Reinforcing Steel	20,000 psi

FOUNDATION PRESSURE 7000 psf.

Revisions: Boring Data 5-12-61 L.K.

FOR INFORMATION ONLY

(RAMP R-2)

LAYOUT OF HWY. I-40 OVERPASS

JCT. HWY. 59 TO SHIBLEY GR. SEPR.

CRAWFORD COUNTY

INTERSTATE ROUTE 540 SEC. 1

ARKANSAS STATE HIGHWAY COMMISSION

LITTLE ROCK, ARK.

DRAWN BY: L.A.R. DATE: 6-7-61
TRACED BY: DATE:
CHECKED BY: DV DATE: 6-27-61
SCALE: 1" = 20'

L. D. Carlson
BRIDGE ENGINEER

BRIDGE NO. 03453 **DRAWING NO. 48614A**

FED. ROAD DIST. NO.	STATE	FED. AID PROJ. NO.	SHEET NO.	TOTAL SHEETS
6	ARK.			
JOB NO.		BB0407	325	464
03453 - END BENTS - 48614B				

(1)

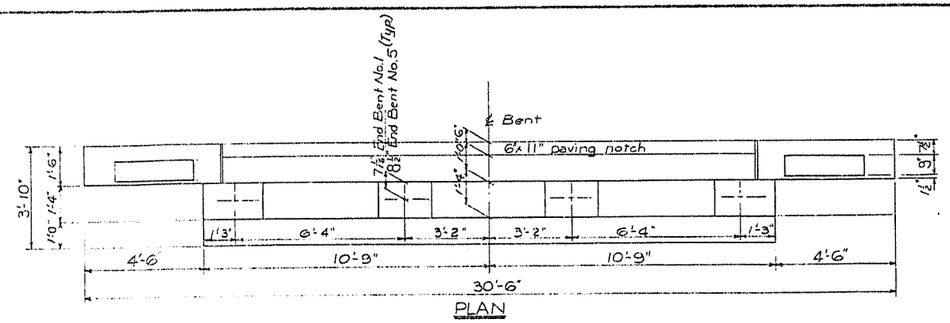

PLAN

Note: Place Type C Bridge Name Plate flush with roadway face of right hand rail turn-out post at beginning of bridge.

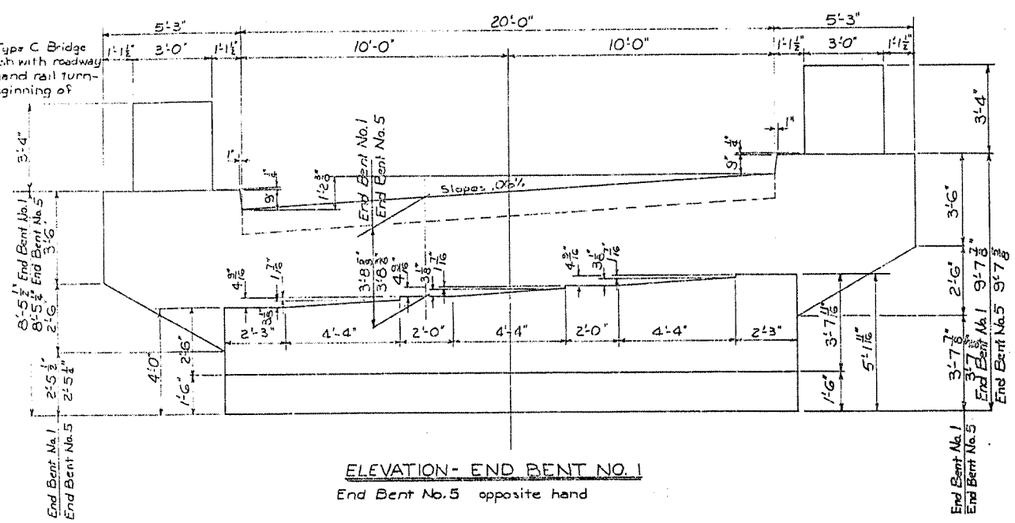

ELEVATION - END BENT NO. 1

End Bent No. 5 opposite hand

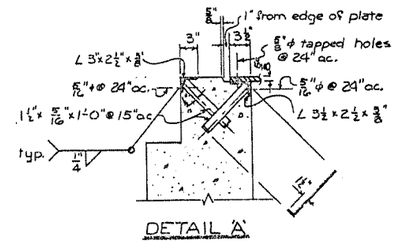

DETAIL 'A'

BAR LIST - EACH BENT

Mark	Size	No.	Length	Pin Dia.
P_1	#4	20	7'-2"	1½"
P_2	#4	22	3'-6"	str.
P_3	#4	32	8'-3"	1½"
P_4	#4	20	4'-10"	str.
P_5	#4	1	11'-10"	1½"
P_6 - P_{25}	#4	1 ea.	varies 11'-1" to 12'-3"	1½"
P_{26}	#4	1	13'-0"	1½"
P_{27} - P_{31}	#4	4 ea.	varies 5'-6" to 3'-3"	str.
P_{32}	#4	4	4'-10"	str.
P_{33}	#4	20	6'-11"	str.
P_{34}	#4	16	21'-0"	str.
TO_1	#5	12	5'-3"	1¼"
TO_2	#3	8	6'-11"	str.

Bending Diagram

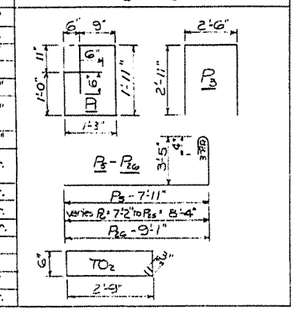

All dimensions are c. to c. of bars

GENERAL NOTES

All concrete to be Class A. Exposed corners to be chamfered ¾" unless otherwise noted.
Reinforcing steel to deformed bars of intermediate or hard grade.
For General Notes not shown see Dwg. No. 11516.

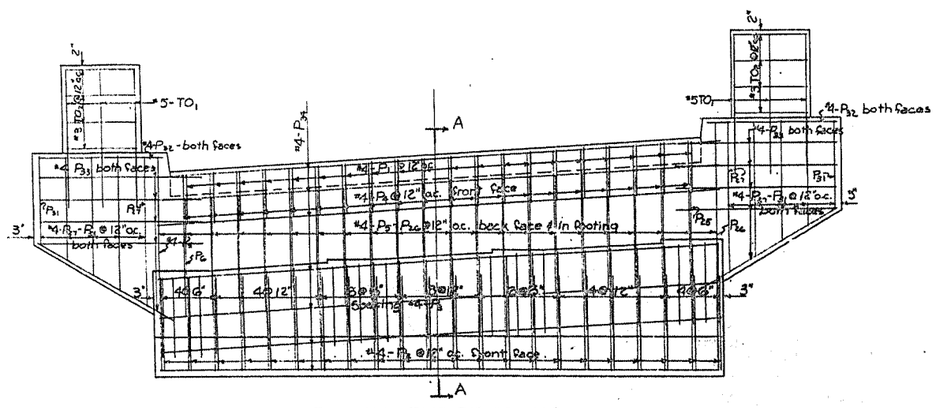

ELEVATION - END BENT NO. 1

End Bent No. 5 same except opposite hand

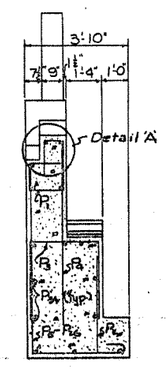

SECTION A-A

FOR INFORMATION ONLY

DETAILS OF END BENTS
(RAMP R-2) HWY I-40 OVERPASS
JCT. HWY 59 - SHIBLEY GRADE SEPARATION
CRAWFORD COUNTY
INT. ROUTE 540 SEC. 1

ARKANSAS STATE HIGHWAY COMMISSION
LITTLE ROCK, ARK.

DRAWN BY: J.A.P. DATE: 2-16-61
TRACED BY: DATE:
CHECKED BY: DV DATE: 6-27-61
SCALE: ⅜" = 1'-0"

L. G. Carlson
BRIDGE ENGINEER

BRIDGE NO. 03453 **DRAWING NO. 48614B**

DATE REVISED	DATE FILMED	DATE REVISED	DATE FILMED	FED. ROAD DIST. NO.	STATE	FED. AID PROJ. NO.	SHEET NO.	TOTAL SHEETS
				6	ARK.			
				JOB NO.		BB0407	326	464
				1	03452, 03455, 03456, 03609	Special Gutter		48615

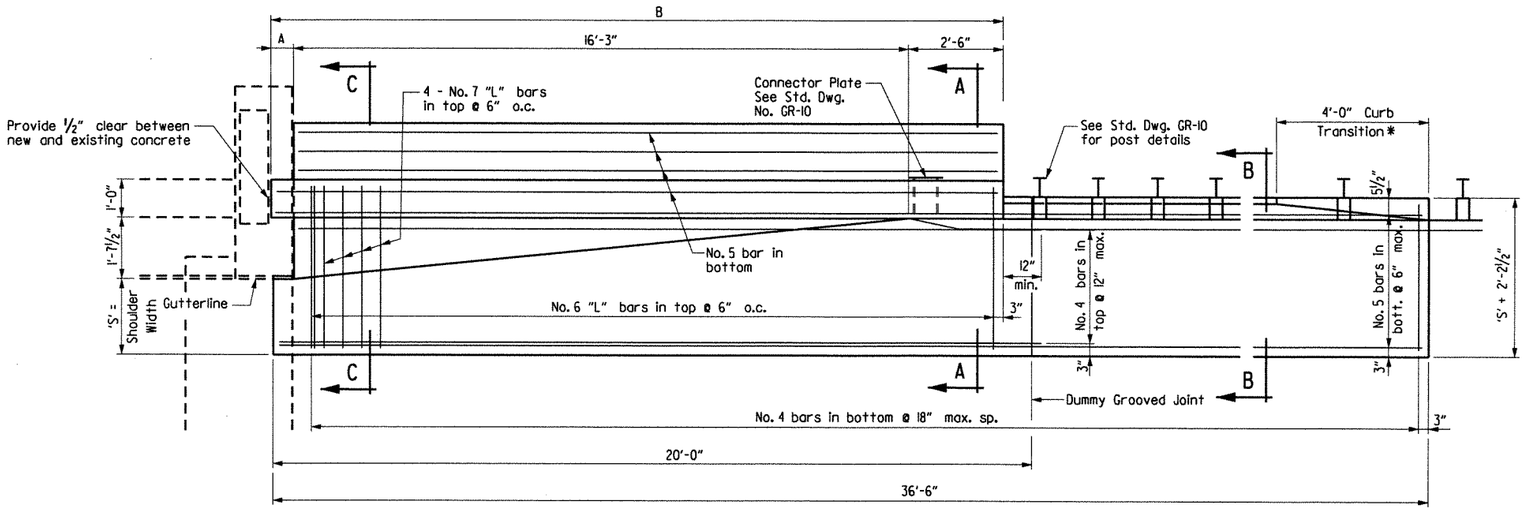

PLAN

Scale: 1/2" = 1'-0"

GENERAL NOTES

Concrete shall be Class S or S(AE) or mixture used for Portland Cement Concrete Pavement.

Reinforcing steel shall conform to AASHTO M31 or M53, Grade 60 (fy = 60,000 psi.) Fabricate bar lengths to provide 2" minimum cover at each end.

Approach gutters will be measured and paid for in accordance with Section 504 of the Standard Specifications.

BENDING DIAGRAMS

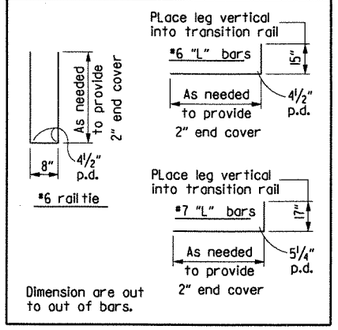

DIMENSIONS & QUANTITIES FOR ONE GUTTER

Bridge No.	"S" Shoulder Width (Ft.)	A	B	C	Reinforcing Steel (Lbs.)	Concrete (C.Y.)
03452	2'-0"	7 1/2"	19'-4 1/2"	2'-6"	1190	11.32
03455	2'-0"	7 1/2"	19'-4 1/2"	2'-6"	1190	11.32
03456	5'-6"	7 1/2"	19'-4 1/2"	2'-6"	1540	15.72
03609	2'-0"	1 1/2"	18'-10 1/2"	2'-0"	1190	11.24

*Construct curb with height-transition as shown if drop inlet is not used at end of gutter.

Construct curb full height (no height-transition) if drop inlet is used at end of gutter. Curb height transition placed on drop inlet. See drop inlet details.

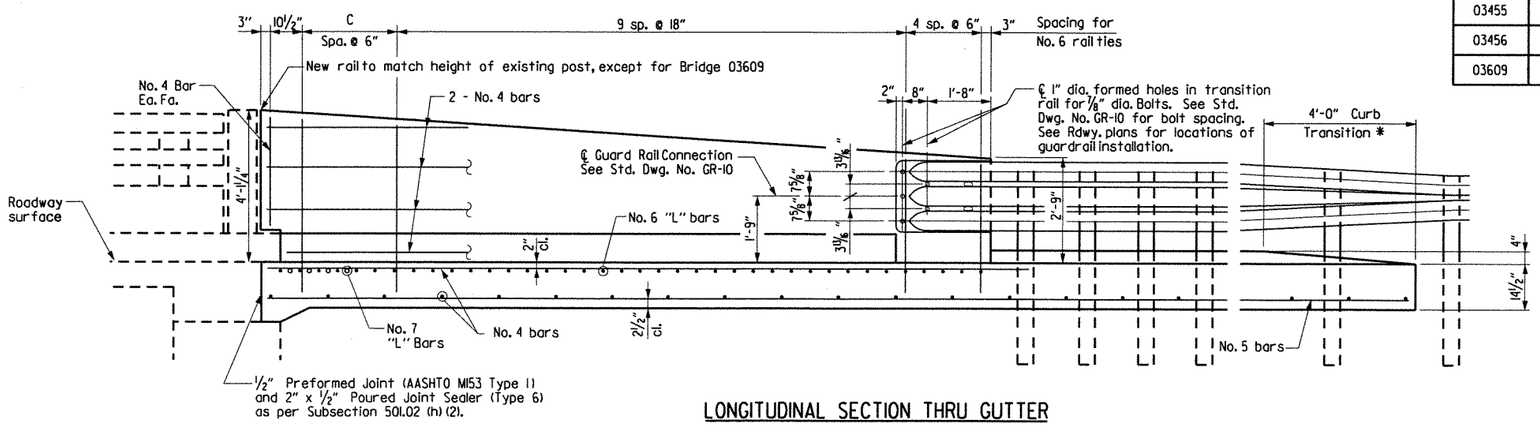

LONGITUDINAL SECTION THRU GUTTER

Scale: 1/2" = 1'-0"

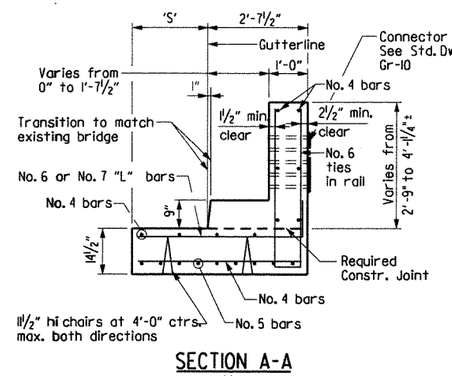

SECTION A-A

Scale: 1/2" = 1'-0"
(Bridge No. 03456 Only)

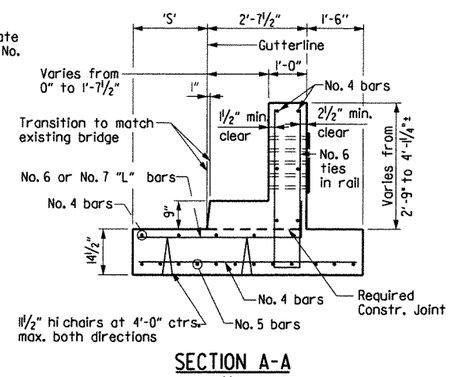

SECTION A-A

Scale: 1/2" = 1'-0"
(Bridge No. 03452, 03455, 03609 Only)

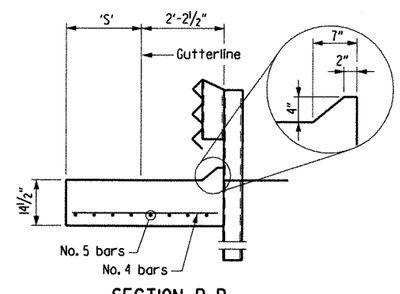

SECTION B-B

Scale: 1/2" = 1'-0"

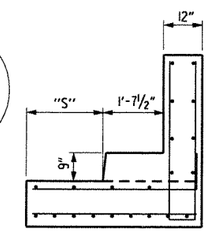

SECTION C-C

At end of Transition Rail
Scale: 1/2" = 1'-0"
(Bridge No. 03456 Only)

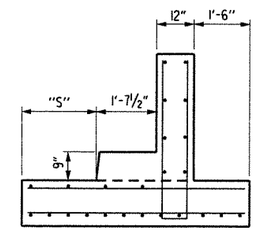

SECTION C-C

At end of Transition Rail
Scale: 1/2" = 1'-0"
(Bridge No. 03452, 03455, 03609 Only)

NOTE: The contractor shall make check measurments and make any adjustments necessary to fit the new work to the existing bridge location.

For Bridges 03452, 03455, and 03456, build approach gutters on arcs concentric to centerline bridge. See Dwg. No. 48615A, 48615D, & 48615F of Existing Drawings for horizontal curve information.

STATE OF ARKANSAS REGISTERED PROFESSIONAL ENGINEER No. 13339 LARRY D. MILLER

Larry D. Miller 8-11-12

BRIDGE ENGINEER

DETAILS OF TYPE SPECIAL 5 APPROACH GUTTERS (1'-7 1/2" CURB WIDTH)

ROUTE SEC.

ARKANSAS STATE HIGHWAY COMMISSION

LITTLE ROCK, ARK.

DRAWN BY:	TAR	DATE:	4/02	FILENAME:	bBB0407_g2.dgn
CHECKED BY:	EMB	DATE:	4/02	SCALE:	N.T.S.
DESIGNED BY:	BCG	DATE:	4/02		
BRIDGE NO.	03452, 03455, 03456, 03609			DRAWING NO.	48615

FED. ROAD DIST. NO.	STATE	FED. AID PROJ. NO.	SHEET NO.	TOTAL SHEETS
6	ARK.			
JOB NO.		BB0407	327	464

(1) 03452 - LAYOUT - 48615A

RIGHT OF WAY DATA
See Roadway Plans

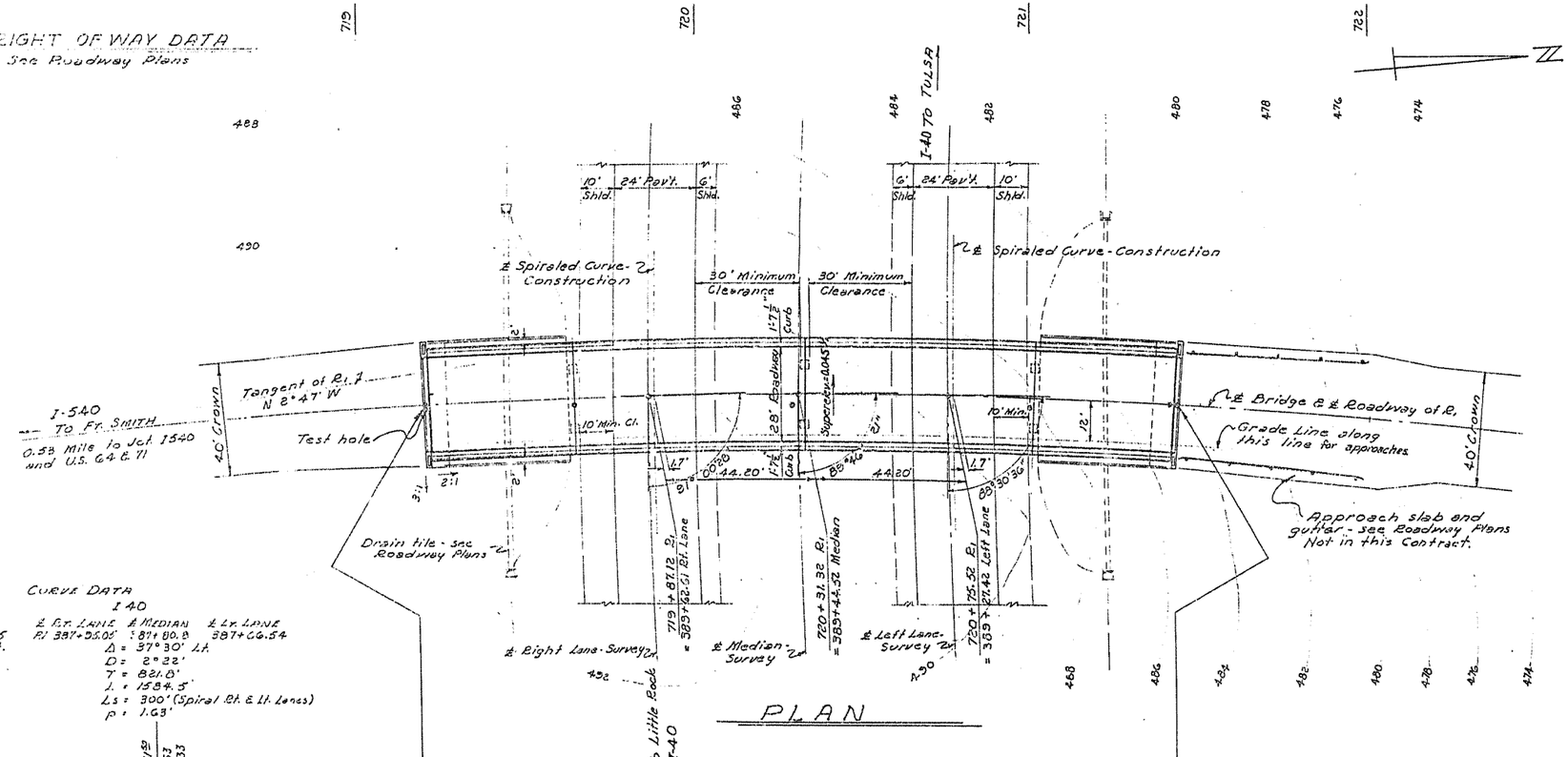

PLAN

CURVE DATA

I 540	I 40 ℄ R.T. LANE	I 40 ℄ MEDIAN	I 40 ℄ Lt. LANE
℄ R.1	R.1 387+55.02'	387+80.8	387+06.54
P.I. 720+34.25			
Δ = 18°00' Rt.	Δ = 37°30' Lt.		
D = 3°00'	D = 2°22'		
T = 302.45'	T = 821.8'		
L = 600.00'	L = 1584.5'		
P.C. 717+31.76	Ls = 300' (Spiral Rt. & Lt. Lanes)		
P.C.C. 723+31.76	p = 1.63'		

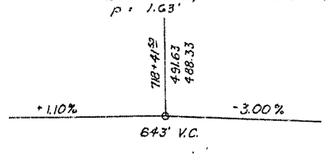

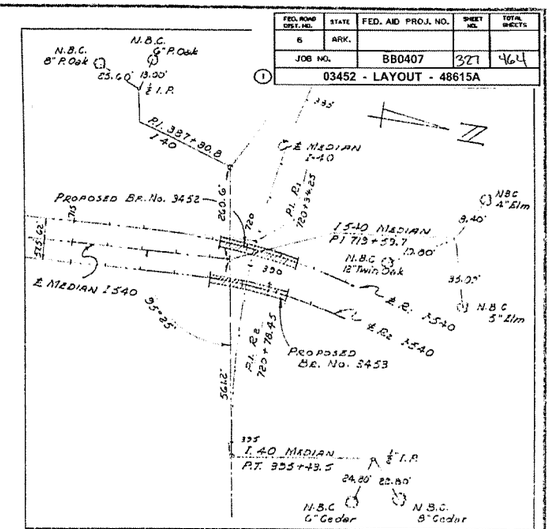

LOCATION SKETCH & REFERENCE POINTS FOR BRIDGES NO. 3452 & 3453
Scale: 1" = 200'

GENERAL NOTES

All concrete to be poured in the dry. All exposed corners to be chamfered 3/4" unless otherwise noted.

Rock excavation shall be made to neat lines of concrete footings. Care shall be exercised to avoid shattering of rock faces by excessive blasting. Concrete in footings shall be poured directly against excavated surfaces of rock.

In general, all construction joints in abutments and bents shall be horizontal and shall be provided with keys not less than 1½" high covering the middle third of both dimensions.

For Details of Abutments No. 1 and 2 see Drawing No. 11511 & 11513.

For Details of Bents 1, 2, and 3 see Drawing No. 11512.

For Details of Standard Composite I-Beam Spans see Drawing Nos. 5162 and 5477.

For Supplemental Details of 43', 41', and 68' Composite I-Beam Spans see Drawing Nos. 11514 & 11515.

NOTE:- Bents to be constructed with their transverse center lines on the radial lines of a 5°00' curve. Curb and railing to be constructed on an arc parallel to a 3°00' curve.

NOTE: Grade line elevations shown are along the ℄ Roadway. Vertical dimensions of Bents are at ℄ Roadway and in reference to the elevations on this grade line.

SPECIFICATIONS: Arkansas State Highway Commission Standard Specifications for Highway Construction, Edition of 1959 and designated Special Provisions.

DESIGN SPECIFICATIONS	AASHO	1957
Live Loading:	H20-S16 and Special Interstate Loading of 2 24,000# axles spaced 4'0" on centers.	
Unit Stresses:	Class A Concrete (n=15)	840 psi
	Class S Concrete (n=10)	1,200 psi
	Structural Steel	18,000 psi
	Reinforcing Steel	20,000 psi
	Foundation Pressure	5,500 psf

Total Length of Bridge = 222'-2⅜"

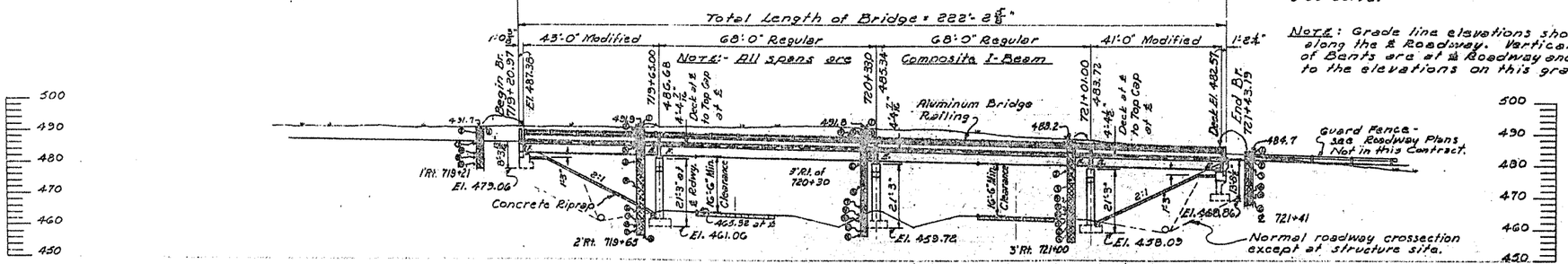

ELEVATION

ABUTMENT No. 1
- ① 10' Soft Silty Clay
- ② 1.9' Loosely Consolidated Sandstone
- ③ 4.1' Hard Brown Sandstone
- ④ 2.7' Firm Silty Clay-Stone Frag.
- ⑤ 0.6' Hard Brown Sandstone
- ⑥ 2.7' Firm Sandy Clay-Stone Frag.

BENT No. 1
- ① 0.6' Soft Silty Clay
- ② 1.2' Loosely Consolid. Sandstone
- ③ 5.8' Hard Brown Sandstone
- ④ 6.4' Firm Silty Clay-Sandstone Frag.
- ⑤ 11.5' Soft Br. Shale & Clay-S.S. Frag.
- ⑥ 3.3' Soft to Med. Hard Shale
- ⑦ 1.0' Soft Dark Gray Shale
- ⑧ 2.9' Cored Hard Gray Shale
- ⑨ 0.4' Cored Soft Gray Shale
- ⑩ 0.7' Cored Hard Gray Shale and Sand Stone

BENT No. 2
- ① 1.0' Soft Black Silty Clay
- ② 1.5' Med. Hard Br. Sandstone
- ③ 0.3' Soft Silty Clay
- ④ 2.5' Hard Brown Sandstone
- ⑤ 10.5' Firm Silty Clay-Sandstone Frag.
- ⑥ 7.8' Soft Br. Shale & Clay-S.S. Frag.
- ⑦ 2.8' Soft to Med. Hard Shale
- ⑧ 2.6' Med. Hard to Hard Gray Shale
- ⑨ 3.2' Hard Gray Shale & Sandstone
- ⑩ 0.7' Cored Soft Gray Shale
- ⑪ 0.6' Cored Hard Gr. Shale & Sandstone

BENT No. 3
- ① 4.0' Firm Br. Sandy Silty Clay-S.S. Frag.
- ② 3.3' Firm Br. Silty Clay-S.S. Frag.
- ③ 4.8' Soft Br. Shale & Clay-S.S. Frag.
- ④ 3.3' Soft Gray Shale-Sandstone Seams
- ⑤ 1.1' Med. Hard Gray Shale
- ⑥ 1.8' Med. Hard Dark Gray Shale
- ⑦ 2.5' Med. Hard to Hard Gray Shale
- ⑧ 2.3' Cored Med. Hard Gray Shale
- ⑨ 3.1' Cored Soft to Med. Hard Gray Shale

ABUTMENT No. 2
- ① 0.7' Soft Sandy Silty Clay
- ② 0.8' Loosely Consolidated Sandstone
- ③ 9.0' Firm Br. Silty Clay-Sandstone Frag.
- ④ 2.8' Soft Br. Shale & Clay-Sandstone Frag.
- ⑤ 2.0' Firm Sandy Clay-Sandstone Fragments
- ⑥ 1.5' Soft Gray Shale

B.M.- Bent nail in base 12" 2 prong Post Oak, 30' Rt. Sta. 389+60 ℄ Median I-40 Elev. 493.72

Revisions:
Vert. Curve & Boring Data 5-12-61 L.K.

FOR INFORMATION ONLY

(RAMP R-1)
LAYOUT OF HWY. I-40 OVERPASS
JCT. HWY. 59 TO SHIBLEY GR. SEPR.
CRAWFORD COUNTY
INTERSTATE ROUTE 540 SEC. 1

ARKANSAS STATE HIGHWAY COMMISSION
LITTLE ROCK, ARK.

DRAWN BY: J.E.H. DATE: 1-26-61
TRACED BY: DATE:
CHECKED BY: DV DATE: 7-6-61
SCALE: 1" = 20'

L. P. Carlson
BRIDGE ENGINEER

BRIDGE NO. 03452 DRAWING NO. 48615A

FED. ROAD DIST. NO.	STATE	FED. AID PROJ. NO.	SHEET NO.	TOTAL SHEETS
6	ARK.			
JOB NO.		BB0407	328	464

(1) 03452 - END BENTS - 48615B

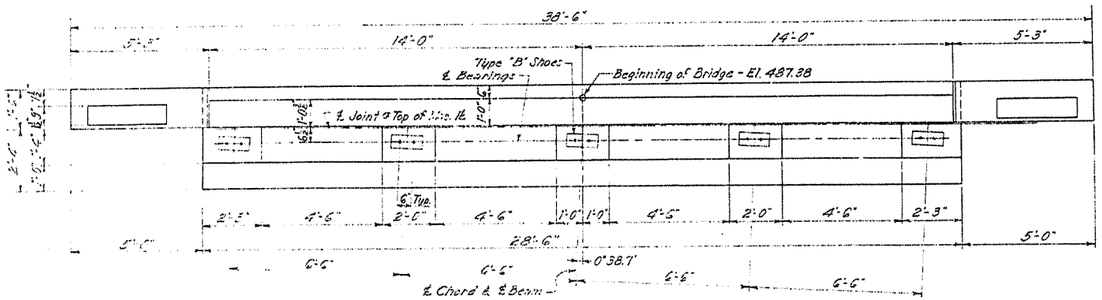

PLAN

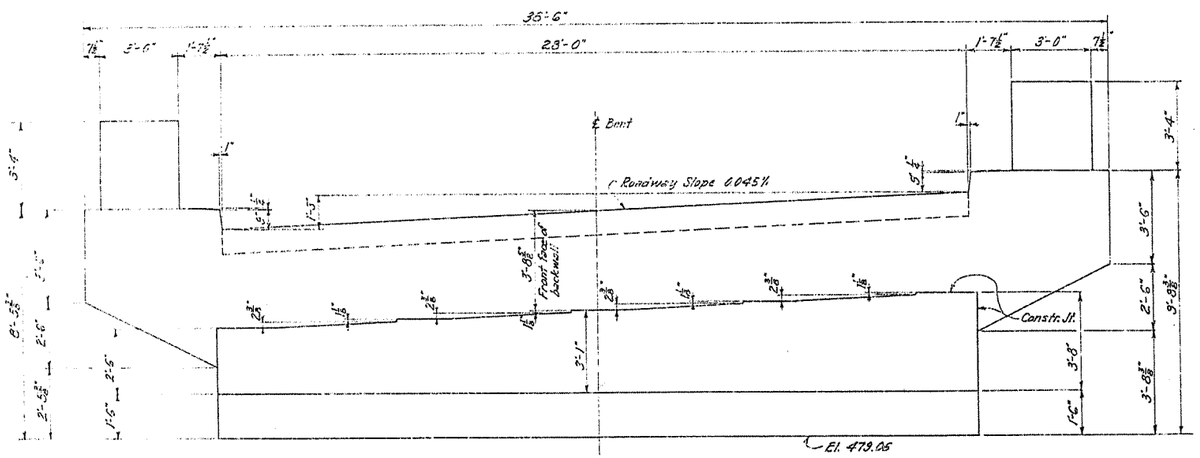

ELEVATION

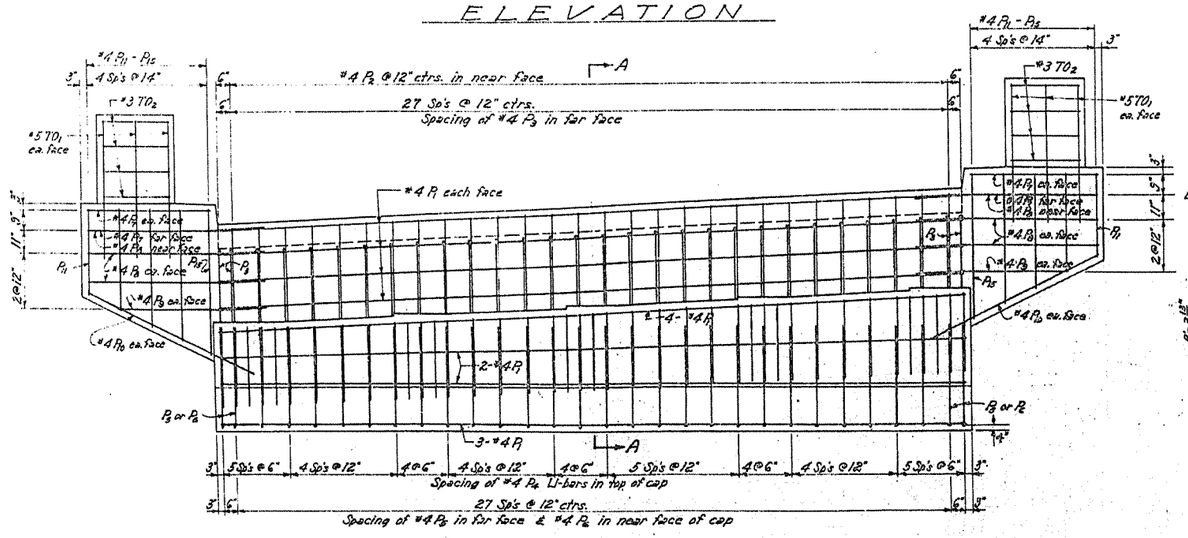

ELEVATION SHOWING REINFORCING

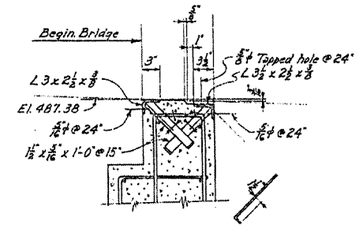

DETAIL A

Scale: 1" = 1'-0"

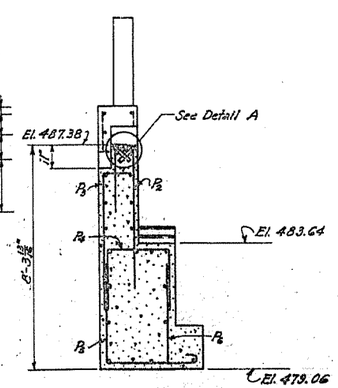

SECTION A-A

ON ℄ RDY.

BAR LIST

MARK	SIZE	NO. REQ'D	LENGTH	PIN DIA.	BENDING DIAGRAM
P_1	#4	19	28'-1"	Str.	
P_2	#4	28	8'-3"	1½"	
P_3	#4	30	6'-10"	1½"	
P_4	#4	40	8'-2"	1½"	
P_5	#4	30	7'-4"	1½"	
P_6	#4	30	3'-6"	Str.	
P_7	#4	6	4'-11"	Str.	
P_8	#4	10	6'-9"	Str.	
P_9	#4	4	5'-3"	Str.	
P_{10}	#4	4	7'-0"	Str.	
P_{11} to P_{15}	#4	4 Each	Varies 7' 3'-3½" to 5'-7½"	Str.	
$T0_1$	#5	12	5'-2"	Str.	
$T0_2$	#3	8	6'-11"	1½"	

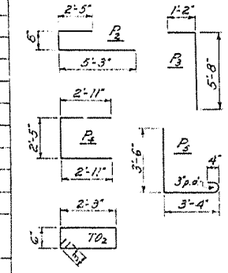

Dimensions are to centers of bars.

NOTES

All concrete to be Class A. All exposed corners to be chamfered ¾" unless otherwise noted.

Reinforcing steel to be deformed bars of intermediate or hard grade.

In general all construction joints are to be horizontal and provided with keys not less than 1½" high covering the middle third of both dimensions.

FOR INFORMATION ONLY

DETAILS OF ABUTMENT NO. 1
(RAMP R-1) HWY. I- 40 OVERPASS
JCT. HWY. 59 - SHIBLEY GRADE SEPARATION
CRAWFORD COUNTY

INTERSTATE ROUTE 540 SEC.

ARKANSAS STATE HIGHWAY COMMISSION
LITTLE ROCK, ARK.

DRAWN BY: A.T. DATE: 6-27-61
TRACED BY: DATE:
CHECKED BY: J.E.M. DATE: 6-30-61
SCALE: ⅜" = 1'-0"

L. P. Carlson
BRIDGE DESIGN ENGINEER

BRIDGE NO. 03452 DRAWING NO. 48615B

FED. ROAD DIST. NO.	STATE	FED. AID PROJ. NO.	SHEET NO.	TOTAL SHEETS
6	ARK.			
JOB NO.		BB0407	329	464

(1) 03452 - END BENT - 48615C

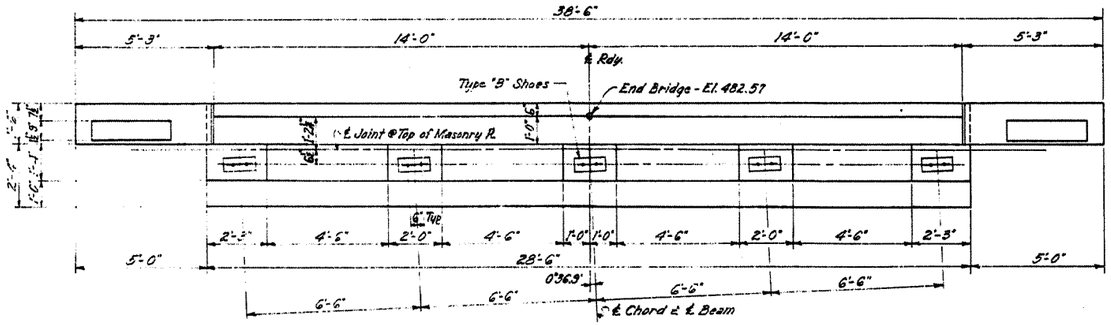

PLAN

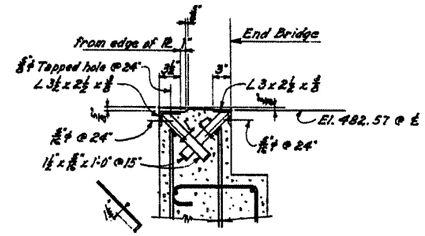

DETAIL A
Scale: 1"=1'-0"

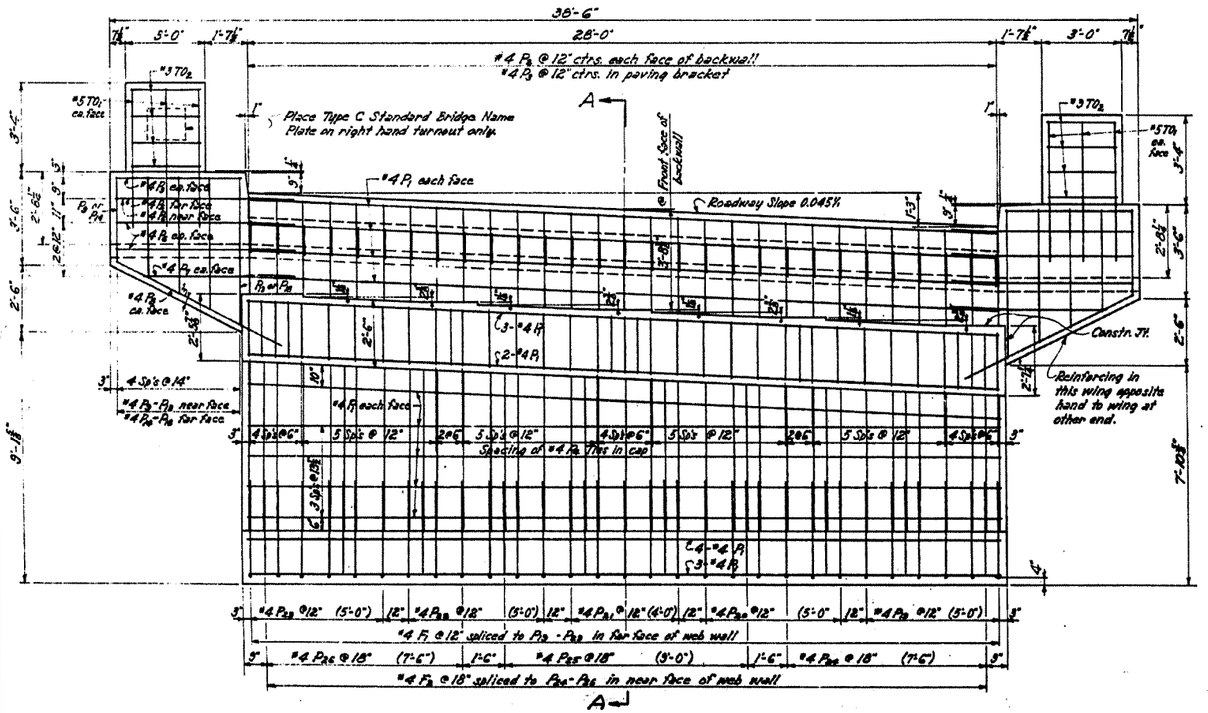

ELEVATION

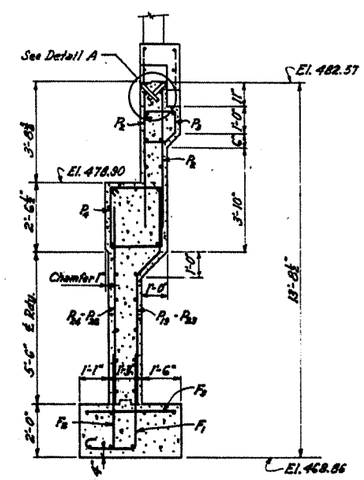

SECTION A-A
ON ℄ RDY.

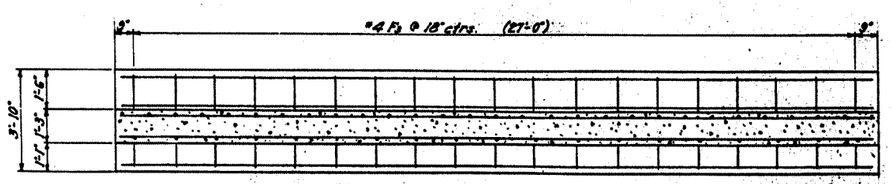

FOOTING PLAN

BAR LIST

MARK	SIZE	NO. REQ'D	LENGTH	A	PIN DIA.
P_1	4	30	28'-1"	Str.	
P_2	4	38	5'-4"	Str.	
P_3	4	29	3'-8"		1½"
P_4	4	37	8'-11"		1½"
P_5	4	6	4'-11"	Str.	
P_6	4	10	6'-9"	Str.	
P_7	4	4	5'-10"	Str.	
P_8	4	4	7'-0"	Str.	
P_9 to P_{13}	4	2 Ea.	Varies 7" 3'-3⅝" to 5'-7⅝"	Str.	
P_{14} to P_{18}	4	2 Ea.	Varies 7" 3'-3" to 5'-10"	Varies 7" 4⅝" to 2'-8⅝"	1½"
P_{19}	4	6	7'-7"	3'-11⅛"	1½"
P_{20}	4	6	7'-10"	4'-2½"	1½"
P_{21}	4	5	8'-1"	4'-5½"	1½"
P_{22}	4	6	8'-4"	4'-8½"	1½"
P_{23}	4	6	8'-7"	4'-11½"	1½"
P_{24}	4	6	6'-11"	Str.	
P_{25}	4	7	7'-4"	Str.	
P_{26}	4	6	7'-9"	Str.	
F_1	4	29	6'-2"		1½"
F_2	4	19	3'-6"	Str.	
F_3	4	19	3'-4"	Str.	
TO_1	5	12	5'-2"	Str.	
TO_2	3	8	6'-11"		1¼"

BENDING DIAGRAM

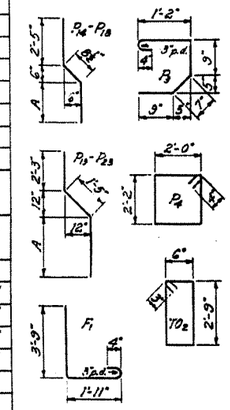

Dimensions are to centers of bars.

NOTES

All concrete to be Class A. All exposed corners to be chamfered ¾" unless otherwise noted.

Reinforcing steel to be deformed bars of intermediate or hard grade.

In general all construction joints shall be horizontal and provided with keys not less than 1½" high covering the middle third of both dimensions.

FOR INFORMATION ONLY

DETAILS OF ABUTMENT NO. 2
(RAMP R-1) HWY. I- 40 OVERPASS
JCT. HWY. 59 - SHIBLEY GRADE SEPARATION
CRAWFORD COUNTY

INTERSTATE **ROUTE** 540 **SEC.**

ARKANSAS STATE HIGHWAY COMMISSION
LITTLE ROCK, ARK.

DRAWN BY: A.J. DATE: 6-30-61
TRACED BY: DATE:
CHECKED BY: J.E.M. DATE: 7-6-61
SCALE: ¾"=1'-0" & As Noted

L. P. Nelson
BRIDGE DESIGN ENGINEER

BRIDGE NO. 03452 **DRAWING NO.** 48615C

FED. ROAD DIST. NO.	STATE	FED. AID PROJ. NO.	SHEET NO.	TOTAL SHEETS
6	ARK.			
JOB NO.		BB0407	330	464
1	03455 - LAYOUT - 48615D			

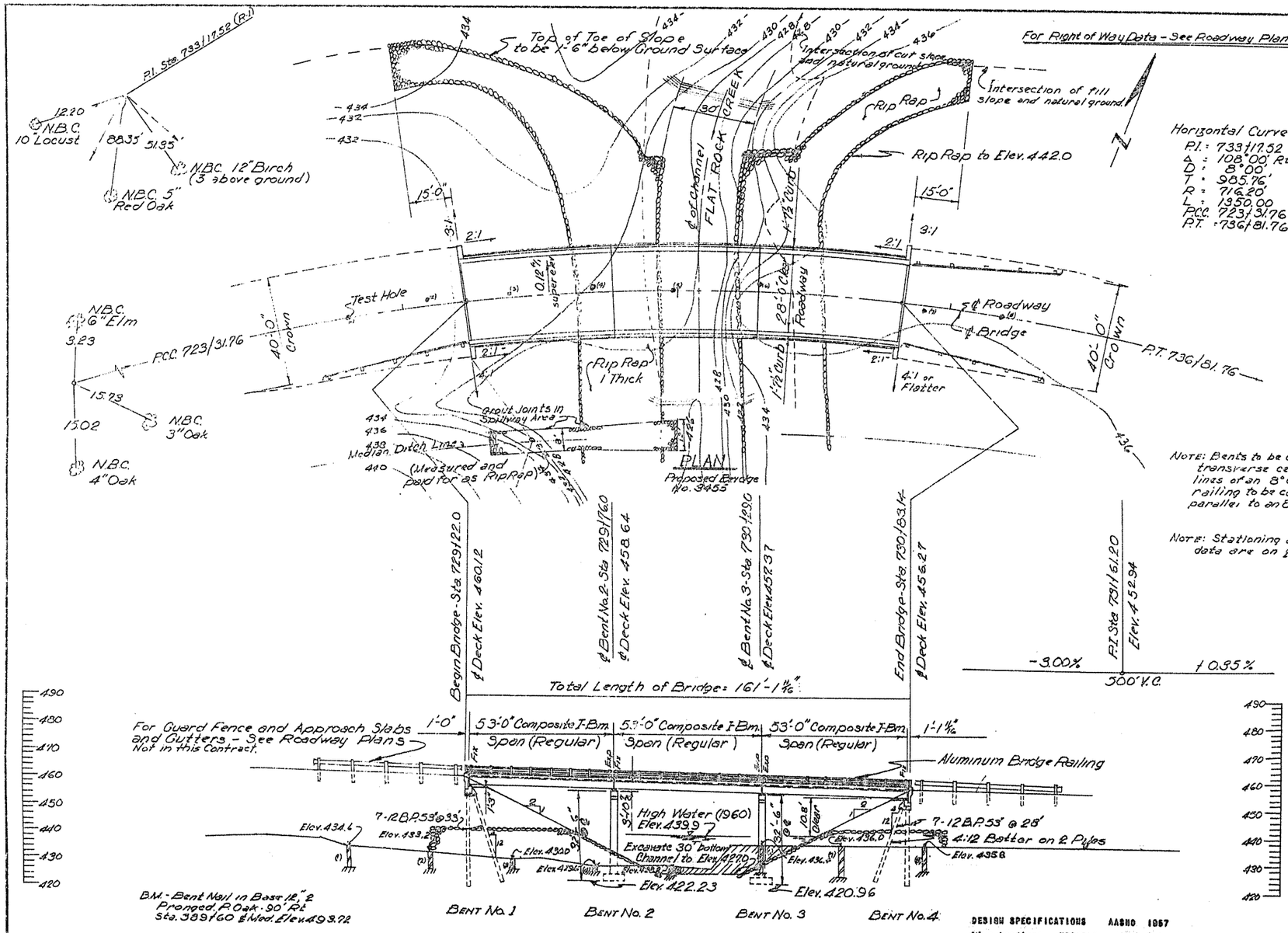

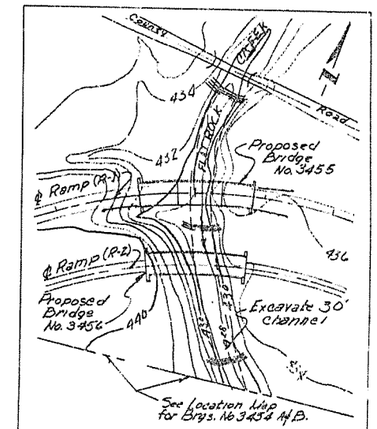

The Contractor is to excavate channel as shown to elev. 427.0, 30' Bottom, 2:1 side slopes. Approximately 870 cu. yds. channel excavation (This sheet). From Bridge No. 3456 to Bridge No. 3454-A Slope the Channel bottom from elev. 427.0 to elev. 425.0.

728/00 729/00 730/00 731/00 732/00
⊥ Ramp ⊥ (R-1) ⊥ Stationing ⊥

LOCATION MAP - R1 & R2
Scale: 1" = 100'

GENERAL NOTES

All concrete is to be poured in the dry. All exposed corners are to be chamfered 3/4" unless otherwise noted.

Rock excavation shall be made to neat lines of concrete footings. Care shall be exercised to avoid shattering of rock by excessive blasting. Concrete in footings shall be poured directly against excavated surfaces of rock. Excavate a minimum of 1.5 feet into hard shale for intermediate Bent footings.

In general, all construction joints in bents shall be horizontal and shall be provided with keys not less than 1½" high covering the middle third of both dimensions.

All piling shall be 12" BP @ 53# and shall be driven with a steam hammer to a minimum capacity of 35 tons per pile and into the material designated as shale on the boring logs. Lengths of piling shown are for estimating quantities only. Order lengths shown; cut off or build up, if necessary, to be paid for in accordance with the Standard Specifications.

Piles in End Bents No. 1 and 4 shall be driven after the embankment is in place.

For details of End Bents see Drawing No. 11525.
For details of Intermediate Bents see Drawing No. 11526.
For details of 53'0" I-Beam Spans see Drawing No. 5677, 5462, 11527.

DESIGN SPECIFICATIONS AASHO 1957
Live Loading: H20S16 and Special Interstate Loading of 2-24,000# axles spaced @ 4'0" ctrs.

Unit Stresses: Class A Concrete (n=15) 880 psi
Class S Concrete (n=10) 1,200 psi
Reinforcing Steel 20,000 psi
Structural Steel 18,000 psi

SPECIFICATIONS: Arkansas State Highway Commission Standard Specifications for Highway Construction, Edition of 1960, and designated Special Provisions.
Max. Foundation Pressure 4.2 Tons/ft²

Revision: Redrawn for revision of Grade, Roadway, and Length: 2-28-61 M.C.

FOR INFORMATION ONLY

(RAMP R-1)
LAYOUT OF
BRIDGE OVER FLAT ROCK CREEK
JCT. HWY. 59 - SHIBLEY GR. SEPR.
CRAWFORD COUNTY

INT. ROUTE 540 SEC. 1
ARKANSAS STATE HIGHWAY COMMISSION
LITTLE ROCK, ARK.

DRAWN BY: M.A. DATE: 2-28-61
TRACED BY: DATE:
CHECKED BY: DV DATE: 6-27-61
SCALE: 1" = 20'

L. D. Gibson
BRIDGE ENGINEER

BRIDGE NO. 03455 DRAWING NO. 48615D

FED. ROAD DIST. NO.	STATE	FED. AID PROJ. NO.	SHEET NO.	TOTAL SHEETS
6	ARK.			
JOB NO.		BB0407	321	464

(1) 03455 - END BENTS - 48615E

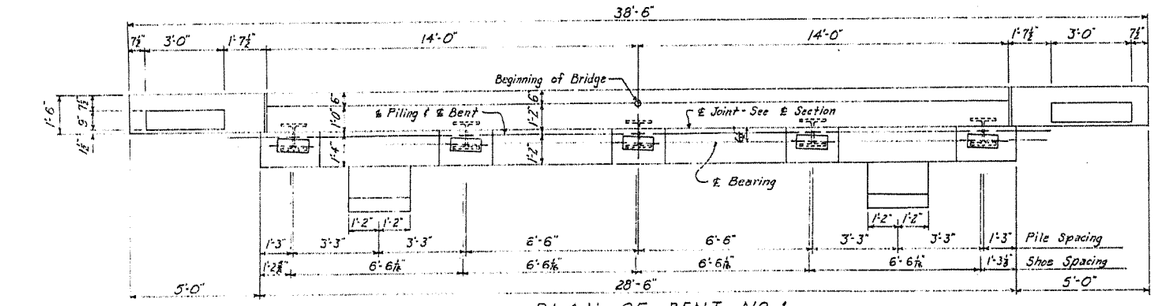

PLAN OF BENT NO. 1

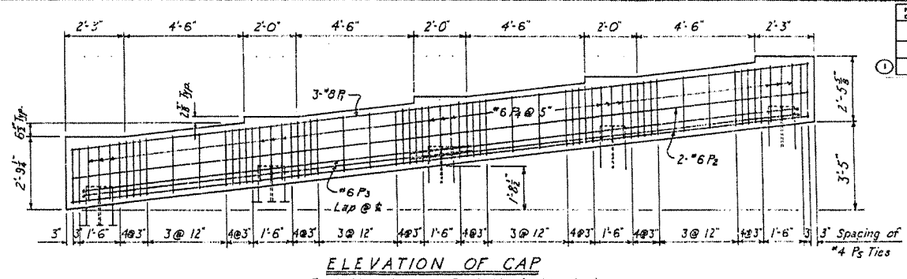

ELEVATION OF CAP

Bent No. 1 Shown ; Bent No. 4 Opp. Hand

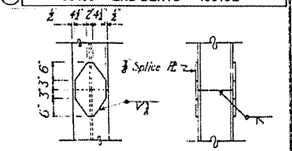

Generally all piles shall be driven full length and shall not be spliced except by permission of the Engineer.

PILE SPLICE DETAIL

Scale: ½" = 1'-0"

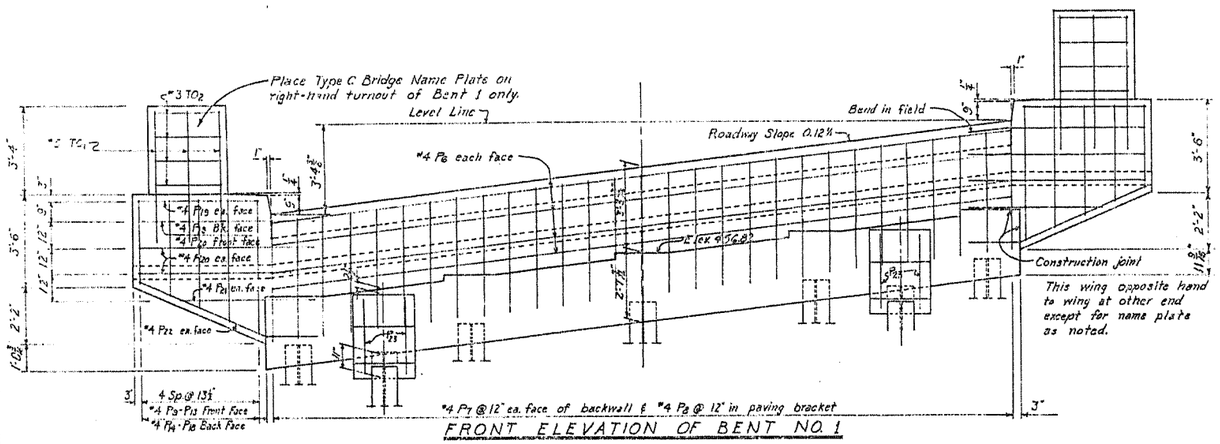

FRONT ELEVATION OF BENT NO. 1

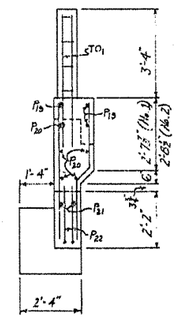

END VIEW

Typical Both Bents Except as Noted

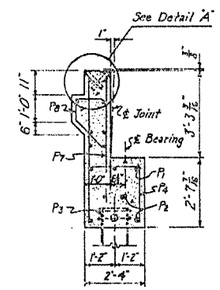

℄ SECTION

Bent No. 1

BAR LIST - EACH BENT

Mark	Size	No.	Length	Pin D	A	B
P1	#8	3	28'-4"	Str.	—	—
P2	#6	4	28'-4"	Str.	—	—
P3	#8	4	31'-6"	2¾"	1'-7"	15'-0"
P4	#6	15	6'-1"	2¾"	1'-11½"	2'-1½"
P5	#4	52	8'-9"	1½"	1'-11½"	2'-1½"
P6	#4	8	28'-2"	Str.	—	—
P7	#4	38	4'-7"	Str.	—	—
P8	#4	23	4'-0"	1½"	—	—
P9 to P13	#4	10 (2 ea.)	3'-2" to 5'-2"	Str.	—	—
P14 to P18	#4	10 (2 ea.)	3'-4" to 5'-4"	1½"	2'-5"	3" to 2'-3"
P19	#4	6	4'-8"	Str.	—	—
P20	#4	10	6'-9"	Str.	—	—
P21	#4	4	5'-1"	Str.	—	—
P22	#4	4	7'-3"	1½"	—	—
P23	#6	4	8'-5"	2¾"	—	—
P24	#6	4	11'-6"	2¾"	—	—
P25	#4	2	5'-0"	1½"	0'-5"	1'-9½"
TO1	#5	12	4'-9"	Str.	—	—
TO2	#3	8	6'-11"	1¼"	0'-6"	2'-5"

BENDING DIAGRAM

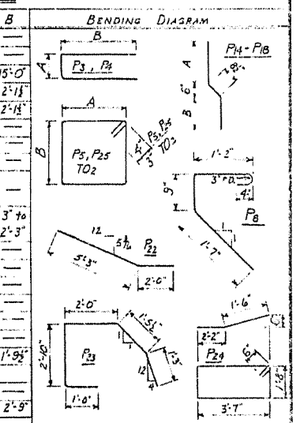

Dimensions are to centers of bars.

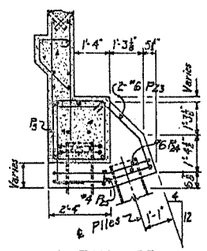

DETAIL OF PILE BRACKET

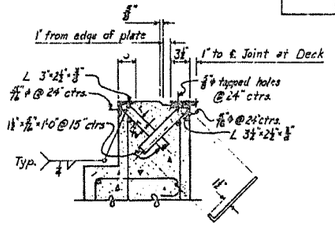

DETAIL "A"

Scale: 1" = 1'-0"

NOTES

All concrete to be Class S. All exposed corners to be chamfered ⅞" unless otherwise noted.

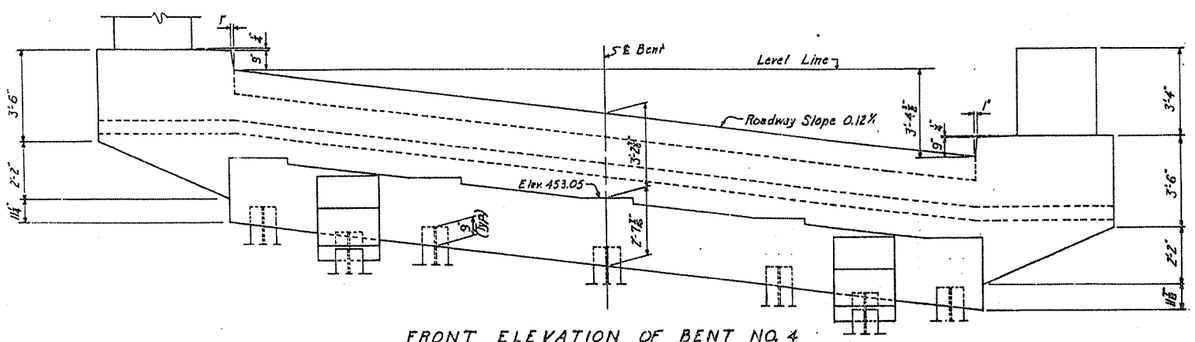

FRONT ELEVATION OF BENT NO. 4

Details not shown same as Bent No. 1 except opp. hand

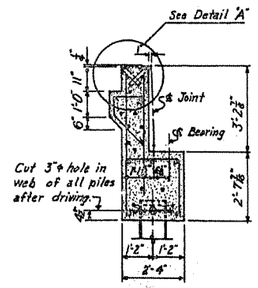

℄ SECTION

Bent No. 4

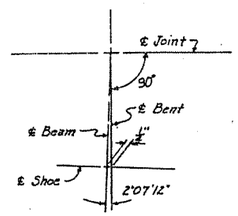

PART PLAN

Bent No. 1 shown; Bent No. 4 opp. hand

Scale: 3" = 1'-0"

FOR INFORMATION ONLY

DETAILS OF BENTS 1 & 4

(RAMP R-1) BRIDGE OVER FLATROCK CREEK

JCT. HWY. 59 — SHIBLEY GRADE SEPARATION

CRAWFORD COUNTY

INT. ROUTE 540 SEC. 1

ARKANSAS STATE HIGHWAY COMMISSION

LITTLE ROCK, ARK.

DRAWN BY: L.K. DATE: 6-19-61

TRACED BY: DATE:

CHECKED BY: DATE: 6-20-61

SCALE: ¼" = 1'-0" & Noted

L. D. Carlson

BRIDGE ENGINEER

BRIDGE NO. 03455 **DRAWING NO. 48615E**

FED. ROAD DIST. NO.	STATE	FED. AID PROJ. NO.	SHEET NO.	TOTAL SHEETS
6	ARK.			
JOB NO.		BB0407	332	464
1	03456 - LAYOUT - 48615F			

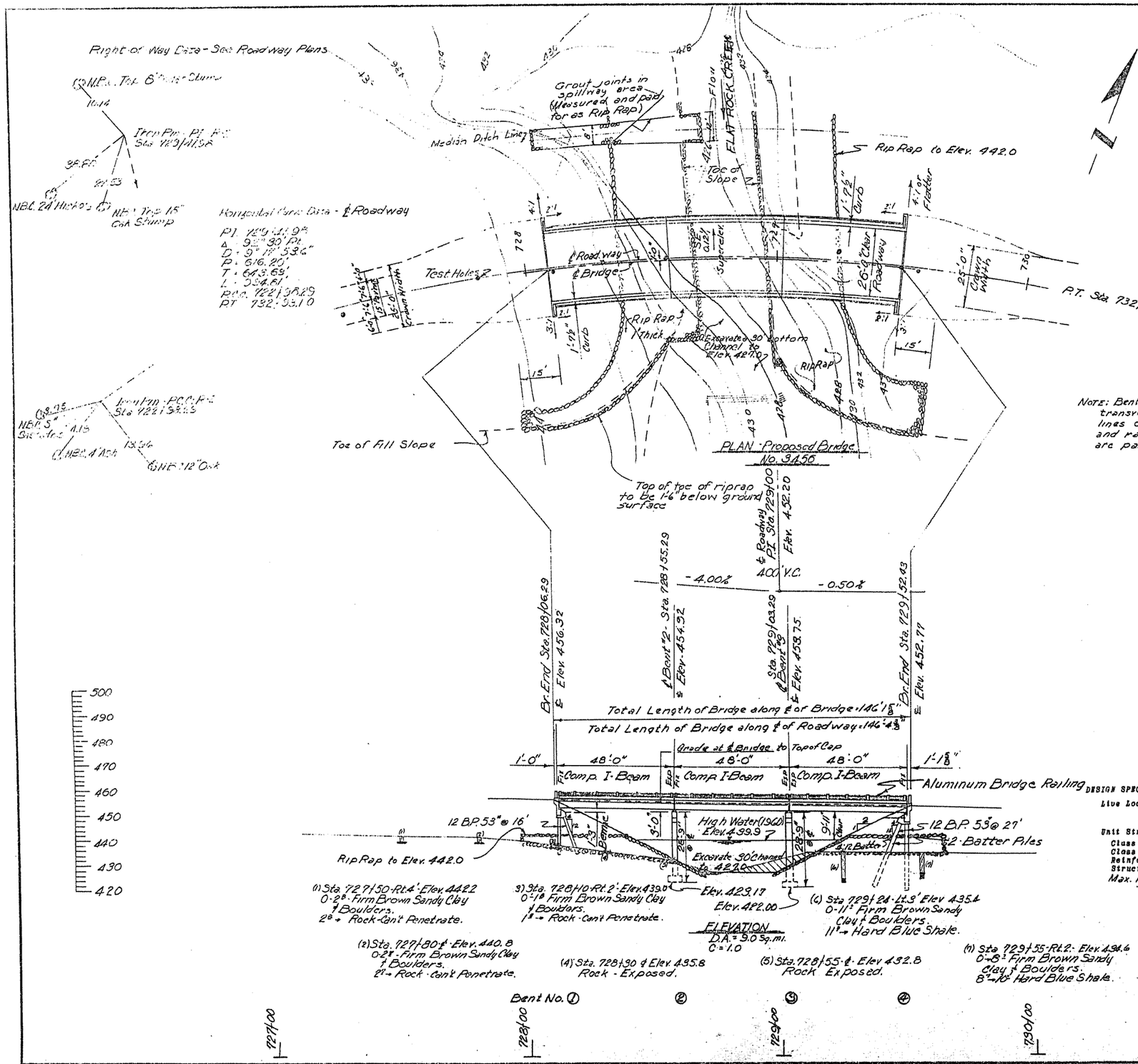

Note: Bents to be constructed with their transverse center lines on the radial lines of a 9°17'53.6" curve. Curb and railing to be constructed on an arc parallel to a 9°17'53.6" curve.

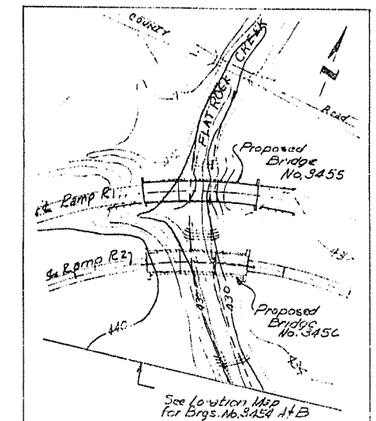

The Contractor is to excavate channel as shown to elev. 427.0, 30' bottom, 2:1 side slopes. Approximately 870 cu. yds. channel excavation (This Sheet). From Bridge No. 3456 to Bridge No. 3454-A, slope channel bottom from elev. 427.0 to elev. 425.0.

727+00	728+00	729+00	730+00
Ramp ⊥ (R-2)	⊥ Station ⊥		⊥

LOCATION MAP - R2 & R1
Scale: 1" = 100'

GENERAL NOTES

All concrete to be poured in the dry. All exposed corners to be chamfered 3/4" unless otherwise noted.

Rock excavation shall be made to neat lines of concrete footings. Care shall be exercised to avoid shattering of rock faces by excessive blasting. Concrete in footings shall be poured directly against excavated surfaces of rock. Excavate a minimum of 1.5 feet into hard shale for Intermediate Bent Footings.

In general, all construction joints in bents shall be horizontal and shall be provided with keys not less than 1½" high covering the middle third of both dimensions.

All piling shall be 12"BP @ 53# and shall be driven with a steam hammer to a minimum capacity of 36 tons per pile and into the material designated as shale on the boring logs. Lengths of piling shown are for estimating quantities only. Order lengths shown; cut-off or build-up, if necessary, to be paid for in accordance with the Standard Specifications.

Piles in End Bents No. 1 and 4 shall be driven after the embankment is in place.

For details of End Bents see Drawing No. 11529.

For details of Intermediate Bents see Drawing No. 11530.

For details of 48'0" I-beam Spans see Drawing No. 5465, 5462, 11531.

Specifications: Arkansas State Highway Commission Standard Specifications for Highway Construction, Edition of 1959, and designated Special Provisions.

DESIGN SPECIFICATIONS — AASHO 1957

Live Loading — H20-S16 and Special Interstate Loading of 2 24,000# axles spaced @ 4'0" ctrs.

Unit Stresses:

Class A Concrete (n=15)	840 psi
Class S Concrete (n=10)	1,200 psi
Reinforcing Steel	20,000 psi
Structural Steel	18,000 psi
Max. Foundation Pressure	3.5 Tons/ft²

B.M.: Bent Nail in Base 12" 2 Pronged P. Oak - 90' Rt. Sta. 389+60 ℄ Med. Elev. 493.72'

Revision: Revised Length & Rdwy. Width 2-28-61; M. G.

L. P. Carlson
BRIDGE ENGINEER

FOR INFORMATION ONLY

(RAMP R-2)
LAYOUT OF
BRIDGE OVER FLAT ROCK CREEK
JCT. HWY. 59 - SHIBLEY GR. SEPR.
CRAWFORD COUNTY

INT. ROUTE 540 SEC. 1

ARKANSAS STATE HIGHWAY COMMISSION
LITTLE ROCK, ARK.

DRAWN BY: M.A.G. DATE: 1-18-61
TRACED BY: DATE:
CHECKED BY: D.V. DATE: 6-27-61
SCALE: 1" = 20'

BRIDGE NO. 03456 **DRAWING NO. 48615F**

FED. ROAD DIST. NO.	STATE	FED. AID PROJ. NO.	SHEET NO.	TOTAL SHEETS
8	ARK.			
JOB NO.		BB0407	333	464

(1) 03456 - END BENTS - 48615G

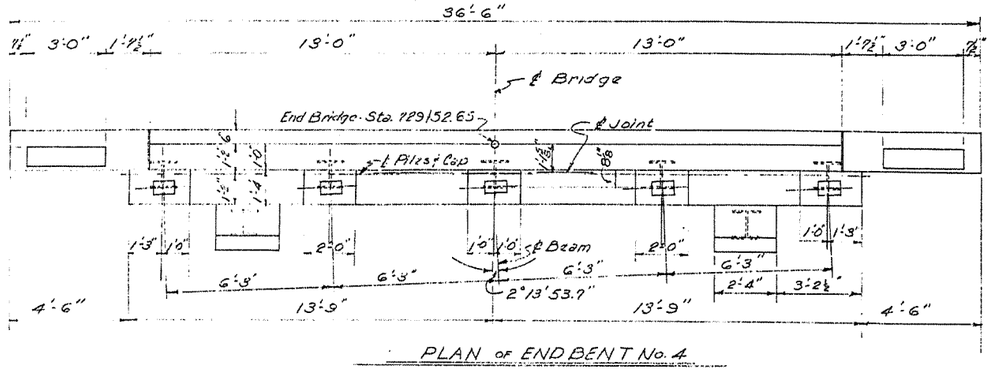

PLAN OF END BENT No. 4

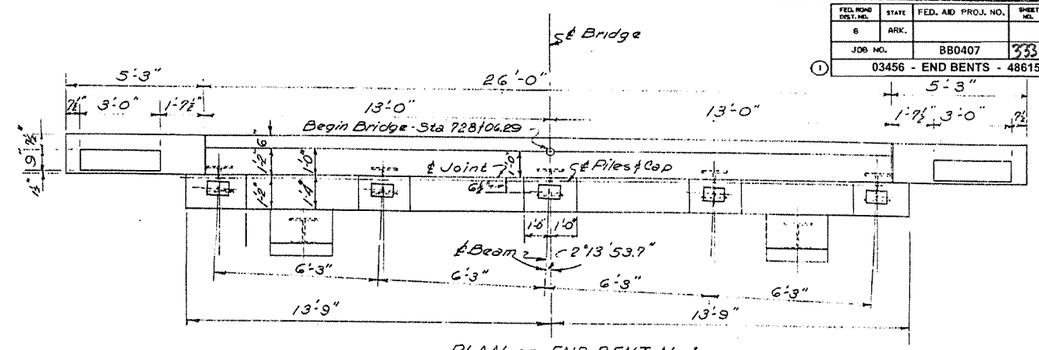

PLAN OF END BENT No. 1

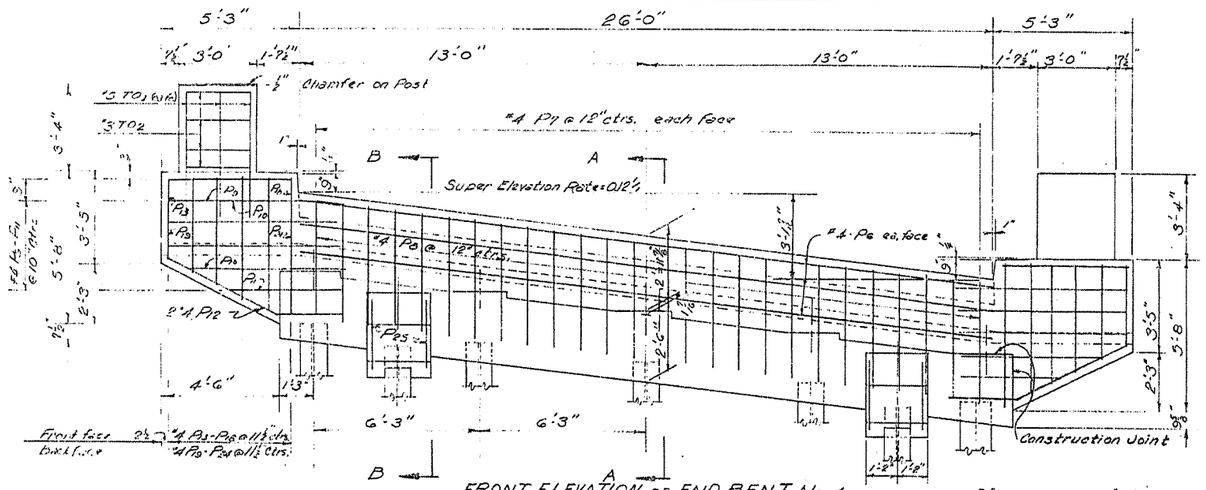

FRONT ELEVATION OF END BENT No. 4

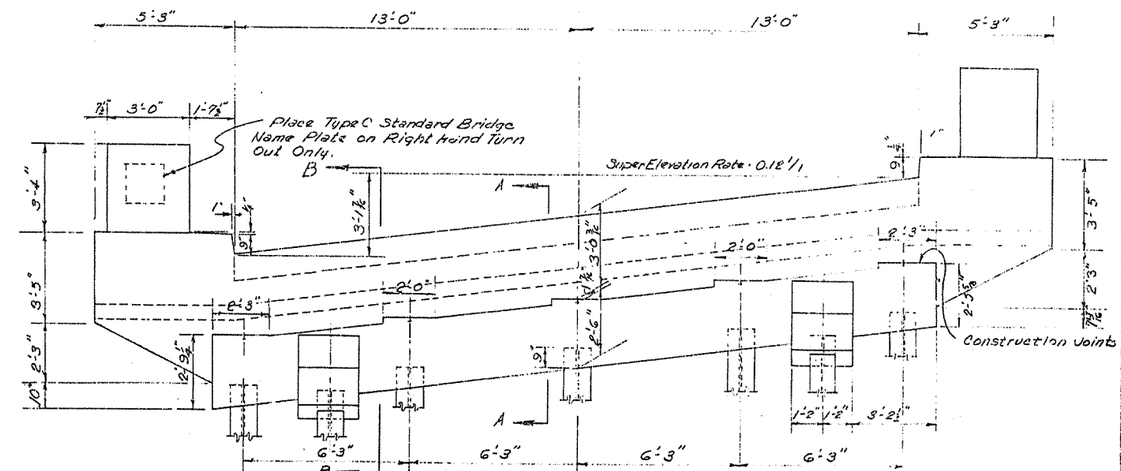

FRONT ELEVATION OF END BENT No. 1

(Details not shown same as End Bent No. 4 - except opp hand)

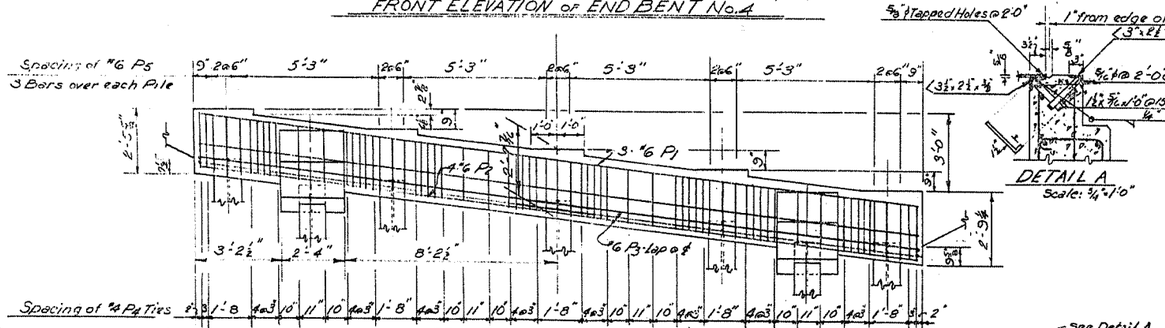

FRONT ELEVATION OF END BENT CAP

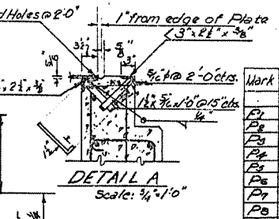

DETAIL A

Scale: 3/4" = 1'-0"

BAR LIST

Mark	Size	No. Req'd. No. 1	No. Req'd. No. 4	Length	A	B	Pin. Dia.
P1	#6	3	3	27'-4"	Straight		
P2	#6	4	4	27'-4"	Straight		
P3	#6	4	4	30'-5"	14'-6"	1'-7"	2½"
P4	#4	52	52	8'-9"	2'-1⅞"	1'-1⅞"	1½"
P5	#6	15	15	6'-1"	2'-1⅞"	1'-1⅞"	2½"
P6	#4	6	6	26'-2"	Straight		
P7	#4	52	52	4'-5"	Straight		
P8	#4	26	26	4'-0"	—	—	1½"
P9	#4	6	6	4'-11"	Straight		
P10	#4	14	14	6'-9"			
P11	#4	4	4	4'-7"	Straight		
P12	#4	4	4	6'-10"	4'-10"	2'-0"	1½"
P13 to P18	#4	2 ea.	2 ea.	Varies 9'-2"-5'-9"	Straight		
P19 to P24	#4	2 ea.	2 ea.	Varies 3'-4"-3'-9"	2'-6"	Varies 0'-8"-2'-0"	1½"
P25	#6	4	4	8'-3"			2½"
P26	#4	2	2	5'-7"	0'-5"	1'-10"	1½"
P27	#6	4	4	11'-4"			2½"
TO1	#3	12	12	5'-2"	Straight		
TO2	#3	8	8	6'-11"	2'-9"	0'-6"	1½"

Bending Diagram

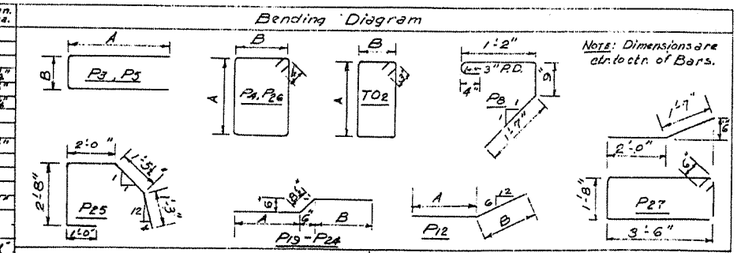

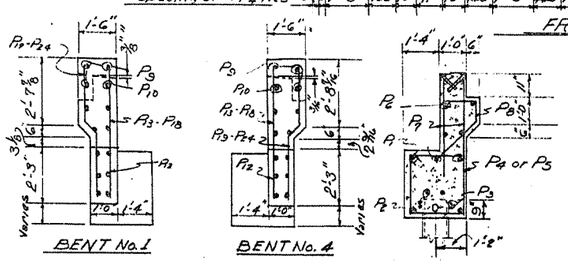

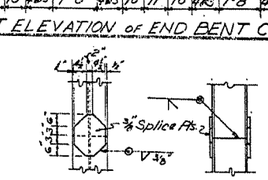

Generally all piles shall be driven full length and shall not be spliced except by permission of the Engineer.

PILE SPLICE DETAIL

Scale: 1/2" = 1'-0"

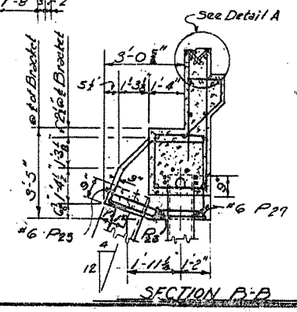

NOTES:

All concrete to be Class S. All corners to be chamfered 3/4" unless otherwise noted.

FOR INFORMATION ONLY

DETAILS OF END BENTS NO. 1 & 4

(RAMP R-2) BRIDGE OVER FLAT ROCK CREEK

JCT. HWY. 59 - SHIBLEY GRADE SEPARATION

CRAWFORD COUNTY

INT. ROUTE 540 SEC. 1

ARKANSAS STATE HIGHWAY COMMISSION

LITTLE ROCK, ARK.

DRAWN BY: M.B. DATE: 6-16-61

TRACED BY: DATE:

CHECKED BY: J.E.M. DATE: 6-23-61

SCALE: 3/8" = 1'-0" unless Noted

L. P. Carlson
BRIDGE ENGINEER

BRIDGE NO. 03456

DRAWING NO. 48615G

FED. ROAD DIST. NO.	STATE	FED. AID PROJ. NO.	SHEET NO.	TOTAL SHEETS
6	ARK.			
JOB NO.		BB0407	33	64
03609 - LAYOUT - 48615H				

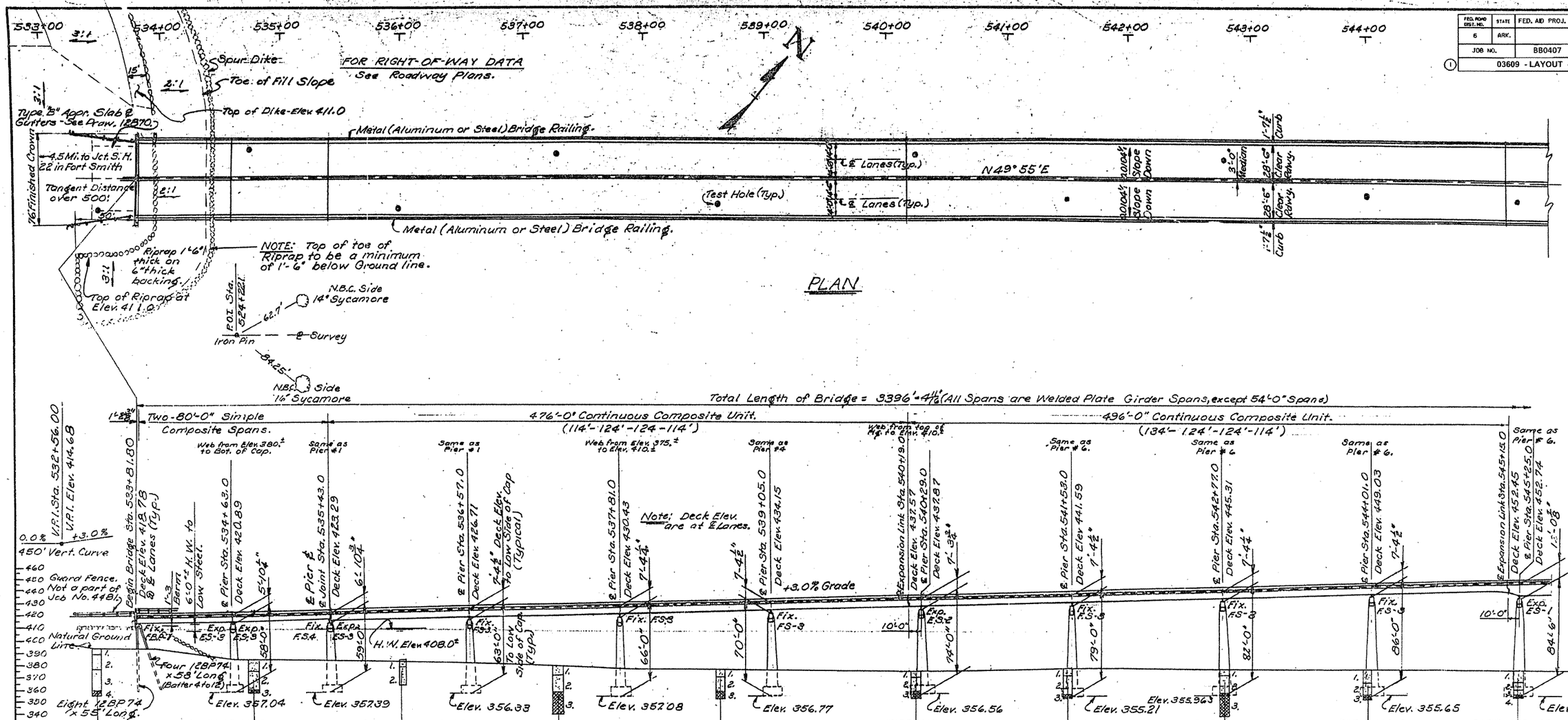

Bench Mark - Nail in Base 18" Cottonwood 250' Rt. Sta. 524+00. Elevation 402.35.

Bench Mark - U.S.C. & G.S. Bench Mark No. 418 North side Highway Bridge over Arkansas River in top of Abutment on West side of Hwy 64 & 71 - Bronze Disc - Elevation 417.814.

MINIMUM DEPTH OF EXCAVATION INTO SHALE

Pier No.	Minimum Depth
1 & 2	11.5'
3 - 9 & 18 - 19	21.0'
10 - 13	2.5'
14 & 15	4.0'

FOR INFORMATION ONLY

(Sheet 1 of 3 Sheets)

LAYOUT OF BRIDGE OVER ARKANSAS RIVER

ARKANSAS R. & RELIEF BR. & APPR.

SEBASTIAN & CRAWFORD COUNTIES

INT. ROUTE 540 SEC. 1

ARKANSAS STATE HIGHWAY COMMISSION

LITTLE ROCK, ARK.

DRAWN BY: VP DATE: 7-16-63
TRACED BY: DATE:
CHECKED BY: Smith DATE: 5-12-64
SCALE: 1" = 40'

L P Carlson
BRIDGE ENGINEER

BRIDGE NO. 03609 **DRAWING NO. 48615H**

FED. ROAD DIST. NO.	STATE	FED. AID PROJ. NO.	SHEET NO.	TOTAL SHEETS
6	ARK.			
JOB NO.		BB0407	335	464
03609 - END BENT - 48615J				

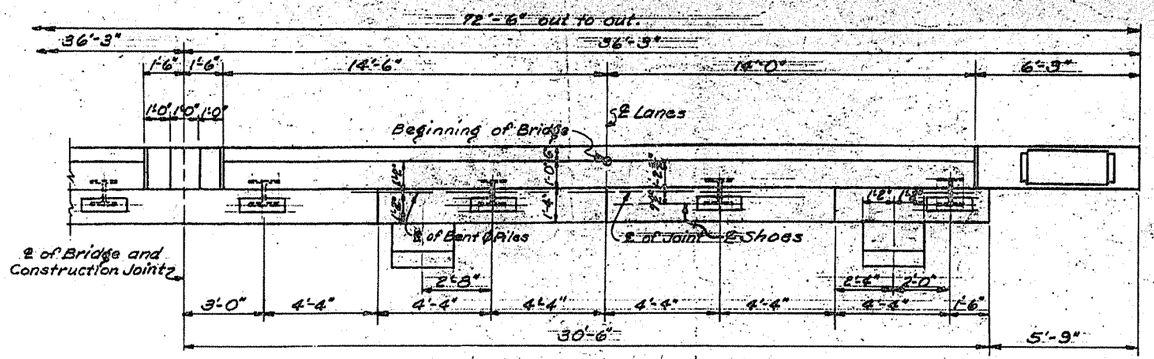

PART PLAN OF END BENT

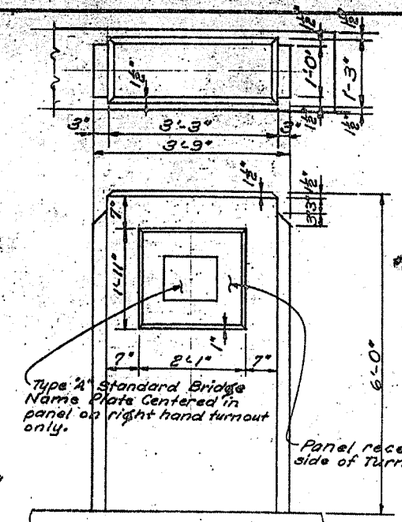

TURNOUT POST DETAIL
Scale: 3/4"=1'-0"

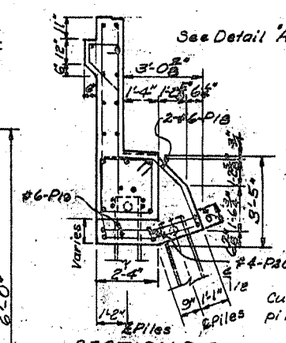

SECTION B-B

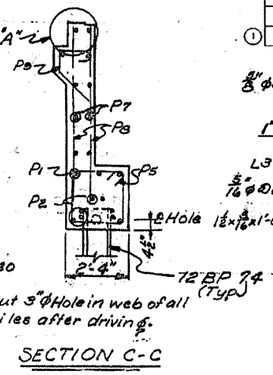

SECTION C-C

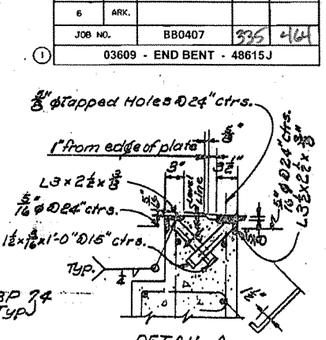

DETAIL A
Scale: 1"=1'-0".

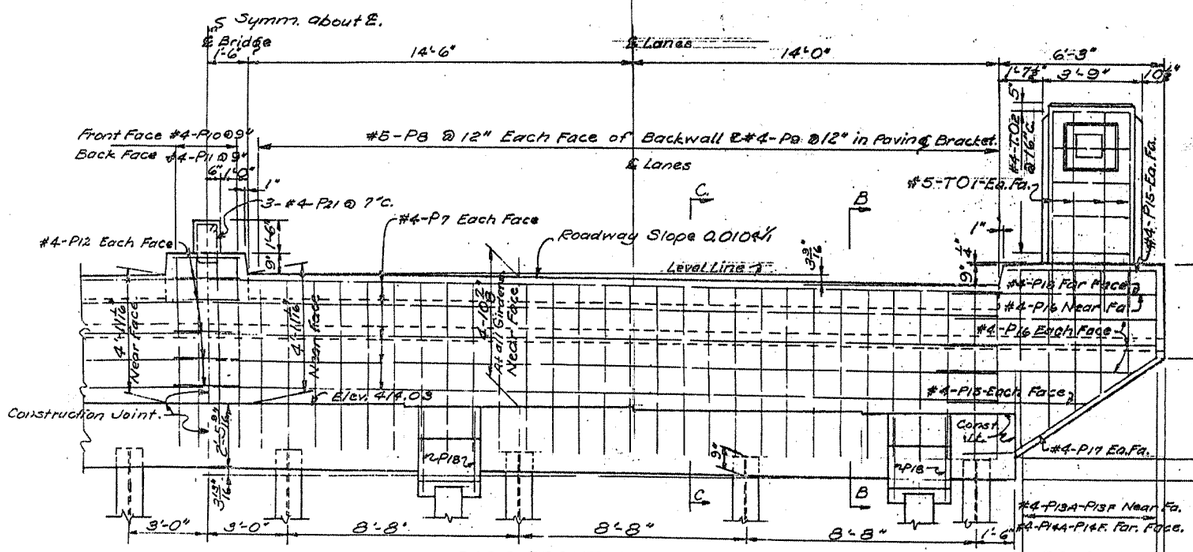

PART FRONT ELEVATION
Cap Reinforcing Steel as shown below.

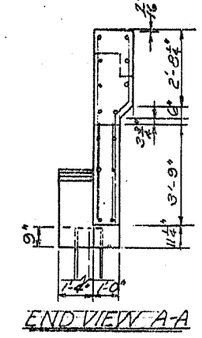

END VIEW A-A

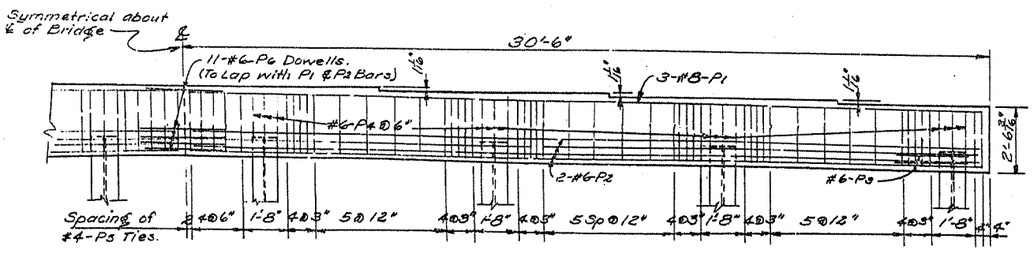

PART ELEVATION OF CAP
Showing Cap Reinforcing Steel.
Pile Brackets not shown.

BAR LIST

MARK	SIZE	NUMBER	LENGTH	PIN DIA.
P1	#8	6	30-0	Str.
P2	#6	16	30-0	Str.
P3	#6	4	6-6	2¼"
P4	#6	24	6-1	2¼"
P5	#4	98	8-9	1½"
P6	#6	11	3-0	Str.
P7	#4	20	30-0	Str.
P8	#5	116	6-8	Str
P9	#4	58	4-0	1½"
P10	#4	4	7-3	Str.
P11	#4	4	7-5	1½"
P12	#4	12	2-6	Str.
P13A-P13F	#4	12 (2 Each)	Var. 3-4 to 6-8	Str.
P14A-P14F	#4	12 (2 Each)	Var. 3-6 to 6-10	1½"
P15	#4	10	5-10	Str.
P16	#4	14	7-8	Str.
P17	#4	4	8-6	1½"
P18	#6	8	8-0	2¼"
P19	#6	8	11-8	2¼"
P20	#4	4	5-4	1½"
P21	#4	3	5-9	1½"
T01	#5	16	8-0	Str.
T02	#4	10	8-3	1½"

BENDING DIAGRAM

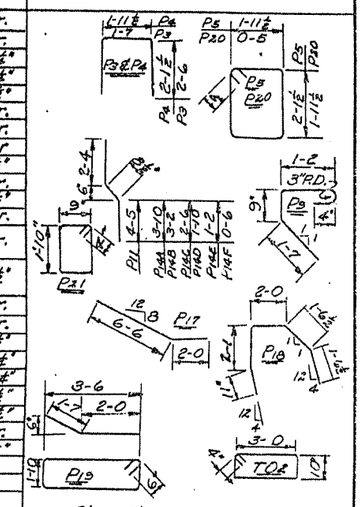

NOTES.

All concrete to be Class S. All exposed corners to have ¾" chamfer unless otherwise noted.
All Structural Steel except steel piles shall be ASTM A-36 Steel and will be paid for as "Structural Steel in Plate Girder Spans (A36)".
For Details of Pile Splice See Drawing 12836.
For Details of Bridge Name Plate see Drawing 2388.

FOR INFORMATION ONLY

DETAILS OF END BENT NO. 1
BRIDGE OVER ARKANSAS RIVER
ARKANSAS R. & RELIEF BR. & APPR.
SEBASTIAN & CRAWFORD COUNTIES
INT. ROUTE 540 SEC. 1

ARKANSAS STATE HIGHWAY COMMISSION
LITTLE ROCK, ARK.

DRAWN BY: VP DATE: 3-5-64
TRACED BY: DATE:
CHECKED BY: DMT DATE: 5-4-64
SCALE: 3/4"=1'-0" and as noted.

L. Pierson
BRIDGE ENGINEER

BRIDGE NO. 03609 **DRAWING NO. 48615J**

DATE REVISED	DATE FILMED	DATE REVISED	DATE FILMED	FED. ROAD DIST. NO.	STATE	FED. AID PROJ. NO.	SHEET NO.	TOTAL SHEETS
				6	ARK.			
				JOB NO.		BB0407	32	464
				1 A&B3604, 03609, A&B3959		Special Gutter		48616

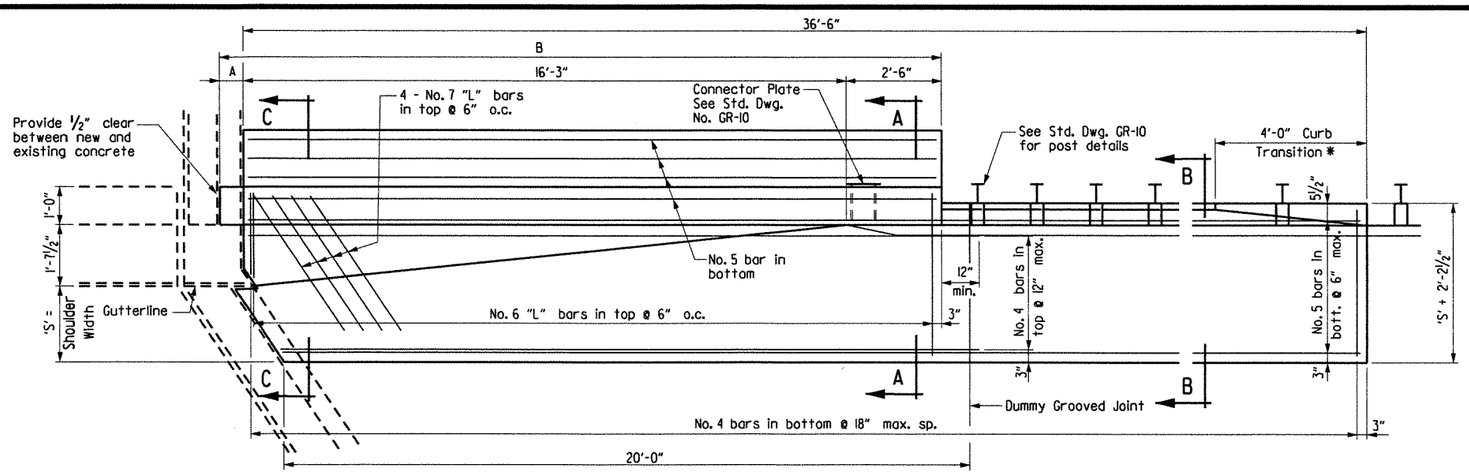

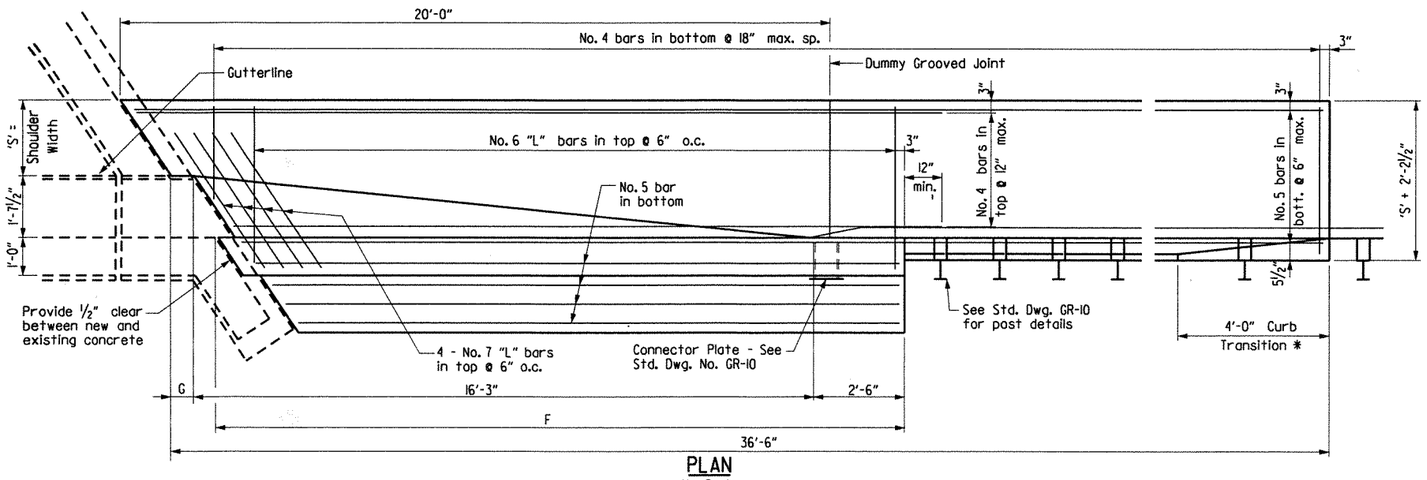

PLAN
No Scale

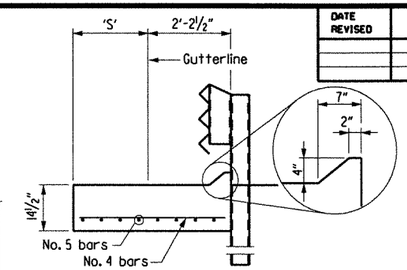

SECTION B-B
Scale: 1/2" = 1'-0"

GENERAL NOTES

Concrete shall be Class S or S(AE) or mixture used for Porland Cement Concrete Pavement.

Reinforcing steel shall conform to AASHTO M31 or M53, Grade 60 (fy = 60,000 psi.) Fabricate bar lengths to provide 2" minimum cover at each end.

Approach gutters will be measured and paid for in accordance with Section 504 of the Standard Specifications.

DIMENSIONS & QUANTITIES FOR ONE SKEWED APPROACH GUTTER

Bridge No.	"S" Shoulder Width (Ft.)	A	B	C	D	E	F	G	Reinforcing Steel (Lbs.)	Concrete (C.Y.)
A&B3604	6'-0"	7 1/2"	19'-4 1/2"	2'-6"	10 1/2"	4'-1 1/4"	19'-0 1/2"	6 1/8"	1605	16.54
	10'-0"	7 1/2"	19'-4 1/2"	2'-6"	10 1/2"	4'-1 1/4"	19'-0 1/2"	6 1/8"	2111	23.20
03609	2'-0"	1 1/2"	18'-10 1/2"	2'-0"	10 1/2"	4'-1 1/4"	18'-7 1/4"	6 1/8"	1190	11.24
A&B3959	2'-0"	4 1/2"	19'-1 1/2"	2'-6"	7 1/2"	3'-11 1/4"	18'-1 1/8"	7 1/4"	1170	11.14

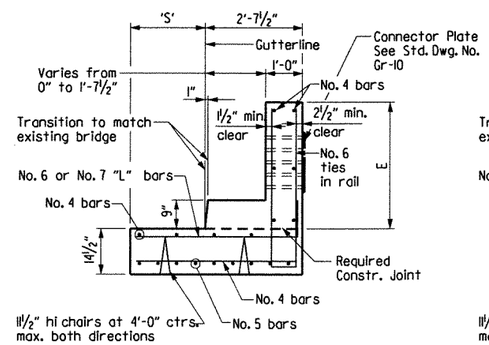

SECTION A-A
Scale: 1/2" = 1'-0"
(Bridge No. A&B3604)

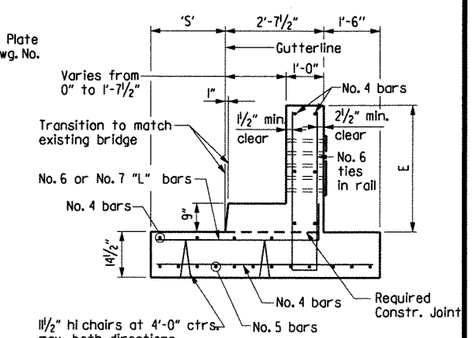

SECTION A-A
Scale: 1/2" = 1'-0"
(Bridge No. 03609, A&B3959 Only)

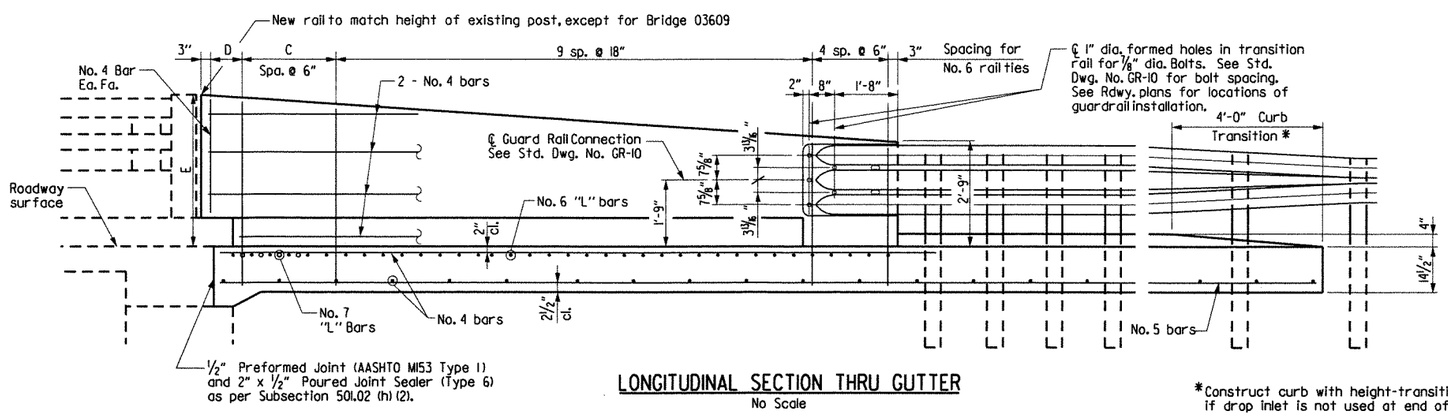

LONGITUDINAL SECTION THRU GUTTER
No Scale

NOTE: The contractor shall make check measurments and make any adjustments necessary to fit the new work to the existing bridge location.

*Construct curb with height-transition as shown if drop inlet is not used at end of gutter.

Construct curb full height (no height-transition) if drop inlet is used at end of gutter. Curb height transition placed on drop inlet. See drop inlet details.

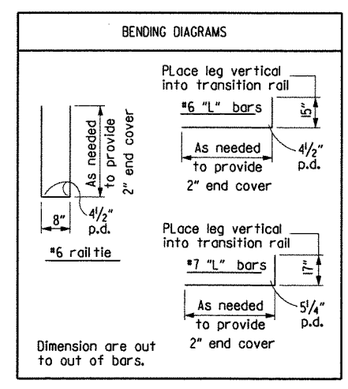

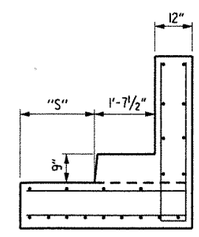

SECTION C-C
At end of Transition Rail
Scale: 1/2" = 1'-0"
(Bridge No. A&B3604)

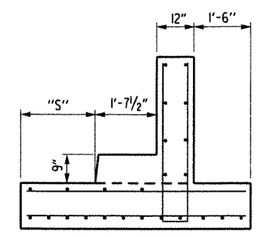

SECTION C-C
At end of Transition Rail
Scale: 1/2" = 1'-0"
(Bridge No. 03609, A&B3959 Only)

DETAILS OF TYPE SPECIAL 6 APPROACH GUTTERS (1'-7 1/2" CURB WIDTH)

STATE OF ARKANSAS REGISTERED PROFESSIONAL ENGINEER No. 11339 LARRY W. MILLER
Larry W. Miller 8-11-12
BRIDGE ENGINEER

ROUTE SEC.
ARKANSAS STATE HIGHWAY COMMISSION
LITTLE ROCK, ARK.

DRAWN BY: TAR DATE: 4/02 FILENAME: bBB0407_g3.dgn
CHECKED BY: EMB DATE: 4/02 SCALE: As Shown
DESIGNED BY: BCG DATE: 4/02
BRIDGE NO. A&B3604, 03069, A&B3959 DRAWING NO. 48616

...\b040468_g3.dgn 8/10/2012 3:50:25 PM

FED. ROAD DIST. NO.	STATE	FED. AID PROJ. NO.	SHEET NO.	TOTAL SHEETS
6	ARK.			
JOB NO.		BB0407	337	464
(1) A3604 - LAYOUT - 48616A				

RIGHT-OF-WAY DATA
See Roadway Plans.

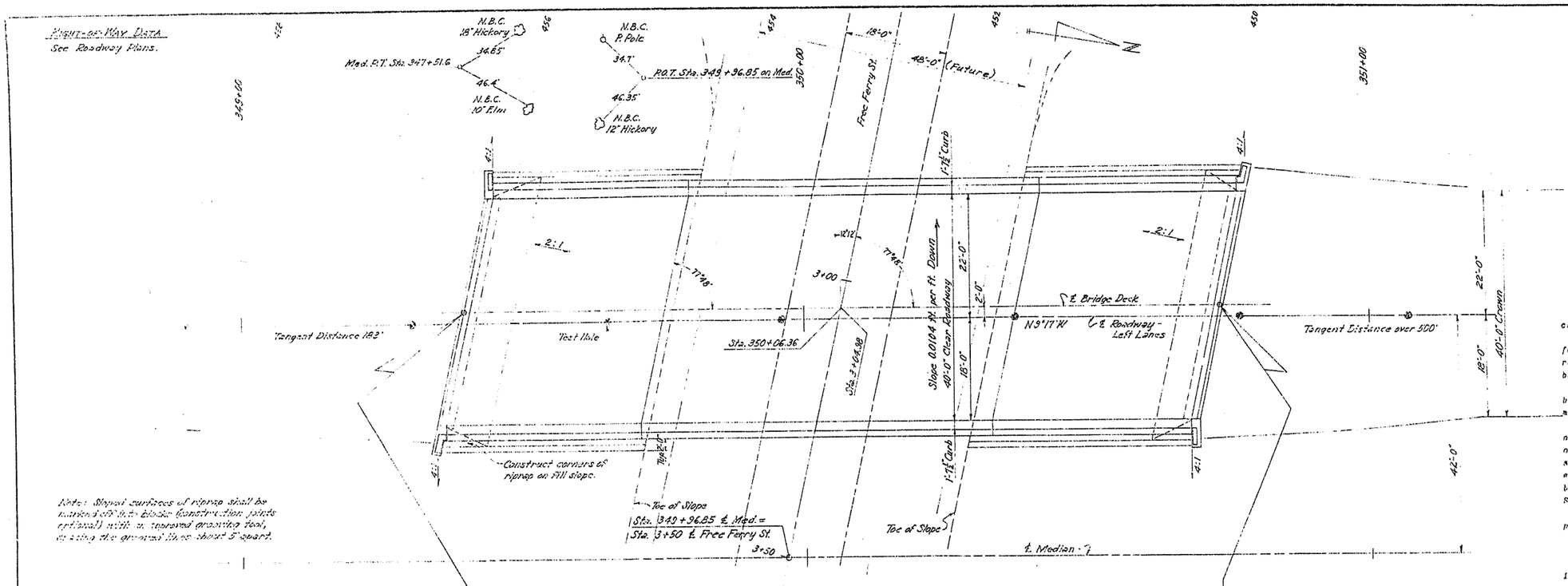

PLAN

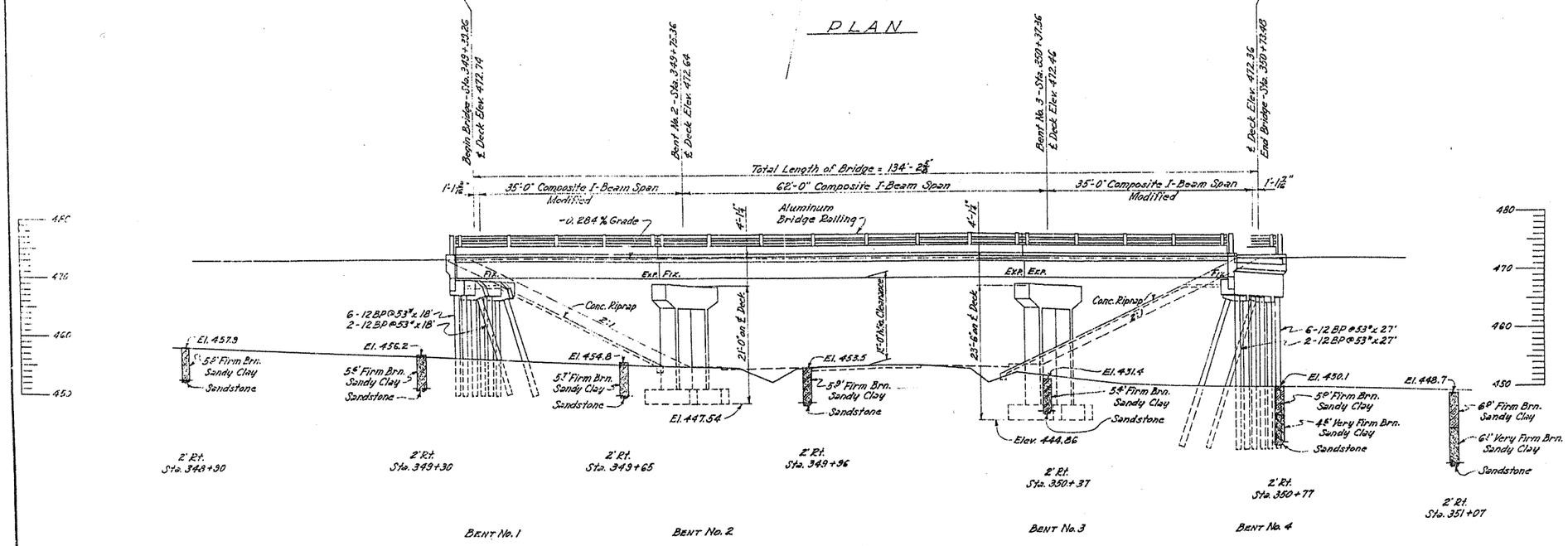

ELEVATION

Foundation Pressure (Calc.) = 5.0 Tons/Sq. Ft.

B.M. Nail in Power Pole 240' Lt. Sta. 349+00, Elev. 457.56.
B.M. N.I.S. Power Pole 22' Rt. Sta. 3+23 (Free Ferry Line), Elev. 454.17
B.M. Nail in Power Pole 250' Rt. Sta. 363+00, Elev. 483.83

349+00 350+00 351+00

GENERAL NOTES

All concrete to be poured in the dry. Exposed corners to be chamfered 3/4" unless otherwise noted.

Rock excavations shall be made to neat lines of concrete footings. Care shall be exercised to avoid shattering of rock faces by excessive blasting. Concrete in footings shall be poured directly against excavated surfaces of rock.

In general, all construction joints in bents or piers shall be provided with keys not less than 1½" high covering the middle third of both dimensions.

All piling shall be 12-BP-55 and shall be driven with an approved air, steam, or diesel hammer to a minimum capacity of 36 tons per pile and into the material designated as sandstone on the boring logs. Lengths of pile shown are for estimating quantities only. Order lengths shown; cut-off or build-up, if necessary, to be paid for in accordance with the Standard Specifications.

Piles in End Bents shall be driven after embankment is in place.

For Details of End Bents see Dwg. No. 11967.
For Details of Intermediate Bents, see Dwg. No. 11968.
For Details of Composite I-Beam Spans see Dwg. No. 14990, 15040, and 11969.
For Location Sketch see Dwg. No. 11966.

SPECIFICATIONS: Arkansas State Highway Commission Standard Specifications for Highway Construction, Edition of 1959, and designated Special Provisions.

DESIGN SPECIFICATIONS A.A.S.H.O. 1961

LIVE LOADING: H20-S16 and Special Interstate Loading of 2 - 24,000# axles spaced 4'-0" on centers.

UNIT STRESSES:

Class A Concrete (n=15)	840 p.s.i.
Class S Concrete (n=10)	1200 p.s.i.
Reinforcing Steel	20,000 p.s.i.
Structural Steel (A36)	20,000 p.s.i.

FOR INFORMATION ONLY

(LEFT LANES)
LAYOUT OF
FREE FERRY STREET OVERPASS
HWY. 22 - ARK. RIVER BRIDGE
SEBASTIAN COUNTY
INT. ROUTE 540 SEC. 1

ARKANSAS STATE HIGHWAY COMMISSION
LITTLE ROCK, ARK.

DRAWN BY: A.J. DATE: 1-30-61
TRACED BY: DATE:
CHECKED BY: DV DATE: 2-15-62
SCALE: 1" = 10'

BRIDGE ENGINEER

BRIDGE NO. A3604 **DRAWING NO. 48616A**

FED. ROAD DIST. NO.	STATE	FED. AID PROJ. NO.	SHEET NO.	TOTAL SHEETS
6	ARK.			
JOB NO.		BB0407	338	464

(1) B3604 - LAYOUT - 48616B

RIGHT LANE - NAV. DATA
See Roadway Plans.

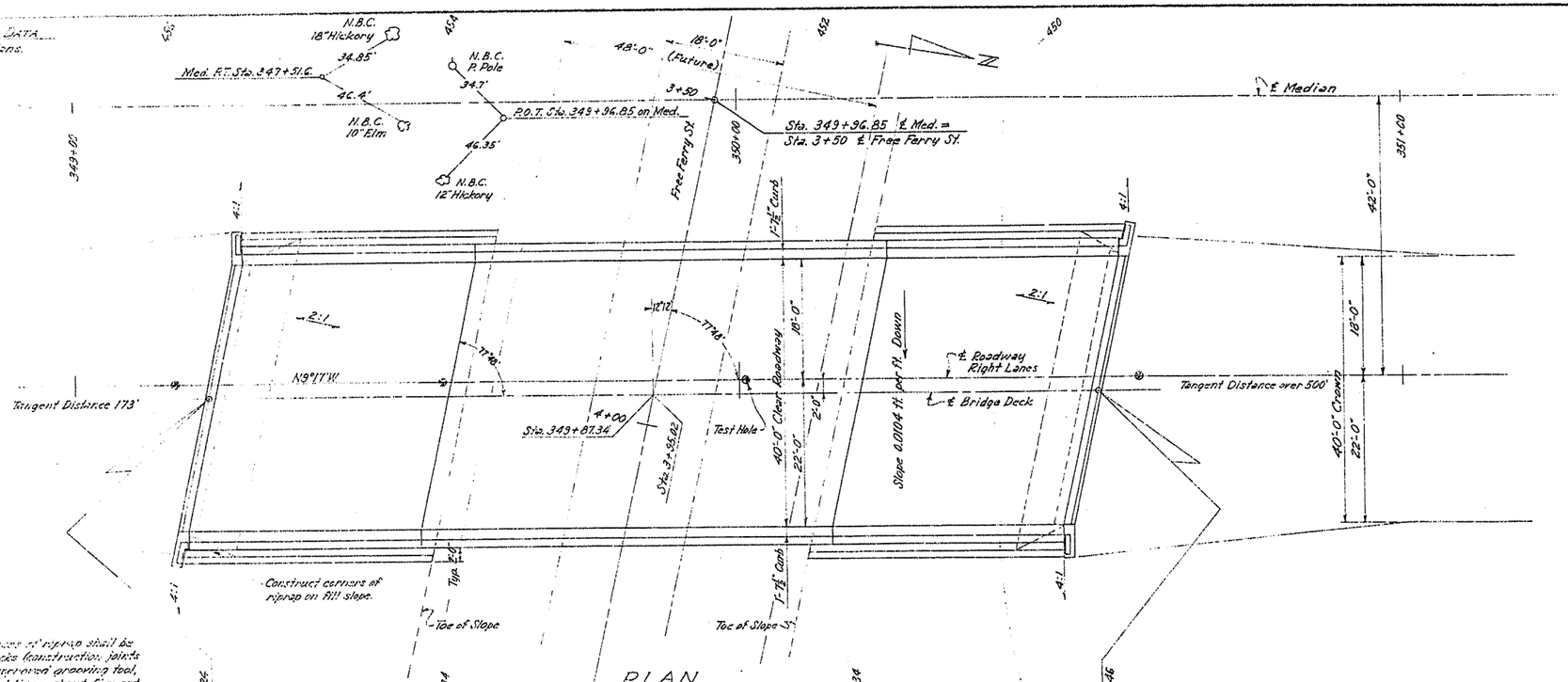

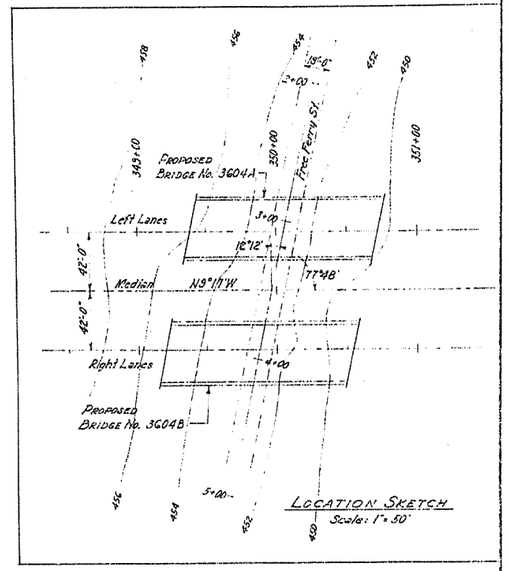

Note: Special surface of riprap shall be marked off into 4' blocks (construction joints optional) with an approved grooving tool, scoring the ground lines about 5' apart.

For General Notes and list of detail drawings see Dwg. No. 11965

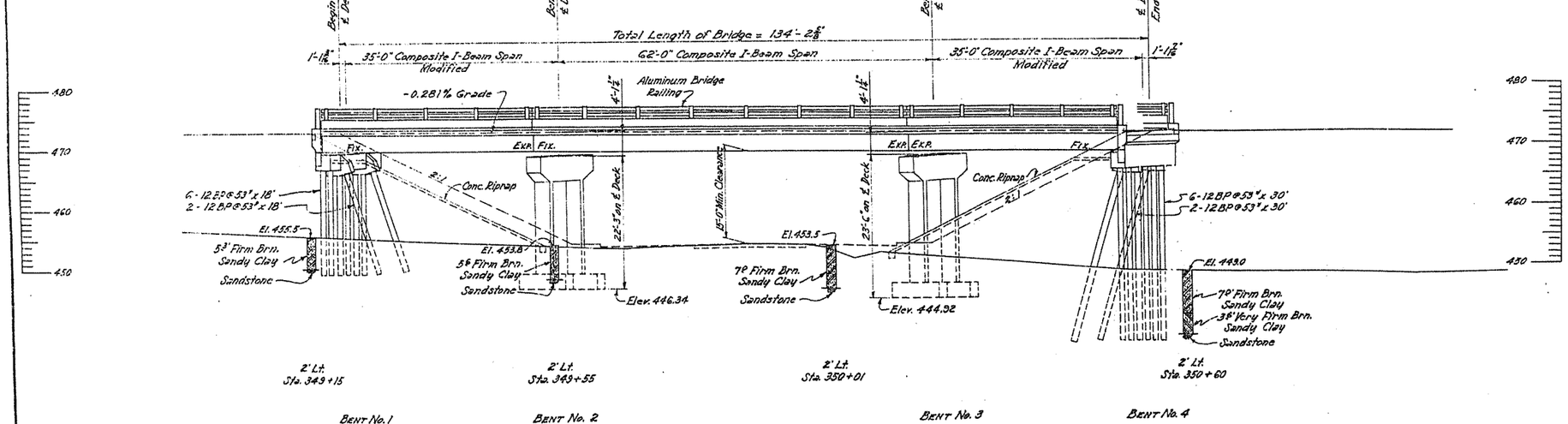

Foundation Pressure (Calc.) = 5.0 Tons/Sq. Ft.

B.M. Nail in Power Pole 240' Lt. Sta. 349+00, Elev. 457.56.
B.M. N.I.S. Power Pole 22' Rt. Sta. 3+23 (Free Ferry Line), Elev. 454.17
B.M. Nail in Power Pole 250' Rt. Sta. 363+00, Elev. 483.83

DESIGN SPECIFICATIONS A.A.S.H.O. 1961

LIVE LOADING: H20-S16 and Special Interstate Loading of 2 - 24,000# axles spaced 4'-0" on centers.

UNIT STRESSES:

Class A Concrete (n=15)	840 p.s.i.
Class S Concrete (n=10)	1200 p.s.i.
Reinforcing Steel	20,000 p.s.i.
Structural Steel (A 36)	20,000 p.s.i.

FOR INFORMATION ONLY

(RIGHT LANES)
LAYOUT OF
FREE FERRY STREET OVERPASS
HWY. 22 - ARK. RIVER BRIDGE
SEBASTIAN COUNTY
INT. ROUTE 540 SEC. 1

ARKANSAS STATE HIGHWAY COMMISSION
LITTLE ROCK, ARK.

DRAWN BY: A.J. DATE: 1-30-61
TRACED BY: DATE:
CHECKED BY: DV DATE: 2-15-62
SCALE: 1" = 10'

L. P. Carlson
BRIDGE ENGINEER

BRIDGE NO. B3604 DRAWING NO. 48616B

FED. ROAD DIST. NO.	STATE	FED. AID PROJ. NO.	SHEET NO.	TOTAL SHEETS
6	ARK.			
JOB NO.		BB0407	339	464

(1) A&B3604 - END BENTS - 48616C

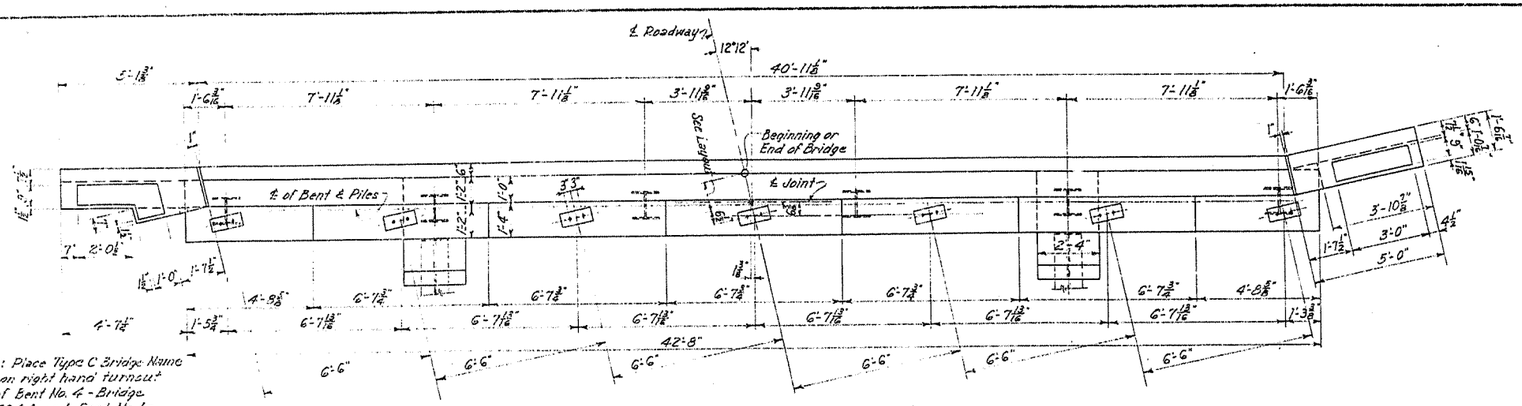

NOTE: Place Type C Bridge Name Plate on right hand turnout entry of Bent No. 4 - Bridge No. 3604 A and Bent No. 1 - Bridge No. 3604 B.

PLAN

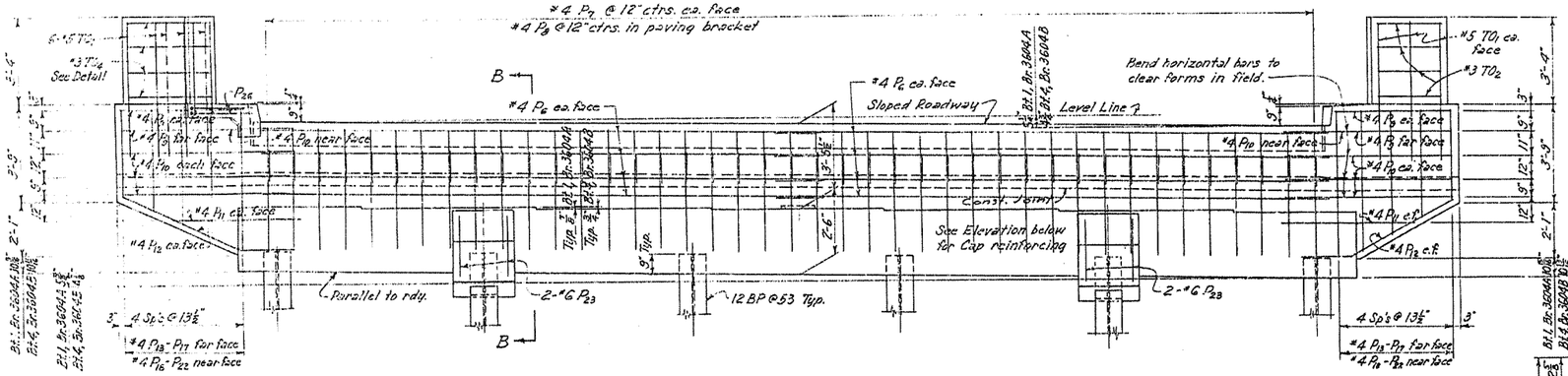

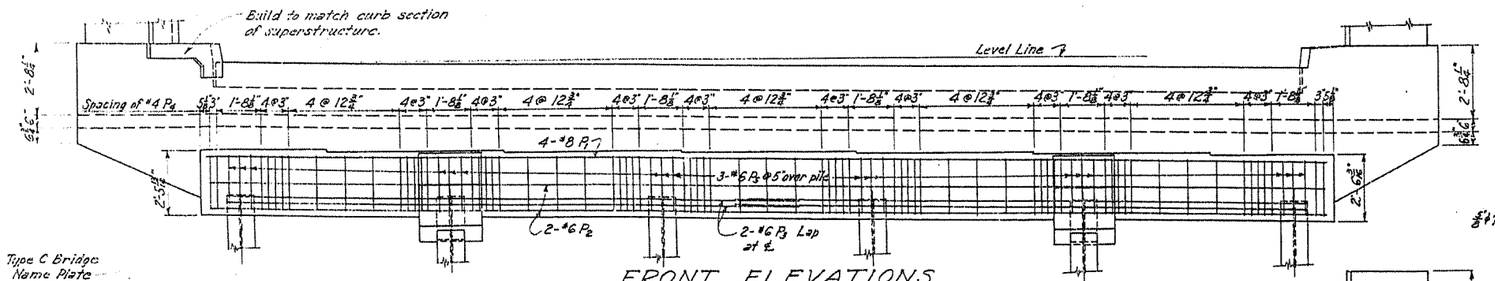

FRONT ELEVATIONS
BENT NO. 1 - BRIDGE NO. 3604 A
BENT NO. 4 - BRIDGE NO. 3604 B

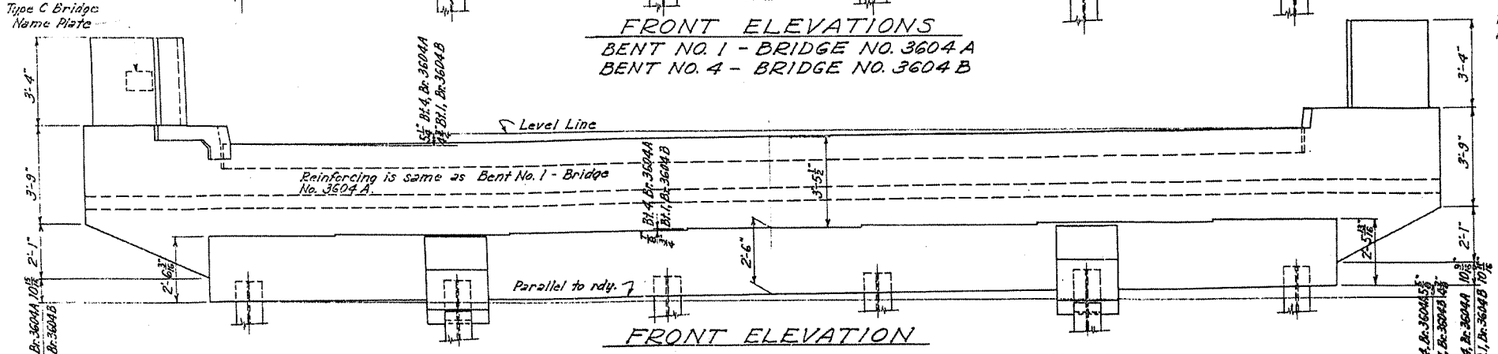

FRONT ELEVATION
BENT NO. 4 - BRIDGE NO. 3604 A BENT NO. 1 - BRIDGE NO. 3604 B

BAR LIST - EACH BENT

MARK	SIZE	NO.	LENGTH	A	B	PIN DIA.
P1	8	4	42'-3"	—	—	Str.
P2	6	4	42'-3"	-	-	Str.
P3	6	4	44'-7"	21'-8"	1'-4"	2¼"
P4	4	69	8'-9"	2'-1½"	1'-11½"	1½"
P5	6	18	6'-1"	2'-1½"	1'-11½"	2¼"
P6	4	16	21'-4"	—	—	Str.
P7	4	84	5'-0"	—	—	Str.
P8	4	42	3'-9"	—	—	1½"
P9	4	6	4'-8"	—	—	Str.
P10	4	14	6'-6"	-	-	Str.
P11	4	4	4'-0"	—	—	Str.
P12	4	4	6'-8"	—	—	1½"
P13 to P17	4	2 ea.	Varies 3'-8" to 5'-10"	Varies 7" to 2'-9"	—	1½"
P18 to P22	4	2 ea.	Varies 3'-6" to 5'-8	—	-	Str.
P23	6	4	8'-0"	---	-	2¼"
P24	6	4	11'-4"	—	-	2¼"
P25	4	2	5'-1"	1'-10"	0'-5"	1½"
P26	4	2	3'-10"	2'-3"	1'-8"	1½
TO1	5	12	5'-3"	—	—	Str.
TO2	3	4	6'-11"	2'-9	0'-6	1½"
TO3	5	2	4'-10"	3'-5"	1'-6"	1⅜"
TO4	3	4	7'-11"	—	—	1½"

BENDING DIAGRAM

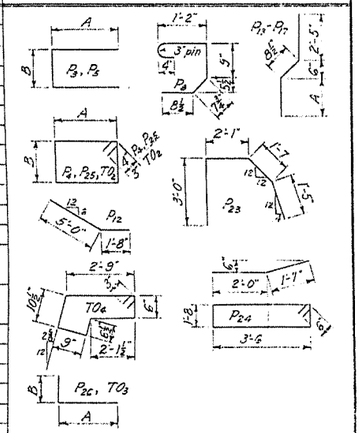

Dimensions are to centers of bars.

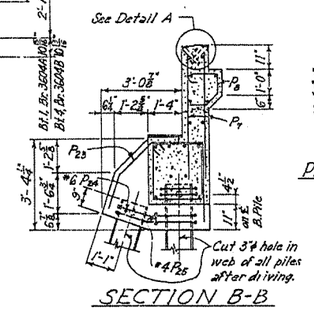

SECTION B-B

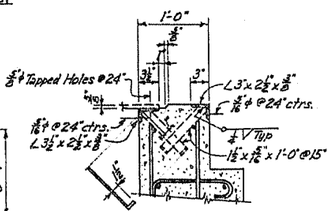

DETAIL A
Scale: 1" = 1'-0"

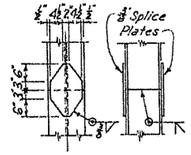

PILE SPLICE DETAIL
Scale: ½" = 1'-0"

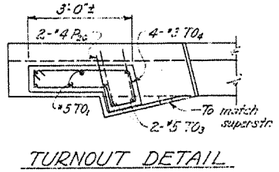

TURNOUT DETAIL
Scale: ½" = 1'-0"

NOTES

All concrete to be Class S. All exposed corners to have ¾" chamfer unless otherwise noted.

Reinforcing steel to be deformed bars of intermediate or hard grade. Bar lists and bending diagrams shall be submitted and approval secured before fabrication is begun.

Steel piles shall be driven to refusal and to a minimum bearing capacity of 36 tons per pile.

Turnout posts to be measured and paid for as Class S concrete.

FOR INFORMATION ONLY

DETAILS OF END BENTS
FREE FERRY STREET OVERPASS
HWY. 22 - ARK. RIVER BRIDGE
SEBASTIAN COUNTY
INT. ROUTE 540 SEC. 1

ARKANSAS STATE HIGHWAY COMMISSION
LITTLE ROCK, ARK.

DRAWN BY: A.T. DATE: 2-19-62
TRACED BY: DATE:
CHECKED BY: DV DATE: 4-16-62
SCALE: ¼" = 1'-0" & As Noted

L. G. Carlson
BRIDGE ENGINEER

BRIDGE NO. A&B3604 DRAWING NO. 48616C

FED. ROAD DIST. NO.	STATE	FED. AID PROJ. NO.	SHEET NO.	TOTAL SHEETS
6	ARK.			
JOB NO.		BB0407	340	464

03609 - LAYOUT - 48616D

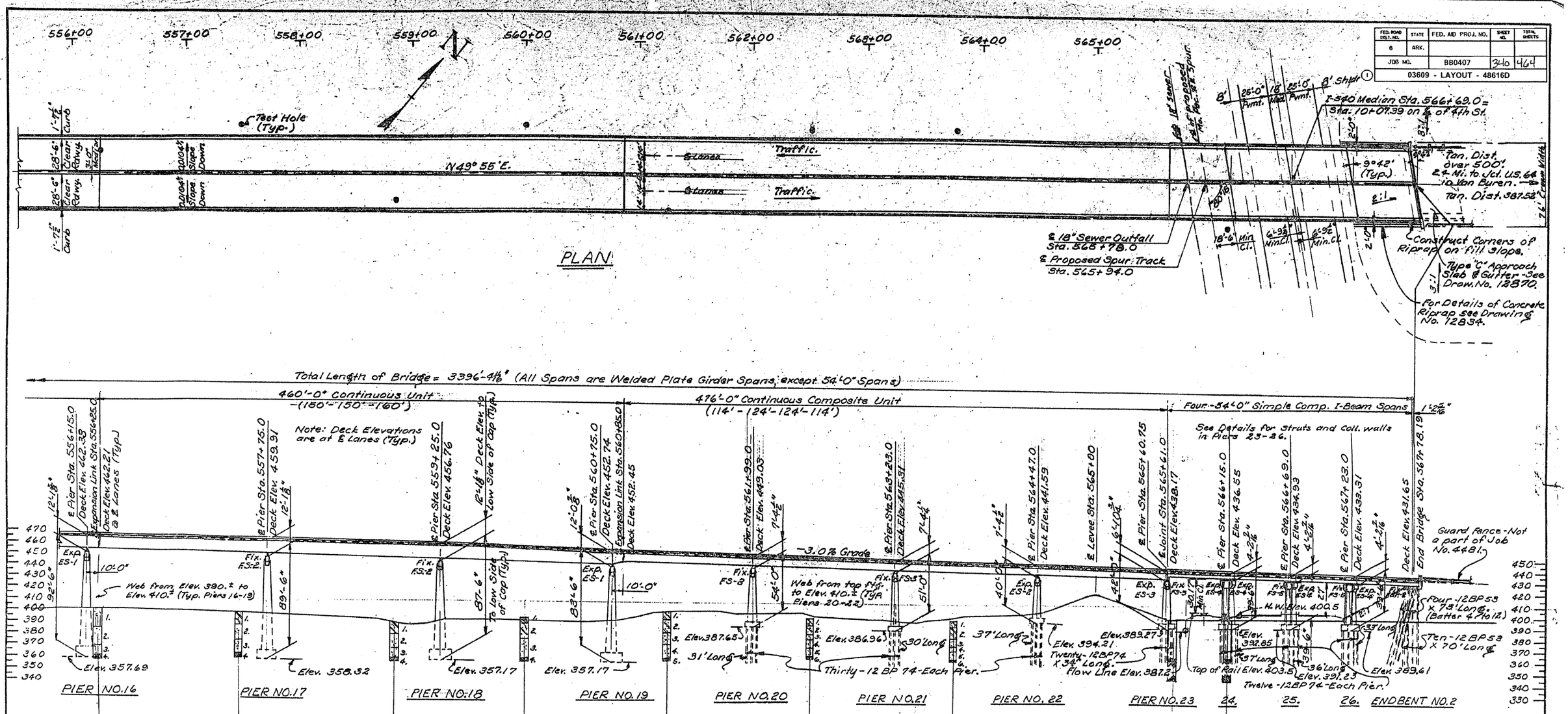

FOR INFORMATION ONLY

(Sheet 3 of 3 Sheets)

LAYOUT OF BRIDGE OVER ARKANSAS RIVER

ARKANSAS R. & RELIEF BR. & APPR.

SEBASTIAN & CRAWFORD COUNTIES

INT. ROUTE 540 SEC. 1

ARKANSAS STATE HIGHWAY COMMISSION

LITTLE ROCK, ARK.

DRAWN BY: VP DATE: 7-18-63

TRACED BY: DATE:

CHECKED BY: DATE: 5-18-64

SCALE: 1" = 40'

L. P. Carlson

BRIDGE ENGINEER

BRIDGE NO. 03609 **DRAWING NO. 48616D**

14.71

FED. ROAD DIST. NO.	STATE	FED. AID PROJ. NO.	SHEET NO.	TOTAL SHEETS
6	ARK.			
JOB NO.		BB0407	311	464

(1) 03608 - END BENT - 48616E

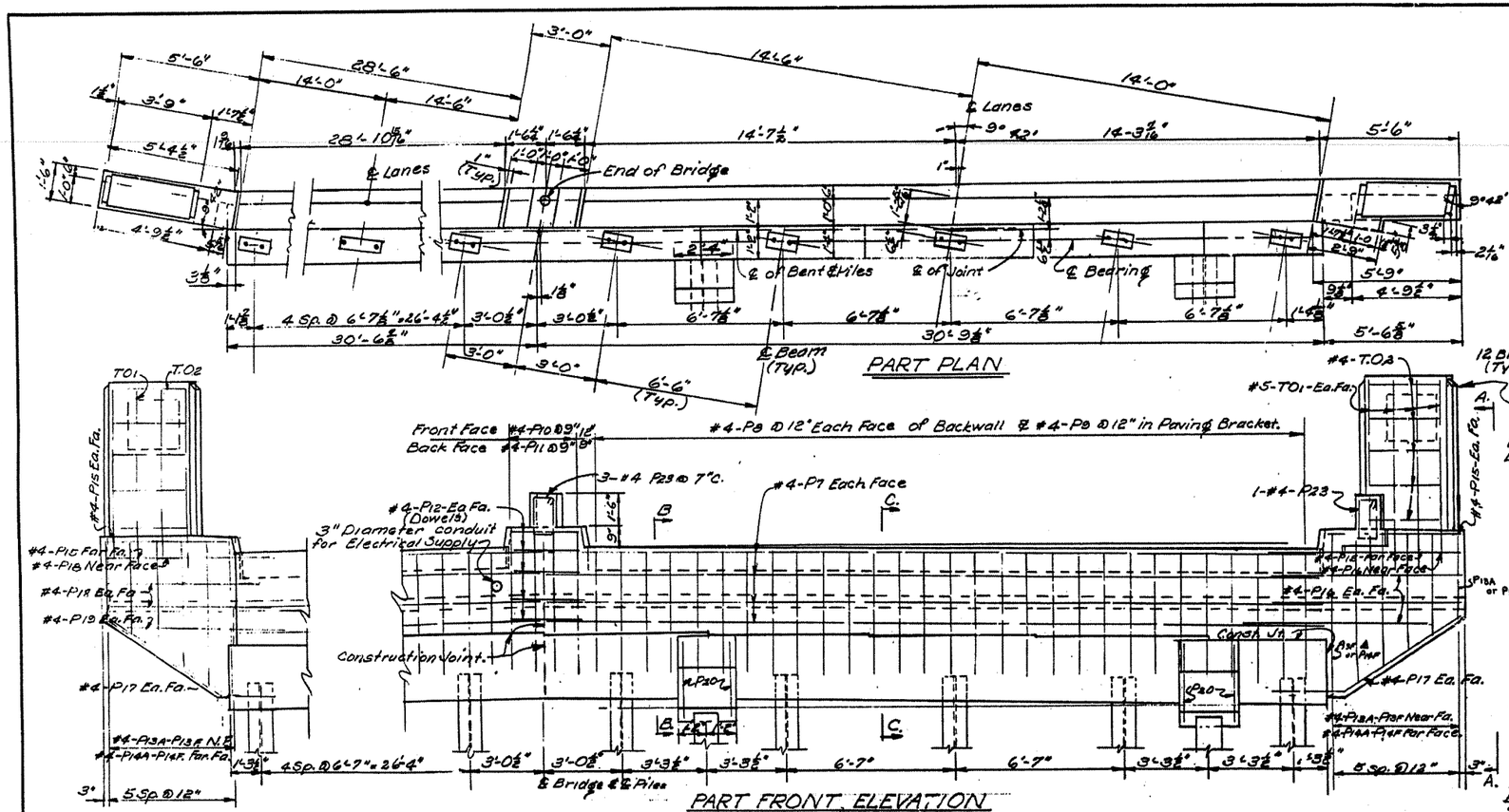

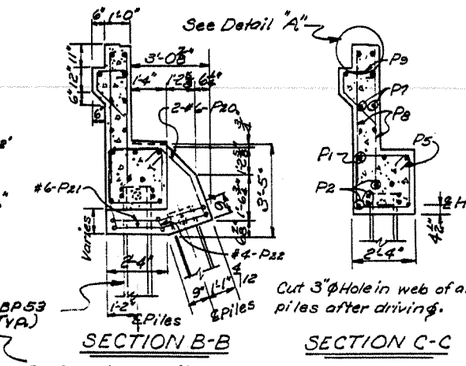

SECTION B-B

SECTION C-C

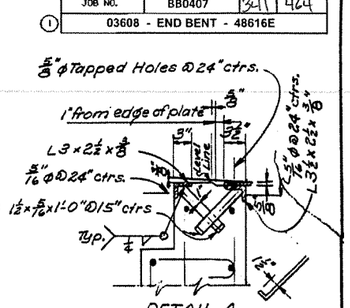

DETAIL A
Scale: 1" = 1'-0"

For Complete details of Turnout Post see End Bent No 1 on Drawing 12843.

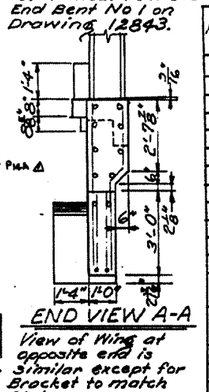

END VIEW A-A

View of Wing at opposite end is similar except for Bracket to match Slab.

BAR LIST

MARK	SIZE	NUMBER	LENGTH	PIN DIA.
P1	#8	6	30'-0"	Str.
P2	#6	16	30-0	Str.
P3	#6	4	6-6	2¼"
P4	#6	30	6-1	2¼"
P5	#4	110	8-9	1¼"
P6	#6	11	3-0	Str.
P7	#4	16	30'-6	Str.
P8	#4	116	4-9	Str.
P9	#4	58	4-0	1¼"
P10	#4	4	5-6	Str.
P11	#4	4	5-6	1¼"
P12	#4	10	2-6	Str.
P13A-P13E	#4	10 (2 Each)	Var. 3¼ to 5-8	Str.
P14A-P14F	#4	12 (2 Each)	Var 3-4 to 6-1	1¼"
P15	#4	6	5-0	Str.
P16	#4	7	7-3	Str.
P17	#4	4	8-0	1¼"
P18	#4	5	7-3	1¼"
P19	#4	2	6-3	1¼"
P20	#6	8	8-0	2¼"
P21	#6	8	11-8	2¼"
P22	#4	4	5-4	1¼"
P23	#4	4	5-3	1¼"
T01	#5	16	8-0	Str.
T02	#4	10	8-3	1¼"
P13F	#4	2	5-11	Str.

BENDING DIAGRAM

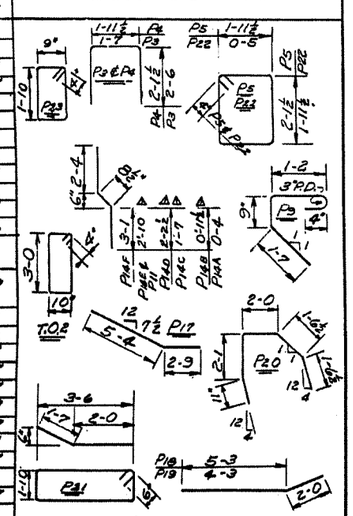

Dimensions are to centers of Bars.

△ REV: Bnk P4 Dimensions 3-1-65 JMH
Checked: 3-1-65 FLB

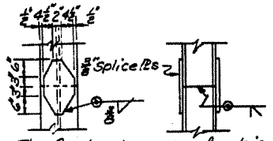

The Contractor may for his convenience and at his own expense provide as many as three splices per pile for steel bearing piling. Minimum spacing between splices shall be 5 feet.

PILE SPLICE DETAIL
Scale: ½" = 1'-0"

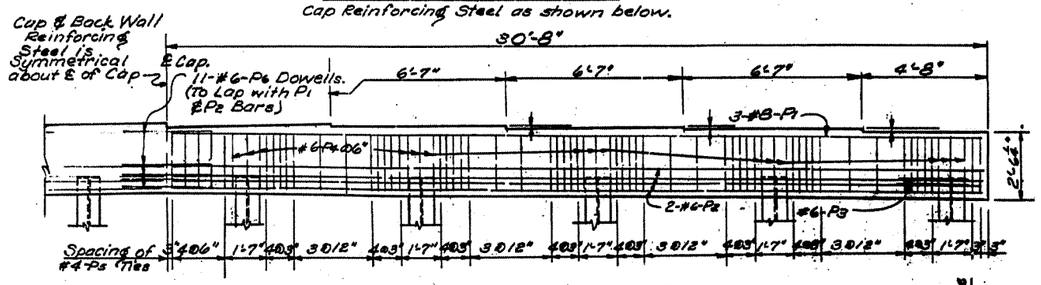

PART ELEVATION OF CAP
Showing Cap Reinforcing steel. Pile brackets not shown.

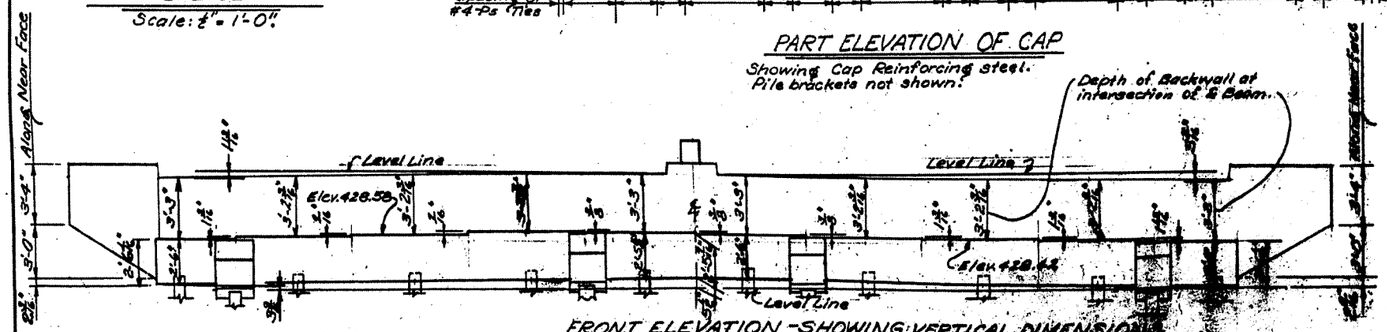

FRONT ELEVATION - SHOWING VERTICAL DIMENSIONS
Scale: ½" = 1'-0"

NOTES

All Concrete to be Class S. All exposed corners to have ¾" chamfer unless otherwise noted.
All Structural Steel except steel piles shall be ASTM A-36 Steel and will be paid for as "Structural Steel in Beam Spans (A-36)."
See Drawing 12868 for Navigation Lighting Details.

FOR INFORMATION ONLY

DETAILS OF END BENT NO. 2
BRIDGE OVER ARKANSAS RIVER
ARKANSAS R. & RELIEF BR. & APPR.
SEBASTIAN & CRAWFORD COUNTIES
INT. ROUTE 540 SEC. 1

ARKANSAS STATE HIGHWAY COMMISSION
LITTLE ROCK, ARK.

DRAWN BY: VP DATE: 3-4-64
TRACED BY: DATE:
CHECKED BY: PHT DATE: 3-4-65
SCALE: ⅜" = 1'-0" and as noted.

L P Carlson
BRIDGE ENGINEER

BRIDGE NO. 03608 **DRAWING NO.** 48616E

DATE REVISED	DATE FILMED	DATE REVISED	DATE FILMED	FED. ROAD DIST. NO.	STATE	FED. AID PROJ. NO.	SHEET NO.	TOTAL SHEETS
				6	ARK.			
				JOB NO.		BB0407	342	464
				1 A&B3956		Special Gutter		48617

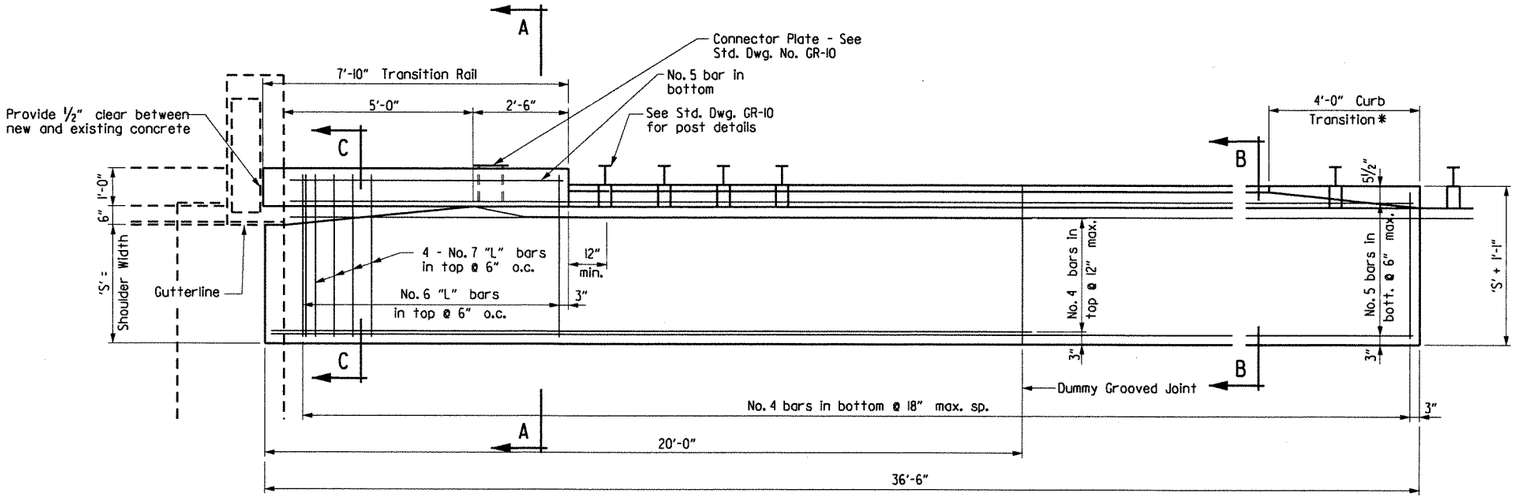

PLAN

No Scale

GENERAL NOTES

Concrete shall be Class S or S(AE) or mixture used for Portland Cement Concrete Pavement.

Reinforcing steel shall conform to AASHTO M31 or M53, Grade 60 (fy = 60,000 psi.) Fabricate bar lengths to provide 2" minimum cover at each end.

Approach gutters will be measured and paid for in accordance with Section 504 of the Standard Specifications.

BENDING DIAGRAMS

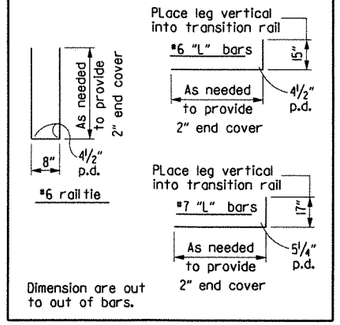

QUANTITIES FOR ONE GUTTER

"S" Shoulder Width (Ft.)	Reinforcing Steel (Lbs.)	Concrete (C.Y.)
5'-6"	1208	12.32
9'-6"	1678	18.44

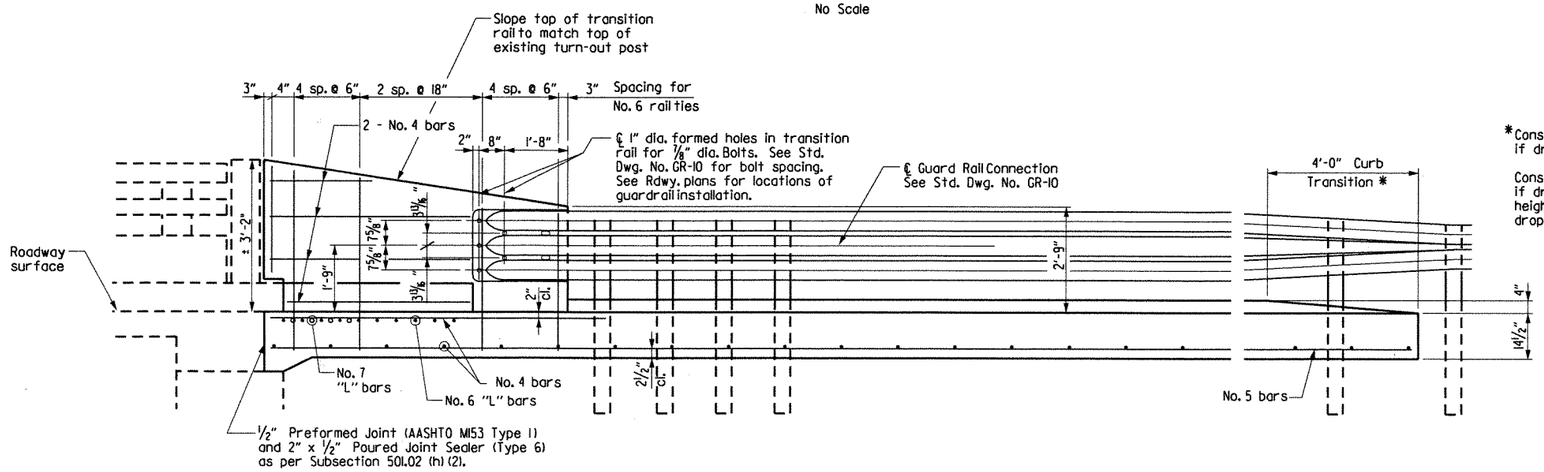

LONGITUDINAL SECTION THRU GUTTER

No Scale

*Construct curb with height-transition as shown if drop inlet is not used at end of gutter.

Construct curb full height (no height-transition) if drop inlet is used at end of gutter. Curb height transition placed on drop inlet. See drop inlet details.

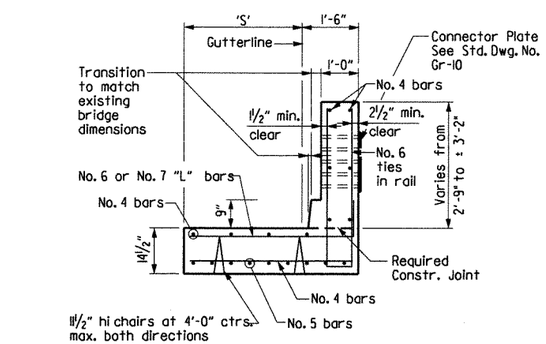

SECTION A-A

Scale: 1/2" = 1'-0"

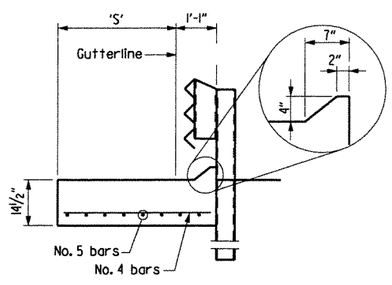

SECTION B-B

Scale: 1/2" = 1'-0"

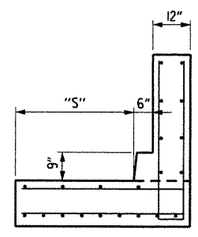

SECTION C-C

At end of Transition Rail
Scale: 1/2" = 1'-0"

NOTE: The contractor shall make check measurments and make any adjustments necessary to fit the new work to the existing bridge location.

DETAILS OF TYPE SPECIAL 7 APPROACH GUTTERS (6" CURB WIDTH)

ROUTE SEC.

ARKANSAS STATE HIGHWAY COMMISSION

LITTLE ROCK, ARK.

STATE OF ARKANSAS REGISTERED PROFESSIONAL ENGINEER No. 11339 LARRY W. MILLER

Larry W. Miller 8-11-12

BRIDGE ENGINEER

DRAWN BY: TAR	DATE: 4/02	FILENAME: bBB0407_g4.dgn			
CHECKED BY: EMB	DATE: 4/02	SCALE: As Shown			
DESIGNED BY: BCG	DATE: 4/02				

BRIDGE NO. A&B3956 DRAWING NO. 48617

FED. ROAD DIST. NO.	STATE	FED. AID PROJ. NO.	SHEET NO.	TOTAL SHEETS
6	ARK.			
JOB NO.		BB0407	343	464

(1) A&B3956 - LAYOUT - 48617A

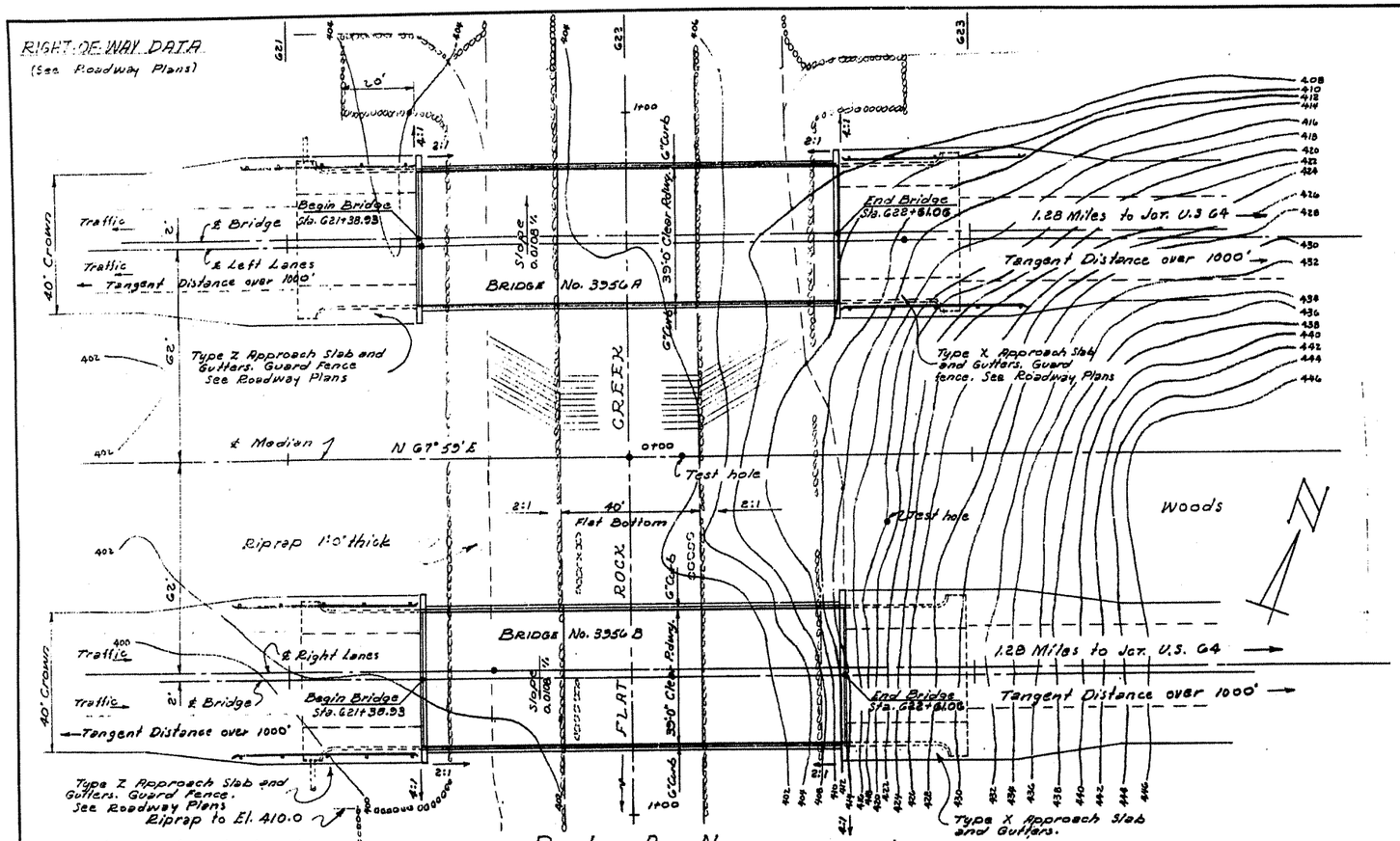

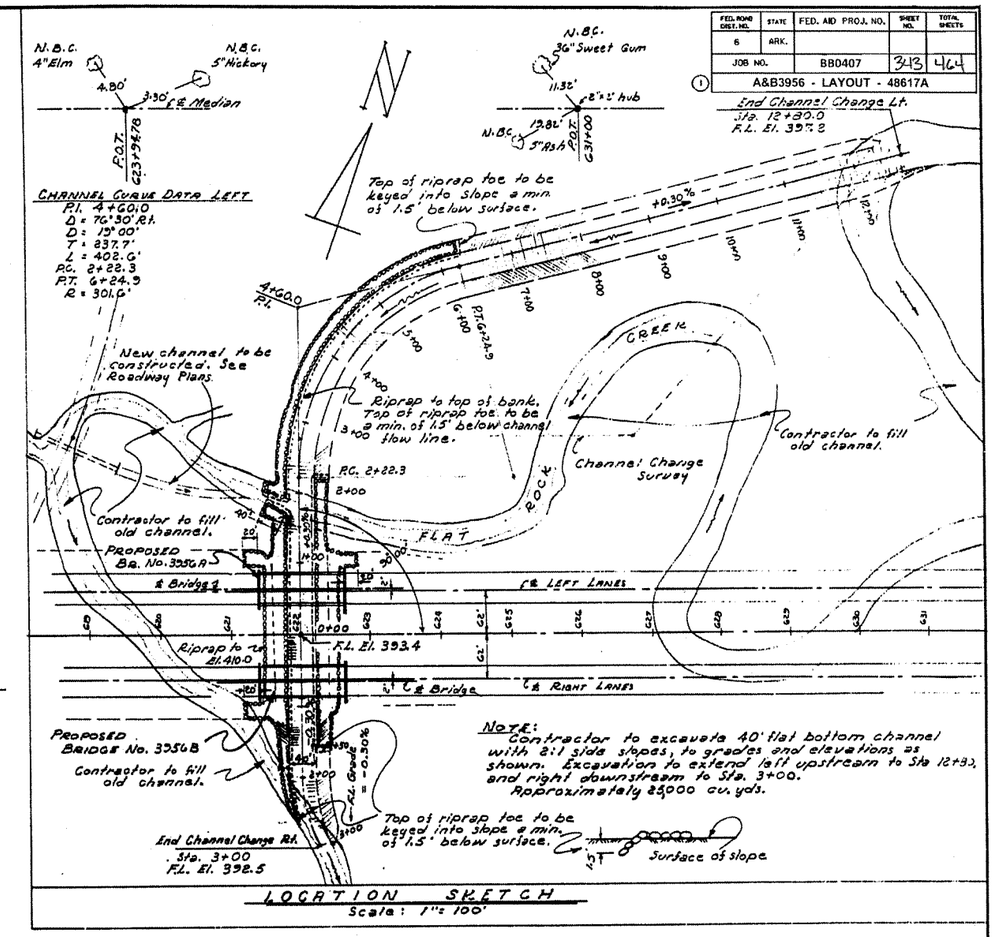

NOTE: Contractor to excavate 40' flat bottom channel with 2:1 side slopes, to grades and elevations as shown. Excavation to extend left upstream to Sta 12+82 and right downstream to Sta. 3+00. Approximately 25,000 cu. yds.

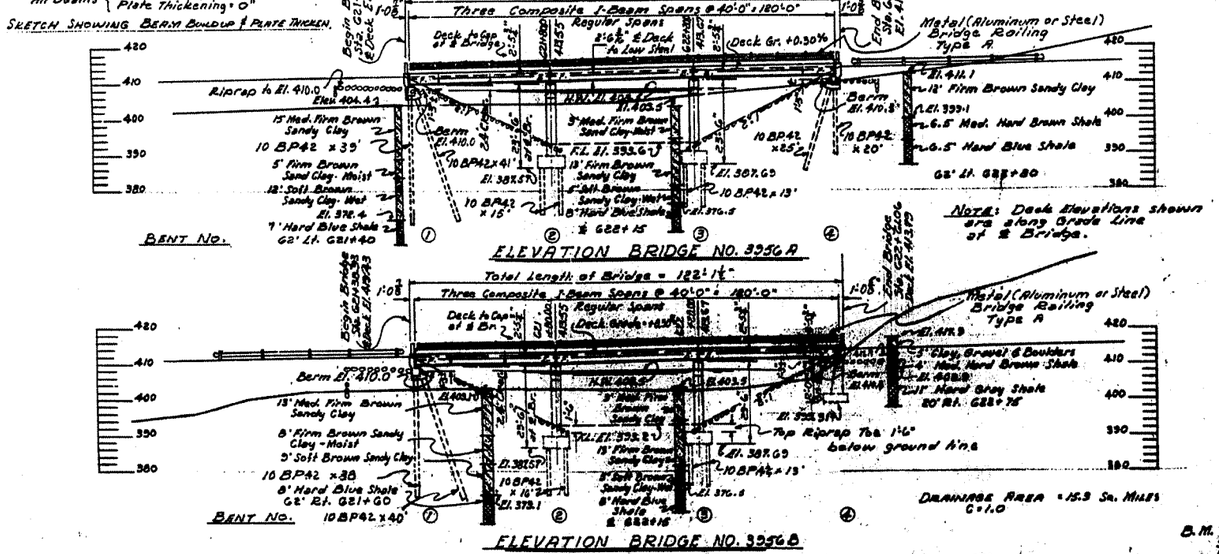

NOTE: Deck Elevations shown are along Grade Line of ℄ Bridge.

GENERAL NOTES

All concrete to be poured in the dry. Exposed corners to be chamfered 3/4" unless otherwise noted.

Rock excavations shall be made to neat lines of concrete footings. Care shall be exercised to avoid shattering of rock faces by excessive blasting. Concrete in footings shall be poured directly against excavated surfaces of rock. Excavate a minimum of 1.0 ft. into shale.

In general, all construction joints in bents or piers shall be horizontal and shall be grooved with keys not less than 1½" high covering the middle third of both dimensions.

All piling shall be 10" BP 42# and shall be driven with an approved air, steam or diesel hammer to a minimum capacity of 80 tons per pile and to the material designated as shale (or other rock) on the boring logs. Lengths of pile shown are for estimating quantities only. Order lengths shown; cut-off or build-up, if necessary, to be paid for in accordance with the Standard Specifications. Piles in End Bent shall be driven after embankment, to subgrade, is in place.

Contractor to construct channel change as shown in location sketch.

Provide roadway drains at low side of roadway.

For Details of End Bents see Dwg. No. 15051 Rev. and 13326
For Details of Intermediate Bents see Dwg. No. 13326
For Details of Composite I-Beam Spans see Dwg. Nos. 14990B REV. and 13327.

Calculated Foundation Pressure - Bent 4 Br. 3956B
Group I 6100 #/□'

REVISIONS:
Channel Change Alignment Left. J.E.H. 7-8-65

B.M. N.W. Cor. - Bottom Step Radio Shack 300' Left Sta. 613+00 Elev. 407.11

SPECIFICATIONS: Arkansas State Highway Commission Standard Specifications for Highway Construction, Edition of 1959, the 1966 Supplement to Specifications thereto and the designated Special Provisions.

DESIGN SPECIFICATIONS: AASHO 1961

Live Loading: HS20 and Special Interstate Loading of two 24,000 axles spaced 4'0" on center.

Unit Stresses:	Class A Concrete (n-15)	840 psi
	Class S Concrete (n-10)	1,200 psi
	Reinforcing Steel	20,000 psi
	Structural Steel (A 36)	20,000 psi

FOR INFORMATION ONLY

LAYOUT OF BRIDGES
OVER FLAT ROCK CREEK
ARKANSAS RIVER BRIDGE - JCT. I-40
CRAWFORD COUNTY

INTERSTATE ROUTE 540 SEC. 1

ARKANSAS STATE HIGHWAY COMMISSION
LITTLE ROCK, ARK.

DRAWN BY: J.E.H. DATE: 10-15-64
TRACED BY: DATE:
CHECKED BY: DATE: 9-27-65
SCALE: 1" = 20'

L P Carlson
BRIDGE ENGINEER

BRIDGE NO. A&B3956 DRAWING NO. 48617A

FED. ROAD DIST. NO.	STATE	FED. AID PROJ. NO.	SHEET NO.	TOTAL SHEETS
6	ARK.			
JOB NO.		BB0407	344	464

(1) A&B3956 - END BENTS - 48617B

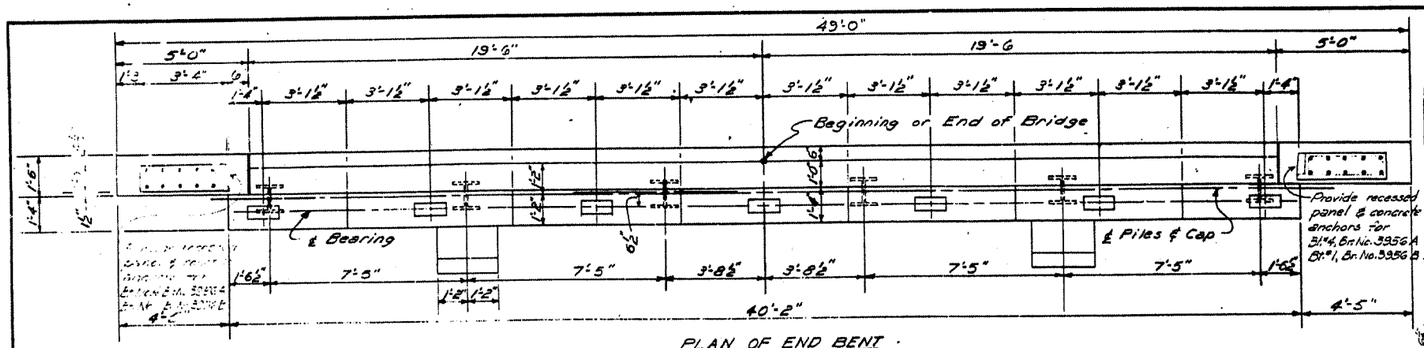

PLAN OF END BENT

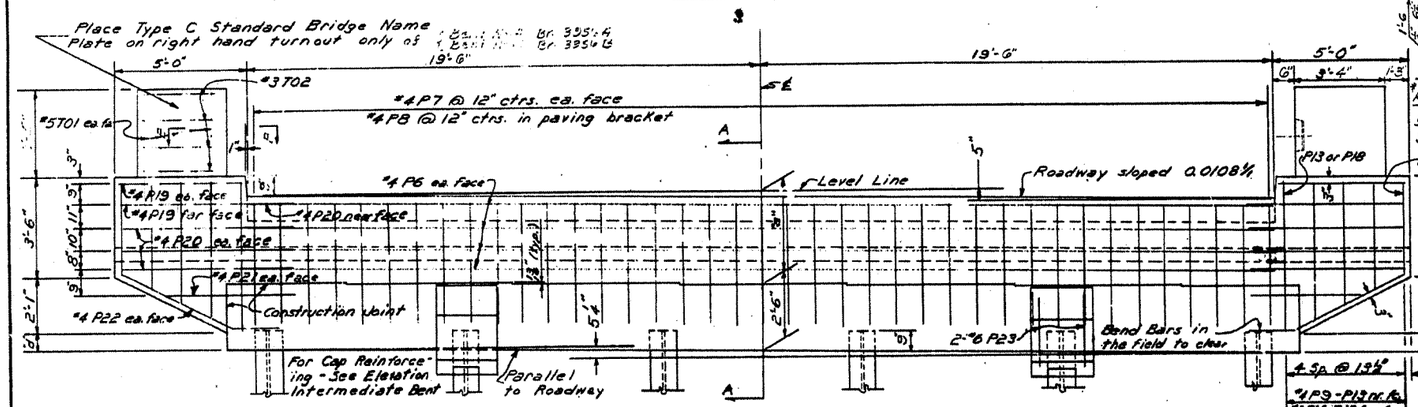

FRONT ELEVATION OF END BENT

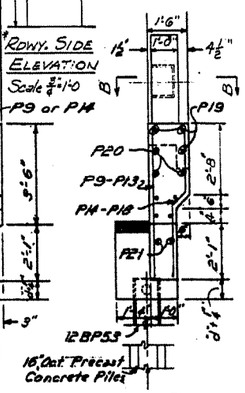

END VIEW

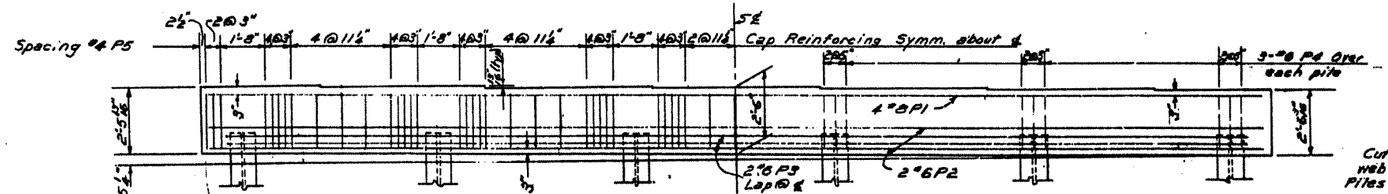

Note: Use this cap for Intermediate Bent or for End Bent when end span beams are of equal depth (regular span).

ELEVATION OF CAP W

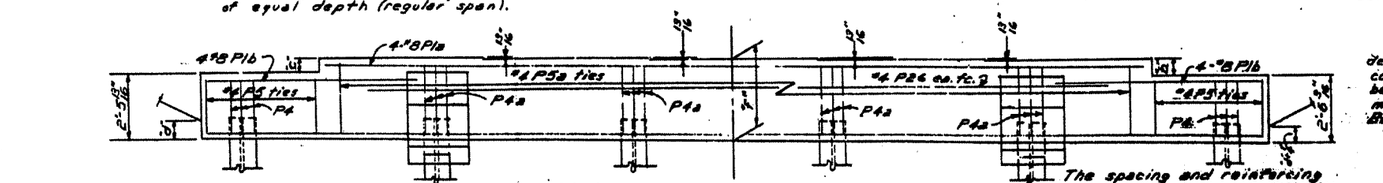

Note: Use this cap for End Bent when end span interior beams are of less depth than exterior beams (modified span).

ELEVATION OF CAP X

The spacing and reinforcing not otherwise shown is same as for Cap W.

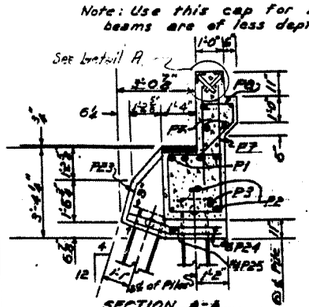

SECTION A-A

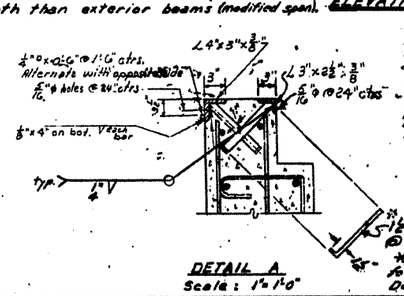

DETAIL A
Scale: 1"=1'-0"

Note: The contractor may for his convenience and at his own expense, provide as many as three splices per pile for steel bearing piling. Minimum spacing between splices shall be 5' feet.

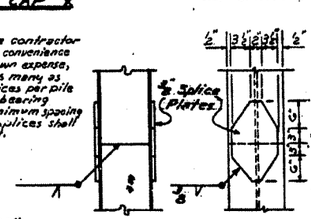

PILE SPLICE DETAIL
Scale: ¾"=1'-0"

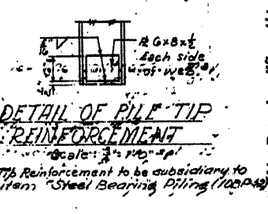

DETAIL OF PILE TIP REINFORCEMENT
Scale: ¾"=1'-0"

Pile Tip Reinforcement to be subsidiary to the item "Steel Bearing Piling (10BP42)"

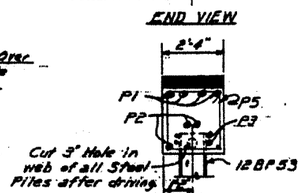

END VIEW

Note: The lengths of bracing members shall be determined in the field. Each member shall be one continuous angle and shall be welded to the steel bearing piles as shown. Angle bracing shall be measured and paid for as "Structural Steel in Beam Spans."

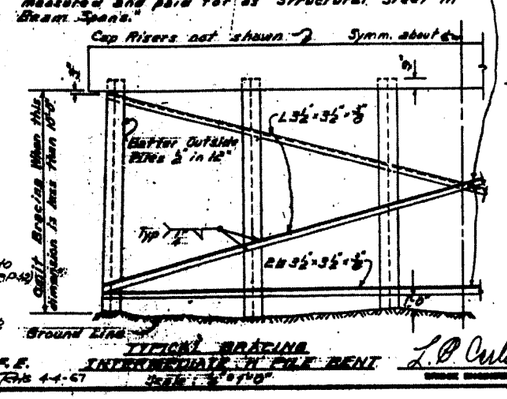

TYPICAL BRACING
INTERMEDIATE "A" PILE BENT
Scale: ¾"=1'-0"

Revised 1-8-65 JBH Ck. 8-27-65 KH Rdwy. to 33'-0", Turnout Past. & Tol. and Pile Tip Reinforcement.
* Revised 12-23-63 F.E.
# Revision Turnout past. & bar list Tots 4-4-67

TABLE OF VARIABLES

Span	Beams Interior	Beams Exterior	a	b	c	d	f	g	Span	Beams Interior	Beams Exterior	a	b	c	d	f	g
35'-37'	21WF55	21WF55	2'-5¾"	-	-	1⅜"	-	-	49'-50'	27WF84	27WF84	2'-11¼"	-	-	7⅜"	-	-
		24WF68		3¾"	2⅛"	4 1/16"	2'-8 11/16"	2"			30WF99		3¾"	2"	10 7/16"	2'-8 11/16"	2"
		27WF84		6 7/16"	5 7/16"	7⅜"	2'-11¼"	5"	49'-50'	27WF84	33WF118	2'-11¼"	6 7/16"	5 7/16"	11 7/16"	3'-0"	5"
		30WF99		9¼"	7⅞"	10 7/16"	3'-2 11/16"	8"	55'	27WF94	27WF94	2'-11¼"	-	-	7⅜"	-	-
35'-37'	21WF55	33WF118	2'-5¾"	12 9/16"	11 1/16"	1'-1⅜"	3'-5¼"	11"			30WF99		3¾"	2"	10 7/16"	2'-8 11/16"	2"
38'-41'	21WF62	21WF62	2'-5¾"	-	-	1⅜"	-	1	55'	27WF94	33WF118	2'-11¼"	6 7/16"	5 7/16"	11 7/16"	3'-0"	5"
		24WF68		3¾"	2"	4 1/16"	2'-8 11/16"	2"	60'	30WF99	30WF99	3'-2 11/16"	-	-	10 7/16"	-	-
		27WF84		6¾"	4 1/16"	7⅜"	2'-11¼"	5"	60'	30WF99	33WF118	3'-2 11/16"	3¾"	2"	11 7/16"	2'-5 11/16"	2"
		30WF99		9¾"	7⅜"	10 7/16"	3'-2 11/16"	8"	65'-70'	33WF118	33WF118	3'-5¼"	-	-	11 7/16"	-	-
38'-41'	21WF62	33WF118	2'-5¾"	12 9/16"	10 7/16"	1'-1⅜"	3'-5¼"	11"	75'	33WF130	33WF130	3'-5¼"	-	-	11 7/16"	-	-
42'-44'	24WF68	24WF68	2'-8¾"	-	-	4 1/16"	-	-									
		27WF84		3¾"	2⅛"	7⅜"	2'-8 11/16"	2"									
		30WF99		6¾"	4 1/16"	10 7/16"	2'-11¼"	5"									
42'-44'	24WF68	33WF118	2'-8¾"	9¾"	8⅛"	1'-1⅜"	3'-2 11/16"	8"									
45'-48'	24WF76	24WF76	2'-8¾"	-	-	4 1/16"	-	-									
		27WF84		3¾"	2⅛"	7⅜"	2'-8 11/16"	2"									
		30WF99		6¾"	4 1/16"	10 7/16"	2'-11¼"	5"									
45'-48'	24WF76	33WF118	2'-8¾"	9¾"	8⅛"	1'-1⅜"	3'-2 11/16"	8"									

BAR LIST

Mark	Size	No. Per Bent End Cap W	No. Per Bent End Cap X	No. Per Bent Int. Cap W	Length	A	B	Pin Dia.
P1	#8	4	-	4	39'-10"			Str.
P1a	#8	-	4	-	30'-11"			
P1b	#8	-	8	-	7'-10"			
P2	#6	4	4	4	39'-10"			Str.
P3	#6	4	4	4	43'-0"	20'-9"	1'-7"	2¼"
P4	#6	18	6	18	6'-1"	2'-7¼"	1'-11¾"	2¼"
△ P4a	#6	-	12	-	6'1"+2¾"	2'-7¼"+¾"	1'-11¾"	2¼"
P5	#4	71	18	71	8'-9"	1'-11¾"	2'-1¼"	1¼"
△ P5a		-	53	-	8'-9"+2¾"	1'-11¾"	2'-1¼"+¾"	1¼"
P6		8	8	-	38'-8"			Str.
P7		78	78	-	2'+1'-7"			Str.
P8		39	39	-	4'-0"	-	-	1¼"
P9 to P12		2 each	2 each	-	Var. 3'-3" to 4'-11½"			Str.
P13		2	2	-	5'-5"			Str.
P14 to P17		2 each	2 each	-	Var. 3'-5¾" to 5'-1⅜"	Var. 0'-4" to 2'-0¼"	2'-5"	1¼"
P18		2	2	-	5'-7¼"	2'-6"	2'-8"	1¼"
P19		6	6	-	4'-8"			Str.
P20		14	14	-	6'-6"			
P21		4	4	-	3'-0"			Str.
P22	#4	4	4	-	6'-3"	-	-	1¼"
P23	#6	4	4	-	8'-0"	-	-	2¼"
P24	#6	4	4	-	11'-4"	-	-	2¼"
P25	#4	2	2	-	4'-11"	0'-5"	1'-9"	1¼"
P26	#4	-	2	-	2'-6"			Str.
T01	#5	20	20	-	4'-0"			Str.
* T02	#3	8	8	-	7'-5"	2'-9"	0'-9"	1¼"

Bending Diagram. Dimensions are ctr. to ctr. of bars

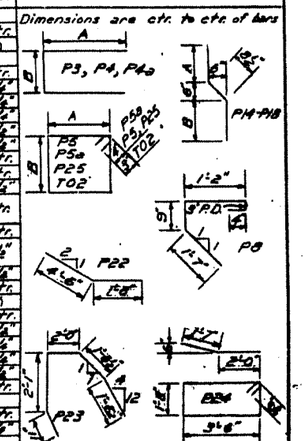

△ For value of 'g' see Table of Variable Dimensions

GENERAL NOTES

All Concrete to be Class S. All exposed corners to be chamfered ¾" unless otherwise noted.
Reinforcing Steel shall be deformed bars of intermediate or hard grade.
All piling shall be driven to a minimum capacity of 50 tons per pile. Piling shall be either 10BP42, 18" Oct. Precast Concrete Piles, or Concrete Filled Metal Shell Piles as shown on the Layout.
All structural steel except Steel Piles shall be ASTM A-36.

Note: Intermediate Bents not to be used for Spans greater than 55'

FOR INFORMATION ONLY

DETAILS OF STANDARD PILE BENTS
FOR 35' TO 75' COMPOSITE I-BEAM SPANS
39'-0" CLEAR ROADWAY — 0'-9" CURBS
ROADWAY SLOPED 0.0108 ft
INT. ROUTE 540 SEC. 1

ARKANSAS STATE HIGHWAY COMMISSION
LITTLE ROCK, ARK.

DRAWN BY JAS DATE 9-12-63
TRACED BY DATE
CHECKED BY DV DATE 9-17-63
SCALE ¾" or as noted

L. B. Carlson
BRIDGE ENGINEER

BRIDGE NO. A&B3956 DRAWING NO. 48617B

DATE REVISED	DATE FILMED	DATE REVISED	DATE FILMED	FED. ROAD DIST. NO.	STATE	FED. AID PROJ. NO.	SHEET NO.	TOTAL SHEETS
				6	ARK.			
				JOB NO.		BB0407	345	464

(1) SEE TABLE OVERHEAD SIGNS 48618

Note: For "VIEW A-A", see Dwg. No. 48619.

Note: For "DETAIL A" thru "DETAIL H", see Dwg. No. 48620.

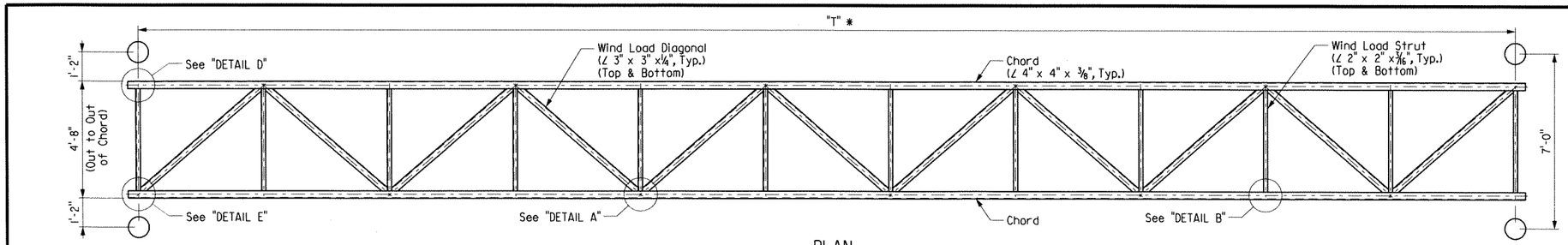

PLAN

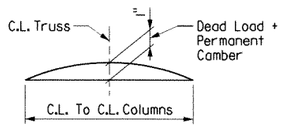

TRUSS CAMBER DETAIL

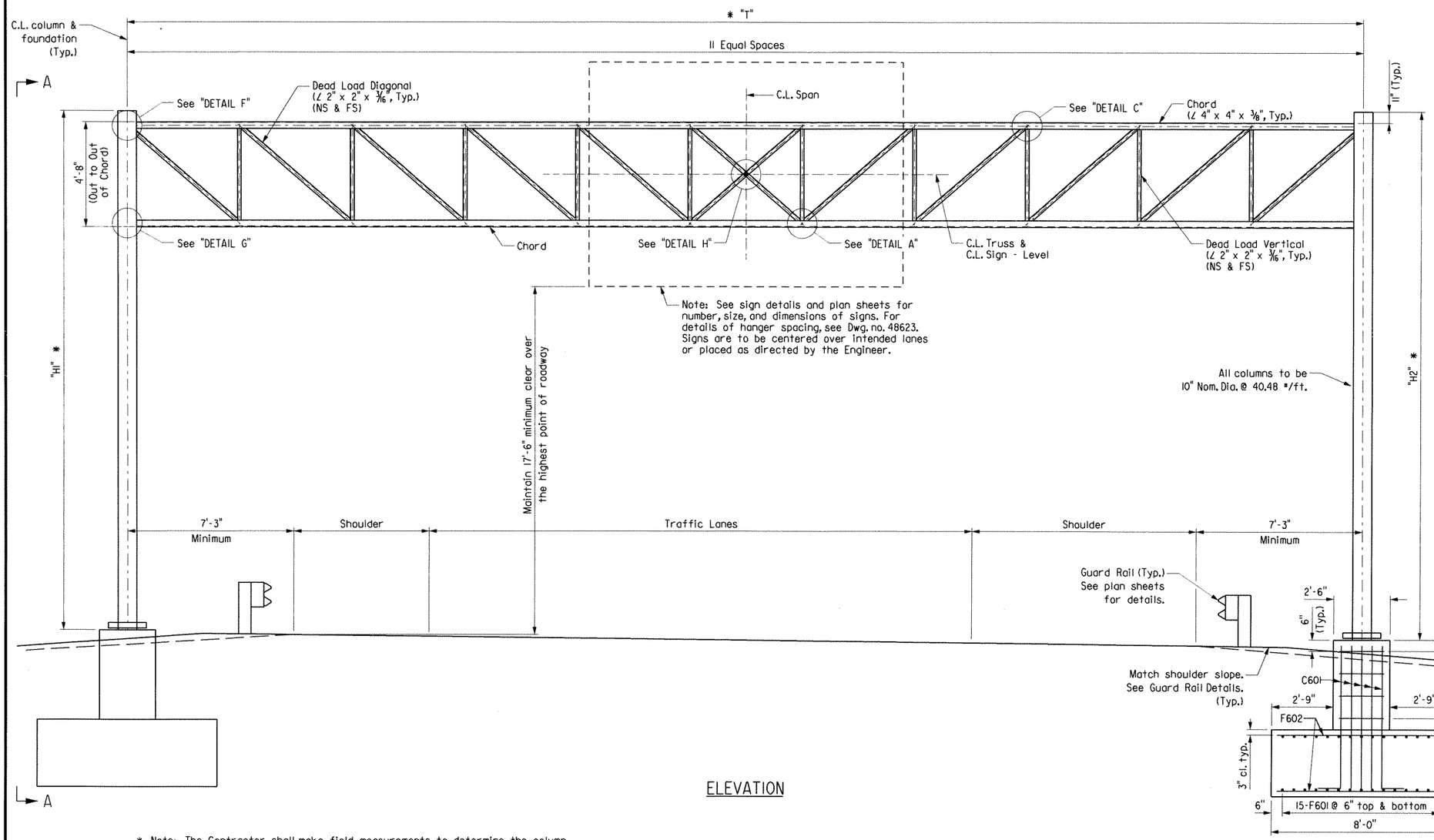

ELEVATION

TABLE

STRUCTURE NUMBER	* "T" (Min.)
OH-540-17-02	52'-11"
OH-540-17-11	54'-6"

APPROXIMATE QUANTITIES (FOR INFORMATION ONLY)

STRUCTURE NUMBER	CLASS S CONCRETE (cu. yd.)	REINFORCING STEEL (pounds)	EXCAVATION (cu. yd.)
EACH STRUCTURE	35.85	4,040	109

* Note: The Contractor shall make field measurements to determine the column heights "H1" & "H2" that are required to maintain the minimum vertical clearance with the C.L. of the sign located at the C.L. of the truss. These column heights shall be shown on the shop drawings with a note stating that the contractor has made the required field measurements. If the structure height ("H1" or "H2") exceeds 30'-0" contact the Engineer. The Contractor shall also verify that the variable "T" is sufficient to meet the minimum clearances and to fit the new structure to the existing and/or proposed conditions.

STATE OF ARKANSAS REGISTERED PROFESSIONAL ENGINEER No. 13570 CARTER D. BEAM 5/11/12

BRIDGE ENGINEER

SHEET 1 OF 6
DETAILS FOR 46' TO 55'
OVERHEAD SIGN STRUCTURES

ROUTE 540 SEC. 2

ARKANSAS STATE HIGHWAY COMMISSION

LITTLE ROCK, ARK.

DRAWN BY: DLM DATE: 6-12 FILENAME: S0100607X1_SL11.dgn
CHECKED BY: BEG DATE: 7-12 SCALE: Not to Scale
DESIGNED BY: CDB DATE: 6-12

STRUCTURE NO. SEE TABLE DRAWING NO. 48618

DATE REVISED	DATE FILMED	DATE REVISED	DATE FILMED	FED. ROAD DIST. NO.	STATE	FED. AID PROJ. NO.	SHEET NO.	TOTAL SHEETS
				6	ARK.			
				JOB NO.		BB0407	346	464
				1	SEE TABLE OVERHEAD SIGNS			48619

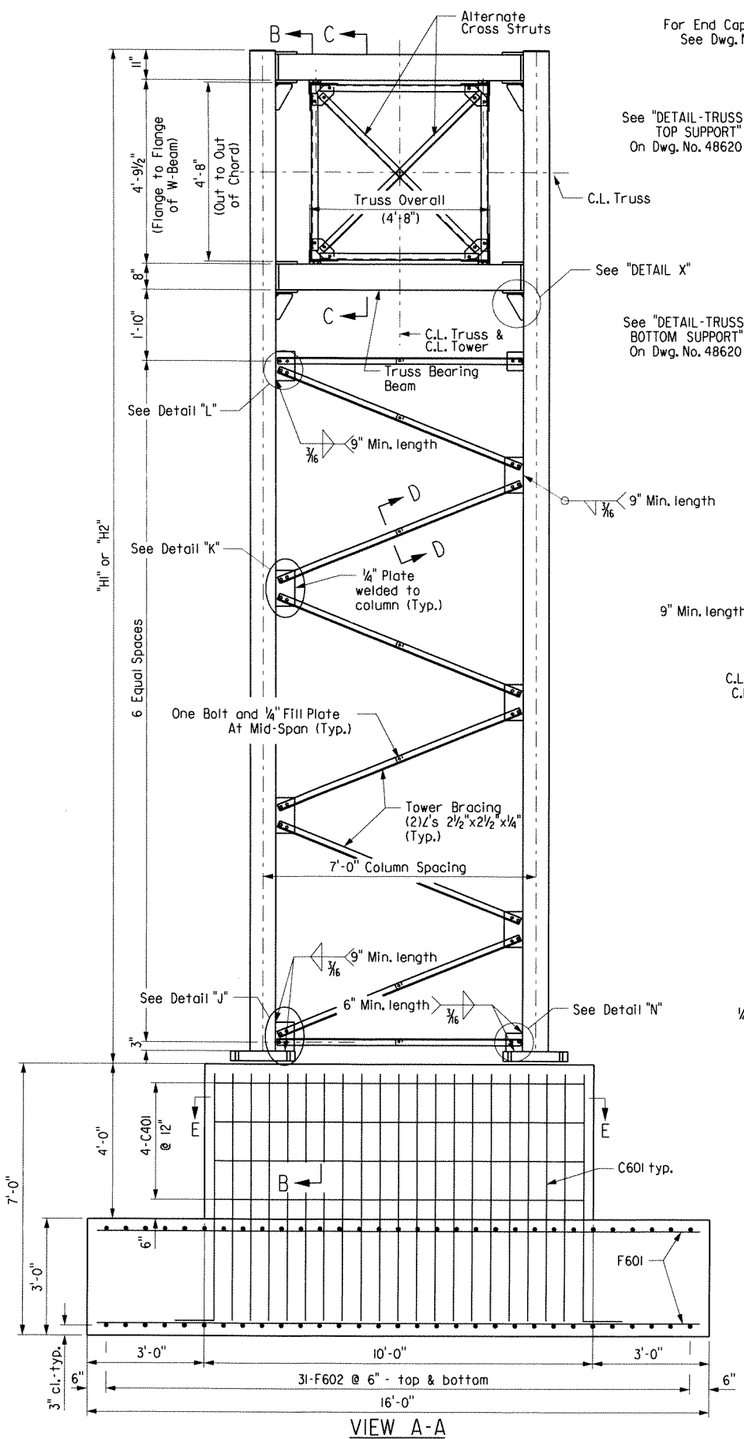

VIEW A-A

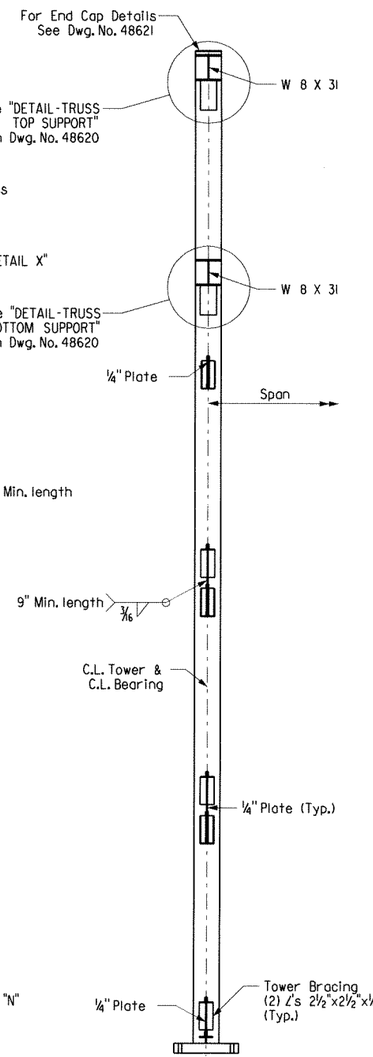

SECTION B-B

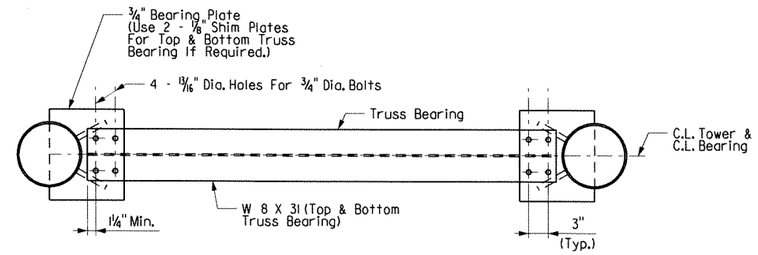

PLAN AT TRUSS BEARING

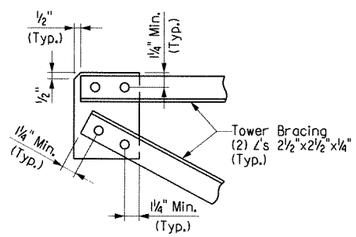

DETAIL "L" [1]

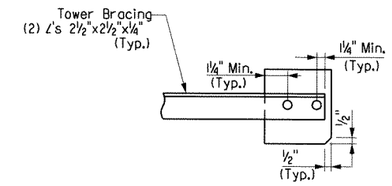

DETAIL "N" [1]

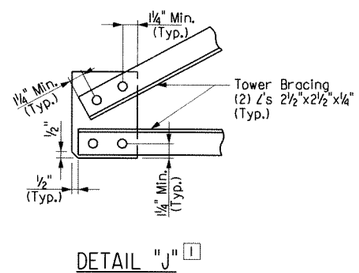

DETAIL "J" [1]

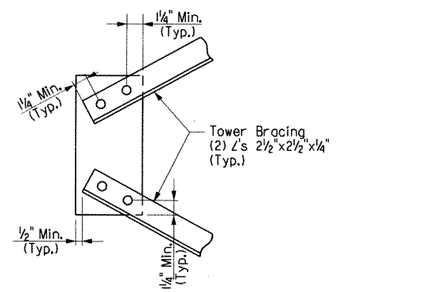

DETAIL "K" [1]

[1] Bolts shall be ¾" Dia. and open holes shall be 13/16". Minimum center to center bolt spacing shall be 2½".

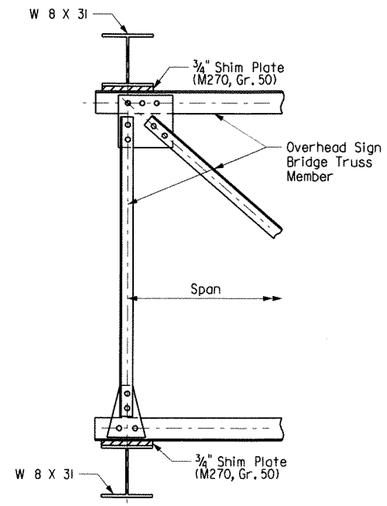

SECTION C-C

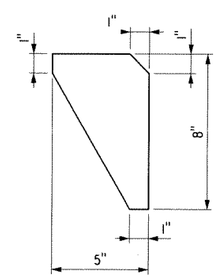

DETAIL "X"

BAR LIST - PER STRUCTURE

Bending Diagrams
(Dimensions are out to out of bars.)

Mark	No. Req'd.	Length	Pin Dia.
C401	16	16'-6"	3"
C601	96	7'-5"	4½"
F601	60	15'-6"	Str.
F602	124	7'-6"	Str.

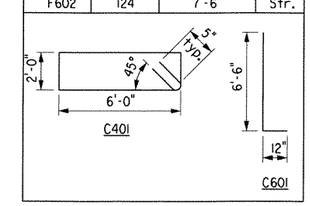

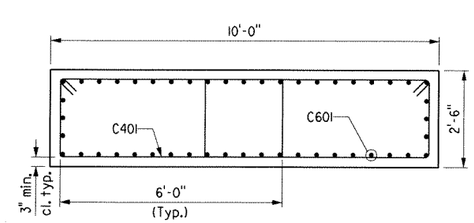

SECTION E-E

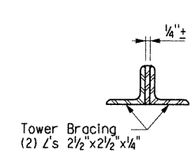

SECTION D-D

STATE OF ARKANSAS REGISTERED PROFESSIONAL ENGINEER No. 13570 CARTER D. BEGLEY

BRIDGE ENGINEER

SHEET 2 OF 6
DETAILS FOR 46' TO 55'
OVERHEAD SIGN STRUCTURES

ROUTE 540 SEC. 2

ARKANSAS STATE HIGHWAY COMMISSION

LITTLE ROCK, ARK.

DRAWN BY: DLM DATE: 6-12 FILENAME: S0100607X1_SD11.dgn
CHECKED BY: BEG DATE: 7-12 SCALE: Not to Scale
DESIGNED BY: CDB DATE: 6-12

STRUCTURE NO. SEE TABLE DRAWING NO. 48619

DATE REVISED	DATE FILMED	DATE REVISED	DATE FILMED	FED. ROAD DIST. NO.	STATE	FED. AID PROJ. NO.	SHEET NO.	TOTAL SHEETS
				6	ARK.			
				JOB NO.		BB0407	347	464
				(1) SEE TABLE OVERHEAD SIGNS				48620

[1] Slotted hole in Gusset Plate and Chord Angle 11/16" x 2". Use Plate Washer on Gusset Plate side. 11/16" diameter hole in 3/4" Shim Plate and Beam Flange.

Note: All Gusset plates shall be 3/8" thick.

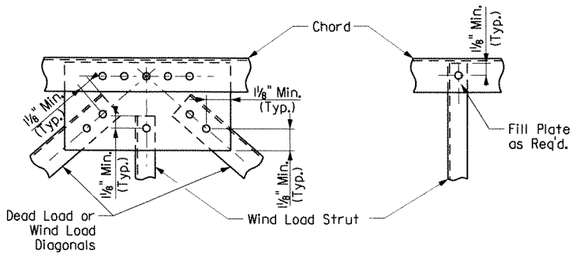

DETAIL A

DETAIL B

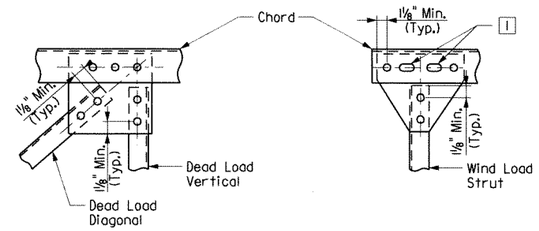

DETAIL C

DETAIL D

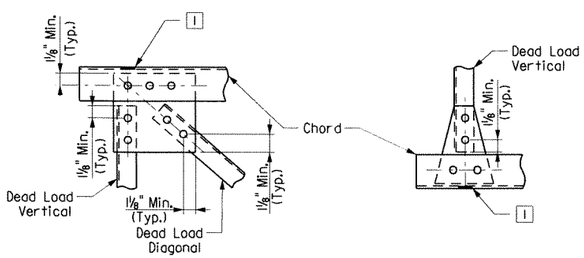

DETAIL F

DETAIL G

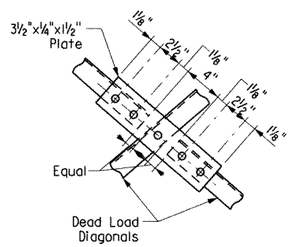

DETAIL H

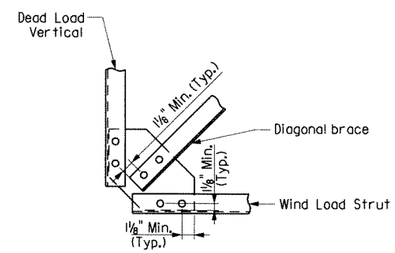

DETAIL M

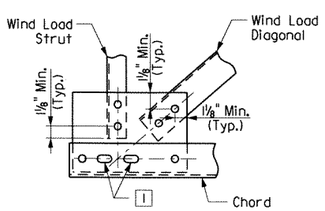

DETAIL E

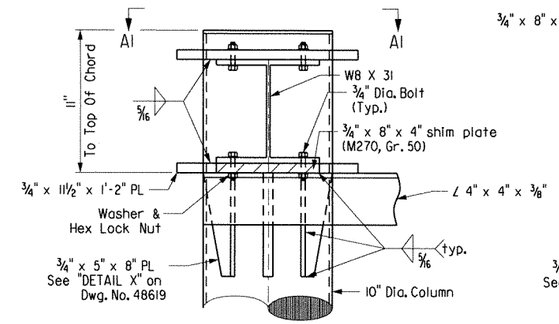

DETAIL - TRUSS TOP SUPPORT

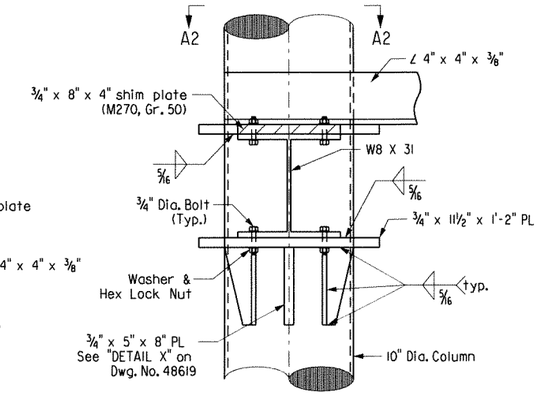

DETAIL - TRUSS BOTTOM SUPPORT

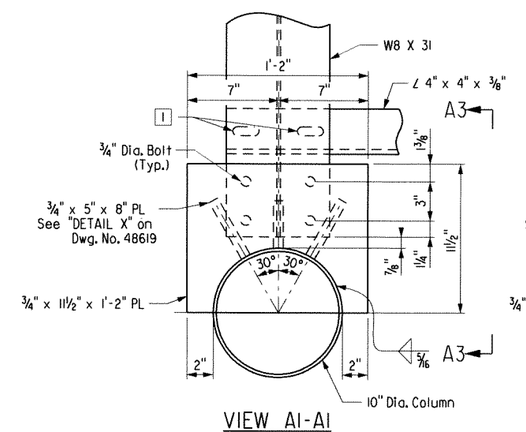

VIEW A1-A1

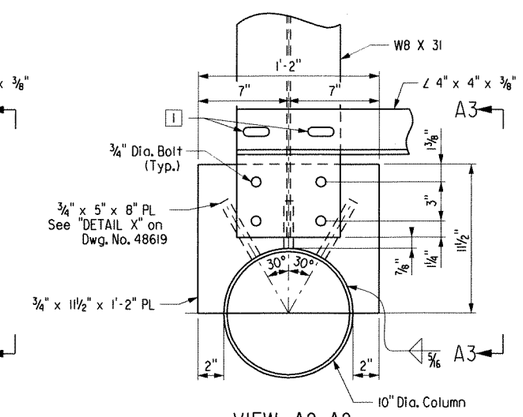

VIEW A2-A2

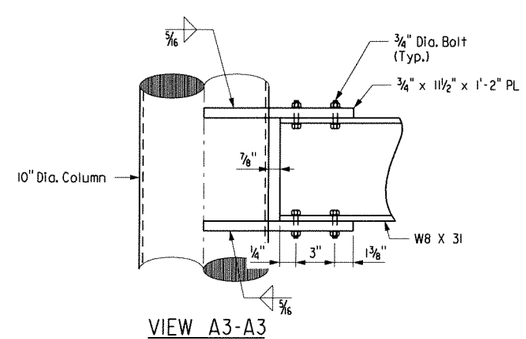

VIEW A3-A3

Note: 3/4" x 5" x 8" Plate Not Shown For Clarity.

STATE OF ARKANSAS REGISTERED PROFESSIONAL ENGINEER No. 13576 CARTER D. BEAL

BRIDGE ENGINEER

SHEET 3 OF 6
DETAILS FOR 46' TO 55'
OVERHEAD SIGN STRUCTURES

ROUTE 540 SEC. 2

ARKANSAS STATE HIGHWAY COMMISSION

LITTLE ROCK, ARK.

DRAWN BY: DLM DATE: 6-12
CHECKED BY: BEG DATE: 7-12
DESIGNED BY: CDB DATE: 6-12

FILENAME: S0100607X1_SD12.dgn
SCALE: Not to Scale

STRUCTURE NO. SEE TABLE DRAWING NO. 48620

DATE REVISED	DATE FILMED	DATE REVISED	DATE FILMED	FED. ROAD DIST. NO.	STATE	FED. AID PROJ. NO.	SHEET NO.	TOTAL SHEETS
				6	ARK.			
				JOB NO.		BB0407	348	464
				(1) SEE TABLE OVERHEAD SIGNS				48621

Note: For "DETAIL M" see Dwg. No. 48620.

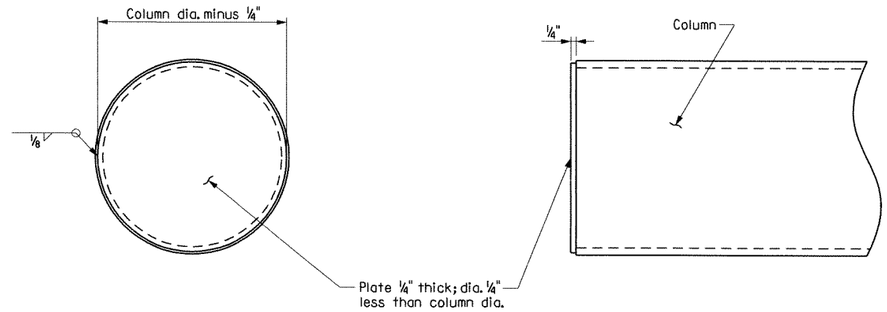

END CAP DETAILS

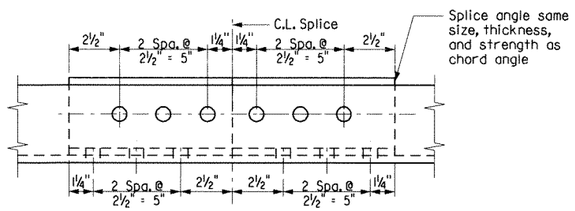

OPTIONAL CHORD SPLICE USING ANGLES [1]

(Place splice angle on inside of truss)
(4" ∠ Shown)

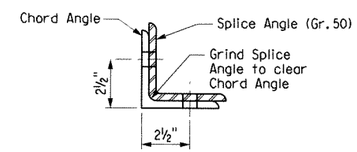

SECTION ON C.L. SPLICE

(4" ∠ Shown)

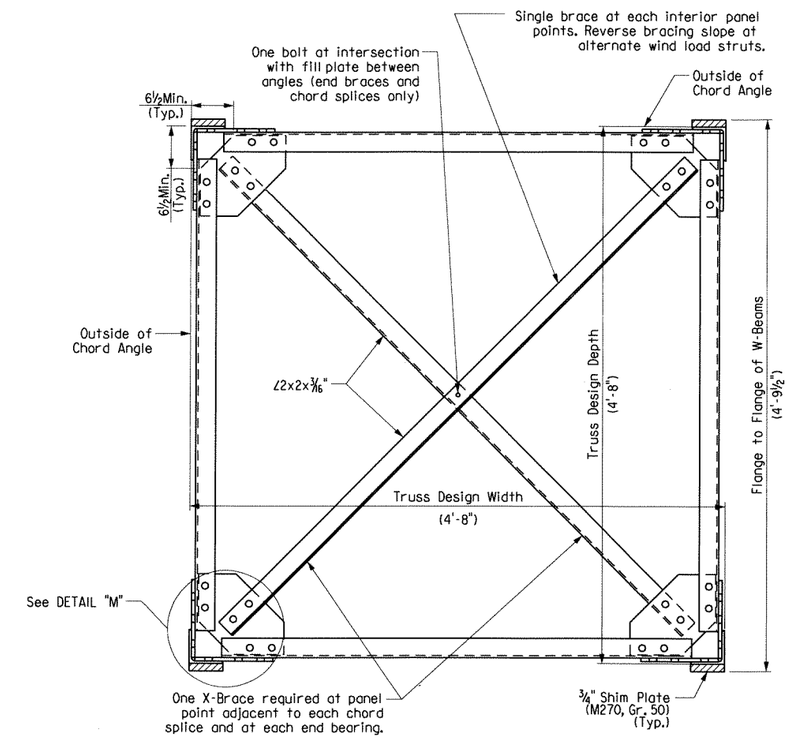

TRUSS SECTION

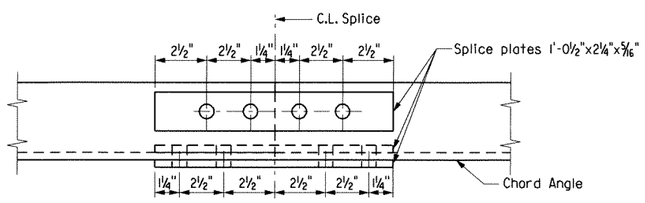

CHORD SPLICE USING PLATES [1]

(4" ∠ Shown)

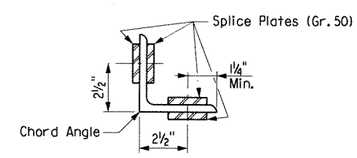

SECTION ON C.L. SPLICE

(4" ∠ Shown)

[1] Bolts shall be 3/4" Dia. and open holes shall be 13/16". Minimum center to center bolt spacing shall be 2 1/2".

SPLICE DETAILS

Note: Chord angles may be spliced in convenient lengths for galvanizing and sign placement.

STATE OF ARKANSAS REGISTERED PROFESSIONAL ENGINEER No. 13570 CARTER D. BEARDEN 8/24/12

BRIDGE ENGINEER

SHEET 4 OF 6
DETAILS FOR 46' TO 55'
OVERHEAD SIGN STRUCTURES

ROUTE 540 SEC. 2

ARKANSAS STATE HIGHWAY COMMISSION

LITTLE ROCK, ARK.

DRAWN BY: DLM DATE: 6-12
CHECKED BY: BEG DATE: 7-12
DESIGNED BY: CDB DATE: 6-12
FILENAME: S0100607X1_SD13.dgn
SCALE: Not to Scale

STRUCTURE NO. SEE TABLE DRAWING NO. 48621

DATE REVISED	DATE FILMED	DATE REVISED	DATE FILMED	FED. ROAD DIST. NO.	STATE	FED. AID PROJ. NO.	SHEET NO.	TOTAL SHEETS
				6	ARK.			
				JOB NO.		BB0407	349	464
				① SEE TABLE OVERHEAD SIGNS				48622

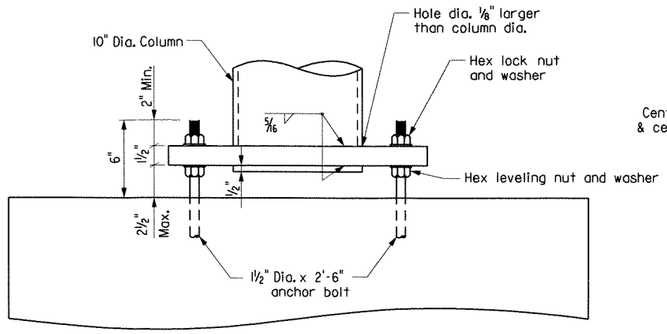

ELEVATION - COLUMN BASE

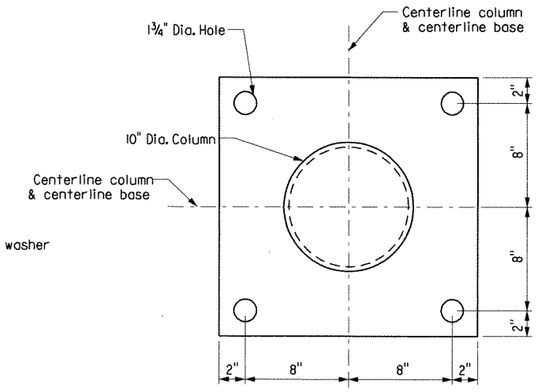

PLAN - COLUMN BASE

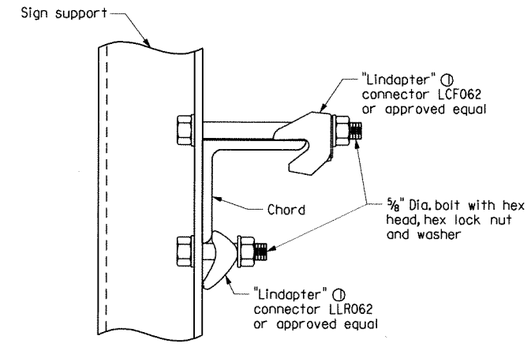

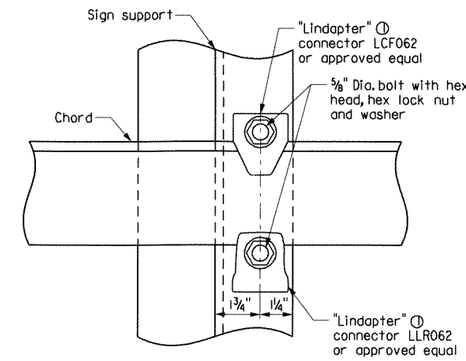

TOP CHORD

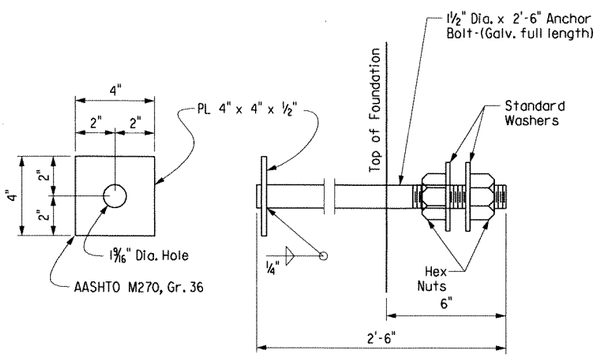

Anchor bolts shall comply with AASHTO M314, Grade 55, with Supplementary Requirement S1, and galvanized according to Section 807.07. Nuts and washers for bolts shall be as specified in Section 807.07.

ANCHOR BOLT DETAIL

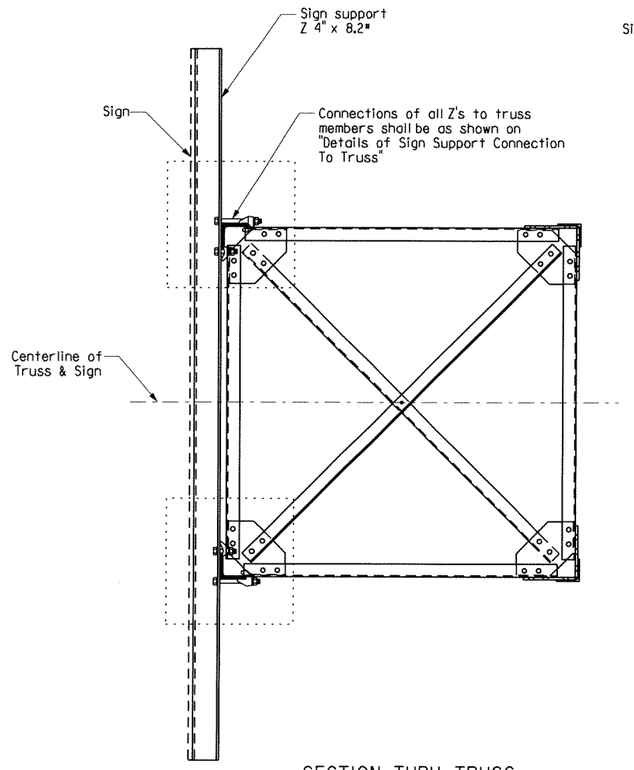

SECTION THRU TRUSS

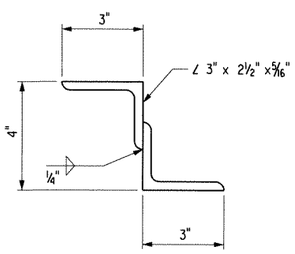

NOTE: Structural Z support may be fabricated from angles as shown.

DETAIL OF ALTERNATE Z SUPPORT

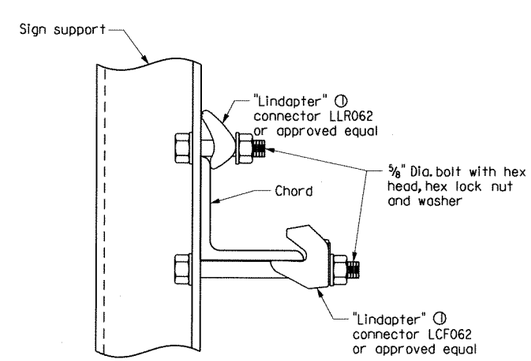

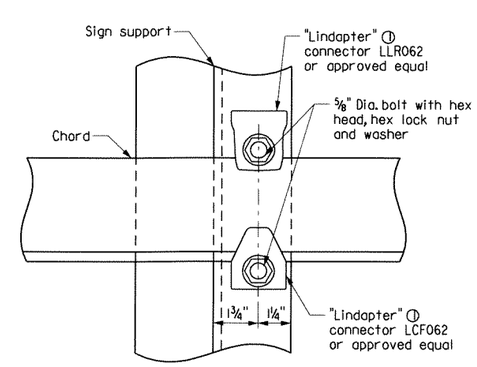

① Note: All "Lindapter" connectors or approved equal shall be installed according to manufacturer's recomendations. All connectors, bolts, nuts, and washers shall be galvanized.

BOTTOM CHORD

NOTE:
Install all support connectors clear of the gusset plates and splice locations.

DETAIL OF SIGN SUPPORT CONNECTION TO TRUSS

STATE OF ARKANSAS REGISTERED STRUCTURAL ENGINEER No. 13570 CARTER D. BEGG

BRIDGE ENGINEER

SHEET 5 OF 6
DETAILS FOR 46' TO 55'
OVERHEAD SIGN STRUCTURES

ROUTE 540 SEC. 2

ARKANSAS STATE HIGHWAY COMMISSION

LITTLE ROCK, ARK.

DRAWN BY: DLM DATE: 6-12
CHECKED BY: BEG DATE: 7-12
DESIGNED BY: CDB DATE: 6-12

FILENAME: S01006071_SD14.dgn
SCALE: Not to Scale

STRUCTURE NO. SEE TABLE DRAWING NO. 48622

DATE REVISED	DATE FILMED	DATE REVISED	DATE FILMED	FED. ROAD DIST. NO.	STATE	FED. AID PROJ. NO.	SHEET NO.	TOTAL SHEETS
				6	ARK.			
				JOB NO.		BB0407	350	464
				(1) SEE TABLE OVERHEAD SIGNS				48623

GENERAL NOTES

CONSTRUCTION SPECIFICATIONS:

Arkansas State Highway and Transportation Department Standard Specifications for Highway Construction, 2003 edition, with applicable supplemental specifications and special provisions. Section and Subsection refer to the Standard Construction Specifications unless otherwise noted in the plans.

DESIGN SPECIFICATIONS:

Standard Specifications for Structural Supports for Highway Signs, Luminaries and Traffic Signals, AASHTO 2009 (Fifth Edition).

Basic Wind Speed = 90 m.p.h.

This structure is approved for a sign area equivalent to 65% of the span at 15' tall. Use of additional sign area must be approved by the Engineer.

If the structure height ('H1' or 'H2') exceeds 30'-0" contact the Engineer.

FOUNDATION MATERIALS AND STRENGTHS:

Class S Concrete ..... f'c = 3,500psi
Reinforcing Steel (AASHTO M31 or M53, Grade 60) ..... fy = 60,000 psi

Structural steel sign support members shall comply with the following specifications:

Angles: ..... AASHTO M270, Gr. 36 (Fy = 36,000 psi).
Plate: ..... AASHTO M270, Gr. 50 (Fy = 50,000 psi).
[1] Pipe: ..... ASTM A139 Gr. C, straight-seam welded (Fy=42,000psi),
ASTM A500 Gr. B (Fy = 42,000 psi),
ASTM A501 Gr. B (Fy = 50,000 psi),
ASTM A714 Class 2, Gr. II, Type E or S (Fy = 50,000 psi)
Z-Shapes: ..... AASHTO M270, Gr. 36 (Fy = 36,000 psi).
Shim Plates: ..... ASTM A1011, SS, Gr. 36, Type 2, or Grade 40.
Bolts: ..... AASHTO M164, Type 1.
Locknuts - Approved Type: ..... Meeting or exceeding AASHTO M292
Washers: ..... AASHTO M293
Nuts: ..... AASHTO M291 or M292, Gr. 2H or Gr. DH (Gr. 10S)

All steel shall be Galvanized according to section 807.19. Steel completely encased in concrete may not be Galvanized.

Drawings show general features of design only. Shop drawings shall be made in accordance with section 807.04, submitted, and approval secured before fabrication is begun.

No circumferential butt welds will be allowed in any pipe sections.

Requests for substitution of structural steel shapes shown with shapes of greater size must be submitted by the Contractor to the Engineer for approval. Steels of equal or greater strengths will be accepted only when shown on the approved shop drawings. Shapes and materials shown in the plans will be the basis of payment and no additional compensation will be made for any adjustments due to substitutions.

Connections shall be bolted with high-strength bolts. Unless noted otherwise, bolts shall be 5/8" diameter and open holes shall be 11/16". Bolt spacing shall be 2 1/4" for 5/8" diameter bolts unless otherwise noted. Bolts shall be placed with heads on the outside face of all members.

All welding that is to be done during fabrication of structural steel, including temporary welds, shall be detailed on the shop drawings and submitted for approval. If additional welds are required, whether temporary or permanent, a formal request with detailed drawings shall be submitted to the Engineer for approval. All welding shall conform to subsection 807.26.

Anchor bolts shall comply with AASHTO M314, Grade 55, with Supplementary Requirement S1, and galvanized according to Section 807.07. Nuts and washers for anchor bolts shall be furnished and galvanized in accordance with subsection 807.07.

All truss frame bolts shall comply with AASHTO M164 Type 1, galvanized according to Subsection 807.06. Nuts and washers for AASHTO M164 Type 1 bolts shall be furnished and galvanized in accordance with subsection 807.06.

Field splices shall be located in order to avoid sign panel connections. There shall be a maximum of two field splices and they shall be spaced a minimum of 15 ft. apart.

All main load carrying tension members greater than 1/2" in thickness shall conform to the requirements of the Longitudinal Charpy V-notch test specified for Zone 1 minimum service temperature. This work and materials shall be paid for in accordance with Special Provision Job BB0407 "STEEL OVERHEAD, CANTILEVER, AND BRIDGE MOUNTED SIGN STRUCTURES".

All fillet welds of critical members shall be tested according to AWS D1.1 Structural Welding Code - Steel, using the magnetic particle method. Critical welds shall include: column to base plate welds and truss bottom support to column.

Truss field sections shall be shop assembled. Entire truss shall be fully assembled and lifted into place as one unit on to tower supports. All truss member connections shall be bolted connections.

Locknuts to be equipped with nylon locking inserts or other approved type locking system. Locknuts to be installed according to manufacturer's recommendations.

Shoring may be required to protect existing shoulders during excavation. Any shoring required shall not be paid for directly, but shall be considered incidental to the item "Steel Overhead Sign Structure". The excavations for the footings shall be back-filled before the structure is attached to the foundations.

Galvanized coating damaged during transport, handling, or erection shall be field repaired in accordance with section 807.88.

The contractor shall make check measurements in the field and make any adjustments necessary to meet the required clearances and to fit the new structures to the existing conditions.

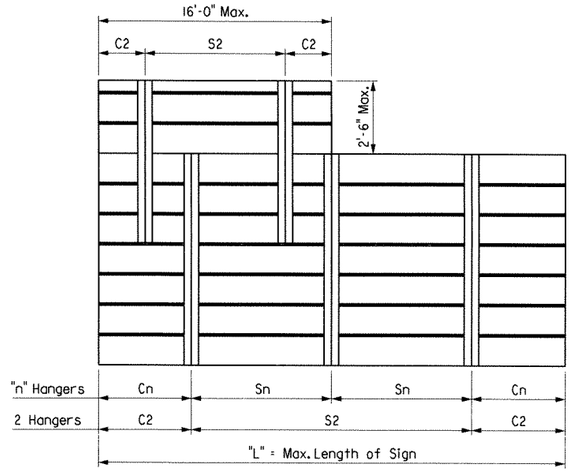

Note: See sign details and plan sheets for number, size and dimensions of signs.

Max. Length of Sign = "L"	"n" Hangers	Cantilever Length "Cn"	Hanger Spacing "Sn"
15'-0"	2 Hangers	0.21 x "L"	0.58 x "L"
30'-0"	3 Hangers	0.145 x "L"	0.355 x "L"
45'-0"	4 Hangers	0.107 x "L"	0.262 x "L"

Note: Hanger spacing and cantilever length shall be rounded to the nearest inch.

HANGER SPACING DETAILS FOR EXTRUDED PANEL SIGNS

[1] In addition to material requirements, all pipe used for welded applications shall have a maximum carbon equivalency (CE) of 0.4 using the following equation:
CE = %C + %Mn/6 + %Cu/40 + %Ni/20 + %Cr/10 - %Mo/50 - %V/10

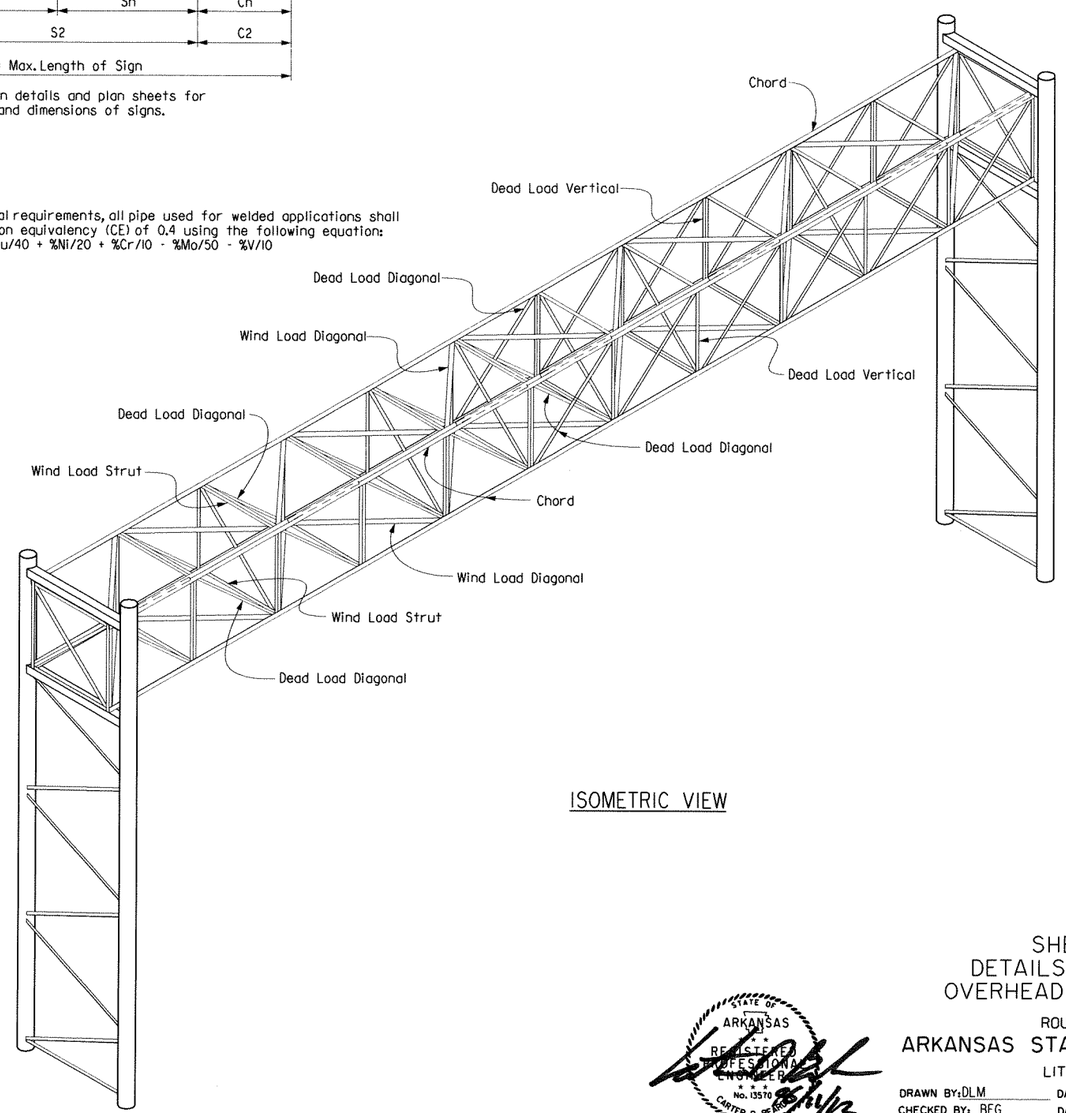

ISOMETRIC VIEW

STATE OF ARKANSAS REGISTERED PROFESSIONAL ENGINEER No. 13570 CARTER D. BERRY 7/12

BRIDGE ENGINEER

SHEET 6 OF 6
DETAILS FOR 46' TO 55'
OVERHEAD SIGN STRUCTURES

ROUTE 540 SEC. 2

ARKANSAS STATE HIGHWAY COMMISSION

LITTLE ROCK, ARK.

DRAWN BY: DLM DATE: 6-12 FILENAME: S0100607X1_SD15.dgn
CHECKED BY: BEG DATE: 7-12 SCALE: Not to Scale
DESIGNED BY: CDB DATE: 6-12

STRUCTURE NO. SEE TABLE DRAWING NO. 48623

DATE REVISED	DATE FILMED	DATE REVISED	DATE FILMED	FED. ROAD DIST. NO.	STATE	FED. AID PROJ. NO.	SHEET NO.	TOTAL SHEETS
				6	ARK.			
				JOB NO.		BB0407	351	464
				(1) SEE TABLE OVERHEAD SIGNS				48624

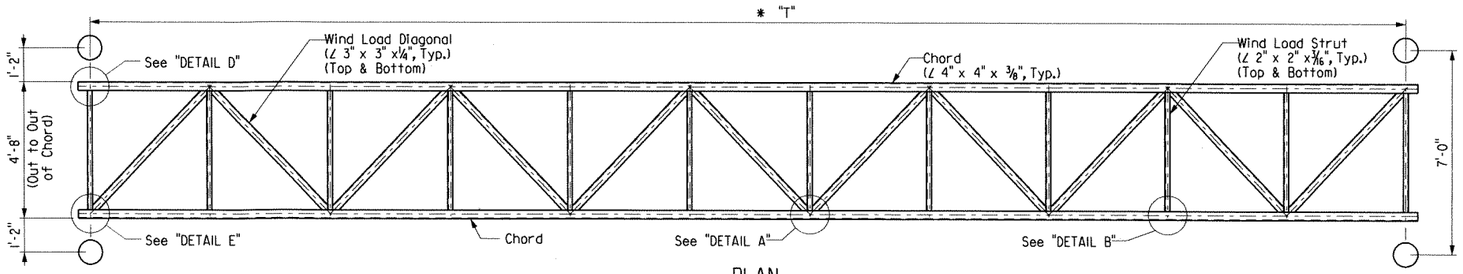

PLAN

TABLE

STRUCTURE NUMBER	* "T" (Min.)
OH-540-17-06	53'-3"

Note: For "VIEW A-A", see Dwg. No. 48625.

Note: For "DETAIL A" thru "DETAIL H", see Dwg. No. 48626.

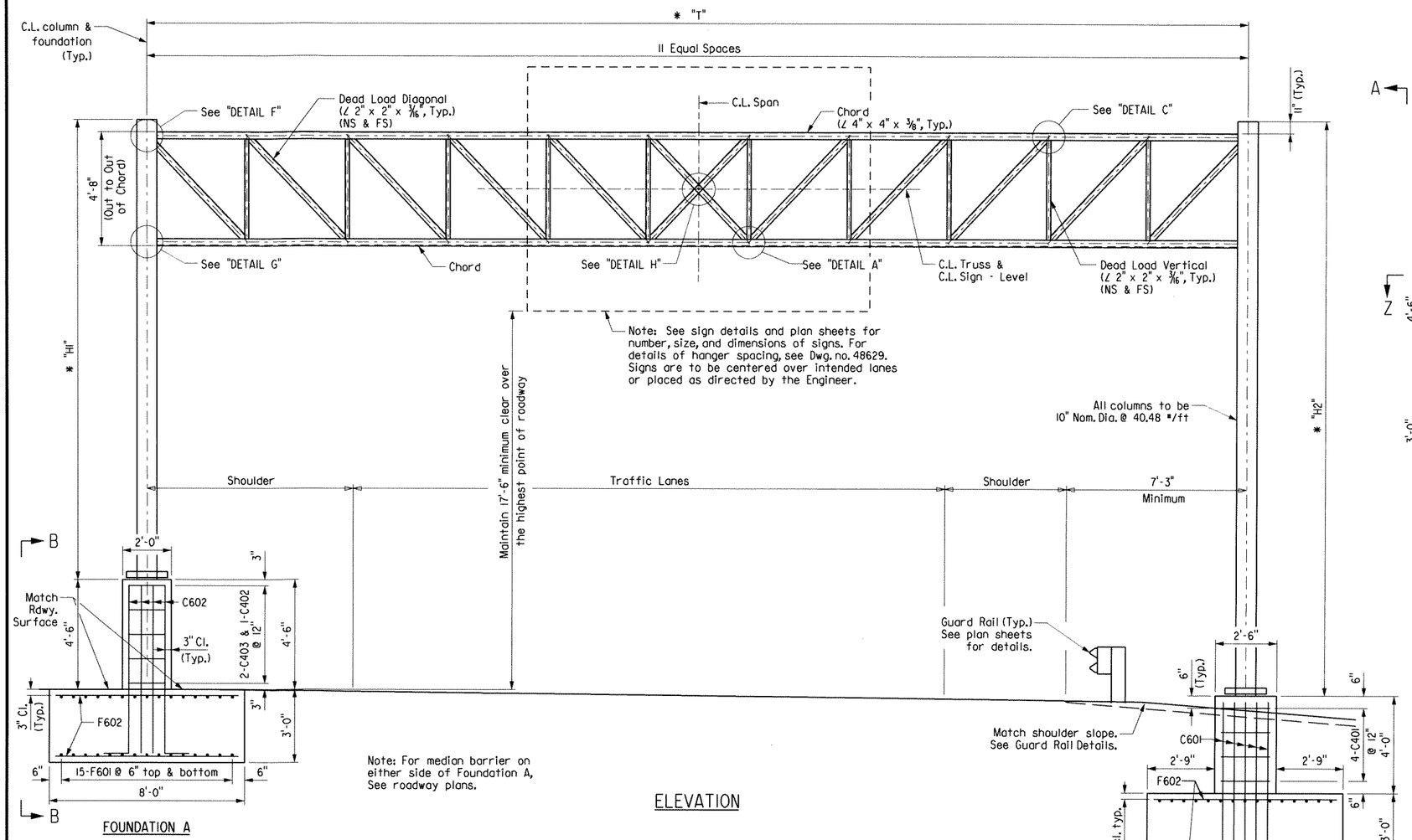

FOUNDATION A

Note: For median barrier on either side of Foundation A, See roadway plans.

ELEVATION

FOUNDATION B

APPROXIMATE QUANTITIES (FOR INFORMATION ONLY)

FOUNDATION	STRUCTURE NUMBER	CLASS S CONCRETE (cu. yd.)	REINFORCING STEEL (pounds)	EXCAVATION (cu. yd.)
A	EACH STRUCTURE	19.55	2,388	--
B	EACH STRUCTURE	17.93	2,020	55

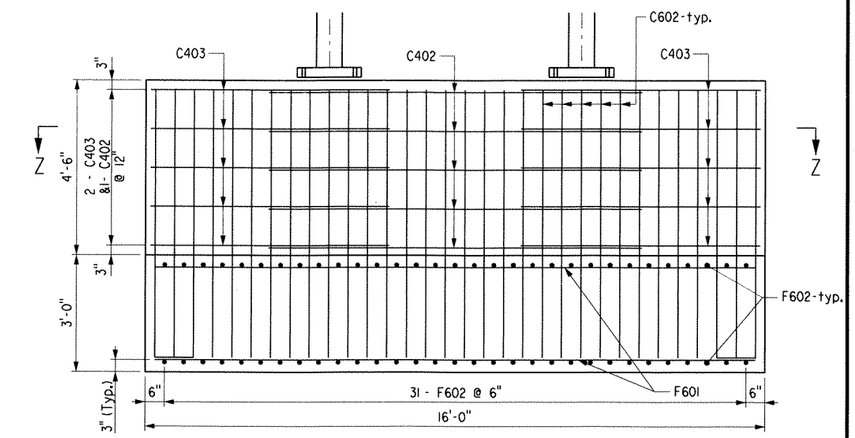

VIEW B-B

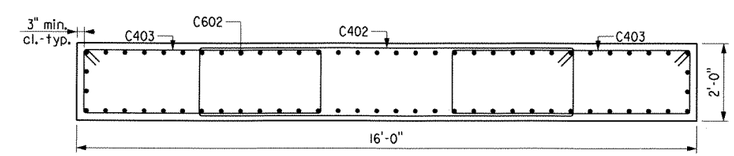

SECTION Z-Z

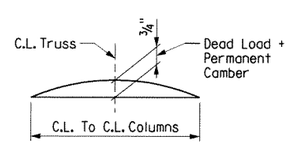

TRUSS CAMBER DETAIL

* Note: The Contractor shall make field measurements to determine the column heights "H1" & "H2" that are required to maintain the minimum vertical clearance with the C.L. of the sign located at the C.L. of the truss. These column heights shall be shown on the shop drawings with a note stating that the contractor has made the required field measurements. If the structure height ("H1" or "H2") exceeds 30'-0" contact the Engineer. The Contractor shall also verify that the variable "T" is sufficient to meet the minimum clearances and to fit the new structure to the existing and/or proposed conditions.

STATE OF ARKANSAS REGISTERED PROFESSIONAL ENGINEER No. 13570 CARTER D. BEGLEY

BRIDGE ENGINEER

SHEET 1 OF 6
DETAILS FOR 46' TO 55'
OVERHEAD SIGN STRUCTURES
WITH MEDIAN FOUNDATION

ROUTE 540 SEC. 2

ARKANSAS STATE HIGHWAY COMMISSION

LITTLE ROCK, ARK.

DRAWN BY: DLM DATE: 6-12
CHECKED BY: BEG DATE: 7-12
DESIGNED BY: CDB DATE: 6-12
FILENAME: S0100607X2_SL11.dgn
SCALE: Not to Scale

STRUCTURE NO. SEE TABLE DRAWING NO. 48624

DATE REVISED	DATE FILMED	DATE REVISED	DATE FILMED	FED. ROAD DIST. NO.	STATE	FED. AID PROJ. NO.	SHEET NO.	TOTAL SHEETS
				6	ARK.			
				JOB NO.		BB0407	352	464
				(1) SEE TABLE OVERHEAD SIGNS				48625

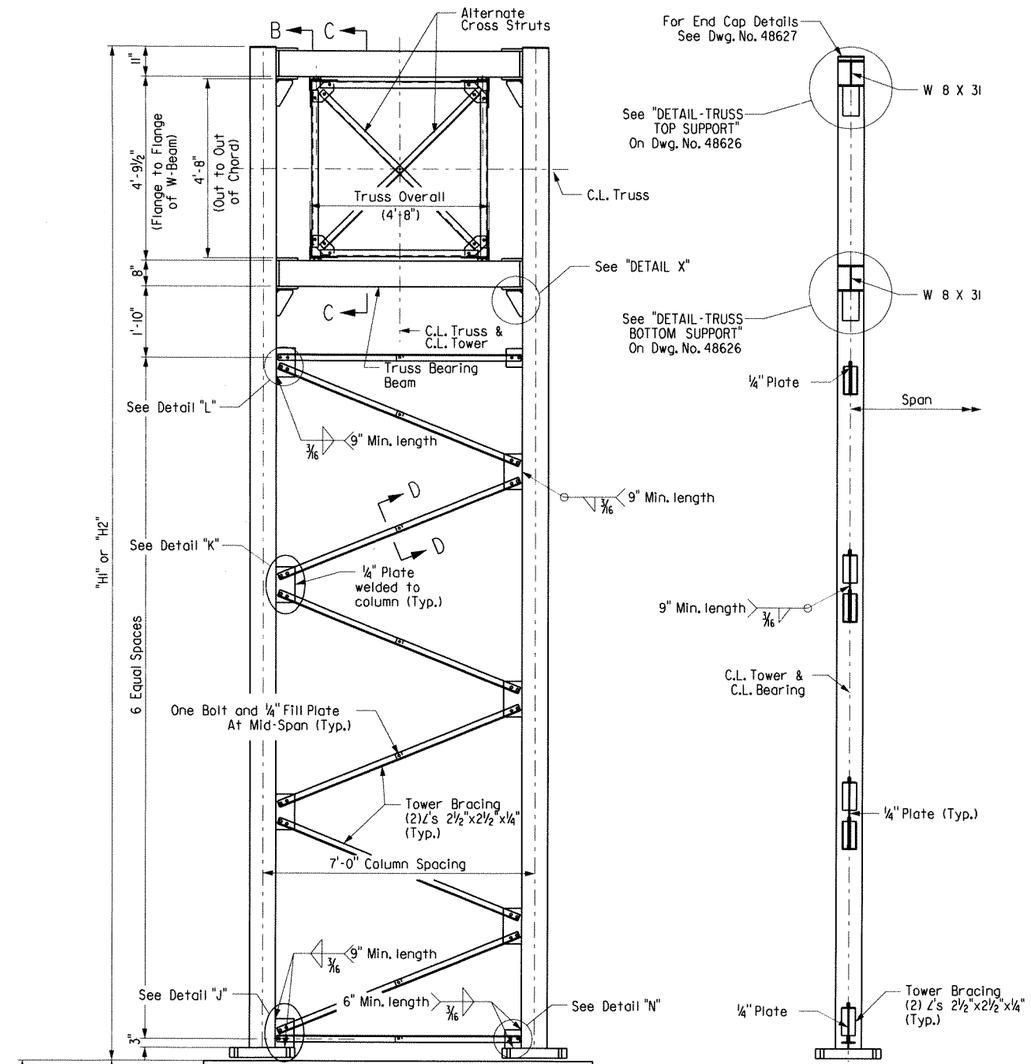

SECTION B-B

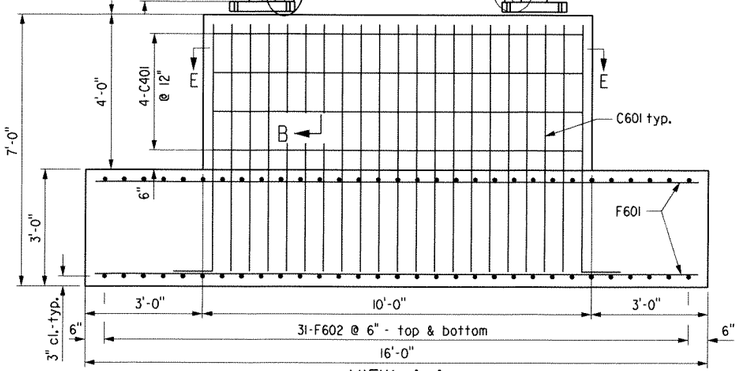

VIEW A-A

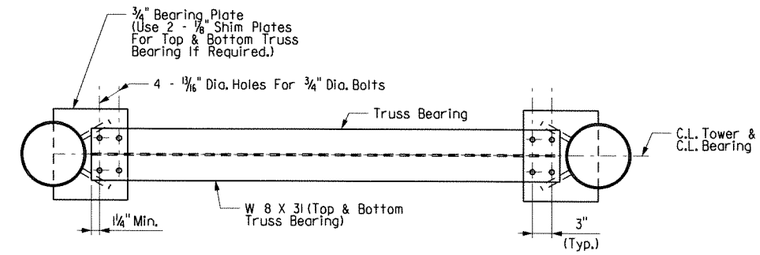

PLAN AT TRUSS BEARING

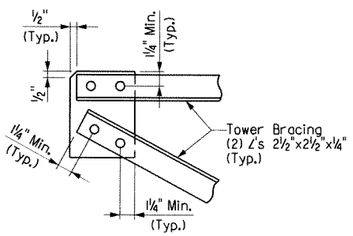

DETAIL "L" [1]

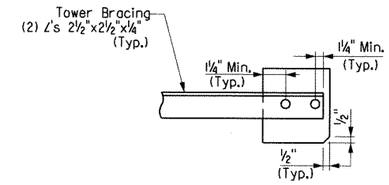

DETAIL "N" [1]

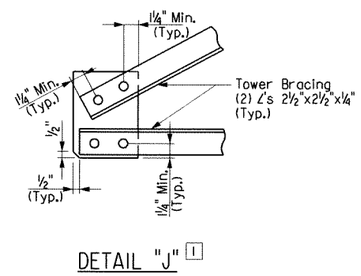

DETAIL "J" [1]

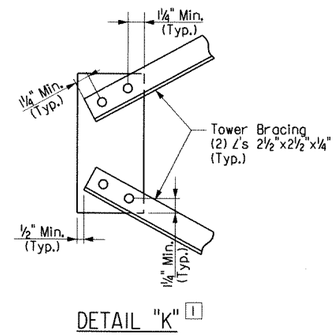

DETAIL "K" [1]

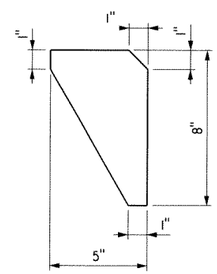

DETAIL "X"

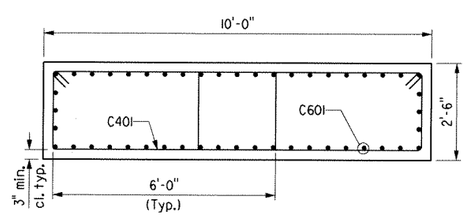

SECTION E-E

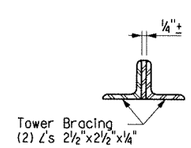

SECTION D-D

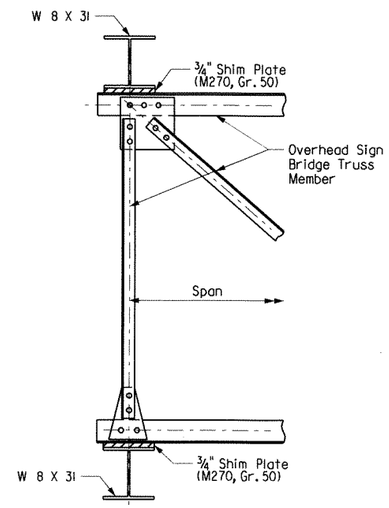

SECTION C-C

[1] Bolts shall be ¾" Dia. and open holes shall be 13/16". Minimum center to center bolt spacing shall be 2½".

BAR LIST - FOUNDATION A

Bending Diagrams (Dimensions are out to out of bars.)

Mark	No. Req'd.	Length	Pin Dia.
C402	5	22'-10"	3"
C403	10	15'-10"	3"
C602	68	7'-11"	4½"
F601	30	15'-6"	Str.
F602	62	7'-6"	Str.

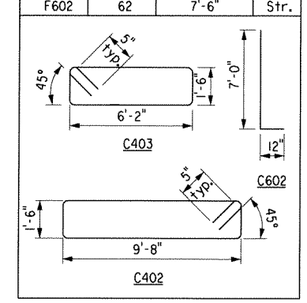

BAR LIST - FOUNDATION B

Mark	No. Req'd.	Length	Pin Dia.
C401	8	16'-6"	3"
C601	48	7'-5"	4½"
F601	30	15'-6"	Str.
F602	62	7'-6"	Str.

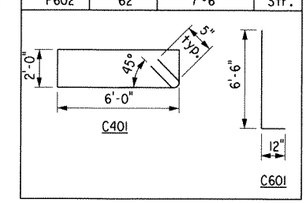

STATE OF ARKANSAS REGISTERED PROFESSIONAL ENGINEER No. 13570 CARTER D. BEARDEN

BRIDGE ENGINEER

SHEET 2 OF 6
DETAILS FOR 46' TO 55'
OVERHEAD SIGN STRUCTURES
WITH MEDIAN FOUNDATION

ROUTE 540 SEC. 2

ARKANSAS STATE HIGHWAY COMMISSION

LITTLE ROCK, ARK.

DRAWN BY: DLM DATE: 6-12
CHECKED BY: BEG DATE: 7-12
DESIGNED BY: CDB DATE: 6-12

FILENAME: S0100607X2_SD11.dgn
SCALE: Not to Scale

STRUCTURE NO. SEE TABLE DRAWING NO. 48625

DATE REVISED	DATE FILMED	DATE REVISED	DATE FILMED	FED. ROAD DIST. NO.	STATE	FED. AID PROJ. NO.	SHEET NO.	TOTAL SHEETS
				6	ARK.			
				JOB NO.		BB0407	363	464
				(1) SEE TABLE OVERHEAD SIGNS				48626

[1] Slotted hole in Gusset Plate and Chord Angle 11/16" x 2". Use Plate Washer on Gusset Plate side. 11/16" diameter hole in 3/4" Shim Plate and Beam Flange.

Note: All Gusset plates shall be 3/8" thick.

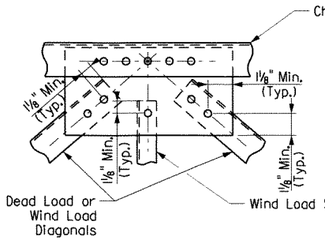

DETAIL A

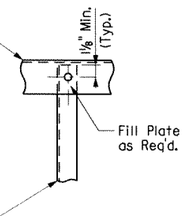

DETAIL B

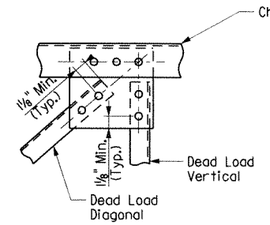

DETAIL C

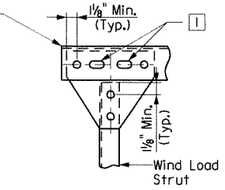

DETAIL D

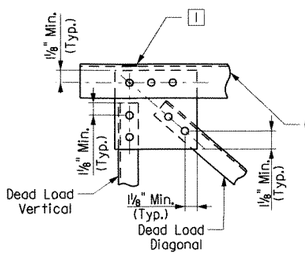

DETAIL F

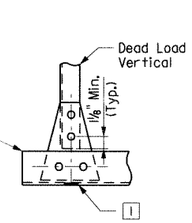

DETAIL G

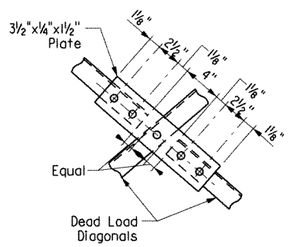

DETAIL H

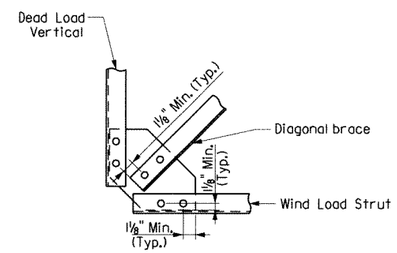

DETAIL M

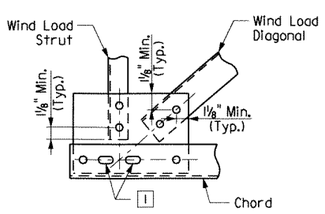

DETAIL E

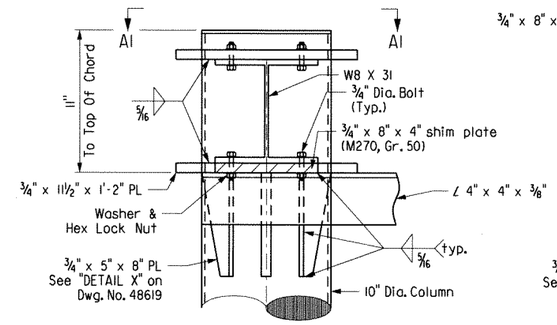

DETAIL - TRUSS TOP SUPPORT

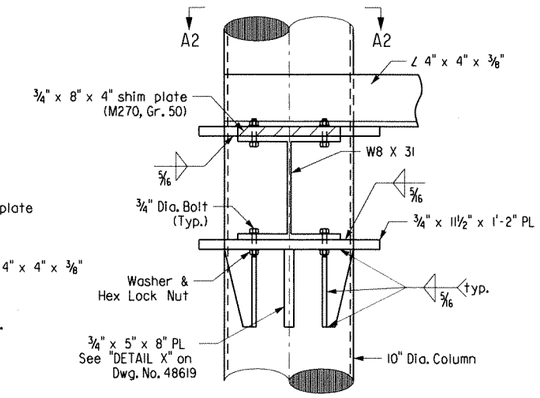

DETAIL - TRUSS BOTTOM SUPPORT

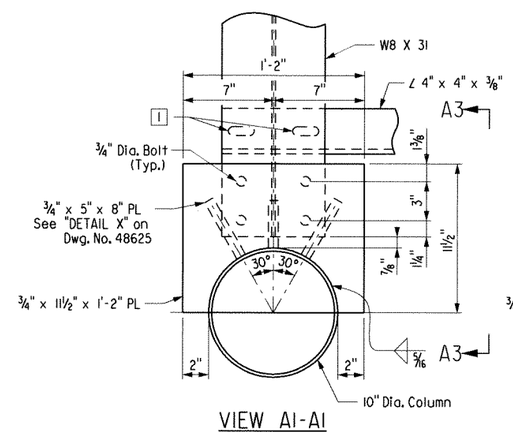

VIEW A1-A1

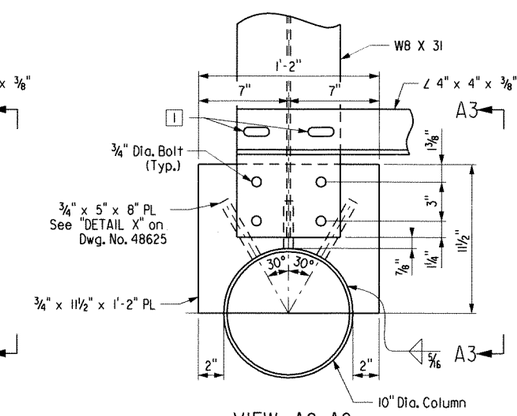

VIEW A2-A2

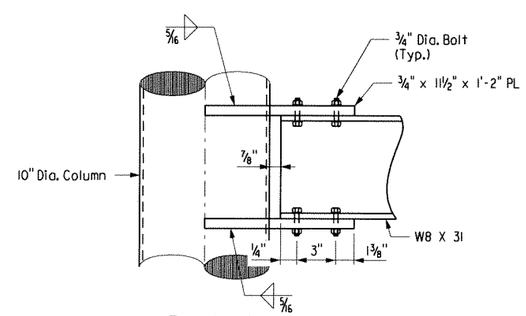

VIEW A3-A3

Note: ¾" x 5" x 8" Plate Not Shown For Clarity.

STATE OF ARKANSAS REGISTERED PROFESSIONAL ENGINEER No. 13570 CARTER D. BEG 6/8/12

BRIDGE ENGINEER

SHEET 3 OF 6
DETAILS FOR 46' TO 55'
OVERHEAD SIGN STRUCTURES
WITH MEDIAN FOUNDATION

ROUTE 540 SEC. 2

ARKANSAS STATE HIGHWAY COMMISSION

LITTLE ROCK, ARK.

DRAWN BY: DLM DATE: 6-12
CHECKED BY: BEG DATE: 7-12
DESIGNED BY: CDB DATE: 6-12
FILENAME: S0100607X2_SD12.dgn
SCALE: Not to Scale

STRUCTURE NO. SEE TABLE DRAWING NO. 48626

DATE REVISED	DATE FILMED	DATE REVISED	DATE FILMED	FED. ROAD DIST. NO.	STATE	FED. AID PROJ. NO.	SHEET NO.	TOTAL SHEETS
				6	ARK.			
				JOB NO.		BB0407	354	464
				(1) SEE TABLE OVERHEAD SIGNS				48627

Note: For "DETAIL M" see Dwg. No. 48626.

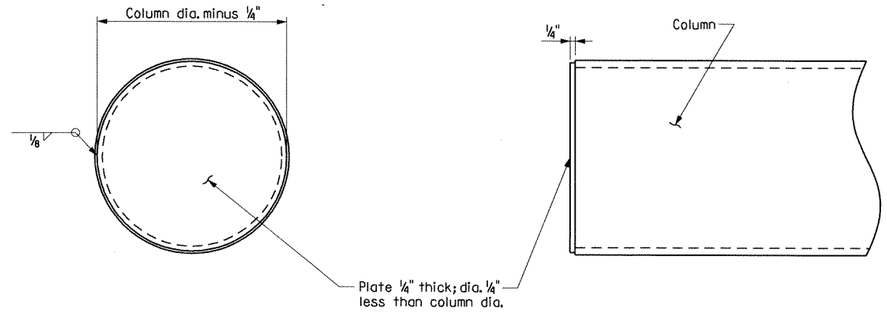

END CAP DETAILS

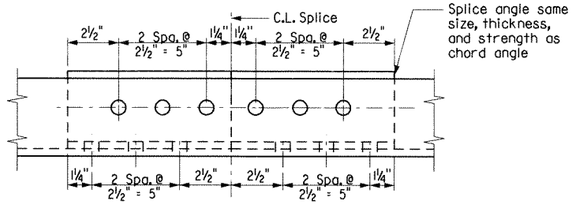

(1) OPTIONAL CHORD SPLICE USING ANGLES
(Place splice angle on inside of truss)
(4" ∠ Shown)

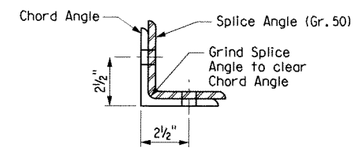

SECTION ON C.L. SPLICE
(4" ∠ Shown)

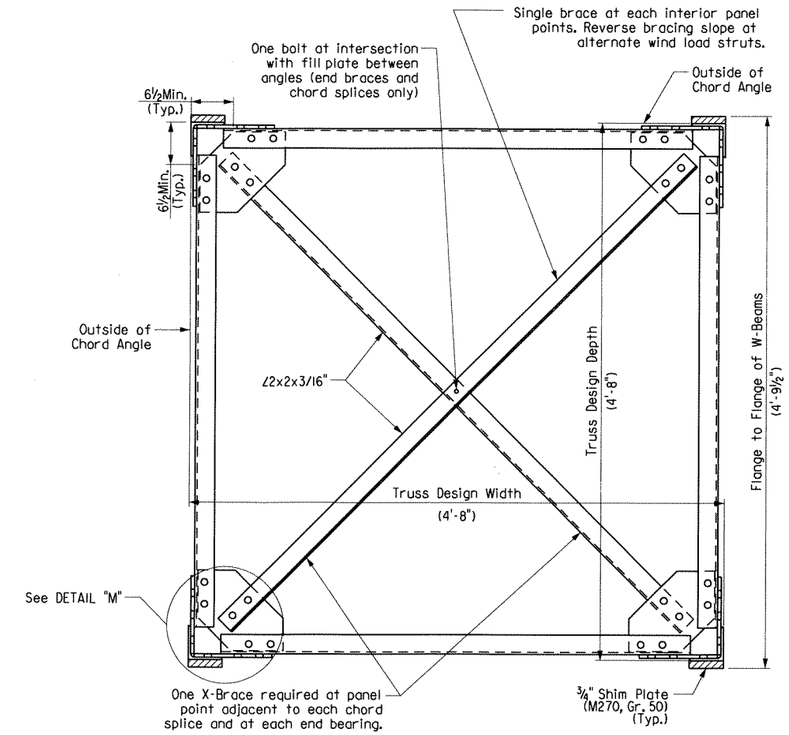

TRUSS SECTION

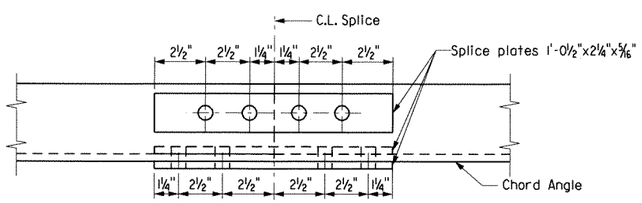

(1) CHORD SPLICE USING PLATES
(4" ∠ Shown)

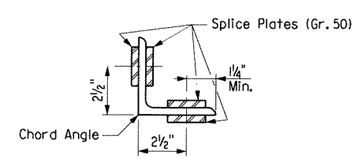

SECTION ON C.L. SPLICE
(4" ∠ Shown)

SPLICE DETAILS

(1) Bolts shall be 3/4" Dia. and open holes shall be 13/16". Minimum center to center bolt spacing shall be 2 1/2".

Note: Chord angles may be spliced in convenient lengths for galvanizing and sign placement.

STATE OF ARKANSAS REGISTERED PROFESSIONAL ENGINEER No. 13570 CARTER D. BEAM

BRIDGE ENGINEER

SHEET 4 OF 6
DETAILS FOR 46' TO 55'
OVERHEAD SIGN STRUCTURES
WITH MEDIAN FOUNDATION

ROUTE 540 SEC. 2

ARKANSAS STATE HIGHWAY COMMISSION

LITTLE ROCK, ARK.

DRAWN BY: DLM DATE: 6-12
CHECKED BY: BEG DATE: 7-12
DESIGNED BY: CDB DATE: 6-12
FILENAME: S0100607X2_SD13.dgn
SCALE: Not to Scale

STRUCTURE NO. SEE TABLE DRAWING NO. 48627

DATE REVISED	DATE FILMED	DATE REVISED	DATE FILMED	FED. ROAD DIST. NO.	STATE	FED. AID PROJ. NO.	SHEET NO.	TOTAL SHEETS
				6	ARK.			
				JOB NO.		BB0407	355	464
				① SEE TABLE OVERHEAD SIGNS				48628

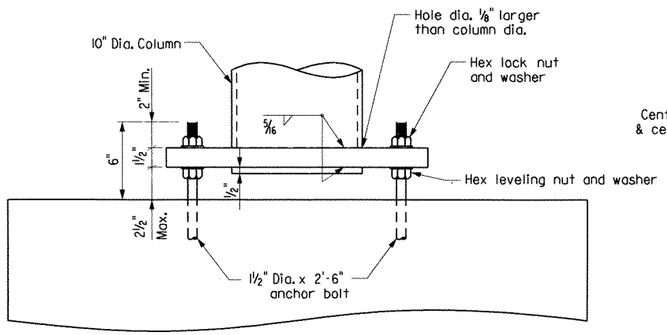

ELEVATION - COLUMN BASE

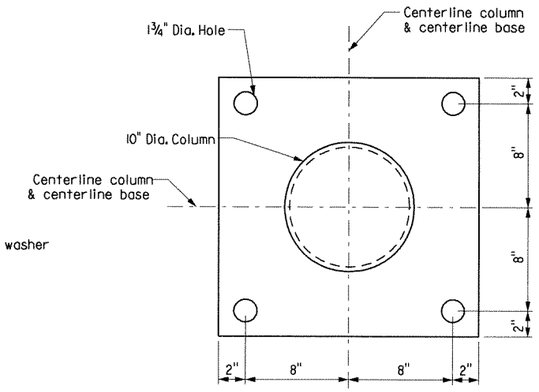

PLAN - COLUMN BASE

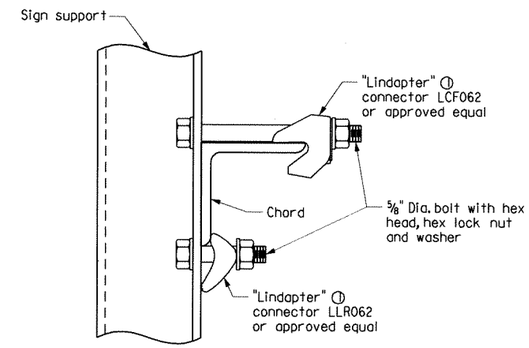

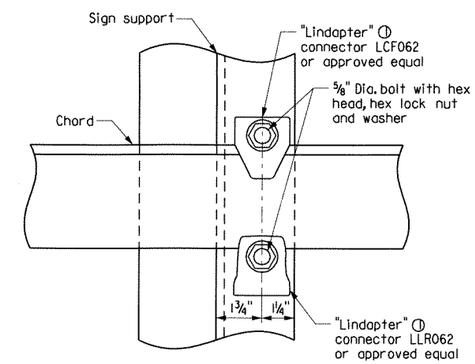

TOP CHORD

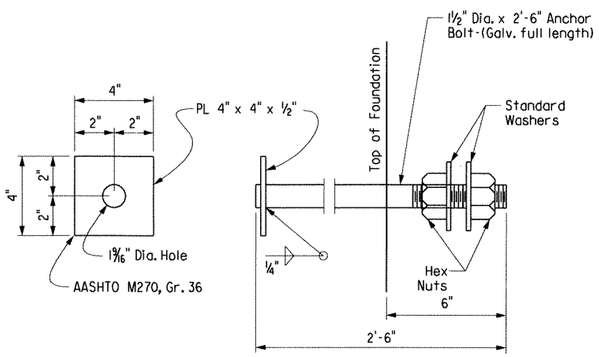

Anchor bolts shall comply with AASHTO M314, Grade 55, with Supplementary Requirement S1, and galvanized according to Section 807.07. Nuts and washers for bolts shall be as specified in Section 807.07.

ANCHOR BOLT DETAIL

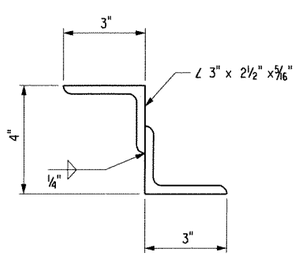

NOTE: Structural Z support may be fabricated from angles as shown.

DETAIL OF ALTERNATE Z SUPPORT

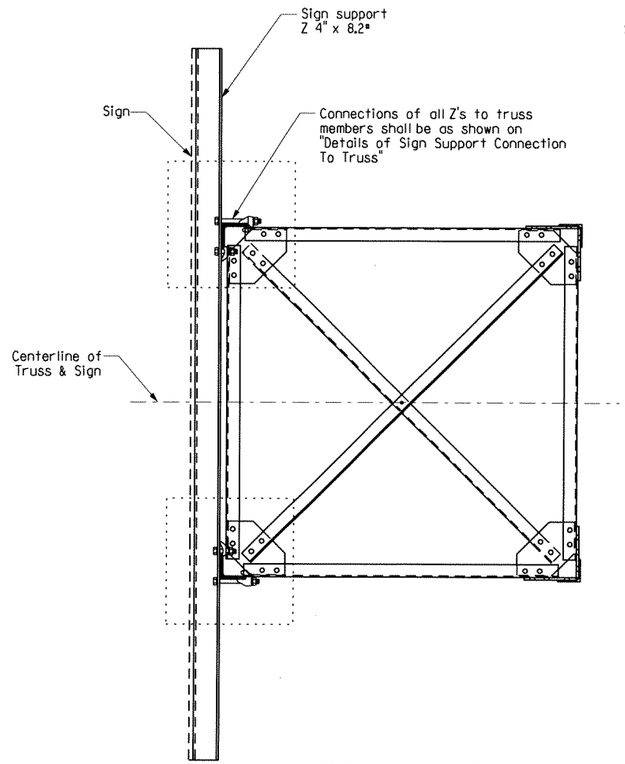

SECTION THRU TRUSS

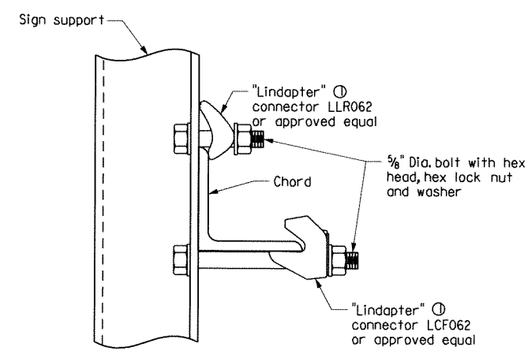

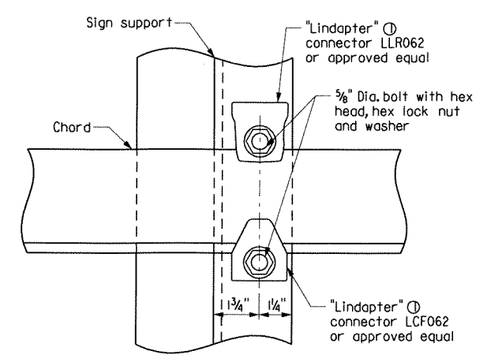

① Note: All "Lindapter" connectors or approved equal shall be installed according to manufacturer's recomendations. All connectors, bolts, nuts, and washers shall be galvanized.

BOTTOM CHORD

NOTE:
Install all support connectors clear of the gusset plates and splice locations.

DETAIL OF SIGN SUPPORT CONNECTION TO TRUSS

SHEET 5 OF 6
DETAILS FOR 46' TO 55'
OVERHEAD SIGN STRUCTURES
WITH MEDIAN FOUNDATION

ROUTE 540 SEC. 2

ARKANSAS STATE HIGHWAY COMMISSION

LITTLE ROCK, ARK.

STATE OF ARKANSAS REGISTERED PROFESSIONAL ENGINEER No. 13570 CARTER D. BEARDEN

BRIDGE ENGINEER

DRAWN BY: DLM DATE: 6-12
CHECKED BY: BEG DATE: 7-12
DESIGNED BY: CDB DATE: 6-12

FILENAME: S0100607X2_SD14.dgn
SCALE: Not to Scale

STRUCTURE NO. SEE TABLE DRAWING NO. 48628

DATE REVISED	DATE FILMED	DATE REVISED	DATE FILMED	FED. ROAD DIST. NO.	STATE	FED. AID PROJ. NO.	SHEET NO.	TOTAL SHEETS
				6	ARK.			
				JOB NO.		BB0407	356	464
				(1) SEE TABLE OVERHEAD SIGNS				48629

GENERAL NOTES

CONSTRUCTION SPECIFICATIONS:

Arkansas State Highway and Transportation Department Standard Specifications for Highway Construction, 2003 edition, with applicable supplemental specifications and special provisions. Section and Subsection refer to the Standard Construction Specifications unless otherwise noted in the plans.

DESIGN SPECIFICATIONS:

Standard Specifications for Structural Supports for Highway Signs, Luminaries and Traffic Signals, AASHTO 2009 (Fifth Edition).

Basic Wind Speed = 90 m.p.h.

This structure is approved for a sign area equivalent to 65% of the span at 15' tall. Use of additional sign area must be approved by the Engineer.

If the structure height ('H1' or 'H2') exceeds 30'-0" contact the Engineer.

FOUNDATION MATERIALS AND STRENGTHS:

Class S Concrete.....f'c = 3,500psi
Reinforcing Steel (AASHTO M31 or M53, Grade 60).....fy = 60,000 psi

Structural steel sign support members shall comply with the following specifications:

Angles:.....AASHTO M270, Gr. 36 (Fy = 36,000 psi).
Plate:.....AASHTO M270, Gr. 50 (Fy = 50,000 psi).
[1] Pipe:.....ASTM A139 Gr. C, straight-seam welded (Fy=42,000psi),
ASTM A500 Gr. B (Fy = 42,000 psi),
ASTM A501 Gr. B (Fy = 50,000 psi),
ASTM A714 Class 2, Gr. II, Type E or S (Fy = 50,000 psi)
Z-Shapes:.....AASHTO M270, Gr. 36 (Fy = 36,000 psi).
Shim Plates:.....ASTM A1011, SS, Gr. 36, Type 2, or Grade 40.
Bolts:.....AASHTO M164, Type 1.
Locknuts - Approved Type:.....Meeting or exceeding AASHTO M292
Washers:.....AASHTO M293
Nuts:.....AASHTO M291 or M292, Gr. 2H or Gr. DH (Gr. 10S)

All steel shall be Galvanized according to section 807.19. Steel completely encased in concrete may not be Galvanized.

Drawings show general features of design only. Shop drawings shall be made in accordance with section 807.04, submitted, and approval secured before fabrication is begun.

No circumferential butt welds will be allowed in any pipe sections.

Requests for substitution of structural steel shapes shown with shapes of greater size must be submitted by the Contractor to the Engineer for approval. Steels of equal or greater strengths will be accepted only when shown on the approved shop drawings. Shapes and materials shown in the plans will be the basis of payment and no additional compensation will be made for any adjustments due to substitutions.

Connections shall be bolted with high-strength bolts. Unless noted otherwise, bolts shall be 5/8" diameter and open holes shall be 11/16". Bolt spacing shall be 2¼" for 5/8" diameter bolts unless otherwise noted. Bolts shall be placed with heads on the outside face of all members.

All welding that is to be done during fabrication of structural steel, including temporary welds, shall be detailed on the shop drawings and submitted for approval. If additional welds are required, whether temporary or permanent, a formal request with detailed drawings shall be submitted to the Engineer for approval. All welding shall conform to subsection 807.26.

Anchor bolts shall comply with AASHTO M314, Grade 55, with Supplementary Requirement S1, and galvanized according to Section 807.07. Nuts and washers for anchor bolts shall be furnished and galvanized in accordance with subsection 807.07.

All truss frame bolts shall comply with AASHTO M164 Type 1, galvanized according to Subsection 807.06. Nuts and washers for AASHTO M164 Type 1 bolts shall be furnished and galvanized in accordance with subsection 807.06.

Field splices shall be located in order to avoid sign panel connections. There shall be a maximum of two field splices and they shall be spaced a minimum of 15 ft. apart.

All main load carrying tension members greater than ½" in thickness shall conform to the requirements of the Longitudinal Charpy V-notch test specified for Zone 1 minimum service temperature. This work and materials shall be paid for in accordance with Special Provision Job BB0407 "STEEL OVERHEAD, CANTILEVER, AND BRIDGE MOUNTED SIGN STRUCTURES".

All fillet welds of critical members shall be tested according to AWS D1.1 Structural Welding Code - Steel, using the magnetic particle method. Critical welds shall include: column to base plate welds and truss bottom support to column.

Truss field sections shall be shop assembled. Entire truss shall be fully assembled and lifted into place as one unit on to tower supports. All truss member connections shall be bolted connections.

Locknuts to be equipped with nylon locking inserts or other approved type locking system. Locknuts to be installed according to manufacturer's recommendations.

Shoring may be required to protect existing shoulders during excavation. Any shoring required shall not be paid for directly, but shall be considered incidental to the item "Steel Overhead Sign Structure". The excavations for the footings shall be back-filled before the structure is attached to the foundations.

Galvanized coating damaged during transport, handling, or erection shall be field repaired in accordance with section 807.88.

The contractor shall make check measurements in the field and make any adjustments necessary to meet the required clearances and to fit the new structures to the existing conditions.

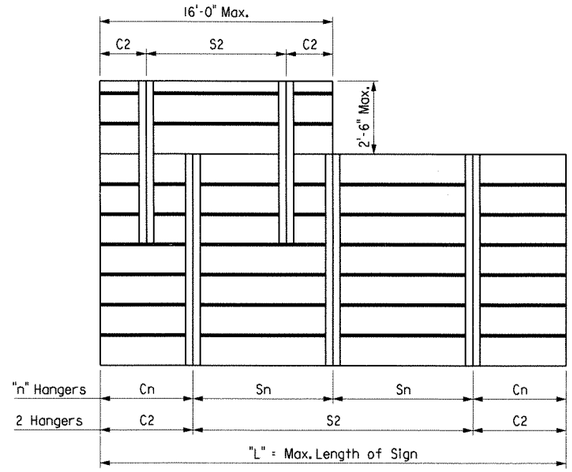

Note: See sign details and plan sheets for number, size and dimensions of signs.

Max. Length of Sign = "L"	"n" Hangers	Cantilever Length "Cn"	Hanger Spacing "Sn"
15'-0"	2 Hangers	0.21 x "L"	0.58 x "L"
30'-0"	3 Hangers	0.145 x "L"	0.355 x "L"
45'-0"	4 Hangers	0.107 x "L"	0.262 x "L"

Note: Hanger spacing and cantilever length shall be rounded to the nearest inch.

HANGER SPACING DETAILS FOR EXTRUDED PANEL SIGNS

[1] In addition to material requirements, all pipe used for welded applications shall have a maximum carbon equivalency (CE) of 0.4 using the following equation:
CE = %C + %Mn/6 + %Cu/40 + %Ni/20 + %Cr/10 - %Mo/50 - %V/10

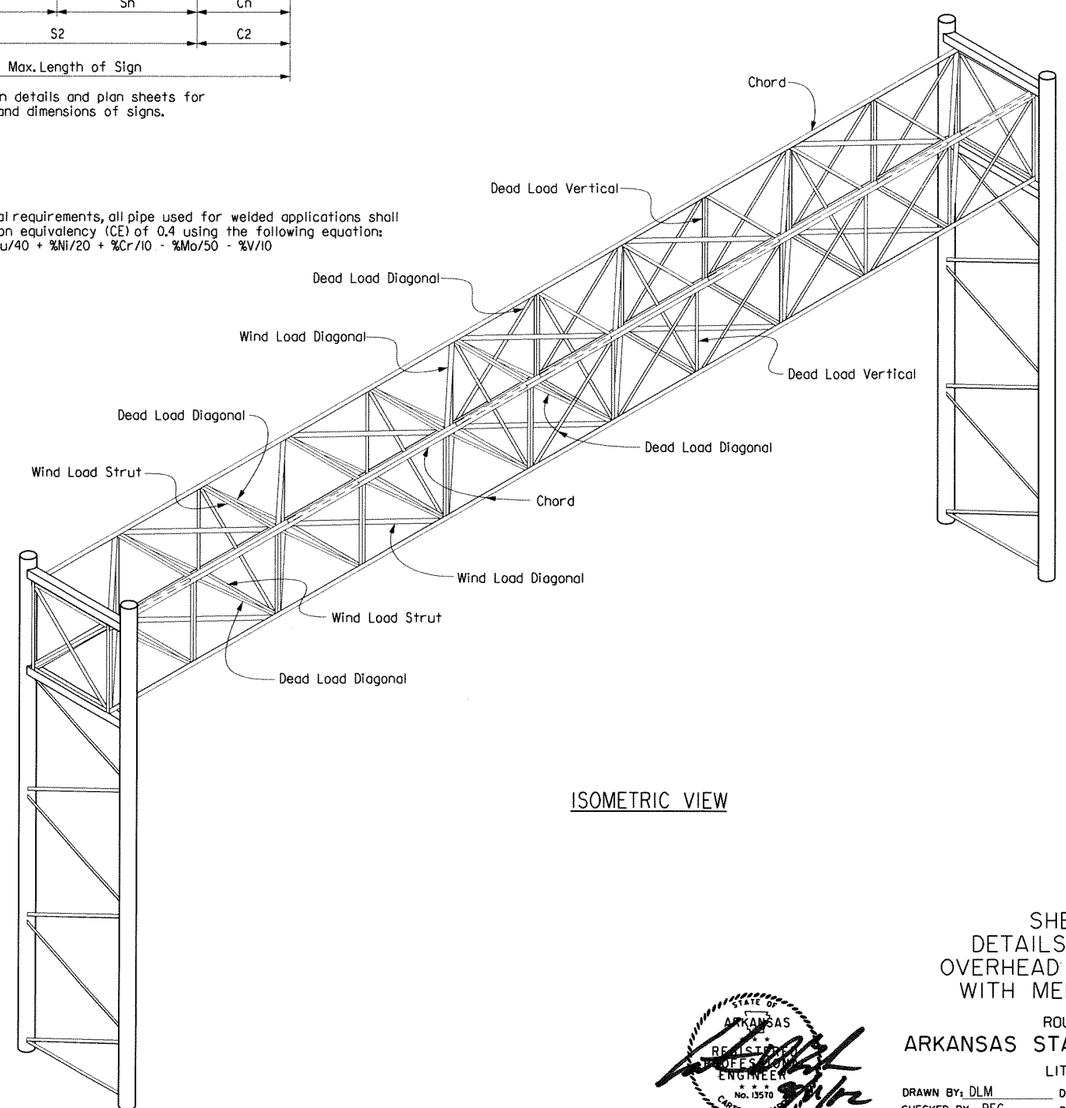

ISOMETRIC VIEW

STATE OF ARKANSAS REGISTERED PROFESSIONAL ENGINEER No. 13570 CARTER O. BEASLEY

BRIDGE ENGINEER

SHEET 6 OF 6
DETAILS FOR 46' TO 55'
OVERHEAD SIGN STRUCTURES
WITH MEDIAN FOUNDATION

ROUTE 540 SEC. 2

ARKANSAS STATE HIGHWAY COMMISSION

LITTLE ROCK, ARK.

DRAWN BY: DLM DATE: 6-12 FILENAME: S0100607X2_SD15.dgn
CHECKED BY: BEG DATE: 7-12 SCALE: Not to Scale
DESIGNED BY: CDB DATE: 6-12

STRUCTURE NO. SEE TABLE DRAWING NO. 48629

DATE REVISED	DATE FILMED	DATE REVISED	DATE FILMED

FED. ROAD DIST. NO.	STATE	FED. AID PROJ. NO.	SHEET NO.	TOTAL SHEETS
6	ARK.			
JOB NO.		BB0407	357	464

(1) SEE TABLE OVERHEAD SIGNS 48630

Note: For "VIEW A-A", see Dwg. No. 48631.

Note: For "DETAIL A" thru "DETAIL H", see Dwg. No. 48632.

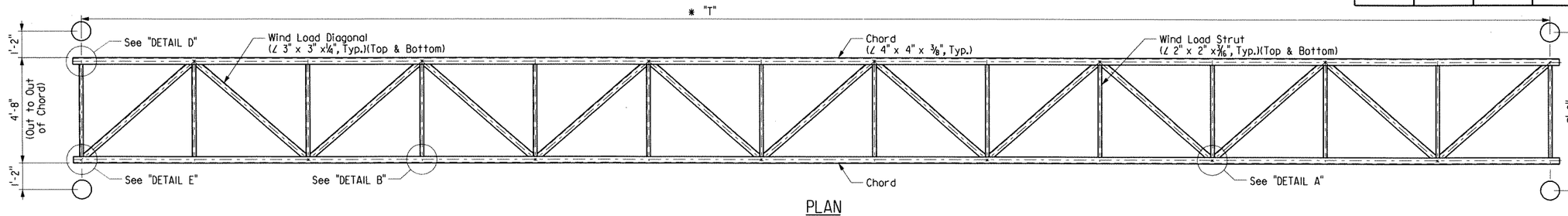

PLAN

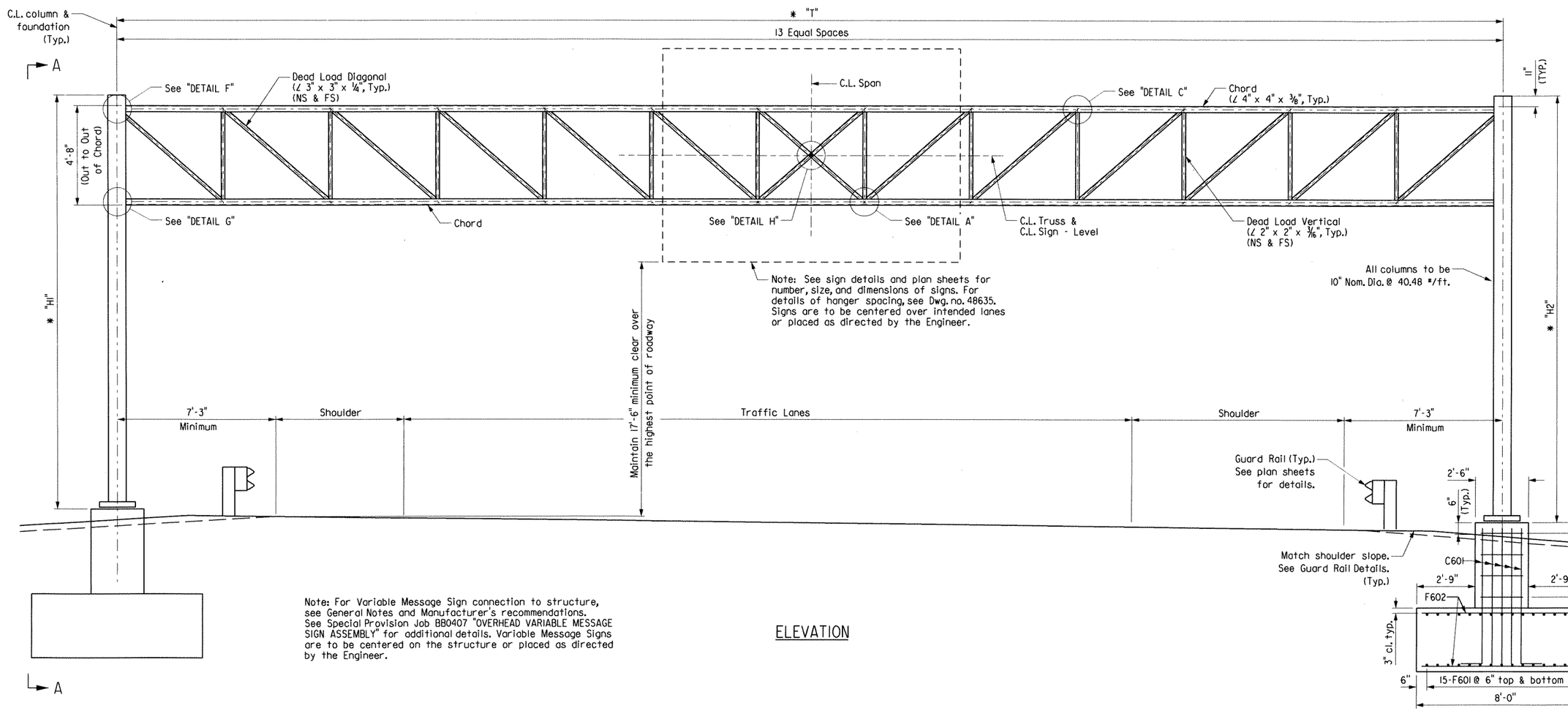

Note: For Variable Message Sign connection to structure, see General Notes and Manufacturer's recommendations. See Special Provision Job BB0407 "OVERHEAD VARIABLE MESSAGE SIGN ASSEMBLY" for additional details. Variable Message Signs are to be centered on the structure or placed as directed by the Engineer.

ELEVATION

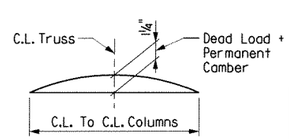

TRUSS CAMBER DETAIL

TABLE

STRUCTURE NUMBER	* "T" (Min.)
OH-540-17-04	62'-6"
OH-540-17-10	62'-6"
OH-540-17-12	62'-6"

APPROXIMATE QUANTITIES (FOR INFORMATION ONLY)

STRUCTURE NUMBER	CLASS S CONCRETE (cu. yd.)	REINFORCING STEEL (pounds)	EXCAVATION (cu. yd.)
EACH STRUCTURE	39.41	4400	120

* Note: The Contractor shall make field measurements to determine the column heights "H1" & "H2" that are required to maintain the minimum vertical clearance with the C.L. of the sign located at the C.L. of the truss. These column heights shall be shown on the shop drawings with a note stating that the contractor has made the required field measurements. If the structure height ("H1" or "H2") exceeds 30'-0" contact the Engineer. The Contractor shall also verify that the variable "T" is sufficient to meet the minimum clearances and to fit the new structure to the existing and/or proposed conditions.

STATE OF ARKANSAS REGISTERED PROFESSIONAL ENGINEER No. 13570 CARTER D. BEASLEY 8/24/12

BRIDGE ENGINEER

SHEET 1 OF 6
DETAILS FOR 60' TO 65'
OVERHEAD SIGN STRUCTURES

ROUTE 540 SEC. 3

ARKANSAS STATE HIGHWAY COMMISSION

LITTLE ROCK, ARK.

DRAWN BY: DLM DATE: 6-12
CHECKED BY: BEG DATE: 7-12
DESIGNED BY: CDB DATE: 6-12

FILENAME: S0100607X3_SL11.dgn
SCALE: Not to Scale

STRUCTURE NO. SEE TABLE DRAWING NO. 48630

DATE REVISED	DATE FILMED	DATE REVISED	DATE FILMED	FED. ROAD DIST. NO.	STATE	FED. AID PROJ. NO.	SHEET NO.	TOTAL SHEETS
				6	ARK.			
				JOB NO.		BB0407	358	464

(1) SEE TABLE OVERHEAD SIGNS 48631

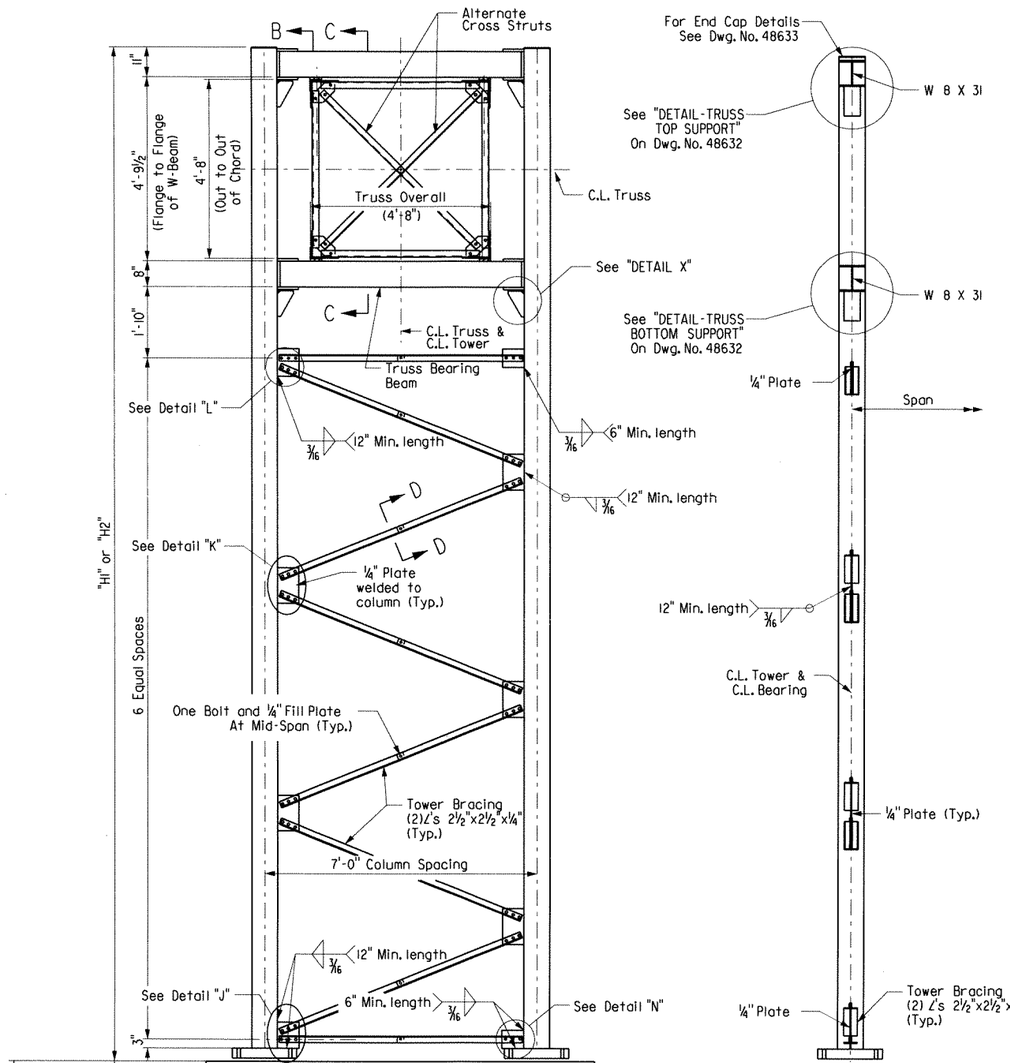

SECTION B-B

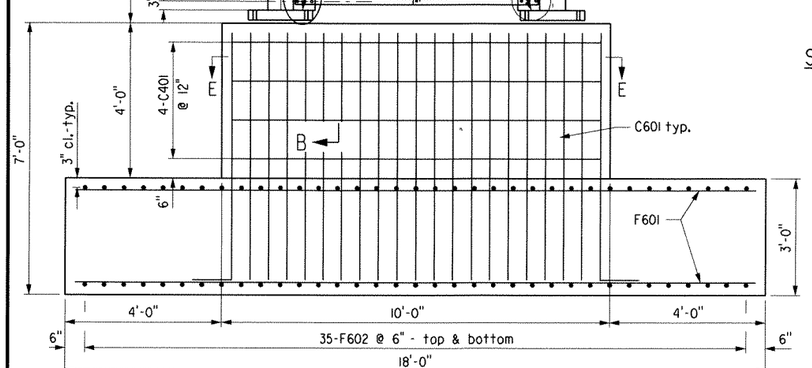

VIEW A-A

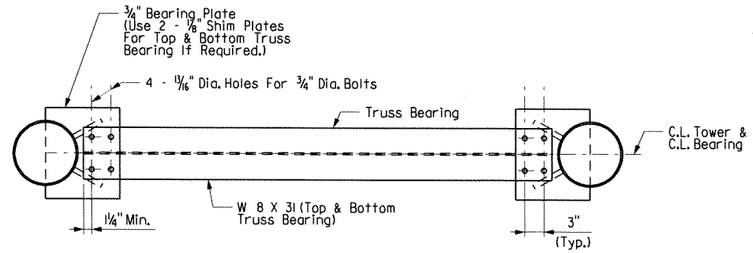

PLAN AT TRUSS BEARING

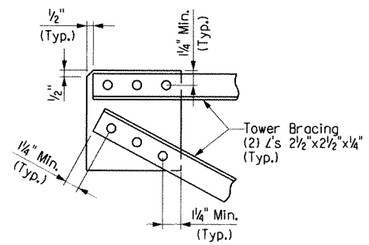

DETAIL "L" [1]

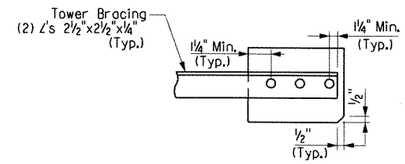

DETAIL "N" [1]

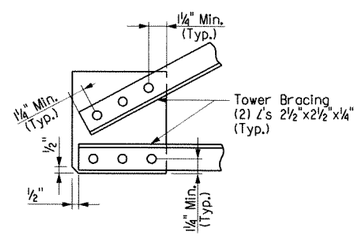

DETAIL "J" [1]

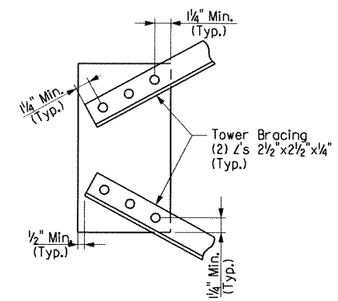

DETAIL "K" [1]

[1] Bolts shall be ¾" Dia. and open holes shall be 13/16". Minimum center to center bolt spacing shall be 2½".

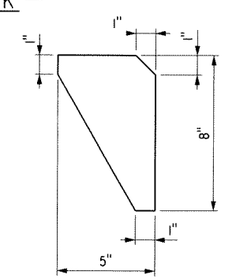

DETAIL "X"

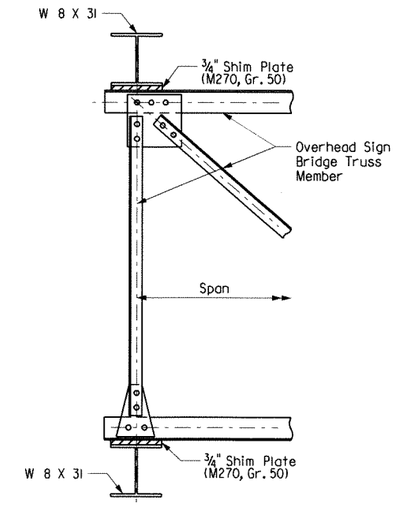

SECTION C-C

BAR LIST - PER STRUCTURE

Bending Diagrams
(Dimensions are out to out of bars.)

Mark	No. Req'd.	Length	Pin Dia.
C401	16	16'-6"	3"
C601	96	7'-5"	4½"
F601	60	17'-6"	Str.
F602	140	7'-6"	Str.

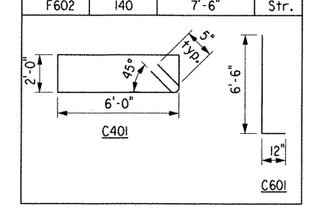

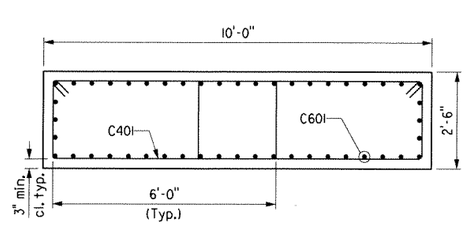

SECTION E-E

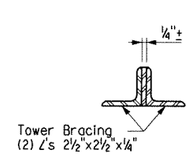

SECTION D-D

STATE OF ARKANSAS REGISTERED PROFESSIONAL ENGINEER No. 13570 CARTER D. BEGGS

BRIDGE ENGINEER

SHEET 2 OF 6
DETAILS FOR 60' TO 65' OVERHEAD SIGN STRUCTURES

ROUTE 540 SEC. 2

ARKANSAS STATE HIGHWAY COMMISSION

LITTLE ROCK, ARK.

DRAWN BY: DLM DATE: 6-12
CHECKED BY: BEG DATE: 7-12
DESIGNED BY: CDB DATE: 6-12

FILENAME: S0100607X3_SD11.dgn
SCALE: Not to Scale

STRUCTURE NO. SEE TABLE DRAWING NO. 48631

DATE REVISED	DATE FILMED	DATE REVISED	DATE FILMED	FED. ROAD DIST. NO.	STATE	FED. AID PROJ. NO.	SHEET NO.	TOTAL SHEETS
				6	ARK.			
				JOB NO.		BB0407	359	464
				(1) SEE TABLE OVERHEAD SIGNS				48632

[1] Slotted hole in Gusset Plate and Chord Angle 11/16" x 2". Use Plate Washer on Gusset Plate side. 11/16" diameter hole in 3/4" Shim Plate and Beam Flange.

Note: All Gusset plates shall be 3/8" thick.

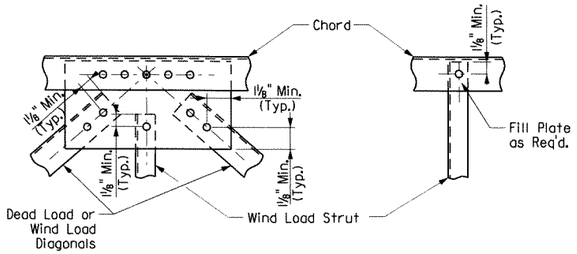

DETAIL A

DETAIL B

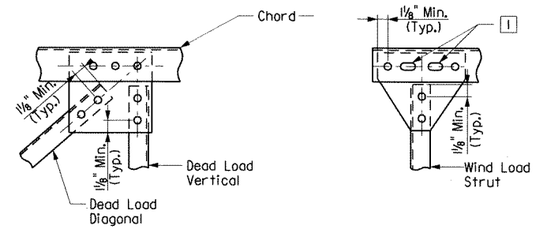

DETAIL C

DETAIL D

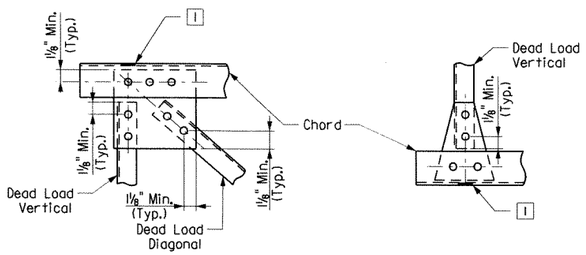

DETAIL F

DETAIL G

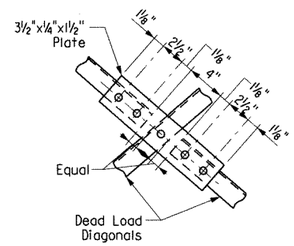

DETAIL H

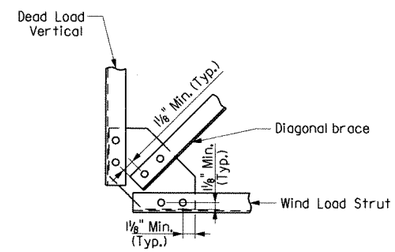

DETAIL M

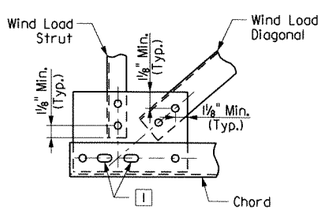

DETAIL E

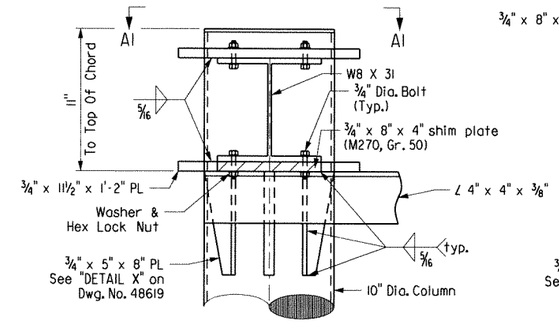

DETAIL - TRUSS TOP SUPPORT

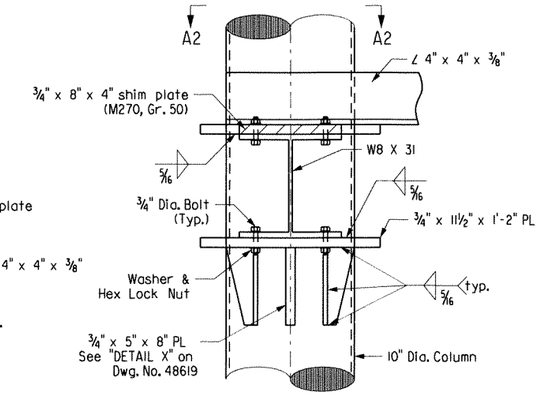

DETAIL - TRUSS BOTTOM SUPPORT

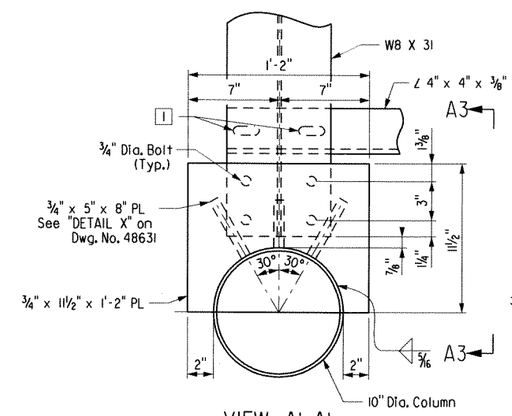

VIEW A1-A1

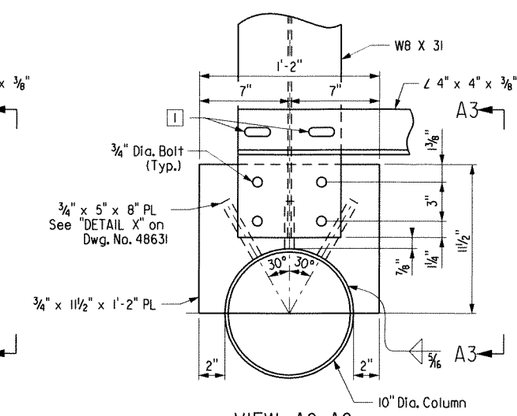

VIEW A2-A2

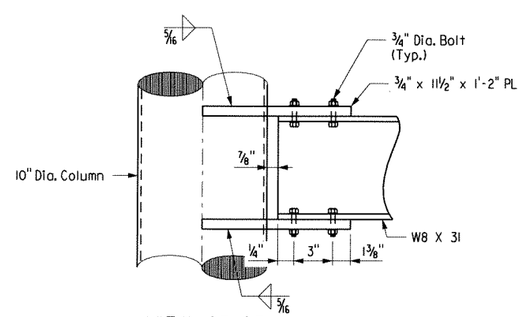

VIEW A3-A3

Note: 3/4" x 5" x 8" Plate Not Shown For Clarity.

STATE OF ARKANSAS REGISTERED PROFESSIONAL ENGINEER No. 13570 CARTER D. BEG

BRIDGE ENGINEER

SHEET 3 OF 6
DETAILS FOR 60' TO 65'
OVERHEAD SIGN STRUCTURES

ROUTE 540 SEC. 2

ARKANSAS STATE HIGHWAY COMMISSION

LITTLE ROCK, ARK.

DRAWN BY: DLM DATE: 6-12
CHECKED BY: BEG DATE: 7-12
DESIGNED BY: CDB DATE: 6-12

FILENAME: S0100607X3_SD12.dgn
SCALE: Not to Scale

STRUCTURE NO. SEE TABLE DRAWING NO. 48632

DATE REVISED	DATE FILMED	DATE REVISED	DATE FILMED	FED. ROAD DIST. NO.	STATE	FED. AID PROJ. NO.	SHEET NO.	TOTAL SHEETS
				6	ARK.			
				JOB NO.		BB0407	360	464
				(1) SEE TABLE OVERHEAD SIGNS				48633

Note: For "DETAIL M" see Dwg. No. 48632.

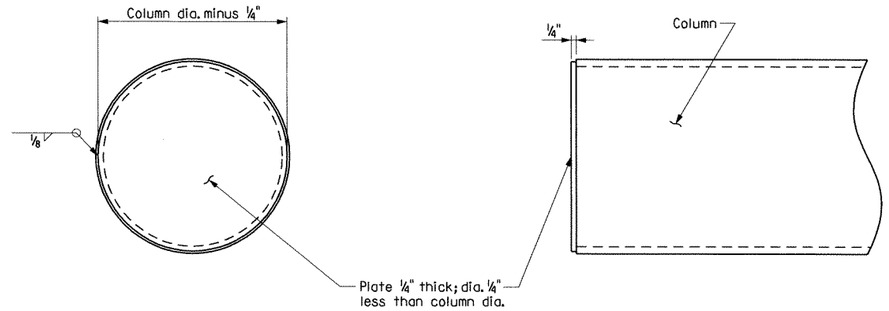

END CAP DETAILS

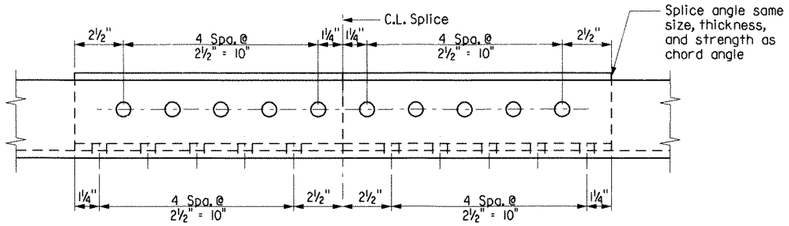

OPTIONAL CHORD SPLICE USING ANGLES [1]

(Place splice angle on inside of truss)
(4" ∠ Shown)

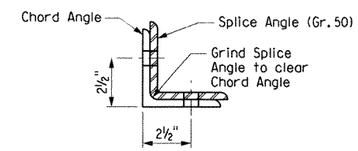

SECTION ON C.L. SPLICE

(4" ∠ Shown)

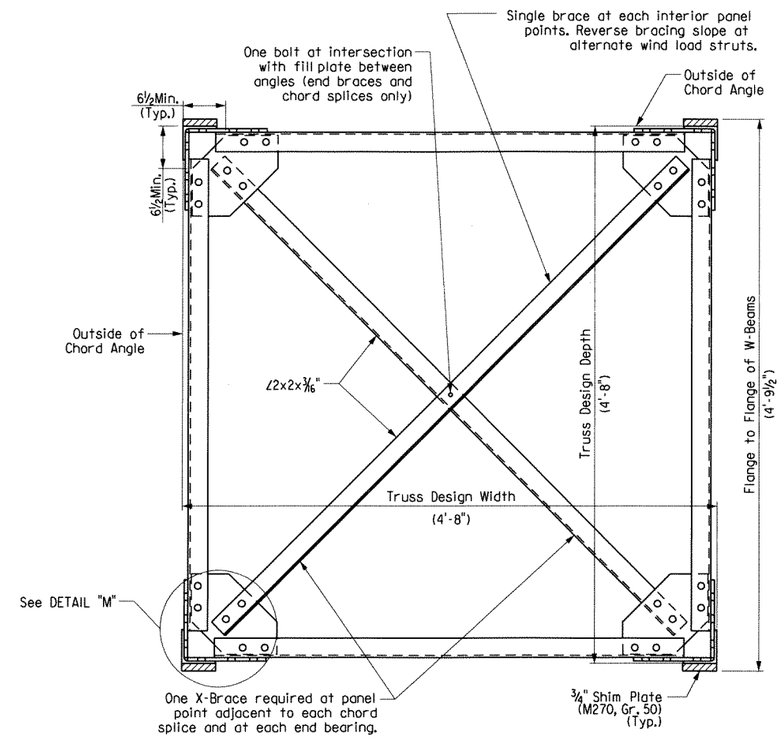

TRUSS SECTION

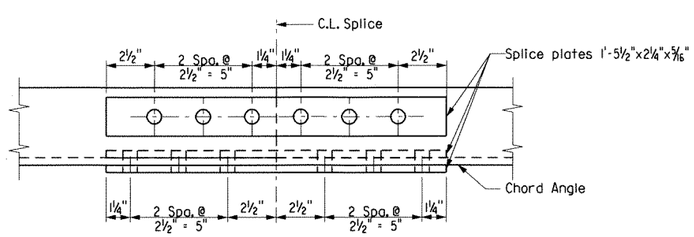

CHORD SPLICE USING PLATES [1]

(4" ∠ Shown)

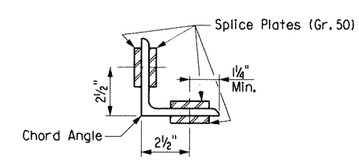

SECTION ON C.L. SPLICE

(4" ∠ Shown)

[1] Bolts shall be 3/4" Dia. and open holes shall be 13/16". Minimum center to center bolt spacing shall be 2 1/2".

SPLICE DETAILS

Note: Chord angles may be spliced in convenient lengths for galvanizing and sign placement.

STATE OF ARKANSAS REGISTERED PROFESSIONAL ENGINEER No. 13570 CARTER D. BEARDEN 5/14/12

BRIDGE ENGINEER

SHEET 4 OF 6
DETAILS FOR 60' TO 65'
OVERHEAD SIGN STRUCTURES

ROUTE 540 SEC. 2

ARKANSAS STATE HIGHWAY COMMISSION

LITTLE ROCK, ARK.

DRAWN BY: DLM DATE: 6-12 FILENAME: S0100607X3_SD13.dgn
CHECKED BY: BEG DATE: 7-12 SCALE: Not to Scale
DESIGNED BY: CDB DATE: 6-12

STRUCTURE NO. SEE TABLE DRAWING NO. 48633

DATE REVISED	DATE FILMED	DATE REVISED	DATE FILMED	FED. ROAD DIST. NO.	STATE	FED. AID PROJ. NO.	SHEET NO.	TOTAL SHEETS
				6	ARK.			
				JOB NO.		BB0407	36	464
				① SEE TABLE OVERHEAD SIGNS				48634

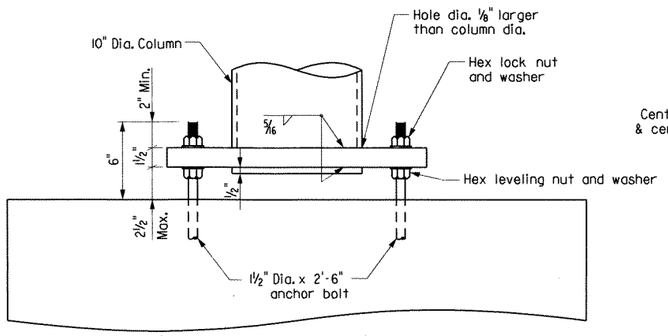

ELEVATION - COLUMN BASE

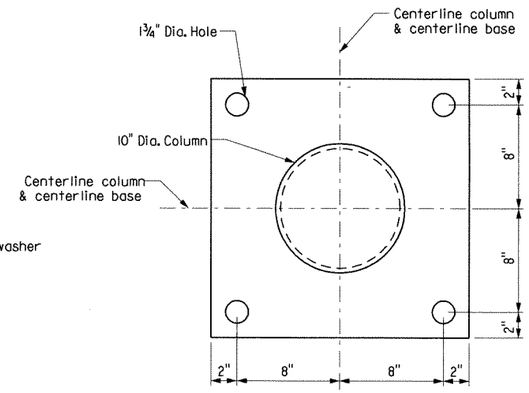

PLAN - COLUMN BASE

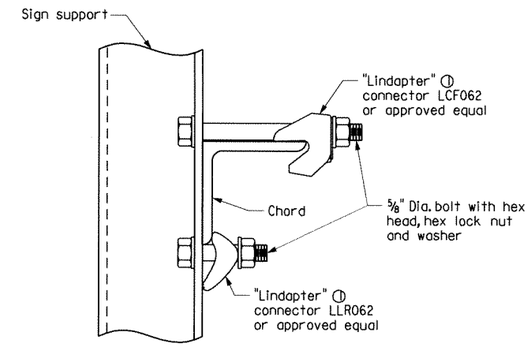

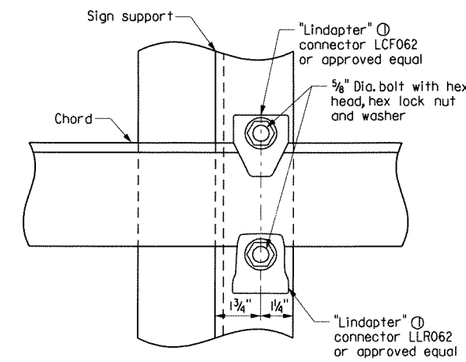

TOP CHORD

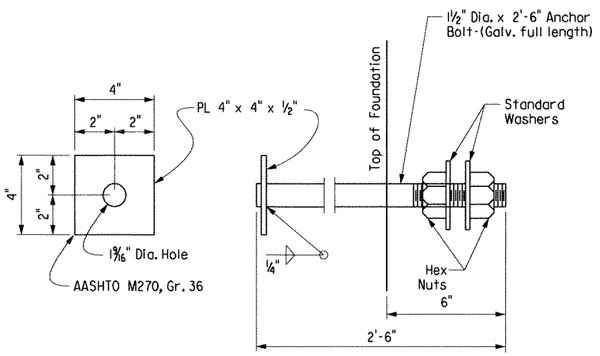

Anchor bolts shall comply with AASHTO M314, Grade 55, with Supplementary Requirement S1, and galvanized according to Section 807.07. Nuts and washers for bolts shall be as specified in Section 807.07.

ANCHOR BOLT DETAIL

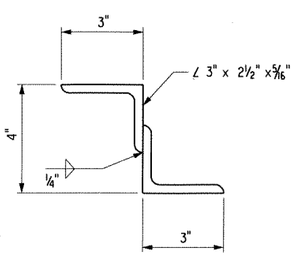

NOTE: Structural Z support may be fabricated from angles as shown.

DETAIL OF ALTERNATE Z SUPPORT

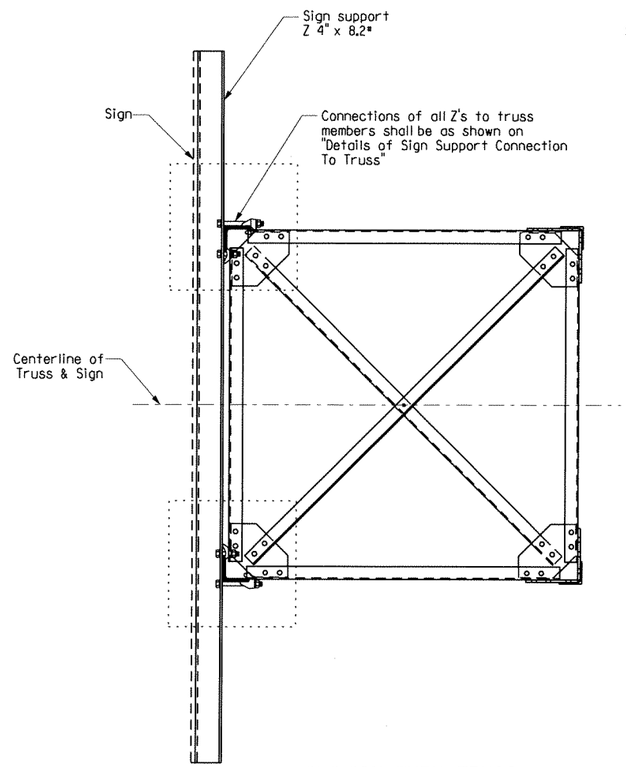

SECTION THRU TRUSS

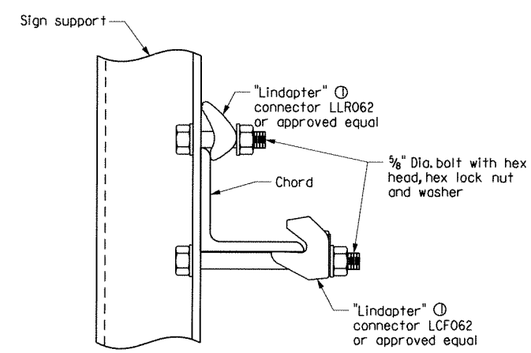

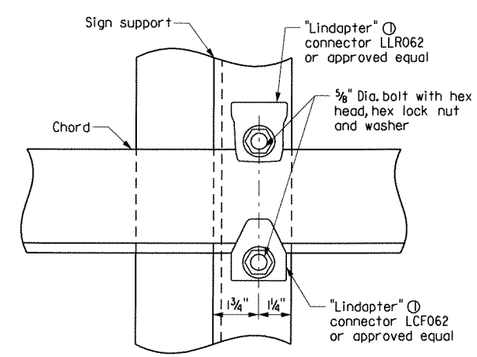

① Note: All "Lindapter" connectors or approved equal shall be installed according to manufacturer's recomendations. All connectors, bolts, nuts, and washers shall be galvanized.

BOTTOM CHORD

NOTE:
Install all support connectors clear of the gusset plates and splice locations.

DETAIL OF SIGN SUPPORT CONNECTION TO TRUSS

STATE OF ARKANSAS REGISTERED PROFESSIONAL ENGINEER No. 13570 CARTER D. BEARDEN 9/12

BRIDGE ENGINEER

SHEET 5 OF 6
DETAILS FOR 60' TO 65'
OVERHEAD SIGN STRUCTURES

ROUTE 540 SEC. 2

ARKANSAS STATE HIGHWAY COMMISSION

LITTLE ROCK, ARK.

DRAWN BY: DLM DATE: 6-12
CHECKED BY: BEG DATE: 7-12
DESIGNED BY: CDB DATE: 6-12
FILENAME: S0100607X3_SD14.dgn
SCALE: Not to Scale

STRUCTURE NO. SEE TABLE DRAWING NO. 48634

DATE REVISED	DATE FILMED	DATE REVISED	DATE FILMED	FED. ROAD DIST. NO.	STATE	FED. AID PROJ. NO.	SHEET NO.	TOTAL SHEETS
				6	ARK.			
				JOB NO.		BB0407	362	464
				(1) SEE TABLE OVERHEAD SIGNS				48635

GENERAL NOTES

CONSTRUCTION SPECIFICATIONS:

Arkansas State Highway and Transportation Department Standard Specifications for Highway Construction, 2003 edition, with applicable supplemental specifications and special provisions. Section and Subsection refer to the Standard Construction Specifications unless otherwise noted in the plans.

DESIGN SPECIFICATIONS:

Standard Specifications for Structural Supports for Highway Signs, Luminaries and Traffic Signals, AASHTO 2009 (Fifth Edition).

Basic Wind Speed = 90 m.p.h.

This structure is approved for a sign area equivalent to 75% of the span at 15' tall. Use of additional sign area must be approved by the Engineer.

If the structure height ('H1' or 'H2') exceeds 30'-0" contact the Engineer.

FOUNDATION MATERIALS AND STRENGTHS:

Class S Concrete ..... f'c = 3,500psi
Reinforcing Steel (AASHTO M31 or M53, Grade 60) ..... fy = 60,000 psi

Structural steel sign support members shall comply with the following specifications:

Angles: ..... AASHTO M270, Gr. 36 (Fy = 36,000 psi).
Plate: ..... AASHTO M270, Gr. 50 (Fy = 50,000 psi).
[1] Pipe: ..... ASTM A139 Gr. C, straight-seam welded (Fy=42,000psi),
ASTM A500 Gr. B (Fy = 42,000 psi),
ASTM A501 Gr. B (Fy = 50,000 psi),
ASTM A714 Class 2, Gr. II, Type E or S (Fy = 50,000 psi)
Z-Shapes: ..... AASHTO M270, Gr. 36 (Fy = 36,000 psi).
Shim Plates: ..... ASTM A1011, SS, Gr. 36, Type 2, or Grade 40.
Bolts: ..... AASHTO M164, Type 1.
Locknuts - Approved Type: ..... Meeting or exceeding AASHTO M292
Washers: ..... AASHTO M293
Nuts: ..... AASHTO M291 or M292, Gr. 2H or Gr. DH (Gr. 10S)

All steel shall be Galvanized according to section 807.19. Steel completely encased in concrete may not be Galvanized.

Drawings show general features of design only. Shop drawings shall be made in accordance with section 807.04, submitted, and approval secured before fabrication is begun.

No circumferential butt welds will be allowed in any pipe sections.

Requests for substitution of structural steel shapes shown with shapes of greater size must be submitted by the Contractor to the Engineer for approval. Steels of equal or greater strengths will be accepted only when shown on the approved shop drawings. Shapes and materials shown in the plans will be the basis of payment and no additional compensation will be made for any adjustments due to substitutions.

Connections shall be bolted with high-strength bolts. Unless noted otherwise, bolts shall be 5/8" diameter and open holes shall be 11/16". Bolt spacing shall be 2¼" for 5/8" diameter bolts unless otherwise noted. Bolts shall be placed with heads on the outside face of all members.

All welding that is to be done during fabrication of structural steel, including temporary welds, shall be detailed on the shop drawings and submitted for approval. If additional welds are required, whether temporary or permanent, a formal request with detailed drawings shall be submitted to the Engineer for approval. All welding shall conform to subsection 807.26.

Anchor bolts shall comply with AASHTO M314, Grade 55, with Supplementary Requirement S1, and galvanized according to Section 807.07. Nuts and washers for anchor bolts shall be furnished and galvanized in accordance with subsection 807.07.

All truss frame bolts shall comply with AASHTO M164 Type 1, galvanized according to Subsection 807.06. Nuts and washers for AASHTO M164 Type 1 bolts shall be furnished and galvanized in accordance with subsection 807.06.

Field splices shall be located in order to avoid sign panel connections. There shall be a maximum of two field splices and they shall be spaced a minimum of 15 ft. apart.

All main load carrying tension members greater than ½" in thickness shall conform to the requirements of the Longitudinal Charpy V-notch test specified for Zone 1 minimum service temperature. This work and materials shall be paid for in accordance with Special Provision Job BB0407 "STEEL OVERHEAD, CANTILEVER, AND BRIDGE MOUNTED SIGN STRUCTURES".

All fillet welds of critical members shall be tested according to AWS D1.1 Structural Welding Code - Steel, using the magnetic particle method. Critical welds shall include: column to base plate welds and truss bottom support to column.

Truss field sections shall be shop assembled. Entire truss shall be fully assembled and lifted into place as one unit on to tower supports. All truss member connections shall be bolted connections.

Locknuts to be equipped with nylon locking inserts or other approved type locking system. Locknuts to be installed according to manufacturer's recommendations.

Shoring may be required to protect existing shoulders during excavation. Any shoring required shall not be paid for directly, but shall be considered incidental to the item "Steel Overhead Sign Structure". The excavations for the footings shall be back-filled before the structure is attached to the foundations.

Galvanized coating damaged during transport, handling, or erection shall be field repaired in accordance with section 807.88.

The contractor shall make check measurements in the field and make any adjustments necessary to meet the required clearances and to fit the new structures to the existing conditions.

The Variable Message Sign supplier shall be responsible for the attachment method and materials used to attach the Variable Message Sign and its accessories to the structure. The method of attachment shall not facilitate any corrosion of the steel structure.

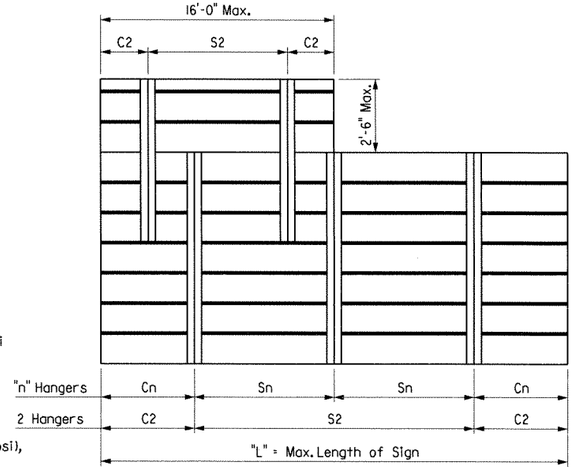

Note: See sign details and plan sheets for number, size and dimensions of signs.

Max. Length of Sign = "L"	"n" Hangers	Cantilever Length "Cn"	Hanger Spacing "Sn"
15'-0"	2 Hangers	0.21 x "L"	0.58 x "L"
30'-0"	3 Hangers	0.145 x "L"	0.355 x "L"
45'-0"	4 Hangers	0.107 x "L"	0.262 x "L"

Note: Hanger spacing and cantilever length shall be rounded to the nearest inch.

HANGER SPACING DETAILS FOR EXTRUDED PANEL SIGNS

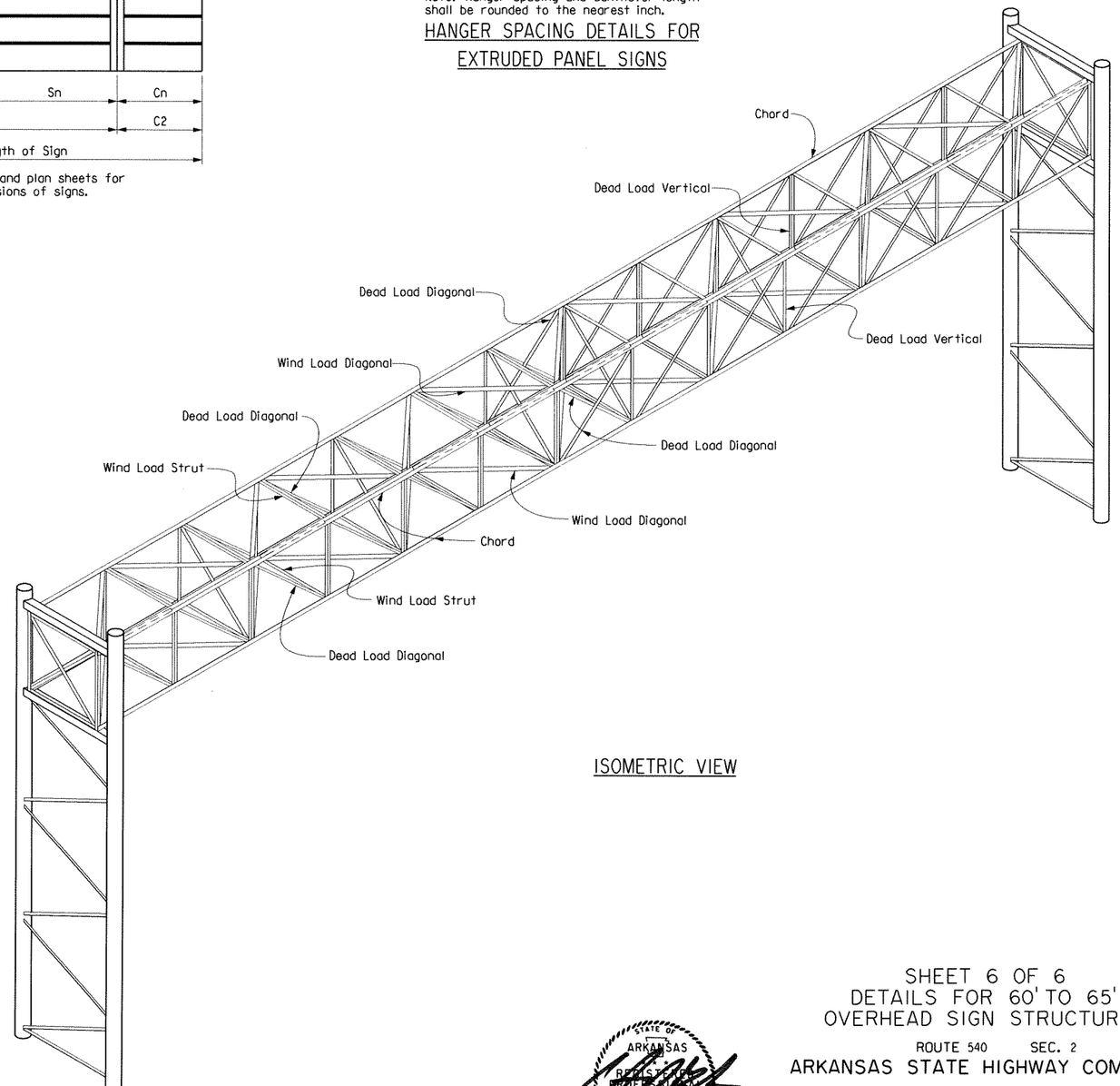

ISOMETRIC VIEW

[1] In addition to material requirements, all pipe used for welded applications shall have a maximum carbon equivalency (CE) of 0.4 using the following equation:
CE = %C + %Mn/6 + %Cu/40 + %Ni/20 + %Cr/10 - %Mo/50 - %V/10

STATE OF ARKANSAS REGISTERED PROFESSIONAL ENGINEER No. 13570 CARTER D. BEASLEY 8/31/12

BRIDGE ENGINEER

SHEET 6 OF 6
DETAILS FOR 60' TO 65'
OVERHEAD SIGN STRUCTURES

ROUTE 540 SEC. 2

ARKANSAS STATE HIGHWAY COMMISSION

LITTLE ROCK, ARK.

DRAWN BY: DLM DATE: 6-12 FILENAME: S0100607X3_SD15.dgn
CHECKED BY: BEG DATE: 7-12 SCALE: Not to Scale
DESIGNED BY: CDB DATE: 6-12

STRUCTURE NO. SEE TABLE DRAWING NO. 48635

DATE REVISED	DATE FILMED	DATE REVISED	DATE FILMED

FED. ROAD DIST. NO.	STATE	FED. AID PROJ. NO.	SHEET NO.	TOTAL SHEETS
6	ARK.			
JOB NO.		BB0407	363	464

(1) SEE TABLE OVERHEAD SIGNS 48636

Note: For "VIEW A-A", see Dwg. No. 48637.

Note: For "DETAIL A" thru "DETAIL H", see Dwg. No. 48638.

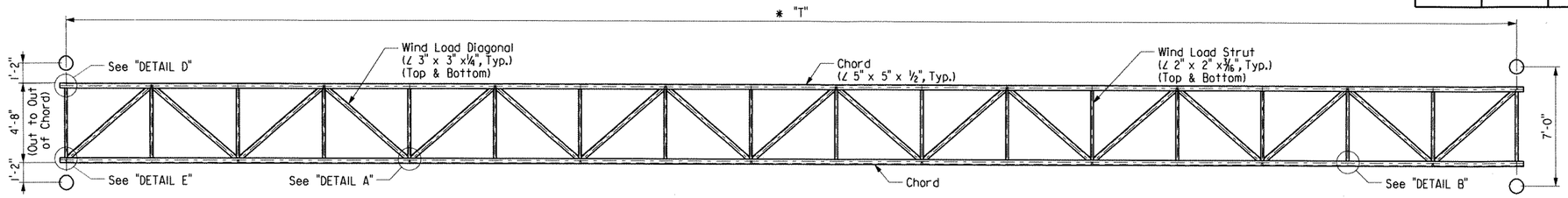

PLAN

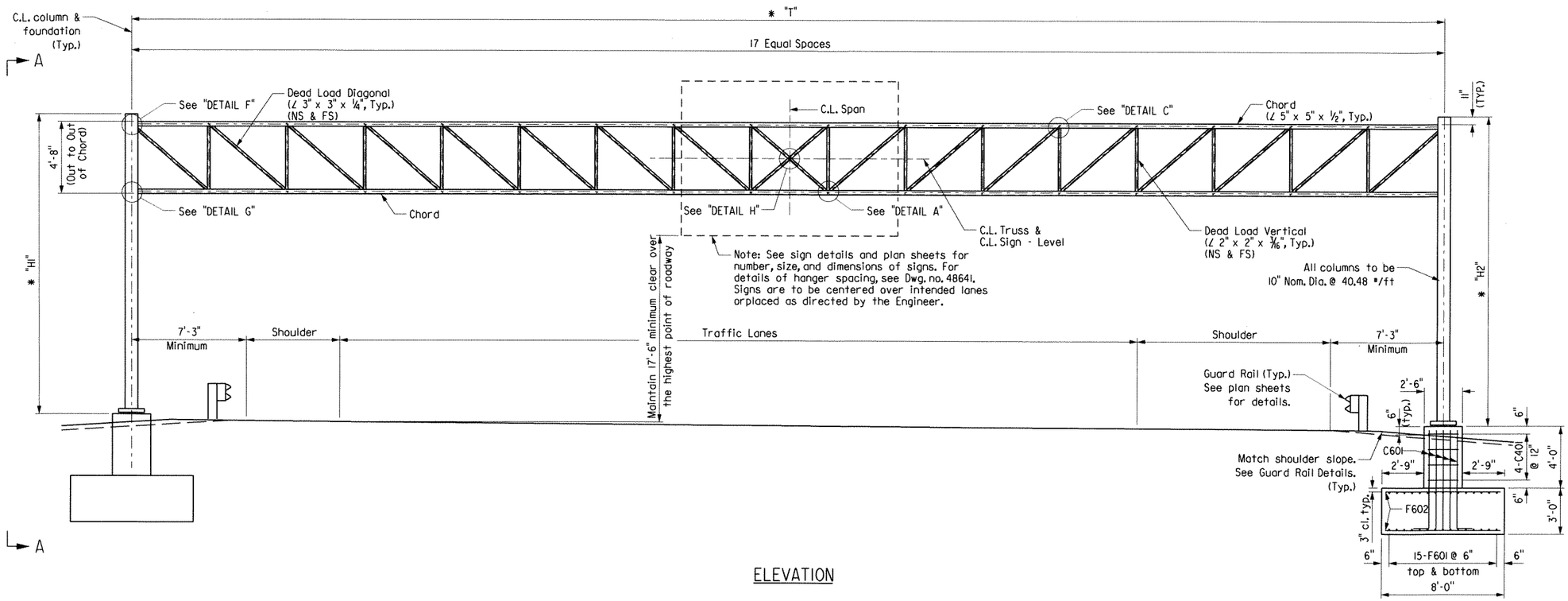

ELEVATION

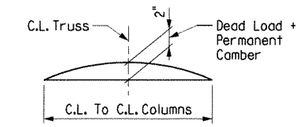

TRUSS CAMBER DETAIL

No Scale

TABLE

STRUCTURE NUMBER	* "T" (Min.)
OH-540-65-01	74'-6"
OH-540-17-05	75'-6"
OH-064-17-01	82'-6"
OH-064-17-02	79'-3"

* Note: The Contractor shall make field measurements to determine the column heights "H1" & "H2" that are required to maintain the minimum vertical clearance with the C.L. of the sign located at the C.L. of the truss. These column heights shall be shown on the shop drawings with a note stating that the contractor has made the required field measurements. If the structure height ("H1" or "H2") exceeds 30'-0" contact the Engineer. The Contractor shall also verify that the variable "T" is sufficient to meet the minimum clearances and to fit the new structure to the existing and/or proposed conditions.

APPROXIMATE QUANTITIES (FOR INFORMATION ONLY)

STRUCTURE NUMBER	CLASS S CONCRETE (cu. yd.)	REINFORCING STEEL (pounds)	EXCAVATION (cu. yd.)
EACH STRUCTURE	42.97	4760	132

STATE OF ARKANSAS REGISTERED PROFESSIONAL ENGINEER No. 13570 CARTER D. BEASLEY 8/31/12

BRIDGE ENGINEER

SHEET 1 OF 6
DETAILS FOR 70' TO 85'
OVERHEAD SIGN STRUCTURES

ROUTE 540 SEC. 2

ARKANSAS STATE HIGHWAY COMMISSION

LITTLE ROCK, ARK.

DRAWN BY: DLM DATE: 6-12 FILENAME: S0100607X4_SL11.dgn
CHECKED BY: BEG DATE: 7-12 SCALE: Not to Scale
DESIGNED BY: CDB DATE: 6-12

STRUCTURE NO. SEE TABLE DRAWING NO. 48636

DATE REVISED	DATE FILMED	DATE REVISED	DATE FILMED	FED. ROAD DIST. NO.	STATE	FED. AID PROJ. NO.	SHEET NO.	TOTAL SHEETS
				6	ARK.			
				JOB NO.		BB0407	364	464
				(1) SEE TABLE OVERHEAD SIGNS				48637

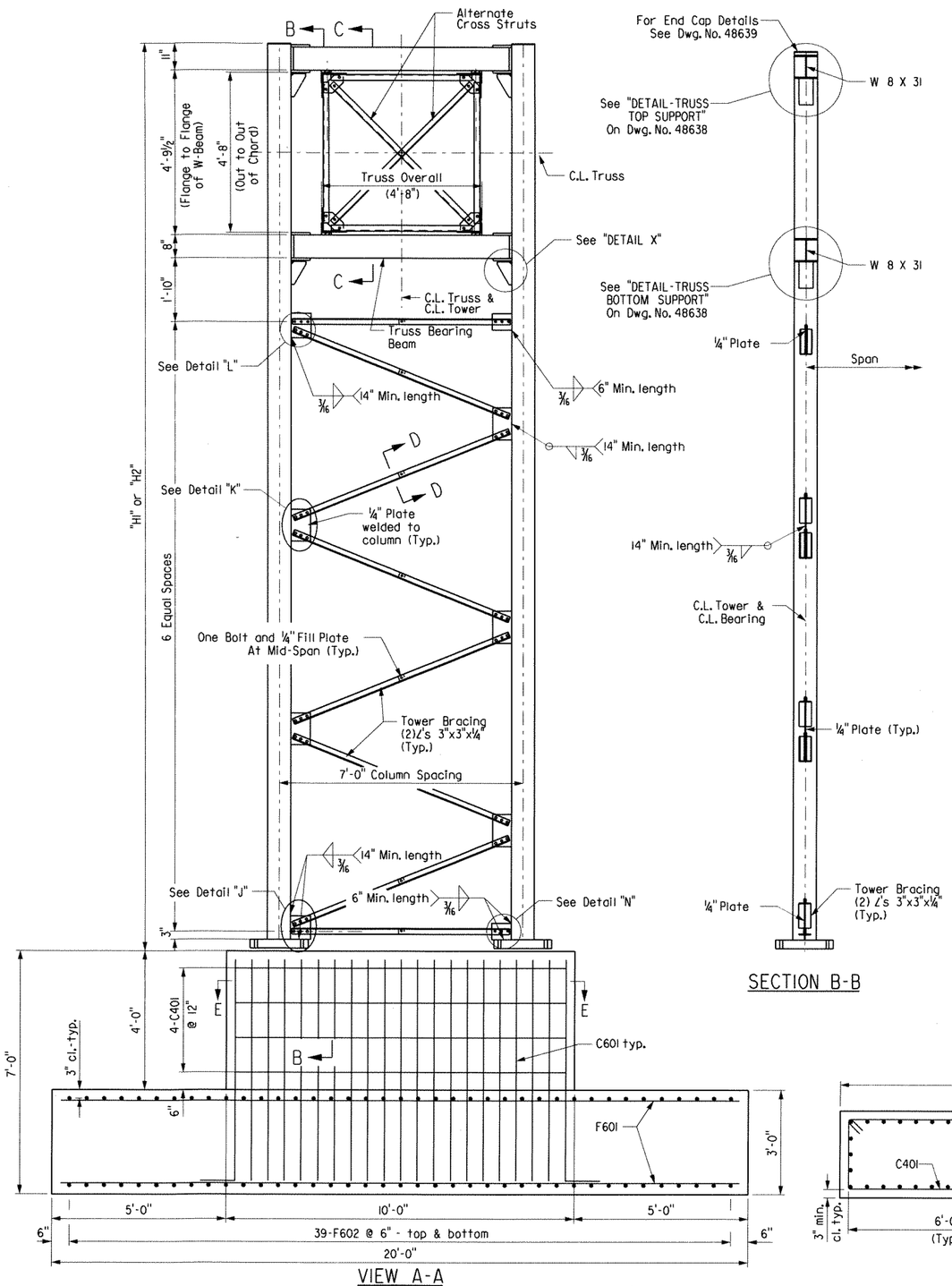

VIEW A-A

SECTION B-B

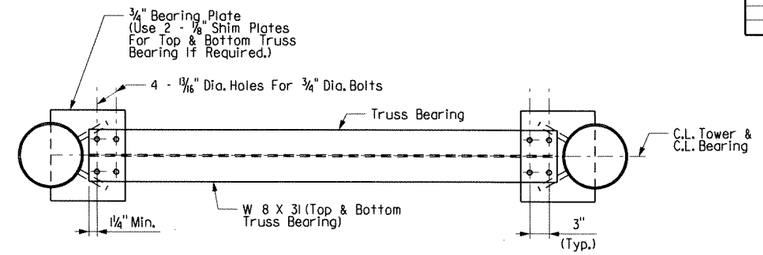

PLAN AT TRUSS BEARING

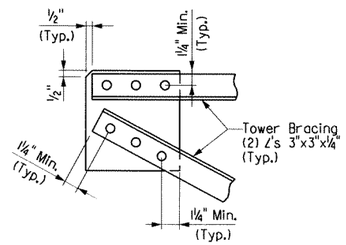

DETAIL "L" [1]

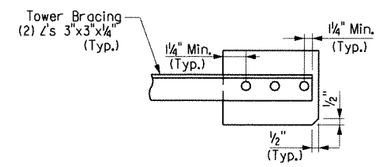

DETAIL "N" [1]

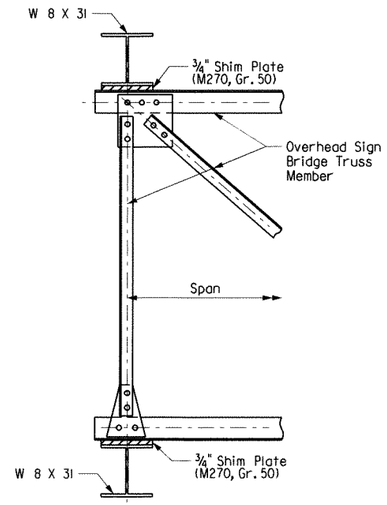

SECTION C-C

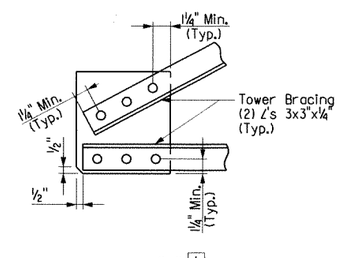

DETAIL "J" [1]

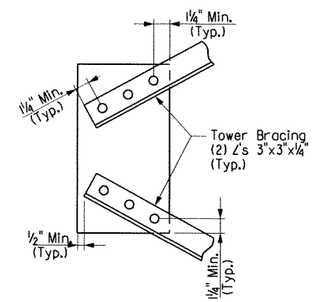

DETAIL "K" [1]

[1] Bolts shall be ¾" Dia. and open holes shall be 13/16". Minimum center to center bolt spacing shall be 2½".

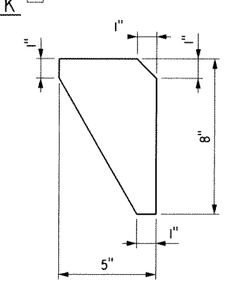

DETAIL "X"

BAR LIST - PER STRUCTURE

Bending Diagrams
(Dimensions are out to out of bars.)

Mark	No. Req'd.	Length	Pin Dia.
C401	16	16'-6"	3"
C601	96	7'-5"	4½"
F601	60	19'-6"	Str.
F602	156	7'-6"	Str.

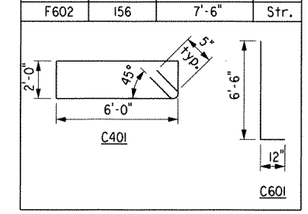

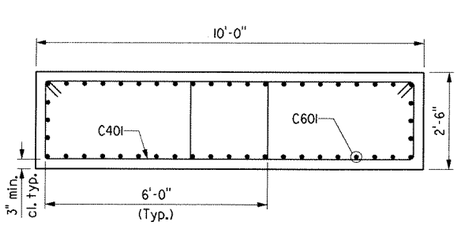

SECTION E-E

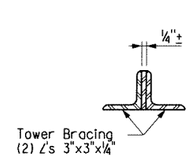

SECTION D-D

STATE OF ARKANSAS REGISTERED PROFESSIONAL ENGINEER No. 13570 CARTER D. BEARDEN

BRIDGE ENGINEER

SHEET 2 OF 6
DETAILS FOR 70' TO 85' OVERHEAD SIGN STRUCTURES

ROUTE 540 SEC. 2

ARKANSAS STATE HIGHWAY COMMISSION

LITTLE ROCK, ARK.

DRAWN BY: DLM DATE: 6-12
CHECKED BY: BEG DATE: 7-12
DESIGNED BY: CDB DATE: 6-12

FILENAME: S0100607X4_SD11.dgn
SCALE: Not to Scale

STRUCTURE NO. SEE TABLE DRAWING NO. 48637

DATE REVISED	DATE FILMED	DATE REVISED	DATE FILMED	FED. ROAD DIST. NO.	STATE	FED. AID PROJ. NO.	SHEET NO.	TOTAL SHEETS
				6	ARK.			
				JOB NO.		BB0407	365	464
				(1) SEE TABLE OVERHEAD SIGNS				48638

[1] Slotted hole in Gusset Plate and Chord Angle 11/16" x 2". Use Plate Washer on Gusset Plate side. 11/16" diameter hole in 3/4" Shim Plate and Beam Flange.

Note: All Gusset plates shall be 3/8" thick.

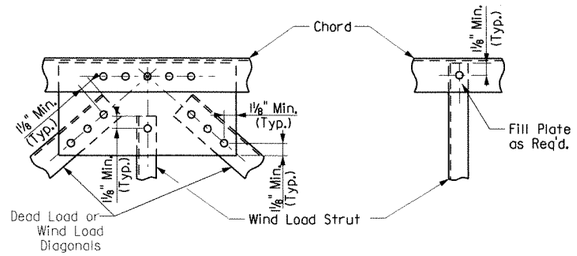

DETAIL A

DETAIL B

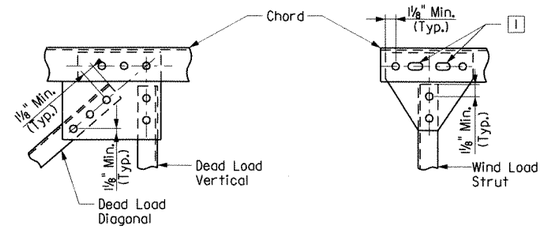

DETAIL C

DETAIL D

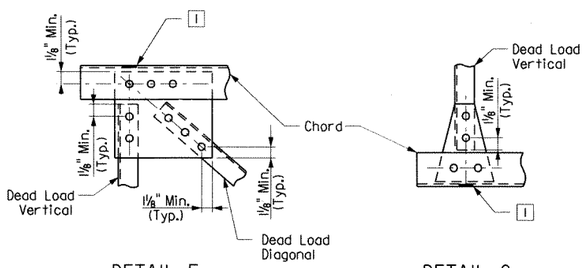

DETAIL F

DETAIL G

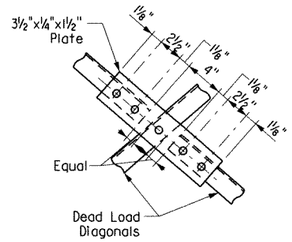

DETAIL H

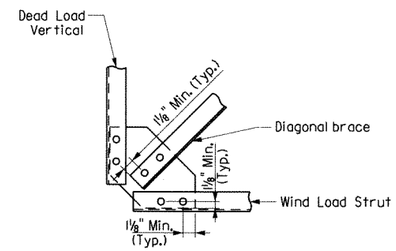

DETAIL M

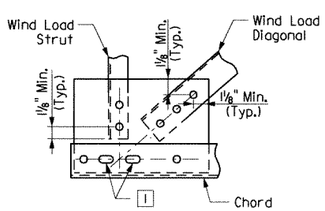

DETAIL E

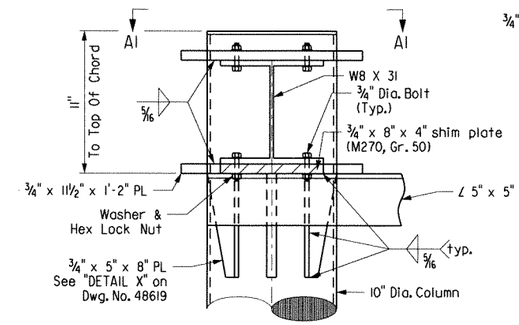

DETAIL - TRUSS TOP SUPPORT

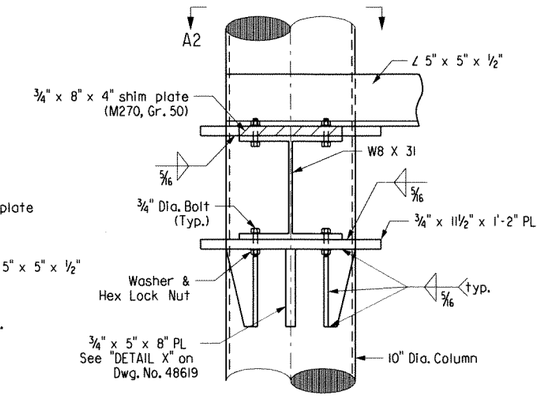

DETAIL - TRUSS BOTTOM SUPPORT

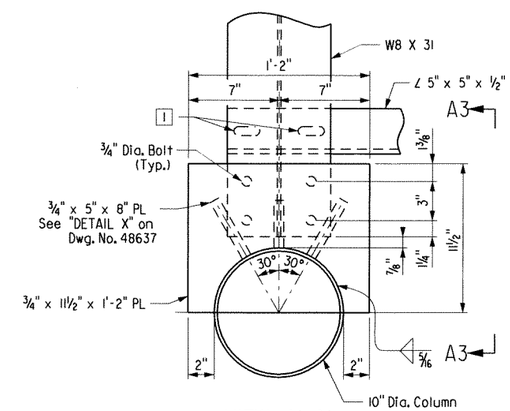

VIEW A1-A1

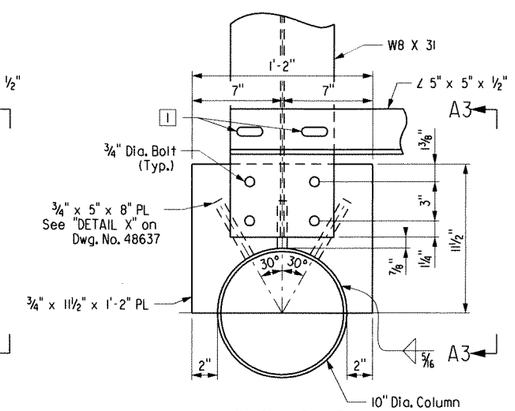

VIEW A2-A2

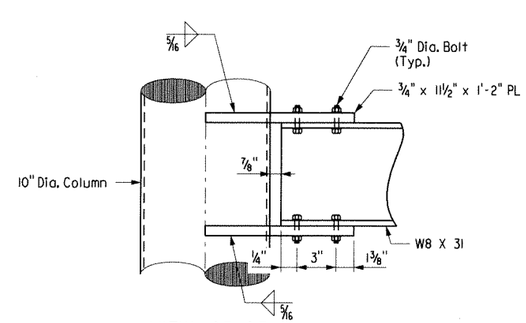

VIEW A3-A3

Note: 3/4" x 5" x 8" Plate Not Shown For Clarity.

STATE OF ARKANSAS REGISTERED PROFESSIONAL ENGINEER No. 13570 CARTER D. BEG

BRIDGE ENGINEER

SHEET 3 OF 6
DETAILS FOR 70' TO 85'
OVERHEAD SIGN STRUCTURES

ROUTE 540 SEC. 2

ARKANSAS STATE HIGHWAY COMMISSION

LITTLE ROCK, ARK.

DRAWN BY: DLM DATE: 6-12
CHECKED BY: BEG DATE: 7-12
DESIGNED BY: CDB DATE: 6-12
FILENAME: S0100607X4_SDI2.dgn
SCALE: Not to Scale

STRUCTURE NO. SEE TABLE DRAWING NO. 48638

DATE REVISED	DATE FILMED	DATE REVISED	DATE FILMED	FED. ROAD DIST. NO.	STATE	FED. AID PROJ. NO.	SHEET NO.	TOTAL SHEETS
				6	ARK.			
				JOB NO.		BB0407	3/66	464
				(1) SEE TABLE OVERHEAD SIGNS				48639

Note: For "DETAIL M" see Dwg. No. 48638

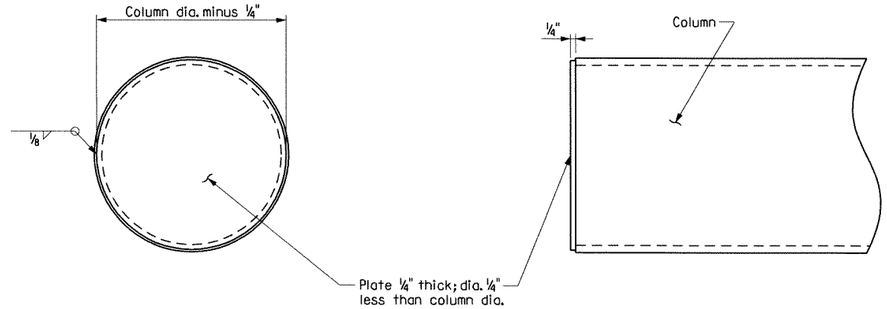

END CAP DETAILS

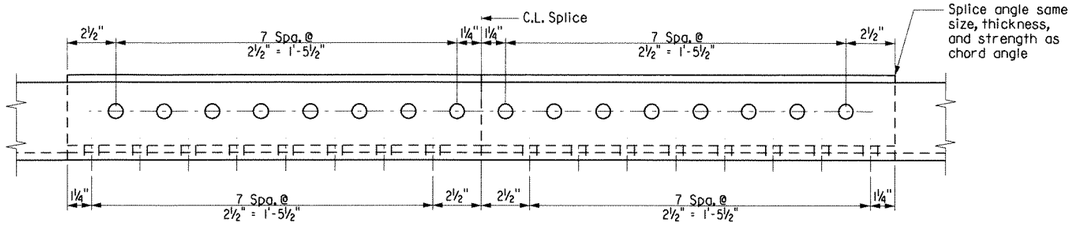

OPTIONAL CHORD SPLICE USING ANGLES [1]

(Place splice angle on inside of truss)
(5" ∠ Shown)

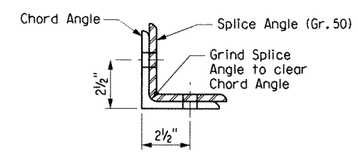

SECTION ON C.L. SPLICE

(4" ∠ Shown)

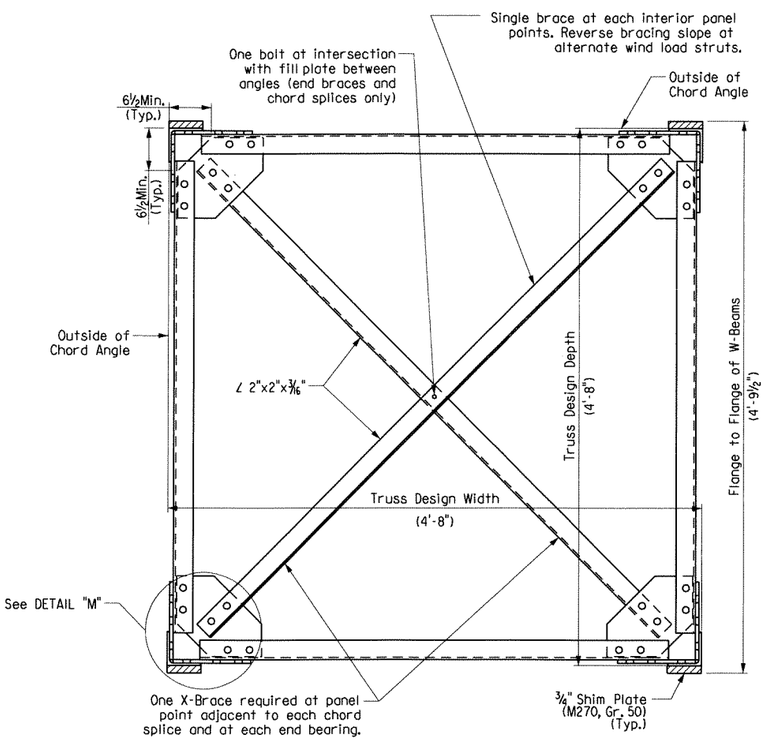

TRUSS SECTION

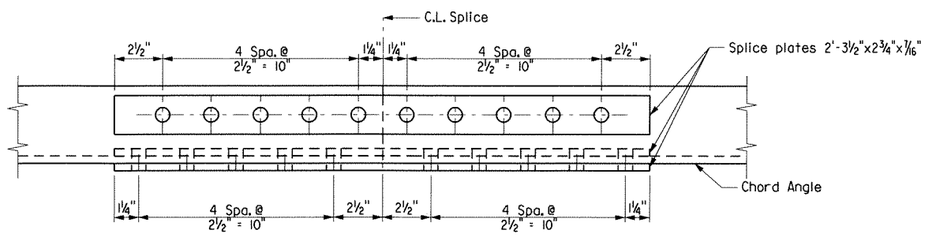

CHORD SPLICE USING PLATES [1]

(5" ∠ Shown)

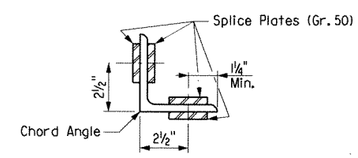

SECTION ON C.L. SPLICE

(4" ∠ Shown)

[1] Bolts shall be 3/4" Dia. and open holes shall be 13/16". Minimum center to center bolt spacing shall be 2 1/2".

SPLICE DETAILS

Note: Chord angles may be spliced in convenient lengths for galvanizing and sign placement.

STATE OF ARKANSAS REGISTERED PROFESSIONAL ENGINEER No. 13570 CARTER D. BEARDEN 8/1/12

BRIDGE ENGINEER

SHEET 4 OF 6
DETAILS FOR 70' TO 85'
OVERHEAD SIGN STRUCTURES

ROUTE 540 SEC. 2

ARKANSAS STATE HIGHWAY COMMISSION

LITTLE ROCK, ARK.

DRAWN BY: DLM DATE: 6-12
CHECKED BY: BEG DATE: 7-12
DESIGNED BY: CDB DATE: 6-12

FILENAME: S0100607X4_SDI3.dgn
SCALE: Not to Scale

STRUCTURE NO. SEE TABLE DRAWING NO. 48639

DATE REVISED	DATE FILMED	DATE REVISED	DATE FILMED	FED. ROAD DIST. NO.	STATE	FED. AID PROJ. NO.	SHEET NO.	TOTAL SHEETS
				6	ARK.			
				JOB NO.		BB0407	261	464
				(1) SEE TABLE OVERHEAD SIGNS				48640

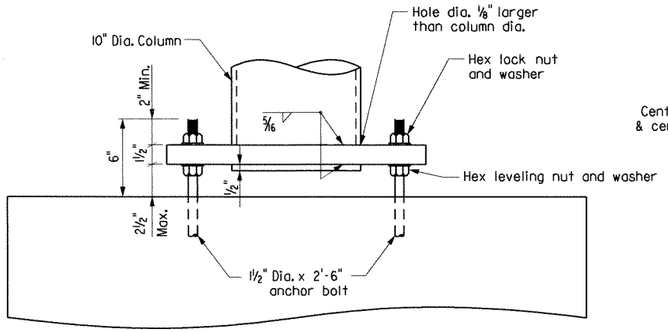

ELEVATION - COLUMN BASE

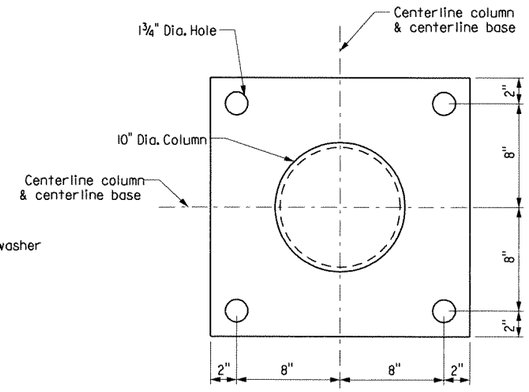

PLAN - COLUMN BASE

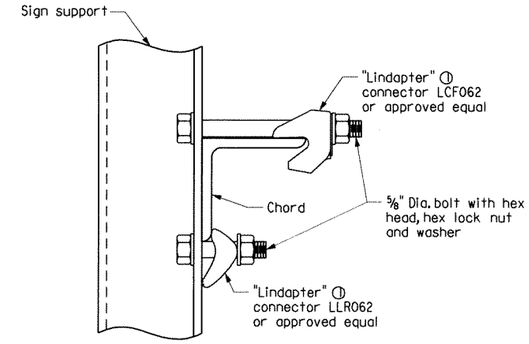

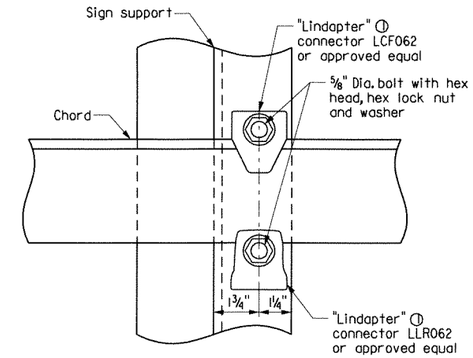

TOP CHORD

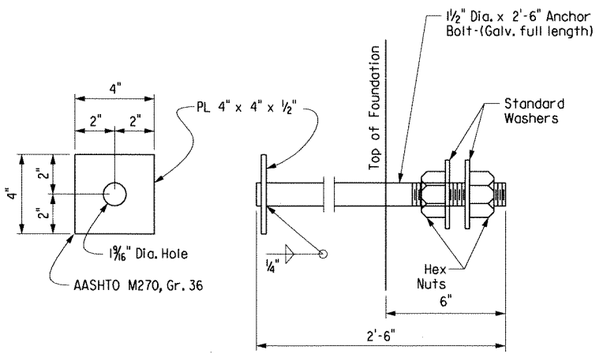

Anchor bolts shall comply with AASHTO M314, Grade 55, with Supplementary Requirement S1, and galvanized according to Section 807.07. Nuts and washers for bolts shall be as specified in Section 807.07.

ANCHOR BOLT DETAIL

No Scale

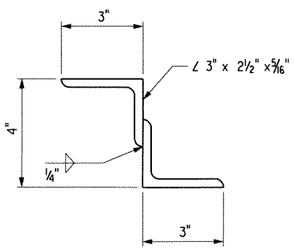

NOTE: Structural Z support may be fabricated from angles as shown.

DETAIL OF ALTERNATE Z SUPPORT

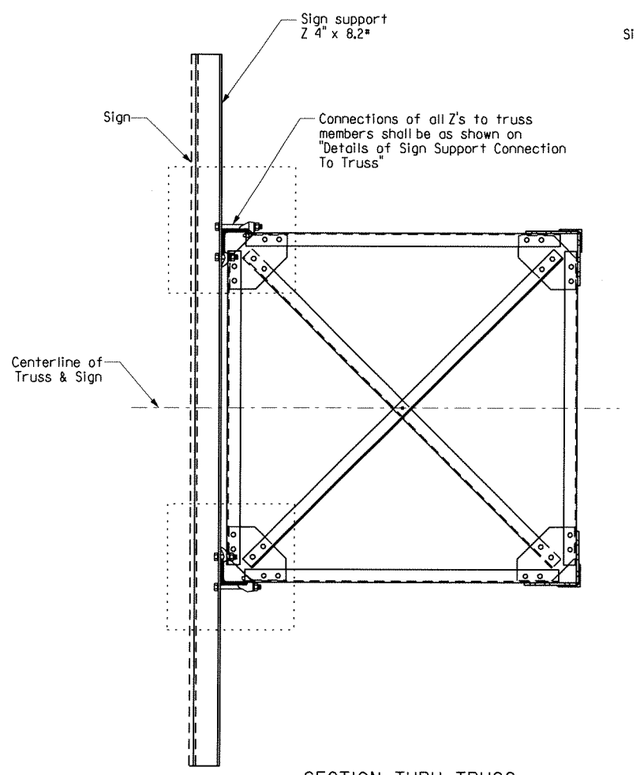

SECTION THRU TRUSS

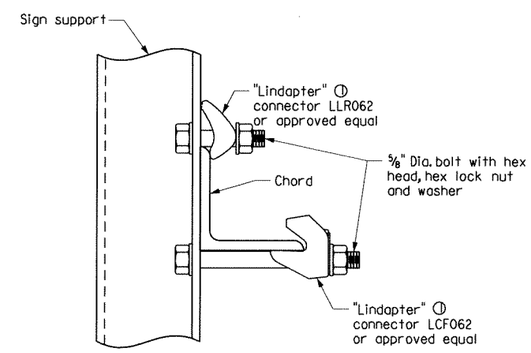

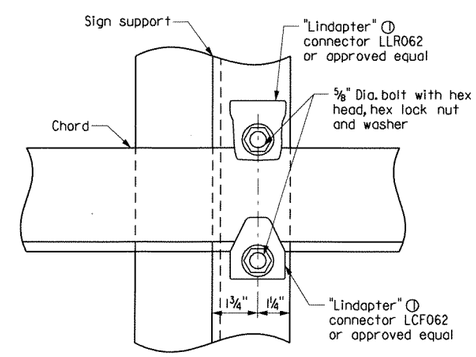

(1) Note: All "Lindapter" connectors or approved equal shall be installed according to manufacturer's recomendations. All connectors, bolts, nuts, and washers shall be galvanized.

BOTTOM CHORD

NOTE:
Install all support connectors clear of the gusset plates and splice locations.

DETAIL OF SIGN SUPPORT CONNECTION TO TRUSS

STATE OF ARKANSAS REGISTERED PROFESSIONAL ENGINEER No. 13570 CARTER D. BEG 8/1/12

BRIDGE ENGINEER

SHEET 5 OF 6
DETAILS FOR 70' TO 85'
OVERHEAD SIGN STRUCTURES

ROUTE 540 SEC. 2

ARKANSAS STATE HIGHWAY COMMISSION

LITTLE ROCK, ARK.

DRAWN BY: DLM DATE: 6-12 FILENAME: S0100607X4_SD14.dgn
CHECKED BY: BEG DATE: 7-12 SCALE: Not to Scale
DESIGNED BY: CDB DATE: 6-12

STRUCTURE NO. SEE TABLE DRAWING NO. 48640

DATE REVISED	DATE FILMED	DATE REVISED	DATE FILMED	FED. ROAD DIST. NO.	STATE	FED. AID PROJ. NO.	SHEET NO.	TOTAL SHEETS
				6	ARK.			
				JOB NO.		BB0407	308	464
				(1) SEE TABLE OVERHEAD SIGNS				48641

GENERAL NOTES

CONSTRUCTION SPECIFICATIONS:

Arkansas State Highway and Transportation Department Standard Specifications for Highway Construction, 2003 edition, with applicable supplemental specifications and special provisions. Section and Subsection refer to the Standard Construction Specifications unless otherwise noted in the plans.

DESIGN SPECIFICATIONS:

Standard Specifications for Structural Supports for Highway Signs, Luminaries and Traffic Signals, AASHTO 2009 (Fifth Edition).

Basic Wind Speed = 90 m.p.h.

This structure is approved for a sign area equivalent to 60% of the span at 15' tall. Use of additional sign area must be approved by the Engineer.

If the structure height ('H1' or 'H2') exceeds 30'-0" contact the Engineer.

FOUNDATION MATERIALS AND STRENGTHS:

Class S Concrete ..... f'c = 3,500psi
Reinforcing Steel (AASHTO M31 or M53, Grade 60) ..... fy = 60,000 psi

Structural steel sign support members shall comply with the following specifications:

Angles: ..... AASHTO M270, Gr. 36 (Fy = 36,000 psi).
Plate: ..... AASHTO M270, Gr. 50 (Fy = 50,000 psi).
[1] Pipe: ..... ASTM A139 Gr. C, straight-seam welded (Fy=42,000psi),
ASTM A500 Gr. B (Fy = 42,000 psi),
ASTM A501 Gr. B (Fy = 50,000 psi),
ASTM A714 Class 2, Gr. II, Type E or S (Fy = 50,000 psi)
Z-Shapes: ..... AASHTO M270, Gr. 36 (Fy = 36,000 psi).
Shim Plates: ..... ASTM A1011, SS, Gr. 36, Type 2, or Grade 40.
Bolts: ..... AASHTO M164, Type 1.
Locknuts - Approved Type: ..... Meeting or exceeding AASHTO M292
Washers: ..... AASHTO M293
Nuts: ..... AASHTO M291 or M292, Gr. 2H or Gr. DH (Gr. 10S)

All steel shall be Galvanized according to section 807.19. Steel completely encased in concrete may not be Galvanized.

Drawings show general features of design only. Shop drawings shall be made in accordance with section 807.04, submitted, and approval secured before fabrication is begun.

No circumferential butt welds will be allowed in any pipe sections.

Requests for substitution of structural steel shapes shown with shapes of greater size must be submitted by the Contractor to the Engineer for approval. Steels of equal or greater strengths will be accepted only when shown on the approved shop drawings. Shapes and materials shown in the plans will be the basis of payment and no additional compensation will be made for any adjustments due to substitutions.

Connections shall be bolted with high-strength bolts. Unless noted otherwise, bolts shall be ⅝" diameter and open holes shall be 11/16". Bolt spacing shall be 2¼" for ⅝" diameter bolts unless otherwise noted. Bolts shall be placed with heads on the outside face of all members.

All welding that is to be done during fabrication of structural steel, including temporary welds, shall be detailed on the shop drawings and submitted for approval. If additional welds are required, whether temporary or permanent, a formal request with detailed drawings shall be submitted to the Engineer for approval. All welding shall conform to subsection 807.26.

Anchor bolts shall comply with AASHTO M314, Grade 55, with Supplementary Requirement S1, and galvanized according to Section 807.07. Nuts and washers for anchor bolts shall be furnished and galvanized in accordance with subsection 807.07.

All truss frame bolts shall comply with AASHTO M164 Type 1, galvanized according to Subsection 807.06. Nuts and washers for AASHTO M164 Type 1 bolts shall be furnished and galvanized in accordance with subsection 807.06.

Field splices shall be located in order to avoid sign panel connections. There shall be a maximum of two field splices and they shall be spaced a minimum of 15 ft. apart.

All main load carrying tension members greater than ½" in thickness shall conform to the requirements of the Longitudinal Charpy V-notch test specified for Zone 1 minimum service temperature. This work and materials shall be paid for in accordance with Special Provision Job BB0407 "STEEL OVERHEAD, CANTILEVER, AND BRIDGE MOUNTED SIGN STRUCTURES".

All fillet welds of critical members shall be tested according to AWS D1.1 Structural Welding Code - Steel, using the magnetic particle method. Critical welds shall include: column to base plate welds and truss bottom support to column.

Truss field sections shall be shop assembled. Entire truss shall be fully assembled and lifted into place as one unit on to tower supports. All truss member connections shall be bolted connections.

Locknuts to be equipped with nylon locking inserts or other approved type locking system. Locknuts to be installed according to manufacturer's recommendations.

Shoring may be required to protect existing shoulders during excavation. Any shoring required shall not be paid for directly, but shall be considered incidental to the item "Steel Overhead Sign Structure". The excavations for the footings shall be back-filled before the structure is attached to the foundations.

Galvanized coating damaged during transport, handling, or erection shall be field repaired in accordance with section 807.88.

The contractor shall make check measurements in the field and make any adjustments necessary to meet the required clearances and to fit the new structures to the existing conditions.

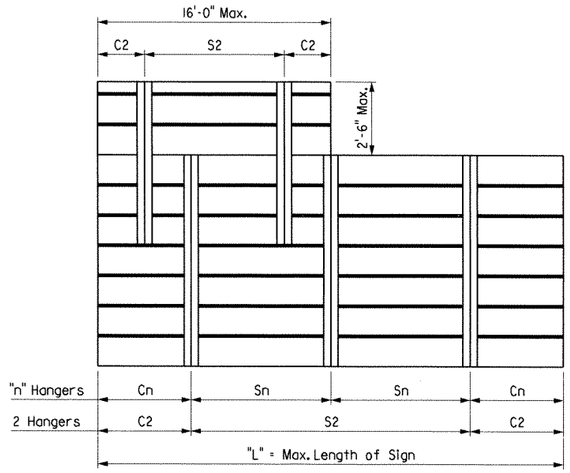

Note: See sign details and plan sheets for number, size and dimensions of signs.

Max. Length of Sign = "L"	"n" Hangers	Cantilever Length "Cn"	Hanger Spacing "Sn"
15'-0"	2 Hangers	0.21 x "L"	0.58 x "L"
30'-0"	3 Hangers	0.145 x "L"	0.355 x "L"
45'-0"	4 Hangers	0.107 x "L"	0.262 x "L"

Note: Hanger spacing and cantilever length shall be rounded to the nearest inch.

HANGER SPACING DETAILS FOR EXTRUDED PANEL SIGNS

[1] In addition to material requirements, all pipe used for welded applications shall have a maximum carbon equivalency (CE) of 0.4 using the following equation:
CE = %C + %Mn/6 + %Cu/40 + %Ni/20 + %Cr/10 - %Mo/50 - %V/10

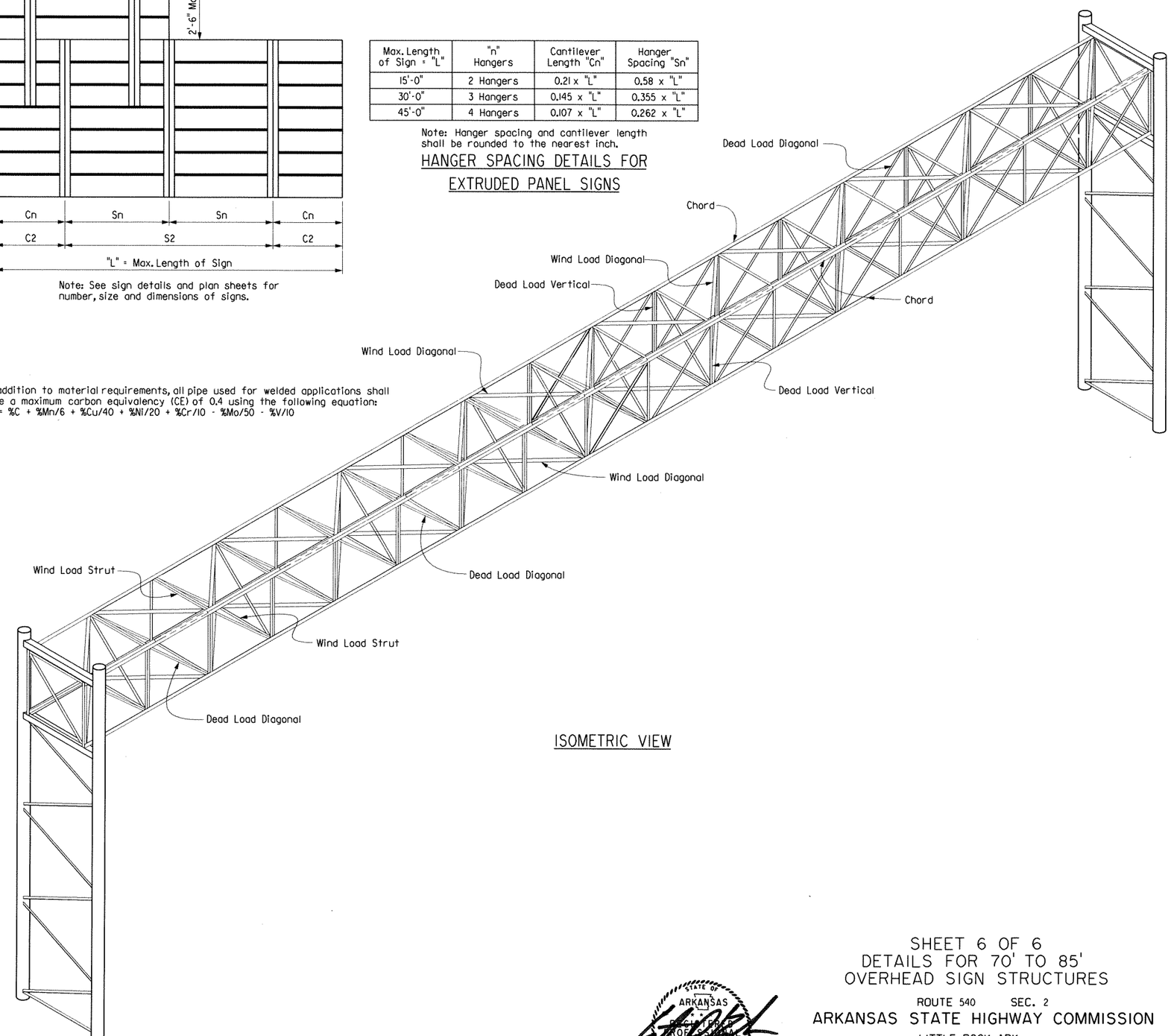

ISOMETRIC VIEW

STATE OF ARKANSAS REGISTERED PROFESSIONAL ENGINEER No. 13570 CARTER D. BEARDEN 8/12

BRIDGE ENGINEER

SHEET 6 OF 6
DETAILS FOR 70' TO 85'
OVERHEAD SIGN STRUCTURES

ROUTE 540 SEC. 2

ARKANSAS STATE HIGHWAY COMMISSION

LITTLE ROCK, ARK.

DRAWN BY: DLM DATE: 6-12 FILENAME: S0100607X4_SD15.dgn
CHECKED BY: BEG DATE: 7-12 SCALE: Not to Scale
DESIGNED BY: CDB DATE: 6-12

STRUCTURE NO. SEE TABLE DRAWING NO. 48641

DATE REVISED	DATE FILMED	DATE REVISED	DATE FILMED	FED. ROAD DIST. NO.	STATE	FED. AID PROJ. NO.	SHEET NO.	TOTAL SHEETS
				6	ARK.			
				JOB NO.		BB0407	369	464
				(1) SEE TABLE OVERHEAD SIGNS				48642

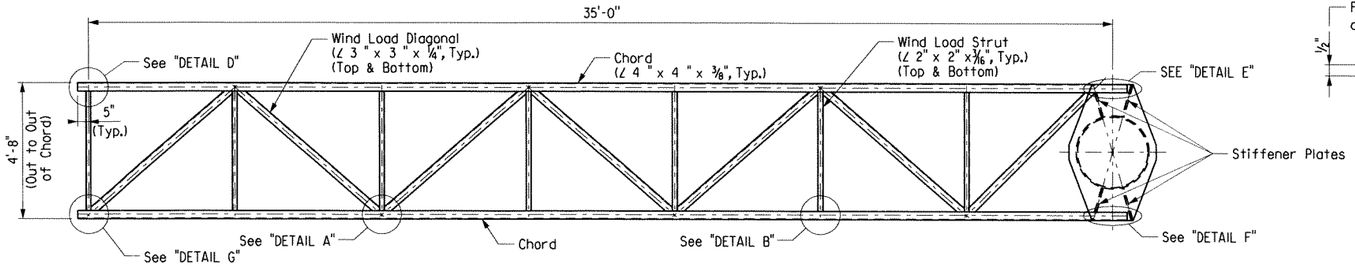

PLAN

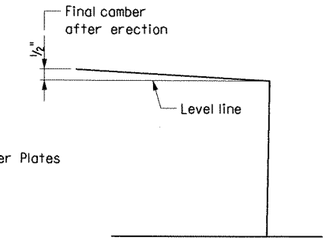

TRUSS CAMBER DETAIL

(1) Note: Cap shall be solid steel sheet ½" nominal thickness. Drill, tap and plug galvanizing vent.

Note: For "DETAIL A" thru "DETAIL G", see Dwg. No. 48643

APPROXIMATE QUANTITIES (FOR INFORMATION ONLY)

STRUCTURE NUMBER	REINFORCING STEEL (pounds)	CLASS S CONCRETE (cu. yd.)	EXCAVATION (cu. yd.)
Each Structure	1,447	20.38	61

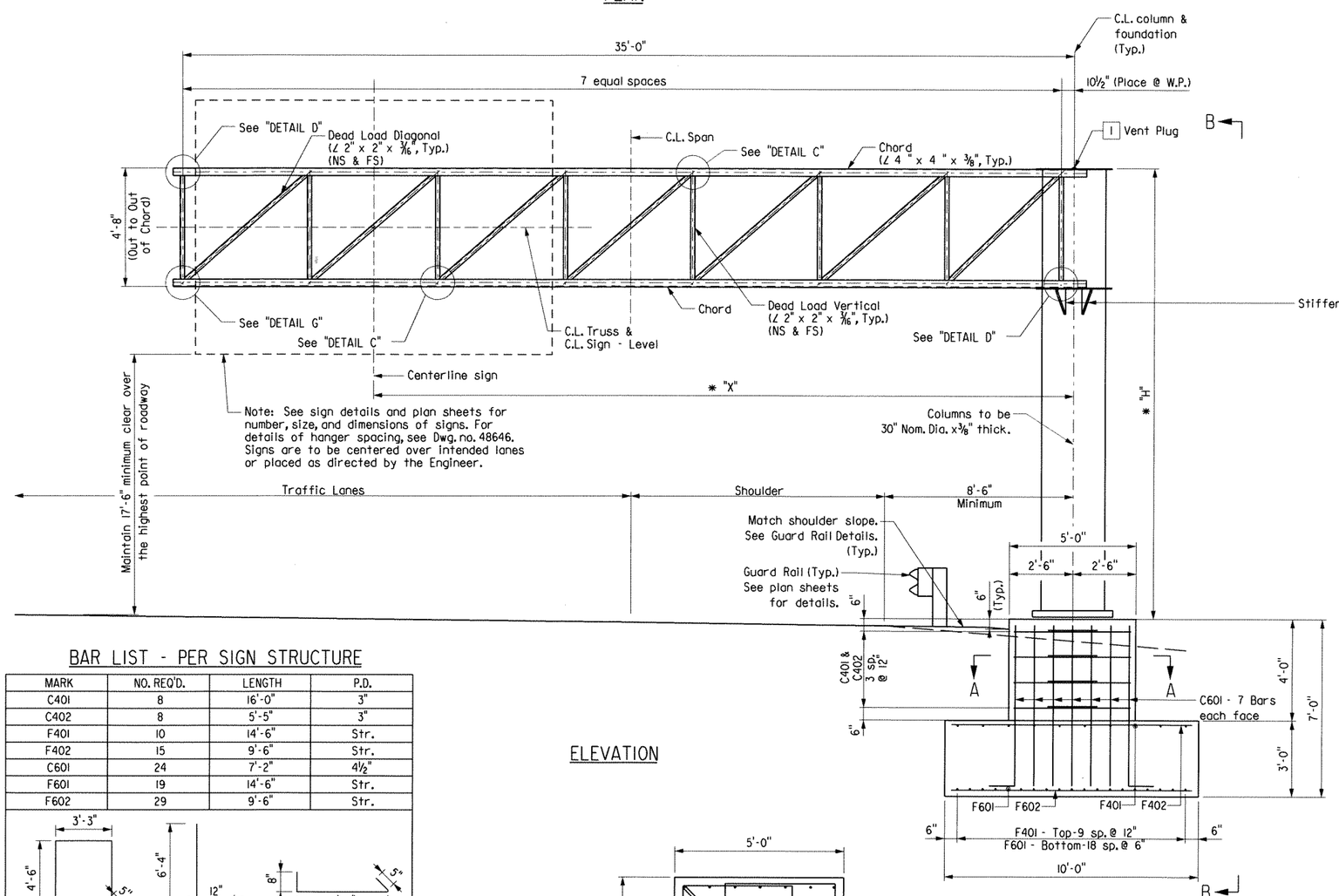

ELEVATION

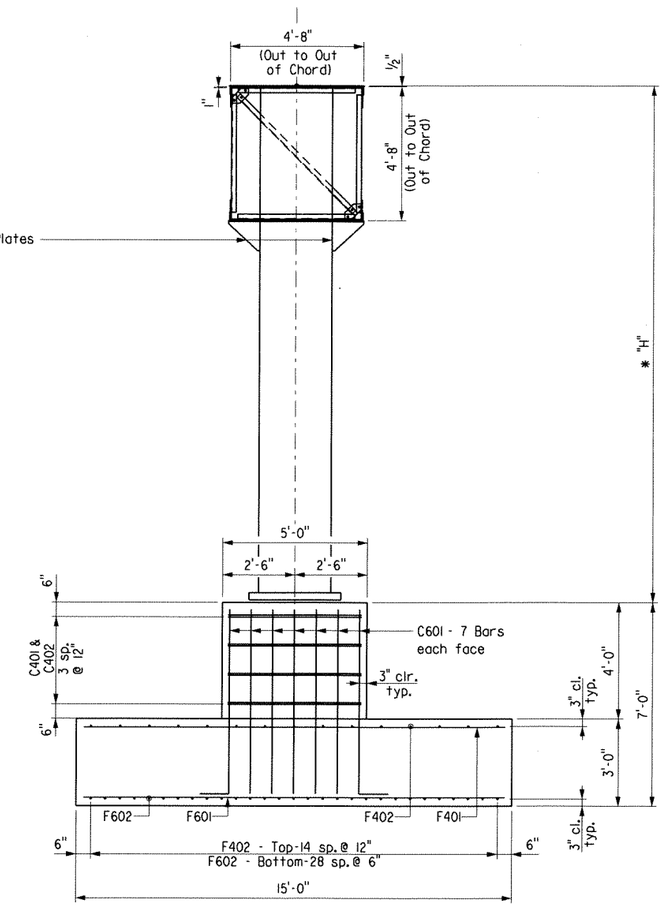

VIEW B-B

BAR LIST - PER SIGN STRUCTURE

MARK	NO. REQ'D.	LENGTH	P.D.
C401	8	16'-0"	3"
C402	8	5'-5"	3"
F401	10	14'-6"	Str.
F402	15	9'-6"	Str.
C601	24	7'-2"	4½"
F601	19	14'-6"	Str.
F602	29	9'-6"	Str.

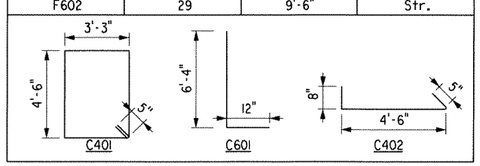

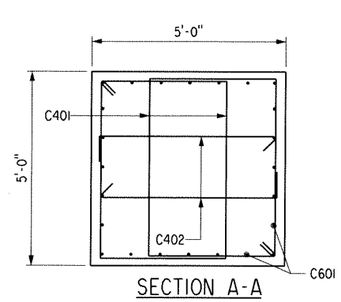

SECTION A-A

TABLE

STRUCTURE NUMBER	"X"
OC-540-65-02	29'-9"
OC-540-65-03	30'-10"
OC-540-65-04	29'-9"

* Note:
The Contractor shall make field measurements to determine the following:

1) To verify that the dimension 'X' is sufficient to center the sign over the intended lane while maintaining minimum horizontal clearances.

2) To determine the column height 'H' required to maintain the minimum vertical clearances with the centerline of the sign located at the C.L. of the truss. If the structure height 'H' exceeds 30'-0" contact the Engineer.

These verifications and measurements are required prior to submittal of the shop drawings. The column height 'H' shall be shown in the shop drawings with a note stating that the Contractor has made the required field measurements.

STATE OF ARKANSAS REGISTERED PROFESSIONAL ENGINEER No. 13570 CARTER D. BEARD 8/14/12

BRIDGE ENGINEER

SHEET 1 OF 5
DETAILS FOR STANDARD
35'-0" CANTILEVER SIGN STRUCTURE

ROUTE 540 SEC. 2

ARKANSAS STATE HIGHWAY COMMISSION

LITTLE ROCK, ARK.

DRAWN BY: DLM DATE: 6-12 FILENAME: S0100607X5_SL11.dgn
CHECKED BY: BEG DATE: 7-12 SCALE: Not to Scale
DESIGNED BY: CDB DATE: 6-12

STRUCTURE NO. SEE TABLE DRAWING NO. 48642

DATE REVISED	DATE FILMED	DATE REVISED	DATE FILMED	FED. ROAD DIST. NO.	STATE	FED. AID PROJ. NO.	SHEET NO.	TOTAL SHEETS
				6	ARK.			
				JOB NO.		BB0407	370	464
				(1) SEE TABLE OVERHEAD SIGNS				48643

Note: All gussets shall be 3/8" thick.

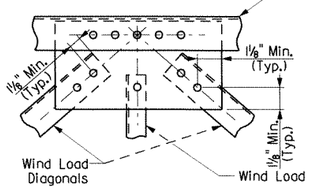

DETAIL A

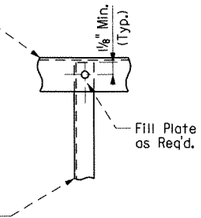

DETAIL B

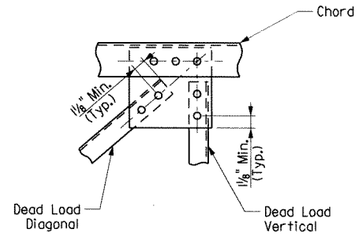

DETAIL C

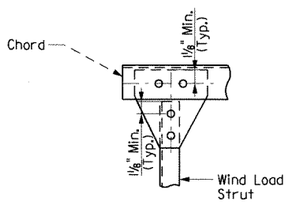

DETAIL D

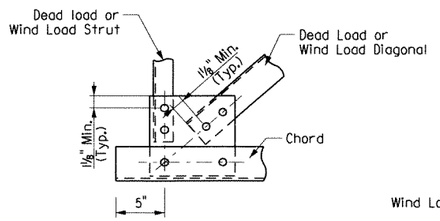

DETAIL G

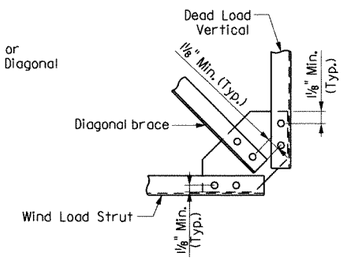

DETAIL H

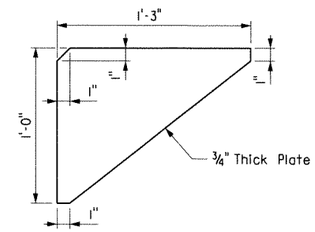

STIFFENER PLATE DETAIL

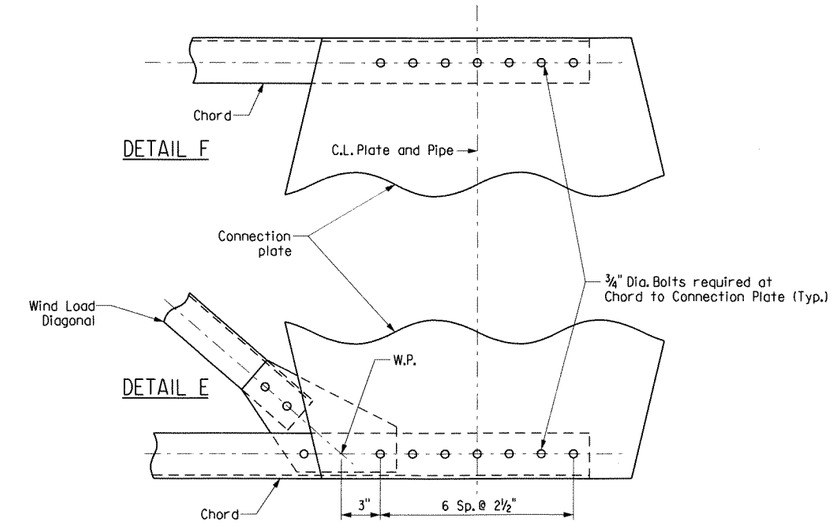

CONNECTION DETAIL

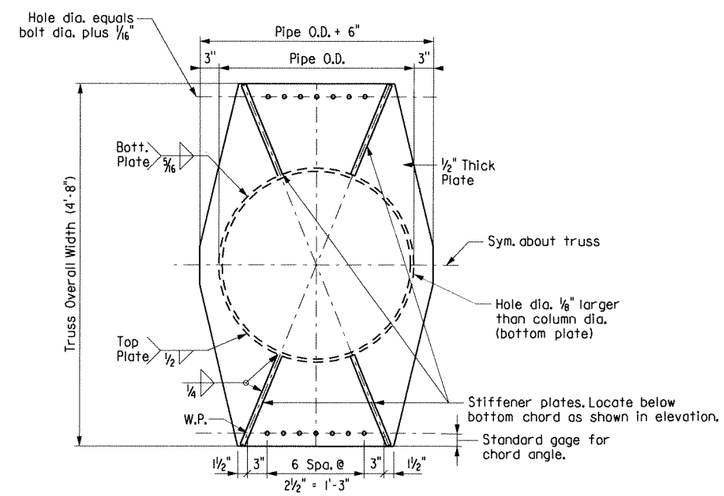

CONNECTION PLATE DETAIL

STATE OF ARKANSAS REGISTERED PROFESSIONAL ENGINEER No. 13570 CARTER D. BEARDEN

BRIDGE ENGINEER

SHEET 2 OF 5
DETAILS FOR STANDARD
35'-0" CANTILEVER SIGN STRUCTURE

ROUTE 540 SEC. 2

ARKANSAS STATE HIGHWAY COMMISSION

LITTLE ROCK, ARK.

DRAWN BY: DLM DATE: 6-12
CHECKED BY: BEG DATE: 7-12
DESIGNED BY: CDB DATE: 6-12

FILENAME: S0100607X5_SD11.dgn
SCALE: Not to Scale

STRUCTURE NO. SEE TABLE DRAWING NO. 48643

DATE REVISED	DATE FILMED	DATE REVISED	DATE FILMED	FED. ROAD DIST. NO.	STATE	FED. AID PROJ. NO.	SHEET NO.	TOTAL SHEETS
				6	ARK.			
				JOB NO.		BB0407	371	464
				(1) SEE TABLE OVERHEAD SIGNS				48644

Note: For "Detail H"
See Dwg. No. 48643.

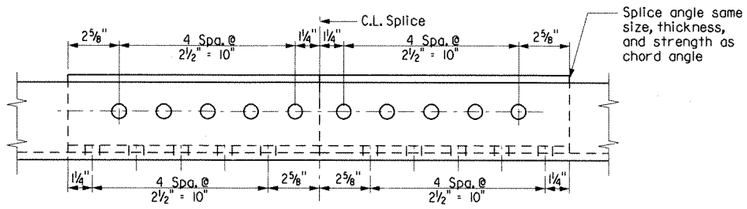

[1] OPTIONAL CHORD SPLICE USING ANGLES
(Place splice angle on inside of truss)
(4" ∠ Shown)

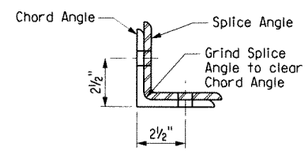

SECTION ON C.L. SPLICE
(4" ∠ Shown)

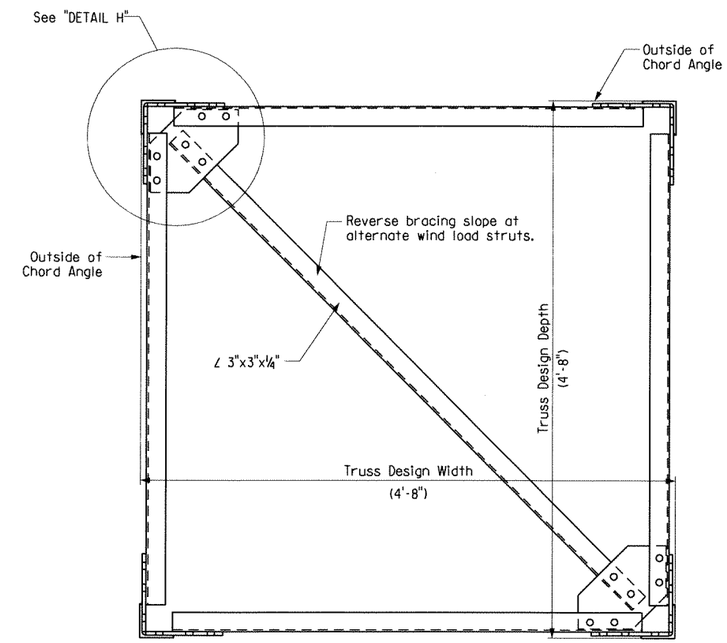

TRUSS SECTION

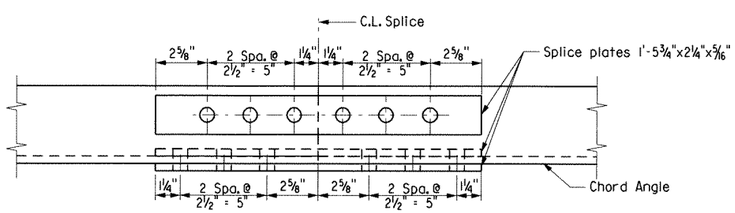

[1] CHORD SPLICE USING PLATES
(4" ∠ Shown)

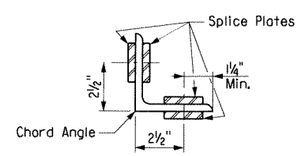

SECTION ON C.L. SPLICE
(4" ∠ Shown)

SPLICE DETAILS

[1] Bolts shall be ¾" Dia. and open holes shall be 13/16".
Minimum center to center bolt spacing shall be 2½".

STATE OF ARKANSAS
REGISTERED PROFESSIONAL ENGINEER
No. 13570
CARTER D. BEARDEN
8/1/12
BRIDGE ENGINEER

SHEET 3 OF 5
DETAILS FOR STANDARD
35'-0" CANTILEVER SIGN STRUCTURE

ROUTE 540 SEC. 2

ARKANSAS STATE HIGHWAY COMMISSION

LITTLE ROCK, ARK.

DRAWN BY: DLM DATE: 6-12
CHECKED BY: BEG DATE: 7-12
DESIGNED BY: CDB DATE: 6-12
FILENAME: S0100607X5_SD12.dgn
SCALE: Not to Scale

STRUCTURE NO. SEE TABLE DRAWING NO. 48644

DATE REVISED	DATE FILMED	DATE REVISED	DATE FILMED	FED. ROAD DIST. NO.	STATE	FED. AID PROJ. NO.	SHEET NO.	TOTAL SHEETS
				6	ARK.			
				JOB NO.		BB0407	372	464
				① SEE TABLE OVERHEAD SIGNS				48645

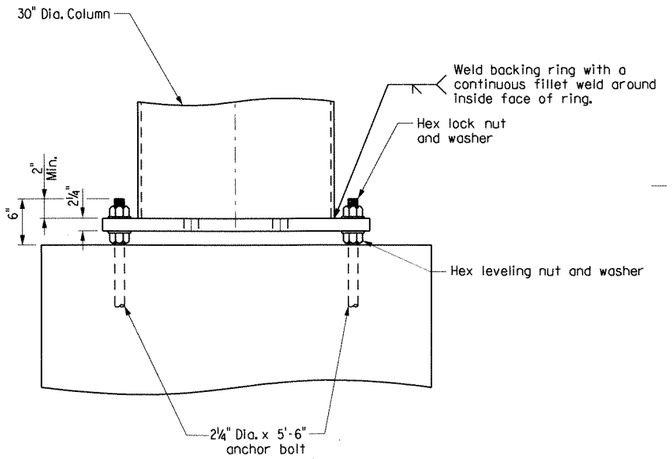

ELEVATION - COLUMN BASE

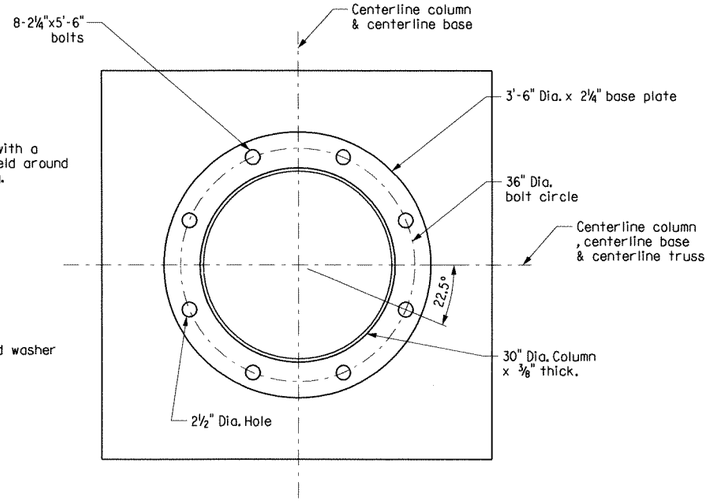

PLAN - COLUMN BASE

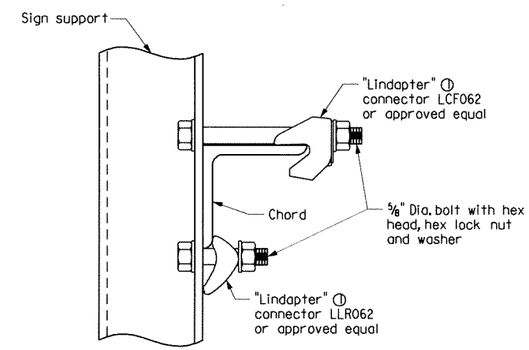

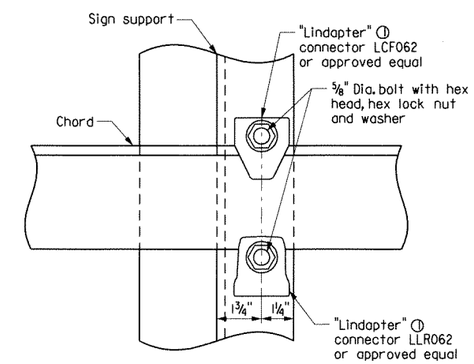

TOP CHORD

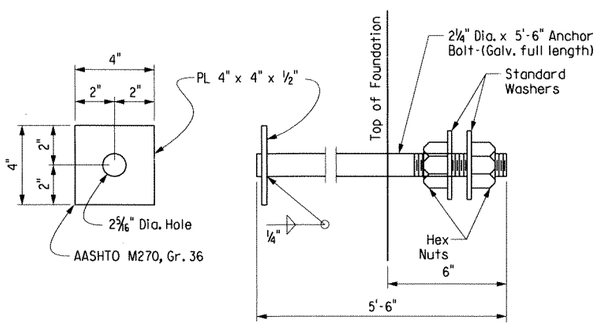

Anchor bolts shall comply with AASHTO M314, Grade 55, with Supplementary Requirement S1, and galvanized according to Section 807.07. Nuts and washers for bolts shall be as specified in Section 807.07.

ANCHOR BOLT DETAIL

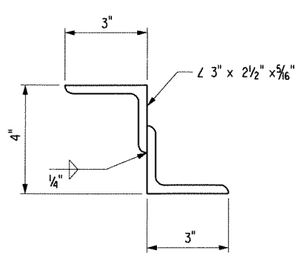

NOTE: Structural Z support may be fabricated from angles as shown.

DETAIL OF ALTERNATE Z SUPPORT

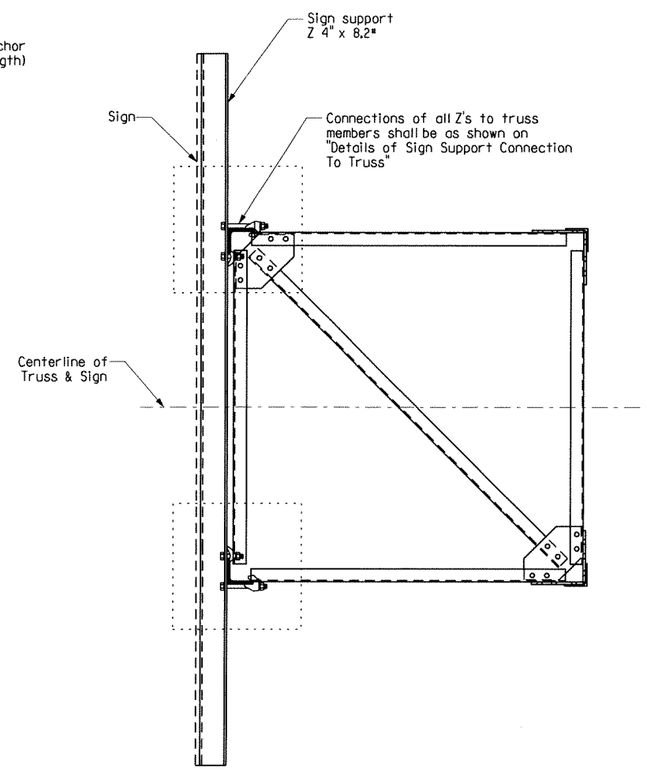

SECTION THRU TRUSS

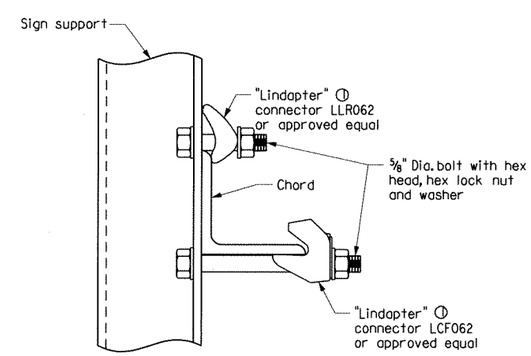

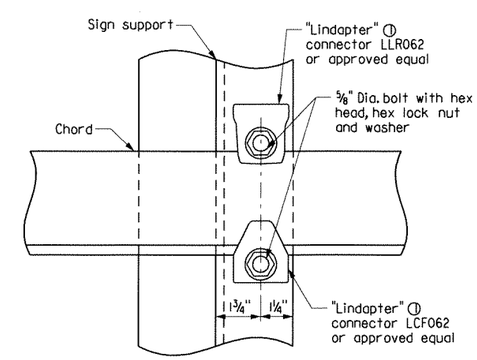

① Note: All "Lindapter" connectors or approved equal shall be installed according to manufacturer's recomendations. All connectors, bolts, nuts, and washers shall be galvanized.

BOTTOM CHORD

NOTE:
Install all support connectors clear of the gusset plates and splice locations.

DETAIL OF SIGN SUPPORT CONNECTION TO TRUSS

STATE OF ARKANSAS REGISTERED PROFESSIONAL ENGINEER No. 13570 CARTER D. BEARDEN 8/31/12

BRIDGE ENGINEER

SHEET 4 OF 5
DETAILS FOR STANDARD
35'-0" CANTILEVER SIGN STRUCTURE

ROUTE 540 SEC. 2

ARKANSAS STATE HIGHWAY COMMISSION

LITTLE ROCK, ARK.

DRAWN BY: DLM DATE: 6-12 FILENAME: S0100607X5_SD13.dgn
CHECKED BY: BEG DATE: 7-12 SCALE: Not to Scale
DESIGNED BY: CDB DATE: 6-12

STRUCTURE NO. SEE TABLE DRAWING NO. 48645

DATE REVISED	DATE FILMED	DATE REVISED	DATE FILMED	FED. ROAD DIST. NO.	STATE	FED. AID PROJ. NO.	SHEET NO.	TOTAL SHEETS
				6	ARK.			
				JOB NO.		BB0407	373	464
				(1) SEE TABLE OVERHEAD SIGNS				48646

GENERAL NOTES

CONSTRUCTION SPECIFICATIONS:

Arkansas State Highway and Transportation Department Standard Specifications for Highway Construction, 2003 edition, with applicable supplemental specifications and special provisions. Section and Subsection refer to the Standard Construction Specifications unless otherwise noted in the plans.

DESIGN SPECIFICATIONS:

Standard Specifications for Structural Supports for Highway Signs, Luminaries and Traffic Signals, AASHTO 2009 (Fifth Edition).

Basic Wind Speed = 90 m.p.h.

This structure is approved for a sign area equivalent to 45% of the span at 15' tall. Use of additional sign area must be approved by the Engineer.

If the structure height ('H1' or 'H2') exceeds 30'-0" contact the Engineer.

FOUNDATION MATERIALS AND STRENGTHS:

Class S Concrete ..... f'c = 3,500psi
Reinforcing Steel (AASHTO M31 or M53, Grade 60) ..... fy = 60,000 psi

Structural steel sign support members shall comply with the following specifications:

Angles: ..... AASHTO M270, Gr. 36 (Fy = 36,000 psi).
Plate: ..... AASHTO M270, Gr. 50 (Fy = 50,000 psi).
[1] Pipe: ..... ASTM A53 Gr. B (Fy = 35,000 psi),
ASTM A252 Gr. 3 (Fy = 45,000 psi),
API-5L-X42 (Fy = 42,000 psi),
API-5L-X52 (Fy = 52,000 psi), or
API-5L-X60 (Fy = 60,000 psi)
Z-Shapes: ..... AASHTO M270, Gr. 36 (Fy = 36,000 psi).
Bolts: ..... AASHTO M164, Type 1.
Locknuts - Approved Type: ..... Meeting or exceeding AASHTO M292
Washers: ..... AASHTO M293
Nuts: ..... AASHTO M291 or M292, Gr. 2H or Gr. DH (Gr. 10S)

All steel shall be Galvanized according to section 807.19. Steel completely encased in concrete may not be Galvanized.

Drawings show general features of design only. Shop drawings shall be made in accordance with section 807.04, submitted, and approval secured before fabrication is begun.

Requests for substitution of structural steel shapes shown with shapes of greater size must be submitted by the Contractor to the Engineer for approval. Steels of equal or greater strengths will be accepted only when shown on the approved shop drawings. Shapes and materials shown in the plans will be the basis of payment and no additional compensation will be made for any adjustments due to substitutions.

Connections shall be bolted with high-strength bolts. Unless noted otherwise, bolts shall be 5/8" diameter and open holes shall be 11/16". Bolt spacing shall be 2¼" for 5/8" diameter bolts unless otherwise noted. Bolts shall be placed with heads on the outside face of all members.

All welding that is to be done during fabrication of structural steel, including temporary welds, shall be detailed on the shop drawings and submitted for approval. If additional welds are required, whether temporary or permanent, a formal request with detailed drawings shall be submitted to the Engineer for approval. All welding shall conform to subsection 807.26.

Anchor bolts shall comply with AASHTO M314, Grade 55, with Supplementary Requirement S1, and galvanized according to Section 807.07. Nuts and washers for anchor bolts shall be furnished and galvanized in accordance with subsection 807.07.

All truss frame bolts shall comply with AASHTO M164 Type 1, galvanized according to Subsection 807.06. Nuts and washers for AASHTO M164 Type 1 bolts shall be furnished and galvanized in accordance with subsection 807.06.

Field splices shall be located in order to avoid sign panel connections. There shall be a maximum of two field splices and they shall be spaced a minimum of 15 ft. apart.

All main load carrying tension members greater than ½" in thickness shall conform to the requirements of the Longitudinal Charpy V-notch test specified for Zone 1 minimum service temperature. This work and materials shall be paid for in accordance with Special Provision Job BB0407 "STEEL OVERHEAD, CANTILEVER, AND BRIDGE MOUNTED SIGN STRUCTURES".

All fillet welds of critical members shall be tested according to AWS D1.1 Structural Welding Code - Steel, using the magnetic particle method. Critical welds shall include: column to truss connection plate welds.

All CJP groove welds shall be tested according to AWS D1.1 Structural Welding Code - Steel.

Truss field sections shall be shop assembled. In order to ensure proper fit up, a portion of the truss may be shop assembled to the column/truss connection plates. Then the field section of the truss can be attached in the field.

All truss member conections shall be bolted.

Locknuts to be equipped with nylon locking inserts or other approved type locking system. Locknuts to be installed according to manufacturer's recommendations.

The excavations for the footings shall be back-filled before the structure is attached to the foundations.

Galvanized coating damaged during transport, handling, or erection shall be field repaired in accordance with section 807.88.

The contractor shall make check measurements in the field and make any adjustments necessary to meet the required clearances and to fit the new structures to the existing conditions.

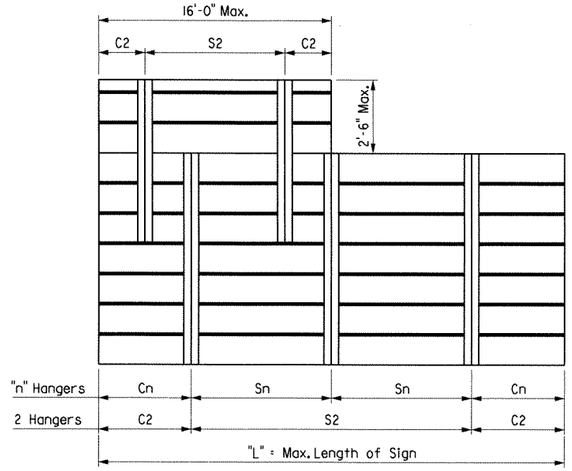

Note: See sign details and plan sheets for number, size and dimensions of signs.

Max. Length of Sign = "L"	"n" Hangers	Cantilever Length "Cn"	Hanger Spacing "Sn"
15'-0"	2 Hangers	0.21 x "L"	0.58 x "L"
30'-0"	3 Hangers	0.145 x "L"	0.355 x "L"

Note: Hanger spacing and cantilever length shall be rounded to the nearest inch.

HANGER SPACING DETAILS FOR EXTRUDED PANEL SIGNS

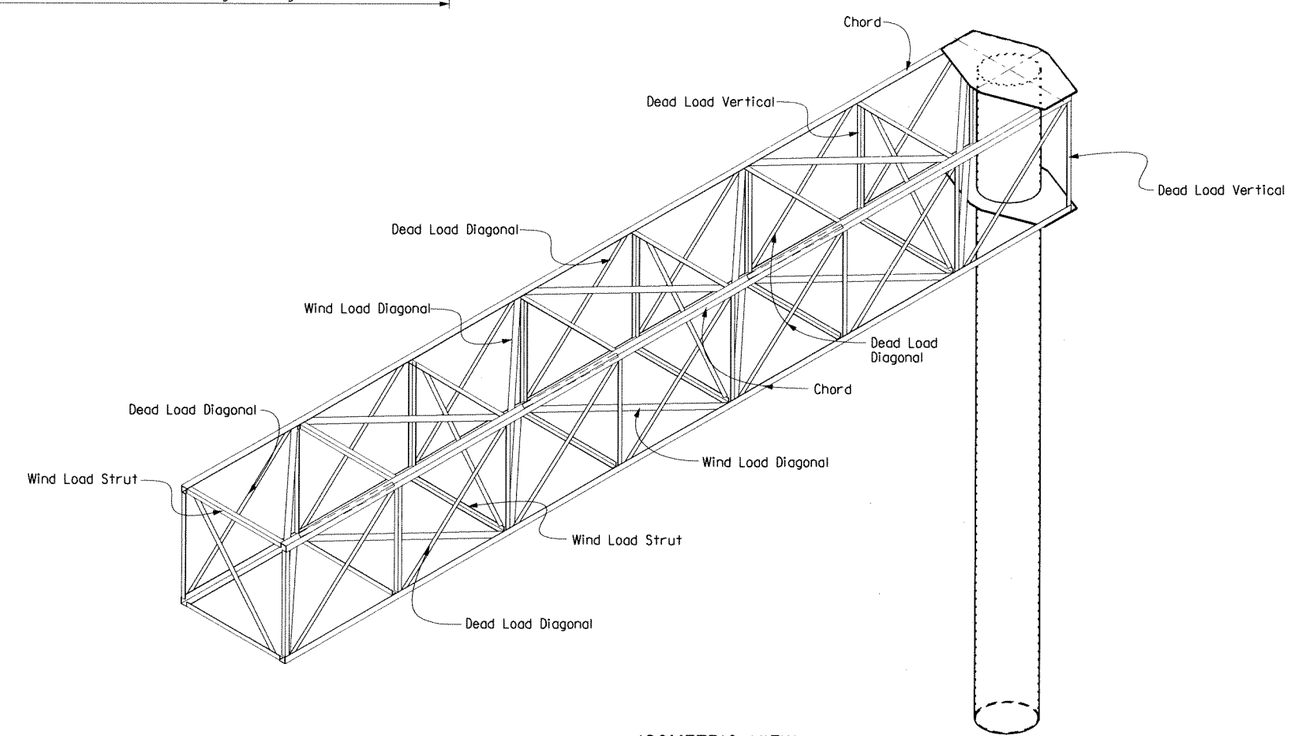

ISOMETRIC VIEW

[1] In addition to material requirements, all pipe used for welded applications shall have a maximum carbon equivalency (CE) of 0.4 using the following equation:
CE = %C + %Mn/6 + %Cu/40 + %Ni/20 + %Cr/10 - %Mo/50 - %V/10

STATE OF ARKANSAS REGISTERED PROFESSIONAL ENGINEER No. 13570 CARTER D. BEG 6/11/12

BRIDGE ENGINEER

SHEET 5 OF 5
DETAILS FOR STANDARD
35'-0" CANTILEVER SIGN STRUCTURE

ROUTE 540 SEC. 2

ARKANSAS STATE HIGHWAY COMMISSION

LITTLE ROCK, ARK.

DRAWN BY: DLM DATE: 6-12 FILENAME: S0100607X5_SD14.dgn
CHECKED BY: BEG DATE: 7-12 SCALE: Not to Scale
DESIGNED BY: CDB DATE: 6-12

STRUCTURE NO. SEE TABLE DRAWING NO. 48646

DATE REVISED	DATE FILMED	DATE REVISED	DATE FILMED	FED. ROAD DIST. NO.	STATE	FED. AID PROJ. NO.	SHEET NO.	TOTAL SHEETS
				6	ARK.			
				JOB NO.		B80407	374	464
				(1) BM 022-65-01		SIGN STRUCTURE		48647

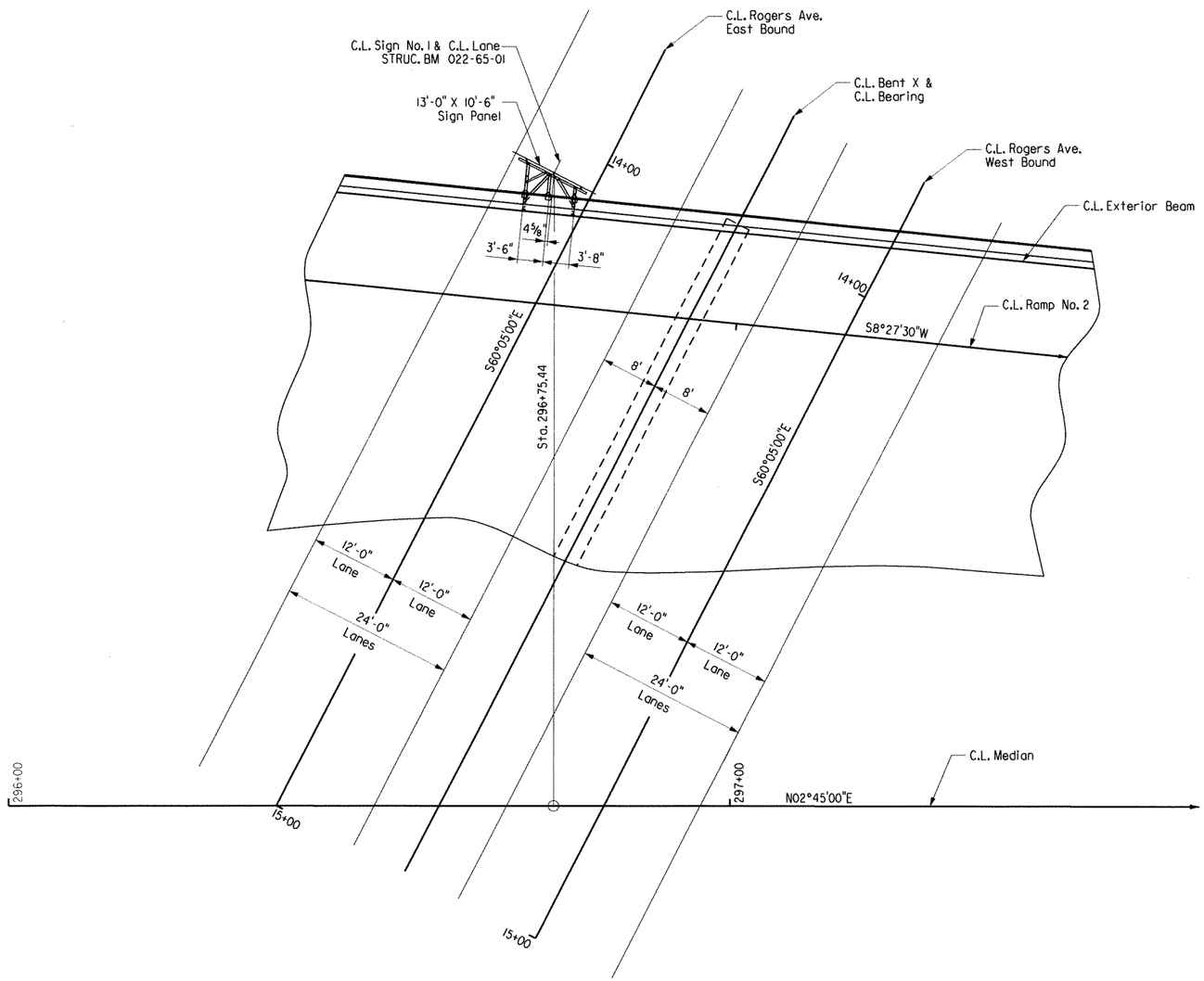

LOCATION SKETCH
(Sign No. 1)
3/16" = 1'-0"

SHEET 1 OF 5
DETAILS OF BRIDGE
MOUNTED SIGN STRUCTURES
I-540 BRIDGES
SEBASTIAN & CRAWFORD COUNTIES

ROUTE 540 SEC. 2

ARKANSAS STATE HIGHWAY COMMISSION

LITTLE ROCK, ARK.

STATE OF ARKANSAS REGISTERED PROFESSIONAL ENGINEER No. 13570 CARTER D. BEARDEN 9/14/12

BRIDGE ENGINEER

DRAWN BY: JEG DATE: 6-12
CHECKED BY: BEG DATE: 7-12
DESIGNED BY: CDB DATE: 6-12

FILENAME: B0100607X6_SSI.dgn
SCALE: As Shown

STR. NO. BM 022-65-01 DRAWING NO. 48647

DATE REVISED	DATE FILMED	DATE REVISED	DATE FILMED	FED. ROAD DIST. NO.	STATE	FED. AID PROJ. NO.	SHEET NO.	TOTAL SHEETS
				6	ARK.			
				JOB NO.		B80407	375	464
				(1) BM 022-65-01		SIGN STRUCTURE		48647A

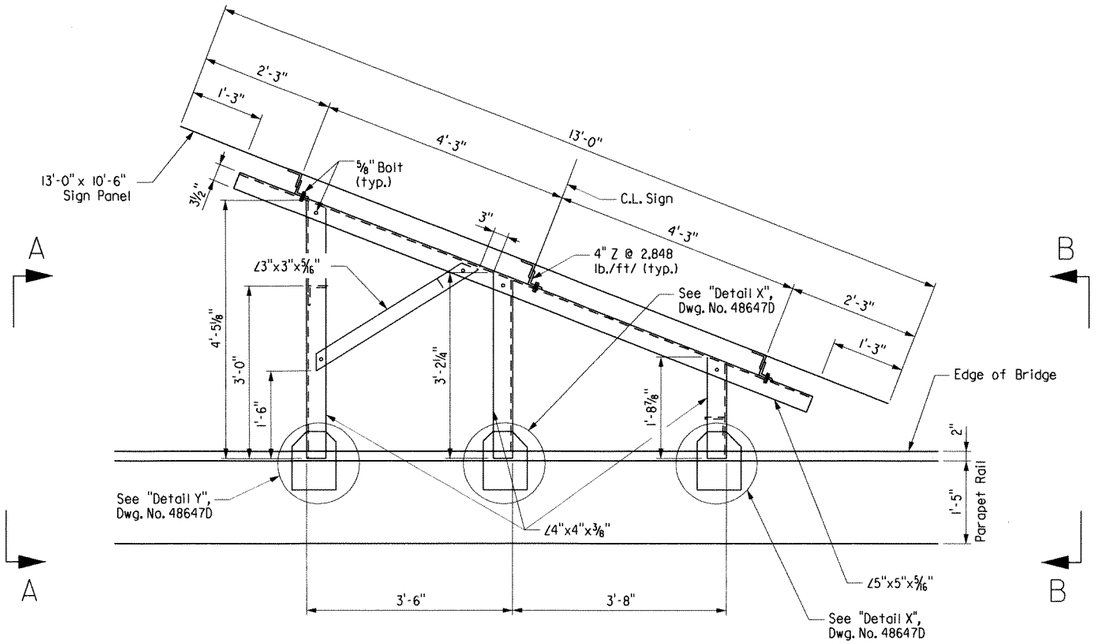

PLAN OF UPPER BRACING
(SIGN STRUCTURE BM 022-65-01)
(Sign No. 1)
¾" = 1'-0"

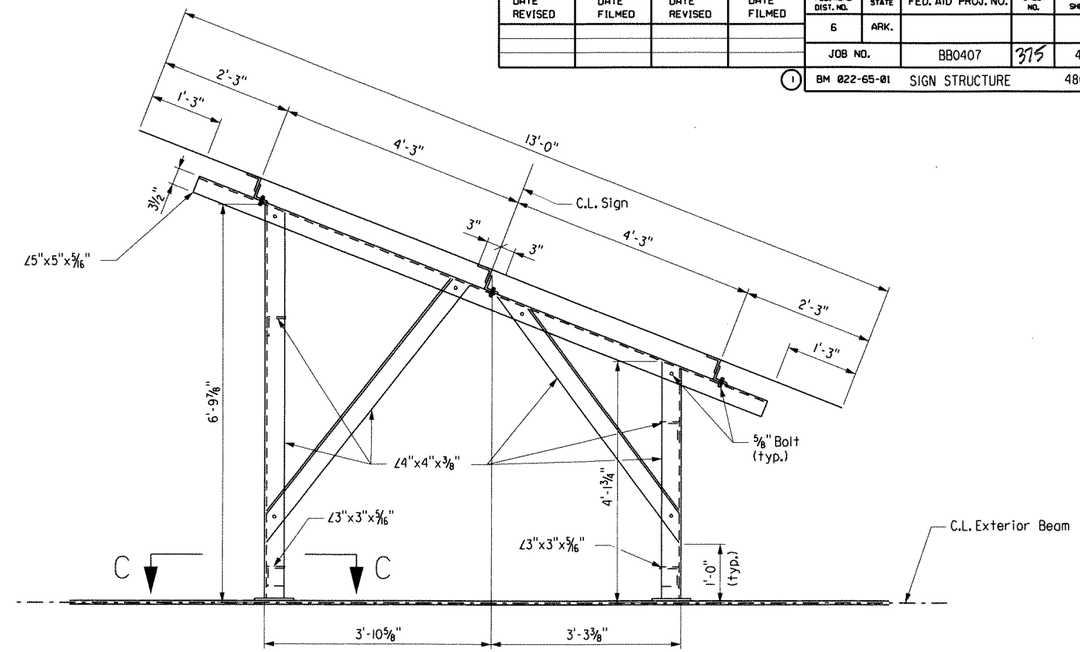

NOTE: For "View C-C", see Dwg. No. 48647D

PLAN OF LOWER BRACING
(SIGN STRUCTURE BM 022-65-01)
(Sign No. 1)
¾" = 1'-0"

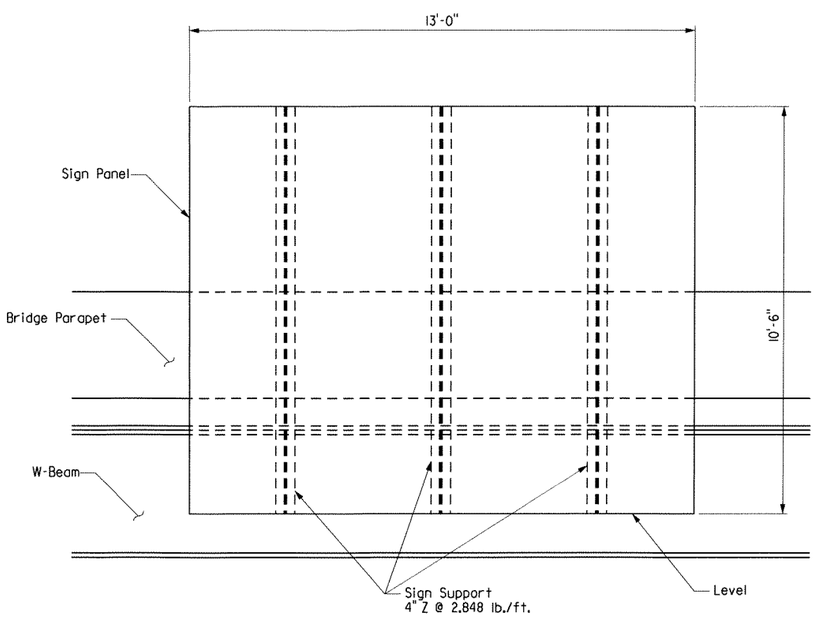

ELEVATION OF SIGN STRUCTURE BM 022-65-01
(Sign No. 1)
½" = 1'-0"

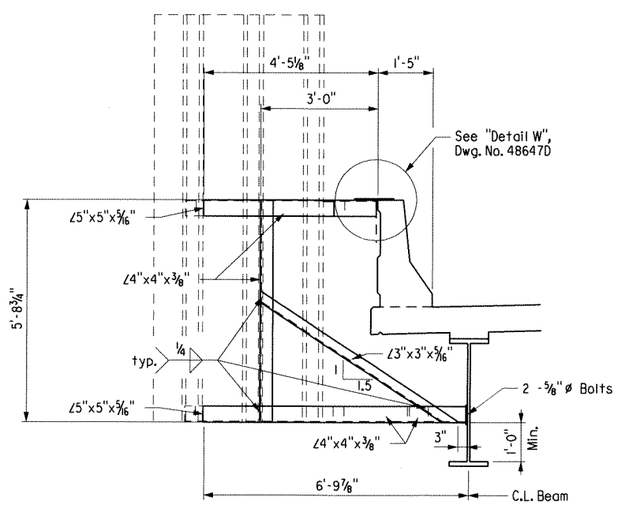

VIEW A-A
½" = 1'-0"

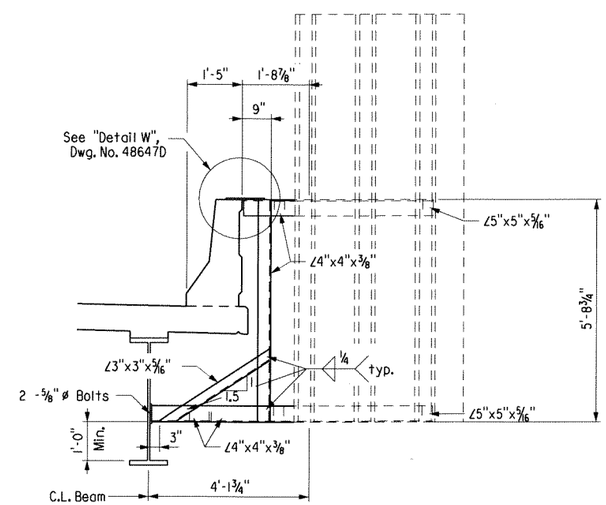

VIEW B-B
½" = 1'-0"

STATE OF ARKANSAS REGISTERED PROFESSIONAL ENGINEER No. 13570 CARTER D. BEARDEN 9/24/12

BRIDGE ENGINEER

SHEET 2 OF 5
DETAILS OF BRIDGE
MOUNTED SIGN STRUCTURES
I-540 BRIDGES
SEBASTIAN & CRAWFORD COUNTIES

ROUTE 540 SEC. 2

ARKANSAS STATE HIGHWAY COMMISSION

LITTLE ROCK, ARK.

DRAWN BY: JEG DATE: 6-12
CHECKED BY: BEG DATE: 7-12
DESIGNED BY: CDB DATE: 6-12
FILENAME: B0100607X6_SS2.dgn
SCALE: AS SHOWN

STR. NO. BM 022-65-01 DRAWING NO. 48647A

DATE REVISED	DATE FILMED	DATE REVISED	DATE FILMED	FED. ROAD DIST. NO.	STATE	FED. AID PROJ. NO.	SHEET NO.	TOTAL SHEETS
				6	ARK.			
				JOB NO.		B00407	376	464
				(1) BM 540-17-03		SIGN STRUCTURE		48647B

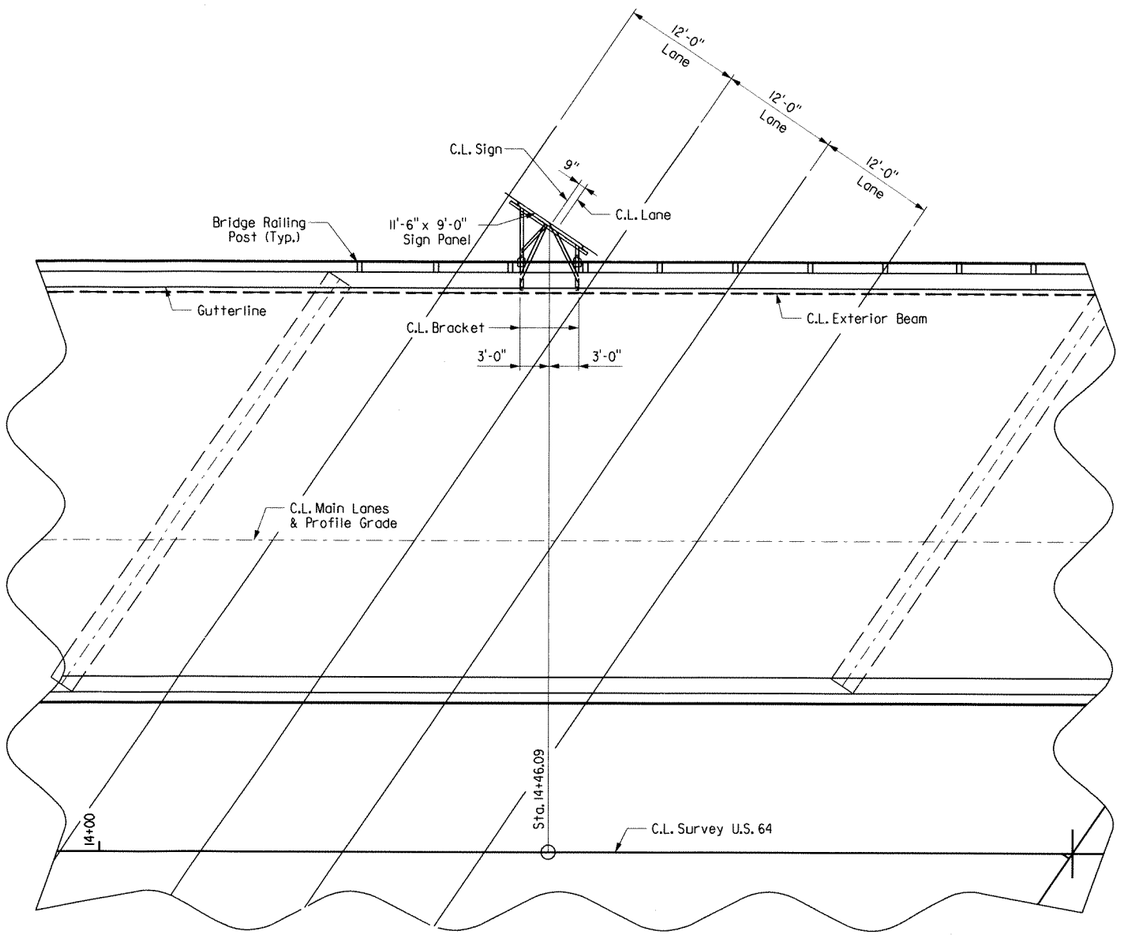

LOCATION SKETCH

(Sign No. 2)
1/8" = 1'-0"

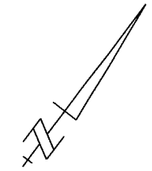

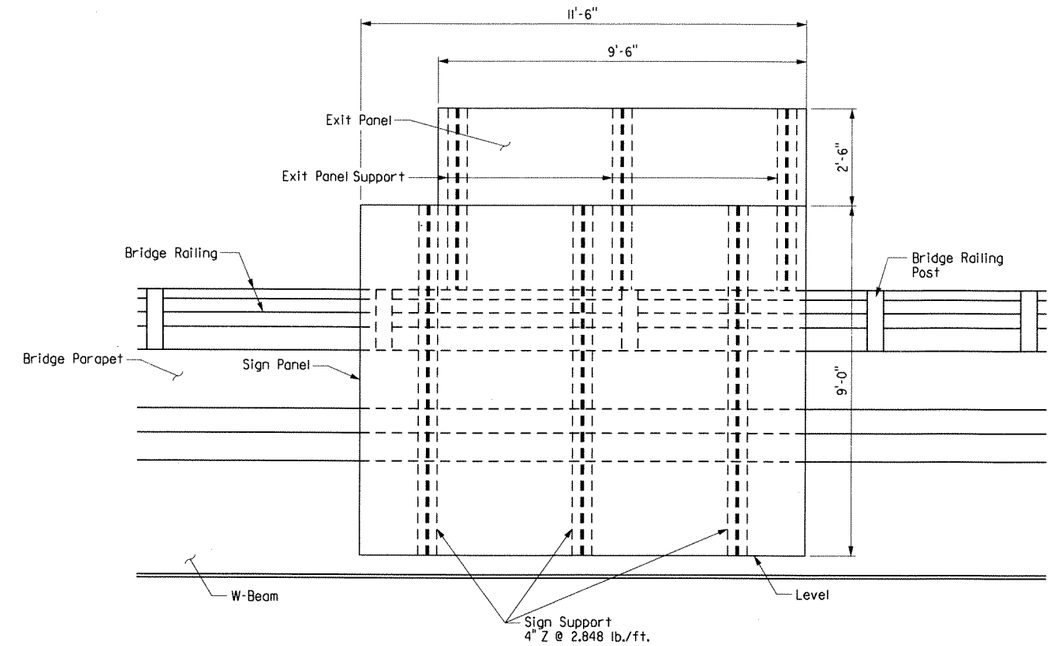

ELEVATION OF SIGN STRUCTURE BM 540-17-03

(Sign No. 2)
1/2" = 1'-0"

STATE OF ARKANSAS REGISTERED PROFESSIONAL ENGINEER No. 13570 CARTER D. BEARDEN

BRIDGE ENGINEER

SHEET 3 OF 5
DETAILS OF BRIDGE
MOUNTED SIGN STRUCTURES
I-540 BRIDGES
SEBASTIAN & CRAWFORD COUNTIES

ROUTE 540 SEC. 2

ARKANSAS STATE HIGHWAY COMMISSION

LITTLE ROCK, ARK.

DRAWN BY: DLM DATE: 6-12
CHECKED BY: BEG DATE: 7-12
DESIGNED BY: CDB DATE: 6-12

FILENAME: B0100607X6_SS3.dgn
SCALE: As Shown

STR. NO. BM 540-17-03 DRAWING NO. 48647B

DATE REVISED	DATE FILMED	DATE REVISED	DATE FILMED	FED. ROAD DIST. NO.	STATE	FED. AID PROJ. NO.	SHEET NO.	TOTAL SHEETS
				6	ARK.			
				JOB NO.		BB0407	377	464
				1	BM 540-17-03	SIGN STRUCTURE		48647C

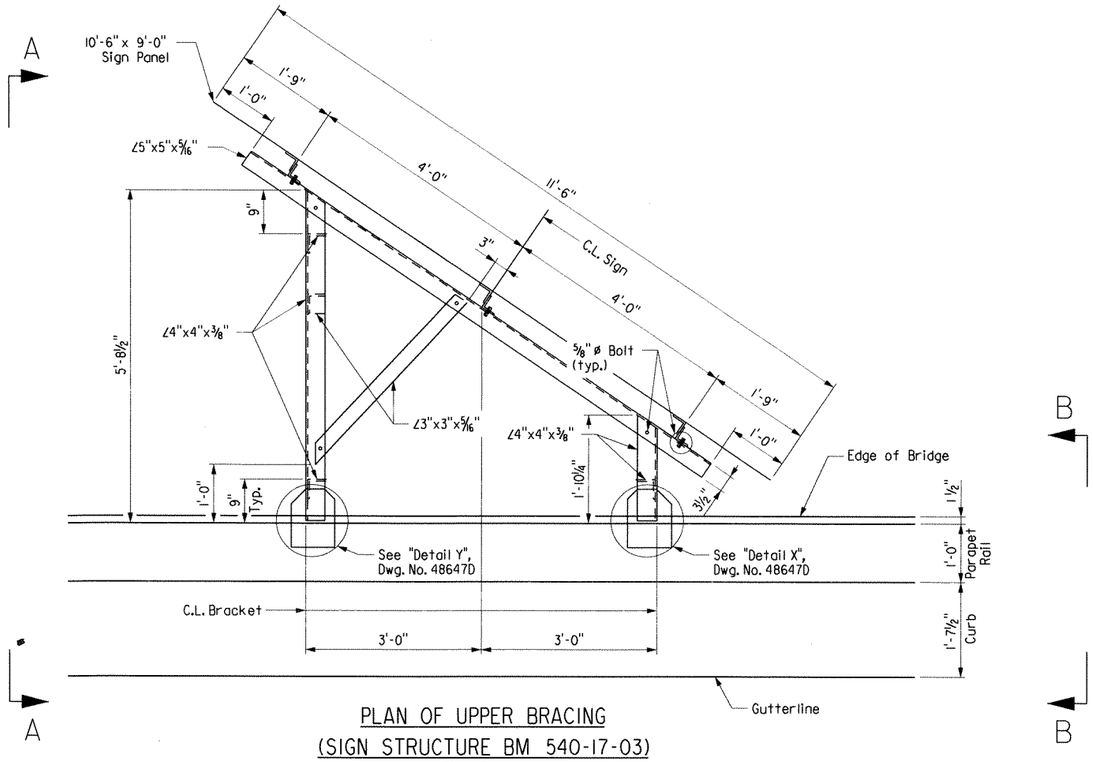

PLAN OF UPPER BRACING
(SIGN STRUCTURE BM 540-17-03)
(Sign No. 2)
¾" = 1'-0"

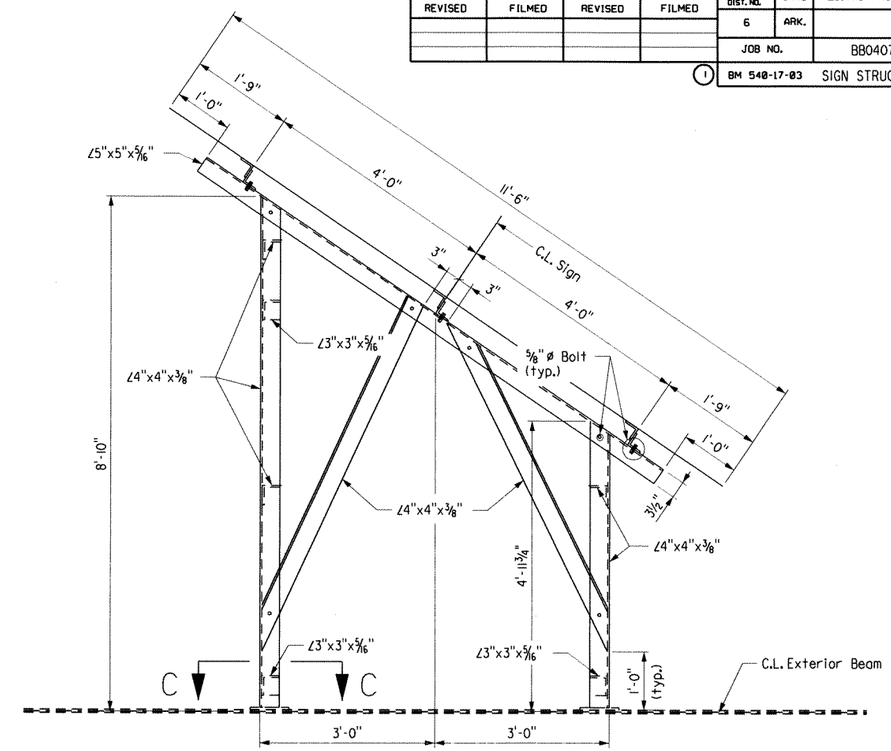

NOTE: For "View C-C", see Dwg. No. 48647D.

PLAN OF LOWER BRACING
(SIGN STRUCTURE BM 540-17-03)
(Sign No. 2)
¾" = 1'-0"

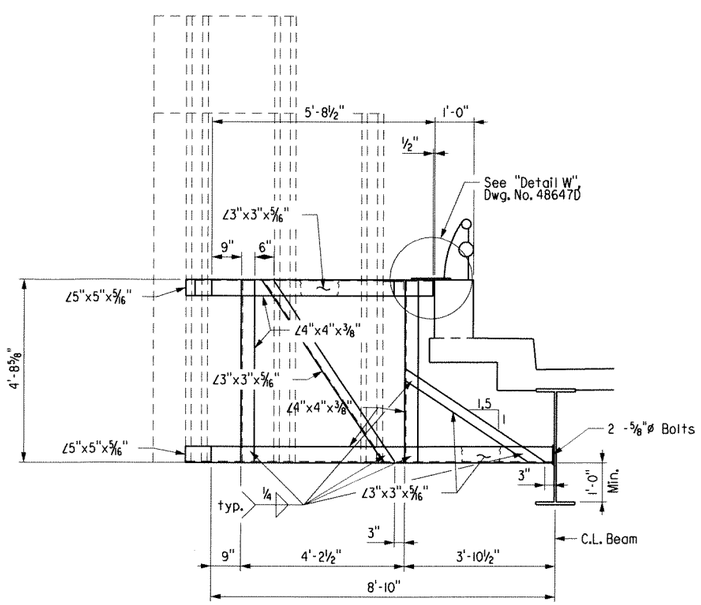

VIEW A-A
½" = 1'-0"

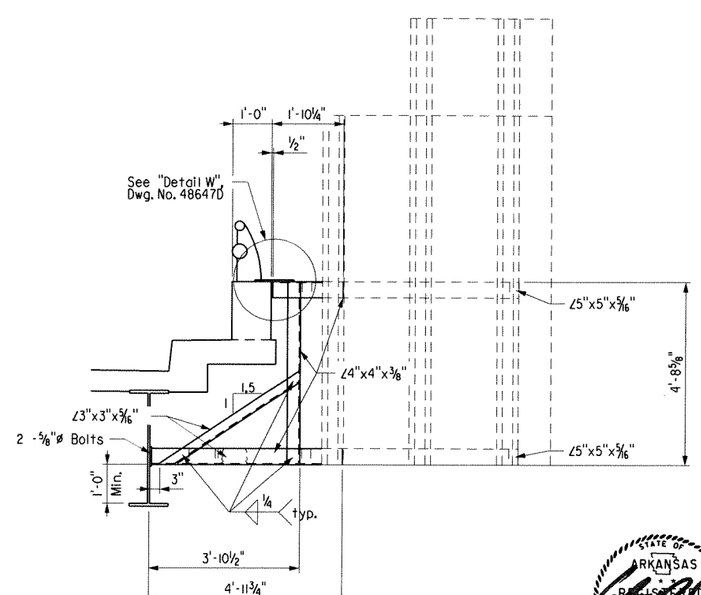

VIEW B-B
½" = 1'-0"

STATE OF ARKANSAS
REGISTERED PROFESSIONAL ENGINEER
No. 13570
CARTER D. BEASLEY
8/4/12
BRIDGE ENGINEER

SHEET 4 OF 5
DETAILS OF BRIDGE
MOUNTED SIGN STRUCTURES
I-540 BRIDGES
SEBASTIAN & CRAWFORD COUNTIES

ROUTE 540 SEC. 2

ARKANSAS STATE HIGHWAY COMMISSION

LITTLE ROCK, ARK.

DRAWN BY: DLM DATE: 6-12
CHECKED BY: BEG DATE: 7-12
DESIGNED BY: CDB DATE: 6-12
FILENAME: B0100607X6_SS4.dgn
SCALE: As Shown

STR. NO. BM 540-17-03 DRAWING NO. 48647C

DATE REVISED	DATE FILMED	DATE REVISED	DATE FILMED	FED. ROAD DIST. NO.	STATE	FED. AID PROJ. NO.	SHEET NO.	TOTAL SHEETS
				6	ARK.			
				JOB NO.		BB0407	378	464
				(1) BM 022-65-01 & BM 540-17-03		SIGN STRUCTURE		48647D

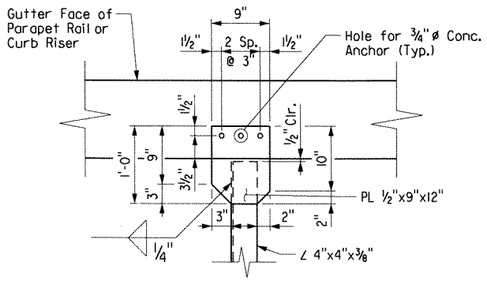

DETAIL X

1" = 1'-0"

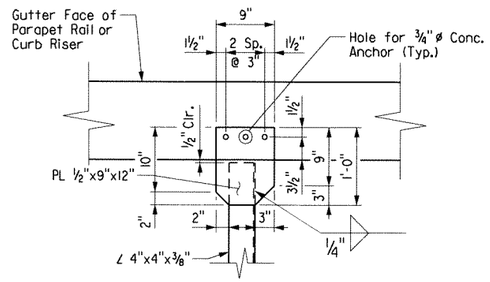

DETAIL Y

1" = 1'-0"

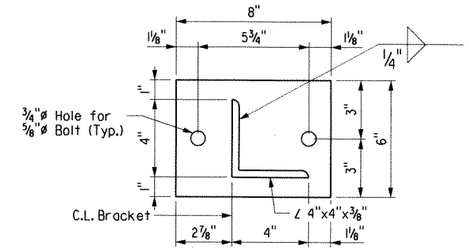

VIEW C-C

No Scale

Note: The concrete anchors shall be an approved QPL type and installed according to Manufactures recommendations.

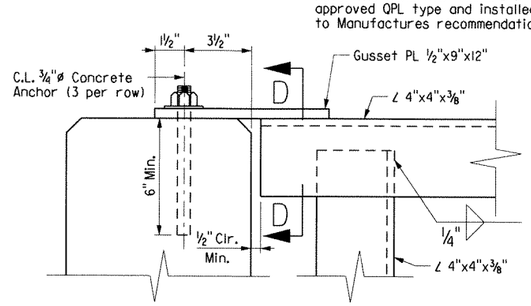

DETAIL W

No Scale

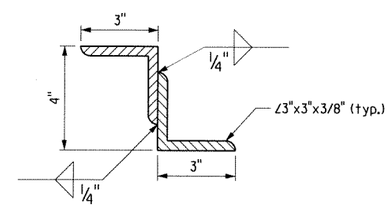

Note: Structural Z sign Support may be fabricated from angles as shown.

DETAILS OF ALTERNATE Z SIGN SUPPORT

No Scale

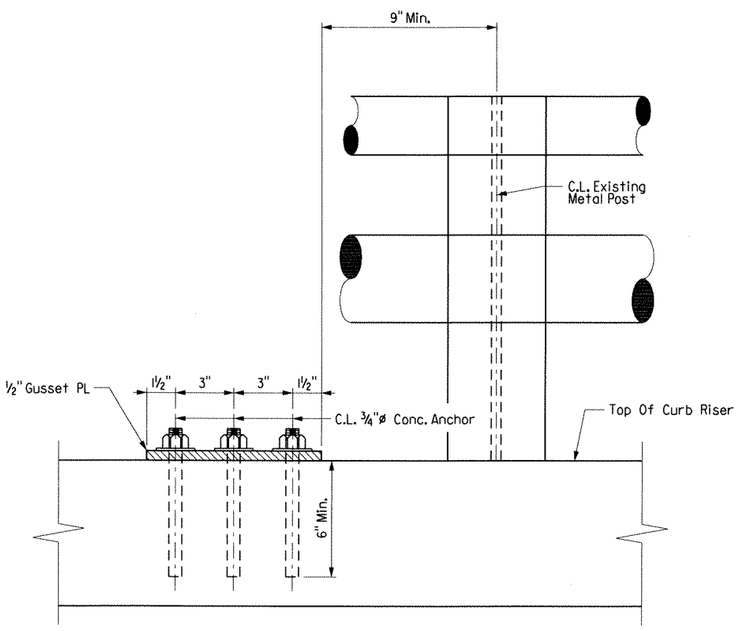

VIEW D-D

(For Sign No. 2)
No Scale

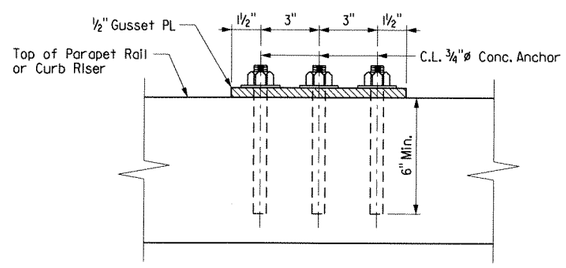

VIEW D-D

(For Sign No. 1)
No Scale

GENERAL NOTES

CONSTRUCTION SPECIFICATIONS:

Arkansas State Highway and Transportation Department Standard Specifications for Highway Construction, 2003 edition, with applicable supplemental specifications and special provisions. Section and Subsection refer to the Standard Construction Specifications unless otherwise noted in the plans.

DESIGN SPECIFICATIONS:

Standard Specifications for Structural Supports for Highway Signs, Luminaries and Traffic Signals, AASHTO 2009 (Fifth Edition).

Basic Wind Speed = 90 m.p.h.

Structural steel sign support members shall comply with the following specifications:

Angles:_____AASHTO M270, Gr. 36 (Fy = 36,000 psi).
Plate:_____AASHTO M270, Gr. 50 (Fy = 50,000 psi).
Z-Shapes:_____AASHTO M270, Gr. 36 (Fy = 36,000 psi).
Bolts:_____AASHTO M164, Type 1.
Locknuts - Approved Type:_____Meeting or exceeding AASHTO M292
Washers:_____AASHTO M293
Nuts:_____AASHTO M291 or M292, Gr. 2H or Gr. DH (Gr. 10S)

All steel shall be Galvanized according to section 807.19. Steel completely encased in concrete may not be Galvanized.

Drawings show general features of design only. Shop drawings shall be made in accordance with section 807.04, submitted, and approval secured before fabrication is begun.

Requests for substitution of structural steel shapes shown with shapes of greater size must be submitted by the Contractor to the Engineer for approval. Steels of equal or greater strengths will be accepted only when shown on the approved shop drawings. Shapes and materials shown in the plans will be the basis of payment and no additional compensation will be made for any adjustments due to substitutions.

Connections shall be bolted with high-strength bolts. Unless noted otherwise, bolts shall be ⅝" diameter and open holes shall be 11/16". Bolt spacing shall be 2¼" for ⅝" diameter bolts unless otherwise noted. Bolts shall be placed with heads on the outside face of all members.

All welding that is to be done during fabrication of structural steel, including temporary welds, shall be detailed on the shop drawings and submitted for approval. If additional welds are required, whether temporary or permanent, a formal request with detailed drawings shall be submitted to the Engineer for approval. All welding shall conform to subsection 807.26.

All frame bolts shall comply with AASHTO M164 Type 1, galvanized according to Subsection 807.06. Nuts and washers for AASHTO M164 Type 1 bolts shall be furnished and galvanized in accordance with subsection 807.06.

All main load carrying tension members greater than ½" in thickness shall conform to requirements of the Longitudinal Charpy V-notch test specified for Zone 1 minimum service temperature. This work and materials shall be paid for in accordance with Special Provision Job BB0407 "STEEL OVERHEAD, CANTILEVER, AND BRIDGE MOUNTED SIGN STRUCTURES".

Locknuts to be equipped with nylon locking inserts or other approved type locking system. Locknuts to be installed according to manufacturer's recommendations.

Galvanized coating damaged during transport, handling, or erection shall be field repaired in accordance with section 807.88.

The Contractor shall make check measurements in the field and make any adjustments necessary to avoid any diaphrams, splice plates, joints in curb riser, and rail posts on the bridge. This may include shifting the sign structures with approval from the Engineer.

STATE OF ARKANSAS REGISTERED PROFESSIONAL ENGINEER No. 13570 CARTER D. BEARDEN 7/12

BRIDGE ENGINEER

SHEET 5 OF 5
DETAILS OF BRIDGE
MOUNTED SIGN STRUCTURES
I-540 BRIDGES
SEBASTIAN & CRAWFORD COUNTIES

ROUTE 540 SEC. 2

ARKANSAS STATE HIGHWAY COMMISSION

LITTLE ROCK, ARK.

DRAWN BY: CB & DM DATE: 6-12
CHECKED BY: BEG DATE: 7-12
DESIGNED BY: CDB DATE: 6-12
FILENAME: B0100607X6_SS5.dgn
SCALE: AS SHOWN
STR. NO. BM 022-65-01 & BM 540-17-03
DRAWING NO. 48647D

DATE REVISED	DATE FILMED	DATE REVISED	DATE FILMED	FED.RD. DIST.NO.	STATE	FED.AID PROJ.NO.	SHEET NO.	TOTAL SHEETS
				6	ARK.			
				JOB NO.		BB0407	379	464

(2) SIGNING QUANTITIES

SIGNING SUMMARY OF QUANTITIES

ITEM NUMBER	ITEM	TOTAL	UNIT
SP	STEEL OVERHEAD SIGN STRUCTURE (OH540-65-01)	1	EACH
SP	STEEL OVERHEAD SIGN STRUCTURE (OH540-17-06)	1	EACH
SP	STEEL OVERHEAD SIGN STRUCTURE (OH540-17-11)	1	EACH
SP	STEEL OVERHEAD SIGN STRUCTURE (OH540-17-05)	1	EACH
SP	STEEL OVERHEAD SIGN STRUCTURE (OH540-17-04)	1	EACH
SP	STEEL OVERHEAD SIGN STRUCTURE (OH540-17-02)	1	EACH
SP	STEEL OVERHEAD SIGN STRUCTURE (OH540-17-10)	1	EACH
SP	STEEL OVERHEAD SIGN STRUCTURE (OH540-17-12)	1	EACH
SP	STEEL OVERHEAD SIGN STRUCTURE (OH064-17-01)	1	EACH
SP	STEEL OVERHEAD SIGN STRUCTURE (OH064-17-02)	1	EACH
SP	STEEL CANTILEVER SIGN STRUCTURE (OC540-65-02)	1	EACH
SP	STEEL CANTILEVER SIGN STRUCTURE (OC540-65-03)	1	EACH
SP	STEEL CANTILEVER SIGN STRUCTURE (OC540-65-04)	1	EACH
SP	STEEL BRIDGE MOUNTED SIGN STRUCTURE (BM540-17-03)	1	EACH
SP	STEEL BRIDGE MOUNTED SIGN STRUCTURE (BM022-65-01)	1	EACH
SS & 725	GUIDE SIGN - ROADSIDE MOUNTED (DEMOUNTABLE LEGEND)	6,995	SQ. FT.
SS & 725	GUIDE SIGN - OVERHEAD MOUNTED (DEMOUNTABLE LEGEND)	3,034	SQ. FT.
SS & 726	STANDARD SIGN	1,253	SQ. FT.
SS & 727	EXIT NUMBER PANEL (TYPE A)	265	SQ. FT.
SS & 727	EXIT NUMBER PANEL (TYPE B)	436	SQ. FT.
SS & 727	EXIT NUMBER PANEL (TYPE C)	121	SQ. FT.
730	BREAKAWAY SIGN SUPPORT (TYPE G - 1)	51,156	POUND

THE CONTRACTOR WILL BE REQUIRED TO INSTALL OVERHEAD SIGNS AND SIGN STRUCTURES OVER ROADWAYS OPEN TO TRAFFIC. IT WILL BE THE RESPONSIBILITY OF THE CONTRACTOR TO PROVIDE TRAFFIC CONTROL. PAYMENT WILL BE CONSIDERED TO BE INCLUDED IN ITEM 603 OF THE STANDARD SPECIFICATIONS.

THE CONTRACTOR WILL VERIFY SIGN PLACEMENT AND MAKE ANY ADJUSTMENTS NECESSARY TO ALIGN SIGNS OVER INTENDED LANES.

ALL SIGNS SHALL BE CONSTRUCTED WITH TYPE-III SHEETING BACKGROUND AND SHALL HAVE DEMOUNTABLE LEGEND CONSTRUCTED OF PRISMATIC SHEETING (TYPE-VIII OR IX), UNLESS OTHERWISE NOTED IN THE PLANS. THE LEGEND SHALL BE PLACED USING CLEARVIEW SPACING AND SERIES-5W AND 5WR CHARACTERS, UNLESS OTHERWISE NOTED IN THE PLANS.

THE CLEARVIEW FONT SHALL FOLLOW THE SPACE TABLES FOR CLEARVIEW AND NOT SHS E-MODIFIED. THIS INCLUDES THE USE OF CLEARVIEW 5-W-R. FOR GENERAL GUIDANCE ON LETTER AND WORD SPACING REFER TO THE FHWA CLEARVIEW TYPEFACE SUPPLEMENT. (HTTP://MUTCD. FHWA.DOT.GOV)

EXISTING LOGOS WILL BE RELOCATED TO THE NEW LOGO SIGN IN THE ORDER SHOWN ON THE PLANS BY THE CONTRACTOR. THE LOGO INSTALLATION SHALL NOT BE PAID FOR SEPARATELY BUT SHALL BE CONSIDERED SUBSIDIARY TO OTHER ITEMS IN THE CONTRACT.

ALL EXISTING GUIDE SIGNS SHALL BE MAINTAINED IN SUCH A MANNER THAT THE SIGNS ARE FULLY VISIBLE, INTACT, AND ERECT FOR THE DURATION OF THE PROJECT, AND SHALL BE REMOVED WHEN THEIR USE IS NO LONGER REQUIRED.

THE EXISTING SIGNS AND SIGN STRUCTURE SHALL BECOME THE PROPERTY OF THE CONTRACTOR. THE EXISTING FOOTINGS SHALL BE REMOVED TO A MINIMUM OF 12" BELOW NORMAL GRADE AND THE HOLES FILLED WITH A SUITABLE MATERIAL AND COMPACTED. THE REMOVAL AND DISPOSAL OF THE SIGNS, SIGN SUPPORTS AND FOUNDATIONS SHALL NOT BE PAID FOR SEPARATELY BUT SHALL BE CONSIDERED SUBSIDIARY TO OTHER ITEMS IN THE CONTRACT.

REVISIONS

DATE	REVISION	SHEET NUMBER

STATE OF ARKANSAS
REGISTERED PROFESSIONAL ENGINEER
No. 5851
L. TONY SULLIVAN
9/10/12

DATE REVISED	DATE FILMED	DATE REVISED	DATE FILMED	FED.RD. DIST.NO.	STATE	FED.AID PROJ.NO.	SHEET NO.	TOTAL SHEETS
				6	ARK.			
				JOB NO.		BB0407	380	464
				(2)	SIGNING QUANTITIES			

MAIN LANES SIGNING QUANTITIES

SIGN NO./ LOCATION	STRUCTURE TYPE ST	CL	OH	BM	G-1	SIGN GUIDE SIGN Length	Height	SQ. Ft.	BREAKAWAY SIGN SUPPORT STEEL SECT. A-572 BEAM	LBS	SIGN POST LENGTH H-1	H-2	STUB POST H-1	H-2	FOOTINGS DIA.	DEPTH	EMBED.	SIGN POST AND STUB	EXIT NUMBER PANEL LEGEND	TYPE A	B	C	GUARDRAIL TYPE A	TERM. ANCHOR POSTS (TYPE 1)	GUARDRAIL TERM. (TYPE 2)	AGG. BASE CR (CL. 7)	ACHM SURF. CR. (1/2") 220 LBS/SY
						LIN. FT.					LIN FT		LIN FT		LIN FT			POUND		SQ. FT.			LIN. FT.	EACH	EACH	TON	TON
EXIT 7, 7A, 7B																											
BM-022-65-01				1																							
BM-540-7AB-SB						13.00	10.50	136.50																			
OC-540-65-02		1																					175	1	1	70	17
CL-540-STA381+00NB						13.00	9.50	123.50											7	17.50							
OC-540-65-03		1																									
CL-540-STA400+00SB						15.00	9.50	142.50											7B		20.00						
GM540-STA270+00NB					1	18.00	14.00	252.00	W10	22.00	21.50	22.50	4.99	4.99	3.00	7.00	4.66	1187.56									
GM540-STA279+00NB					1	18.00	14.00	252.00	W10	22.00	21.50	22.50	4.99	4.99	3.00	7.00	4.66	1187.56									
GM540-STA321+10NB					1	13.00	7.00	91.00	W6	12.00	14.50	15.50	3.33	3.33	2.00	4.50	3.00	439.92									
GM540-STA296+00NB					1	14.50	9.50	137.75	W8	18.00	17.00	18.00	4.33	4.33	2.00	6.00	4.00	785.88	7	17.50							
GM540-STA304+00NB					1	18.00	12.00	216.00	W8	21.00	19.50	20.50	4.99	4.99	2.50	7.00	4.66	1049.58									
GM540-STA326+00NB					1	12.50	11.50	143.75	W8	18.00	19.00	20.00	3.99	3.99	2.50	5.50	3.66	845.64									
GM540-STA312+00NB					1	19.50	9.00	175.50	W8	18.00	16.50	17.50	4.33	4.33	2.50	6.00	4.00	767.88									
GM540-STA387+00NB					1	6.00	7.00	42.00	W6	9.00	14.50	15.50	2.66	2.66	1.50	3.50	2.33	317.88									
GM540-STA394+80SB					1	6.50	7.00	45.50	W6	9.00	14.50	15.50	2.99	2.99	1.50	4.00	2.66	323.82									
GM540-STA404+90SB					1	6.50	7.00	45.50	W6	9.00	14.50	15.50	2.99	2.99	1.50	4.00	2.66	323.82									
GM540-STA418+00SB					1	17.00	14.00	238.00	W10	22.00	21.50	22.50	4.99	4.99	3.00	7.00	4.66	1187.56									
GM540-STA426+00SB					1	13.50	10.00	135.00	W8	18.00	17.50	18.50	4.33	4.33	2.00	6.00	4.00	803.88									
GM540-STA434+00SB					1	19.50	9.00	175.50	W8	18.00	16.50	17.50	4.33	4.33	2.50	6.00	4.00	767.88									
GM540-STA442+00SB					1	18.00	12.00	216.00	W8	21.00	19.50	20.50	4.99	4.99	2.50	7.00	4.66	1049.58									
GM540-STA464+20SB					1	18.00	16.00	288.00	W10	26.00	23.50	24.50	5.66	5.66	3.00	8.00	5.33	1542.32									
GM540-STA485+15SB					1	18.00	16.00	288.00	W10	26.00	23.50	24.50	5.66	5.66	3.00	8.00	5.33	1542.32									
GM540-STA451+90SB					1	14.50	9.50	137.75	W8	18.00	17.00	18.00	4.33	4.33	2.00	6.00	4.00	785.88	7A-B			27.50					
OH-540-65-01			1																				350	2	2	140	34
OH-540-STA406+10SB(A)						12.50	10.50	131.25																			
OH-540-STA406+10SB(B)						10.00	11.50	115.00											7B		20.00						
OH-540-STA406+10SB(C)						14.00	9.50	133.00											7A		20.00						
EXIT 8																											
OC-540-65-04		1																					175	1	1	70	17
CL540-STA475+00NB						13.00	5.50	71.50											8	17.50							
GM540-STA435+00NB					1	13.50	5.50	74.25	W6	9.00	13.00	14.00	3.33	3.33	1.50	4.50	3.00	302.94	8	17.50							
GM540-STA560+00SB					1	13.50	5.50	74.25	W6	9.00	13.00	14.00	3.33	3.33	1.50	4.50	3.00	302.94	8	17.50							
GM540-STA451+90NB					1	9.50	7.00	66.50	W6	9.00	14.50	15.50	3.33	3.33	1.50	4.50	3.00	329.94									
GM540-STA531+00SB					1	9.50	7.00	66.50	W6	9.00	14.50	15.50	3.33	3.33	1.50	4.50	3.00	329.94									
GM540-STA500+00SB					1	6.00	5.00	30.00	W6	9.00	12.50	13.50	2.33	2.33	1.50	3.00	2.00	275.94									
GM540-STA479+50NB					1	6.00	5.00	30.00	W6	9.00	12.50	13.50	2.33	2.33	1.50	3.00	2.00	275.94									
GM540-STA509+00SB					1	13.00	5.50	71.50	W6	9.00	13.00	14.00	3.33	3.33	1.50	4.50	3.00	302.94	8	17.50							
GM540-STA522+00SB					1	13.00	7.00	91.00	W6	12.00	14.50	15.50	3.33	3.33	2.00	4.50	3.00	439.92									
EXIT 10																											
GM540-STA518+90NB					1	16.50	5.00	82.50	W6	9.00	12.50	13.50	3.66	3.66	1.50	5.00	3.33	299.88									
GM540-STA535+10NB					1	20.50	7.00	143.50	W8	18.00	14.50	15.50	4.33	4.33	2.00	6.00	4.00	695.88									
GM540-STA526+50NB					1	14.00	5.50	77.00	W6	9.00	13.00	14.00	3.33	3.33	1.50	4.50	3.00	302.94	10	20.00							
GM540-STA544+00NB					1	12.00	5.50	66.00	W6	9.00	13.00	14.00	3.33	3.33	1.50	4.50	3.00	302.94	10	20.00							
GM540-STA574+00SB					1	12.00	5.50	66.00	W6	9.00	13.00	14.00	3.33	3.33	1.50	4.50	3.00	302.94	10	20.00							
GM540-STA589+00SB					1	20.50	7.00	143.50	W8	18.00	14.50	15.50	4.33	4.33	2.00	6.00	4.00	695.88									
GM540-STA549+90NB					1	6.00	5.00	30.00	W6	9.00	12.50	13.50	2.33	2.33	1.50	3.00	2.00	275.94									
GUIDE SIGNS ROADSIDE MOUNTED TOTALS;								**3848.25**																			
GUIDE SIGNS OVERHEAD MOUNTED TOTALS;								**989.75**																			
TOTALS:		**3**	**1**	**1**	**32**			**4838.00**										**20345.86**		**165.00**	**60.00**	**27.50**	**700**	**4**	**4**	**280**	**68**

BASIS OF ESTIMATE: ACHM SURFACE COURSE (1/2") - MINERAL AGGREGATE 94.4%, ASPHALT BINDER (PG 64-22) 5.6%.
NMAX = 205

STATE OF ARKANSAS
REGISTERED PROFESSIONAL ENGINEER
No. 5851
L. TONY SULLIVAN
9/30/12

DATE REVISED	DATE FILMED	DATE REVISED	DATE FILMED	FED.RD. DIST.NO.	STATE	FED.AID PROJ.NO.	SHEET NO.	TOTAL SHEETS
				6	ARK.			
				JOB NO.		BB0407	381	464
				(2)	SIGNING QUANTITIES			

MAIN LANES SIGNING QUANTITIES

SIGN NO./ LOCATION	STRUCTURE TYPE ST	CL	OH	BM	G-1	SIGN GUIDE SIGN Length LIN. FT.	Height LIN. FT.	SQ. FT.	BREAKAWAY SIGN SUPPORT STEEL SECT. A-572 BEAM	LBS	SIGN POST LENGTH H-1 LIN FT	H-2 LIN FT	STUB POST H-1 LIN FT	H-2 LIN FT	FOOTINGS DIA. LIN FT	DEPTH LIN FT	EMBED. LIN FT	SIGN POST AND STUB POUND	EXIT NUMBER PANEL LEGEND	TYPE A SQ. FT.	B SQ. FT.	C SQ. FT.	GUARDRAIL TYPE A LIN. FT.	TERM. ANCHOR POSTS (TYPE 1) EACH	GUARDRAIL TERM. (TYPE 2) EACH	AGG. BASE CR (CL. 7) TON	ACHM SURF. CR. (1/2") 220 LBS/SY TON
EXIT 10 CONT.																											
GM540-STA567+40SB					1	6.00	5.00	30.00	W6	9.00	12.50	13.50	2.33	2.33	1.50	3.00	2.00	275.94									
GM540-STA590+90SB					1	16.50	5.00	82.50	W6	9.00	12.50	13.50	3.66	3.66	1.50	5.00	3.33	299.88									
GM540-STA610+00SB					1	18.00	12.00	216.00	W8	21.00	19.50	20.50	4.99	4.99	2.50	7.00	4.66	1049.58									
GM540-STA617+10SB					1	14.00	5.50	77.00	W6	9.00	13.00	14.00	3.33	3.33	1.50	4.50	3.00	302.94	10	20.00							
GM540-STA630+00SB					1	13.00	5.00	65.00	W6	9.00	12.50	13.50	3.33	3.33	1.50	4.50	3.00	293.94									
GM540-STA668+00SB					1	10.50	1.50	15.75	W6	9.00	9.00	10.00	1.99	1.99	1.50	2.50	1.66	206.82									
EXIT 12																											
GM540-STA615+00NB					1	13.50	9.50	128.25	W8	18.00	17.00	18.00	3.99	3.99	2.00	5.00	3.66	773.64	12	20.00							
GM540-STA737+00SB					1	13.50	9.50	128.25	W8	18.00	17.00	18.00	3.99	3.99	2.00	5.00	3.66	773.64	12	20.00							
GM540-STA624+00NB					1	16.00	5.00	80.00	W6	9.00	12.50	13.50	3.66	3.66	1.50	5.50	3.33	299.88									
GM540-STA729+10SB					1	16.00	5.00	80.00	W6	9.00	12.50	13.50	3.66	3.66	1.50	5.50	3.33	299.88									
GM540-STA676+00NB					1	6.50	7.00	45.50	W6	9.00	14.50	15.50	2.99	2.99	1.50	4.00	2.66	323.82									
GM540-STA688+00SB					1	6.50	7.00	45.50	W6	9.00	14.50	15.50	2.99	2.99	1.50	4.00	2.66	323.82									
GM540-STA692+90SB					1	16.50	7.00	115.50	W6	12.00	14.50	15.50	3.66	3.66	2.00	5.00	3.33	447.84	12	20.00							
GM540-STA708+00SB					1	13.50	5.00	67.50	W6	9.00	12.50	13.50	3.33	3.33	1.50	4.50	3.00	293.94									
GM540-STA633+00NB					1	10.50	1.50	15.75	W6	9.00	9.00	10.00	1.99	1.99	1.50	2.50	1.66	206.82									
OH-540-17-06			1																				175	1	1	70	17
OH-540-STA668+50NB(A)						12.50	8.00	100.00											14A-B			31.25					
OH-540-STA668+50NB(B)						18.50	8.00	148.00											12	20.00							
EXIT 14A, 14B																											
BM-540-17-03				1																							
BM-540-STA791+70SB						11.50	9.00	103.50											14A		23.75						
GM540-STA737+10NB					1	13.00	7.00	91.00	W6	12.00	14.50	15.50	3.33	3.33	2.00	4.50	3.00	439.92									
GM540-STA810+00SB					1	13.00	7.00	91.00	W6	12.00	14.50	15.50	3.33	3.33	2.00	4.50	3.00	439.92									
GM64-STA24+30WB					1	6.00	5.00	30.00	W6	9.00	12.50	13.50	2.33	2.33	1.50	3.00	2.00	275.94									
GM64-STA3+90EB					1	6.00	5.00	30.00	W6	9.00	12.50	13.50	2.33	2.33	1.50	3.00	2.00	275.94									
GM540-STA786+00SB					1	8.00	7.00	56.00	W6	9.00	14.50	15.50	2.99	2.99	1.50	4.00	2.66	323.82									
GM540-STA780+90NB					1	7.50	5.00	37.50	W6	9.00	12.50	13.50	2.66	2.66	1.50	3.50	2.33	281.88									
GM540-STA801+10SB					1	7.50	5.00	37.50	W6	9.00	12.50	13.50	2.66	2.66	1.50	3.50	2.33	281.88									
GM540-STA795+95NB					1	8.00	7.00	56.00	W6	9.00	14.50	15.50	2.99	2.99	1.50	4.00	2.66	323.82									
GM64-STA18+90EB					1	8.00	7.00	56.00	W6	9.00	14.50	15.50	2.99	2.99	1.50	4.00	2.66	323.82									
GM64-STA11+00WB					1	8.00	7.00	56.00	W6	9.00	14.50	15.50	2.99	2.99	1.50	4.00	2.66	323.82									
GM540-STA388+70SB					1	13.50	9.50	128.25	W8	18.00	17.00	18.00	3.99	3.99	2.00	5.50	3.66	773.64									
GM540-STA818+90SB					1	13.50	9.50	128.25	W8	18.00	17.00	18.00	3.99	3.99	2.00	5.50	3.66	773.64									
GM64-STA12+80EB					1	23.00	10.50	241.50	W8	21.00	18.00	19.00	4.99	4.99	2.50	7.00	4.66	986.58									
GM64-STA17+00WB					1	18.50	8.50	157.25	W8	18.00	16.00	17.00	3.99	3.99	2.50	5.50	3.66	737.64									
OH-540-17-11			1																				350	2	2	140	34
OH-540-STA725+00NB(A)						12.50	8.00	100.00											15A-B			31.25					
OH-540-STA725+00NB(B)						13.50	9.50	128.25											14A-B			31.25					
OH-540-17-05			1																				175	1	1	70	17
OH-540-STA779+00NB(A)						30.50	15.00	457.50											15A, 15B		66.50						
OH-540-STA779+00NB(B)						12.50	9.50	118.75											14B		23.75						
OH-540-STA779+00NB(C)						9.50	7.00	66.50											14A		23.75						
OH-540-17-04			1																				350	2	2	140	34
OH-540-STA790+10NB(A)						30.50	13.00	396.50											15A, 15B		66.50						
OH-540-STA790+10NB(B)						18.50	10.50	194.25											14B		23.75						
GUIDE SIGNS ROADSIDE MOUNTED TOTALS;								**2388.75**																			
GUIDE SIGNS OVERHEAD MOUNTED TOTALS;								**1813.25**																			
TOTALS:			**4**	**1**	**29**			**4202.00**										**12734.64**		**100.00**	**228.00**	**93.75**	**1050**	**6**	**6**	**420**	**102**

BASIS OF ESTIMATE: ACHM SURFACE COURSE (1/2") - MINERAL AGGREGATE 94.4%, ASPHALT BINDER (PG 64-22) 5.6%.
NMAX = 205

STATE OF ARKANSAS
REGISTERED PROFESSIONAL ENGINEER
No. 5851
L. TONY SULLIVAN
8/30/12

DATE REVISED	DATE FILMED	DATE REVISED	DATE FILMED	FED.RD. DIST.NO.	STATE	FED.AID PROJ.NO.	SHEET NO.	TOTAL SHEETS
				6	ARK.			
				JOB NO.		BB0407	382	464
				(2)	SIGNING QUANTITIES			

MAIN LANES SIGNING QUANTITIES

SIGN NO./ LOCATION	STRUCTURE TYPE ST	CL	OH	BM	G-1	SIGN GUIDE SIGN Length LIN. FT.	Height LIN. FT.	SQ. Ft.	BREAKAWAY SIGN SUPPORT STEEL SECT. A-572 BEAM	LBS	SIGN POST LENGTH H-1 LIN FT	H-2 LIN FT	STUB POST H-1 LIN FT	H-2 LIN FT	FOOTINGS DIA. LIN FT	DEPTH LIN FT	EMBED. LIN FT	SIGN POST AND STUB POUND	EXIT NUMBER PANEL LEGEND	TYPE A SQ. FT.	B SQ. FT.	C SQ. FT.	GUARDRAIL TYPE A LIN. FT.	TERM. ANCHOR POSTS (TYPE 1) EACH	GUARDRAIL TERM. (TYPE 2) EACH	AGG. BASE CR (CL. 7) TON	ACHM SURF. CR. (1/2") 220 LBS/SY TON
EXIT 14A, 14B CONT.																											
OH-64-17-01			1																				350	2	2	140	34
OH-64-STA2+90EB(A)						22.50	12.50	281.25																			
OH-64-STA2+90EB(B)						16.50	8.50	140.25																			
OH-64-17-02			1																				350	2	2	140	34
OH-64-STA26+00WB(A)						13.50	10.50	141.75																			
OH-64-STA26+00WB(B)						18.00	16.00	288.00																			
OH-540-17-02			1																				350	2	2	140	34
OH-540-STA805+50SB(A)						13.50	8.00	108.00																			
OH-540-STA805+50SB(B)						9.50	7.00	66.50											14A		23.75						
OH-540-STA805+50SB©						14.00	10.50	147.00											14B		23.75						
OH-540-17-12			1																				350	2	2	140	34
OH-540-STA812+50SB						14.00	10.00	140.00											14B		23.75						
EXIT 15A, 15B																											
OH-540-17-10			1																				350	2	2	140	34
OH-540-STA809+50NB						28.00	15.50	434.00											15A, 15B		66.50						
GM540-STA387+00SB					1	8.50	4.00	34.00	W6	9.00	11.50	12.50	2.33	2.33	1.50	3.00	2.00	257.94									
GM540-STA823+00SB					1	8.50	4.00	34.00	W6	9.00	11.50	12.50	2.33	2.33	1.50	3.00	2.00	257.94									
GM540-STA813+10NB					1	15.50	10.50	162.75	W8	18.00	18.00	19.00	4.33	4.33	2.50	6.00	4.00	821.88									
GUIDE SIGNS ROADSIDE MOUNTED TOTALS;								**757.75**																			
GUIDE SIGNS OVERHEAD MOUNTED TOTALS;								**230.75**																			
TOTALS:			**5**		**3**			**988.50**										**1337.76**			**137.75**		**1750**	**10**	**10**	**700**	**170**

BASIS OF ESTIMATE: ACHM SURFACE COURSE (1/2") - MINERAL AGGREGATE 94.4%, ASPHALT BINDER (PG 64-22) 5.6%.
NMAX = 205

STATE OF ARKANSAS
REGISTERED PROFESSIONAL ENGINEER
No. 5851
L. TONY SULLIVAN
8/30/12

	STANDARD SIGNS FLAT SHEET			BREAKAWAY SIGN SUPPORT									
	I-BEAM SIGN SUPPORTS			STEEL									SIGN
	TYPE		STANDARD	SECT.		SIGN POST LENGTH		STUB POST		FOOTINGS			POST
SIGN NO./			SIGN	A-572		H - 1	H - 2	H - 1	H - 2	DIA.	DEPTH	EMBED.	AND STUB
LOCATION		G-2	SQ. FT.	BEAM	LBS	LIN FT		LIN FT		LIN FT			POUND
EXIT 7													
SS540-STA384+00SB		1	20.00	W6	9	12.00	13.00	1.99	1.99	1.50	3.00	2.00	260.82
SS540-STA320+00SB		1	20.00	W6	9	12.00	13.00	1.99	1.99	1.50	3.00	2.00	260.82
SS540-STA430+00NB		1	20.00	W6	9	12.00	13.00	1.99	1.99	1.50	3.00	2.00	260.82
SS540-STA406+10SB		1	20.00	W6	9	12.00	13.00	1.99	1.99	1.50	3.00	2.00	260.82
SS540-STA398+50SB		1	28.00	W6	9	14.00	15.00	1.99	1.99	2.00	4.00	3.00	296.82
SS540-STA391+00NB		1	16.00	W6	9	11.00	12.00	1.99	1.99	1.50	3.00	2.00	242.82
SS540-STA404+00NB		1	16.00	W6	9	11.00	12.00	1.99	1.99	1.50	3.00	2.00	242.82
SS540-STA393+00SB		1	16.00	W6	9	11.00	12.00	1.99	1.99	1.50	3.00	2.00	242.82
SS540-STA327+00SB		1	24.50	W6	9	12.50	13.50	1.99	1.99	1.50	3.00	2.00	269.82
SS540-STA426+00NB		1	24.50	W6	9	12.50	13.50	1.99	1.99	1.50	3.00	2.00	269.82
EXIT 8													
SS540-STA477+90NB		1	20.00	W6	9	12.00	13.00	1.99	1.99	1.50	3.00	2.00	260.82
SS540-STA503+00SB		1	20.00	W6	9	12.00	13.00	1.99	1.99	1.50	3.00	2.00	260.82
SS540-STA447+00SB		1	20.00	W6	9	12.00	13.00	1.99	1.99	1.50	3.00	2.00	260.82
SS540-STA481+00SB		1	16.00	W6	9	11.00	12.00	1.99	1.99	1.50	3.00	2.00	242.82
SS540-STA500+00NB		1	16.00	W6	9	11.00	12.00	1.99	1.99	1.50	3.00	2.00	242.82
SS540-STA458+00SB		1	24.50	W6	9	12.50	13.50	1.99	1.99	1.50	3.00	2.00	269.82
EXIT 9													
SS540-STA548+10NB		1	20.00	W6	9	12.00	13.00	1.99	1.99	1.50	3.00	2.00	260.82
SS540-STA568+90SB		1	20.00	W6	9	12.00	13.00	1.99	1.99	1.50	3.00	2.00	260.82
SS540-STA526+50SB		1	20.00	W6	9	12.00	13.00	1.99	1.99	1.50	3.00	2.00	260.82
SS540-STA598+00NB		1	20.00	W6	9	12.00	13.00	1.99	1.99	1.50	3.00	2.00	260.82
SS540-STA634+00SB		1	20.00	W6	9	12.00	13.00	1.99	1.99	1.50	3.00	2.00	260.82
SS540-STA549+00SB		1	16.00	W6	9	11.00	12.00	1.99	1.99	1.50	3.00	2.00	242.82
SS540-STA565+00NB		1	16.00	W6	9	11.00	12.00	1.99	1.99	1.50	3.00	2.00	242.82
SS540-STA589+00NB		1	24.50	W6	9	12.50	13.50	1.99	1.99	1.50	3.00	2.00	269.82
SS540-STA535+00SB		1	24.50	W6	9	12.50	13.50	1.99	1.99	1.50	3.00	2.00	269.82
SS540-STA668+00SB		1	24.50	GM540-STA668+00SB									
SS540-STA633+00NB		1	24.50	GM540-STA633+00NB									
EXIT 12													
SS540-STA674+00NB		1	20.00	W6	9	12.00	13.00	1.99	1.99	1.50	3.00	2.00	260.82
SS540-STA689+00SB		1	20.00	W6	9	12.00	13.00	1.99	1.99	1.50	3.00	2.00	260.82
SS540-STA709+00NB		1	20.00	W6	9	12.00	13.00	1.99	1.99	1.50	3.00	2.00	260.82
SS540-STA684+00NB		1	16.00	W6	9	11.00	12.00	1.99	1.99	1.50	3.00	2.00	242.82
SS540-STA683+00SB		1	16.00	W6	9	11.00	12.00	1.99	1.99	1.50	3.00	2.00	242.82
SS540-STA702+00NB		1	24.50	W6	9	12.50	13.50	1.99	1.99	1.50	3.00	2.00	269.82
EXIT 14													
SS540-STA762+00SB		1	20.00	W6	9	12.00	13.00	1.99	1.99	1.50	3.00	2.00	260.82
SS540-STA779+00NB		1	20.00	OH540-STA779+00NB									
SS540-STA805+50SB		1	20.00	OH540-STA805+50SB									
SS540-STA786+50SB		1	28.00	W6	9	14.00	15.00	1.99	1.99	2.00	4.00	3.00	296.82
SS540-STA795+00NB		1	28.00	W6	9	14.00	15.00	1.99	1.99	2.00	4.00	3.00	296.82
SS540-STA783+00SB		1	16.00	W6	9	11.00	12.00	1.99	1.99	1.50	3.00	2.00	242.82
SS540-STA799+00NB		1	16.00	W6	9	11.00	12.00	1.99	1.99	1.50	3.00	2.00	242.82
SS540-STA786+00NB		1	16.00	W6	9	11.00	12.00	1.99	1.99	1.50	3.00	2.00	242.82
SS540-STA795+50SB		1	16.00	W6	9	11.00	12.00	1.99	1.99	1.50	3.00	2.00	242.82
SS540-STA768+00SB		1	24.50	W6	9	12.50	13.50	1.99	1.99	1.50	3.00	2.00	269.82
EXIT 15													
		1	20.00	W6	9	12.00	13.00	1.99	1.99	1.50	3.00	2.00	260.82
SS540-STA809+50NB		1	20.00	OH540-STA809+50NB									
SS540-STA815+00NB-A		1	28.00	W6	9	14.00	15.00	1.99	1.99	2.00	4.00	3.00	296.82
SS540-STA815+00NB-B		1	28.00	W6	9	14.00	15.00	1.99	1.99	2.00	4.00	3.00	296.82
SS540-STA815+00SB		1	16.00	W6	9	11.00	12.00	1.99	1.99	1.50	3.00	2.00	242.82
SS540-STA832+00NB-A		1	20.00	W6	9	11.00	12.00	1.99	1.99	1.50	3.00	2.00	242.82
SS540-STA832+00NB-B		1	20.00	W6	9	11.00	12.00	1.99	1.99	1.50	3.00	2.00	242.82
SS540-01		1	12.00	W6	9	11.00	12.00	1.99	1.99	1.50	3.00	2.00	242.82
SS540-02		1	12.00	W6	9	12.50	13.50	1.99	1.99	1.50	3.00	2.00	269.82
SS540-03		1	12.00	W6	9	12.50	13.50	1.99	1.99	1.50	3.00	2.00	269.82
SS540-04		1	12.00	W6	9	12.50	13.50	1.99	1.99	1.50	3.00	2.00	269.82
SS540-05		1	12.00	W6	9	12.50	13.50	1.99	1.99	1.50	3.00	2.00	269.82
SS540-06		1	12.00	W6	9	12.50	13.50	1.99	1.99	1.50	3.00	2.00	269.82
SS540-07		1	12.00	W6	9	12.50	13.50	1.99	1.99	1.50	3.00	2.00	269.82
SS540-08		1	12.00	W6	9	12.50	13.50	1.99	1.99	1.50	3.00	2.00	269.82
SS540-09		1	12.00	W6	9	11.00	12.00	1.99	1.99	1.50	3.00	2.00	242.82
SS540-10		1	12.00	W6	9	12.50	13.50	1.99	1.99	1.50	3.00	2.00	269.82
SS540-11		1	12.00	W6	9	12.50	13.50	1.99	1.99	1.50	3.00	2.00	269.82
SS540-12		1	12.00	W6	9	12.50	13.50	1.99	1.99	1.50	3.00	2.00	269.82
SS540-13		1	12.00	W6	9	11.00	12.00	1.99	1.99	1.50	3.00	2.00	242.82
SS540-14		1	12.00	W6	9	12.50	13.50	1.99	1.99	1.50	3.00	2.00	269.82
SS540-15		1	12.00	W6	9	12.50	13.50	1.99	1.99	1.50	3.00	2.00	269.82
SS540-16		1	12.00	W6	9	12.50	13.50	1.99	1.99	1.50	3.00	2.00	269.82
SS540-17		1	12.00	W6	9	12.50	13.50	1.99	1.99	1.50	3.00	2.00	269.82
SS540-18		1	12.00	W6	9	12.50	13.50	1.99	1.99	1.50	3.00	2.00	269.82
SS540-19		1	12.00	W6	9	12.50	13.50	1.99	1.99	1.50	3.00	2.00	269.82
TOTALS:	**0**	**69**	**1252.50**										**16737.48**

STANDARD SIGNS FLAT SHEET

STATE OF ARKANSAS
REGISTERED PROFESSIONAL ENGINEER
No. 5861
TONY SULLIVAN
6/20/12

DATE REVISED	DATE FILMED	DATE REVISED	DATE FILMED	FED.RD. DIST.NO.	STATE	FED.AID PROJ.NO.	SHEET NO.	TOTAL SHEETS
				6	ARK.	BB0407	383	464

JOB NO.

2 SIGNING QUANTITIES

DATE REVISED	DATE FILMED	DATE REVISED	DATE FILMED	FED.RD. DIST.NO.	STATE	FED.AID PROJ.NO.	SHEET NO.	TOTAL SHEETS
				6	ARK.			
				JOB NO.		BB0407	384	464

(2) SIGN LAYOUT SHEET

BM-022-65-01

INSTALL

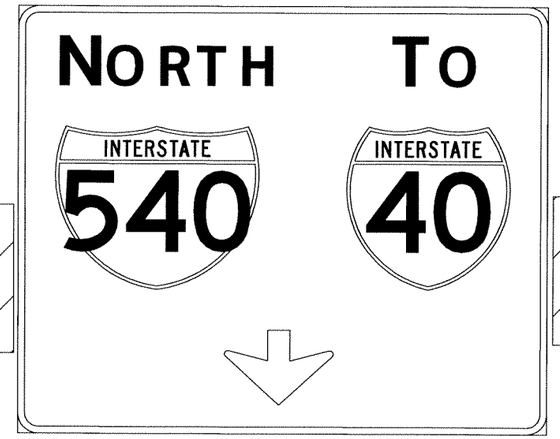

BM540-7AB-SB

REPLACE BRIDGE MOUNT

NOTE: SEE OVERHEAD SIGN STRUCTURE DETAILS SHEETS FOR DESIGN SPECIFICATIONS.

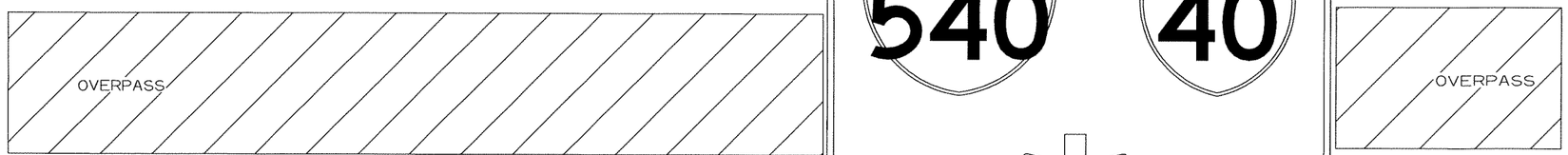

17.5 FT. MIN. VERTICAL CLEARANCE OVER THE HIGHEST POINT OF ROADWAY

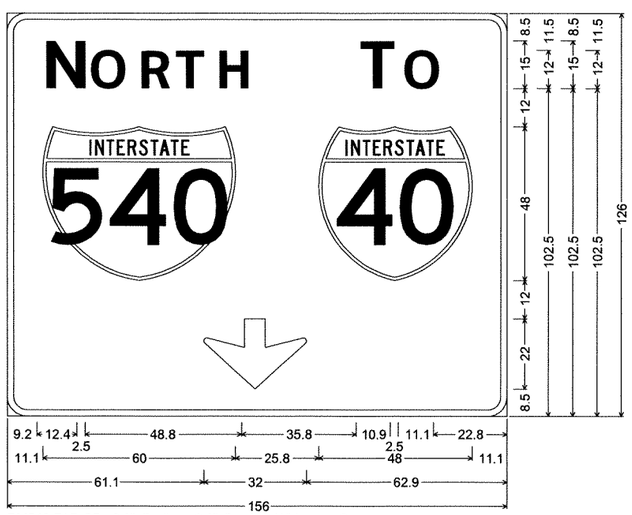

BM540-7AB-SB; 6.0" Radius, 2.0" Border, White on Green;
[N] ClearviewHwy-5-W; [ORTH] ClearviewHwy-5-W; [T] ClearviewHwy-5-W;
[O] ClearviewHwy-5-W; Down Arrow 22.0" 270°;

STATE OF ARKANSAS
REGISTERED PROFESSIONAL ENGINEER
No. 5851
L. TONY SULLIVAN
6/30/12

DATE REVISED	DATE FILMED	DATE REVISED	DATE FILMED	FED.RD. DIST.NO.	STATE	FED.AID PROJ.NO.	SHEET NO.	TOTAL SHEETS
				6	ARK.			
				JOB NO.		BB0407	385	464

(2) SIGN LAYOUT SHEET

OC-540-65-02

NOTE: SEE OVERHEAD SIGN STRUCTURE DETAILS SHEETS FOR DESIGN SPECIFICATIONS.

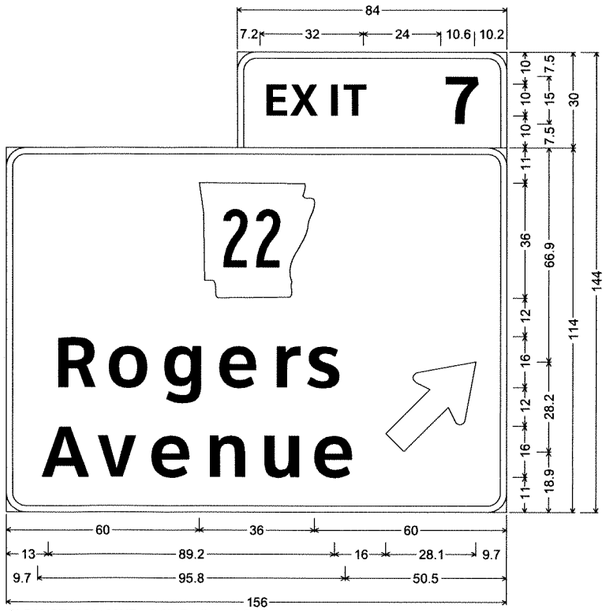

CL540-STA381+00NB; 6.0" Radius, 2.0" Border, White on Green;
[EXIT] ClearviewHwy-5-W; [7] ClearviewHwy-5-W;
6.0" Radius, 2.0" Border, White on Green;
M1-6; [Rogers] ClearviewHwy-5-W; [Avenue] ClearviewHwy-5-W;
Standard Arrow Custom 35.8" X 21.6" 45°;

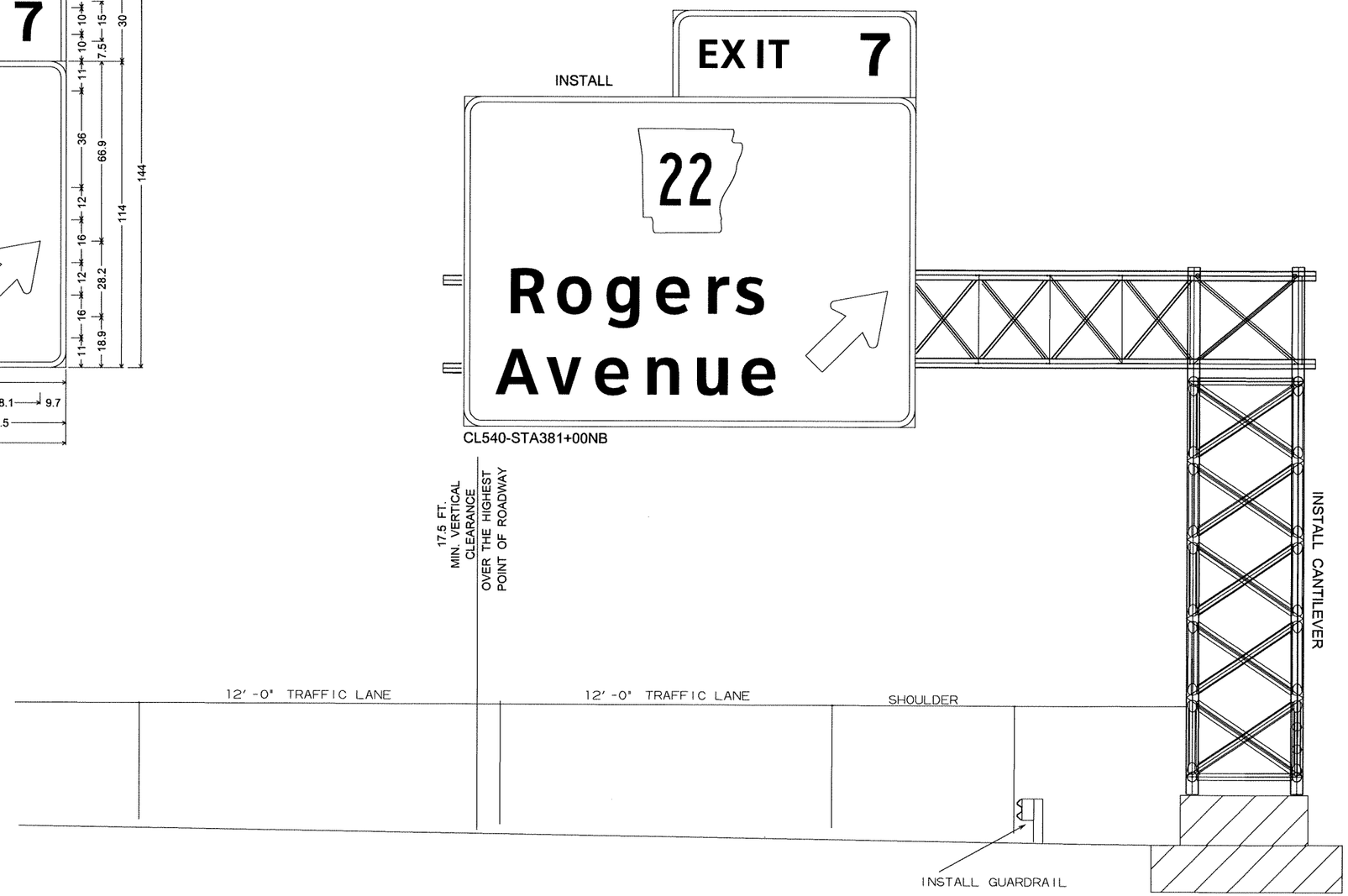

STATE OF ARKANSAS
REGISTERED PROFESSIONAL ENGINEER
No. 5851
L. TONY SULLIVAN
8/13/12

DATE REVISED	DATE FILMED	DATE REVISED	DATE FILMED	FED.RD. DIST.NO.	STATE	FED.AID PROJ.NO.	SHEET NO.	TOTAL SHEETS
				6	ARK.			
				JOB NO.		BB0407	386	464

(2) SIGN LAYOUT SHEET

OC-540-65-03

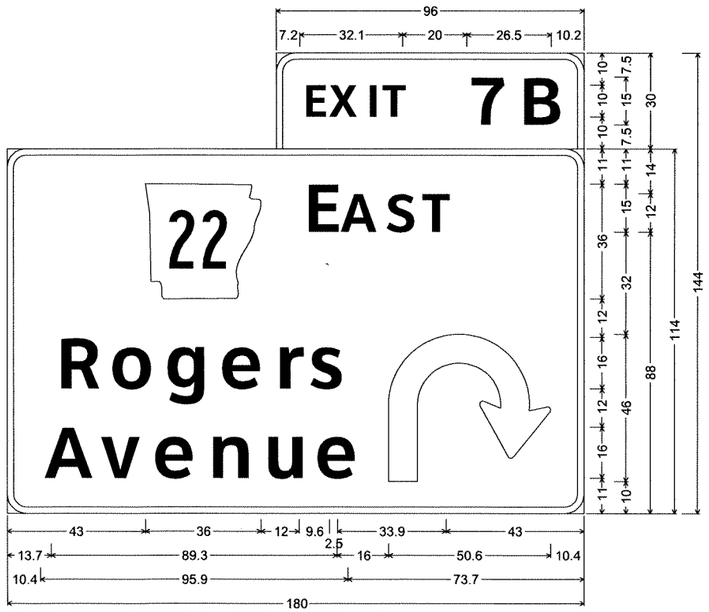

CL540-STA400+00SB; 6.0" Radius, 2.0" Border, White on Green;
[EXIT] ClearviewHwy-5-W; [7B] ClearviewHwy-5-W;
6.0" Radius, 2.0" Border, White on Green;
M1-6; [E] ClearviewHwy-5-W; [AST] ClearviewHwy-5-W; [Rogers] ClearviewHwy-5-W;
[Avenue] ClearviewHwy-5-W; Turn Arrow Custom;

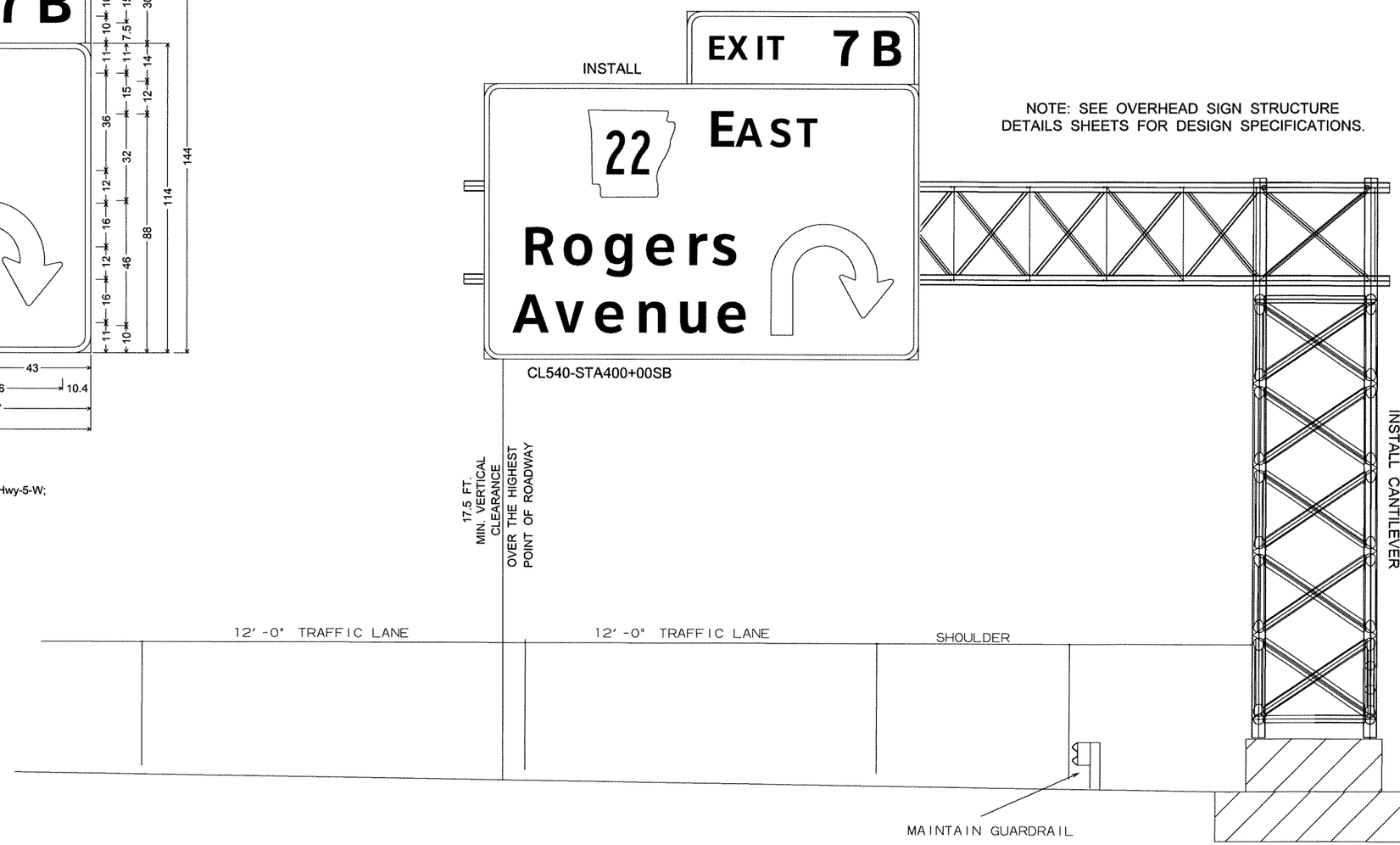

NOTE: SEE OVERHEAD SIGN STRUCTURE DETAILS SHEETS FOR DESIGN SPECIFICATIONS.

STATE OF ARKANSAS
REGISTERED PROFESSIONAL ENGINEER
No. 5851
J. TONY SULLIVAN
6/20/12

DATE REVISED	DATE FILMED	DATE REVISED	DATE FILMED	FED.RD. DIST.NO.	STATE	FED.AID PROJ.NO.	SHEET NO.	TOTAL SHEETS
				6	ARK.			
				JOB NO.		BB0407	387	464

(2) SIGN LAYOUT SHEET

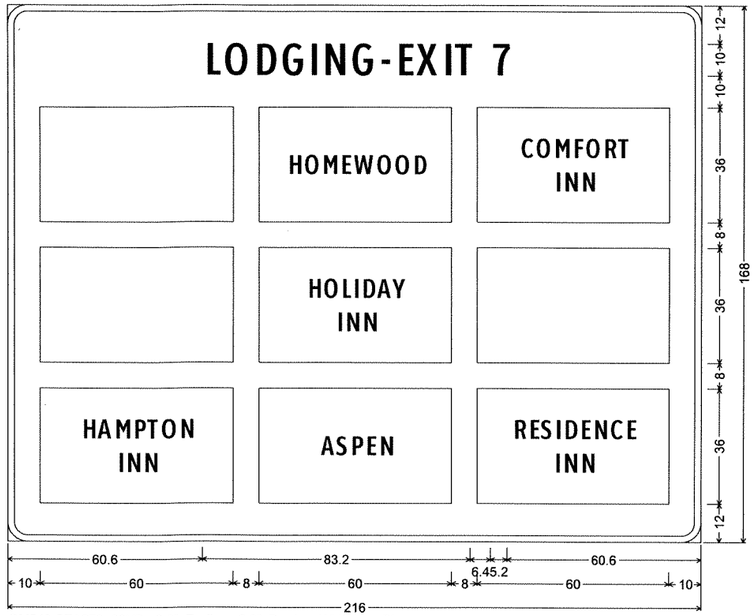

GM540-STA270+00NB; 6.0" Radius, 2.0" Border, White on Blue;
[LODGING-EXIT 7] ClearviewHwy-2-W;

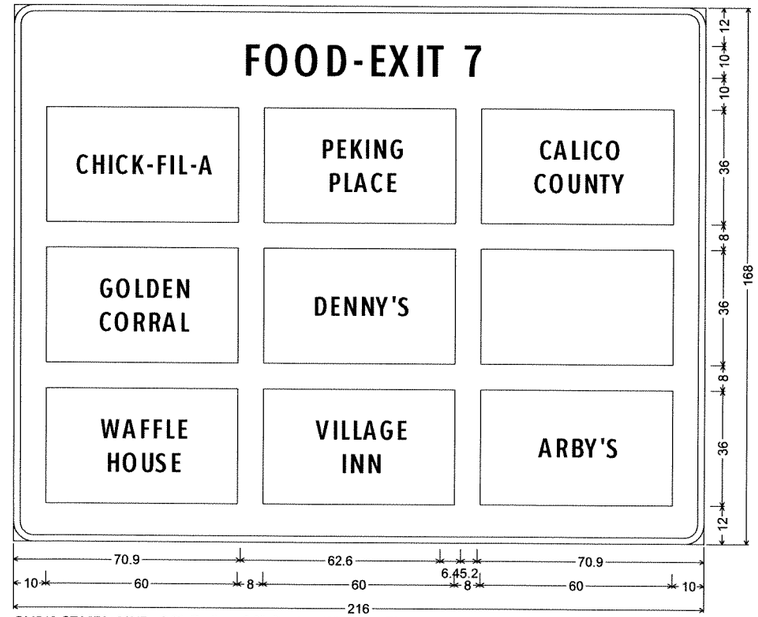

GM540-STA279+00NB; 6.0" Radius, 2.0" Border, White on Blue;
[FOOD-EXIT 7] ClearviewHwy-2-W;

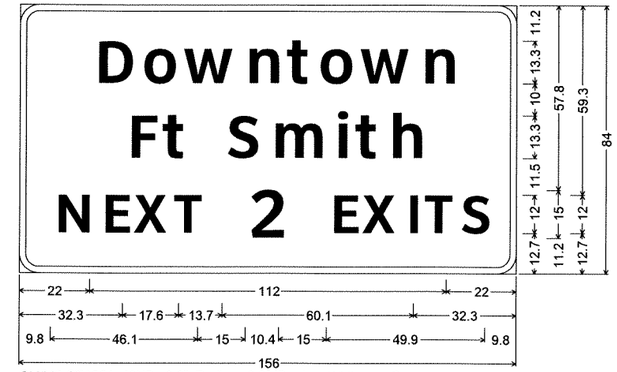

GM540-STA321+10NB; 6.0" Radius, 2.0" Border, White on Green;
[Downtown] ClearviewHwy-5-W; [Ft Smith] ClearviewHwy-5-W;
[NEXT] ClearviewHwy-5-W; [2] ClearviewHwy-5-W;
[EXITS] ClearviewHwy-5-W;

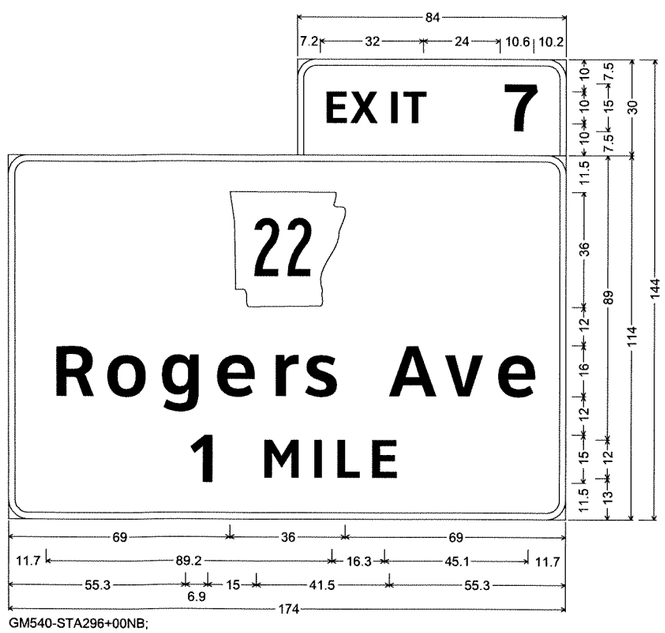

GM540-STA296+00NB;
6.0" Radius, 2.0" Border, White on Green;
[EXIT] ClearviewHwy-5-W; [7] ClearviewHwy-5-W;
6.0" Radius, 2.0" Border, White on Green;
M1-6; [Rogers Ave] ClearviewHwy-5-W; [1] ClearviewHwy-5-W;
[MILE] ClearviewHwy-5-W;

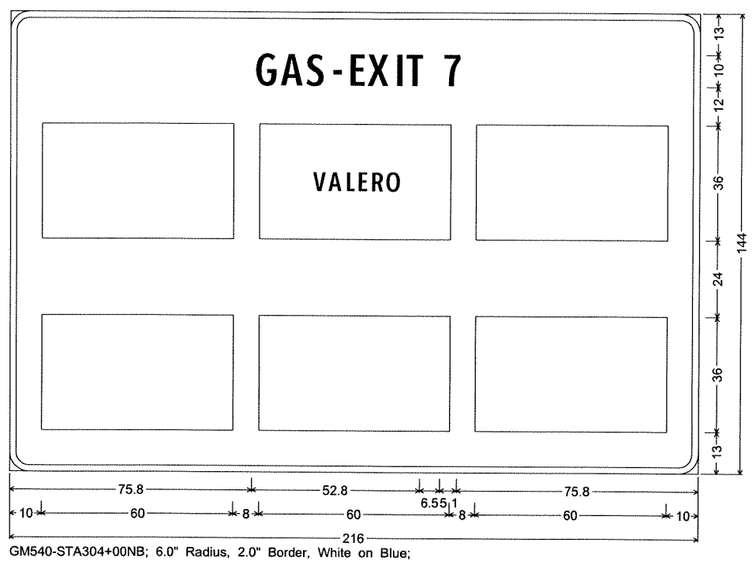

GM540-STA304+00NB; 6.0" Radius, 2.0" Border, White on Blue;
[GAS-EXIT 7] ClearviewHwy-2-W;

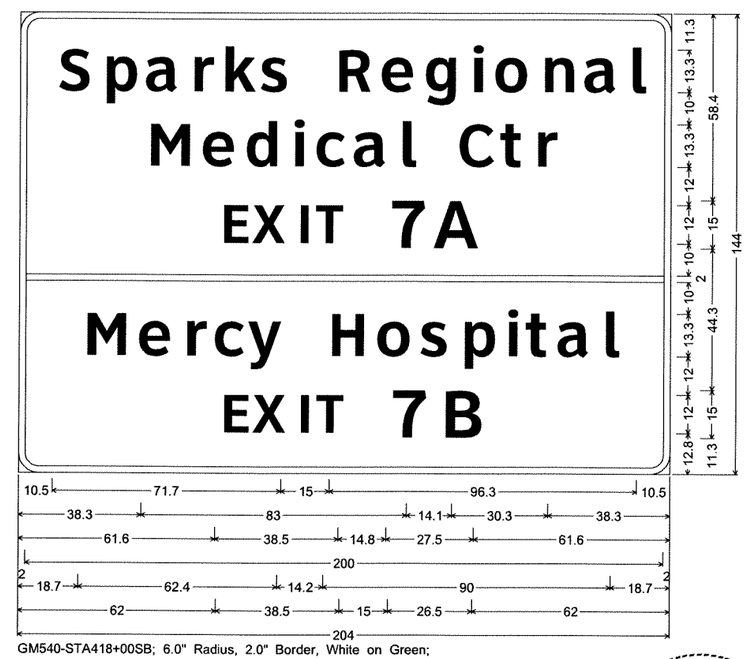

GM540-STA418+00SB; 6.0" Radius, 2.0" Border, White on Green;
[Sparks Regional] ClearviewHwy-5-W; [Medical Ctr] ClearviewHwy-5-W; [EXIT] ClearviewHwy-5-W;
[7A] ClearviewHwy-5-W; [Mercy Hospital] ClearviewHwy-5-W; [EXIT] ClearviewHwy-5-W;
[7B] ClearviewHwy-5-W;

STATE OF ARKANSAS
REGISTERED PROFESSIONAL ENGINEER
No. 5851
J. TONY SULLIVAN

DATE REVISED	DATE FILMED	DATE REVISED	DATE FILMED	FED.RD. DIST.NO.	STATE	FED.AID PROJ.NO.	SHEET NO.	TOTAL SHEETS
				6	ARK.			
				JOB NO.		BB0407	388	464

(2) SIGN LAYOUT SHEET

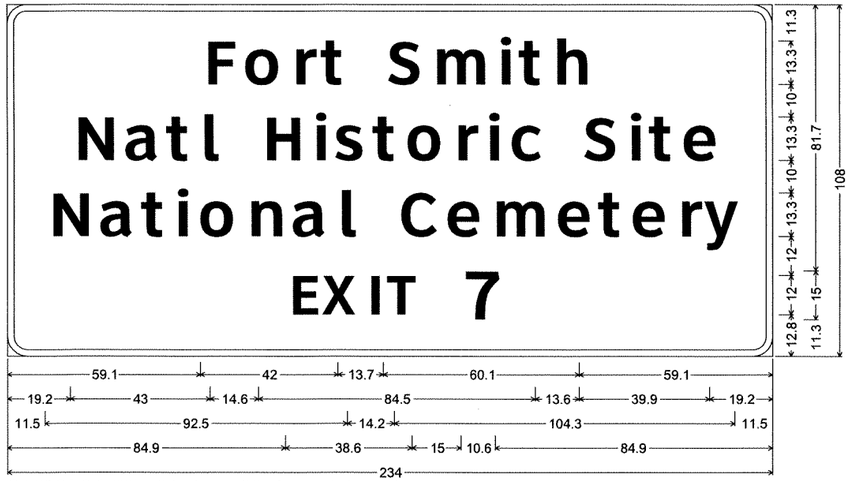

GM540-STA312+00NB; 6.0" Radius, 2.0" Border, White on Brown;
[Fort Smith] ClearviewHwy-5-W; [Natl Historic Site] ClearviewHwy-5-W; [National Cemetery] ClearviewHwy-5-W;
[EXIT] ClearviewHwy-5-W; [7] ClearviewHwy-5-W;

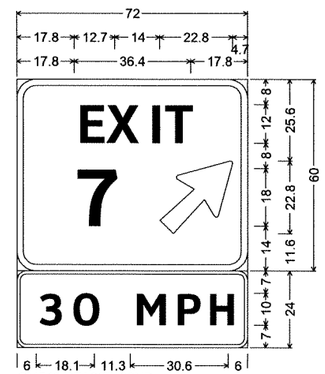

GM540-STA387+00NB;
6.0" Radius, 2.0" Border, White on Green;
[EXIT] ClearviewHwy-5-W-R;
[7] ClearviewHwy-5-W-R;
Arrow Custom - 29.0° 45°;
3.0" Radius, 1.0" Border, Black on Yellow;
[30 MPH] ClearviewHwy-5-W 90% spacing;

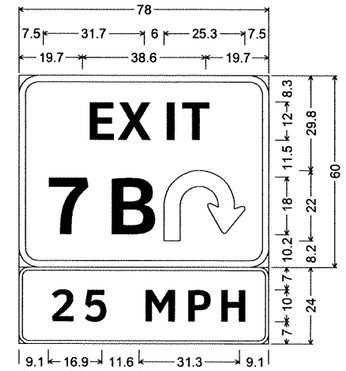

GM540-STA394+80SB;
6.0" Radius, 2.0" Border, White on Green;
[EXIT] ClearviewHwy-5-W;
[7B] ClearviewHwy-5-W;
Turn Arrow Custom;
3.0" Radius, 1.0" Border, Black on Yellow;
[25 MPH] ClearviewHwy-5-W;

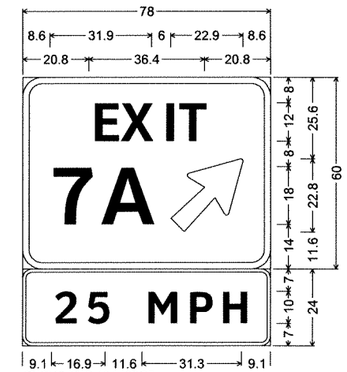

GM540-STA404+90SB;
6.0" Radius, 2.0" Border, White on Green;
[EXIT] ClearviewHwy-5-W-R;
[7A] ClearviewHwy-5-W-R;
Arrow Custom - 29.0° 45°;
3.0" Radius, 1.0" Border, Black on Yellow;
[25 MPH] ClearviewHwy-5-W;

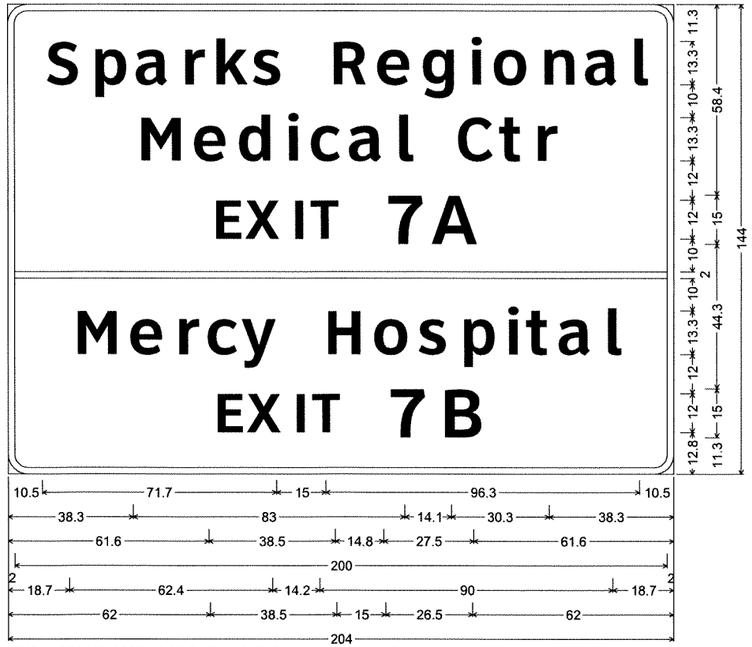

GM540-STA418+00SB; 6.0" Radius, 2.0" Border, White on Green;
[Sparks Regional] ClearviewHwy-5-W; [Medical Ctr] ClearviewHwy-5-W; [EXIT] ClearviewHwy-5-W;
[7A] ClearviewHwy-5-W; [Mercy Hospital] ClearviewHwy-5-W; [EXIT] ClearviewHwy-5-W;
[7B] ClearviewHwy-5-W;

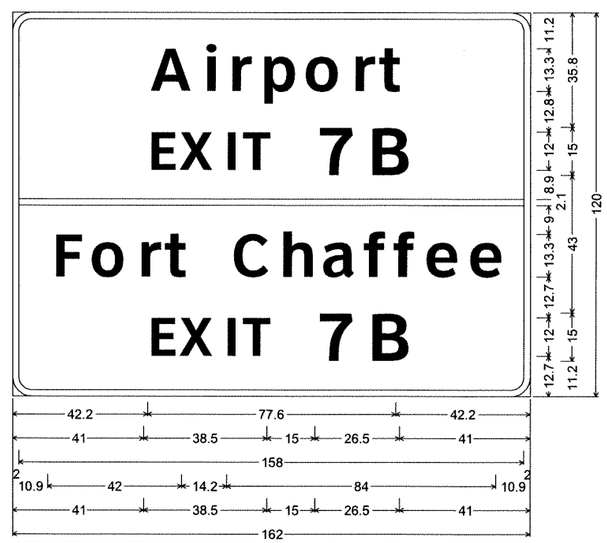

GM540-STA426+00SB; 6.0" Radius, 2.0" Border, White on Green;
[Airport] ClearviewHwy-5-W; [EXIT] ClearviewHwy-5-W;
[7B] ClearviewHwy-5-W; [Fort Chaffee] ClearviewHwy-5-W;
[EXIT] ClearviewHwy-5-W; [7B] ClearviewHwy-5-W;

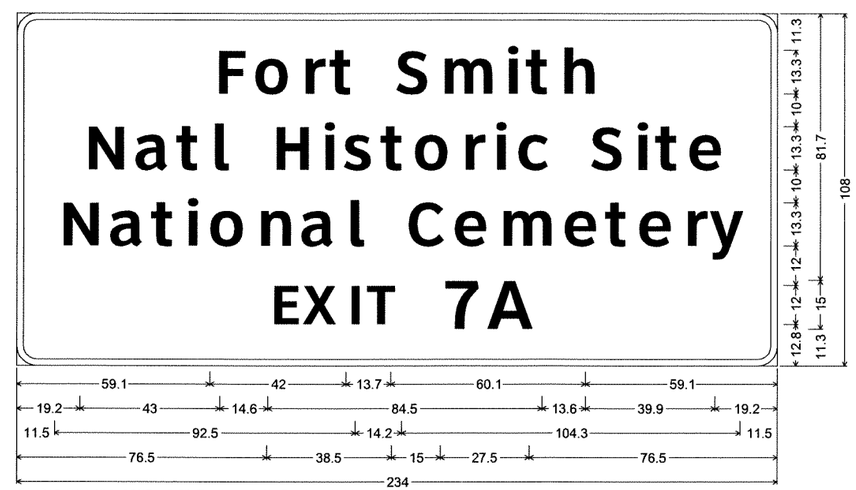

GM540-STA434+00SB; 6.0" Radius, 2.0" Border, White on Brown;
[Fort Smith] ClearviewHwy-5-W; [Natl Historic Site] ClearviewHwy-5-W; [National Cemetery] ClearviewHwy-5-W;
[EXIT] ClearviewHwy-5-W; [7A] ClearviewHwy-5-W;

STATE OF ARKANSAS
REGISTERED PROFESSIONAL ENGINEER
No. 5851
L. TONY SULLIVAN
8/30/12

DATE REVISED	DATE FILMED	DATE REVISED	DATE FILMED	FED.RD. DIST.NO.	STATE	FED.AID PROJ.NO.	SHEET NO.	TOTAL SHEETS
				6	ARK.			
				JOB NO.		BB0407	389	464

(2) SIGN LAYOUT SHEET

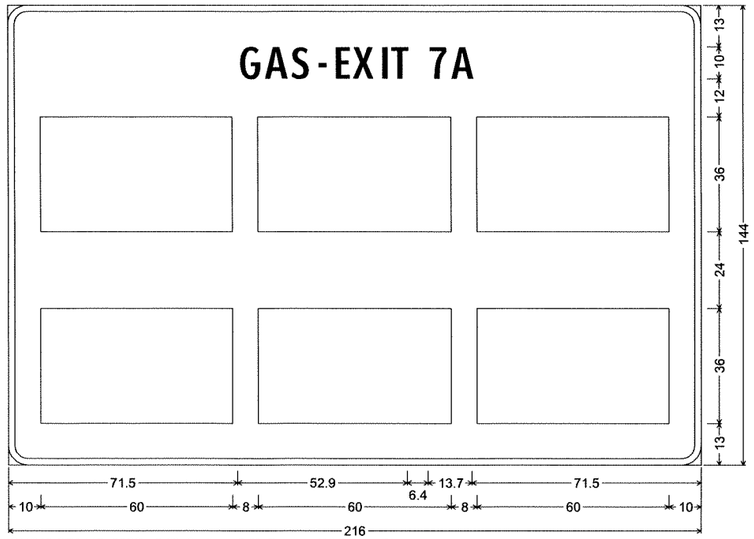

GM540-STA442+00SB; 6.0" Radius, 2.0" Border, White on Blue;
[GAS-EXIT 7A] ClearviewHwy-2-W;

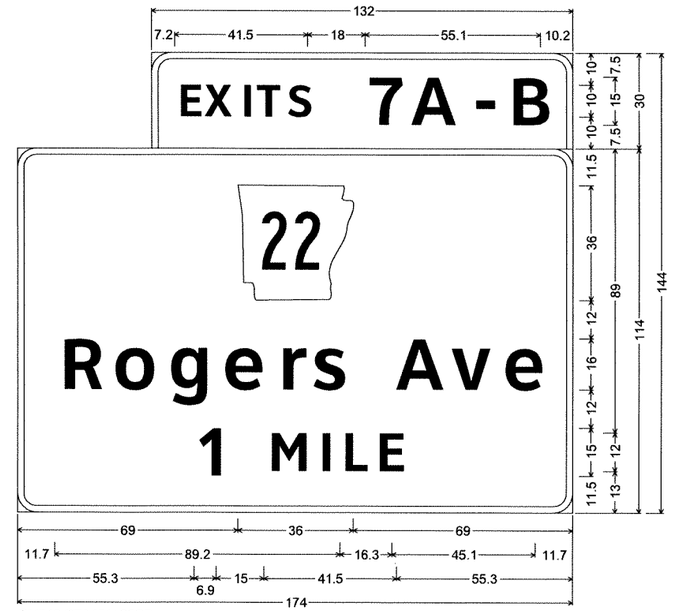

GM540-STA451+90SB;
6.0" Radius, 2.0" Border, White on Green;
[EXITS] ClearviewHwy-5-W; [7A-B] ClearviewHwy-5-W;
6.0" Radius, 2.0" Border, White on Green;
M1-6; [Rogers Ave] ClearviewHwy-5-W; [1] ClearviewHwy-5-W;
[MILE] ClearviewHwy-5-W;

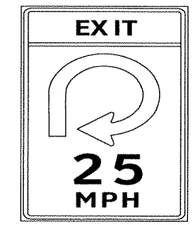

W13-6(25) 48"X60"
SS540-STA398+50SB

W13-2(30) 48"X60"
SS540-STA384+00NB

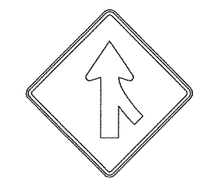

W4-1RT 48"X48"
SS540-STA391+00NB
SS540-STA404+00NB
SS540-STA393+00NB

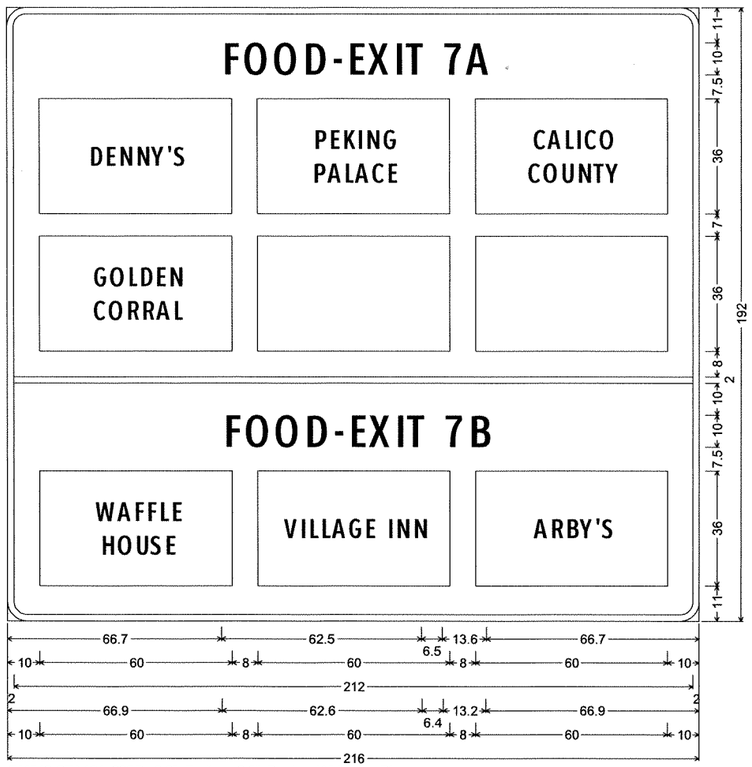

GM540-STA464+20SB; 6.0" Radius, 2.0" Border, White on Blue;
[FOOD-EXIT 7A] ClearviewHwy-2-W;
[FOOD-EXIT 7B] ClearviewHwy-2-W;

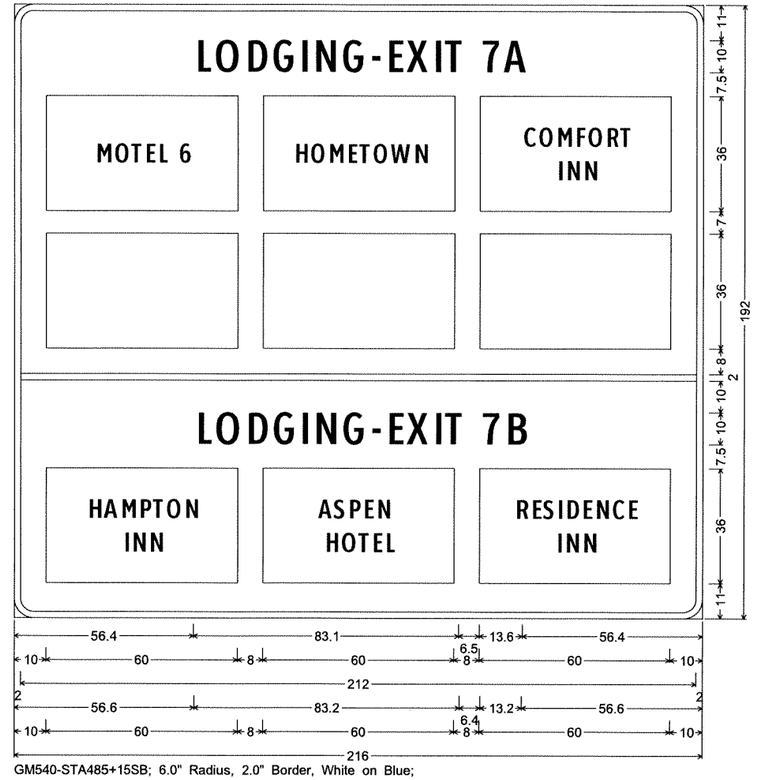

GM540-STA485+15SB; 6.0" Radius, 2.0" Border, White on Blue;
[LODGING-EXIT 7A] ClearviewHwy-2-W;
[LODGING-EXIT 7B] ClearviewHwy-2-W;

M3-3(Blue) 36"X18"
M1-1(540) 60"X48"
SS540-STA327+00SB

M3-1(Blue) 36"X18"
M1-1(540) 60"X48"
SS540-STA426+00NB

R2-1(65) 48"X60"
SS540-STA320+00SB
SS540-STA430+00NB

STATE OF ARKANSAS
REGISTERED PROFESSIONAL ENGINEER
No. 5851
T. TONY SULLIVAN
8/23/12

DATE REVISED	DATE FILMED	DATE REVISED	DATE FILMED	FED.RD. DIST.NO.	STATE	FED.AID PROJ.NO.	SHEET NO.	TOTAL SHEETS
				6	ARK.			
				JOB NO.		BB0407	390	464

(2) SIGN LAYOUT SHEET

OH-540-65-01

NOTE: SEE OVERHEAD SIGN STRUCTURE DETAILS SHEETS FOR DESIGN SPECIFICATIONS.

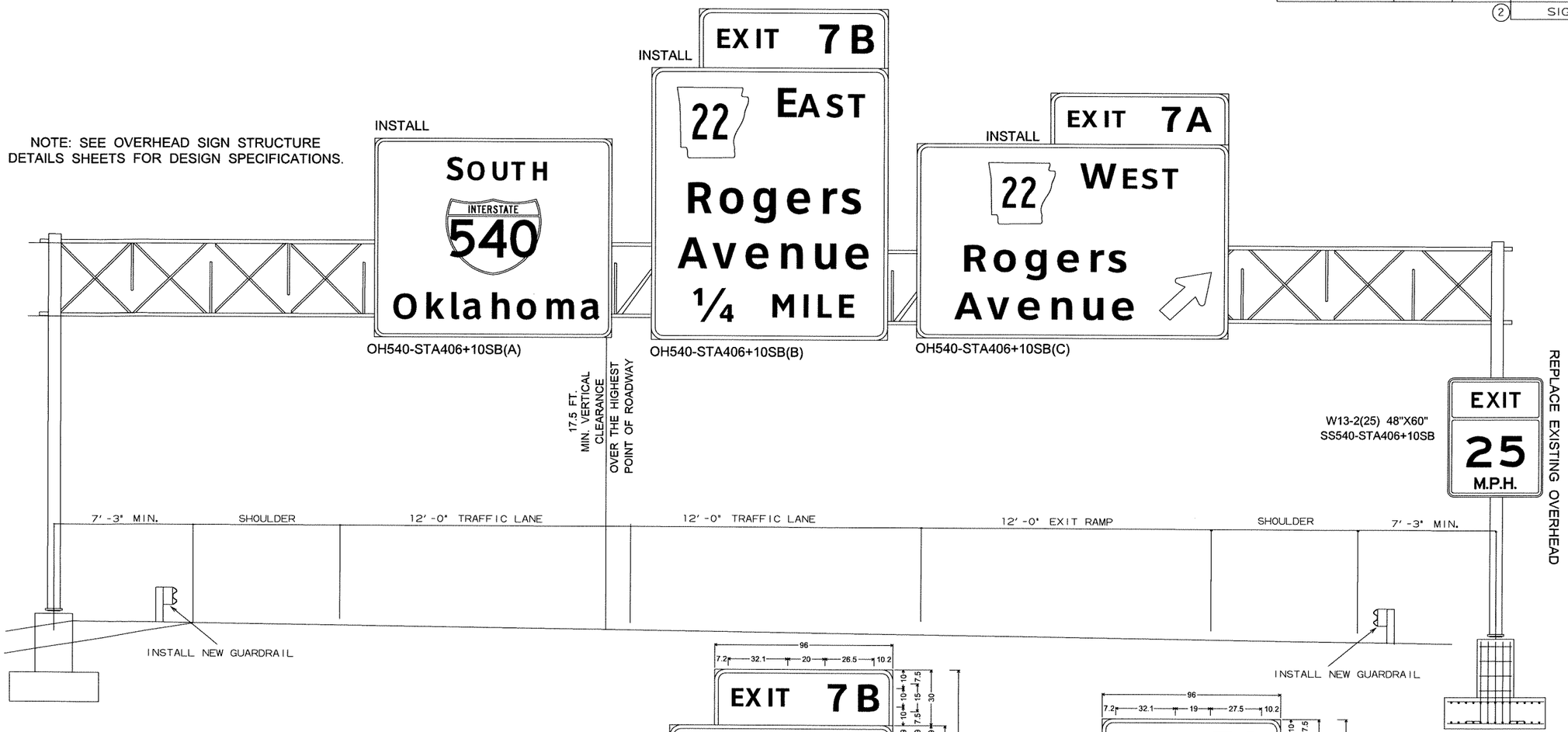

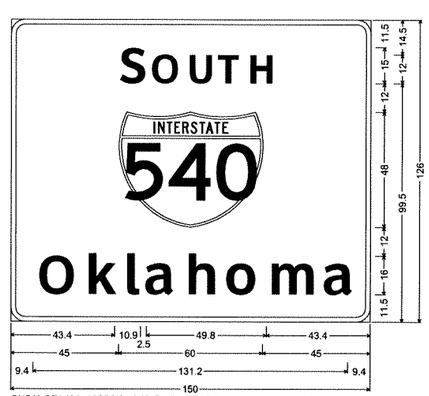

OH540-STA406+10SB(A); 6.0" Radius, 2.0" Border, White on Green;
[S] ClearviewHwy-5-W; [OUTH] ClearviewHwy-5-W;
[Oklahoma] ClearviewHwy-5-W;

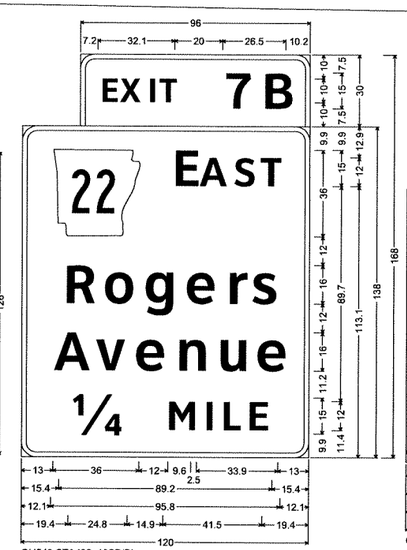

OH540-STA406+10SB(B);
6.0" Radius, 2.0" Border, White on Green;
[EXIT] ClearviewHwy-5-W; [7B] ClearviewHwy-5-W;
6.0" Radius, 2.0" Border, White on Green;
M1-6; [E] ClearviewHwy-5-W; [AST] ClearviewHwy-5-W;
[Rogers] ClearviewHwy-5-W; [Avenue] ClearviewHwy-5-W;
[1/4] ClearviewHwy-5-W; [MILE] ClearviewHwy-5-W;

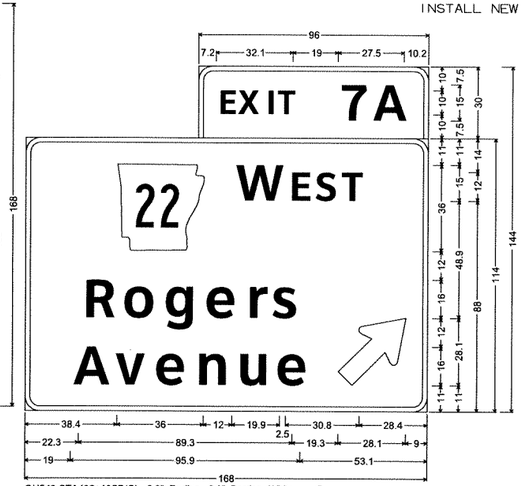

OH540-STA406+10SB(C); 6.0" Radius, 2.0" Border, White on Green;
[EXIT] ClearviewHwy-5-W; [7A] ClearviewHwy-5-W;
6.0" Radius, 2.0" Border, White on Green;
M1-6; [W] ClearviewHwy-5-W; [EST] ClearviewHwy-5-W;
[Rogers] ClearviewHwy-5-W; [Avenue] ClearviewHwy-5-W;
Standard Arrow Custom 35.8" X 21.6" 45°;

STATE OF ARKANSAS
REGISTERED PROFESSIONAL ENGINEER
No. 5851
L. TONY SULLIVAN
8/13/2017

DATE REVISED	DATE FILMED	DATE REVISED	DATE FILMED	FED.RD. DIST.NO.	STATE	FED.AID PROJ.NO.	SHEET NO.	TOTAL SHEETS
				6	ARK.			
				JOB NO.		BB0407	391	464

(2) SIGN LAYOUT SHEET

OC-540-65-04

CL540-STA475+00NB;
6.0" Radius, 2.0" Border, White on Green;
[EXIT] ClearviewHwy-5-W; [8] ClearviewHwy-5-W;
6.0" Radius, 2.0" Border, White on Green;
[Grand] ClearviewHwy-5-W; [Avenue] ClearviewHwy-5-W;
Standard Arrow Custom 35.8" X 21.6" 45°;

NOTE: SEE OVERHEAD SIGN STRUCTURE DETAILS SHEETS FOR DESIGN SPECIFICATIONS.

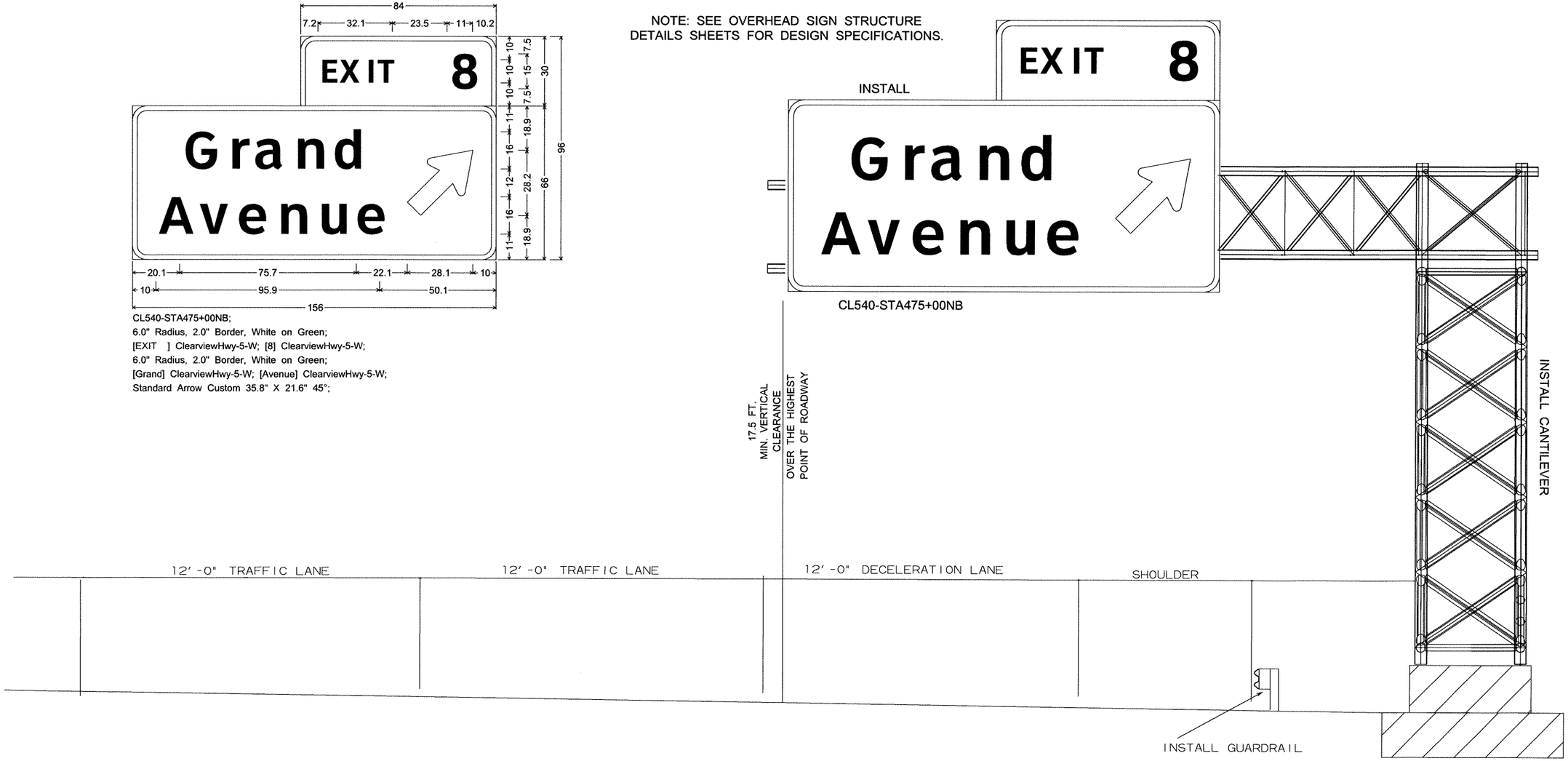

STATE OF ARKANSAS
REGISTERED PROFESSIONAL ENGINEER
No. 5851
J. TONY SULLIVAN
8/30/12

DATE REVISED	DATE FILMED	DATE REVISED	DATE FILMED	FED.RD. DIST.NO.	STATE	FED.AID PROJ.NO.	SHEET NO.	TOTAL SHEETS
				6	ARK.			
				JOB NO.		BB0407	392	464

(2) SIGN LAYOUT SHEET

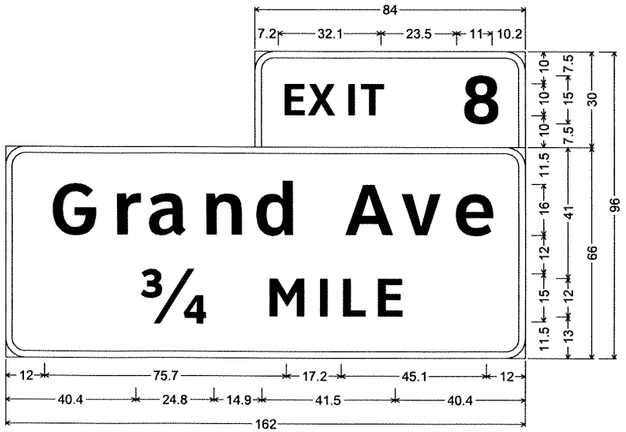

GM540-STA435+00NB;
6.0" Radius, 2.0" Border, White on Green;
[EXIT] ClearviewHwy-5-W; [8] ClearviewHwy-5-W;
6.0" Radius, 2.0" Border, White on Green;
[Grand Ave] ClearviewHwy-5-W; [3/4] ClearviewHwy-5-W;
[MILE] ClearviewHwy-5-W;

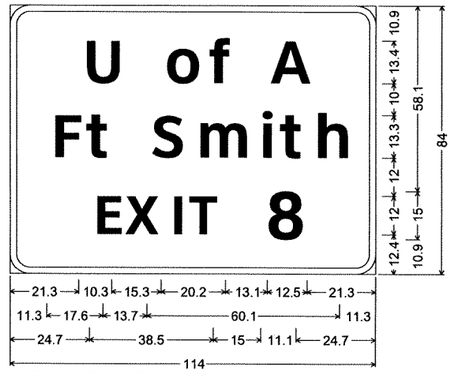

GM540-STA451+90NB;
6.0" Radius, 2.0" Border, White on Green;
[U of A] ClearviewHwy-5-W;
[Ft Smith] ClearviewHwy-5-W;
[EXIT] ClearviewHwy-5-W; [8] ClearviewHwy-5-W;

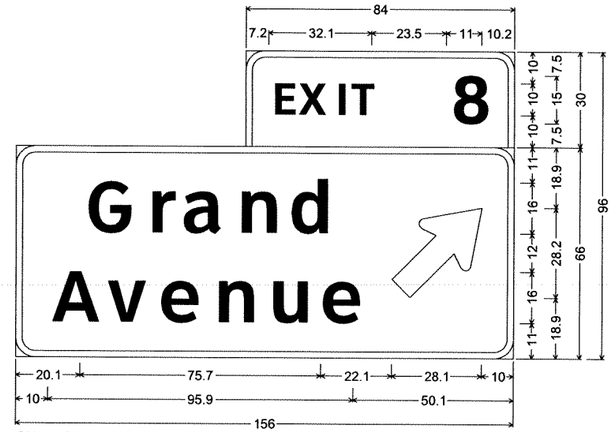

GM540-STA509+00SB;
6.0" Radius, 2.0" Border, White on Green;
[EXIT] ClearviewHwy-5-W; [8] ClearviewHwy-5-W;
6.0" Radius, 2.0" Border, White on Green;
[Grand] ClearviewHwy-5-W; [Avenue] ClearviewHwy-5-W;
Standard Arrow Custom 35.8" X 21.6" 45°;

W13-2(35) 48"X60"
SS540-STA477+90NB
SS540-STA503+00SB

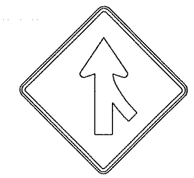

W4-1RT 48"X48"
SS540-STA481+00SB
SS540-STA500+00NB

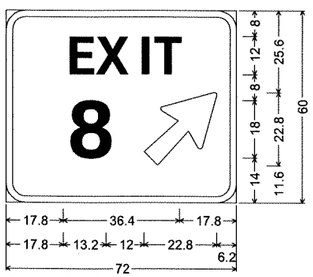

GM540-STA470+50SB;
6.0" Radius, 2.0" Border, White on Green;
[EXIT] ClearviewHwy-5-W-R;
[8] ClearviewHwy-5-W-R;
Arrow Custom - 29.0" 45°;

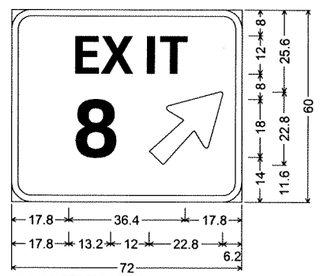

GM540-STA500+00NB;
6.0" Radius, 2.0" Border, White on Green;
[EXIT] ClearviewHwy-5-W-R;
[8] ClearviewHwy-5-W-R;
Arrow Custom - 29.0" 45°;

M3-3(Blue) 36"X18"
M1-1(540) 60"X48"
SS540-STA458+00SB

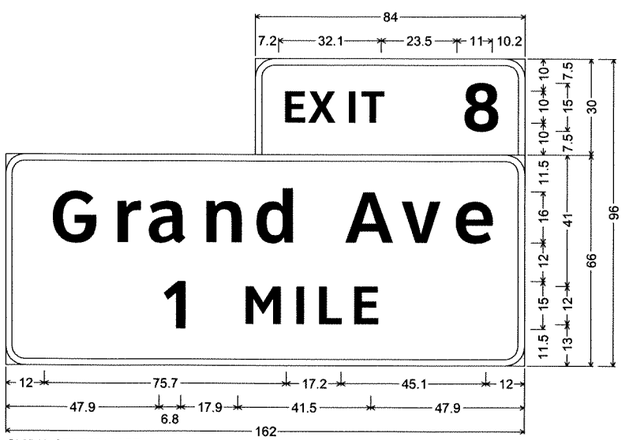

GM540-STA560+00SB;
6.0" Radius, 2.0" Border, White on Green;
[EXIT] ClearviewHwy-5-W; [8] ClearviewHwy-5-W;
6.0" Radius, 2.0" Border, White on Green;
[Grand Ave] ClearviewHwy-5-W; [1] ClearviewHwy-5-W;
[MILE] ClearviewHwy-5-W;

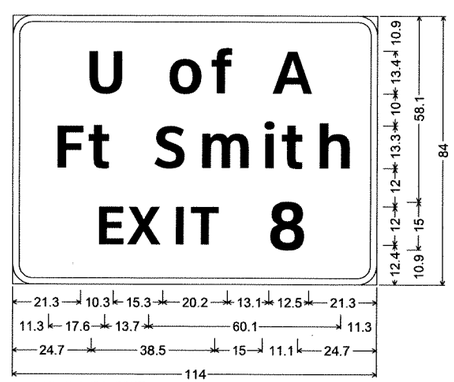

GM540-STA531+00SB;
6.0" Radius, 2.0" Border, White on Green;
[U of A] ClearviewHwy-5-W;
[Ft Smith] ClearviewHwy-5-W;
[EXIT] ClearviewHwy-5-W; [8] ClearviewHwy-5-W;

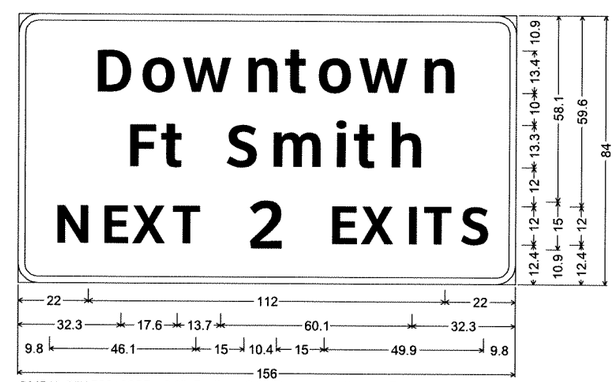

GM540-STA522+00SB; 6.0" Radius, 2.0" Border, White on Green;
[Downtown] ClearviewHwy-5-W; [Ft Smith] ClearviewHwy-5-W;
[NEXT] ClearviewHwy-5-W; [2] ClearviewHwy-5-W;
[EXITS] ClearviewHwy-5-W;

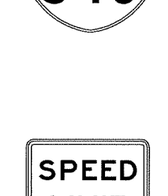

R2-1(65) 48"X60"
SS540-STA447+00SB

STATE OF ARKANSAS
REGISTERED PROFESSIONAL ENGINEER
No. 5851
J. TONY SULLIVAN
8/20/12

DATE REVISED	DATE FILMED	DATE REVISED	DATE FILMED	FED.RD. DIST.NO.	STATE	FED.AID PROJ.NO.	SHEET NO.	TOTAL SHEETS
				6	ARK.			
				JOB NO.		BB0407	393	464

(2) SIGN LAYOUT SHEET

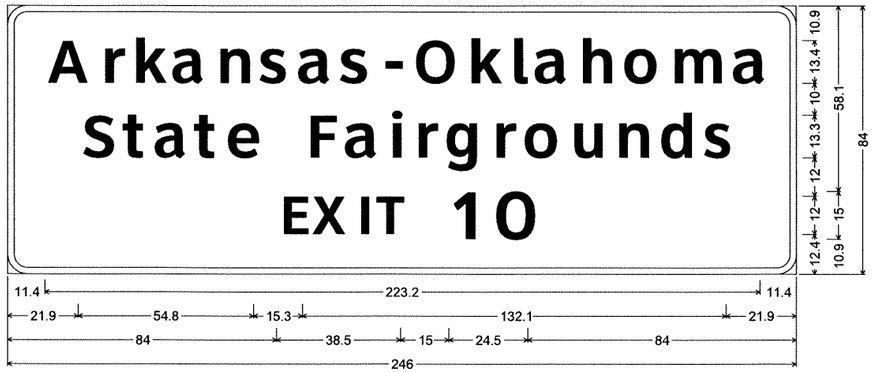

GM540-STA535+10NB; 6.0" Radius, 2.0" Border, White on Green;
[Arkansas-Oklahoma] ClearviewHwy-5-W; [State Fairgrounds] ClearviewHwy-5-W; [EXIT] ClearviewHwy-5-W;
[10] ClearviewHwy-5-W;

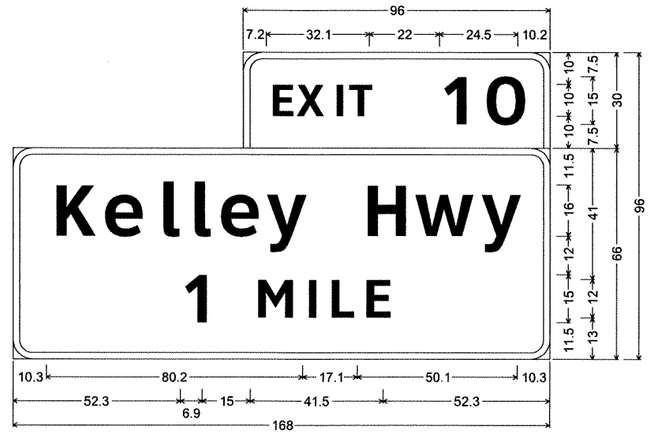

GM540-STA617+10SB;
6.0" Radius, 2.0" Border, White on Green;
[EXIT] ClearviewHwy-5-W; [10] ClearviewHwy-5-W;
6.0" Radius, 2.0" Border, White on Green;
[Kelley Hwy] ClearviewHwy-5-W; [1] ClearviewHwy-5-W;
[MILE] ClearviewHwy-5-W;

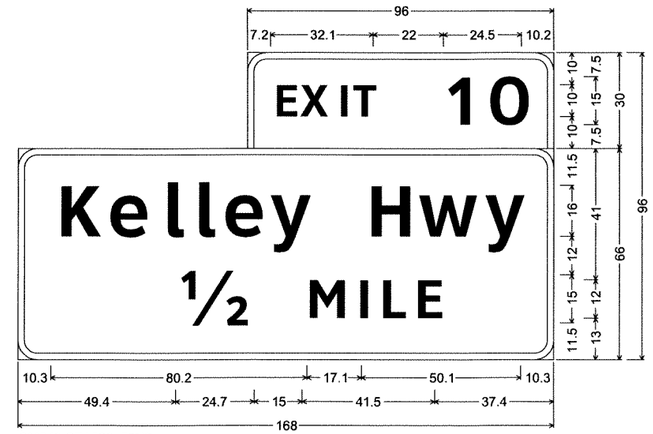

GM540-STA526+50NB;
6.0" Radius, 2.0" Border, White on Green;
[EXIT] ClearviewHwy-5-W; [10] ClearviewHwy-5-W;
6.0" Radius, 2.0" Border, White on Green;
[Kelley Hwy] ClearviewHwy-5-W; [½] ClearviewHwy-5-W;
[MILE] ClearviewHwy-5-W;

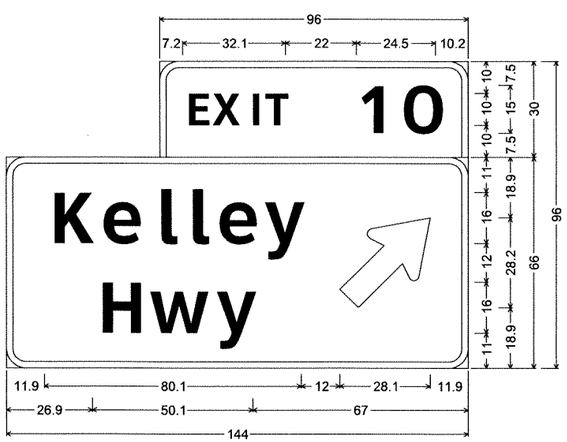

GM540-STA544+00NB;
6.0" Radius, 2.0" Border, White on Green;
[EXIT] ClearviewHwy-5-W; [10] ClearviewHwy-5-W;
6.0" Radius, 2.0" Border, White on Green;
[Kelley] ClearviewHwy-5-W; [Hwy] ClearviewHwy-5-W;
Standard Arrow Custom 35.8" X 21.6" 45°;

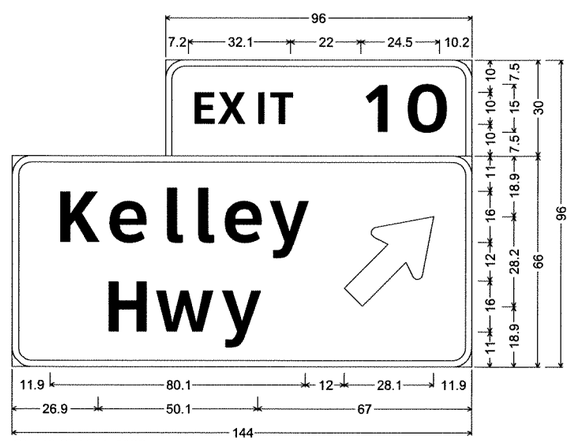

GM540-STA574+00SB;
6.0" Radius, 2.0" Border, White on Green;
[EXIT] ClearviewHwy-5-W; [10] ClearviewHwy-5-W;
6.0" Radius, 2.0" Border, White on Green;
[Kelley] ClearviewHwy-5-W; [Hwy] ClearviewHwy-5-W;
Standard Arrow Custom 35.8" X 21.6" 45°;

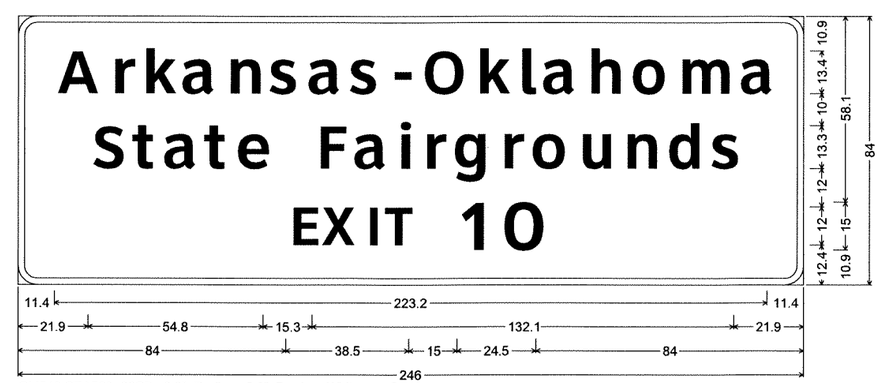

GM540-STA589+00SB; 6.0" Radius, 2.0" Border, White on Green;
[Arkansas-Oklahoma] ClearviewHwy-5-W; [State Fairgrounds] ClearviewHwy-5-W; [EXIT] ClearviewHwy-5-W;
[10] ClearviewHwy-5-W;

STATE OF ARKANSAS
REGISTERED PROFESSIONAL ENGINEER
No. 5851
L. TONY SULLIVAN
8/30/12

DATE REVISED	DATE FILMED	DATE REVISED	DATE FILMED	FED.RD. DIST.NO.	STATE	FED.AID PROJ.NO.	SHEET NO.	TOTAL SHEETS
				6	ARK.			
				JOB NO.		BB0407	394	464

(2) SIGN LAYOUT SHEET

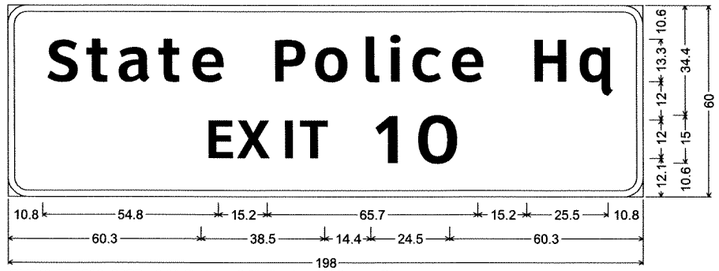

GM540-STA590+90SB; 6.0" Radius, 2.0" Border, White on Blue;
[State Police Hq] ClearviewHwy-5-W; [EXIT] ClearviewHwy-5-W; [10] ClearviewHwy-5-W;

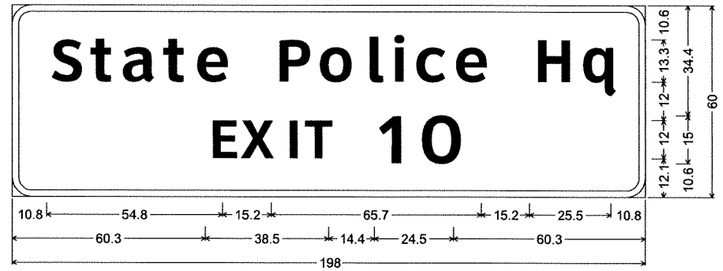

GM540-STA518+90NB; 6.0" Radius, 2.0" Border, White on Blue;
[State Police Hq] ClearviewHwy-5-W; [EXIT] ClearviewHwy-5-W; [10] ClearviewHwy-5-W;

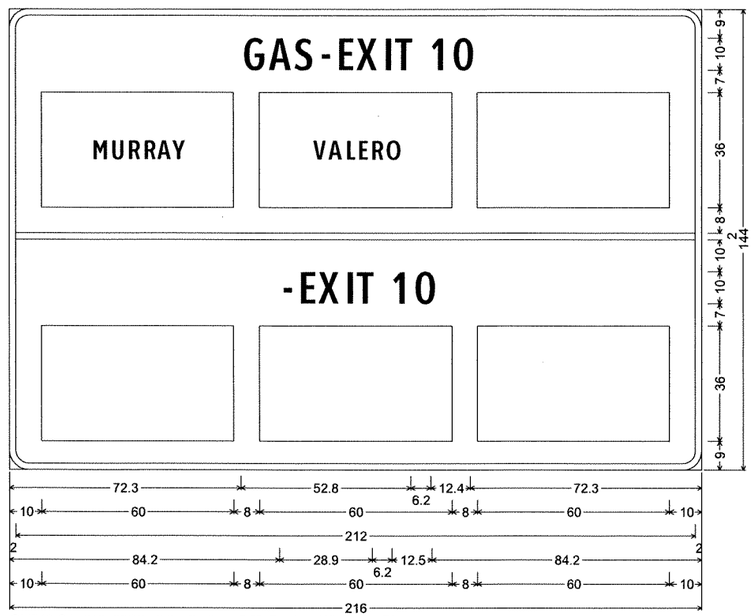

GM540-STA610+00SB; 6.0" Radius, 2.0" Border, White on Blue;
[GAS-EXIT 10] ClearviewHwy-2-W;
[-EXIT 10] ClearviewHwy-2-W;

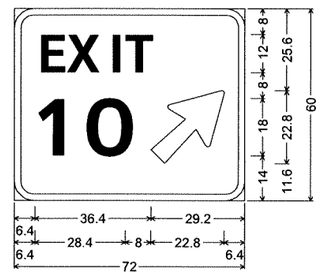

GM540-STA549+90NB;
6.0" Radius, 2.0" Border, White on Green;
[EXIT] ClearviewHwy-5-W-R;
[10] ClearviewHwy-5-W-R;
Arrow Custom - 29.0" 45°;

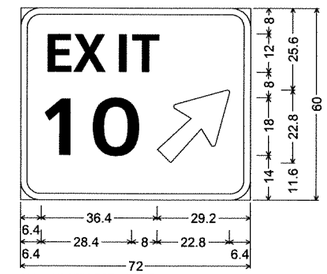

GM540-STA567+40SB;
6.0" Radius, 2.0" Border, White on Green;
[EXIT] ClearviewHwy-5-W-R;
[10] ClearviewHwy-5-W-R;
Arrow Custom - 29.0" 45°;

W13-2(35) 48"X60"
SS540-STA548+10NB
SS540-STA568+90SB

R2-1(65) 48"X60"
SS540-STA526+50SB
SS540-STA598+00NB
SS540-STA634+00SB

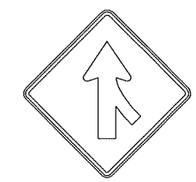

W4-1RT 48"X48"
SS540-STA549+00SB
SS540-STA565+00NB

M3-3(Blue) 36"X18"
M1-1(540) 60"X48"

M3-1(Blue) 36"X18"
M1-1(540) 60"X48"

M3-1(Blue) 36"X18"
M1-1(540) 60"X48"
SS540-STA589+00NB

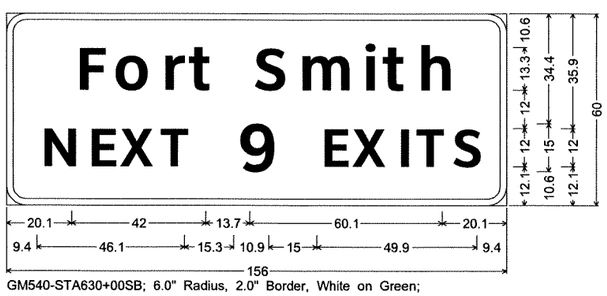

GM540-STA630+00SB; 6.0" Radius, 2.0" Border, White on Green;
[Fort Smith] ClearviewHwy-5-W; [NEXT] ClearviewHwy-5-W;
[9] ClearviewHwy-5-W; [EXITS] ClearviewHwy-5-W;

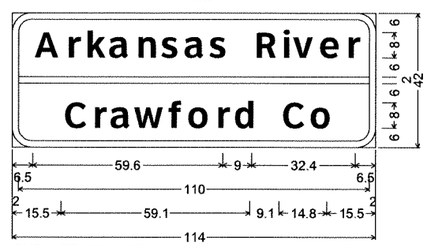

GM540-STA633+00NB;
6.0" Radius, 2.0" Border, White on Green;
[Arkansas River] ClearviewHwy-5-W;
[Crawford Co] ClearviewHwy-5-W;

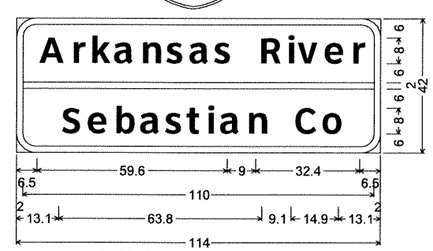

GM540-STA668+00SB;
6.0" Radius, 2.0" Border, White on Green;
[Arkansas River] ClearviewHwy-5-W;
[Sebastian Co] ClearviewHwy-5-W;

M3-3(Blue) 36"X18"
M1-1(540) 60"X48"
SS540-STA535+00SB

STATE OF ARKANSAS
REGISTERED PROFESSIONAL ENGINEER
No. 5851
L. TONY SULLIVAN
8/30/12

DATE REVISED	DATE FILMED	DATE REVISED	DATE FILMED	FED.RD. DIST.NO.	STATE	FED.AID PROJ.NO.	SHEET NO.	TOTAL SHEETS
				6	ARK.			
				JOB NO.		BB0407	395	464

(2) SIGN LAYOUT SHEET

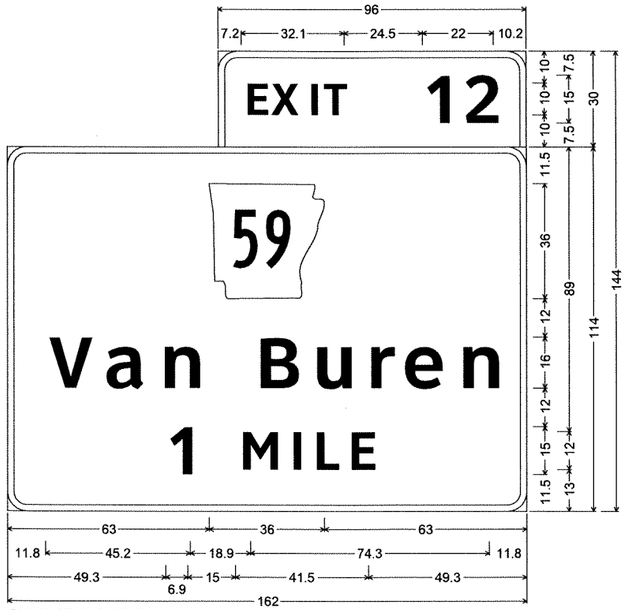

GM540-STA615+00NB;
6.0" Radius, 2.0" Border, White on Green;
[EXIT] ClearviewHwy-5-W; [12] ClearviewHwy-5-W;
6.0" Radius, 2.0" Border, White on Green;
M1-6; [Van Buren] ClearviewHwy-5-W; [1] ClearviewHwy-5-W;
[MILE] ClearviewHwy-5-W;

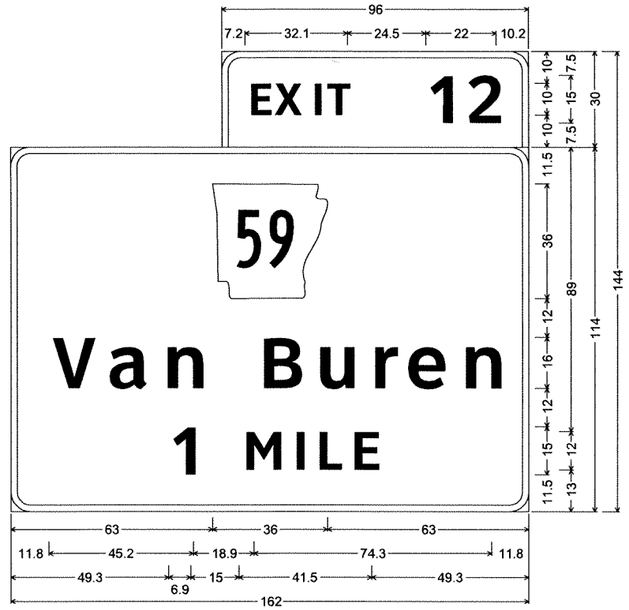

GM540-STA737+00SB;
6.0" Radius, 2.0" Border, White on Green;
[EXIT] ClearviewHwy-5-W; [12] ClearviewHwy-5-W;
6.0" Radius, 2.0" Border, White on Green;
M1-6; [Van Buren] ClearviewHwy-5-W; [1] ClearviewHwy-5-W;
[MILE] ClearviewHwy-5-W;

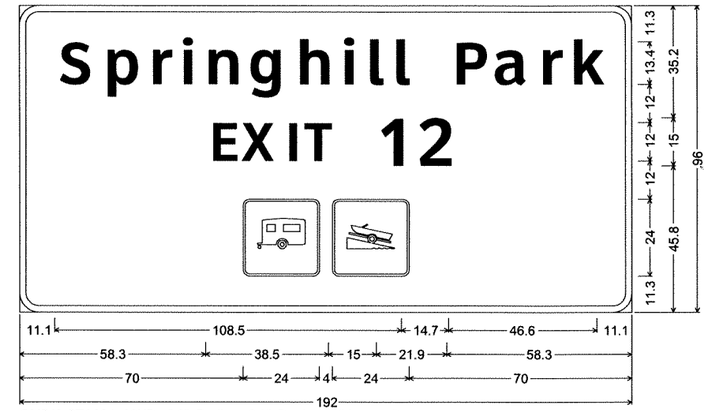

GM540-STA624+00NB; 6.0" Radius, 2.0" Border, White on Brown;
[Springhill Park] ClearviewHwy-5-W; [EXIT] ClearviewHwy-5-W; [12] ClearviewHwy-5-W;

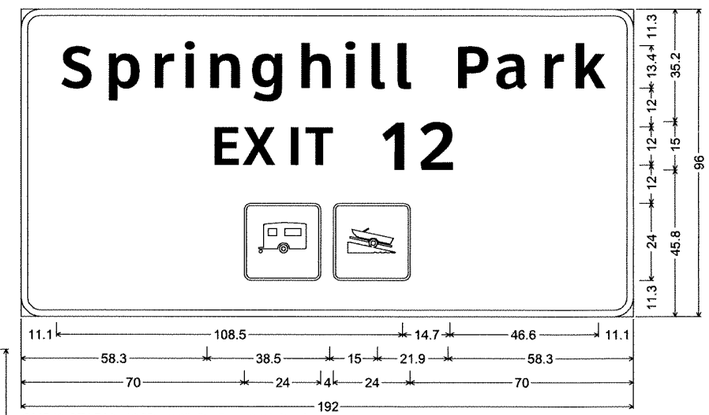

GM540-STA729+10SB; 6.0" Radius, 2.0" Border, White on Brown;
[Springhill Park] ClearviewHwy-5-W; [EXIT] ClearviewHwy-5-W; [12] ClearviewHwy-5-W;

W13-2(30) 48"X60"
SS540-STA674+00NB
SS540-STA689+00SB

R2-1(65) 48"X60"
SS540-STA709+00NB

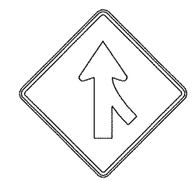

W4-1RT 48"X48"
SS540-STA684+00NB
SS540-STA683+00SB

M3-1(Blue) 36"X18"
M1-1(540) 60"X48"
SS540-STA702+00NB

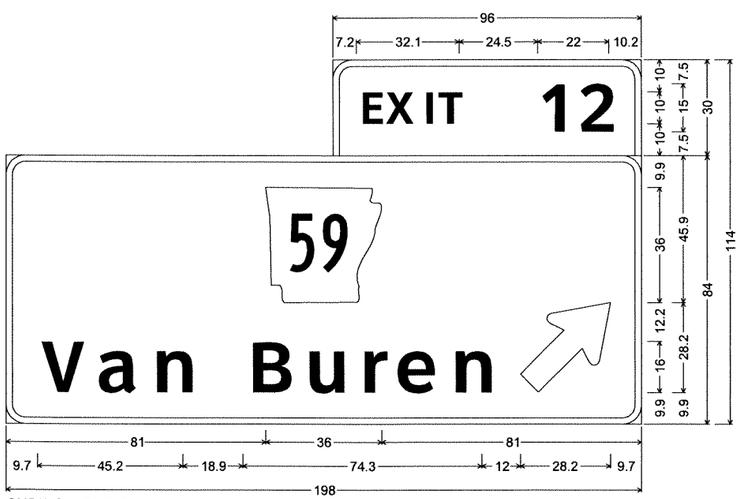

GM540-STA692+90SB;
6.0" Radius, 2.0" Border, White on Green;
[EXIT] ClearviewHwy-5-W; [12] ClearviewHwy-5-W;
6.0" Radius, 2.0" Border, White on Green;
M1-6; [Van Buren] ClearviewHwy-5-W; Standard Arrow Custom 35.8" X 21.6" 45°;

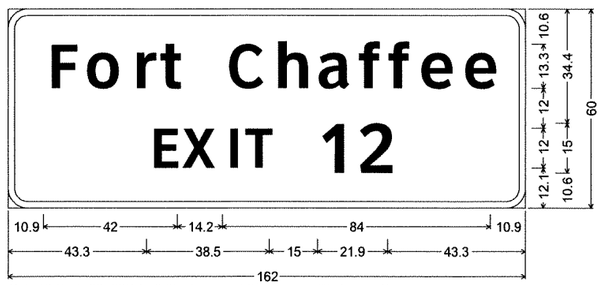

GM540-STA708+00SB; 6.0" Radius, 2.0" Border, White on Green;
[Fort Chaffee] ClearviewHwy-5-W; [EXIT] ClearviewHwy-5-W;
[12] ClearviewHwy-5-W;

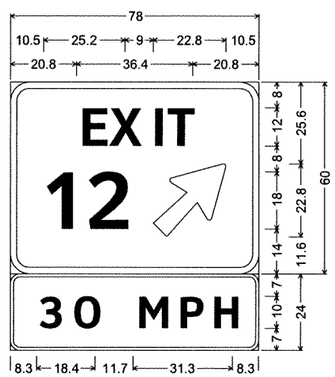

GM540-STA676+00NB;
6.0" Radius, 2.0" Border, White on Green;
[EXIT] ClearviewHwy-5-W-R;
[12] ClearviewHwy-5-W-R;
Arrow Custom - 29.0" 45°;
3.0" Radius, 1.0" Border, Black on Yellow;
[30 MPH] ClearviewHwy-5-W;

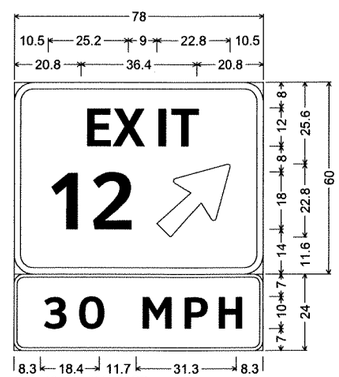

GM540-STA688+00SB;
6.0" Radius, 2.0" Border, White on Green;
[EXIT] ClearviewHwy-5-W-R;
[12] ClearviewHwy-5-W-R;
Arrow Custom - 29.0" 45°;
3.0" Radius, 1.0" Border, Black on Yellow;
[30 MPH] ClearviewHwy-5-W;

STATE OF ARKANSAS
REGISTERED PROFESSIONAL ENGINEER
No. 5851
L. TONY SULLIVAN
8/30/12

DATE REVISED	DATE FILMED	DATE REVISED	DATE FILMED	FED.RD. DIST.NO.	STATE	FED.AID PROJ.NO.	SHEET NO.	TOTAL SHEETS
				6	ARK.			
				JOB NO.		BB0407	396	464

(2) SIGN LAYOUT SHEET

OH-540-17-06

NOTE: SEE OVERHEAD SIGN STRUCTURE DETAILS SHEETS FOR DESIGN SPECIFICATIONS.

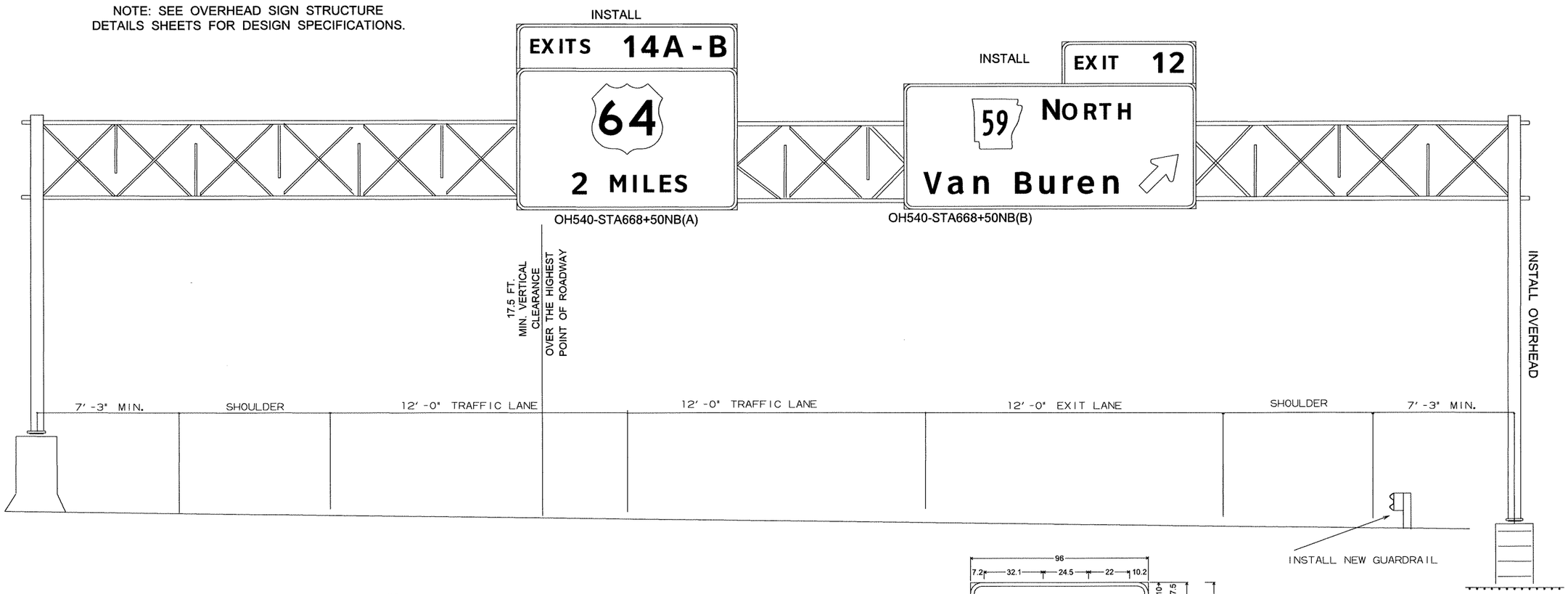

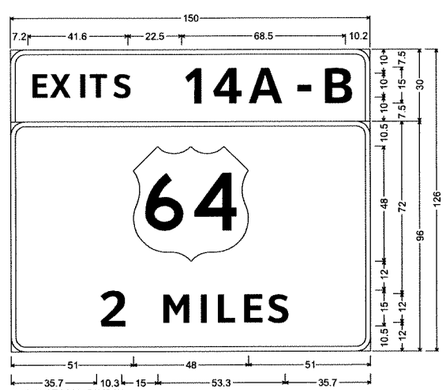

OH540-STA668+50NB(A);
6.0" Radius, 2.0" Border, White on Green;
[EXITS] ClearviewHwy-5-W; [14A-B] ClearviewHwy-5-W;
6.0" Radius, 2.0" Border, White on Green;
[2] ClearviewHwy-5-W; [MILES] ClearviewHwy-5-W;

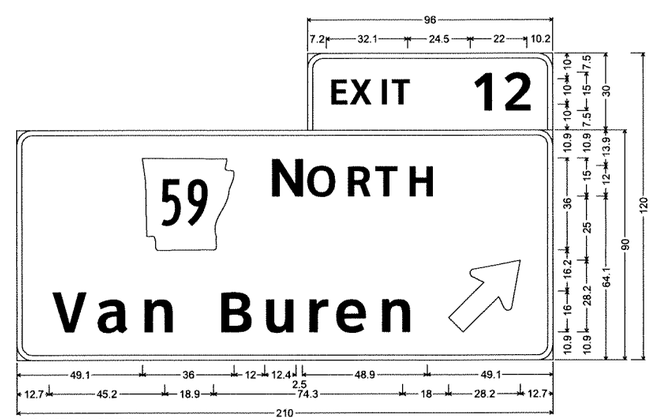

OH540-STA668+50NB(B);
6.0" Radius, 2.0" Border, White on Green;
[EXIT] ClearviewHwy-5-W; [12] ClearviewHwy-5-W;
6.0" Radius, 2.0" Border, White on Green;
M1-6; [N] ClearviewHwy-5-W; [ORTH] ClearviewHwy-5-W; [Van Buren] ClearviewHwy-5-W;
Standard Arrow Custom 35.8" X 21.6" 45°;

STATE OF ARKANSAS
REGISTERED PROFESSIONAL ENGINEER
No. 5851
L. TONY SULLIVAN
01/30/12

DATE REVISED	DATE FILMED	DATE REVISED	DATE FILMED	FED.RD. DIST.NO.	STATE	FED.AID PROJ.NO.	SHEET NO.	TOTAL SHEETS
				6	ARK.			
				JOB NO.		BB0407	397	464

(2) SIGN LAYOUT SHEET

BM-540-17-03

NOTE: SEE OVERHEAD SIGN STRUCTURE DETAILS SHEETS FOR DESIGN SPECIFICATIONS.

INSTALL

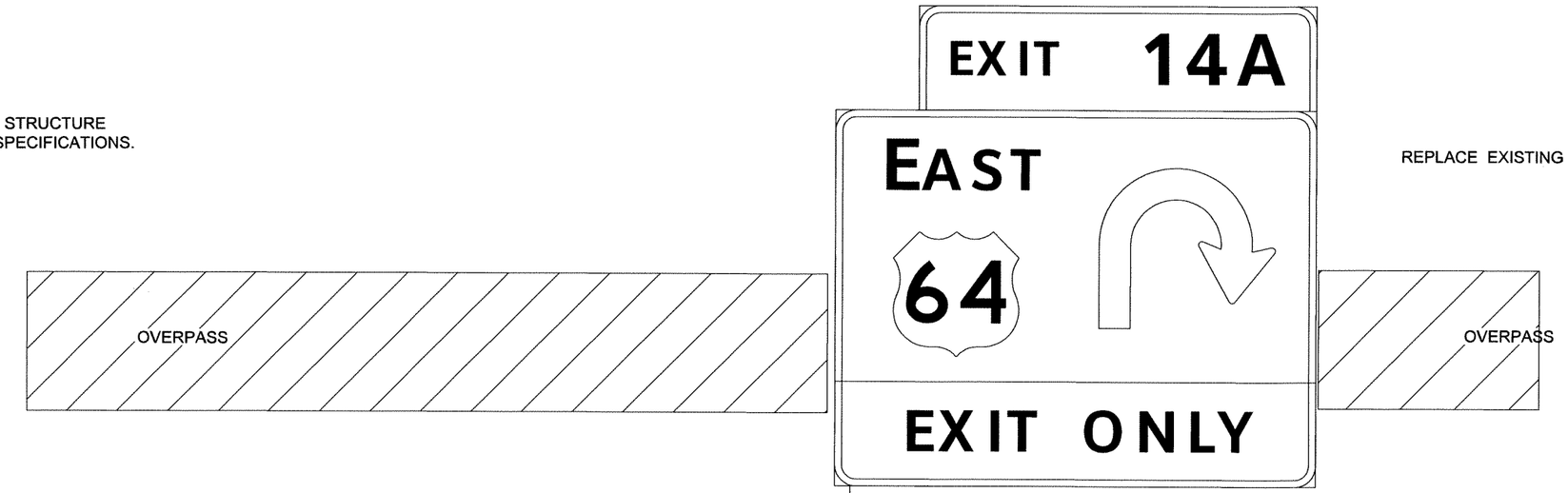

REPLACE EXISTING BRIDGE MOUNT

BM540-STA791+70SB

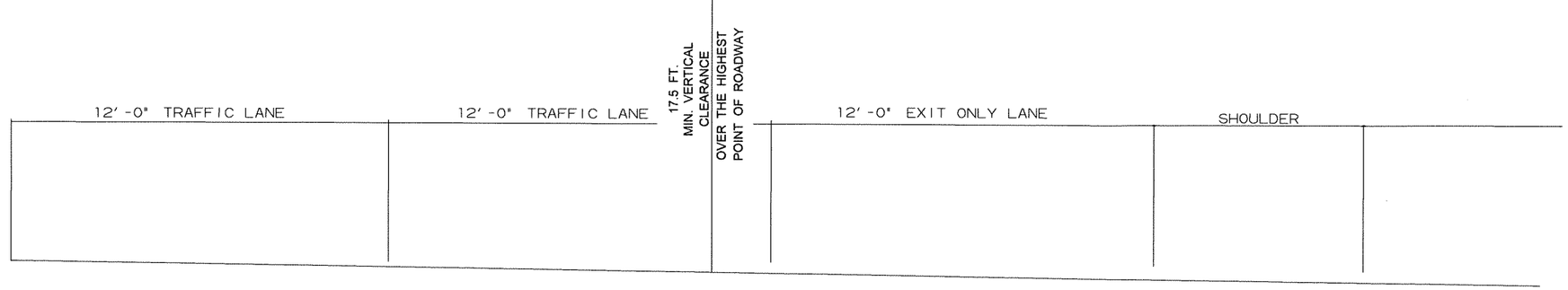

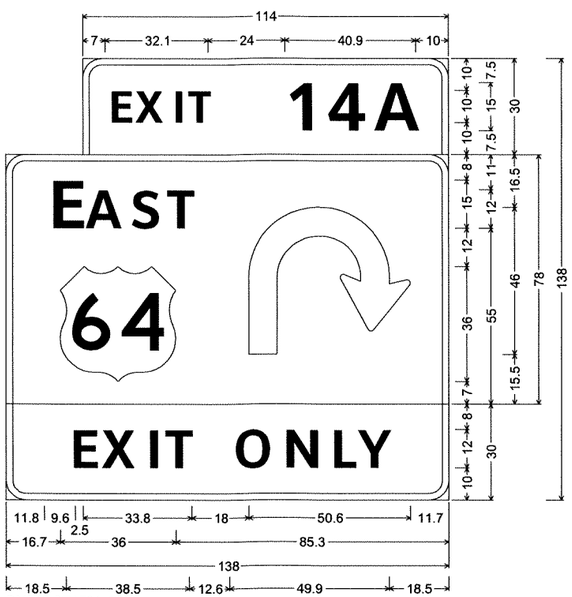

BM540-STA791+70SB;
6.0" Radius, 2.0" Border, White on Green;
[EXIT] ClearviewHwy-5-W; [14A] ClearviewHwy-5-W;
6.0" Radius, 2.0" Border, White on Green;
[E] ClearviewHwy-5-W; [AST] ClearviewHwy-5-W;
Turn Arrow Custom;
6.0" Radius, 2.0" Border, Black on Yellow;
[EXIT ONLY] ClearviewHwy-5-W;

STATE OF ARKANSAS
REGISTERED PROFESSIONAL ENGINEER
No. 5851
J. TONY SULLIVAN
9/22/17

DATE REVISED	DATE FILMED	DATE REVISED	DATE FILMED	FED.RD. DIST.NO.	STATE	FED.AID PROJ.NO.	SHEET NO.	TOTAL SHEETS
				6	ARK.			
				JOB NO.		BB0407	398	464

(2) SIGN LAYOUT SHEET

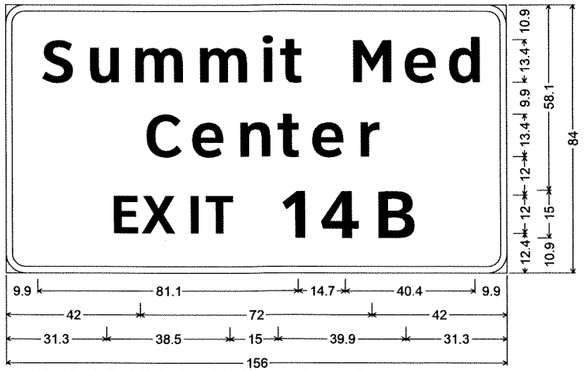

GM540-737+10NB; 6.0" Radius, 2.0" Border, White on Green;
[Summit Med] ClearviewHwy-5-W; [Center] ClearviewHwy-5-W;
[EXIT] ClearviewHwy-5-W; [14B] ClearviewHwy-5-W;

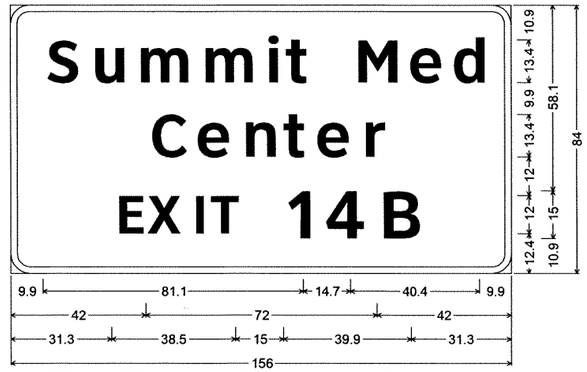

GM540-STA810+00SB; 6.0" Radius, 2.0" Border, White on Green;
[Summit Med] ClearviewHwy-5-W; [Center] ClearviewHwy-5-W;
[EXIT] ClearviewHwy-5-W; [14B] ClearviewHwy-5-W;

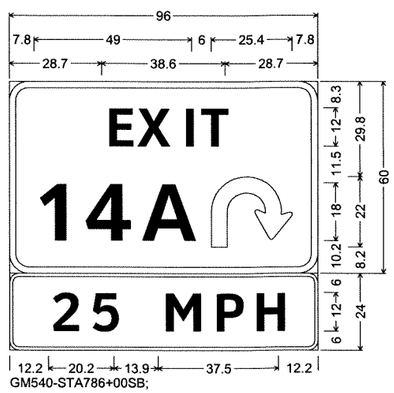

GM540-STA786+00SB;
6.0" Radius, 2.0" Border, White on Green;
[EXIT] ClearviewHwy-5-W;
[14A] ClearviewHwy-5-W; Turn Arrow Custom;
3.0" Radius, 1.0" Border, Black on Yellow;
[25 MPH] ClearviewHwy-5-W;

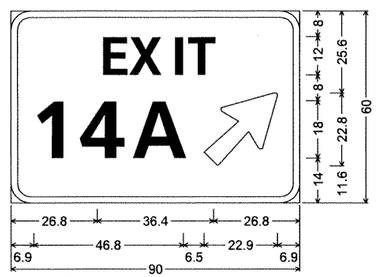

GM540-STA780+90NB;
6.0" Radius, 2.0" Border, White on Green;
[EXIT] ClearviewHwy-5-W-R;
[14A] ClearviewHwy-5-W-R;
Arrow Custom - 29.0" 45°;

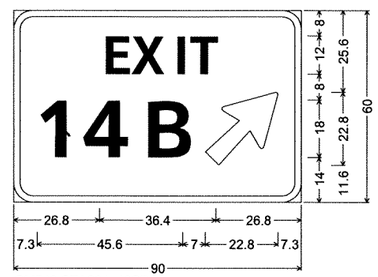

GM540-STA801+10SB;
6.0" Radius, 2.0" Border, White on Green;
[EXIT] ClearviewHwy-5-W-R;
[14B] ClearviewHwy-5-W-R;
Arrow Custom - 29.0" 45°;

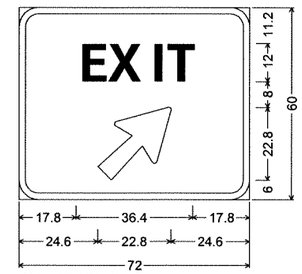

GM64-STA24+30WB;
6.0" Radius, 2.0" Border, White on Green;
[EXIT] ClearviewHwy-5-W-R;
Arrow Custom - 29.0" 45°;

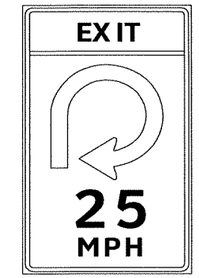

W13-2(30) 48"X84"
SS540-STA786+50SB
SS540-STA795+00NB

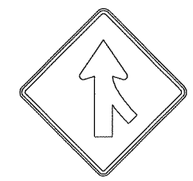

W4-1RT 48"X48"
SS540-STA783+00SB
SS540-STA799+00NB

R2-1(65) 48"X60"
SS540-STA762+00SB

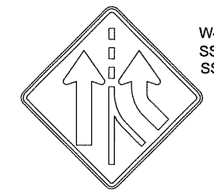

W4-3RT 48"X48"
SS540-STA786+00NB
SS540-STA795+50SB

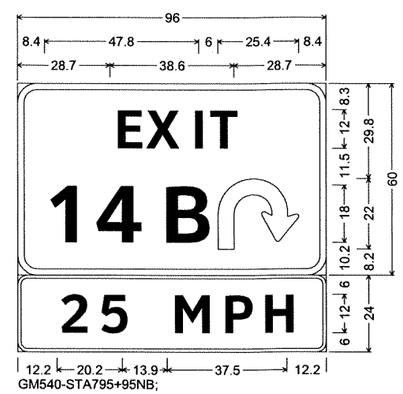

GM540-STA795+95NB;
6.0" Radius, 2.0" Border, White on Green;
[EXIT] ClearviewHwy-5-W;
[14B] ClearviewHwy-5-W; Turn Arrow Custom;
3.0" Radius, 1.0" Border, Black on Yellow;
[25 MPH] ClearviewHwy-5-W;

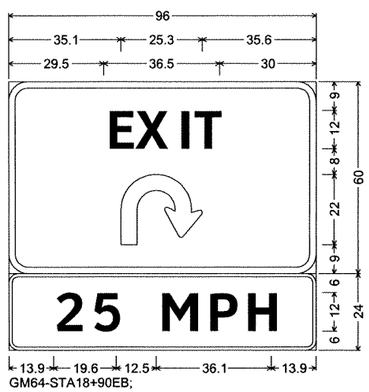

GM64-STA18+90EB;
6.0" Radius, 2.0" Border, White on Green;
[EXIT] ClearviewHwy-5-W-R;
Turn Arrow Custom;
3.0" Radius, 1.0" Border, Black on Yellow;
[25 MPH] ClearviewHwy-5-W-R;

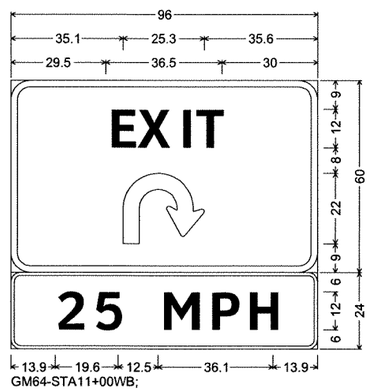

GM64-STA11+00WB;
6.0" Radius, 2.0" Border, White on Green;
[EXIT] ClearviewHwy-5-W-R;
Turn Arrow Custom;
3.0" Radius, 1.0" Border, Black on Yellow;
[25 MPH] ClearviewHwy-5-W-R;

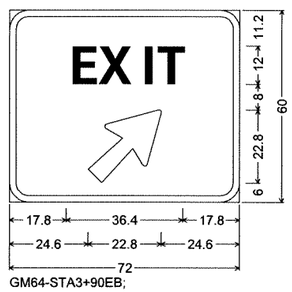

GM64-STA3+90EB;
6.0" Radius, 2.0" Border, White on Green;
[EXIT] ClearviewHwy-5-W-R;
Arrow Custom - 29.0" 45°;

M3-3(Blue) 36"X18"
M1-1(540) 60"X48"
SS540-STA768+00SB

STATE OF ARKANSAS
REGISTERED PROFESSIONAL ENGINEER
No. 5851
J. TONY SULLIVAN
8/24/12

DATE REVISED	DATE FILMED	DATE REVISED	DATE FILMED	FED.RD. DIST.NO.	STATE	FED.AID PROJ.NO.	SHEET NO.	TOTAL SHEETS
				6	ARK.			
				JOB NO.		BB0407	399	464

(2) SIGN LAYOUT SHEET

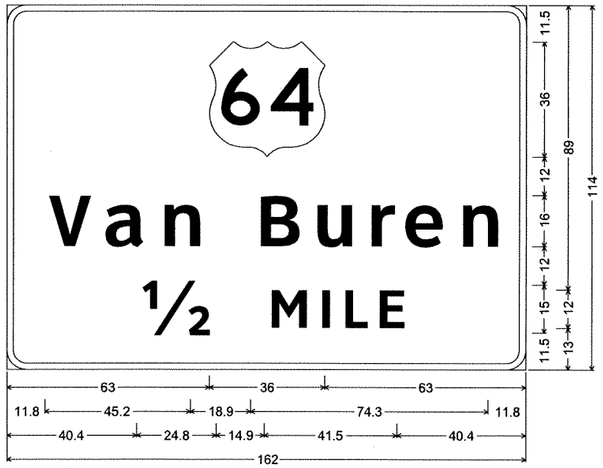

GM540-STA388+70SB;
6.0" Radius, 2.0" Border, White on Green;
[Van Buren] ClearviewHwy-5-W; [½] ClearviewHwy-5-W;
[MILE] ClearviewHwy-5-W;

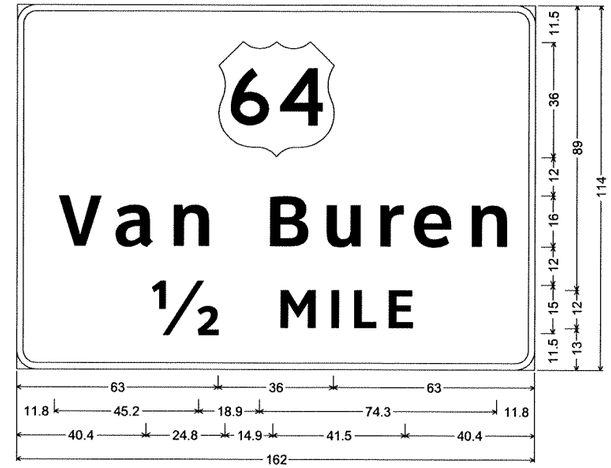

GM540-STA818+90SB;
6.0" Radius, 2.0" Border, White on Green;
[Van Buren] ClearviewHwy-5-W; [½] ClearviewHwy-5-W;
[MILE] ClearviewHwy-5-W;

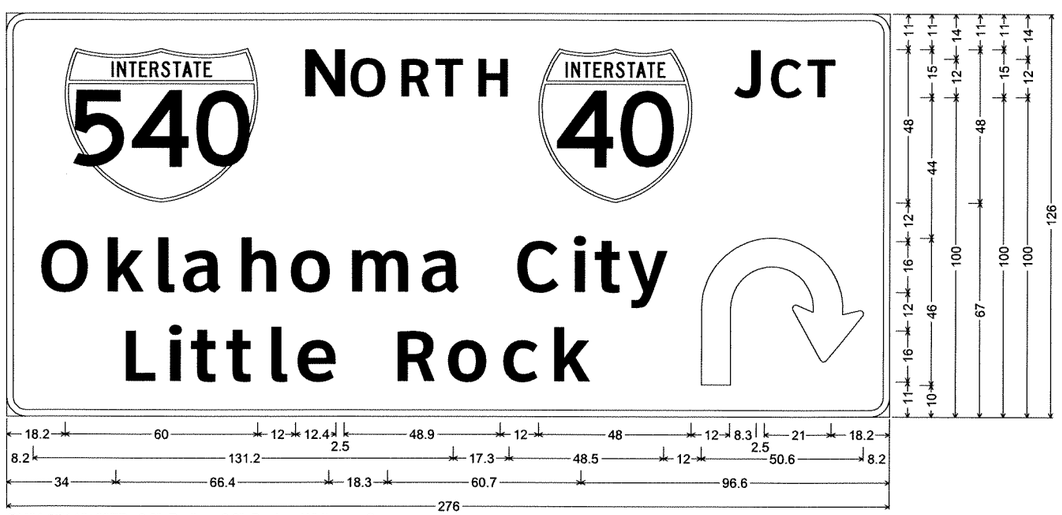

GM64-STA12+80EB; 6.0" Radius, 2.0" Border, White on Green;
[N] ClearviewHwy-5-W; [ORTH] ClearviewHwy-5-W; [J] ClearviewHwy-5-W; [CT] ClearviewHwy-5-W;
[Oklahoma City] ClearviewHwy-5-W; [Little Rock] ClearviewHwy-5-W; Turn Arrow Custom;

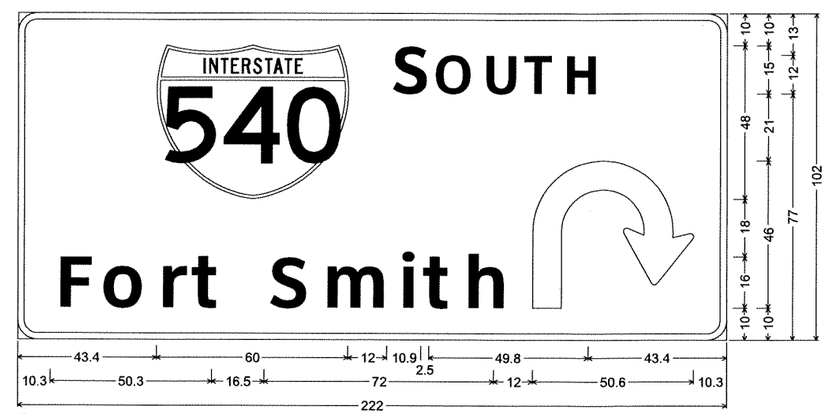

GM64-STA17+00WB ; 6.0" Radius, 2.0" Border, White on Green;
[S] ClearviewHwy-5-W; [OUTH] ClearviewHwy-5-W; [Fort Smith] ClearviewHwy-5-W; Turn Arrow Custom;

STATE OF ARKANSAS
REGISTERED PROFESSIONAL ENGINEER
No. 5851
J. TONY SULLIVAN
9/30/12

DATE REVISED	DATE FILMED	DATE REVISED	DATE FILMED	FED.RD. DIST.NO.	STATE	FED.AID PROJ.NO.	SHEET NO.	TOTAL SHEETS
				6	ARK.			
				JOB NO.		BB0407	400	464

(2) SIGN LAYOUT SHEET

OH-540-17-11

NOTE: SEE OVERHEAD SIGN STRUCTURE DETAILS SHEETS FOR DESIGN SPECIFICATIONS.

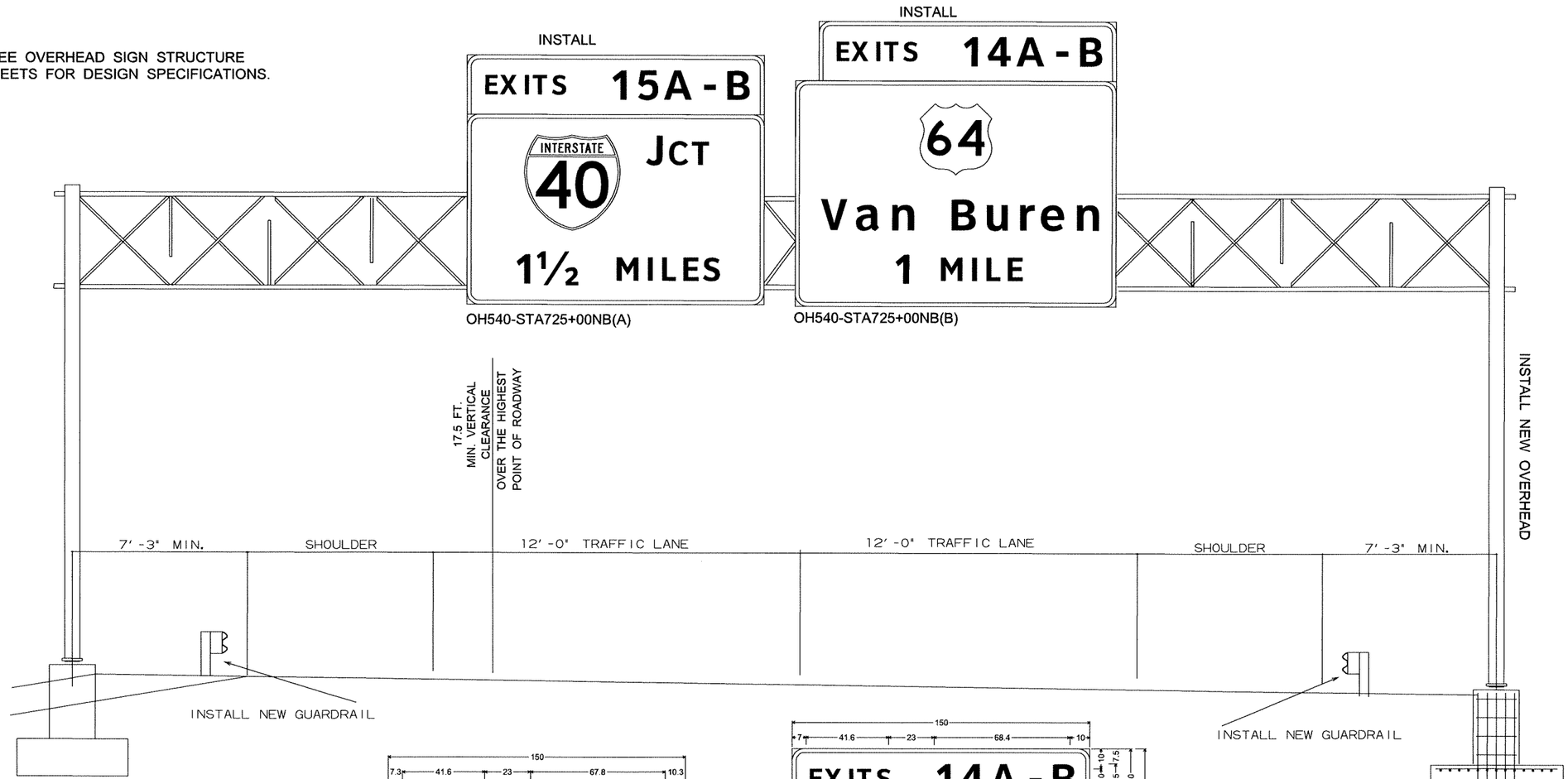

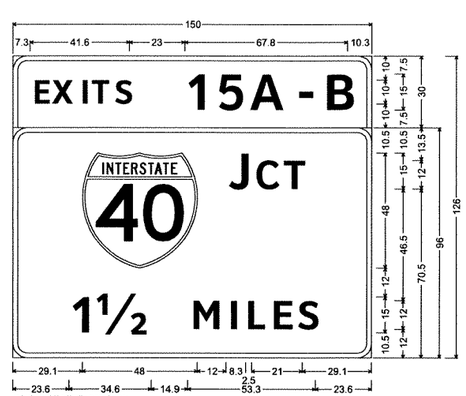

OH540-STA725+00NB(A);
6.0" Radius, 2.0" Border, White on Green;
[EXITS] ClearviewHwy-5-W; [15A-B] ClearviewHwy-5-W;
6.0" Radius, 2.0" Border, White on Green;
[J] ClearviewHwy-5-W; [CT] ClearviewHwy-5-W;
[1½] ClearviewHwy-5-W; [MILES] ClearviewHwy-5-W;

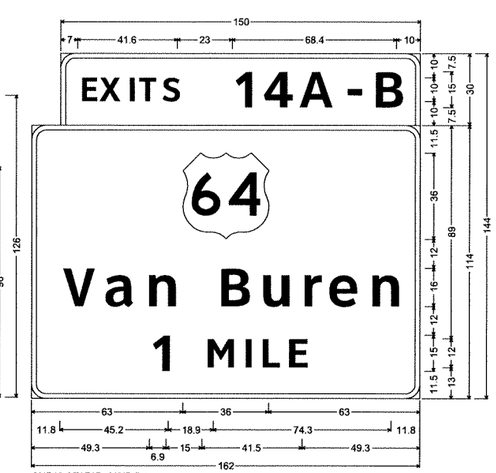

OH540-STA725+00NB(B);
6.0" Radius, 2.0" Border, White on Green;
[EXITS] ClearviewHwy-5-W; [14A-B] ClearviewHwy-5-W;
6.0" Radius, 2.0" Border, White on Green;
[Van Buren] ClearviewHwy-5-W; [1] ClearviewHwy-5-W;
[MILE] ClearviewHwy-5-W;

STATE OF ARKANSAS
REGISTERED PROFESSIONAL ENGINEER
No. 5851
J. TONY SULLIVAN
8/30/12

DATE REVISED	DATE FILMED	DATE REVISED	DATE FILMED	FED.RD. DIST.NO.	STATE	FED.AID PROJ.NO.	SHEET NO.	TOTAL SHEETS
				6	ARK.			
				JOB NO.		BB0407	401	464

(2) SIGN LAYOUT SHEET

OH-540-17-05

NOTE: SEE OVERHEAD SIGN STRUCTURE DETAILS SHEETS FOR DESIGN SPECIFICATIONS.

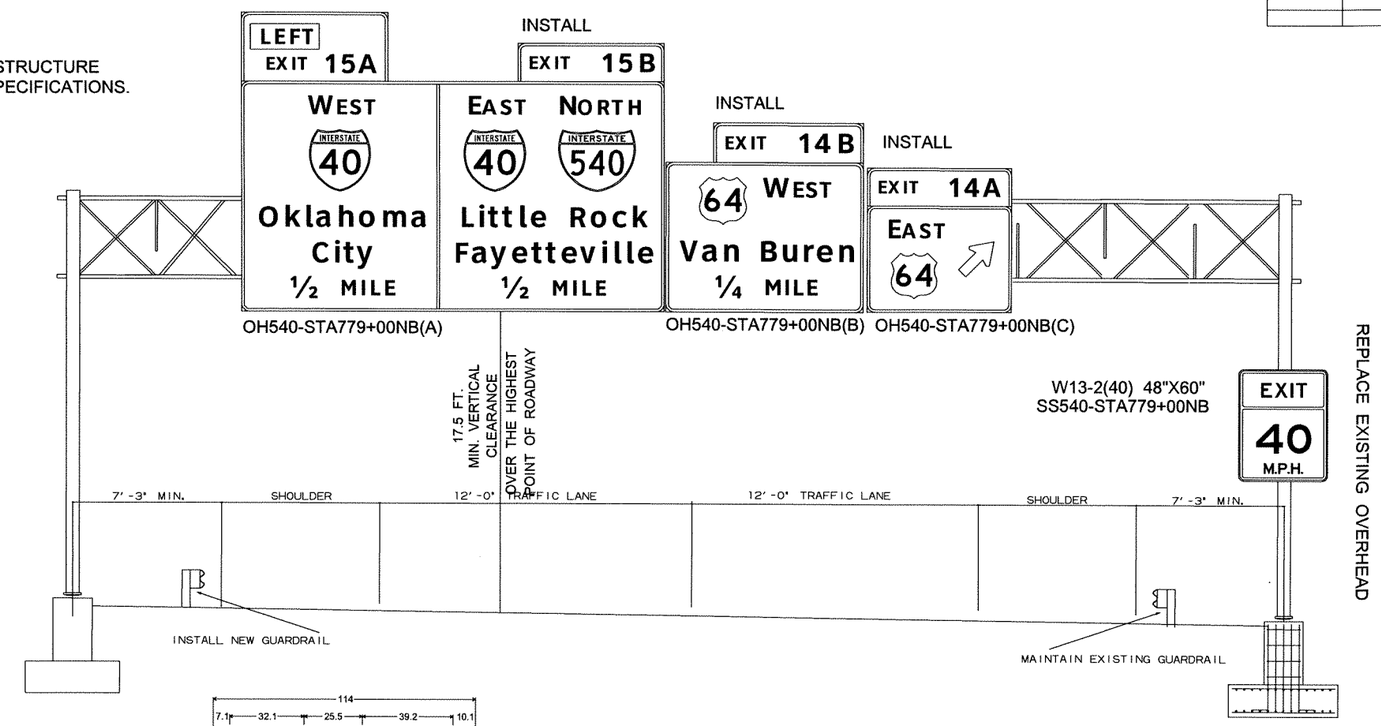

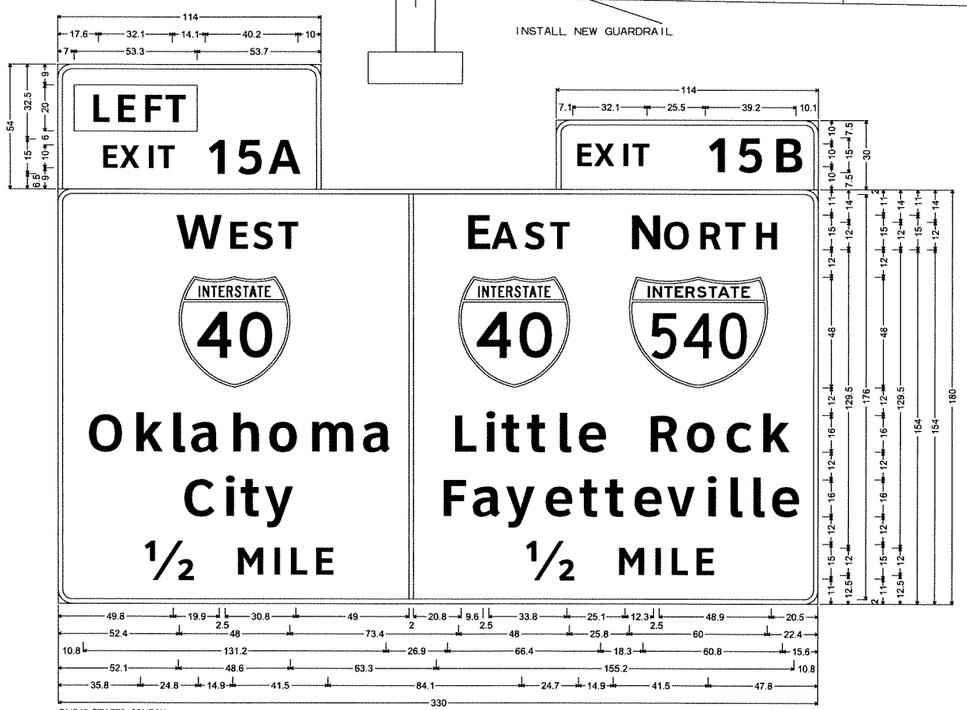

OH540-STA779+00NB(A);
6.0" Radius, 2.0" Border, White on Green;
Rectangle Yellow;
[EXIT] ClearviewHwy-5-W; [15A] ClearviewHwy-5-W;
6.0" Radius, 2.0" Border, White on Green;
[EXIT] ClearviewHwy-5-W; [15B] ClearviewHwy-5-W;
6.0" Radius, 2.0" Border, White on Green;
[W] ClearviewHwy-5-W; [EST] ClearviewHwy-5-W; [Oklahoma] ClearviewHwy-5-W; [City] ClearviewHwy-5-W; [½] ClearviewHwy-5-W; [MILE] ClearviewHwy-5-W;
[E] ClearviewHwy-5-W; [AST] ClearviewHwy-5-W; [N] ClearviewHwy-5-W; [ORTH] ClearviewHwy-5-W; [Little Rock] ClearviewHwy-5-W;
[Fayetteville] ClearviewHwy-5-W; [½] ClearviewHwy-5-W; [MILE] ClearviewHwy-5-W;

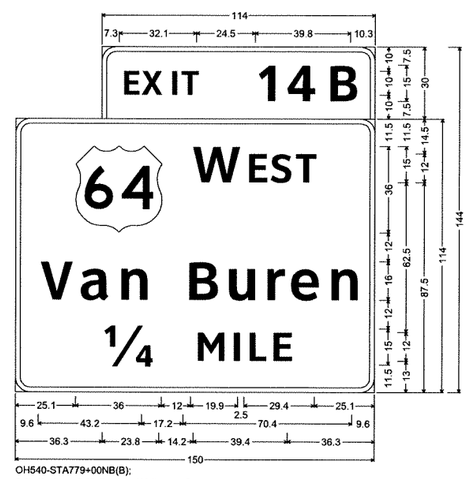

OH540-STA779+00NB(B);
6.0" Radius, 2.0" Border, White on Green;
[EXIT] ClearviewHwy-5-W; [14B] ClearviewHwy-5-W;
6.0" Radius, 2.0" Border, White on Green;
[W] ClearviewHwy-5-W-R; [EST] ClearviewHwy-5-W-R;
[Van Buren] ClearviewHwy-5-W-R; [¼] ClearviewHwy-5-W-R;
[MILE] ClearviewHwy-5-W-R;

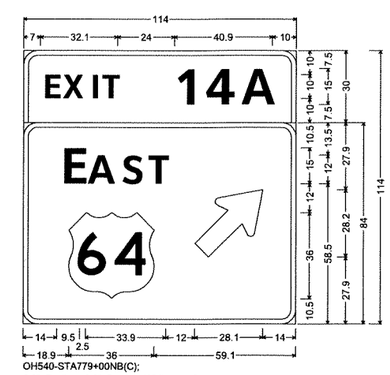

OH540-STA779+00NB(C);
6.0" Radius, 2.0" Border, White on Green;
[EXIT] ClearviewHwy-5-W; [14A] ClearviewHwy-5-W;
6.0" Radius, 2.0" Border, White on Green;
[E] ClearviewHwy-5-W; [AST] ClearviewHwy-5-W;
Standard Arrow Custom 35.8" X 21.6" 45°;

STATE OF ARKANSAS
REGISTERED PROFESSIONAL ENGINEER
No. 5851
L. TONY SULLIVAN
8/30/12

DATE REVISED	DATE FILMED	DATE REVISED	DATE FILMED	FED.RD. DIST.NO.	STATE	FED.AID PROJ.NO.	SHEET NO.	TOTAL SHEETS
				6	ARK.			
				JOB NO.		BB0407	402	464

(2) SIGN LAYOUT SHEET

OH-540-17-04

NOTE: SEE OVERHEAD SIGN STRUCTURE DETAILS SHEETS FOR DESIGN SPECIFICATIONS.

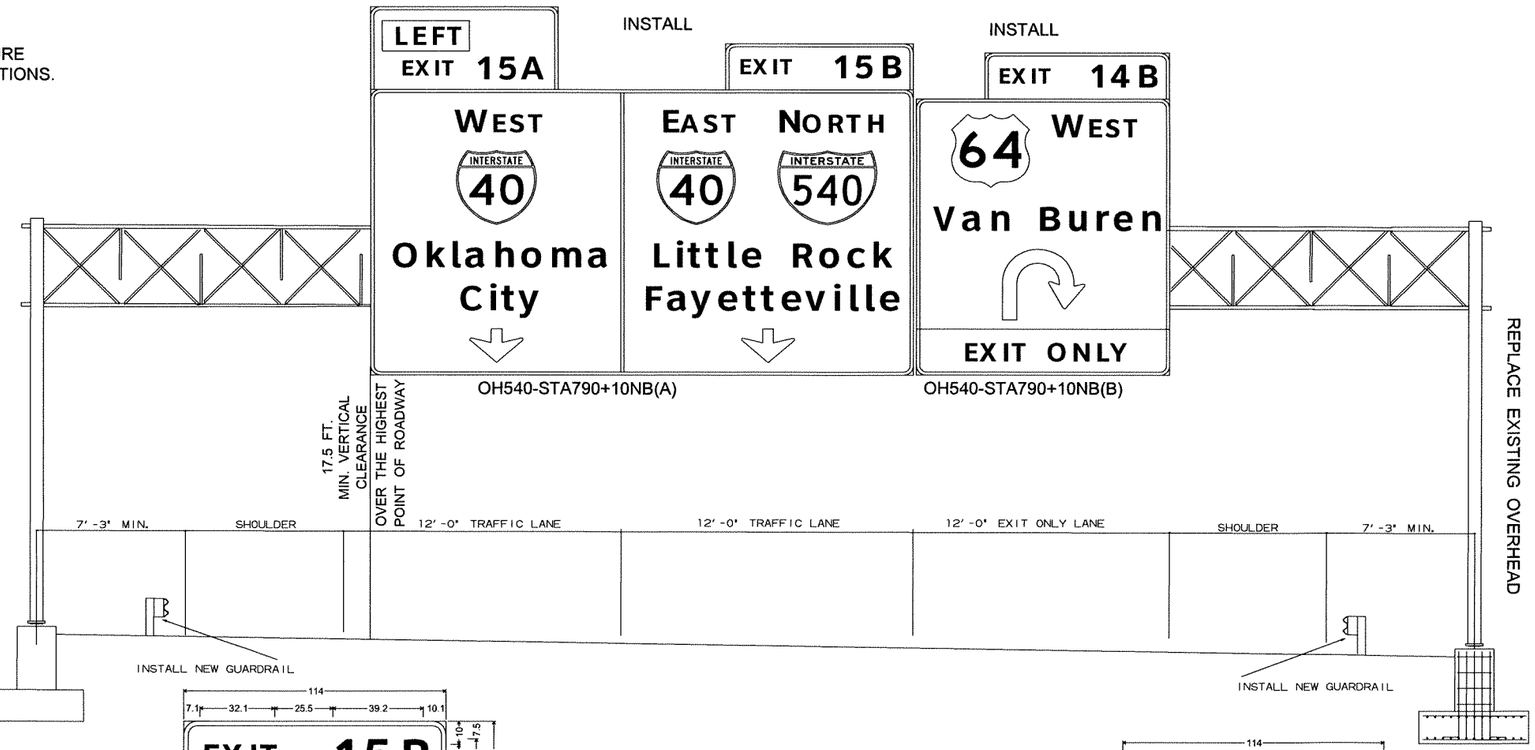

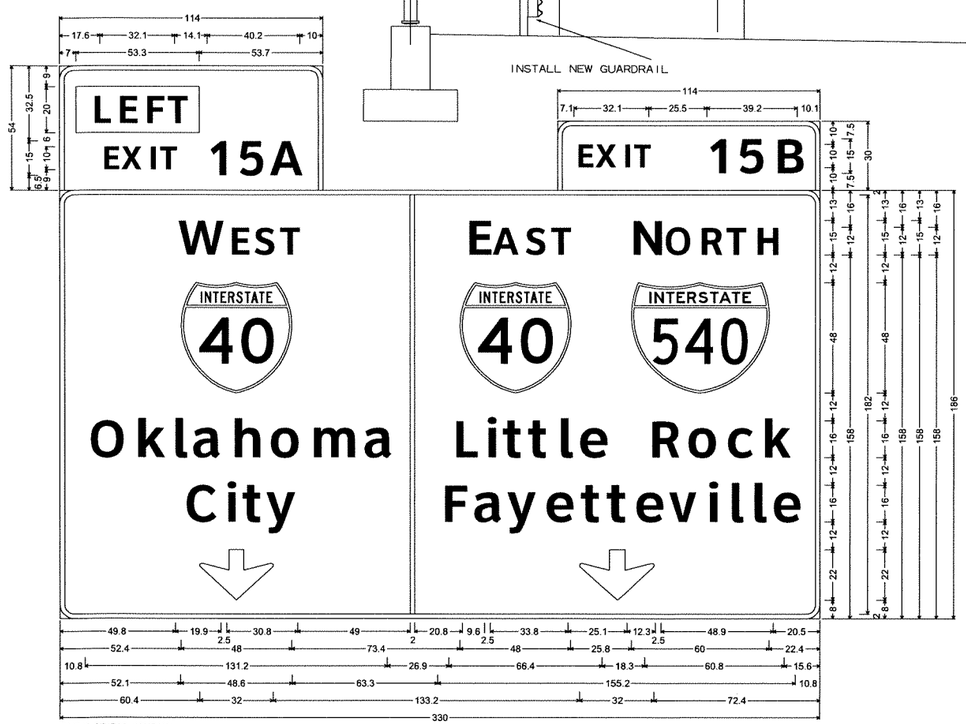

OH540-STA790+10NB(A);
6.0" Radius, 2.0" Border, White on Green;
Rectangle Yellow;
[EXIT] ClearviewHwy-5-W; [15A] ClearviewHwy-5-W;
6.0" Radius, 2.0" Border, White on Green;
[EXIT] ClearviewHwy-5-W; [15B] ClearviewHwy-5-W;
6.0" Radius, 2.0" Border, White on Green;
[W] ClearviewHwy-5-W; [EST] ClearviewHwy-5-W; [Oklahoma] ClearviewHwy-5-W; [City] ClearviewHwy-5-W; Down Arrow 22.0" 270"; [E] ClearviewHwy-5-W;
[AST] ClearviewHwy-5-W; [N] ClearviewHwy-5-W; [ORTH] ClearviewHwy-5-W; [Little Rock] ClearviewHwy-5-W; [Fayetteville] ClearviewHwy-5-W;
Down Arrow 22.0" 270";

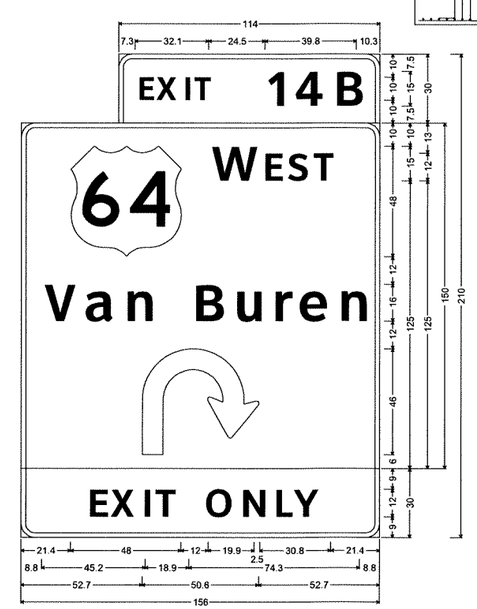

OH540-STA790+10NB(B);
6.0" Radius, 2.0" Border, White on Green;
[EXIT] ClearviewHwy-5-W; [14B] ClearviewHwy-5-W;
6.0" Radius, 2.0" Border, White on Green;
[W] ClearviewHwy-5-W; [EST] ClearviewHwy-5-W;
[Van Buren] ClearviewHwy-5-W; Turn Arrow Custom;
6.0" Radius, 2.0" Border, Black on Yellow;
[EXIT ONLY] ClearviewHwy-5-W;

STATE OF ARKANSAS
REGISTERED PROFESSIONAL ENGINEER
No. 5851
L. TONY SULLIVAN
8/13/12

DATE REVISED	DATE FILMED	DATE REVISED	DATE FILMED	FED.RD. DIST.NO.	STATE	FED.AID PROJ.NO.	SHEET NO.	TOTAL SHEETS
				6	ARK.			
				JOB NO.		BB0407	403	464

(2) SIGN LAYOUT SHEET

OH-064-17-01

NOTE: SEE OVERHEAD SIGN STRUCTURE DETAILS SHEETS FOR DESIGN SPECIFICATIONS.

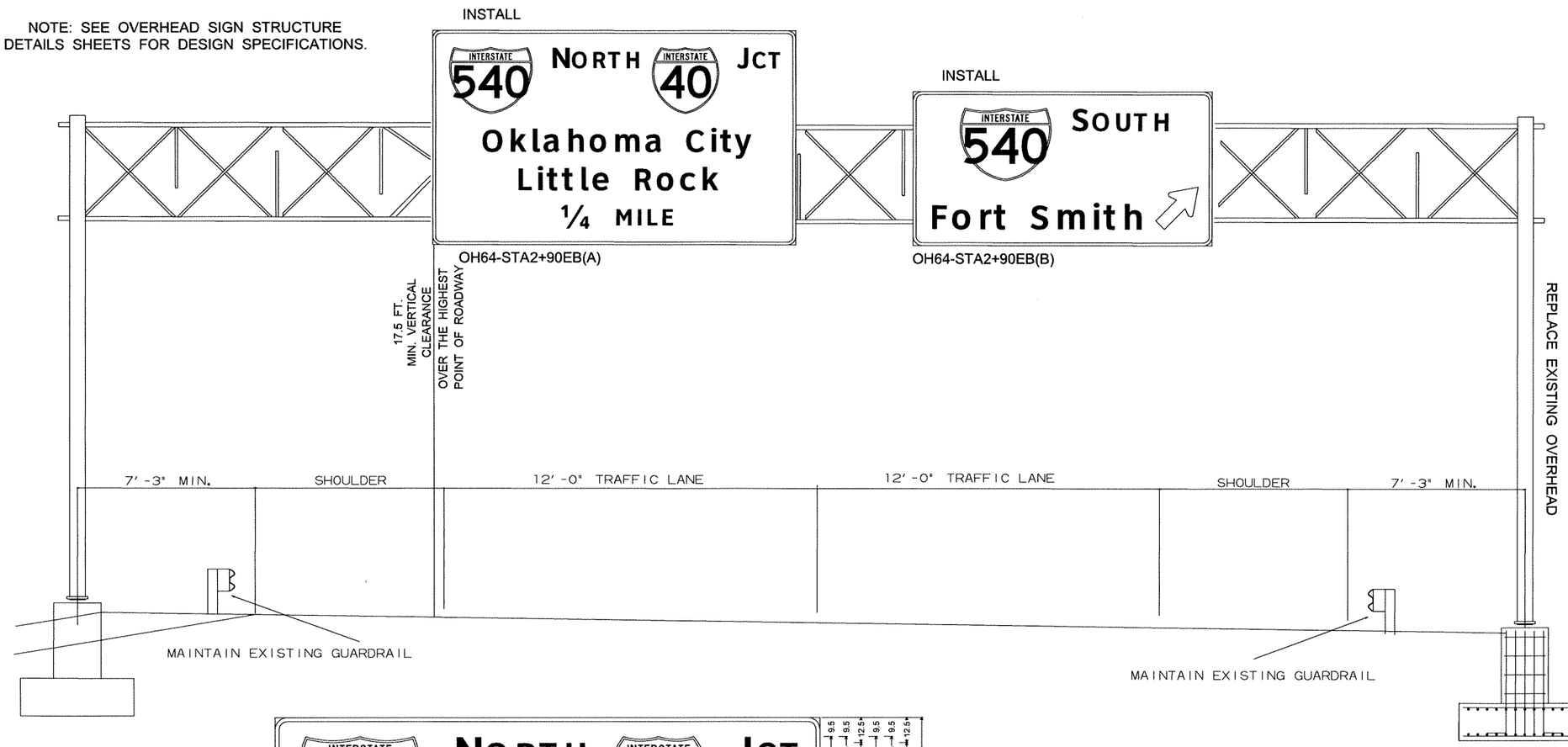

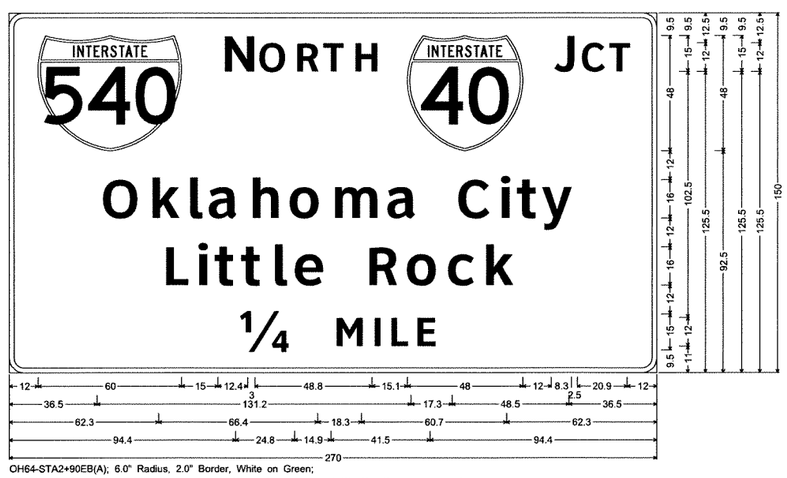

OH64-STA2+90EB(A); 6.0" Radius, 2.0" Border, White on Green;
[N] ClearviewHwy-5-W; [ORTH] ClearviewHwy-5-W; [J] ClearviewHwy-5-W; [CT] ClearviewHwy-5-W;
[Oklahoma City] ClearviewHwy-5-W; [Little Rock] ClearviewHwy-5-W; [1/4] ClearviewHwy-5-W; [MILE] ClearviewHwy-5-W;

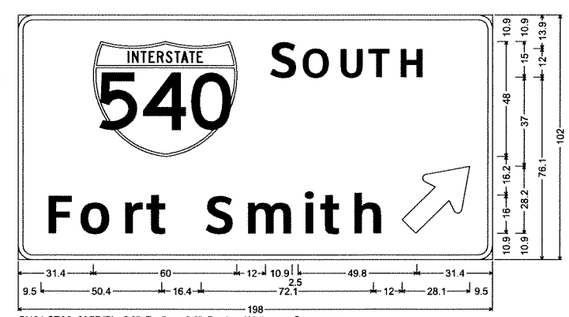

OH64-STA2+90EB(B); 6.0" Radius, 2.0" Border, White on Green;
[S] ClearviewHwy-5-W; [OUTH] ClearviewHwy-5-W; [Fort Smith] ClearviewHwy-5-W;
Standard Arrow Custom 35.8" X 21.6" 45°;

STATE OF ARKANSAS
REGISTERED PROFESSIONAL ENGINEER
No. 5851
L. TONY SULLIVAN
8/30/12

DATE REVISED	DATE FILMED	DATE REVISED	DATE FILMED	FED.RD. DIST.NO.	STATE	FED.AID PROJ.NO.	SHEET NO.	TOTAL SHEETS
				6	ARK.			
				JOB NO.		BB0407	404	464

(2) SIGN LAYOUT SHEET

OH-064-17-02

NOTE: SEE OVERHEAD SIGN STRUCTURE DETAILS SHEETS FOR DESIGN SPECIFICATIONS.

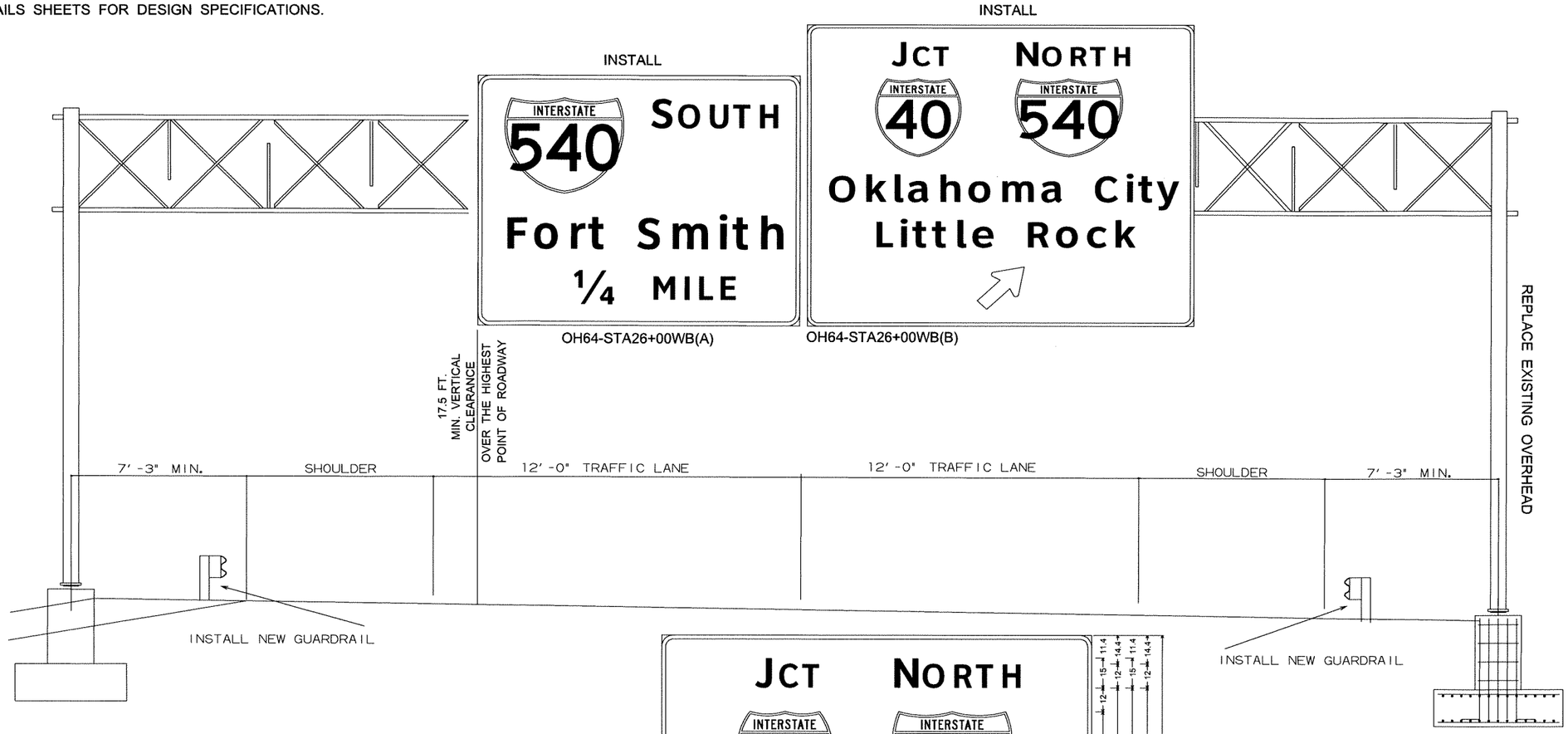

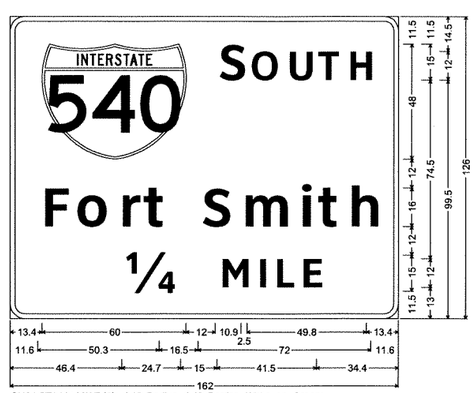

OH64-STA26+00WB(A); 6.0" Radius, 2.0" Border, White on Green;
[S] ClearviewHwy-5-W; [OUTH] ClearviewHwy-5-W;
[Fort Smith] ClearviewHwy-5-W; [1/4] ClearviewHwy-5-W;
[MILE] ClearviewHwy-5-W;

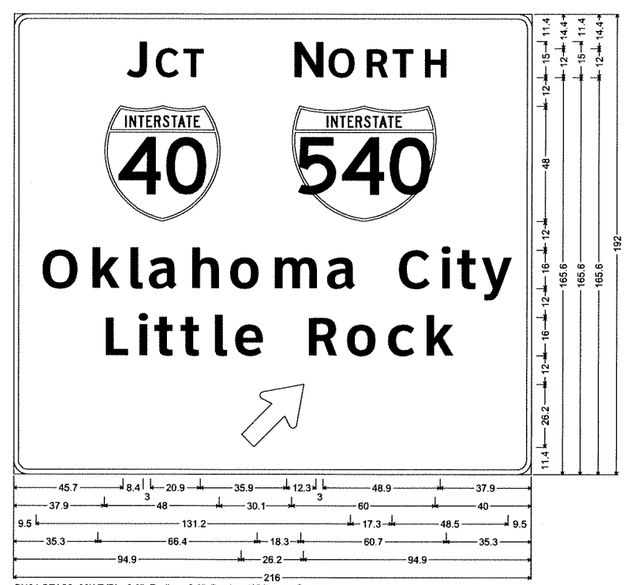

OH64-STA26+00WB(B); 6.0" Radius, 2.0" Border, White on Green;
[J] ClearviewHwy-5-W; [CT] ClearviewHwy-5-W; [N] ClearviewHwy-5-W; [ORTH] ClearviewHwy-5-W;
[Oklahoma City] ClearviewHwy-5-W; [Little Rock] ClearviewHwy-5-W;
Standard Arrow Custom 33.4" X 20.3" 45°;

STATE OF ARKANSAS
REGISTERED PROFESSIONAL ENGINEER
No. 5851
J. TONY SULLIVAN
8/30/12

DATE REVISED	DATE FILMED	DATE REVISED	DATE FILMED	FED.RD. DIST.NO.	STATE	FED.AID PROJ.NO.	SHEET NO.	TOTAL SHEETS
				6	ARK.			
				JOB NO.		BB0407	405	464

(2) SIGN LAYOUT SHEET

OH-540-17-02

NOTE: SEE OVERHEAD SIGN STRUCTURE DETAILS SHEETS FOR DESIGN SPECIFICATIONS.

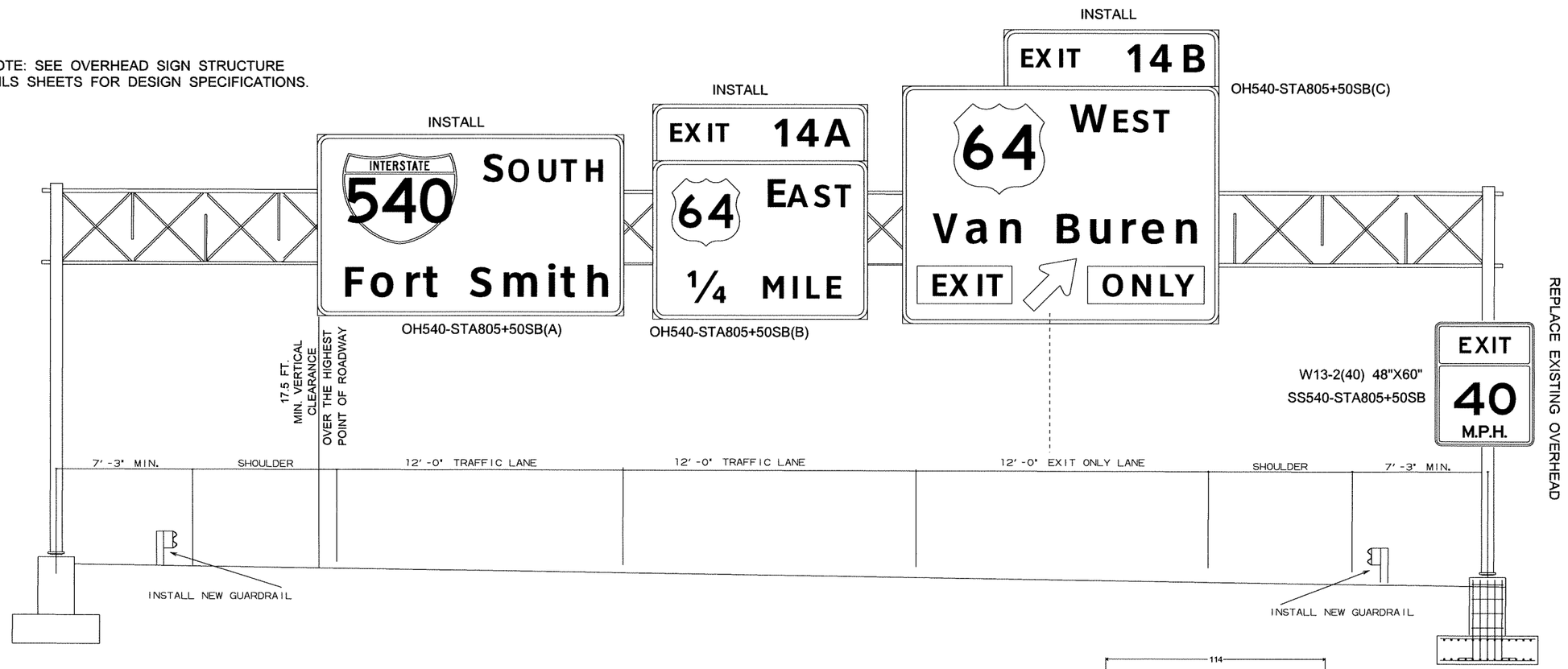

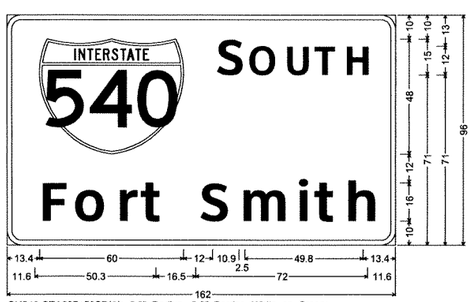

OH540-STA805+50SB(A); 6.0" Radius, 2.0" Border, White on Green;
[S] ClearviewHwy-5-W; [OUTH] ClearviewHwy-5-W;
[Fort Smith] ClearviewHwy-5-W;

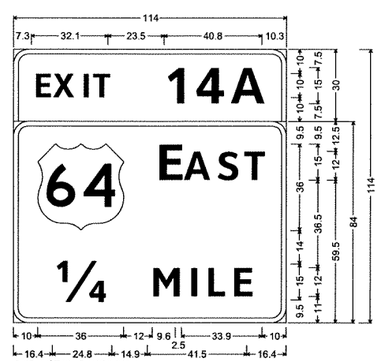

OH540-STA805+50SB(B);
6.0" Radius, 2.0" Border, White on Green;
[EXIT] ClearviewHwy-5-W; [14A] ClearviewHwy-5-W;
6.0" Radius, 2.0" Border, White on Green;
[E] ClearviewHwy-5-W; [AST] ClearviewHwy-5-W;
[1/4] ClearviewHwy-5-W; [MILE] ClearviewHwy-5-W;

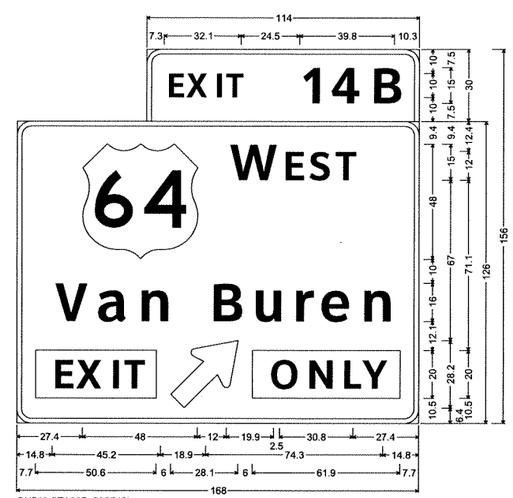

OH540-STA805+50SB(C);
6.0" Radius, 2.0" Border, White on Green;
[EXIT] ClearviewHwy-5-W; [14B] ClearviewHwy-5-W;
6.0" Radius, 2.0" Border, White on Green;
[W] ClearviewHwy-5-W; [EST] ClearviewHwy-5-W;
[Van Buren] ClearviewHwy-5-W; Rectangle Yellow;
Standard Arrow Custom 35.8" X 21.6" 45°; Rectangle Yellow;

STATE OF ARKANSAS
REGISTERED PROFESSIONAL ENGINEER
No. 5851
J. TONY SULLIVAN
8/30/12

DATE REVISED	DATE FILMED	DATE REVISED	DATE FILMED	FED.RD. DIST.NO.	STATE	FED.AID PROJ.NO.	SHEET NO.	TOTAL SHEETS
				6	ARK.			
				JOB NO.		BB0407	406	464

(2) SIGN LAYOUT SHEET

OH-540-17-12

NOTE: SEE OVERHEAD SIGN STRUCTURE DETAILS SHEETS FOR DESIGN SPECIFICATIONS.

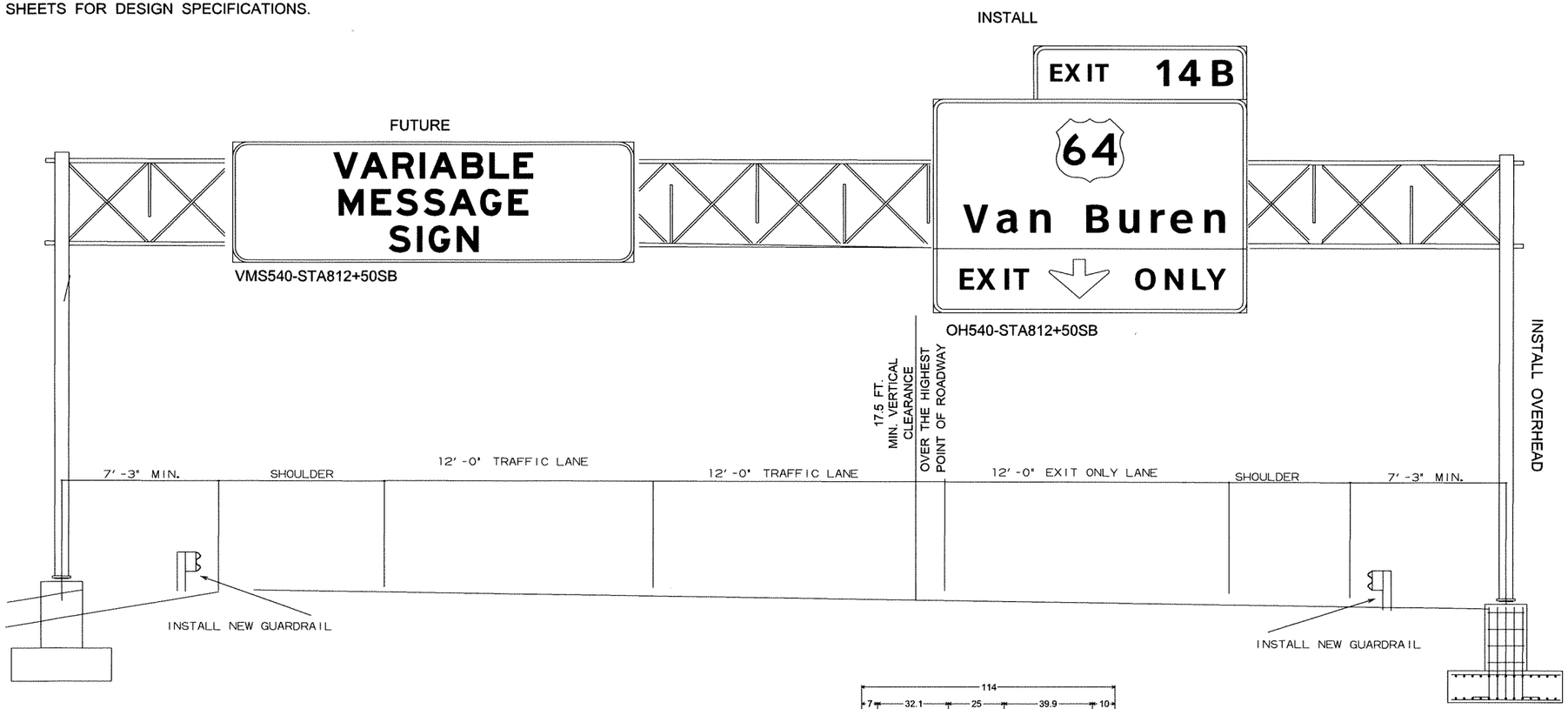

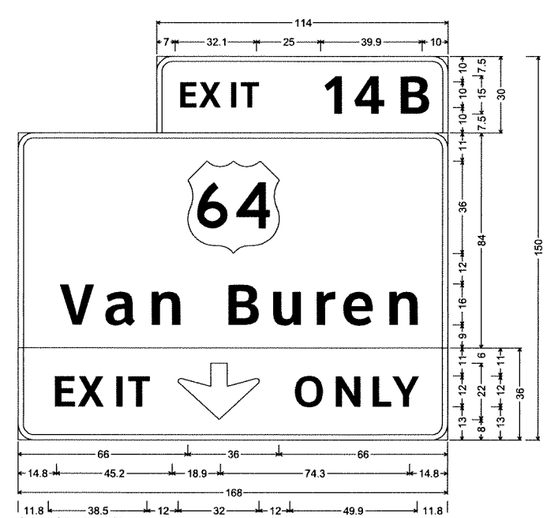

OH540-STA812+50SB;
6.0" Radius, 2.0" Border, White on Green;
[EXIT] ClearviewHwy-5-W; [14B] ClearviewHwy-5-W;
6.0" Radius, 2.0" Border, White on Green;
[Van Buren] ClearviewHwy-5-W;
6.0" Radius, 2.0" Border, Black on Yellow;
[EXIT] ClearviewHwy-5-W; Down Arrow 22.0" 270°; [ONLY] ClearviewHwy-5-W;

STATE OF ARKANSAS
REGISTERED PROFESSIONAL ENGINEER
No. 5851
J. TONY SULLIVAN

DATE REVISED	DATE FILMED	DATE REVISED	DATE FILMED	FED.RD. DIST.NO.	STATE	FED.AID PROJ.NO.	SHEET NO.	TOTAL SHEETS
				6	ARK.			
				JOB NO.		BB0407	407	464

(2) SIGN LAYOUT SHEET

OH-540-17-10

NOTE: SEE OVERHEAD SIGN STRUCTURE DETAILS SHEETS FOR DESIGN SPECIFICATIONS.

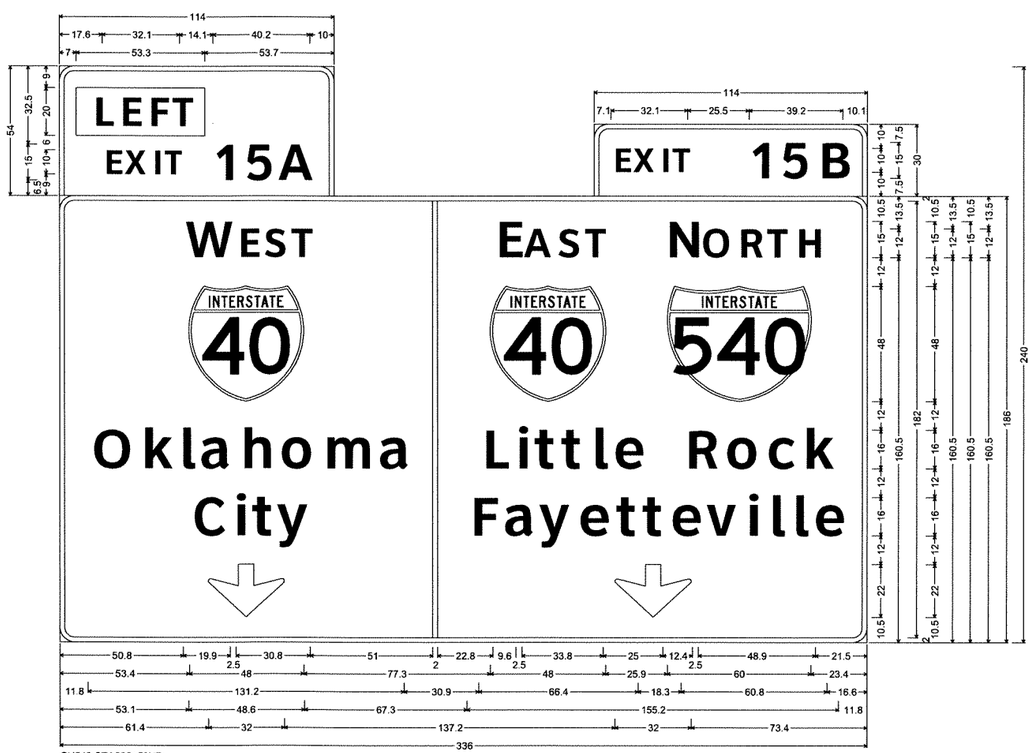

OH540-STA809+50NB;
6.0" Radius, 2.0" Border, White on Green;
Rectangle Yellow;
[EXIT] ClearviewHwy-5-W; [15A] ClearviewHwy-5-W;
6.0" Radius, 2.0" Border, White on Green;
[EXIT] ClearviewHwy-5-W; [15B] ClearviewHwy-5-W;
6.0" Radius, 2.0" Border, White on Green;
[W] ClearviewHwy-5-W; [EST] ClearviewHwy-5-W; [Oklahoma] ClearviewHwy-5-W; [City] ClearviewHwy-5-W; Down Arrow 22.0" 270°; [E] ClearviewHwy-5-W;
[AST] ClearviewHwy-5-W; [N] ClearviewHwy-5-W; [ORTH] ClearviewHwy-5-W; [Little Rock] ClearviewHwy-5-W; [Fayetteville] ClearviewHwy-5-W;
Down Arrow 22.0" 270°;

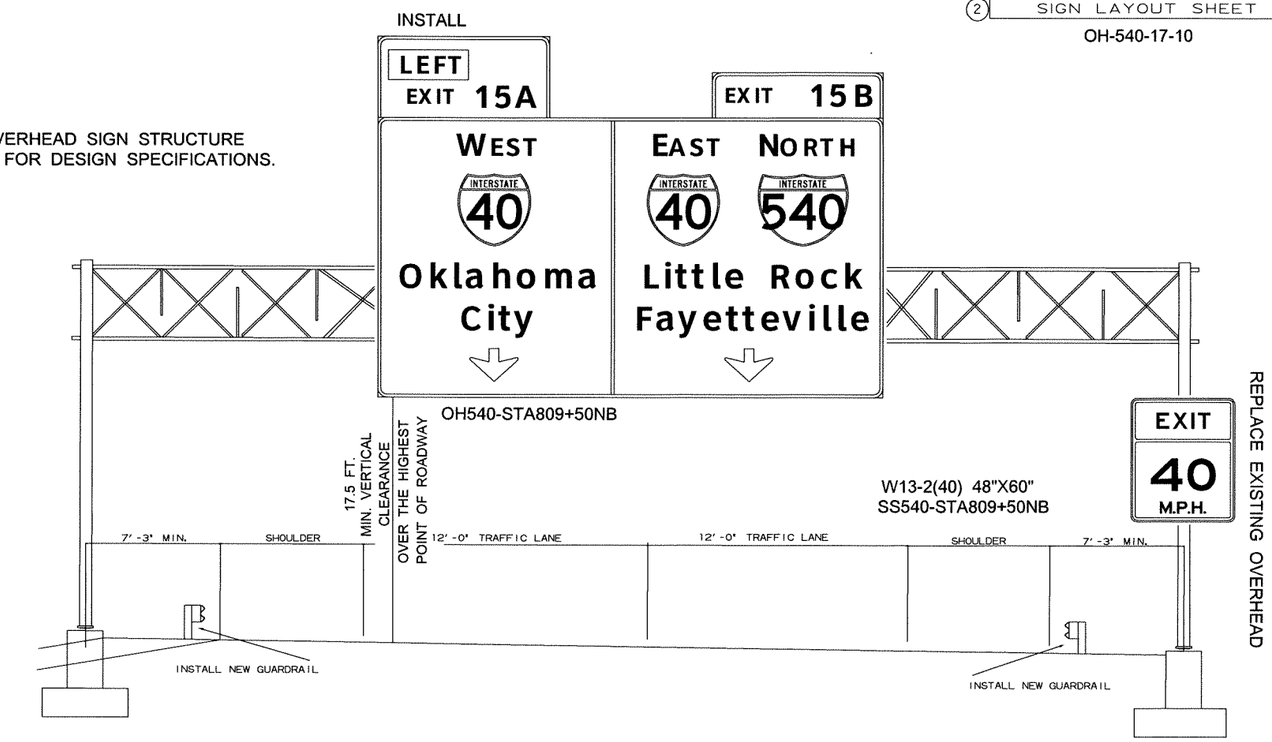

STATE OF ARKANSAS
REGISTERED PROFESSIONAL ENGINEER
No. 5851
L. TONY SULLIVAN
8/30/12

DATE REVISED	DATE FILMED	DATE REVISED	DATE FILMED	FED.RD. DIST.NO.	STATE	FED.AID PROJ.NO.	SHEET NO.	TOTAL SHEETS
				6	ARK.			
				JOB NO.		BB0407	408	464

(2) SIGN LAYOUT SHEET

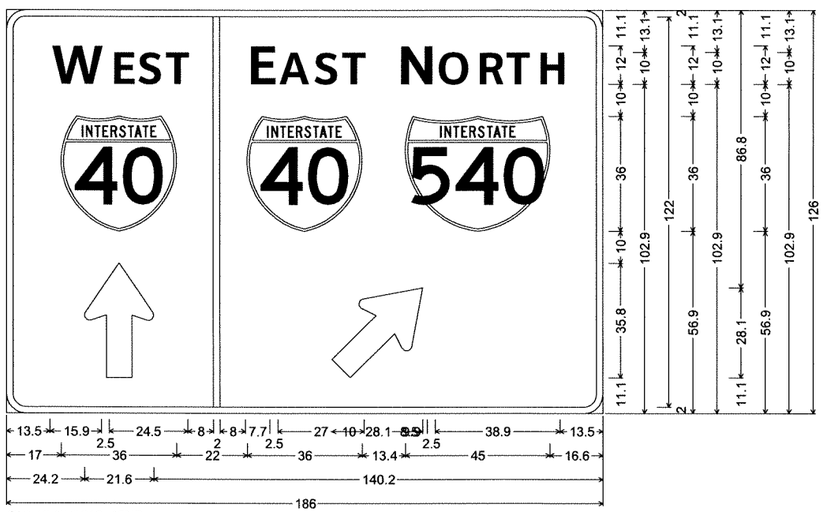

GM540-STA813+10NB;
6.0" Radius, 2.0" Border, White on Green;
[W] ClearviewHwy-5-W-R; [EST] ClearviewHwy-5-W-R;
Standard Arrow Custom 35.8" X 21.6" 90°; [E] ClearviewHwy-5-W-R;
[AST] ClearviewHwy-5-W-R; Standard Arrow Custom 35.8" X 21.6" 45°;
[N] ClearviewHwy-5-W-R; [ORTH] ClearviewHwy-5-W-R;

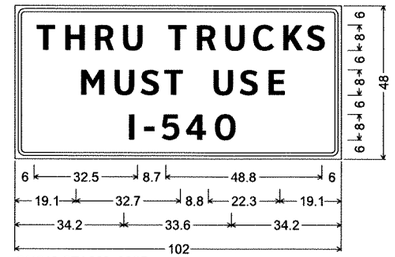

GM540-STA823+00SB;
3.0" Radius, 1.0" Border, 1.0" Indent, Black on White;
[THRU TRUCKS] ClearviewHwy-5-W;
[MUST USE] ClearviewHwy-5-W;
[I-540] ClearviewHwy-5-W;

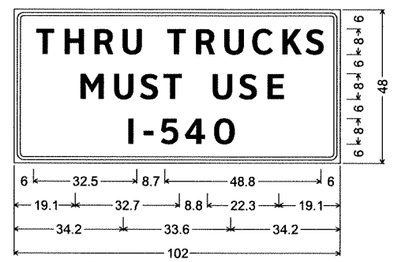

GM540-STA387+00SB;
3.0" Radius, 1.0" Border, 1.0" Indent, Black on White;
[THRU TRUCKS] ClearviewHwy-5-W;
[MUST USE] ClearviewHwy-5-W;
[I-540] ClearviewHwy-5-W;

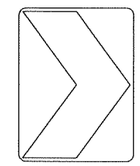

W1-8 36"X48"

SS540-01 SS540-11
SS540-02 SS540-12
SS540-03 SS540-13
SS540-04 SS540-14
SS540-05 SS540-15
SS540-06 SS540-16
SS540-07 SS540-17
SS540-08 SS540-18
SS540-09 SS540-19
SS540-10

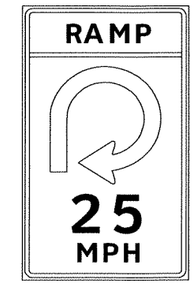

W13-7(25) 48"X84"
SS540-STA815+00NB-A
SS540-STA815+00NB-B

W11-1RT 48"X84"
W13-1(25) 24"X24"
SS540-STA832+00NB-A
SS540-STA832+00NB-B

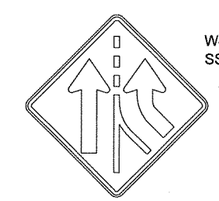

W4-3RT 48"X48"
SS540-STA815+00SB

STATE OF ARKANSAS
REGISTERED PROFESSIONAL ENGINEER
No. 5851
J. TONY SULLIVAN
5/13/12

DATE REVISED	DATE FILMED	DATE REVISED	DATE FILMED	FED.RD. DIST.NO.	STATE	FED.AID PROJ.NO.	SHEET NO.	TOTAL SHEETS
				6	ARK.			
				JOB NO.		BB0407	409	464

(2) SIGN PLACEMENT SHEET

STA. 255+00 TO STA. 380+00

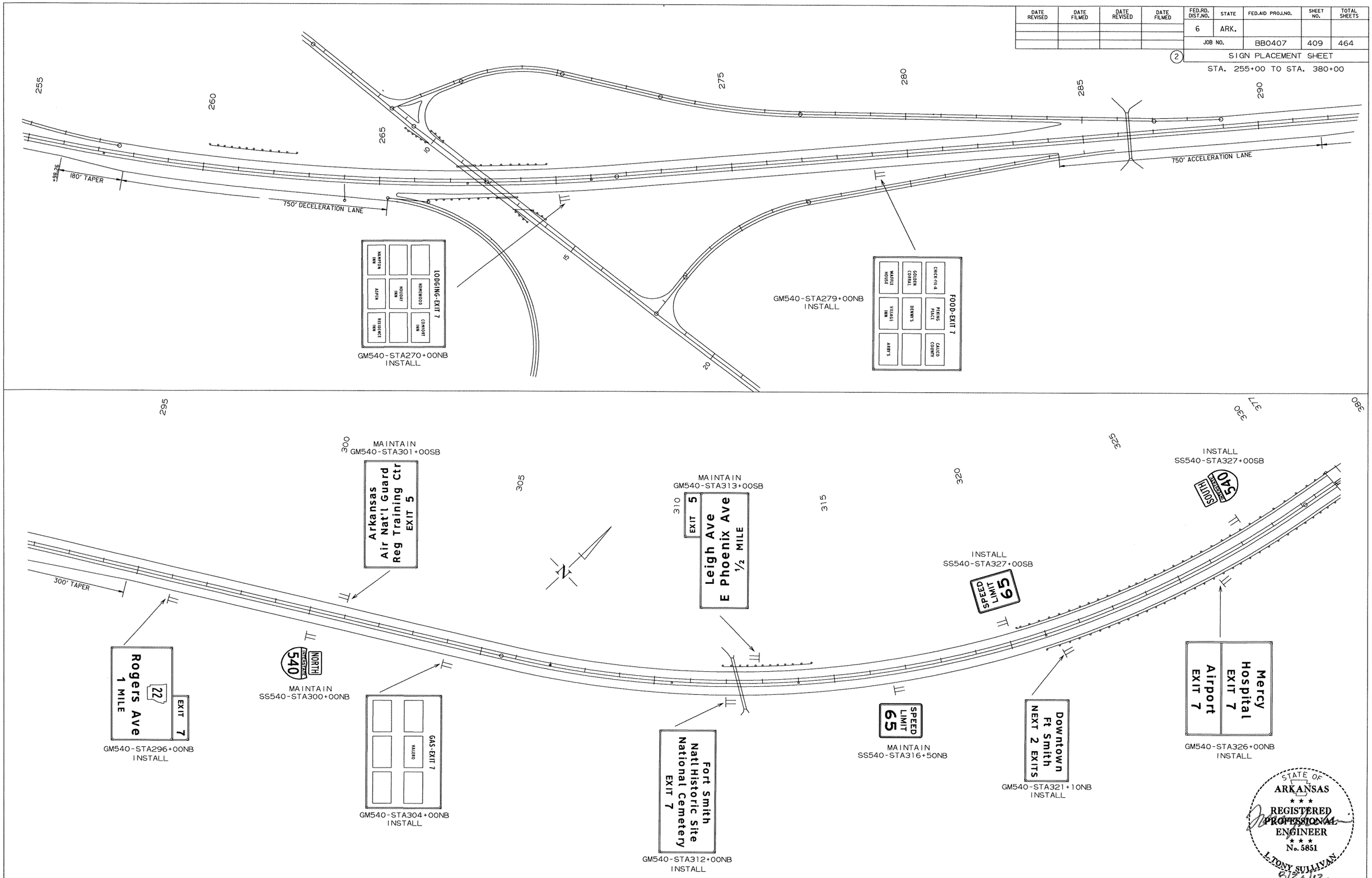

STATE OF ARKANSAS
REGISTERED PROFESSIONAL ENGINEER
No. 5851
L. TONY SULLIVAN
8/30/02

DATE REVISED	DATE FILMED	DATE REVISED	DATE FILMED	FED.RD. DIST.NO.	STATE	FED.AID PROJ.NO.	SHEET NO.	TOTAL SHEETS
				6	ARK.			
				JOB NO.		BB0407	410	464

(2) SIGN PLACEMENT SHEET

STA. 380+00 TO STA. 415+00

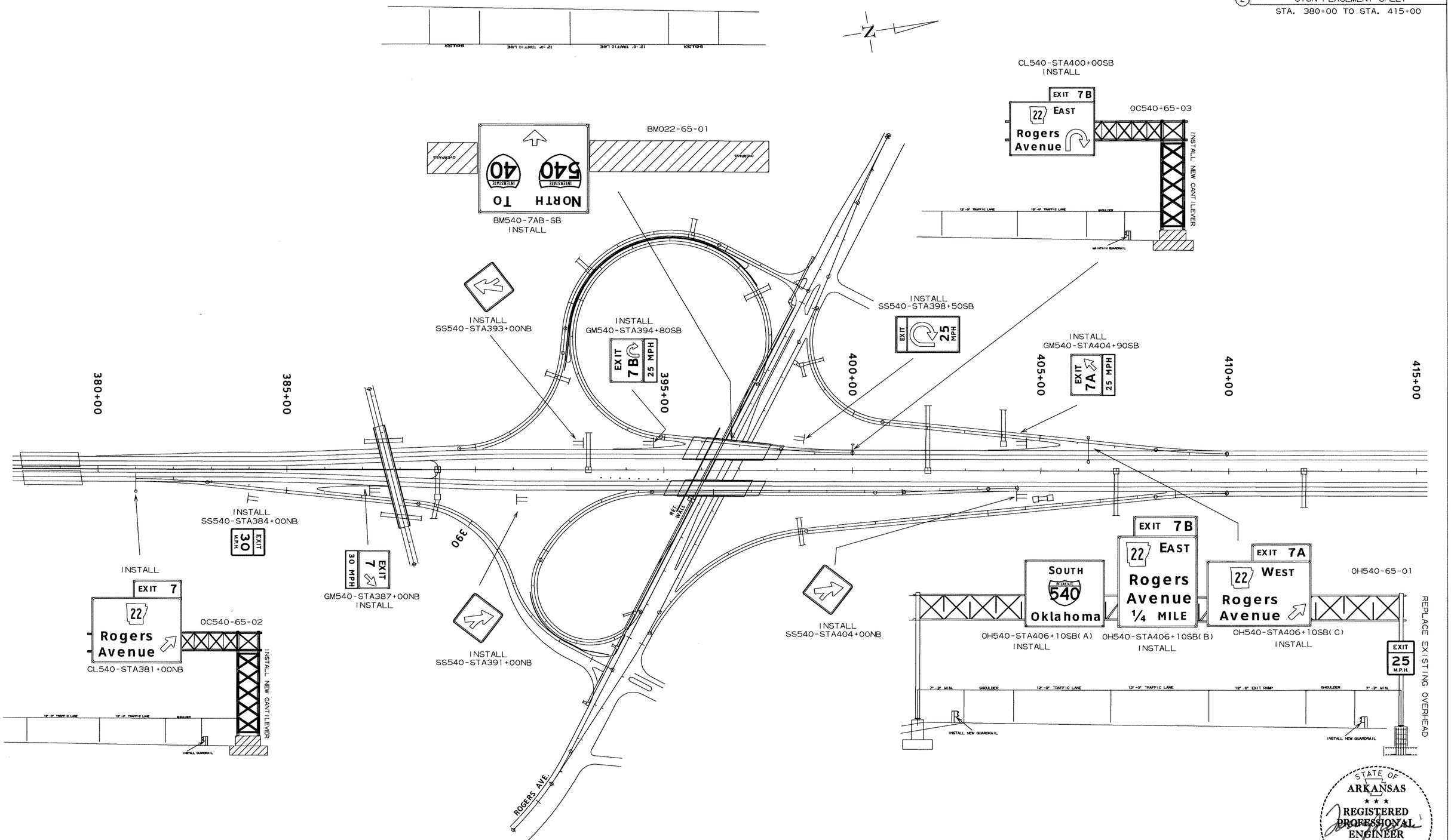

STATE OF ARKANSAS
REGISTERED PROFESSIONAL ENGINEER
No. 5851
J. TONY SULLIVAN
8/30/12

DATE REVISED	DATE FILMED	DATE REVISED	DATE FILMED	FED.RD. DIST.NO.	STATE	FED.AID PROJ.NO.	SHEET NO.	TOTAL SHEETS
				6	ARK.			
				JOB NO.		BB0407	411	464

(2) SIGN PLACEMENT SHEET

STA. 415+00 TO STA. 453+00

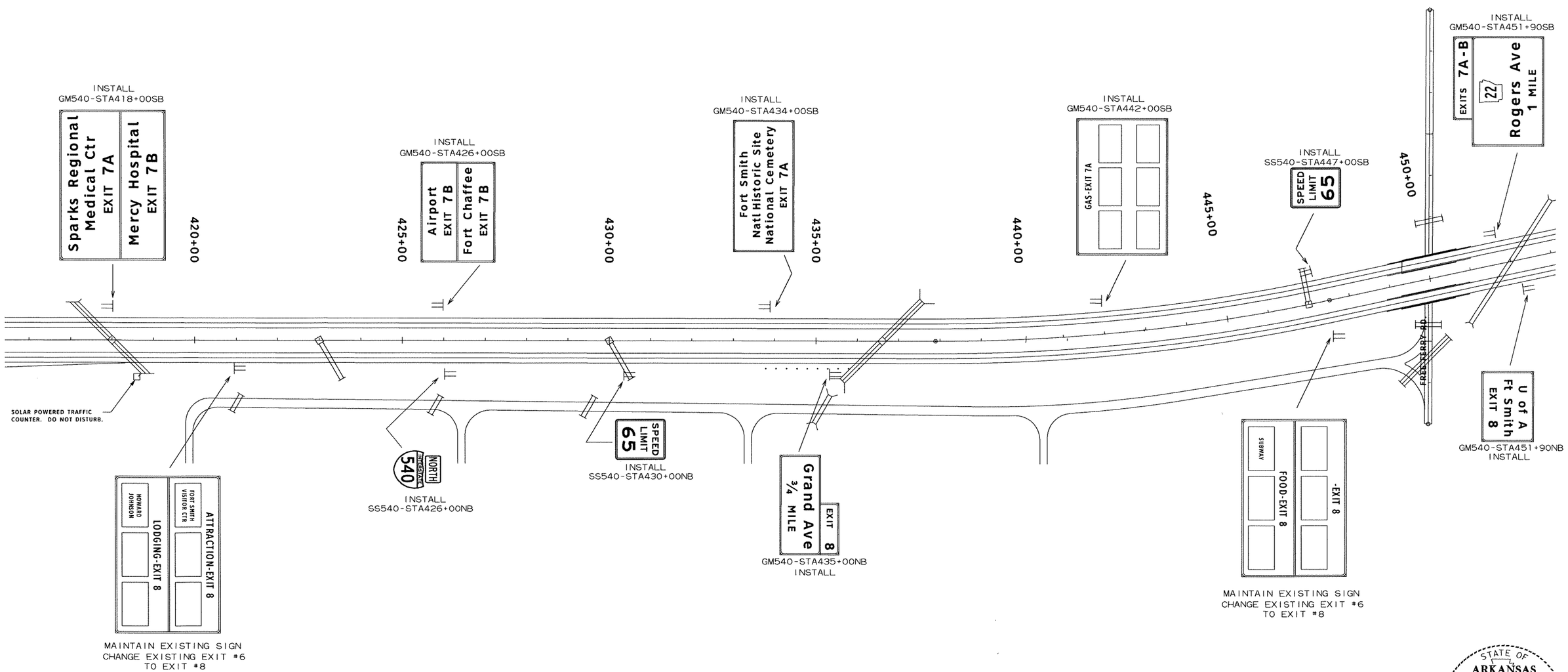

STATE OF ARKANSAS
REGISTERED PROFESSIONAL ENGINEER
No. 5851
L. TONY SULLIVAN
8/30/12

DATE REVISED	DATE FILMED	DATE REVISED	DATE FILMED	FED.RD. DIST.NO.	STATE	FED.AID PROJ.NO.	SHEET NO.	TOTAL SHEETS
				6	ARK.			
				JOB NO.		BB0407	412	464

(2) SIGN PLACEMENT SHEET

STA. 453+00 TO STA. 491+00

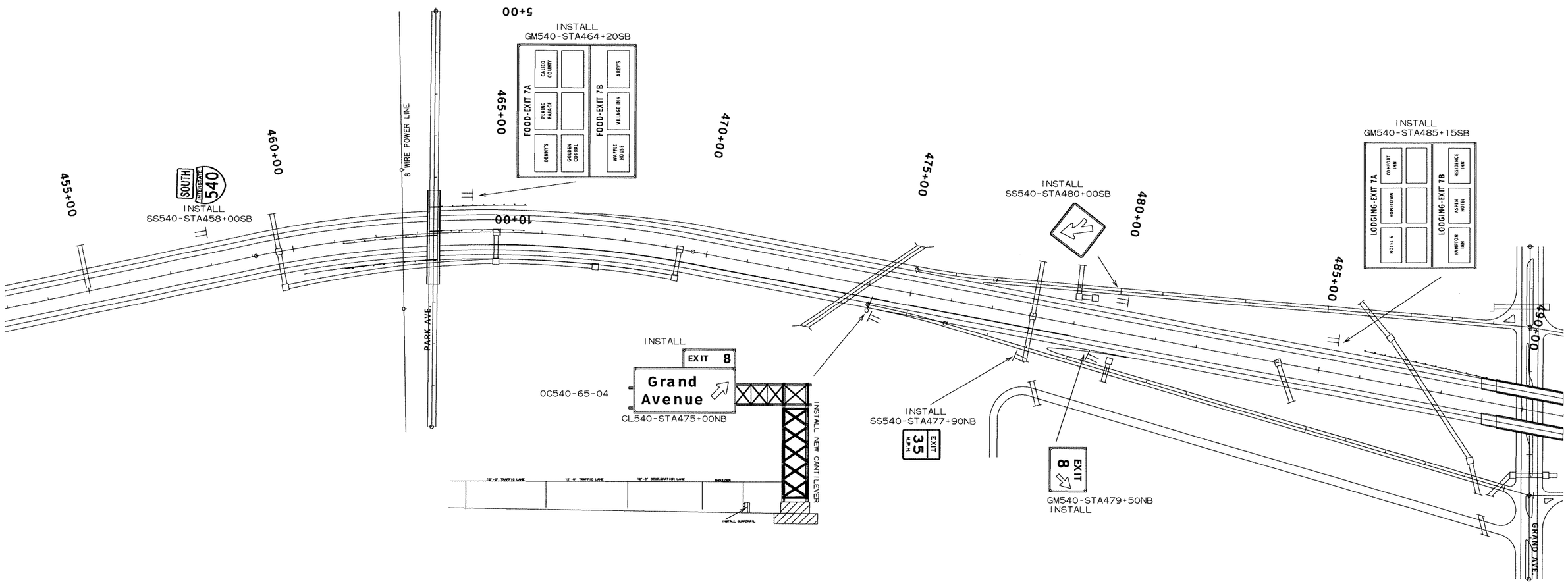

STATE OF ARKANSAS
REGISTERED PROFESSIONAL ENGINEER
No. 5851
J. TONY SULLIVAN
8/20/12

DATE REVISED	DATE FILMED	DATE REVISED	DATE FILMED	FED.RD. DIST.NO.	STATE	FED.AID PROJ.NO.	SHEET NO.	TOTAL SHEETS
				6	ARK.			
				JOB NO.		BB0407	413	464

(2) SIGN PLACEMENT SHEET

STA. 491+00 TO STA. 530+00

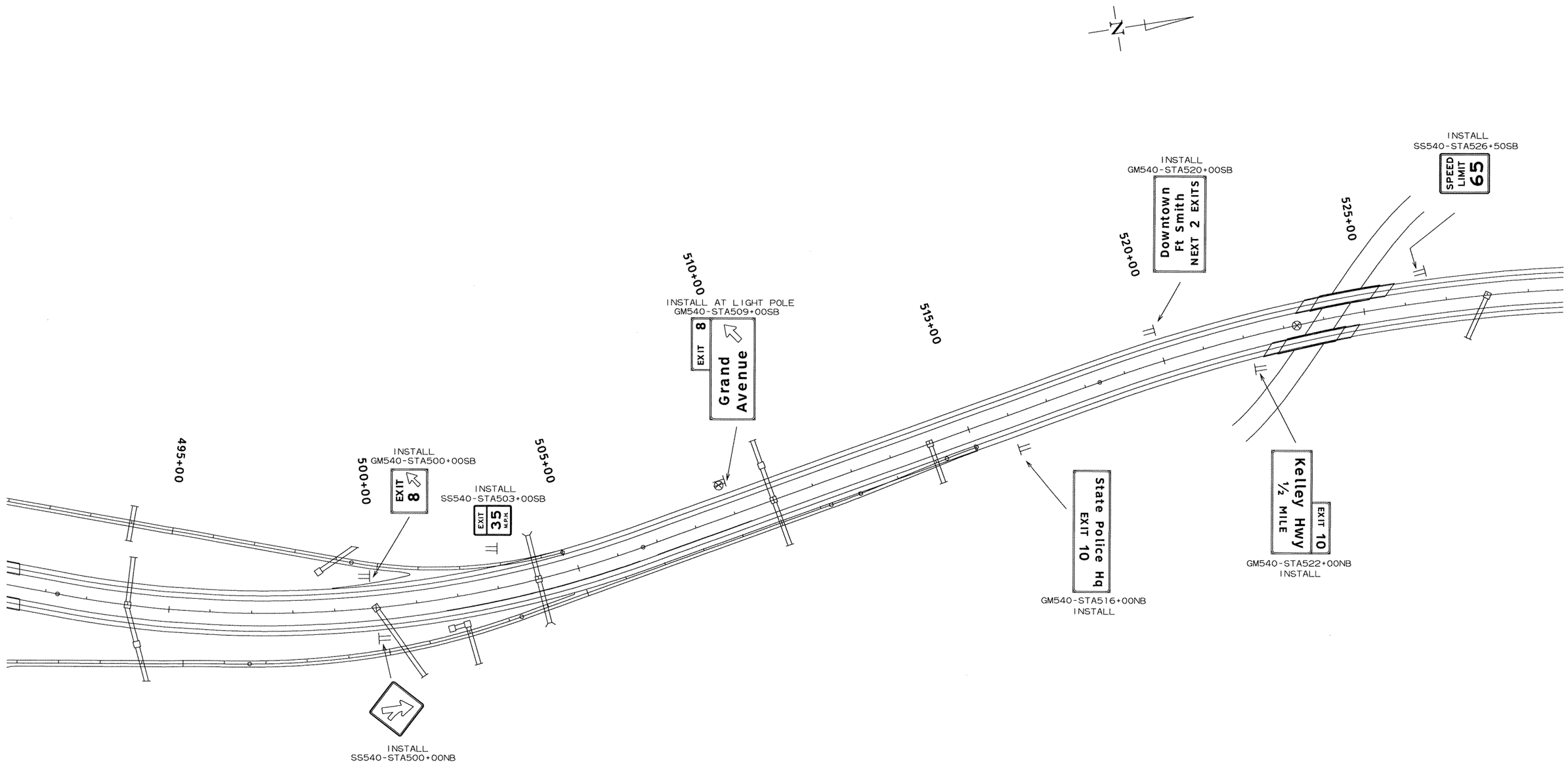

STATE OF ARKANSAS
REGISTERED PROFESSIONAL ENGINEER
No. 5851
L. TONY SULLIVAN
8/30/12

DATE REVISED	DATE FILMED	DATE REVISED	DATE FILMED	FED.RD. DIST.NO.	STATE	FED.AID PROJ.NO.	SHEET NO.	TOTAL SHEETS
				6	ARK.			
				JOB NO.		BB0407	414	464

(2) SIGN PLACEMENT SHEET

STA. 530+00 TO STA. 567+00

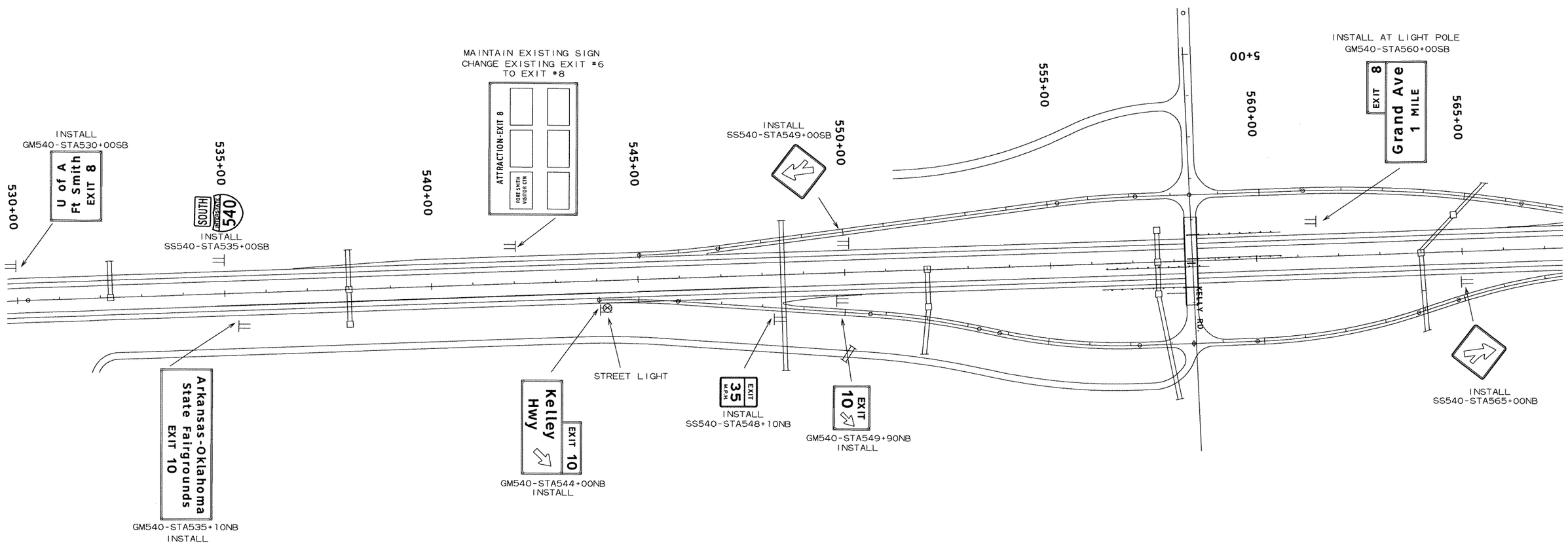

STATE OF ARKANSAS
REGISTERED PROFESSIONAL ENGINEER
No. 5851
L. TONY SULLIVAN
8/30/12

DATE REVISED	DATE FILMED	DATE REVISED	DATE FILMED	FED.RD. DIST.NO.	STATE	FED.AID PROJ.NO.	SHEET NO.	TOTAL SHEETS
				6	ARK.			
				JOB NO.		BB0407	415	464

(2) SIGN PLACEMENT SHEET

STA. 567+00 TO STA. 605+00

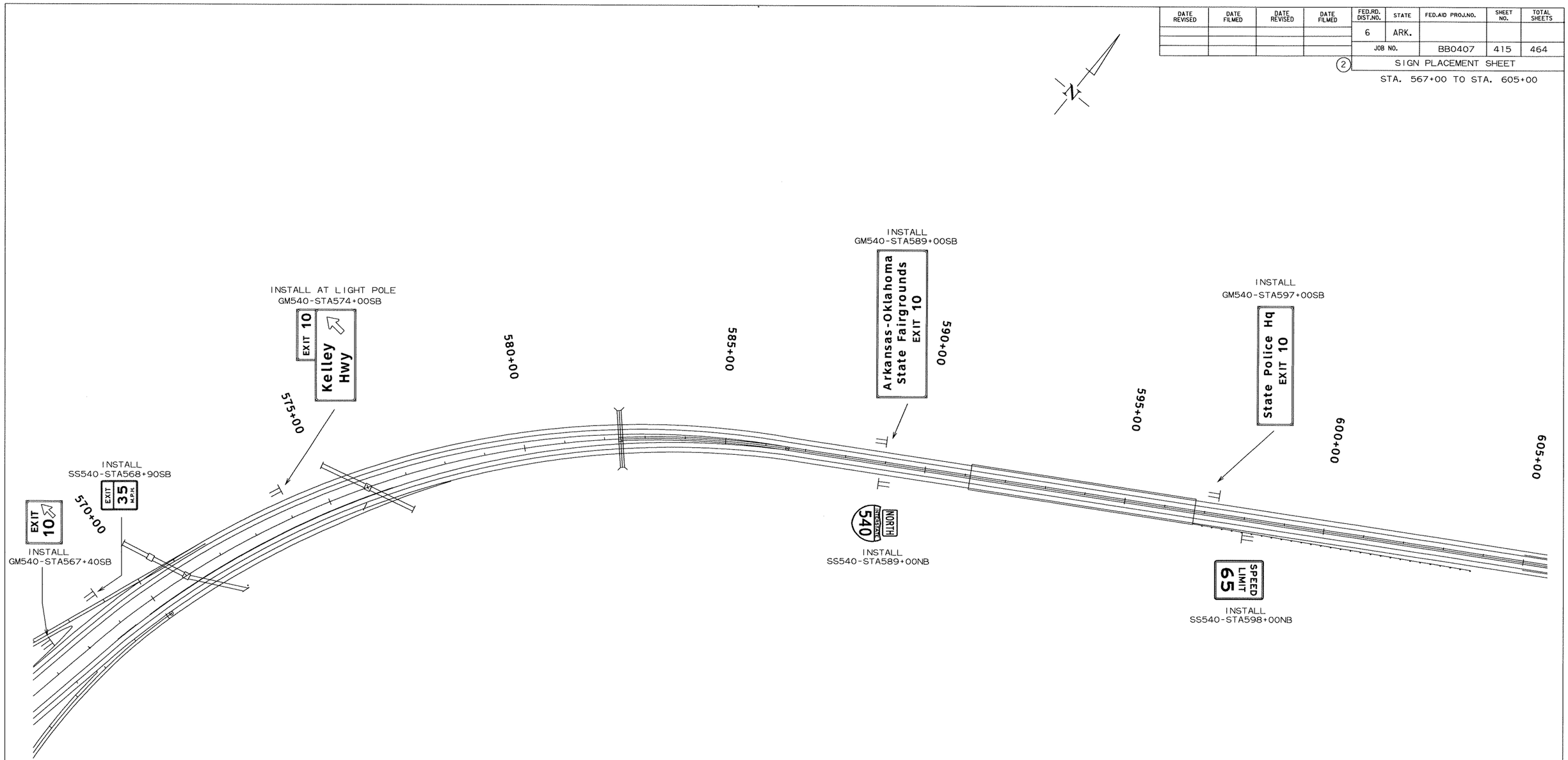

STATE OF ARKANSAS
REGISTERED PROFESSIONAL ENGINEER
No. 5851
L. TONY SULLIVAN
8/30/12

DATE REVISED	DATE FILMED	DATE REVISED	DATE FILMED	FED.RD. DIST.NO.	STATE	FED.AID PROJ.NO.	SHEET NO.	TOTAL SHEETS
				6	ARK.			
				JOB NO.		BB0407	416	464

(2) SIGN PLACEMENT SHEET

STA. 605+00 TO STA. 643+00

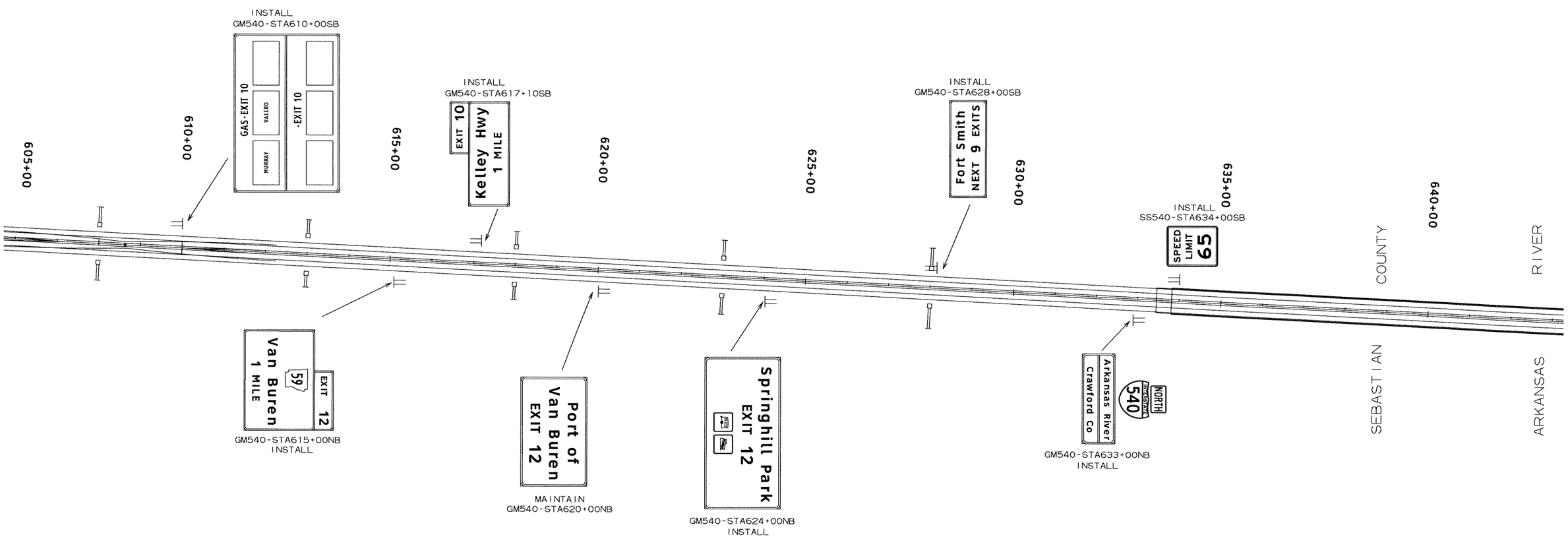

STATE OF ARKANSAS
REGISTERED PROFESSIONAL ENGINEER
No. 5851
L. TONY SULLIVAN
8/30/12

DATE REVISED	DATE FILMED	DATE REVISED	DATE FILMED	FED.RD. DIST.NO.	STATE	FED.AID PROJ.NO.	SHEET NO.	TOTAL SHEETS
				6	ARK.			
				JOB NO.		BB0407	417	464

(2) SIGN PLACEMENT SHEET

STA. 643+00 TO STA. 680+00

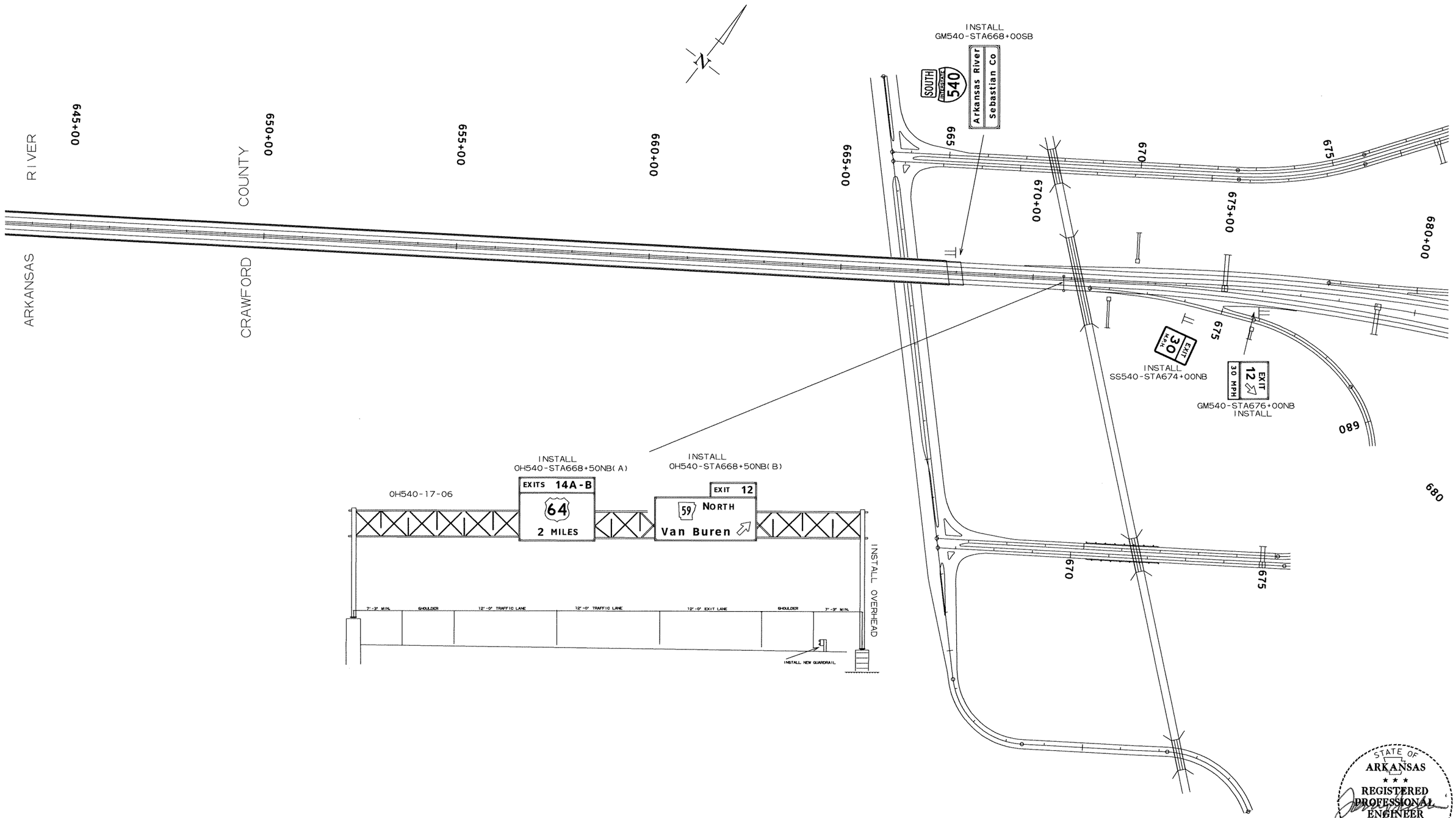

STATE OF ARKANSAS
REGISTERED PROFESSIONAL ENGINEER
No. 5851
L. TONY SULLIVAN
8/30/12

DATE REVISED	DATE FILMED	DATE REVISED	DATE FILMED	FED.RD. DIST.NO.	STATE	FED.AID PROJ.NO.	SHEET NO.	TOTAL SHEETS
				6	ARK.			
				JOB NO.		BB0407	418	464

(2) SIGN PLACEMENT SHEET

STA. 680+00 TO STA. 716+00

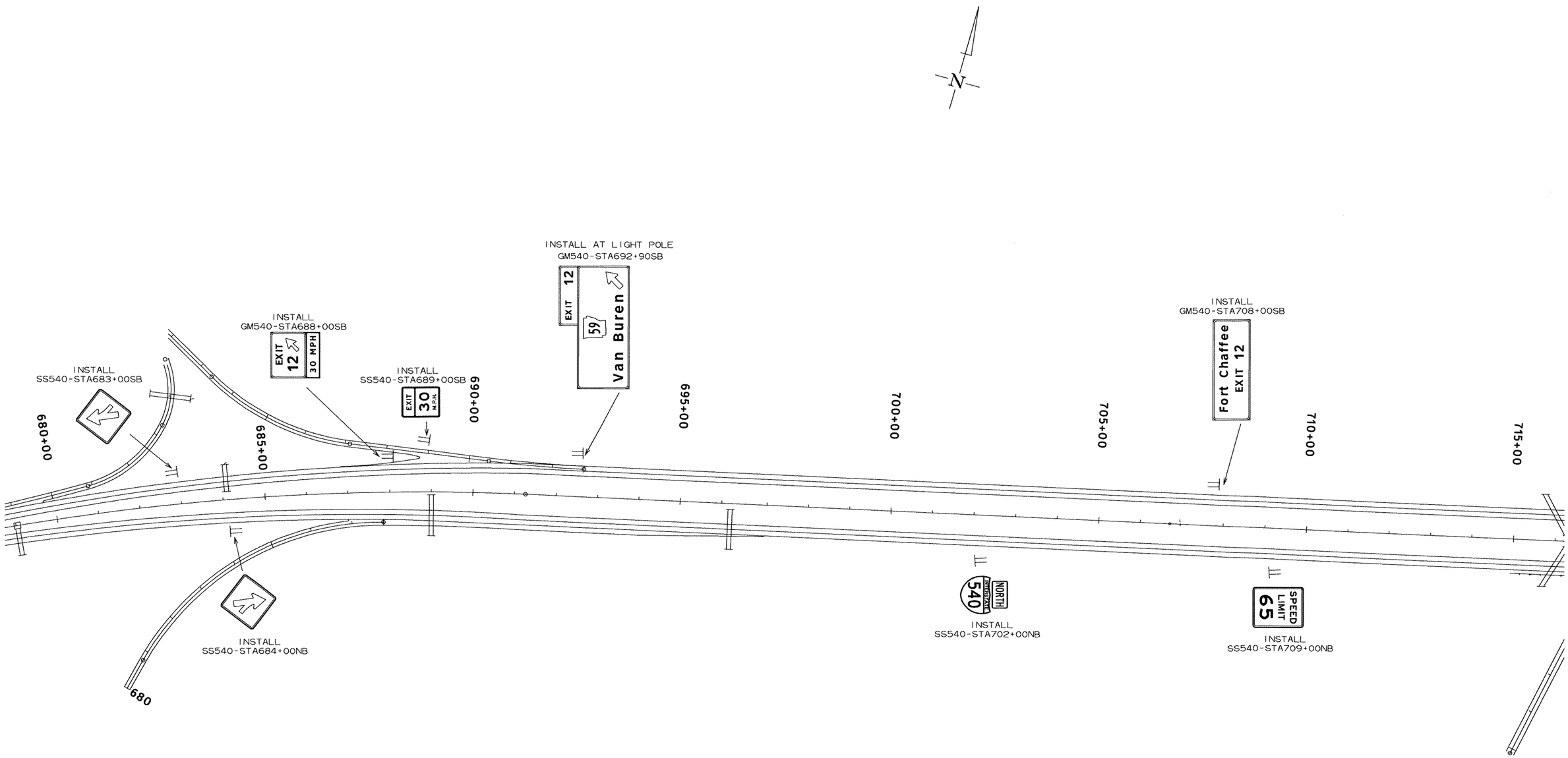

STATE OF ARKANSAS
REGISTERED PROFESSIONAL ENGINEER
No. 5851
L. TONY SULLIVAN
8/30/12

DATE REVISED	DATE FILMED	DATE REVISED	DATE FILMED	FED.RD. DIST.NO.	STATE	FED.AID PROJ.NO.	SHEET NO.	TOTAL SHEETS
				6	ARK.			
				JOB NO.		BB0407	419	464

(2) SIGN PLACEMENT SHEET

STA. 716+00 TO STA. 760+00

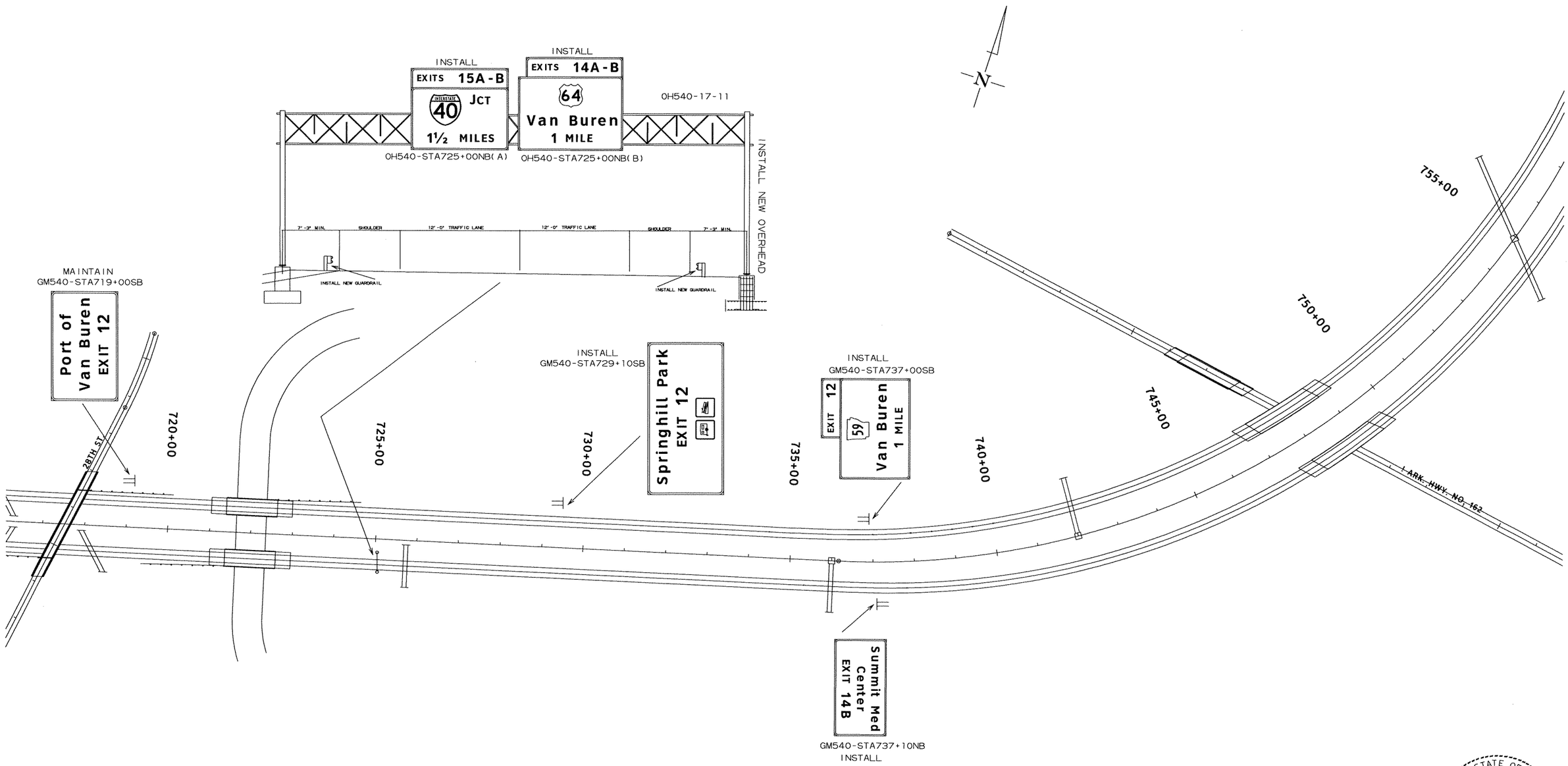

STATE OF ARKANSAS
REGISTERED PROFESSIONAL ENGINEER
No. 5851
L. TONY SULLIVAN
8/30/12

DATE REVISED	DATE FILMED	DATE REVISED	DATE FILMED	FED.RD. DIST.NO.	STATE	FED.AID PROJ.NO.	SHEET NO.	TOTAL SHEETS
				6	ARK.			
				JOB NO.		BB0407	420	464

(2) SIGN PLACEMENT SHEET

STA. 760+00 TO STA. 795+00

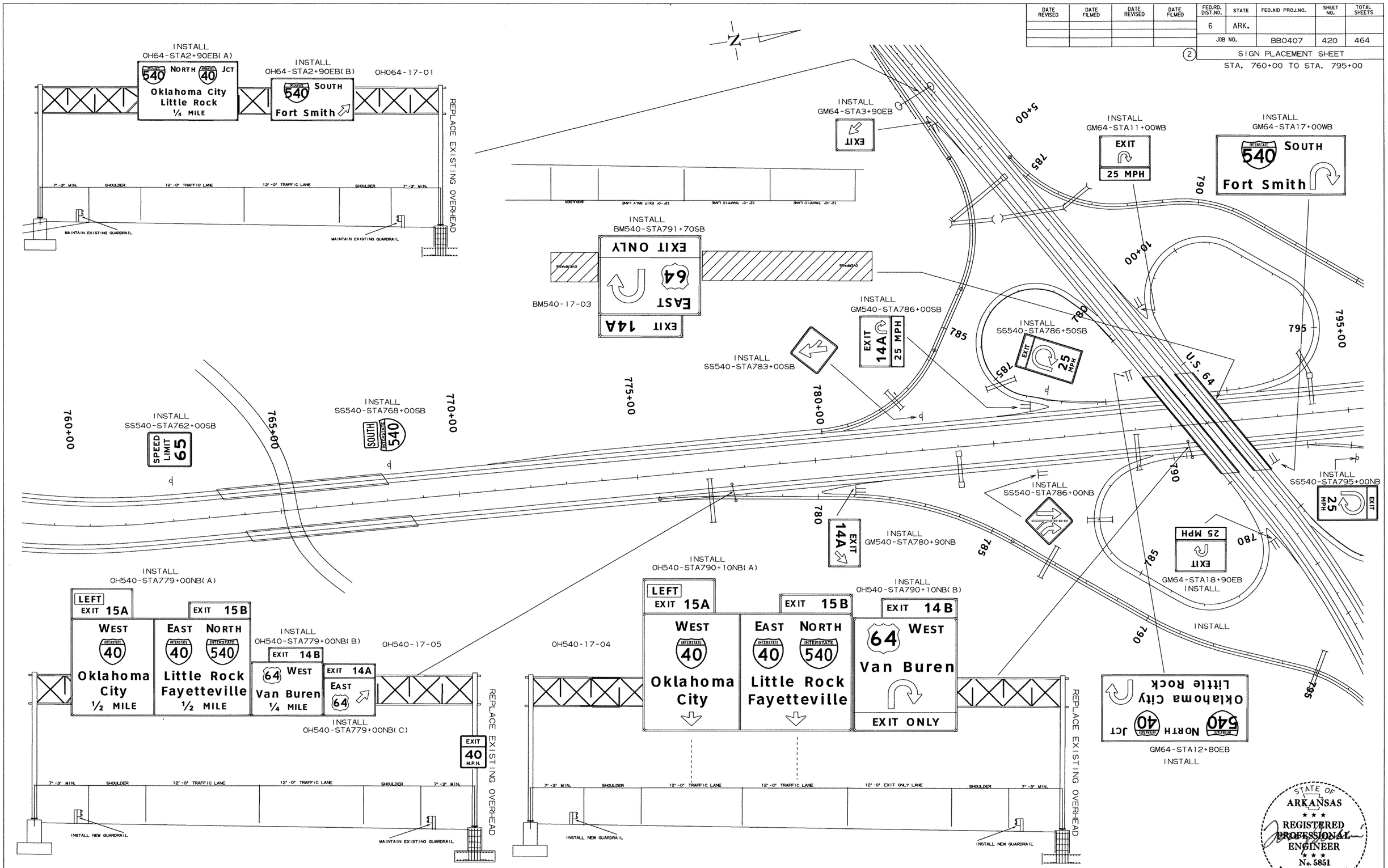

STATE OF ARKANSAS
REGISTERED PROFESSIONAL ENGINEER
No. 5851
L. TONY SULLIVAN
8/30/12

DATE REVISED	DATE FILMED	DATE REVISED	DATE FILMED	FED.RD. DIST.NO.	STATE	FED.AID PROJ.NO.	SHEET NO.	TOTAL SHEETS
				6	ARK.			
				JOB NO.		BB0407	421	464

(2) SIGN PLACEMENT SHEET

STA. 795+00 TO STA. 840+00

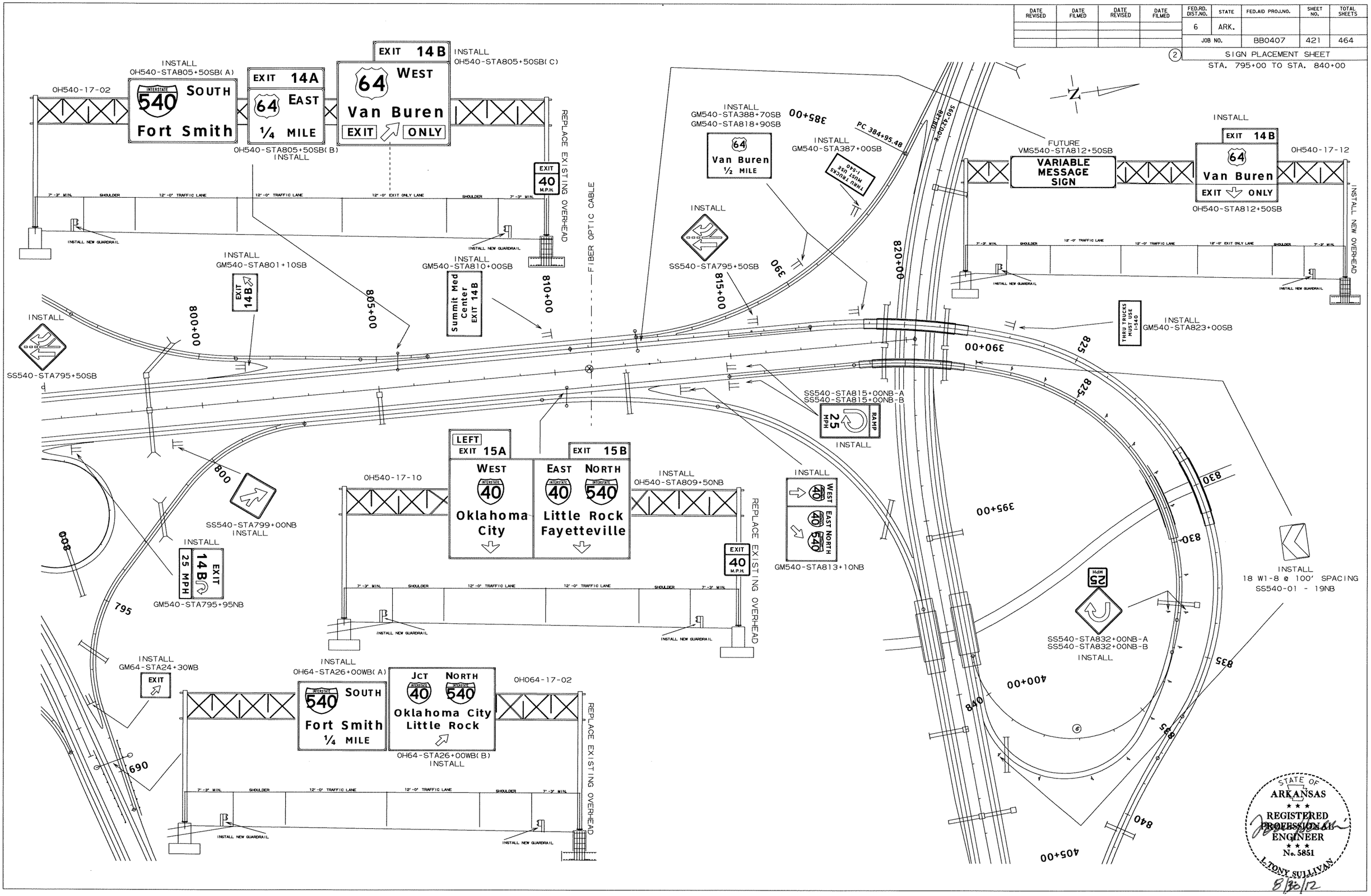

STATE OF ARKANSAS
REGISTERED PROFESSIONAL ENGINEER
No. 5851
L. TONY SULLIVAN
8/30/12

DATE REVISED	DATE FILMED	DATE REVISED	DATE FILMED	FED.RD. DIST.NO.	STATE	FED.AID PROJ.NO.	SHEET NO.	TOTAL SHEETS
				6	ARK.			
				JOB NO.		BB0407	421A	464

(2) MOUNTING DETAILS FOR DEMOUNTABLE LEGEND ON GUIDE SIGNS

THE CONTRACTOR SHALL DRILL AND POP-RIVET LEGEND, SHIELDS, ARROWS, OR OTHER COPY AS SHOWN.

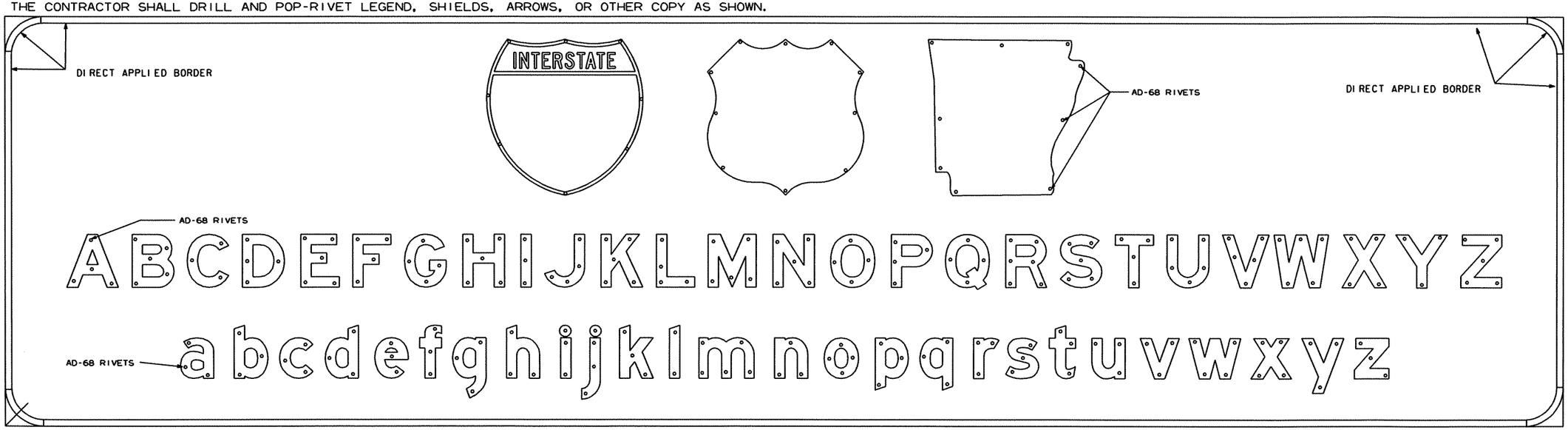

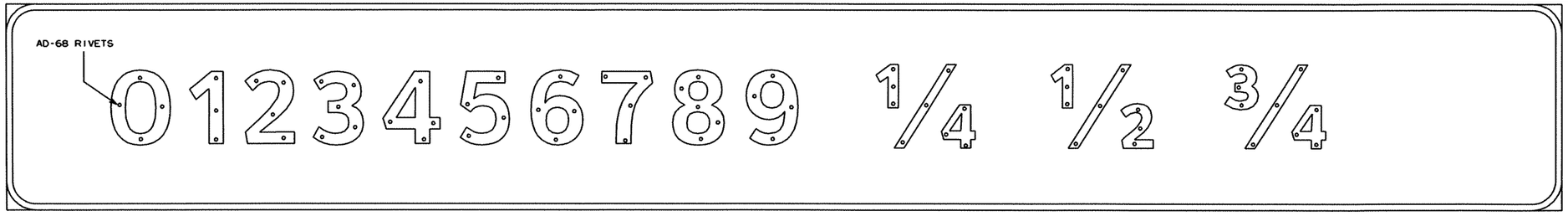

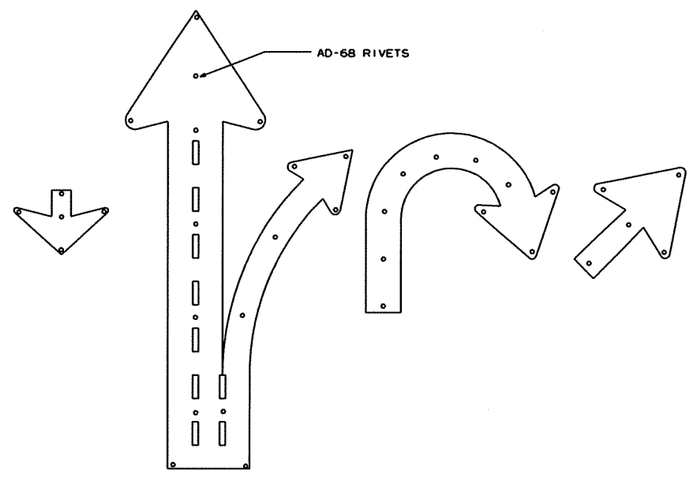

NOTE:

LEGEND ON GUIDE SIGNS ON THE MAIN LANES SHALL BE DEMOUNTABLE LEGEND.
LEGEND ON GUIDE SIGNS ON CROSS ROADS AND RAMPS SHALL BE DIRECT APPLIED.
THE DEMOUNTABLE AND DIRECT APPLIED LEGENDS SHALL BE TYPE VIII OR IX SHEETING.

THE BACKGROUND ON ALL GUIDE SIGNS AND STANDARD SIGNS SHALL BE CONSTRUCTED USING TYPE III SHEETING.
TYPE IX SHEETING FOR BORDER, LEGEND, SHIELDS, ARROWS, OR OTHER COPY SHALL BE ORIENTED VERTICALLY AS PER MANUFACTURERS' DATUM MARKS, ORIENTATION MARKS, OR OTHER RECOMMENDATIONS.

SIGN LEGEND, SHIELDS, ARROWS OR OTHER COPY SHALL BE APPLIED WITH RIVETS ONLY.
NO OTHER METHOD OF APPLYING CHARACTERS IS ALLOWED.

STATE OF ARKANSAS
REGISTERED PROFESSIONAL ENGINEER
No. 5851
L. TONY SULLIVAN
8/30/12

MOUNTING DETAILS FOR DEMOUNTABLE LEGEND ON GUIDE SIGNS

DATE REVISED	DATE FILMED	DATE REVISED	DATE FILMED	FED.RD. DIST.NO.	STATE	FED.AID PROJ.NO.	SHEET NO.	TOTAL SHEETS
				6	ARK.			
				JOB NO.		BB0407	421B	464
				(2)	EXIT PANEL DETAILS			

TYPICAL DETAIL

TYPE A

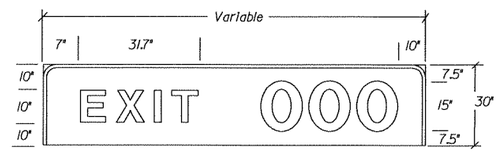

EXIT WITH 1 DIGIT 84"X30"=17.50 SF
EXIT WITH 2 DIGITS 96"X30"=20.0 SF
EXIT WITH 3 DIGITS 114"X30"=23.57 SF

TYPE B

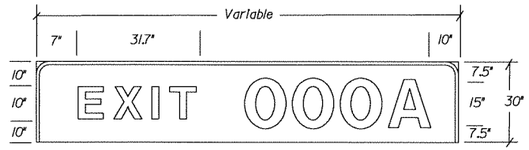

EXIT WITH 1 DIGIT PLUS "A"OR"B" 96"X30"=20.0 SF
EXIT WITH 2 DIGITS PLUS "A"OR"B" 114"X30"=23.57 SF
EXIT WITH 3 DIGITS PLUS "A"OR"B" 126"X30"=26.25 SF

TYPE D

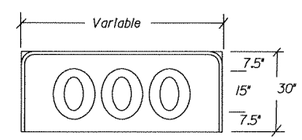

1 DIGIT 24"X30" =5.0 SF
2 DIGITS 42"X30" =8.75 SF
3 DIGITS 60"X30" =12.50 SF

TYPE C

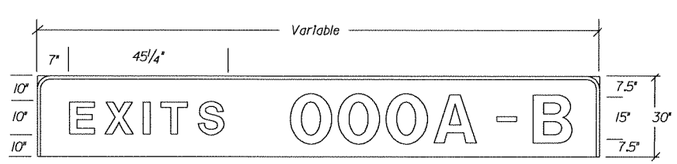

EXITS WITH 1 DIGIT PLUS "A"&"B" 132"X30"=27.50 SF
EXITS WITH 2 DIGITS PLUS "A"&"B" 150"X30"=31.25 SF
EXITS WITH 3 DIGITS PLUS "A"&"B" 168"X30"=35.00 SF

TYPE E

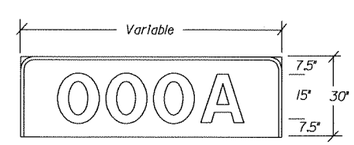

1 DIGIT PLUS "A"OR"B" 42"X30"=8.75 SF
2 DIGITS PLUS "A"OR"B" 60"X30"=12.50 SF
3 DIGIT PLUS "A"OR"B" 78"X30"=16.25 SF

STATE OF ARKANSAS
REGISTERED PROFESSIONAL ENGINEER
No. 5851
L. TONY SULLIVAN
8/30/12

EXIT PANEL DETAILS

DATE REVISED	DATE FILMED	DATE REVISED	DATE FILMED	FED.RD. DIST.NO.	STATE	FED.AID PROJ.NO.	SHEET NO.	TOTAL SHEETS
				6	ARK.			
				JOB NO.		BB0407	421C	464
				(2)	I-BEAM SIGN SUPPORTS			

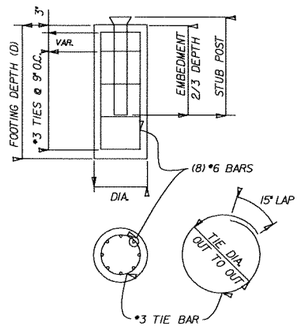

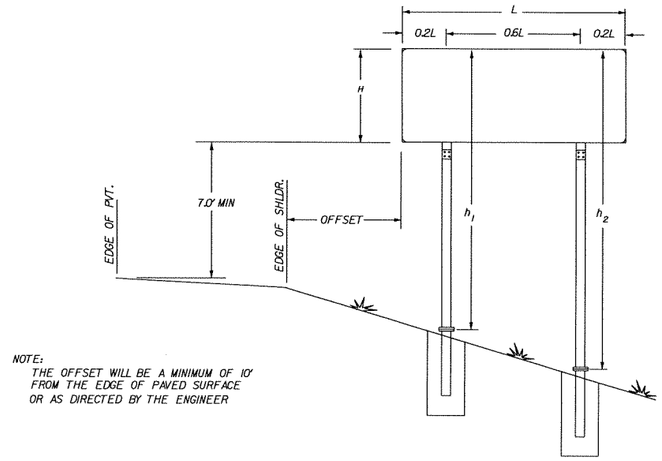

NOTE:
THE OFFSET WILL BE A MINIMUM OF 10' FROM THE EDGE OF PAVED SURFACE OR AS DIRECTED BY THE ENGINEER

G-I

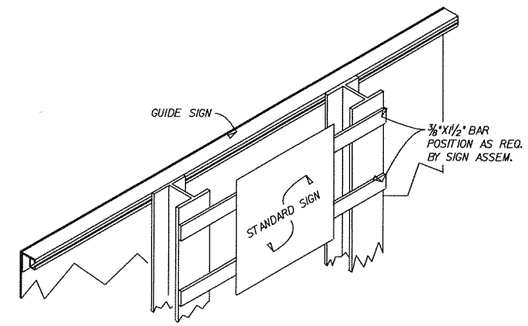

SECONDARY SIGN INSTALLATION ON BACKSIDE OF GUIDE SIGN

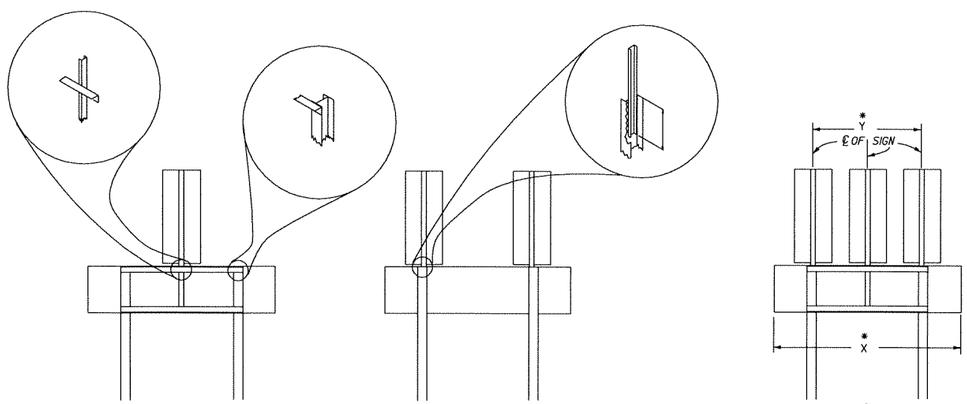

A B C

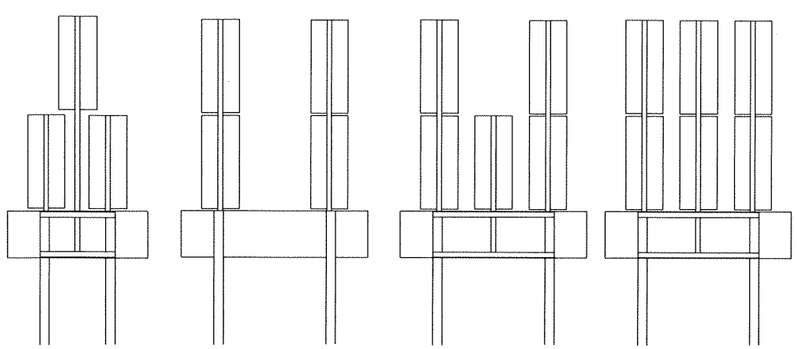

D E F G

TRIPLE ASSEM.(C or D)

* Y	* X	TYPE ASSEM.
4'-4"	≥ 7'-6"	G-IC
4'-4"	< 7'-6"	G-ID
4'-10"	≥ 8'-0"	G-IC
4'-10"	< 8'-0"	G-ID
5'-1"	≥ 8'-6"	G-IC
5'-1"	< 8'-6"	G-ID
5'-4"	≥ 9'-0"	G-IC
5'-4"	< 9'-0"	G-ID

LEGEND
≥ GREATER THAN OR EQUAL TO
< LESS THAN

FOOTING QUANTITIES

FTG. DEPTH	NO. OF TIES	STUB PROJ.	18" DIA.		24" DIA.		30" DIA.		36" DIA.		"A"
			CU.YD.	# STEEL	CU.YD.	# STEEL	CU.YD.	# STEEL	CU.YD.	# STEEL	EMBED.
2'-6"	4	4 "	0.16	30.5							1'-8"
3'-0"	4	4 "	0.20	36.6							2'-0"
3'-6"	5	4 "	0.23	44.2							2'-4"
4'-0"	6	4 "	0.26	51.8	0.46	55.4					2'-8"
4'-6"	7	4 "	0.29	59.5	0.52	63.6					3'-0"
5'-0"	7	4 "	0.33	65.5	0.58	69.6	0.91	73.8			3'-4"
5'-6"	8	4 "			0.64	77.9	1.00	82.6			3'-8"
6'-0"	9	4 "			0.70	86.7	1.09	91.5	1.57	96.5	4'-0"
6'-6"	9	4 "					1.18	97.5	1.70	102.6	4'-4"
7'-0"	10	4 "					1.27	106.3	1.83	111.9	4'-8"
7'-6"	11	4 "							1.96	121.3	5'-0"
8'-0"	11	4 "							2.09	127.3	5'-4"

REINFORCING STEEL SCHEDULE

FTG. DIA. IN.	#3 TIE BARS			FTG. DEPTH FT./IN.	(8) #6 BARS		NO. TIES EA.
	DIA. IN.	LGTH.-EA. FT./IN.	WEIGHT LBS.		LGTH.-EA. FT./IN.	WEIGHT LBS.	
18"	12"	4'-4"	1.629	2'-6"	2'-0"	24.03	4
				3'-0"	2'-6"	30.04	4
24"	18"	5'-11"	2.225	3'-6"	3'-0"	36.05	5
				4'-0"	3'-6"	42.06	6
30"	24"	7'-6"	2.820	4'-6"	4'-0"	48.06	7
				5'-0"	4'-6"	54.07	7
36"	30"	9'-0"	3.384	5'-6"	5'-0"	60.08	8
				6'-0"	5'-6"	66.09	9
				6'-6"	6'-0"	72.10	9
				7'-0"	6'-6"	78.10	10
				7'-6"	7'-0"	84.11	11
				8'-0"	7'-6"	90.12	11

STATE OF ARKANSAS
REGISTERED PROFESSIONAL ENGINEER
No. 5851
L. TONY SULLIVAN
8/30/12

I-BEAM SIGN SUPPORTS

DATE REVISED	DATE FILMED	DATE REVISED	DATE FILMED	FED.RD. DIST.NO.	STATE	FED.AID PROJ.NO.	SHEET NO.	TOTAL SHEETS
				6	ARK.			
				JOB NO.		BB0407	421D	464

(2) SPECIAL DETAILS SHOWING BREAKAWAY SIGN SUPPORTS (I-BEAM)

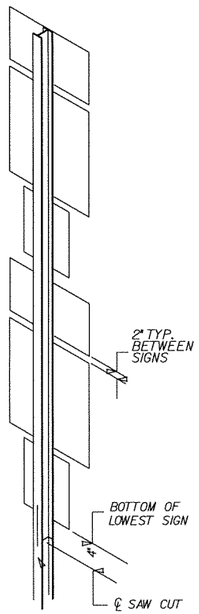

TYPE-1

I-BEAM (TYPICAL)

BASIS OF ESTIMATE
APPROX. 325 lbs STEEL

FOOTING
DIA. 1'-6"
DEPTH 4'-6"
EMBED. 4'-0" MIN.

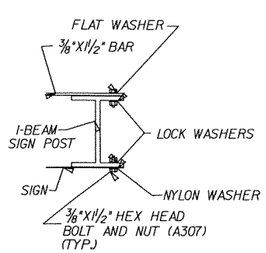

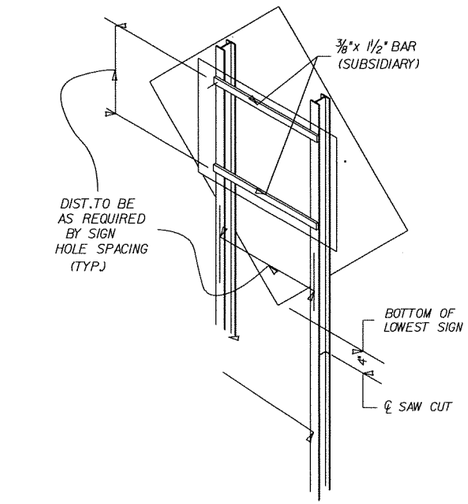

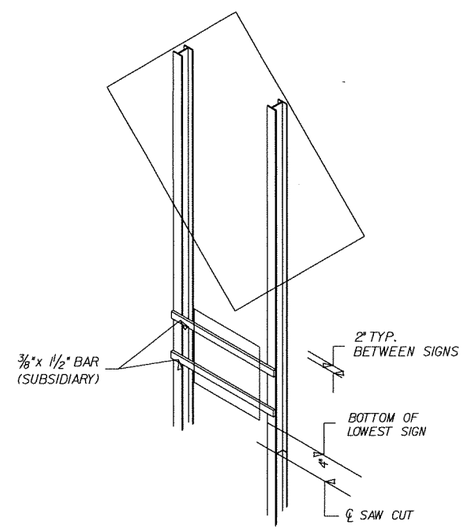

TYPE-2

I-BEAM (TYPICAL)

BASIS OF ESTIMATE
APPROX. 160 lbs STEEL

FOOTING
DIA. 1'-0"
DEPTH 3'-6"
EMBED. 3'-0" MIN.

NOTE

ALL ADDITIONAL MOUNTING HARDWARE, BOLTS, NUTS, CHANNELS AND BAR STRAPS REQUIRED TO MOUNT SECONDARY SIGNS WILL BE CONSIDERED TO BE SUPPLEMENTAL TO THE MAIN SIGN SUPPORT SPECIFIED. PAYMENT WILL BE CONSIDERED SUBSIDIARY TO THE MAIN SUPPORT .

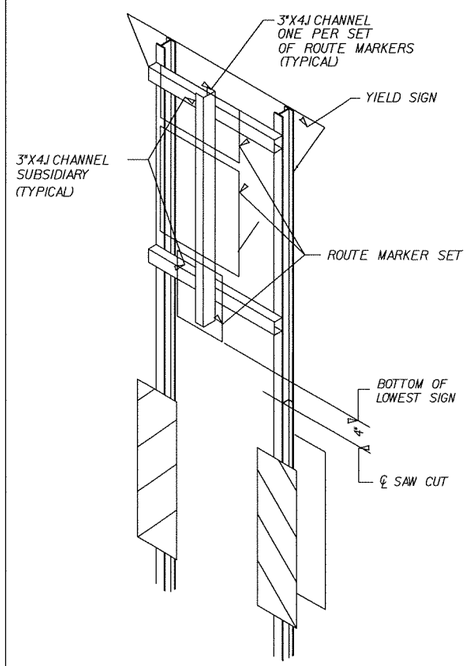

TYPE-3

I-BEAM (TYPICAL)

BASIS OF ESTIMATE
APPROX. 160 lbs STEEL

FOOTING
DIA. 1'-0"
DEPTH 3'-6"
EMBED. 3'-0" MIN.

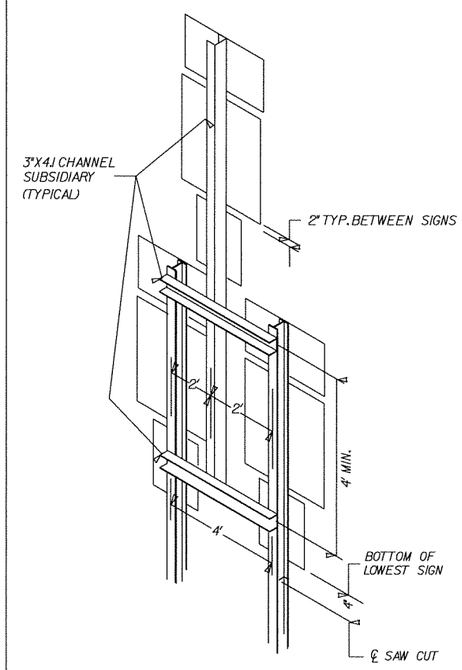

TYPE-4

I-BEAM (TYPICAL)

BASIS OF ESTIMATE
APPROX. 325 lbs STEEL

FOOTING
DIA. 1'-0"
DEPTH 3'-6"
EMBED. 3'-0" MIN.

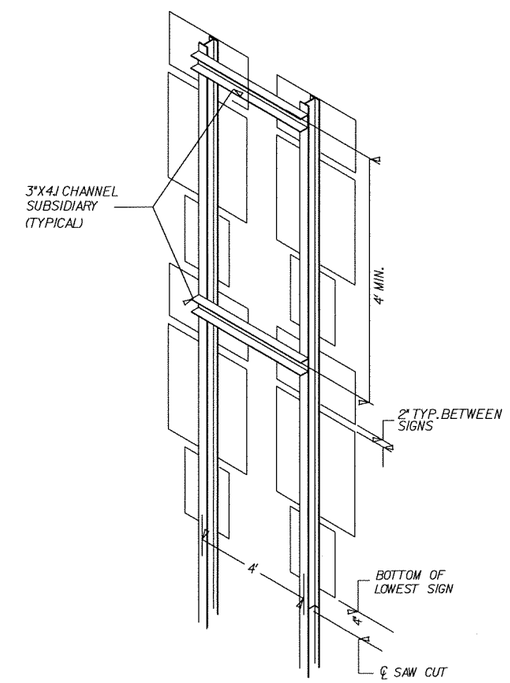

TYPE-5

I-BEAM (TYPICAL)

BASIS OF ESTIMATE
APPROX. 325 lbs STEEL

FOOTING
DIA. 1'-0"
DEPTH 3'-6"
EMBED. 3'-0" MIN.

NOTE:

THE GALVANIZED STEEL CHANNEL AND BAR SUPPORTS MAY BE ASTM A-36.

FOOTING DESIGN IS BASED ON THE FOLLOWING:
AVG. SOIL PRESSURE S =1200LBS PER SQ.FT.
MAX. FOUNDATION PRESSURE = 3000LBS. PER SQ.FT.
ALL CONCRETE TO BE CLASS "S".

REFER TO THE P.C. RUTLEDGE FORMULA ON PAGE 58 OF THE AASHTO PUBLICATION "STANDARD SPECIFICATIONS FOR STRUCTURAL SUPPORTS FOR HIGHWAY SIGNS, LUMINAIRES, AND TRAFFIC SIGNALS".

ALL BOLT HOLES SHALL BE 1/8" DIA. UNLESS OTHERWISE SHOWN.

STATE OF ARKANSAS
REGISTERED PROFESSIONAL ENGINEER
No. 5851
L. TONY SULLIVAN
8/30/12

SPECIAL DETAILS SHOWING BREAKAWAY SIGN SUPPORTS (I-BEAM)
- FOR STANDARD SIGNS -

DATE REVISED	DATE FILMED	DATE REVISED	DATE FILMED	FED.RD. DIST.NO.	STATE	FED.AID PROJ.NO.	SHEET NO.	TOTAL SHEETS
				6	ARK.			
				JOB NO.		BB0407	421E	464

(2) DETAILS OF I-BEAM SIGN SUPPORTS

NOTE: BOLT HOLES, USED IN THE MOUNTING OF STANDARD SIGNS SHALL BE LOCATED IN THE FLANGE ADJACENT TO THE NEAR EDGE OF PAVEMENT FOR SINGLE POST ASSEMBLIES AND IN THE OUTSIDE FLANGES FOR MULTIPLE POST ASSEMBLIES.

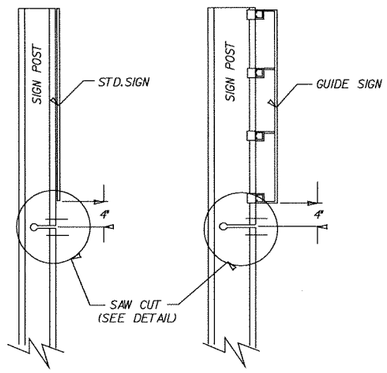

NOTE: POST SHALL BE SAW CUT AFTER GALVANIZING AND THE CUT SURFACE TREATED, AFTER PLATE IS INSTALLED AND ALL BOLTS FULLY TIGHTENED, WITH AN APPROVED ZINC SOLDER MEETING THE FEDERAL SPEC. O-G-93 (STICK ONLY).

Standard Signs

Guide Signs

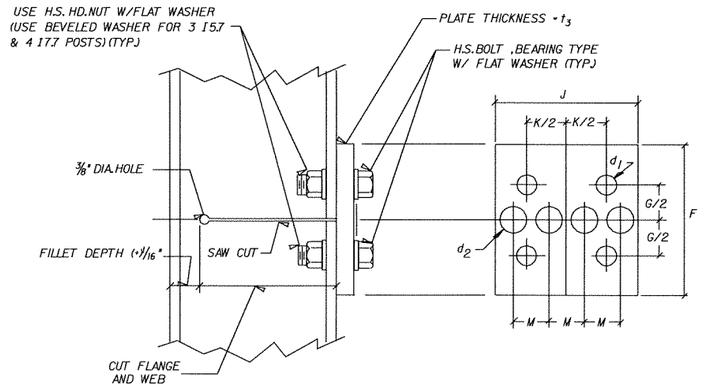

NOTE: USE H.S. HEX HEAD BOLTS, HEX HEAD NUTS AND BEVEL OR FLAT WASHERS (WHERE REQ.) UNDER NUTS. ALL HOLES SHALL BE DRILLED. ALL PLATE CUTS SHALL PREFERABLY BE SAW CUTS. HOWEVER FLAME CUTTING WILL BE PERMITTED PROVIDED ALL EDGES ARE GROUND. METAL PROJECTING BEYOND THE PLANE OF THE PLATE FACE WILL NOT BE PERMITTED. STEEL FUSE PLATES SHALL CONFORM TO THE REQUIREMENTS OF ASTM-A36, ASTM-A441, ASTM-572 GRADE 50, OR ASTM-A588 MAY BE SUBSTITUTED FOR A36 AT THE OPTION OF THE FABRICATOR. STEEL USED SHALL HAVE AN ULTIMATE TENSILE STRENGTH NOT TO EXCEED 80 KSI.

POST SIZE	BASE CONNECTION DATA											FUSE PLATE DATA										
	BOLT SIZE	BOLT TORQUE (INCH/LBS)	A	B	C	D	E	t_1	t_2	W	R	F	G		J	K	M	d_1	d_2	t_3	BOLT SIZE	WT. OF EACH FUSE PLATE LBS.
W 6X9	5/8" x 2 3/4"	450"-680"	5"	2"	1 1/4"	2 3/4"	1 1/8"	3/4"	1/2"	1/4"	11/32"	4 1/4"	2"		4"	2 1/4"	1"	9/16"	3/4"	1/4"	1/2" x 1 1/2"	1.01
W 6X12												5"	2 1/2"		6"	3 1/2"	1 1/2"	11/16"	1 1/4"	3/8"	5/8" x 2 1/4"	2.51
W 6X15																						
W 8X18	3/4" x 3 1/2"	750"-1050"	6"	2 1/4"	1 3/8"	3 1/2"	1 1/4"	1"	3/4"	5/16"	11/32"	5"	2 1/2"		5 1/4"	2 3/4"	1 1/4"	11/16"	1 1/16"	3/8"	3/4" x 2 1/4"	2.26
W 8X21												5 1/2"	2 1/2"		5 1/4"	2 3/4"	1 1/4"	13/16"	1"	1/2"	3/4" x 2 1/4"	3.35
W 10X22												6"	3"		5 3/4"	2 3/4"	1 3/8"	13/16"	1 1/8"	1/2"	3/4" x 2 1/4"	4.03
W 10X26																						
W 12X26												6"	3"		6 1/2"	3 1/2"	1 5/8"	13/16"	1 5/16"	1/2"	3/4" x 2 1/4"	4.47

FUSE PLATE DETAILS

FURNISH 2 ~ .012"+/- THICK AND 2 ~ .032"+/- THICK SHIMS PER POST

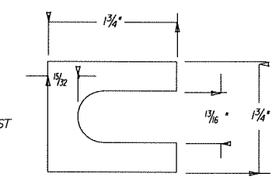

SHIM DETAIL

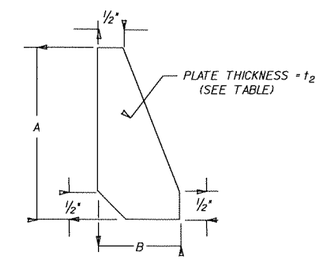

STIFFENER PLATE DETAIL

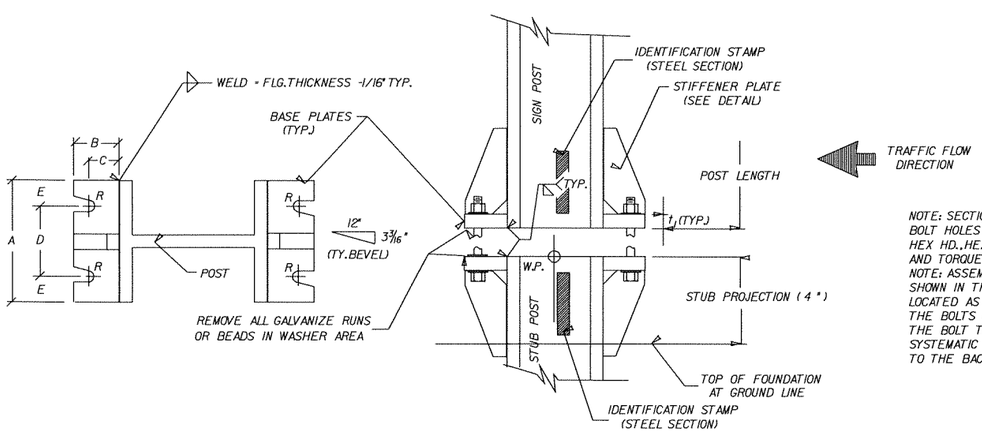

NOTE: SECTIONS SHOWN ARE FOR INSTALLATION ON THE RIGHT SHOULDER AND IN THE GORE. BOLT HOLES IN BASE PLATE ARE SLOTTED AND BEVELED AS SHOWN. USE H.S. BOLTS WITH HEX HD., HEX NUT AND THREE FLAT WASHERS FOR EACH BOLT. SEE TABLE FOR BOLT DIA. AND TORQUE.

NOTE: ASSEMBLE SIGN POST TO STUB POST USING THE BOLTS SPEC. IN THE TABLE AND AS SHOWN IN THE ELEVATION DETAILS. THERE SHALL BE THREE FLAT WASHERS ON EACH BOLT LOCATED AS SHOWN IN THE ELEVATIONS. USE A SHIM TO PLUMB THE SIGN POST, THEN TIGHTEN THE BOLTS USING A 12" TO 15" WRENCH UNTIL THE WASHERS AND SHIMS ARE SEATED AND THE BOLT THREADS ARE CLEAR, THEN LOOSEN EACH BOLT IN TURN AND RETIGHTEN IN A SYSTEMATIC ORDER TO THE PRESCRIBED TORQUE (SEE TABLE). THE BURR THREADS ADJACENT TO THE BACK SIDE OF THE NUT TO PREVENT LOOSENING.

SIGN POST AND STUB POST

GENERAL NOTES

TIGHTEN THE HIGH STRENGTH BOLTS IN THE BASE CONNECTION ONLY TO THE TORQUE SHOWN. DO NOT OVERTIGHTEN.

BASE PLATES AND STIFFENER PLATES SHALL BE OF THE SAME MATERIAL AS THE PRIMARY SUPPORT POSTS WHICH THEY ARE WELDED.

FOR FOOTING DETAILS REFER TO PLANS.

EACH STUB POST AND SIGN POST SHALL HAVE A PERMANENT IDENTIFYING STAMP WHICH SPECIFIES THE STEEL SECTION USED. IF THE CONTRACTOR ELECTS TO SHIP THE STUB POST SEPARATE FROM THE SIGN POST A MATCH MARK SYSTEM WILL BE REQUIRED.

STATE OF ARKANSAS
REGISTERED PROFESSIONAL ENGINEER
No. 5851
L. TONY SULLIVAN
8/30/12

DETAILS OF I-BEAM SIGN SUPPORTS

DATE REVISED	DATE FILMED	DATE REVISED	DATE FILMED	FED.RD. DIST.NO.	STATE	FED.AID PROJ.NO.	SHEET NO.	TOTAL SHEETS
				6	ARK.			
				JOB NO.		BB0407	421F	464

(2) DETAILS OF GUIDE SIGN PANELS

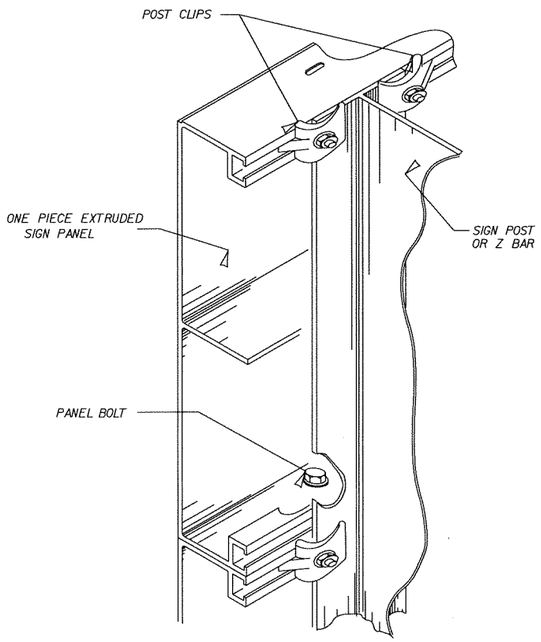

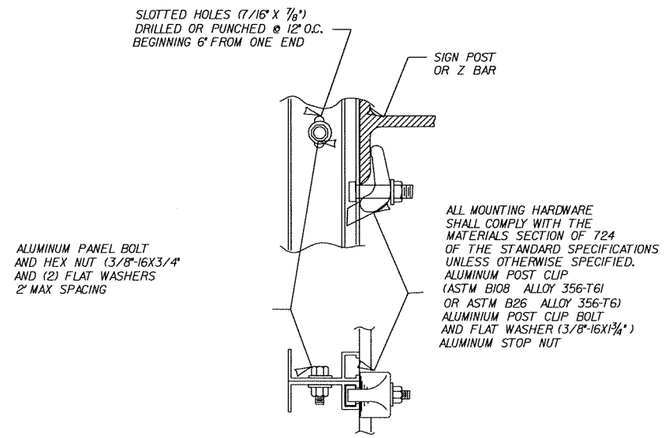

MOUNTING HARDWARE

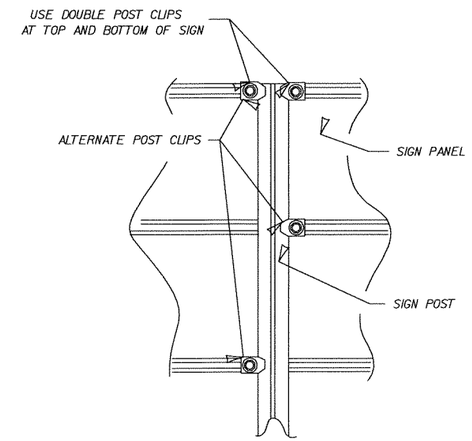

POST CLIP PLACEMENT

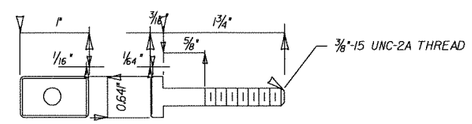

POST CLIP BOLT

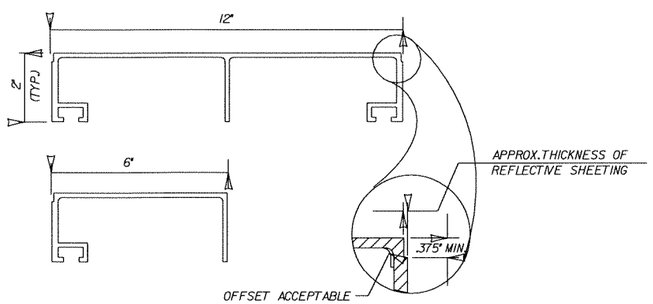

ONE PIECE EXTRUDED SIGN PANELS

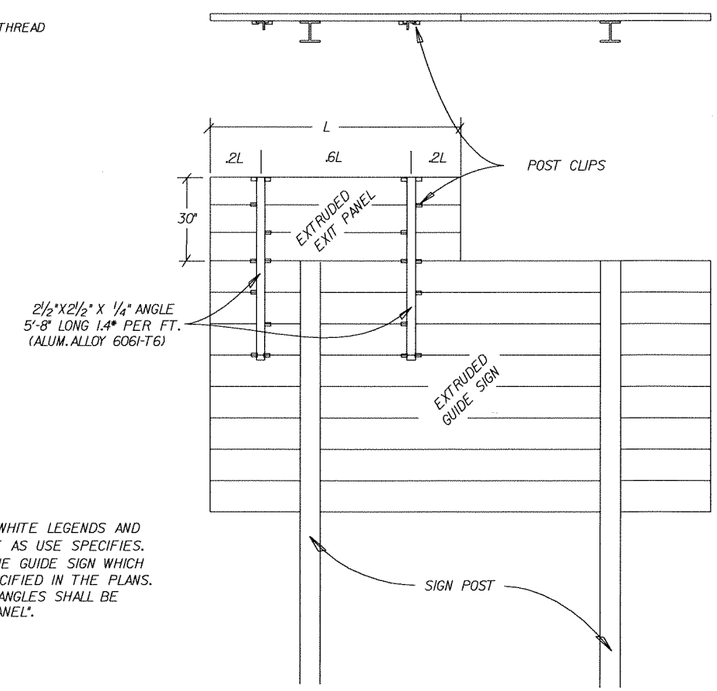

NOTE: EXIT NUMBER PANELS SHALL HAVE WHITE LEGENDS AND BORDERS. THE BACKGROUND COLOR WILL BE AS USE SPECIFIES. SHEETING TYPE WILL BE THE SAME AS THE GUIDE SIGN WHICH THE EXIT PANEL IS ATTACHED OR AS SPECIFIED IN THE PLANS. PAYMENT FOR ALL POST CLIPS, BOLTS, AND ANGLES SHALL BE SUBSIDIARY TO THE ITEM "EXIT NUMBER PANEL".

STATE OF ARKANSAS REGISTERED PROFESSIONAL ENGINEER No. 5851 L. TONY SULLIVAN 8/30/12

DETAILS OF GUIDE SIGN PANELS

DATE REVISED	DATE FILMED	DATE REVISED	DATE FILMED	FED.RD. DIST.NO.	STATE	FED.AID PROJ.NO.	SHEET NO.	TOTAL SHEETS
				6	ARK.			
				JOB NO.		BB0407	421G	464

(2) DETAIL OF SIGN PLACEMENT

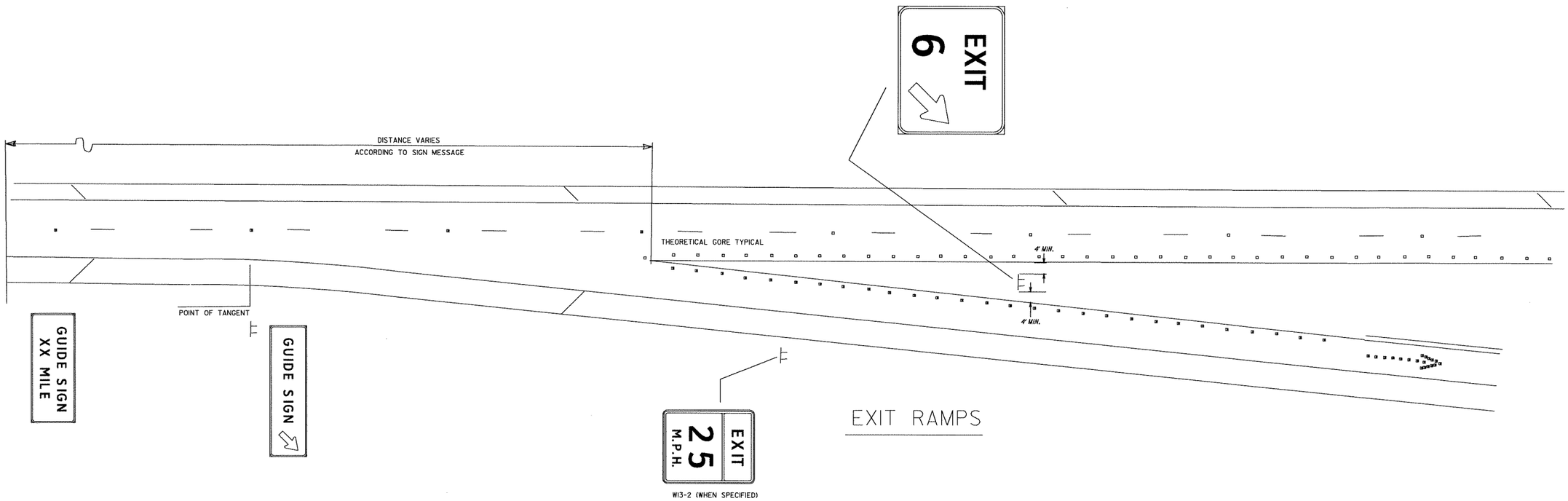

STATE OF ARKANSAS
REGISTERED PROFESSIONAL ENGINEER
No. 5851
L. TONY SULLIVAN
6/30/12

DETAIL OF SIGN PLACEMENT

DATE REVISED	DATE FILMED	DATE REVISED	DATE FILMED	FED. ROAD DIST. NO.	STATE	FED. AID PROJ. NO.	SHEET NO.	TOTAL SHEETS
04-10-2003				6	ARK.		4/22	
				JOB NO.				
				1	EMBANKMENT & BACKFILL		1888A	

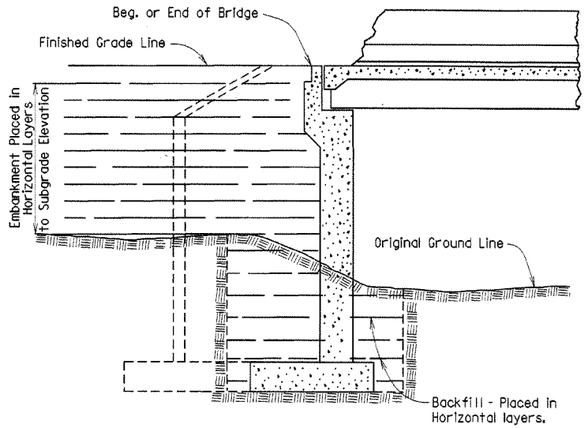

EMBANKMENT CONSTRUCTION AND FOOTING BACKFILL AT VERTICAL WALL ABUTMENTS

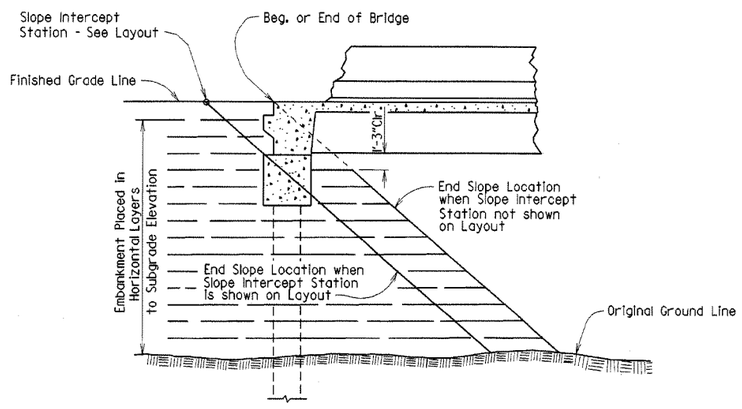

EMBANKMENT CONSTRUCTION AT SPILL-THROUGH PILE END BENTS

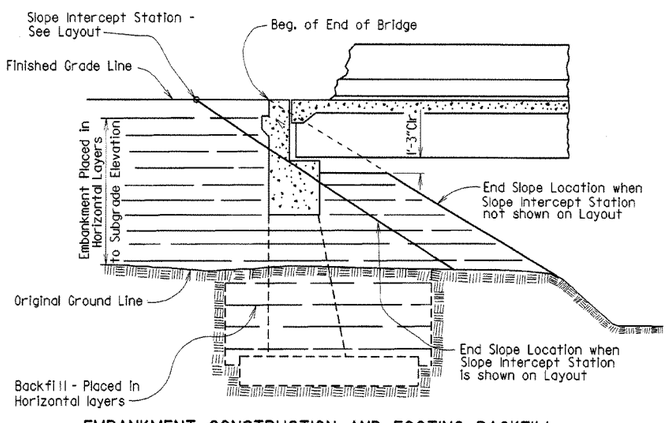

EMBANKMENT CONSTRUCTION AND FOOTING BACKFILL AT SPILL-THROUGH END BENTS

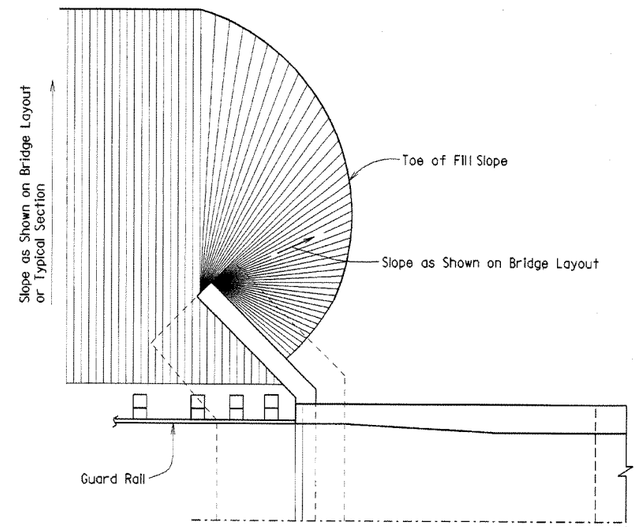

VERTICAL WALL ABUTMENTS

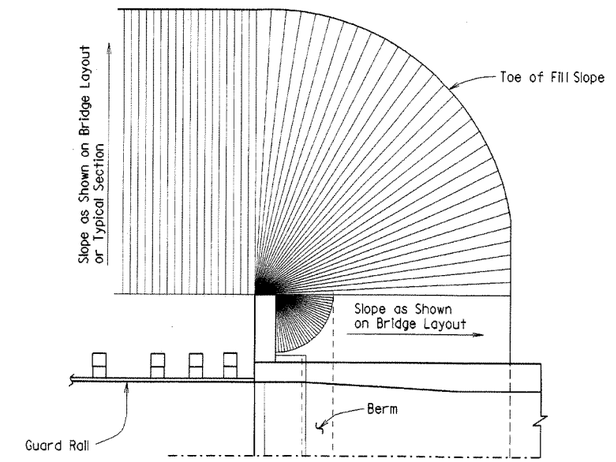

SPILL-THROUGH END BENTS WITH STUB WING

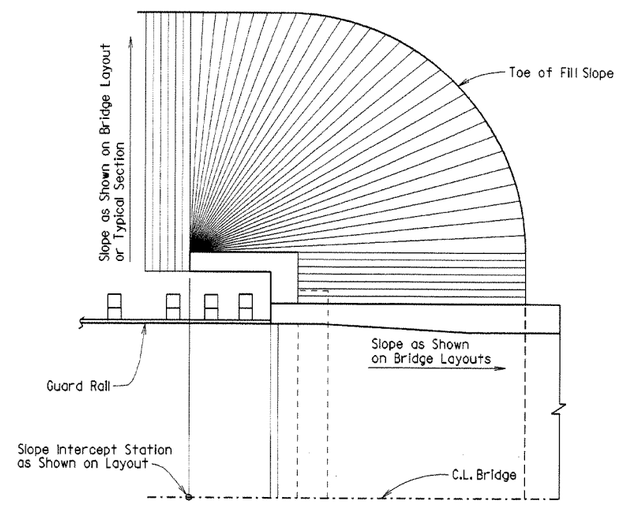

SPILL-THROUGH END BENTS WITH TURNBACK WING

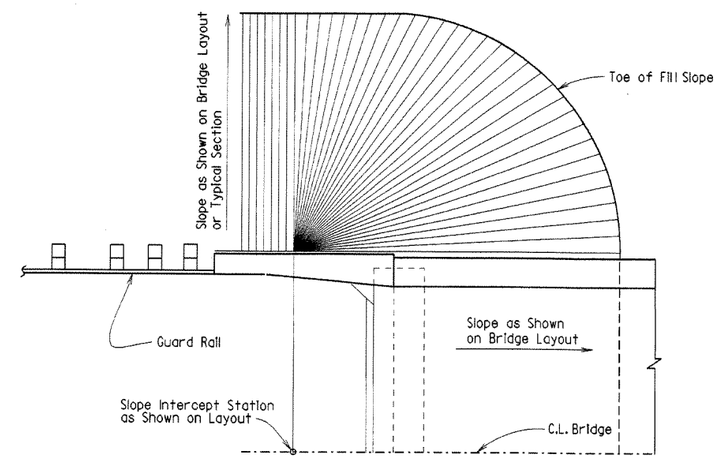

SPILL-THROUGH END BENTS WITH TRANSITION WING

METHOD OF DETERMINING FILL SLOPE LOCATION AT BRIDGE ENDS

GENERAL NOTES

The Bridge End Embankment shall be defined as a section of embankment, not less than 20 feet long adjacent to the bridge end, together with the side slopes and slopes under the bridge end including around the end of wingwalls. Embankment adjacent to structures shall be constructed in 4 inch horizontal layers (loose measure) and compacted by the use of mechanical equipment to the satisfaction of the Engineer. Refer to subsections 210.09, 210.10 and 801.08 of the Specifications for construction requirements.

⚠ Revised and redrawn MJT 04-10-2003
Chk'd. By: CJF 04-10-2003

STATE OF ARKANSAS
REGISTERED PROFESSIONAL ENGINEER
No. 4337
CHARLES P. BRAND

BRIDGE ENGINEER

EMBANKMENT CONSTRUCTION AND BACKFILL AT BRIDGE ENDS

ROUTE SEC.

ARKANSAS STATE HIGHWAY COMMISSION

LITTLE ROCK, ARK.

DRAWN BY: MJT DATE: 04-10-2003 FILENAME: BI888A.STD
CHECKED BY: CJF DATE: 04-10-2003 SCALE: NO SCALE
DESIGNED BY: STD. DATE: —

BRIDGE NO. DRAWING NO. 1888A

BI888A.STD

DATE REVISED	DATE FILMED	DATE REVISED	DATE FILMED	FED. ROAD DIST. NO.	STATE	FED. AID PROJ. NO.	SHEET NO.	TOTAL SHEETS
04-10-2003				6	ARK.		423	
				JOB NO.				
				1	RIP. & EXCAV.		1891F	

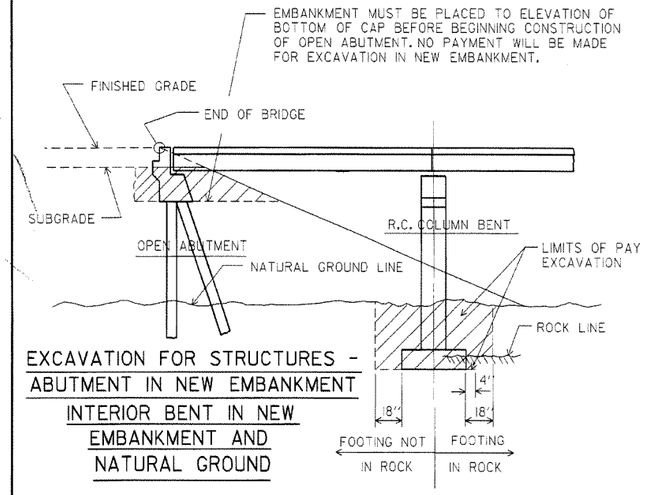

EXCAVATION FOR STRUCTURES - ABUTMENT IN NEW EMBANKMENT INTERIOR BENT IN NEW EMBANKMENT AND NATURAL GROUND

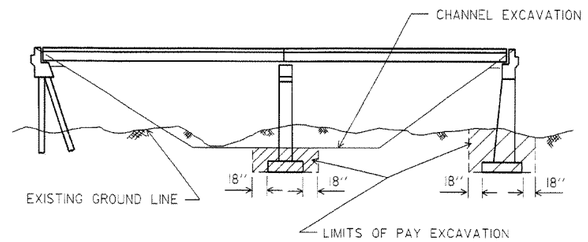

EXCAVATION FOR STRUCTURES - BRIDGE LOCATION WITH DESIGNATED CHANNEL CHANGE

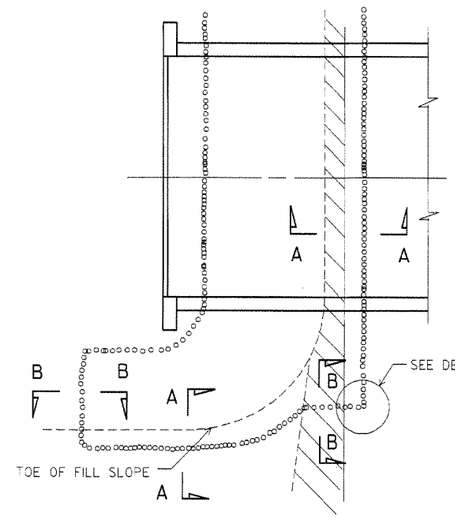

PLAN OF DUMPED RIPRAP

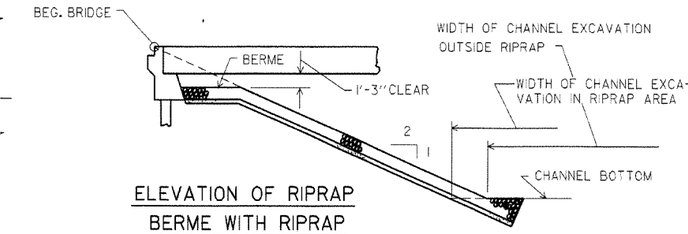

ELEVATION OF RIPRAP BERME WITH RIPRAP

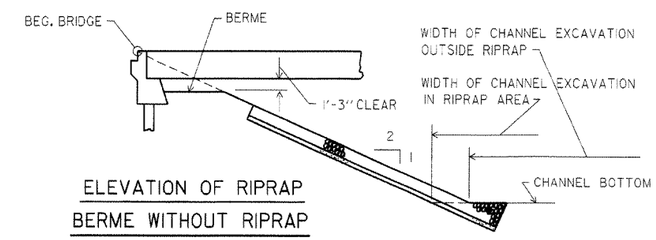

ELEVATION OF RIPRAP BERME WITHOUT RIPRAP

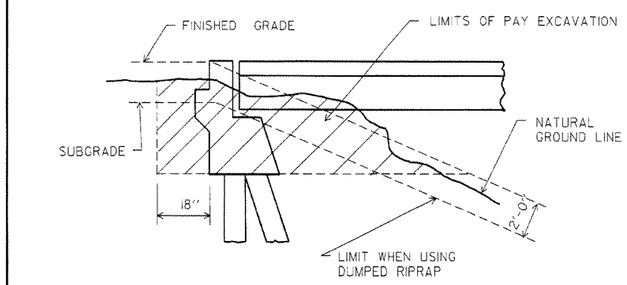

EXCAVATION FOR STRUCTURES - ABUTMENT IN NATURAL GROUND

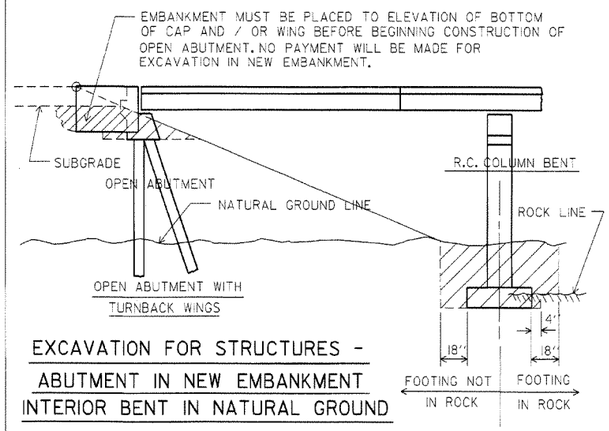

EXCAVATION FOR STRUCTURES - ABUTMENT IN NEW EMBANKMENT INTERIOR BENT IN NATURAL GROUND

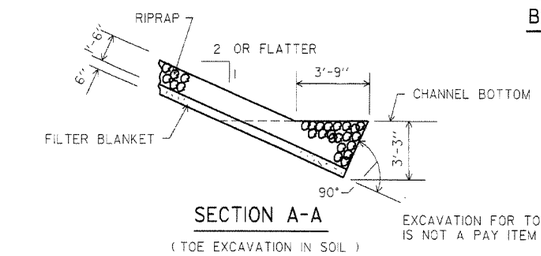

SECTION A-A

(TOE EXCAVATION IN SOIL)

EXCAVATION FOR TOES IS NOT A PAY ITEM

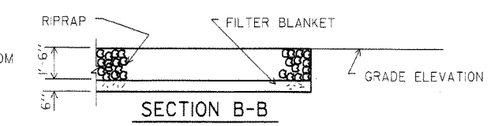

SECTION B-B

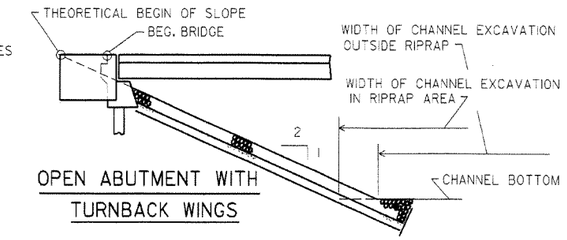

OPEN ABUTMENT WITH TURNBACK WINGS

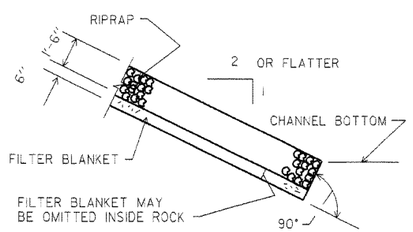

SECTION A-A

(TOE EXCAVATION IN ROCK)

NOTE : USE THIS TYPE OF TOE WHEN ROCK IS ENCOUNTERED WHICH IS IN A STABLE CONDITION.

NOTE : IN LIEU OF AN AGGREGATE FILTER BLANKET, A SYNTHETIC FIBER GEOTEXTILE FABRIC COMPLYING WITH THE REQUIREMENTS OF SUBSECTION 816.02(e) MAY BE USED.

NOTE : DETAILS FOR COMPUTING EXCAVATION FOR STRUCTURES ARE INCLUDED FOR INFORMATION AS TO HOW PLAN QUANTITIES WERE CALCULATED AND FOR USE WHEN ADJUSTING QUANTITIES WHEN CHANGING FOOTING ELEVATION.

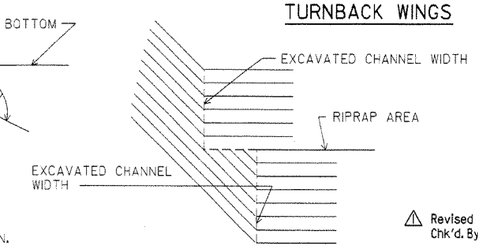

DETAIL C

⚠ Revised and redrawn MJT 04-10-2003
Chk'd. By: CJF 04-10-2003

STATE OF ARKANSAS
REGISTERED PROFESSIONAL ENGINEER
No. 4337
CHARLES P. BRAND

BRIDGE ENGINEER

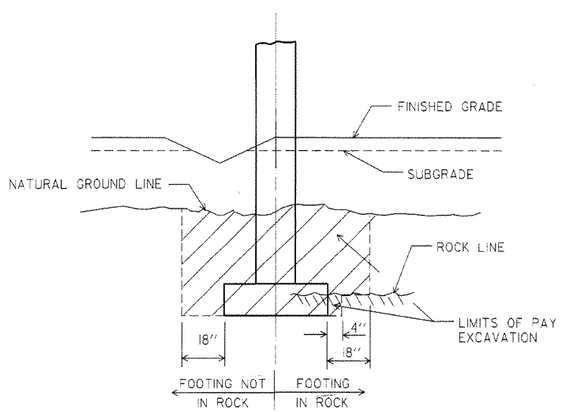

EXCAVATION FOR STRUCTURES - BENT IN ROADWAY FILL SECTION AND NATURAL GROUND

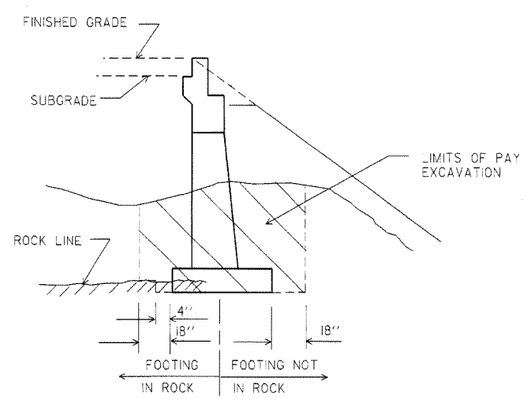

EXCAVATION FOR STRUCTURES - ABUTMENT IN NATURAL GROUND AND NEW EMBANKMENT

DETAILS FOR DUMPED RIPRAP AND FILTER BLANKET AND DETAILS FOR COMPUTING EXCAVATION FOR STRUCTURES

ROUTE SEC.

ARKANSAS STATE HIGHWAY COMMISSION

LITTLE ROCK, ARK.

DRAWN BY:	MJT	DATE:	04-10-2003	FILENAME:	B1891F.STD
CHECKED BY:	CJF	DATE:	04-10-2003	SCALE:	NO SCALE
DESIGNED BY:	STD.	DATE:	—		

BRIDGE NO. DRAWING NO. 1891F

DATE REVISED	DATE FILMED	DATE REVISED	DATE FILMED	FED. ROAD DIST. NO.	STATE	FED. AID PROJ. NO.	SHEET NO.	TOTAL SHEETS
4-10-2003				6	ARK.		424	
07-14-2010				JOB NO.				
				① TYPE C GUTTERS - 2016C				

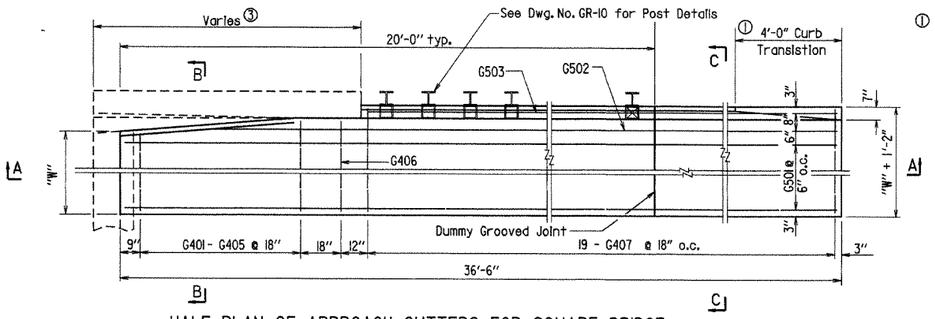

HALF PLAN OF APPROACH GUTTERS FOR SQUARE BRIDGE

① Construct gutter curb with height-transition as shown if drop inlet is not placed at end of gutter.

Construct gutter curb full height (no height-transition) if drop inlet is placed at end of gutter. Curb height transition placed on drop inlet. See drop inlet details.

③ Length Varies See End Bt. Details for Actual Length. Quantities Shown are for 10'-0" Transition Rail.

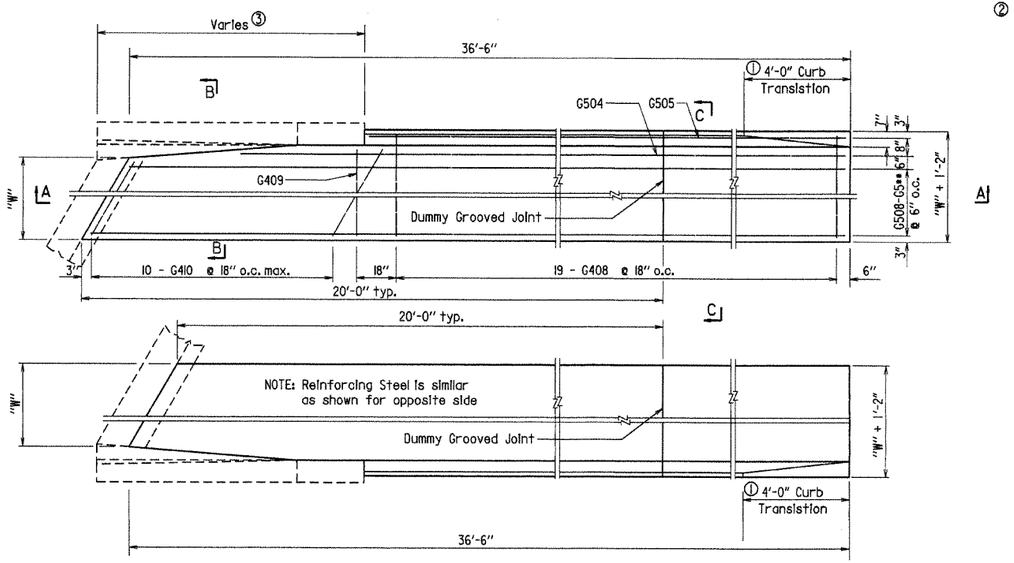

PLAN OF APPROACH GUTTERS FOR SKEWED BRIDGE

② Thickness shall match Approach Slab Thickness. Thickness shall be 9" if Approach Slab is not used.

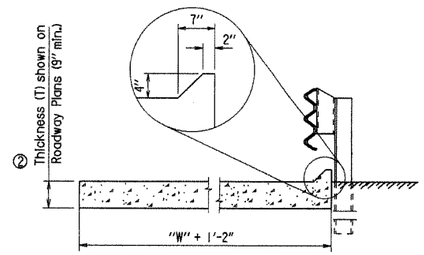

SECTION C - C
N.T.S.

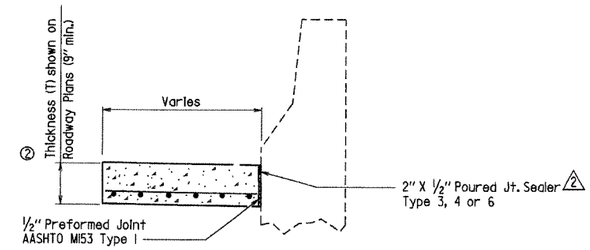

SECTION B - B
N.T.S.

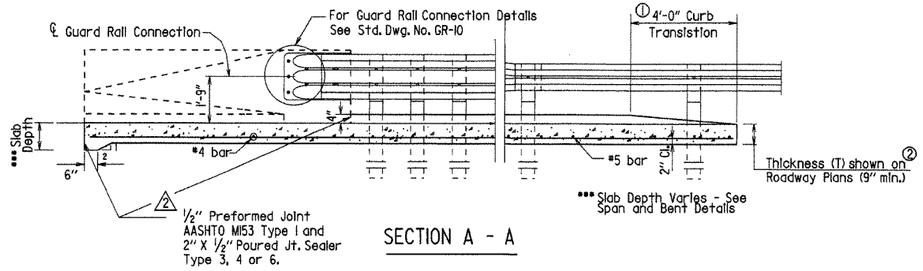

SECTION A - A

***BAR LIST FOR ONE TYPE C GUTTER

*** Special bar list required when skew angle exceeds 35° for W = 10'; 40° for W = 8'; 50° for W = 6'; or 60° for W = 4'.

Mark	No. Req'd. for Width "W" 4'-0"	6'-0"	8'-0"	10'-0"	Length	Square or Skewed
G401 - G405	1 each	1 each	1 each	1 each	"W"-3" to "W"+3"	Square
G406	1	1	1	1	"W"+3"	Square
G407	19	19	19	19	"W"+ 10"	Square
G408	19	19	19	19	"W"+ 10"	Skewed
G409	1	1	1	1	"W"+3"	Skewed
G410	10	10	10	10	*	Skewed
G501	8	12	16	20	36'-2"	Square
G502	1	1	1	1	31'-8"	Square
G503	1	1	1	1	27'-2"	Square
G504	1	1	1	1	*	Skewed
G505	1	1	1	1	*	Skewed
G508 - G5__ **	1 each	1 each	1 each	1 each	*	Skewed

* Bar Lengths vary with Skew.

** G515 for W = 4'
G519 for W = 6'
G523 for W = 8'
G527 for W = 10'

GENERAL NOTES

Concrete shall be Class S or Class S(AE) or mixture used for Portland Cement Concrete Pavement.

Reinforcement Steel shall conform to AASHTO M31 or M53, Grade 60 (fy = 60,000 psi).

Approach Gutters will be measured and paid for in accordance with Section 504 of the Standard Specifications.

1 Revised and redrawn 4-10-2003. By KDH Ck. By: CJF 4-10-2003

2 Added joint sealer type
07-14-2010 by MJT Checked by: CJF 7-14-2010

QUANTITIES FOR ONE SQUARE APPROACH GUTTER ③

"W" Width (ft.)	Reinforcing Steel (lbs.)	Concrete (cubic yards) T=9"	T=10"	T=11"	T=12"	T=14½"
4	439	5.19	5.75	6.31	6.88	8.25
6	623	7.24	8.02	8.80	9.59	11.52
8	807	9.28	10.29	11.30	12.32	14.79
10	991	11.33	12.56	13.79	15.03	18.06

STATE OF ARKANSAS
REGISTERED PROFESSIONAL ENGINEER
No. 4337
CHARLES P. BRAND

BRIDGE ENGINEER

DETAILS OF STANDARD TYPE C APPROACH GUTTERS

ROUTE SEC.

ARKANSAS STATE HIGHWAY COMMISSION

LITTLE ROCK, ARK.

DRAWN BY: KDH DATE: 4-10-2003 FILENAME: B2016C.STD
CHECKED BY: CJF DATE: 4-10-2003 SCALE: 3/8" = 1'-0"
DESIGNED BY: STD. DATE:

BRIDGE NO. DRAWING NO. 2016C

DATE REVISED	DATE FILMED	DATE REVISED	DATE FILMED	FED. ROAD DIST. NO.	STATE	FED. AID PROJ. NO.	SHEET NO.	TOTAL SHEETS
4-10-2003				6	ARK.		425	
07-14-2010				JOB NO.				

1 TYPE PT APPR. GUTTER - 2091

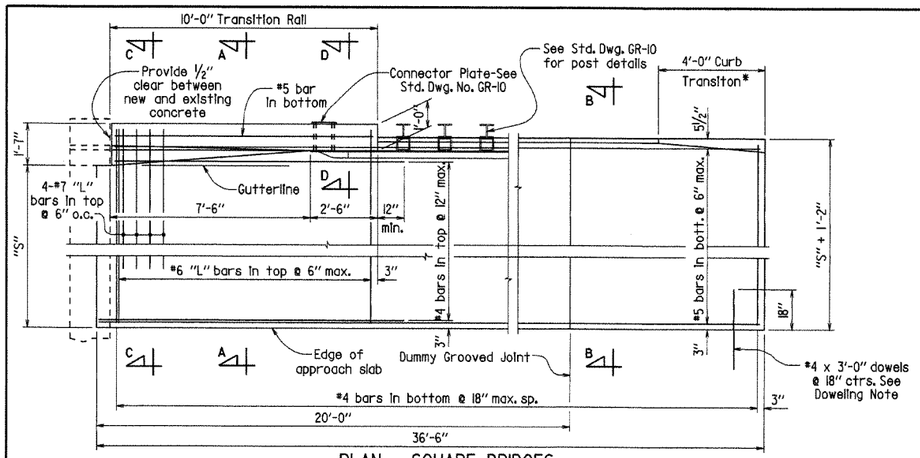

PLAN - SQUARE BRIDGES

Scale: 3/8" = 1'-0"

'S' = Distance from gutterline to edge of approach slab.

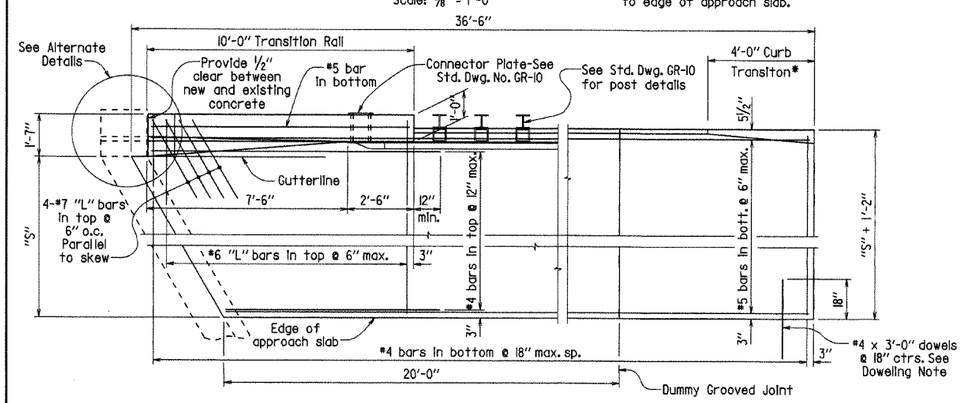

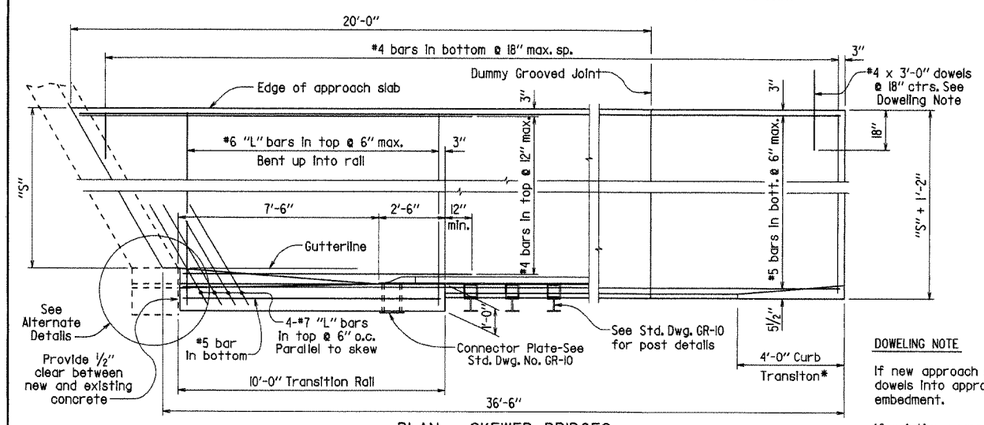

PLAN - SKEWED BRIDGES

Scale: 3/8" = 1'-0"

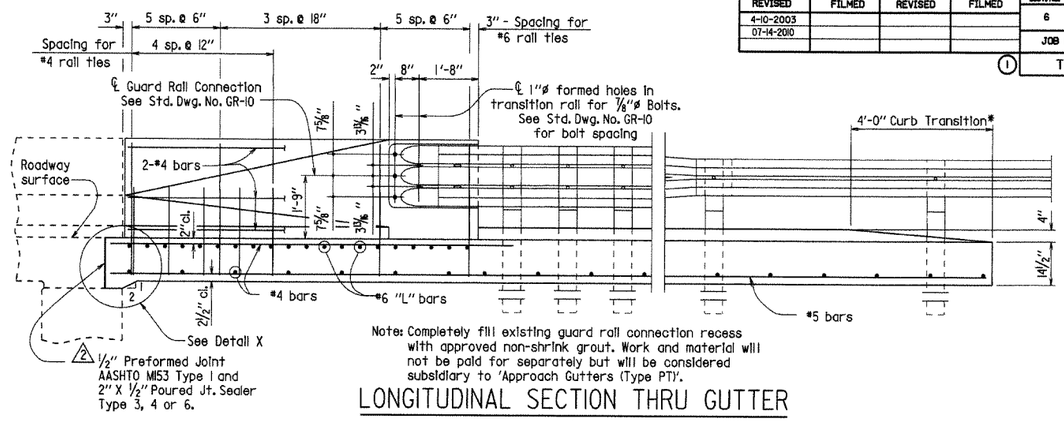

Note: Completely fill existing guard rail connection recess with approved non-shrink grout. Work and material will not be paid for separately but will be considered subsidiary to 'Approach Gutters (Type PT)'.

* Construct curb with height-transition as shown if drop inlet is not used at end of gutter.

Construct curb full height (no height-transition) if drop inlet is used at end of gutter. Curb height transition placed on drop inlet. See drop inlet details.

LONGITUDINAL SECTION THRU GUTTER

Scale: 1/2" = 1'-0"

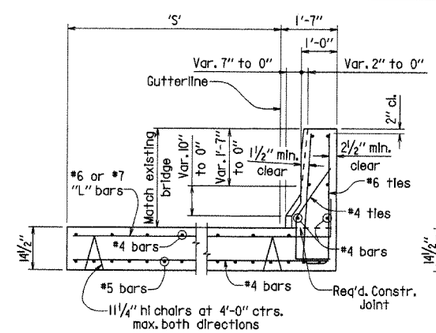

SECTION A-A

Scale: 1/2" = 1'-0"

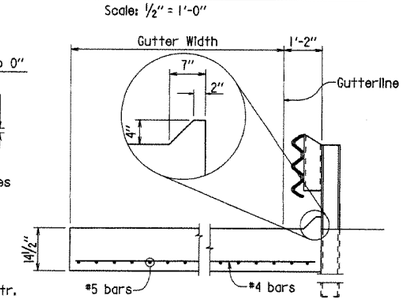

SECTION B-B

Scale: 1/2" = 1'-0"

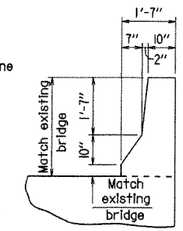

SECTION C-C

At End of Transition Rail
Scale: 1/2" = 1'-0"

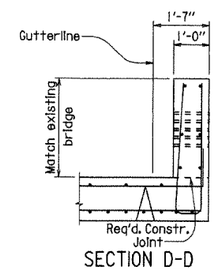

SECTION D-D

Scale: 1/2" = 1'-0"

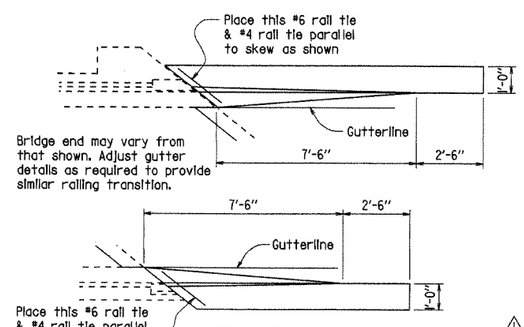

ALTERNATE DETAILS

Scale: 3/8" = 1'-0"

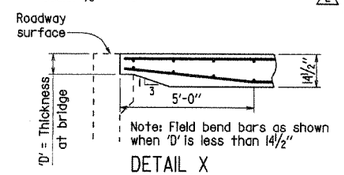

Note: Field bend bars as shown when 'D' is less than 14 1/2"

DETAIL X

Scale: 3/8" = 1'-0"

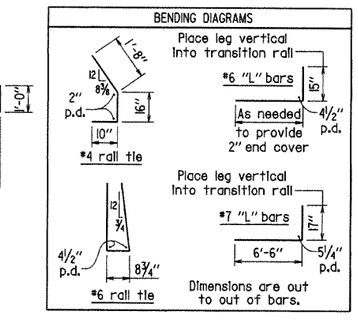

1 Revised and redrawn 4-10-2003. By KDH Ck. By: CJF 4-10-2003

2 Added joint sealer type
07-14-2010 by MJT Checked by: CJF 7-14-2010

GENERAL NOTES

Concrete shall be Class S or S(AE) or mixture used for Portland Cement Concrete Pavement.

Reinforcing steel shall conform to AASHTO M31 or M53, Grade 60 (fy = 60,000 psi.) Fabricate bar lengths to provide 2" minumum cover at each end.

Approach gutters will be measured and paid for in accordance with Section 504 of the Standard Specifications.

QUANTITIES FOR ONE SQUARE APPROACH GUTTER

'S'	Concrete	Reinforcing Steel
5'-6"	12.49 cu.yd.	1227 lb.
5'-9"	12.91 cu.yd.	1276 lb.
6'-0"	13.34 cu.yd.	1296 lb.
9'-6"	19.23 cu.yd.	1746 lb.
9'-9"	19.65 cu.yd.	1795 lb.
10'-0"	20.07 cu.yd.	1815 lb.

DOWELING NOTE

If new approach slab is used, place dowels into approach slab using 18" embedment.

If existing approach slab is retained, dowels shall be drilled and grouted 18" into existing slab. At the Contractor's option, existing dowels may be retained, cleaned and incorporated into new gutters. Work for drilling and grouting, or retaining and cleaning will not be paid for separately but will be considered subsidiary to 'Approach Gutters (Type PT)'.

STATE OF ARKANSAS
REGISTERED PROFESSIONAL ENGINEER
No. 4337
CHARLES P. BRAND

BRIDGE ENGINEER

DETAILS OF STANDARD TYPE 'PT' APPROACH GUTTERS (BRIDGES WITH CONCRETE PARAPET RAILING)

ROUTE SEC.

ARKANSAS STATE HIGHWAY COMMISSION

LITTLE ROCK, ARK.

DRAWN BY: KDH DATE: 4-10-2003 FILENAME: B2091.STD
CHECKED BY: CJF DATE: 4-10-2003 SCALE: AS NOTED
DESIGNED BY: STD. DATE:

BRIDGE NO. DRAWING NO. 2091

DATE REVISED	DATE FILMED	DATE REVISED	DATE FILMED	FED. ROAD DIST. NO.	STATE	FED. AID PROJ. NO.	SHEET NO.	TOTAL SHEETS
4-10-2003				6	ARK.		476	
07-14-2010				JOB NO.				

1 APPROACH SLAB - 2018

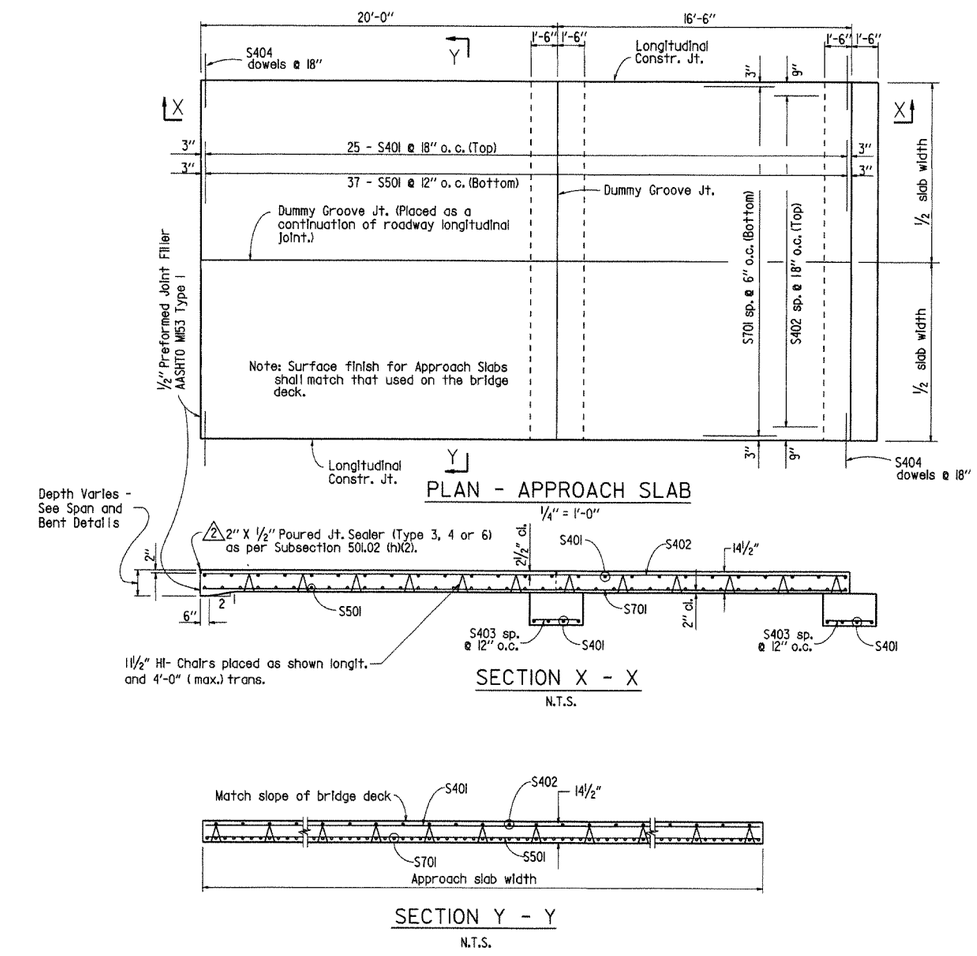

PLAN - APPROACH SLAB

1/4" = 1'-0"

SECTION X - X

N.T.S.

SECTION Y - Y

N.T.S.

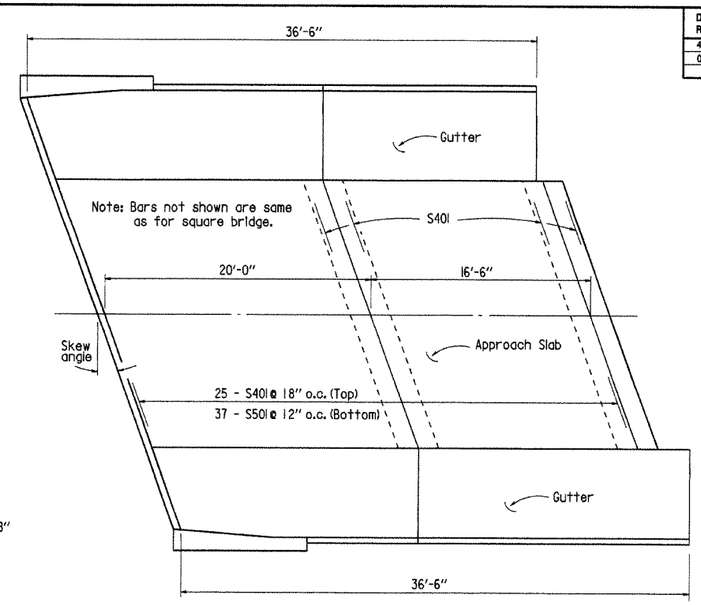

PLAN VIEW SHOWING APPROACH FOR SKEWED BRIDGE

3/16" = 1'-0"

BAR LISTS

(Square & Skewed Slabs)

	Mark	No. Req'd.	Length: Square	Length: Skewed
15'-0" slab width	S401	33	14'-8"	14'-8" (secant skew angle)
	S402	10	36'-2"	
	S403	* 30	2'-8"	
	S404	* 50	3'-0"	
	S501	37	14'-8"	14'-8" (secant skew angle)
	S701	30	36'-2"	
24'-0" slab width	S401	33	23'-8"	23'-8" (secant skew angle)
	S402	16	36'-2"	
	S403	* 48	2'-8"	
	S404	* 50	3'-0"	
	S501	37	23'-8"	23'-8" (secant skew angle)
	S701	48	36'-2"	
36'-0" slab width	S401	33	35'-8"	35'-8" (secant skew angle)
	S402	24	36'-2"	
	S403	* 72	2'-8"	
	S404	* 50	3'-0"	
	S501	37	35'-8"	35'-8" (secant skew angle)
	S701	72	36'-2"	

* Varies with skew angle. The number shown is for square bridges.

GENERAL NOTES

Concrete shall be Class S (AE) (f'c = 4,000 psi).

Reinforcement Steel shall conform to AASHTO M31 or M53, Grade 60 (fy = 60,000 psi).

Approach Slabs will be measured and paid for in accordance with Section 504 of the Standard Specifications.

1 Revised and redrawn 4-10-2003. By KDH Ck. By: CJF 4-10-2003

2 Added joint sealer type 07-14-2010 By MJT Ck. By: CJF 07-14-2010

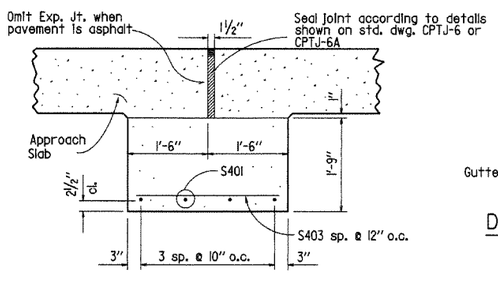

DETAILS OF SUPPORT AT EXPANSION JOINT

3/4" = 1'-0"

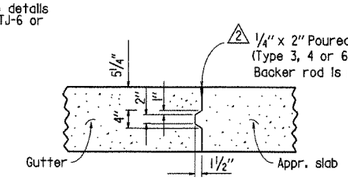

DETAILS OF LONGITUDINAL CONSTRUCTION JOINT

3/4" = 1'-0"

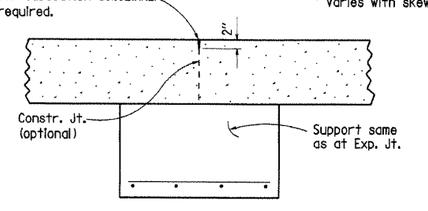

DETAILS OF DUMMY GROOVED JOINT

3/4" = 1'-0"

TABLE OF QUANTITIES FOR ONE SQUARE APPROACH SLAB

Slab Width	Reinforcing Steel	Concrete (Cu. Yds.)
15'-0"	3502 lb.	30.72
24'-0"	5556 lb.	49.15
36'-0"	8294 lb.	73.73

STATE OF ARKANSAS REGISTERED PROFESSIONAL ENGINEER No. 4337 CHARLES P. BRAND

BRIDGE ENGINEER

DETAILS OF APPROACH SLAB

ROUTE SEC.

ARKANSAS STATE HIGHWAY COMMISSION

LITTLE ROCK, ARK.

DRAWN BY: KDH DATE: 4-10-2003 FILENAME: B2018.STD

CHECKED BY: CJF DATE: 4-10-2003 SCALE: AS SHOWN

DESIGNED BY: Std. DATE:

BRIDGE NO. DRAWING NO. 2018

DATE REVISED	DATE FILMED	DATE REVISED	DATE FILMED	FED. ROAD DIST. NO.	STATE	FED. AID PROJ. NO.	SHEET NO.	TOTAL SHEETS
9-8-11				6	ARK.		427	
				JOB NO.				
				NAME PLATE		2387		

1

The name of the bridge as shown on the plans shall be placed on Lines 1 - 3 using 1/8" raised letters and numerals 3/8" high.

	Example 1	Example 2	Example 3	Example 4
Line 1	Red River	Southern	Saline	
Line 2	Relief	Railroad	River	Highway 5
Line 3		Overpass	Relief	

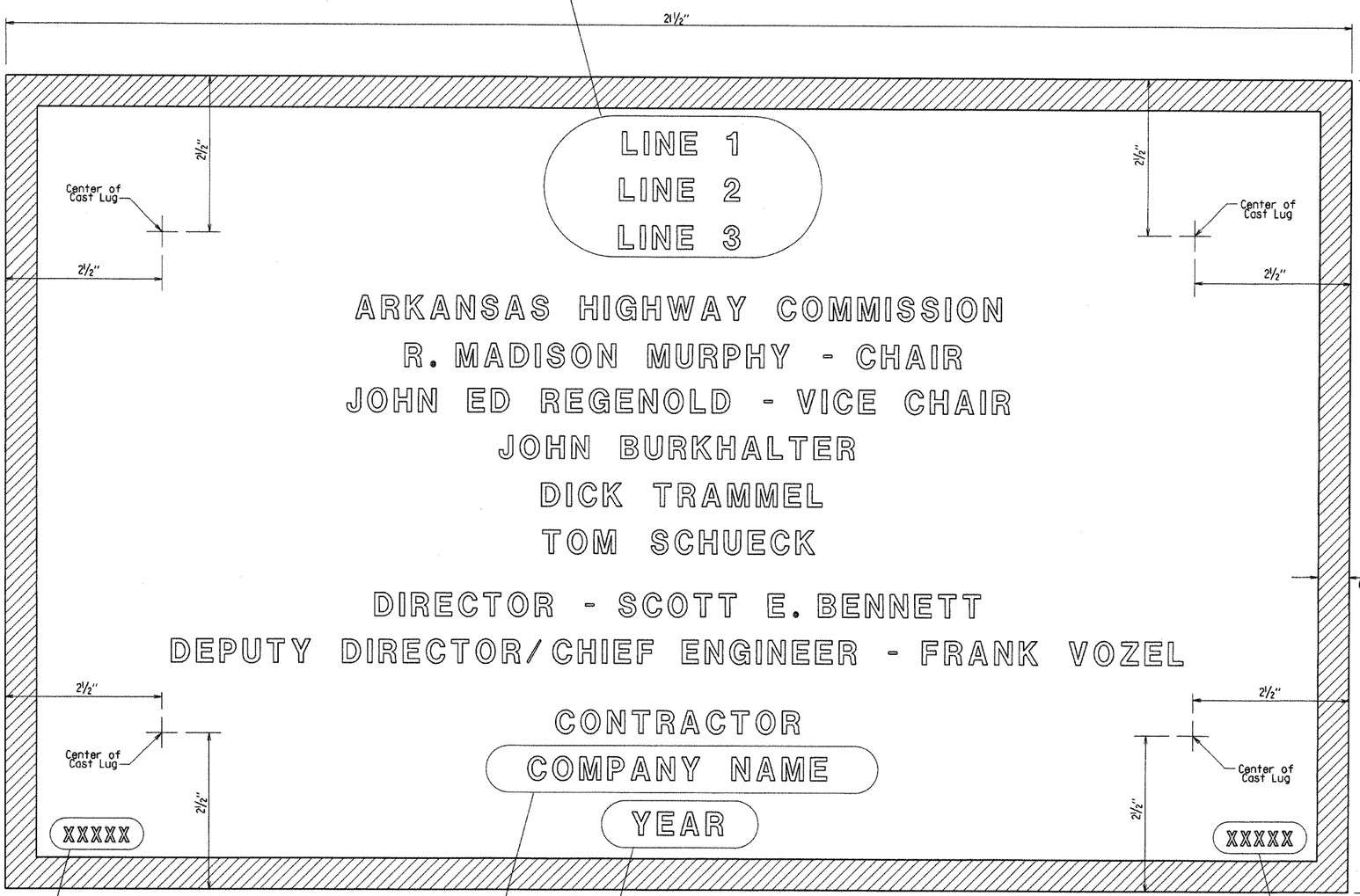

Place the design live loading here using 1/8" raised letters and numerals 1/4" high. Examples : HS 20 HL-93

Place the name of the company awarded the construction contract here using 1/8" raised letters and numerals 3/8" high. Example : ABCD CONSTRUCTION, INC.

Place the Year in which Contract was awarded here using 1/8" raised numerals 3/8" high. Example : 2001

Place the Bridge number here using 1/8" raised letters and numerals 1/4" high. Examples : A1234 05432

TYPICAL BRIDGE NAME PLATE

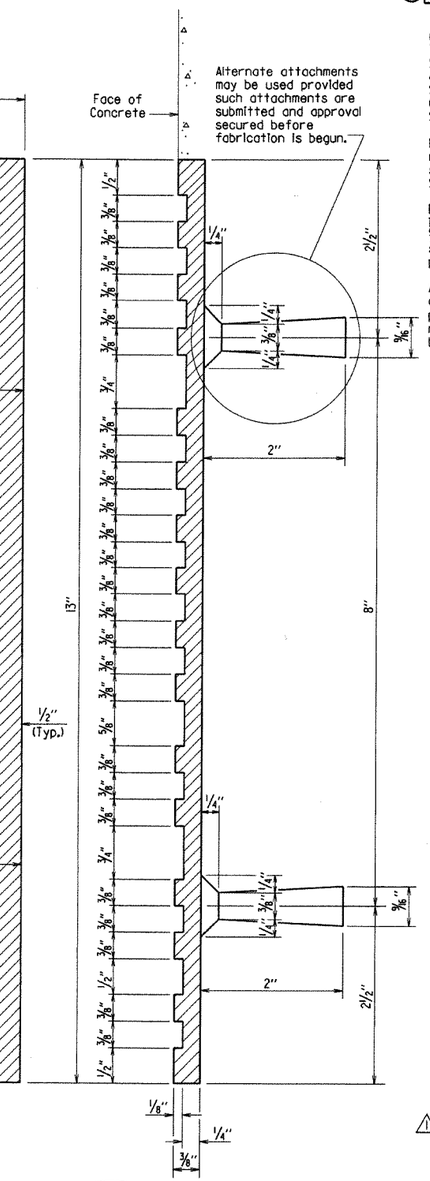

GENERAL NOTES

Specifications: Arkansas State Highway and Transportation Department Standard Specifications for Highway Construction, (2003 Edition) with applicable Supplemental Specifications and Special Provisions.

Name plates shall be cast bronze and shall meet the material requirements as specified in Section 812 of the Standard Specifications.

Body of plate shall be 1/4" thick and shall include four tapering cone lugs 3/8" to 9/16" x 2" long. The border and all lettering shall be raised 1/8" above the face of plate and shall be polished.

All lettering shall be plain gothic, square cut and not tapered. The number of plates required and the location and name on the plate for each bridge shall be as designated on the plans.

1 Revised and Redrawn 9-8-11 KDH Checked By: CRE

STATE OF ARKANSAS
REGISTERED PROFESSIONAL ENGINEER
No. 7610
CARL J. PUSPLIER

BRIDGE ENGINEER

DETAILS OF STANDARD TYPE D
BRIDGE NAME PLATE
ROUTE SEC.
ARKANSAS STATE HIGHWAY COMMISSION
LITTLE ROCK, ARK.

DRAWN BY: KDH DATE: 9-8-11 FILENAME: B2387.STD
CHECKED BY: CRE DATE: 9-8-11 SCALE: 1'-0" = 1'-0" OR AS NOTED
DESIGNED BY: STD. DATE: —

BRIDGE NO. DRAWING NO. 2387

DATE REVISED	DATE FILMED	DATE REVISED	DATE FILMED	FED. ROAD DIST. NO.	STATE	FED. AID PROJ. NO.	SHEET NO.	TOTAL SHEETS
09-28-2000				6	ARK.		428	
04-10-2003	04-10-2003			JOB NO.				
03-31-2005								

① STD. SPAN DTLS. 14990H

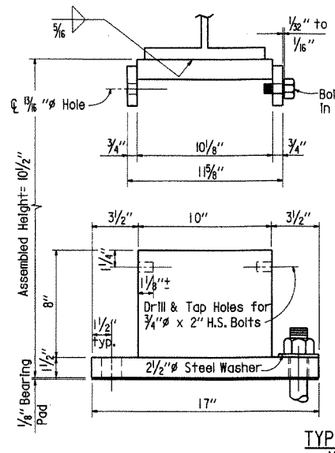

TYPE "D" FIXED SHOE

MAXIMUM LOAD = 155 K

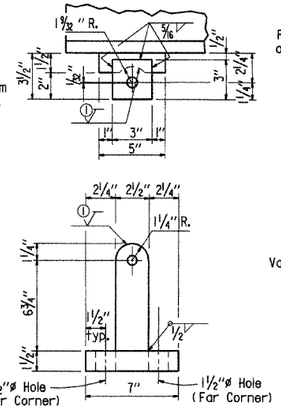

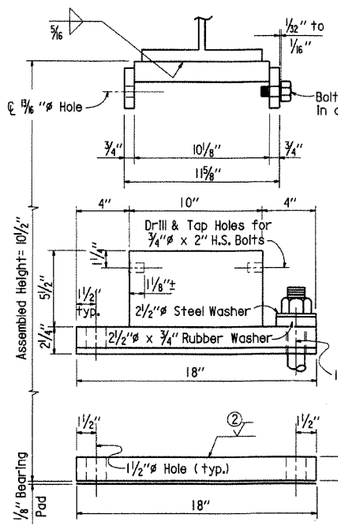

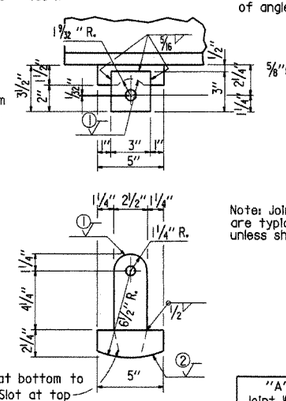

① Finish to ANSI 0.12 mils (RMS)

② Finish to ANSI 0.24 mils (RMS)

TYPE "D" EXPANSION SHOE

MAXIMUM LOAD = 135 K

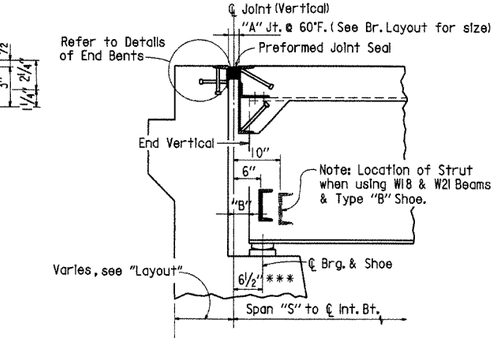

JOINT AT END BENTS

3/4" = 1'-0"

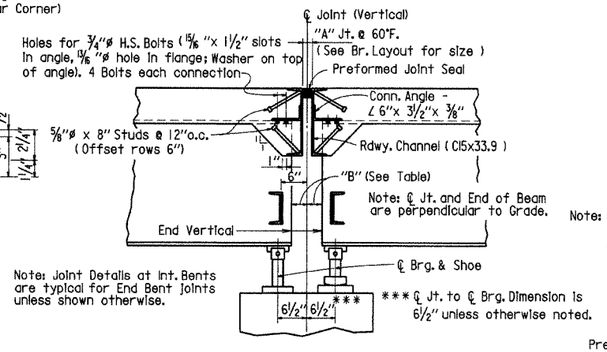

Note: Joint Details at Int. Bents are typical for End Bent Joints unless shown otherwise.

JOINT AT INTERMEDIATE BENTS

3/4" = 1'-0"

One of two different blocking systems is required depending on the type of span finishing machine that is used.

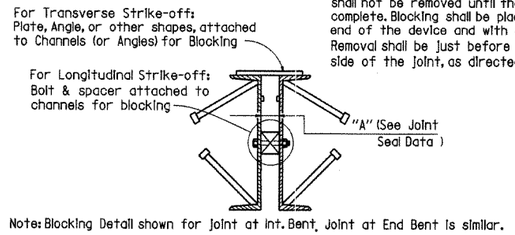

Note: Blocking Detail shown for joint at int. Bent. Joint at End Bent is similar.

DETAILS FOR BLOCKING EXPANSION JOINT DEVICE

1 1/2" = 1'-0"

Note: Each expansion joint device shall be blocked in the Shop by the Fabricator to the dimension "A", and the blocking details shall be shown on the Shop Drawings. The blocking shall not be removed until the Slab on one side is complete. Blocking shall be placed within 2 feet of each end of the device and with a maximum spacing of 8 feet. Removal shall be just before or after pouring the second side of the joint, as directed by the Engineer.

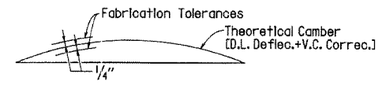

FABRICATION TOLERANCES

N.T.S.

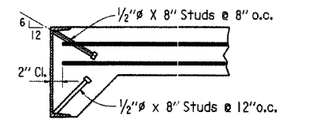

Note: As an alternate to 5/8"ø studs, 1/2"ø x 8" studs spaced as shown may be used. Use weight of 5/8"ø stud as basis of measurement of structural steel in anchors.

DETAILS OF ALTERNATE ANCHORS

1" = 1'-0"

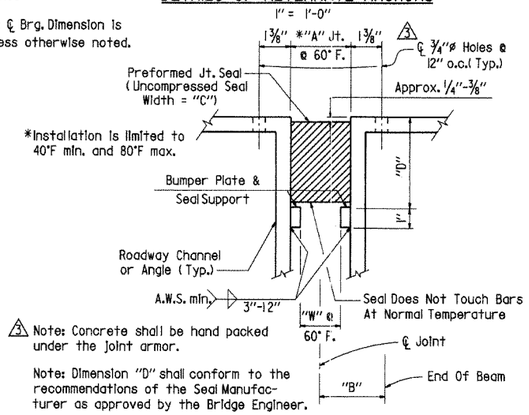

Note: Concrete shall be hand packed under the joint armor.

Note: Dimension "D" shall conform to the recommendations of the Seal Manufacturer as approved by the Bridge Engineer.

DETAIL OF JOINT SEAL & SUPPORT

N.T.S.

Note: The Seal shall be in one piece (without splices) for the full length of the Joint, except that lengths 55 feet and longer may have a factory made splice. Splices, when required, shall be shown on the Shop Drawings and shall be placed near the high ends of the Roadway. Separation of the Splice during installation shall be cause for rejection of the Seal.

JOINT SEAL DATA

"A" Joint Width Perpendicular To Joint @ 60°F*	"B" Perpendicular To Joint	"C" Uncompressed Seal Width	"W" Width Between Plates	Bumper Plate Size
1"	1 3/4"±	**1 5/8"	1/4"	1"x 3/8"
1 1/8"	1 7/8"±	1 3/4"	3/8"	1"x 3/8"
1 1/4"	1 7/8"±	2"	1/2"	1"x 3/8"
1 5/8"	2 1/8"±	2 1/2"	5/8"	1"x 1/2"
1 7/8"	2 1/4"±	3"	5/8"	1"x 5/8"
2 1/4"	2 3/8"±	3 1/2"	3/4"	1"x 3/4"
2 5/8"	2 5/8"±	4"	7/8"	1"x 7/8"

*Installation is limited to 40°F. min. and 80°F. max.

**1 3/4" Seal may be used.

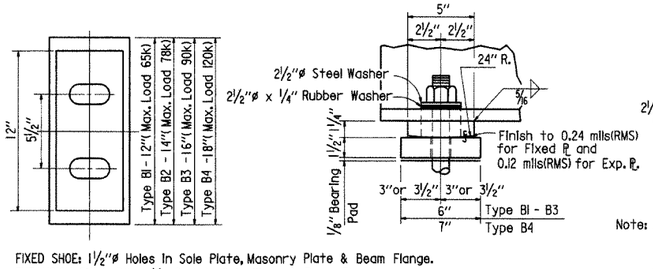

FIXED SHOE: 1 1/2"ø Holes in Sole Plate, Masonry Plate & Beam Flange.

EXPANSION SHOE: 3"x 1 1/2" Slot in Sole Plate & Beam Flange; 1 1/2"ø Holes in Masonry Plate.

TYPE "B" FIXED OR EXP. SHOE

Use For End Bents: All Spans Unless Otherwise Noted.

Use For Int. Bents: Thru 60' Spans Unless Otherwise Noted.

NOTE: Plates for Type "B" & "D" Shoes must be M270, GR. 50W if W-Beams are M270, GR. 50W. Shoe Plates may be Grade 36, 50, or 50W for other applications. Shoe Plates shall be painted when used with painted W-Beams.

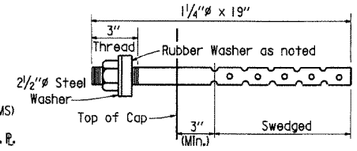

ANCHOR BOLT DETAIL

N.T.S.

Note: Anchor Bolt, Nut and Washer to be according to subsection 807.07. Indentations shall be circular with rounded bottoms and staggered as shown above. Rubber washer shall be closed cell expanded rubber, meeting the requirements of ASTM D1056 - 85 2B2 E2, and shall be considered subsidiary to the Item of Structural Steel.

TABLE FOR WELD

Material Thickness Of Thicker Part Joined (Inches)	Minimum Size Of Fillet Weld (Inches)	Single Pass Weld Must Be Used
To 3/4" Inclusive	1/4"	
Over 3/4"	5/16"	

Note: When a fillet weld size, as shown on the Plans, is larger than the minimum, the First Pass shall be that specified for mimimum size of fillet weld.

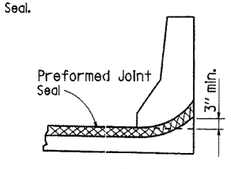

JOINT SEAL PLACEMENT AT CURB

N.T.S.

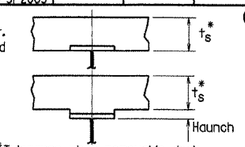

*Tolerance when removable deck forming is used is +1", -1/4". Haunch may be provided to maintain slab thickness tolerance.

DETAIL A

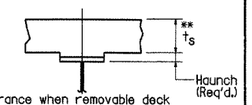

**Tolerance when removable deck forming is used is +1/2", -1/4". Haunch forming is required and shall be adjusted to maintain slab thickness tolerance.

DETAIL B

Note : t_s=slab thickness as shown on superstructure detail drawings.

Use Detail A unless superstructure detail drawings specify otherwise. Haunch dimension may vary within the following limits to maintain the grade and slab thickness tolerance : Minimum - occurs when top flange contacts bottom reinforcing steel; Maximum - top flange thickness plus 1 3/4". No increase in concrete and structural steel quantities will be made to maintain tolerances.

ADJUSTMENT FOR SLAB THICKNESS TOLERANCE WHEN REMOVABLE DECK FORMING IS USED

N.T.S.

Tolerances shown are applicable only when removable deck forming is used. See Std. Dwg. No. 14991 for tolerances when permanent steel deck forms are used." Payment for concrete shall be based on removable deck forming.

GENERAL NOTES

2 Governing specifications are the Arkansas State Highway and Transportation Department Standard Specifications for Highway Construction (2003 edition) with applicable supplemental specifications and special provisions. Unless otherwise noted, references to Section and subsection numbers in the plans refer to the Construction Specifications.

All concrete shall be Class S(AE) and shall be poured in the dry. All exposed corners to be chamfered 3/4" unless otherwise noted. Concrete for span lengths thru 50 feet shall be poured in one continuous operation with a strike off extending over the whole span length. Spans over 50 feet in length may be poured in increments with the center one-third to one-half span length poured first, after which, not less than 72 hours shall elapse before pouring the end sections. End sections may be poured simultaneously. If not poured simultaneously, 48 hours shall elapse between end section pours. A minimum of 72 hours shall elapse between completion of the slab and the pouring of the parapet railing or curb. Concrete shall be placed and consolidated for the entire pour before any concrete has taken its initial set. This may require the use of a retarding agent.

The bridge deck shall be given a tine finish as specified for final finishing in subsection 802.19 for a Class 5 Tined Bridge Roadway Surface Finish.

Reinforcing steel shall conform to AASHTO M31 or M53, GR 60. The reinforcing is to be accurately located in the forms and firmly held in place by steel wire supports, sufficient in number and size to prevent displacement during the course of construction. The wire supports will not be paid for directly but will be considered subsidiary to the Item "Reinforcing Steel - Bridge".

All structural steel shall be AASHTO M270, GR. 36 unless otherwise noted.

All structural steel except AASHTO M270, GR. 50W and galvanized steel shall be painted. Painting shall conform to subsection 807.75 unless span details or applicable special provisions note otherwise.

All longitudinal beams and cover plates are considered main load carrying members. All welding shall conform to subsection 807.26. Welded connections shall be 5/16" fillet shop welds unless otherwise noted. All welding that is to be done during fabrication of structural steel, including temporary welds, shall be detailed on the shop drawings and submitted for approval. If the contractor or erector should want to make additional welds, whether temporary or permanent, he shall submit detailed drawings with formal request to the Bridge Engineer of the Arkansas State Highway and Transportation Department for approval.

All stud shear connectors shall be granular flux filled, solid fluxed, or equal, and shall be automatically end welded in accordance with recommendations of the manufacturer.

Field connections shall be bolted with 3/4" high strength bolts. Unless otherwise noted, bolt holes shall be 15/16"ø except that 15/16"ø holes may be used for connection of expansion devices, diaphragms, and end struts if a washer is used under both the nut and head of the bolt.

Diaphragms shall be installed as beams are erected and shall be completely bolted prior to pouring of the concrete deck.

Bearings shall be seated in accordance with subsection 807.66. This work and material are to be considered as subsidiary to the Item "Structural Steel in Beam Spans" and will not be paid for directly.

Drawings show general features of design only. Shop drawings shall be made in accordance with the specifications, submitted and approval secured before any fabrication is begun. Structural shapes of equal or greater strength may be substituted for shapes shown if approval is obtained from the bridge engineer. Payment will be made on the basis of shapes shown.

2 Revised for 2003 AHTD Construction Specifications and CPB Seal. MJT 04-10-2003
Chk'd. By: CJF 04-10-2003

3 Revised Vent Holes in Joint Armor & Added hand Packing Note JMW 03-31-2005
Chk'd. By: CSL 03-31-2005

1 Revised and redrawn MJT 09-28-2000
Chk'd. By: JGT 09-28-2000

STATE OF ARKANSAS
REGISTERED PROFESSIONAL ENGINEER
No. 4337
CHARLES P. BRAND

BRIDGE ENGINEER

DETAILS COMMON TO STANDARD COMPOSITE W-BEAM SPANS ALL ROADWAYS

ROUTE SEC.

ARKANSAS STATE HIGHWAY COMMISSION

LITTLE ROCK, ARK.

DRAWN BY: MJT DATE: 09-28-2000 FILENAME: BI4990H.STD

CHECKED BY: JGT DATE: 09-28-2000 SCALE: 3/16" = 1" or as noted

DESIGNED BY: STD. DATE: —

BRIDGE NO. DRAWING NO. 14990H

DATE REVISED	DATE FILMED	DATE REVISED	DATE FILMED	DATE REVISED	DATE FILMED	FED. ROAD DIST. NO.	STATE	FED. AID PROJ. NO.	SHEET NO.	TOTAL SHEETS
11-27-96						6	ARK.		429	
04-10-2003						JOB NO.				

① BR. DECK FORMS 14991

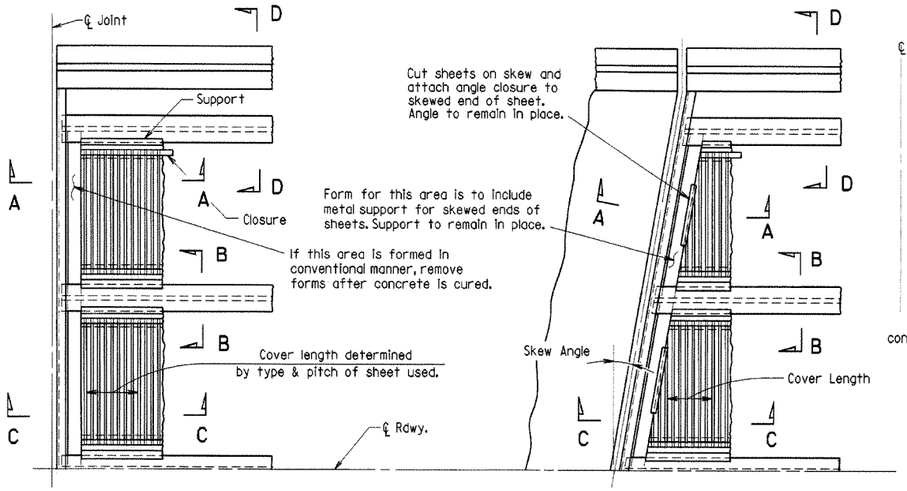

PART PLAN - SQUARE SPAN
3/8" = 1'-0"

PART PLAN - SKEWED SPAN
3/8" = 1'-0"

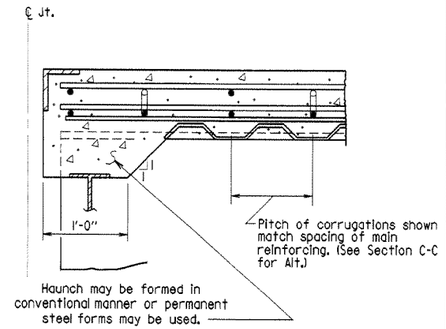

SECTION A-A
N.T.S.
(Angle at end of span)

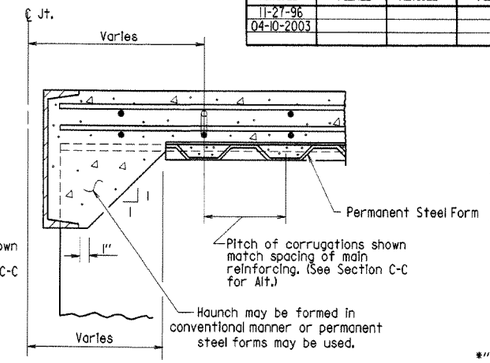

SECTION A-A
N.T.S.
(Channel at end of span)

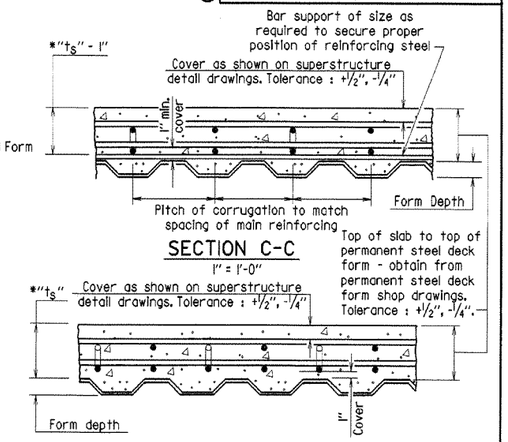

SECTION C-C
1" = 1'-0"

SECTION C-C - ALTERNATE
1" = 1'-0"
(Applicable when corrugations do not match spacing of main reinforcement)

*t_s = slab thickness as shown on superstructure detail drawings.

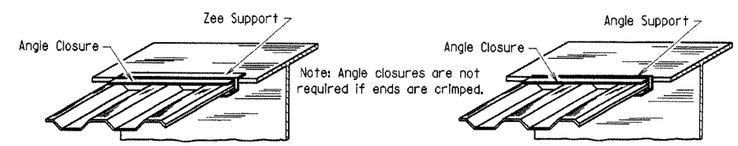

SKETCH OF PERMISSIBLE SUPPORTS
N.T.S.

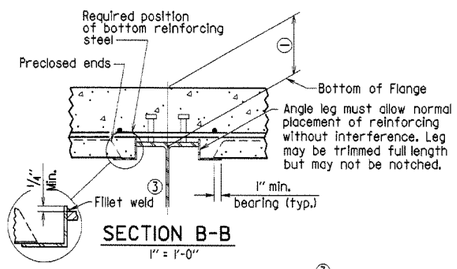

SECTION B-B
1" = 1'-0"
(Showing permissible support for tension flange where shear connectors are used, and for all compression flanges)

③ Minimum weld: 1/8" x 1" @ 18". More weld may be required; maximum length per weld = 1 1/2" (typ.)

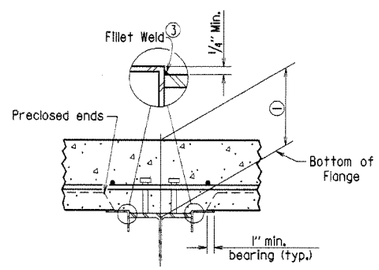

SECTION B-B
1" = 1'-0"
(Showing permissible support for tension flange where shear connectors are used and for all compression flanges)

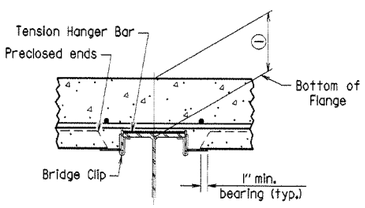

SECTION B-B
1" = 1'-0"
(Showing permissible support for tension flange where shear connectors are not used)

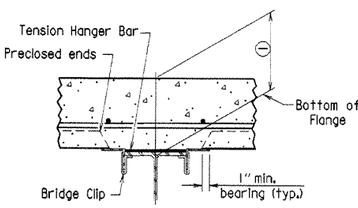

SECTION B-B
1" = 1'-0"
(Showing permissible support for tension flange where shear connectors are not used)

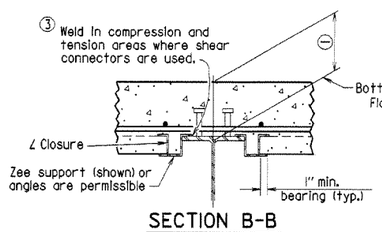

SECTION B-B
1" = 1'-0"
(Showing ∠ Closure)

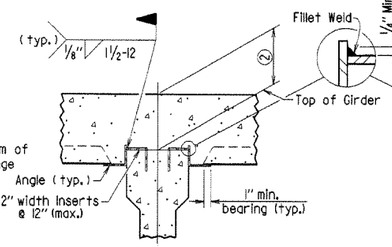

SECTION B-B
(FOR CONCRETE GIRDERS)
1" = 1'-0"
(Showing support by insert cast in girder)

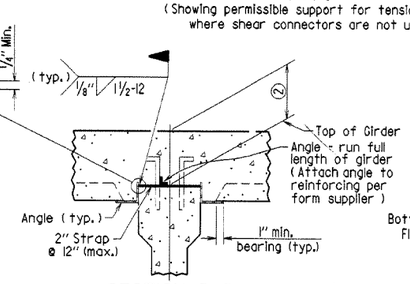

SECTION B-B
(FOR CONCRETE GIRDERS)
1" = 1'-0"
(Showing support by Strap)

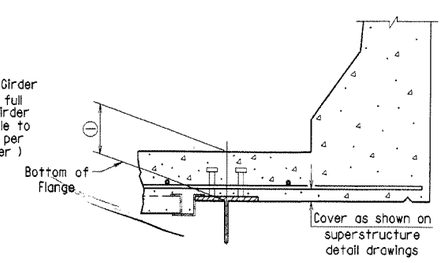

SECTION D-D
1" = 1'-0"
Note: Only Bottom Reinforcing is shown.

① Distance from top of slab to bottom of top flange as measured at centerline girder and as shown on superstructure detail drawings. This dimension may vary within the following limits to maintain the grade and slab thickness tolerances : Minimum - occurs when either the top flange or the support angle leg contacts the bottom reinforcing steel; Maximum = t_s + 1 3/4" + flange thickness. See Section C-C for slab thickness tolerance between adjacent girder flanges.

② Distance from top of slab to top of girder as measured at centerline girder and as shown on superstructure detail drawings. This dimension may vary within the following limits to maintain the grade and slab thickness tolerances : Minimum - occurs when either the top of girder or the support angle leg contacts the bottom reinforcing steel; Maximum - value shown on the superstructure detail drawings when removable forms are used. See Section C-C for slab thickness tolerance between adjacent girder flanges.

GENERAL NOTES

Permanent steel deck forms may be used at the Contractor's option and shall be at no additional cost to the Department. Such use may result in changes to the dead load deflection of the girder. Any cost for adjustments due to a change in the dead load deflection will be borne by the Contractor. Payment for deck concrete and structural steel will not be increased due to use of permanent steel deck forms.

Permanent steel deck forms shall conform to subsection 802.14(b) of the Standard Specifications. Detailed plans, including detailed calculations and manufacturer's technical brochure, shall be submitted to and approved by the Bridge Engineer before work of forming the bridge deck is started.

Welding of form supports to the tension flange of steel girders will be permitted only in areas where shear connectors are used. When welding is not allowed, the method of fastening Z or ∠ supports to the flange must be approved by the Bridge Engineer.

Form sheets shall be fastened to supporting members and to each other with galvanized metal screws sufficient in size and number to provide a secure attachment. Alternate methods of attachment must be approved by the Bridge Engineer.

When the pitch of form corrugations match the reinforcing spacing, transversely align form sheets across the bridge to maintain the correct orientation of continuous reinforcing bars in the corrugations.

Bar support rods, when used, shall be sized and spaced to adequately support the bottom reinforcing mat at the required position.

High chairs shall be sized to support the top mat of reinforcing at the proper position. High chairs shall be placed at locations shown on the detail drawings.

⚠ Specifications: Arkansas State Highway and Transportation Department Standard Specifications for Highway Construction (2003 Edition), with applicable supplemental specifications and special provisions.

⚠ Redrawn and revised 11/27/96; MJT

⚠ Revised for 2003 AHTD Construction Specifications and CPB Seal. MJT 04-10-2003
Chk'd. By: CJF 04-10-2003

STATE OF ARKANSAS
REGISTERED PROFESSIONAL ENGINEER
No. 4337
CHARLES P. BRAND

BRIDGE ENGINEER

DETAILS OF PERMISSIBLE TYPE PERMANENT STEEL BRIDGE DECK FORMS FOR STEEL & CONCRETE GIRDER SPANS

ROUTE SEC.

ARKANSAS STATE HIGHWAY COMMISSION

LITTLE ROCK, ARK.

DRAWN BY: MJT DATE: 10-17-96
CHECKED BY: CPB DATE: 10-17-96
DESIGNED BY: STD. DATE: —
SCALE: as noted

BRIDGE NO. DRAWING NO. 14991

BI4991.STD

DATE REVISED	DATE FILMED	DATE REVISED	DATE FILMED	FED. ROAD DIST. NO.	STATE	FED. AID PROJ. NO.	SHEET NO.	TOTAL SHEETS
04-10-2003				6	ARK.		430	
				JOB NO.				

1 RIPRAP & PILE - 14995A

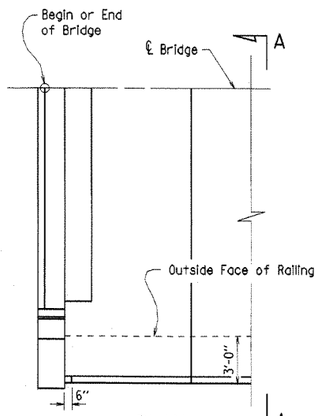

PLAN

Note:
Sloped surfaces of concrete riprap to be marked off into blocks (construction joints optional) with an approved grooving tool, spacing the grooved lines about 5' apart.

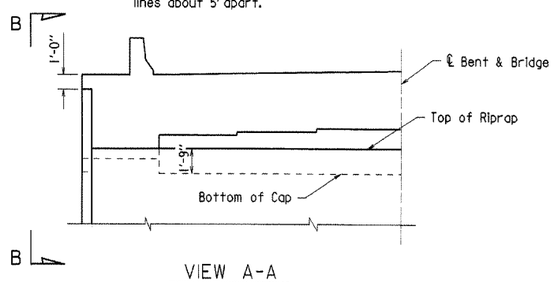

VIEW A-A

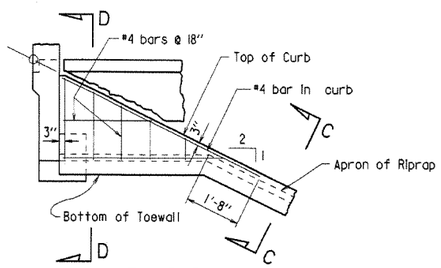

VIEW B-B

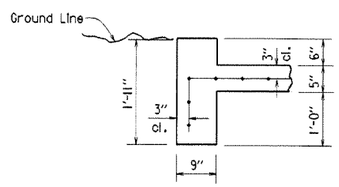

SECTION C-C

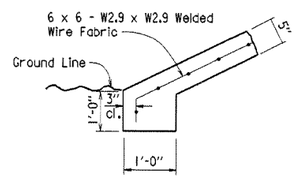

TOE WALL

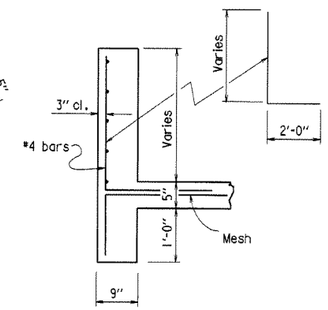

SECTION D-D

DETAILS OF CONCRETE RIPRAP

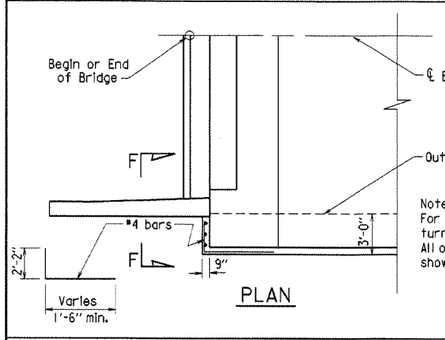

PLAN

Note:
For use on bridges with turned back wings. All other details same as shown above.

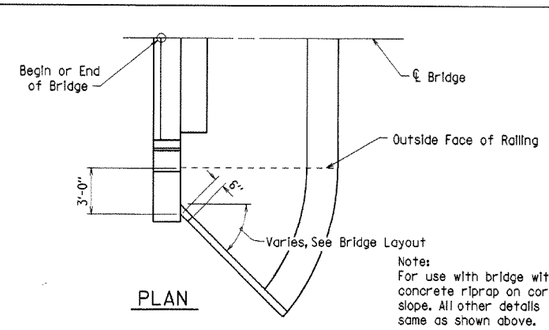

PLAN

Note:
For use with bridge with concrete riprap on corner slope. All other details same as shown above.

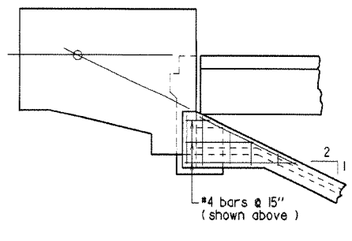

ELEVATION

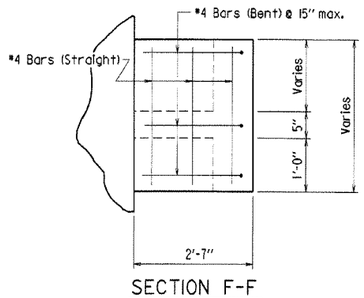

SECTION F-F

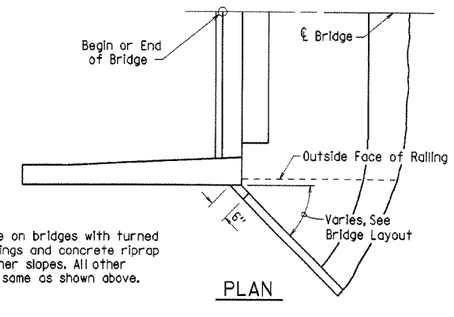

PLAN

Note:
For use on bridges with turned back wings and concrete riprap on corner slopes. All other details same as shown above.

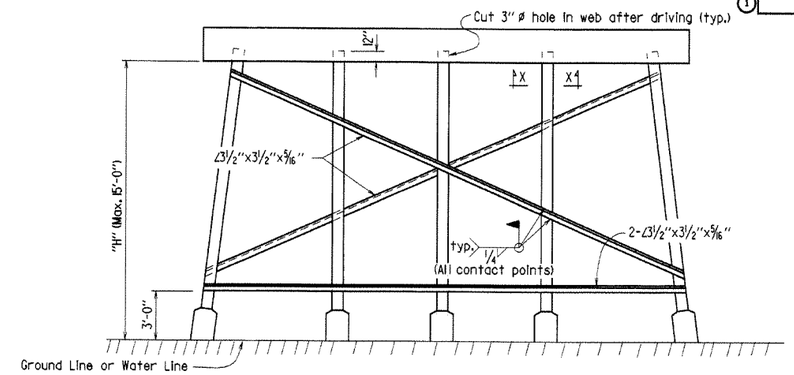

Note:
All bracing shall be cut and welded in the field. Each brace shall be furnished in one piece. Payment shall be made under Item 807.

Omit bottom bracing where "H" is less than 10 ft. Omit all bracing where "H" is less than 5 ft.

Note:
Where required by the bridge layout sheet, pile encasements shall be constructed.

Omit bracing (and V-groove in cap) where pile encasement is extended to bottom of bent cap.

TYPICAL BRACING FOR INT. STEEL PILE BENTS

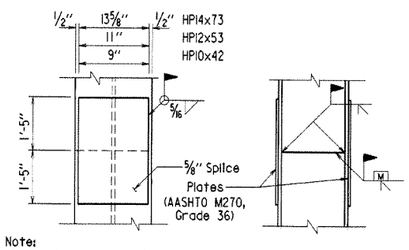

Note:
The contractor may for his own convenience and at this own expense provide as many as three splices per pile for steel bearing piling. Minimum spacing between splices shall be 5 ft.

PILE SPLICE DETAIL

Scale : 1" = 1'-0"

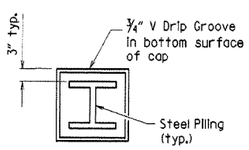

VIEW X-X

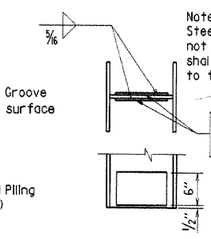

Note:
Steel pile tip reinforcing will not be paid for directly, but shall be considered subsidiary to the item of "Steel Piling."

HP14x73 - PL 1/2"x6"x11"
HP12x53 - PL 1/2"x6"x9"
HP10x42 - PL 1/2"x6"x7"

REINFORCING DETAIL FOR STEEL PILE TIP

Scale : 1" = 1'-0"

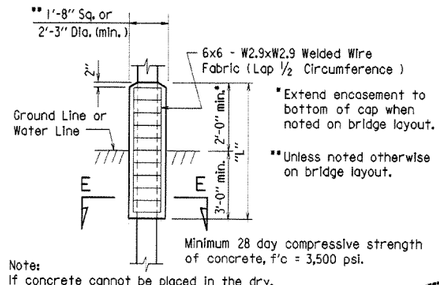

*Extend encasement to bottom of cap when noted on bridge layout.

**Unless noted otherwise on bridge layout.

Minimum 28 day compressive strength of concrete, f'c = 3,500 psi.

Note:
If concrete cannot be placed in the dry, seal concrete may be deposited under water. Concrete & welded wire fabric or reinforcing in encasements shall be paid for at the contract unit price per linear foot bid for "Pile Encasement."

PILE ENCASEMENT DETAIL

Reinforcing Alternate
#3 Vertical - 8 per encasement
#3 ties @ 12" ctrs.
Yield Strength, fy = 60,000 psi.

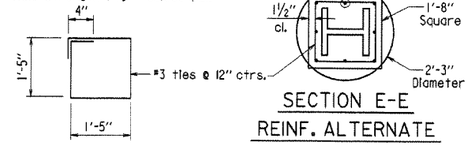

SECTION E-E
REINF. ALTERNATE

STATE OF ARKANSAS
REGISTERED PROFESSIONAL ENGINEER
No. 4337
CHARLES P. BRAND

BRIDGE ENGINEER

1 Revised and redrawn MJT 04-10-2003
Chk'd. By: CJF 04-10-2003

DETAILS OF CONCRETE RIPRAP
AND MISC. DETAILS OF STEEL PILING

ROUTE SEC.

ARKANSAS STATE HIGHWAY COMMISSION

LITTLE ROCK, ARK.

DRAWN BY: MJT DATE: 04-10-2003 FILENAME: BI4995A.STD
CHECKED BY: CJF DATE: 04-10-2003 SCALE: No Scale or As Noted
DESIGNED BY: STD. DATE: —

BRIDGE NO. DRAWING NO. 14995A

REFER TO TABULATION OF QUANTITIES FOR 'W' & 'B' DIMENSIONS

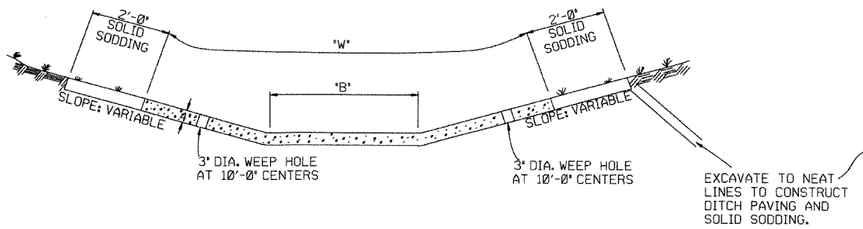

EXCAVATE TO NEAT LINES TO CONSTRUCT DITCH PAVING AND SOLID SODDING.

TYPE A

REFER TO TABULATION OF QUANTITIES FOR 'W' DIMENSIONS

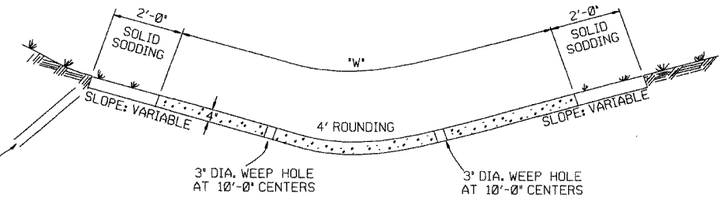

TYPE B

THE STEEL AND ADDITIONAL CONCRETE FOR THE WALLS SHALL NOT BE PAID FOR DIRECTLY, BUT SHALL BE CONSIDERED TO BE INCLUDED IN THE PRICE BID FOR 'CONCRETE DITCH PAVING.'

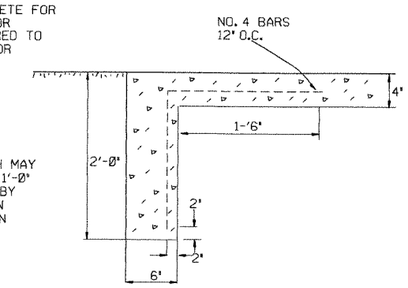

TOE WALL DEPTH MAY BE ALTERED TO 1'-0" WHEN DIRECTED BY THE ENGINEER IN ROCK EXCAVATION

TOE WALL DETAIL FOR CONCRETE DITCH PAVING

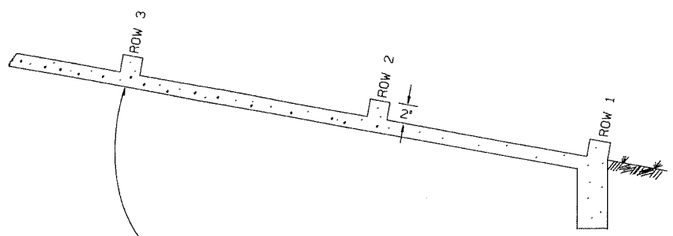

NUMBER OF ELEMENTS PER ROW VARIES WITH WIDTH OF PAVING SPECIFIED

ENERGY DISSIPATORS TO BE USED FOR THE ENTIRE LENGTH OF DITCH WHEN SLOPE OF DITCH PAVING EXCEEDS 7%. THE DISSIPATORS WILL NOT BE PAID FOR DIRECTLY, BUT SHALL BE CONSIDERED TO BE UNCLUDED IN THE PRICE BID FOR CONCRETE DITCH PAVING.

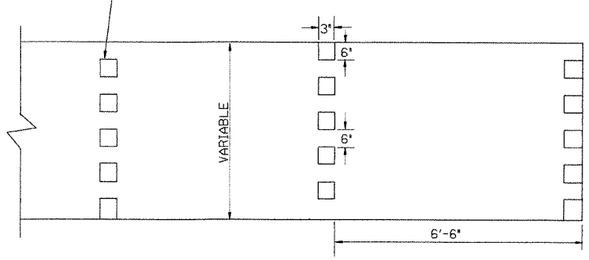

ENERGY DISSIPATORS
(NO SCALE)

GENERAL NOTES:

THE FULL WIDTH OF EACH SECTION SHALL BE POURED MONOLITHICALLY.

TOE WALLS TO BE CONSTRUCTED FULL WIDTH AT EACH END OF DITCH PAVING, AND POURED MONOLITHICALLY.

SOLID SOD ALONG DITCH PAVING TO BE PLACED WITHIN 14 DAYS OF DITCH PAVING CONSTRUCTION.

1" WIDE TRANSVERSE EXPANSION JOINTS SHALL BE PLACED IN CONCRETE DITCH PAVING AT 45' INTERVALS. THE SPACE SHALL BE FILLED WITH APPROVED JOINT FILLER COMPLYING WITH AASHTO M213.

DATE	REVISION	DATE FILM'D
11-17-10	ADDED GENERAL NOTE	
6-2-94	ADDED GENERAL NOTE ABOUT SOLID SODDING	
11-30-8	ELIMINATED MIN. ROWS OF ELEMENTS	111-30-89
7-15-88	REVISED DISSIPATOR NOTE	653-7-15-88
4-3-87	REVISED ENERGY DISSIPATOR	671-4-3-87
1-9-87	MODIFIED NOTE ON ENERGY DISS.	532-1-9-87
11-3-86	ADDED NOTE TO ENERGY DISS.	599-12-1-86
11-1-84	ENERGY DISSIPATOR DETAILS ADDED	508-11-1-84
11-1-84	EXCAVATION DETAILS ADDED TYPED A & B	
10-2-72	REVISED AND REDRAWN	508-10-2-72

ARKANSAS STATE HIGHWAY COMMISSION

CONCRETE DITCH PAVING

STANDARD DRAWING CDP-1

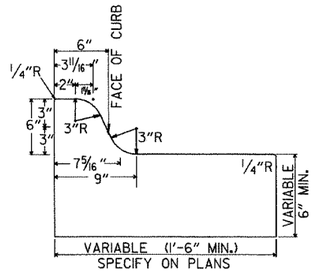

TYPE A

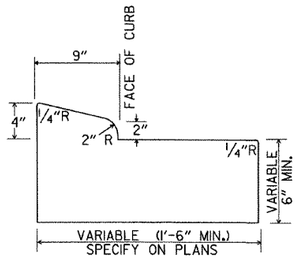

TYPE B-1

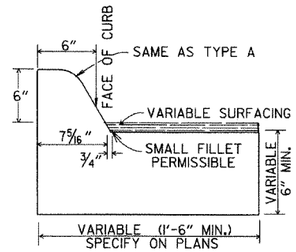

TYPE C

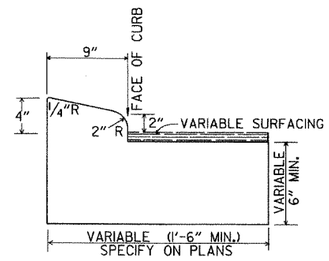

TYPE B-2

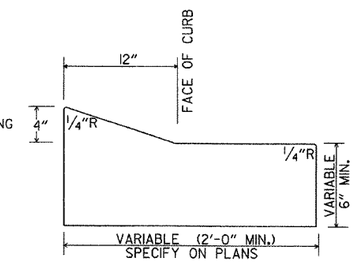

TYPE E-1

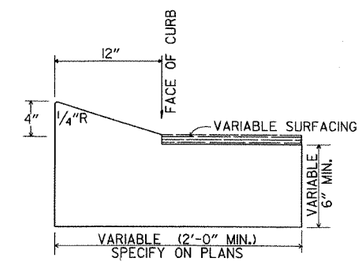

TYPE E-2

CONCRETE COMBINATION CURB AND GUTTER

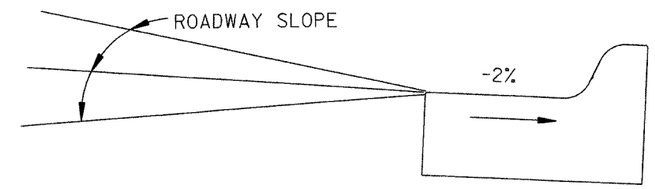

DETAIL OF GUTTER SLOPE

GUTTER SHALL BE CONSTRUCTED ON 2% SLOPE AWAY FROM ROADWAY, REGARDLESS OF ROADWAY SLOPE.

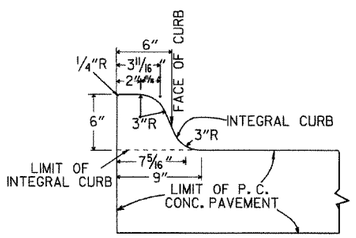

TYPE A

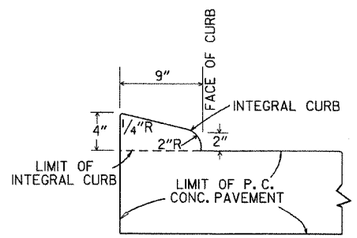

TYPE B

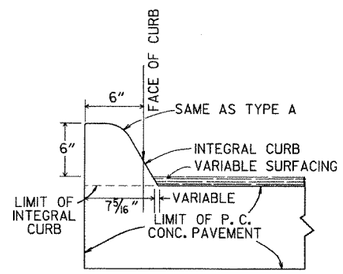

TYPE C

INTEGRAL CURB

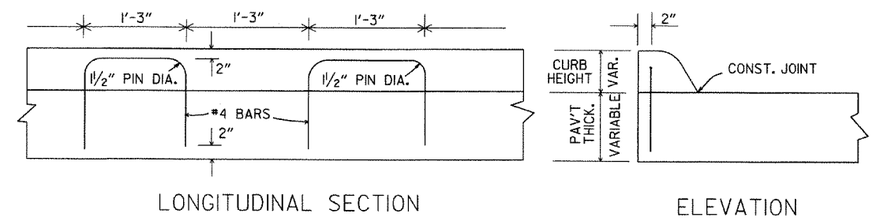

ALTERNATE CONSTRUCTION METHOD FOR INTEGRAL CURB

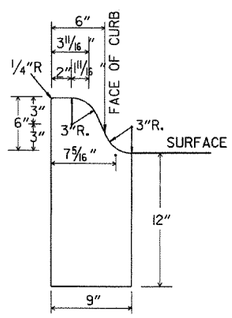

TYPE A

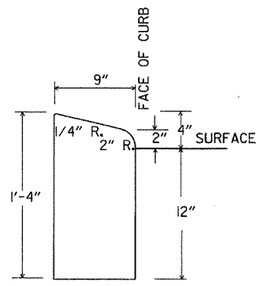

TYPE B

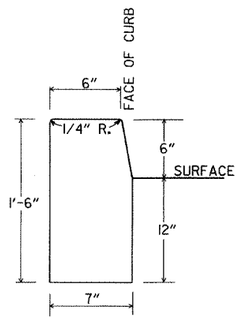

TYPE D

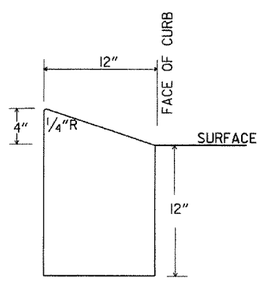

TYPE E

CONCRETE CURB

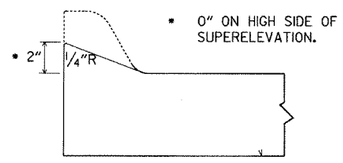

NOTE: USE MODIFIED CURB AS SPECIFIED ON STD. DR-1. COMPENSATION FOR MODIFIED CURB WILL BE CONSIDERED INCLUDED IN THE PRICE BID FOR THE TYPE OF CURB OR CURB AND GUTTER SPECIFIED.

DETAILS OF MODIFIED CURB

DATE	REVISION	DATE FILMED
11-29-07	REVISED GUTTER SLOPE & MODIFIED CURB DETAILS	
11-10-05	ADDED DETAILS OF TYPE E CURBS	
11-16-01	REVISED CONCRETE CURB TYPE B	
11-18-98	REVISED MODIFIED CURB	
6-2-94	ADDED NOTE TO SPECIAL MODIFIED CURB	
8-5-93	CORRECTED GUTTER SLOPE	8-5-93
10-1-92	ADDED DETAILS OF GUTTER SLOPE	10-1-92
5-24-90	ADDED DETAILS OF MODIFIED CURB	5-24-90
11-30-89	VARIBLE DEPTH TYPE A & B I	11-30-89
7-15-88	REVISED MODIFIED CURB	630-7-15-88
11-1-73	REVISED MODIFIED CURB	500-11-1-73
10-2-72	REVISED AND REDRAWN	512-10-2-72

ARKANSAS STATE HIGHWAY COMMISSION

CURBING DETAILS

STANDARD DRAWING CG-1

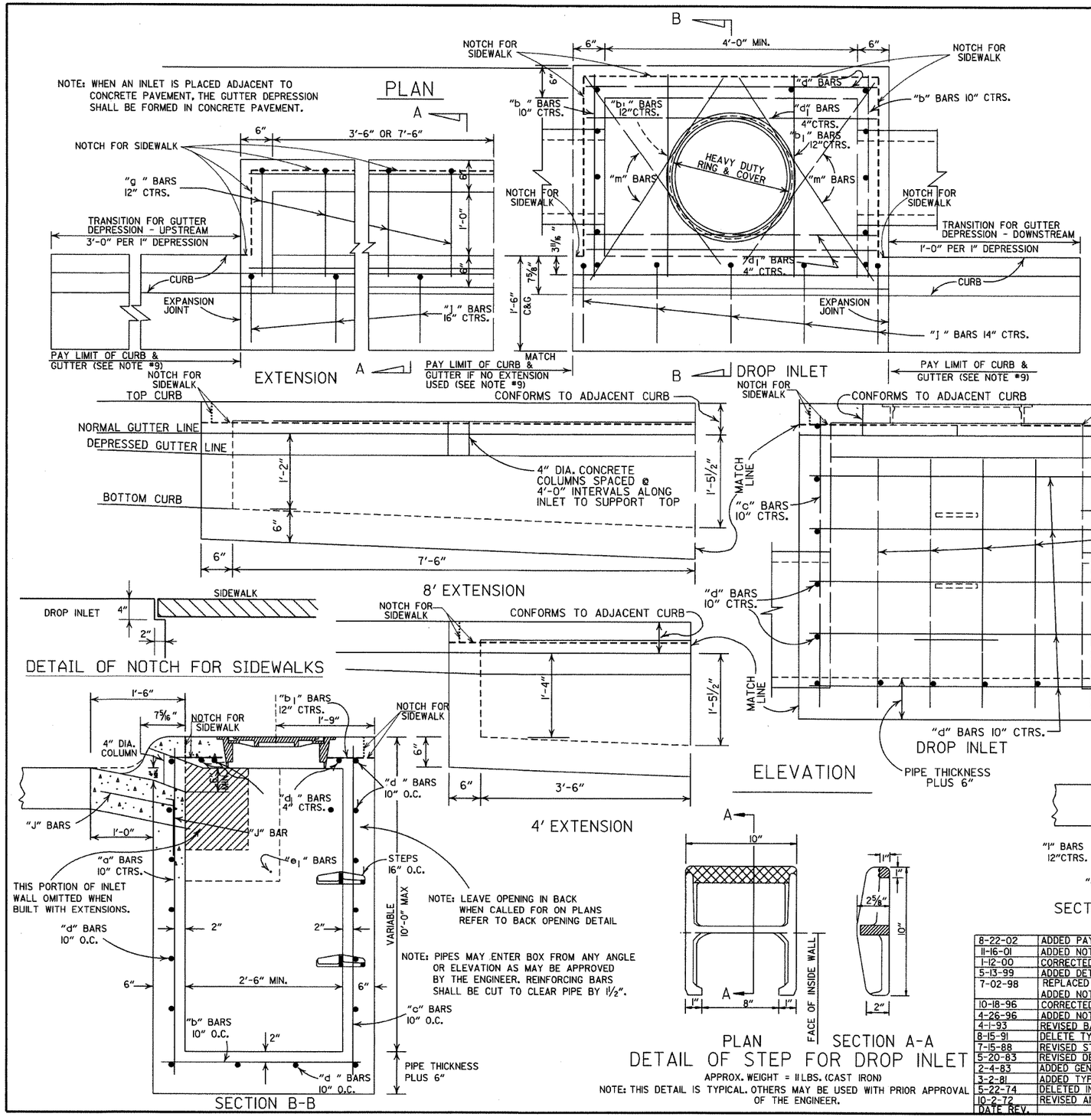

4'-0" LENGTH DROP INLET

PIPE SIZE	MIN. WIDTH	HEIGHT 5'-0" CLASS A CONC. CU. YDS.	HEIGHT 5'-0" REINF. STEEL POUNDS	PLUS OR MINUS PER LIN. FT. OF HEIGHT CLASS A CONC. CU. YDS.	PLUS OR MINUS PER LIN. FT. OF HEIGHT REINF. STEEL POUNDS
18"	2'-6"	1.77	156	0.28	22
24"	2'-6"	1.79	156	0.28	22
30"	3'-2"	2.39	205	0.30	26
36"	3'-8"	2.63	236	0.32	28
42"	4'-4"	2.95	250	0.34	30
48"	4'-10"	3.21	265	0.36	32

NOTE: QUANTITIES ARE APPROXIMATE AND ARE SHOWN FOR BIDDER INFORMATION ONLY.

DROP INLET EXTENSION 433

4'-0" CLASS A CONC. CU. YDS.	4'-0" REINF. STEEL POUNDS	8'-0" CLASS A CONC. CU. YDS.	8'-0" REINF. STEEL POUNDS
0.58	38	0.87	72
DEDUCT FROM QUANTITY COMPUTED FOR EACH EXTENSION ADDED.			
0.04	3		

DEDUCT FROM QUANTITY COMPUTED FOR EACH PIPE ENTERING INLET		
INSIDE DIA. PIPE	CLASS A CONC.	REINF. STEEL
INCHES	CU. YDS.	POUNDS
18	0.05	2
24	0.09	3
30	0.13	4
42	0.24	8

BAR DIAGRAM

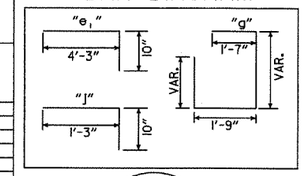

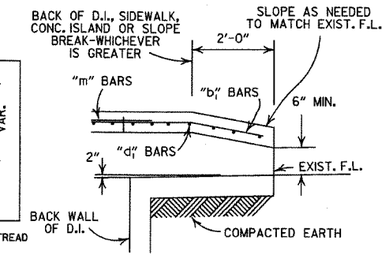

BACK OPENING

WHEN OPENING IN BACK IS CALLED FOR ON PLANS EXTEND OPENING AS SHOWN IN DETAIL. PAYMENT TO BE INCLUDED IN PRICE BID FOR DROP INLET (TYPE C).

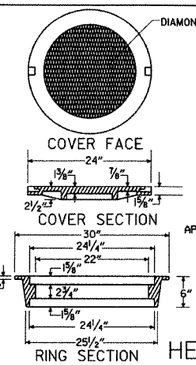

HEAVY DUTY RING & COVER

APPROXIMATE TOTAL WEIGHT = 333 LBS.

GENERAL NOTES:

1. ALL EXPOSED CORNERS TO HAVE ¾" CHAMFER.
2. STEPS SHALL BE INSTALLED IN ALL INLETS 4'-0" HIGH AND OVER OF AS APPROVED BY THE ENGINEER.
3. ALL REINF. BARS SHALL BE #4 AND HAVE 1½" COVER.
4. DROP INLETS AND EXTENSION ON CURVED SECTIONS SHALL CONFORM TO THE CURVATURE OF THE CURB.
5. THIS DROP INLET MAY BE CONSTRUCTED ON NEW OR EXISTING R.C. BOX CULVERT AS SHOWN ON F.P.C.-9.
6. WHEN PLANS CALL FOR DROP INLET OVER 10'-0" HIGH, FLOOR AND WALLS SHALL BE CONSTRUCTED AS SHOWN FOR TYPE "RM" DROP INLET (F.P.C.-9D).
7. HEAVY DUTY RING SHALL ALWAYS BE INSTALLED WITH FLANGE ON TOP.
8. DURING CONSTRUCTION OF THE ROADWAY THE CONTRACTOR SHALL MAINTAIN DRAINAGE INTO OR AROUND THE DROP INLET AS APPROVED BY THE ENGINEER.
9. PAYMENT FOR CURB AND/OR CURB AND GUTTER WITHIN THE LIMITS OF DROP INLETS AND DROP INLET EXTENSIONS SHALL BE CONSIDERED INCLUDED IN PAYMENT MADE FOR DROP INLETS AND/OR DROP INLET EXTENSIONS.
10. HEAVY DUTY RING AND COVER SHALL BE CONSTRUCTED OF CAST IRON AND SHALL CONFORM TO THE REQUIREMENTS OF THE STANDARD SPECIFICATIONS FOR GRAY IRON CASTINGS AASHTO M105 CLASS 35B & AASHTO M306.
11. HEAVY DUTY RING AND COVER SHALL NOT BE PAINTED.
12. 4"×2" NOTCH SHALL BE FORMED IN ALL DROP INLETS TO SUPPORT SIDEWALK CONSTRUCTION. REFER TO DETAIL OF NOTCH FOR SIDEWALKS.
13. DIMENSIONS SHOWN FOR RING AND COVER ARE TYPICAL. THE CONTRACTOR MAY SUBSTITUTE SIMILAR CASTINGS WITH THE APPROVAL OF THE ENGINEER. REQUESTING APPROVAL FOR CASTING DESIGNS MAY BE MADE BY REFERRING TO PREVIOUSLY APPROVED DRAWINGS.

DATE REV.	REVISION	DATE FILMED
8-22-02	ADDED PAY LIMIT CURB NOTES TO SECTIONS A-A & B-B	
11-16-01	ADDED NOTE 13; REVISED SECTION B-B	
1-12-00	CORRECTED DIMENSION ON SECTION B-B & REVISED RING & COVER	
5-13-99	ADDED DETAIL OF NOTCH FOR SIDEWALKS	
7-02-98	REPLACED RING & COVER W/HEAVY DUTY RING & COVER ADDED NOTES 9,10,&11	
10-18-96	CORRECTED SPELLING	
4-26-96	ADDED NOTE 8 & REVISED (4')(8') EXTENSION TITLES	10-18-96
4-1-93	REVISED BACK OPENING & NOTE	
8-15-91	DELETE TYPE IV GRATE	
7-15-88	REVISED STEP DETAIL	
5-20-83	REVISED DETAILS OF GRATES (TYPE IV & IV-A)	
2-4-83	ADDED GENERAL NOTE NO. 4	
3-2-81	ADDED TYPE IV-A GRATE	
5-22-74	DELETED INLET (TYPE F) & GRATE (TYPE III)	
10-2-72	REVISED AND REDRAWN	

ARKANSAS STATE HIGHWAY COMMISSION

DETAILS OF DROP INLETS

(TYPE C)

STANDARD DRAWING FPC-9E

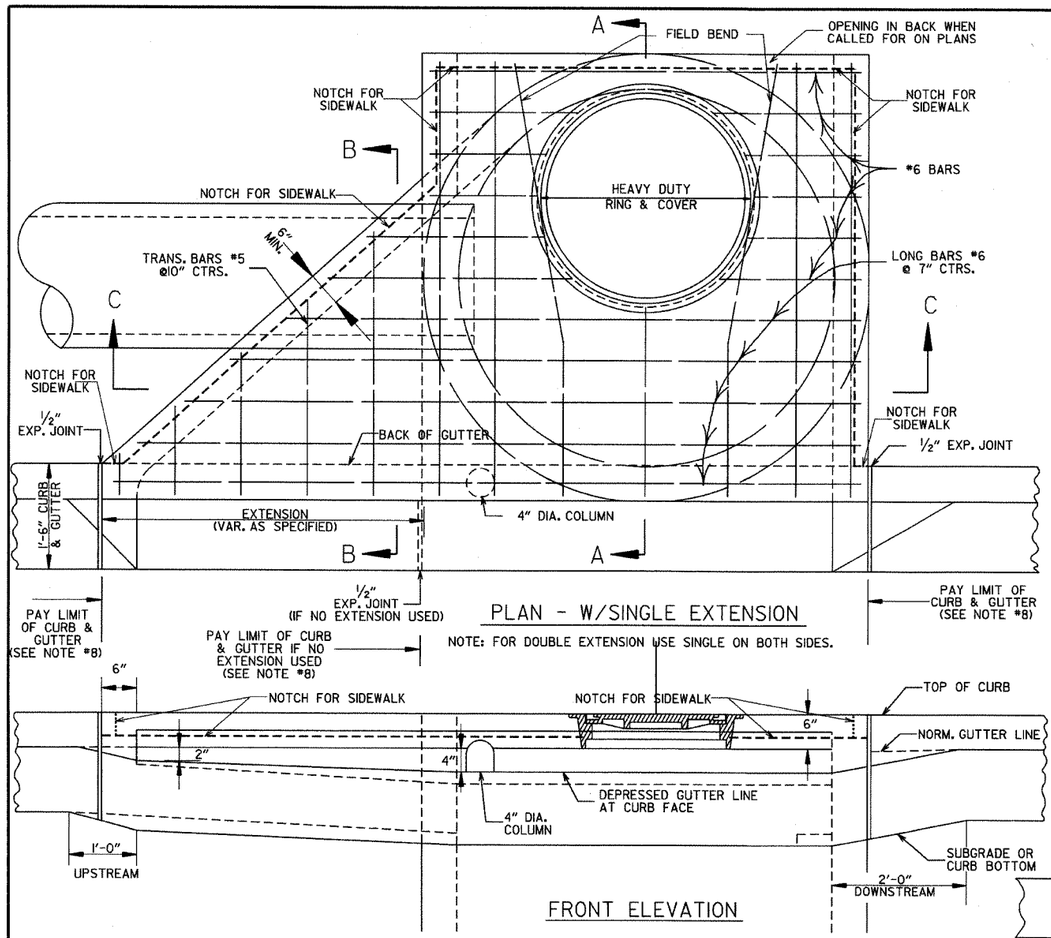

PLAN - W/SINGLE EXTENSION

NOTE: FOR DOUBLE EXTENSION USE SINGLE ON BOTH SIDES.

FRONT ELEVATION

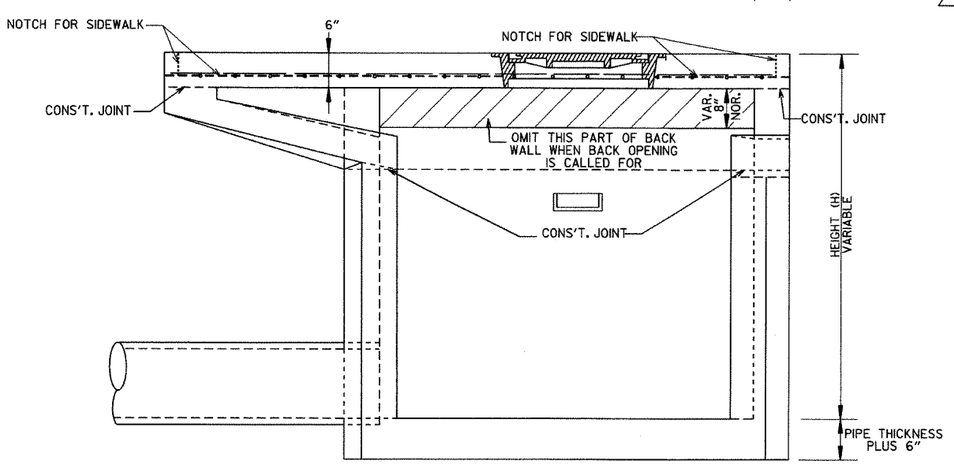

SECTION C-C

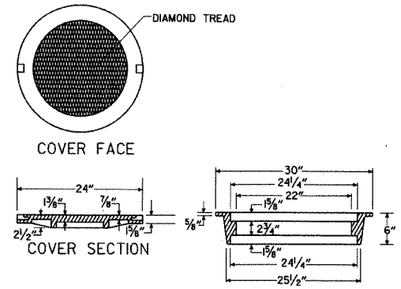

APPROXIMATE TOTAL WEIGHT = 333 LBS.

HEAVY DUTY RING & COVER

1. HEAVY DUTY RING AND COVER SHALL BE CONSTRUCTED OF CAST IRON AND SHALL CONFORM TO THE REQUIREMENTS OF THE STANDARD SPECIFICATIONS FOR GRAY IRON CASTINGS AASHTO M105 CLASS 35B & AASHTO M306.
2. HEAVY DUTY RING AND COVER SHALL NOT BE PAINTED.
3. HEAVY DUTY RING SHALL ALWAYS BE INSTALLED WITH FLANGE ON TOP.

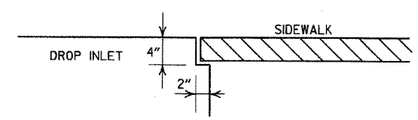

DETAIL OF NOTCH FOR SIDEWALKS

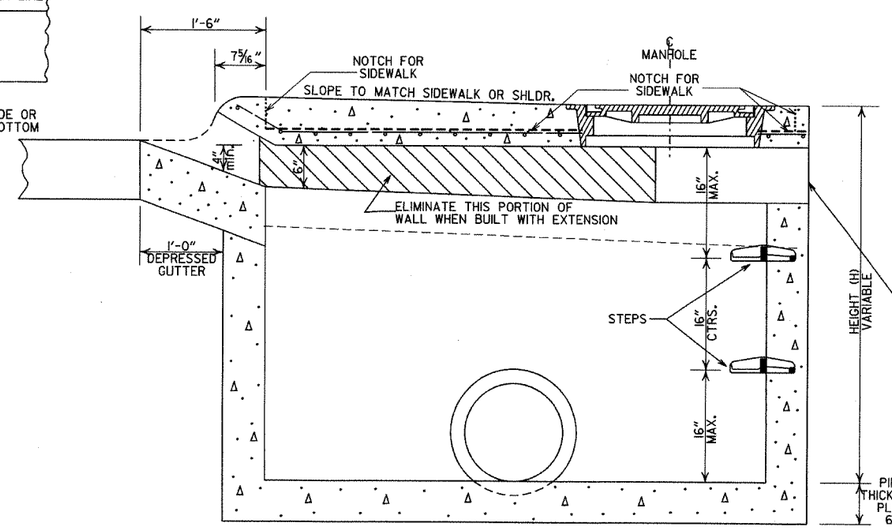

SECTION A-A

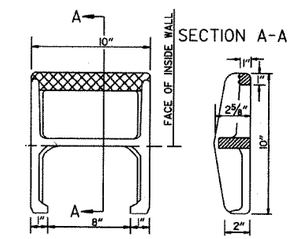

APPROX. WEIGHT = 11 LBS. (CAST IRON)

PLAN

NOTE: THIS DETAIL IS TYPICAL. OTHERS MAY BE USED WITH PRIOR APPROVAL OF THE ENGINEER.

DETAIL OF STEP FOR DROP INLET

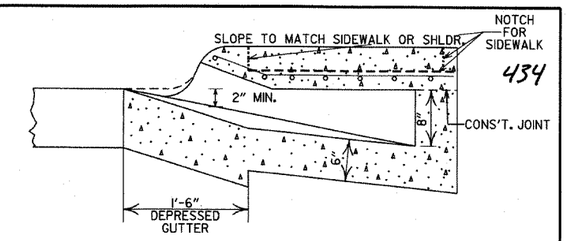

SECTION B-B

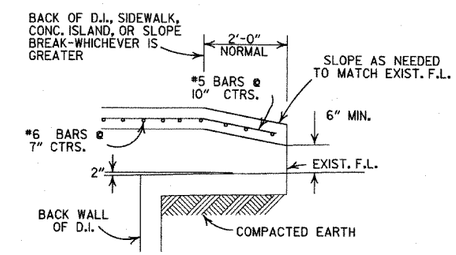

BACK OPENING

WHEN OPENING IN BACK IS CALLED FOR ON PLANS EXTEND OPENING AS SHOWN IN DETAIL. PAYMENT TO BE INCLUDED IN PRICE BID FOR DROP INLET (TYPE MO).

GENERAL NOTES:

1. ALL EXPOSED CORNERS TO HAVE 3/4" CHAMFER.
2. STEPS SHALL BE INSTALLED IN ALL INLETS 4'-0" HIGH AND OVER OR AS DIRECTED BY THE ENGINEER.
3. ALL REINFORCING BARS SHALL BE GRADE 60 AND HAVE MIN. 1 1/2" COVER.
4. DROP INLETS AND EXTENSION ON CURVED SECTIONS SHALL CONFORM TO THE CURVATURE OF THE CURB.
5. 4" DIA. COLUMNS SPACED AT MAX. 4'-0" INTERVALS SHALL BE INSTALLED ALONG INLET AND EXTENSION TO SUPPORT TOP.
6. BASE AND INLET WALLS SHALL BE CAST MONOLITHICALLY.
7. THE THROAT SHALL BE CAST INTEGRALLY WITH THE GUTTER.
8. PAYMENT FOR CURB AND/OR CURB AND GUTTER WITHIN THE LIMITS OF DROP INLETS AND DROP INLET EXTENSIONS SHALL BE CONSIDERED INCLUDED IN PAYMENT MADE FOR DROP INLETS AND/OR DROP INLET EXTENSIONS.
9. PIPES MAY ENTER DROP INLET FROM ANY ANGLE OR ELEVATION AS MAY BE APPROVED BY THE ENGINEER.
10. APPROPRIATE SIZE TYPE C DROP INLETS MAY BE SUBSTITUTED FOR TYPE MO DROP INLETS AS APPROVED BY THE ENGINEER. PAYMENT TO BE AS DROP INLET (TYPE MO).
11. DURING CONSTRUCTION OF THE ROADWAY THE CONTRACTOR SHALL MAINTAIN DRAINAGE INTO OR AROUND THE DROP INLET AS APPROVED BY THE ENGINEER.
12. 4"×2" NOTCH SHALL BE FORMED IN ALL DROP INLETS TO SUPPORT SIDEWALK CONSTRUCTION. REFER TO DETAIL OF NOTCH FOR SIDEWALKS.
13. DIMENSIONS SHOWN FOR RING AND COVER ARE TYPICAL. THE CONTRACTOR MAY SUBSTITUTE SIMILAR CASTINGS WITH THE APPROVAL OF THE ENGINEER. REQUESTING APPROVAL FOR CASTING DESIGNS MAY BE MADE BY REFERRING TO PREVIOUSLY APPROVED DRAWINGS.

LEAVE OPENING IN BACK WHEN CALLED FOR ON PLANS REFER TO BACK OPENING DETAIL

		MINIMUM WALL THICKNESS	
DIA. OF D.I.	DIA. OF OUTLET PIPE	CAST IN PLACE	PRECAST
4' I.D.	12" THRU 27"	6"	5"
5' I.D.	30" THRU 42"	8"	6"
6' I.D.	48" THRU 54"	8"	7"

DATE	REVISIONS	DATE FILMED
8-22-02	ADDED PAY LIMIT CURB NOTES TO SECTIONS A-A & B-B	
11-16-01	ADDED NOTE 13	
1-12-00	REVISED HEAVY DUTY RING & COVER	
5-13-99	ADDED NOTCH DETAIL FOR SIDEWALKS	
7-02-98	REP. NOTE 8, REM. PLAN DET., REV. PICTURE FOR NEW RING & COVER, ADDED HEAVY DUTY RING & COVER AND DETAIL OF STEP FOR DROP INLET	
4-26-96	ADDED NOTE 11 & ADJ. OPENING DIMENSION	
10-12-95	CORRECTED #6 BAR SPACING	
7-20-95	CORRECTED DIAMETER OF D.I. IN BOX	
4-2-95	TYPE C TO MO (OPEN BACK DETAIL)	
11-3-94	REVISED GENERAL NOTES	11-3-94
4-1-93	REV. BACK OPEN. DETAIL & NOTE	4-1-93
8-15-91	REVISED NOTES 11,12 & ADDED BK.OPEN DETAIL	8-15-91
11-30-89	ADDED NOTE NO. 12	11-30-89
3-23-89	ADDED NOTE & MINIMUM WALL THICKNESS	SIC-3-23-89
7-12-88	ADDED EXTEND NOTE TO SECTION A-A	6,9,5-7-12-88
1-14-87	MODIFIED WALL THICKNESS	7,8,1-14-87
12-12-87	ISSUED	4-6-12-87

ARKANSAS STATE HIGHWAY COMMISSION

DETAILS OF DROP INLET (TYPE MO)

STANDARD DRAWING FPC-9M

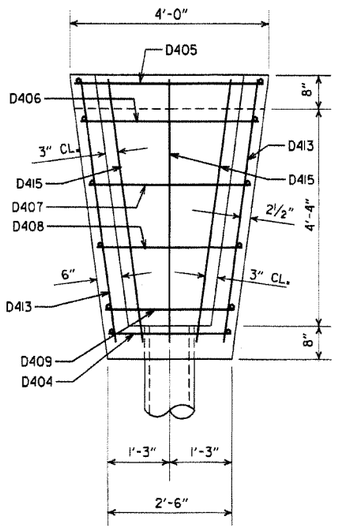

PLAN

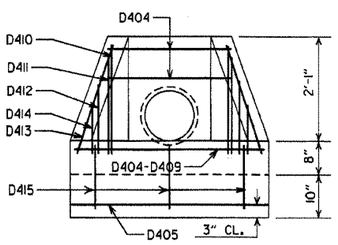

FRONT ELEVATION

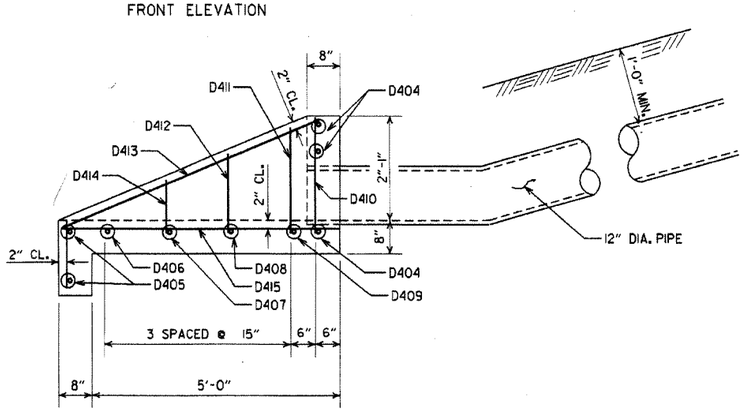

SIDE ELEVATION
CONCRETE SPILLWAY

BAR LIST (CONCRETE SPILLWAY)

MARK	NO. REQ'D.	LENGTH	BENDING DIAGRAM
D404	3	2'-2"	5'-4"; 1'-2"; 2" P.D.
D405	2	3'-8"	
D406	1	3'-5"	
D407	1	3'-1"	
D408	1	2'-9"	
D409	1	2'-5"	
D410	2	2'-5"	
D411	2	2'-2"	
D412	2	1'-9"	
D413	2	5'-6"	
D414	2	1'-2"	
D415	3	6'-5"	D415

DETAILS OF CONCRETE SPILLWAY (TYPE A)

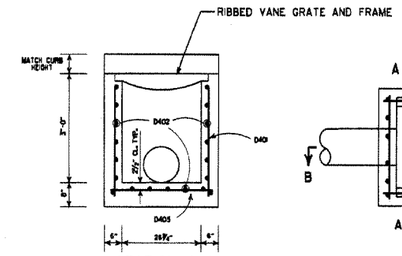

SECTION A-A

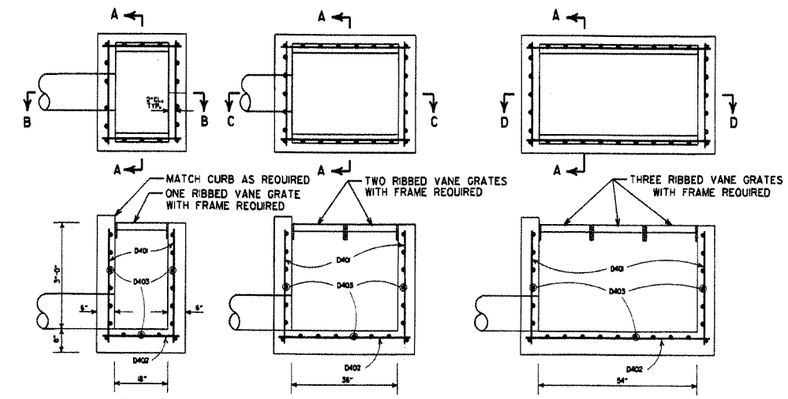

SECTION B-B
DETAILS OF DROP INLET
(TYPE N-1)

SECTION C-C
DETAILS OF DROP INLET
(TYPE N-2)

SECTION D-D
DETAILS OF DROP INLET
(TYPE N-3)

BAR LIST (DROP INLET)

MARK	TYPE N-1		TYPE N-2		TYPE N-3	
	NO. REQ'D.	LENGTH	NO. REQ'D.	LENGTH	NO. REQ'D.	LENGTH
D401	20	3'-0"	26	3'-0"	32	3'-0"
D402	19	2'-2"	19	3'-8"	19	5'-2"
D403	17	2'-11"	20	2'-11"	23	2'-11"

ALL BARS #4 @ 6" SPACING

DETAILS OF DROP INLET

GENERAL NOTES (GRATE & FRAME)

1. RIBBED VANE GRATE AND FRAME SHALL BE CONSTRUCTED OF CAST IRON AND SHALL CONFORM TO THE REQUIREMENTS OF THE STANDARD SPECIFICATIONS FOR GRAY IRON CASTINGS AASHTO M 105 CLASS 35B & AASHTO M 306.
2. GRATE AND FRAME SHALL NOT BE PAINTED.
3. GRATE AND FRAME SHALL BE INSTALLED IN DROP INLET IN ASSEMBLED POSITION.
4. APPROXIMATE WEIGHT OF GRATE SHALL BE 170 LBS.

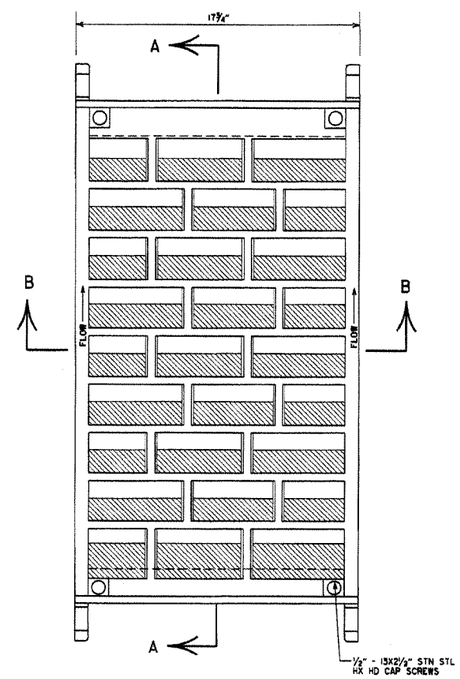

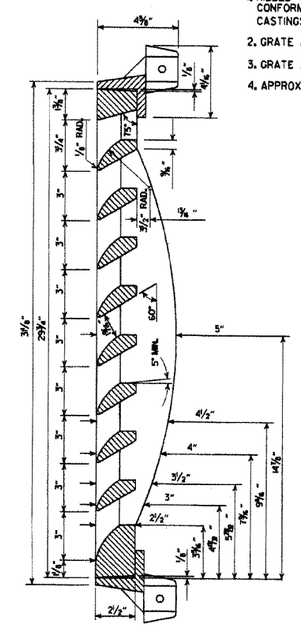

SECTION A-A

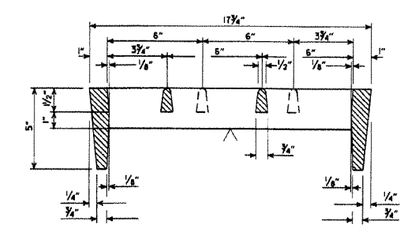

SECTION B-B

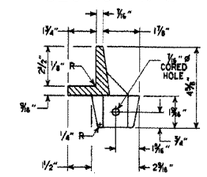

SECTION THRU FRAME

DETAILS OF RIBBED VANE GRATE AND FRAME

DATE REVISED	DATE FILMED	DESCRIPTION
7-02-98	7-2-98	REVISED SECT. A-A DETAIL OF DROP INLET & ADDED AASHTO REF. TO NOTE 1, REVISED GRATE
10-18-96		REVISED ASTM REF. TO AASHTO
8-15-91		ISSUED

ARKANSAS STATE HIGHWAY COMMISSION

DETAILS OF DROP INLETS AND SPILLWAY OUTLET

STANDARD DRAWING FPC-9N

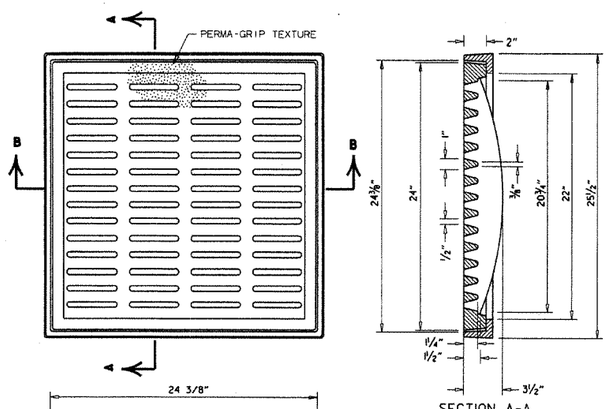

SECTION A-A

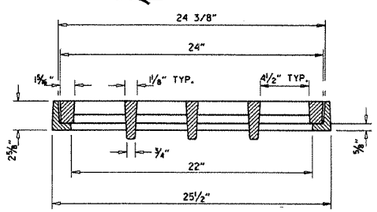

SECTION B-B

DETAILS OF PEDESTRIAN GRATE AND FRAME

GENERAL NOTES (PEDESTRIAN GRATE & FRAME)

1. THE PEDESTRIAN GRATE SHALL BE ORIENTED IN THE TOP OF THE DROP INLET SO THAT THE 1/2" OPENINGS ARE PERPENDICULAR TO THE PATH OF PEDESTRIAN TRAVEL.
2. THE PEDESTRIAN GRATE AND FRAME SHALL BE CONSTRUCTED OF CAST IRON AND SHALL CONFORM TO THE REQUIREMENTS OF THE STANDARD SPECIFICATIONS FOR GRAY IRON CASTINGS AASHTO M 105, CLASS 35B, & AASHTO M 306.
3. THE GRATE AND FRAME SHALL NOT BE PAINTED.
4. THE GRATE AND FRAME SHALL BE INSTALLED IN THE DROP INLET IN THE ASSEMBLED POSITION.
5. THE APPROXIMATE WEIGHT OF THE GRATE AND FRAME SHALL BE 211 LBS.
6. THE MINIMUM WATERWAY OPENING SHALL BE 122 SQ. IN.

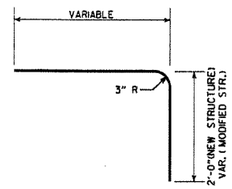

DETAIL OF BENT "b" BAR

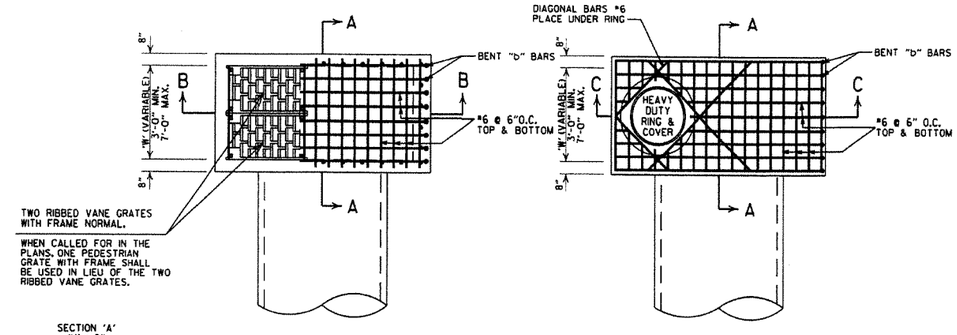

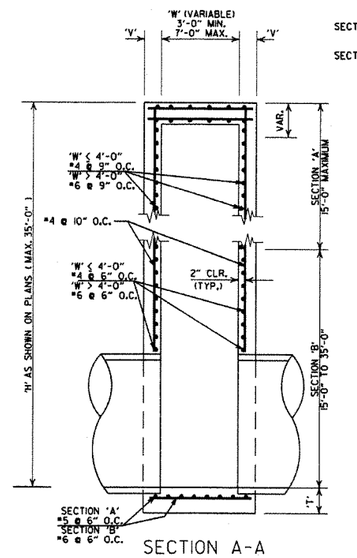

SECTION A-A

DETAILS OF DROP INLET (TYPE ST)

SECTION 'A'
'V' = 8"

SECTION 'B' (W<4'-0")
'V' = 8"

SECTION 'B' (W>4'-0")
'V' = 10"

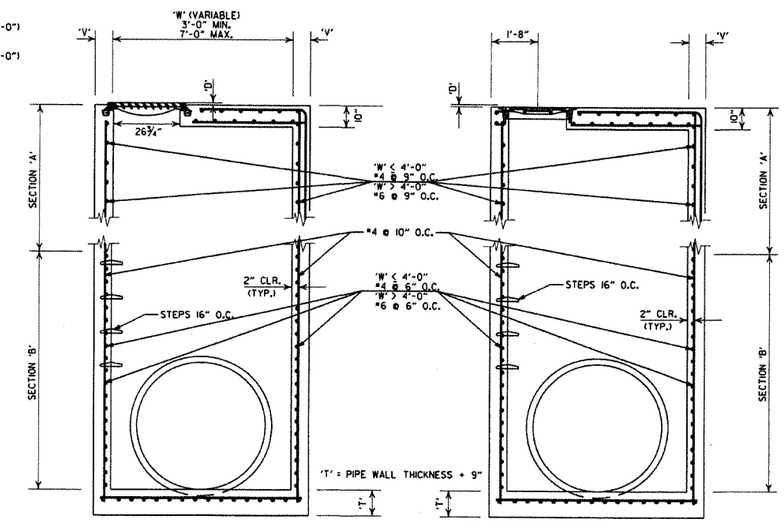

SECTION B-B

SECTION C-C

DETAILS OF JUNCTION BOX (TYPE ST)

GENERAL NOTES (TYPE ST DROP INLET & JUNCTION BOX)

1. THE 'D' DIMENSION SHALL MATCH THE FINAL LIFT OF ACHM SURFACE COURSE SHOWN IN THE PLANS WHEN ASPHALT PAVING SURROUNDS THE GRATE OR RING COVER, AND SHALL BE 0" AT OTHER INSTALLATIONS.
2. THE STEPS SHALL BE OMITTED WHERE 'H' IS LESS THAN 4'-0".
3. ALL EXPOSED CORNERS ARE TO HAVE A 3/4" CHAMFER.

GENERAL NOTES (HEAVY DUTY RING & COVER):

1. HEAVY DUTY RING AND COVER SHALL BE CONSTRUCTED OF CAST IRON AND SHALL CONFORM TO THE REQUIREMENTS OF THE STANDARD SPECIFICATIONS FOR GRAY IRON CASTINGS AASHTO M 105, CLASS 35B, & AASHTO M 306.
2. HEAVY DUTY RING AND COVER SHALL NOT BE PAINTED.
3. HEAVY DUTY RING SHALL ALWAYS BE INSTALLED WITH FLANGE ON TOP.
4. DIMENSIONS SHOWN FOR RING AND COVER ARE TYPICAL. THE CONTRACTOR MAY SUBSTITUTE SIMILAR CASTINGS WITH THE APPROVAL OF THE ENGINEER. REQUESTING APPROVAL FOR CASTING DESIGNS MAY BE MADE BY REFERRING TO PREVIOUSLY APPROVED DRAWINGS.

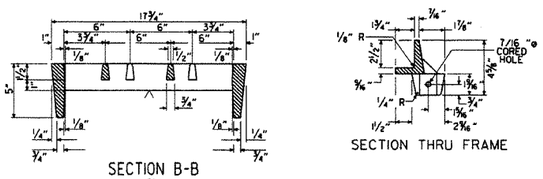

SECTION B-B

SECTION THRU FRAME

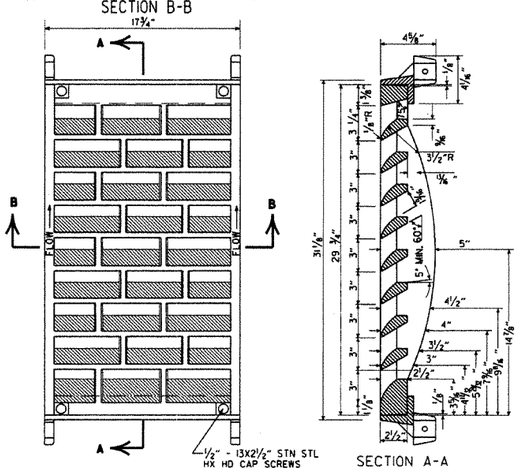

SECTION A-A

DETAILS OF RIBBED VANE GRATE AND FRAME

GENERAL NOTES (RIBBED VANE GRATE & FRAME)

1. RIBBED VANE GRATE AND FRAME SHALL BE CONSTRUCTED OF CAST IRON AND SHALL CONFORM TO THE REQUIREMENTS OF THE STANDARD SPECIFICATIONS FOR GRAY IRON CASTINGS AASHTO M 105, CLASS 35B, & AASHTO M 306.
2. GRATE AND FRAME SHALL NOT BE PAINTED.
3. GRATE AND FRAME SHALL BE INSTALLED IN DROP INLET IN ASSEMBLED POSITION.
4. APPROXIMATE WEIGHT OF GRATE SHALL BE 170 LBS.

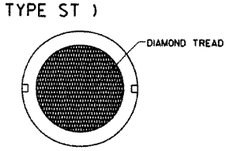

COVER FACE

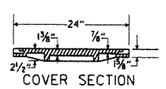

COVER SECTION

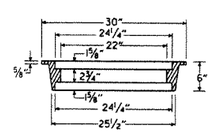

RING SECTION

HEAVY DUTY RING & COVER

APPROXIMATE TOTAL WEIGHT = 333 LBS.

DATE REVISED	DATE FILMED	DESCRIPTION
7-26-12		REMOVED NOTE 4, REVISED 'T', REVISED BOTTOM SLAB REBAR FOR SECTION 'A', SHOWED REBAR CLEARANCE IN SECTIONS
11-16-01		ADDED NOTE 4
1-12-00		REVISED HEAVY DUTY RING & COVER
5-13-99		ADDED PEDESTRIAN FRAME & GRATE
7-02-98		REMOVED NOTE 5, REV. DIMENSIONS, ADDED HEAVY DUTY RING & COVER ADDED AASHTO REF. REVISED GRATE
10-18-96		REVISED ASTM REF. TO AASHTO
10-1-92		REVISED & REISSUED
8-15-91	8-15-91	REVISED & REISSUED

ARKANSAS STATE HIGHWAY COMMISSION

DETAILS OF DROP INLET & JUNCTION BOX (TYPE ST)

STANDARD DRAWING FPC-9S

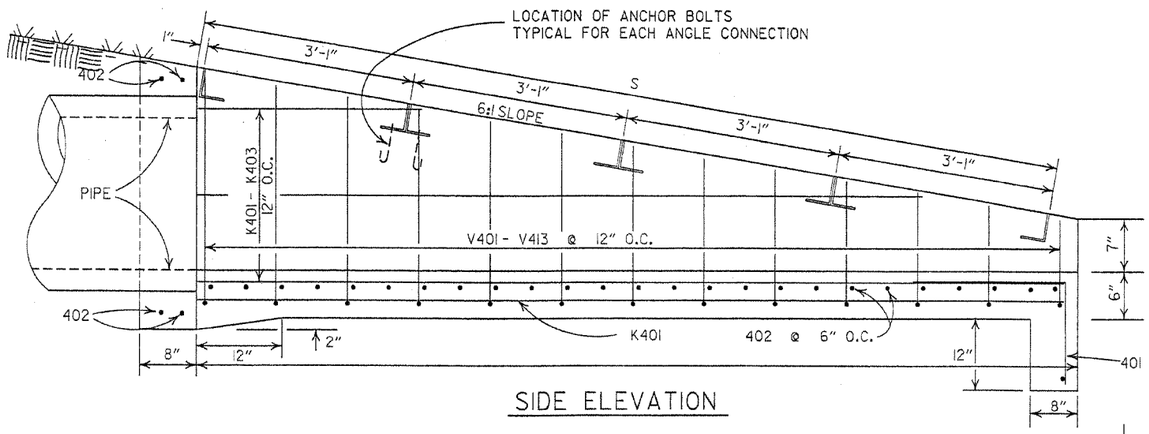

SIDE ELEVATION

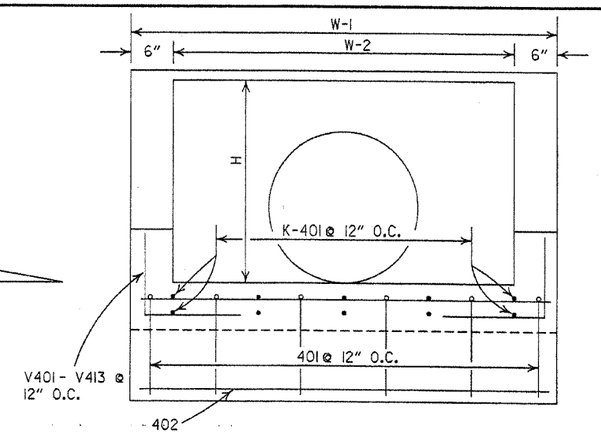

END ELEVATION

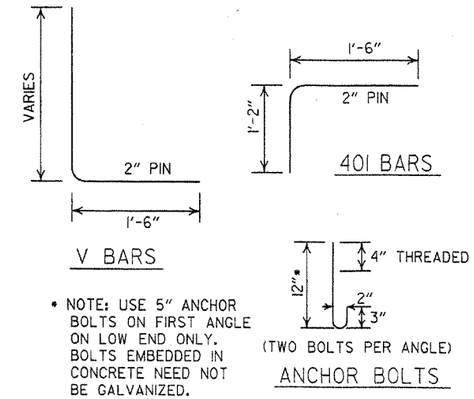

* NOTE: USE 5" ANCHOR BOLTS ON FIRST ANGLE ON LOW END ONLY. BOLTS EMBEDDED IN CONCRETE NEED NOT BE GALVANIZED.

BENDING DIAGRAM

(DIMENSIONS ARE OUTSIDE TO OUTSIDE)

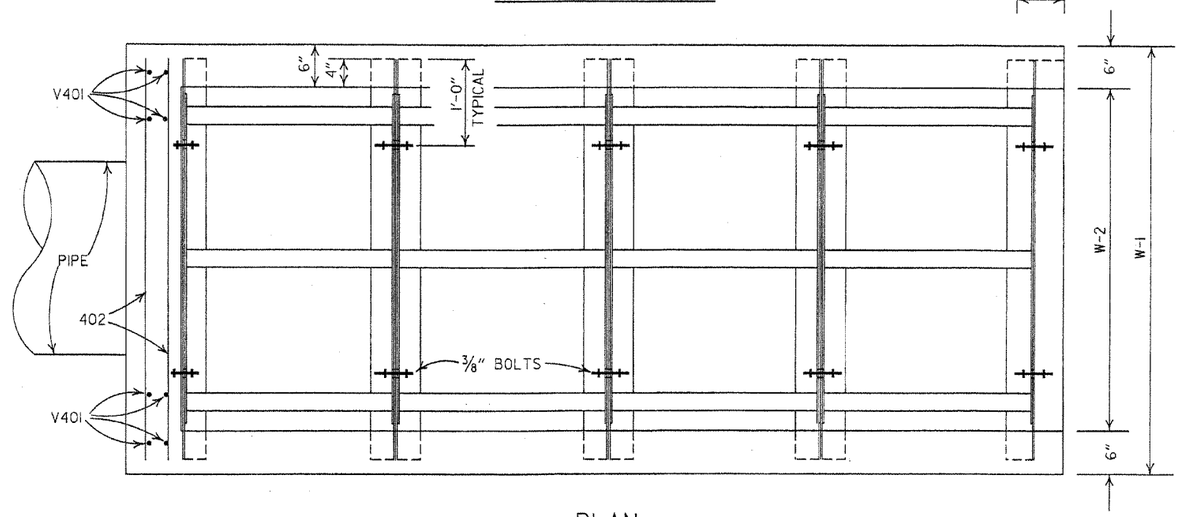

PLAN

QUANTITIES & DIMENSIONS - ONE GRATE COMPLETE

PIPE DIA.	W - 1	W - 2	L	S	H	PANEL SIZE	NUMBER OF PANELS	ANGLE DIMEN. D	APPROX. CONC. QUANT. CU. YDS.
24"	5'-0"	4'-0"	12'-6"	12'-8"	2'-8"	2'-11½" x 3'-10"	4	4" x 3½" x 3/8"	2.35
30"	5'-0"	4'-0"	15'-6"	15'-8½"	3'-2"	2'-11½" x 3'-10"	5	4" x 3½" x 3/8"	3.09
18"	5'-0"	4'-0"	9'-6"	9'-7½"	2'-2"	2'-11½" x 3'-10"	3	4" x 3½" x 3/8"	1.77

BAR LISTS - ONE HEADWALL

24" PIPE

MRK	LENGTH	NO.
401	2'-8"	6
402	4'-8"	30
K401	12'-2"	10
K402	10'-3"	2
K403	4'-3"	2
V401	4'-5"	10
V402	4'-1"	2
V403	3'-11"	2
V404	3'-9"	2
V405	3'-7"	2
V406	3'-5"	2
V407	3'-3"	2
V408	3'-1"	2
V409	2'-11"	2
V410	2'-9"	2
V411	2'-7"	2
V412	2'-5"	2
V413	2'-3"	2

30" PIPE

MRK	LENGTH	NO.
401	2'-8"	6
402	4'-8"	36
K401	15'-2"	10
K402	13'-3"	2
K403	7'-3"	2
K404	1'-3"	2
V401	4'-11"	10
V402	4'-7"	2
V403	4'-5"	2
V404	4'-3"	2
V405	4'-1"	2
V406	3'-11"	2
V407	3'-9"	2
V408	3'-7"	2
V409	3'-5"	2
V410	3'-3"	2
V411	3'-1"	
V412	2'-11"	
V413	2'-9"	
V414	2'-7"	
V415	2'-5"	
V416	2'-3"	

18" PIPE

MARK	LENGTH	NO.
401	2'-8"	6
402	4'-8"	24
K401	9'-2"	10
K402	7'-3"	2
K403	1'-3"	2
V401	3'-11"	10
V402	3'-7"	2
V403	3'-5"	2
V404	3'-3"	2
V405	3'-1"	2
V406	2'-11"	2
V407	2'-9"	2
V408	2'-7"	2
V409	2'-5"	2
V410	2'-3"	2

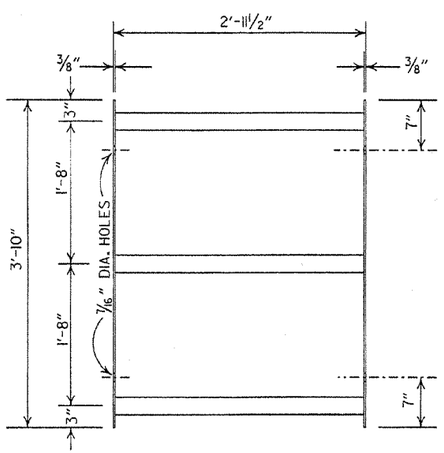

STANDARD GRATE PANEL

NOTE: 2½" STANDARD STEEL PIPE TO BE VENTED FOR GALVANIZING.

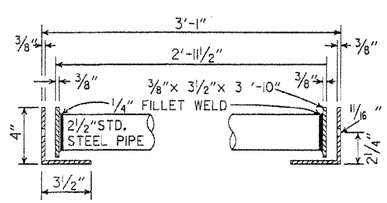

TYPICAL SECTION

FURNISH WASHERS WITH BOLTS

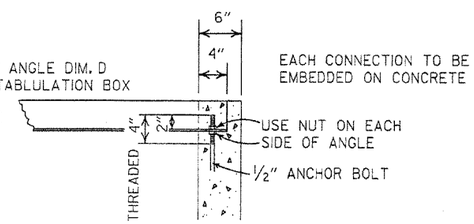

DETAIL OF ANGLE CONNECTION

DATE	REVISION	DATE FILMED
8-15-91	REVISED GRATE PANEL	8-15-91
2-16-89	ADDED (TYPE I) TO TITLE	581-2-16-89
7-15-88	CHANGED TITLE	641-7-15-88
2-18-75	ADDED QTYS. & DIMENSIONS FOR 18" PIPE	985-2-18-75
10-2-72	REVISED & REDRAWN	761-10-2-72

ARKANSAS STATE HIGHWAY COMMISSION

STEEL GRATE ASSEMBLY
(TYPE I)

STANDARD DRAWING G-1

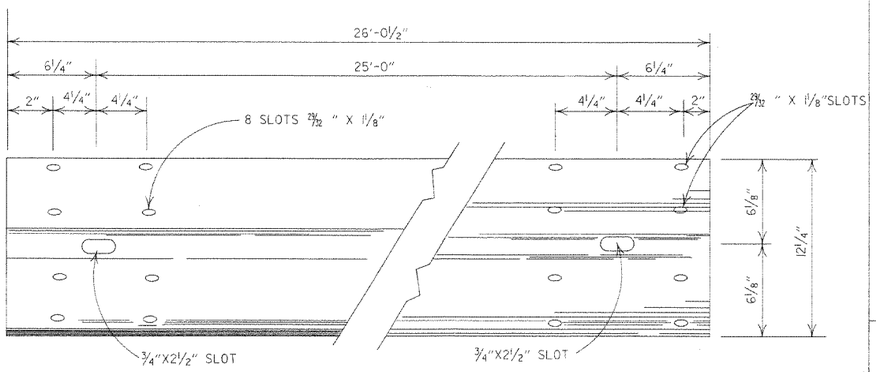

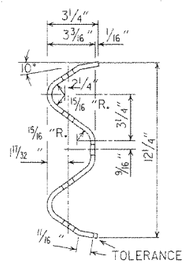

DETAILS OF
W-BEAM GUARD RAIL

RAIL SECTION OF CLOSELY SIMILAR DIMENSIONS AND COMPARABLE STRENGTH MAY BE SUBSTITUTED IF APPROVED BY THE ENGINEER.

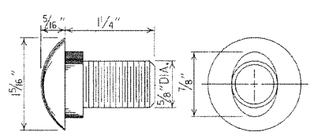

SPLICE BOLT
POST BOLT - SAME EXCEPT LENGTH

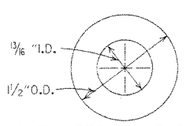

CUT STEEL WASHER

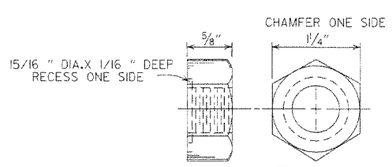

NUT

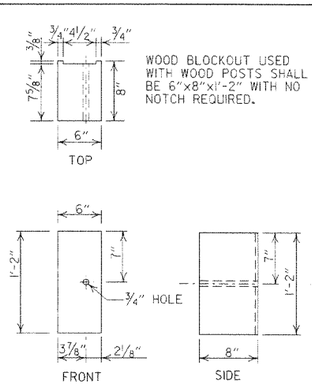

WOOD BLOCKOUT USED WITH WOOD POSTS SHALL BE 6"x8"x1'-2" WITH NO NOTCH REQUIRED.

WOOD BLOCKOUT
(W-BEAM)

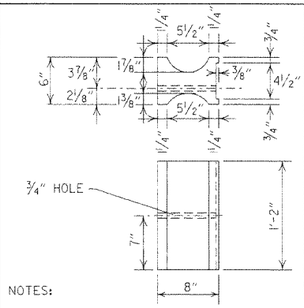

NOTES:

1. SIMILAR SHAPED PLASTIC BLOCKOUTS MAY BE USED AS LONG AS THEY MEET NCHRP-350 TEST LEVEL 3 SPECIFICATIONS OR REQUIREMENTS FOR MANUAL FOR ASSESSING SAFETY HARDWARE (MASH).
2. DIMENSIONS ARE SUBJECT TO MANUFACTURERS TOLERANCES.

PLASTIC BLOCKOUT
(W-BEAM)

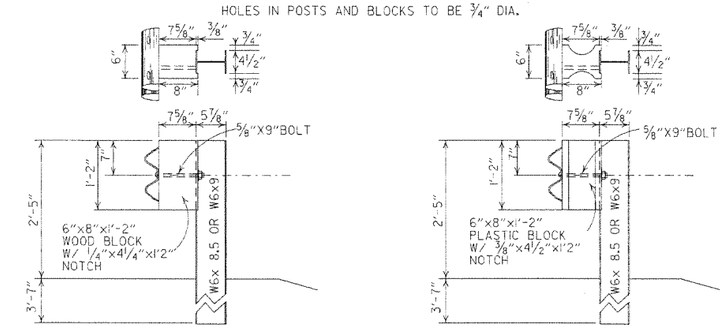

WOOD BLOCKOUT CONNECTIONS

PLASTIC BLOCKOUT CONNECTIONS

DETAILS OF STEEL LINE POST CONNECTIONS
(W-BEAM)

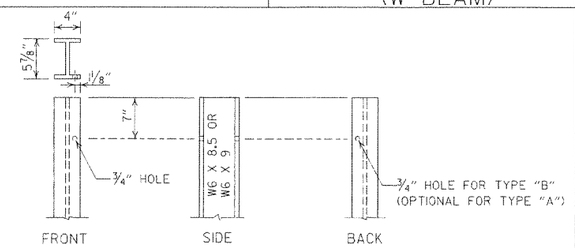

STEEL POST

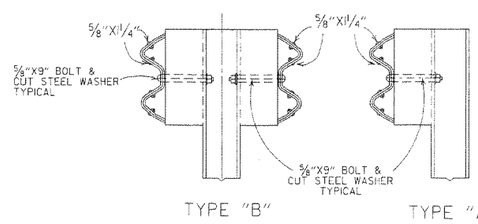

DETAILS OF STEEL LINE POST CONNECTIONS
(W-BEAM)

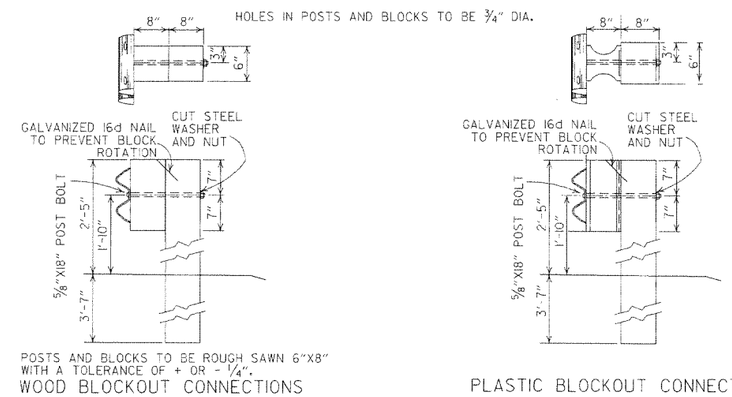

POSTS AND BLOCKS TO BE ROUGH SAWN 6"X8" WITH A TOLERANCE OF + OR - 1/4".

WOOD BLOCKOUT CONNECTIONS

PLASTIC BLOCKOUT CONNECTIONS

DETAILS OF WOOD LINE POST CONNECTIONS
(W-BEAM)

-GENERAL NOTES-

ALL BOLTS SHALL BE SUFFICIENT LENGTH TO EXTEND THROUGH THE FULL THICKNESS OF THE NUT AND NO MORE THAN 3/4" BEYOND IT.

WHERE W-BEAM GUARD RAIL CONTINUES, THE INTERMEDIATE SECTIONS SHALL HAVE A POST SPACING OF 6'-3" UNLESS OTHERWISE NOTED.

W-BEAM GUARD RAIL REPRESENTING INTERMEDIATE SECTIONS WILL BE MEASURED ALONG THE ROADWAY FACE FROM CENTERLINE OF POST TO CENTERLINE OF POST.

USE W-BEAM GUARD RAIL COMPONENTS OF SAME MATERIAL FOR ENTIRE JOB. FOR EXTENSIONS OR MODIFICATION OF EXISTING GUARD RAIL, W-BEAM GUARD RAIL COMPONENTS OF THE SAME TYPE AS THOSE EXISTING SHALL BE USED.

ANY BACKFILLING UNDER OR AROUND POST SHALL BE DAMP SAND THOROUGHLY TAMPED IN PLACE.

WOOD POSTS & WOOD BLOCKS SHALL BE EITHER DENSE NO. 1 STRUCTURAL OR BETTER 9.7# (1400 #) OR NO. 1 (1350 # SOUTHERN PINE.

CONTRACTOR SHALL HAVE THE OPTION OF USING WOOD BLOCKOUTS FOR W-BEAM GUARD RAIL OR PLASTIC BLOCKOUTS, AS LONG AS BLOCKOUT USED MEETS NCHRP-350 TEST LEVEL 3 SPECIFICATIONS OR REQUIREMENTS FOR MANUAL FOR ASSESSING SAFETY HARDWARE (MASH) FOR W-BEAM GUARD RAIL.

DATE	REVISION	DATE FILM
7-14-10	RAISED HEIGHT OF GUARD RAIL 1"	
10-15-09	ADDED REFERENCE TO MASH	
4-10-03	REVISED GENERAL NOTES	
8-22-02	REVISED DIMENSION ON WOOD & PLASTIC BLOCKOUT CONNECTIONS & ON STEEL POST	
11-16-01	REVISED WOOD BLOCKOUT & DETAILS OF WOOD LINE POST CONNECTIONS	
3-30-00	REMOVED GUARD RAIL AT BRIDGE ENDS	
1-12-00	ADDED PLASTIC BLOCKOUT	
8-12-98	REV. BLOCKOUTS TO WOOD, DELETED CONC. POST & REV. GENERAL NOTE, DELETED DET. OF GUARD RAIL REPLACE. BEHIND CURB & DET. OF POST PLACE. IN SOLID ROCK, & ADDED DETAILS OF STEEL LINE POST CONN. REMOVED BACK-UP PLATE, REVISED HOLES IN STEEL POLES	
4-3-97	REMOVED "LAP IN DIRECTION OF TRAFFIC" NOTE & PLACED ARROWS ON WASHERS	
10-18-96	REVISED WOOD POST NOTE	
6-2-94	ADDED ALT. STEEL POST SIZE	
8-5-93	REVISED STEEL POST SIZE	8-5-93
10-1-92	REDRAWN & REVISED	10-1-92
8-15-91	REVISED WASHER NOTE	8-15-91
8-2-90	REV. GEN. NOTE & DEPHT OF ANC. POST IN ROCK	8-2-90
7-15-88	REVISED SECTION 3 & GENERAL NOTES	
3-4-88	REV. ANCHOR POST, ELEV. NOTES & POST IN ROCK	780-3-4-88
10-30-87	REVISED WOOD LINE POST DETAIL	546-10-30-87
10-9-87	REDRAWN & REVISED	802-10-9-87

ARKANSAS STATE HIGHWAY COMMISSION

GUARD RAIL DETAILS

STANDARD DRAWING GR-8

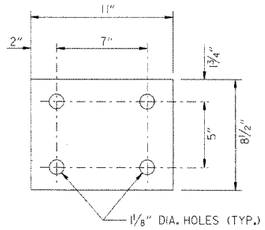

WASHER PLATE

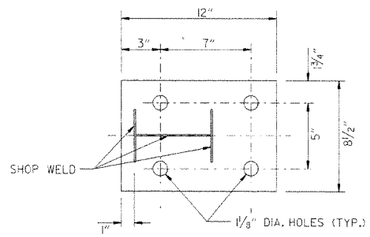

BASE PLATE

Note: Bolts, nuts, washers and plates shall be galvanized in accordance with Section 807 of the Standard Specifications.

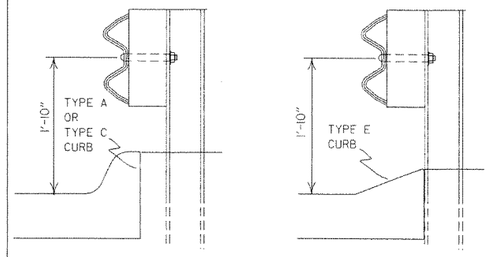

FOR DESIGN SPEEDS OF 50 MPH OR LESS

ALIGN FACE OF GUARD RAIL WITH FACE OF CURB.

FOR DESIGN SPEEDS OF 55 MPH OR MORE

PLACE GUARD RAIL POSTS AGAINST BACK OF CURB.

DETAIL OF GUARD RAIL PLACEMENT BEHIND CURB (W-BEAM)

FOR DESIGN SPEEDS OF 50 MPH OR LESS ALL CURB FACES, AS SHOWN ON STD. DRWG. CG-1, MAY BE USED. FOR DESIGN SPEEDS OF 55 MPH OR MORE TYPE "E" CURB FACE SHALL BE USED.

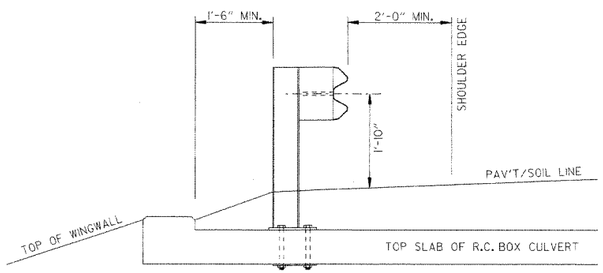

SECTION A-A

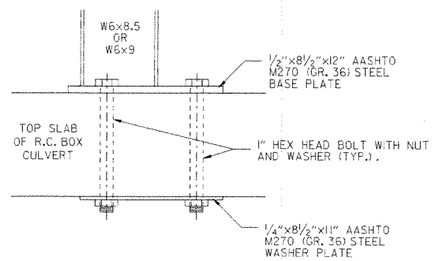

DETAIL OF CONNECTION

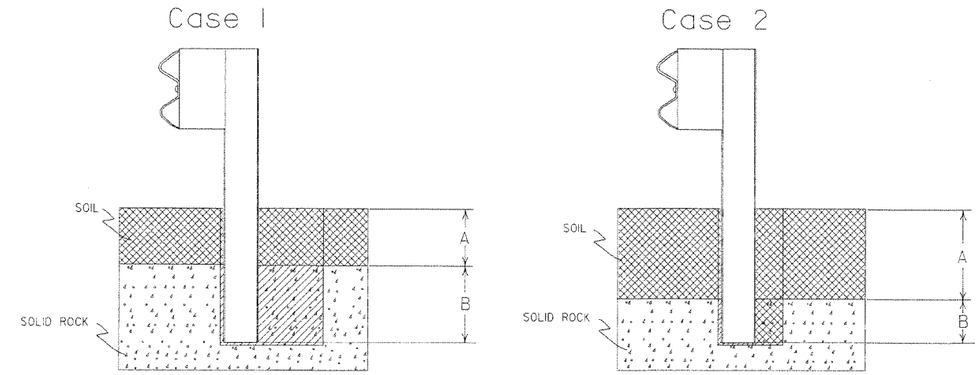

Plan View Steel Posts

Either hole configuration acceptable

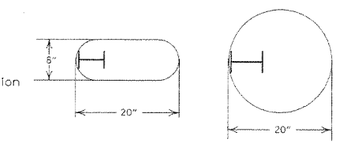

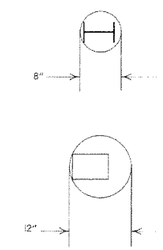

Plan View Wood Posts

Either hole configuration acceptable

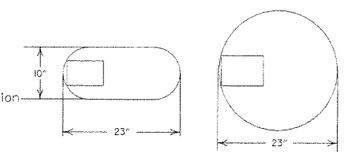

Notes: For overlying soil depths (A) ranging from 0 to 18", the depth of required drilling (B) is equal to 24".

Zone A:
Backfill according to Section 617.03(a).

Zone B:
Backfill hole in 6" lifts with material meeting the requirements of Section 802.02(c) - Alternate gradation. Compact to 95% maximum dry density per ASTM D-698.

Notes: For overlying soil depths (A) ranging from 18" to 44", the depth of required drilling (B) is equal to either 12" or 44" minus the depth of soil whichever is less.

Zone A & B:
Backfill according to Section 617.03(a).

DETAIL OF POST PLACEMENT IN SOLID ROCK (W-BEAM)

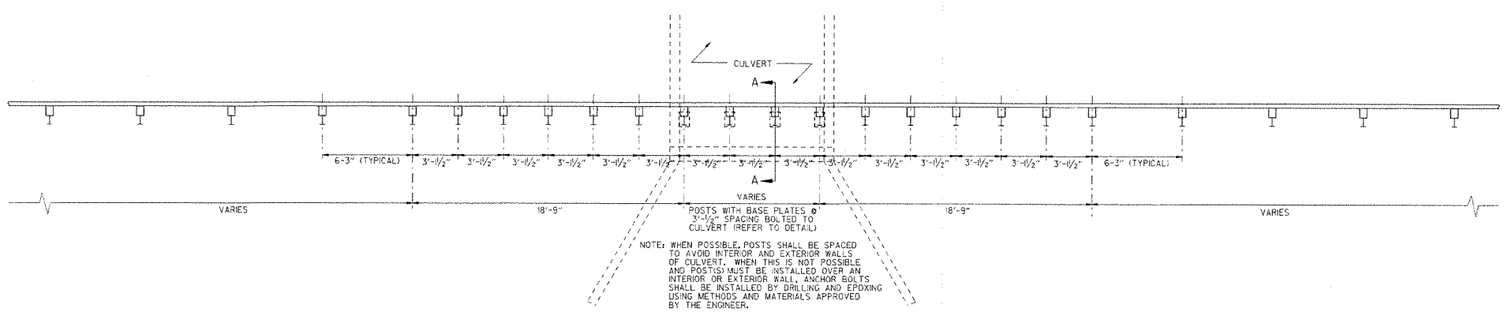

PLAN LAYOUT OF TYPE A GUARD RAIL AT LOW-FILL CULVERTS

NOTE: THIS DETAIL IS TO BE USED ONLY WHEN THE COVER OVER THE CULVERT DOES NOT PERMIT FULL EMBEDMENT OF GUARD RAIL POSTS AS SHOWN ON STD. DWG. GR-8.

DATE	REVISION	DATE FILM
7-14-10	RAISED HEIGHT OF GUARD RAIL 1"	
4-12-07	REVISED DETAIL OF GUARD RAIL PLACEMENT BEHIND CURB	
11-10-05	ADDED GUARD RAIL PLACEMENT BEHIND CURB; REVISED DETAIL OF CONNECTION	
11-18-04	REVISED POST PLACEMENT IN ROCK & CULVERT CONNECTION DETAILS. ADDED DETAIL FOR GUARD RAIL PLACEMENT AT LOW-FILL CULVERTS	
3-30-00	REMOVED CONCRETE INSERT ANCHOR	
6-12-98	CHANGED STEEL SPACER BLOCK TO WOOD BLOCKOUT, ADD. DET. OF GUARD RAIL CONNECTION TO R.C. BOX CULV'T. DELETED DET. OF STEEL LINE POST CONN.& ADDED DET. OF GUARD RAIL PLACE. BEHIND CURB & DET. OF POST PLACE. IN SOLID ROCK	
4-3-96	PLACED ARROWS AT CUT STEEL WASHERS	4-3-96
10-18-96	REV. ASTM REF. TO AASHTO	
11-22-95	ADDED OPTIONAL HOLES	
6-2-94	REVISED ALTERNATE POST SIZE	
8-6-93	REVISED STEEL POST SIZE	
10-1-92	REDRAWN & REVISED	10-1-92
8-2-90	DEL. WASHER ON ANCHOR ASSEMBLY	8-2-90
7-15-88	CONFORMED TO 1988 SPECS	
3-4-88	REVISED ANCHOR NOTE	
10-30-87	REVISED ANCHOR ASSEMBLY	712-10-30-87
10-30-87	REVISED PLACEMENT BEHIND CURB	547-10-30-87
10-9-87	REDRAWN & REVISED	803-10-9-87

ARKANSAS STATE HIGHWAY COMMISSION

GUARD RAIL DETAILS

STANDARD DRAWING GR-8A

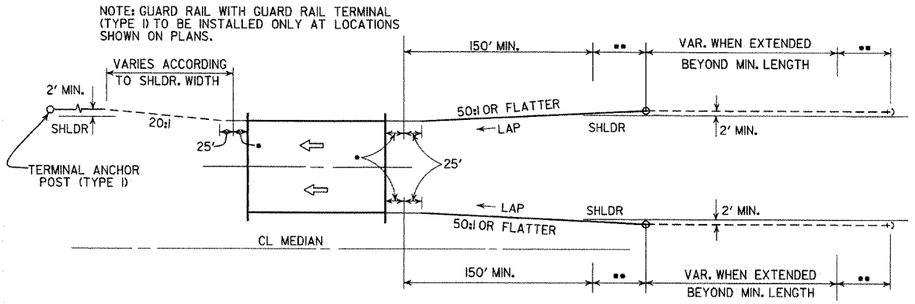

ONE-WAY TRAFFIC

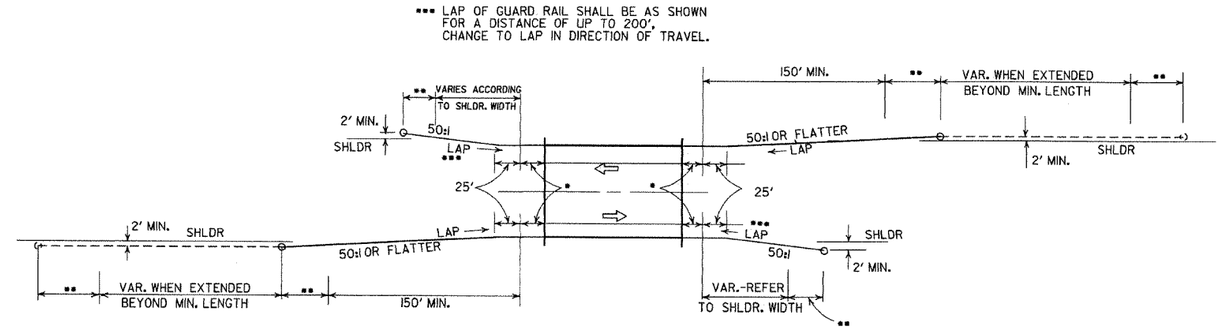

TWO-WAY TRAFFIC

METHODS OF INSTALLATION OF GUARD RAIL AT LESS THAN FULL SHOULDER WIDTH BRIDGES USING GUARD RAIL TERMINAL (TYPE 2)

••• LAP OF GUARD RAIL SHALL BE AS SHOWN FOR A DISTANCE OF UP TO 200', CHANGE TO LAP IN DIRECTION OF TRAVEL.

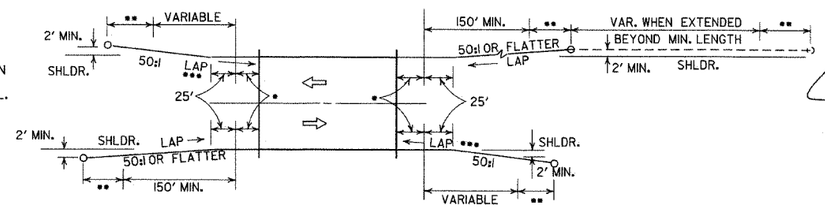

TWO-WAY TRAFFIC

NOTE: GUARD RAIL WITH GUARD RAIL TERMINAL (TYPE I) TO BE INSTALLED ONLY AT LOCATIONS SHOWN ON PLANS.

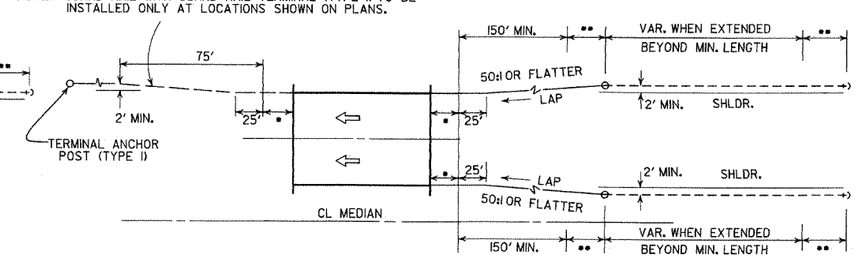

ONE-WAY TRAFFIC

METHOD OF INSTALLATION OF GUARD RAIL AT FULL SHOULDER WIDTH BRIDGES USING GUARD RAIL TERMINAL (TYPE 2)

••• LAP OF GUARD RAIL SHALL BE AS SHOWN FOR A DISTANCE OF UP TO 200', CHANGE TO LAP IN DIRECTION OF TRAVEL.

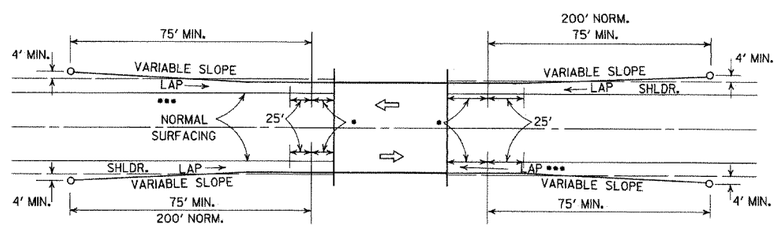

METHOD OF INSTALLATION OF GUARD RAIL
USING GUARD RAIL TERMINAL (TYPE I)
(FULL SHOULDER WIDTH OR LESS BRIDGES)

LEGEND

- • THRIE BEAM GUARD RAIL TERMINAL
- •• GUARD RAIL TERMINAL (TYPE 2)

DATE	REVISION	DATE FILM
4-17-08	REVISED LAYOUTS	
11-10-05	REMOVED GUARD RAIL NOTES AND DETAILS	
11-16-01	DELETED NOTE-METHOD OF INSTALLATION OF GUARD RAIL USING GUARD RAIL TERM. (TY. I)	
1-12-00	ADDED CONSTRUCTION NOTE	1-12-00
6-26-97	REVISED LAYOUT	
10-1-92	REDRAWN & REVISED	10-1-92
	ADDED NOTE	
10-9-87	REDRAWN & REVISED	

ARKANSAS STATE HIGHWAY COMMISSION

GUARD RAIL DETAILS

STANDARD DRAWING GR-9

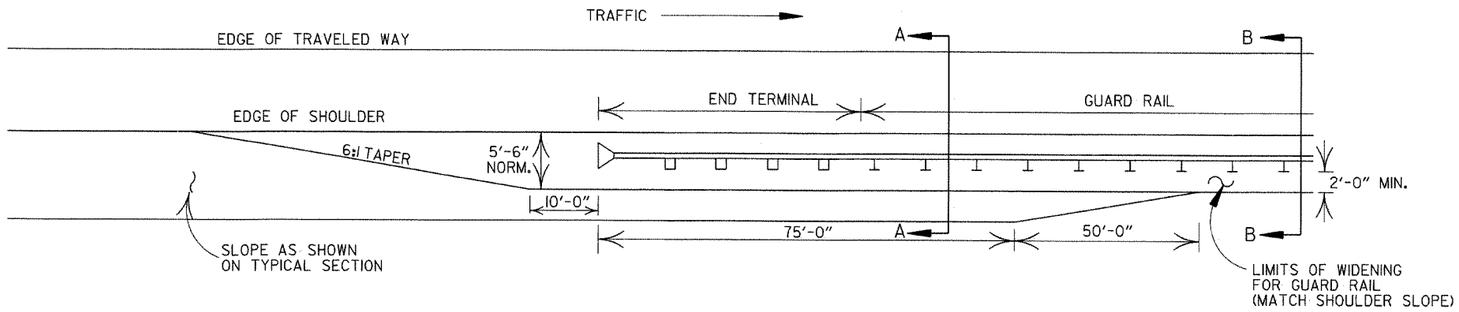

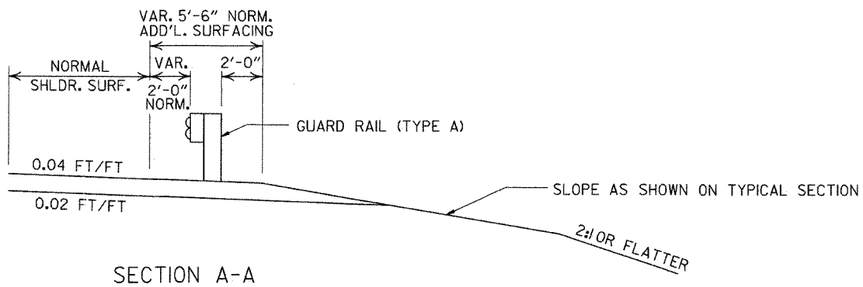

SECTION A-A

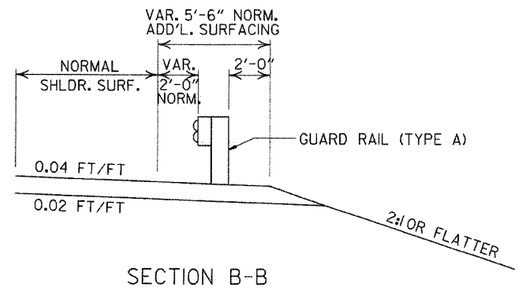

SECTION B-B

DETAILS OF WIDENING FOR GUARD RAIL

NOTE: NORMAL SECTION TO BE WIDENED APPROX. 5'-6" EACH SIDE TO SUPPORT GUARD RAIL.

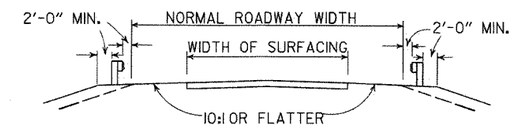

SECTION ON TANGENT

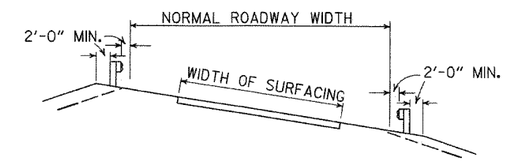

SECTION ON CURVE

DETAILS SHOWING POSITION OF GUARD RAIL ON HIGHWAY

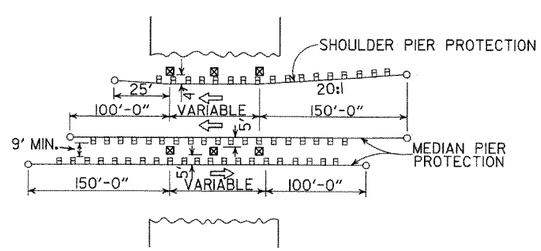

METHOD OF INSTALLATION OF GUARD RAIL AT FIXED OBSTACLE

DATE	REVISION	DATE FILM
4-17-08	MINOR REVISION	
11-10-05	DRAWN	

ARKANSAS STATE HIGHWAY COMMISSION

GUARD RAIL DETAILS

STANDARD DRAWING GR-9A

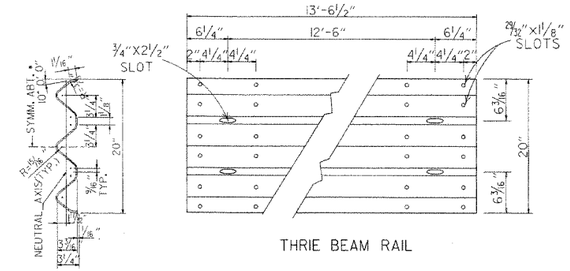

SECTION THRU THRIE BEAM RAIL

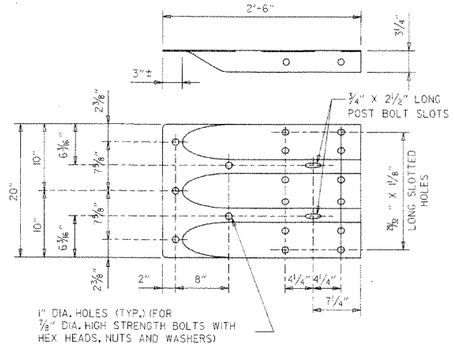

SPECIAL END SHOE

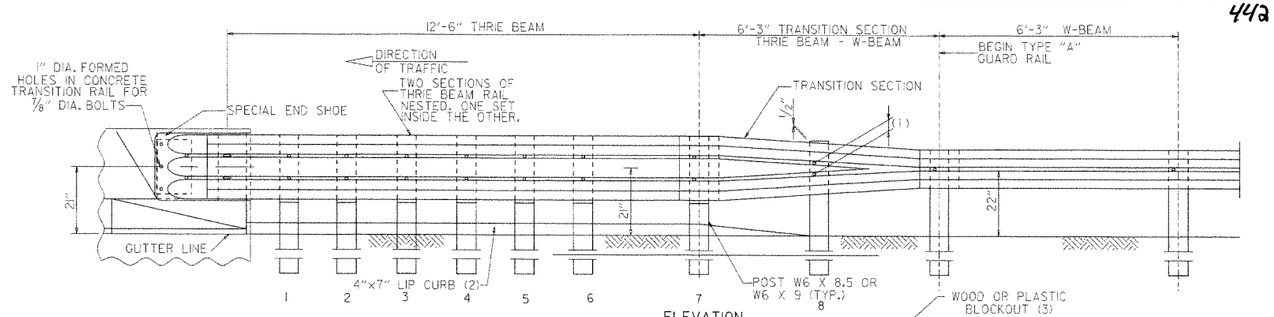

ELEVATION

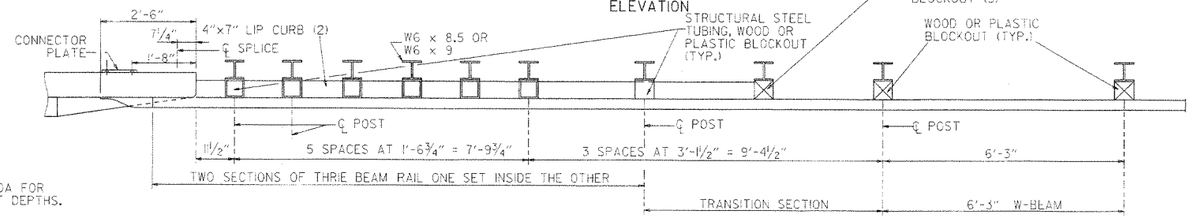

PLAN

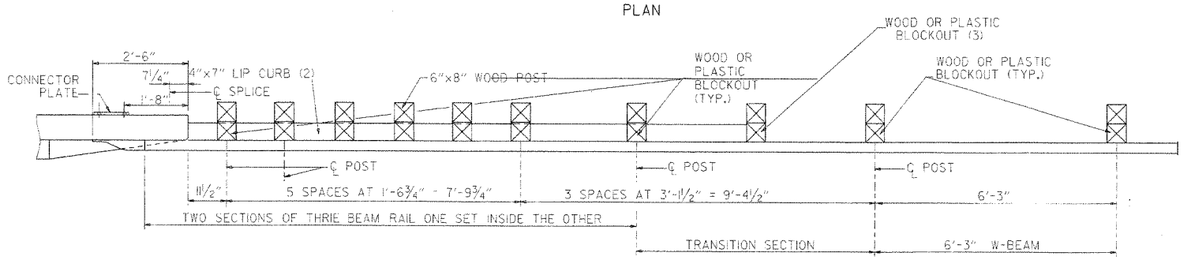

PLAN

(1) VERIFY BOLT SPACING FROM RAIL TRANSITION PRODUCER.
(2) REFER TO APPROACH GUTTER DETAILS.
(3) LENGTH OF BLOCKOUT ON POST 8 TO BE MODIFIED TO FIT RAIL WIDTH.

THRIE BEAM GUARD RAIL CONNECTION AT BRIDGE ENDS

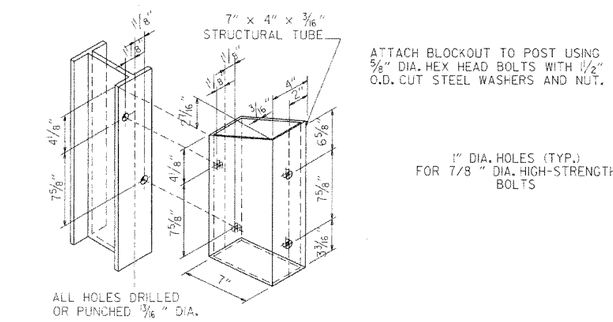

STRUCTURAL STEEL TUBING BLOCKOUT DETAIL

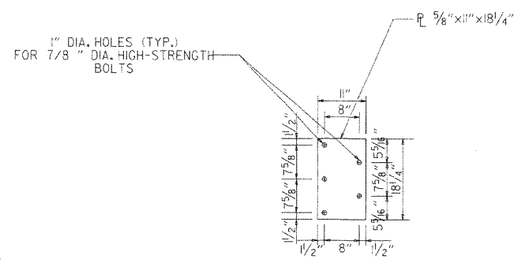

CONNECTOR PLATE

NOTE:
SEE STANDARD DRAWING GR-10A FOR GUARD RAIL POST EMBEDMENT DEPTHS.

CONNECTOR PLATE SHALL BE AASHTO M270, GR. 36 AND SHALL BE GALVANIZED AFTER FABRICATION. GALVANIZING SHALL CONFORM TO SUBSECTION 807.19 OF THE STANDARD SPECIFICATIONS. CONNECTOR PLATE TO BE BOLTED TO SPECIAL END SHOE USING ⅞" DIA. HIGH STRENGTH BOLTS, WITH THE HEADS PLACED ON THE TRAFFIC FACE. WASHERS SHALL BE USED UNDER THE HEAD AND NUT. BOLTS, NUTS AND WASHERS SHALL BE GALVANIZED AND SHALL CONFORM TO SUBSECTION 807.06.

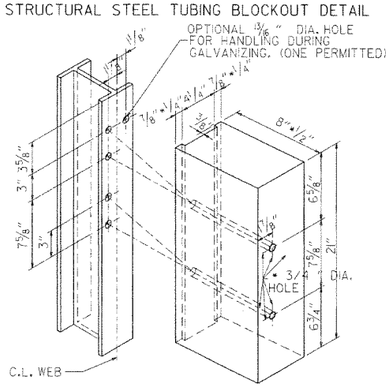

ALL HOLES 13/16" DIAMETER EXCEPT AS NOTED

HOLE PUNCHING DETAIL
FOR STEEL POST & WOOD OR PLASTIC BLOCKOUTS

NOTE: BLOCKS SHALL BE THE SAME TYPE THROUGHOUT THE PROJECT LIMITS.

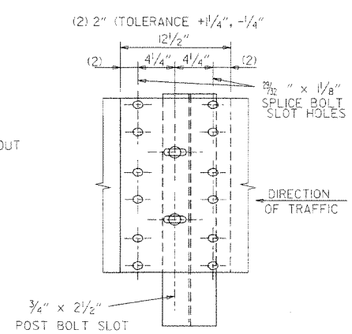

THRIE BEAM RAIL SPLICE AT POST

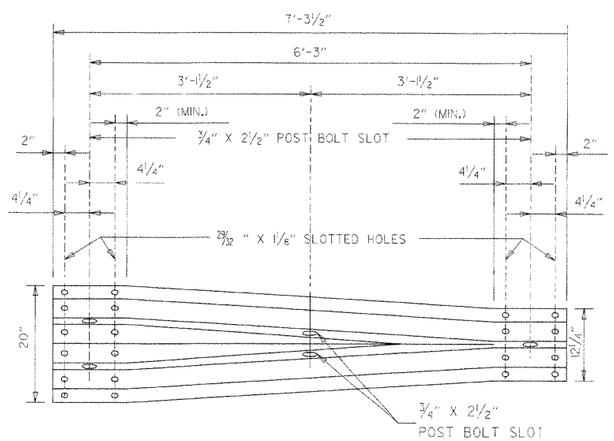

TRANSITION SECTION

GENERAL NOTES:

THE THRIE BEAM RAIL, SPECIAL END SHOE, AND THE TRANSITION SECTION SHALL BE MADE OF STEEL AND SHALL BE 12 GAGE. ZINC COATING SHALL BE TYPE I.

RAIL POSTS SHALL BE SET PERPENDICULAR TO THE ROADWAY PROFILE GRADE AND VERTICALLY IN CROSS SECTION.

ALL BOLTS SHALL BE SUFFICIENT LENGTH TO EXTEND THROUGH THE FULL THICKNESS OF THE NUT AND NO MORE THAN ¾" BEYOND IT.

ALL LAP SPLICES, INCLUDING SPECIAL END SHOES, SHALL BE MADE IN THE DIRECTION SHOWN ON STANDARD DRAWINGS GR-9 & GR-11.

WOOD POSTS & WOOD BLOCKS SHALL BE EITHER DENSE NO. 1 STRUCTURAL OR BETTER 9.7# (1400 f) OR NO. 1 1350 f SOUTHERN PINE.

REFER TO STD. DRWG. GR-10A FOR POST DETAILS.

USE THRIE BEAM GUARD RAIL COMPONENTS OF SAME MATERIAL FOR ENTIRE JOB.

THRIE BEAM POSTS SHALL BE SAME MATERIAL AS W-BEAM POSTS FOR ENTIRE JOB.

DATE	REVISION	DATE FILM
7-14-10	RAISED HEIGHT OF W-BEAM 1"	
11-29-07	ADDED PLASTIC BLOCKOUTS	
11-10-05	ADDED NOTE FOR ATTACHING STEEL BLOCKOUT	
11-18-04	REVISED GENERAL NOTES	
10-9-03	REVISED GENERAL NOTES	
4-10-03	REVISED GENERAL NOTES	
8-22-02	REVISED NOTE (2)	
6-29-00	MOVED DIMENSION LINES	
5-18-00	ADDED NOTE	
3-30-00	DRAWN & ISSUED	

ARKANSAS STATE HIGHWAY COMMISSION

GUARD RAIL DETAILS

STANDARD DRAWING GR-10

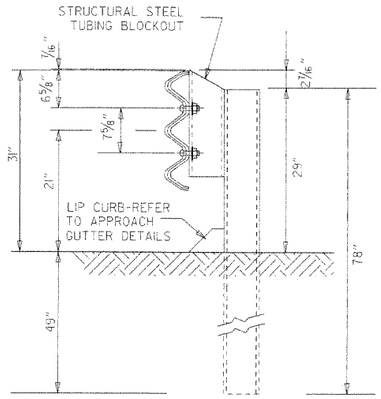

THRIE BEAM RAIL WITH STEEL TUBING BLOCKOUT
AND STEEL POST
POSTS 1-7

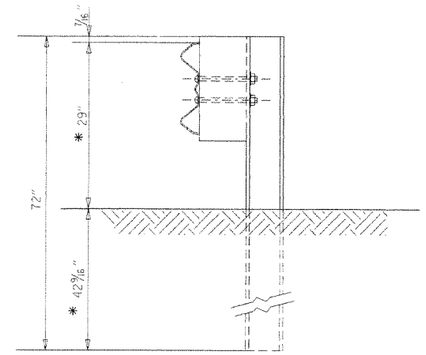

W-BEAM TO THRIE BEAM TRANSITION RAIL
WITH WOOD OR PLASTIC BLOCKOUT AND STEEL POST
POST 8

* NOTE:
THESE DIMENSIONS WILL NEED TO BE ADJUSTED IN THE FIELD TO MAKE THE TRANSITION FROM 21" MID POINT OF THRIE BEAM TO 22" MID POINT OF W-BEAM.

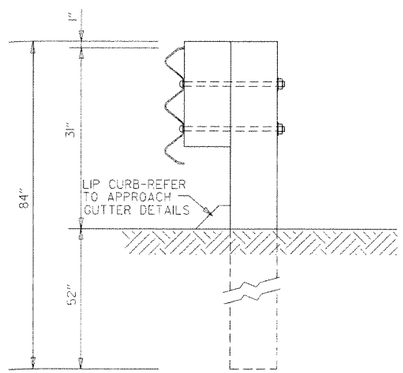

THRIE BEAM RAIL
WITH WOOD OR PLASTIC
BLOCKOUTS & WOOD POSTS
POSTS 1-6

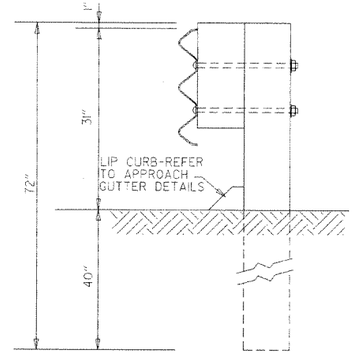

THRIE BEAM RAIL
WITH WOOD OR PLASTIC
BLOCKOUT & WOOD POST
POST 7

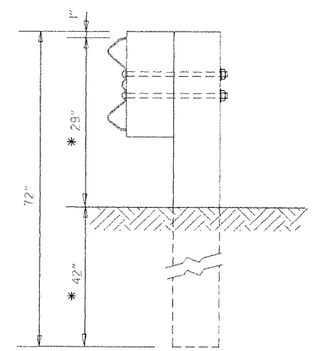

W-BEAM TO THRIE BEAM
TRANSITION RAIL WITH WOOD OR
PLASTIC BLOCKOUT & WOOD POST
POST 8

GENERAL NOTES:

RAIL POSTS SHALL BE SET PERPENDICULAR TO THE ROADWAY PROFILE GRADE AND VERTICALLY IN CROSS SECTION.

WOOD POSTS & WOOD BLOCKS SHALL BE EITHER DENSE NO. 1 STRUCTURAL OR BETTER 9.7f (1400 f) OR NO. 1 (1350 f SOUTHERN PINE.

DATE	REVISION	DATE FILM
7-14-10	REVISED POST 8 DIMENSIONS	
11-29-07	ADDED PLASTIC BLOCKOUTS	
8-22-02	REVISED LIP CURB NOTE	
3-30-00	DRAWN & ISSUED	

ARKANSAS STATE HIGHWAY COMMISSION

GUARD RAIL DETAILS

STANDARD DRAWING GR-10A

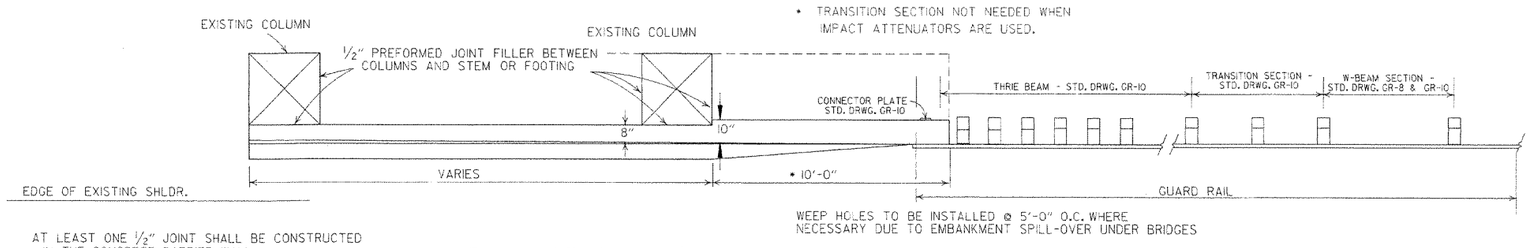

AT LEAST ONE 1/2" JOINT SHALL BE CONSTRUCTED IN THE CONCRETE BARRIER WALL. JOINTS SHALL BE EQUALLY SPACED AT A MAXIMUM OF 25'-0" O.C. FILL JOINT WITH PREFORMED JOINT FILLER.

PLAN OF CONCRETE BARRIER WALL

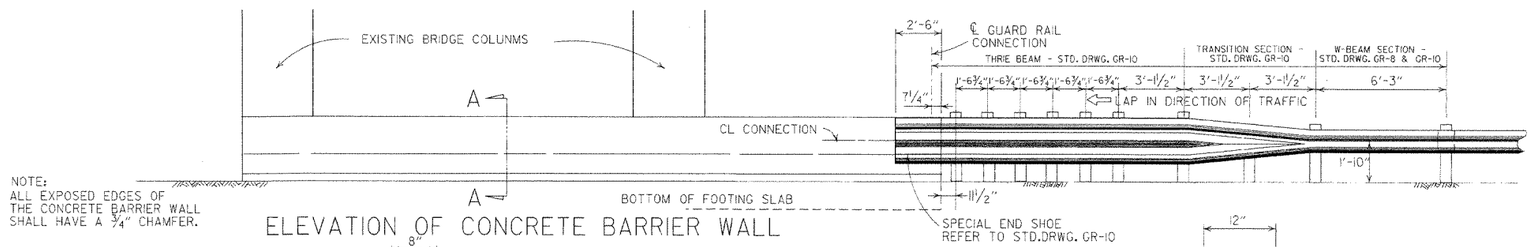

NOTE:
ALL EXPOSED EDGES OF THE CONCRETE BARRIER WALL SHALL HAVE A 3/4" CHAMFER.

ELEVATION OF CONCRETE BARRIER WALL

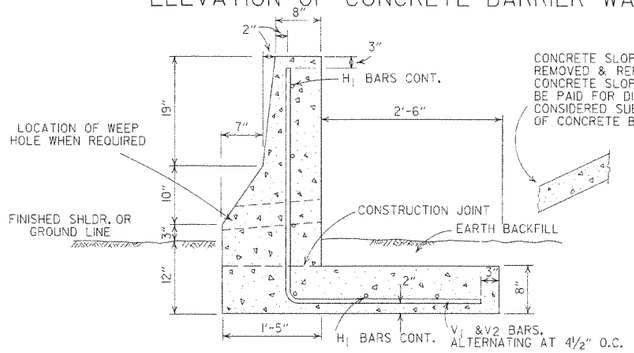

CONCRETE SLOPE PAVING TO BE REMOVED & REPLACED WHERE REQ'D. CONCRETE SLOPE PAVING WILL NOT BE PAID FOR DIRECTLY, BUT WILL BE CONSIDERED SUBSIDIARY TO THE ITEM OF CONCRETE BARRIER WALL.

SECTION A-A

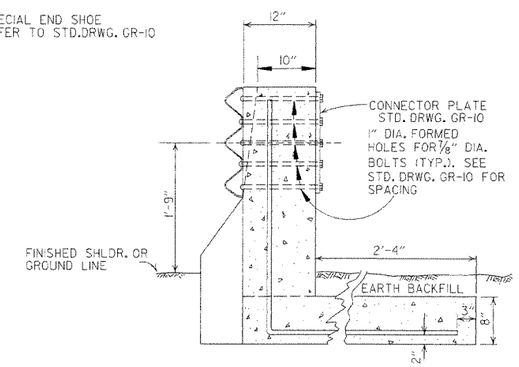

SECTION THRU CONNECTION

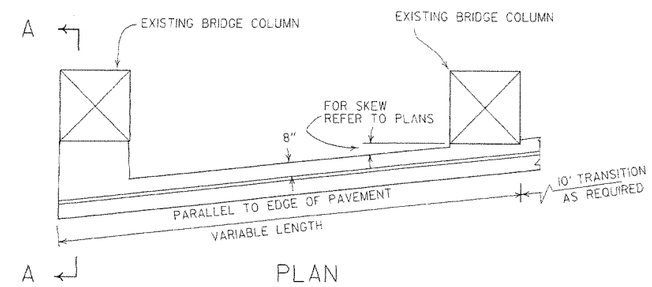

PLAN

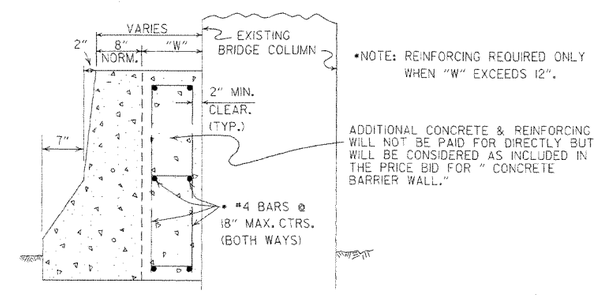

*NOTE: REINFORCING REQUIRED ONLY WHEN "W" EXCEEDS 12".

ADDITIONAL CONCRETE & REINFORCING WILL NOT BE PAID FOR DIRECTLY BUT WILL BE CONSIDERED AS INCLUDED IN THE PRICE BID FOR " CONCRETE BARRIER WALL."

SECTION A-A

DETAILS OF CONCRETE BARRIER WALL WHEN PIERS ARE SKEWED TO ROADWAY

IF FOR ANY REASON IT IS NECESSARY TO CONSTRUCT THE FOOTING AT A LOWER ELEVATION THAN IS SHOWN, THE STEM MAY BE LENGTHENED 1'-0" BETWEEN FIN. SHLDR. AND TOP OF FOOTING WITHOUT REQUIRING HEAVIER REINF. STEEL BARS.

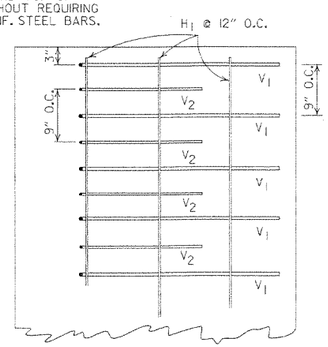

PLAN OF REINFORCING STEEL IN FOOTING

BAR LIST

MARK	NO.	SIZE	LENGTH
V1		#5	6'-2¼"
V2		#4	5'-1"
V3		#5	4'-1⅛"
H1	6	4	VAR.

THE V3 BARS SHALL BE USED IN PLACE OF THE V1 & V2 BARS IN FRONT OF PIERS.

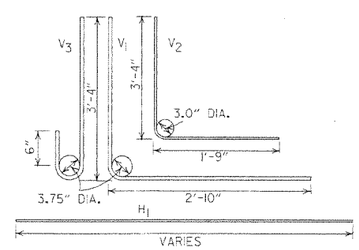

BEND DIAGRAMS

DATE	REVISION	DATE FILM
7-14-10	RAISED HEIGHT OF W-BEAM 1"	
8-22-02	REV. SECTION A-A OF DETAILS OF CONCRETE BARRIER WALL	
6-29-00	MOVED DIMENSION LINE	
5-18-00	ADDED NOTE	
3-30-00	REVISED TO INCLUDE THRIE BEAM	
6-2-94	ADDED TRANSITION SECTION NOTE	
10-1-92	REDRAWN & REVISED	10-1-92
8-15-91	REVISED DRAWING PLAN CONC. BARR.	8-15-91
2-16-89	ADDED SKEWED DETAILS	594-2-16-89
7-14-88	CHANGED TITLE	
10-9-87	REDRAWN & REVISED	

ARKANSAS STATE HIGHWAY COMMISSION

CONCRETE BARRIER WALL
(PIER PROTECTION TYPE A)

STANDARD DRAWING GR-11

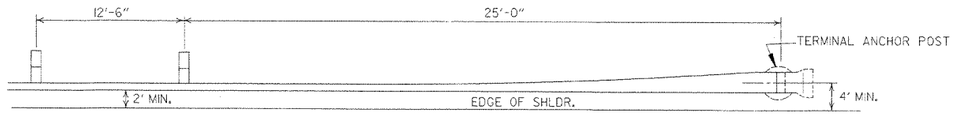

PLAN - GUARD RAIL TERMINAL (TYPE I)

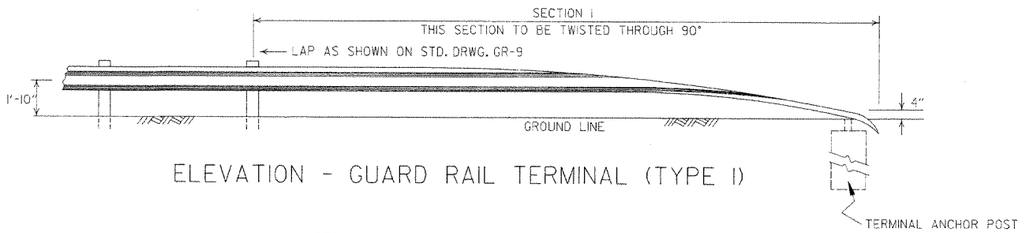

ELEVATION - GUARD RAIL TERMINAL (TYPE I)

NOTE:
SECTIONS 1 AND 2 OF GUARD RAIL TERMINAL SHALL BE PAID FOR AT THE PRICE BID PER LINEAR FOOT OF THE TYPE OF GUARD RAIL SPECIFIED.

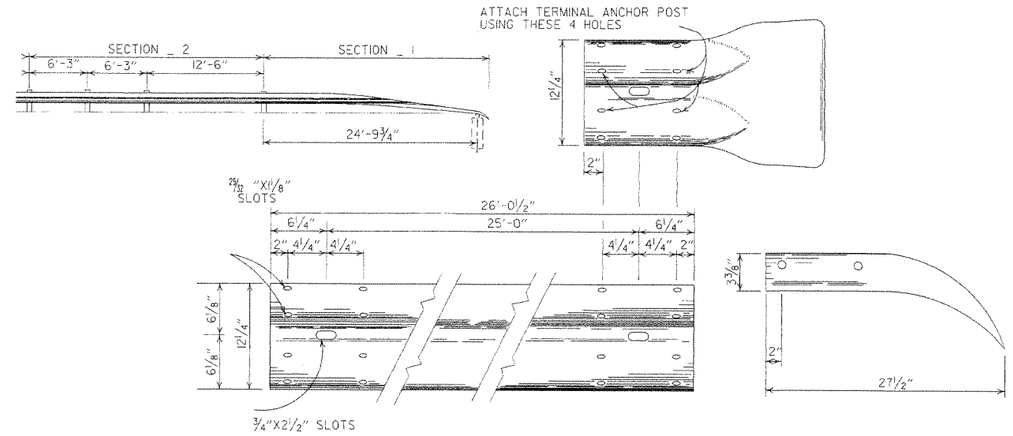

SECTION 1

TERMINAL SECTION

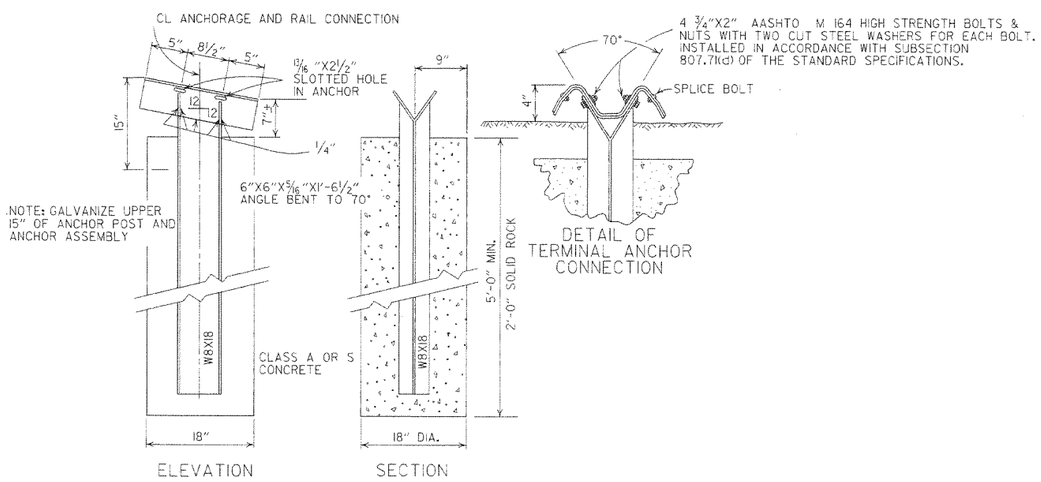

ELEVATION

SECTION

NOTE: RAIL MEMBERS MAY BE BOLTED TO ANGLE AT TERMINAL ANCHOR AND THE TWO ASSEMBLIES POSITIONED TO PROPER ALIGNMENT PRIOR TO PLACING CONCRETE AROUND 8 WF 17 POST IF CONTRACTOR SO DESIRES.

DETAIL OF TERMINAL ANCHOR POST (TYPE I)

DATE	REVISION	DATE FILM
7-14-10	RAISED HEIGHT OF GUARD RAIL 1"	
6-26-97	REVISED LAP NOTE	
10-18-96	REVISED ASTM REF. TO AASHTO	
11-3-94	DIMENSION TERMINAL DETAIL	
11-11-92	ADDED NOTE FOR PAYMENT	11-11-92
10-1-92	DRAWN & ISSUED	10-1-92

ARKANSAS STATE HIGHWAY COMMISSION

GUARD RAIL DETAILS

STANDARD DRAWING GRT-1

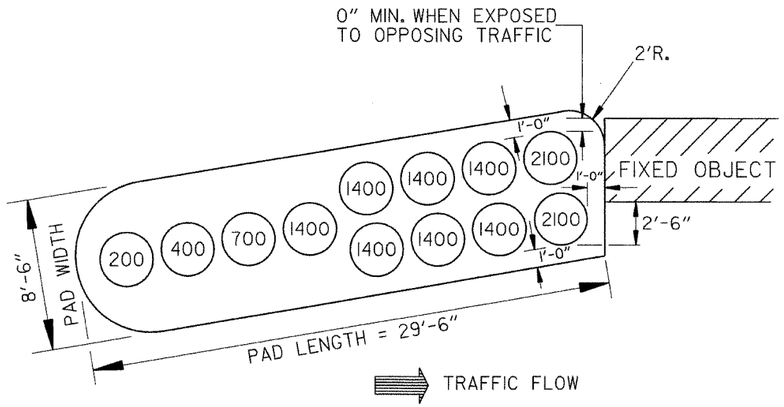

(TYPE C)

BARRIER LENGTH = 27'-6"
DESIGN IMPACT SPEED = 50 M.P.H.= 73.3 fps

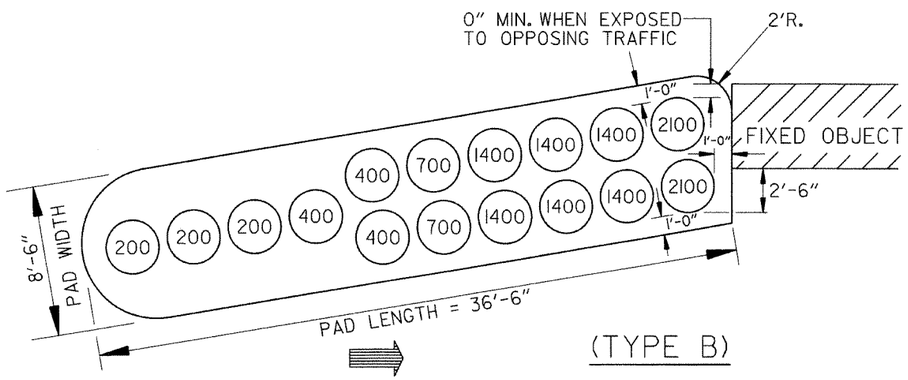

(TYPE B)

BARRIER LENGTH = 34'-6"
DESIGN IMPACT SPEED = 60 M.P.H.= 88 fps

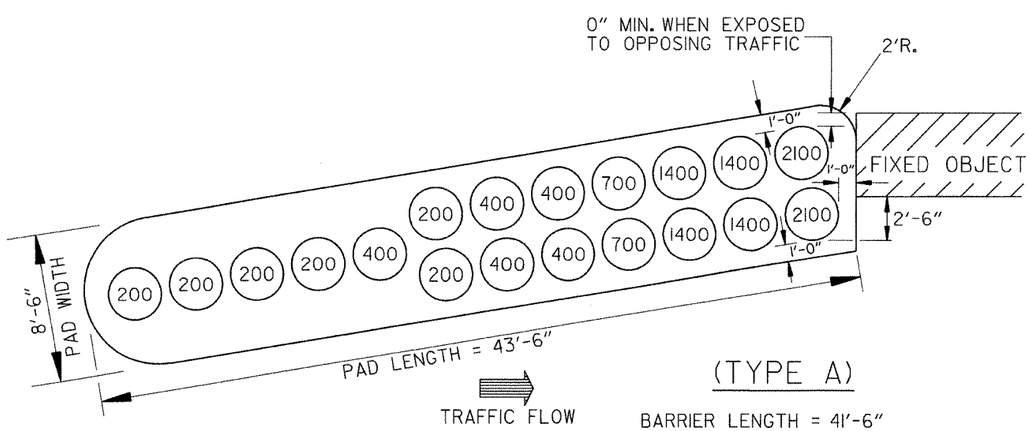

(TYPE A)

BARRIER LENGTH = 41'-6"
DESIGN IMPACT SPEED = 70 M.P.H.= 103 fps

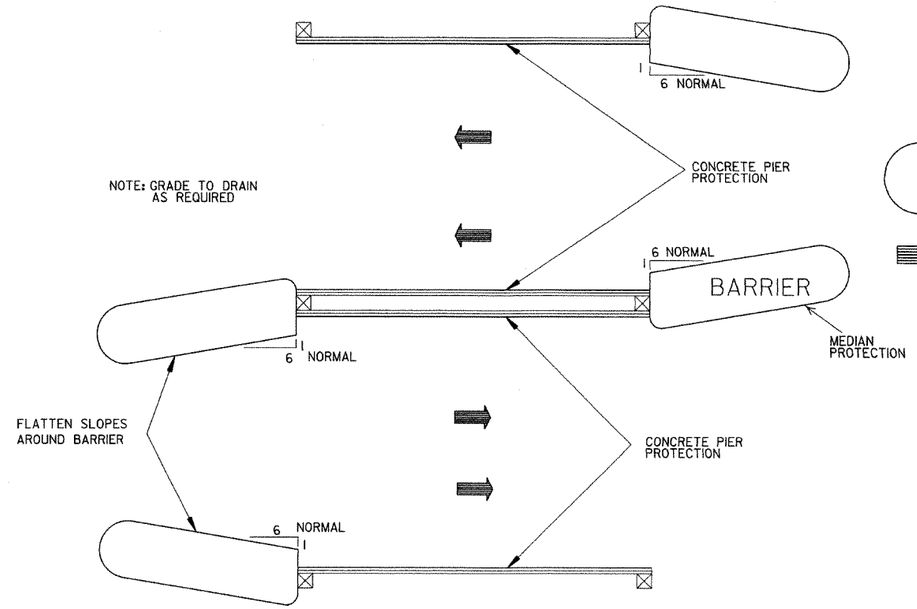

METHOD OF INSTALLATION OF IMPACT ATTENUATION BARRIER FOR PIER PROTECTION

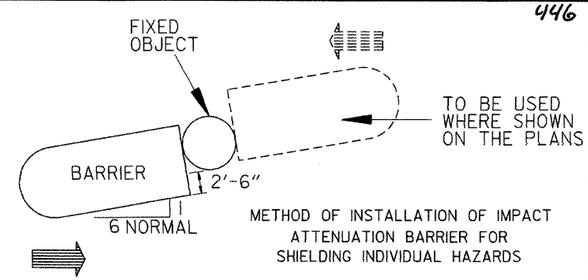

METHOD OF INSTALLATION OF IMPACT ATTENUATION BARRIER FOR SHIELDING INDIVIDUAL HAZARDS

APPROXIMATE QUANTITIES PER PAD

TYPE	ALTERNATE #1		ALTERNATE #2
	AGGR. BASE COURSE	A.C.H.M. SURFACE COURSE	P.C.CONC. BASE (4"U.T.)
	TONS	TONS	SQ.YDS.
A	9.7	4.6	41.6
B	8.1	3.8	34.9
C	6.6	3.1	28.3

NOTE: APPROXIMATE QUANTITIES SHOWN ARE FOR INFORMATIONAL PURPOSES ONLY. PAYMENT TO BE INCLUDED IN UNIT PRICE BID FOR IMPACT ATTENUATION BARRIER.

GENERAL NOTES

1. DIMENSIONS SHOWN ARE TO TOP OF PLASTIC MODULES.
2. SPACING BETWEEN PLASTIC MODULES SHALL NOT EXCEED 6" AT THE TOP.
3. PLASTIC MODULES SHALL MEET THE REQUIREMENTS OF NCHRP-350 OR MANUAL FOR ASSESSING SAFETY HARDWARE (MASH).

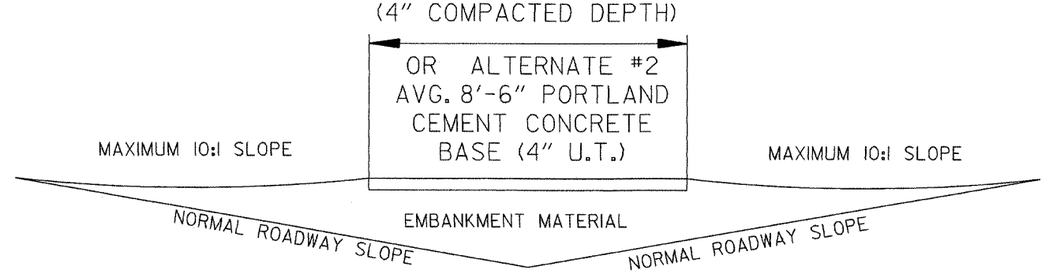

DETAIL OF BARRIER PAD

NOTE: BARRIER PAD TO BE SKEWED TOWARD ONCOMING TRAFFIC A MAXIMUM OF 6:1 WITH 6:1 BEING NORMAL

DATE	REVISION	DATE FILMED
10-15-09	ADDED REFERENCE TO MASH	
11-29-07	REVISED TY. A & TY. C ARRAYS	
11-19-98	REVISED FIXED OBJECT	
11-18-98	REV. NOTES & TYPE A MOD. WTS.	
10-18-96	REDRAWN	
7-15-88	CONFORMED TO 1988 SPECS	
7-29-87	REDRAWN	

ARKANSAS STATE HIGHWAY COMMISSION

IMPACT ATTENUATION BARRIER

STANDARD DRAWING IB-1

REINFORCED CONCRETE ARCH PIPE DIMENSIONS

EQUIV. DIA.	SPAN		RISE	
	AASHTO M 206	AHTD NOMINAL	AASHTO M 206	AHTD NOMINAL
INCHES	INCHES			
15	18	18	11	11
18	22	22	13½	14
21	26	26	15½	16
24	28½	29	18	18
30	36¼	36	22½	23
36	43⅜	44	26⅝	27
42	51⅛	51	31 5/16	31
48	58½	59	36	36
54	65	65	40	40
60	73	73	45	45
72	88	88	54	54
84	102	102	62	62
90	115	115	72	72
96	122	122	77½	77
108	138	138	87⅛	87
120	154	154	96⅞	97
132	168¾	169	106½	107

THE MEASURED SPAN AND RISE SHALL NOT VARY MORE THAN ± 2 PERCENT FROM THE VALUES SPECIFIED BY AASHTO M206.

REINFORCED CONCRETE HORIZONTAL ELLIPTICAL PIPE DIMENSIONS

EQUIV. DIA.	AASHTO M 207	
	SPAN	RISE
INCHES	INCHES	
18	23	14
24	30	19
27	34	22
30	38	24
33	42	27
36	45	29
39	49	32
42	53	34
48	60	38
54	68	43
60	76	48
66	83	53
72	91	58
78	98	63
84	106	68

THE MEASURED SPAN AND RISE SHALL NOT VARY MORE THAN ± 2 PERCENT FROM THE VALUES SPECIFIED BY AASHTO M207.

CONSTRUCTION SEQUENCE

1. PLACE STRUCTURAL BEDDING MATERIAL TO GRADE. DO NOT COMPACT.
2. INSTALL PIPE TO GRADE.
3. COMPACT STRUCTURAL BEDDING OUTSIDE THE MIDDLE THIRD OF THE PIPE.
4. PLACE AND COMPACT THE HAUNCH AREA UP TO THE MIDDLE OF THE PIPE.
5. COMPLETE BACKFILL ACCORDING TO SUBSECTION 606.03.(f)(i).

NOTE: HAUNCH AND STRUCTURAL BEDDING MATERIAL WILL NOT BE PAID FOR SEPARATELY, BUT COMPENSATION WILL BE CONSIDERED TO BE INCLUDED IN THE PRICE BID PER LINEAR FOOT OF CONCRETE PIPE.

- LEGEND -

D_i = NORMAL INSIDE DIAMETER OF PIPE
D_o = OUTSIDE DIAMETER OF PIPE
H = FILL COVER HEIGHT OVER PIPE (FEET)
MIN. = MINIMUM
= UNDISTURBED SOIL

INSTALLATION TYPE	MATERIAL REQUIREMENTS FOR HAUNCH AND STRUCTURAL BEDDING
TYPE 1	AGGREGATE BASE COURSE (CLASS 5 OR CLASS 7)
TYPE 2	SELECTED MATERIALS (CLASS SM-1, SM-2, OR SM-4) OR TYPE 1 INSTALLATION MATERIAL*
TYPE 3**	AASHTO CLASSIFICATION A-1 THRU A-6 SOIL OR TYPE 1 OR 2 INSTALLATION MATERIAL

* SM-3 WILL NOT BE ALLOWED.

** MATERIALS SHALL NOT INCLUDE ORGANIC MATERIALS OR STONES LARGER THAN 3 INCHES.

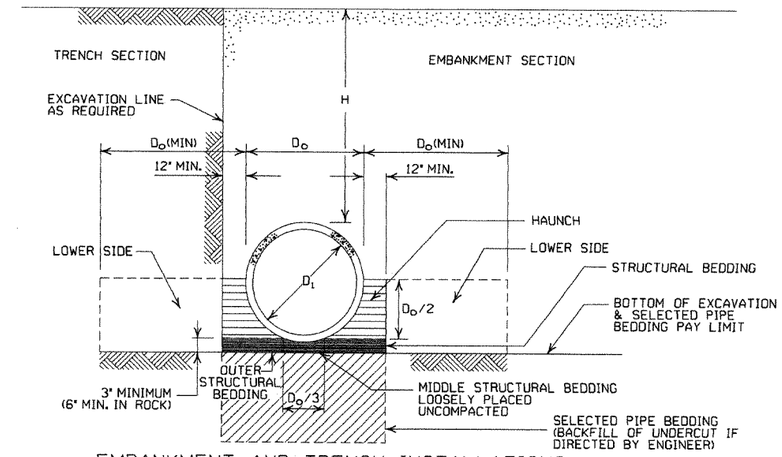

EMBANKMENT AND TRENCH INSTALLATIONS

1. MATERIAL IN THE HAUNCH AND OUTER STRUCTURAL BEDDING SHALL BE COMPACTED TO 95% OF THE MAXIMUM DENSITY ACCORDING TO THE TYPE OR CLASS OF MATERIAL USED.
2. FOR TRENCHES WITH WALLS OF NATURAL SOIL, THE DENSITY OF THE SOIL IN THE LOWER SIDE ZONE SHALL BE AS FIRM AS THE 95% DENSITY REQUIRED FOR THE HAUNCH. IF THE EXISTING SOIL DOES NOT MEET THIS CRITERIA, IT SHALL BE REMOVED AND RECOMPACTED TO 95% OF THE MAXIMUM DENSITY ACCORDING TO THE TYPE OF MATERIAL USED.
3. FOR EMBANKMENTS, THE MATERIAL IN THE LOWER SIDE ZONE SHALL BE COMPACTED TO 95% OF THE MAXIMUM DENSITY ACCORDING TO THE TYPE OR CLASS OF MATERIAL USED.

MINIMUM HEIGHT OF FILL "H" OVER CIRCULAR R.C. PIPE CULVERTS

	CLASS OF PIPE			
	CLASS III		CLASS IV	CLASS V
INSTALLATION TYPE	TYPE 1 OR 2	TYPE 3	ALL	ALL
PIPE ID (IN.)	FEET			
12-15	2	2.5	2	1
18-24	2.5	3	2	1
27-33	3	4	2	1
36-42	3.5	5	2	1
48	4.5	5.5	2	1
54-60	5	7	2	1
66-78	6	8	2	1
84-108	7.5	8	2	1

NOTE: FOR MINIMUM COVER VALUES, "H" SHALL INCLUDE A MINIMUM OF 12" OF PAVEMENT AND/OR BASE.

MAXIMUM HEIGHT OF FILL "H" OVER CIRCULAR R.C. PIPE CULVERTS

INSTALLATION TYPE	CLASS OF PIPE		
	CLASS III	CLASS IV	CLASS V
	FEET		
TYPE 1	21	32	50
TYPE 2	16	25	39
TYPE 3	12	20	30

NOTE: IF FILL HEIGHT EXCEEDS 50 FEET, A SPECIAL DESIGN CONCRETE PIPE WILL BE REQUIRED USING TYPE 1 INSTALLATION.

MINIMUM HEIGHT OF FILL "H" OVER R.C. ARCH & HORIZONTAL ELLIPTICAL PIPE CULVERTS

INSTALLATION TYPE	CLASS OF PIPE	
	CLASS III	CLASS IV
	FEET	
TYPE 2 OR TYPE 3	2.5	1.5

NOTE: TYPE 1 INSTALLATION WILL NOT BE ALLOWED FOR ARCH & HORIZONTAL ELLIPTICAL PIPE CULVERTS.

NOTE: FOR MINIMUM COVER VALUES, "H" SHALL INCLUDE A MINIMUM OF 12" OF PAVEMENT AND/OR BASE.

MAXIMUM HEIGHT OF FILL "H" OVER R.C. ARCH & HORIZONTAL ELLIPTICAL PIPE CULVERTS

INSTALLATION TYPE	CLASS OF PIPE	
	CLASS III	CLASS IV
	FEET	
TYPE 2	13	21
TYPE 3	10	16

NOTE: TYPE 1 INSTALLATION WILL NOT BE ALLOWED FOR ARCH & HORIZONTAL ELLIPTICAL PIPE CULVERTS.

GENERAL NOTES

1. CONCRETE PIPE CULVERT CONSTRUCTION SHALL CONFORM TO ARKANSAS STATE HIGHWAY AND TRANSPORTATION DEPARTMENT STANDARD SPECIFICATIONS FOR HIGHWAY CONSTRUCTION (2003 EDITION), WITH APPLICABLE SUPPLEMENTAL SPECIFICATIONS AND SPECIAL PROVISIONS. UNLESS OTHERWISE NOTED IN THE PLANS, SECTION AND SUBSECTION REFER TO THE STANDARD CONSTRUCTION SPECIFICATIONS.
2. CONCRETE PIPE CULVERT DESIGN SHALL CONFORM TO AASHTO LRFD BRIDGE DESIGN SPECIFICATIONS, FIFTH EDITION (2010) WITH 2010 INTERIMS.
3. ALL PIPE SHALL CONFORM TO SECTION 606. CIRCULAR R.C. PIPE CULVERTS SHALL CONFORM TO AASHTO M170. R.C. ARCH PIPE CULVERTS SHALL CONFORM TO AASHTO M206 AND HORIZONTAL ELLIPTICAL PIPE CULVERTS SHALL CONFORM TO AASHTO M207.
4. ALL PIPE SHALL BE PROTECTED DURING CONSTRUCTION BY A COVER SUFFICIENT TO PREVENT DAMAGE FROM PASSAGE OF EQUIPMENT.
5. THE MINIMUM TRENCH WIDTH SHALL BE THE OUTSIDE DIAMETER OF THE PIPE PLUS 24 INCHES. THE MAXIMUM ALLOWABLE TRENCH WIDTH SHALL BE THE MINIMUM WIDTH PRACTICABLE FOR WORKING CONDITIONS.
6. MULTIPLE PIPE CULVERTS SHALL BE INSTALLED WITH A MINIMUM CLEARANCE OF 24 INCHES BETWEEN STRINGS OF PIPE. REFER TO STD. DWG. FES-2 FOR MINIMUM CLEARANCE WHERE FLARED END SECTIONS ARE USED.
7. IMPERVIOUS MATERIAL SHOULD BE PLACED AS DIRECTED BY THE ENGINEER AT THE ENDS OF THE CULVERT TO PREVENT LOSS OF STRUCTURAL BEDDING WHEN PERVIOUS MATERIAL IS USED FOR STRUCTURAL BEDDING AND/OR BACKFILL.
8. NOT MORE THAN ONE LIFTING HOLE MAY BE PROVIDED IN CONCRETE PIPE TO FACILITATE HANDLING. HOLE MAY BE CAST IN PLACE, CUT INTO THE FRESH CONCRETE AFTER FORMS ARE REMOVED, OR DRILLED. THE HOLE SHALL NOT BE MORE THAN TWO INCHES IN DIAMETER OR TWO INCHES SQUARE. CUTTING OR DISPLACEMENT OF REINFORCEMENT WILL NOT BE PERMITTED. SPALLED AREAS AROUND THE HOLE SHALL BE REPAIRED IN A WORKMANLIKE MANNER. LIFTING HOLE SHALL BE FILLED WITH MORTAR, CONCRETE, OR OTHER METHOD AS APPROVED BY THE ENGINEER.
9. WHEN DIRECTED BY THE ENGINEER, UNSUITABLE MATERIAL THAT IS ENCOUNTERED AT THE BOTTOM OF THE EXCAVATED TRENCH (BELOW THE AREA IDENTIFIED AS "STRUCTURAL BEDDING" ABOVE) WILL BE EXCAVATED AND REPLACED WITH SELECTED PIPE BEDDING. THE QUANTITY OF MATERIAL REQUIRED TO BACKFILL THE UNDERCUT AREA UP TO THE SELECTED PIPE BEDDING PAY LIMIT DESIGNATED ABOVE WILL BE MEASURED AND PAID FOR AS "SELECTED PIPE BEDDING."
10. WHEN THE EXISTING MATERIAL EXCAVATED FOR THE PIPE TRENCH IS DETERMINED BY THE ENGINEER TO BE UNSUITABLE FOR BACKFILLING THE PIPE (ABOVE THE AREA IDENTIFIED ABOVE AS THE HAUNCH), BORROW MATERIAL OR MATERIAL FROM THE ROADWAY EXCAVATION WILL BE USED TO BACKFILL THE PIPE. IF SUITABLE MATERIAL IS NOT AVAILABLE, THE ENGINEER MAY AUTHORIZE THE USE OF "SELECTED PIPE BACKFILL."

DATE	REVISION	DATE FILMED
12-15-11	REVISED FOR LRFD DESIGN SPECIFICATIONS	
5-18-00	REVISED TYPE 3 BEDDING & ADDED NOTE	
3-30-00	REVISED INSTALLATIONS	
11-06-97	ISSUED	

ARKANSAS STATE HIGHWAY COMMISSION

CONCRETE PIPE CULVERT FILL HEIGHTS & BEDDING

STANDARD DRAWING PCC-1

CORRUGATED STEEL PIPE (ROUND)

PIPE DIAMETER (INCHES)	① MINUMUM COVER TOP OF PIPE TO TOP OF GROUND "H" (FEET)	MAX. FILL HEIGHT "H" ABOVE TOP OF PIPE (FEET)				
		METAL THICKNESS (INCHES)				
		0.064	0.079	0.109	0.138	0.168
2⅔ INCH BY ½ INCH CORRUGATION RIVETED, WELDED, OR HELICAL LOCK-SEAM						
12	1	84	91			
15	1	67	73			
18	1	56	61			
24	1	42	46	59		
30	2	34	36	47		
36	2		30	39	41	
42	2		43	67	70	73
48	2		37	58	61	64
② 3 INCH BY 1 INCH OR 5 INCH BY 1 INCH CORRUGATION RIVETED, WELDED, BOLTED, OR HELICAL LOCK-SEAM						
36	1	48	60	88	111	118
42	1	41	51	72	90	102
48	1	36	45	64	77	85
54	2	32	40	59	71	79
60	2	29	36	53	64	71
66	2	26	33	47	58	64
72	2	24	30	44	53	59
78	2		28	41	49	54
84	2		26	38	45	51
90	2		24	35	43	45
96	2		22	33	40	44
102	2			31	38	42
108	2			30	35	39
114	2			28	34	37
120	2			27	32	35

CORRUGATED ALUMINUM PIPE (ROUND)

PIPE DIAMETER (INCHES)	① MINUMUM COVER TOP OF PIPE TO TOP OF GROUND "H" (FEET)	MAX. FILL HEIGHT "H" ABOVE TOP OF PIPE (FEET)				
		METAL THICKNESS IN INCHES				
		0.060	0.075	0.105	0.135	0.164
		2 ⅔ INCH BY ½ INCH CORRUGATION RIVETED OR HELICAL LOCK-SEAM				
12	1	45	45			
18	2	30	30	52		
24	2	22	22	39	41	
30	2		18	31	32	34
36	2.5		15	26	27	28
42	2			43	43	44
48	2			40	41	43
54	2			35	37	38
60	2				33	34
66	2					31
72	2					29

CORRUGATED METAL PIPE ARCHES

EQUIV. DIA. (INCHES)	PIPE DIMENSION SPAN X RISE (INCHES)	MINUMUM CORNER RADIUS (INCHES)	STEEL: MIN. THICKNESS REQUIRED INCHES	STEEL: ① MIN. HEIGHT OF FILL, "H" (FT.) INSTALLATION TYPE 1	STEEL: MAX. HEIGHT OF FILL, "H" (FT.) INSTALLATION TYPE 1	ALUMINUM: MIN. THICKNESS REQUIRED INCHES	ALUMINUM: ① MIN. HEIGHT OF FILL, "H" (FT.) INSTALLATION TYPE 1	ALUMINUM: MAX. HEIGHT OF FILL, "H" (FT.) INSTALLATION TYPE 1
			2 ⅔ INCH BY ½ INCH CORRUGATION RIVETED, WELDED, OR HELICAL LOCK-SEAM			2 ⅔ INCH BY ½ INCH CORRUGATION RIVETED OR HELICAL LOCK-SEAM		
15	17x13	3	0.064	2	15	0.060	2	15
18	21x15	3	0.064	2	15	0.060	2	15
21	24x18	3	0.064	2.25	15	0.060	2.25	15
24	28x20	3	0.064	2.5	15	0.075	2.5	15
30	35x24	3	0.079	3	12	0.075	3	12
36	42x29	3½	0.079	3	12	0.105	3	12
42	49x33	4	0.079	3	12	0.105	3	12
48	57x38	5	0.109	3	13	0.135	3	13
54	64x43	6	0.109	3	14	0.135	3	14
60	71x47	7	0.138	3	15	0.164	3	15
66	77x52	8	0.168	3	15			
72	83x57	9	0.168	3	15			

EQUIV. DIA. (INCHES)	PIPE DIMENSION SPAN X RISE (INCHES)	MINUMUM CORNER RADIUS (INCHES)	MIN. THICKNESS REQUIRED INCHES	② 3 INCH BY 1 INCH OR 5 INCH BY 1 INCH CORRUGATION RIVETED, WELDED, OR HELICAL LOCK-SEAM: INSTALLATION TYPE 2	INSTALLATION TYPE 1	MAX. HEIGHT OF FILL, "H" (FT.) INSTALLATION TYPE 2	INSTALLATION TYPE 1
36	40x31	5	0.079	3	2	12	15
42	46x36	6	0.079	3	2	13	15
48	53x41	7	0.079	3	2	13	15
54	60x46	8	0.079	3	2	13	15
60	66x51	9	0.079	3	2	13	15
66	73x55	12	0.079	3	2	15	15
72	81x59	14	0.079	3	2	15	15
78	87x63	14	0.079	3	2	15	15
84	95x67	16	0.109	3	2	15	15
90	103x71	16	0.109	3	2	15	15
96	112x75	18	0.109	3	2	15	15
102	117x79	18	0.109	3	2	15	15
108	128x83	18	0.138	3	2	15	15

CONSTRUCTION SEQUENCE

1. PLACE STRUCTURAL BEDDING MATERIAL TO GRADE. DO NOT COMPACT.
2. INSTALL PIPE TO GRADE.
3. COMPACT STRUCTURAL BEDDING OUTSIDE THE MIDDLE THIRD OF THE PIPE.
4. COMPLETE STRUCTURAL BACKFILL OPERATION BY WORKING FROM SIDE TO SIDE OF THE PIPE. THE SIDE TO SIDE STRUCTURAL BACKFILL DIFFERENTIAL SHALL NOT EXCEED 24 INCHES OR 1/3 THE SIZE OF THE PIPE, WHICHEVER IS LESS.

NOTE: STRUCTURAL BACKFILL AND STRUCTURAL BEDDING MATERIAL WILL NOT BE PAID FOR SEPARATELY, BUT COMPENSATION WILL BE CONSIDERED TO BE INCLUDED IN THE PRICE BID PER LINEAR FOOT OF METAL PIPE.

INSTALLATION TYPE	MATERIAL REQUIREMENTS FOR STRUCTURAL BACKFILL AND STRUCTURAL BEDDING
TYPE 1	AGGREGATE BASE COURSE (CLASS 4, 5, 6, OR 7)
TYPE 2	SELECTED MATERIALS (CLASS SM-1, SM-2, OR SM-4) OR TYPE 1 INSTALLATION MATERIAL ③

③ SM-3 WILL NOT BE ALLOWED.

EQUIVALENT METAL THICKNESSES AND GAUGES

METAL THICKNESS IN INCHES: STEEL: ZINC COATED	STEEL: UNCOATED	ALUMINUM	GAUGE NUMBER
0.064	0.0598	0.060	16
0.079	0.0747	0.075	14
0.109	0.1046	0.105	12
0.138	0.1345	0.135	10
0.168	0.1644	0.164	8

- LEGEND -

D_o = OUTSIDE DIAMETER OF PIPE
MAX. = MAXIMUM
MIN. = MINIMUM
= STRUCTURAL BACKFILL MATERIAL
= UNDISTURBED SOIL
EQUIV. DIA. = EQUIVALENT DIAMETER
H = FILL COVER HEIGHT OVER PIPE (FEET)

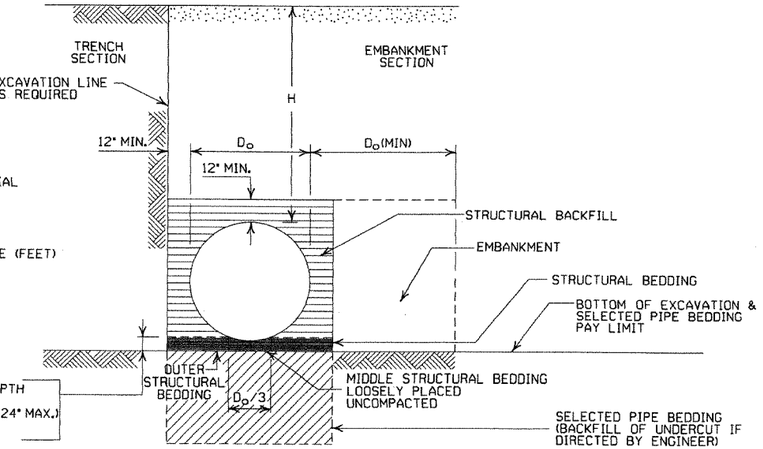

EMBANKMENT AND TRENCH INSTALLATIONS

1. STRUCTURAL BACKFILL, EMBANKMENT, AND OUTER STRUCTURAL BEDDING MATERIAL SHALL BE COMPACTED TO 95% OF THE MAXIMUM DENSITY ACCORDING TO THE TYPE OR CLASS OF MATERIAL USED.
2. INSTALLATION TYPE 1 OR 2 MAY BE USED FOR CORRUGATED STEEL OR ALUMINUM PIPE (ROUND).
3. INSTALALTION TYPE 1 SHALL BE USED FOR CORRUGATED STEEL OR ALUMINUM PIPE ARCHES WITH 2⅔" X ½" CORRUGATION.
4. INSTALLATION TYPE 1 OR 2 MAY BE USED FOR CORRUGATED STEEL OR ALUMINUM PIPE ARCHES WITH 3" X 1" OR 5" X 1" CORRUGATION.

GENERAL NOTES

1. METAL PIPE CULVERT CONSTRUCTION SHALL CONFORM TO ARKANSAS STATE HIGHWAY AND TRANSPORTATION DEPARTMENT STANDARD SPECIFICATIONS FOR HIGHWAY CONSTRUCTION (2003 EDITION), WITH APPLICABLE SUPPLEMENTAL SPECIFICATIONS AND SPECIAL PROVISIONS. UNLESS OTHERWISE NOTED IN THE PLANS, SECTION AND SUBSECTION REFER TO THE STANDARD CONSTRUCTION SPECIFICATIONS.
2. METAL PIPE CULVERT DESIGN SHALL CONFORM TO AASHTO LRFD BRIDGE DESIGN SPECIFICATIONS, FIFTH EDITION (2010) WITH 2010 INTERIMS.
3. METAL PIPE CULVERT MATERIALS AND INSTALLATIONS SHALL CONFORM TO SECTION 606 AND JOB SPECIAL PROVISION "METAL PIPE".
4. ALL PIPE SHALL BE PROTECTED DURING CONSTRUCTION BY A COVER SUFFICIENT TO PREVENT DAMAGE FROM PASSAGE OF EQUIPMENT.
5. THE MINIMUM TRENCH WIDTH SHALL BE THE OUTSIDE DIAMETER OF THE PIPE PLUS 24 INCHES. THE MAXIMUM ALLOWABLE TRENCH WIDTH SHALL BE THE MINIMUM WIDTH PRACTICABLE FOR WORKING CONDITIONS.
6. MULTIPLE PIPE CULVERTS SHALL BE INSTALLED WITH A MINIMUM CLEARANCE OF 24 INCHES BETWEEN STRINGS OF PIPE. REFER TO STD. DWG. FES-2 FOR MINIMUM CLEARANCE WHERE FLARED END SECTIONS ARE USED.
7. IMPERVIOUS MATERIAL SHOULD BE PLACED AS DIRECTED BY THE ENGINEER AT THE ENDS OF THE CULVERT TO PREVENT LOSS OF STRUCTURAL BEDDING WHEN PERVIOUS MATERIAL IS USED FOR STRUCTURAL BEDDING AND/OR BACKFILL.
8. WHEN DIRECTED BY THE ENGINEER, UNSUITABLE MATERIAL THAT IS ENCOUNTERED AT THE BOTTOM OF THE EXCAVATED TRENCH (BELOW THE AREA IDENTIFIED AS "STRUCTURAL BEDDING" ABOVE) WILL BE EXCAVATED AND REPLACED WITH SELECTED PIPE BEDDING. THE QUANTITY OF MATERIAL REQUIRED TO BACKFILL THE UNDERCUT AREA UP TO THE SELECTED PIPE BEDDING PAY LIMIT DESIGNATED ABOVE WILL BE MEASURED AND PAID FOR AS "SELECTED PIPE BEDDING."
9. WHEN THE EXISTING MATERIAL EXCAVATED FOR THE PIPE TRENCH IS DETERMINED BY THE ENGINEER TO BE UNSUITABLE FOR BACKFILLING THE PIPE (ABOVE THE AREA IDENTIFIED AS STRUCTURAL BACKFILL), BORROW MATERIAL OR MATERIAL FROM THE ROADWAY EXCAVATION WILL BE USED TO BACKFILL THE PIPE. IF SUITABLE MATERIAL IS NOT AVAILABLE, THE ENGINEER MAY AUTHORIZE THE USE OF "SELECTED PIPE BACKFILL."

① FOR MINIMUM COVER VALUES, "H" SHALL INCLUDE A MINIMUM 12" OF PAVEMENT AND/OR BASE.

② WHERE THE STANDARD 2 2/3" x ½" CORRUGATION AND GAUGE IS SPECIFIED FOR A GIVEN DIAMETER, A PIPE OF THE SAME DIAMETER WITH A 3" x 1" OR 5" x 1" CORRUGATION MAY BE SUBSTITUTED, PROVIDING IT IS GAUGED FOR A FILL HEIGHT CONDITION EQUAL TO OR GREATER THAN THE MAXIMUM FILL HEIGHT CONDITION FOR THE SPECIFIED GAUGE AND CORRUGATION.

DATE	REVISION	DATE FILMED
12-15-11	REVISED FOR LRFD DESIGN SPECS	
3-30-00	REVISED INSTALLATIONS	
11-06-97	ISSUED	

ARKANSAS STATE HIGHWAY COMMISSION

METAL PIPE CULVERT FILL HEIGHTS & BEDDING

STANDARD DRAWING PCM-1

NOTES:

1. ALL LINES SHALL HAVE A WIDTH OF 4 INCHES.
2. THE THICKNESS AND RATE OF PAINT APPLICATION SHALL BE AS SPECIFIED IN SECTION 718 OF THE STANDARD SPECIFICATIONS.
3. THIS DRAWING SHALL BE USED IN CONJUNCTION WITH THE LATEST REVISED ADDITION OF THE "MANUAL ON UNIFORM TRAFFIC CONTROL DEVICES."
4. RAISED PAVEMENT MARKERS SHALL BE CENTERED BETWEEN SKIP LINES ON 40 FEET SPACING UNLESS OTHERWISE SHOWN ON THE PLANS.

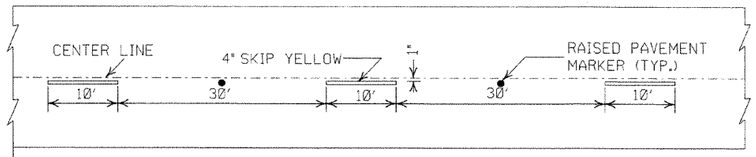

CONCRETE PAVEMENT

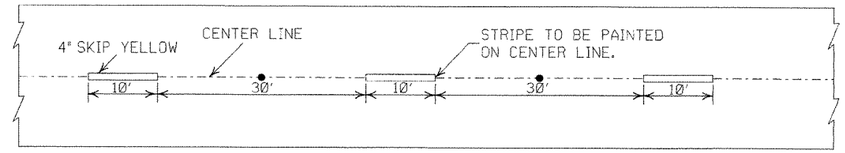

ASPHALT PAVEMENT

BROKEN LINE STRIPING

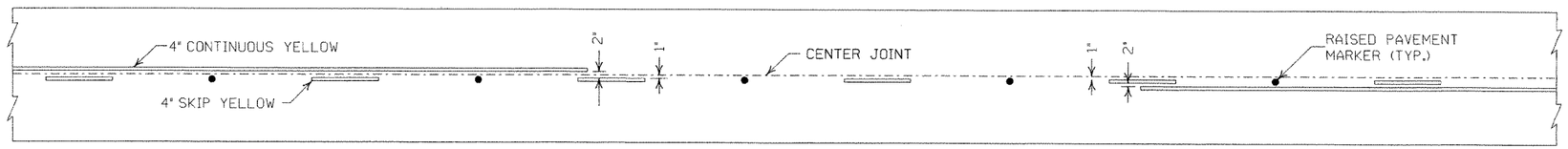

SOLID LINE STRIPING ON CONCRETE PAVEMENT

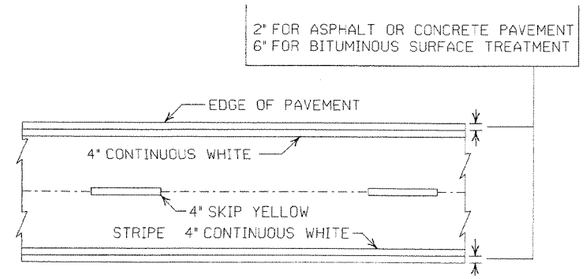

PAVEMENT EDGE LINE MARKING

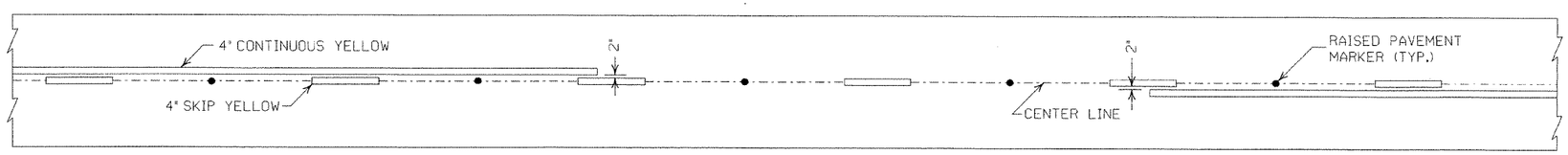

SOLID LINE STRIPING ON ASPHALT PAVEMENT

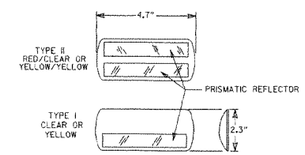

NOTE:
THE RED LENS OF THE TYPE II R.P.M. SHALL FACE THE INCORRECT TRAFFIC MOVEMENT.

DETAIL OF STANDARD RAISED PAVEMENT MARKERS

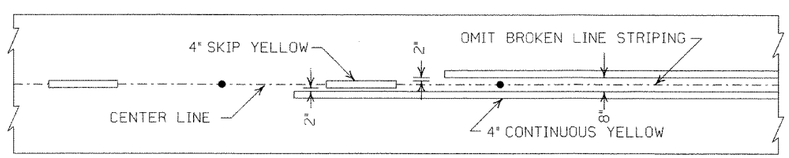

ASPHALT PAVEMENT

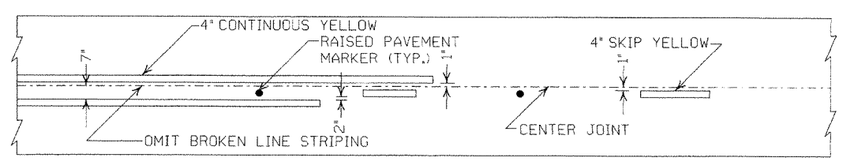

CONCRETE PAVEMENT

STRIPING AT ADJACENT NO PASSING LANES

GENERAL NOTES:

THIS DRAWING SHOULD BE CONSIDERED AS TYPICAL ONLY AND THE FINAL LOCATION OF THE STRIPING AND RAISED PAVEMENT MARKERS SHALL BE DETERMINED BY THE ENGINEER.

THIS DRAWING SHOULD BE USED IN CONJUNCTION WITH THE "MANUAL ON UNIFORM TRAFFIC CONTROL DEVICES", LATEST REVISION.

NOTE:

DIMENSIONS SHOWN FOR RAISED PAVEMENT MARKERS ARE TYPICAL. THE CONTRACTOR MAY SUBSTITUTE SIMILAR MARKERS WITH THE APPROVAL OF THE ENGINEER. REQUESTING APPROVAL FOR SIMILAR MARKERS MAY BE MADE BY REFERRING TO THE AHTD QUALIFIED PRODUCTS LIST.

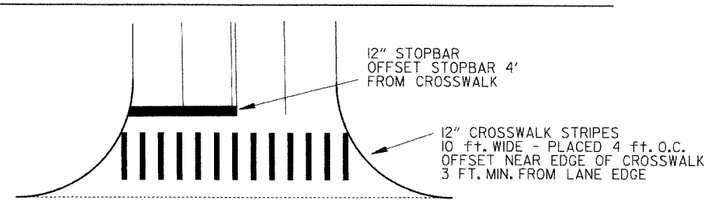

CROSSWALK AND STOPBAR DETAILS

DATE	REVISION	FILMED
11-17-10	REVISED GENERAL NOTES & REMOVED PLOWABLE PVMT MRKRS	
11-18-04	REVISED NOTE 2 & GENERAL NOTES	
8-22-02	ADDED CROSSWALK & STOPBAR DTLS.	
7-02-98	ADDED DETAILS OF STD. RAISED PAV'T. MARKERS	
4-26-96	REV. NOTES 3&4; ADDED R.P.M.	
9-30-80	DRAWN	1-9-30-80

ARKANSAS STATE HIGHWAY COMMISSION

PAVEMENT MARKING DETAILS

STANDARD DRAWING PM-1

PAVEMENT MARKING QUANTITIES
(BASED ON 700' ACCEL. LANE + 300' TAPER)

ENTRANCE RAMP

8" WHITE = 228 LIN. FT.
RAISED PAVEMENT MARKERS TYPE II (WHITE/RED) = 38 EACH

EXIT RAMP

4" WHITE = 280 LIN. FT.
8" WHITE = 655 LIN. FT.
RAISED PAVEMENT MARKERS TYPE II (WHITE/RED) = 38 EACH
RAISED PAVEMENT MARKERS TYPE II (WHITE/RED) = 48 EACH
RAISED PAVEMENT MARKERS TYPE II (WHITE/RED) = 38 EACH

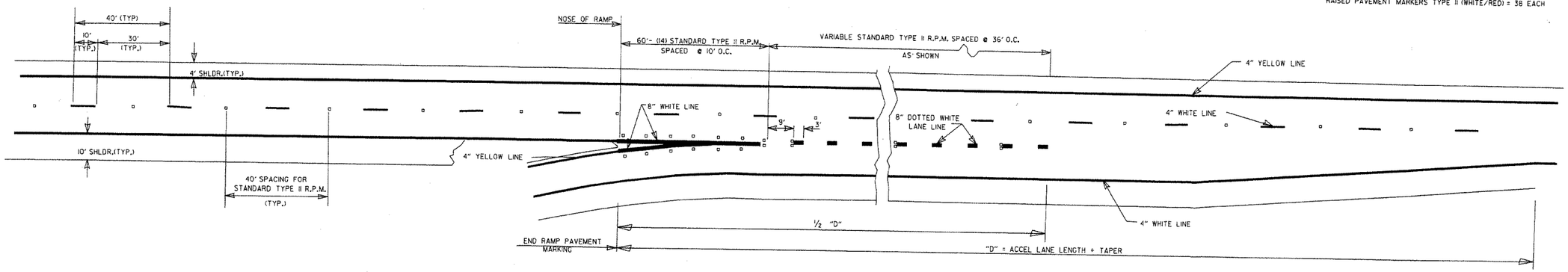

ENTRANCE RAMPS

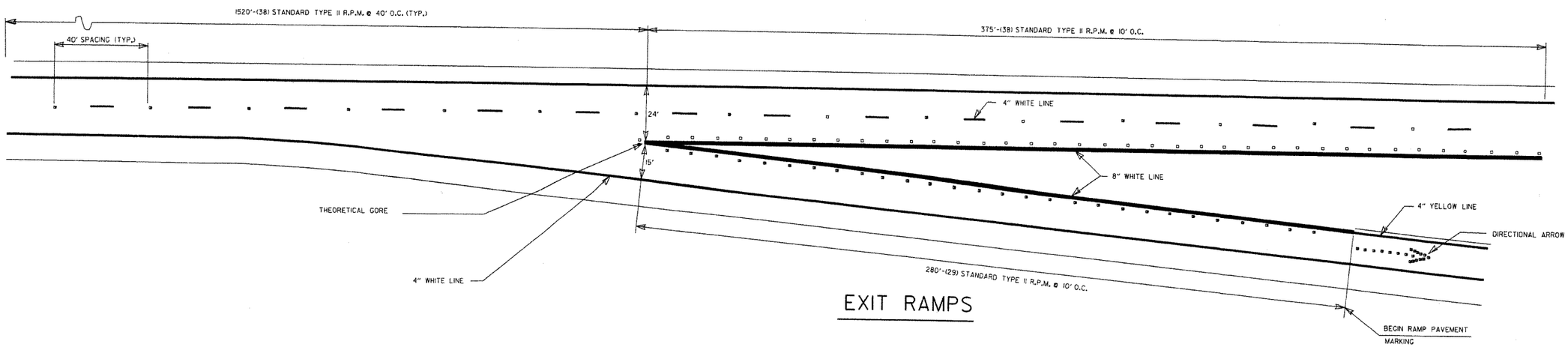

EXIT RAMPS

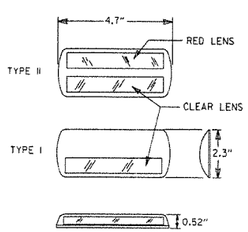

DETAIL OF
STANDARD
RAISED PAVEMENT MARKERS

NOTE:
THE RED LENS OF THE TYPE II R.P.M. SHALL FACE THE INCORRECT TRAFFIC MOVEMENT.

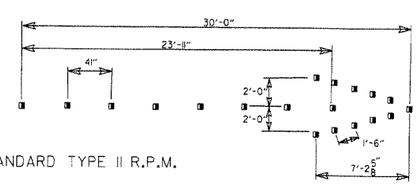

(19) STANDARD TYPE II R.P.M.

DIRECTIONAL ARROWS

GENERAL NOTES:
THIS DRAWING SHOULD BE CONSIDERED AS TYPICAL ONLY AND THE FINAL LOCATION OF THE STRIPING AND PAVEMENT MARKERS SHALL BE DETERMINED BY THE ENGINEER.

THIS DRAWING SHOULD BE USED IN CONJUNCTION WITH THE "MANUAL ON UNIFORM TRAFFIC CONTROL DEVICES", LATEST REVISION.

NOTE:
DIMENSIONS SHOWN FOR RAISED PAVEMENT MARKERS ARE TYPICAL. THE CONTRACTOR MAY SUBSTITUTE SIMILAR MARKERS WITH THE APPROVAL OF THE ENGINEER. REQUESTING APPROVAL FOR SIMILAR MARKERS MAY BE MADE BY REFERRING TO THE AHTD QUALIFIED PRODUCTS LIST.

DATE	REVISION	FILMED
7/26/12	REVISED RPM NOTATION	
12-15-11	REVISED RPMs ACCORDING TO LATEST POLICY	
11-17-10	REMOVED PLOWABLE PAVEMENT MARKERS	
6-3-10	REVISED PER 2009 MUTCD	
11-18-04	REVISED NOTES	
8-22-02	ADDED & REVISED NOTES; REV. ENTRANCE & EXIT RAMPS	
5-18-00	REMOVED HASHMARKS	
7-02-98	CHANGED TYPES TO ROMAN NUMERALS	
4-26-96	ADDED DIMENSIONS & QUANTITIES; REVISED LANE WIDTH ON EXIT RAMP	
2-2-95	PLACED IN USE	2-2-95

ARKANSAS STATE HIGHWAY COMMISSION

PERMANENT PAVEMENT MARKING ON ACCESS CONTROLLED ROADWAYS

STANDARD DRAWING PM-2

NOTE:
1. GRANULAR BACKFILL TO BE SUBSIDIARY TO PIPE UNDERDRAIN.
2. UNLESS OTHERWISE SPECIFIED ON THE PLANS, THE UNDERDRAIN COVER SHALL BE THOROUGHLY COMPACTED EARTH AND SHALL BE SUBSIDIARY TO PIPE UNDERDRAIN.
3. GRANULAR MATERIAL SHALL BE WRAPPED WITH GEOTEXTILE FABRIC. LAP FABRIC 12" OR THE WIDTH OF THE TRENCH AT THE TOP.

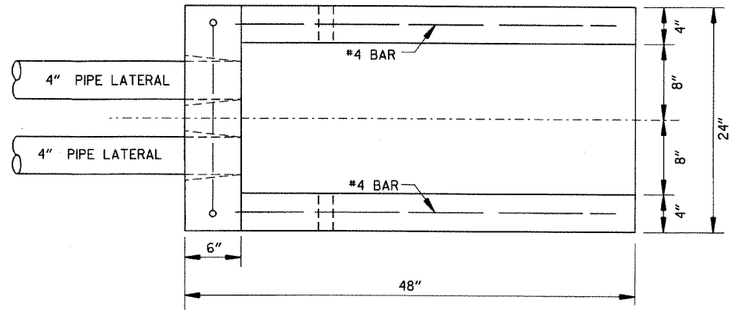

PLAN VIEW

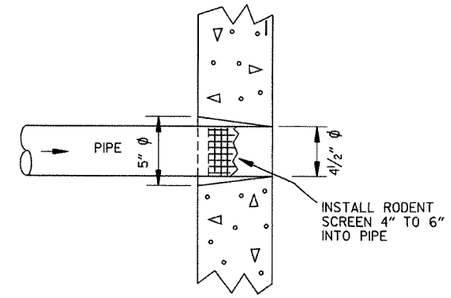

DETAIL OF HOLE FOR 4" PIPE

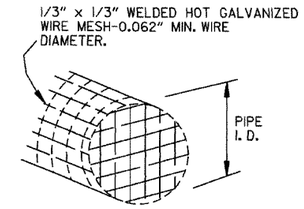

DETAIL OF RODENT SCREEN

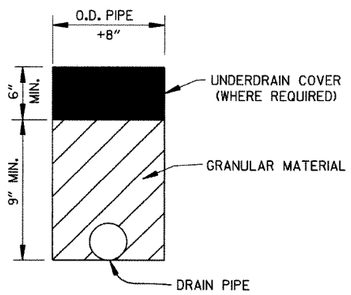

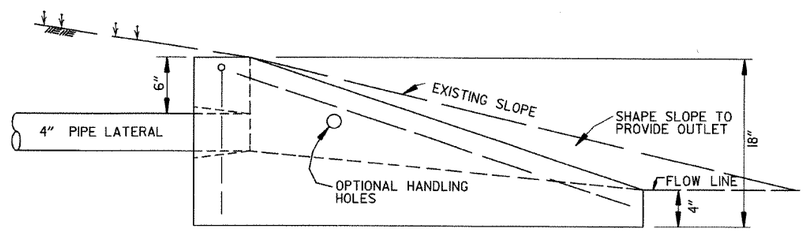

SIDE VIEW

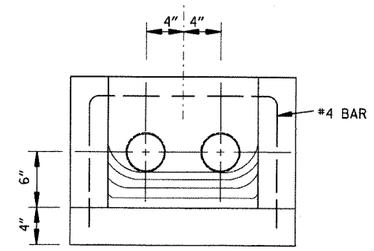

FRONT VIEW

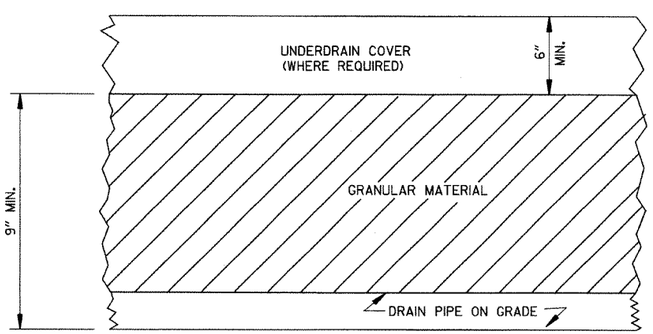

DETAILS OF PIPE UNDERDRAIN

UNDERDRAIN OUTLET PROTECTORS

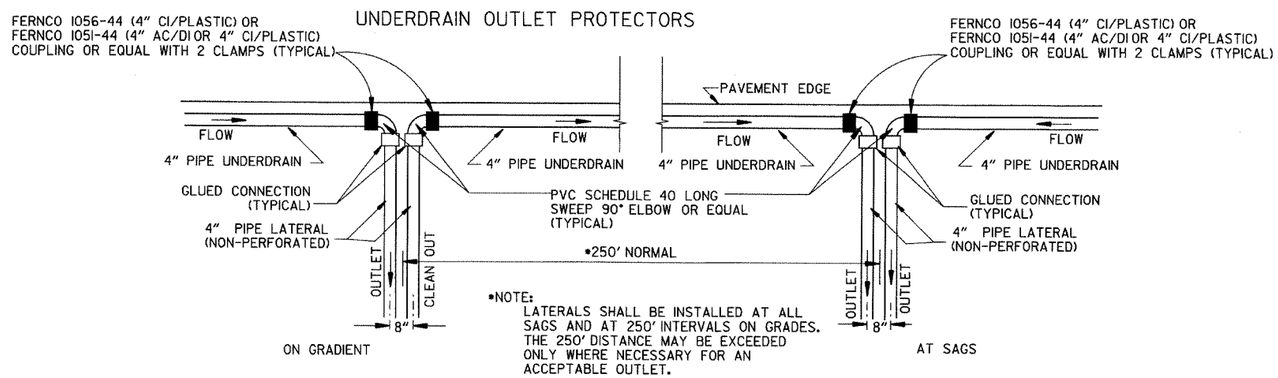

DETAIL OF PIPE UNDERDRAIN LATERALS WHEN PLACED ALONG PAVEMENT EDGE

NOTE: PVC PIPE FOR LATERALS SHALL MEET THE REQUIREMENTS OF ASTM D 1785 (LATEST REVISION) FOR SCHEDULE 40 PIPE.

DATE	REVISION	DATE FILMED
4-10-03	REVISED NOTE 3	
1-12-00	REVISED DETAIL OF UNDERDRAIN LATERALS	
11-18-98	REVISED NOTE	
10-18-96	REVISED MIN. DEPTH & GEOTEXTILE FABRIC	
4-26-96	ADDED LATERAL NOTE; 5 1/2" TO 5"	
11-22-95	REVISED LATERALS	
7-20-95	REVISED LATERALS & ADDED NOTE	
11- 3-94	REVISED FOR DUAL LATERALS	11- 3-94
10- 1-92	SUBSTITUTED GEOTEXTILE	10- 1-92
8-15-91	ADDED POLYEDTHYLENE PIPE	8-15-91
11- 8-90	DELETED ALTERNATE NOTE	11- 8-90
1-25-90	ADDED 4" SNAP ADAPTER	1-25-90
11-30-89	DEL. (SUBGRADE); ADDED (WHERE REQUIRED)	11-30-89
7-15-88	ISSUED P.L.M.	647-7-15-88

ARKANSAS STATE HIGHWAY COMMISSION

DETAILS OF PIPE UNDERDRAIN

STANDARD DRAWING PU-1

7-20-95 INSTD.PUI

SUPERELEVATION TABLE FOR ONE - WAY TRAFFIC

DEGREE OF CURVE	30 MPH e	30 MPH Ls (FT) MINIMUM	30 MPH Ls (FT) DESIRABLE	40 MPH e	40 MPH Ls (FT) MINIMUM	40 MPH Ls (FT) DESIRABLE	50 MPH e	50 MPH Ls (FT) MINIMUM	50 MPH Ls (FT) DESIRABLE	55 MPH e	55 MPH Ls (FT) MINIMUM	55 MPH Ls (FT) DESIRABLE	60 MPH e	60 MPH Ls (FT) MINIMUM	60 MPH Ls (FT) DESIRABLE	65 MPH e	65 MPH Ls (FT) MINIMUM	65 MPH Ls (FT) DESIRABLE	70 MPH e	70 MPH Ls (FT) MINIMUM	70 MPH Ls (FT) DESIRABLE
0° 15′	N.C.			N.C.			N.C.			N.C.			N.C.			N.C.			N.C.		
0° 30′	N.C.			N.C.			N.C.			N.C.			N.C.			N.C.			N.C.		
0° 45′	N.C.			N.C.			N.C.			0.022			0.023			0.025			0.028		
1° 00′	N.C.			N.C.			R.C.			0.026			0.030			0.033	250		0.037	275	
1° 15′	N.C.			R.C.			0.021			0.032			0.037	250		0.041		350	0.046		350
1° 30′	N.C.			0.021			0.026			0.037			0.043			0.048			0.054		
1° 45′	N.C.			0.025			0.031	200		0.043	225		0.049			0.055			0.062		
2° 00′	R.C.			0.028	175		0.036			0.048		350	0.055			0.062			0.070		
2° 15′	R.C.			0.031			0.040			0.053			0.061			0.069	265		0.078	300	
2° 30′	0.021			0.034			0.045		300	0.058			0.067			0.075	280		0.085	315	400
2° 45′	0.023			0.037			0.049			0.063			0.072			0.081	300		0.091	335	
3° 00′	0.025	150		0.040			0.053			0.067	230		0.077	260		0.087	315		0.096	350	
3° 15′	0.027			0.043			0.057			0.072	245		0.082	275		0.090	325	400	0.098	360	450
3° 30′	0.029			0.046			0.061	205		0.076	255		0.086	285		0.095	340		0.100	360	
3° 45′	0.031		250	0.049			0.065	215		0.080	265		0.090	295	400	0.097	345				
4° 00′	0.033			0.051			0.072	225		0.083	270		0.093	305		0.099	350				
4° 30′	0.037			0.056			0.078	240		0.087	280		0.096	315							
5° 00′	0.040			0.061			0.083	250		0.091	295		0.098	320							
5° 30′	0.043			0.066	185		0.088	260		0.094	300	400									
6° 00′	0.046			0.070	190		0.092	270		0.096	305										
6° 30′	0.050			0.074	200		0.095	280	350	0.100	315										
7° 00′	0.053			0.078	210		0.098	285													
7° 30′	0.056			0.081	215		0.099	290													
8° 00′	0.058			0.084	220		0.100	290													
8° 30′	0.061			0.087	225	300															
9° 00′	0.063			0.089	230																
10° 00′	0.068	160		0.094	235																
11° 00′	0.072	170		0.097	250																
12° 00′	0.076	175		0.099	250																
13° 00′	0.080	180		0.100	250																
14° 00′	0.083	190																			
15° 00′	0.086	195																			
16° 00′	0.089	200																			
17° 00′	0.091	200																			
18° 00′	0.093	205																			
19° 00′	0.095	210	300																		
20° 00′	0.097	215																			
21° 00′	0.098	215																			
22° 00′	0.099	215																			
23° 00′	0.099	215																			
24° 00′	0.100	220																			

D MAX = 24° 45′ | D MAX = 13° 15′ | D MAX = 8° 15′ | D MAX = 6° 30′ | D MAX = 5° 15′ | D MAX = 4° 15′ | D MAX = 3° 30′

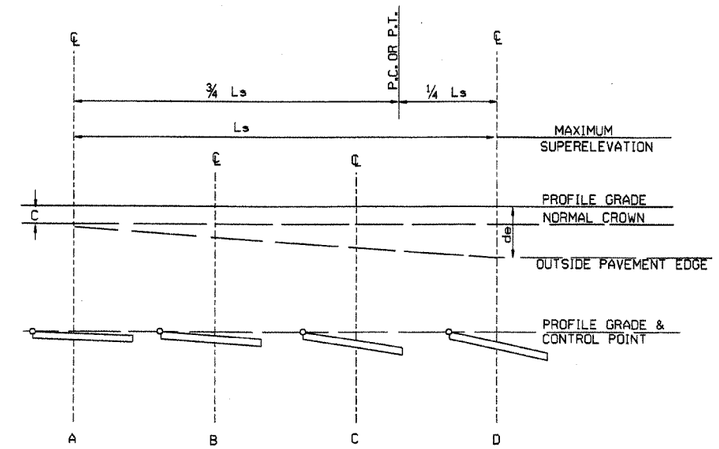

ONE-WAY TRAFFIC
INSIDE LANE

SUPERELEVATION FORMULA = $S = -\frac{L(de-C)}{Ls} - C$

ABBREVIATIONS

NC - NORMAL CROWN
RC - REVERSE CROWN, SUPERELEVATION AT NORMAL CROWN SLOPE
S - SUPERELEVATION
L - DISTANCE FROM BEGINNING OF SUPERELEVATION TRANSITION TO ANY POINT (FT.)
d - WIDTH OF PAVEMENT
e - MAXIMUM RATE OF SUPERELEVATION (FT. PER FT.)
Ls - LENGTH OF SUPERELEVATION TRANSITION (FT.)
C - NORMAL CROWN (FT.)

GENERAL NOTES

1. ON PAVEMENT WITH ONE-WAY TRAFFIC, THE SUPERELEVATION SHALL BE REVOLVED ON THE PROFILE GRADE POINT.
2. SUPERELEVATION VALUES SHOWN ON THE CROSS SECTIONS ARE VALUES (+) OR (-) TO BE ADDED OR SUBTRACTED FROM THE POINT OF CONTROL.
3. LENGTHS FOR Ls MAY BE ROUNDED IN MULTIPLES OF 25 FT. OR 50 FT. TO PERMIT SIMPLER CALCULATIONS.
4. MINIMUM Ls VALUES MAY BE USED FOR RAMPS; DESIRABLE VALUES SHALL APPLY TO MAIN LANES.
5. DIVIDED PAVEMENTS WIDER THAN 4 LANES SHALL HAVE ADDITIONAL TRANSITION LENGTHS AS FOLOWS:

6 LANE DIVIDED---------+20%
8 LANE DIVIDED---------+50%

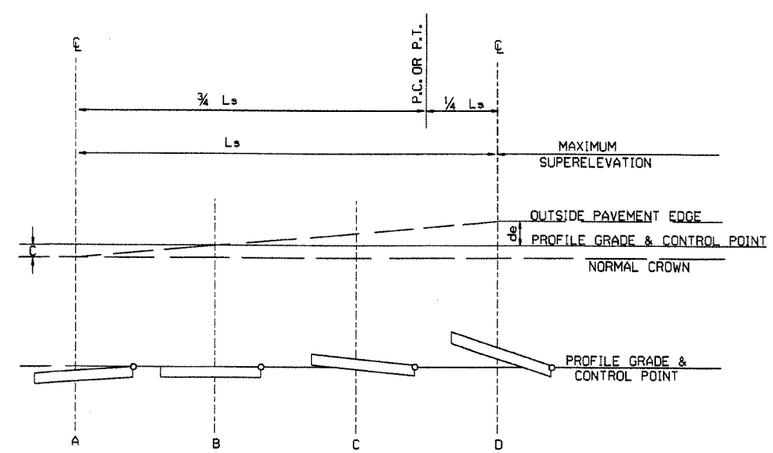

ONE-WAY TRAFFIC
OUTSIDE LANE

SUPERELEVATION FORMULA = $S = +\frac{L(de+C)}{Ls} - C$

DATE	REVISION	DATE FILMED
01-09-87	ISSUED	578-1-15-87

ARKANSAS STATE HIGHWAY COMMISSION

TABLES AND METHOD OF SUPERELEVATION FOR ONE-WAY TRAFFIC

STANDARD DRAWING SE-1

R1-1

STANDARD 30"X30"
EXPRESSWAY 36"X36"
SPECIAL 48"X48"

R1-2

STD. 36"X36"X36"
EXPWY. 48"X48"X48"
FWY. 60"X60"X60"

R2-1

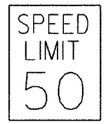

STD. 24"X30"
EXPWY. 36"X48"
FWY. 48"X60"

R2-5A

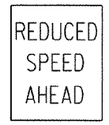

STD. 24"X30"
EXPWY. 36"X48"
FWY. 48"X60"

R2-5C

STD. 24"X30"
EXPWY. 36"X48"
FWY. 48"X60"

R4-1

STD. 24"X30"
EXPWY. 36"X48"
FWY. 48"X60"

R4-2

STD. 24"X30"
EXPWY. 36"X48"
FWY. 48"X60"

R5-1

STD. 30"X30"
EXPWY. 36"X36"
SPECIAL 48"X48"

R11-2

48"X30"

R11-3A

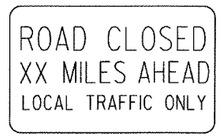

60"X30"

R11-4

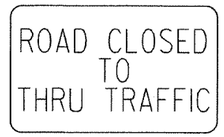

60"X30"

RSP-1

48"X30"

W1-1

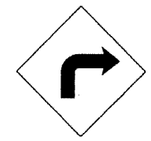

STD. 36"X36"
FWY. 48"X48"

W1-2

STD. 36"X36"
FWY. 48"X48"

W1-3

STD. 48"X48"

W1-4

STD. 48"X48"

W1-6

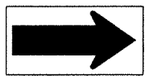

STD. 48"X24"
SPECIAL 60"X30"

W1-8

STD. 18"X24"
SPECIAL 24"X30"
EXPWY. 30"X36"
FWY. 36"X48"

W3-1

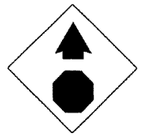

STD. 36"X36"
SPECIAL 48"X48"

W3-2

STD. 36"X36"
SPECIAL 48"X48"

W4-2

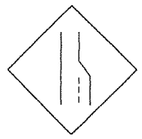

STD. 36"X36"
FWY. 48"X48"

W5-1

STD. 36"X36"
SPECIAL 48"X48"

W6-3

EXPWY. 36"X36"
SPECIAL 48"X48"

W8-7

EXPWY. 36"X36"
FWY. 48"X48"

W9-2

STD. 36"X36"
FWY. 48"X48"

W13-1

STD. 24"X24"

W20-1

STD. 48"X48"

W20-2

STD. 48"X48"

W20-3

STD. 48"X48"

W20-4

STD. 48"X48"

W20-5

STD. 48"X48"

W20-7a

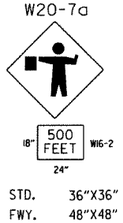

STD. 36"X36"
FWY. 48"X48"

W21-2

STD. 30"X30"
SPECIAL 36"X36"

W21-5

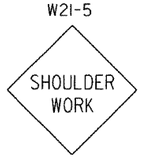

STD. 30"X30"
SPECIAL 36"X36"

W24-1

STD. 36"X36"

W1-4b

STD. 48"X48"

R56-1

STD. 18"X18"

W8-11

STD. 36"X36"
FWY. 48"X48"

W8-9

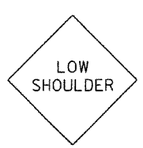

STD. 36"X36"
FWY. 48"X48"

G20-1

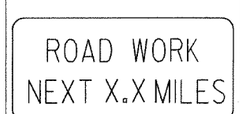

60"X24"

G20-2

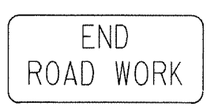

48"X24"

OM-3L OM-3R

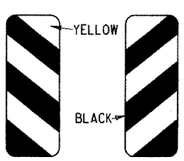

12"X36"

M4-9

STD. 30"X24"
SPECIAL 48"X36"
SPECIAL 60"X48"

M4-10

48"X18"

R55-1

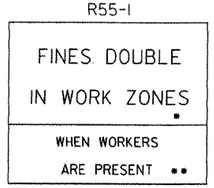

36"X60"

* USE 6" C LETTERS
** USE 4" D LETTERS

ADVANCE DISTANCES
(XXXX)

500 FT	1/2 MILE
1000 FT	3/4 MILE
1500 FT	1 MILE
	AHEAD

GENERAL NOTES:

1. ALL TRAFFIC CONTROL DEVICES USED ON ROAD CONSTRUCTION SHALL CONFORM TO THE MANUAL ON UNIFORM TRAFFIC CONTROL DEVICES, LATEST EDITION, AND TO THE STANDARD HIGHWAY SIGNS, LATEST EDITION, OR AS APPROVED BY THE FEDERAL HIGHWAY ADMINISTRATION.
2. TRAFFIC CONTROL DEVICES SHALL BE SET UP JUST BEFORE THE START OF CONSTRUCTION OPERATIONS AND SHALL BE PROPERLY MAINTAINED DURING THE TIME SUCH CONDITIONS EXIST. THEY SHALL REMAIN IN PLACE ONLY AS LONG AS NEEDED AND REMOVED THEREAFTER.
3. EXISTING SIGNS AND CONSTRUCTION SIGNS SHALL BE KEPT IN PROPER POSITION, AND BE CLEAN AND LEGIBLE AT ALL TIMES. SIGNS THAT DO NOT APPLY TO EXISTING CONDITIONS SHALL BE REMOVED. SIGNS THAT ARE DAMAGED, DEFACED, OR THAT ACCUMULATE DIRT DURING CONSTRUCTION SHALL BE CLEANED, REPAIRED, OR REPLACED.
4. • SIGNS ARE USUALLY MOUNTED ON A SINGLE POST, ALTHOUGH THOSE WIDER THAN 36" OR LARGER THAN 10 SQ. FT. SHALL BE MOUNTED ON TWO POSTS OR ABOVE A TYPE III BARRICADE.
5. • SIGN POSTS DIRECT BURIED IN SOIL SHALL BE 2 LB. MINIMUM CHANNEL POST OR 4"x4" WOOD POSTS. CHANNEL POSTS SHALL BE PAINTED GREEN. WOOD POSTS SHALL BE PAINTED WHITE. ALL POSTS SHALL BE NEATLY CONSTRUCTED, AND SHALL BE REPLUMBED, CLEANED, OR REPAIRED AS NEEDED FOR THE DURATION OF THE JOB. THERE SHALL NOT BE MORE THAN 2 POSTS IN A 7' PATH FOR WOOD OR CHANNEL POSTS. ANY CHANNEL POST SPLICE SHALL BE IN ACCORDANCE WITH STANDARD DRAWING TC-3.
6. POST MOUNTED SIGNS IN RURAL AREAS SHALL BE CONSTRUCTED WITH THE NEAR EDGE OF THE SIGN FROM 6 TO 12 FEET FROM THE PAVEMENT EDGE. SIGNS IN URBAN AREAS AND BARRICADE MOUNTED SIGNS SHALL BE MOUNTED A MINIMUM OF 2 FEET FROM THE PAVEMENT EDGE.
7. ALL POST AND BARRICADE MOUNTED SIGNS MOUNTED IN URBAN AREAS SHALL BE MOUNTED A MINIMUM DISTANCE OF 7' FROM THE BOTTOM OF THE SIGN TO THE ROADWAY SURFACE. ALL POST AND BARRICADE MOUNTED SIGNS MOUNTED IN RURAL AREAS SHALL BE MOUNTED A MINIMUM DISTANCE OF 7' FROM THE BOTTOM OF THE SIGN TO THE ROADWAY SURFACE, EXCEPT A MINIMUM OF 6' SHALL BE USED WHEN MOUNTING AN ADVISORY SIGN BELOW A WARNING SIGN. TEMPORARY SIGNS MAY BE MOUNTED ON PORTABLE SUPPORTS FOR INTERMEDIATE TERM STATIONARY WORK CONDITIONS. THE SIGNS MINIMUM MOUNTING HEIGHT SHALL BE 5'. RETROREFLECTIVE DEVICES SHALL BE USED. TEMPORARY SIGNS MAY BE MOUNTED ON PORTABLE SUPPORTS FOR SHORT-TERM, SHORT DURATION, AND MOBILE CONDITIONS. THEY SHALL BE NO LESS THAN ONE (1) FOOT ABOVE THE TRAVELED WAY. LONG-TERM STATIONARY SIGNS SHALL BE DIRECT BURIED IN SOIL, UNLESS CONDITIONS NECESSITATE THE USE OF PORTABLE SIGNS, OR AS APPROVED BY THE ENGINEER. CONCRETE PADS, CONCRETE OR ROCK BALLAST, OR OTHER SOLID MATERIALS SHALL NOT BE UTILIZED WITH PORTABLE SIGN SUPPORTS.
8. FLAGGERS SHALL USE REFLECTORIZED STOP-SLOW PADDLES. FLAGS MAY BE USED ONLY FOR EMERGENCY SITUATIONS.
9. MOST OF THE SIGNS SHOWN ARE ORIENTED TO THE RIGHT. HOWEVER, THIS DOES NOT PRECLUDE THE USE OF MIRROR IMAGES OF THESE SIGNS WHERE THE REVERSE ORIENTATION MIGHT BETTER CONVEY TO MOTORISTS THE PROPER DIRECTION OF MOVEMENT.
10. R55-1 SIGNS SHALL BE PLACED AT LEAST 1500' BUT NOT MORE THAN 1 MILE IN ADVANCE OF THE WORK ZONE. IF A SPEED LIMIT REDUCTION IS IN EFFECT, THE SIGN SHALL BE PLACED A MINIMUM OF 500' IN ADVANCE OF THE "REDUCED SPEED AHEAD" SIGN.

• NOTE: SUPPORTS FOR SIGNS, BARRICADES, AND VERTICAL PANELS THAT ARE DIFFERENT FROM THE REQUIREMENTS SHOWN IN NOTES 4 & 5, BUT MEET THE REQUIREMENTS OF NCHRP-350 OR MANUAL FOR ASSESSING SAFETY HARDWARE (MASH), WILL BE ACCEPTED. COMPLIANCE WITH THE REQUIREMENTS OF NCHRP-350 OR MANUAL FOR ASSESSING SAFETY HARDWARE (MASH) IS REQUIRED FOR ALL PROJECTS.

DATE	REVISION	FILMED
12-15-11	REVISED W24-1	
11-17-10	DELETED W8-9a & ADDED W8-9	
10-15-09	ADDED REFERENCE TO MASH & ADDED SIGN W24-1	
4-17-08	REVISED SIGN DESIGNATIONS	
11-18-04	REVISED NOTES	
10-9-03	REVISED NOTE 1	
11-16-01	REVISED NOTE 7	
9-28-00	REVISED NOTE	
11-18-98	ADDED NOTE	
6-26-97	REVISED NOTE 5	
4-03-97	REVISED NOTE 5	
10-18-96	ADDED CONTROLLED ACCESS HWY. SIGN & TO NOTE 7	
10-12-95	ADDED R55-1	
6-8-95	REVISED TO CORRECT SIGN ILLUSTRATIONS	6-8-95
2-2-95	REVISED PER PART VI, MUTCD SEPT. 3, 1993	
8-15-91	DRAWN AND PLACED IN USE	

ARKANSAS STATE HIGHWAY COMMISSION

STANDARD TRAFFIC CONTROLS FOR HIGHWAY CONSTRUCTION

STANDARD DRAWING TC-1

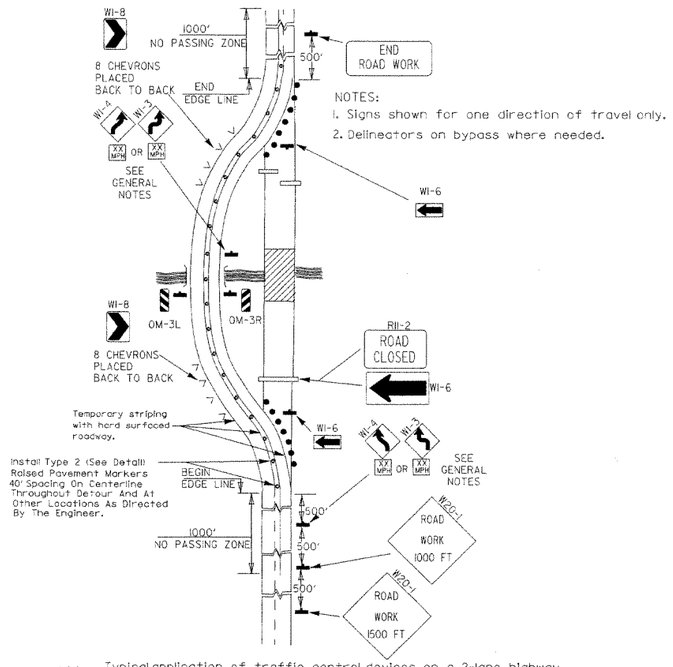

NOTES:
1. Signs shown for one direction of travel only.
2. Delineators on bypass where needed.

(A) Typical application of traffic control devices on a 2-lane highway where the entire roadway is closed and a bypass detour is provided.

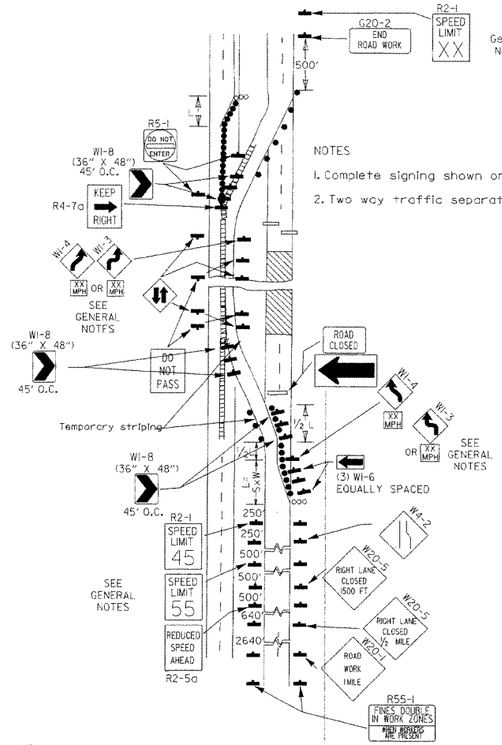

NOTES
1. Complete signing shown only in crossover direction.
2. Two way traffic separated with positive barrier.

(B) Typical application - 4-lane divided roadway where one roadway is closed.

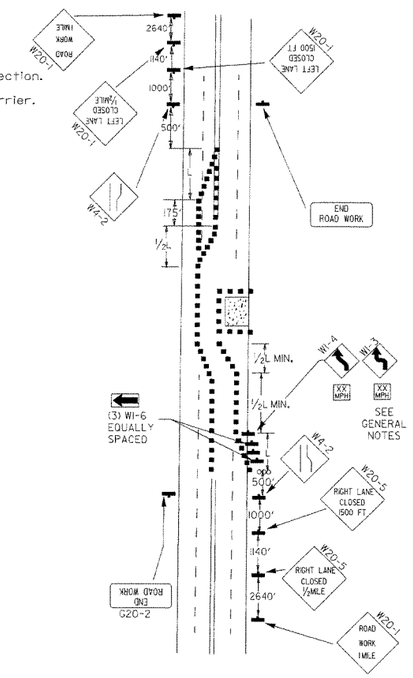

(C) Typical application - 4-lane undivided roadway where half of the roadway is closed.

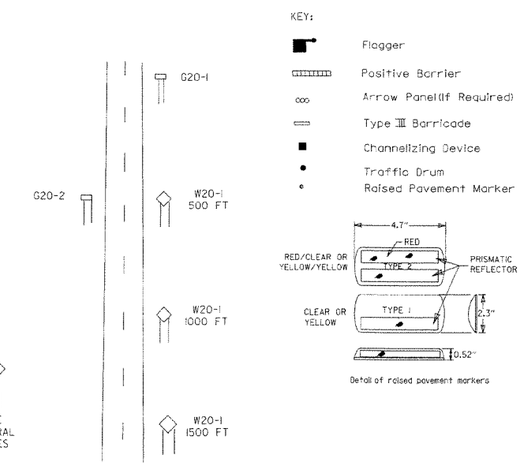

Typical advance warning sign placement

Taper formulae:

$L=5xW$ for speeds of 45mph or more.

$L=\frac{WS^2}{60}$ for speeds of 40mph or less.

Where:

L= Minimum length of taper.

S= Numerical value of posted speed limit prior to work or 85th percentile speed.

W= Width of offset.

GENERAL NOTES:

1. Advisory speed posted on WI-3 or WI-4 curve warning signs to be determined at site. Use WI-4 when speed is greater than 30mph and WI-3 when 30mph or less.
2. When the existing speed limit is 55mph and the plans require a speed limit of 45mph, the R2-1(55) shall be omitted and the R2-5A shall be installed at that location. Additional R2-1 45mph speed limit signs shall be installed at a maximum of 1mile intervals. At the end of the work area a R2-1(xx) shall be installed to match original speed limit.
3. When the existing speed limit is 65mph and the plans require a speed limit of 55mph, the R2-1(45) shall be omitted. Additional R2-1 55mph speed limit signs shall be installed at a maximum of 1mile intervals. At the end of the work area a R2-1(xx) shall be installed to match original speed limit.
4. The maximum spacing between channelizing devices in a taper should be approximately equal in feet to the speed limit. Beyond the taper, maximum spacing shall be two times the speed limit, or as directed by the Engineer.
5. Warning lights and/or flags may be mounted to signs or channelizing devices at night as needed.
6. Pavement markings no longer applicable which might create confusion in the minds of vehicle operators shall be removed or obliterated as soon as practicable.
7. Trailer mounted devices such as arrow panels and portable changeable message signs shall be delineated by affixing conspicuity material in a continuous line on the face of the trailer. When placed on or adjacent to the shoulder and not behind a positive barrier, these devices shall be delineated by placing five (5) traffic drums, equally spaced along the traffic side of the device.

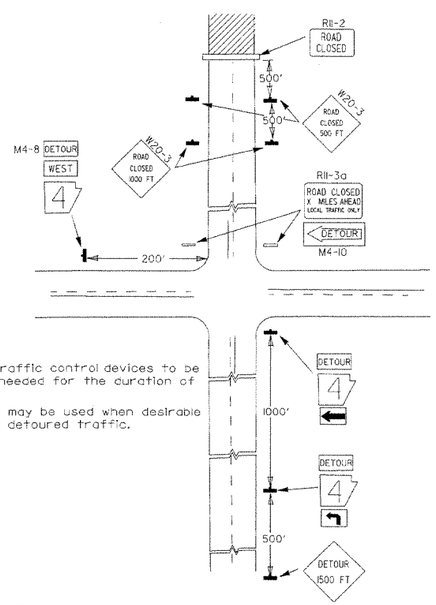

NOTES:
1. Regulatory traffic control devices to be modified as needed for the duration of the detour.
2. Street names may be used when desirable for directing detoured traffic.

(D) Typical application - roadway closed beyond detour point.

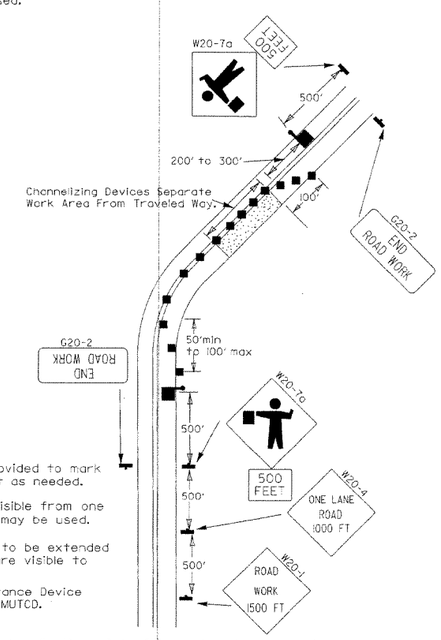

NOTES:
1. Flood lights should be provided to mark flagger stations at night as needed.
2. If entire work area is visible from one station, a single flagger may be used.
3. Channelizing devices are to be extended to a point where they are visible to approaching traffic.
4. Automated Flagger Assistance Device (AFAD) optional. Refer to MUTCD.

(E) Typical application of traffic control devices on 2-lane highway where one lane is closed and flagging is provided.

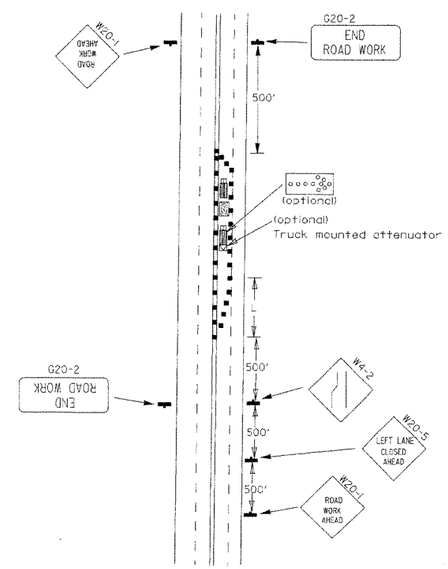

(F) Typical application - 4-lane undivided roadway with inside lane closed.

DATE	REVISION	FILMED
3-11-10	ADDED (AFAD)	
11-20-08	REVISED SIGN DESIGNATIONS	
11-18-04	ADDED GENERAL NOTE	
10-18-96	ADDED R55-1	
4-26-96	CORRECTED (a) BEHIND G20-2	
6-8-95	CORRECTED SIGN IDENT. ON WI-4A	6-8-95
2-2-95	REVISED PER PART VI, MUTCD, SEPT. 3, 1993	
8-15-91	DRAWN AND PLACED IN USE	

ARKANSAS STATE HIGHWAY COMMISSION

STANDARD TRAFFIC CONTROLS FOR HIGHWAY CONSTRUCTION

STANDARD DRAWING TC-2

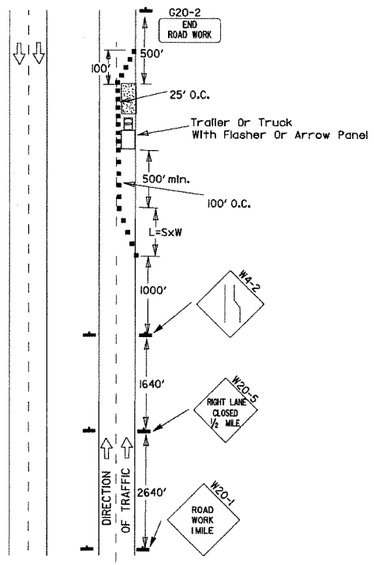

(A) Typical application - daytime maintenance operations of short duration on a 4-lane divided roadway where half of the roadway is closed.

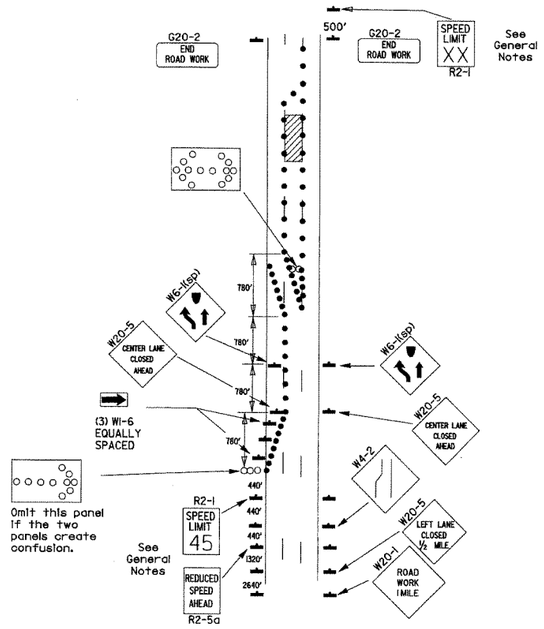

(B) Typical application - 3-lane oneway roadway where center lane is closed.

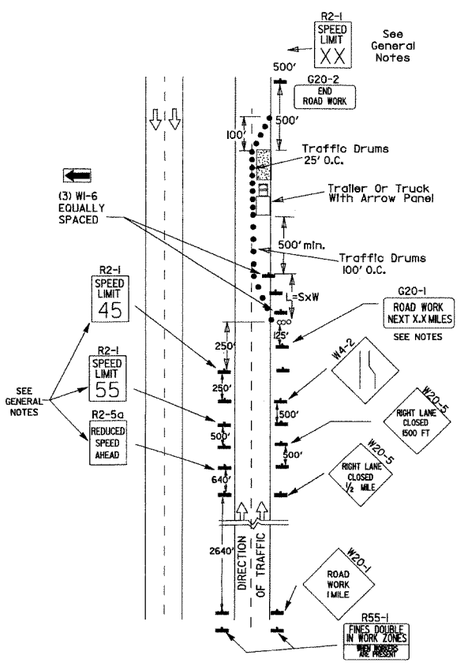

(C) Typical application - construction operations of intermediate to long term duration on a 4-lane divided roadway where half of the roadway is closed.

KEY:

ooo Arrow Panel (If Required)

■ Channelizing Device

● Traffic drum

GENERAL NOTES:

1. A speed limit reduction may be implemented ONLY when designated in the plan or when recommended by the Roadway Design Division.
2. When the existing speed limit is 55mph and the plans require a speed limit of 45mph, the R2-1(55) shall be omitted and the R2-5A shall be installed at that location. Additional R2-1 45mph speed limit signs shall be installed at a maximum of 1mile intervals. At the end of the work area a R2-1(XX) shall be installed to match original speed limit.
3. When the existing speed limit is 65mph and the plans require a speed limit of 55mph, the R2-1(45) shall be omitted. Additional R2-1 55mph speed limit signs shall be installed at a maximum of 1mile intervals. At the end of the work area a R2-1(XX) shall be installed to match original speed limit.
4. The maximum spacing between channelizing devices in a taper should be approximately equal in feet to the speed limit. Beyond the taper, maximum spacing shall be two times the speed limit or as directed by the Engineer.
5. Warning lights and/or flags may be mounted to signs or channelizing devices at night as needed.
6. Pavement markings no longer applicable which might create confusion in the minds of vehicle operators shall be removed or obliterated as soon as practicable.
7. The G20-1 sign will be required on jobs of over two miles in length. When the lane closure is not at the beginning of the project, the G20-1 sign shall be erected 125' in advance of the job limit. Additional W20-1 (1 MILE) signs are not required in advance of lane closures that begin inside the project limits.
8. Flaggers shall use STOP/SLOW paddles for controlling traffic through work zones. Flags may be used only for emergency situations.
9. All plastic drums and cones shall meet the requirements of NCHRP-350 or Manual For Assessing Safety Hardware (MASH).
10. Trailer mounted devices such as arrow panels and portable changeable message signs shall be delineated by affixing conspicuity material in a continuous line on the face of the trailer. When placed on or adjacent to the shoulder and not behind a positive barrier, these devices shall be delineated by placing five (5) traffic drums, equally spaced along the traffic side of the device.

Channelizing devices

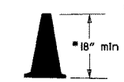

* When cones are used on freeways and multi-lane highways, they shall be 28" min. During hours of darkness, 28" cones shall be used on all roadways, and shall be reflectorized in accordance with the M.U.T.C.D.

CONES

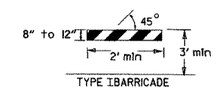

TYPE I BARRICADE

PLASTIC DRUM

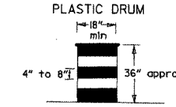

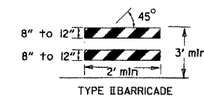

TYPE II BARRICADE

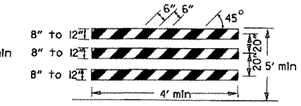

TYPE III BARRICADE

NOTE:
For all road closures, the Type III barricades shall be of sufficient length to extend across entire roadway.

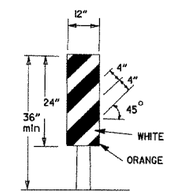

VERTICAL PANEL
VP-1R

VERTICAL PANEL PLACEMENT

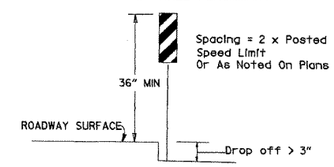

TRAFFIC CONTROL DEVICES
FOR
VERTICAL PAVEMENT DIFFERENTIALS

VERTICAL DIFFERENTIAL	LOCATIONS	TRAFFIC CONTROL
1" to 3"	Centerline, lane lines	W8-11
1" to 3"	Edge of shoulder	W8-9
Greater than 3"	Lane lines	Standard lane closure required
Greater than 3"	Edge of traveled lane	*RSP-1 and vertical panels, drums or concrete barrier
Greater than 3"	Edge of shoulder	*Vertical panels, drums or concrete barrier

* When shown on the plans concrete barrier will be used.

When the shoulder area is used as part of the traveled lane and there is insufficient width to place drums on the remaining shoulder width, then vertical panels shall be used.

FLAG

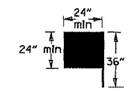

Flag shall be of good grade red material

STOP SLOW PADDLE

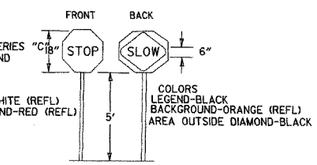

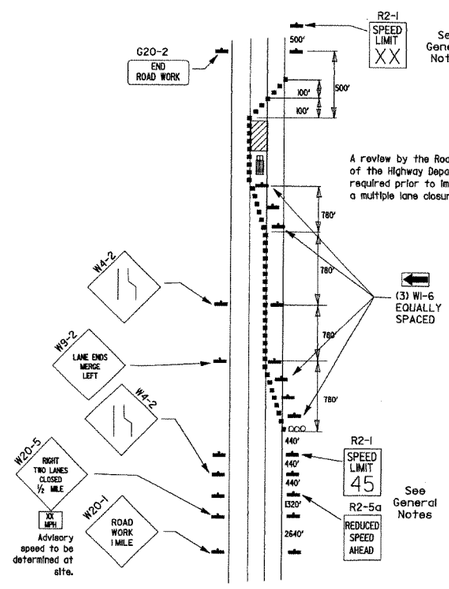

(D) Typical application - closing multiple lanes of a multilane highway.

NOTES: USE SPLICES ONLY WHEN NECESSARY FOR INSTALLATION. TYPICAL INSTALLATION SHOULD HAVE NO SPLICES (SEE STD. DRAWING NO. SHS-2)

NORMAL INSTALLATIONS WILL REQUIRE 1/4" DIA. BOLTS TO MOUNT SIGNS TO POST AND 5/16" DIA. BOLTS TO ASSEMBLE THE VARIOUS POST SUPPORTS. EACH OF THESE BOLTS SHALL BE CARRIAGE BOLTS.

SIGN POSTS SHALL BE PAINTED GREEN; SIGNS SHALL NOT BE PAINTED, AND ALL SIGN POSTS SHALL BE PLUMB.

DETAIL OF SPLICES

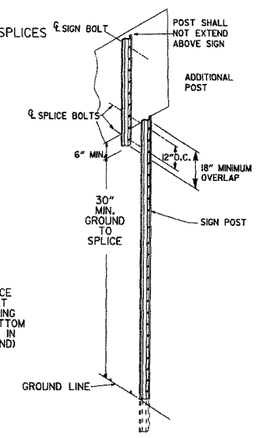

DATE	REVISION	FILMED
10-15-09	ADDED REFERENCE TO MASH	
11-20-08	REVISED SIGN DESIGNATIONS	
11-18-04	ADDED NOTE	
10-1-98	ADDED NOTE	
4-03-97	ADDED (SP) TO W6-1 & REVISED TRAFFIC CONTROL DEVICES NOTE	
10-18-96	ADDED R55-1	
10-12-95	MOVED UPPER SPLICE	
6-8-95	REVISED SPLICE DETAIL, TEXT	6-8-95
2-2-95	REVISED PER PART VI, MUTCD, SEPT. 3, 1993	
8-15-91	DRAWN AND PLACED IN USE	

ARKANSAS STATE HIGHWAY COMMISSION

STANDARD TRAFFIC CONTROLS FOR HIGHWAY CONSTRUCTION

STANDARD DRAWING TC-3

REINFORCING BAR TABLE PER BARRIER UNIT

MARK	LOCATION	BAR SIZE	(NO. BARS)	SKETCH
H-1	HORIZONTAL IN BARRIER TIED INSIDE V-1 BARS	#5	(6)	19'-3"
H-2	CENTERED ABOVE DRAIN SLOTS LONG. & TRANSVERSELY	#5	(6)	6'-6"
H-3	TIED ABOVE H-1 BARS TO SUPPORT H-2, TIED TO V-1	#4	(2)	1'-6"
S-1	OVER LIFT HOLES	#4	(2)	2'-5", 90°, 3 3/8" R, LIFTING HOLE
S-2	HORIZ. AROUND SLOTS BETWEEN V-1'S @ DRAIN SLOTS	#4	(2)	1 1/2" R, SLOTS, 7", 1" MIN. CLEAR TO BAR, 1'-6", 5'-1" BAR W/(4) 1 1/2" R BENDS & MIN. 1'-0" OVERLAP
V-1	VERTICAL IN BARRIER(3) EACH END & (2) AT EACH DRAIN SLOTS	#5	(16)	TOTAL LENGTH 4'-9", 2 3/16" R, 12°, 1/2", ±6", 2'-1 3/8", 4 3/8"

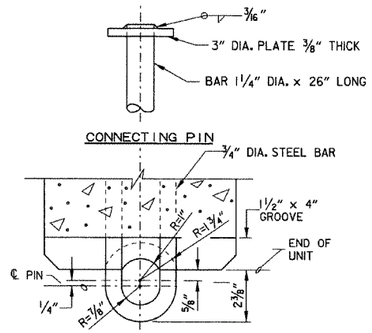

SECTION E-E

CONNECTION DETAILS

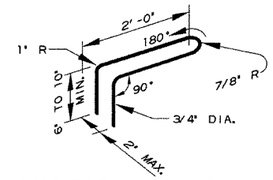

CONNECTION LOOP

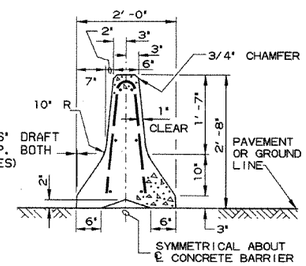

SECTION A-A

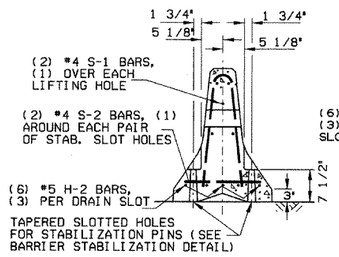

SECTION B-B

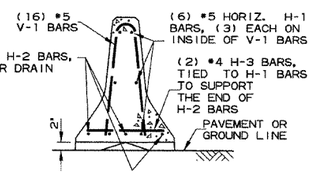

SECTION C-C

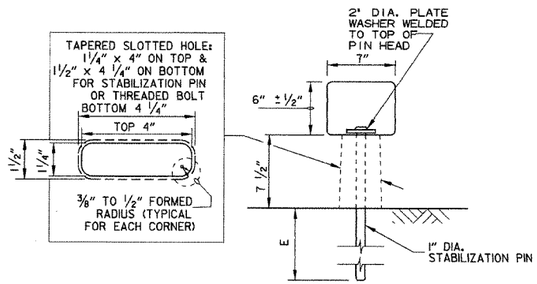

BARRIER STABILIZATION DETAIL

ROADWAY SECTION

(E) 4" - Concrete Pavement
8" - Asphalt Pavement
12" - Shoulder Areas

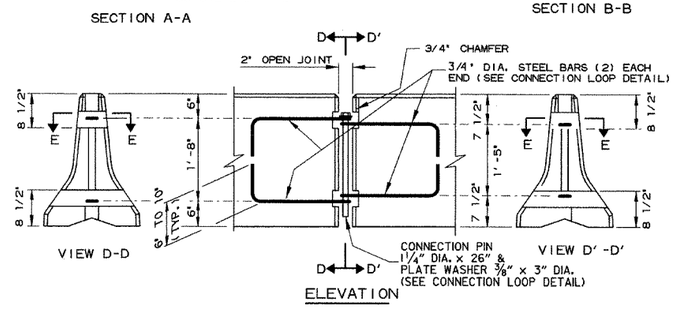

ELEVATION

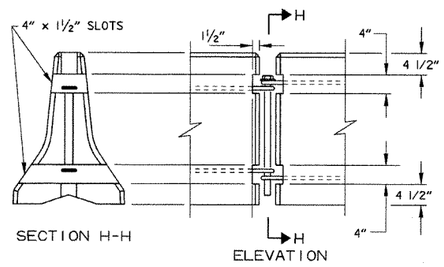

BARRIER REMOVAL SLOT DETAILS

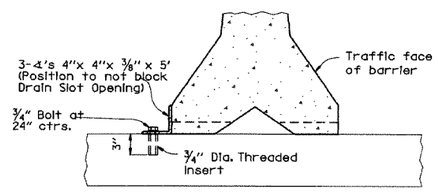

NOTE: 3/4" Threaded Inserts shall be cast in place for all new bridge decks and drilled and grouted for existing bridge decks to be retained. Inserts shall have a minimum ultimate load capacity of 8000 lbs. in tension. After removal of barrier, bolts, and angles, the inserts shall be filled with approved non-shrink epoxy.

BARRIER STABILIZATION DETAIL

BRIDGE DECKS

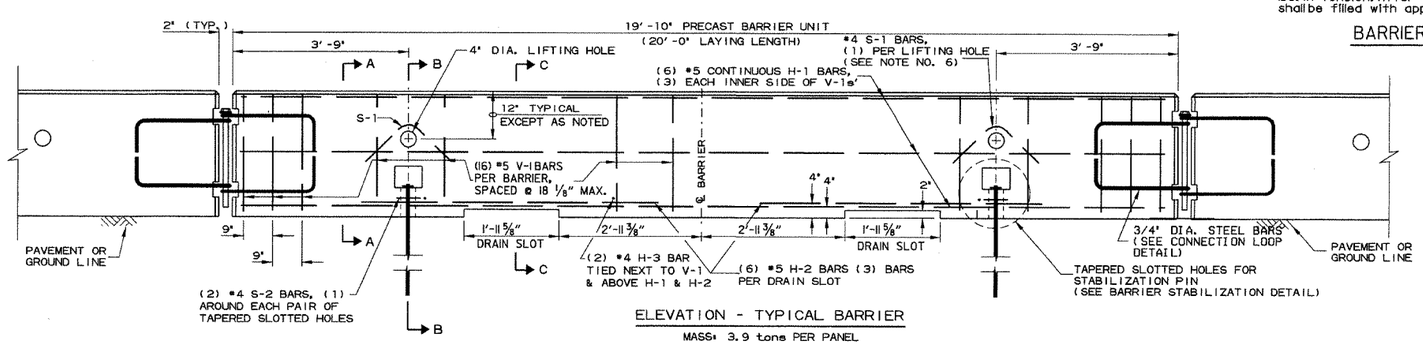

ELEVATION - TYPICAL BARRIER

MASS: 3.9 tons PER PANEL

General Notes

1. The contractor shall furnish the Precast Concrete Barrier Units and shall be responsible for the manufacture, shipment, storage, placement and removal. At the completion of the project, the precast units will remain the property of the contractor.

2. Materials shall meet the following minimum requirements:
   Concrete: 2500 psi compressive strength at 28 days.
   Reinforcing Steel: AASHTO M 31 or M 53, Grade 60
   Structural Steel: AASHTO-M270 Grade 36 shall be used for the Connection Pin, Connection Loops, and Stabilization Pins. A One Piece Pin with a 3" rounded top may be used in place of the detailed Connection Pin.
   Delineators: Delineators shall be mounted at 10' spacing on top of precast barrier.

   In applications where barrier wall is within 6 feet of a traffic lane, additional delineators shall be placed on the barrier at 10' spacing approximately one (1) foot from the top of the barrier. Delineators shall be on the AHTD Qualified Products List for Construction Concrete Barrier Markers.
   Delineator color shall be in accordance with the Manual on Uniform Traffic Control Devices.
   Payment for delineators shall be considered included in the price bid per Lin. Ft. for "Furnishing and Installing Precast Concrete Barrier". The contractor shall certify to the Engineer that the material and the design used in the precast barrier units meets the requirements as shown on this standard drawing.

3. Other Precast Concrete Barriers that have been crash tested and approved by the Federal Highway Administration to meet the requirements of NCHRP-350 test level 3 or Manual For Assessing Safety Hardware (MASH) will be accepted in lieu of the barrier shown. Drain slots shall be provided as needed or as directed by the Engineer. The Contractor shall furnish a certification of NCHRP Report 350 or Manual For Assessing Safety Hardware (MASH) compliance for any other types of precast barrier to be used. The certification shall state that the precast concrete barrier meets the requirements of NCHRP Report 350 or Manual For Assessing Safety Hardware (MASH) and include a copy of the Federal Highway Administration's (FHWA) approval letter with all attachments. Precast concrete barrier units shall be fabricated and installed in accordance with crash testing and documentation provided in the FHWA approval letter. Mixing of shapes will not be allowed in a continuous line of units.

4. Dowel holes in pavement or bridge slabs that are to remain in place shall be filled. Holes in concrete pavement and bridge slabs shall be filled with an approved non-shrink epoxy grout. Holes in asphalt pavement shall be filled with an approved asphalt joint filler. Payment for drilling and filling holes to be included in the price for various barrier items.

5. Attach Units To Roadway Surface with Stabilization Pins and to Deck Slabs using bolts when required.

6. A 4" White PVC Sleeve may be used to form the Lifting Hole and if used the Sleeve is to be left in place.

DATE	REVISION	FILMED
10-15-09	ADDED REFERENCE TO MASH	
8-5-09	REV. NOTE 3 CONCERNING DRAIN SLOTS	
11-29-07	REVISED NOTE 3	
5-25-06	DELETED GENERAL NOTE 7	
11-18-04	REVISED BARRIER STABILIZATION DETAIL BRIDGE DECKS	
4-10-03	REVISED GENERAL NOTE 2	
8-22-02	ISSUED NEW DRAWING	

ARKANSAS STATE HIGHWAY COMMISSION

STANDARD TRAFFIC CONTROLS FOR HIGHWAY CONSTRUCTION - TEMPORARY PRECAST BARRIER

STANDARD DRAWING TC-4

Ⓐ 4 feet or greater preferred. If less than 4 feet, Precast Units shall be connected to slab (SEE BARRIER STABILIZATION DETAIL-BRIDGE DECKS STD. DRWG. TC-4)

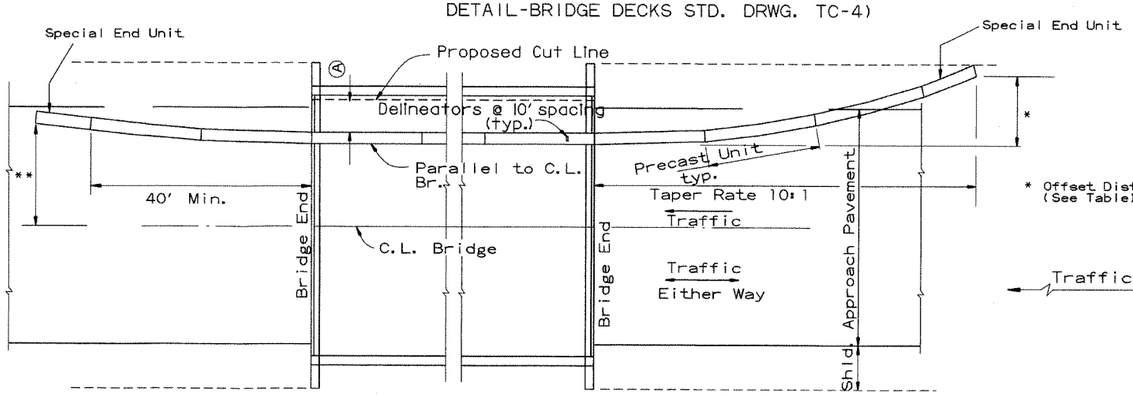

* Offset Distance (See Table)

BARRIER PLACEMENT ALONG BRIDGE WITH OFFSET

No Scale

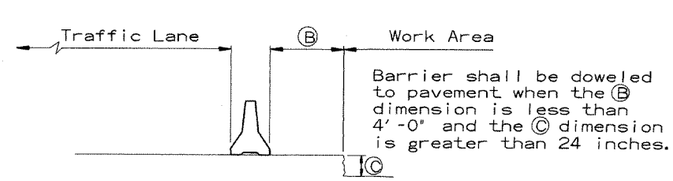

Barrier shall be doweled to pavement when the Ⓑ dimension is less than 4'-0" and the Ⓒ dimension is greater than 24 inches.

SECTION J-J

No Scale

** Offset Distance for Two Way Traffic Only

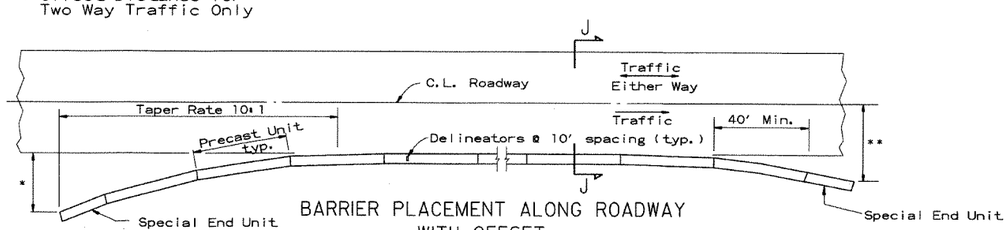

BARRIER PLACEMENT ALONG ROADWAY WITH OFFSET

No Scale

* Offset Distance (See Table)

** Offset Distance For Two Way Traffic Only

Offset Distance Table

Speed (MPH)	Offset Distance (FT.)
≤ 45	12
> 45	18

If offset distance is not attainable, then see 'Barrier Placement With Attenuator' Detail shown below.

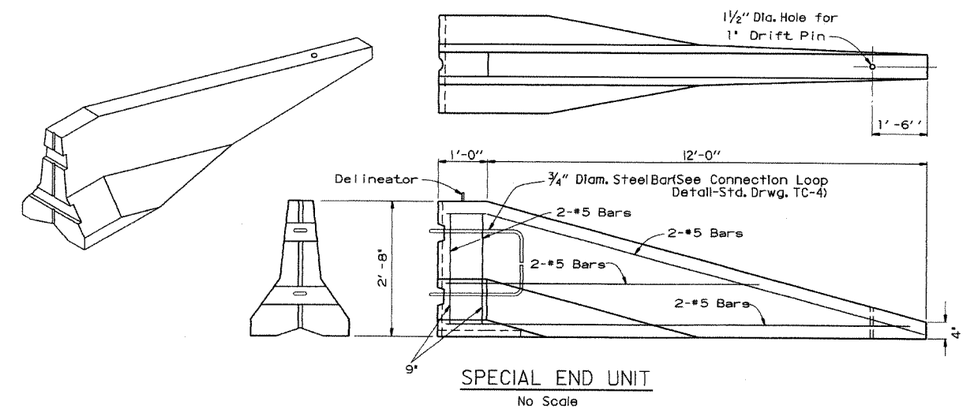

SPECIAL END UNIT

No Scale

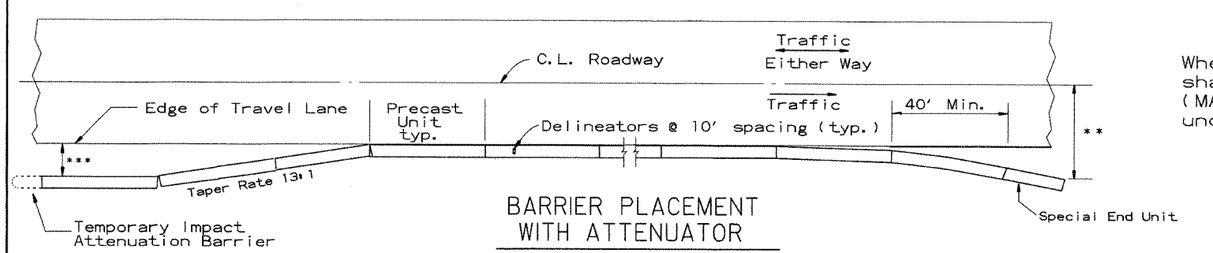

BARRIER PLACEMENT WITH ATTENUATOR

No Scale

*** Min. 3'-0" From Edge of Travel Lane to Nearest Edge of Attenuator

** Offset Distance For Two Way Traffic Only

General Notes

When shown on the Plans, the ends of the Temporary Precast Concrete Barrier shall be protected with an NCHRP-350 or Manual For Assessing Safety Hardware (MASH) approved Crash Cushion. Payment for Crash Cushions shall be made under the item of "Temporary Impact Attenuation Barrier."

DATE	REVISION	FILMED
10-15-09	ADDED REFERENCE TO MASH	
5-25-06	REVISED BARRIER PLACEMENT	
8-22-02	ISSUED NEW DRAWING	

ARKANSAS STATE HIGHWAY COMMISSION

STANDARD TRAFFIC CONTROLS FOR HIGHWAY CONSTRUCTION - TEMPORARY PRECAST BARRIER

STANDARD DRAWING TC-5

GENERAL NOTES

INSTALL A MINIMUM OF 2 UPSLOPE STAKES AND 4 DOWNSLOPE STAKES AT AN ANGLE TO WEDGE WATTLE TO BOTTOM OF DITCH.

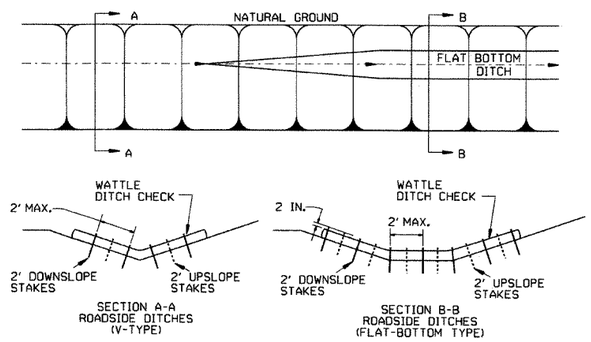

WATTLE DITCH CHECK (E-1)

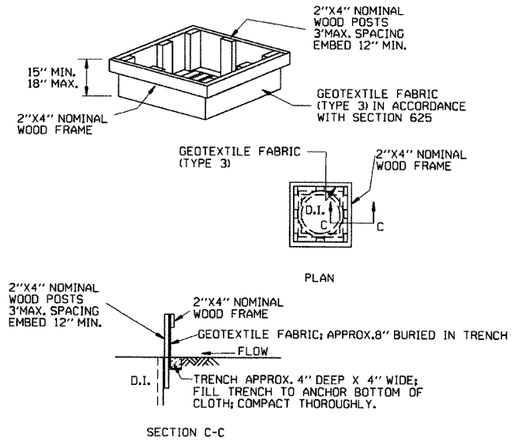

DROP INLET SILT FENCE (E-7)

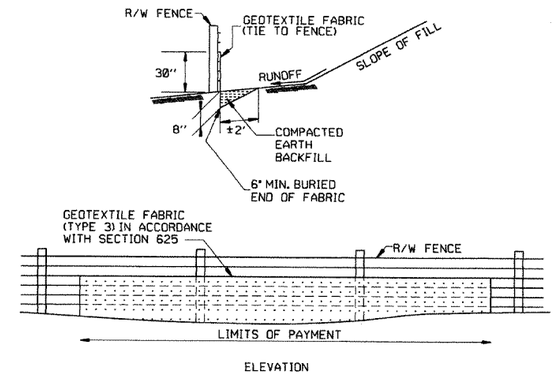

SILT FENCE ON R/W FENCE (E-4)

GENERAL NOTES

GEOTEXTILE FABRIC SHALL BE SPLICED TOGETHER WITH A SEWN SEAM ONLY AT A SUPPORT POST, OR TWO SECTIONS OF FENCE MAY BE OVERLAPPED INSTEAD. PAYMENT OF ADDITIONAL MATERIAL FOR OVERLAP WILL NOT BE MADE.

GENERAL NOTES

1. STRAW BALES SHALL BE INSTALLED SO THAT THE BINDINGS ARE ORIENTED AROUND THE SIDES RATHER THAN ALONG THE TOPS AND BOTTOMS OF THE BALES. THE BALES SHALL BE A MINIMUM OF 30 INCHES IN LENGTH.

2. NO GAPS SHALL BE LEFT BETWEEN BALES.

3. BALED STRAW FILTER BARRIERS COMPLETED AND ACCEPTED WILL BE MEASURED BY THE BALE IN PLACE AS AUTHORIZED BY THE ENGINEER AND WILL BE PAID FOR AT THE CONTRACT UNIT PRICE BID PER BALE FOR BALED STRAW DITCH CHECKS.

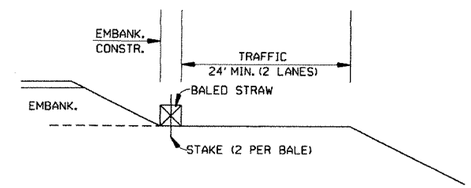

BALED STRAW FILTER BARRIER (E-2)

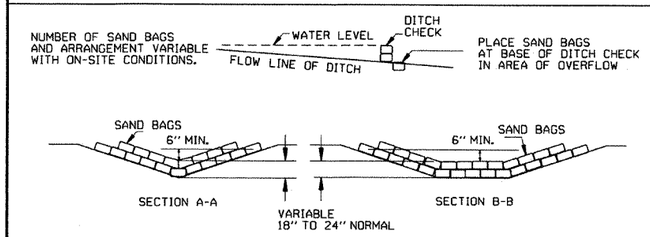

SAND BAG DITCH CHECK (E-5)

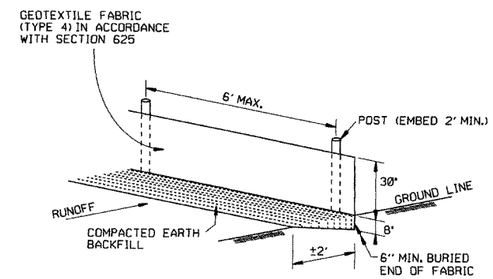

SILT FENCE (E-11)

GENERAL NOTES

GEOTEXTILE FABRIC SHALL BE SPLICED TOGETHER WITH A SEWN SEAM ONLY AT A SUPPORT POST OR TWO SECTIONS OF FENCE MAY BE OVERLAPPED INSTEAD. PAYMENT OF ADDITIONAL MATERIAL FOR OVERLAP WILL NOT BE MADE.

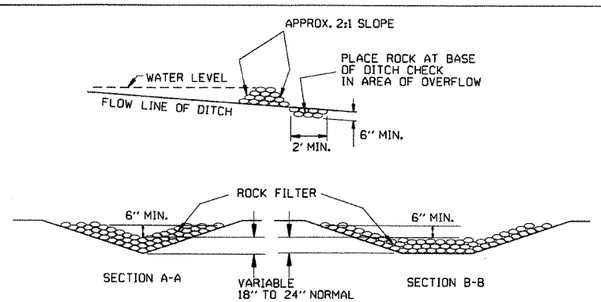

ROCK DITCH CHECK (E-6)

DATE	REVISION	FILMED
12-15-11	DELETED BALED STRAW DITCH CHECK & ADDED WATTLE DITCH CHECK	
11-18-98	ADDED NOTES	
7-02-98	ADDED BALED STRAW FILTER BARRIER (E-2)	
7-20-95	REVISED SILT FENCE E-4 AND E-11	7-20-95
7-15-94	REV. E-4 & E-11 MIN. 13" BURIED END OF FABRIC	
6-2-94	REVISED E-1,4,7 & 11; DELETED E-2 & 3	6-2-94
4-1-93	REDRAWN	
10-1-92	REDRAWN	
8-2-76	ISSUED R.D.M.	298-7-28-76

ARKANSAS STATE HIGHWAY COMMISSION

TEMPORARY EROSION CONTROL DEVICES

STANDARD DRAWING TEC-1

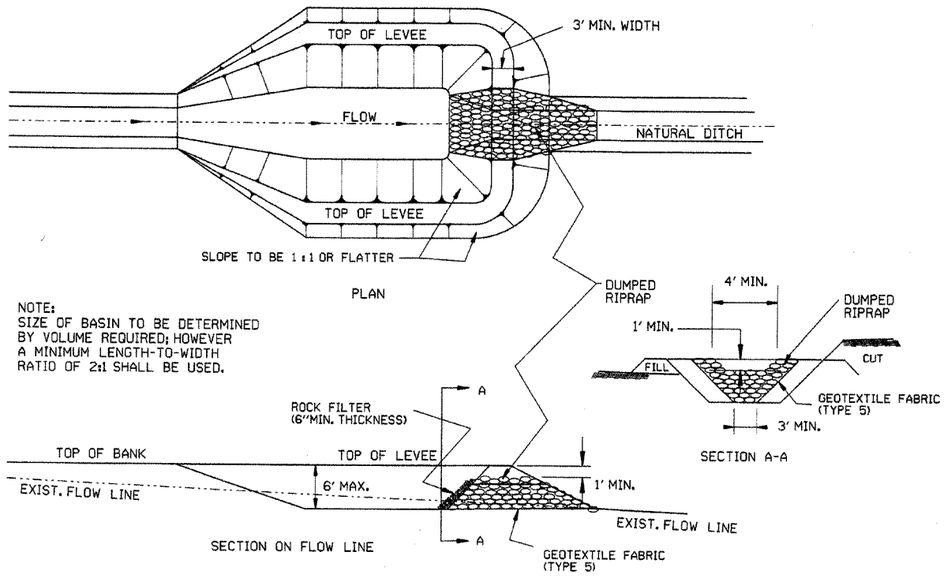

SEDIMENT BASIN WITH RIPRAP OUTLET (E-9)

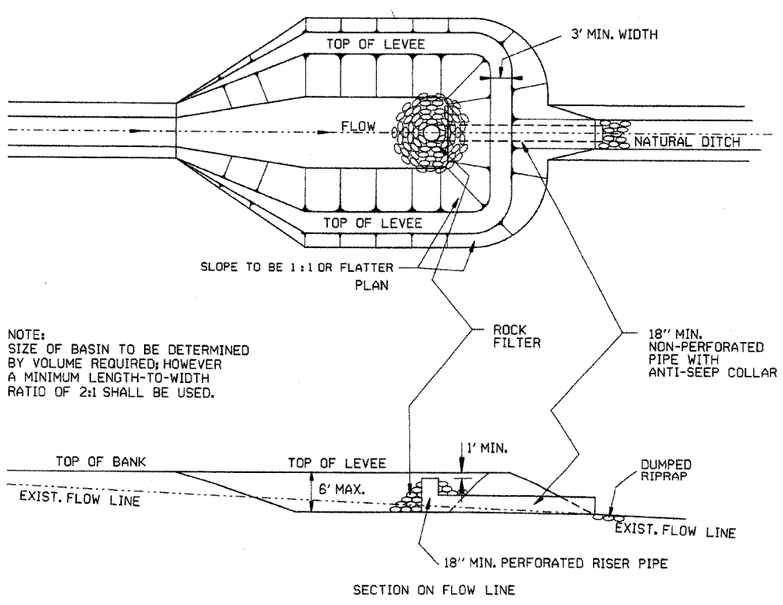

SEDIMENT BASIN WITH PIPE OUTLET (E-10)

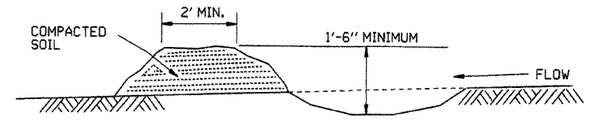

DIVERSION DITCH (E-8)

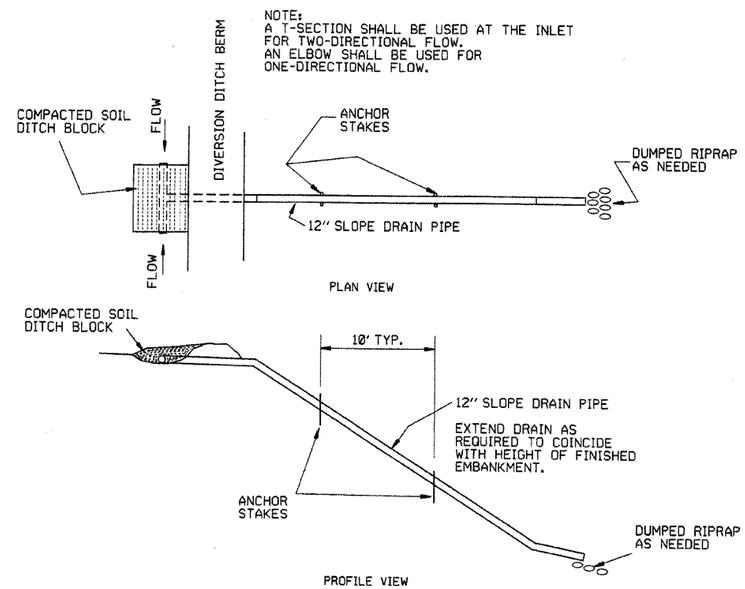

SLOPE DRAIN (E-12)

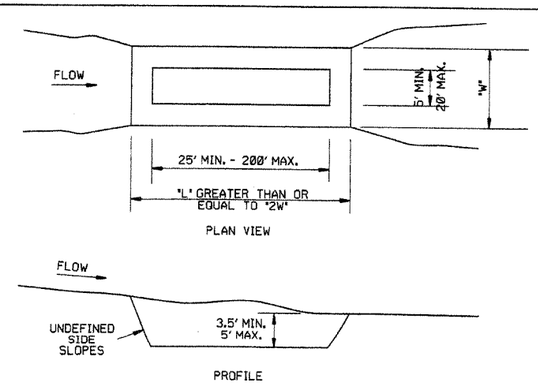

SEDIMENT BASIN (E-14)

DATE	REVISION	FILMED
6-2-94	Revised E-8 & E-12; Added E-14 & Deleted E-13	
4-1-93	ISSUED	

ARKANSAS STATE HIGHWAY COMMISSION

TEMPORARY EROSION CONTROL DEVICES

STANDARD DRAWING TEC-2

CLEARING AND GRUBBING

CONSTRUCTION SEQUENCE

1. PLACE PERIMETER CONTROLS (I.E. SILT FENCES , DIVERSION DITCHES, SEDIMENT BASINS, ETC.)
2. PERFORM CLEARING AND GRUBBING OPERATION.

EXCAVATION

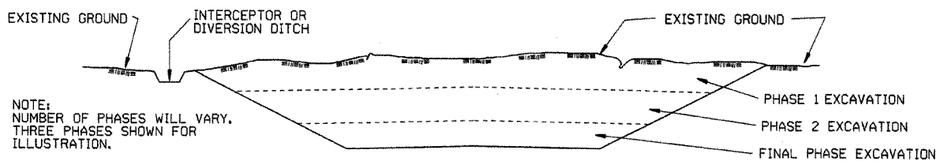

NOTE:
NUMBER OF PHASES WILL VARY. THREE PHASES SHOWN FOR ILLUSTRATION.

GENERAL NOTE

ALL CUT SLOPES SHALL BE DRESSED, PREPARED, SEEDED, AND MULCHED AS THE WORK PROGRESSES. SLOPES SHALL BE EXCAVATED AND STABILIZED IN EQUAL INCREMENTS NOT TO EXCEED 25 FEET, MEASURED VERTICALLY.

CONSTRUCTION SEQUENCE

1. EXCAVATE AND STABILIZE INTERCEPTOR AND/OR DIVERSION DITCHES.
2. PERFORM PHASE 1 EXCAVATION. PLACE PERMANENT OR TEMPORARY SEEDING.
3. PERFORM PHASE 2 EXCAVATION. PLACE PERMANENT OR TEMPORARY SEEDING.
4. PERFORM FINAL PHASE OF EXCAVATION. PLACE PERMANENT OR TEMPORARY SEEDING. STABILIZE DITCHES. CONSTRUCT DITCH CHECKS, DIVERSION DITCHES, SEDIMENT BASINS, OR OTHER EROSION CONTROL DEVICES AS REQUIRED.

EMBANKMENT

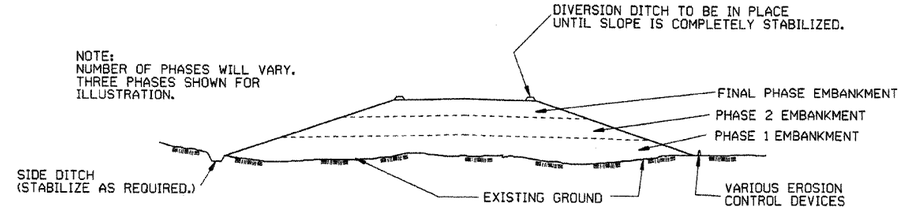

NOTE:
NUMBER OF PHASES WILL VARY. THREE PHASES SHOWN FOR ILLUSTRATION.

GENERAL NOTE

ALL EMBANKMENT SLOPES SHALL BE DRESSED, PREPARED, SEEDED, AND MULCHED AS THE WORK PROGRESSES. SLOPES SHALL BE CONSTRUCTED AND STABILIZED IN EQUAL INCREMENTS NOT TO EXCEED 25 FEET, MEASURED VERTICALLY.

CONSTRUCTION SEQUENCE

1. CONSTRUCT DIVERSION DITCHES, DITCH CHECKS, SEDIMENT BASINS, SILT FENCES, OR OTHER EROSION CONTROL DEVICES AS SPECIFIED.
2. PLACE PHASE 1 EMBANKMENT WITH PERMANENT OR TEMPORARY SEEDING. PROVIDE DIVERSION DITCHES AND SLOPE DRAINS IF EMBANKMENT CONSTRUCTION IS TO BE TEMPORARILY ABANDONED FOR A PERIOD OF GREATER THAN 21 DAYS.
3. PLACE PHASE 2 EMBANKMENT WITH PERMANENT OR TEMPORARY SEEDING. PROVIDE DIVERSION DITCHES AND SLOPE DRAINS IF EMBANKMENT CONSTRUCTION IS TO BE TEMPORARILY ABANDONED FOR A PERIOD OF GREATER THAN 21 DAYS.
4. PLACE FINAL PHASE OF EMBANKMENT WITH PERMANENT OR TEMPORARY SEEDING. PLACE DIVERSION DITCHES AND SLOPE DRAINS AND MAINTAIN UNTIL ENTIRE SLOPE IS STABILIZED.

DATE	REVISION	FILMED
11-03-94	CORRECTED SPELLING	
6-2-94	Drawn & Issued	6-2-94

ARKANSAS STATE HIGHWAY COMMISSION

TEMPORARY EROSION CONTROL DEVICES

STANDARD DRAWING TEC-3

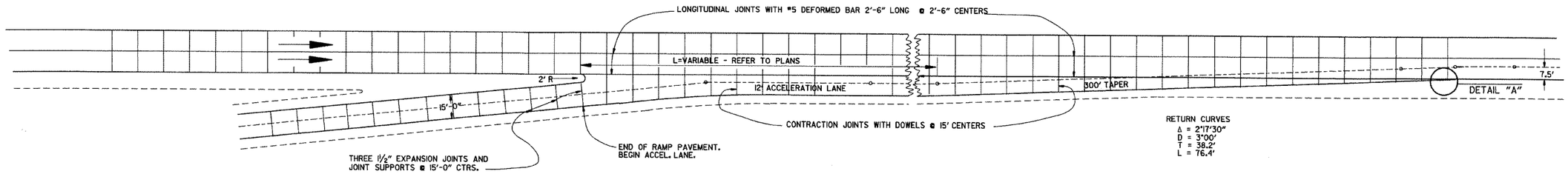

ENTRANCE RAMP

NOTE: JOINT SPACING ON THE MAIN LANES SHALL BE ADJUSTED AS NECESSARY TO CONFORM TO THESE JOINT LAYOUTS. THE MAIN LANE JOINT SPACING MAY BE REDUCED TO A 12' MINIMUM.

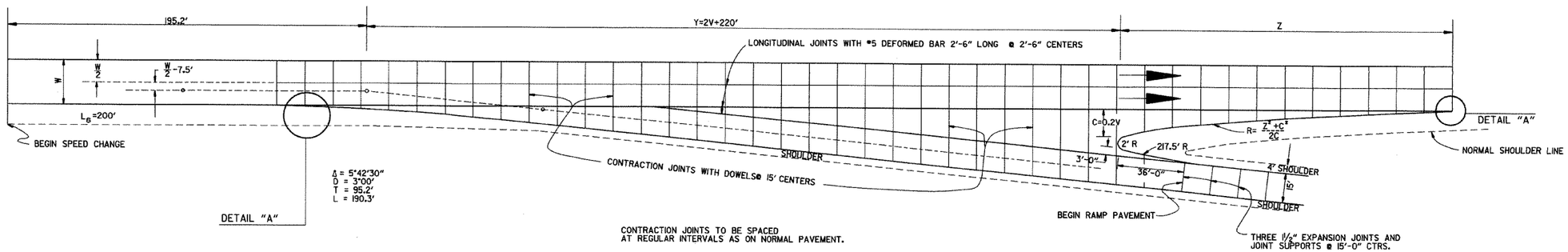

EXIT RAMP

EXIT RAMP

DESIGN SPEED V	Y	NOSE OFFSET C	LENGTH NOSE TAPER Z	RETURN RADIUS R	ADDITIONAL SURFACING SQ. YDS.
40	300.0	8.0	96.0	580.0	602.43
50	320.0	10.0	120.0	725.0	687.29
60	340.0	12.0	168.0	1182.0	790.55
70	360.0	14.0	210.0	1582.0	902.27

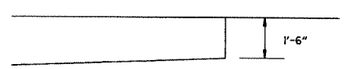

DETAIL "A"

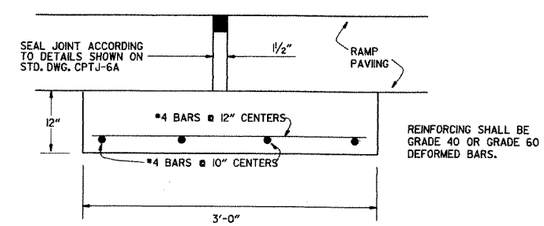

DETAIL OF EXPANSION JOINT & JOINT SUPPORT

NOTE: THE EXPANSION JOINTS SHALL BE MEASURED AND PAID FOR AS P.C.C. PAVEMENT (RAMP THICKNESS). WHEN RAMP PAVING IS ASPHALT, EXPANSION JOINT IS NOT REQUIRED.
THE JOINT SUPPORT MAY BE CONSTRUCTED WITH CLASS "A", "S", OR PAVING CONCRETE. PAYMENT FOR THE JOINT SUPPORT SHALL BE FOR THE CONTRACT UNIT PRICE BID FOR THE CLASS OF CONCRETE USED. ALL OTHER WORK AND MATERIALS REQUIRED FOR THE CONSTRUCTION OF THE JOINT SUPPORT SHALL BE INCLUDED IN THE PRICE BID FOR THE ABOVE ITEMS.

DATE	REVISION	DATE FILM'D
8-22-02	DELETED NOTE	
11-16-01	CORRECTED SPELLING ON ENTRANCE RAMP NOTE	
5-13-99	ADDED, EDITED AND DELETED NOTES	
11-03-94	ADDED NOTE RE: REINF. BARS	
10-1-92	ADDED DETAIL A & OTHER MINOR CHANGES	10-1-92
1-25-90	REVISED EXPANSION JOINT	1-25-90
7-15-88	CONFORM'D TO 1988 SPECIFICATIONS	65C-7-15-88
3-2-81	ISSUED	511-10-2-72

ARKANSAS STATE HIGHWAY COMMISSION

DETAILS OF STANDARD TURNOUT FOR ENTRANCE & EXIT RAMPS (NON-REINFORCED)

STANDARD DRAWING TR-1A

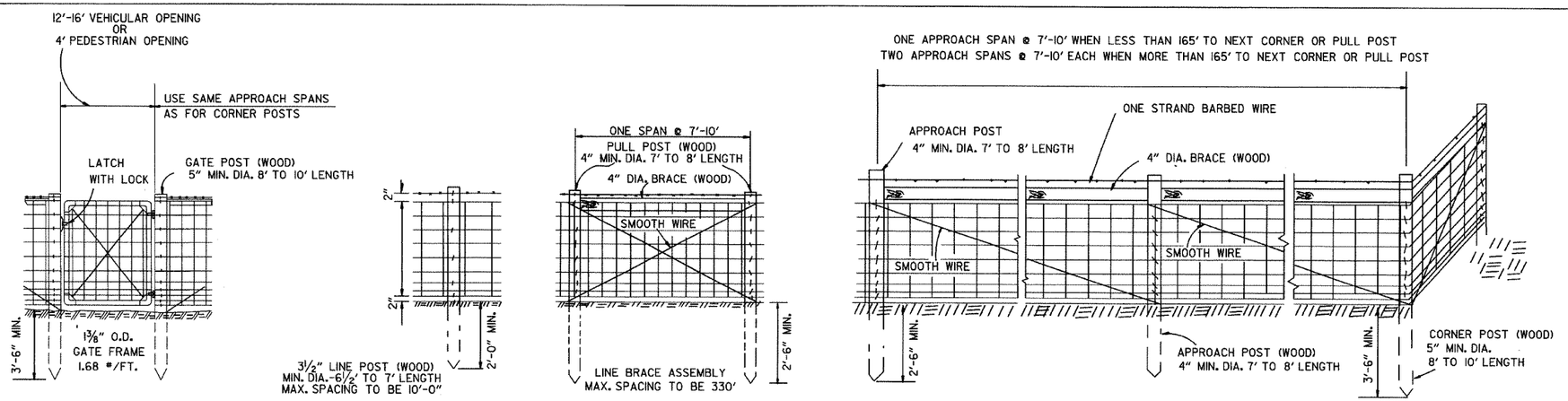

NOTE: STAPLE AT LEAST TOP, BOTTOM AND ALTERNATE WIRES OF WOVEN FABRIC FOR WOOD LINE POSTS.

TYPE A FENCE (WOOD POSTS)

GENERAL NOTES:

STEEL LINE POSTS SHALL BE GALVANIZED, 7 FT. IN LENGTH.

TUBULAR END, CORNER, PULL, OR DIAGONAL BRACES MUST CONFORM TO THE DIMENSIONS AND WEIGHTS SPECIFIED ON STANDARD DRAWING WF-3 (CHAIN LINK).

THE CONTRACTOR SHALL FURNISH AT LEAST 25% OF WOOD LINE POSTS OF 7' LENGTHS IN ORDER TO PROVIDE SUFFICIENT SET IN SOFT GROUND OR SMALL DEPRESSIONS.

GATE HINGES AND LATCHES WITH LOCKS TO BE OF A TYPE APPROVED BY THE ENGINEER. DRIVEWAY GATES, EITHER SINGLE 12' OR 16' OR DOUBLE 6' TO 8' OPENINGS OF THE SAME TYPE AS THE PEDESTRIAN GATE, SHALL BE INSTALLED ON THE RIGHT SIDE OF EACH THROUGH LANE ROAD AT LARGE CULVERTS OR BRIDGE CROSS FENCE FOR USE BY MAINTENANCE EQUIPMENT. LOCATION OF GATES TO BE SHOWN ON THE PLANS OR AS DESIGNATED BY THE ENGINEER.

AT STREAM CROSSINGS THE FENCE SHALL NOT BE CONSTRUCTED ACROSS LARGE STREAMS. WHERE CLEARANCE IS SUFFICIENT FROM THE TOP OF BANK TO THE BRIDGE STRUCTURE, A CROSS CONNECTION SHALL BE CONSTRUCTED BETWEEN THE FENCE ON EACH SIDE OF THE ROAD. WHERE THE CLEARANCE IS NOT SUFFIEICNT, THE FENCE SHALL BE TERMINATED WITH CROSS CONNECTIONS AND END POSTS ADJACENT TO THE BRIDGE ABUTMENTS OR CULVERT WINGWALLS.

SPLICE FOR WOVEN WIRE BETWEEN PULL POST SHALL BE BY THE "WESTERN UNION METHOD" AS DESCRIBED AS FOLLOWS: THE VERTICAL WIRES FOR EACH END OF THE FENCE FABRIC SHALL BE PLACED SIDE BY SIDE AND THE PROJECTING HORIZONTAL WIRES SHALL BE WRAPPED A MINIMUM OF 4 TIMES AROUND THE HORIZONTAL WIRES OF THE FIRST WEB.

SPLICE FOR BARBED WIRE BETWEEN PULL POST ASSEMBLY SHALL BE BY THE "EYE METHOD": AS DESCRIBED AS FOLLOWS: THE ENDS OF THE BARBED WIRE SHALL BE BENT TO FORM A LOOP. THE LOOPS SHALL BE CONNECTED. AFTER THE LOOPS ARE CONNECTED THE ENDS OF THE WIRE SHALL BE WRAPPED AROUND THE PROJECTING WIRE A MINIMUM OF 4 TIMES FOR EACH WIRE LOOP.

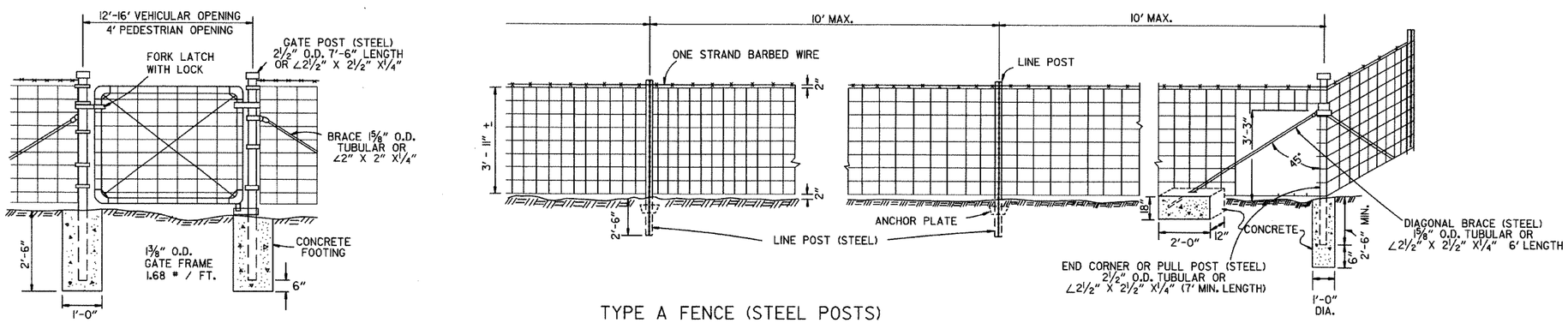

TYPE A FENCE (STEEL POSTS)

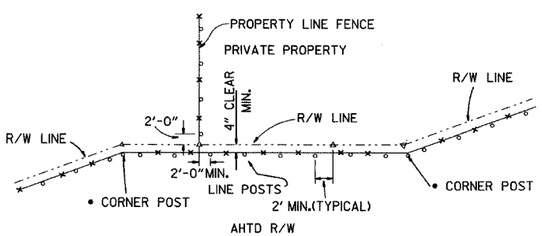

•NOTE: RIGHT-OF-WAY MONUMENTS SHALL NOT BE DISTURBED BY FENCE CONSTRUCTION. CORNER POSTS SHALL BE CONSTRUCTED 2' FROM THE RIGHT-OF-WAY MONUMENT OR AS DIRECTED BY THE ENGINEER.

△ - R/W MONUMENTS

∘ - FENCE POSTS

RIGHT-OF-WAY FENCE LOCATION

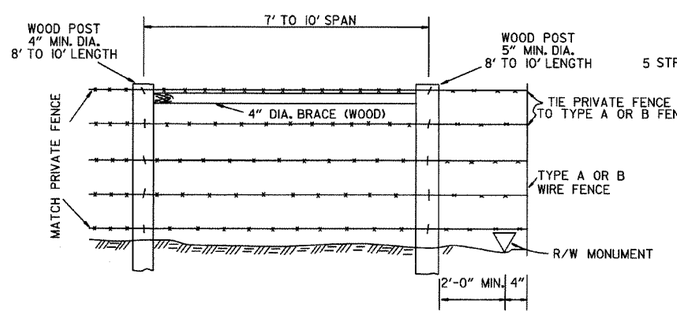

WHERE EXISTING PRIVATE FENCE CONSISTS OF STEEL POSTS, USE END POST ASSEMBLY AS SHOWN WITH TYPE A FENCE OR OTHER END POST ASSEMBLY AS APPROVED BY THE ENGINEER.

PRIVATE FENCE
TERMINAL INSTALLATION

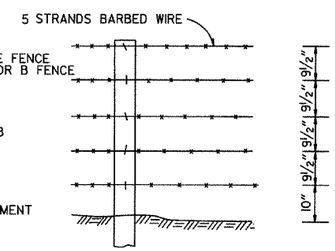

SPACING AND SIZE OF POSTS FOR TYPE B FENCE SHALL BE THE SAME AS TYPE A FENCE.

TYPE B FENCE

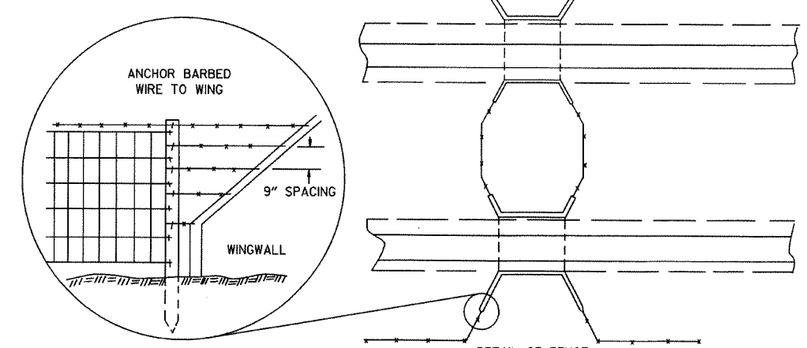

DETAIL OF FENCE CONSTRUCTION AT LARGE CULVERTS (5' IN HEIGHT AND OVER)

DATE	REVISION	DATE FILMED
8-22-02	REVISED GENERAL NOTES	
10-18-96	REVISED ASTM REF. TO AASHTO	
11-22-95	REVISED R-O-W LOCATION DETAIL	
6-2-94	ADDED CORNER POST NOTE	6-2-94
8-5-93	REVISED R-O-W LOCATION DETAIL	8-5-93
10-1-92	ADDED STAPLE NOTE	
8-2-90	REV'D PULL POST LENGTH	
11-30-89	DELETED CLASS CONC.	
7-15-88	ADDED SPLICE NOTES	
7-15-88	ADDED HEIGHT DIMENSION	
4-3-87	REVISED VARIOUS NOTES	
	AND GENERAL NOTES	
11-1-84	MAX. POST SPACING	
1-4-83	MIN. DIA. LINE POST	
10-2-72	REVISED & REDRAWN	

ARKANSAS STATE HIGHWAY COMMISSION

WIRE FENCE
TYPE A AND B

STANDARD DRAWING WF-1

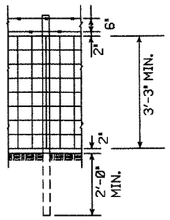

LINE POST
3" MIN. DIA. 6'-3" LENGTH
MAX. SPACING TO BE 10'-0"

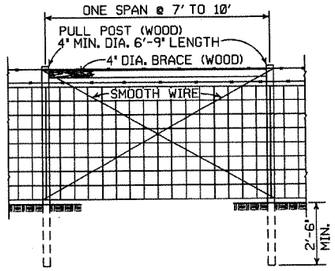

LINE BRACE ASSEMBLY
MAX. SPACING TO BE 330'

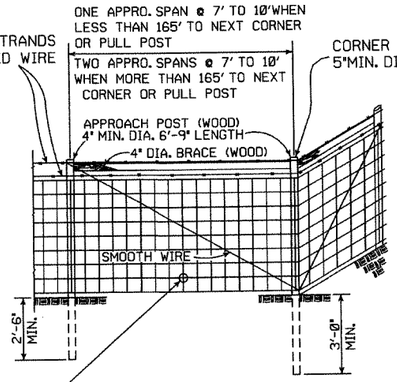

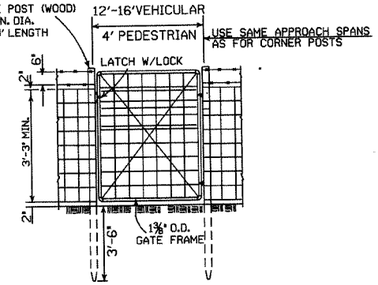

TYPE C FENCE (WOOD POSTS)

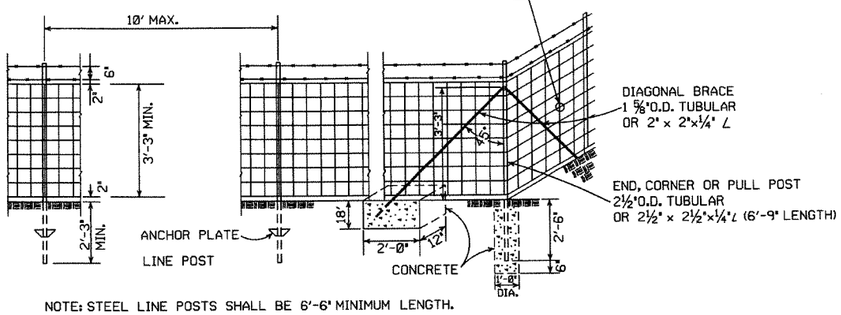

NOTE: STEEL LINE POSTS SHALL BE 6'-6" MINIMUM LENGTH.

TYPE C FENCE (STEEL POSTS)

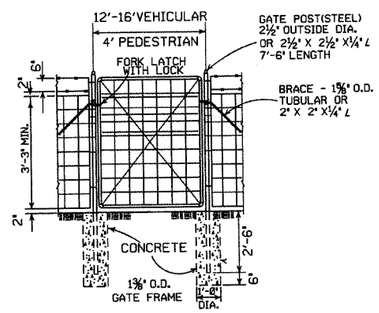

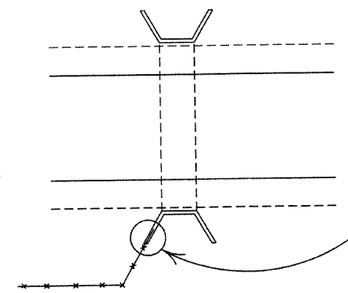

NOTE: USE 3/8" X 1 1/2" LAG BOLT & SHIELD OR AS APPROVED BY THE ENGINEER.

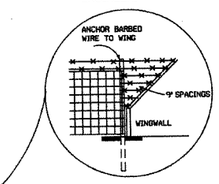

DETAIL OF FENCE CONSTRUCTION
AT LARGE CULVERTS
(5' IN HEIGHT AND OVER)

GENERAL NOTES:

STEEL LINE POSTS SHALL BE PAINTED OR GALVANIZED.
TUBULAR END, CORNER, PULL, OR DIAGONAL BRACES MUST CONFORM TO THE DIMENSIONS AND WEIGHTS SPECIFIED ON STANDARD DRAWING WF-3 (CHAIN LINK). APPROVED ALTERNATES ARE ACCEPTABLE.
AN ACCEPTABLE TOLERANCE IN LENGTH OF TUBULAR OR WOODEN POSTS SHALL BE - 1" TO +2".
TUBULAR POSTS MUST BE PAINTED OR GALVANIZED.

THE CONTRACTOR SHALL FURNISH AT LEAST 25% OF TIMBER LINE POSTS OF 7 FOOT LENGTHS IN ORDER TO PROVIDE SUFFICIENT SET IN SOFT GROUND OR SMALL DEPRESSIONS.

DRIVEWAY GATES, EITHER SINGLE 12' TO 16' OR DOUBLE 6' TO 8' OPENING OF THE SAME TYPE AS THE PEDESTRIAN GATE, SHALL BE INSTALLED ON THE RIGHT SIDE OF EACH THROUGH LANE ROAD AT LARGE CULVERTS OR BRIDGE CROSS FENCE, FOR USE OF MAINTENANCE EQUIPMENT. LOCATION OF GATES TO BE SHOWN ON PLANS OR AS DESIGNATED BY THE ENGINEER.

AT STREAM CROSSINGS, THE FENCE SHALL NOT BE CONSTRUCTED ACROSS LARGE STREAMS. WHERE CLEARANCE IS SUFFICIENT FROM THE TOP OF THE BANK TO THE BRIDGE STRUCTURE A CROSS CONNECTION SHALL BE CONSTRUCTED BETWEEN THE FENCE ON EACH SIDE OF THE ROAD. WHERE THE CLEARANCE IS NOT SUFFICIENT, THE FENCE SHALL BE TERMINATED WITH CROSS CONNECTIONS AND END POSTS ADJACENT TO BRIDGE ABUTMENTS OR CULVERT WINGWALLS.

SPLICE FOR BARBED WIRE BETWEEN PULL POST ASSEMBLY SHALL BE BY THE "EYE METHOD" AS DESCRIBED AS FOLLOWS:
THE ENDS OF THE BARBED WIRE SHALL BE BENT TO FORM A LOOP. THE LOOPS SHALL BE CONNECTED. AFTER THE LOOPS ARE CONNECTED THE ENDS OF THE WIRE SHALL BE WRAPPED AROUND THE PROJECTING WIRES A MINIMUM OF 4 TIMES FOR EACH WIRE LOOP.

SPLICE FOR WOVEN WIRE BETWEEN PULL POST SHALL BE BY THE "WESTERN UNION METHOD" AS DESCRIBED AS FOLLOWS: THE VERTICAL WIRES FOR EACH END OF THE FENCE FABRIC SHALL BE PLACED SIDE BY SIDE AND THE PROJECTING HORIZONTAL WIRES SHALL BE WRAPPED A MINIMUM OF 4 TIMES AROUND THE HORIZONTAL WIRES OF THE FIRST WEB.

STAPLE AT LEAST TOP, BOTTOM AND ALTERNATE WIRES OF WOVEN FABRIC FOR WOOD LINE POSTS.

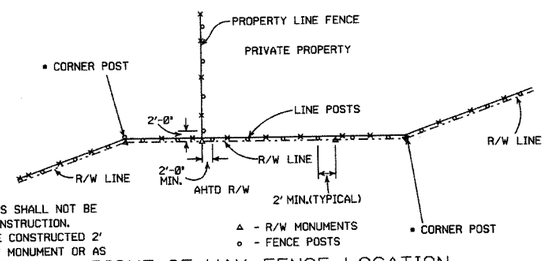

• NOTE: RIGHT-OF-WAY MONUMENTS SHALL NOT BE DISTURBED BY FENCE CONSTRUCTION. CORNER POSTS SHALL BE CONSTRUCTED 2' FROM THE RIGHT-OF-WAY MONUMENT OR AS DIRECTED BY THE ENGINEER.

RIGHT-OF-WAY FENCE LOCATION

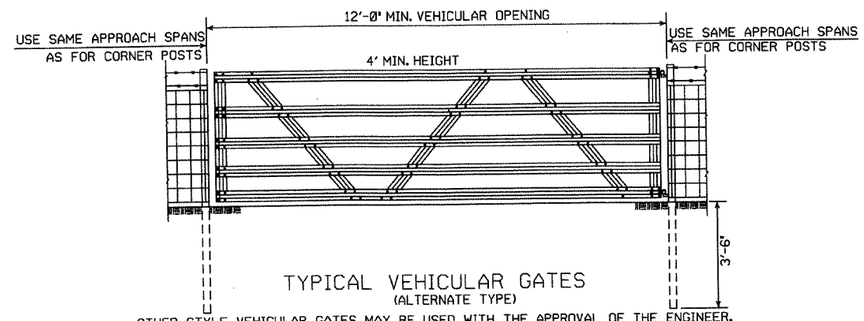

TYPICAL VEHICULAR GATES
(ALTERNATE TYPE)

OTHER STYLE VEHICULAR GATES MAY BE USED WITH THE APPROVAL OF THE ENGINEER.
THE METHOD OF SECURING GATE (LATCH AND/OR LOCK) SHALL MEET THE APPROVAL OF THE ENGINEER.

4 STRANDS BARBED WIRE (D)
5 STRANDS BARBED WIRE (D-1)
6 STRANDS BARBED WIRE (D-2)

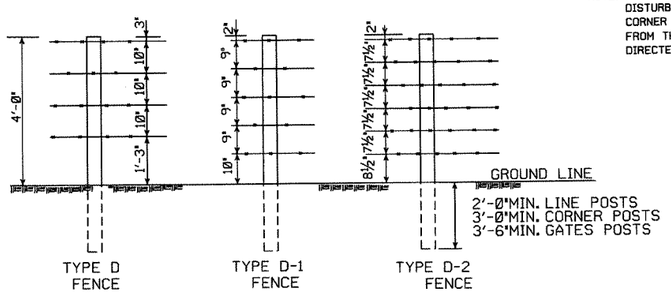

NOTE: SPACING AND SIZE (EXCEPT LENGTH) OF POSTS, APPROACH SPANS, PULL POST ASSEMBLIES, AND CORNER BRACING FOR TYPE D FENCE SHALL CONFORM TO TYPE C FENCE. USE GALVANIZED STAPLES ON WOOD POSTS AND APPROVED FASTENERS ON STEEL POSTS.

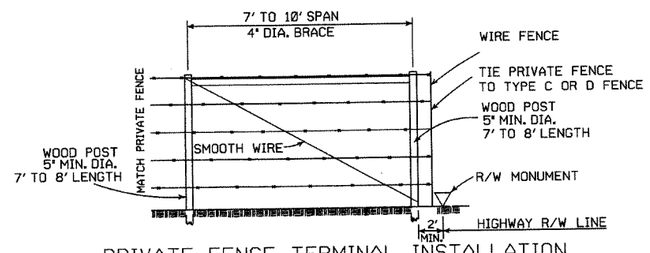

PRIVATE FENCE TERMINAL INSTALLATION

WHERE EXISTING FENCE CONSISTS OF STEEL POSTS, USE END POST ASSEMBLY AS SHOWN IN TYPE C FENCE OR OTHER END POST ASSEMBLY AS APPROVED BY THE ENGINEER.

DATE	REVISION	FILMED
8-22-02	REVISED GENERAL NOTES	
10-18-96	REVISED AASHTO	
11-22-95	REVISED R-O-W LOCATION DETAIL	
6-2-94	REVISED BARB WIRE AND ADDED CORNER POST NOTES	6-2-94
8-5-93	REVISED R/W INSTALLATION FENCE	8-5-93
10-1-92	ADDED STAPLE NOTE	10-1-92
8-15-91	ADDED TYPE D-2 FENCE	8-15-91
11-30-89	DELETED CLASS CONCRETE	11-30-89
7-15-88	ADDED SPLICE NOTE	700-7-15-88
10-30-87	GENERAL REVISIONS	549-10-30-87
11-1-84	MAX. POST SPACING MIN. WIRE GAUGE	507-11-1-84
1-4-83	MIN. DIA. LINE POST	648-1-4-83
3-2-81	TOLERANCE FOR POST LENGTH	722-3-2-81
12-1-72	ADDED D-1 & FENCE INSTALLATION	564-12-1-72
10-2-72	REVISED AND REDRAWN	540-10-2-72

ARKANSAS STATE HIGHWAY COMMISSION

WIRE FENCE
TYPE C AND D

STANDARD DRAWING WF-4