DATE REVISED	DATE FILMED	DATE REVISED	DATE FILMED	FED.RD. DIST.NO.	STATE	FED.AID PROJ.NO.	SHEET NO.	TOTAL SHEETS
				6	ARK.			
				JOB NO.		005836	1	230
				(2) WHITE RIVER STR. & APPRS. (NEWPORT) (S)				

ARKANSAS STATE HIGHWAY AND TRANSPORTATION DEPARTMENT
CONSTRUCTION PLANS FOR STATE HIGHWAY

WHITE RIVER STR. & APPRS. (NEWPORT) (S)

JACKSON COUNTY

ROUTE 367 SECTION 21

JOB 005836

FED. AID PROJ. STPC-STP-9309(2)

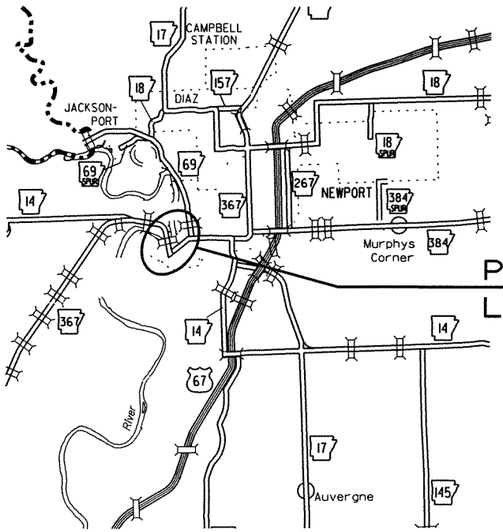

VICINITY MAP

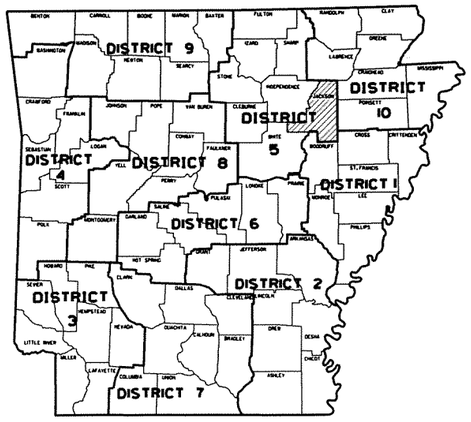

ARK. HWY. DIST. NO. 5

0 1 2

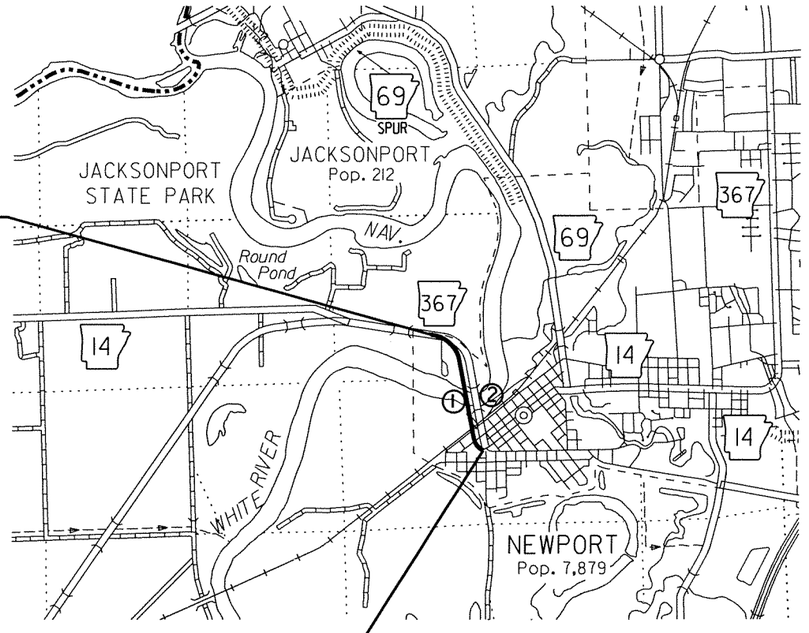

STA. 156+50.00
END JOB 005836
LOG MILE 6.71

STA. 108+57.06
BEGIN JOB 005836
LOG MILE 7.62

BRIDGE DATA

(1) BR. END STA. 112+05.91
BRIDGE NO. 07289
40'-0" CLEAR ROADWAY
2620'-2¼" TOTAL LENGTH
BR. END STA. 138+26.09
CONSTRUCT

(2) BR. END STA. 111+54.33
BRIDGE NO. 00612
24'-0" CLEAR ROADWAY
2831-8" TOTAL LENGTH
CONCRETE SPANS W/ STEEL TRUSS UNIT
BR. END STA. 138+00.83
RETAIN

• DESIGN TRAFFIC DATA •

DESIGN YEAR	2033
2013 ADT	2500
2033 ADT	2800
2033 DHV	308
DIRECTIONAL DISTRIBUTION	60%
TRUCKS	15%
DESIGN SPEED	60 MPH RURAL 40 MPH URBAN

	BEGIN PROJECT	MID-POINT OF PROJECT	END PROJECT
LATITUDE	N 35°36'44"	N 35°36'24"	N 35°36'44"
LONGITUDE	W 91°17'17"	W 91°17'19"	W 91°17'37"

GROSS LENGTH OF	PROJECT	4792.94	FEET	OR	0.908	MILES
NET	" "	ROADWAY	2172.76	"	"	0.412	"
NET	" "	BRIDGES	2620.18	"	"	0.496	"
NET	" "	PROJECT	4792.94	"	"	0.908	"

N

APPROVED

STATE OF ARKANSAS
REGISTERED PROFESSIONAL ENGINEER
No. 3917
FRANK VOZEL

9/26/13

DEPUTY DIRECTOR AND CHIEF ENGINEER

P.E. 005836
LICE-9309-002

9/25/2013

R005836.DGN

R005836.DGN 9/16/2013

INDEX OF SHEETS - SHEET 1 OF 2

SHEET NO.	TITLE	BRIDGE NO.	DRWG.NO.	DATE
1	TITLE SHEET			
2	INDEX OF SHEETS (SHEET 1 OF 2)			
3	INDEX OF SHEETS (SHEET 2 OF 2), GOVERNING SPECIFICATIONS, AND GENERAL NOTES			
4 - 11	TYPICAL SECTIONS OF IMPROVEMENT			
12 - 16	SPECIAL DETAILS			
17 - 25	TEMPORARY EROSION CONTROL DETAILS			
26 - 33	MAINTENANCE OF TRAFFIC			
- 34	PERMANENT PAVEMENT MARKING DETAILS			
35 - 39	QUANTITIES			
40	SCHEDULE OF BRIDGE QUANTITIES	07289	54072	
41	SUMMARY OF QUANTITIES AND REVISIONS			
42 - 47	SURVEY CONTROL DETAILS			
48 - 52	PLAN AND PROFILE SHEETS			
53	LAYOUT OF BRIDGE OVER WHITE RIVER (SHEET 1 OF 6)	07289	54073	
54	LAYOUT OF BRIDGE OVER WHITE RIVER (SHEET 2 OF 6)	07289	54074	
55	LAYOUT OF BRIDGE OVER WHITE RIVER (SHEET 3 OF 6)	07289	54075	
56	LAYOUT OF BRIDGE OVER WHITE RIVER (SHEET 4 OF 6)	07289	54076	
57	LAYOUT OF BRIDGE OVER WHITE RIVER (SHEET 5 OF 6)	07289	54077	
58	LAYOUT OF BRIDGE OVER WHITE RIVER (SHEET 6 OF 6)	07289	54078	
59	EXHIBT A (SHEET 1 OF 2)	07289	54078A	
60	EXHIBT A (SHEET 2 OF 2)	07289	54078B	
61	HYDROGRAPH - WHITE RIVER	07289	54079	
62	DETAILS OF RETAINING WALLS (SHEET 1 OF 2)	07289	54080	
63	DETAILS OF RETAINING WALLS (SHEET 2 OF 2)	07289	54081	
64	BENT 1 DETAILS (SHEET 1 OF 2)	07289	54082	
65	BENT 1 DETAILS (SHEET 2 OF 2)	07289	54083	
66	DETAILS OF BENTS 2 & 4 (SHEET 1 OF 2)	07289	54084	
67	DETAILS OF BENTS 2 & 4 (SHEET 2 OF 2)	07289	54085	
68	DETAILS OF BENT 3 (SHEET 1 OF 2)	07289	54086	
69	DETAILS OF BENT 3 (SHEET 2 OF 2)	07289	54087	
70	DETAILS OF BENT 5 (SHEET 1 OF 2)	07289	54088	
71	DETAILS OF BENT 5 (SHEET 2 OF 2)	07289	54089	
72	DETAILS OF BENT 6 (SHEET 1 OF 2)	07289	54090	
73	DETAILS OF BENT 6 (SHEET 2 OF 2)	07289	54091	
74	DETAILS OF BENT 7 (SHEET 1 OF 2)	07289	54092	
75	DETAILS OF BENT 7 (SHEET 2 OF 2)	07289	54093	
76	DETAILS OF PIERS 1 & 2 (SHEET 1 OF 3)	07289	54094	
77	DETAILS OF PIERS 1 & 2 (SHEET 2 OF 3)	07289	54095	
78	DETAILS OF PIERS 1 & 2 (SHEET 3 OF 3)	07289	54096	
79	DETAILS OF BENT 8 (SHEET 1 OF 2)	07289	54097	
80	DETAILS OF BENT 8 (SHEET 2 OF 2)	07289	54098	
81	DETAILS OF BENT 9 (SHEET 1 OF 2)	07289	54099	
82	DETAILS OF BENT 9 (SHEET 2 OF 2)	07289	54100	
83	DETAILS OF BENTS 10, 11, 13, 14, 16, & 17 (SHEET 1 OF 2)	07289	54101	
84	DETAILS OF BENTS 10, 11, 13, 14, 16, & 17 (SHEET 2 OF 2)	07289	54102	
85	DETAILS OF BENTS 12 & 15 (SHEET 1 OF 2)	07289	54103	
86	DETAILS OF BENTS 12 & 15 (SHEET 2 OF 2)	07289	54104	
87	DETAILS OF BENT 18 (SHEET 1 OF 2)	07289	54105	
88	DETAILS OF BENT 18 (SHEET 2 OF 2)	07289	54106	
89	DETAILS OF 246'-0" CONTINUOUS COMPOSITE PLATE GIRDER UNIT (UNIT 1) (SHEET 1 OF 7)	07289	54107	
90	DETAILS OF 246'-0" CONTINUOUS COMPOSITE PLATE GIRDER UNIT (UNIT 1) (SHEET 2 OF 7)	07289	54108	
91	DETAILS OF 246'-0" CONTINUOUS COMPOSITE PLATE GIRDER UNIT (UNIT 1) (SHEET 3 OF 7)	07289	54109	
92	DETAILS OF 246'-0" CONTINUOUS COMPOSITE PLATE GIRDER UNIT (UNIT 1) (SHEET 4 OF 7)	07289	54110	
93	DETAILS OF 246'-0" CONTINUOUS COMPOSITE PLATE GIRDER UNIT (UNIT 1) (SHEET 5 OF 7)	07289	54111	
94	DETAILS OF 246'-0" CONTINUOUS COMPOSITE PLATE GIRDER UNIT (UNIT 1) (SHEET 6 OF 7)	07289	54112	
95	DETAILS OF 246'-0" CONTINUOUS COMPOSITE PLATE GIRDER UNIT (UNIT 1) (SHEET 7 OF 7)	07289	54113	
96	DETAILS OF 522'-0" CONTINUOUS COMPOSITE PLATE GIRDER UNIT (UNIT 2) (SHEET 1 OF 11)	07289	54114	
97	DETAILS OF 522'-0" CONTINUOUS COMPOSITE PLATE GIRDER UNIT (UNIT 2) (SHEET 2 OF 11)	07289	54115	
98	DETAILS OF 522'-0" CONTINUOUS COMPOSITE PLATE GIRDER UNIT (UNIT 2) (SHEET 3 OF 11)	07289	54116	
99	DETAILS OF 522'-0" CONTINUOUS COMPOSITE PLATE GIRDER UNIT (UNIT 2) (SHEET 4 OF 11)	07289	54117	
100	DETAILS OF 522'-0" CONTINUOUS COMPOSITE PLATE GIRDER UNIT (UNIT 2) (SHEET 5 OF 11)	07289	54118	
101	DETAILS OF 522'-0" CONTINUOUS COMPOSITE PLATE GIRDER UNIT (UNIT 2) (SHEET 6 OF 11)	07289	54119	
102	DETAILS OF 522'-0" CONTINUOUS COMPOSITE PLATE GIRDER UNIT (UNIT 2) (SHEET 7 OF 11)	07289	54120	
103	DETAILS OF 522'-0" CONTINUOUS COMPOSITE PLATE GIRDER UNIT (UNIT 2) (SHEET 8 OF 11)	07289	54121	
104	DETAILS OF 522'-0" CONTINUOUS COMPOSITE PLATE GIRDER UNIT (UNIT 2) (SHEET 9 OF 11)	07289	54122	
105	DETAILS OF 522'-0" CONTINUOUS COMPOSITE PLATE GIRDER UNIT (UNIT 2) (SHEET 10 OF 11)	07289	54123	
106	DETAILS OF 522'-0" CONTINUOUS COMPOSITE PLATE GIRDER UNIT (UNIT 2) (SHEET 11 OF 11)	07289	54124	
107	DETAILS OF 1220'-0" CONTINUOUS COMPOSITE PLATE GIRDER UNIT (UNIT 3) (SHEET 1 OF 29)	07289	54125	
108	DETAILS OF 1220'-0" CONTINUOUS COMPOSITE PLATE GIRDER UNIT (UNIT 3) (SHEET 2 OF 29)	07289	54126	
109	DETAILS OF 1220'-0" CONTINUOUS COMPOSITE PLATE GIRDER UNIT (UNIT 3) (SHEET 3 OF 29)	07289	54127	
110	DETAILS OF 1220'-0" CONTINUOUS COMPOSITE PLATE GIRDER UNIT (UNIT 3) (SHEET 4 OF 29)	07289	54128	
111	DETAILS OF 1220'-0" CONTINUOUS COMPOSITE PLATE GIRDER UNIT (UNIT 3) (SHEET 5 OF 290	07289	54129	
112	DETAILS OF 1220'-0" CONTINUOUS COMPOSITE PLATE GIRDER UNIT (UNIT 3) (SHEET 6 OF 29)	07289	54130	
113	DETAILS OF 1220'-0" CONTINUOUS COMPOSITE PLATE GIRDER UNIT (UNIT 3) (SHEET 7 OF 29)	07289	54131	
114	DETAILS OF 1220'-0" CONTINUOUS COMPOSITE PLATE GIRDER UNIT (UNIT 3) (SHEET 8 OF 29)	07289	54132	
115	DETAILS OF 1220'-0" CONTINUOUS COMPOSITE PLATE GIRDER UNIT (UNIT 3) (SHEET 9 OF 29)	07289	54133	
116	DETAILS OF 1220'-0" CONTINUOUS COMPOSITE PLATE GIRDER UNIT (UNIT 3) (SHEET 10 OF 29)	07289	54134	
117	DETAILS OF 1220'-0" CONTINUOUS COMPOSITE PLATE GIRDER UNIT (UNIT 3) (SHEET 11 OF 29)	07289	54135	
118	DETAILS OF 1220'-0" CONTINUOUS COMPOSITE PLATE GIRDER UNIT (UNIT 3) (SHEET 12 OF 29)	07289	54136	
119	DETAILS OF 1220'-0" CONTINUOUS COMPOSITE PLATE GIRDER UNIT (UNIT 3) (SHEET 13 OF 29)	07289	54137	
120	DETAILS OF 1220'-0" CONTINUOUS COMPOSITE PLATE GIRDER UNIT (UNIT 3) (SHEET 14 OF 29)	07289	54138	
121	DETAILS OF 1220'-0" CONTINUOUS COMPOSITE PLATE GIRDER UNIT (UNIT 3) (SHEET 15 OF 29)	07289	54139	
122	DETAILS OF 1220'-0" CONTINUOUS COMPOSITE PLATE GIRDER UNIT (UNIT 3) (SHEET 16 OF 29)	07289	54140	
123	DETAILS OF 1220'-0" CONTINUOUS COMPOSITE PLATE GIRDER UNIT (UNIT 3) (SHEET 17 OF 29)	07289	54141	
124	DETAILS OF 1220'-0" CONTINUOUS COMPOSITE PLATE GIRDER UNIT (UNIT 3) (SHEET 18 OF 29)	07289	54142	
125	DETAILS OF 1220'-0" CONTINUOUS COMPOSITE PLATE GIRDER UNIT (UNIT 3) (SHEET 19 OF 29)	07289	54143	
126	DETAILS OF 1220'-0" CONTINUOUS COMPOSITE PLATE GIRDER UNIT (UNIT 3) (SHEET 20 OF 29)	07289	54144	
127	DETAILS OF 1220'-0" CONTINUOUS COMPOSITE PLATE GIRDER UNIT (UNIT 3) (SHEET 21 OF 29)	07289	54145	
128	DETAILS OF 1220'-0" CONTINUOUS COMPOSITE PLATE GIRDER UNIT (UNIT 3) (SHEET 22 OF 29)	07289	54146	
129	DETAILS OF 1220'-0" CONTINUOUS COMPOSITE PLATE GIRDER UNIT (UNIT 3) (SHEET 23 OF 29)	07289	54147	
130	DETAILS OF 1220'-0" CONTINUOUS COMPOSITE PLATE GIRDER UNIT (UNIT 3) (SHEET 24 OF 29)	07289	54148	
131	DETAILS OF 1220'-0" CONTINUOUS COMPOSITE PLATE GIRDER UNIT (UNIT 3) (SHEET 25 OF 29)	07289	54149	
132	DETAILS OF 1220'-0" CONTINUOUS COMPOSITE PLATE GIRDER UNIT (UNIT 3) (SHEET 26 OF 29)	07289	54150	
133	DETAILS OF 1220'-0" CONTINUOUS COMPOSITE PLATE GIRDER UNIT (UNIT 3) (SHEET 27 OF 29)	07289	54151	
134	DETAILS OF 1220'-0" CONTINUOUS COMPOSITE PLATE GIRDER UNIT (UNIT 3) (SHEET 28 OF 29)	07289	54152	
135	DETAILS OF 1220'-0" CONTINUOUS COMPOSITE PLATE GIRDER UNIT (UNIT 3) (SHEET 29 OF 29)	07289	54153	
136	DETAILS OF 210'-0" CONTINUOUS COMPOSITE W-BEAM UNIT (UNIT 4) (SHEET 1 OF 7)	07289	54154	
137	DETAILS OF 210'-0" CONTINUOUS COMPOSITE W-BEAM UNIT (UNIT 4) (SHEET 2 OF 7)	07289	54155	
138	DETAILS OF 210'-0" CONTINUOUS COMPOSITE W-BEAM UNIT (UNIT 4) (SHEET 3 OF 7)	07289	54156	
139	DETAILS OF 210'-0" CONTINUOUS COMPOSITE W-BEAM UNIT (UNIT 4) (SHEET 4 OF 7)	07289	54157	
140	DETAILS OF 210'-0" CONTINUOUS COMPOSITE W-BEAM UNIT (UNIT 4) (SHEET 5 OF 7)	07289	54158	
141	DETAILS OF 210'-0" CONTINUOUS COMPOSITE W-BEAM UNIT (UNIT 4) (SHEET 6 OF 7)	07289	54159	
142	DETAILS OF 210'-0" CONTINUOUS COMPOSITE W-BEAM UNIT (UNIT 4) (SHEET 7 OF 7)	07289	54160	
143	DETAILS OF 210'-0" CONTINUOUS COMPOSITE W-BEAM UNIT (UNIT 5 & 6) (SHEET 1 OF 7)	07289	54161	
144	DETAILS OF 210'-0" CONTINUOUS COMPOSITE W-BEAM UNIT (UNIT 5 & 6) (SHEET 2 OF 7)	07289	54162	
145	DETAILS OF 210'-0" CONTINUOUS COMPOSITE W-BEAM UNIT (UNIT 5 & 6) (SHEET 3 OF 7)	07289	54163	
146	DETAILS OF 210'-0" CONTINUOUS COMPOSITE W-BEAM UNIT (UNIT 5 & 6) (SHEET 4 OF 7)	07289	54164	
147	DETAILS OF 210'-0" CONTINUOUS COMPOSITE W-BEAM UNIT (UNIT 5 & 6) (SHEET 5 OF 7)	07289	54165	
148	DETAILS OF 210'-0" CONTINUOUS COMPOSITE W-BEAM UNIT (UNIT 5 & 6) (SHEET 6 OF 7)	07289	54166	
149	DETAILS OF 210'-0" CONTINUOUS COMPOSITE W-BEAM UNIT (UNIT 5 & 6) (SHEET 7 OF 7)	07289	54167	
150	DETAILS OF STUDS IN CONCRETE DIAPHRAMS	07289	54168	
151	DETAILS OF RETRAINERS	07289	54169	
152	DETAILS OF STRIP SEAL JOINTS	07289	54170	
153	DETAILS OF FINGER JOINTS	07289	54171	
154	SUPERSTRUCTURE GENERAL NOTES	07289	54172	
155	DETAILS OF ELASTOMERIC BEARINGS	07289	54173	
156	DETAILS OF SIESMIC ISOLATION BEARINGS	07289	54174	
157	DETAILS OF TYPE SPECIAL 1 APPROACH GUTTERS	07289	54175	
158	DETAILS OF TYPE SPECIAL 2 APPROACH GUTTERS	07289	54176	
159	DETAILS OF TYPE SPECIAL APPROACH SLAB	07289	54177	
160	DETAILS OF CONCRETE FILLED STEEL SHELL PILES	07289	54178	
161	DETAILS OF CLEARANCE GAUGES	07289	54179	
162	DETAILS OF REFLECTIVE PANELS	07289	54180	
163	DETAILS OF CHAIN LINK FENCE	07289	54181	

INDEX OF SHEETS

STATE OF ARKANSAS
REGISTERED PROFESSIONAL ENGINEER
No. 11425
TIMOTHY D. SMITH
9-17-13

DATE REVISED	DATE FILMED	DATE REVISED	DATE FILMED	FED.REG. DIST.NO.	STATE	FED.AID PROJ.NO.	SHEET NO.	TOTAL SHEETS
				6	ARK.		2	230

JOB NO. 005836

(2) INDEX OF SHEETS

DATE REVISED	DATE FILMED	DATE REVISED	DATE FILMED	FED.RD. DIST.NO.	STATE	FED.AID PROJ.NO.	SHEET NO.	TOTAL SHEETS
				6	ARK.			
				JOB NO.		005836	3	230

(2) INDEX OF SHEETS, GOV. SPEC. AND GEN. NOTES

INDEX OF SHEETS - SHEET 2 OF 2

SHEET NO.	TITLE	DRWG.NO.	DATE
164	EMBANKMENT CONSTRUCTION AND BACKFILL AT BRIDGE ENDS	1888A	4-10-03
165	DETAILS FOR DUMPED RIPRAP AND FILTER BLANKET AND DETAILS FOR COMPUTING EXCAVATION FOR STRUCTURES	1891F	4-10-03
166	DETAILS OF STANDARD TYPE D BRIDGE NAME PLATES	2387	1-10-13
167	DETAILS OF PERMISSIBLE TYPE PERMANENT STEEL BRIDGE DECK FORMS FOR STEEL & CONCRETE GIRDER SPANS	14991	4-10-03
168	DETAILS OF CONCRETE RIPRAP AND MISC. DETAILS OF STEEL PILING	14995A	4-10-03
169	CURBING DETAILS	CG-1	11-29-07
170	TRANSVERSE & LONGITUDINAL JOINTS FOR CONCRETE PAVEMENT (NON-REINFORCED)	CPTJ-6A	5-25-06
171	DETAILS OF DRIVEWAYS & ISLANDS	DR-1	11-29-07
172	DETAILS OF DROP INLETS (TYPE C)	FPC-9E	8-22-02
173	DETAILS OF DROP INLET (TYPE MO)	FPC-9M	8-22-02
174	DETAILS OF DROP INLET & JUNCTION BOX (TYPE ST)	FPC-9S	7-26-12
175	GUARD RAIL DETAILS (TYPE C) STREET/ROAD BARRICADE OR TEMPORARY INSTALLATION	GR-7	7-14-10
176	GUARD RAIL DETAILS	GR-8	7-14-10
177	GUARD RAIL DETAILS	GR-8A	7-14-10
178	GUARD RAIL DETAILS	GR-9	4-17-08
179	GUARD RAIL DETAILS	GR-9A	4-17-08
180	GUARD RAIL DETAILS	GR-10	7-14-10
181	GUARD RAIL DETAILS	GR-10A	7-14-10
182	GUARD RAIL DETAILS	GRT-1	7-14-10
183	CONCRETE PIPE CULVERT FILL HEIGHTS & BEDDING	PCC-1	12-15-11
184	METAL PIPE CULVERT FILL HEIGHTS & BEDDING	PCM-1	12-15-11
185	PLASTIC PIPE CULVERT (HIGH DENSITY POLYETHYLENE)	PCP-1	12-15-11
186	PLASTIC PIPE CULVERT (PVC F949)	PCP-2	12-15-11
187	PAVEMENT MARKING DETAILS	PM-1	9-12-13
188	DETAILS OF PIPE UNDERDRAIN	PU-1	4-10-03
189	TABLES AND METHOD OF SUPERELEVATION FOR TWO-WAY TRAFFIC	SE-2	10-18-96
190	DETAILS OF SPECIAL ITEMS	SI-1	7-26-12
191	STANDARD TRAFFIC CONTROLS FOR HIGHWAY CONSTRUCTION	TC-1	12-15-11
192	STANDARD TRAFFIC CONTROLS FOR HIGHWAY CONSTRUCTION	TC-2	9-12-13
193	STANDARD TRAFFIC CONTROLS FOR HIGHWAY CONSTRUCTION	TC-3	10-15-09
194	TEMPORARY EROSION CONTROL DEVICES	TEC-1	12-15-11
195	TEMPORARY EROSION CONTROL DEVICES	TEC-2	6-02-94
196	TEMPORARY EROSION CONTROL DEVICES	TEC-3	11-03-94
197	TEMPORARY EROSION CONTROL DEVICES	TEC-4	7-26-12
198	CHAIN LINK FENCE	WF-3	11-17-10
199	WIRE FENCE TYPE C AND D	WF-4	8-22-02
200	WHEELCHAIR RAMPS NEW CONSTRUCTION AND ALTERATIONS	WR-1	11-10-05
201 - 230	CROSS SECTIONS		

NOTE: CROSS SECTIONS NOT NORMALLY INCLUDED IN PLANS SOLD TO PROSPECTIVE BIDDERS, BUT MAY BE HAD UPON REQUEST.

GENERAL NOTES

1. GRADE LINE DENOTES FINISHED GRADE WHERE SHOWN ON PLANS.
2. ALL PIPE LINES, POWER, TELEPHONE AND TELEGRAPH LINES TO BE MOVED OR LOWERED BY THE RESPECTIVE OWNERS AS PER AGREEMENT WITH SUCH OWNERS.
3. ANY EQUIPMENT OR APPURTENANCE THAT INTERFERES WITH THE PROPOSED CONSTRUCTION AND WHICH MAY BE THE PROPERTY OF UTILITY SERVICE ORGANIZATIONS SHALL BE MOVED BY THE OWNERS UNLESS OTHERWISE PROVIDED.
4. THE CONTRACTOR SHALL BE RESPONSIBLE FOR MAINTAINING U. S. MAILBOXES WITHIN THE PROJECT LIMITS IN SUCH A MANNER THAT THE PUBLIC MAY RECEIVE CONTINUED MAIL SERVICE. PAYMENT WILL BE CONSIDERED INCLUDED IN THE PRICE BID FOR THE VARIOUS BID ITEMS.
5. ALL LAND MONUMENTS LOCATED WITHIN THE CONSTRUCTION AREA SHALL BE PROTECTED IN ACCORDANCE WITH SECTION 107.12 OF THE STANDARD SPECIFICATIONS.
6. ALL TREES THAT DO NOT DIRECTLY INTERFERE WITH THE PROPOSED CONSTRUCTION SHALL BE SPARED AS DIRECTED BY THE ENGINEER. CARE AND DISCRETION SHALL BE USED TO INSURE THAT ALL TREES NOT TO BE REMOVED SHALL BE HARMED AS LITTLE AS POSSIBLE DURING THE CONSTRUCTION OPERATIONS.
7. ALL FLEXIBLE BASE AND ASPHALTIC PAVEMENTS REMOVED SHALL BE PAID FOR UNDER THE ITEM NO. 210 - UNCLASSIFIED EXCAVATION.
8. THE EXISTING ASPHALT PAVEMENT TO BE REMOVED FROM THE REMAINING PAVEMENT SHALL BE SEPARATED BY SAWING ALONG A NEAT LINE. AFTER SAWING, THE PAVEMENT TO BE REMOVED SHALL BE CAREFULLY REMOVED IN A MANNER THAT WILL NOT DAMAGE THE PAVEMENT THAT IS TO REMAIN. ANY DAMAGE OF THE ASPHALT PAVEMENT THAT IS TO REMAIN IN PLACE SHALL BE REPAIRED AT THE CONTRACTOR'S EXPENSE.

GOVERNING SPECIFICATIONS

ARKANSAS STATE HIGHWAY COMMISSION STANDARD SPECIFICATIONS FOR HIGHWAY CONSTRUCTION, EDITION OF 2003, AND THE FOLLOWING SPECIAL PROVISIONS AND SUPPLEMENTAL SPECIFICATIONS:

NUMBER	TITLE
ERRATA	ERRATA FOR THE BOOK OF STANDARD SPECIFICATIONS
FHWA-1273	REQUIRED CONTRACT PROVISIONS FEDERAL-AID CONSTRUCTION CONTRACTS
FHWA-1273	SUPPLEMENT - EQUAL EMPLOYMENT OPPORTUNITY - NOTICE TO CONTRACTORS
FHWA-1273	SUPPLEMENT - SPECIFIC EQUAL EMPLOYMENT OPPORTUNITY RESPONSIBILITIES (23 U.S.C. 140)
FHWA-1273	SUPPLEMENT - EQUAL EMPLOYMENT OPPORTUNITY - GOALS AND TIMETABLES
FHWA-1273	SUPPLEMENT - EQUAL EMPLOYMENT OPPORTUNITY - FEDERAL STANDARDS
FHWA-1273	SUPPLEMENT - TRAINING PROGRAM - JOB 005836
FHWA-1273	SUPPLEMENT - POSTERS AND NOTICES REQUIRED FOR FEDERAL-AID PROJECTS
FHWA-1273	SUPPLEMENT - WAGE RATE DETERMINATION
100-2	MANUAL FOR ASSESSING SAFETY HARDWARE (MASH)
102-1	BIDDING REQUIREMENTS AND CONDITIONS
103-1	DETERMINATION OF DBE PARTICIPATION
105-1	CONSTRUCTION CONTROL MARKINGS
105-2	EQUIPMENT AND MATERIAL STORAGE ON BRIDGE STRUCTURES
105-3	CONTROL OF WORK
107-1	WORKER VISIBILITY
108-1	LIQUIDATED DAMAGES
110-1	PROTECTION OF WATER QUALITY AND WETLANDS
303-1	AGGREGATE BASE COURSE
404-1	PRODUCTION VERIFICATION OF ASPHALT CONCRETE HOT MIX
404-2	DESIGN AND QUALITY CONTROL OF ASPHALT MIXTURES
409-1	MINERAL AGGREGATES
410-3	DENSITY TESTING FOR ACHM LEVELING COURSES AND BOND BREAKERS
411-1	ASPHALT CONCRETE COLD PLANT MIX
600-1	WATER FOR VEGETATION
603-1	MAINTENANCE OF TRAFFIC
604-1	RETROREFLECTIVE SHEETING FOR TRAFFIC CONTROL DEVICES IN CONSTRUCTION ZONES
604-2	INSPECTION OF TRAFFIC CONTROL DEVICES IN CONSTRUCTION ZONES
606-1	PIPE CULVERTS FOR SIDE DRAINS
606-2	PIPE CULVERTS
718-2	REFLECTORIZED PAINT PAVEMENT MARKINGS
719-2	THERMOPLASTIC PAVEMENT MARKING MATERIAL
804-1	INSTALLATION OF DOWEL BARS AND TIE BARS
JOB 005836	APPROACH SLABS AND GUTTERS
JOB 005836	ARMORED JOINT WITH NEOPRENE STRIP SEAL
JOB 005836	ASPHALT CONCRETE HOT MIX SURFACE COURSE SURFACE TOLERANCE AND INCENTIVE PAYMENTS
JOB 005836	BROADBAND INTERNET SERVICE FOR ASPHALT CONCRETE PLANT
JOB 005836	BROADBAND INTERNET SERVICE FOR FIELD OFFICE
JOB 005836	CLASS B CONCRETE - BRIDGE
JOB 005836	CLEARANCE GAUGES
JOB 005836	CONCRETE FOR STRUCTURES
JOB 005836	CONSTRUCTION IN SPECIAL FLOOD HAZARD AREAS
JOB 005836	DELAY IN RIGHT-OF-WAY OCCUPANCY
JOB 005836	DETAILS FOR BOATER SAFETY ON THE WHITE RIVER
JOB 005836	DIRECT TENSION INDICATORS FOR HIGH STRENGTH BOLT ASSEMBLIES
JOB 005836	DRIVEN STEEL PILING BY METHOD B
JOB 005836	GEOSYNTHETIC INTERNAL REINFORCED EMBANKMENT CONSTRUCTION
JOB 005836	GOALS FOR DISADVANTAGED BUSINESS ENTERPRISE PARTICIPATION
JOB 005836	HIGH PERFORMANCE PAVEMENT MARKING
JOB 005836	INSURANCE, CONSTRUCTION, AND FLAGGING REQUIREMENTS ON RAILROAD PROPERTY (UPRR)
JOB 005836	INTERNET BIDDING
JOB 005836	NESTING SITES OF MIGRATORY BIRDS
JOB 005836	PARTNERING REQUIREMENTS
JOB 005836	PLASTIC PIPE
JOB 005836	REQUIREMENTS OF U.S. COAST GUARD PERMIT
JOB 005836	RETAINING WALLS
JOB 005836	RETROREFLECTIVE PANELS
JOB 005836	SECTION 404 NATIONWIDE 23 PERMIT REQUIREMENTS
JOB 005836	SEISMIC ISOLATION BEARINGS
JOB 005836	SHORING
JOB 005836	SOIL STABILIZATION
JOB 005836	SPECIAL FACILITIES AT SITE
JOB 005836	SPECIAL SAFETY REQUIREMENTS FOR BRIDGE
JOB 005836	SPLICING REINFORCING STEEL
JOB 005836	STEEL SHELL PILES
JOB 005836	STORM WATER POLLUTION PREVENTION PLAN
JOB 005836	SUBMISSION OF ASPHALT CONCRETE HOT MIX ACCEPTANCE TEST RESULTS
JOB 005836	UNPAINTED WEATHERING STRUCTURAL STEEL
JOB 005836	UTILITY ADJUSTMENTS
JOB 005836	VALUE ENGINEERING
JOB 005836	WARM MIX ASPHALT
JOB 005836	WATER POLLUTION CONTROL
JOB 005836	WATTLES
JOB 005836	ZEBRA MUSSEL CONTAINMENT

STATE OF ARKANSAS
REGISTERED PROFESSIONAL ENGINEER
No. 11425
TRINITY D. SMITH
9-25-13

9/25/2013

R005836.DGN

INDEX OF SHEETS, GOVERNING SPECIFICATIONS AND GENERAL NOTES

DATE REVISED	DATE FILMED	DATE REVISED	DATE FILMED	FED.RD. DIST.NO.	STATE	FED.AID PROJ.NO.	SHEET NO.	TOTAL SHEETS
				6	ARK.			
				JOB NO.		005836	4	230

(2) TYPICAL SECTIONS OF IMPROVEMENT

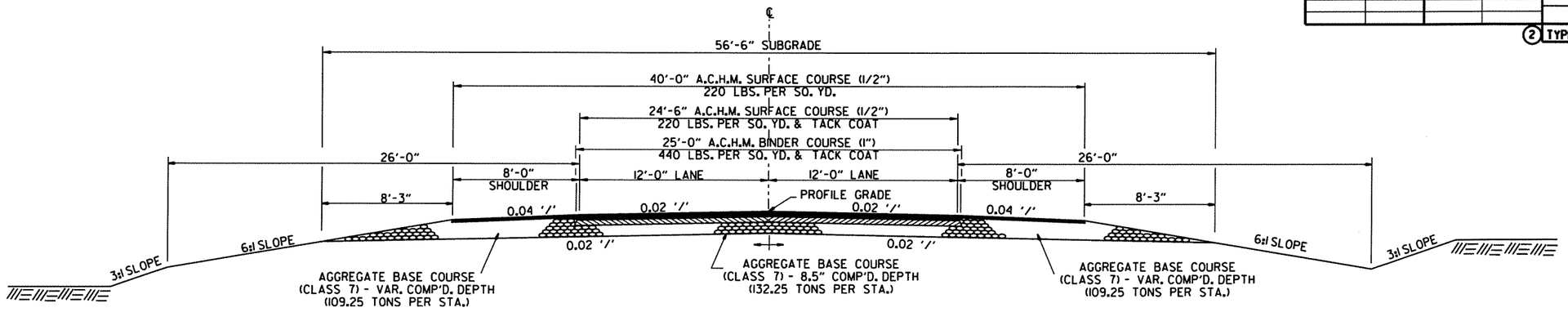

FULL DEPTH NORMAL CROWN
HWY. 367

STA. 108+72.77 - STA. 109+29.00
STA. 138+53.09 - STA. 138+75.00

NOTES:
THE FINAL 2" OF SURFACE COURSE IS TO BE PLACED AFTER ALL OTHER COURSES HAVE BEEN LAID. LONGITUDINAL JOINTS SHALL BE AT LANE LINES.

REFER TO CROSS SECTIONS FOR DEVIATION FROM THE NORMAL SLOPES. NO CHANGES SHALL BE MADE FROM THE PLANNED SLOPES WITHOUT THE APPROVAL OF THE ENGINEER.

THE THICKNESS OF AGGREGATE BASE COURSE SHALL BE WITHIN PLUS OR MINUS ONE INCH OF THE PLAN THICKNESS SHOWN. THE CONTRACTOR WILL CORRECT ANY DEFICIENT THICKNESS THAT DOES NOT MEET TOLERANCE INDICATED. PAYMENT WILL NOT BE MADE FOR MATERIAL PLACED IN EXCESS OF THE TOLERANCE INDICATED.

WITH THE APPROVAL OF THE ENGINEER, THE CONTRACTOR WILL BE ALLOWED TO SUBSTITUTE, AT NO ADDITIONAL COST TO THE DEPARTMENT, THE FIRST LIFT OF ACHM SURFACE COURSE (1/2 ") IN LIEU OF AGGREGATE BASE COURSE ON THE SHOULDERS.

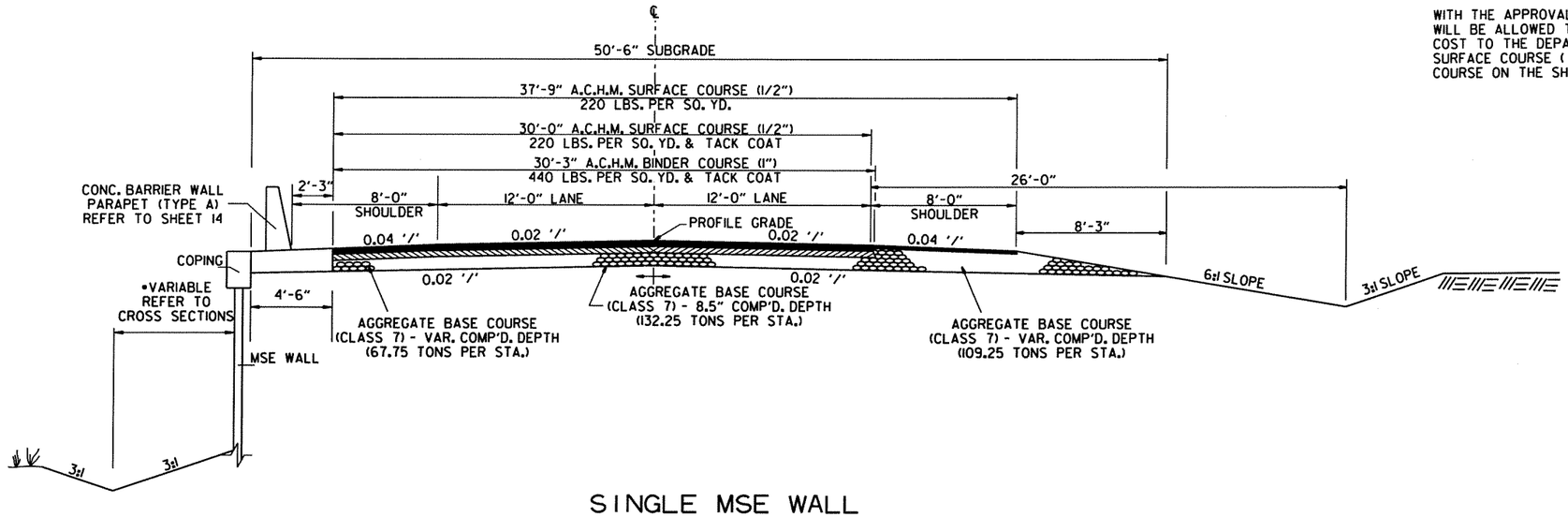

SINGLE MSE WALL
HWY. 367

STA. 109+29.00 - STA. 110+16.50

STATE OF ARKANSAS
REGISTERED PROFESSIONAL ENGINEER
No. 11425
TRINITY D. SMITH
9-17-13

9/16/2013

R005836.DGN

TYPICAL SECTIONS OF IMPROVEMENT

DATE REVISED	DATE FILMED	DATE REVISED	DATE FILMED	FED.RD. DST.NO.	STATE	FED.AID PROJ.NO.	SHEET NO.	TOTAL SHEETS
				6	ARK.			
				JOB NO.		005836	5	230

(2) TYPICAL SECTIONS OF IMPROVEMENT

STATE OF ARKANSAS
REGISTERED PROFESSIONAL ENGINEER
No. 11425
TRINITY D. SMITH
9-17-13

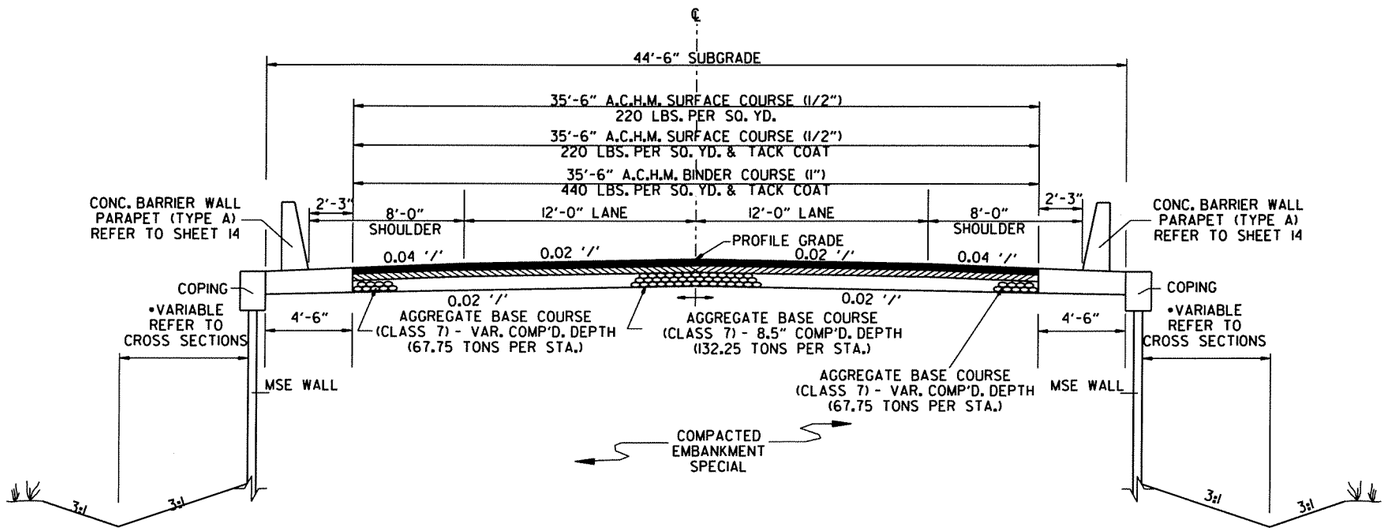

DOUBLE MSE WALL
HWY. 367
STA. 110+16.50 - STA. 111+78.91

NOTES:
THE FINAL 2" OF SURFACE COURSE IS TO BE PLACED AFTER ALL OTHER COURSES HAVE BEEN LAID. LONGITUDINAL JOINTS SHALL BE AT LANE LINES.

REFER TO CROSS SECTIONS FOR DEVIATION FROM THE NORMAL SLOPES. NO CHANGES SHALL BE MADE FROM THE PLANNED SLOPES WITHOUT THE APPROVAL OF THE ENGINEER.

THE THICKNESS OF AGGREGATE BASE COURSE SHALL BE WITHIN PLUS OR MINUS ONE INCH OF THE PLAN THICKNESS SHOWN. THE CONTRACTOR WILL CORRECT ANY DEFICIENT THICKNESS THAT DOES NOT MEET TOLERANCE INDICATED. PAYMENT WILL NOT BE MADE FOR MATERIAL PLACED IN EXCESS OF THE TOLERANCE INDICATED.

WITH THE APPROVAL OF THE ENGINEER. THE CONTRACTOR WILL BE ALLOWED TO SUBSTITUTE, AT NO ADDITIONAL COST TO THE DEPARTMENT, THE FIRST LIFT OF ACHM SURFACE COURSE (1/2 ") IN LIEU OF AGGREGATE BASE COURSE ON THE SHOULDERS.

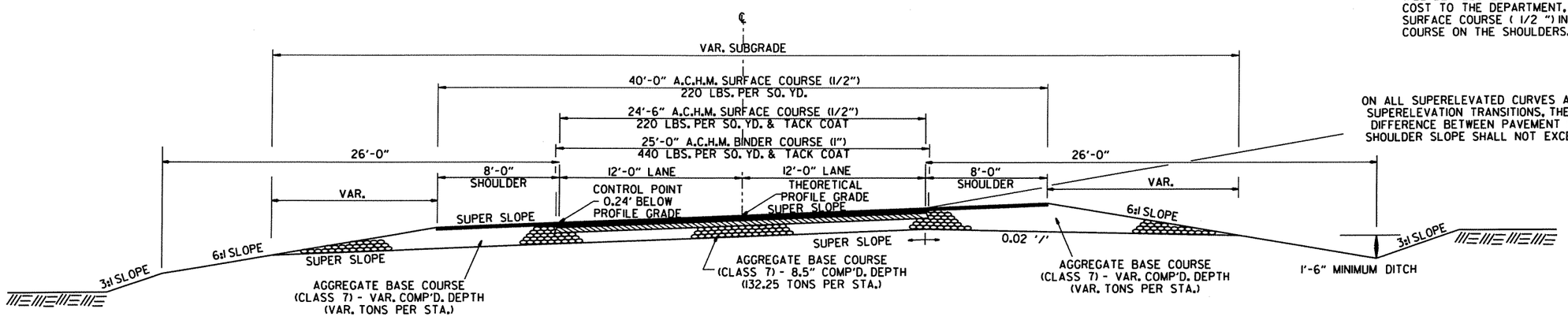

ON ALL SUPERELEVATED CURVES AND THROUGH SUPERELEVATION TRANSITIONS, THE ALGEBRAIC DIFFERENCE BETWEEN PAVEMENT SLOPE AND SHOULDER SLOPE SHALL NOT EXCEED 0.08'/'.

FULL DEPTH SUPERELEVATION SECTION
HWY. 367
STA. 138+75.00 - STA. 151+50

9/16/2013

R005836.DGN

TYPICAL SECTIONS OF IMPROVEMENT

DATE REVISED	DATE FILMED	DATE REVISED	DATE FILMED	FED.RD. DIST.NO.	STATE	FED.AID PROJ.NO.	SHEET NO.	TOTAL SHEETS
				6	ARK.			
				JOB NO.		005836	6	230

(2) TYPICAL SECTIONS OF IMPROVEMENT

STATE OF ARKANSAS
REGISTERED PROFESSIONAL ENGINEER
No. 11425
TRINITY D. SMITH
9-17-13

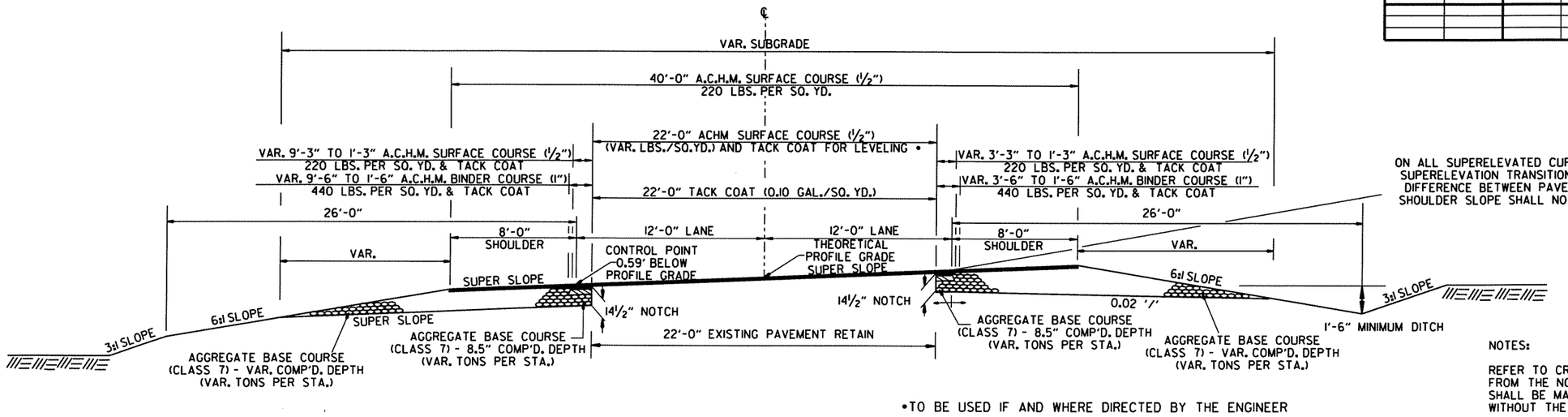

•TO BE USED IF AND WHERE DIRECTED BY THE ENGINEER

NOTCH AND WIDENING SUPERELEVATION SECTION
HWY. 367

STA. 151+50 - STA. 156+37.47

ON ALL SUPERELEVATED CURVES AND THROUGH SUPERELEVATION TRANSITIONS, THE ALGEBRAIC DIFFERENCE BETWEEN PAVEMENT SLOPE AND SHOULDER SLOPE SHALL NOT EXCEED 0.08'/'.

NOTES:

REFER TO CROSS SECTIONS FOR DEVIATION FROM THE NORMAL SLOPES. NO CHANGES SHALL BE MADE FROM THE PLANNED SLOPES WITHOUT THE APPROVAL OF THE ENGINEER.

THE THICKNESS OF AGGREGATE BASE COURSE SHALL BE WITHIN PLUS OR MINUS ONE INCH OF THE PLAN THICKNESS SHOWN. THE CONTRACTOR WILL CORRECT ANY DEFICIENT THICKNESS THAT DOES NOT MEET TOLERANCE INDICATED. PAYMENT WILL NOT BE MADE FOR MATERIAL PLACED IN EXCESS OF THE TOLERANCE.

ASPHALT FOR LEVELING OF EXISTING PAVEMENT SHALL BE PLACED ONLY IF AND WHERE DIRECTED BY THE ENGINEER. CALCULATIONS FOR THE AMOUNT OF LEVELING AND/OR LEVELING OPERATIONS SHALL BE PERFORMED BEFORE CONSTRUCTING NOTCH AND WIDENING. CALCULATIONS WILL NOT BE PAID FOR DIRECTLY BUT PAYMENT WILL BE CONSIDERED INCLUDED IN THE VARIOUS PAY ITEMS.

THE FINAL 2" OF SURFACE COURSE IS TO BE PLACED AFTER ALL OTHER COURSES HAVE BEEN LAID. LONGITUDINAL JOINTS SHALL BE AT LANE LINES.

WITH THE APPROVAL OF THE ENGINEER, THE CONTRACTOR WILL BE ALLOWED TO SUBSTITUTE, AT NO ADDITIONAL COST TO THE DEPARTMENT, THE FIRST LIFT OF ACHM SURFACE COURSE (1/2") IN LIEU OF AGGREGATE BASE COURSE ON THE SHOULDERS.

ALL FLEXIBLE BASE AND ASPHALTIC PAVEMENTS REMOVED SHALL BE PAID FOR UNDER THE ITEM NO. 210 UNCLASSIFIED EXCAVATION. THE EXISTING ASPHALT PAVEMENT TO BE REMOVED FROM THE REMAINING PAVEMENT SHALL BE SEPARATED BY SAWING ALONG A NEAT LINE. AFTER SAWING, THE PAVEMENT TO BE REMOVED SHALL BE CAREFULLY REMOVED IN A MANNER THAT WILL NOT DAMAGE THE PAVEMENT THAT IS TO REMAIN. ANY DAMAGE OF THE ASPHALT PAVEMENT THAT IS TO REMAIN IN PLACE SHALL BE REPAIRED AT THE CONTRACTOR'S EXPENSE.

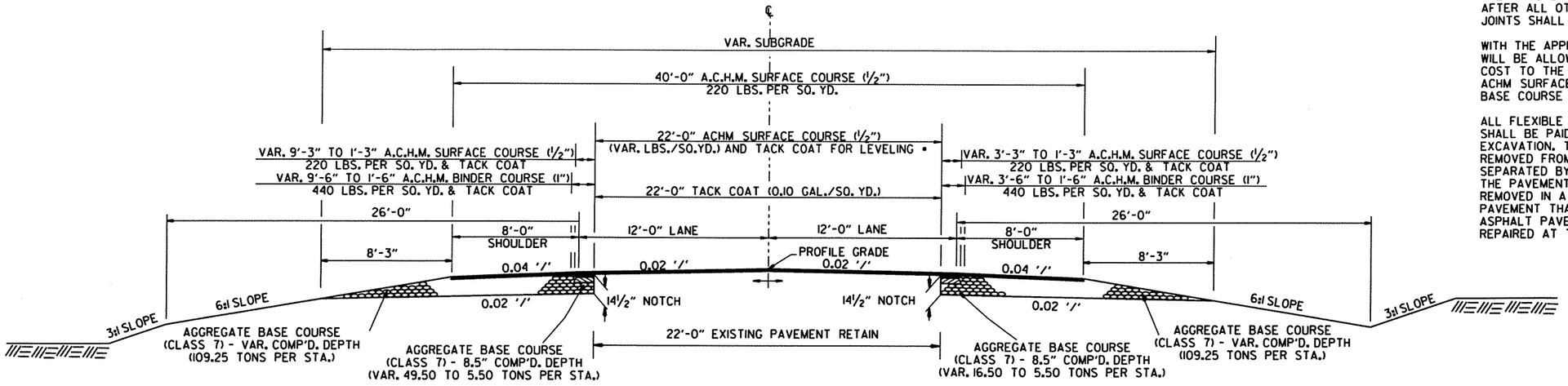

•TO BE USED IF AND WHERE DIRECTED BY THE ENGINEER

NOTCH AND WIDENING NORMAL CROWN SECTION
HWY. 367

STA. 156+37.47 - STA. 156+50.00

9/16/2013

R005836.DGN

TYPICAL SECTIONS OF IMPROVEMENT

DATE REVISED	DATE FILMED	DATE REVISED	DATE FILMED	FED.RD. DST.NO.	STATE	FED.AID PROJ.NO.	SHEET NO.	TOTAL SHEETS
				6	ARK.			
				JOB NO.		005836	7	230

(2) TYPICAL SECTIONS OF IMPROVEMENT

STATE OF ARKANSAS
REGISTERED PROFESSIONAL ENGINEER
No. 11425
TRINITY D. SMITH
9-17-13

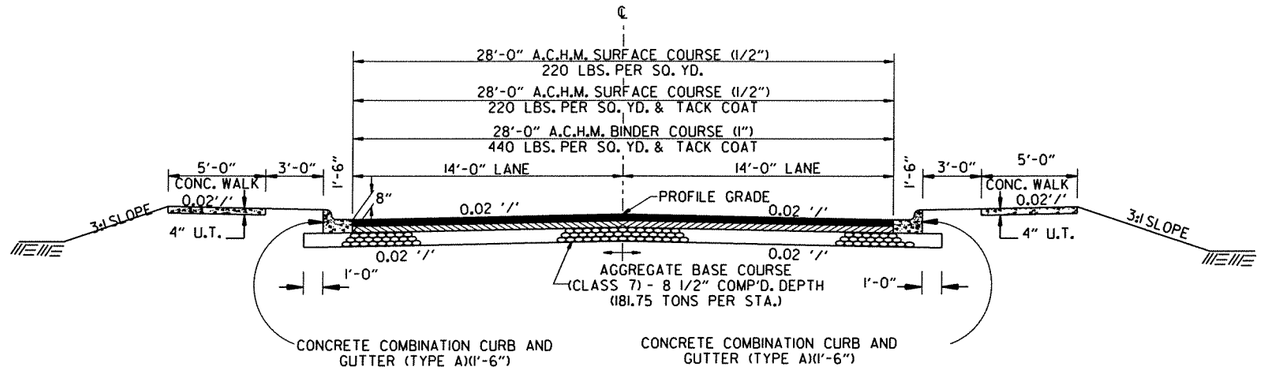

3RD STREET CONNECTION
NORMAL CROWN
STA. 200+69.39 - STA. 200+80.00

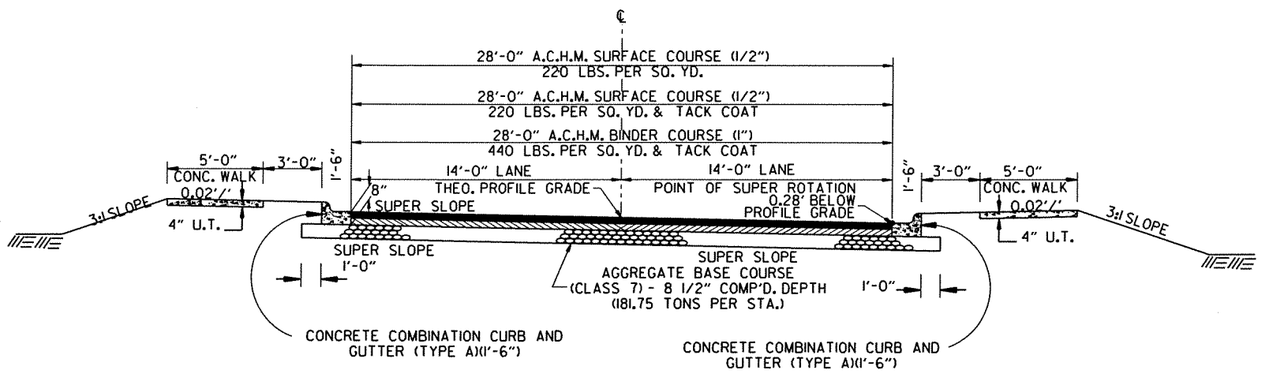

3RD STREET CONNECTION
SUPERELEVATION SECTION
STA. 200+80.00 - STA. 203+60.00

NOTES:

REFER TO CROSS SECTIONS FOR DEVIATION FROM THE NORMAL SLOPES. NO CHANGES SHALL BE MADE FROM THE PLANNED SLOPES WITHOUT THE APPROVAL OF THE ENGINEER.

THE THICKNESS OF AGGREGATE BASE COURSE SHALL BE WITHIN PLUS OR MINUS ONE INCH OF THE PLAN THICKNESS SHOWN. THE CONTRACTOR WILL CORRECT ANY DEFICIENT THICKNESS THAT DOES NOT MEET TOLERANCE INDICATED. PAYMENT WILL NOT BE MADE FOR MATERIAL PLACED IN EXCESS OF THE TOLERANCE.

THE FINAL 2" OF SURFACE COURSE IS TO BE PLACED AFTER ALL OTHER COURSES HAVE BEEN LAID. LONGITUDINAL JOINTS SHALL BE AT LANE LINES.

ALL FLEXIBLE BASE AND ASPHALTIC PAVEMENTS REMOVED SHALL BE PAID FOR UNDER THE ITEM NO. 210 UNCLASSIFIED EXCAVATION.

THE EXISTING ASPHALT PAVEMENT TO BE REMOVED FROM THE REMAINING PAVEMENT SHALL BE SEPARATED BY SAWING ALONG A NEAT LINE. AFTER SAWING, THE PAVEMENT TO BE REMOVED SHALL BE CAREFULLY REMOVED IN A MANNER THAT WILL NOT DAMAGE THE PAVEMENT THAT IS TO REMAIN. ANY DAMAGE OF THE ASPHALT PAVEMENT THAT IS TO REMAIN IN PLACE SHALL BE REPAIRED AT THE CONTRACTOR'S EXPENSE.

PRIOR TO AND DURING PLACEMENT OF PAVEMENT IN FRONT OF THE CURB OR CURB AND GUTTER, THE CONTRACTOR SHALL PROVIDE POSITIVE DRAINAGE AT ALL TIMES. THE METHOD(S) USED SHALL BE APPROVED BY THE ENGINEER. PAYMENT FOR THIS WORK SHALL BE CONSIDERED INCLUDED IN THE PRICE BID FOR THE VARIOUS CONTRACT ITEMS.

9/12/2013

R005836.DGN

TYPICAL SECTIONS OF IMPROVEMENT

DATE REVISED	DATE FILMED	DATE REVISED	DATE FILMED	FED.RD. DIST.NO.	STATE	FED.AID PROJ.NO.	SHEET NO.	TOTAL SHEETS
				6	ARK.			
				JOB NO.		005836	8	230

(2) TYPICAL SECTIONS OF IMPROVEMENT

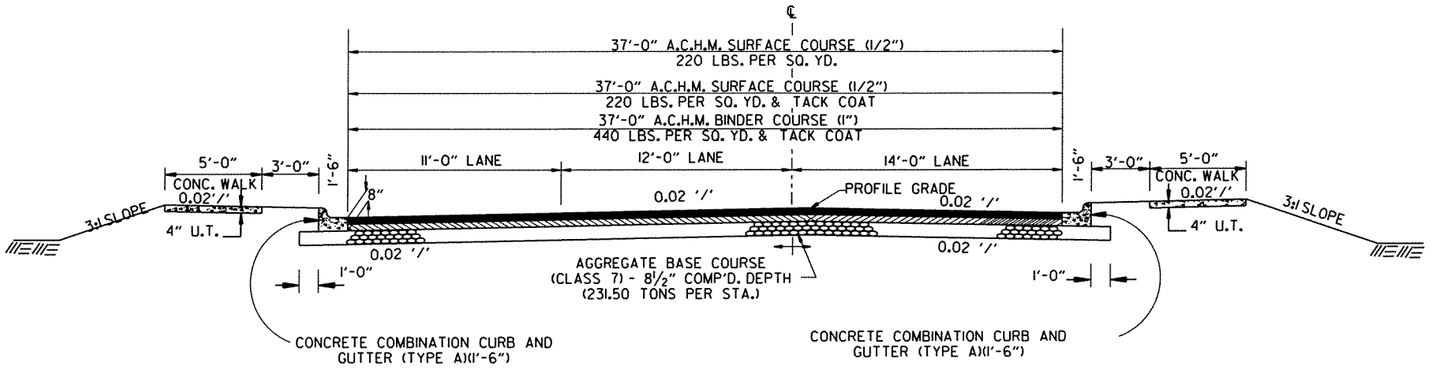

3RD STREET CONNECTION - 3 LANES

STA. 203+60.00 - STA. 205+00.00

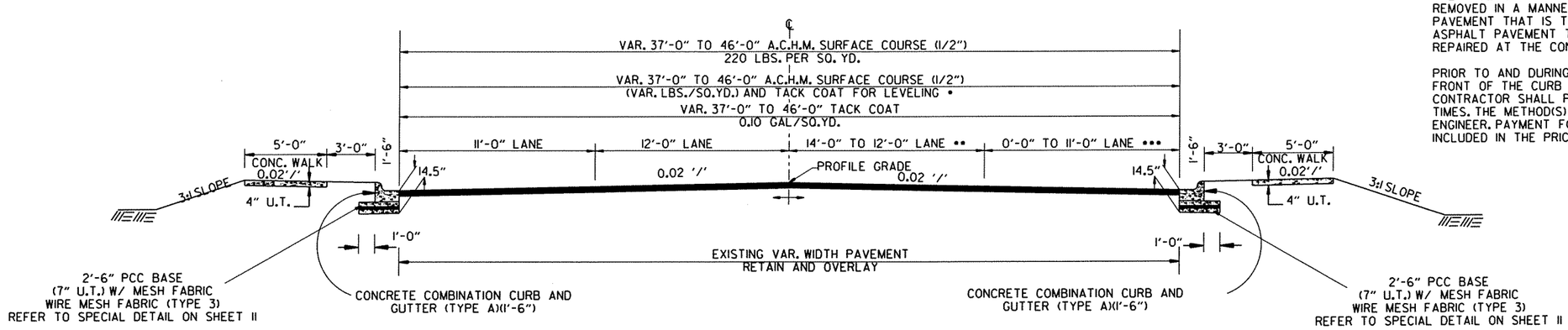

•TO BE USED IF AND WHERE DIRECTED BY THE ENGINEER

3RD STREET CONNECTION - 3 TO 4 LANES

STA. 205+00.00 - STA. 206+00.00

•• 14'-0" LANE AT STA. 205+00.00
12'-0" LANE AT STA. 206+00.00

••• 0'-0" LANE AT STA. 205+00.00
11'-0" LANE AT STA. 206+00.00

STATE OF ARKANSAS
REGISTERED PROFESSIONAL ENGINEER
No. 11425
TRINITY D. SMITH
9-17-13

NOTES:

REFER TO CROSS SECTIONS FOR DEVIATION FROM THE NORMAL SLOPES. NO CHANGES SHALL BE MADE FROM THE PLANNED SLOPES WITHOUT THE APPROVAL OF THE ENGINEER.

THE THICKNESS OF AGGREGATE BASE COURSE SHALL BE WITHIN PLUS OR MINUS ONE INCH OF THE PLAN THICKNESS SHOWN. THE CONTRACTOR WILL CORRECT ANY DEFICIENT THICKNESS THAT DOES NOT MEET TOLERANCE INDICATED. PAYMENT WILL NOT BE MADE FOR MATERIAL PLACED IN EXCESS OF THE TOLERANCE.

ASPHALT FOR LEVELING OF EXISTING PAVEMENT SHALL BE PLACED ONLY IF AND WHERE DIRECTED BY THE ENGINEER. CALCULATIONS FOR THE AMOUNT OF LEVELING AND/OR LEVELING OPERATIONS SHALL BE PERFORMED BEFORE CONSTRUCTING NOTCH AND WIDENING. CALCULATIONS WILL NOT BE PAID FOR DIRECTLY BUT PAYMENT WILL BE CONSIDERED INCLUDED IN THE VARIOUS PAY ITEMS.

THE FINAL 2" OF SURFACE COURSE IS TO BE PLACED AFTER ALL OTHER COURSES HAVE BEEN LAID. LONGITUDINAL JOINTS SHALL BE AT LANE LINES.

ALL FLEXIBLE BASE AND ASPHALTIC PAVEMENTS REMOVED SHALL BE PAID FOR UNDER THE ITEM NO. 210 UNCLASSIFIED EXCAVATION.

THE EXISTING ASPHALT PAVEMENT TO BE REMOVED FROM THE REMAINING PAVEMENT SHALL BE SEPARATED BY SAWING ALONG A NEAT LINE. AFTER SAWING, THE PAVEMENT TO BE REMOVED SHALL BE CAREFULLY REMOVED IN A MANNER THAT WILL NOT DAMAGE THE PAVEMENT THAT IS TO REMAIN. ANY DAMAGE OF THE ASPHALT PAVEMENT THAT IS TO REMAIN IN PLACE SHALL BE REPAIRED AT THE CONTRACTOR'S EXPENSE.

PRIOR TO AND DURING PLACEMENT OF PAVEMENT IN FRONT OF THE CURB OR CURB AND GUTTER, THE CONTRACTOR SHALL PROVIDE POSITIVE DRAINAGE AT ALL TIMES. THE METHOD(S) USED SHALL BE APPROVED BY THE ENGINEER. PAYMENT FOR THIS WORK SHALL BE CONSIDERED INCLUDED IN THE PRICE BID FOR THE VARIOUS CONTRACT ITEMS.

9/12/2013

R005836.DGN

TYPICAL SECTIONS OF IMPROVEMENT

DATE REVISED	DATE FILMED	DATE REVISED	DATE FILMED	FED.RD. DIST.NO.	STATE	FED.AID PROJ.NO.	SHEET NO.	TOTAL SHEETS
				6	ARK.			
				JOB NO.		005836	9	230

(2) TYPICAL SECTIONS OF IMPROVEMENT

STATE OF ARKANSAS
REGISTERED PROFESSIONAL ENGINEER
No. 11425
TRINITY D. SMITH
9-17-13

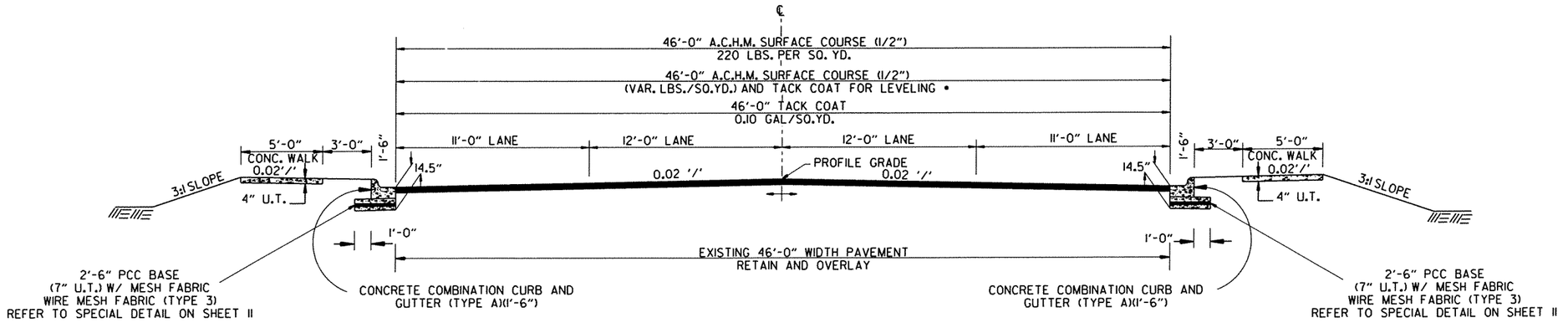

•TO BE USED IF AND WHERE DIRECTED BY THE ENGINEER

3RD STREET CONNECTION - 4 LANES

STA. 206+00.00 - STA. 206+30.00

NOTES:

REFER TO CROSS SECTIONS FOR DEVIATION FROM THE NORMAL SLOPES. NO CHANGES SHALL BE MADE FROM THE PLANNED SLOPES WITHOUT THE APPROVAL OF THE ENGINEER.

ASPHALT FOR LEVELING OF EXISTING PAVEMENT SHALL BE PLACED ONLY IF AND WHERE DIRECTED BY THE ENGINEER. CALCULATIONS FOR THE AMOUNT OF LEVELING AND/OR LEVELING OPERATIONS SHALL BE PERFORMED BEFORE CONSTRUCTING NOTCH AND WIDENING. CALCULATIONS WILL NOT BE PAID FOR DIRECTLY BUT PAYMENT WILL BE CONSIDERED INCLUDED IN THE VARIOUS PAY ITEMS.

THE FINAL 2" OF SURFACE COURSE IS TO BE PLACED AFTER ALL OTHER COURSES HAVE BEEN LAID. LONGITUDINAL JOINTS SHALL BE AT LANE LINES.

ALL FLEXIBLE BASE AND ASPHALTIC PAVEMENTS REMOVED SHALL BE PAID FOR UNDER THE ITEM NO. 210 UNCLASSIFIED EXCAVATION.

THE EXISTING ASPHALT PAVEMENT TO BE REMOVED FROM THE REMAINING PAVEMENT SHALL BE SEPARATED BY SAWING ALONG A NEAT LINE. AFTER SAWING, THE PAVEMENT TO BE REMOVED SHALL BE CAREFULLY REMOVED IN A MANNER THAT WILL NOT DAMAGE THE PAVEMENT THAT IS TO REMAIN. ANY DAMAGE OF THE ASPHALT PAVEMENT THAT IS TO REMAIN IN PLACE SHALL BE REPAIRED AT THE CONTRACTOR'S EXPENSE.

PRIOR TO AND DURING PLACEMENT OF PAVEMENT IN FRONT OF THE CURB OR CURB AND GUTTER, THE CONTRACTOR SHALL PROVIDE POSITIVE DRAINAGE AT ALL TIMES. THE METHOD(S) USED SHALL BE APPROVED BY THE ENGINEER. PAYMENT FOR THIS WORK SHALL BE CONSIDERED INCLUDED IN THE PRICE BID FOR THE VARIOUS CONTRACT ITEMS.

R005836.DGN 9/12/2013

TYPICAL SECTIONS OF IMPROVEMENT

DATE REVISED	DATE FILMED	DATE REVISED	DATE FILMED	FED.RD. DIST.NO.	STATE	FED.AID PROJ.NO.	SHEET NO.	TOTAL SHEETS
				6	ARK.			
				JOB NO.		005836	10	230

(2) SPECIAL DETAILS

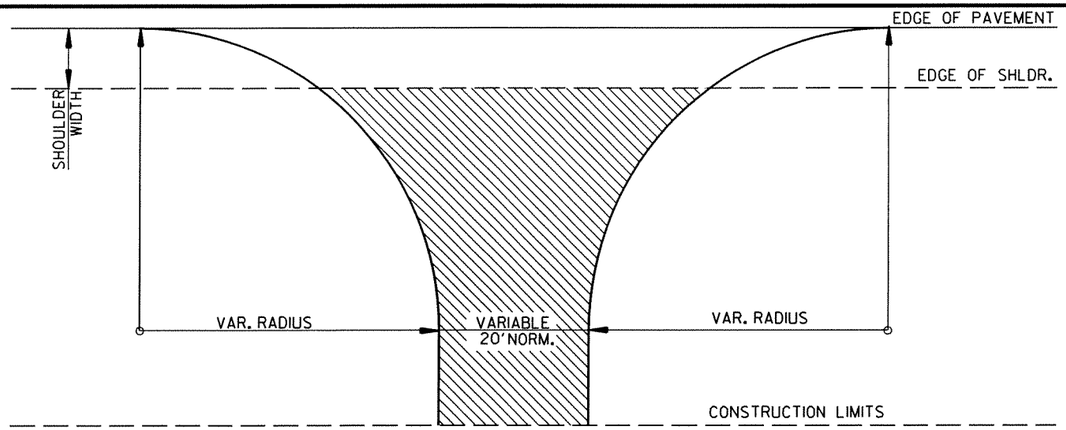

ASPHALT CONCRETE HOT MIX SURFACE COURSE (1/2") (220 LBS. PER SQ. YD.) AND AGGREGATE BASE COURSE (CLASS 7) 7" DEPTH IF ASPHALT DRIVE EXISTING

NOTE:
REFER TO PLAN SHEETS FOR WIDTHS OF COUNTY ROADS.

DETAIL FOR COUNTY ROAD TURNOUTS

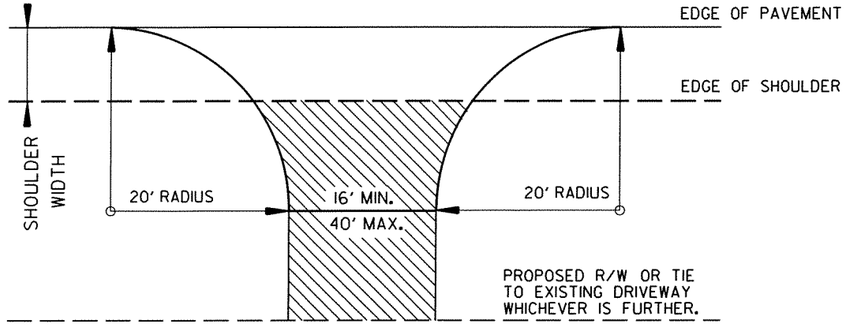

ASPHALT CONCRETE HOT MIX SURFACE COURSE (1/2")(220 LBS. PER SQ. YD.) AGGREGATE BASE COURSE (CL. 7) 7" COMP. DEPTH.

DETAIL FOR DRIVEWAY TURNOUTS

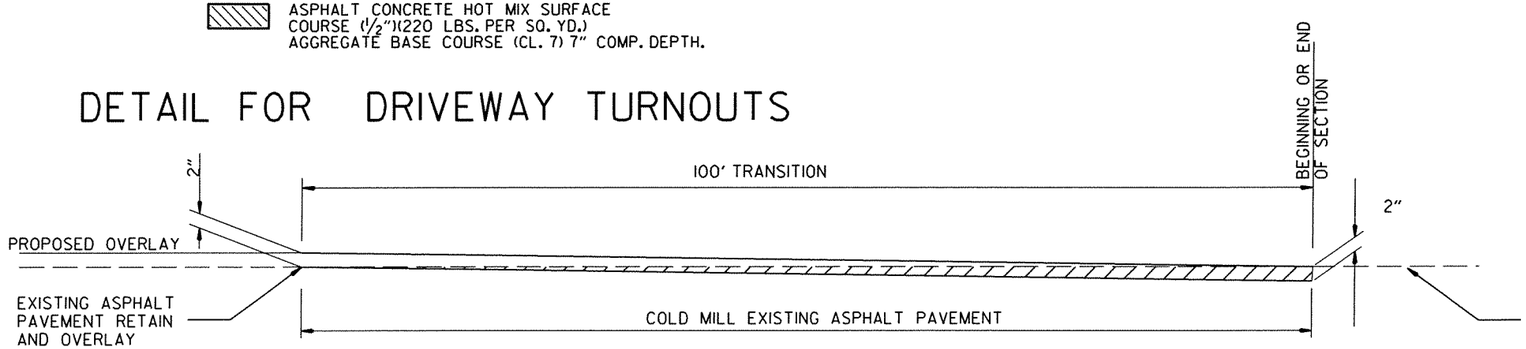

DETAIL FOR TRANSITIONS

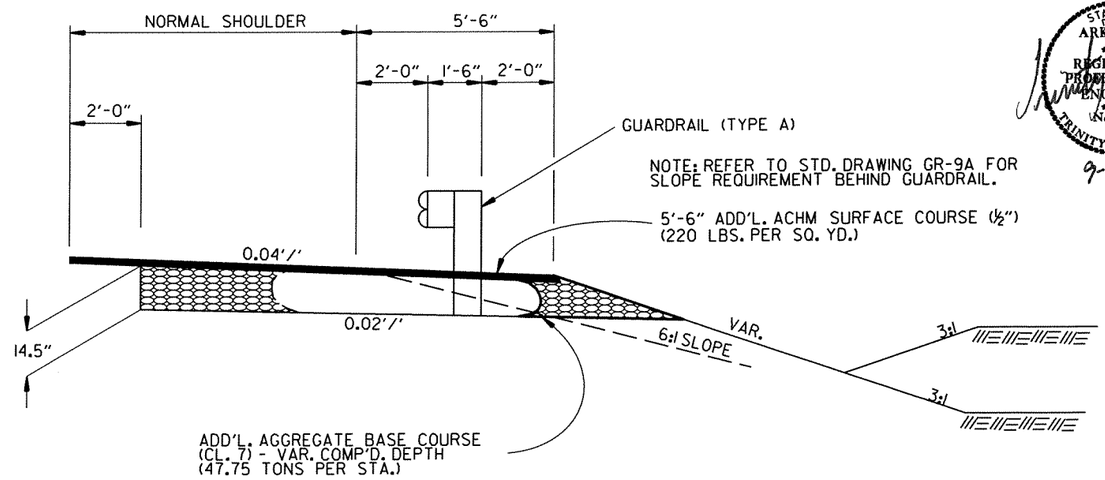

WIDENING FOR GUARDRAIL

NOTE: REFER TO STANDARD DRAWINGS GR-8, GR-9, GR-9A, GR-10, & GR-10A FOR ADDITIONAL INFORMATION.

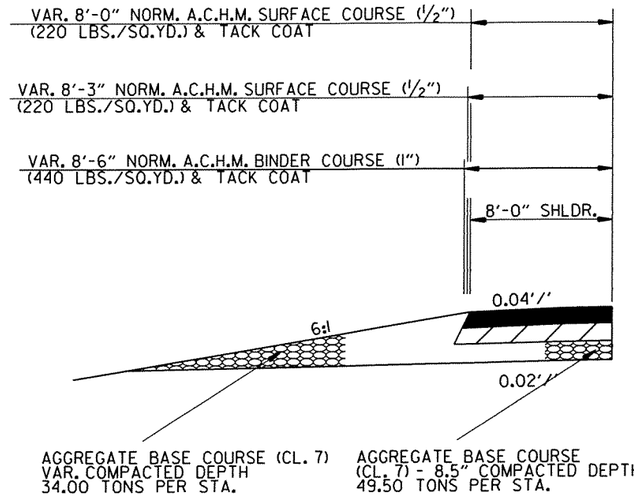

DETAIL OF FULL DEPTH SHOULDER HWY. 367 STA. 144+00 LT. TO STA. 154+00 LT.

STATE OF ARKANSAS
REGISTERED PROFESSIONAL ENGINEER
No. 11425
TRINITY D. SMITH
9-17-13

9/12/2013

R005836.DGN

SPECIAL DETAILS

DATE REVISED	DATE FILMED	DATE REVISED	DATE FILMED	FED.RD. DIST.NO.	STATE	FED.AID PROJ.NO.	SHEET NO.	TOTAL SHEETS
				6	ARK.			
				JOB NO.		005836	11	230

(2) SPECIAL DETAILS

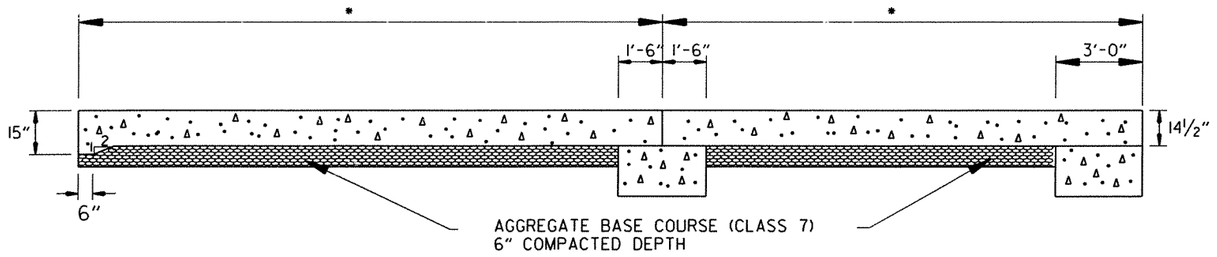

SPECIAL DETAIL OF APPROACH SLAB

• REFER TO BRIDGE DRAWINGS

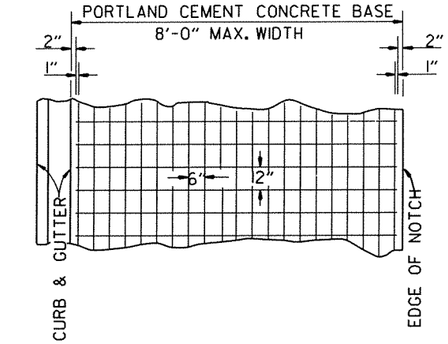

DETAIL OF REINFORCING STEEL FOR PAVEMENT (MESH FABRIC TYPE 3)

6"X 12" MESH FABRIC (TYPE 3) (W5.5 x W2.9) = 4.26 LBS./SQ.YD.

NOTES:

1. LAP MESH FABRIC MIN. 12" LONGITUDINALLY AND MIN. 6" TRANSVERSELY.
2. MESH FABRIC IS NOT REQUIRED WHEN WIDTH OF PORTLAND CEMENT CONCRETE BASE IS LESS THAN 12".
3. MESH FABRIC (TYPE 3) WILL NOT BE PAID FOR DIRECTLY, BUT FULL COMPENSATION THEREFORE WILL BE CONSIDERED INCLUDED IN THE CONTRACT PRICE BID PER SQ. YD. FOR PORTLAND CEMENT CONCRETE BASE (7" U.T.).

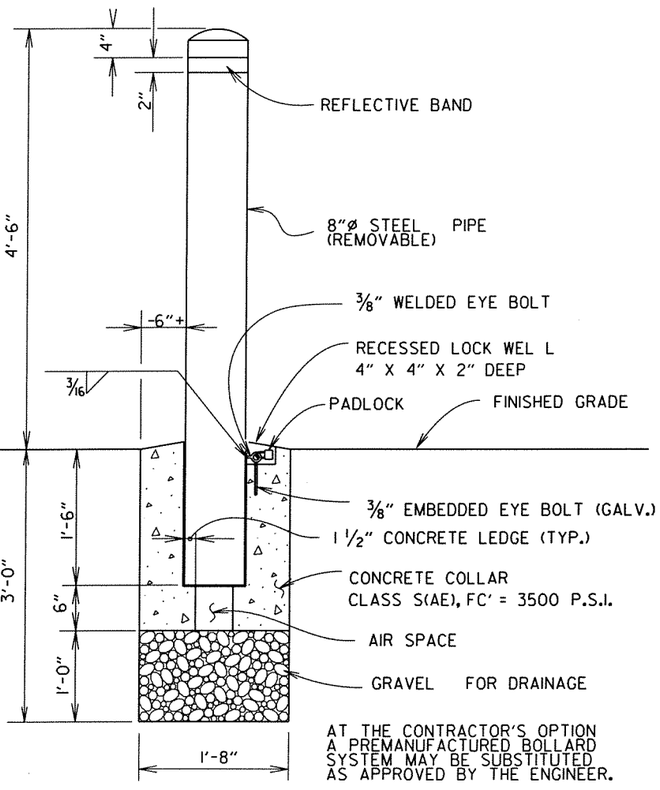

REMOVABLE BOLLARD DETAIL

NO SCALE

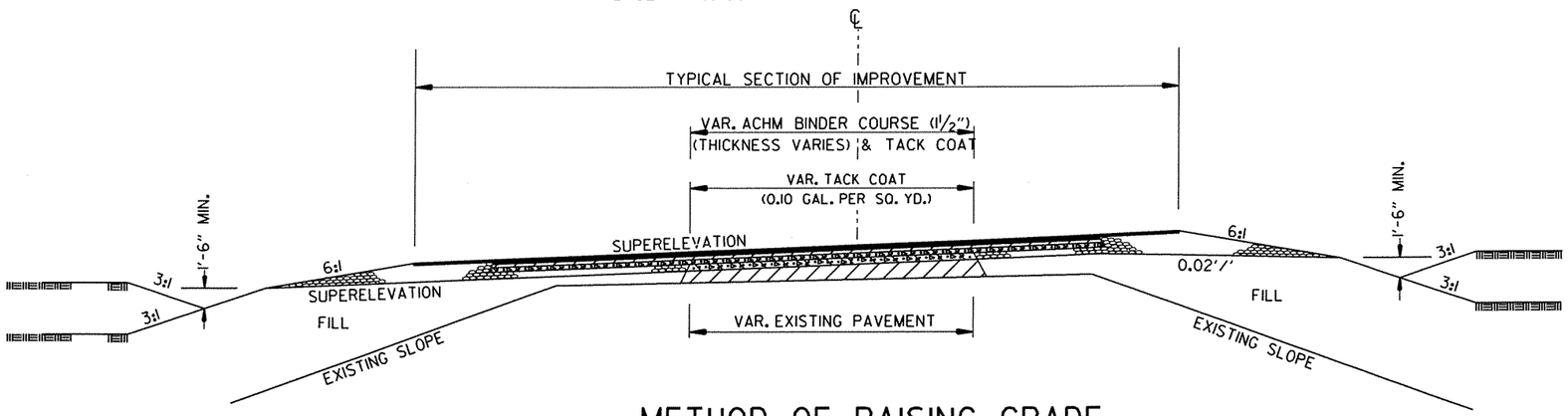

METHOD OF RAISING GRADE

NOTES:
(1) THIS DETAIL TO BE USED ONLY IF AND WHERE DIRECTED BY THE ENGINEER.
(2) QUANTITIES FOR METHOD OF GRADE RAISE USING ASPHALT WERE CALCULATED ON THIS PROJECT AT LOCATIONS WHERE THE DISTANCE BETWEEN THE EXISTING ASPHALT ROADWAY AND THE PROPOSED SUBGRADE WAS ONE FOOT OR LESS.
(3) IN LOCATIONS WHERE THE DISTANCE BETWEEN THE PROPOSED SUBGRADE AND THE EXISTING ASPHALT ROADWAY IS MORE THAN ONE FOOT, SCARIFICATION OF THE EXISTING ASPHALT ROADWAY WILL BE REQUIRED AS STATED IN SECTION 210, SUBSECTION 210.09 OF THE STANDARD SPECIFICATIONS, EDITION OF 2003.

STATE OF ARKANSAS
REGISTERED PROFESSIONAL ENGINEER
No. 11425
TRINITY D. SMITH
9-17-13

9/12/2013

R005836.DGN

SPECIAL DETAILS

DATE REVISED	DATE FILMED	DATE REVISED	DATE FILMED	FED.RD. DIST.NO.	STATE	FED.AID PROJ.NO.	SHEET NO.	TOTAL SHEETS
				6	ARK.			
				JOB NO.		005836	12	230

(2) SPECIAL DETAILS

STATE OF ARKANSAS
REGISTERED PROFESSIONAL ENGINEER
No. 11425
TRINITY D. SMITH
9-17-13

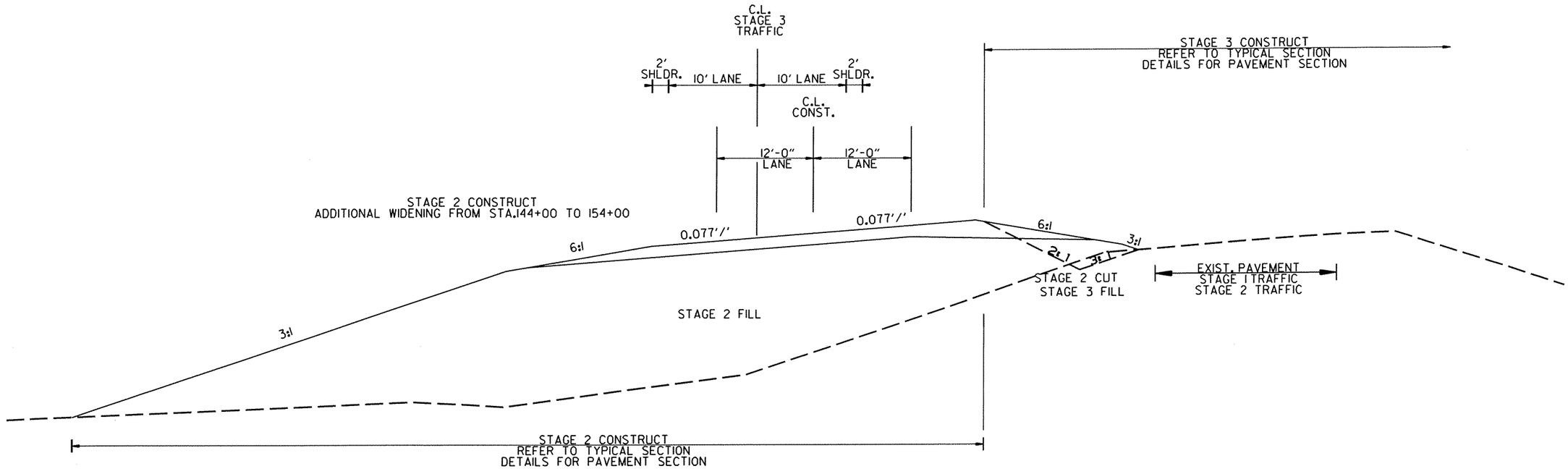

METHOD OF STAGE CONSTRUCTION

9/12/2013

R005836.DGN

SPECIAL DETAILS

DATE REVISED	DATE FILMED	DATE REVISED	DATE FILMED	FED.RD. DIST.NO.	STATE	FED.AID PROJ.NO.	SHEET NO.	TOTAL SHEETS
				6	ARK.			
				JOB NO.		005836	13	230

(2) SPECIAL DETAILS

STATE OF ARKANSAS
REGISTERED PROFESSIONAL ENGINEER
No. 11425
TRINITY D. SMITH
9-17-13

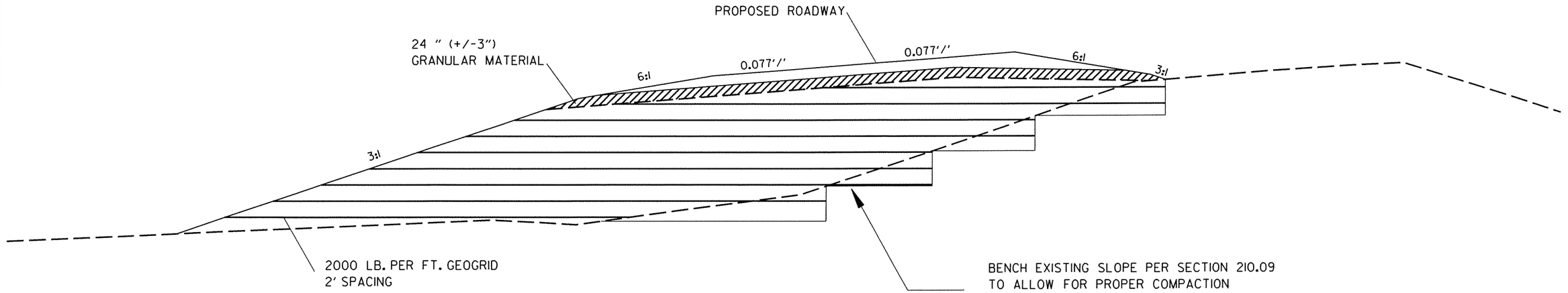

DETAIL FOR GEOSYNTHETIC INTERNAL REINFORCED EMBANKMENT

NOTE:
REFER TO "GEOSYNTHETIC INTERNAL REINFORCED EMBANKMENT CONSTRUCTION" SPECIAL PROVISIONS FOR ADDITIONAL INFORMATION.

9/12/2013

R005836.DGN

SPECIAL DETAILS

DATE REVISED	DATE FILMED	DATE REVISED	DATE FILMED	FED.RD. DIST.NO.	STATE	FED.AID PROJ.NO.	SHEET NO.	TOTAL SHEETS
				6	ARK.			
				JOB NO.		005836	14	230

(2) SPECIAL DETAILS

STATE OF ARKANSAS
REGISTERED PROFESSIONAL ENGINEER
No. 11425
TRINITY D. SMITH
9-17-13

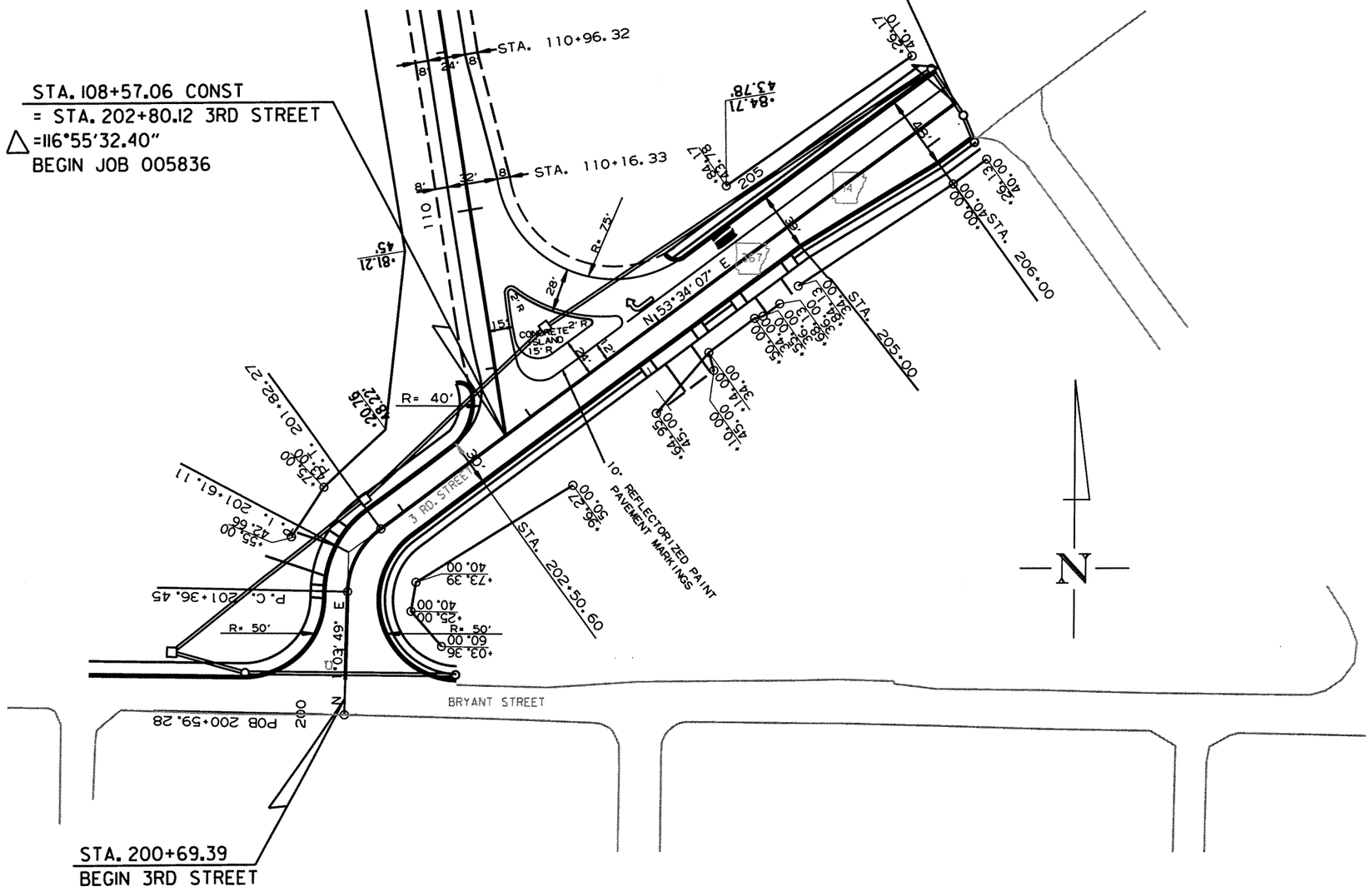

SPECIAL DETAILS

9/12/2013

R005836.DGN

DATE REVISED	DATE FILMED	DATE REVISED	DATE FILMED	FED.RD. DIST.NO.	STATE	FED.AID PROJ.NO.	SHEET NO.	TOTAL SHEETS
				6	ARK.			
				JOB NO.		005836	15	230

(2) SPECIAL DETAILS

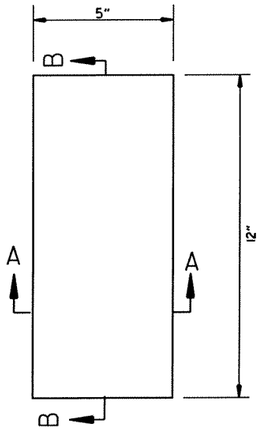

PLAN

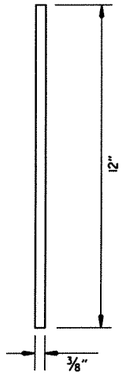

SECTION B-B

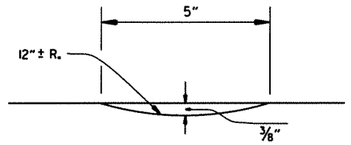

SECTION A-A

DETAILS OF RUMBLE STRIPS

GENERAL NOTES

1. RUMBLE STRIPS SHALL NOT BE INSTALLED ON CURB SECTIONS, BRIDGE DECKS, APPROACH SLABS, INTERSECTING STREETS OR ROADWAYS, RESIDENTIAL OR COMMERCIAL DRIVEWAYS OR ACROSS TRANSVERSE JOINTS OF CONCRETE SHOULDERS.
2. RUMBLE STRIPS SHALL NOT BE INSTALLED ON A PAVED SHOULDER THAT IS USED AS A DECELERATION LANE FOR THE LENGTH DEEMED APPROPRIATE BY THE ENGINEER.
3. THE 4" OFFSET FROM THE EDGE LINE MAY BE INCREASED TO AVOID LONGITUDINAL JOINTS. IN ALL CASES, THE LATERAL DEVIATION FROM THE PLANNED OFFSET SHOULD BE KEPT TO A MINIMUM.
4. RUMBLE STRIPS SHALL BE MEASURED BY THE LINEAR FOOT LONGITUDINALLY ALONG THE SHOULDER. PAYMENT SHALL ONLY INCLUDE THAT PORTION OF THE SHOULDER ON WHICH RUMBLE STRIPS HAVE BEEN CONSTRUCTED. NO MEASUREMENT OR PAYMENT WILL BE MADE FOR GAPS, DRIVEWAYS, TURNOUTS, OR OTHER PUBLIC ROAD INTERSECTIONS WHERE RUMBLE STRIPS HAVE NOT BEEN CONSTRUCTED.
5. THE 3/8" DEPTH SHALL GENERALLY APPLY FOR THE ENTIRE 12" LENGTH. SOME VARIATION TO SUIT SHOULDER SLOPE BREAKS MAY BE NECESSARY.

STATE OF ARKANSAS
REGISTERED PROFESSIONAL ENGINEER
No. 11425
TRINITY D. SMITH
9-17-13

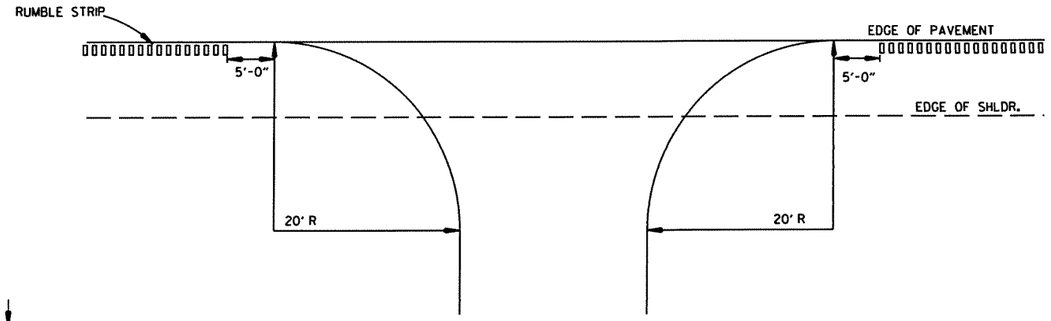

DETAIL FOR RUMBLE STRIP GAP AT DRIVEWAY TURNOUTS

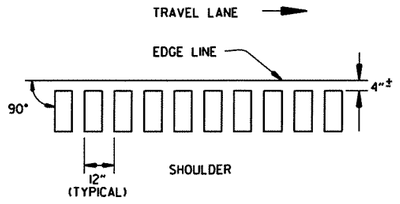

LOCATION PLAN OF RUMBLE STRIPS LEFT OR RIGHT SHOULDER

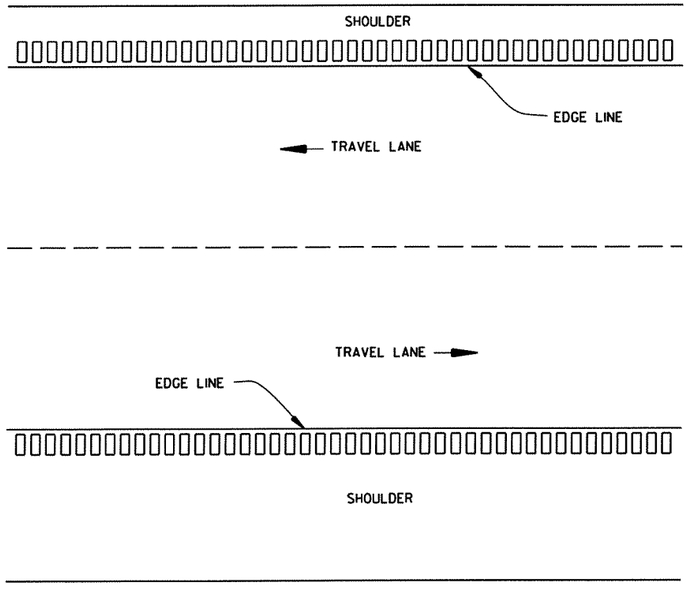

PLAN VIEW

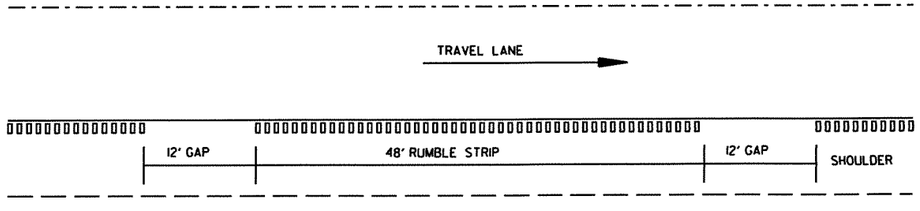

DETAIL FOR GAP PATTERN RUMBLE STRIP

NOTE: GAP PATTERN SHALL BE ADJUSTED BY THE ENGINEER IN THE FIELD ALLOWING FOR DRIVEWAYS TO SERVE AS THE GAP.

SPECIAL DETAILS

9/12/2013

R005836.DGN

DATE REVISED	DATE FILMED	DATE REVISED	DATE FILMED	FED. ROAD DIST. NO.	STATE	FED. AID PROJ. NO.	SHEET NO.	TOTAL SHEETS
				6	ARK.			
				JOB NO.		005836	16	230

① SPECIAL DETAILS

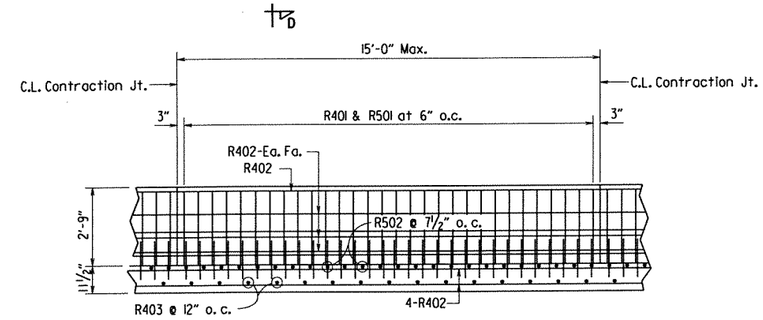

DETAILS OF CONCRETE BARRIER WALL (PARAPET TYPE A)

Scale: ⅜" = 1'-0"

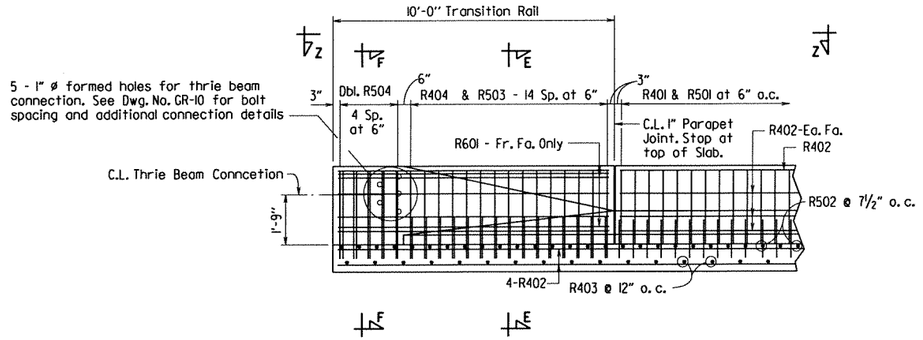

DETAILS OF TRANSITION RAIL AT BEGIN WALL

Scale: ⅜" = 1'-0"

BAR LIST

MARK	LENGTH	P.D.
R401	5'-6"	3"
R402	①40'-0"	Str.
R403	4'-2"	Str.
R404	15'-6"	3"
R405	9'-7"	Str.
R501	4'-9"	3¾"
R502	4'-2"	Str.
R503	3'-2"	3¾"
R504	4'-5"	3¾"
R601	9'-7"	Str.

BENDING DIAGRAMS

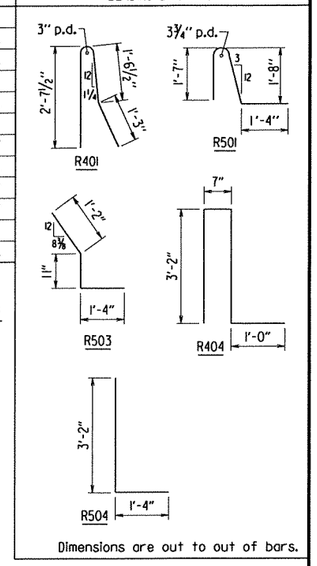

① Note: Min. Lap For Longitudinal Bars: #4 Bar - 1'-9". Ends of longitudinal bars shall have 2" clear to ends of barrier walls and at expansion joints.

② See Roadway Plans Typical Section

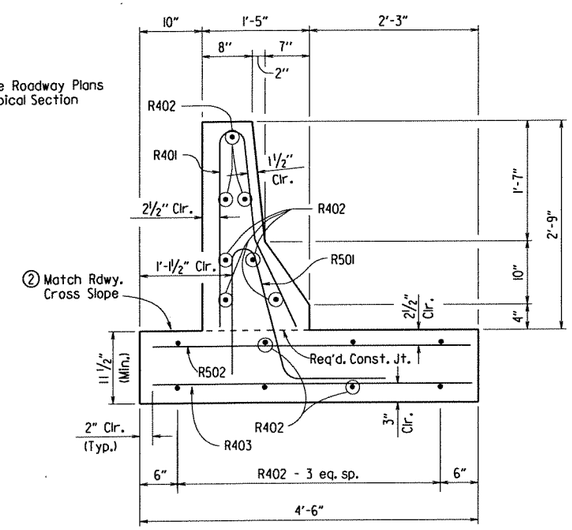

SECTION D-D

Scale: 1" = 1'-0"

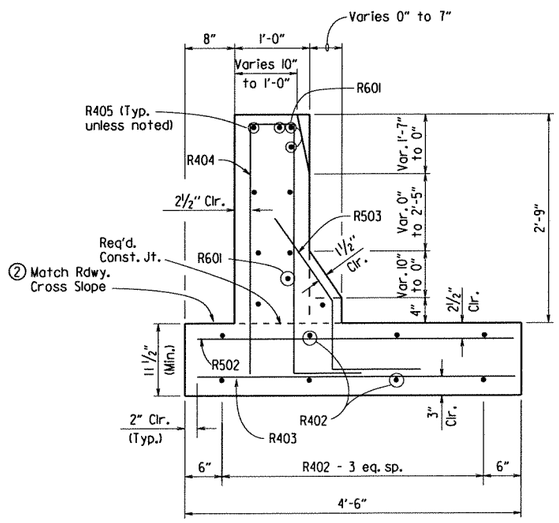

SECTION E-E

Scale: 1" = 1'-0"

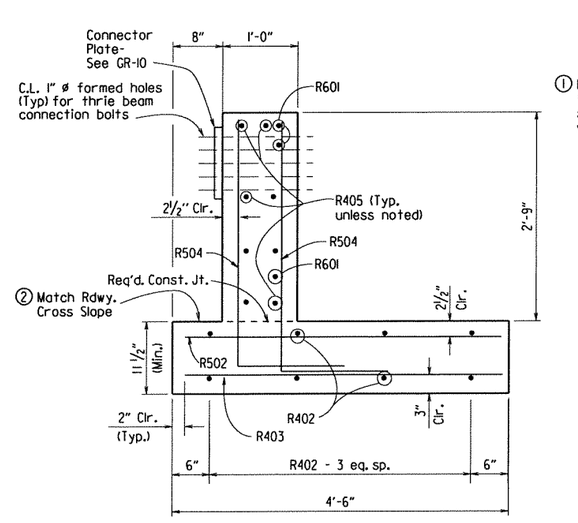

SECTION F-F

Scale: 1" = 1'-0"

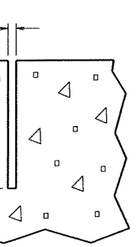

CONTRACTION JOINT DETAIL

No Scale

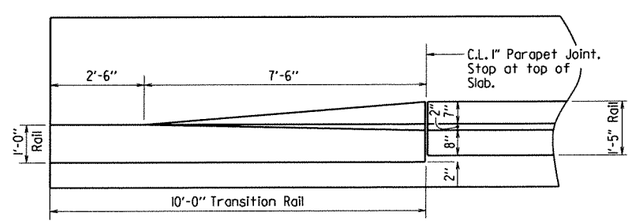

VIEW Z-Z

No Scale

GENERAL NOTES

All barrier walls shall be constructed in accordance with Section 631 of the Standard Specifications, 2003 edition. Concrete Barrier Wall will be paid for as "Concrete Barrier Wall (Parapet Type A)".

Contraction joints are required at 15'-0" maximum spacing. All contraction joints shall be formed in fresh concrete on the top and faces of the barrier wall.

All exposed edges of the barrier wall shall have a ¾" chamfer.

Reinforcing Steel shall be Grade 60 (fy=60,000 psi) conforming to AASHTO M31 or M322, Type A, with mill test reports.

Expansion joints shall be 1½" and the spacing between expansion joints shall not exceed 120 feet. For details of expansion joints, see Dwg. No. CPTJ-6A. Continuous reinforcement shall be cut 2" clear of expansion joints.

Drain openings to be constructed where shown on the plans or as directed by the Engineer.

SPECIAL DETAILS OF CONCRETE BARRIER WALL

PRINT DATE: 8/27/2013

DATE REVISED	DATE FILMED	DATE REVISED	DATE FILMED	FED.RD. DIST.NO.	STATE	FED.AID PROJ.NO.	SHEET NO.	TOTAL SHEETS
				6	ARK.			
				JOB NO.		005836	17	230

(2) TEMPORARY EROSION CONTROL DETAILS

STATE OF ARKANSAS
REGISTERED PROFESSIONAL ENGINEER
No. 11425
TRINITY D. SMITH
9-20-13

STA. 109+71 - STA. 112+05.91
INSTALL E-11 = 250 LIN. FT.

STA. 108+57.06 - STA. 112+05.91
INSTALL E-11 = 553 LIN. FT.

AROUND BRIDGE ENDS
INSTALL E-11 = 107 LIN. FT.

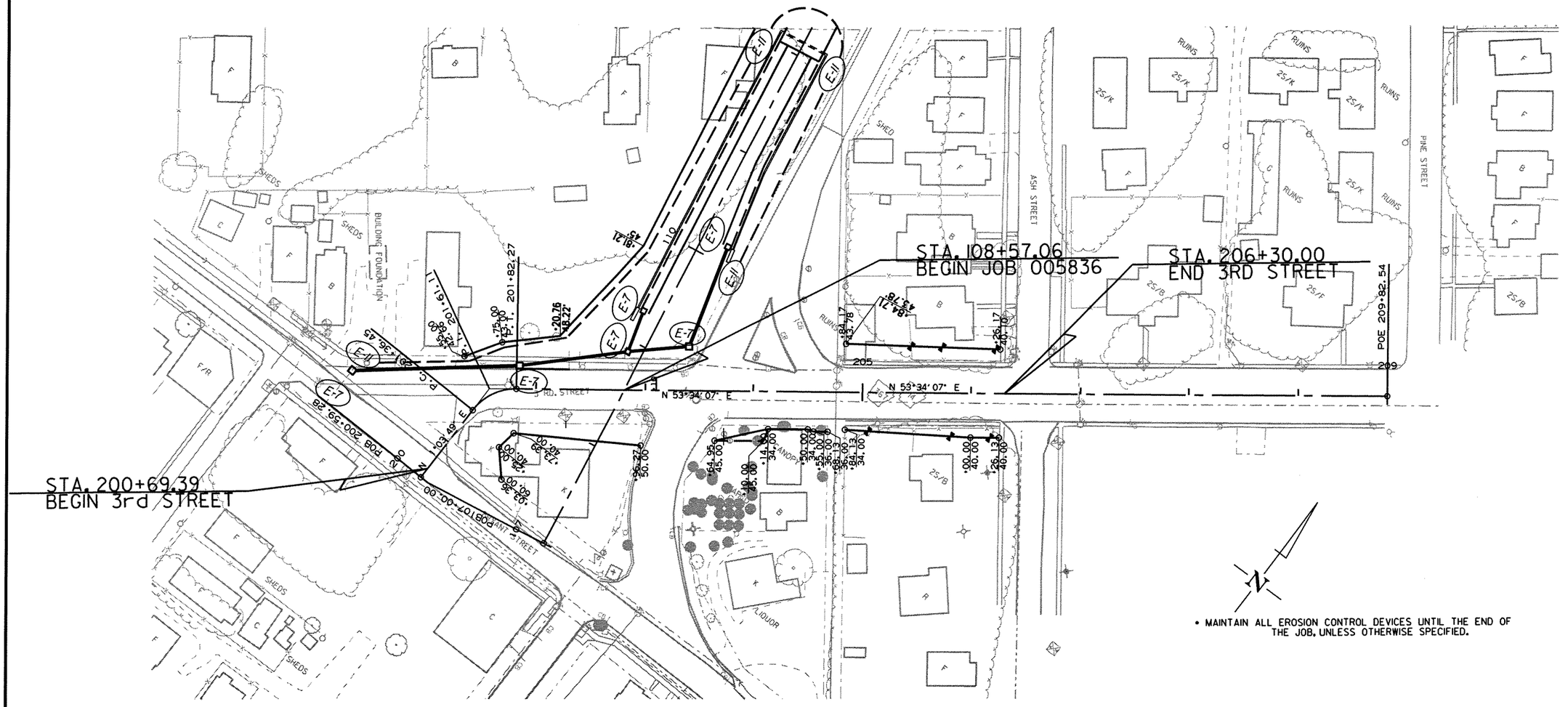

• MAINTAIN ALL EROSION CONTROL DEVICES UNTIL THE END OF THE JOB, UNLESS OTHERWISE SPECIFIED.

LEGEND

- (E-5) = SAND BAG DITCH CHECK
- (E-6) = ROCK DITCH CHECK
- (E-7) = DROP INLET SILT FENCE
- (E-11) = SILT FENCE

DATE OF REVISION	REVISION

9/20/2013

R005836.DGN

TEMPORARY EROSION CONTROL DETAILS STAGE I

DATE REVISED	DATE FILMED	DATE REVISED	DATE FILMED	FED.RD. DIST.NO.	STATE	FED.AID PROJ.NO.	SHEET NO.	TOTAL SHEETS
				6	ARK.			
				JOB NO.		005836	18	230

(2) TEMPORARY EROSION CONTROL DETAILS

STATE OF ARKANSAS
REGISTERED PROFESSIONAL ENGINEER
No. 11425
TRINITY D. SMITH
9-17-13

LEGEND

DATE OF REVISION	REVISION

(E-5) = SAND BAG DITCH CHECK

(E-6) = ROCK DITCH CHECK

(E-7) = DROP INLET SILT FENCE

(E-11) = SILT FENCE

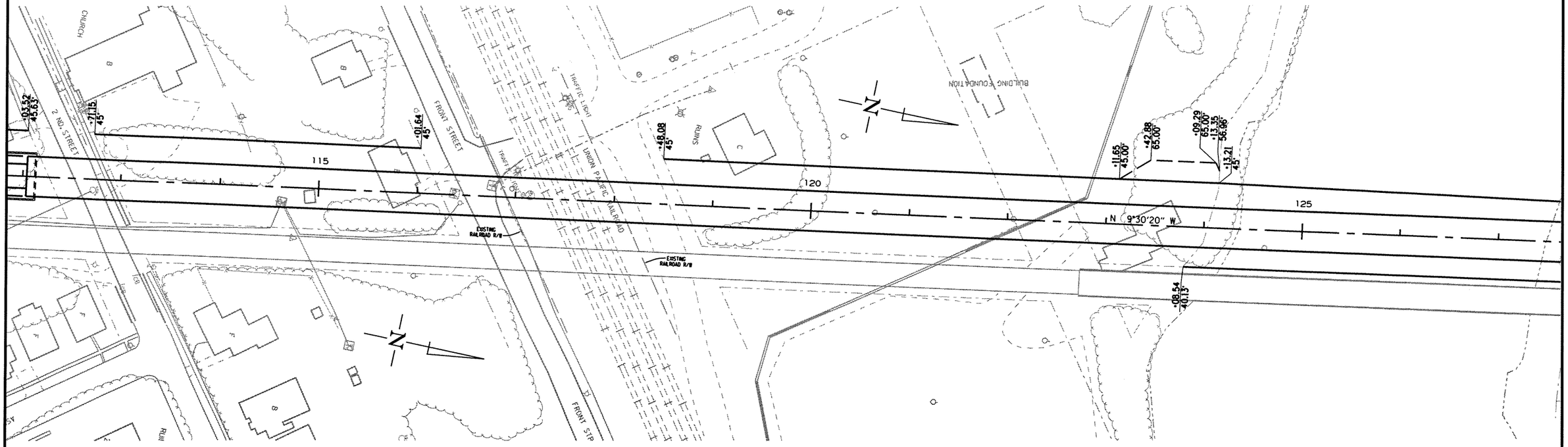

• MAINTAIN ALL EROSION CONTROL DEVICES UNTIL THE END OF THE JOB, UNLESS OTHERWISE SPECIFIED.

TEMPORARY EROSION CONTROL DETAILS
STAGE I

9/12/2013

R005836.DGN

DATE REVISED	DATE FILMED	DATE REVISED	DATE FILMED	FED.RD. DIST.NO.	STATE	FED.AID PROJ.NO.	SHEET NO.	TOTAL SHEETS
				6	ARK.			
				JOB NO.		005836	19	230

(2) TEMPORARY EROSION CONTROL DETAILS

STATE OF ARKANSAS
REGISTERED PROFESSIONAL ENGINEER
No. 11425
TRINITY D. SMITH
9-17-13

STA. 138+26.09 - STA. 140+50
INSTALL E-11 = 224 LIN. FT.

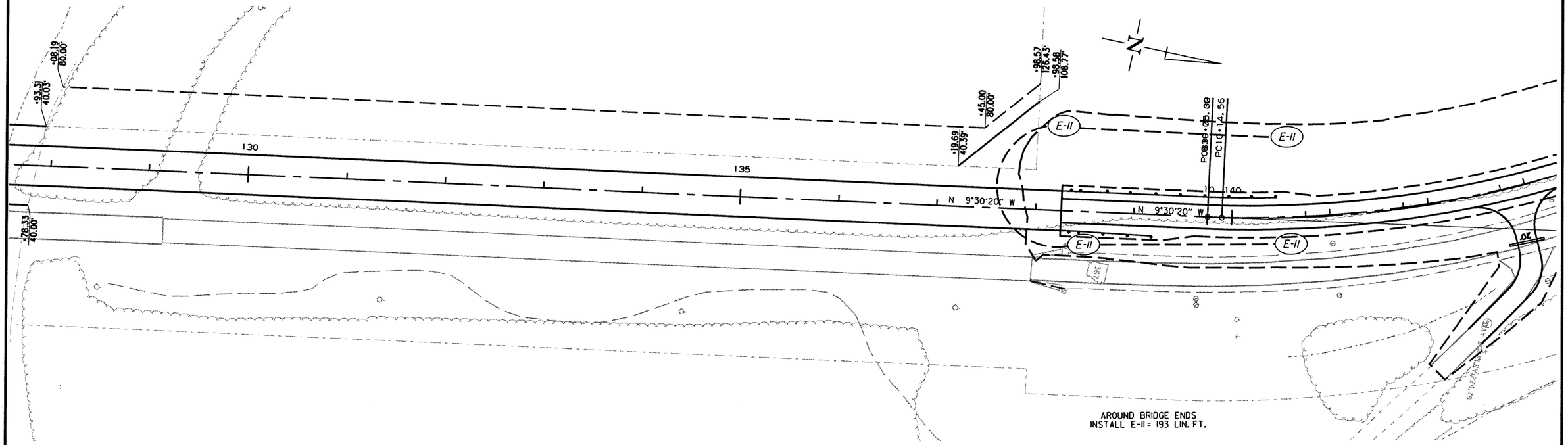

STA. 138+26.09 - STA. 140+50
INSTALL E-11 = 224 LIN. FT.

LEGEND

DATE OF REVISION	REVISION

(E-5) = SAND BAG DITCH CHECK

(E-6) = ROCK DITCH CHECK

(E-7) = DROP INLET SILT FENCE

(E-11) = SILT FENCE

• MAINTAIN ALL EROSION CONTROL DEVICES UNTIL THE END OF THE JOB, UNLESS OTHERWISE SPECIFIED.

TEMPORARY EROSION CONTROL DETAILS STAGE I

9/12/2013

R005836.DGN

DATE REVISED	DATE FILMED	DATE REVISED	DATE FILMED	FED.RD. DIST.NO.	STATE	FED.AID PROJ.NO.	SHEET NO.	TOTAL SHEETS
				6	ARK.			
				JOB NO.		005836	20	230

(2) TEMPORARY EROSION CONTROL DETAILS

LEGEND

DATE OF REVISION	REVISION

(E-5) = SAND BAG DITCH CHECK

(E-6) = ROCK DITCH CHECK

(E-7) = DROP INLET SILT FENCE

(E-11) = SILT FENCE

STATE OF ARKANSAS
REGISTERED PROFESSIONAL ENGINEER
No. 11425
TRINITY D. SMITH
9-20-13

STA. 204+56 - STA. 206+30
INSTALL E-11 = 174 LIN. FT.

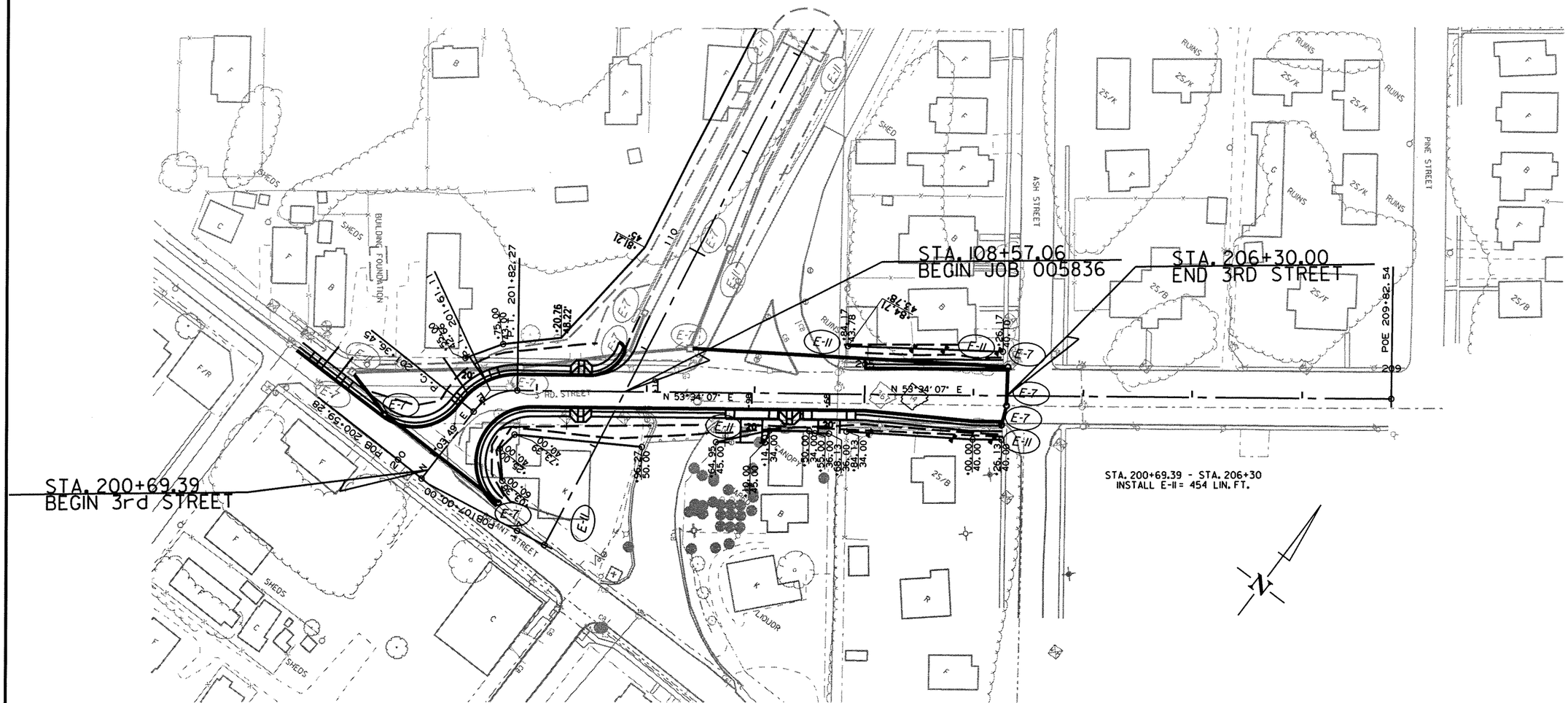

STA. 200+69.39 - STA. 206+30
INSTALL E-11 = 454 LIN. FT.

• MAINTAIN ALL EROSION CONTROL DEVICES UNTIL THE END OF THE JOB, UNLESS OTHERWISE SPECIFIED.

TEMPORARY EROSION CONTROL DETAILS
STAGE 2

9/20/2013

R005836.DGN

DATE REVISED	DATE FILMED	DATE REVISED	DATE FILMED	FED.RD. DIST.NO.	STATE	FED.AID PROJ.NO.	SHEET NO.	TOTAL SHEETS
				6	ARK.			
				JOB NO.		005836	21	230

(2) TEMPORARY EROSION CONTROL DETAILS

STATE OF ARKANSAS
REGISTERED PROFESSIONAL ENGINEER
No. 11425
TRINITY D. SMITH
9-17-13

LEGEND

DATE OF REVISION	REVISION

(E-5) = SAND BAG DITCH CHECK

(E-6) = ROCK DITCH CHECK

(E-7) = DROP INLET SILT FENCE

(E-11) = SILT FENCE

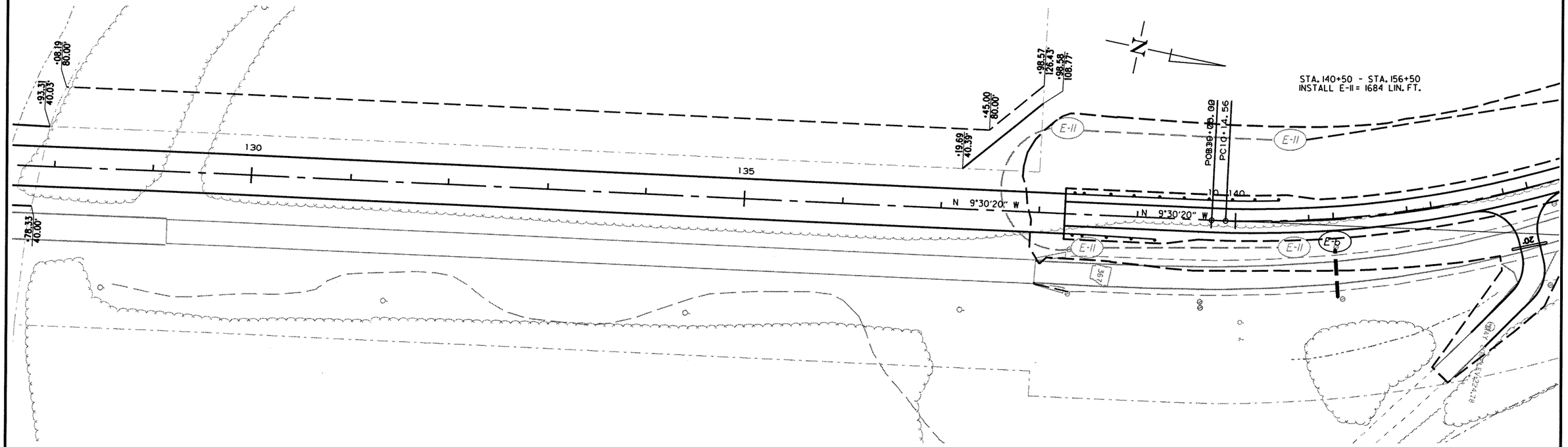

TEMPORARY EROSION CONTROL DETAILS
STAGE 2

9/12/2013

R005836.DGN

DATE REVISED	DATE FILMED	DATE REVISED	DATE FILMED

FED.RD. DIST.NO.	STATE	FED.AID PROJ.NO.	SHEET NO.	TOTAL SHEETS
6	ARK.			
JOB NO.		005836	22	230

(2) TEMPORARY EROSION CONTROL DETAILS

DATE OF REVISION	REVISION

LEGEND

- (E-5) = SAND BAG DITCH CHECK
- (E-6) = ROCK DITCH CHECK
- (E-7) = DROP INLET SILT FENCE
- (E-11) = SILT FENCE

STATE OF ARKANSAS
REGISTERED PROFESSIONAL ENGINEER
No. 11425
TRINITY D. SMITH
9-17-13

STA. 156+50
END JOB 005836

STA. 140+50 - STA. 156+50
INSTALL E-11 = 1684 LIN. FT.

STA. 150+00 - STA. 156+50
INSTALL E-11 = 750 LIN. FT.

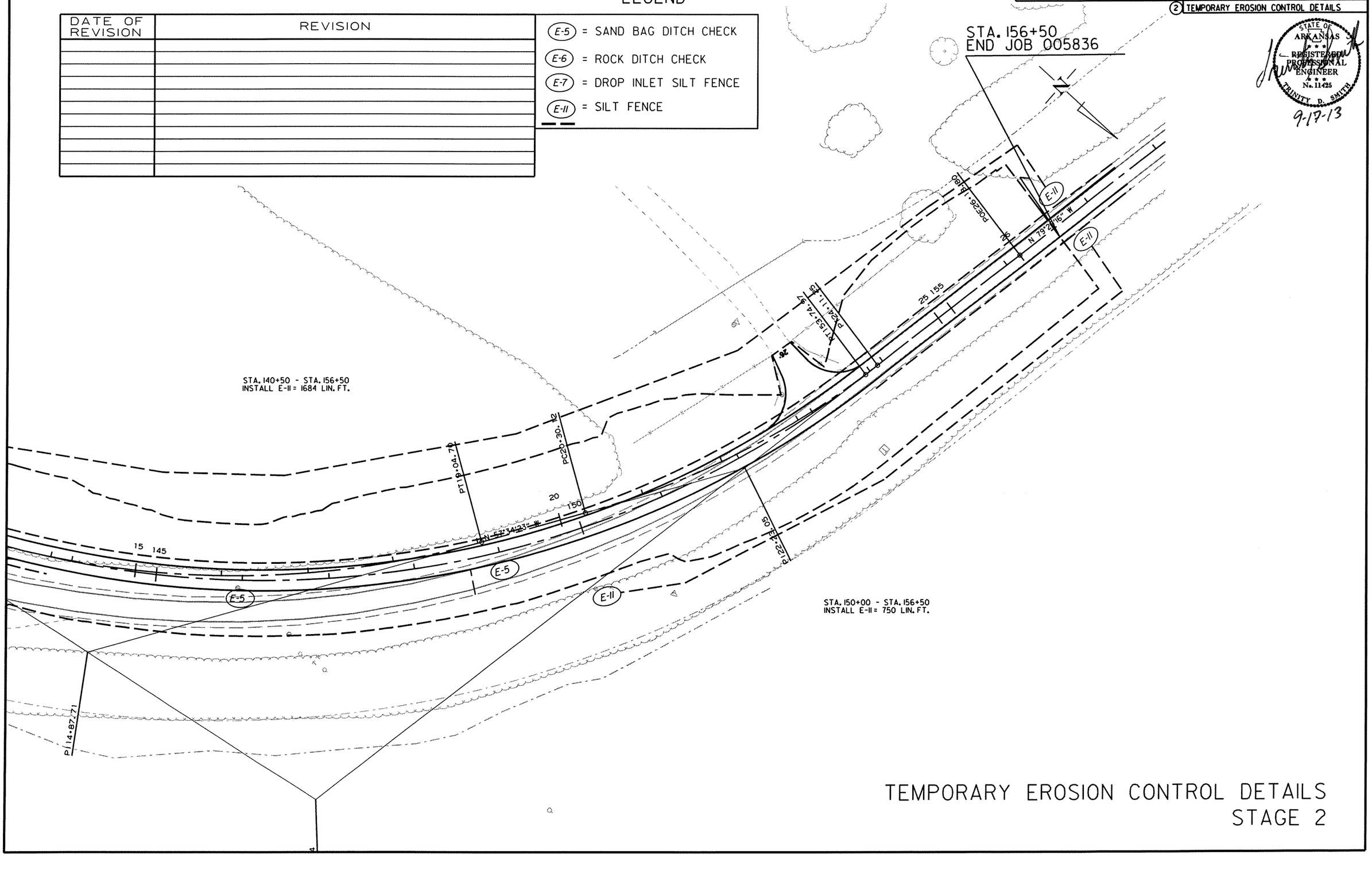

TEMPORARY EROSION CONTROL DETAILS
STAGE 2

9/12/2013

R005836.DGN

DATE REVISED	DATE FILMED	DATE REVISED	DATE FILMED	FED.RD. DIST.NO.	STATE	FED.AID PROJ.NO.	SHEET NO.	TOTAL SHEETS
				6	ARK.			
				JOB NO.	005836		23	230

(2) TEMPORARY EROSION CONTROL DETAILS

LEGEND

DATE OF REVISION	REVISION

(E-5) = SAND BAG DITCH CHECK

(E-6) = ROCK DITCH CHECK

(E-7) = DROP INLET SILT FENCE

(E-11) = SILT FENCE

STATE OF ARKANSAS
REGISTERED PROFESSIONAL ENGINEER
No. 11425
TRINITY D. SMITH
9-20-13

STA. 204+00 - STA. 204+62
INSTALL E-11= 135 LIN. FT.

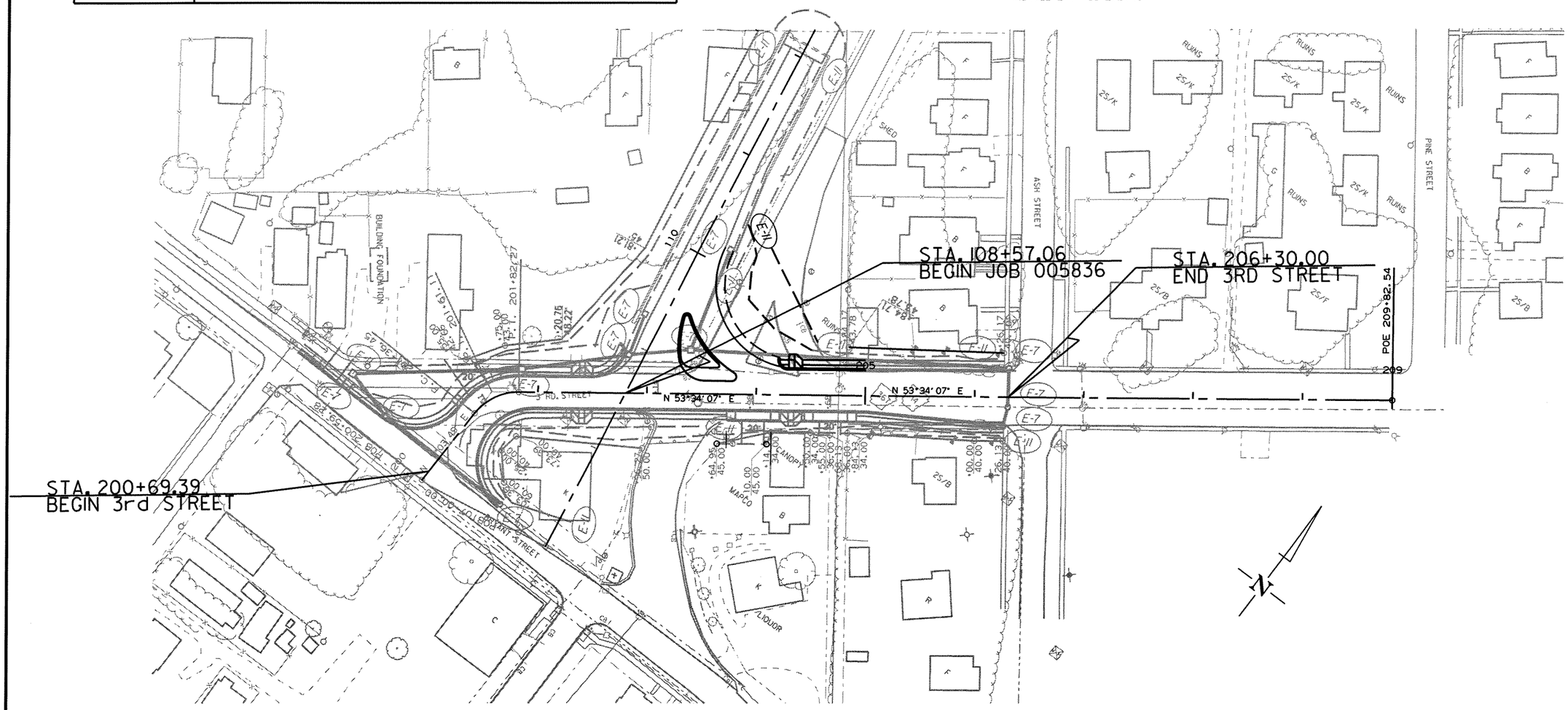

• MAINTAIN ALL EROSION CONTROL DEVICES UNTIL THE END OF THE JOB, UNLESS OTHERWISE SPECIFIED.

TEMPORARY EROSION CONTROL DETAILS
STAGE 3

9/20/2013

R005836.DGN

DATE REVISED	DATE FILMED	DATE REVISED	DATE FILMED

FED.RD. DIST.NO.	STATE	FED.AID PROJ.NO.	SHEET NO.	TOTAL SHEETS
6	ARK.			
JOB NO.		005836	24	230

(2) TEMPORARY EROSION CONTROL DETAILS

STATE OF ARKANSAS
REGISTERED PROFESSIONAL ENGINEER
No. 11425
TRINITY D. SMITH
9-17-13

LEGEND

DATE OF REVISION	REVISION

(E-5) = SAND BAG DITCH CHECK

(E-6) = ROCK DITCH CHECK

(E-7) = DROP INLET SILT FENCE

(E-11) = SILT FENCE

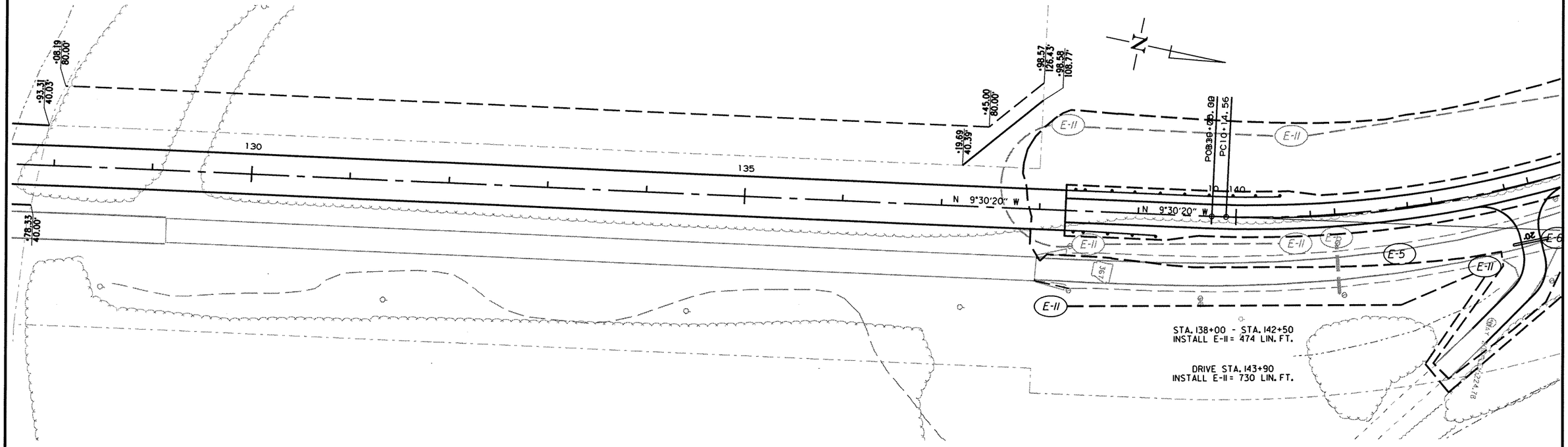

• MAINTAIN ALL EROSION CONTROL DEVICES UNTIL THE END OF THE JOB, UNLESS OTHERWISE SPECIFIED.

TEMPORARY EROSION CONTROL DETAILS
STAGE 3

9/12/2013

R005836.DGN

DATE REVISED	DATE FILMED	DATE REVISED	DATE FILMED	FED.RD. DIST.NO.	STATE	FED.AID PROJ.NO.	SHEET NO.	TOTAL SHEETS
				6	ARK.			
				JOB NO.		005836	25	230

(2) TEMPORARY EROSION CONTROL DETAILS

STATE OF ARKANSAS REGISTERED PROFESSIONAL ENGINEER No. 11425 TRINITY D. SMITH

9-17-13

LEGEND

DATE OF REVISION	REVISION

(E-5) = SAND BAG DITCH CHECK

(E-6) = ROCK DITCH CHECK

(E-7) = DROP INLET SILT FENCE

(E-11) = SILT FENCE

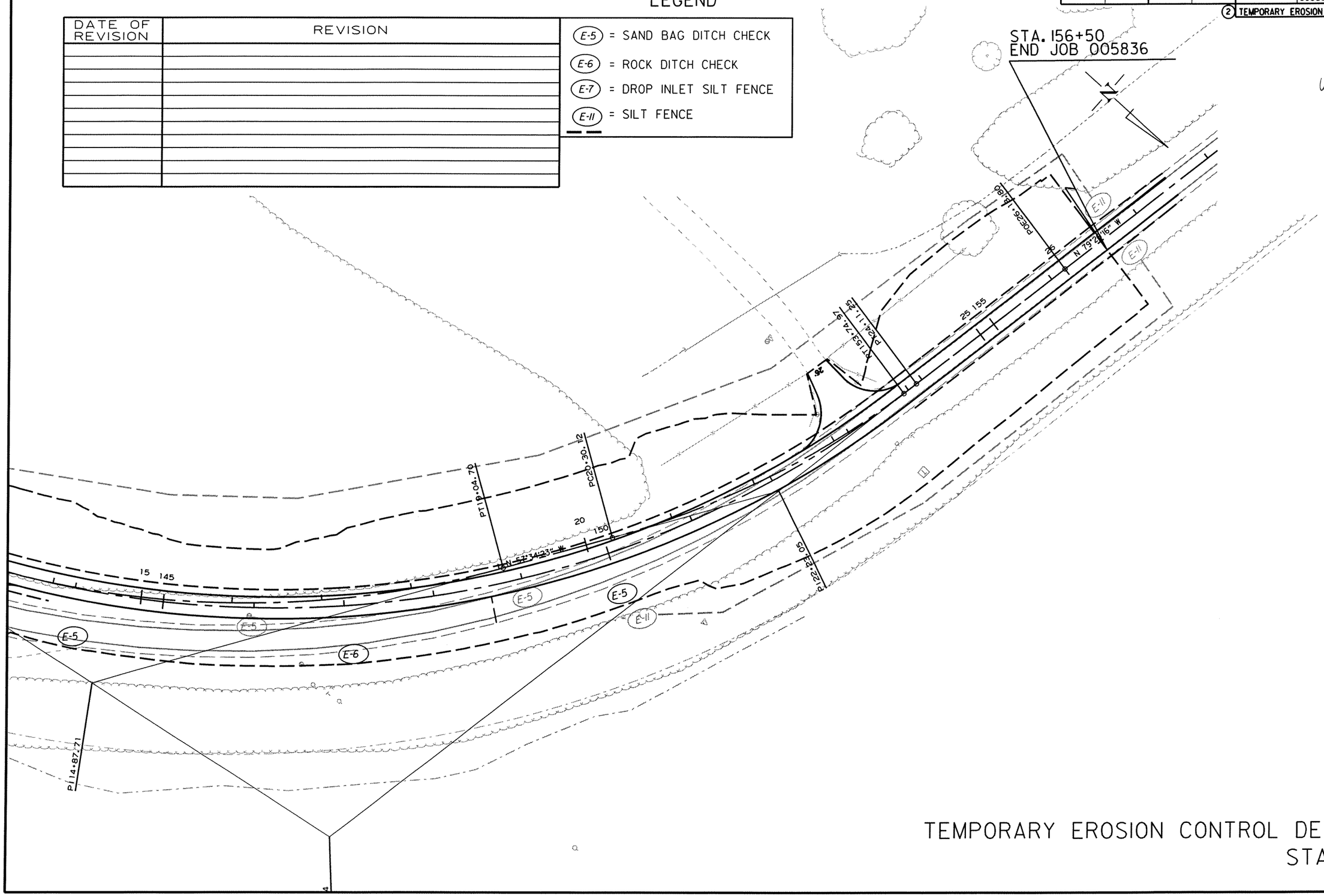

TEMPORARY EROSION CONTROL DETAILS
STAGE 3

9/12/2013

R005836.DGN

ADVANCE SIGNS AT BEGINNING AND END OF JOB
ALL STAGES

DATE REVISED	DATE FILMED	DATE REVISED	DATE FILMED	FED.RD. DIST.NO.	STATE	FED.AID PROJ.NO.	SHEET NO.	TOTAL SHEETS
				6	ARK.			
				JOB NO.		005836	26	230

(2) MAINTENANCE OF TRAFFIC

NOTE:
RETAIN THESE ADVANCE SIGNS THROUGH ALL STAGES

STATE OF ARKANSAS
REGISTERED PROFESSIONAL ENGINEER
No. 11425
TRINITY D. SMITH
9-20-13

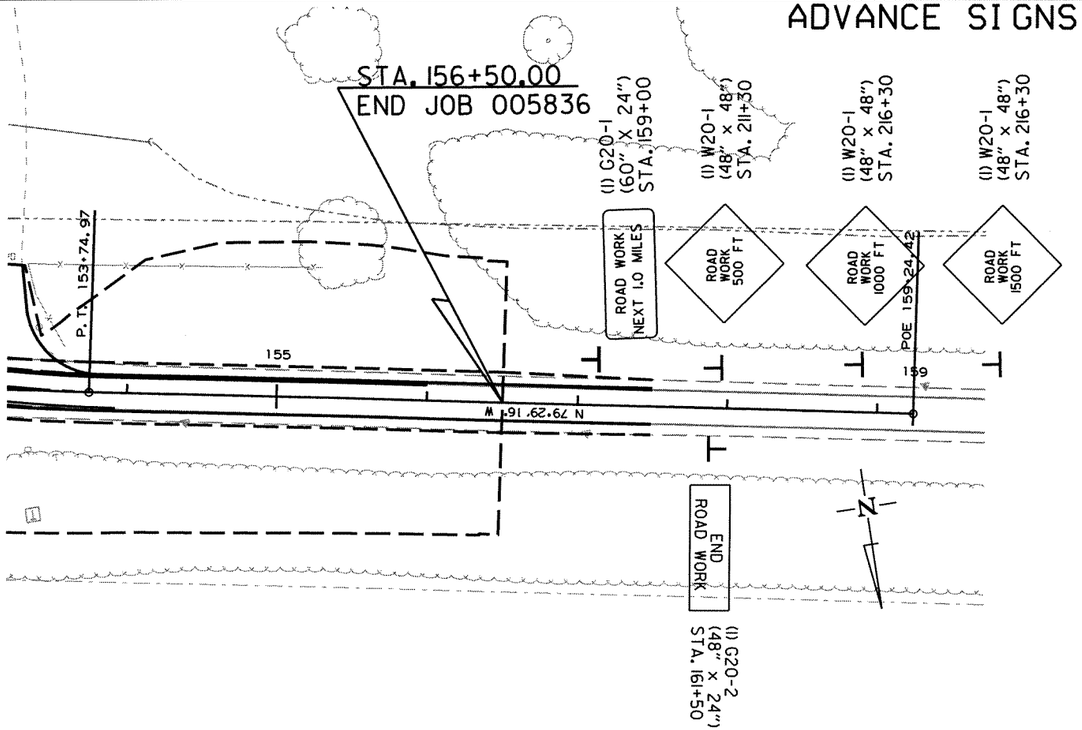

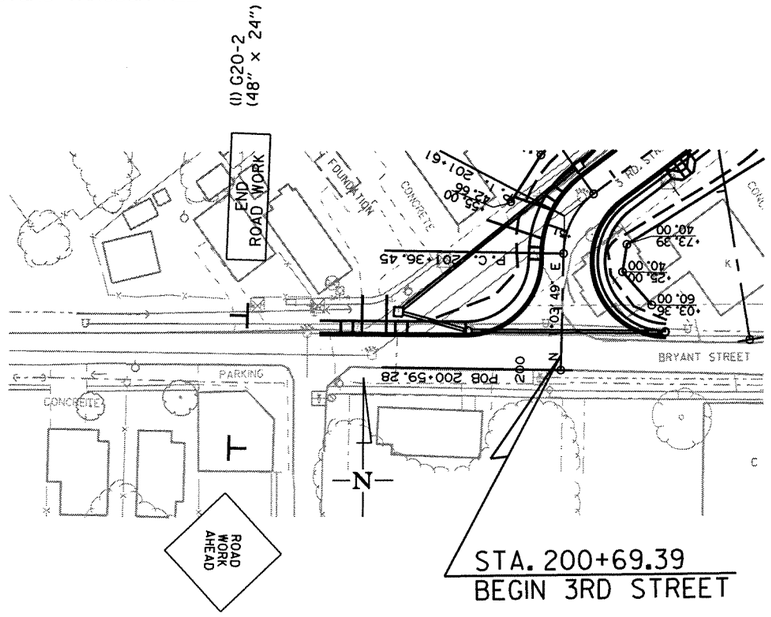

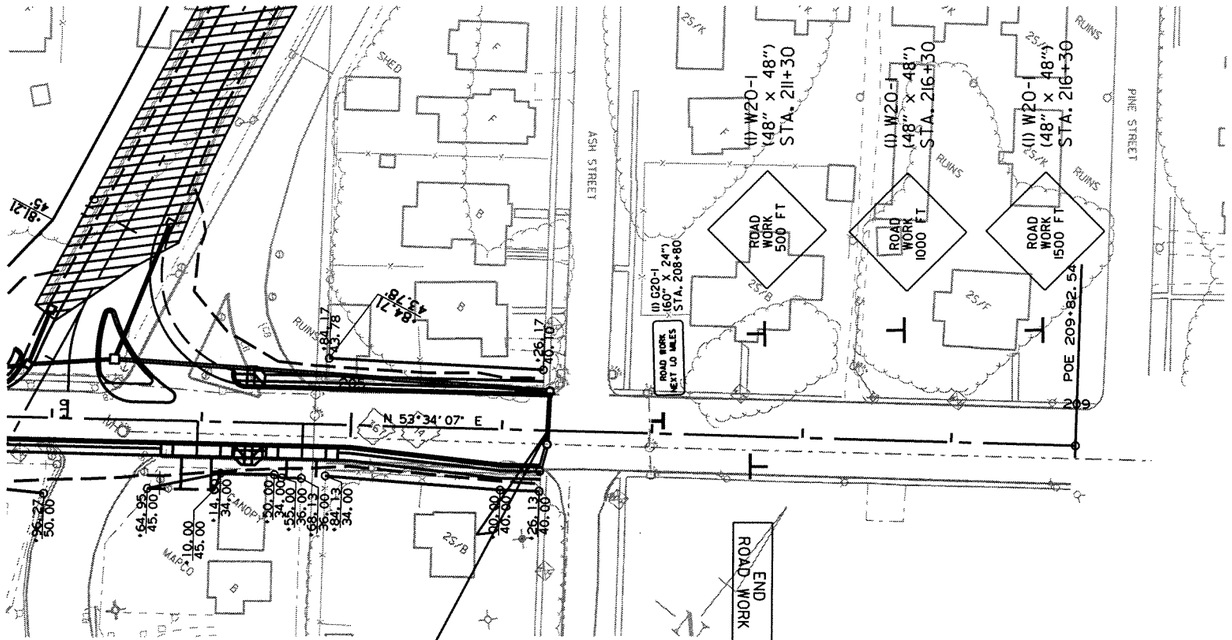

SPECIAL SIGN
TO BE PLACED AS DIRECTED IN SP "DETAILS FOR BOATER SAFETY ON THE WHITE RIVER"
(4) (60"x36") DETAIL B
(2) (60"x36") DETAIL A
TO BE PLACED AS DIRECTED BY THE ENGINEER

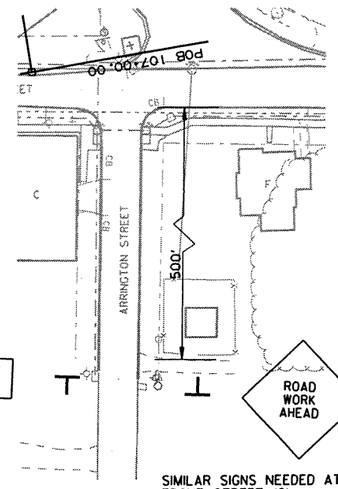

DO NOT PASS — (2) R4-1 (24" X 30")

SHOULDER CLOSED — (2) RSP-1 (48" X 30")

SHOULDER DROP-OFF — (4) W8-9A (36" X 36")

(1) G20-2 (48" x 24") — END ROAD WORK

(1) W20-1 (48" x 48") — ROAD WORK AHEAD

SIMILAR SIGNS NEEDED AT
FRONT STREET (2)
2ND STREET (2)
ASH STREET (2)
BRYANT STREET (1)
REMMEL AVENUE (2)
3RD STREET
JACKSON STREET
MILTON STREET

RSP-1, R4-1 & W8-9A TO BE USED IF AND WHERE DIRECTED BY THE ENGINEER

MAINTENANCE OF TRAFFIC
ADVANCE SIGNS AT JOB ENDS

9/20/2013

R005836.DGN

DATE REVISED	DATE FILMED	DATE REVISED	DATE FILMED	FED.RD. DIST.NO.	STATE	FED.AID PROJ.NO.	SHEET NO.	TOTAL SHEETS
				6	ARK.			
				JOB NO.		005836	27	230

2 MAINTENANCE OF TRAFFIC

STATE OF ARKANSAS
REGISTERED PROFESSIONAL ENGINEER
No. 11425
TRINITY D. SMITH
9-20-13

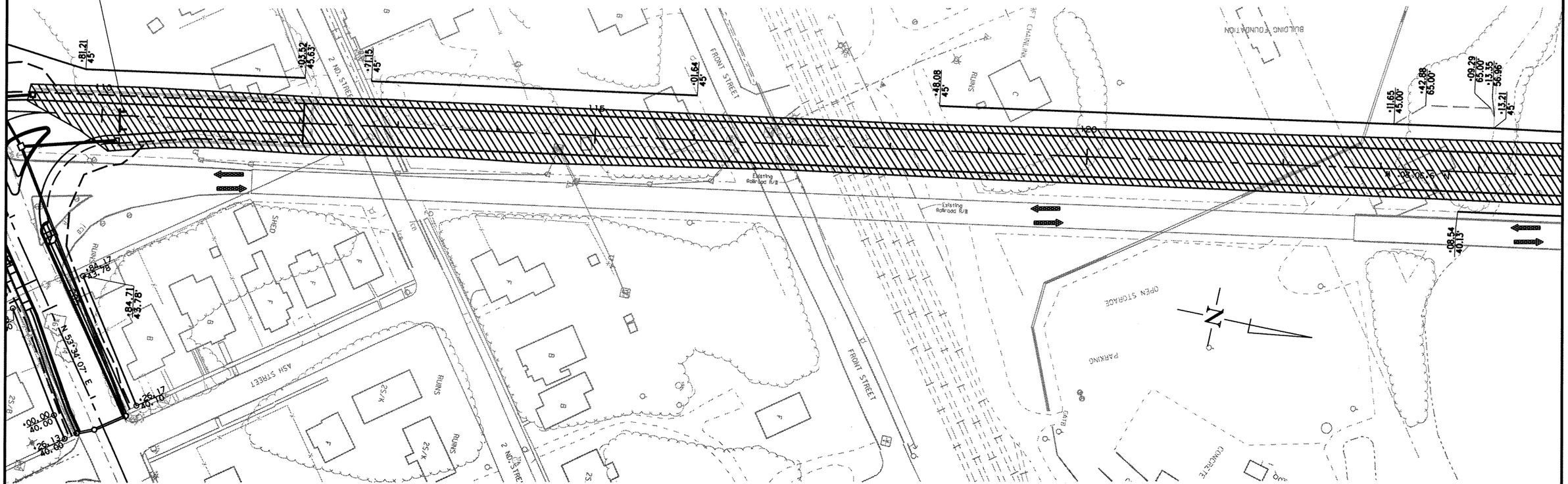

SEQUENCE OF OPERATIONS

STAGE I
BEGIN CONSTRUCTION OF PROPOSED BRIDGE AND APPROACHES.
KEEP TRAFFIC ON EXISTING ALIGNMENT AND CONSTRUCT AS MUCH OF PROPOSED ROAD THAT DOESN'T AFFECT EXISTING TRAFFIC.
STA. 108+57.06 - STA. 112+05.91 AND STA. 138+26.09 - STA. 140+50.
CONSTRUCT TYPE ST DROP INLET @ STA. 109+29 AND STA. 110+16.
CONSTRUCT JUNCTION BOX @ STA. 200+94, STA. 201+85, AND STA. 203+40.

MAINTENANCE OF TRAFFIC STAGE I

9/20/2013

R005836.DGN

DATE REVISED	DATE FILMED	DATE REVISED	DATE FILMED

FED.RD. DIST.NO.	STATE	FED.AID PROJ.NO.	SHEET NO.	TOTAL SHEETS
6	ARK.			
JOB NO.		005836	28	230

(2) MAINTENANCE OF TRAFFIC

STATE OF ARKANSAS
REGISTERED PROFESSIONAL ENGINEER
No. 11425
TRINITY D. SMITH
9-17-13

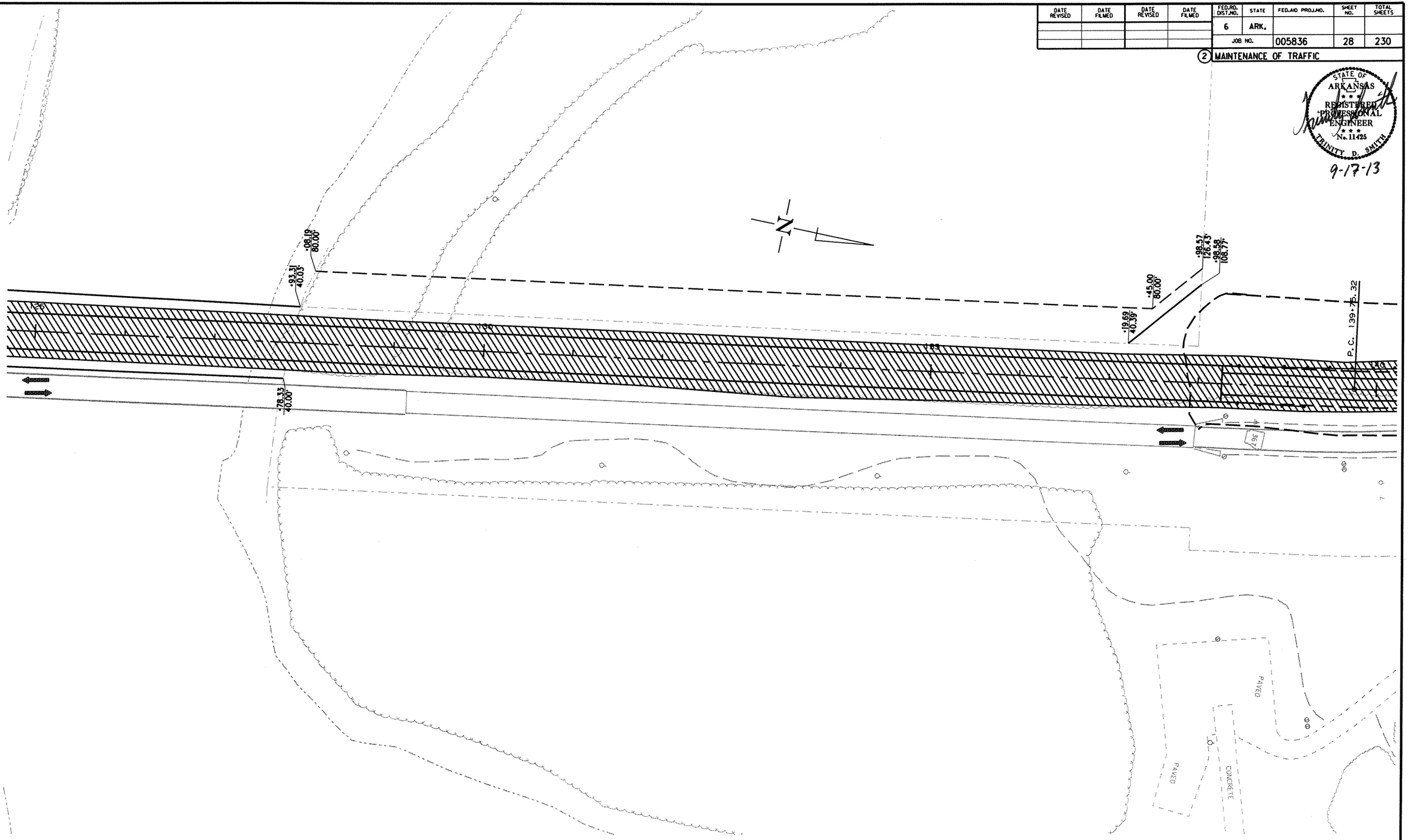

SEQUENCE OF OPERATIONS

STAGE I
BEGIN CONSTRUCTION OF PROPOSED BRIDGE AND APPROACHES.
KEEP TRAFFIC ON EXISTING ALIGNMENT AND CONSTRUCT AS MUCH OF PROPOSED ROAD THAT DOESN'T AFFECT EXISTING TRAFFIC.
STA. 108+57.06 - STA. 112+05.91 AND STA. 138+26.09 - STA. 140+50.
CONSTRUCT TYPE ST DROP INLET @ STA. 109+29 AND STA. 110+16.
CONSTRUCT JUNCTION BOX @ STA. 200+94, STA. 201+85, AND STA. 203+40.

MAINTENANCE OF TRAFFIC STAGE I

9/12/2013

R005836.DGN

DATE REVISED	DATE FILMED	DATE REVISED	DATE FILMED	FED.RD. DIST.NO.	STATE	FED.AID PROJ.NO.	SHEET NO.	TOTAL SHEETS
				6	ARK.			
				JOB NO.		005836	29	230

(2) MAINTENANCE OF TRAFFIC

STATE OF ARKANSAS
REGISTERED PROFESSIONAL ENGINEER
No. 11425
TRINITY D. SMITH
9-17-13

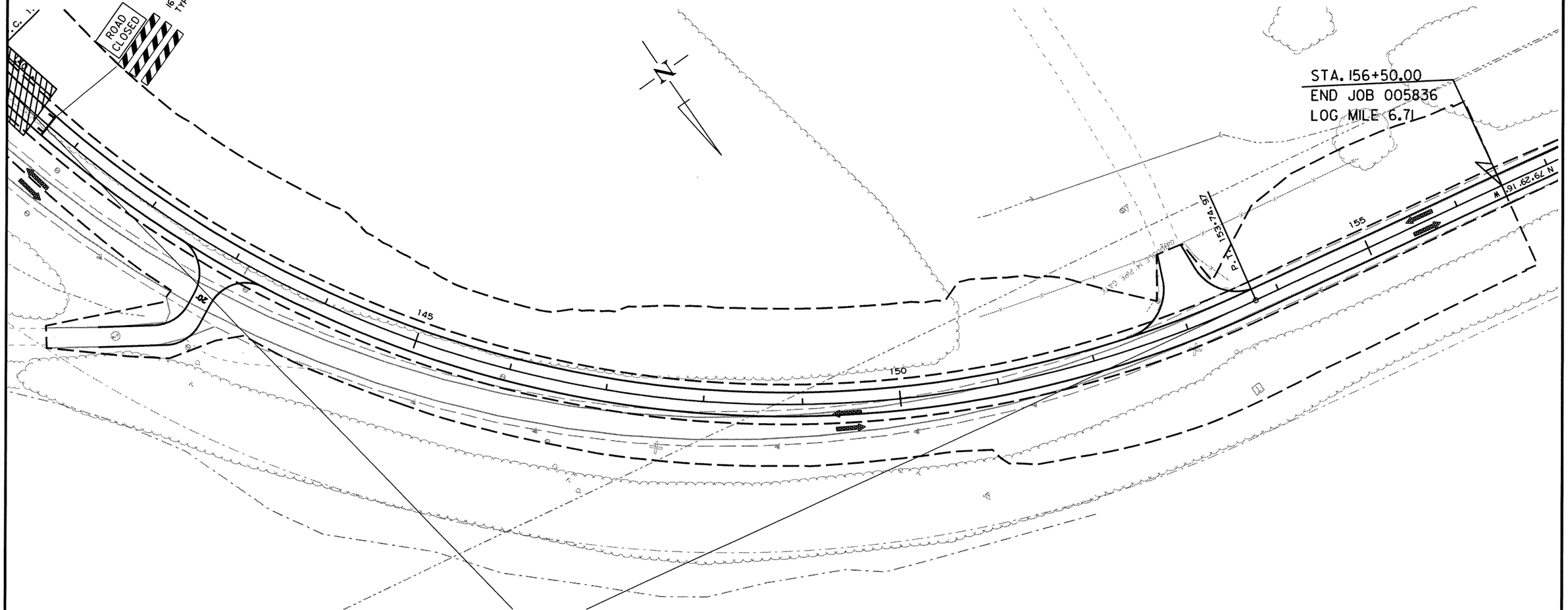

SEQUENCE OF OPERATIONS

STAGE I
BEGIN CONSTRUCTION OF PROPOSED BRIDGE AND APPROACHES
KEEP TRAFFIC ON EXISTING ALIGNMENT AND CONSTRUCT AS MUCH OF PROPOSED ROAD THAT DOESN'T AFFECT EXISTING TRAFFIC
STA. 108+57.06 - STA. 112+05.91 AND STA. 138+26.09 - STA. 140+50
CONSTRUCT TYPE ST DROP INLET @ STA. 109+29 AND STA. 110+16
CONSTRUCT JUNCTION BOX @ STA. 200+94, STA. 201+85, AND STA. 203+40

MAINTENANCE OF TRAFFIC STAGE I

9/12/2013

R005836.DGN

DATE REVISED	DATE FILMED	DATE REVISED	DATE FILMED	FED.RD. DIST.NO.	STATE	FED.AID PROJ.NO.	SHEET NO.	TOTAL SHEETS
				6	ARK.			
				JOB NO.		005836	30	230

(2) MAINTENANCE OF TRAFFIC

STATE OF ARKANSAS
REGISTERED PROFESSIONAL ENGINEER
No. 11425
TRINITY D. SMITH
9-20-13

STA. 206+30.00
END 3RD STREET

STA. 108+57.06
BEGIN JOB 005836

STA. 200+69.39
BEGIN 3RD STREET

FIRST BAPTIST CHURCH

(I) RII-2 (48" X 30")
ROAD CLOSED
16' BARR. TYP. III RT.

4 TRAFFIC DRUMS ADDITIONAL AT DRIVE TURNOUT

4 TRAFFIC DRUMS ADDITIONAL TO CLOSE ROAD

4 TRAFFIC DRUMS ADDITIONAL AT DRIVE TURNOUT

4 TRAFFIC DRUMS ADDITIONAL AT DRIVE TURNOUT

TRAFFIC DRUMS ADDITIONAL TO CLOSE ROAD

ROAD CLOSED TO THRU TRAFFIC (I) RII-4 (60" X 30")

ROAD CLOSED (I) RII-2 (48" X 30") 8' BARR. TYP. III RT. 8' BARR. TYP. III LT.

ROAD CLOSED (I) RII-2 (48" X 30") 8' BARR. TYP. III RT. 8' BARR. TYP. III LT.

ROAD CLOSED (I) RII-2 (48" X 30") 16' BARR. TYP. III RT.

2ND STREET · ASH STREET · BRYANT STREET · REMMEL AVENUE · ARRINGTON STREET · CLAY STREET · 3RD STREET

(9)
ARRINGTON ST. (I) D3 (36"x12")
DETOUR (I) M4-8 (24" X 12")
(I) M5-IR (21" X 15")

(14)
14 (I) MI-5 (24" X 24")
367 (I) MI-5 (30" X 24")
DETOUR (I) M4-8 (24" X 12")
(I) M6-3 (21" X 15")

(1) (7)
14 (I) MI-5 (24" X 24")
367 (I) MI-5 (30" X 24")
3RD ST. (I) D3 (36"x12")
DETOUR AHEAD (I) W20-2 (48" X 48")

(2) (3) (4) (6)
14 (I) MI-5 (24" X 24")
367 (I) MI-5 (30" X 24")
3RD ST. (I) D3 (36"x12")
DETOUR (I) M4-8 (24" X 12")
(I) M5-IR (21" X 15")

(12)
ARRINGTON ST. (I) D3 (36"x12")
3RD ST. (I) D3 (36"x12")
DETOUR (I) M4-8 (24" X 12")
(I) M6-3 (21" X 15")

(5)
3RD ST. (I) D3 (36"x12")
DETOUR (I) M4-8 (24" X 12")
(I) M5-IL (21" X 15")

(11) (13)
ARRINGTON ST. (I) D3 (36"x12")
3RD ST. (I) D3 (36"x12")
DETOUR AHEAD (I) W20-2 (48" X 48")

(8)
ARRINGTON ST. (I) D3 (36"x12")
3RD ST. (I) D3 (36"x12")
DETOUR (I) M4-8 (24" X 12")
(I) M5-IL (21" X 15")

(10)
ARRINGTON ST. (I) D3 (36"x12")
3RD ST. (I) D3 (36"x12")
DETOUR (I) M4-8 (24" X 12")
(I) M5-IR (21" X 15")

SEQUENCE OF OPERATIONS

STAGE 2

KEEP TRAFFIC ON EXISTING
CONSTRUCT LEFT OF EXISTING STA. 140+50 - STA. 156+50
CONSTRUCT TEMPORARY WIDENING FOR STAGE 3 TRAFFIC
INSTALL TEMPORARY PIPE AT STA. 141+00
CONSTRUCT CURB AND GUTTER ON 3RD STREET

MAINTENANCE OF TRAFFIC STAGE 2

9/20/2013

R005836.DGN

DATE REVISED	DATE FILMED	DATE REVISED	DATE FILMED	FED.RD. DIST.NO.	STATE	FED.AID PROJ.NO.	SHEET NO.	TOTAL SHEETS
				6	ARK.			
				JOB NO.		005836	31	230

(2) MAINTENANCE OF TRAFFIC

STATE OF ARKANSAS
REGISTERED PROFESSIONAL ENGINEER
No. 11425
TRINITY D. SMITH
9-17-13

CONSTRUCTION PAVEMENT MARKINGS STA. 151+00.00 - STA. 156+00.00

LT. & RT. EDGE LINES, AND DBL. CENTERLINE = 2000 LIN.FT. 4" WHITE

NOTE: REPLACE VERTICAL PANELS WITH TRAFFIC DRUMS WHEN THE VERTICAL DIFFERENTIAL IS 4" OR LESS.

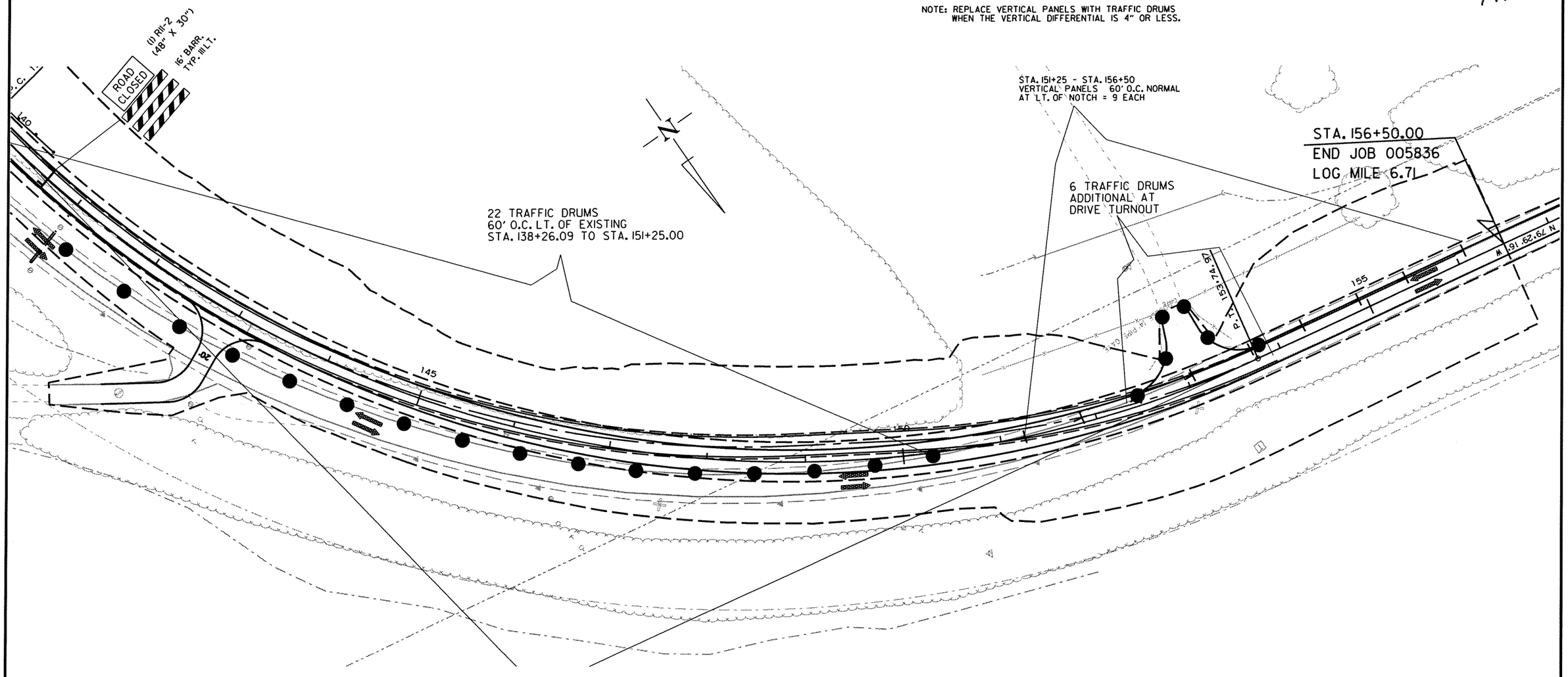

SEQUENCE OF OPERATIONS

STAGE 2

KEEP TRAFFIC ON EXISTING
CONSTRUCT LEFT OF EXISTING STA. 140+50 - STA. 156+50
CONSTRUCT TEMPORARY WIDENING FOR STAGE 3 TRAFFIC
INSTALL TEMPORARY PIPE AT STA. 141+00
CONSTRUCT CURB AND GUTTER ON 3RD STREET

MAINTENANCE OF TRAFFIC STAGE 2

R005836.DGN 9/12/2013

DATE REVISED	DATE FILMED	DATE REVISED	DATE FILMED	FED.RD. DIST.NO.	STATE	FED.AID PROJ.NO.	SHEET NO.	TOTAL SHEETS
				6	ARK.			
				JOB NO.		005836	32	230

(2) MAINTENANCE OF TRAFFIC

STATE OF ARKANSAS
REGISTERED PROFESSIONAL ENGINEER
No. 11425
TRINITY D. SMITH
9-20-13

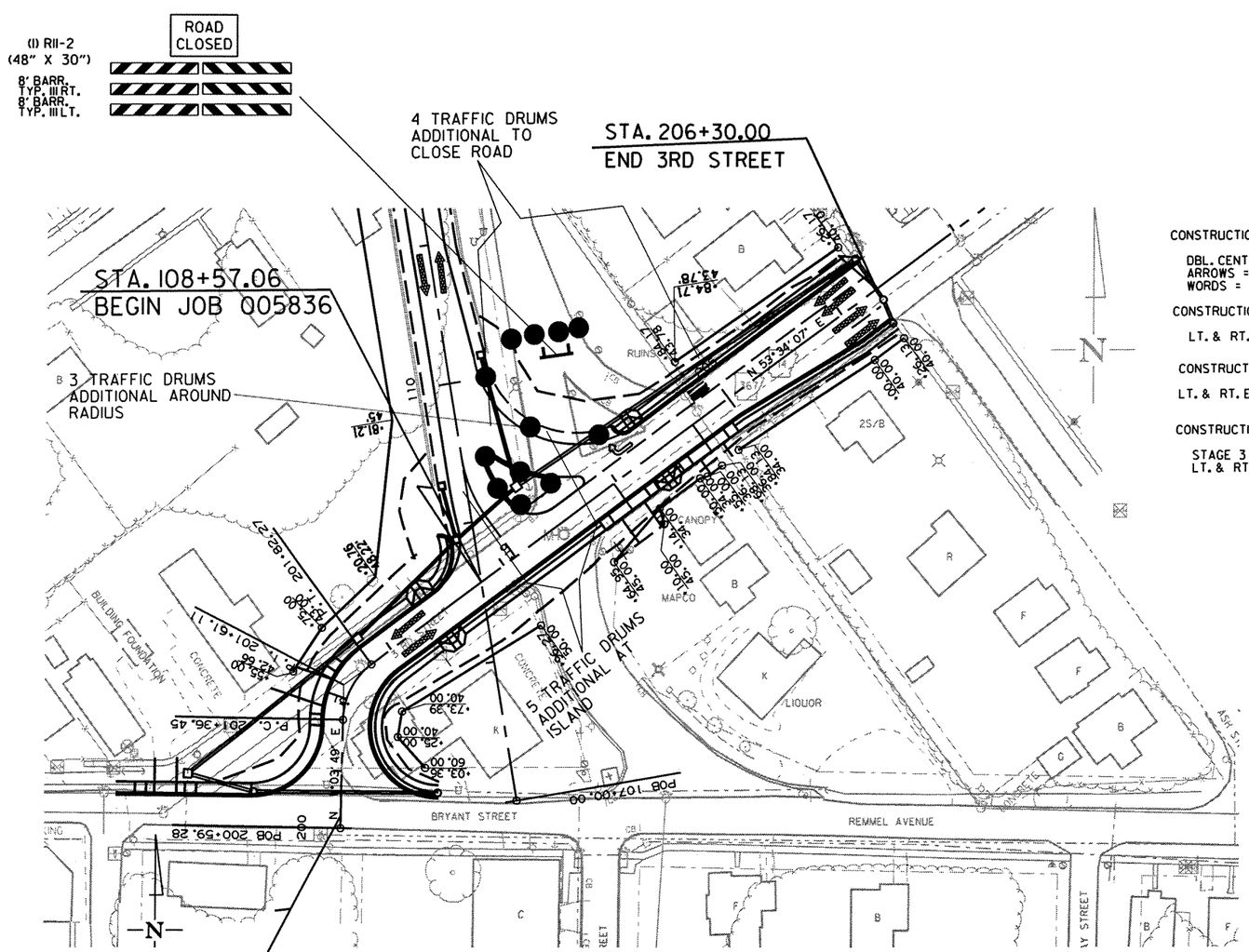

CONSTRUCTION PAVEMENT MARKINGS 3RD STREET STA. 200+81.19 - 206+30

DBL. CENTERLINE AND LANE LINE STA. 200+81.19 - STA. 205+00 = 1176 LIN.FT.
ARROWS = 1EACH
WORDS = 1EACH

CONSTRUCTION PAVEMENT MARKINGS STA. 108+57.06 - STA. 112+05.91

LT. & RT. EDGE LINES, DBL. CENTERLINE AND ISLAND OUTLINE = 1461 LIN.FT.

CONSTRUCTION PAVEMENT MARKINGS ON BRIDGE DECK STA. 112+05.91 - STA. 138+26.09

LT. & RT. EDGE LINES, DBL. CENTERLINE = 10482 LIN.FT.

CONSTRUCTION PAVEMENT MARKINGS STA. 138+26.09 - STA. 156+50

STAGE 3 ALIGNMENT
LT. & RT. EDGE LINES + DBL. CENTERLINE = 7296 LIN.FT.

9/20/2013

R005836.DGN

SEQUENCE OF OPERATIONS

STAGE 3
SHIFT TRAFFIC TO STAGE 3 ALIGNMENT.
BUILD REMAINING PROPOSED PAVEMENT ON 3RD STREET AND HWY. 367.
BUILD ISLAND AT STA. 203+40.
REMOVE TEMPORARY PIPE AT STA. 141+00.
PLACE FINAL PAVEMENT MARKING ON BRIDGE.

MAINTENANCE OF TRAFFIC
STAGE 3

DATE REVISED	DATE FILMED	DATE REVISED	DATE FILMED	FED.RD. DIST.NO.	STATE	FED.AID PROJ.NO.	SHEET NO.	TOTAL SHEETS
				6	ARK.			
				JOB NO.		005836	33	230

(2) MAINTENANCE OF TRAFFIC

CONSTRUCTION PAVEMENT MARKINGS 3RD STREET STA. 200+81.19 - 206+30

DBL. CENTERLINE AND LANE LINE STA. 200+81.19 - STA. 205+00 = 1176 LIN.FT.
ARROWS = 1 EACH
WORDS = 1 EACH

CONSTRUCTION PAVEMENT MARKINGS STA. 108+57.06 - STA. 112+05.91

LT. & RT. EDGE LINES, DBL. CENTERLINE AND ISLAND OUTLINE = 1461 LIN.FT.

CONSTRUCTION PAVEMENT MARKINGS ON BRIDGE DECK STA. 112+05.91 - STA. 138+26.09

LT. & RT. EDGE LINES, DBL. CENTERLINE = 10482 LIN.FT.

CONSTRUCTION PAVEMENT MARKINGS STA. 138+26.09 - STA. 156+50

STAGE 3 ALIGNMENT
LT. & RT. EDGE LINES + DBL. CENTERLINE = 7296 LIN.FT.

STATE OF ARKANSAS
REGISTERED PROFESSIONAL ENGINEER
No. 11425
TRINITY D. SMITH
9-17-13

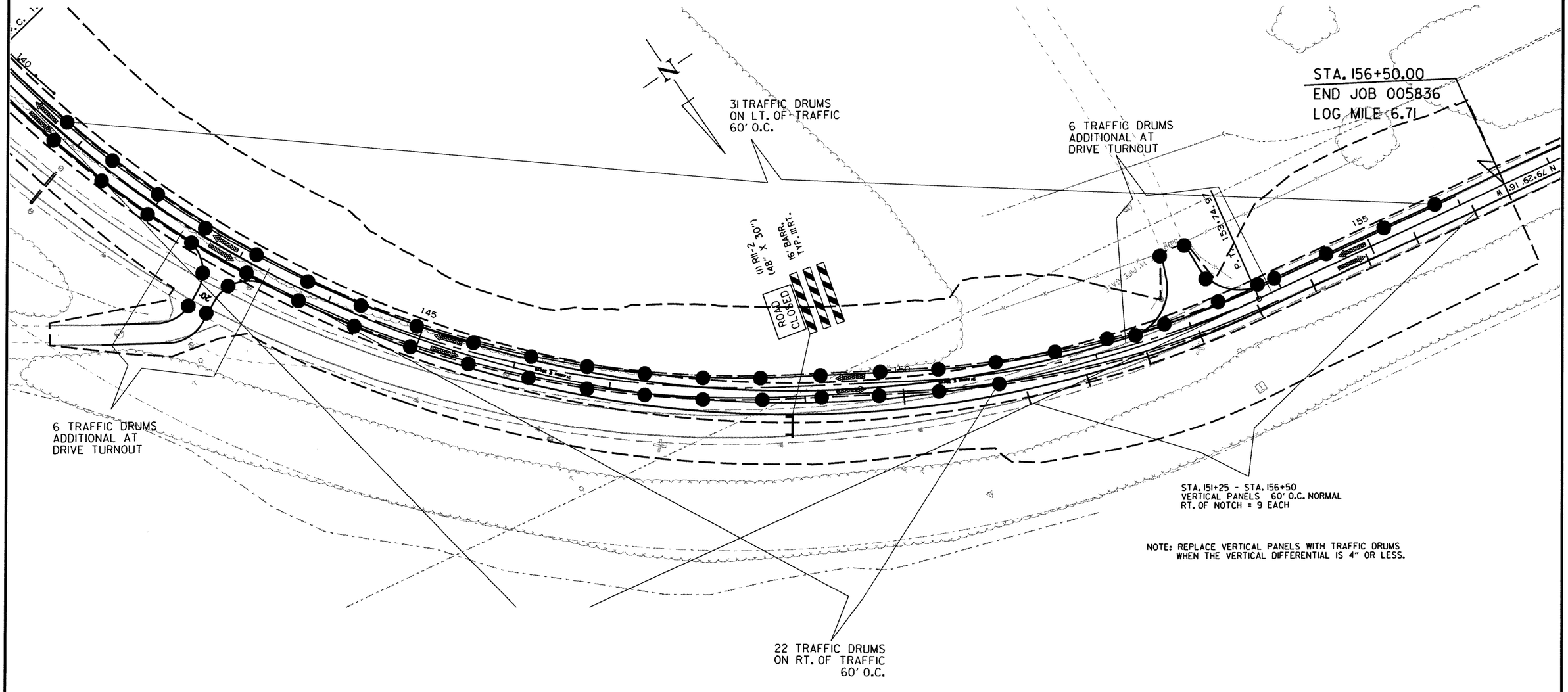

NOTE: REPLACE VERTICAL PANELS WITH TRAFFIC DRUMS WHEN THE VERTICAL DIFFERENTIAL IS 4" OR LESS.

SEQUENCE OF OPERATIONS

STAGE 3
SHIFT TRAFFIC TO STAGE 3 ALIGNMENT.
BUILD REMAINING PROPOSED PAVEMENT ON 3RD STREET AND HWY. 367.
BUILD ISLAND AT STA. 203+40.
REMOVE TEMPORARY PIPE AT STA. 141+00.
PLACE FINAL PAVEMENT MARKING ON BRIDGE.

MAINTENANCE OF TRAFFIC STAGE 3

9/12/2013

R005836.DGN

DATE REVISED	DATE FILMED	DATE REVISED	DATE FILMED	FED.RD. DIST.NO.	STATE	FED.AID PROJ.NO.	SHEET NO.	TOTAL SHEETS
				6	ARK.			
				JOB NO.		005836	34	230

(2) PERMANENT PAVEMENT MARKING DETAILS

FINAL STRIPING 3RD STREET STA. 200+81.19 - STA. 205+00

THERMOPLASTIC PAVEMENT MARKINGS
DBL. CENTERLINE STA. 200+81.19 - STA. 205+00 = 838 LIN.FT. 4" YELLOW

RAISED PAVEMENT MARKERS 40' O.C.
TYPE II (YEL/YEL) ON DBL YELLOW LINES = 11 EACH

THERMOPLASTIC PAVEMENT MARKINGS
LANE LINE STA. 203+78 - STA. 206+30 = 252 LIN.FT. 4" WHITE

FINAL STRIPING 3RD STREET STA. 205+00 - STA. 206+30

THERMOPLASTIC PAVEMENT MARKINGS
DBL. CENTERLINE STA. 205+00 - STA. 206+30 = 260 LIN.FT. 4" YELLOW

RAISED PAVEMENT MARKERS 40' O.C.
TYPE II (YEL/YEL) ON DBL YELLOW LINES = 4 EACH

THERMOPLASTIC PAVEMENT MARKINGS
SKIP LANE LINE STA. 206+00 - STA. 206+30 = 10 LIN.FT. 4" WHITE

RAISED PAVEMENT MARKERS 40' O.C.
TYPE II (WHITE/RED) ON SKIP WHITE LANE LINE = 7 EACH

THERMOPLASTIC PAVEMENT MARKINGS ARROWS = 1 EACH
THERMOPLASTIC PAVEMENT MARKINGS WORDS = 1 EACH

FINAL STRIPING ISLAND OUTLINE STA. 203+40

REFLECTORIZED PAINT PAVEMENT MARKINGS
ISLAND OUTLINE AT INTERSECTION = 185 LIN.FT. 10" WHITE

FINAL STRIPING HWY. 376 TURNOUTS STA. 108+56.81 - STA. 110+16.35

THERMOPLASTIC PAVEMENT MARKINGS
TURNOUT RADIUS + EDGE LINES = 321 LIN.FT. 4" WHITE
DBL. CENTERLINE = 319 LIN.FT. 4" YELLOW

RAISED PAVEMENT MARKERS 40' O.C.
TYPE II (YEL/YEL) ON DBL YELLOW LINES = 4 EACH

FINAL STRIPING ON HWY. 367 STA. 110+16.35 - STA. 112+05.91

THERMOPLASTIC PAVEMENT MARKINGS
LT. & RT. EDGE LINES = 379 LIN.FT. 4" WHITE
DBL. CENTERLINE = 379 LIN.FT. 4" YELLOW

RAISED PAVEMENT MARKERS 40' O.C.
TYPE II (YEL/YEL) ON DBL YELLOW LINES = 5 EACH

FINAL STRIPING ON BRIDGE DECK
STA. 112+05.91 - STA. 138+26.09

THERMOPLASTIC PAVEMENT MARKINGS
LT. & RT. EDGE LINES = 5241 LIN.FT. 4" WHITE

HIGH PERFORMANCE CONTRAST MARKINGS
DBL. CENTERLINE ON CONCRETE BRIDGE DECK = 5241 LIN.FT. 4" YELLOW

RAISED PAVEMENT MARKERS TYPE II (YEL/YEL)
40' O.C. ON CENTERLINE ENTIRE SECTION = 66 EACH

FINAL STRIPING STA. 138+26.09 - STA. 156+50

THERMOPLASTIC PAVEMENT MARKINGS
LT. & RT. EDGE LINES = 3648 LIN.FT. 4" WHITE
DBL. CENTERLINE = 3648 LIN.FT. 4" YELLOW

RAISED PAVEMENT MARKERS 40' O.C.
TYPE II (YEL/YEL) ON DBL YELLOW LINES = 46 EACH

EDGE OF SHOULDER
8' SHOULDER — 4" WHITE THERMOPLASTIC PAVEMENT MARKINGS EDGE LINE
12' LANE — 40' O.C. RAISED PAVEMENT MARKERS TYPE II (YEL/YEL)
12' LANE — DBL. YELLOW CENTERLINE HIGH PERFORMANCE CONTRAST MARKINGS
8' SHOULDER — 4" WHITE THERMOPLASTIC PAVEMENT MARKINGS EDGE LINE
EDGE OF SHOULDER

BRIDGE STRIPE DETAIL

STATE OF ARKANSAS
REGISTERED PROFESSIONAL ENGINEER
No. 11425
TRINITY D. SMITH
9-20-13

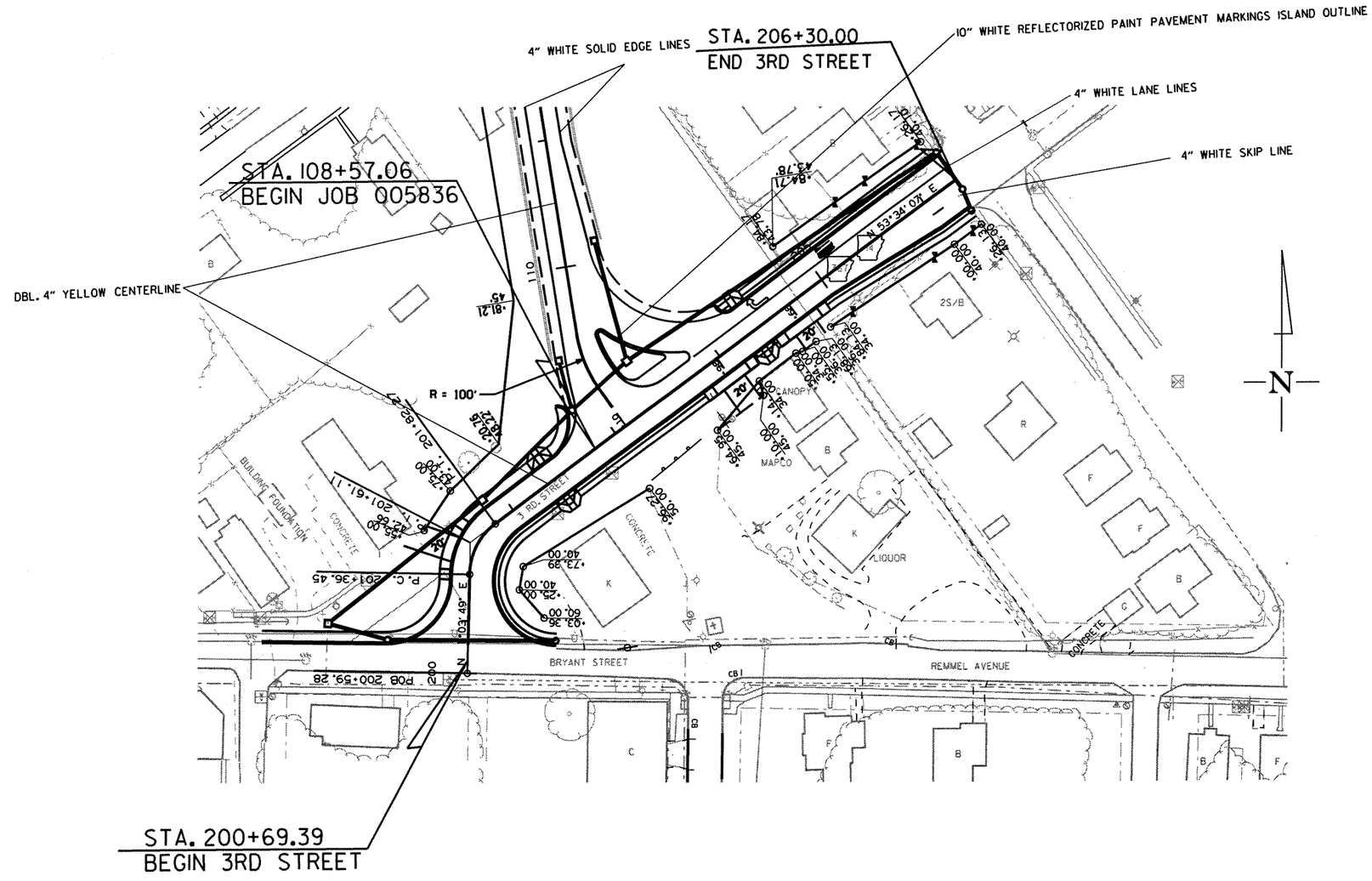

SEQUENCE OF OPERATIONS

END OF JOB
PLACE FINAL LIFT OF SURFACE AND FINAL STRIPING

PERMANENT PAVEMENT MARKING DETAILS

9/20/2013

R005836.DGN

DATE REVISED	DATE FILMED	DATE REVISED	DATE FILMED

FED.RD. DIST.NO.	STATE	FED.AID PROJ.NO.	SHEET NO.	TOTAL SHEETS
6	ARK.			
JOB NO.		005836	35	230

(2) QUANTITIES

STATE OF ARKANSAS
REGISTERED PROFESSIONAL ENGINEER
No. 11425
TRINITY D. SMITH
9-17-13

CONSTRUCTION PAVEMENT MARKINGS AND PERMANENT PAVEMENT MARKINGS

DESCRIPTION	STAGE 2	STAGE 3	END OF JOB	CONSTRUCTION PAVEMENT MARKINGS	CONSTRUCTION PAVEMENT MARKINGS		RAISED PAVEMENT MARKERS		THERMOPLASTIC PAVEMENT MARKINGS				REFLECTORIZED PAINT PAVEMENT MARKINGS	HIGH PERFORMANCE CONTRAST PAVEMENT MARKING
					WORDS	ARROWS	TYPE II (WHITE/RED	TYPE II (YEL/YEL)	4" WHITE	4" YELLOW	WORDS	ARROWS	10" WHITE	4" YELLOW
	LIN. FT. - EACH			LIN. FT.	EACH		EACH		LIN. FT.		EACH		LIN. FT.	LIN. FT.
CONSTRUCTION PAVEMENT MARKINGS	2000	20415		22415										
CONSTRUCTION PAVEMENT MARKINGS (WORDS)		1			1									
CONSTRUCTION PAVEMENT MARKINGS (ARROWS)		1				1								
RAISED PAVEMENT MARKERS TYPE II (WHITE/RED)			7				7							
RAISED PAVEMENT MARKERS TYPE II (YEL/YEL)			136					136						
THERMOPLASTIC PAVEMENT MARKINGS WHITE (4")			9851						9851					
THERMOPLASTIC PAVEMENT MARKINGS YELLOW (4")			5444							5444				
THERMOPLASTIC PAVEMENT MARKINGS WORDS			1								1			
THERMOPLASTIC PAVEMENT MARKINGS ARROWS			1									1		
REFLECTORIZED PAINT PAVEMENT MARKINGS WHITE (10")			185										185	
HIGH PERFORMANCE CONTRAST PAVEMENT MARKING YELLOW (4")			5241											5241
TOTALS:				**22415**	**1**	**1**	**7**	**136**	**9851**	**5444**	**1**	**1**	**185**	**5241**

NOTE: THIS IS A HIGH TRAFFIC VOLUME ROAD AS DEFINED IN SECTION 604.03, STANDARD SPECIFICATIONS FOR HIGHWAY CONSTRUCTION, 2003 EDITION.

ADVANCE WARNING SIGNS AND DEVICES

SIGN NUMBER	DESCRIPTION	SIGN SIZE	STAGE 1	STAGE 2	STAGE 3	END OF JOB	MAXIMUM NUMBER REQUIRED	TOTAL SIGNS REQUIRED		VERTICAL PANELS	TRAFFIC DRUMS	BARRICADES (TYPE III)	
												RIGHT	LEFT
			LIN. FT. - EACH					NO.	SQ. FT.	EACH		LIN. FT.	
D3	ARRINGTON STREET	36"x12"		12		12	12	12	36.0				
D3	ARRINGTON STREET	36"x12"		6		6	6	6	18.0				
M1-1	STRAIGHT	21"x15"		2		2	2	2	4.4				
M1-1L	LEFT TURN	21"x15"		2		2	2	2	4.4				
M1-1R	RIGHT TURN	21"x15"		6		6	6	6	13.1				
M1-5	HWY. 14	24"x24"		7		7	7	7	28.0				
M1-5	HWY. 367	30"x24"		7		7	7	7	35.0				
M4-8	DETOUR	24"x12"		10		10	10	10	21.9				
M5-2L	LEFT TURN	21"x15"		1		1	1	1	2.2				
W20-1	ROAD WORK 1500 FT.	48"x48"	2	2	2	2	2	2	32.0				
W20-1	ROAD WORK 1000 FT.	48"x48"	2	2	2	2	2	2	32.0				
W20-1	ROAD WORK 500 FT.	48"x48"	2	2	2	2	2	2	32.0				
W20-1	ROAD WORK AHEAD	48"x48"	14			14	14	14	224.0				
W20-2	DETOUR AHEAD	48"x48"		4		4	4	4	64.0				
G20-2	END ROAD WORK	48"x24"	16	16	16	16	16	16	128.0				
G20-1	ROAD WORK NEXT 1 MILE	60"x24"	2	2	2	2	2	2	20.0				
R11-2	ROAD CLOSED	48"x30"	2	5	2	5	5	5	50.0				
R11-4	ROAD CLOSED TO THRU TRAFFIC	60"x36"		1		1	1	1	15.0				
R4-1	DO NOT PASS	24"x30"	2	2	2	2	2	2	10.0				
R4-2	PASS WITH CARE	24"x30"	2	2	2	2	2	2	10.0				
RSP-1	SHOULDER CLOSED	48"x30"	2	2	2	2	2	2	20.0				
W8-9A	SHOULDER DROP OFF	36"X36"	4	4	4	4	4	4	36.0				
	SPECIAL SIGN	60"x36"	6	6	6	6	6	6	90.0				
	VERTICAL PANELS			9	9	9	9			9			
	TRAFFIC DRUMS			54	77	77	77				77		
	TYPE III BARRICADE-RT. (8')			2	1	2	2					16	
	TYPE III BARRICADE-LT. (8')			2	1	2	2						16
	TYPE III BARRICADE-RT. (16')		1	2	1	2	2					32	
	TYPE III BARRICADE-LT. (16')		1	1		1	1						16
TOTALS:									**926.0**	**9**	**77**	**48**	**32**

NOTE: THIS IS A HIGH TRAFFIC VOLUME ROAD AS DEFINED IN SECTION 604.03, STANDARD SPECIFICATIONS FOR HIGHWAY CONSTRUCTION, 2003 EDITION.

9/20/2013

R005836.DGN

QUANTITIES

DATE REVISED	DATE FILMED	DATE REVISED	DATE FILMED	FED.RD. DIST.NO.	STATE	FED.AID PROJ.NO.	SHEET NO.	TOTAL SHEETS
10-11-13				6	ARK.			
				JOB NO.		005836	36	230

(2) QUANTITIES

EARTHWORK

STATION	STATION	LOCATION / DESCRIPTION	UNCLASSIFIED EXCAVATION	COMPACTED EMBANKMENT	COMPACTED EMBANKMENT (SPECIAL)	* SOIL STABILIZATION	** GEOGRID SOIL REINFORCEMENT
			CU. YD.			TON	SQ. YD.
108+84.34	111+54.33	HWY. 367 - OBLITERATION	706				
138+26.09	150+50	HWY. 367- OBLITERATION	2841				
137+99.05	148+66.14	HWY. 367			42180		57683
ENTIRE	PROJECT	STAGE 1-MAIN LANES		2137			
ENTIRE	PROJECT	STAGE 2-MAIN LANES	435	8590			
ENTIRE	PROJECT	STAGE 3-MAIN LANES	256	1804			
ENTIRE	PROJECT	APPROACHES		160			
ENTIRE	PROJECT	TEMPORARY APPROACHES		100			
* ENTIRE	PROJECT	TO BE USED IF AND WHERE				1000	
		DIRECTED BY THE ENGINEER					
TOTALS:			4238	12791	42180	1000	57683

* QUANTITY ESTIMATED.
SEE SECTION 104.03 OF THE STD. SPECS.
** QUANTITY ESTIMATED FOR BIDDING PURPOSES ONLY. NOT FOR PAYMENT.
SEE SPECIAL PROVISION "GEOSYNTHETIC INTERNAL REINFORCED EMBANKMENT CONSTRUCTION".

GUARDRAIL

STATION	STATION	LOCATION	GUARDRAIL (TYPE A)	GUARDRAIL (TYPE C)	THRIE BEAM GUARDRAIL TERMINAL	GUARDRAIL TERMINAL (TYPE 2)	TERMINAL ANCHOR POST (TYPE 1)	BRIDGE END TERMINAL
			LIN. FT.	LIN. FT.	EACH			
138+25.49	140+44.24	LT. SIDE - HWY. 367	150		1	1		
138+25.49	139+19.24	RT. SIDE - HWY. 367	75		1		1	
109+29.00		LT. SIDE - HWY. 367						1
110+16.50		RT. SIDE - HWY. 367						1
203+25.00		RT. OF 3RD ST. ON ARRINGTON STREET		50				
TOTALS:			225	50	2	1	1	2

REMOVAL AND DISPOSAL OF ITEMS

STATION	STATION	LOCATION	CURB AND GUTTER	CONCRETE PAVEMENT	CONCRETE ISLANDS	CONCRETE DRIVEWAYS	WALKS	SIGN FOUNDATIONS	BUILDINGS	SIGNS
			LIN. FT.	SQ. YD.	SQ. YD.	SQ. YD.	SQ. YD.	EACH	EACH	EACH
107+13.27		RT. SIDE HWY. 367				33		1		1
108+64.67		RT. SIDE HWY. 367						1		1
108+83.19		LT. SIDE HWY. 367						1		1
109+14.01		RT. SIDE HWY. 367						1		1
110+00		RT. SIDE HWY. 367							1	
112+56.76		LT. SIDE HWY. 367						1		1
200+82		BRYANT STREET				33				
201+01	201+29	LT. SIDE 3RD STREET					24			
201+02	202+30	LT. SIDE 3RD STREET	194							
201+04	201+20	RT. SIDE 3RD STREET	18							
201+22	201+48	LT. SIDE 3RD STREET				69				
201+36	202+96	RT. SIDE 3RD STREET		369						
201+50	203+37	LT. SIDE 3RD STREET					54			
202+36		LT. SIDE 3RD STREET				26				
202+57	203+25	LT. SIDE 3RD STREET	69							
202+96		RT. SIDE 3RD STREET	47							
203+60		LT. SIDE 3RD STREET	20							
203+68		LT. SIDE 3RD STREET	89							
204+12		LT. SIDE 3RD STREET			156					
204+42	206+21	LT. SIDE 3RD STREET	243							
204+80	206+37	LT. SIDE 3RD STREET					70			
204+84	206+27	RT. SIDE 3RD STREET	143	206			68			
TOTALS:			823	575	156	161	216	5	1	5

BENCH MARKS

STATION	LOCATION	BENCH MARKS
		EACH
112+05.91	BRIDGE END	1
138+26.09	BRIDGE END	1
TOTAL:		2

NOTE: SHOWN FOR INFORMATION ONLY. BENCH MARKS SHALL BE FURNISHED AND PLACED BY STATE FORCES.

STATE OF ARKANSAS
REGISTERED PROFESSIONAL ENGINEER
No. 11425
TRINITY D. SMITH
10-11-13

CLEARING AND GRUBBING

STATION	STATION	LOCATION	CLEARING	GRUBBING
			STATION	
109+50	116+02	LT. OF HWY. 367	8	8
119+00	120+00	LT. OF HWY. 367	1	1
123+00	124+50	LT. OF HWY. 367	2	2
127+50	150+75	LT. OF HWY. 367	24	24
151+00	156+50	RT. OF HWY. 367	6	6
TOTALS:			41	41

4" PIPE UNDERDRAIN

STATION	STATION	LOCATIONS	4" PIPE UNDERDRAINS	UNDERDRAIN OUTLET PROTECTORS
			LIN. FT.	EACH
* ENTIRE PROJECT TO BE USED IF AND			1000	6
WHERE DIRECTED BY THE ENGINEER				
TOTALS:			1000	6

* NOTE: QUANTITIES ARE ESTIMATED.
SEE SECTION 104.03 OF THE STD. SPECS.

UNDERDRAINS SHALL BE STUBBED INTO THE PROPOSED DROP INLET IF AND WHERE DIRECTED BY THE ENGINEER. PAYMENT FOR THIS TO BE INCLUDED IN THE UNIT PRICE BID FOR 4" PIPE UNDERDRAIN.

CONCRETE WALKS

STATION	STATION	LOCATION	LENGTH	CONCRETE WALKS
			LIN. FT.	SQ.YD.
200+89.54	201+35.00	LT. OF 3RD STREET	45	25
201+67.00	202+73.80	LT. OF 3RD STREET	107	59
204+30.07	206+26.69	LT. OF 3RD STREET	312	173
200+86.21	203+82.00	RT. OF 3RD STREET	296	164
204+14.00	204+42.00	RT. OF 3RD STREET	28	16
204+74.00	206+26.84	RT. OF 3RD STREET	153	85
TOTAL:				522

10/11/2013

R005836.DGN

QUANTITIES

DATE REVISED	DATE FILMED	DATE REVISED	DATE FILMED	FED.RD. DIST.NO.	STATE	FED.AID PROJ.NO.	SHEET NO.	TOTAL SHEETS
				6	ARK.			
				JOB NO.		005836	37	230

(2) QUANTITIES

STATE OF ARKANSAS
REGISTERED PROFESSIONAL ENGINEER
No. 11425
TRINITY D. SMITH
9-17-13

CONCRETE COMBINATION CURB AND GUTTER

STATION	STATION	LOCATION	TYPE A (1' 6")
			LIN. FT.
200+89.54	202+73.80	LT. OF 3RD STREET	359
204+30.07	206+26.05	LT. OF 3RD STREET	312
200+86.21	206+26.05	RT. OF 3RD STREET	558
TOTAL:			1229

CONCRETE ISLAND

STATION	LOCATION	CURB FACE TYPE	CONCRETE ISLAND
			SQ.YD.
203+40	INTERSECTION OF HWY. 367 & 3RD STREET	B	96
TOTAL:			96

WHEELCHAIR RAMPS

STATION	LOCATION	TYPE 3
		SQ.YD.
202+40	RT. OF 3RD STREET	10.1
202+40	LT. OF 3RD STREET	10.1
204+32	RT. OF 3RD STREET	10.1
204+32	LT. OF 3RD STREET	7.1
TOTAL:		37.4

REMOVAL AND DISPOSAL OF FENCE

STATION	STATION	LOCATION	FENCE
			LIN. FT.
204+84	206+27	RT. SIDE OF 3RD STREET	180
204+84	206+05	LT. SIDE OF 3RD STREET	80
153+90		LT. SIDE HWY. 367	611
110+70	111+60	RT. SIDE HWY. 368	125
TOTALS:			996

SOIL LOG

STATION	LATITUDE			LONGITUDE			LOCATION	DEPTH	LIQUID LIMIT	PLASTICITY INDEX	AASHTO CLASSIFICATION	COLOR
	DEG	MIN	SEC	DEG	MIN	SEC		FEET				
106+00	35	36	2.50	91	17	14.70	5' RT	0-5	33	14	A-6 (10)	GRAY
147+00	35	36	40.80	91	17	26.80	10' RT	0-5	23	8	A-4 (1)	BROWN
147+00	35	36	40.80	91	17	26.80	10' RT	0-5	26	10	A-4 (8)	BROWN
155+00	35	36	43.80	91	17	35.50	5' LT	0-5	24	9	A-4 (3)	BR/GR
155+00	35	36	43.80	91	17	35.50	12' RT	0-5	21	9	A-4 (2)	RD/BR
155+00	35	36	43.70	91	17	35.50	16' LT	0-5	23	14	A-6 (4)	BROWN
202+00	35	36	3.60	91	17	16.90	5' RT	0-5	40	22	A-6 (12)	BROWN
208+00	35	36	6.90	91	17	12.40	15' LT	0-5	33	16	A-6 (14)	BROWN

SOIL CHARACTERISTICS TABULATED ABOVE ARE REPRESENTATIVE AT THE LOCATION OF THE SAMPLE, AND FROM SURFACE INDICATIONS ARE TYPICAL FOR THE LIMITS SHOWN. THESE DATA ARE SHOWN FOR INFORMATION ONLY. THE STATE WILL NOT BE RESPONSIBLE FOR VARIATIONS IN THE SOIL CHARACTERISTICS AND/OR EXTENT OF SAME DIFFERING FROM THE ABOVE TABULATIONS.

SELECTED PIPE BEDDING

LOCATION	SELECTED PIPE BEDDING
	CU.YD.
ENTIRE PROJECT TO BE USED IF	
AND WHERE DIRECTED BY THE	50
ENGINEER	
TOTAL:	50

NOTE: QUANTITY ESTIMATED.
SEE SECTION 104.03 OF THE STD. SPECS.

APPROACH GUTTERS AND SLABS

STATION	STATION	LOCATION	APPROACH GUTTER (TYPE SPECIAL 1)	APPROACH GUTTER (TYPE SPECIAL 2)	APPROACH SLABS (TYPE SPECIAL 1)	REINFORCING STEEL RDWY. (GR 60)	AGGREGATE BASE CRS. (CLASS 7)
			CU.YD.	CU.YD.	CU.YD.	POUND	TON
111+78.91	112+05.91	LT. SIDE	15.00			2734	
111+78.91	112+05.91	RT. SIDE	15.00			2734	
138+26.09	138+53.09	LT. SIDE		6.00		318	
138+26.09	138+53.09	RT. SIDE		6.00		318	
111+78.91	112+05.91	BRIDGE END			38.80	4382	19.6
138+26.09	138+53.09	BRIDGE END			38.80	4382	19.6
TOTALS:			30.00	12.00	77.60	14868	39.2

NOTE: USE T =14.5" FOR 8' SHOULDER.

EROSION CONTROL

STATION	STATION	LOCATION	PERMANENT EROSION CONTROL						TEMPORARY EROSION CONTROL								
			SEEDING	LIME	MULCH COVER	WATER	SECOND SEEDING APPLICATION	SOLID SODDING	TEMPORARY SEEDING	MULCH COVER	WATER	WATTLE DITCH CHECKS (E-1)	SAND BAG DITCH CHECKS (E-5)	ROCK DITCH CHECKS (E-6)	DROP INLET SILT FENCE (E-7)	SILT FENCE (E-11)	*SEDIMENT REMOVAL & DISPOSAL
			ACRE	TON	ACRE	M.GAL.	ACRE	SQ.YD.	ACRE	ACRE	M.GAL.	LIN. FT.	BAG	CU.YD.	LIN. FT.	LIN. FT.	CU. YD.
ENTIRE	PROJECT	STAGE 1	0.87	1.74	0.87	88.7	0.87								125	1551	62
ENTIRE	PROJECT	STAGE 2	5.81	11.62	5.81	592.6	5.81						44	3	125	3062	121
ENTIRE	PROJECT	STAGE 3	11.82	23.64	11.82	1207.0	11.82	105					66	6		1204	50
*ENTIRE PROJECT TO BE USED IF AND WHERE DIRECTED BY THE ENGINEER.									13.00	13.00	265.2	90	330	30	50	1000	74
TOTALS:			18.50	37.00	18.50	1888.3	18.50	105	13.00	13.00	265.2	90	440	39	300	6817	307

BASIS OF ESTIMATE:
LIME .....2 TONS / ACRE OF SEEDING
WATER.....102.0 M.G. / ACRE OF SEEDING.
WATER.....20.4 M.G. / ACRE OF TEMPORARY SEEDING.
WATER.....12.6 GAL. / SQ. YD. OF SOLID SODDING.
WATTLE DITCH CHECKS.....9 LIN. FT. / LOCATION
SAND BAG DITCH CHECKS.....22 BAGS / LOCATION
ROCK DITCH CHECKS.....3 CU.YD./LOCATION

NOTE: THE TEMPORARY EROSION CONTROL DEVICES SHOWN ABOVE AND ON THE PLANS SHALL BE INSTALLED IN SUCH A SEQUENCE AS TO DETER EROSION AND SEDIMENTATION ON U.S. WATERWAYS AS EXPLAINED BY THE NATIONAL POLLUTANT DISCHARGE ELIMINATION SYSTEM PERMIT.

*QUANTITIES ARE ESTIMATED.
SEE SECTION 104.03 OF THE STD. SPECS.

9/20/2013

R005836.DGN

QUANTITIES

DATE REVISED	DATE FILMED	DATE REVISED	DATE FILMED	FED.RD. DIST.NO.	STATE	FED.AID PROJ.NO.	SHEET NO.	TOTAL SHEETS
				6	ARK.			
				JOB NO.		005836	38	230

(2) QUANTITIES

STATE OF ARKANSAS
REGISTERED PROFESSIONAL ENGINEER
No. 11425
TRINITY D. SMITH
9-17-13

DRIVEWAYS & TURNOUTS

STATION	SIDE	LOCATION	WIDTH	**MODIFIED CURB		PORTLAND CEMENT CONCRETE DRIVEWAY	ACHM SURFACE COURSE (1/2") 220 LBS. PER SQ. YD. (PG 64-22)		AGGREGATE BASE COURSE (CLASS 7)	SIDE DRAINS 24"	STANDARD DRAWINGS
			FEET	STATION	STATION	SQ. YD.	SQ. YD.	TON	TON	LIN. FT.	
142+90	RT.	HWY. 367	20				378.6	41.6	154.6	34	PCC-1, PCM-1, PCP-1, PCP-2
153+12	LT.	HWY. 367	26				262.5	28.9	107.2		
200+82	RT.	BRYANT STREET	20	200+58	201+06	97.70					
201+51	LT.	3RD STREET	20	201+27	201+75	101.70					
203+98	RT.	3RD STREET	20	203+74	204+22	76.20					
204+68	RT.	3RD STREET	20	204+44	204+92	56.20					
* ENTIRE PROJECT TEMPORARY DRIVES									180.0		
TOTALS:						**331.80**	**641.1**	**70.5**	**441.8**	**34**	

BASIS OF ESTIMATE:
ACHM SURFACE COURSE (1/2").....94.6% MIN. AGGR.....5.4% ASPHALT BINDER
MAXIMUM NUMBER OF GYRATIONS = 115 FOR PG 64-22

* QUANTITY ESTIMATED
SEE SECTION 104.03 OF THE STD. SPECS.
TO BE USED IF AND WHERE DIRECTED BY THE ENGINEER.

ASPHALT CONCRETE PATCHING FOR MAINTENANCE OF TRAFFIC

LOCATION	TON	TACK COAT GALLON
ENTIRE PROJECT - TO BE USED IF AND WHERE	23	46
DIRECTED BY THE ENGINEER		
TOTALS:	**23**	**46**

NOTE: QUANTITIES ARE ESTIMATED.
SEE SECTION 104.03 OF THE STD. SPECS.
BASIS OF ESTIMATE:
ASPHALT CONCRETE PATCHING FOR MAINTENANCE OF TRAFFIC...25 TON/MILE
TACK COAT FOR MAINTENANCE OF TRAFFIC.....50 GAL./MILE

RUMBLE STRIPS IN ASPHALT SHOULDERS

STATION	STATION	LOCATION	* RUMBLE STRIPS IN ASPHALT SHOULDERS LIN.FT.
138+53.09	142+37.12	RT. OF HWY. 367	384
143+42.81	157+50	RT. OF HWY. 367	1407
138+53.09	152+35.77	LT. OF HWY. 367	1383
153+82.92	157+50	LT. OF HWY. 367	367
TOTAL:			**3541**

* QUANTITY ESTIMATED.
SEE SECTION 104.03 OF THE STD. SPECS.
TO BE USED IF AND WHERE DIRECTED BY THE ENGINEER.

ACHM PATCHING OF EXISTING ROADWAY

DESCRIPTION	TON
ENTIRE PROJECT - TO BE USED IF AND WHERE	100
DIRECTED BY THE ENGINEER	
TOTAL:	**100**

NOTE: QUANTITY IS ESTIMATED
SEE SECTION 104.03 OF THE STD. SPECS.

CONCRETE BASE

STATION	STATION	LOCATION	LENGTH	PORTLAND CEMENT CONCRETE BASE	
				AVG. WID.	7" U.T.
			FEET	FEET	SQ. YD.
205+00	206+30	3RD STREET CONNECTION	130.0	2.5	72.2
TOTALS:					**72.2**

COLD MILLING ASPHALT PAVEMENT

STATION	STATION	LOCATION	AVG. WIDTH	COLD MILLING ASPHALT PAVEMENT
			FEET	SQ. YD.
206+30	207+30	MAIN LANES	22	244.44
156+50	157+50	MAIN LANES	47.8	531.11
TOTAL:				**775.55**

NOTE: AVERAGE MILLING DEPTH 1".

CONCRETE BARRIER WALL

STATION	STATION	LOCATION	PARAPET TYPE A LIN.FT
109+29	111+78.91	LT. OF HWY. 367	249.91
110+16.50	111+78.91	RT. OF HWY. 367	162.41
TOTALS:			412.32

RETAINING WALLS

STATION	STATION	LOCATION	UNCLASSIFIED EXCAVATION	SELECT GRANULAR BACKFILL	RETAINING WALL
			CU.YDS.	CU.YD.	SQ.FT.
109+29	112+13	LT. OF HWY. 367	485	3900	4400
110+16.50	112+13	RT. OF HWY. 367	360	3190	3400
112+13		BRIDGE END			610
TOTALS:			845	7090	8410

NOTE: REFER TO SHEET 61.

9/16/2013

R005836.DGN

DATE REVISED	DATE FILMED	DATE REVISED	DATE FILMED	FED.RD. DIST.NO.	STATE	FED.AID PROJ.NO.	SHEET NO.	TOTAL SHEETS
				6	ARK.			
				JOB NO.		005836	39	230

(2) QUANTITIES

STRUCTURES

STATION	DESCRIPTION	REINFORCED CONCRETE (CLASS III)	PIPE CULVERT STORM DRAIN ALTERNATES 1 & 2	TEMPORARY PIPE CULVERTS	DROP INLETS TYPE		JUNCT. BOX TYPE	STD. DWG. NOS.
		18"	18"	24"	MO	ST	(TYPE ST)	
		LIN. FT.		LIN. FT.	EACH			
109+29	CONSTRUCT DROP INLET ON LT.	36				1		FPC-9S, PCC-1, PCM-1
110+16	CONSTRUCT DROP INLET ON RT.	94				1		FPC-9S, PCC-1, PCM-1
140+00	CONSTRUCT TEMP. 24' RCP			40				
200+83	CONSTRUCT DROP INLET ON LT.		48		1			FPC-9E, FPC-9M, PCC-1, PCM-1
200+83	CONSTRUCT DROP INLET ON RT.		133		1			FPC-9E, FPC-9M, PCC-1, PCM-1
200+94	CONSTRUCT JUNCTION BOX						1	FPC-9S, PCC-1, PCM-1
201+85	CONSTRUCT JUNCTION BOX		154				1	FPC-9S, PCC-1, PCM-1
202+83	CONSTRUCT JUNCTION BOX	98					1	FPC-9S, PCC-1, PCM-1
203+40	CONSTRUCT JUNCTION BOX	54					1	FPC-9E, FPC-9M, PCC-1, PCM-1
206+30	CONSTRUCT DROP INLET ON LT.	292			1			FPC-9E, FPC-9M, PCC-1, PCM-1
206+26	CONSTRUCT DROP INLET ON RT.	18			1			FPC-9E, FPC-9M, PCC-1, PCM-1
206+30	CONSTRUCT JUNCTION BOX	36					1	FPC-9S, PCC-1, PCM-1
TOTALS:		628	335	40	4	2	5	

BASIS OF ESTIMATE:
WATER.....12.6 GAL. / SQ. YD. OF SOLID SODDING.

NOTE: FOR R.C. PIPE CULVERT INSTALLATIONS USE TYPE 3 BEDDING UNLESS OTHERWISE SPECIFIED.
NOTE: FOR C.M. PIPE CULVERT INSTALLATIONS USE TYPE 2 BEDDING UNLESS OTHERWISE SPECIFIED.

FENCING

STATION	STATION	LOCATION	* 4' CHAIN LINK FENCE LIN. FT.
204+84	206+26	RT. SIDE OF 3RD STREET	142
205+45	206+26	LT. SIDE OF 3RD STREET	94
TOTAL:			236

* DENOTES ALTERNATE BID ITEM.

PAVEMENT REPAIR OVER CULVERTS (ASPHALT)

STATION	LOCATION	WIDTH	LENGTH	TON
		FEET		
140+00	HWY. 367	8.5	40	25
TOTAL:				25

AVG. DEPTH = 12"

STATE OF ARKANSAS
REGISTERED PROFESSIONAL ENGINEER
No. 11425
TRINITY D. SMITH
9-20-13

BASE AND SURFACING

STATION	STATION	LOCATION	LENGTH	AGGREGATE BASE COURSE (CLASS 7)		TACK COAT				ACHM BINDER COURSE (1")				ACHM SURFACE COURSE (1/2")								
				TON / STATION	TON	AVG. WID.	SQ.YD.	GALLONS / SQ.YD.	GALLON	AVG. WID.	SQ.YD.	POUND / SQ.YD.	PG 64-22	AVG. WID.	SQ.YD.	POUND / SQ.YD.	PG 64-22	AVG. WID.	SQ.YD.	POUND / SQ.YD.	PG 64-22	TOTAL PG 64-22
			FEET			FEET				FEET			TON	FEET			TON	FEET			TON	TON
MAIN LANES																						
108+72.77	109+29	FULL DEPTH NORMAL CROWN - HWY. 367	56.2	350.75	197.1	49.5	309.1	0.03	9.3	25.0	156.1	440.0	34.3	24.5	153.0	220.0	16.8	40.0	249.8	220.0	27.5	44.3
108+90.08	110+96.35	ADDITIONAL FOR TURNOUT-HWY. 367	206.3	VAR.	261.6	VAR.	1101.5	0.03	33.0	VAR.	558.5	440.0	122.9	VAR.	543.0	220.0	59.7	VAR.	527.6	220.0	58.0	117.7
109+29.00	110+16.50	SINGLE MSE WALL ON LT. - HWY. 367	87.5	309.25	270.6	60.3	586.3	0.03	17.6	30.3	294.6	440.0	64.8	30.0	291.7	220.0	32.1	37.8	367.5	220.0	40.4	72.5
110+16.50	111+78.91	DOUBLE MSE WALL - HWY. 367	162.4	267.75	434.8	71.0	1281.2	0.03	38.4	35.5	640.6	440.0	140.9	35.5	640.6	220.0	70.5	35.5	640.6	220.0	70.5	141.0
138+53.09	138+75	FULL DEPTH NORMAL CROWN - HWY. 367	21.9	350.75	76.8	49.5	120.5	0.03	3.6	25.0	60.8	440.0	13.4	24.5	59.6	220.0	6.6	40.0	97.3	220.0	10.7	17.3
138+75	144+00	FULL DEPTH SUPERELEVATION - HWY. 367	525.0	350.75	1841.4	49.5	2887.5	0.03	86.6	25.0	1458.3	440.0	320.8	24.5	1429.2	220.0	157.2	40.0	2333.3	220.0	256.7	413.9
144+00	151+50	FULL DEPTH SHOULDER ON LEFT	750.0	319.50	2396.3	65.5	5458.3	0.03	163.7	33.0	2750.0	440.0	605.0	32.5	2708.3	220.0	297.9	40.0	3333.3	220.0	366.7	664.6
151+50	154+00.00	FULL DEPTH SHOULDER ON LEFT	250.0	225.88	564.7	40.8	1133.3	0.03	34.0	9.5	263.9	440.0	58.1	9.3	258.3	220.0	28.4	40.0	1111.1	220.0	122.2	150.6
154+00.00	156+37.47	NOTCH AND WIDENING SUPERELEVATION - HWY. 367	237.5	257.00	610.4	37.5	989.6	0.03	29.7	8.0	211.1	440.0	46.4	7.5	197.9	220.0	21.8	40.0	1055.6	220.0	116.1	137.9
156+37.47	156+50	NOTCH AND WIDENING NORMAL CROWN - HWY. 367	12.5	257.00	32.1	37.5	52.1	0.03	1.6	8.0	11.1	440.0	2.4	7.5	10.4	220.0	1.1	40.0	55.6	220.0	6.1	7.2
156+50.00	157+50	TRANSITION - HWY. 367	100.0															22.0	244.4	220.0	26.9	26.9
200+69.39	200+80	3RD STREET CONNECTION - NORMAL CROWN	10.6	181.75	19.3	56.0	66.0	0.03	2.0	28.0	33.0	440.0	7.3	28.0	33.0	220.0	3.6	28.0	33.0	220.0	3.6	7.2
200+80	203+60.00	3RD STREET CONNECTION - SUPERELEVATION SECTION	280.0	181.75	508.9	56.0	1742.2	0.03	52.3	28.0	871.1	440.0	191.6	28.0	871.1	220.0	95.8	28.0	871.1	220.0	95.8	191.6
203+60.00	205+00.00	3RD STREET CONNECTION - 37' WIDTH PAVEMENT	140.0	231.50	324.1	74.0	1151.1	0.03	34.5	37.0	575.6	440.0	126.6	37.0	575.6	220.0	63.3	37.0	575.6	220.0	63.3	126.6
205+00.00	206+00	3RD STREET CONNECTION - 3 TO 4 LANES	100.0			41.5	461.1	0.03	13.8									41.5	461.1	220.0	50.7	50.7
206+00	206+30	3RD STREET CONNECTION - 4 LANES	30.0			46.0	153.3	0.03	4.6									46.0	153.3	220.0	16.9	16.9
206+30	207+30	TRANSITION - 3RD STREET CONNECTION	100.0															47.8	531.1	220.0	58.4	58.4
ADDITIONAL FOR LEVELING																						
147+00	151+00	HWY. 367- TEMP. WIDENING	400.0															VAR.	94.4	VAR.	764.3	764.3
149+00	156+50	HWY. 367	750.0			22.0	1833.3	0.10	183.3									22.0	1833.3	VAR.	764.3	764.3
203+60	205+00	3RD STREET CONNECTION - METHOD OF RAISING GRADE	140.0			37.0	575.6	0.10	57.6	37.0	575.6	935.0	269.1									
205+00	206+00	3RD STREET CONNECTION	100.0			41.5	461.1	0.10	46.1									41.5	461.1	VAR.	33.7	33.7
206+00	206+30	3RDSTREET CONNECTION	30.0			46.0	153.3	0.10	15.3									46.0	153.3	VAR.	2.5	2.5
ADDITIONAL FOR SUPERELEVATION																						
138+75.00	142+25	TRANSITION	350.0	105.47	369.1																	
142+25	152+87.47	MAX SUPER	1062.5	210.93	2241.1																	
152+87.47	156+37.47	TRANSITION	350.0	105.47	369.1																	
ADDITIONAL FOR GUARDRAIL																						
138+26.09	140+64.24	LT. SIDE MAIN LANES	238.2															5.5	145.6	220.0	16.0	16.0
140+64.24	140+97.24	LT. SIDE MAIN LANES	33.0															2.8	10.3	220.0	1.1	1.1
138+26.09	139+89.24	RT. SIDE MAIN LANES	163.2															5.5	99.7	220.0	11.0	11.0
139+89.24	140+22.24	RT. SIDE MAIN LANES	33.0															2.8	10.3	220.0	1.1	1.1
TOTALS:					10517.4		20516.4		827.0		8460.3		2003.6		7771.7		854.8		15449.3		2984.5	3839.3

BASIS OF ESTIMATE:
ACHM SURFACE COURSE (1/2").....94.6% MIN. AGGR.....5.4% ASPHALT BINDER
ACHM BINDER COURSE (1").....95.6% MIN. AGGR.....4.4% ASPHALT BINDER
MAXIMUM NUMBER OF GYRATIONS = 115 FOR PG 64-22

9/20/2013

R005836.DGN

QUANTITIES

DATE REVISED	DATE FILMED	DATE REVISED	DATE FILMED	FED. ROAD DIST. NO.	STATE	FED. AID PROJ. NO.	SHEET NO.	TOTAL SHEETS
				6	ARK.		40	230
				JOB NO.		005836		
				①		07289 - QUANTITIES - 54072		

SCHEDULE OF BRIDGE QUANTITIES-JOB 005836

BRIDGE NO. / CODE NO. / NAME PLATE TITLE	UNIT OF STRUCTURE	ITEM NO. / ITEM / UNIT	619	801	801	SP & 802	SP & 802	SP & 802	SP & 802	803	SS & 804	SS & 804	SP & 805	SP & 805	805	805	805	SP & 807	SP & 807	808
			7' STEEL CHAIN LINK FENCE	UNCLASSIFIED EXCAVATION FOR STRUCTURES-BRIDGE	COFFERDAM	CLASS S CONCRETE-BRIDGE	CLASS S(AE) CONCRETE-BRIDGE	CLASS B CONCRETE-BRIDGE	SEAL CONCRETE-BRIDGE	CLASS I PROTECTIVE SURFACE TREATMENT	REINFORCING STEEL-BRIDGE (GRADE 60)	EPOXY COATED REINFORCING STEEL (GRADE 60)	STEEL ① SHELL PILING (18" DIA.)	STEEL ② SHELL PILING (20" DIA.)	STEEL PILING (HP 14x117)	TEST PILE (HP 14x117)	DYNAMIC PILE LOAD TEST	STRUCTURAL STEEL IN BEAM SPANS (M270, GR. 50W)	STRUCTURAL STEEL IN PLATE GIRDER SPANS (M270, GR. 50W)	ELASTOMERIC BEARINGS
			LIN. FT.	CU. YD.	EACH	CU. YD.	CU. YD.	CU. YD.	CU. YD.	GAL.	LB.	LB.	LIN. FT.	LIN. FT.	LIN. FT.	LIN. FT.	EACH	LB.	LB.	CU. IN.
07289 / X971 / WHITE RIVER	BENT NO. 1					33.10				0.1	4,006	515	385						1,140	2,145.0
	BENT NOS. 2 & 4			404		392.25					70,255		3,744							5,877.0
	BENT NO. 3			208		205.62					33,961		2,304							6,043.3
	BENT NO. 5			236		74.30		152.69			39,005			1,836						3,285.2
	BENT NOS. 6 & 9			919		595.38		432.79			154,614			5,580						6,372.5
	BENT NO. 7			399		237.88		269.18			82,573			3,285						
	BENT NO. 8			883		217.49		577.86			117,271			2,880						
	BENT NOS. 10, 11, 13, 14, 16 & 17			2,839		1,234.04					216,891		15,048							11,310.0
	BENT NOS. 12 & 15			908		410.42					72,700		4,896							6,240.0
	BENT NO. 18					30.79				0.3	3,994	561	480					1,093		1,560.0
	PIER NOS. 1 & 2			9,499	2	472.23		2,403.48	2,773.30		534,800				4,410	450	2			
	246'-0" CONT. COMP. PLATE GIRDER UNIT						350.03			25.7		74,862							325,025	
	522'-0" CONT. COMP. PLATE GIRDER UNIT		230				737.56			54.5		159,953							892,775	
	1220'-0" CONT. COMP. PLATE GIRDER UNIT						2,061.35			127.7		426,109							3,409,420	
	3-210'-0" CONT. COMP. W-BEAM UNITS						881.36			65.7		192,670						622,877		
TOTALS FOR JOB NO. 005836			230	16,295	2	3,903.50	4,030.30	3,836.00	2,773.30	274.0	1,330,070	854,670	26,857	13,581	4,410	450	2	623,970	4,628,360	42,833.0

BRIDGE NO. / CODE NO. / NAME PLATE TITLE	UNIT OF STRUCTURE	ITEM NO. / ITEM / UNIT	812	816	816	SP 005836	SP 005836	SP 005836
			BRIDGE NAME PLATE (TYPE D)	DUMPED RIPRAP	FILTER BLANKET	ARMORED JOINT WITH NEOPRENE STRIP SEAL	CLEARANCE GAUGES	SEISMIC ISOLATION BEARINGS
			EACH	CU. YD.	SQ. YD.	LIN. FT.	LUMP SUM	EACH
07289 / X971 / WHITE RIVER	BENT NO. 1							
	BENT NOS. 2 & 4							
	BENT NO. 3							
	BENT NO. 5							
	BENT NOS. 6 & 9							8
	BENT NO. 7							4
	BENT NO. 8							4
	BENT NOS. 10, 11, 13, 14, 16 & 17							
	BENT NOS. 12 & 15							
	BENT NO. 18			393	743			
	PIER NOS. 1 & 2							8
	246'-0" CONT. COMP. PLATE GIRDER UNIT		1			42		
	522'-0" CONT. COMP. PLATE GIRDER UNIT					42		
	1220'-0" CONT. COMP. PLATE GIRDER UNIT							
	3-210'-0" CONT. COMP. W-BEAM UNITS					126		
TOTALS FOR JOB NO. 005836			1	393	743	210	1	24

① Wall thickness for 18" Dia. Steel Shell Piling = ½".

② Wall thickness for 20" Dia. Steel Shell Piling = ⅝".

STEWART LINZ
DESIGN SECTION SUPERVISOR

STATE OF ARKANSAS
REGISTERED PROFESSIONAL ENGINEER
No. 7510
CARL S. FUSELIER
8/12/13

BRIDGE ENGINEER

SCHEDULE OF BRIDGE QUANTITIES
WHITE RIVER STR. & APPRS. (NEWPORT) (S)
JACKSON COUNTY

ROUTE 367 SEC. 21

ARKANSAS STATE HIGHWAY COMMISSION
LITTLE ROCK, ARK.

DRAWN BY: CMW DATE: 7/11/2013 FILENAME: b005836_qi.dgn
CHECKED BY: CSL DATE: 8/13/13 SCALE: No Scale
DESIGNED BY: — DATE: —

BRIDGE NO. 07289 DRAWING NO. 54072

PRINT DATE: 9/25/2013

SUMMARY OF QUANTITIES

ITEM NUMBER	ITEM		QUANTITY	UNIT
201	CLEARING		41	STATION
201	GRUBBING		41	STATION
202	REMOVAL AND DISPOSAL OF CURB AND GUTTER		823	LIN. FT.
202	REMOVAL AND DISPOSAL OF FENCE		996	LIN. FT.
202	REMOVAL AND DISPOSAL OF CONCRETE PAVEMENT		575	SQ. YD.
202	REMOVAL AND DISPOSAL OF CONCRETE ISLANDS		156	SQ. YD.
202	REMOVAL AND DISPOSAL OF CONCRETE DRIVEWAYS		161	SQ. YD.
202	REMOVAL AND DISPOSAL OF WALKS		216	SQ. YD.
202	REMOVAL AND DISPOSAL OF SIGN FOUNDATIONS		5	EACH
202	REMOVAL AND DISPOSAL OF BUILDINGS		1	EACH
202	REMOVAL AND DISPOSAL OF SIGNS		5	EACH
210	UNCLASSIFIED EXCAVATION		5083	CU. YD.
SP	SELECT GRANULAR BACKFILL		7090	CU. YD.
210	COMPACTED EMBANKMENT		12791	CU. YD.
SP & 210	COMPACTED EMBANKMENT (SPECIAL)		42180	CU. YD.
SP & 210	SOIL STABILIZATION		1000	TON
SS & 303	AGGREGATE BASE COURSE (CLASS 7)		10998	TON
309	PORTLAND CEMENT CONCRETE BASE (7" UNIFORM THICKNESS)		72	SQ. YD.
401	TACK COAT		873	GAL.
SP, SS, & 406	MINERAL AGGREGATE IN ACHM BINDER COURSE (1")		1916	TON
SP, SS, & 406	ASPHALT BINDER (PG 64-22) IN ACHM BINDER COURSE (1")		88	TON
SP, SS, & 407	MINERAL AGGREGATE IN ACHM SURFACE COURSE (1/2")		3699	TON
SP, SS, & 407	ASPHALT BINDER (PG 64-22) IN ACHM SURFACE COURSE (1/2")		211	TON
412	COLD MILLING ASPHALT PAVEMENT		776	SQ. YD.
SP, SS, & 414	ASPHALT CONCRETE PATCHING FOR MAINTENANCE OF TRAFFIC		23	TON
SP, SS, & 415	ACHM PATCHING OF EXISTING ROADWAY		100	TON
SP & 504	APPROACH SLABS		77.60	CU. YD.
SP & 504	APPROACH GUTTERS		42.00	CU. YD.
505	PORTLAND CEMENT CONCRETE DRIVEWAY		331.80	SQ. YD.
601	MOBILIZATION		1.00	LUMP SUM
SP & 602	FURNISHING FIELD OFFICE		1	EACH
602	FURNISHING FIELD LABORATORY		1	EACH
SS & 603	MAINTENANCE OF TRAFFIC		1.00	LUMP SUM
603	24" TEMPORARY CULVERT		40	LIN. FT.
SP, SS, & 604	SIGNS		926	SQ. FT.
SS & 604	BARRICADES		80	LIN. FT.
SS & 604	TRAFFIC DRUMS		77	EACH
SS & 604	CONSTRUCTION PAVEMENT MARKINGS		22415	LIN. FT.
SS & 604	CONSTRUCTION PAVEMENT MARKINGS (WORDS)		1	EACH
SS & 604	CONSTRUCTION PAVEMENT MARKINGS (ARROWS)		1	EACH
SS & 604	VERTICAL PANELS		9	EACH
SS & 606	18" REINFORCED CONCRETE PIPE CULVERTS (CLASS III)		628	LIN. FT.
* SS & 606	18" REINFORCED CONCRETE PIPE CULVERTS (CLASS III)	(ALTERNATE NO. 1)	335	LIN. FT.
* 606	18" SMOOTH LINED POLYMER PRECOATED METALLIC COATED CORRUGATED STEEL PIPE	(ALTERNATE NO. 2)	335	LIN. FT.
SP, SS, & 606	24" SIDE DRAIN		34	LIN. FT.
606	SELECTED PIPE BEDDING		50	CU. YD.
609	DROP INLETS (TYPE MO)		4	EACH
609	DROP INLETS (TYPE ST)		2	EACH
609	JUNCTION BOXES (TYPE ST)		5	EACH
611	UNDERDRAIN OUTLET PROTECTORS		6	EACH
611	4" PIPE UNDERDRAINS		1000	LIN. FT.
615	PAVEMENT REPAIR OVER CULVERTS (ASPHALT)		25	TON
SS & 617	GUARDRAIL (TYPE A)		225	LIN. FT.
SS & 617	GUARDRAIL (TYPE C)		50	LIN. FT.
SS & 617	TERMINAL ANCHOR POSTS (TYPE 1)		1	EACH
SS & 617	GUARDRAIL TERMINAL (TYPE 2)		1	EACH
SS & 617	THRIE BEAM GUARDRAIL TERMINAL		2	EACH
* 619	4' STEEL CHAIN LINK FENCE	(ALTERNATE NO. 1)	236	LIN. FT.
* 619	4' ALUMINUM CHAIN LINK FENCE	(ALTERNATE NO. 2)	236	LIN. FT.
620	LIME		37	TON
620	SEEDING		18.50	ACRE
620	MULCH COVER		31.50	ACRE
SS & 620	WATER		2153.5	M.GAL.
621	TEMPORARY SEEDING		13.00	ACRE
621	SILT FENCE		6817	LIN. FT.
621	SAND BAG DITCH CHECKS		440	BAG
621	DROP INLET SILT FENCE		300	LIN. FT.
621	SEDIMENT REMOVAL AND DISPOSAL		307	CU. YD.
621	ROCK DITCH CHECKS		39	CU. YD.
623	SECOND SEEDING APPLICATION		18.50	ACRE
624	SOLID SODDING		105	SQ. YD.
631	CONCRETE BARRIER WALL (PARAPET TYPE A)		412	LIN. FT.
632	CONCRETE ISLAND		96	SQ. YD.
633	CONCRETE WALKS		522	SQ. YD.
634	CONCRETE COMBINATION CURB AND GUTTER (TYPE A) (1' 6")		1229	LIN. FT.
635	ROADWAY CONSTRUCTION CONTROL		1.00	LUMP SUM
641	WHEELCHAIR RAMPS (TYPE 3)		37	SQ. YD.
642	RUMBLE STRIPS IN ASPHALT SHOULDERS		3541	LIN. FT.
SS & 718	REFLECTORIZED PAINT PAVEMENT MARKING WHITE (10")		185	LIN. FT.
SS & 719	THERMOPLASTIC PAVEMENT MARKING WHITE (4")		9851	LIN. FT.
SS & 719	THERMOPLASTIC PAVEMENT MARKING YELLOW (4")		5444	LIN. FT.
SS & 719	THERMOPLASTIC PAVEMENT MARKING (WORDS)		1	EACH
SS & 719	THERMOPLASTIC PAVEMENT MARKING (ARROWS)		1	EACH
* SP & 719	INVERTED PROFILE THERMOPLASTIC CONTRAST PAVEMENT MARKING YELLOW (4")	(ALTERNATE NO. 1)	5241	LIN. FT.
* SP	HIGH PERFORMANCE CONTRAST MARKING TAPE YELLOW (4")	(ALTERNATE NO. 2)	5241	LIN. FT.
721	RAISED PAVEMENT MARKERS (TYPE II)		143	EACH
SS & 734	BRIDGE END TERMINAL		2	EACH
SS & 804	REINFORCING STEEL-ROADWAY (GRADE 60)		14868	POUND
SP	WATTLE (20")		90	LIN. FT.
SP	RETAINING WALL		8410	SQ.FT.
	STRUCTURES OVER 20' SPAN			
619	7' STEEL CHAIN LINK FENCE		230	LIN. FT.
636	BRIDGE CONSTRUCTION CONTROL		1.00	LUMP SUM
801	UNCLASSIFIED EXCAVATION FOR STRUCTURES-BRIDGE		16295	CU. YD.
801	COFFERDAM		2	EACH
SP & 802	CLASS S CONCRETE-BRIDGE		3903.50	CU. YD.
SP & 802	CLASS S(AE) CONCRETE-BRIDGE		4030.30	CU. YD.
SP & 802	CLASS B CONCRETE-BRIDGE		3836.00	CU. YD.
SP & 802	SEAL CONCRETE-BRIDGE		2773.30	CU. YD.
803	CLASS 1 PROTECTIVE SURFACE TREATMENT		274.0	GAL.
SS & 804	REINFORCING STEEL-BRIDGE (GRADE 60)		1330070	POUND
SS & 804	EPOXY COATED REINFORCING STEEL (GRADE 60)		854670	POUND
SP & 805	STEEL SHELL PILING (18" DIAMETER)		26857	LIN. FT.
SP & 805	STEEL SHELL PILING (20" DIAMETER)		13581	LIN. FT.
805	STEEL PILING (HP 14X117)		4410	LIN. FT.
805	TEST PILE (HP 14X117)		450	LIN. FT.
805	DYNAMIC PILE LOAD TEST		2	EACH
SP & 807	STRUCTURAL STEEL IN BEAM SPANS (M270-GR50W)		623970	POUND
SP & 807	STRUCTURAL STEEL IN PLATE GIRDER SPANS (M270-GR50W)		4628360	POUND
808	ELASTOMERIC BEARINGS		42833.0	CU. IN.
812	BRIDGE NAME PLATE (TYPE D)		1	EACH
816	FILTER BLANKET		743	SQ. YD.
816	DUMPED RIPRAP		393	CU. YD.
SP	ARMORED JOINT WITH NEOPRENE STRIP SEAL		210	LIN. FT.
SP	CLEARANCE GAUGES		1.00	LUMP SUM
SP	SEISMIC ISOLATION BEARINGS		24	EACH

* DENOTES ALTERNATE BID ITEMS

REVISIONS

DATE	REVISION	SHEET NUMBER
10/11/2013	MODIFIED GEOGRID SOIL REINFORCEMENT TITLE IN QUANTITY BOX	36 AND 41
10/15/2013	ADDED FIELD LABORATORY	41

SUMMARY OF QUANTITIES & REVISIONS

STATE OF ARKANSAS REGISTERED PROFESSIONAL ENGINEER No. 11285 TIMOTHY D. SMITH

10-15-13

DATE REVISED	DATE FILMED	DATE REVISED	DATE FILMED
10-11-13			
10-15-13			

(2) SUMMARY OF QUANTITIES & REVISIONS

FED.RD. DIST.NO.	STATE	FED.AID PROJ.NO.	SHEET NO.	TOTAL SHEETS
6	ARK.		41	230

JOB NO. 005836

SURVEY CONTROL COORDINATES

Project Name: s005836
Date: 6/15/2011
Coordinate System: ARKANSAS STATE PLANE - NORTH ZONE BASED ON GPS CONTROL, PROJECTED TO GROUND.
Units: U.S. SURVEY FOOT

Point Name	Northing	Easting	Elev	Feature	Description
1	462286.3291	1524134.3362	222.21	CTL	5/8" REBAR W/2" CAP
2	463014.4053	1523992.0058	225.26	CTL	5/8" REBAR W/2" CAP
3	463347.5098	1523715.6154	225.66	CTL	5/8" REBAR W/2" CAP
4	463525.8672	1524091.0492	226.43	CTL	5/8" REBAR W/2" CAP
5	464216.5604	1523876.0838	218.14	CTL	5/8" REBAR W/2" CAP
6	464873.8617	1523783.5783	220.63	CTL	5/8" REBAR W/2" CAP
7	465673.0142	1523572.3616	232.98	CTL	5/8" REBAR W/2" CAP
8	466346.9066	1522226.4045	231.47	CTL	5/8" REBAR W/2" CAP
9	466444.9915	1521684.0141	233.71	CTL	5/8" REBAR W/2" CAP
10	466571.8327	1520795.2084	233.36	CTL	5/8" REBAR W/2" CAP
11	466747.9585	1520051.2872	231.60	CTL	5/8" REBAR W/2" CAP
12	466895.0151	1519144.9824	232.33	CTL	5/8" REBAR W/2" CAP
13	466916.5276	1518602.1815	233.39	CTL	5/8" REBAR W/2" CAP
14	466846.7021	1517968.3440	234.13	CTL	5/8" REBAR W/2" CAP
15	466758.2321	1516725.9531	235.11	CTL	5/8" REBAR W/2" CAP
16	466573.4160	1516012.0499	233.02	CTL	5/8" REBAR W/2" CAP
17	466132.1535	1515352.7465	233.41	CTL	5/8" REBAR W/2" CAP
18	467386.7282	1517446.6852	223.71	CTL	5/8" REBAR W/2" CAP
19	467386.5935	1515107.9864	224.32	CTL	5/8" REBAR W/2" CAP
20	467350.2064	1514269.5941	224.60	CTL	5/8" REBAR W/2" CAP
21	467362.6670	1513443.4162	225.12	CTL	5/8" REBAR W/2" CAP 18' E C/L HWY 14
100	463265.6608	1524242.0037	226.05	GPS	AHTD GPS 340012 RTK ELEV
101	464007.8571	1525211.4771	228.12	GPS	AHTD GPS 340012A RTK ELEV
102	465577.8170	1514898.4606	233.77	GPS	AHTD GPS 340011 RTK ELEV
103	467412.5236	1512747.6682	225.20	GPS	AHTD GPS 340011A RTK ELEV
900	463357.4560	1525570.9035	222.69	TBM	CHISELED SQUARE CUT IN SE
901	462710.7226	1524687.8824	222.96	TBM	CHISELED SQUARE CUT IN SE
902	462261.7636	1524206.4348	222.29	TBM	CHISELED SQUARE CUT IN SW
903	462029.4841	1524929.0045	219.68	TBM	CHISELED SQUARE CUT IN CB
904	-99999.0000	-99999.0000	197.25	TBM	5/8" REBAR W/2" CAP
905	463608.4192	1523993.4626	224.10	TBM	5/8" REBAR W/2" CAP
906	-99999.0000	-99999.0000	218.56	TBM	RR SPIKE IN E SIDE OF
907	-99999.0000	-99999.0000	222.92	TBM	CHIS SQUARE CUT IN NW
908	465202.2309	1524079.5019	221.29	TBM	CHISELED SQUARE CUT IN SW
909	465174.2495	1523696.7348	235.82	TBM	CHISELED SQUARE CUT IN NW
910	466445.7295	1521676.8923	234.95	TBM	CHISELED SQUARE CUT IN NE
911	466577.6020	1520803.1134	234.97	BM	2*" ALUMINUM CAP
912	466847.4198	1517960.8084	235.19	TBM	CHISELED SQUARE CUT IN SE
913	466776.1097	1516943.0424	235.18	BM	2*" ALUMINUM CAP SETIN
914	465552.5823	1514922.3053	234.80	TBM	CHISELED SQUARE CUT IN SE
915	464720.9246	1514273.7137	234.91	BM	2*" ALUMINUM CAP SET
916	465420.7978	1513520.2719	221.70	BM	5/8" REBAR W/2" CAP
917	467204.3574	1515117.1419	223.41	TBM	CHIS SQUARE CUT IN NW
918	-99999.0000	-99999.0000	224.80	TBM	TOP OF PIPE ON WELLHEAD
919	-99999.0000	-99999.0000	224.74	TBM	TOP OF PIPE ON WELLHEAD
920	-99999.0000	-99999.0000	226.46	TBM	CHIS SQUARE CUT IN SE
921	-99999.0000	-99999.0000	196.65	TBM	5/8" REBAR W/2" CAP
922	-99999.0000	-99999.0000	220.19	TBM	RR SPIKE IN BASE OF 48" OAK TREE
923	-99999.0000	-99999.0000	234.83	TBM	TOP OF*" BOLT IN CONC
924	-99999.0000	-99999.0000	232.72	TBM	CHIS SQUARE CUT IN NW
925	-99999.0000	-99999.0000	232.67	TBM	CHIS SQUARE CUT IN SE
990	464076.9656	1525562.0252	235.03	BM	NGS MARK B 9
991	461115.4936	1521536.7769	233.61	BM	NGS MARK RV 42
992	465195.2380	1526379.6482	229.34	BM	NGS MARK RV 44
993	463979.4643	1526058.2152	228.11	BM	NGS MARK D 9

Note - Rebar and Cap - Standard -" Rebar with 2" Aluminum Cap stamped
*(standard markings common to all caps), or as indicated
(other markings indicated in the point description of the individual point).
ALL DISTANCES ARE GROUND.
USE CAF = 1.0 FOR STAKEOUT FOR THIS PROJECT.
A PROJECT CAF OF 0.9999253926 HAS BEEN USED TO COMPUTE THE ABOVE GROUND COORDINATES.
THIS CAF IS INTENDED FOR USE WITHIN THE PROJECT LIMITS.
GRID DISTANCE = GROUND DISTANCE X CAF.
GRID COORDINATES ARE STORED UNDER FILE NAME. XXXCTL
HORIZONTAL DATUM: NAD 83 (1997)
VERTICAL DATUM: NAVD 88 POSITIONAL ACCURACY THIRD ORDER, UNLESS SPECIFIED OTHERWISE AT A SPECIFIC POINT.

REFERENCE POINTS (1500 SERIES) ARE TO BE USED TO ESTABLISH CONTROL IF THE PRIMARY CONTROL POINTS LISTED ABOVE HAVE BEEN DESTROYED.
REFERENCE POINTS ARE NOT TO BE USED FOR VERTICAL CONTROL

BASIS OF BEARING:
ARKANSAS STATE PLANE GRID BEARINGS - 0301-NORTH ZONE
DETERMINED FROM GPS CONTROL POINTS: 340011 - 340011A , 340012 - 340012A
CONVERGENCE ANGLE: 00-24-50 RIGHT AT LT: 35-36-24 LG: 091-17-19
GRID AZIMUTH = ASTRONOMICAL AZIMUTH - CONVERGENCE ANGLE.

SURVEY CONTROL DETAILS

STATE OF ARKANSAS REGISTERED PROFESSIONAL ENGINEER No. 11425 KENNETH D. SMITH 9-17-13

DATE REVISED	DATE FILED	DATE REVISED	DATE FILED	FED.AID DIST.NO.	STATE	FED.AID PROJ.NO.	SHEET NO.	TOTAL SHEETS
				6	ARK.		42	230

JOB NO. 005836

② SURVEY CONTROL DETAILS

DATE REVISED	DATE FILMED	DATE REVISED	DATE FILMED

FED.RD. DIST.NO.	STATE	FED.AID PROJ.NO.	SHEET NO.	TOTAL SHEETS
6	ARK.			
JOB NO.		005836	43	230

(2) SURVEY CONTROL DETAILS

STATE OF ARKANSAS
REGISTERED PROFESSIONAL ENGINEER
No. 11425
TRINITY D. SMITH
9-17-13

3RD STREET

POINT NO.	TYPE	STATION	NORTHING	EASTING
8008	POB	200+59.28	462056.5214	1524008.1515
8009	PC	201+36.45	462133.6784	1524009.5838
8011	PT	201+82.27	462172.9788	1524029.8823
8012	POE	209+82.54	462648.2250	1524673.7549

CONST

POINT NO.	TYPE	STATION	NORTHING	EASTING
8013	POB	107+00.00	462076.1820	1524134.5483
8004	PC	139+75.32	465306.5324	1523593.6493
8006	PT	153+74.97	466243.9742	1522672.5340
8007	POE	159+24.42	466344.2184	1522132.3068

STAGE 3

POINT NO.	TYPE	STATION	NORTHING	EASTING
8004	POB	10+00.00	465306.5324	1523593.6493
8014	PC	10+14.56	465320.8919	1523591.2449
8016	PT	19+04.70	466041.2600	1523113.7334
8017	PC	20+30.12	466108.5179	1523007.8625
8019	PT	24+11.25	466247.1650	1522655.3383
8020	POE	26+18.80	466285.0304	1522451.2775

9/12/2013

R005836.DGN

SURVEY CONTROL DETAILS

DATE REVISED	DATE FILMED	DATE REVISED	DATE FILMED	FED.RD. DIST.NO.	STATE	FED.AID PROJ.NO.	SHEET NO.	TOTAL SHEETS
				6	ARK.			
				JOB NO.		005836	44	230

(2) SURVEY CONTROL DETAILS

STATE OF ARKANSAS REGISTERED PROFESSIONAL ENGINEER No. 11425 TRINITY D. SMITH

9-17-13

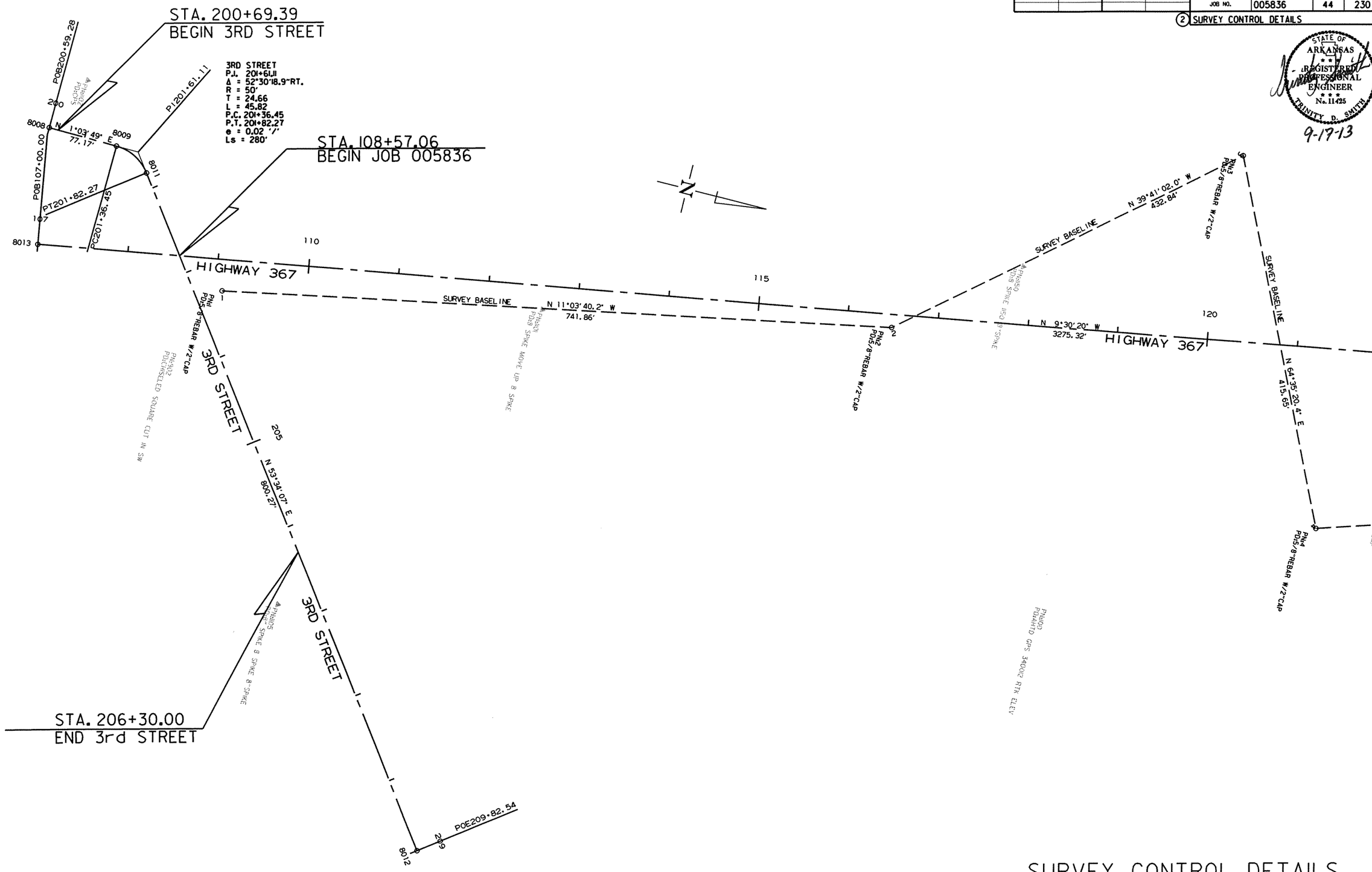

SURVEY CONTROL DETAILS

9/12/2013

R005836.DGN

DATE REVISED	DATE FILMED	DATE REVISED	DATE FILMED

FED.RD. DIST.NO.	STATE	FED.AID PROJ.NO.	SHEET NO.	TOTAL SHEETS
6	ARK.			
JOB NO.		005836	45	230

(2) SURVEY CONTROL DETAILS

STATE OF ARKANSAS
REGISTERED PROFESSIONAL ENGINEER
No. 11425
TRINITY D. SMITH

9-17-13

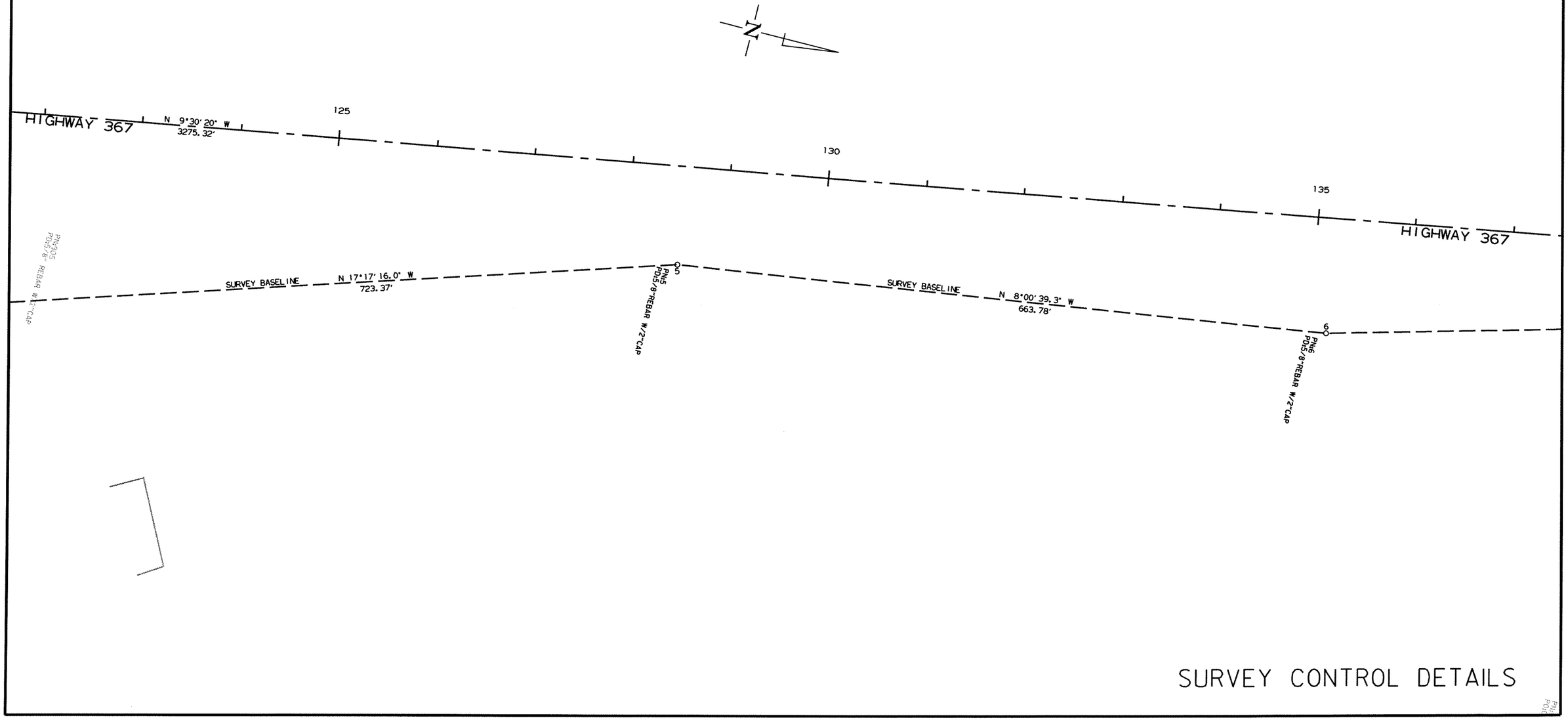

SURVEY CONTROL DETAILS

9/12/2013

R005836.DGN

DATE REVISED	DATE FILMED	DATE REVISED	DATE FILMED	FED.RD. DIST.NO.	STATE	FED.AID PROJ.NO.	SHEET NO.	TOTAL SHEETS
				6	ARK.			
				JOB NO.		005836	46	230

(2) SURVEY CONTROL DETAILS

STATE OF ARKANSAS
REGISTERED PROFESSIONAL ENGINEER
No. 11425
TRINITY D. SMITH
9-17-13

SURVEY CONTROL DETAILS

9/12/2013

R005836.DGN

DATE REVISED	DATE FILMED	DATE REVISED	DATE FILMED	FED.RD. DIST.NO.	STATE	FED.AID PROJ.NO.	SHEET NO.	TOTAL SHEETS
				6	ARK.			
				JOB NO.		005836	47	230

(2) SURVEY CONTROL DETAILS

STATE OF ARKANSAS REGISTERED PROFESSIONAL ENGINEER No. 11425 TRINITY D. SMITH

9-17-13

SURVEY CONTROL DETAILS

9/12/2013

R005836.DGN

DATE REVISED	DATE FILMED	DATE REVISED	DATE FILMED	FED.RD. DIST.NO.	STATE	FED.AID PROJ.NO.	SHEET NO.	TOTAL SHEETS
				6	ARK.			
				JOB NO.		005836	48	230

(2) PLAN AND PROFILE SHEETS

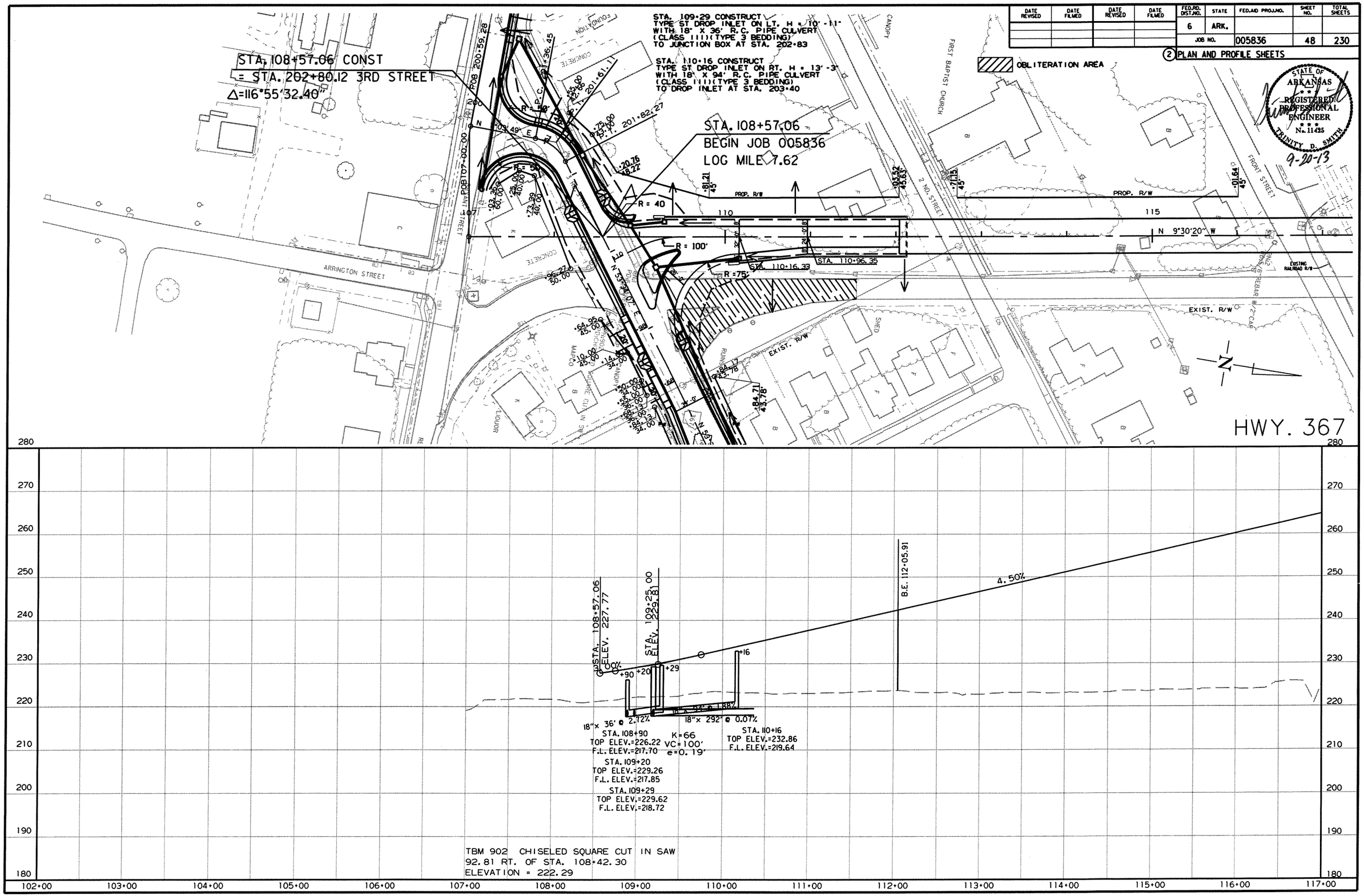

9/20/2013

R005836.DGN

DATE REVISED	DATE FILMED	DATE REVISED	DATE FILMED	FED.RD. DIST.NO.	STATE	FED.AID PROJ.NO.	SHEET NO.	TOTAL SHEETS
				6	ARK.			
				JOB NO.		005836	49	230

(2) PLAN AND PROFILE SHEETS

STA. 112+05.91 TO STA. 138+26.09 CONSTRUCT
2620'-2¼" X 40' CLEAR ROADWAY BRIDGE NO. 07289
246' CONTINUOUS COMPOSITE PLATE GIRDER UNIT (123',123')
522' CONTINUOUS COMPOSITE PLATE GIRDER UNIT (159',204',159')
1220' CONTINUOUS COMPOSITE PLATE GIRDER UNIT (155',280',350',280',155')
210' CONTINUOUS COMPOSITE PLATE GIRDER UNIT (65',80',65')
210' CONTINUOUS COMPOSITE PLATE GIRDER UNIT (65',80',65')

STA. 111+54.33 TO STA. 138+00.83 IN PLACE
2831-8" X 24' CLEAR ROADWAY
BRIDGE NO. 00612
CONCRETE SPANS W/STEEL TRUSS UNIT
RETAIN

STATE OF ARKANSAS
REGISTERED PROFESSIONAL ENGINEER
No. 11425
TRINITY D. SMITH
9-17-13

-01.64 45'
-48.08 45'
-11.65 45.00'
-42.88 65.00'
-09.29 65.00'
-13.95
+56.96
-13.21 45'
-09.19 80.00'
-93.31 40.03'
-08.54 40.13'
-78.33 40.00'

FRONT STREET
PK NAIL
PINS
RAILS
DRL'D CHANNEL
PK NAIL
PDS5/8" REBAR W/2" CAP
BUILDING FOUNDATION
EXIST. R/W
PROP. R/W
TCE
EXISTING RAILROAD R/W
EXISTING RAILROAD R/W
EXIST. R/W
N 9°30'20" W
120
125
130
EXIST. R/W
EXIST. R/W
PK NAIL
PDS5/8" REBAR W/2" CAP
PK NAIL
PDS5/8" REBAR W/2" CAP
PK NAIL
PDS5/8" REBAR W/2" CAP
FRONT STR

SPECIAL FLOOD HAZARD AREA
STA. 119+51.61 TO STA. 145+00

FOR THE CONSTRUCTION OF TEMPORARY RAMPS OR HAUL ROADS,
THIS STREAM IS CLASSIFIED AS A 5 CFS.
THE STREAM BANK ELEVATIONS ARE 216 FT.

HWY. 367

310

300
290
280
270
260
250
240
230
220
210

4.50%
-4.50%
STA. 125+10.00
ELEV. 301.13
K= 155
VC=1400'
e=-15.75'
DESIGN HW
ELEV. 229.52

TBM 905 ⅝" REBAR W/2" CAP
113.89 RT. OF STA. 122+34.50
ELEVATION = 224.10

116+00 117+00 118+00 119+00 120+00 121+00 122+00 123+00 124+00 125+00 126+00 127+00 128+00 129+00 130+00 131+00

9/12/2013
R005836.DGN

DATE REVISED	DATE FILMED	DATE REVISED	DATE FILMED	FED.RD. DIST.NO.	STATE	FED.AID PROJ.NO.	SHEET NO.	TOTAL SHEETS
				6	ARK.			
				JOB NO.		005836	50	230

(2) PLAN AND PROFILE SHEETS

OBLITERATION AREA

STA.	STA.	LOCATION	GUARDRAIL (TYPE A)	THRIE BEAM GUARDRAIL TERMINAL	GUARDRAIL TERMINAL (TYPE 2)	GUARDRAIL TERMINAL (TYPE 1)
138+25.49	140+44.24	LT. OF C.L. HWY. 367	150 LIN. FT.	1	1	
138+25.49	139+19.24	RT. OF C.L. HWY. 367	75 LIN. FT.	1		1

STATE OF ARKANSAS REGISTERED PROFESSIONAL ENGINEER No. 11425 TRINITY D. SMITH

9-17-13

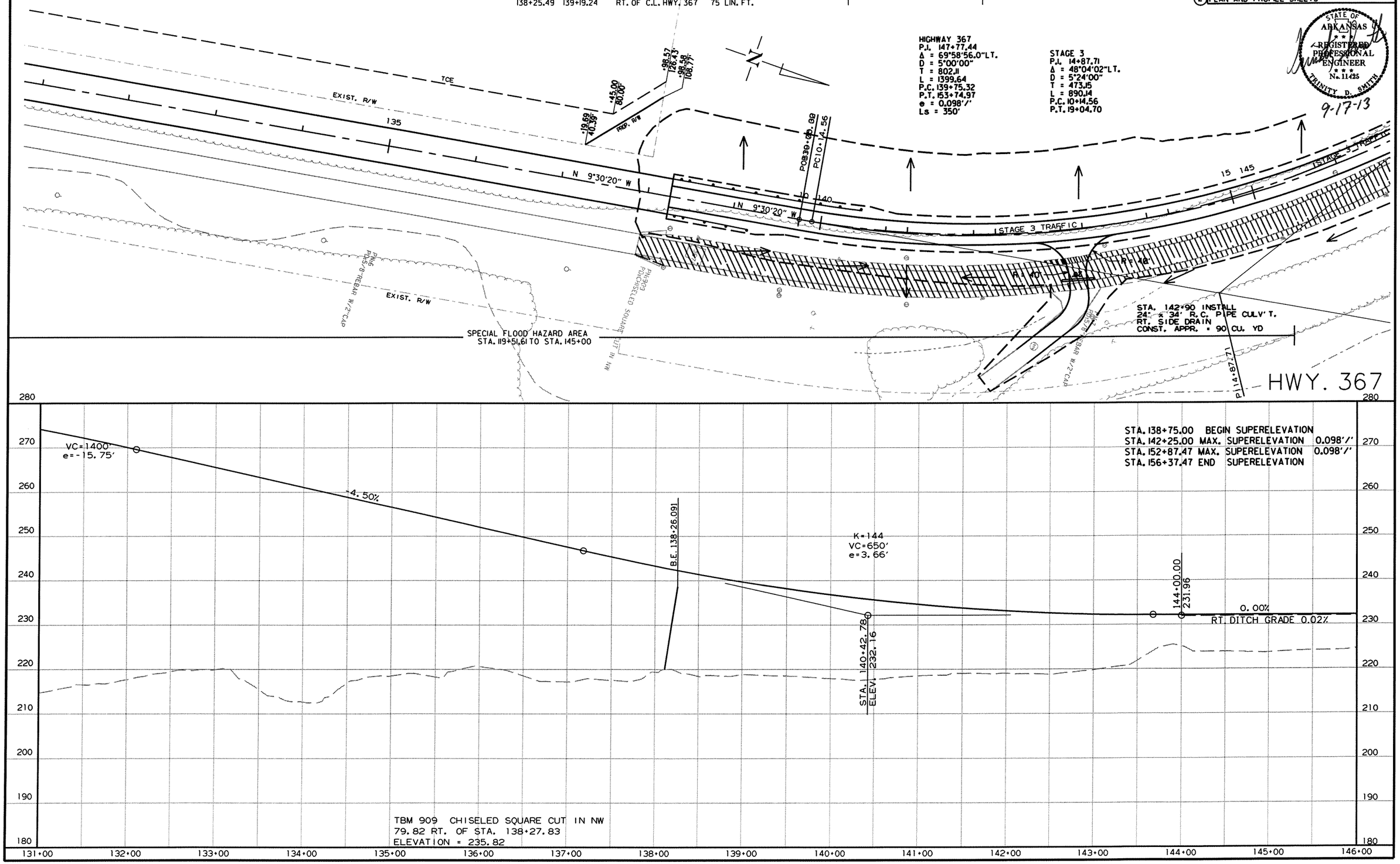

R005836.DGN 9/12/2013

DATE REVISED	DATE FILMED	DATE REVISED	DATE FILMED	FED.RD. DIST.NO.	STATE	FED.AID PROJ.NO.	SHEET NO.	TOTAL SHEETS
				6	ARK.			
				JOB NO.		005836	51	230

(2) PLAN AND PROFILE SHEETS

OBLITERATION AREA

STAGE 3
P.I. 22+23.05
Δ = 21°54'54"LT.
D = 5°45'00"
T = 192.92
L = 381.13
P.C. 20+30.12
P.T. 24+11.25

HIGHWAY 367
P.I. 147+77.44
Δ = 69°58'56.0"LT.
D = 5°00'00"
T = 802.11
L = 1399.64
P.C. 139+75.32
P.T. 153+74.97
e = 0.098'/'
Ls = 350'

STA. 153+12- CONSTRUCT APPR. ON LT. = 40 CU. YD.

STAGE 3 TRAFFIC

PT 19+04.70

PC 20+30.12

TAN S 23°34'23" W

20

150

STAGE 2 TRAFFIC

R = 50'

PT 153+74.97

PI 24+11.25

R = 50'

POE 26+18.80

POE 159+24.42

25 155

26

159

N 79°28'16" W

PI 22+23.05

EXIST. R/W

STA. 156+50.00
END JOB 005836
LOG MILE 6.71

STATE OF ARKANSAS
REGISTERED PROFESSIONAL ENGINEER
No. 11425
TRINITY D. SMITH
9-17-13

HWY. 367

STA. 138+75.00 BEGIN SUPERELEVATION
STA. 142+25.00 MAX. SUPERELEVATION 0.098'/'
STA. 152+87.47 MAX. SUPERELEVATION 0.098'/'
STA. 156+37.47 END SUPERELEVATION

150+50.00
232.06

STA. 156+50.00
ELEV. 232.16

0.00%

RT. DITCH GRADE 0.02%

250 245 240 235 230 225 220 215 210 205 200

147+00 148+00 149+00 150+00 151+00 152+00 153+00 154+00 155+00 156+00 157+00 158+00 159+00 160+00 161+00 162+00

9/12/2013

R005836.DGN

DATE REVISED	DATE FILMED	DATE REVISED	DATE FILMED	FED.RD. DIST.NO.	STATE	FED.AID PROJ.NO.	SHEET NO.	TOTAL SHEETS
				6	ARK.			
				JOB NO.		005836	52	230

(2) PLAN AND PROFILE SHEETS

STATE OF ARKANSAS
REGISTERED PROFESSIONAL ENGINEER
No. 11425
TRINITY D. SMITH
9-20-13

STA. 200+94 CONSTRUCT
JUNCTION BOX 110° LT. H = 2'-1"
OVER EXIST. 18" PIPE
TYPE ST JUNCTION BOX = 3'-0" X 3'-0"

STA. 201+85 CONSTRUCT
JUNCTION BOX 21° LT. H = 9'-1"
WITH 18" X 154' PIPE CULVERT
TO JUNCTION BOX AT STA. 200+94
TYPE ST JUNCTION BOX = 3'-0" X 3'-0"
24" R.C. PIPE (CL. III) = 154 LIN. FT.
24" SLPPMCCS PIPE = 154 LIN. FT.

STA. 202+83 CONSTRUCT
JUNCTION BOX H = 8'-6"
WITH 18" X 98' R.C. PIPE CULVERT
(CLASS III) (TYPE 3 BEDDING)
TO JUNCTION BOX AT STA. 201+85
TYPE ST JUNCTION BOX = 3'-0" X 3'-0"

STA. 203+40 CONSTRUCT
JUNCTION BOX 40° LT. H = 11'-5"
WITH 18" X 54' R.C. PIPE CULVERT
(CLASS III) (TYPE 3 BEDDING)
TO JUNCTION BOX AT STA. 202+83
TYPE ST JUNCTION BOX = 3'-0" X 3'-0"

3RD. STREET
P.I. 201+61.11
Δ = 52°30'18.9"RT.
R = 50'
T = 24.66
L = 45.82
P.C. 201+36.45
P.T. 201+82.27
e = 0.02'/'
l_s = 280'

OBLITERATION AREA

STA. 108+57.06
BEGIN JOB 005836
LOG MILE 7.62

WHEELCHAIR RAMP TYPE 3

STA.	LOCATION	
202+40	RT. SIDE OF 3RD STREET	10.1 SQ. YD.
202+40	LT. SIDE OF 3RD STREET	10.1 SQ. YD.
204+32	RT. SIDE OF 3RD STREET	10.1 SQ. YD.
204+32	LT. SIDE OF 3RD STREET	7.1 SQ. YD.

STA. 206+30.00
END 3RD STREET

POE 209+82.54

GUARDRAIL (TYPE C)

STA.	LOCATION	GUARDRAIL (TYPE C)
203+25.00	ARRINGTON STREET	50 LIN. FT.

STA. 200+82.27
3RD STREET TIE

STA. 200+69.39
BEGIN 3RD STREET

STA. 108+57.06 CONST
= STA. 202+80.12 3RD STREET
Δ=116°55'32.40"

STA. 206+26 CONSTRUCT
DROP INLET ON RT. H=5'-4"
WITH 18" X 18' R.C. PIPE CULVERT
(CLASS III) (TYPE 3 BEDDING)
TO JUNCTION BOX AT STA. 206+30
TYPE MO DROP INLET = 4' DIA.
TYPE C DROP INLET = 2'-6" X 4'-0"

STA. 206+30 CONSTRUCT
JUNCTION BOX H=5'-1"
WITH 18" X 36' R.C. PIPE CULVERT
(CLASS III) (TYPE 3 BEDDING)
TO DI ON LT.
TYPE ST JUNCTION BOX = 1 EACH

STA. 206+30 CONSTRUCT
DROP INLET ON LT. H=5'-4"
WITH 18" X 292' R.C. PIPE CULVERT
(CLASS III) (TYPE 3 BEDDING)
TO DI AT STA. 203+40
TYPE MO DROP INLET = 4' DIA.
TYPE C DROP INLET = 2'-6" X 4'-0"

STA. 200+83 CONSTRUCT
DROP INLET ON LT. H = 3'-4"
WITH 18" X 48' R.C. PIPE CULVERT
TO JUNCTION BOX AT STA. 200+94
TYPE MO DROP INLET = 4' DIA.
TYPE C DROP INLET = 2'-6" X 4'-0"
24" R.C. PIPE (CL. III) = 48 LIN. FT.
24" SLPPMCCS PIPE = 48 LIN. FT.

STA. 200+83 CONSTRUCT
DROP INLET ON RT. H = 3'-2"
WITH 18" X 134' PIPE CULVERT
TO DI ON LT.
TYPE MO DROP INLET = 4' DIA.
TYPE C DROP INLET = 2'-6" X 4'-0"
24" R.C. PIPE (CL. III) = 134 LIN. FT.
24" SLPPMCCS PIPE = 134 LIN. FT.

FENCE

STA.	LOCATION	4' CHAIN LINK FENCE
204+84 TO 206+26	RT. SIDE OF 3RD STREET	142 LIN. FT.
205+45 TO 206+26	LT. SIDE OF 3RD STREET	94 LIN. FT.

HWY. 367/3RD STREET

STA. 200+80.00 BEGIN SUPERELEVATION
STA. 201+37.00 MAX. SUPERELEVATION 0.020'/'
STA. 203+04.00 MAX. SUPERELEVATION 0.020'/'
STA. 203+60.00 END SUPERELEVATION

P.V.I. 200+69.39
ELEV. 219.66
P.V.C. 200+89.32
ELEV. 220.06
K 18.33
VC=55'
e=0.21'

P.V.I. 201+16.82
ELEV. 220.61

P.V.T. 201+44.32
ELEV. 221.98
5.00%

P.V.C. 202+30.12
ELEV. 226.27
+85

P.V.I. 202+80.12
ELEV. 228.77
K 12.50
VC=100'
e=1.00'
+83

P.V.T. 203+30.12
ELEV. 227.27

P.V.C. 203+63.65
ELEV. 226.26
3.08%
+40

K 66.65
VC=220'
e=0.91'

P.V.I. 204+73.65
ELEV. 222.86

P.V.T. 205+83.65
ELEV. 223.30
0.30%

P.V.I. 206+30.00
ELEV. 223.43
+30

18" x 154' @ 0.03% | 18" x 94' @ 0.05% | 18" x 54' @ 0.19% | 18" x 292' @ 0.07%

STA. 200+84
TOP ELEV.=220.85
F.L. ELEV.=217.54

STA. 200+86
TOP ELEV.=220.85
F.L. ELEV.=217.67

STA. 200+96
TOP ELEV.=219.60
F.L. ELEV.=0.00

STA. 201+85
TOP ELEV.=224.90
F.L. ELEV.=217.60

STA. 202+83
TOP ELEV.=226.22
F.L. ELEV.=217.70

STA. 203+40
TOP ELEV.=229.26
F.L. ELEV.=217.85

STA. 206+26
TOP ELEV.=223.43
F.L. ELEV.=218.13

STA. 206+30
TOP ELEV.=223.43
F.L. ELEV.=218.09

STA. 206+30
TOP ELEV.=223.20
F.L. ELEV.=218.12

235 230 225 220 215 210 205 200 195

196+00 197+00 198+00 199+00 200+00 201+00 202+00 203+00 204+00 205+00 206+00 207+00 208+00 209+00 210+00 211+00

9/20/2013

R005836.DGN

DATE REVISED	DATE FILMED	DATE REVISED	DATE FILMED	FED. ROAD DIST. NO.	STATE	FED. AID PROJ. NO.	SHEET NO.	TOTAL SHEETS
				6	ARK.			
				JOB NO.		005836	53	230
				①	07289 -	LAYOUT		- 54073

For R/W Data, see Rdwy. Plans

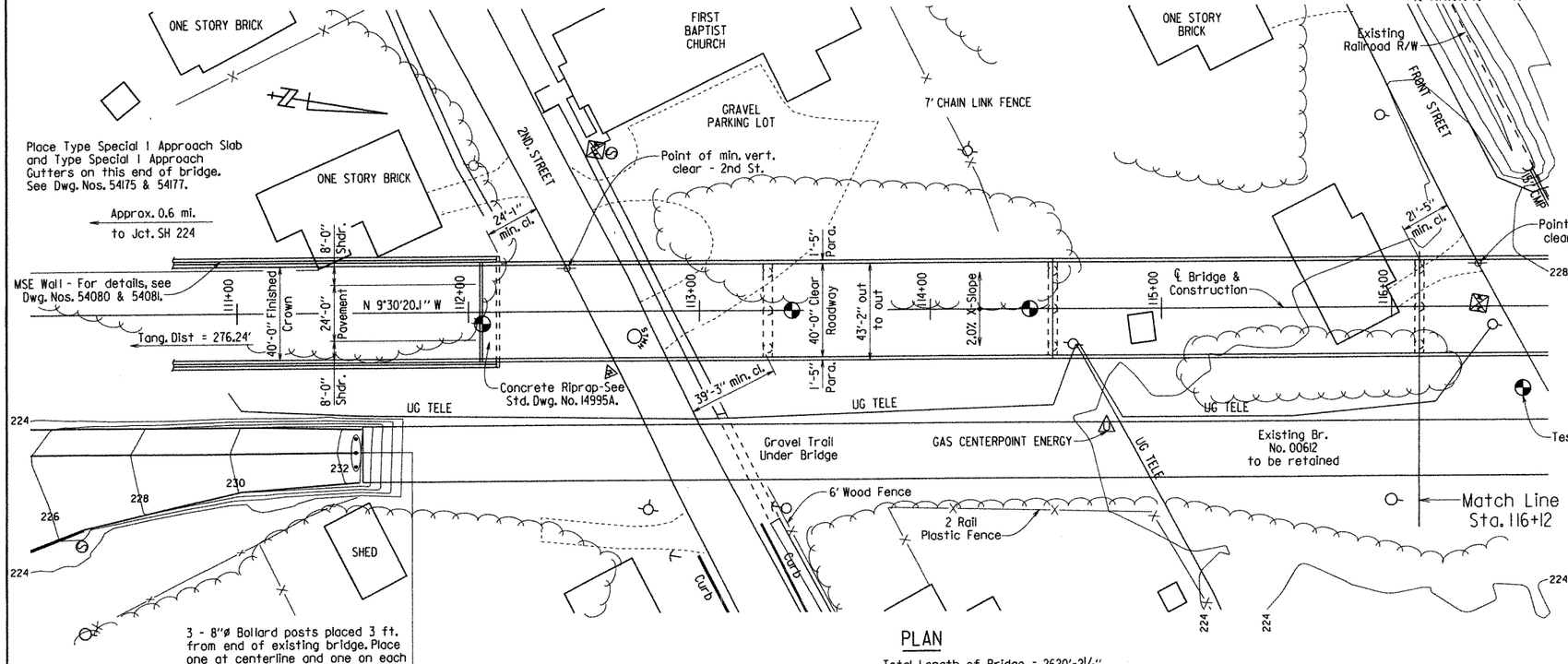

PLAN

Total Length of Bridge = 2620'-2¼"

1'-1⅛" | 246'-0" Continuous Composite Plate Girder Unit (123', 123') - Unit 1 | 522'-0" Continuous Composite Plate Girder Unit (159', 204, 159') - Unit 2

℄ 2¾" Strip Seal Joint

+4.50% Grade

Stations and elevations are along ℄ Bridge. Elevations are at Working Point.

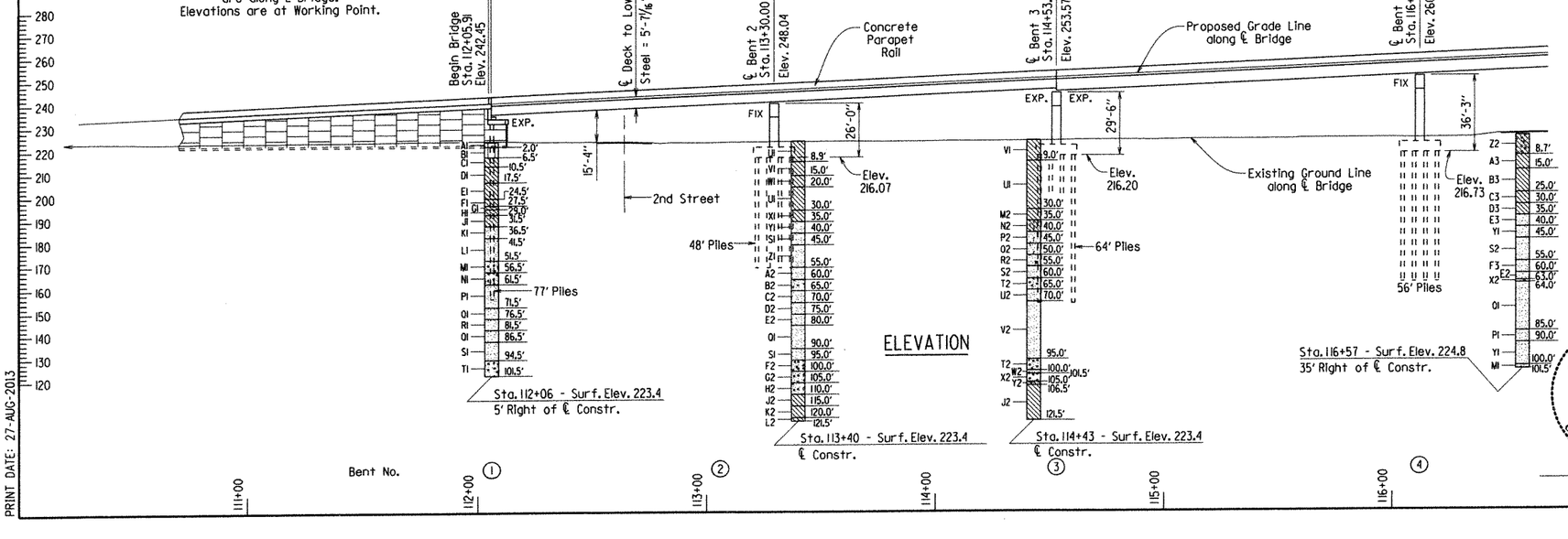

"N" VALUES

Sta. 112+06 - 5' Right of ℄ Constr.

0.5- 1.5, N=17
4.5- 5.5, N=18
9.0- 10.0, N=11
13.0- 14.0, N=11
16.5- 17.5, N=10
21.5- 22.5, N=8
23.5- 24.5, N=6
25.5- 26.5, N=6
28.0- 29.0, N=5
30.5- 31.5, N=4
35.5- 36.5, N=8
40.5- 41.5, N=31
45.5- 46.5, N=32
50.5- 51.5, N=29
55.5- 56.5, N=14
60.5- 61.5, N=34
65.5- 66.5, N=64
70.5- 71.5, N=56
75.5- 76.5, N=77
80.5- 81.5, N=27
85.5- 86.5, N=89
90.5- 91.5, N=43
95.5- 96.5, N=73
100.5-101.5, N=64

Sta. 113+40 - ℄ Constr.

4.4- 5.4, N=13
9.4- 10.4, N=17
15.5- 16.5, N=9
20.5- 21.5, N=9
25.5- 26.5, N=9
30.5- 31.5, N=5
35.5- 36.5, N=22
40.5- 41.5, N=45
45.5- 46.5, N=56
50.5- 51.5, N=37
55.5- 56.5, N=40
60.5- 61.5, N=31
65.5- 66.5, N=39
70.5- 71.5, N=59
75.5- 76.5, N=47
80.5- 81.5, N=107
85.5- 86.5, N=79
90.5- 91.5, N=39
95.5- 96.5, N=21
100.0-100.3, N=60(4'')
105.5-105.8, N=60(4'')
110.5-111.5, N=36
115.5-116.5, N=58
120.5-121.5, N=80

Sta. 114+43 - ℄ Constr.

4.5- 5.5, N=20
9.5- 10.5, N=13
15.5- 16.5, N=10
20.5- 21.5, N=10
25.5- 26.5, N=10
30.5- 31.5, N=3
35.5- 36.5, N=11
40.5- 41.5, N=41
45.5- 46.5, N=30
50.5- 51.5, N=29
55.5- 56.5, N=27
60.5- 61.5, N=29
65.5- 66.5, N=32
70.5- 71.5, N=73
75.5- 76.5, N=111
80.5- 81.5, N=107
85.5- 86.5, N=74
90.5- 90.8, N=60(4'')
95.5- 96.5, N=21
100.5-101.5, N=59
105.5-106.5, N=56
110.5-111.5, N=39
115.5-116.5, N=40
120.5-121.5, N=40

Sta. 116+57 - 35' Right of ℄ Constr.

4.2- 5.2, N=6
9.2- 10.2, N=14
15.5- 16.5, N=7
20.5- 21.5, N=10
25.5- 26.5, N=5
30.5- 31.5, N=5
35.5- 36.5, N=9
40.5- 41.5, N=30
45.5- 46.5, N=23
50.5- 51.5, N=27
55.5- 56.5, N=11
60.5- 61.5, N=38
65.5- 66.5, N=75
70.5- 71.5, N=82
75.5- 76.3, N=100(10'')
80.5- 81.2, N=100(9'')
85.5- 85.8, N=60(4'')
90.5- 91.5, N=29
95.5- 96.5, N=25
100.5-101.5, N=25

Bent No.	℄ Deck ø ℄ Bt & ℄ Br. (Working Point) to Low Side Top of Cap
2	5'-11⅝"
3	7'-10⅛"
4	7'-9"

For "General Notes", "Boring Legend" and "Hydraulic Data", see Dwg. No. 54078.

STATE OF ARKANSAS
CARL J. FUSELIER
REGISTERED PROFESSIONAL ENGINEER
No. 7510
CARL J. FUSELIER 8/28/13
BRIDGE ENGINEER

SHEET 1 OF 6
LAYOUT OF BRIDGE OVER WHITE RIVER
WHITE RIVER STR. & APPRS.
(NEWPORT) (S)
JACKSON COUNTY

ROUTE 367 SEC. 21

ARKANSAS STATE HIGHWAY COMMISSION
LITTLE ROCK, ARK.

DRAWN BY: KDH DATE: 12-29-11
CHECKED BY: DHP DATE: 8-28-13
DESIGNED BY: CSL DATE: Nov 2012
FILENAME: b005836_ll.dgn
SCALE: 1" = 30'

BRIDGE NO. 07289 DRAWING NO. 54073

DATE REVISED	DATE FILMED	DATE REVISED	DATE FILMED	FED. ROAD DIST. NO.	STATE	FED. AID PROJ. NO.	SHEET NO.	TOTAL SHEETS
				6	ARK.			
				JOB NO.		005836	54	230
				(1) 07289 -		LAYOUT		- 54074

For R/W Data, see Rdwy. Plans

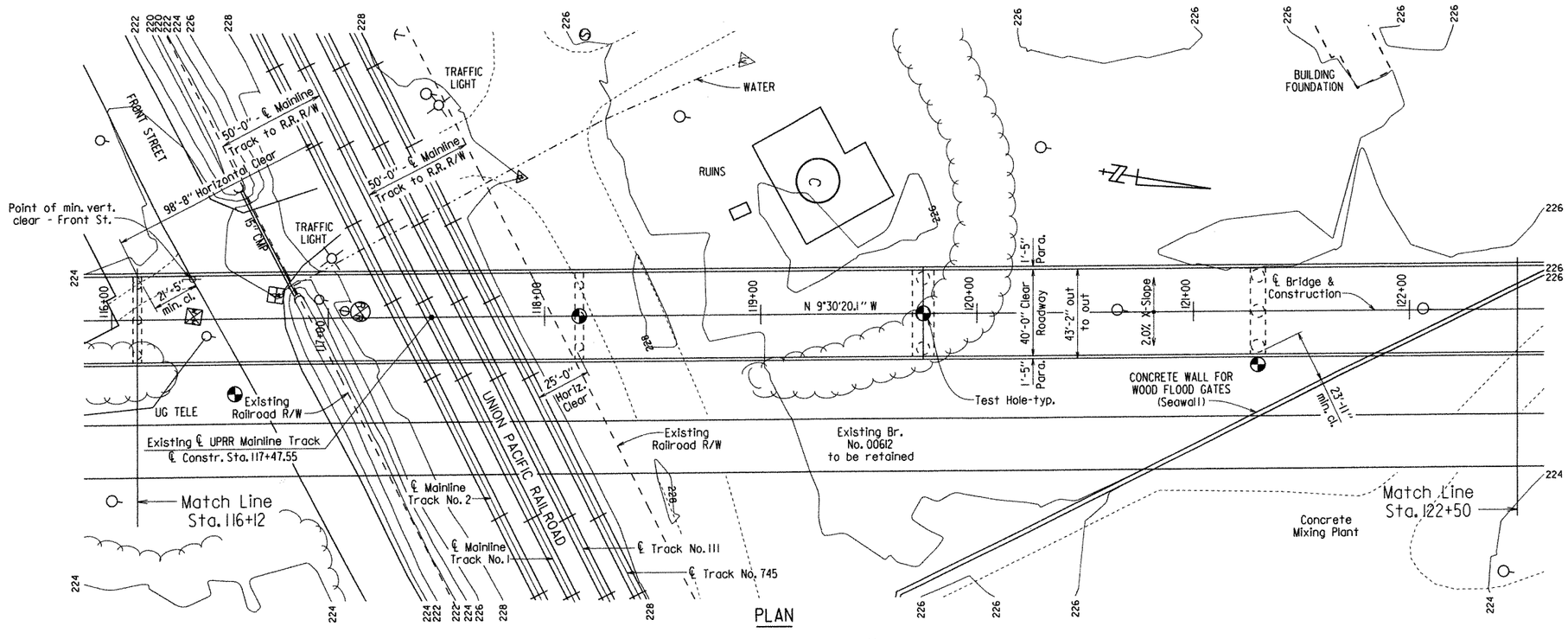

"N" VALUES

Sta. 116+57 - 35' Right of ℄ Constr.

4.2- 5.2	N=6
9.2- 10.2	N=14
15.5- 16.5	N=7
20.5- 21.5	N=10
25.5- 26.5	N=5
30.5- 31.5	N=5
35.5- 36.5	N=9
40.5- 41.5	N=30
45.5- 46.5	N=23
50.5- 51.5	N=27
55.5- 56.5	N=11
60.5- 61.5	N=38
65.5- 66.5	N=75
70.5- 71.5	N=82
75.5- 76.3	N=100(10'')
80.5- 81.2	N=100(9'')
85.5- 85.8	N=60(4'')
90.5- 91.5	N=29
95.5- 96.5	N=25
100.5-101.5	N=25

Sta. 118+16 - ℄ Constr.

4.6- 5.6	N=11
9.6- 10.6	N=9
15.5- 16.5	N=11
20.5- 21.5	N=9
25.5- 26.5	N=8
30.5- 31.5	N=7
35.5- 36.5	N=5
40.5- 41.5	N=17
45.5- 46.5	N=22
50.5- 51.5	N=64
55.5- 56.5	N=22
60.5- 61.5	N=36
65.5- 66.5	N=63
70.5- 71.5	N=26
75.5- 76.5	N=21
80.5- 81.3	N=119(10'')
85.5- 85.8	N=60(4'')
90.5- 91.5	N=95
95.5- 96.5	N=33
100.5-101.5	N=25

Sta. 119+75 - ℄ Constr.

4.9- 5.9	N=6
10.4- 11.4	N=14
15.5- 16.5	N=13
20.5- 21.5	N=10
25.5- 26.5	N=9
30.5- 31.5	N=4
35.5- 36.5	N=0
40.5- 41.5	N=4
45.5- 46.5	N=30
50.5- 51.5	N=22
55.5- 56.5	N=50
60.5- 61.5	N=21
65.5- 66.5	N=35
70.5- 71.5	N=52
75.5- 76.5	N=78
80.5- 81.5	N=67
85.5- 86.5	N=112
90.5- 91.5	N=45
95.5- 96.5	N=58
100.5-101.5	N=57

Sta. 121+30 - 25' Right of ℄ Constr.

4.6- 5.6	N=11
9.6- 10.6	N=14
15.5- 16.5	N=11
20.5- 21.5	N=13
25.5- 26.5	N=12
30.5- 31.5	N=8
35.5- 36.5	N=26
40.5- 41.5	N=31
45.5- 46.5	N=43
50.5- 51.5	N=28
55.5- 56.5	N=26
60.5- 61.5	N=45
65.5- 66.5	N=35
70.5- 71.5	N=116
75.5- 76.5	N=90
80.5- 81.5	N=26
85.5- 86.3	N=119(10'')
90.5- 91.5	N=35
95.5- 96.5	N=52
100.5-101.5	N=63

Total Length of Bridge = 2620'-2¼"

522'-0" Continuous Composite Plate Girder Unit (159', 204, 159') - Unit 2

1220'-0" Continuous Composite Plate Girder Unit (155', 280', 350', 280', 155') - Unit 3

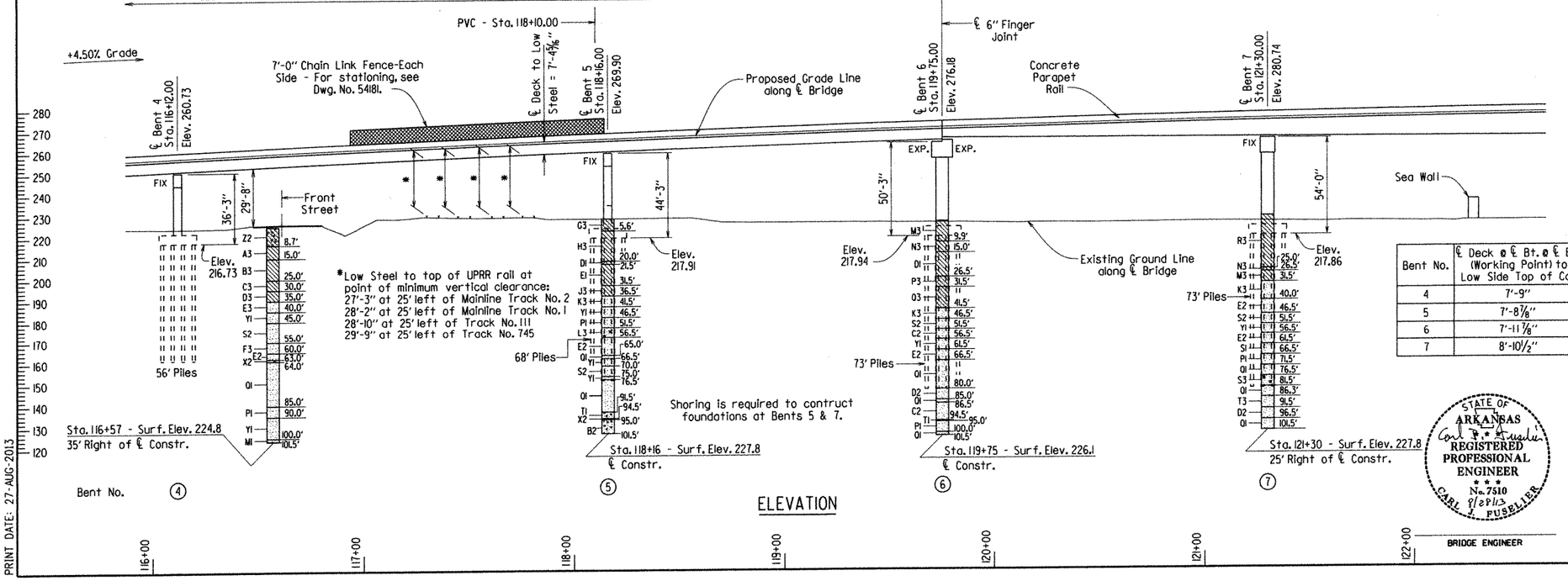

*Low Steel to top of UPRR rail at point of minimum vertical clearance:
27'-3" at 25' left of Mainline Track No. 2
28'-2" at 25' left of Mainline Track No. 1
28'-10" at 25' left of Track No. 111
29'-9" at 25' left of Track No. 745

Bent No.	℄ Deck ø ℄ Bt. ø ℄ Br. (Working Point) to Low Side Top of Cap
4	7'-9"
5	7'-8⅞"
6	7'-11⅞"
7	8'-10½"

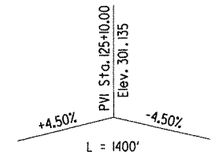

VERTICAL CURVE DATA ALONG ℄ BRIDGE

Stations and elevations are along ℄ Bridge.
Elevations are at Working Point.

For "General Notes", "Boring Legend" and "Hydraulic Data", see Dwg. No. 54078.

STATE OF ARKANSAS
Carl L. Fusellier
REGISTERED PROFESSIONAL ENGINEER
No. 7510
9/29/13
CARL L. FUSELLIER
BRIDGE ENGINEER

SHEET 2 OF 6
LAYOUT OF BRIDGE OVER WHITE RIVER
WHITE RIVER STR. & APPRS. (NEWPORT) (S)
JACKSON COUNTY

ROUTE 367 SEC. 21

ARKANSAS STATE HIGHWAY COMMISSION

LITTLE ROCK, ARK.

DRAWN BY: KDH DATE: 12-29-11 FILENAME: b005836_11.dgn
CHECKED BY: DHP DATE: 8-28-13 SCALE: 1" = 30'
DESIGNED BY: CSL DATE: Nov 2013

BRIDGE NO. 07289 DRAWING NO. 54074

PRINT DATE: 27-AUG-2013

For R/W Data, see Rdwy. Plans

DATE REVISED	DATE FILMED	DATE REVISED	DATE FILMED

FED. ROAD DIST. NO.	STATE	FED. AID PROJ. NO.	SHEET NO.	TOTAL SHEETS
6	ARK.			
JOB NO.		005836	55	230
07289 -		LAYOUT		- 54075

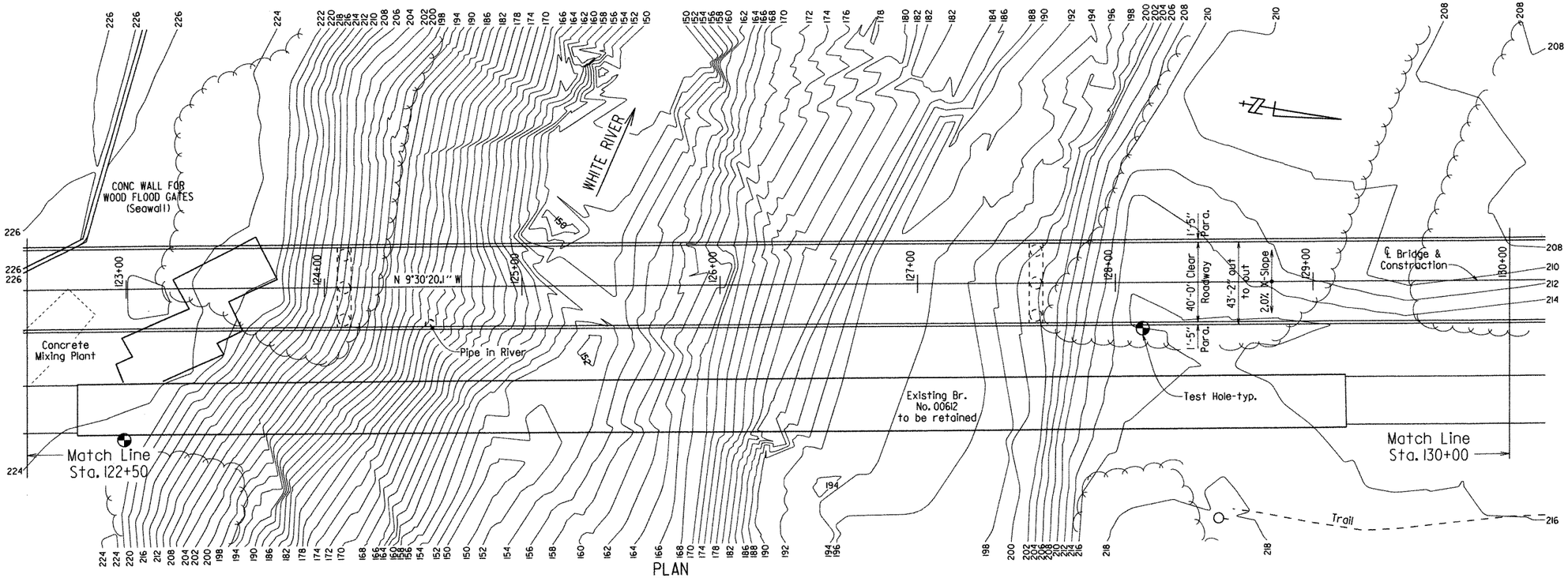

PLAN

Total Length of Bridge = 2620'-2¼"

1220'-0" Continuous Composite Plate Girder Unit (155', 280', 350', 280', 155') - Unit 3

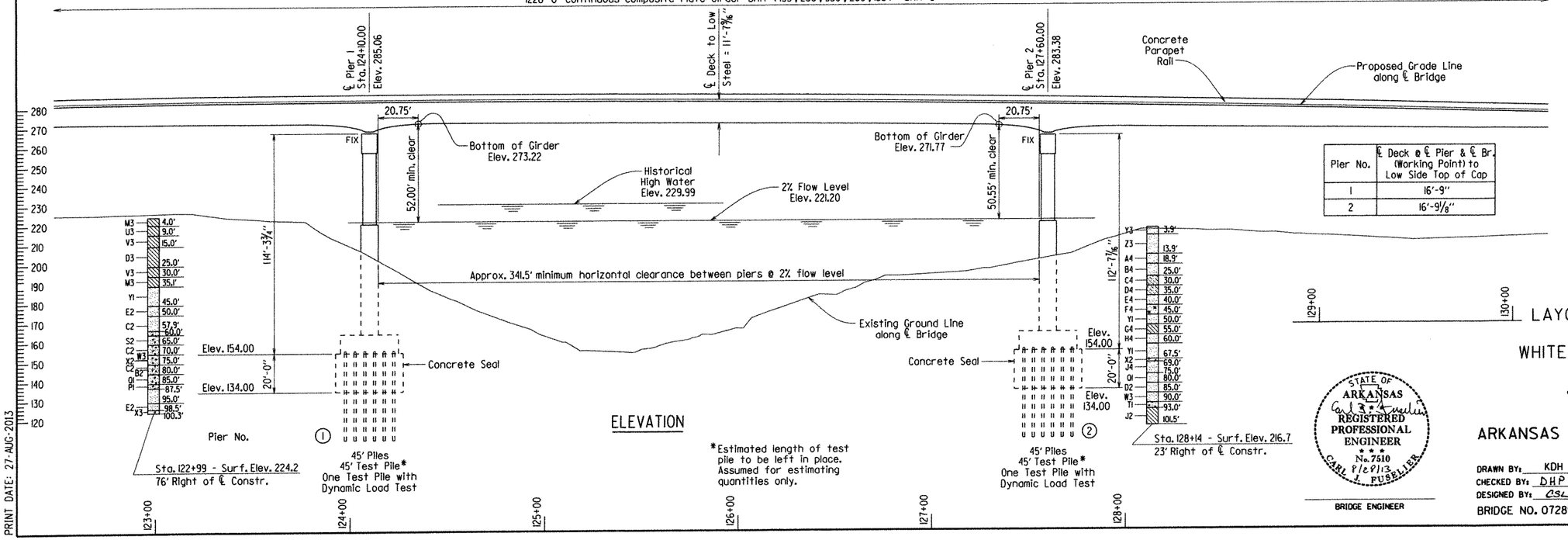

ELEVATION

*Estimated length of test pile to be left in place. Assumed for estimating quantities only.

Pier No.	℄ Deck @ ℄ Pier & ℄ Br. (Working Point) to Low Side Top of Cap
1	16'-9"
2	16'-9⅛"

"N" VALUES

Sta. 122+99 - 76' Right of ℄ Constr.

4.5- 5.5, N=4
9.5- 10.5, N=13
15.5- 16.5, N=6
20.5- 21.5, N=8
25.5- 26.5, N=9
30.5- 31.5, N=5
35.5- 36.5, N=19
40.5- 41.5, N=17
45.5- 46.5, N=36
50.5- 51.5, N=39
55.5- 56.5, N=34
60.5- 61.5, N=26
65.5- 66.5, N=41
70.5- 71.5, N=40
75.5- 76.5, N=35
80.5- 80.8, N=60(3')
85.5- 86.5, N=63
90.5- 91.5, N=41
95.5- 96.5, N=48
100.0-100.2, N=60(3')

Sta. 128+14 - 23' Right of ℄ Constr. or 37' Left of ℄ Existing Bridge

4.4- 5.4, N=3
9.4- 10.4, N=2
14.4- 15.4, N=4
19.4- 20.4, N=2
25.5- 26.5, N=0
30.5- 31.5, N=3
35.5- 36.5, N=8
40.5- 41.5, N=10
45.5- 46.5, N=15
50.5- 51.5, N=0
55.5- 56.5, N=10
60.5- 61.5, N=16
65.5- 66.5, N=15
70.5- 71.5, N=52
75.5- 76.5, N=79
80.5- 81.5, N=64
85.5- 86.5, N=43
90.0- 90.3, N=60(4')
95.5- 96.5, N=31
100.5-101.5, N=32

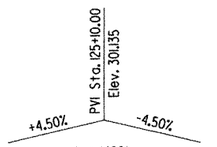

VERTICAL CURVE DATA ALONG ℄ BRIDGE

Stations and elevations are along ℄ Bridge. Elevations are at Working Point.

For "General Notes", "Boring Legend" and "Hydraulic Data", see Dwg. No. 54078.

SHEET 3 OF 6
LAYOUT OF BRIDGE OVER WHITE RIVER
WHITE RIVER STR. & APPRS.
(NEWPORT) (S)
JACKSON COUNTY

ROUTE 367 SEC. 21

ARKANSAS STATE HIGHWAY COMMISSION

LITTLE ROCK, ARK.

STATE OF ARKANSAS
Carl J. Fuselier
REGISTERED PROFESSIONAL ENGINEER
No. 7510
9/20/13
CARL J. FUSELIER

BRIDGE ENGINEER

DRAWN BY: KDH DATE: 12-19-11
CHECKED BY: DHP DATE: 8-28-13
DESIGNED BY: CSL DATE: Nov. 2012
FILENAME: b005836.11.dgn
SCALE: 1" = 30'

BRIDGE NO. 07289 DRAWING NO. 54075

PRINT DATE: 27-AUG-2013

For R/W Data, see Rdwy. Plans

DATE REVISED	DATE FILMED	DATE REVISED	DATE FILMED	FED. ROAD DIST. NO.	STATE	FED. AID PROJ. NO.	SHEET NO.	TOTAL SHEETS
				6	ARK.			
				JOB NO.		005836	56	230
				(1) 07289 -		LAYOUT		- 54076

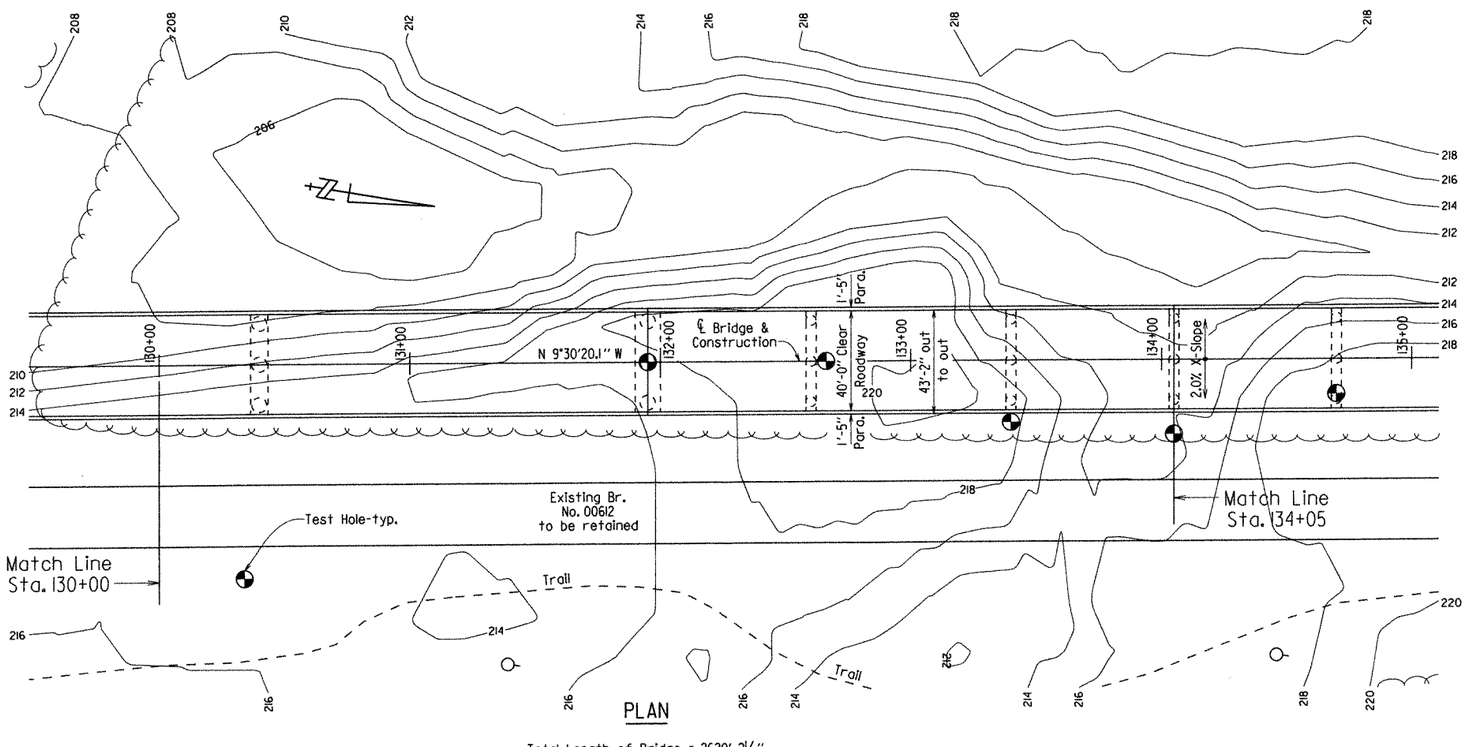

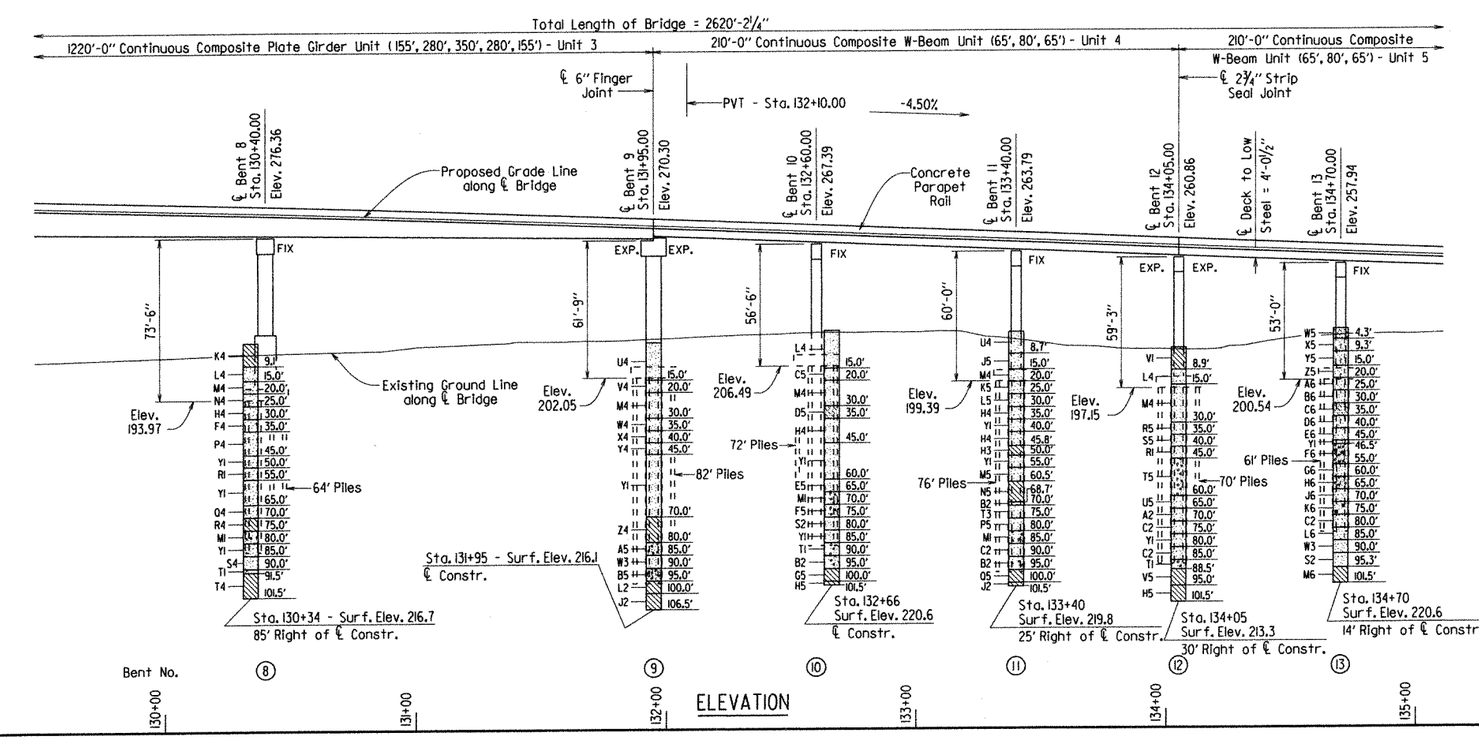

"N" VALUES

Sta. 130+34 - 85' Right of ℄ Constr.

4.6-	5.6, N=19
9.6-	10.6, N=8
15.5-	16.5, N=7
20.5-	21.5, N=10
25.5-	26.5, N=7
30.5-	31.5, N=10
35.5-	36.5, N=11
40.5-	41.5, N=10
45.5-	46.5, N=14
50.5-	51.5, N=20
55.5-	56.5, N=12
60.5-	61.5, N=23
65.5-	66.5, N=27
70.5-	71.5, N=8
75.5-	76.5, N=14
80.5-	81.5, N=27
85.5-	86.5, N=59
90.0-	90.4, N=60(5'')
95.5-	96.5, N=33
100.5-	101.5, N=28

Sta. 131+95 - ℄ Constr.

4.0-	5.0, N=5
9.0-	10.0, N=9
15.5-	16.5, N=9
20.5-	21.5, N=7
25.5-	26.5, N=10
30.5-	31.5, N=11
35.5-	36.5, N=4
40.5-	41.5, N=2
45.5-	46.5, N=16
50.5-	51.5, N=15
55.5-	56.5, N=17
60.5-	61.5, N=20
65.5-	66.5, N=26
70.5-	71.5, N=0
75.5-	76.5, N=2
80.5-	81.5, N=17
85.5-	86.5, N=38
90.5-	91.5, N=63
95.5-	96.0, N=60(6'')
100.5-	101.5, N=38
105.5-	106.5, N=40

Sta. 132+66 - ℄ Constr.

4.3-	5.3, N=5
9.3-	10.3, N=8
15.5-	16.5, N=10
20.5-	21.5, N=6
25.5-	26.5, N=7
30.5-	31.5, N=2
35.5-	36.5, N=10
40.5-	41.5, N=7
45.5-	46.5, N=12
50.5-	51.5, N=11
55.5-	56.5, N=20
60.5-	61.5, N=36
65.5-	66.5, N=11
70.5-	71.5, N=17
75.5-	76.5, N=20
80.5-	81.5, N=25
85.5-	86.5, N=73
90.5-	91.5, N=42
95.5-	96.5, N=30
100.5-	101.5, N=35

Sta. 133+40 - 25' Right of ℄ Constr.

4.2-	5.2, N=5
9.2-	10.2, N=4
15.5-	16.5, N=7
20.5-	21.5, N=11
25.5-	26.5, N=10
30.5-	31.5, N=9
35.5-	36.5, N=11
40.5-	41.5, N=10
45.5-	46.5, N=19
50.5-	51.5, N=27
55.5-	56.5, N=11
60.5-	61.5, N=6
65.5-	66.5, N=0
70.5-	71.5, N=31
75.5-	76.5, N=23
80.5-	81.5, N=25
85.5-	86.5, N=42
90.5-	91.5, N=42
95.5-	96.5, N=29
100.5-	101.5, N=32

Sta. 134+05 - 30' Right of ℄ Constr.

4.0-	5.0, N=17
9.0-	10.0, N=6
15.5-	16.5, N=5
20.5-	21.5, N=7
25.5-	26.5, N=7
30.5-	31.5, N=11
35.5-	36.5, N=14
40.5-	41.5, N=12
45.5-	46.5, N=8
50.5-	51.5, N=8
55.5-	56.5, N=6
60.5-	61.5, N=18
65.5-	66.5, N=32
70.5-	71.5, N=33
75.5-	76.5, N=25
80.5-	81.5, N=37
85.5-	86.5, N=56
90.5-	91.5, N=29
95.5-	96.5, N=33
100.5-	101.5, N=34

Sta. 134+70 - 14' Right of ℄ Constr.

4.8-	5.8, N=6
9.8-	10.8, N=12
15.5-	16.5, N=9
20.5-	21.5, N=6
25.5-	26.5, N=8
30.5-	31.5, N=12
35.5-	36.5, N=15
40.5-	41.5, N=13
45.5-	46.5, N=12
50.5-	51.5, N=9
55.5-	56.5, N=19
60.5-	61.5, N=14
65.5-	66.5, N=16
70.5-	71.5, N=23
75.5-	76.5, N=43
80.5-	81.5, N=53
85.5-	86.5, N=33
90.5-	90.8, N=30
95.5-	96.5, N=28
100.5-	101.5, N=37

Bent No.	℄ Deck @ ℄ Bt. & ℄ Br. (Working Point) to Low Side Top of Cap
8	8'-10⅝"
9	6'-6"
10	4'-4¾"
11	4'-4¾"
12	4'-5½"
13	4'-4¾"

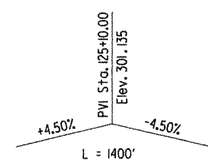

VERTICAL CURVE DATA ALONG ℄ BRIDGE

Stations and elevations are along ℄ Bridge. Elevations are at Working Point.

For "General Notes", "Boring Legend" and "Hydraulic Data", see Dwg. No. 54078.

STATE OF ARKANSAS
Carl S. Fuselier
REGISTERED PROFESSIONAL ENGINEER
No. 7510
CARL S. FUSELIER
BRIDGE ENGINEER

SHEET 4 OF 6
LAYOUT OF BRIDGE OVER WHITE RIVER
WHITE RIVER STR. & APPRS.
(NEWPORT) (S)
JACKSON COUNTY

ROUTE 367 SEC. 21

ARKANSAS STATE HIGHWAY COMMISSION
LITTLE ROCK, ARK.

DRAWN BY: KDH DATE: 12-29-11 FILENAME: b005836.11.dgn
CHECKED BY: DHP DATE: 8-28-13 SCALE: 1" = 30'
DESIGNED BY: CSL DATE: Nov 2012

BRIDGE NO. 07289 DRAWING NO. 54076

PRINT DATE: 27-AUG-2013

DATE REVISED	DATE FILMED	DATE REVISED	DATE FILMED	FED. ROAD DIST. NO.	STATE	FED. AID PROJ. NO.	SHEET NO.	TOTAL SHEETS
				6	ARK.			
				JOB NO.		005836	57	230
				(1) 07289 -		LAYOUT		- 54077

for R/W Data, see Rdwy. Plans

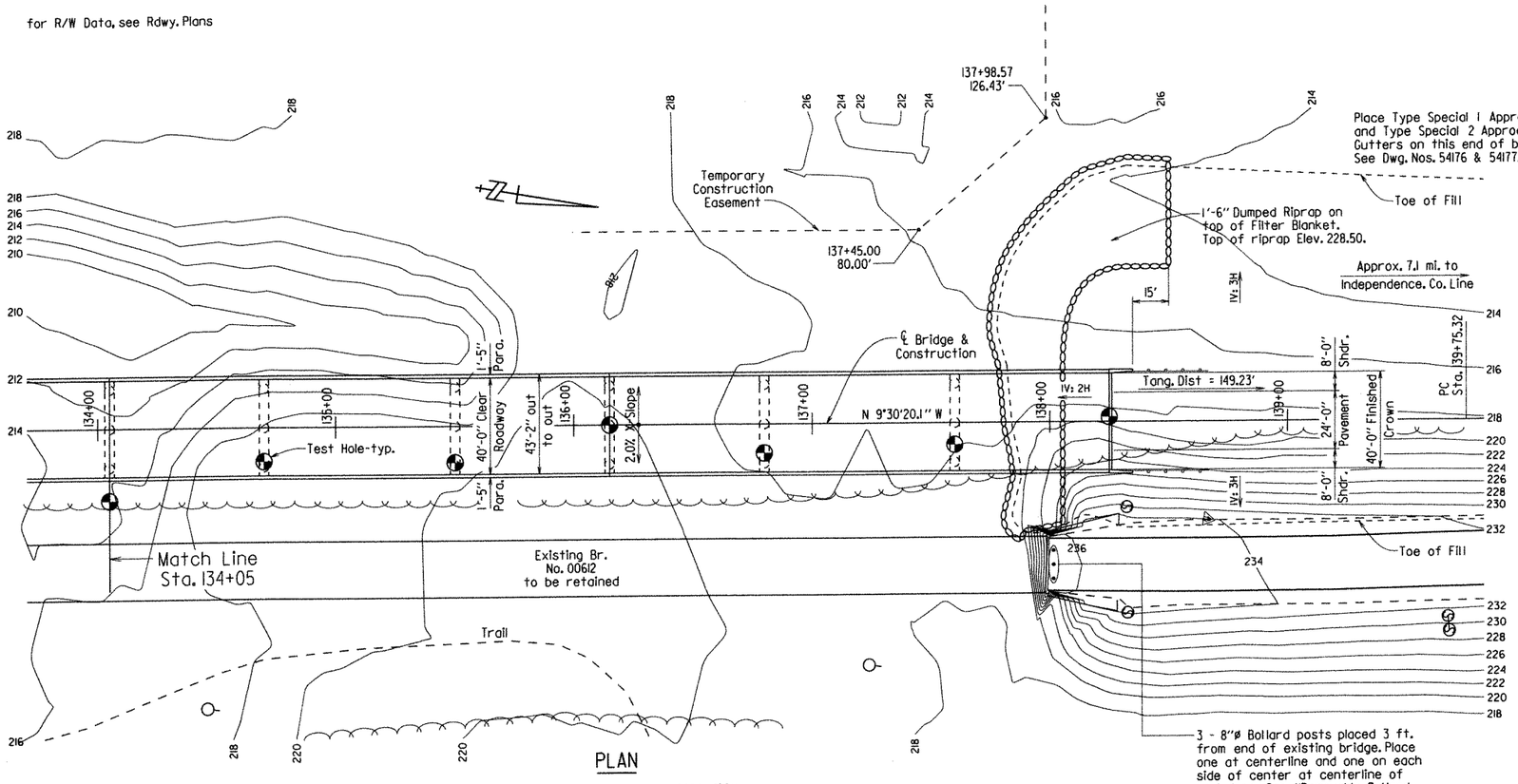

PLAN

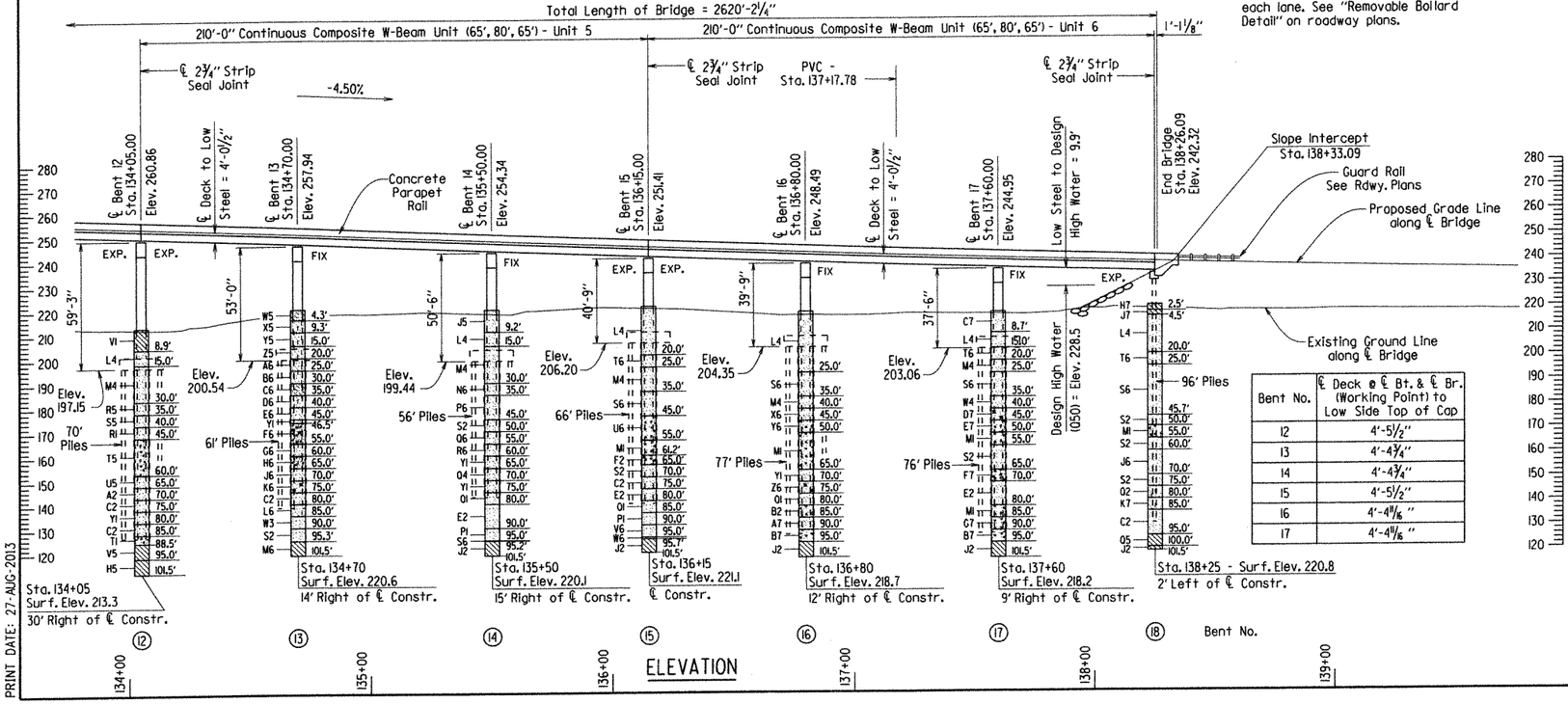

ELEVATION

Bent No.	℄ Deck ø ℄ Bt. & ℄ Br. (Working Point) to Low Side Top of Cap
12	4'-5½"
13	4'-4¾"
14	4'-4¾"
15	4'-5½"
16	4'-4⅛"
17	4'-4⅛"

"N" VALUES

Sta. 134+05 - 30' Right of ℄ Constr.

4.0 - 5.0	N=17
9.0 - 10.0	N=6
15.5 - 16.5	N=5
20.5 - 21.5	N=7
25.5 - 26.5	N=7
30.5 - 31.5	N=11
35.5 - 36.5	N=14
40.5 - 41.5	N=12
45.5 - 46.5	N=8
50.5 - 51.5	N=8
55.5 - 56.5	N=6
60.5 - 61.5	N=18
65.5 - 66.5	N=32
70.5 - 71.5	N=33
75.5 - 76.5	N=25
80.5 - 81.5	N=37
85.5 - 86.5	N=56
90.5 - 91.5	N=29
95.5 - 96.5	N=33
100.5 - 101.5	N=34

Sta. 134+70 - 14' Right of ℄ Constr.

4.8 - 5.8	N=6
9.8 - 10.8	N=12
15.5 - 16.5	N=9
20.5 - 21.5	N=6
25.5 - 26.5	N=8
30.5 - 31.5	N=12
35.5 - 36.5	N=15
40.5 - 41.5	N=13
45.5 - 46.5	N=12
50.5 - 51.5	N=9
55.5 - 56.5	N=19
60.5 - 61.5	N=14
65.5 - 66.5	N=16
70.5 - 71.5	N=23
75.5 - 76.5	N=43
80.5 - 81.5	N=53
85.5 - 86.5	N=33
90.5 - 90.8	N=30
95.5 - 96.5	N=28
100.5 - 101.5	N=37

Sta. 135+50 - 15' Right of ℄ Constr.

4.7 - 5.7	N=4
9.7 - 10.7	N=6
15.5 - 16.5	N=5
20.5 - 21.5	N=8
25.5 - 26.5	N=9
30.5 - 31.5	N=10
35.5 - 36.5	N=16
40.5 - 41.5	N=21
45.5 - 46.5	N=16
50.5 - 51.5	N=12
55.5 - 56.5	N=8
60.5 - 61.5	N=14
65.5 - 66.5	N=15
70.5 - 71.5	N=27
75.5 - 76.5	N=79
80.5 - 81.5	N=49
85.5 - 86.5	N=42
90.5 - 90.8	N=59
95.5 - 96.5	N=33
100.5 - 101.5	N=41

Sta. 136+15 - ℄ Constr.

5.0 - 6.0	N=6
10.0 - 11.0	N=6
15.5 - 16.5	N=10
20.5 - 21.5	N=13
25.5 - 26.5	N=8
30.5 - 31.5	N=8
35.5 - 36.5	N=12
40.5 - 41.5	N=18
45.5 - 46.5	N=13
50.5 - 51.5	N=13
55.5 - 56.5	N=13
60.5 - 61.5	N=25
65.5 - 66.5	N=22
70.5 - 71.5	N=39
75.5 - 76.5	N=42
80.5 - 81.5	N=76
85.5 - 86.5	N=87
90.5 - 91.5	N=63
95.5 - 96.5	N=56
100.5 - 101.5	N=33

Sta. 136+80 - 12' Right of ℄ Constr.

4.7 - 5.7	N=6
9.7 - 10.7	N=7
15.5 - 16.5	N=9
20.5 - 21.5	N=10
25.5 - 26.5	N=12
30.5 - 31.5	N=13
35.5 - 36.5	N=8
40.5 - 41.5	N=11
45.5 - 46.5	N=7
50.5 - 51.5	N=15
55.5 - 56.5	N=14
60.5 - 61.5	N=17
65.5 - 66.5	N=19
70.5 - 71.5	N=42
75.5 - 76.5	N=54
80.5 - 81.5	N=32
85.5 - 86.5	N=27
90.5 - 91.5	N=82
95.5 - 96.5	N=33
100.5 - 101.5	N=38

Sta. 137+60 - 9' Right of ℄ Constr.

4.2 - 5.2	N=8
9.2 - 10.2	N=8
15.5 - 16.5	N=13
20.5 - 21.5	N=7
25.5 - 26.5	N=12
30.5 - 31.5	N=17
35.5 - 36.5	N=19
40.5 - 41.5	N=8
45.5 - 46.5	N=15
50.5 - 51.5	N=15
55.5 - 56.5	N=25
60.5 - 61.5	N=28
65.5 - 66.5	N=33
70.5 - 71.5	N=32
75.5 - 76.5	N=31
80.5 - 81.5	N=28
85.5 - 86.5	N=27
90.5 - 91.5	N=72
95.5 - 96.5	N=36
100.5 - 101.5	N=40

Sta. 138+25 - 2' Left of ℄ Constr.

0.5 - 1.5	N=7
5.0 - 6.0	N=9
7.0 - 8.0	N=6
9.5 - 10.5	N=7
15.5 - 16.5	N=10
20.5 - 21.5	N=15
25.5 - 26.5	N=14
30.5 - 31.5	N=14
35.5 - 36.5	N=16
40.5 - 41.5	N=19
45.5 - 46.5	N=16
50.5 - 51.5	N=28
55.5 - 56.5	N=20
60.5 - 61.5	N=17
65.5 - 66.5	N=22
70.5 - 71.5	N=39
75.5 - 76.5	N=29
80.5 - 81.5	N=47
85.5 - 86.5	N=32
90.5 - 91.5	N=35
95.5 - 96.5	N=28
100.5 - 101.5	N=54

For "General Notes", "Boring Legend" and "Hydraulic Data", see Dwg. No. 54078.

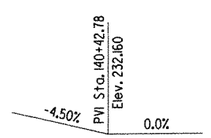

VERTICAL CURVE DATA ALONG ℄ BRIDGE

Stations and elevations are along ℄ Bridge. Elevations are at Working Point.

STATE OF ARKANSAS
Carl J. Puselier
REGISTERED PROFESSIONAL ENGINEER
No. 7510
8/28/13
CARL J. PUSELIER
BRIDGE ENGINEER

SHEET 5 OF 6
LAYOUT OF BRIDGE OVER WHITE RIVER
WHITE RIVER STR. & APPRS.
(NEWPORT) (S)
JACKSON COUNTY

ROUTE 367 SEC. 21

ARKANSAS STATE HIGHWAY COMMISSION

LITTLE ROCK, ARK.

DRAWN BY: KDH DATE: 12-29-11 FILENAME: b005836.11.dgn
CHECKED BY: DHP DATE: 8-28-13 SCALE: 1" = 30'
DESIGNED BY: CSL DATE: Nov 2012

BRIDGE NO. 07289 DRAWING NO. 54077

PRINT DATE: 27-AUG-2013

DATE REVISED	DATE FILMED	DATE REVISED	DATE FILMED	FED. ROAD DIST. NO.	STATE	FED. AID PROJ. NO.	SHEET NO.	TOTAL SHEETS
				6	ARK.			
				JOB NO.		005836	58	230
				① 07289 -		LAYOUT		- 54078

GENERAL NOTES

BENCH MARK: TBM 908 - 5/8" rebar with 2" cap, 113.89' right of Sta. 122+34.50, Elev. 224.10.

CONSTRUCTION SPECIFICATION: Arkansas State Highway and Transportation Department Standard Specifications for Highway Construction (2003 edition) with applicable Supplemental Specifications and Special Provisions. Unless otherwise noted on the plans, Section and subsection refer to the Standard Construction Specifications.

DESIGN SPECIFICATIONS: AASHTO LRFD Bridge Design Specifications 5th Edition (2010) with 2010 interims, and AASHTO Vessel Collision Guide Specifications 2nd Edition (2009) with 2010 interims.

LIVE LOADING: HL-93

SEISMIC ZONE : 4 S_{D1} = 0.529 SITE CLASS = E

MATERIALS AND STRENGTHS:

Class S(AE) Concrete (superstructure)	f'c = 4,000 psi
Class S Concrete	f'c = 3,500 psi
Class B concrete	f'c = 3,500 psi
Seal Concrete (Piers 1 & 2)	f'c = 2,100 psi
Reinforcing Steel (Gr. 60 AASHTO M31 or M322, Type A)	fy = 60,000 psi
Structural Steel (AASHTO M270, Gr. 36)	Fy = 36,000 psi
Structural Steel (AASHTO M270, Gr. 50W)	Fy = 50,000 psi

BORING LOGS: Boring logs may be obtained from the Programs and Contracts Division.

BRIDGE DECK: The concrete bridge deck shall be given a tine finish as specified for final finishing in subsection 802.19 for Class 5 Tined Bridge Roadway Surface Finish.

DETAIL DRAWINGS:

	DRAWING NOS.
Exhibit A	54078A & 54078B
Hydrograph - White River	54079
Details of Retaining Walls	54080-54081
End Bents	54082-54083 & 54105-54106
Intermediate Bents	54084-54093 & 54097-54104
Piers 1 & 2	54094-54096
246' Continuous Composite Plate Girder Unit - Unit 1	54107-54113
522' Continuous Composite Plate Girder Unit - Unit 2	54114-54124
1220' Continuous Composite Plate Girder Unit - Unit 3	54125-54153
3 - 210' Continuous Composite W-Beam Units - Units 4, 5 & 6	54154-54167
Details of Studs in Concrete Diaphragms	54168
Restrainer Details	54169
Strip Seal Details	54170
Finger Joint Details	54171
Superstructure General Notes	54172
Details of Elastomeric Bearings	54173
Details of Seismic Isolation Bearings	54174
Type Special 1 Approach Gutters	54175
Type Special 2 Approach Gutters	54176
Type Special Approach Slabs	54177
Concrete Filled Steel Shell Piles	54178
Clearance Gauges	54179
Details of Reflective Panels	54180
Details of Chain Link Fence	54181
Steel Piling (H-Piles)	14995A

STEEL SHELL PILING: Piling in Bents 1 thru 4 and 10 thru 18 shall be 18" diameter concrete filled steel shell piles and shall be driven to a minimum ultimate bearing capacity of 250 tons per pile. Piling in Bents 5 thru 9 shall be 20" diameter concrete filled steel shell piles and shall be driven to a minimum ultimate bearing capacity of 350 tons per pile. All piles shall be driven with an approved air, steam, or diesel hammer. Lengths of piling shown are assumed for estimating quantities only. Actual piling lengths are to be determined in the field. No additional payment will be made for cutoff or build-up. Test piles are not required but may be driven for the Contractor's information in accordance with Subsection 805.08(g). Piling in Bent 1 shall be driven after excavation to top of leveling pad is completed and prior to backfilling. Piling in Bent 18 shall be driven after embankment to the bottom of the cap is in place. Piling in Bents 1 and 18 shall be driven a minimum of 20 ft. below natural ground. Piling in Bents 2 thru 17 shall be driven a minimum of 20 ft. below the bottom of footing.

The driving system approval and the ultimate bearing capacity determination for piling shall be based on the requirements of Subsection 805.09(b), "Method B - Wave equation Analysis (WEAP)". It is estimated that the minimum required rated energy of the hammer to obtain the minimum ultimate bearing capacity will be 40,000 foot pounds per blow for 18" diameter piles, and 60,000 foot pounds per blow for 20" diameter piles.

Water Jetting or other methods as approved by the Engineer may be required to achieve the minimum tip elevation. Any cost associated with achieving the minimum tip elevation shall be included in the item "Steel Shell Piling (18" dia.)" or "Steel Shell Piling (20" dia.)".

STEEL H PILING: Piling for Piers 1 & 2 shall be HP 14x117 (AASHTO M270-Gr. 50) and shall be driven with an approved air, steam, or diesel hammer to a minimum ultimate bearing capacity of 460 tons per pile. Piling shall be driven a minimum of 20 ft. below the bottom of seal footing. The driving system approval and the ultimate bearing capacity determination shall be based upon the requirements of Subsection 805.09(c) "Method C - Dynamic Load Test". It is estimated that the minimum required rated energy of the hammer will be 75,000 foot pounds per blow. Five piles in each pier designated as long piles in the Standard Specifications shall be driven without a follower and shall serve as test piles to determine the established tip elevation of the production piles. See the details of Piers 1 & 2 for the locations of the test piles. The lengths of the test piles shown on the layout are the estimated lengths of the test piles to be left in place. The first long pile in each pier requires dynamic testing. The dynamic test in the piers shall be used to approve the proposed driving system before production piles and remaining test piles in Piers 1 & 2 are driven. Lengths of piling shown are assumed for estimating quantities only. Actual lengths are determined in the field. Payment for production piles and test piles will be based on the actual accepted length left in place. No payment will be made for cut-off or build-up of the production piles or test piles.

FOOTINGS: The top of the footings for Bents 2 thru 4, 6, 7 & 8 thru 17 shall be set a minimum of 2'-0" below natural ground. The top of the footings for Bent 5 shall be set a minimum of 6'-0" below track. Foundations for footings shall be prepared in accordance with Subsection 801.04 and backfilled in accordance with Subsection 801.08.

For dewatering cofferdam, maximum water surface elevation is 218.00 for the seal size shown on the pier details.

EXISTING BRIDGE: The existing bridge No. 00612 (log mile 7.06) is 24 feet wide and 2831.67 feet long and consists of concrete girder spans and a steel thru truss unit. Superstructure is supported by concrete substructure. The existing bridge is located approximately 60 feet upstream from the proposed new bridge. The existing bridge will remain in place.

MAINTENANCE OF TRAFFIC: See Roadway Plans.

BORING LEGEND

A1-Dry, Medium Dense, Brown Silt with Trace of Gravel and Organic Matter
B1-Moist, Medium Dense, Gray and Brown Silt
C1-Moist, Stiff, Gray and Brown Clay with Iron Nodules
D1-Moist, Stiff, Gray and Brown Clay
E1-Moist, Medium Stiff, Gray and Brown Clay
F1-Moist, Medium Stiff, Gray and Brown Clay with Trace of Sand
G1-Moist, Medium Stiff, Gray and Brown Clay with Sand
H1-Wet, Soft, Brown and Gray Clay with Sand
J1-Wet, Medium Stiff, Gray Clay with Sand
K1-Wet, Dense, Gray Sand with Trace of Clay
L1-Wet, Dense to Medium Dense, Gray Sand
M1-Wet, Medium Dense, Gray Sand with Gravel
N1-Wet, Dense, Gray Sand with Gravel and Organic Matter
P1-Wet, Very Dense, Gray Sand with Trace of Gravel
Q1-Wet, Very Dense, Gray Sand
R1-Wet, Medium Dense, Gray Sand with Trace of Organic Matter
S1-Wet, Dense, Gray Sand with Trace of Organic Matter
T1-Wet, Very Dense, Gray Sand with Gravel
U1-Moist, Stiff, Brown Clay with some Organic Matter
V1-Moist, Very Stiff, Brown Clay with some Organic Matter
W1-Moist, Stiff, Dark Brown Clay with some Organic Matter
X1-Moist, Medium Stiff, Brown and Gray Clay with some Organic Matter
Y1-Wet, Medium Dense, Gray Sand
Z1-Wet, Very Dense to Dense, Gray Sand with Trace of Gravel
A2-Wet, Dense, Gray Sand with Trace of Gravel and Organic Matter
B2-Wet, Dense, Gray Sand with Gravel
C2-Wet, Dense, Gray Sand with Trace of Gravel
D2-Wet, Very Dense, Gray Sand with Trace of Organic Matter
E2-Wet, Dense, Gray Sand
F2-Wet, Medium Dense, Gray Sand with Gravel and Organic Matter
G2-Wet, Very Dense, Gray Gravel with Sand
H2-Wet, Very Dense, Gray Gravel with Sand and Trace of Clay
J2-Moist, Hard, Dark Gray Clay
K2-Wet, Hard, Dark Gray Clay with Trace of Gravel
L2-Moist, Very Hard, Dark Gray Clay
M2-Moist, Soft, Brown and Gray Clay
N2-Wet, Stiff, Gray Sandy, Silty Clay
P2-Wet, Dense, Gray Silty Sand
Q2-Wet, Medium Dense, Gray Sand with Silt
R2-Wet, Medium Dense, Gray Sand with Silt and Organic Matter
S2-Wet, Medium Dense, Gray Sand with Trace of Gravel
T2-Wet, Medium Dense, Gray Sand with Silt and Gravel
U2-Wet, Dense, Gray Sand with Silt and Trace of Organic Matter
V2-Wet, Very Dense, Gray Sand with Silt
W2-Wet, Very Dense, Gray Sand with Silt and Gravel
X2-Gravel
Y2-Moist, Hard, Gray Sandy Clay with Gravel
Z2-Moist, Medium Stiff, Dark Brown Clay with Sand and Trace of Gravel and Organic Matter
A3-Moist, Stiff, Dark Brown Clay with some Iron Nodules
B3-Moist, Medium Stiff to Stiff, Brown Clay with some Iron Nodules
C3-Moist, Medium Stiff, Brown and Gray Clay with some Iron Nodules
D3-Moist, Medium Stiff, Brown Clay
E3-Wet, Loose, Gray Sand with some Clay
F3-Wet, Medium Dense, Gray Sand with some Clay and Trace of Gravel
G3-Moist, Stiff, Dark Gray Clay with Sand
H3-Moist, Stiff, Gray Clay
J3-Wet, Medium Stiff, Gray Clay
K3-Wet, Medium Dense, Gray Sand with Trace of Clay
L3-Wet, Medium Dense, Gray Sand with Organic Matter Trace of Gravel
M3-Moist, Medium Stiff, Brown and Gray Clay
N3-Moist, Stiff, Brown and Gray Clay
P3-Wet, Soft, Gray Clay with Sand
Q3-Wet, Very Soft to Soft, Gray Clay with Sand
R3-Moist, Stiff, Dark Brown Clay
S3-Wet, Medium Dense, Gray Sand with Organic Matter and Trace of Gravel
T3-Wet, Dense, Gray Sand with Trace of Gravel and Clay
U3-Moist, Soft, Brown Clay with Trace of Gravel
V3-Moist, Stiff, Brown Clay
W3-Wet, Dense, Gray Sand with some Gravel
X3-Gravel with Hard, Cemented Sand
Y3-Moist, Very Loose, Brown Sand with some Organic Matter
Z3-Moist, Very Loose, Brown Sand with Trace of Clay
A4-Moist, Very Loose, Brown Sand with Trace of Organic Matter
B4-Moist, Very Loose, Brown Sand with Trace of Gray Clay and Organic Matter
C4-Wet, Very Loose, Dark Gray Sand with Clay
D4-Wet, Very Loose, Dark Gray Sand with Clay and Trace of Organic Matter
E4-Wet, Loose, Dark Gray Sand with some Clay
F4-Wet, Loose, Gray Sand with Organic Matter
G4-Wet, Very Soft, Dark Gray Clay with Sand
H4-Wet, Loose, Gray Sand
J4-Wet, Very Dense, Gray Sand with some Clay
K4-Moist, Very Stiff, Dark Brown and Gray Clay with some Iron Nodules
L4-Moist, Loose, Brown Sand
M4-Wet, Loose, Brown Sand
N4-Wet, Loose, Brown and Gray Sand
P4-Wet, Medium Dense to Loose, Gray Sand with some Organic Matter
Q4-Wet, Medium Dense, Gray and Brown Sand
R4-Moist, Stiff, Gray Clay with Trace of Gravel
S4-Wet, Very Dense, Gray Sand with some Gravel
T4-Moist, Hard to Very Stiff, Dark Gray Clay
U4-Moist, Loose, Brown Sand with some Organic Matter
V4-Wet, Loose, Brown Sand with some Organic Matter
W4-Wet, Medium Dense, Brown Sand with Trace of Organic Matter
X4-Wet, Very Loose, Brown and Gray Sand
Y4-Wet, Very Loose, Gray Sand with Trace of Clay
Z4-Moist, Very Soft to Soft, Gray Clay
A5-Wet, Medium Dense, Gray Sand with Gravel and Trace of Clay
B5-Wet, Very Dense, Gray Sand with Clay and Gravel
C5-Wet, Loose, Brown Sand with Trace of Clay
D5-Wet, Very Loose, Brown Sand with Gray Clay
E5-Wet, Dense, Gray Sand with some Clay
F5-Wet, Medium Dense, Gray Gravelly Sand
G5-Moist, Very Stiff, Dark Gray Clay with Trace of Shells
H5-Moist, Hard, Dark Gray Clay with Trace of Shells
J5-Moist, Very Loose, Brown Sand
K5-Wet, Medium Dense, Brown Sand with Trace of Clay
L5-Wet, Loose, Gray Sand with Trace of Clay
M5-Wet, Medium Dense, Gray Gravelly Sand with Trace of Clay
N5-Moist, Very Soft, Dark Gray Clay
P5-Wet, Medium Dense, Gray Sand with Trace of Gravel and Clay
Q5-Moist, Very Stiff, Dark Gray Clay
R5-Wet, Medium Dense, Light Brown Sand with Trace of Clay and Organic Matter
S5-Wet, Medium Dense, Light Brown Sand
T5-Wet, Loose, Gray Sand with Gravel and Trace of Clay
U5-Wet, Medium Dense, Gray Sand with Trace of Gravel and Organic Matter
V5-Moist, Very Stiff, Dark Gray Clay with Trace of Sand
W5-Moist, Loose, Brown Sand with Clay and some Organic Matter
X5-Moist, Loose, Brown Silty Sand with some Organic Matter
Y5-Moist, Medium Dense, Brown Silty Sand with some Organic Matter
Z5-Wet, Loose, Brown Sand with Silt and some Organic Matter
A6-Wet, Loose, Brown Sand with Silt
B6-Wet, Loose, Brown and Gray Sand with Silt
C6-Wet, Medium Dense, Gray Clayey Sand
D6-Wet, Medium Dense, Gray Sand with Silt and Trace of Clay
E6-Wet, Medium Dense, Gray and Brown Sand with Trace of Organic Matter
F6-Wet, Loose, Gray Sand with Silt, Gravel and Organic Matter (Wood)
G6-Wet, Medium Dense, Gray Sand with Silt, some Gravel and Trace of Clay
H6-Wet, Medium Dense, Gray Sand with Silt, Gravel and Trace of Clay and Organic Matter
J6-Wet, Medium Dense, Gray Sand with some Gravel
K6-Wet, Medium Dense, Gray Sand with Organic Matter and some Gravel
L6-Wet, Very Dense, Gray Sand with Silt and some Gravel
M6-Moist, Very Stiff to Hard, Dark Gray Clay
N6-Wet, Loose, Reddish Brown Sand
P6-Wet, Medium Dense, Reddish Brown Sand
Q6-Wet, Medium Dense, Gray Sand with some Gravel and Organic Matter (Wood)
R6-Wet, Loose, Gray Sand with Trace of Gravel and Clay
S6-Wet, Medium Dense, Brown Sand
T6-Moist, Medium Dense, Brown Sand
U6-Wet, Medium Dense, Gray to Gray and Brown Sand with Gravel
V6-Wet, Very Dense, Gray and Brown Sand with Trace of Gravel
W6-Wet, Dense, Gray and Brown Sand
X6-Wet, Medium Dense, Brown Sand with Trace of Gravel
Y6-Wet, Loose, Brown and Gray Sand with Gravel
Z6-Wet, Dense, Gray Sand with Organic Matter
A7-Wet, Medium Dense, Gray and Brown Sand with some Gravel
B7-Wet, Very Dense, Gray and Brown Sand with Gravel
C7-Moist, Loose, Brown Sand with some Organic Matter and Trace of Gravel
D7-Wet, Loose, Brown Sand with Organic Matter
E7-Wet, Medium Dense, Brown Sand with Gravel
F7-Wet, Medium Dense, Gray Sand with Gravel and Organic Matter (Wood)
G7-Wet, Medium Dense, Gray and Brown Sand with Gravel
H7-Dry, Medium Stiff, Brown Clay with some Organic Matter (Grassroots)
J7-Dry, Loose, Brown Clay with Sand and some Organic Matter (Grassroots)
K7-Wet, Dense, Gray Sand with Silt

HYDRAULIC DATA

FLOOD DESCRIPTION	FREQUENCY	②TOTAL DISCHARGE	DISCHARGE THRU BRIDGE OPENING	①NATURAL WATER SURFACE ELEVATION	WATER SURFACE ELEVATION W/ BACKWATER
	YEARS	CFS	CFS	FEET	FEET
Design	50	340,000	225,700	229.36	229.52
Base	100	388,000	238,100	230.56	230.72
Extreme	500	450,000	262,900	231.88	232.07
Overtopping	500	450,000	262,900	231.88	232.07

① Unconstricted water surface elevation without structure and roadway approaches.

② Includes main river bridges (Br. Nos. 07289 & 00612) & relief structures.

Estimated 100-Year backwater elevation with Existing Structures in place is 230.72 ft.

Proposed Low Bridge Member Elevation = 238.35

Drainage area = 19812 square miles

Historical H.W. Elev. = 229.99 ft.

STATE OF ARKANSAS
Carl J. Pusellier
REGISTERED PROFESSIONAL ENGINEER
No. 7510
8/29/13
CARL J. PUSELLIER

BRIDGE ENGINEER

SHEET 6 OF 6
LAYOUT OF BRIDGE OVER
WHITE RIVER
WHITE RIVER STR. & APPRS.
(NEWPORT) (S)
JACKSON COUNTY

ROUTE 367 SEC. 21

ARKANSAS STATE HIGHWAY COMMISSION
LITTLE ROCK, ARK.

DRAWN BY: KDH DATE: 12-29-11 FILENAME: b005836_11.dgn
CHECKED BY: DHP DATE: 8-28-13 SCALE: 1" = 30'
DESIGNED BY: CSL DATE: Nov 2012

BRIDGE NO. 07289 DRAWING NO. 54078

PRINT DATE: 27-AUG-2013

DATE REVISED	DATE FILMED	DATE REVISED	DATE FILMED	FED. ROAD DIST. NO.	STATE	FED. AID PROJ. NO.	SHEET NO.	TOTAL SHEETS
				6	ARK.			
				JOB NO.		005836	59	230
				(1) 07289 -		EXHIBIT A		- 54078A

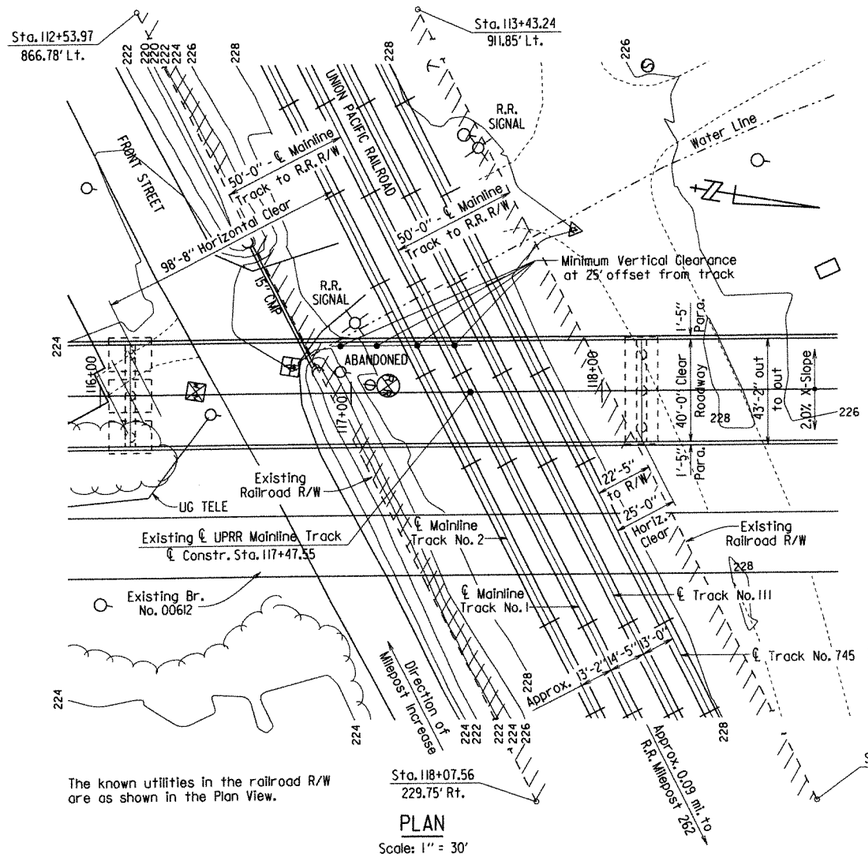

PLAN
Scale: 1" = 30'

The known utilities in the railroad R/W are as shown in the Plan View.

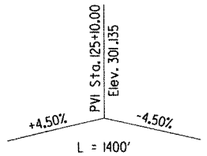

VERTICAL CURVE DATA
ALONG ℄ BRIDGE

All permanent clearances shall be verified before project closing.

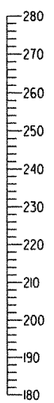

Bent No. (4)

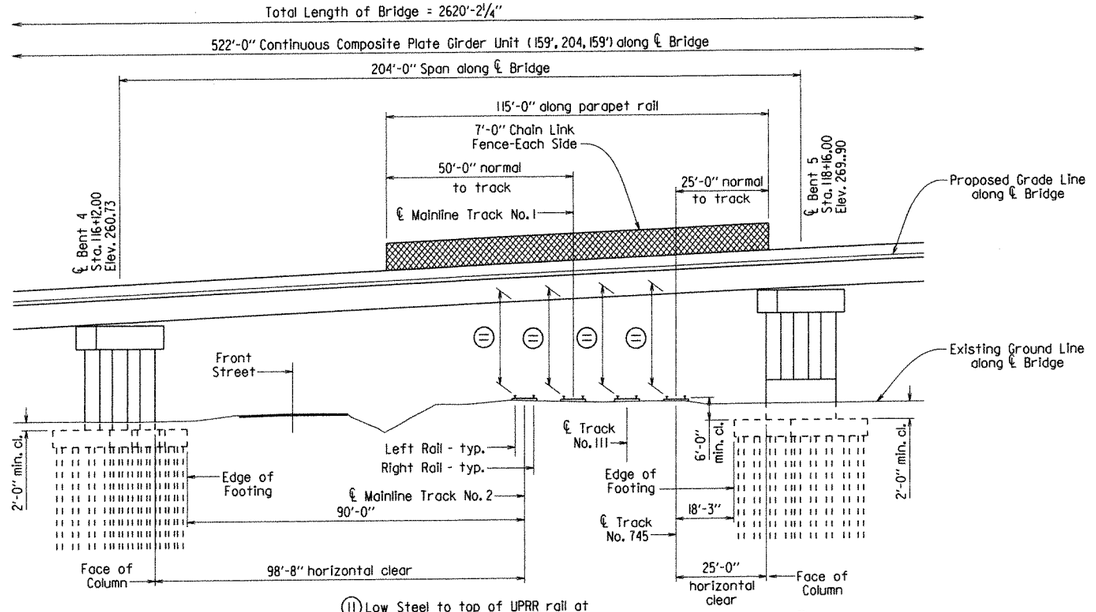

(11) Low Steel to top of UPRR rail at point of minimum vertical clearance:
27'-3" at 25' left of Mainline Track No. 2
28'-2" at 25' left of Mainline Track No. 1
28'-10" at 25' left of Track No. 111
29'-9" at 25' left of Track No. 745

(5)

ELEVATION SECTION
NORMAL TO TRACK
Looking in the direction of the milepost increase
Scale: 1" = 20'

Shoring will be required to construct foundation at Bent 5 to protect the railroad. Details shall be approved by Union Pacific Railroad prior to construction. Top of temporary shoring shall not extend above top of rail.

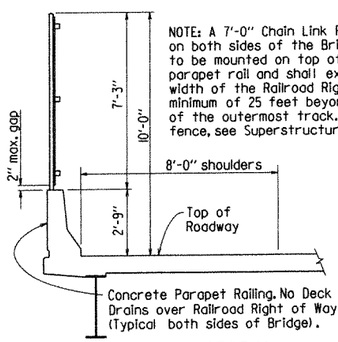

TYPICAL SECTION
No Scale

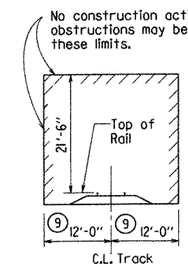

Note: No excavation permitted within 12' of C.L. track.

(9) Measured normal to track.

MINIMUM CONSTRUCTION CLEARANCES
No Scale

STATE OF ARKANSAS
Carl J. Puseliер
REGISTERED PROFESSIONAL ENGINEER
No. 7510
8/28/13
CARL J. PUSELIER

BRIDGE ENGINEER

SHEET 1 OF 2
EXHIBIT A

WHITE RIVER STR. & APPRS.
(NEWPORT) (S)
JACKSON COUNTY

ROUTE 367 SEC. 21

ARKANSAS STATE HIGHWAY COMMISSION
LITTLE ROCK, ARK.

DRAWN BY: KDH DATE: 1-5-12 FILENAME: b005836.exa.dgn
CHECKED BY: DHP DATE: 8-28-13 SCALE: AS NOTED
DESIGNED BY: CSL DATE: Nov 2012

BRIDGE NO. 07289 DRAWING NO. 54078A

PRINT DATE: 27-AUG-2013

DATE REVISED	DATE FILMED	DATE REVISED	DATE FILMED	FED. ROAD DIST. NO.	STATE	FED. AID PROJ. NO.	SHEET NO.	TOTAL SHEETS
				6	ARK.			
				JOB NO.		005836	60	230
				①	07289 -	EXHIBIT A	- 54078B	

TOP OF RAIL ELEVATIONS

Looking in direction of Milepost increase.
Stations decrease with Milepost increase

Direction of Railroad Milepost Increase ↑

MAINLINE TRACK NO. 2			
① LEFT RAIL		② RIGHT RAIL	
STATION	ELEVATION	STATION	ELEVATION
0+00	230.29	0+00	230.30
1+00	230.20	1+00	230.11
2+00	230.11	2+00	230.01
3+00	230.03	3+00	229.87
4+00	229.94	4+00	229.84
5+00	229.85	5+00	229.77
6+00	229.75	6+00	229.76
7+00	229.75	7+00	229.75
8+00	229.73	8+00	229.74
9+00	229.74	9+00	229.72
10+00	229.75	10+00	229.75
11+00	229.76	11+00	229.77
12+00	229.87	12+00	229.87
13+00	229.88	13+00	229.89
14+00	229.89	14+00	229.88
15+00	229.96	15+00	229.97
16+00	230.00	16+00	230.02
17+00	230.07	17+00	230.01
18+00	230.15	18+00	230.04
19+00	230.25	19+00	230.06
20+00	230.29	20+00	230.11
21+00	230.42	21+00	230.24

① ℄ Rail Sta. 9+65.11 =
℄ Constr. Sta. 117+30.11

② ℄ Rail Sta. 9+67.52 =
℄ Constr. Sta. 117+35.67

MAINLINE TRACK NO. 1			
③ LEFT RAIL		④ RIGHT RAIL	
STATION	ELEVATION	STATION	ELEVATION
0+00	230.37	0+00	230.40
1+00	230.23	1+00	230.22
2+00	230.00	2+00	230.04
3+00	229.75	3+00	229.77
4+00	229.58	4+00	229.58
5+00	229.37	5+00	229.42
6+00	229.37	6+00	229.38
7+00	229.41	7+00	229.42
8+00	229.46	8+00	229.48
9+00	229.51	9+00	229.55
10+00	229.51	10+00	229.52
11+00	229.62	11+00	229.64
12+00	229.72	12+00	229.73
13+00	229.74	13+00	229.75
14+00	229.76	14+00	229.77
15+00	229.81	15+00	229.78
16+00	229.81	16+00	229.80
17+00	229.93	17+00	229.89
18+00	230.16	18+00	230.02
19+00	230.36	19+00	230.16
20+00	230.46	20+00	230.29
21+00	230.59	21+00	230.40

③ ℄ Rail Sta. 9+71.41 =
℄ Constr. Sta. 117+44.74

④ ℄ Rail Sta. 9+73.83 =
℄ Constr. Sta. 117+50.36

TRACK NO. 111			
⑤ LEFT RAIL		⑥ RIGHT RAIL	
STATION	ELEVATION	STATION	ELEVATION
0+00	229.93	0+00	229.95
1+00	229.78	1+00	229.76
2+00	229.58	2+00	229.58
3+00	229.54	3+00	229.53
4+00	229.45	4+00	229.49
5+00	229.32	5+00	229.29
6+00	229.28	6+00	229.14
7+00	229.27	7+00	229.24
8+00	229.41	8+00	229.40
9+00	229.53	9+00	229.53
10+00	229.49	10+00	229.50
11+00	229.40	11+00	229.39
12+00	229.43	12+00	229.41
13+00	229.50	13+00	229.48
14+00	229.57	14+00	229.55
15+00	229.55	15+00	229.53
16+00	229.47	16+00	229.45
17+00	229.59	17+00	229.51
18+00	229.72	18+00	229.59
19+00	229.89	19+00	229.76
20+00	230.08	20+00	229.95
21+00	230.17	21+00	230.06

⑤ ℄ Rail Sta. 9+78.19 =
℄ Constr. Sta. 117+60.84

⑥ ℄ Rail Sta. 9+80.70 =
℄ Constr. Sta. 117+66.41

TRACK NO. 745			
⑦ LEFT RAIL		⑧ RIGHT RAIL	
STATION	ELEVATION	STATION	ELEVATION
0+00	228.08	0+00	228.07
1+00	228.30	1+00	228.27
2+00	228.29	2+00	228.46
3+00	228.40	3+00	228.36
4+00	228.50	4+00	228.44
5+00	228.54	5+00	228.54
6+00	228.95	6+00	228.95
7+00	228.93	7+00	228.91
8+00	228.89	8+00	228.88
9+00	229.33	9+00	229.35
10+00	229.19	10+00	229.20
11+00	229.00	11+00	228.99
12+00	228.97	12+00	228.96
13+00	229.15	13+00	229.15
14+00	229.33	14+00	229.30
15+00	229.61	15+00	229.54
16+00	229.75	16+00	229.58
17+00	229.71	17+00	229.56
18+00	229.72	18+00	229.66
19+00	229.71	19+00	229.69
20+00	229.76	20+00	229.76
21+00	229.79	21+00	229.79

⑦ ℄ Rail Sta. 9+84.53 =
℄ Constr. Sta. 117+75.60

⑧ ℄ Rail Sta. 9+87.05 =
℄ Constr. Sta. 117+81.10

The elevations of the existing top-of-rail profile shall be verified by the Contractor prior to beginning construction. Any discrepancies that will decrease the vertical clearance shown in the Elevation Section shall be brought to the attention of the railroad prior to construction.

GENERAL NOTES

All demolitions within the Railroad's right-of-way and/or demolition that may impact the Railroad's tracks or operations shall comply with the Railroad's demolition requirements.

Erection over the Railroad's right-of-way shall be designed to cause no interruption to the Railroad's operation. Erection over the Railroad's track(s) shall be developed such that it enables the track(s) to remain open to traffic per the Railroad's requirements.

The Contractor must submit a proposed method of erosion and sediment control and have the method approved by the Railroad prior to beginning any grading on the project site.

Railroad requirements do not allow work within 50 feet of track centerline when a train passes the work site and all personnel must clear the area within 25 feet of the track centerline and secure all equipment when trains are present.

The State shall not plow ice, snow, or sleet over the sides of the structure. In consideration of this practice, the Carrier waives its request for the State to attach splash boards to sides of the structure. This statement is in the State Railroad Agreement.

The proposed bridge structure will not significantly change the quantity and/or characteristic of the flow in the railway's ditches and/or drainage structure.

Closed Parapet Railing (No Deck Drains) over Railroad Right of Way on both sides of Bridge.

Construction shall comply with the Union Pacific Railroad requirements noted in Job 005836 Special Provision "Insurance, Construction, and Flagging Requirements on Railroad Property (Union Pacific Railroad)". Any shoring shall comply with UPRR requirements.

Railroad review and approval of Shoring, Erection and Falsework is required. Allow a minimum of four weeks for the review and approval of each submittal.

For Railroad coordination, refer to the Railroad Minimum Requirments of SP Job 005836 "Insurance, Construction and Flagging Requirments on Railroad Property (Union Pacific Railroad)".

STATE OF ARKANSAS
Carl J. Puseliier
REGISTERED PROFESSIONAL ENGINEER
No. 7510
9/20/13
CARL J. PUSELIER

BRIDGE ENGINEER

SHEET 2 OF 2
EXHIBIT A

WHITE RIVER STR. & APPRS.
(NEWPORT) (S)
JACKSON COUNTY

ROUTE 367 SEC. 21

ARKANSAS STATE HIGHWAY COMMISSION
LITTLE ROCK, ARK.

DRAWN BY: KDH DATE: 1-5-12
CHECKED BY: DHP DATE: 8-28-13
DESIGNED BY: CSL DATE: Nov 2012
FILENAME: b005836.exa.dgn
SCALE: AS NOTED

BRIDGE NO. 07289 DRAWING NO. 54078B

PRINT DATE: 27-AUG-2013

DATE REVISED	DATE FILMED	DATE REVISED	DATE FILMED	FED. ROAD DIST. NO.	STATE	FED. AID PROJ. NO.	SHEET NO.	TOTAL SHEETS
				6	ARK.			
				JOB NO.		005836	61	230
				①	07289 -	HYDROGRAPH	- 54079	

Daily Stages are the water surface height, in feet, above Gauge No. 07074500 datum.

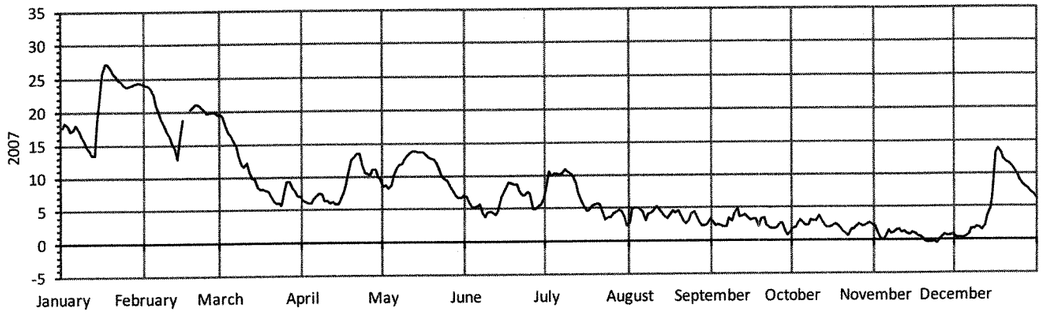

DAILY STAGES FOR JANUARY THRU DECEMBER 2007

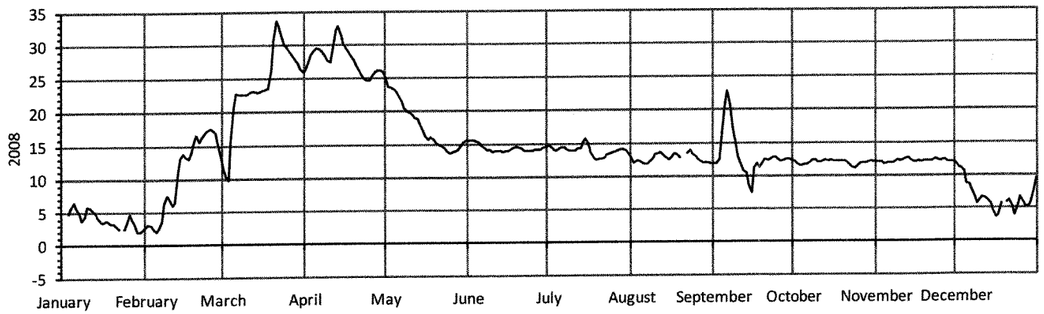

DAILY STAGES FOR JANUARY THRU DECEMBER 2008

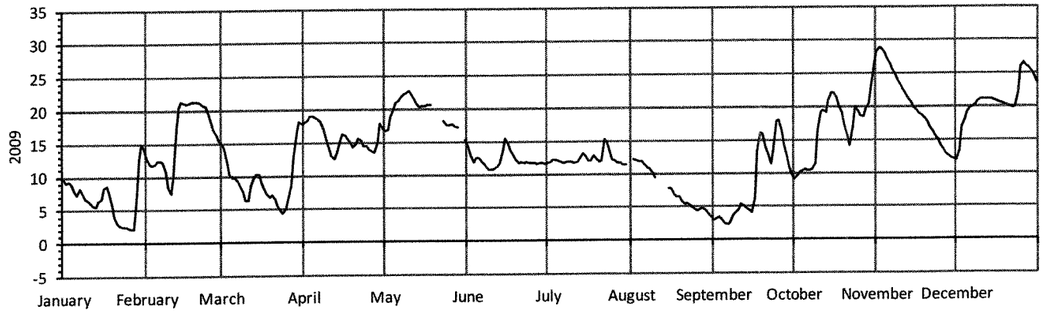

DAILY STAGES FOR JANUARY THRU DECEMBER 2009

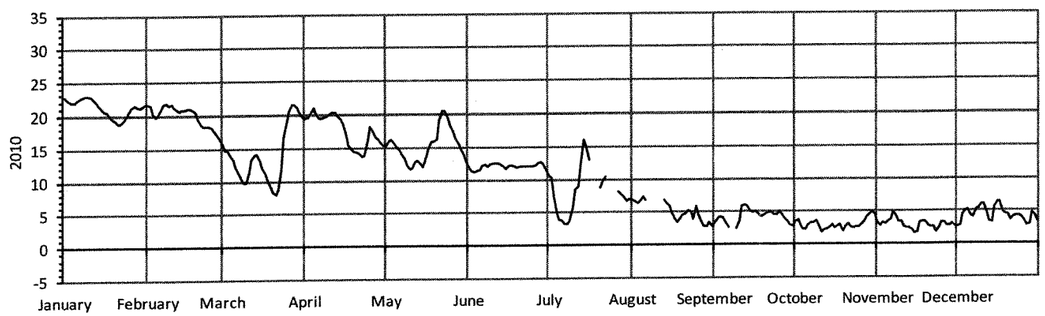

DAILY STAGES FOR JANUARY THRU DECEMBER 2010

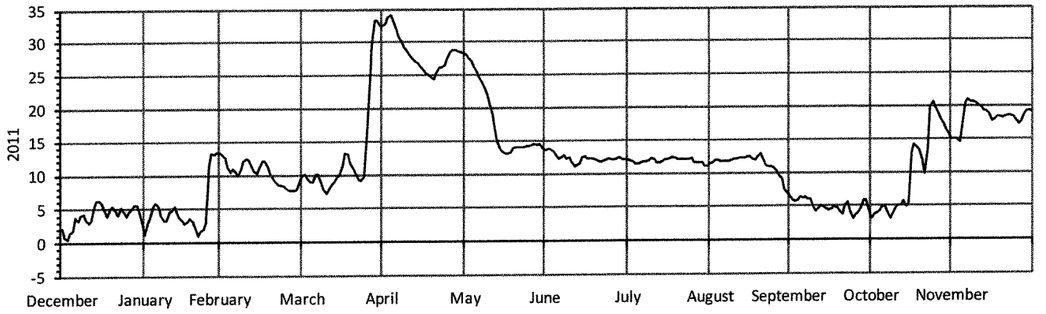

DAILY STAGES FOR JANUARY THRU DECEMBER 2011

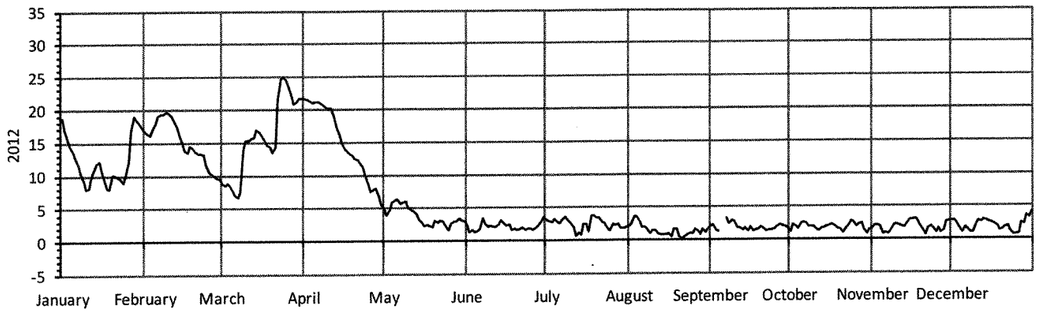

DAILY STAGES FOR JANUARY THRU DECEMBER 2012

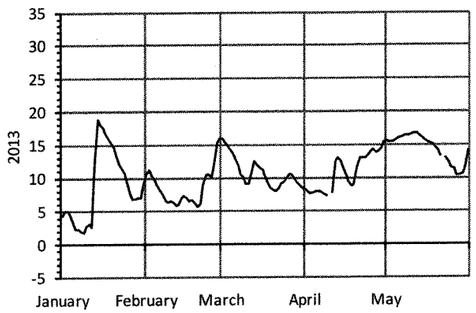

DAILY STAGES FOR JANUARY THRU MAY 2013

This Stage Hydrograph was obtained from the United States Geological Survey Division and was plotted by the Arkansas State Highway and Transportation Department.

This hydrograph is provided for information only.

Gage No. 07074500
Location: Latitude 35°36'19", Longitude 91°17'20". At River Mile 254.7, Gauge datum Elevation 194.09. Broken lines in hydrograph signify missing data.

STATE OF ARKANSAS
Carl S. Fuselier
REGISTERED PROFESSIONAL ENGINEER
No. 7510
CARL S. FUSELIER
8/28/13

BRIDGE ENGINEER

HYDROGRAPH - WHITE RIVER
WHITE RIVER STR. & APPRS. (NEWPORT) (S)
JACKSON COUNTY

ROUTE 367 SEC. 21

ARKANSAS STATE HIGHWAY COMMISSION

LITTLE ROCK, ARK.

DRAWN BY: CSL DATE: 7-2-13 FILENAME: b005836_hyg.dgn
CHECKED BY: DHP DATE: 8-28-13 SCALE: NONE
DESIGNED BY: — DATE: —

BRIDGE NO. 07289 DRAWING NO. 54079

DATE REVISED	DATE FILMED	DATE REVISED	DATE FILMED	FED. ROAD DIST. NO.	STATE	FED. AID PROJ. NO.	SHEET NO.	TOTAL SHEETS
				6	ARK.			
				JOB NO.		005836	62	230
				(1)	07289 - RETAINING WALL - 54080			

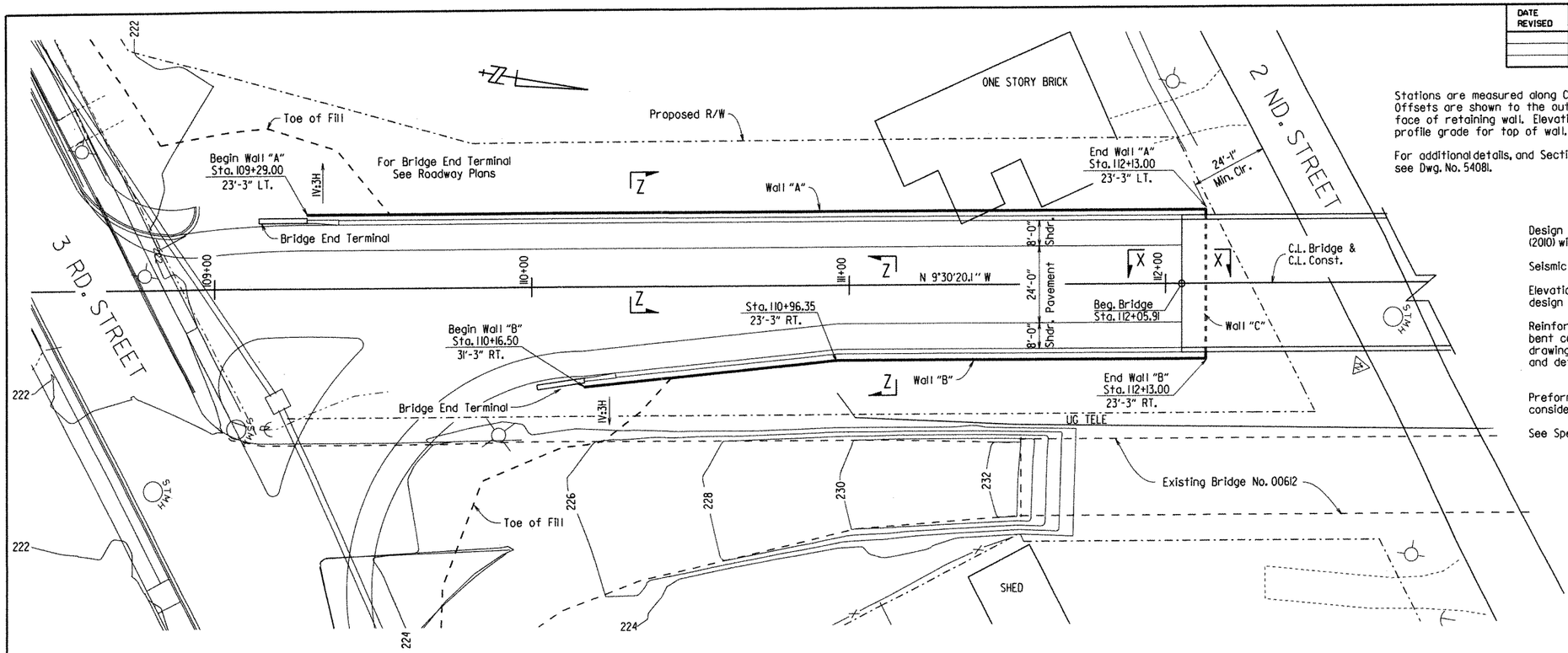

Stations are measured along C.L. Construction Offsets are shown to the outside vertical face of retaining wall. Elevations shown are profile grade for top of wall.

For additional details, and Section X-X and Z-Z, see Dwg. No. 54081.

GENERAL NOTES

Design Specifications: AASHTO LRFD Bridge Design Specifications, 5th Edition (2010) with 2010 interims.

Seismic Zone: 4 S_{D1} = 0.529 SITE CLASS = E

Elevations are approximate. Wall dimensions may vary depending on wall design selected.

Reinforcement placement and details for retaining walls may be affected by end bent construction and proposed roadway drainage structures. See End Bent drawings for pile locations and wingwall details. See Roadway Plans for locations and details of drainage structures.

Preformed joint filler and joint seal will not be paid for directly, but will be considered subsidiary to the item "Concrete Barrier Wall".

See Special Provision Job 005836 "Retaining Wall" for additional information.

PLAN RETAINING WALLS

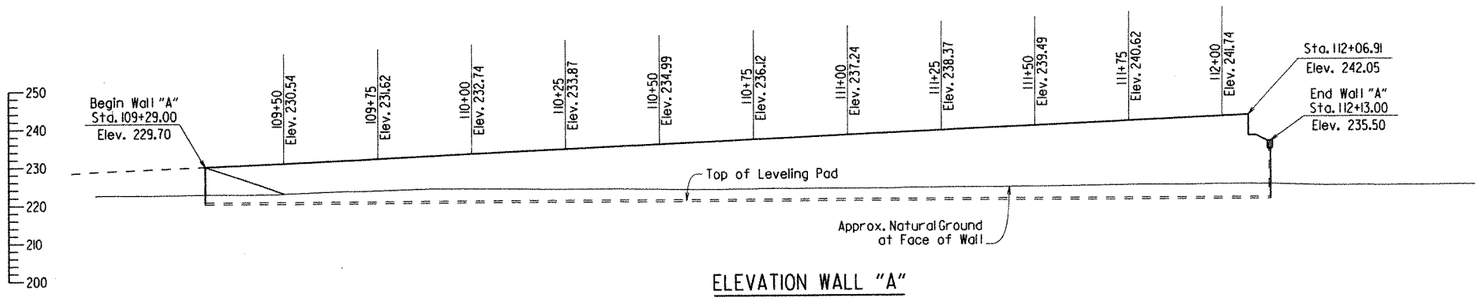

ELEVATION WALL "A"

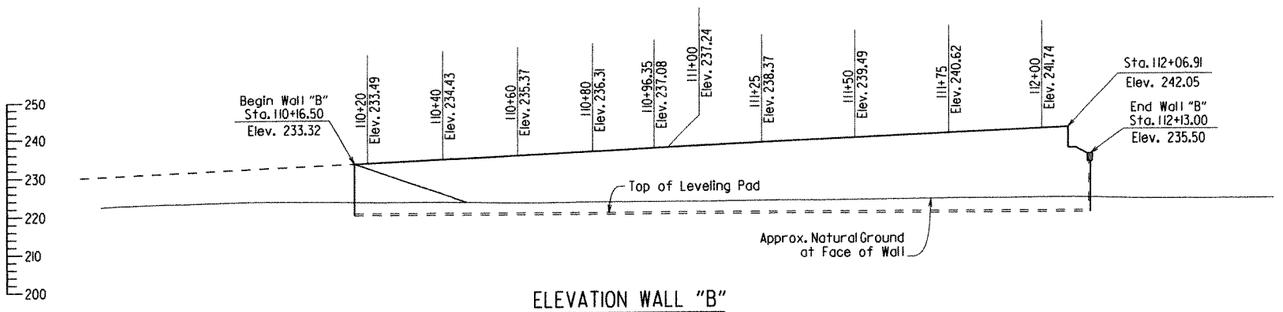

ELEVATION WALL "B"

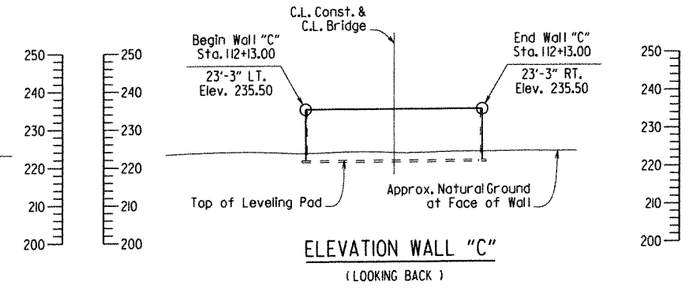

ELEVATION WALL "C"

(LOOKING BACK)

STATE OF ARKANSAS
Carl J. Puseliер
REGISTERED PROFESSIONAL ENGINEER
No. 7510
8/28/13
CARL J. PUSELIER

BRIDGE ENGINEER

SHEET 1 OF 2
DETAILS OF RETAINING WALLS
WHITE RIVER

ROUTE SEC.

ARKANSAS STATE HIGHWAY COMMISSION

LITTLE ROCK, ARK.

DRAWN BY: LJB DATE: 4/23/13 FILENAME: b005836_rw.dgn

CHECKED BY: RBR DATE: June 2013 SCALE: 1"=20'-0"

DESIGNED BY: RBR DATE: April 2013

BRIDGE NO. 07289 DRAWING NO. 54080

PRINT DATE: 27-AUG-2013

DATE REVISED	DATE FILMED	DATE REVISED	DATE FILMED	FED. ROAD DIST. NO.	STATE	FED. AID PROJ. NO.	SHEET NO.	TOTAL SHEETS
				6	ARK.			
				JOB NO.		005836	63	230
				①	07289 - RETAINING WALL - 54081			

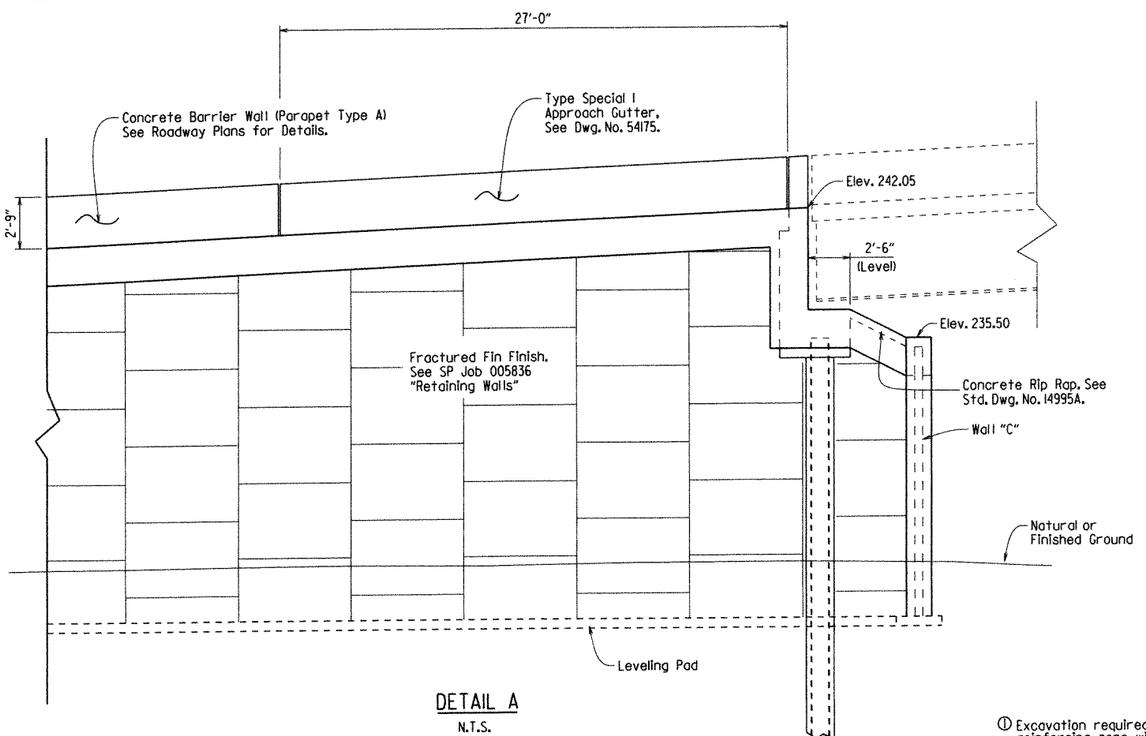

DETAIL A

N.T.S.

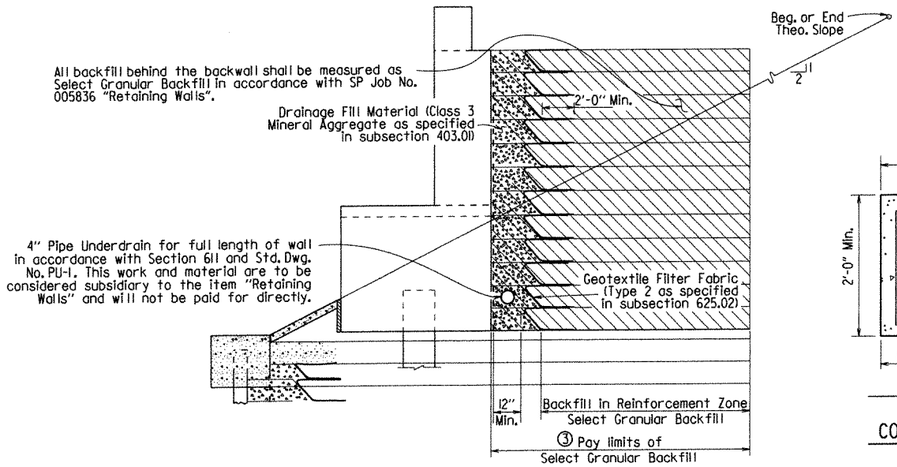

BACKWALL SOIL REINFORCEMENT

NO SCALE

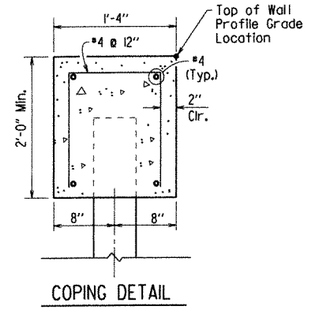

COPING DETAIL

Reinforcing steel and Class S(AE) Concrete for coping shall not be paid for directly, but will be considered subsidiary to the item "Retaining Wall."

Precast concrete coping may be substituted for the cast in place coping shown.

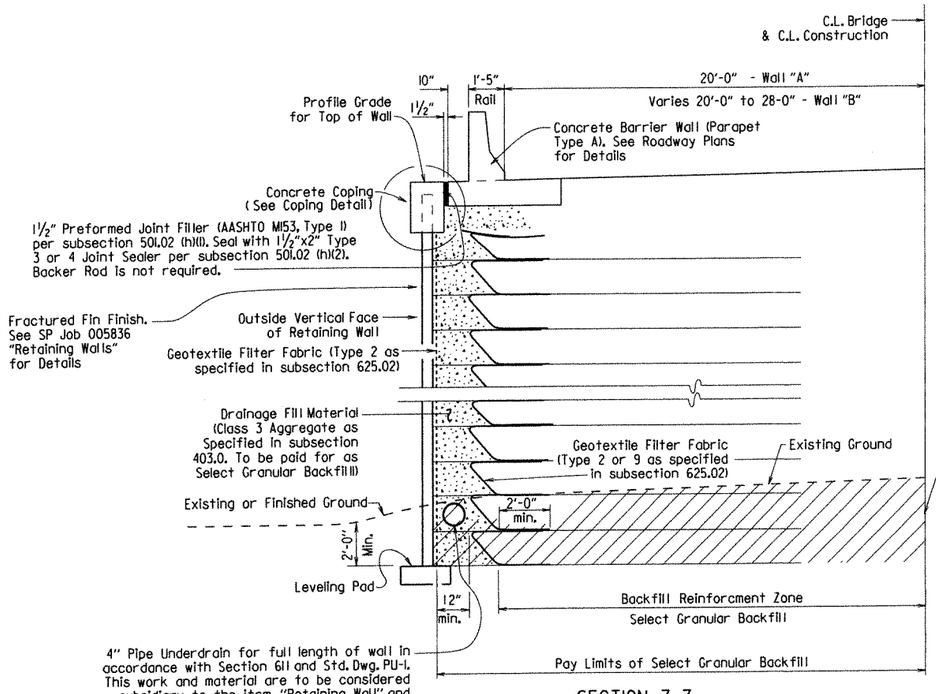

SECTION Z-Z

N.T.S.

① Excavation required for reinforcing zone will be paid for under pay item 210, "Unclassified Excavation", See SP Job No. 005836 "Retaining Walls".

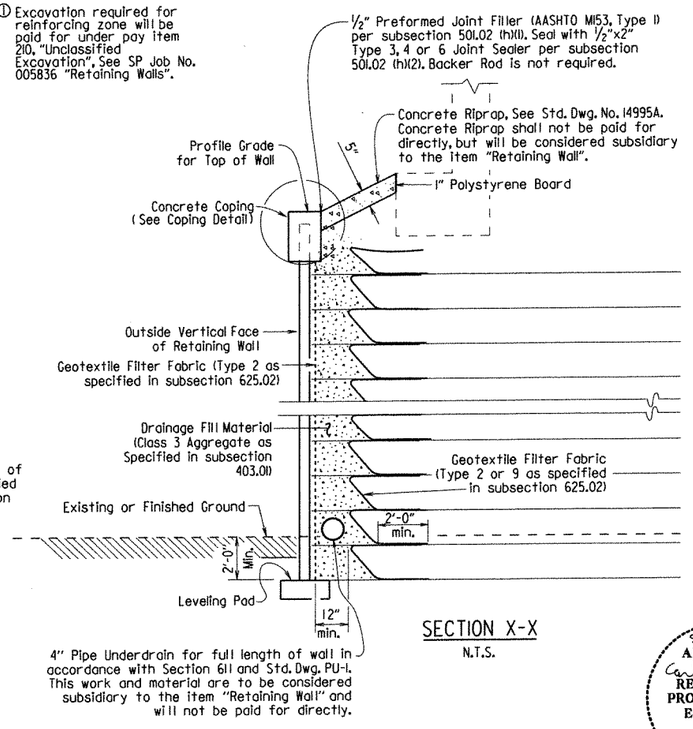

SECTION X-X

N.T.S.

② TABLE OF QUANTITIES

LOCATION	ITEM NO.	210	302	SP JOB 00586
	ITEM	UNCLASSIFIED EXCAVATION	SELECT GRANULAR BACKFILL	RETAINING WALL
	UNIT	CU. YD.	CU. YD.	SQ. FT.
Wall "A"		485	3,900	4,400
Wall "B"		360	3,190	3,400
Wall "C"		③	③	610
TOTALS		845	7,090	8,410

② Quantities are for estimating purposes and are subject to field measurment

③ Included in quantities shown for "Wall A" and "Wall B".

STATE OF ARKANSAS
Carl J. Pusellier
REGISTERED PROFESSIONAL ENGINEER
No. 7510
8/29/13
CARL J. PUSELLIER

BRIDGE ENGINEER

SHEET 2 OF 2
DETAILS OF RETAINING WALLS
WHITE RIVER

ROUTE SEC.

ARKANSAS STATE HIGHWAY COMMISSION

LITTLE ROCK, ARK.

DRAWN BY: LJB DATE: 4/23/13 FILENAME: b005836_rw.dgn

CHECKED BY: CSL DATE: 8/28/13 SCALE: NONE

DESIGNED BY: RBR DATE: Aug./2013

BRIDGE NO. 07289 DRAWING NO. 54081

PRINT DATE: 28-AUG-2013

DATE REVISED	DATE FILMED	DATE REVISED	DATE FILMED	FED. ROAD DIST. NO.	STATE	FED. AID PROJ. NO.	SHEET NO.	TOTAL SHEETS
				6	ARK.			
				JOB NO.		005836	64	230
				①	07289 - END BENT DETAILS - 54082			

Class I Protective Surface Treatment shall be applied to the top of the backwall and to the roadway face and top of end posts.

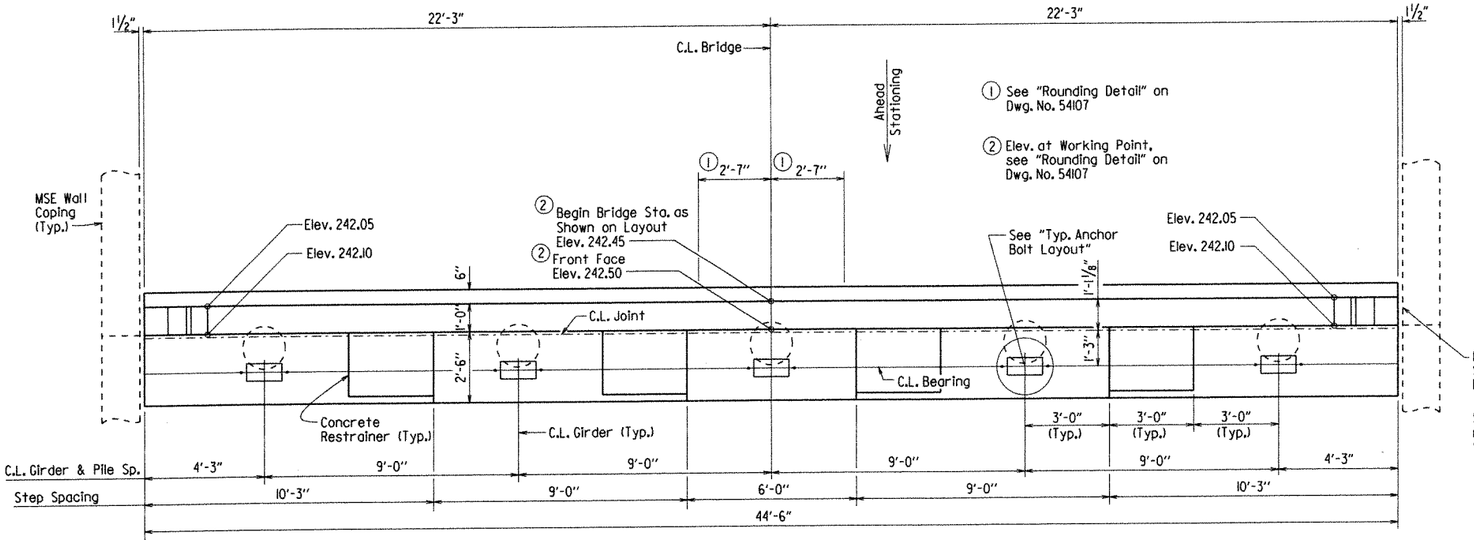

③ Adjust spacing of D601E bars as necessary to provide 3" clear from the longitudinal construction joint between the approach slab and gutters.

PLAN - BENT I
⅜" = 1'-0"

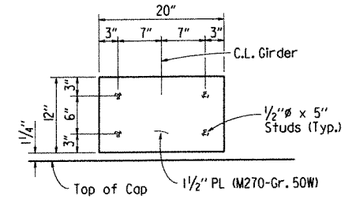

BUMPER PLATE DETAIL
1" = 1'-0"

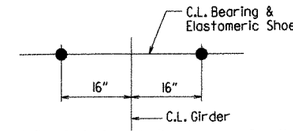

For details of Elastomeric Bearings, see Dwg. No. 54173.

TYP. ANCHOR BOLT LAYOUT
No Scale

1½" Preformed Joint Filler (AASHTO M153, Type I) per subsection 501.02 (h)(1). Seal with 1½"x2" Type 3 or 4 Joint Sealer per subsection 501.02 (h)(2). Baker Rod is not required. (Typ. both sides)

Studs and plates shall meet the requirements of Section 807 and shall be measured and paid for as "Structural Steel in Beam Spans (M270, Gr. 50W)" or "Structural Steel in Plate Girder Spans (M270, Gr. 50W)".

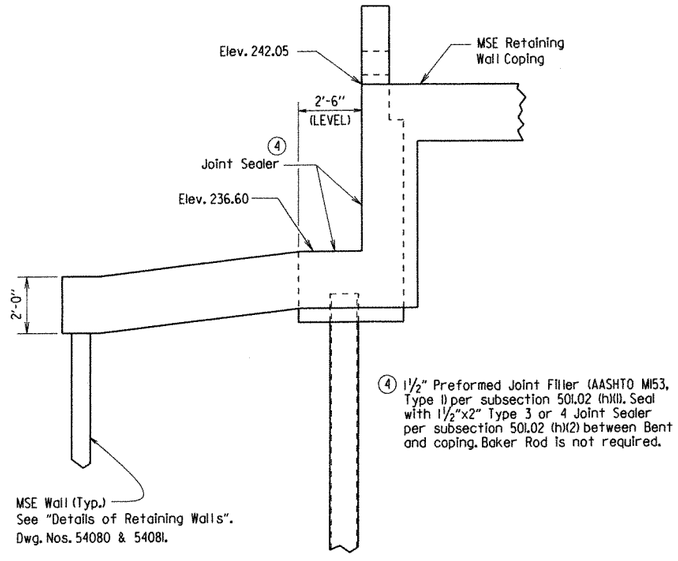

④ 1½" Preformed Joint Filler (AASHTO M153, Type I) per subsection 501.02 (h)(1). Seal with 1½"x2" Type 3 or 4 Joint Sealer per subsection 501.02 (h)(2) between Bent and coping. Baker Rod is not required.

VIEW B-B
No Scale

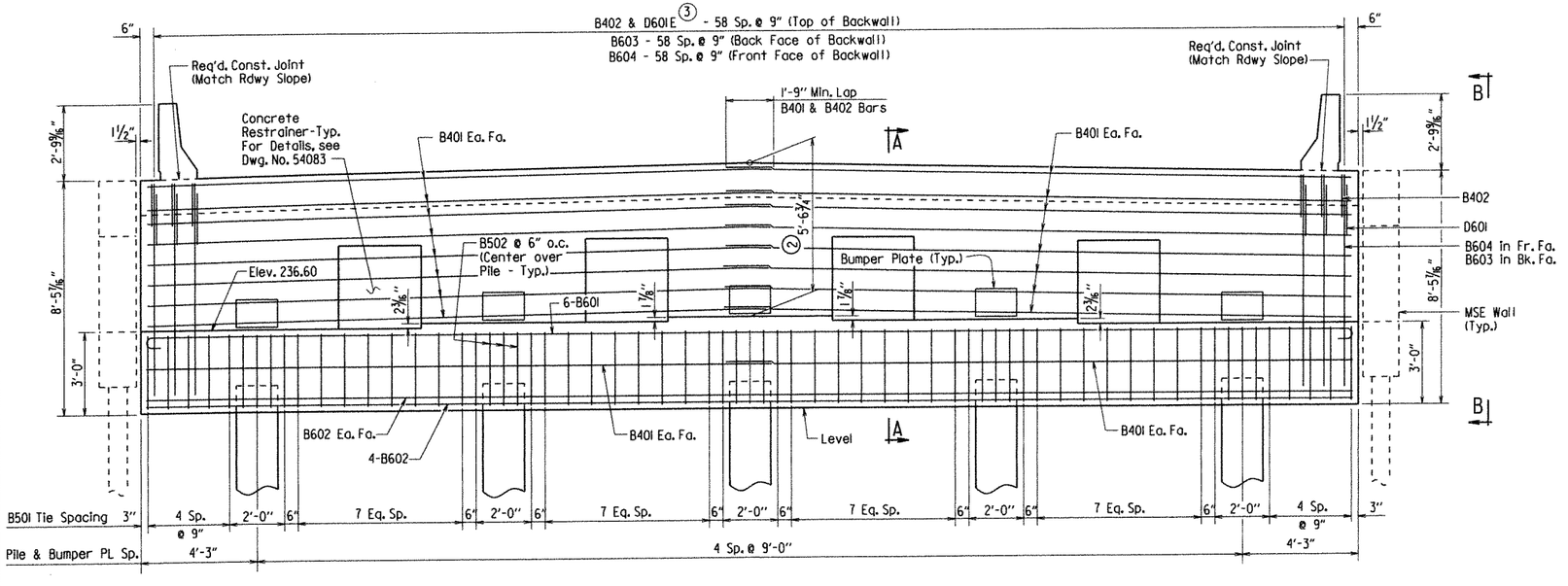

ELEVATION - BENT I
Looking Back
⅜" = 1'-0"

For "Section A-A", see Dwg. No. 54083.

For General Notes and Bar List, See Dwg. No. 54083.

STATE OF ARKANSAS
Carl J. Puselier
REGISTERED PROFESSIONAL ENGINEER
No. 7510
8/28/13
CARL J. PUSELIER
BRIDGE ENGINEER

SHEET 1 OF 2
DETAILS OF BENT 1
WHITE RIVER
ROUTE SEC.
ARKANSAS STATE HIGHWAY COMMISSION
LITTLE ROCK, ARK.

DRAWN BY: MRE DATE: 04/22/13 FILENAME: b005836.bl.dgn
CHECKED BY: CSL DATE: 8/28/13 SCALE: ⅜" = 1'-0"
DESIGNED BY: RBR DATE: 4pe/2013
BRIDGE NO. 07289 DRAWING NO. 54082

PRINT DATE: 8/27/2013

DATE REVISED	DATE FILMED	DATE REVISED	DATE FILMED	FED. ROAD DIST. NO.	STATE	FED. AID PROJ. NO.	SHEET NO.	TOTAL SHEETS
				6	ARK.			
				JOB NO.		005836	165	230
				①	07289	- END BENTS -		54083

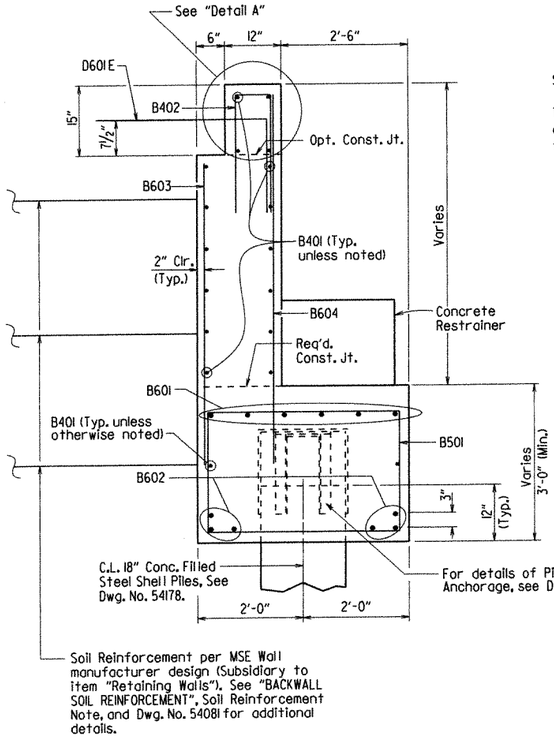

SECTION A-A

¾" = 1'-0"

Soil Reinforcement Note:

The Contractor shall provide soil reinforcement elements to resist the following concurrent horizontal forces and pressures, perpendicular to Bent 1.

- 65 psf per foot of depth equivalent fluid pressure
- A lateral force of 730 lb/ft at the top of cap
- A lateral live load surcharge of 260 psf

Soil reinforcement shall be attached at the back of End Bents. Type, size, and spacing of soil reinforcement shall be designed by the contractor. The design details and computations shall accompany the wall design submittal for review by the Engineer. Cost included with item Special Provision Job 005836 "Retaining Walls". See Special Provision Job 005836 "Retaining Walls" for additional information.

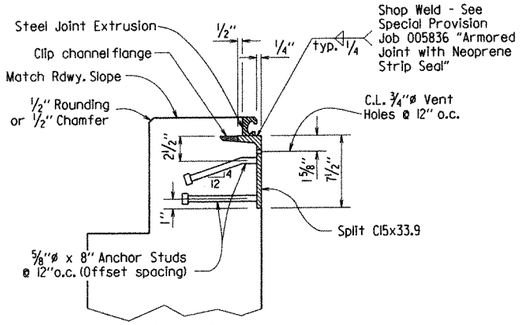

For additional joint details, see Dwg. No. 54170.

Transverse spacing between bent anchor studs and vent holes shall be 6".

Concrete shall be hand packed under the joint armor.

DETAIL A

No Scale

BAR LIST - BENT 1

MARK	NO. REQ'D.	LENGTH	P.D.
B401	36	23'-0"	Str.
B402	59	4'-10"	2"
B403	16	9'-4"	3"
B501	42	13'-2"	2½"
B502	15	8'-10"	2½"
B601	6	45'-6"	4½"
B602	6	44'-2"	Str.
B603	59	5'-7"	Str.
B604	59	6'-10"	Str.
B605	16	11'-8"	4½"
B606	24	4'-9"	Str.
D601E	59	5'-10"	4½"
P401	12	8"	Str.
P601	12	5'-4"	Str.
P602	6	3'-1"	4½"

BENDING DIAGRAMS

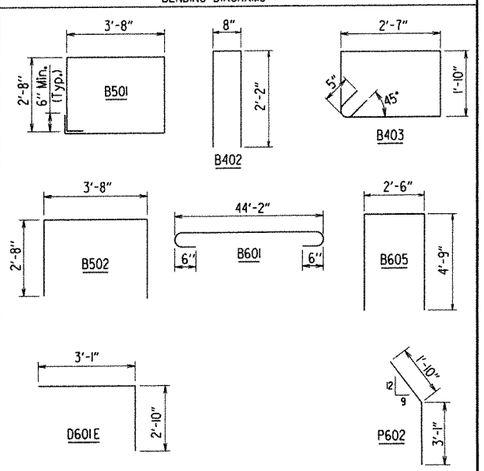

Dimensions are out to out of bars.

NOTE: Bars designated with an "E" suffix shall be epoxy coated.

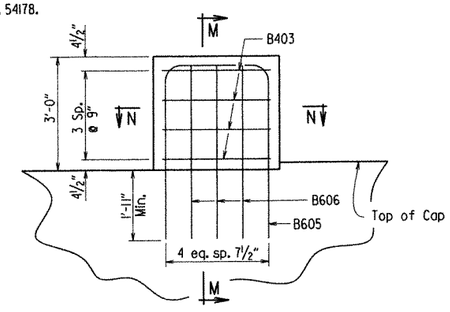

ELEVATION - CONCRETE RESTRAINER

Looking Back

No Scale

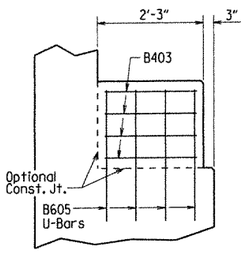

SECTION M-M

No Scale

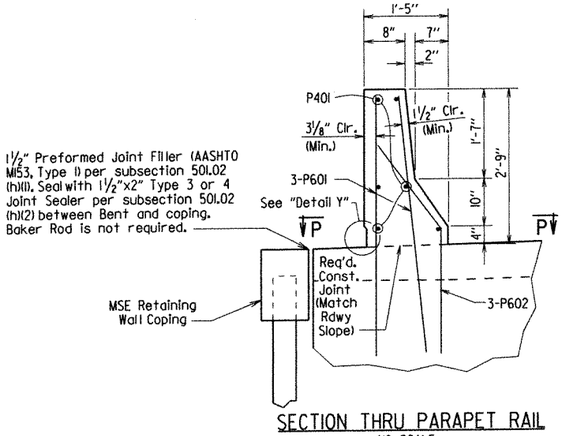

SECTION THRU PARAPET RAIL

NO SCALE

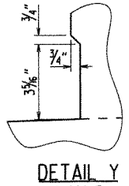

DETAIL Y

NO SCALE

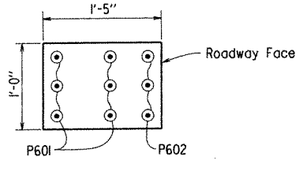

SECTION P-P

NO SCALE

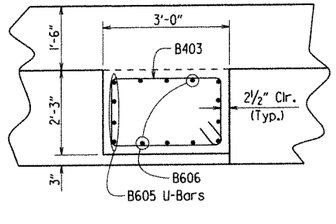

SECTION N-N

No Scale

GENERAL NOTES

All concrete shall be Class "S" with a minimum 28 day compressive strength f'c = 3,500 psi. Concrete shall be poured in the dry and all exposed corners to be chamfered ¾" unless otherwise noted.

All reinforcing steel shall be Grade 60 (Yield Strength = 60,000 psi.), conforming to AASHTO M31 or M322, Type A, with Mill Test Reports.

Structural steel in end bents shall be M270, Gr. 50W and shall be paid for as "Structural Steel in Plate Girder Spans (M270, Gr. 50W)".

Top reinforcing bars in cap shall be properly placed to avoid interference with anchor bolts or sheet metal sleeves.

No portion of the backwall shall be poured before beams or girders are in place. The portion of the backwall above the optional construction joint at the paving bracket shall not be placed until the deck pour has been made. Refer to the "Expansion Device Installation" note, see Dwg. No. 54170. No heavy construction equipment shall be allowed directly behind the backwall until the concrete for the span has been completed.

Special care shall be taken to properly and thoroughly consolidate the concrete in the vicinity of the expansion joint device in the backwall. See Subsection 802.09 (a)(3).

For additional information, see Layout.

STATE OF ARKANSAS
CARL J. FUSELIER
REGISTERED PROFESSIONAL ENGINEER
No. 7510
8/28/13

BRIDGE ENGINEER

SHEET 2 OF 2
DETAILS OF BENT 1
WHITE RIVER

ROUTE SEC.

ARKANSAS STATE HIGHWAY COMMISSION

LITTLE ROCK, ARK.

DRAWN BY: MRE DATE: 04/23/13 FILENAME: b005836_b1.dgn
CHECKED BY: CSL DATE: 8/28/13 SCALE: As Shown
DESIGNED BY: RBR DATE: Apr. '13

BRIDGE NO. 07289 DRAWING NO. 54083

PRINT DATE: 8/27/2013

DATE REVISED	DATE FILMED	DATE REVISED	DATE FILMED	FED. ROAD DIST. NO.	STATE	FED. AID PROJ. NO.	SHEET NO.	TOTAL SHEETS
				6	ARK.			
				JOB NO.		005836	66	230
				①	07289 -	INT. BENTS	- 54084	

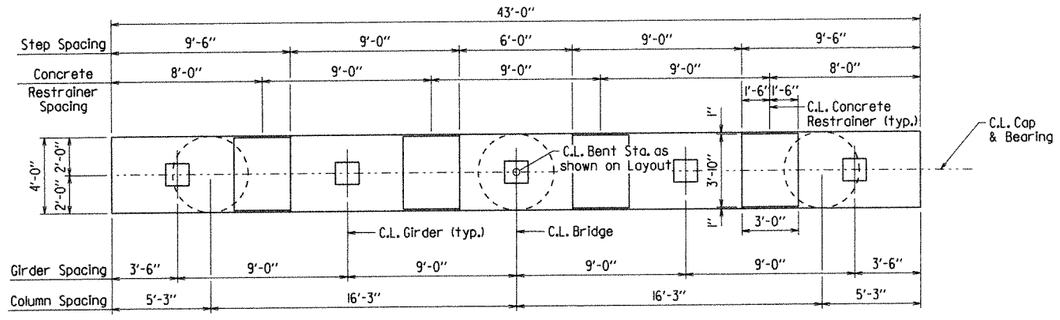

PLAN

1/4" = 1'-0"

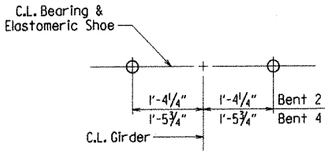

TYPICAL ANCHOR BOLT LAYOUT

No Scale

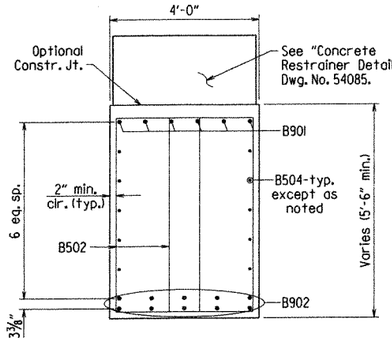

SECTION A-A

1/2" = 1'-0"

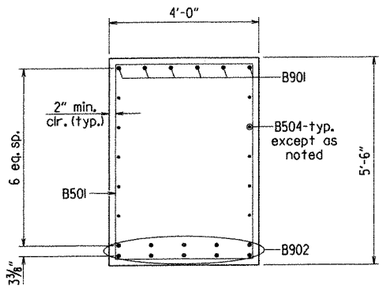

SECTION B-B

1/2" = 1'-0"

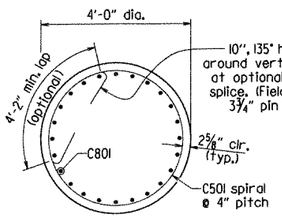

SECTION C-C

1/2" = 1'-0"

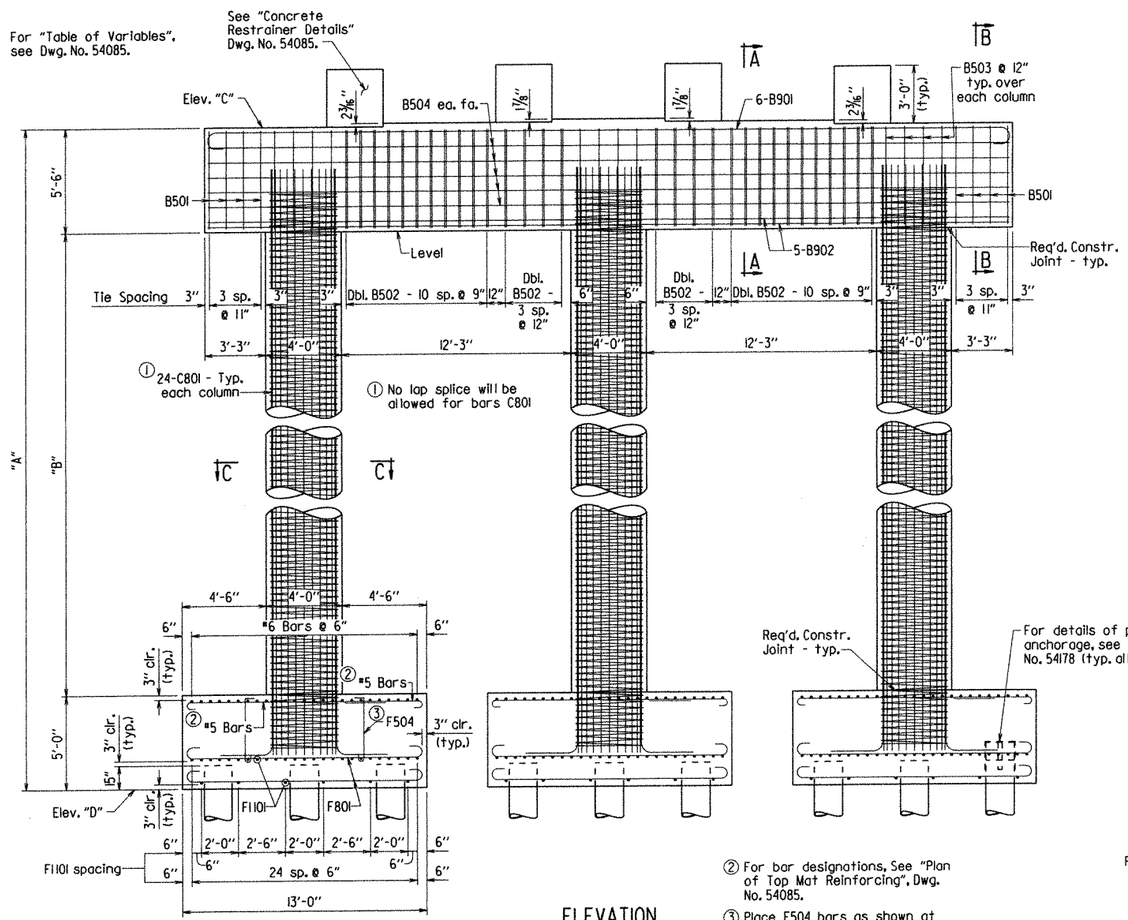

ELEVATION

1/4" = 1'-0"

② For bar designations, See "Plan of Top Mat Reinforcing", Dwg. No. 54085.

③ Place F504 bars as shown at 12" max. spacing in both directions. See "Plan of Footing Ties", Dwg. No. 54085.

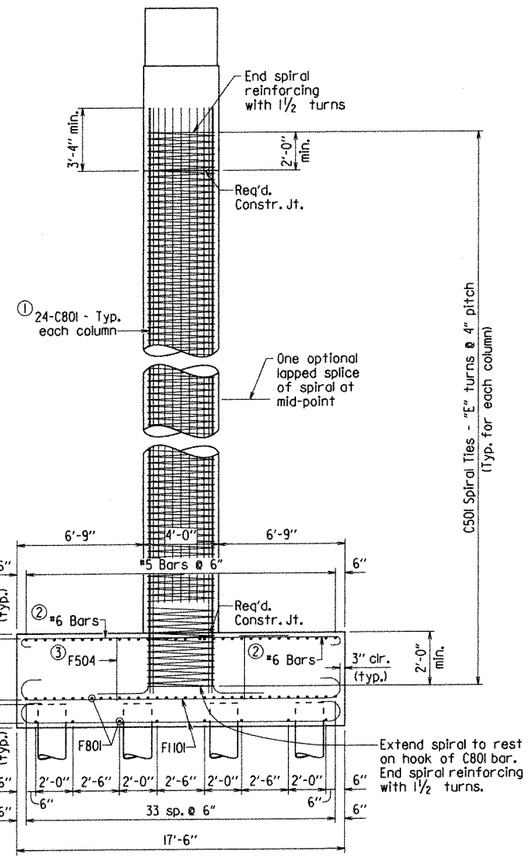

END VIEW

1/4" = 1'-0"

STATE OF ARKANSAS
Carl J. Fuselier
REGISTERED PROFESSIONAL ENGINEER
No. 7510
8/28/13
CARL J. FUSELIER

BRIDGE ENGINEER

SHEET 1 OF 2
DETAILS OF BENTS 2 & 4
WHITE RIVER

ROUTE SEC.

ARKANSAS STATE HIGHWAY COMMISSION

LITTLE ROCK, ARK.

DRAWN BY: JYP DATE: 4-9-13 FILENAME: b005836_b2.dgn

CHECKED BY: CSL DATE: 8/28/13 SCALE: AS NOTED

DESIGNED BY: RBR DATE: April 2013

BRIDGE NO. 07289 DRAWING NO. 54084

PRINT DATE: 8/27/2013

DATE REVISED	DATE FILMED	DATE REVISED	DATE FILMED	FED. ROAD DIST. NO.	STATE	FED. AID PROJ. NO.	SHEET NO.	TOTAL SHEETS
				6	ARK.			
				JOB NO.		005836	67	230
				①	07289 -	INT. BENTS	- 54085	

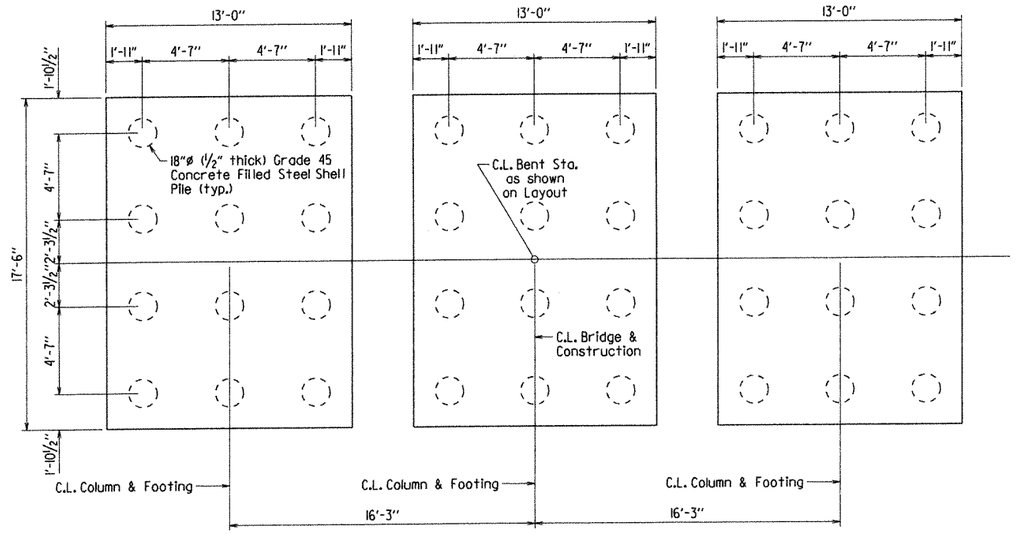

PLAN OF FOOTINGS

1/4" = 1'-0"

TABLE OF VARIABLES

	BENT 2	BENT 4
"A"	26'-0"	36'-3"
"B"	15'-6"	25'-9"
Elev. "C"	242.07	252.98
Elev. "D"	216.07	216.73
"E"	62	92
"F"	723'-6"	1056'-6"
"G"	22'-2"	32'-5"
"H"	23'-3"	33'-6"

BAR LIST - PER BENT

MARK	NO. REQ'D.	LENGTH	P.D.
B501	8	18'-2"	2½"
B502	60	15'-6"	2½"
B503	12	13'-10"	2½"
B504	10	42'-8"	Str.
B601	32	12'-10"	4½"
B801	28	14'-5"	6"
B802	16	6'-2"	Str.
B901	6	45'-2"	9"
B902	10	42'-8"	Str.
C501	3	"F"	Spiral
C801	72	"H"	6"
F501	78	13'-8"	3¾"
F502	24	11'-2"	3¾"
F503	24	4'-8"	3¾"
F504	468	4'-3"	3¾"
F601	54	18'-4"	4½"
F602	21	14'-11"	4½"
F603	21	6'-0"	4½"
F801	126	14'-4"	6"
F1101	93	20'-0"	11¼"

BENDING DIAGRAMS

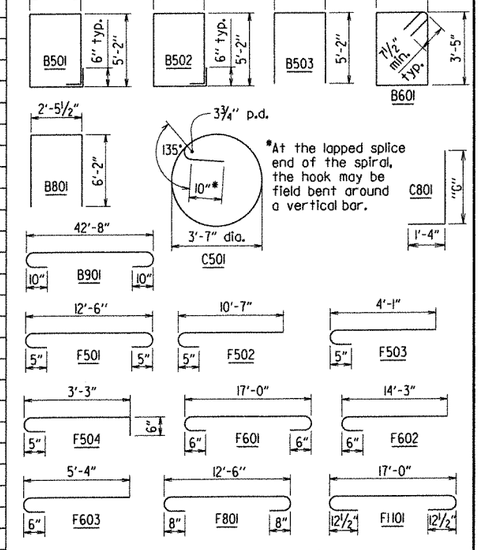

Dimensions are out to out of bars.

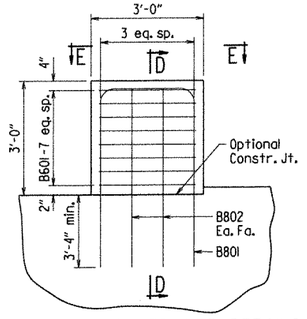

CONCRETE RESTRAINER DETAILS

½" = 1'-0"

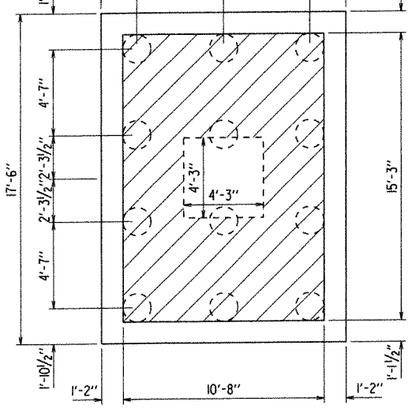

Place F504 bars within hatched area at 12" max. spacing in both directions. F504 bars not needed in area of spiral reinforcing. Alternate hooks between top and bottom mat.

PLAN OF FOOTING TIES

1/4" = 1'-0"

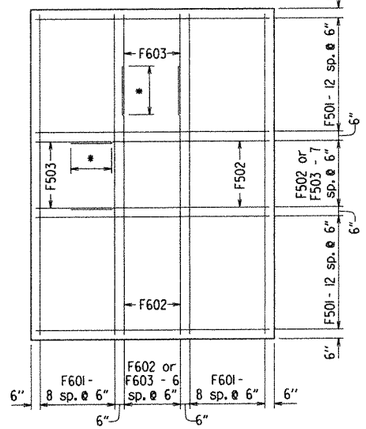

*2'-2" Min. Lap Length #5 bar
2'-7" Min. Lap Length #6 bar

PLAN OF TOP MAT REINFORCING

1/4" = 1'-0"

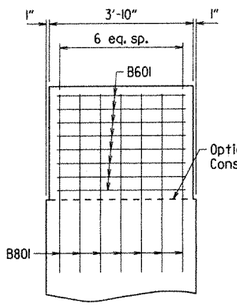

SECTION D-D

½" = 1'-0"

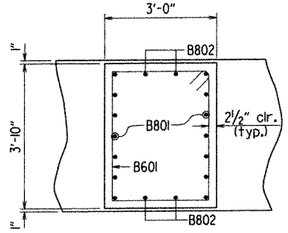

SECTION E-E

½" = 1'-0"

INTERMEDIATE BENT NOTES

All concrete in cap, column & footing shall be Class "S" with a minimum 28 day compressive strength, f'c = 3,500 psi. Class "S" Concrete shall be poured in the dry and all exposed corners to be chamfered ¾" unless otherwise noted. All reinforcing steel shall conform to AASHTO M31 or M322, Type A, with mill test report, Grade 60 (yield strength = 60,000 psi.).

If anchor bolts are drilled into cap, top reinforcing bars shall be properly placed to avoid damage.

For additional information see layout.

NOTES FOR SPIRAL REINFORCING

Spiral reinforcing shall be plain round or deformed steel bars meeting the requirements of AASHTO M31 or M322, Type A, with mill test report (Grade 60) or shall be cold drawn wire meeting the requirements of AASHTO M32 or M225 (Grade 70) with a minimum diameter of 0.625".

Spiral reinforcement shall be paid for at the contract unit price bid per pound for "Reinforcing Steel-Bridge (Grade 60)". No additional payment shall be made for spacers, optional splices, or bracing needed for assembly, shipping, handling, or erecting.

Contractor may elect to use one lap splice in the spiral reinforcing per column. The lap splice shall be located at the mid-point of the column.

Splices in spiral reinforcement shall be lapped a minimum of 80 bar diameters.

Spiral reinforcement at lapped splices shall be terminated by a 135° hook with a 10" tail around a vertical bar. Hook may be field bent. Ends of spirals not lapped shall be terminated with 1½ turns and a 135° hook with a 10" tail around a vertical bar.

STATE OF ARKANSAS
Carl J. Fusselier
REGISTERED PROFESSIONAL ENGINEER
No. 7510
8/28/13
CARL J. FUSSELIER

BRIDGE ENGINEER

SHEET 2 OF 2
DETAILS OF BENTS 2 & 4
WHITE RIVER

ROUTE SEC.

ARKANSAS STATE HIGHWAY COMMISSION

LITTLE ROCK, ARK.

DRAWN BY: JYP DATE: 4-9-13 FILENAME: b005836.b2.dgn
CHECKED BY: CSL DATE: 8/28/13 SCALE: AS NOTED
DESIGNED BY: RBR DATE: April 2013

BRIDGE NO. 07289 DRAWING NO. 54085

PRINT DATE: 8/27/2013

DATE REVISED	DATE FILMED	DATE REVISED	DATE FILMED	FED. ROAD DIST. NO.	STATE	FED. AID PROJ. NO.	SHEET NO.	TOTAL SHEETS
				6	ARK.			
				JOB NO.		005836	168	230
				① 07289 -		INT. BENTS	- 54086	

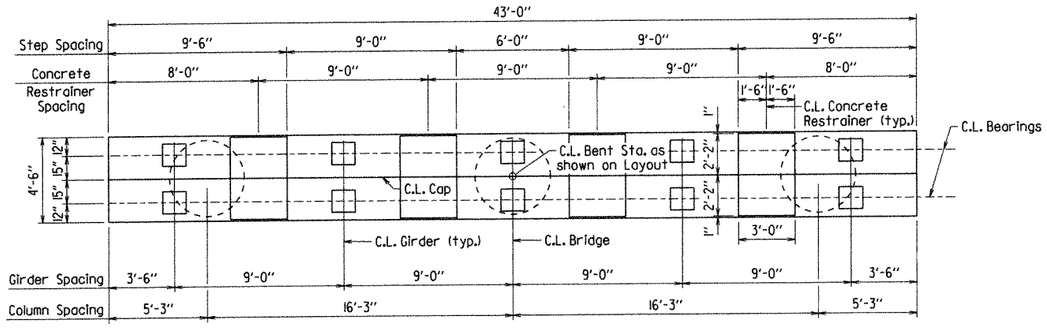

PLAN

1/4" = 1'-0"

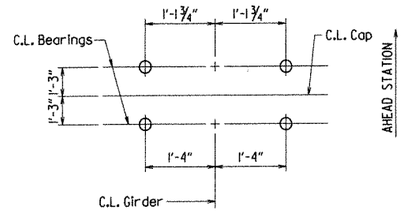

TYPICAL ANCHOR BOLT LAYOUT

No Scale

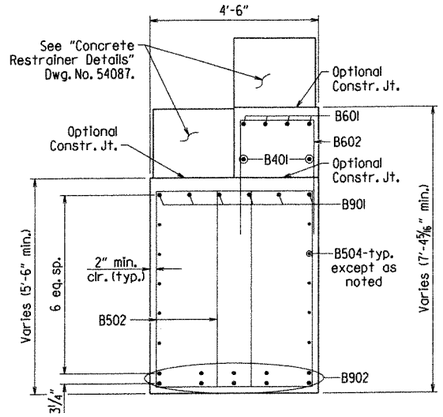

SECTION A-A

1/2" = 1'-0"

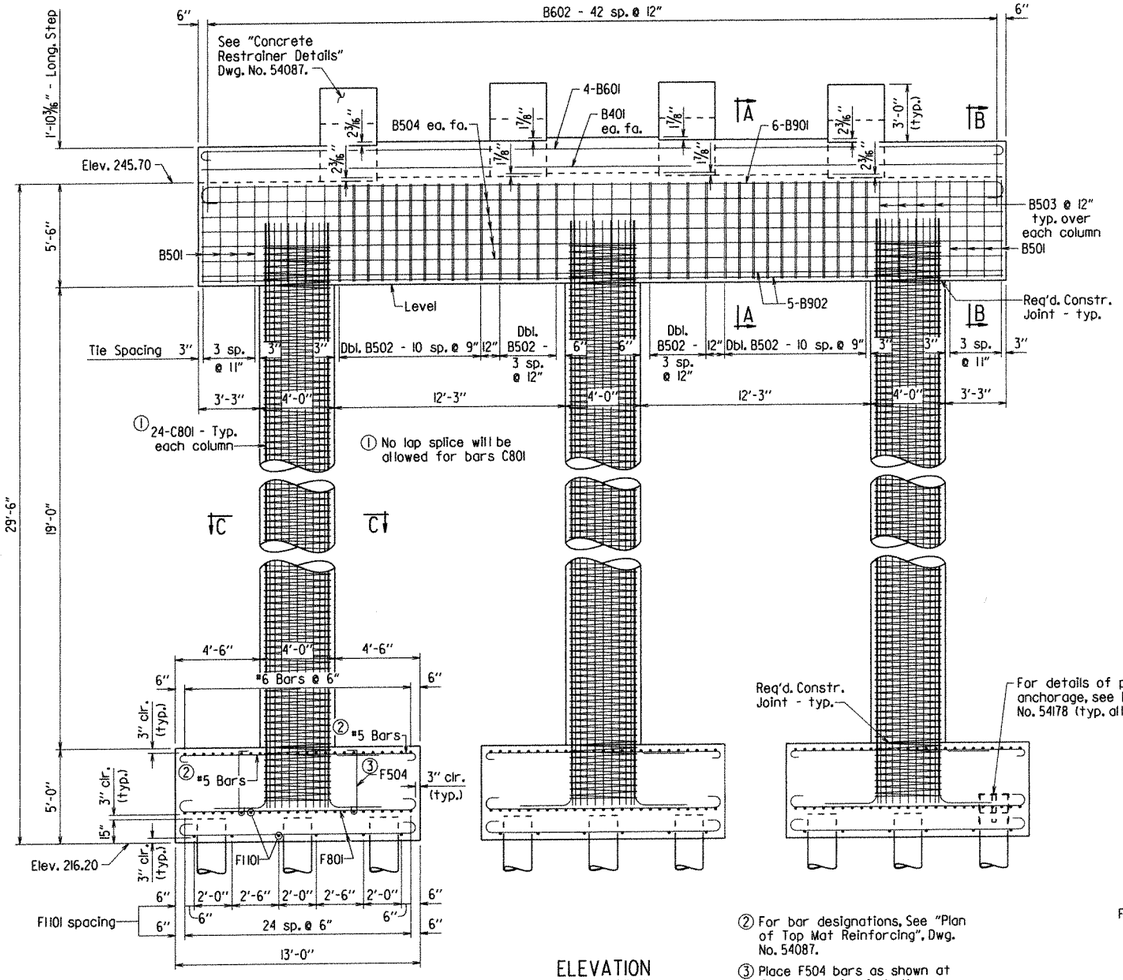

ELEVATION

Looking Ahead

1/4" = 1'-0"

② For bar designations, See "Plan of Top Mat Reinforcing", Dwg. No. 54087.

③ Place F504 bars as shown at 12" max. spacing in both directions. See "Plan of Footing Ties", Dwg. No. 54087.

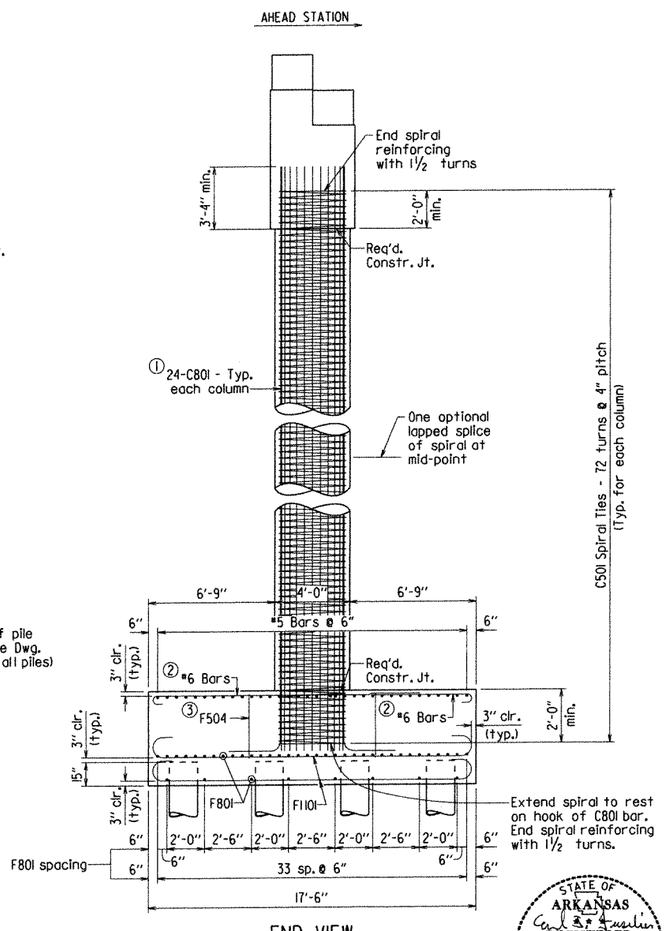

END VIEW

1/4" = 1'-0"

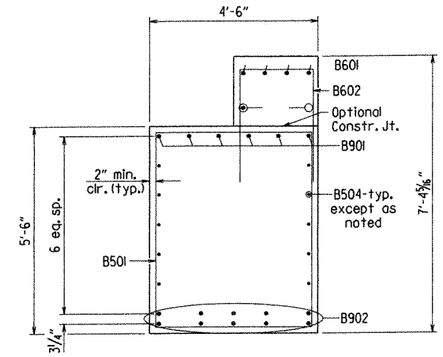

SECTION B-B

1/2" = 1'-0"

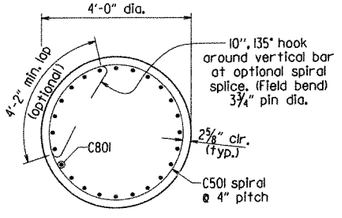

SECTION C-C

1/2" = 1'-0"

STATE OF ARKANSAS
Carl J. Fuselier
REGISTERED PROFESSIONAL ENGINEER
No. 7510
8/28/13
CARL J. FUSELIER

BRIDGE ENGINEER

SHEET 1 OF 2
DETAILS OF BENT 3
WHITE RIVER

ROUTE SEC.

ARKANSAS STATE HIGHWAY COMMISSION

LITTLE ROCK, ARK.

DRAWN BY: JYP DATE: 4-9-13 FILENAME: b005836_b3.dgn

CHECKED BY: CSL DATE: 8/28/13 SCALE: AS NOTED

DESIGNED BY: RBR DATE: Aug. 1 2013

BRIDGE NO. 07289 DRAWING NO. 54086

PRINT DATE: 8/27/2013

DATE REVISED	DATE FILMED	DATE REVISED	DATE FILMED

FED. ROAD DIST. NO.	STATE	FED. AID PROJ. NO.	SHEET NO.	TOTAL SHEETS
6	ARK.			
JOB NO.		005836	69	230
①	07289 -	INT. BENTS	- 54087	

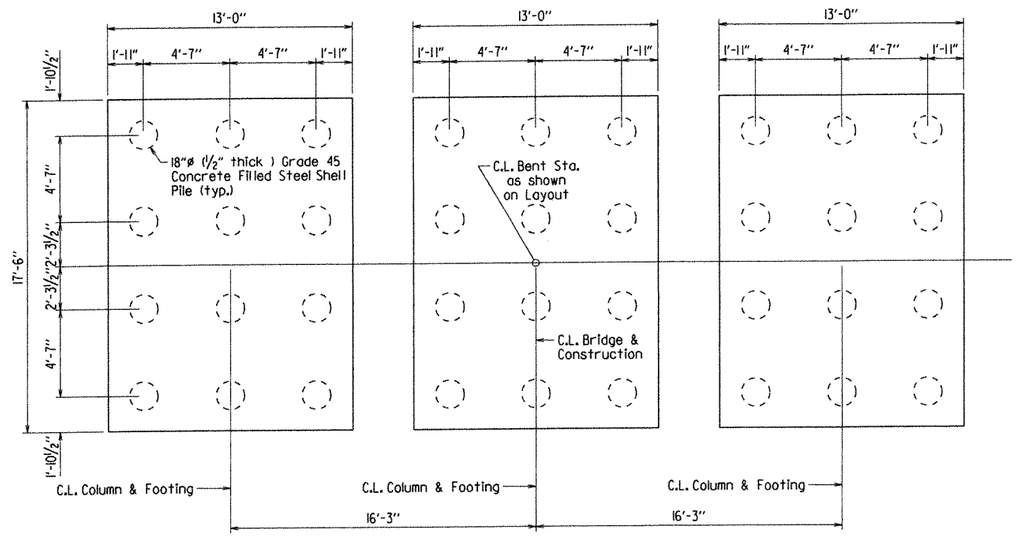

PLAN OF FOOTINGS

1/4" = 1'-0"

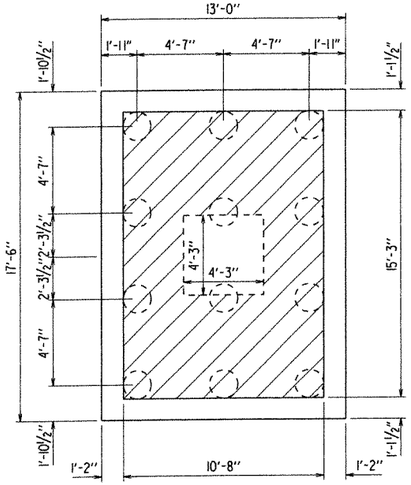

Place F504 bars within hatched area at 12" max. spacing in both directions. F504 bars not needed in area of spiral reinforcing. Alternate hooks between top and bottom mat.

PLAN OF FOOTING TIES

1/4" = 1'-0"

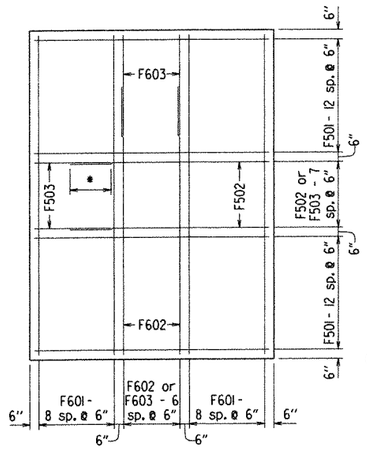

PLAN OF TOP MAT REINFORCING

1/4" = 1'-0"

*2'-2" Min. Lap Length #5 bar
2'-7" Min. Lap Length #6 bar

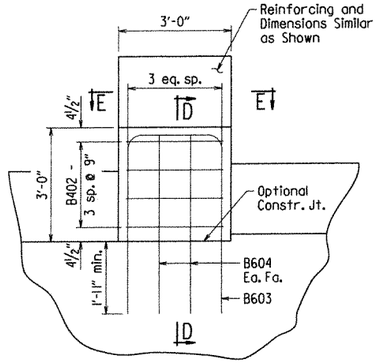

CONCRETE RESTRAINER DETAILS

1/2" = 1'-0"

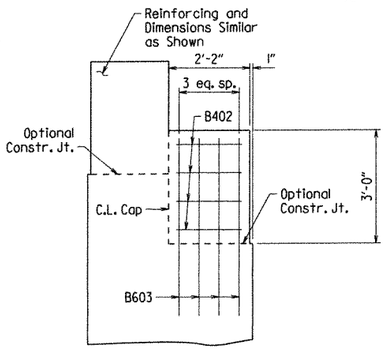

SECTION D-D

1/2" = 1'-0"

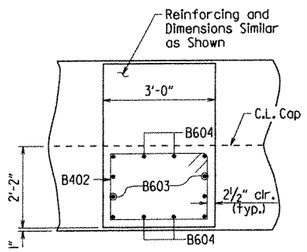

SECTION E-E

1/2" = 1'-0"

BAR LIST

MARK	NO. REQ'D.	LENGTH	P.D.
	2	42'-8"	Str.
B402	32	9'-2"	3"
B501	8	19'-2"	2½"
B502	60	16'-0"	2½"
B503	12	14'-4"	2½"
B504	10	42'-8"	Str.
B601	4	44'-0"	4½"
B602	43	8'-1"	4½"
B603	32	11'-8"	4½"
B604	32	4'-9"	Str.
B901	6	45'-2"	9"
B902	10	42'-8"	Str.
C501	3	834'-6"	Spiral
C801	72	26'-10"	6"
F501	78	13'-8"	3¾"
F502	24	11'-2"	3¾"
F503	24	4'-8"	3¾"
F504	468	4'-3"	3¾"
F601	54	18'-4"	4½"
F602	21	14'-11"	4½"
F603	21	6'-0"	4½"
F801	126	14'-4"	6"
F1101	93	20'-0"	11¼"

BENDING DIAGRAMS

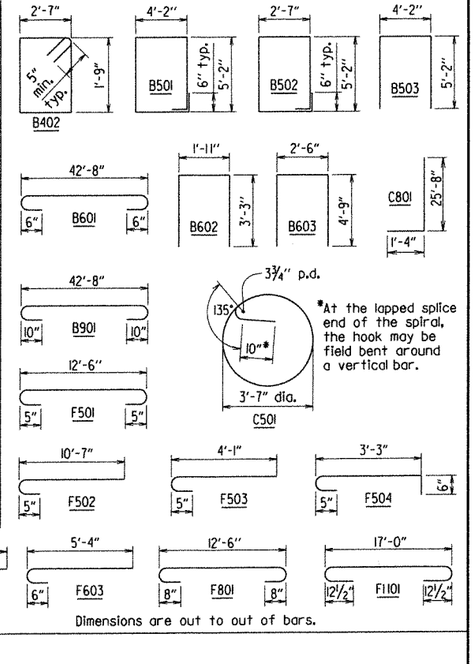

Dimensions are out to out of bars.

INTERMEDIATE BENT NOTES

All concrete in cap, column & footing shall be Class "S" with a minimum 28 day compressive strength, f'c = 3,500 psi. Class "S" Concrete shall be poured in the dry and all exposed corners to be chamfered ¾" unless otherwise noted. All reinforcing steel shall conform to AASHTO M31 or M322, Type A, with mill test report, Grade 60 (yield strength = 60,000 psi.).

If anchor bolts are drilled into cap, top reinforcing bars shall be properly placed to avoid damage.

For additional information see layout.

NOTES FOR SPIRAL REINFORCING

Spiral reinforcing shall be plain round or deformed steel bars meeting the requirements of AASHTO M31 or M322, Type A, with mill test report (Grade 60) or shall be cold drawn wire meeting the requirements of AASHTO M32 or M225 (Grade 70) with a minimum diameter of 0.625".

Spiral reinforcement shall be paid for at the contract unit price bid per pound for "Reinforcing Steel-Bridge (Grade 60)". No additional payment shall be made for spacers, optional splices, or bracing needed for assembly, shipping, handling, or erecting.

Contractor may elect to use one lap splice in the spiral reinforcing per column. The lap slice shall be located at the mid-point of the column.

Splices in spiral reinforcement shall be lapped a minimum of 80 bar diameters.

Spiral reinforcement at lapped splices shall be terminated by a 135° hook with a 10" tail around a vertical bar. Hook may be field bent. Ends of spirals not lapped shall be terminated with 1½ turns and a 135° hook with a 10" tail around a vertical bar.

STATE OF ARKANSAS
Carl J. Fuselier
REGISTERED PROFESSIONAL ENGINEER
No. 7510
8/28/13
CARL J. FUSELIER

BRIDGE ENGINEER

SHEET 2 OF 2
DETAILS OF BENT 3
WHITE RIVER

ROUTE SEC.

ARKANSAS STATE HIGHWAY COMMISSION

LITTLE ROCK, ARK.

DRAWN BY: JYP DATE: 4-9-13 FILENAME: b005836_b3.dgn
CHECKED BY: CSL DATE: 8/28/13 SCALE: AS NOTED
DESIGNED BY: RBR DATE: April 2013

BRIDGE NO. 07289 DRAWING NO. 54087

PRINT DATE: 8/27/2013

DATE REVISED	DATE FILMED	DATE REVISED	DATE FILMED	FED. ROAD DIST. NO.	STATE	FED. AID PROJ. NO.	SHEET NO.	TOTAL SHEETS
				6	ARK.			
				JOB NO.		005836	70	230
				①	07289 -	INT. BENTS	- 54088	

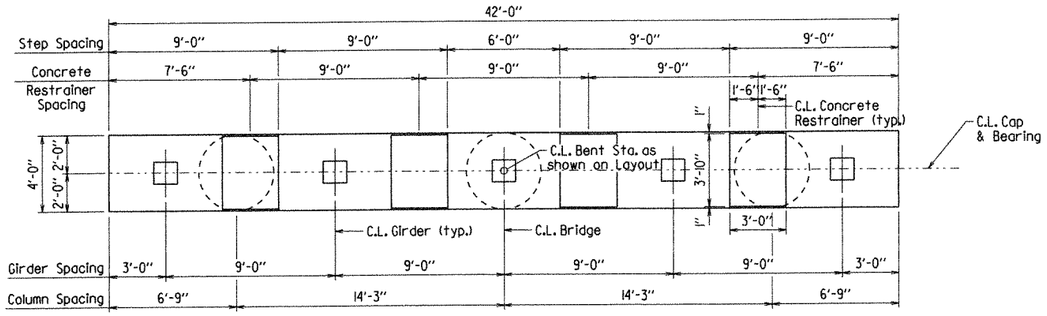

PLAN

1/4" = 1'-0"

① Lap splice will only be allowed for bars C801 & C802 as shown, min Lap Length = 5'-9".

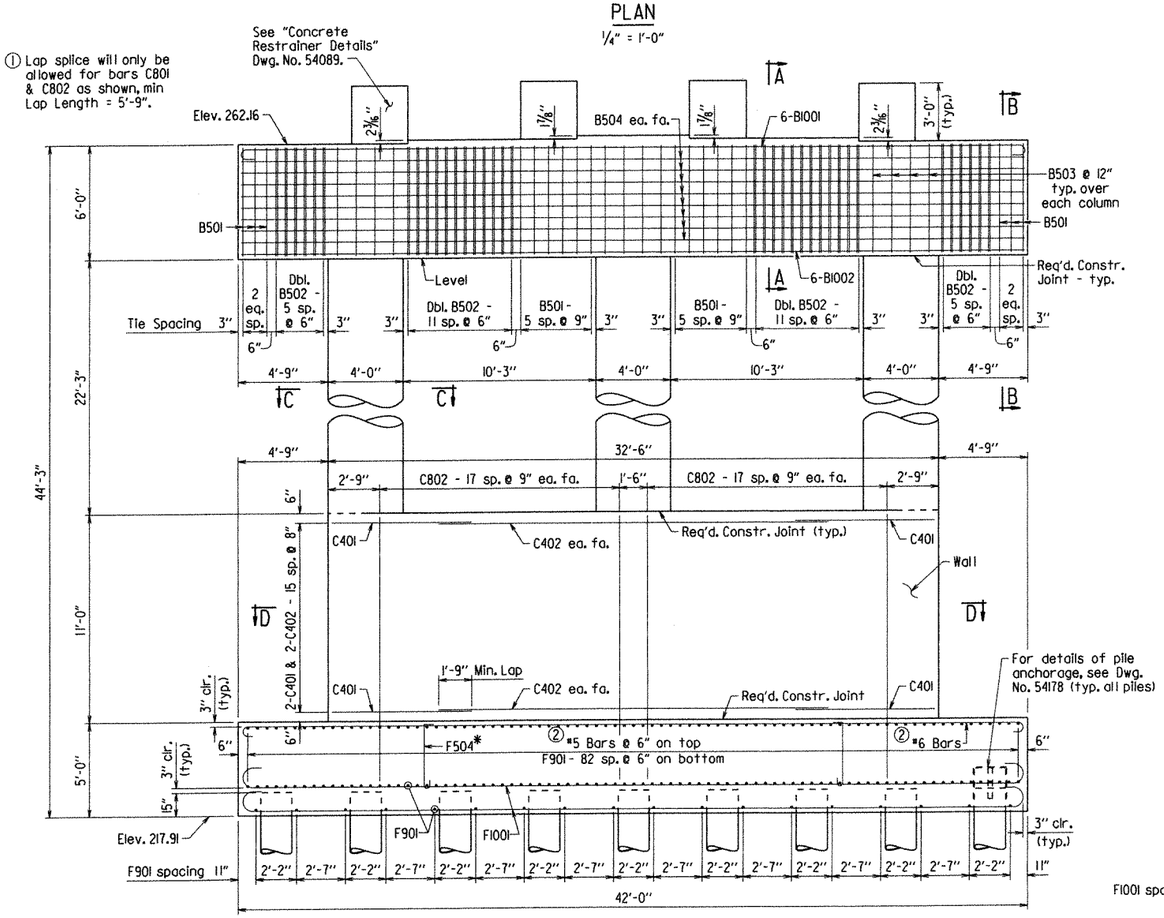

ELEVATION

1/4" = 1'-0"

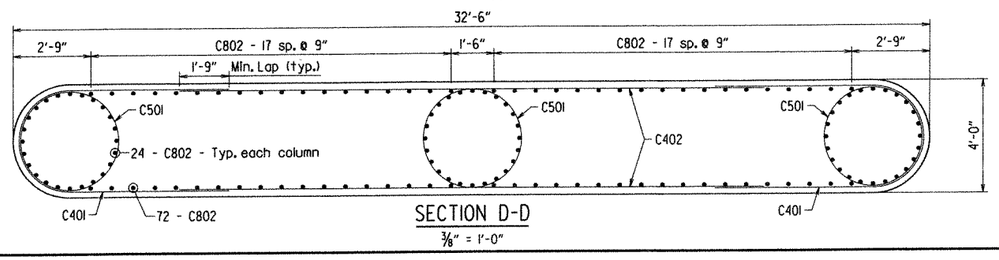

SECTION D-D

3/8" = 1'-0"

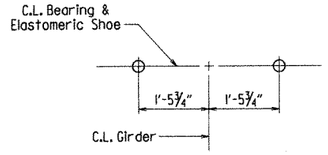

TYPICAL ANCHOR BOLT LAYOUT

No Scale

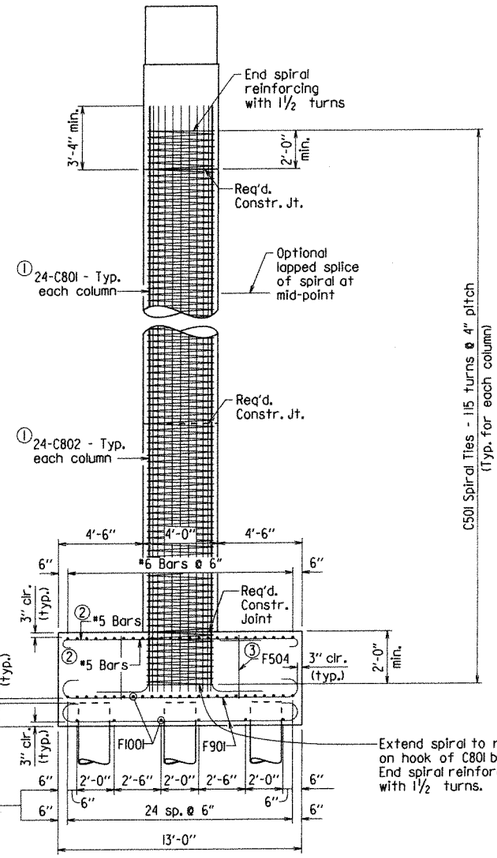

END VIEW

1/4" = 1'-0"

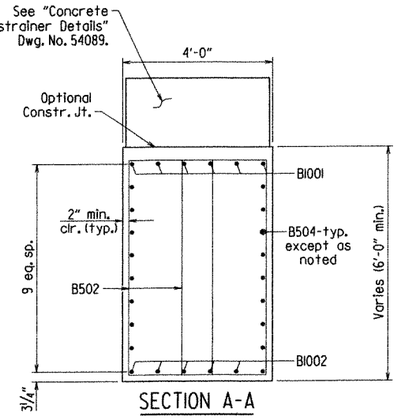

SECTION A-A

1/2" = 1'-0"

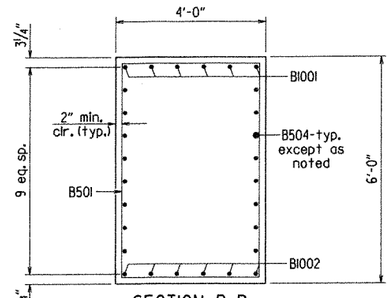

SECTION B-B

1/2" = 1'-0"

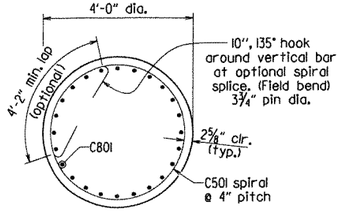

SECTION C-C

1/2" = 1'-0"

② For bar designations, See "Plan of Top Mat Reinforcing", Dwg. No. 54089.

③ Place F504 bars as shown at 12" max. spacing in both directions. See "Plan of Footing Ties", Dwg. No. 54089.

STATE OF ARKANSAS
Carl J. Puseller
REGISTERED PROFESSIONAL ENGINEER
No. 7510
CARL J. PUSELLER 8/28/13

BRIDGE ENGINEER

SHEET 1 OF 2
DETAILS OF BENT 5
WHITE RIVER

ROUTE SEC.

ARKANSAS STATE HIGHWAY COMMISSION

LITTLE ROCK, ARK.

DRAWN BY: JYP DATE: 4-9-13 FILENAME: b005836.b5.dgn

CHECKED BY: CSL DATE: 8/28/13 SCALE: AS NOTED

DESIGNED BY: RBR DATE: April 2013

BRIDGE NO. 07289 DRAWING NO. 54088

PRINT DATE: 8/28/2013

DATE REVISED	DATE FILMED	DATE REVISED	DATE FILMED	FED. ROAD DIST. NO.	STATE	FED. AID PROJ. NO.	SHEET NO.	TOTAL SHEETS
				6	ARK.			
				JOB NO.		005836	7	230
				07289 -		INT. BENTS	- 54089	

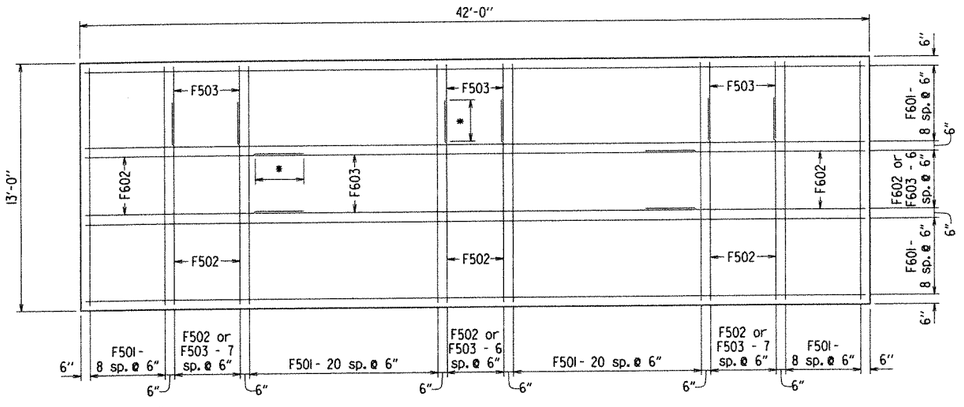

*2'-2" Min. Lap Length #5 bar
2'-7" Min. Lap Length #6 bar

PLAN OF TOP MAT REINFORCING

1/4" = 1'-0"

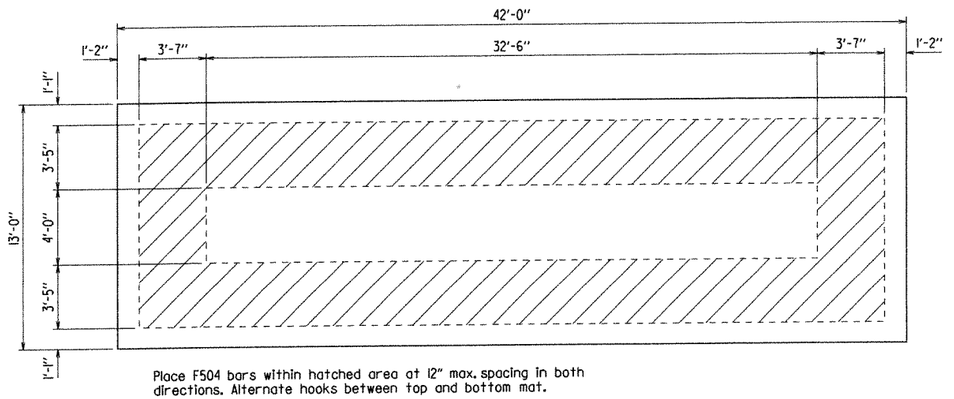

Place F504 bars within hatched area at 12" max. spacing in both directions. Alternate hooks between top and bottom mat.

PLAN OF FOOTING TIES

1/4" = 1'-0"

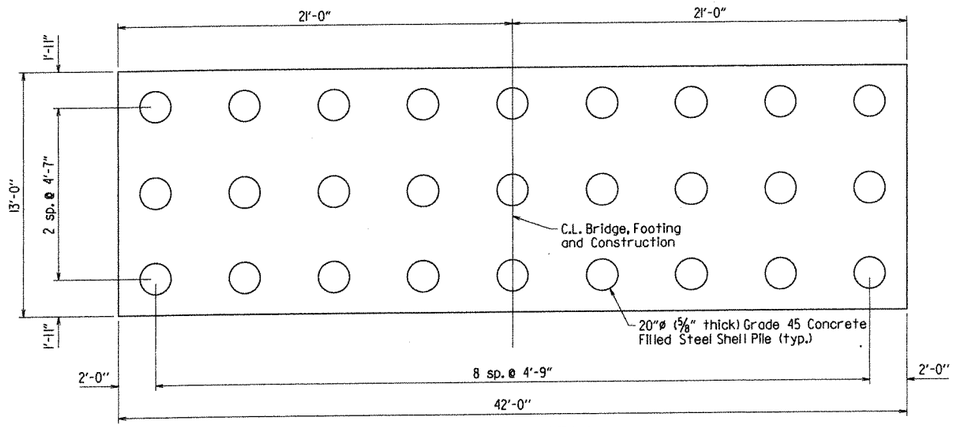

PLAN OF FOOTING

1/4" = 1'-0"

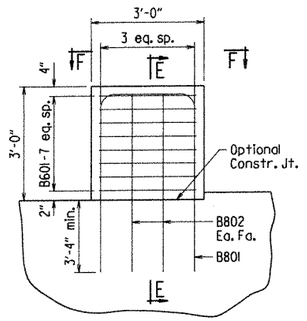

CONCRETE RESTRAINER DETAILS

1/2" = 1'-0"

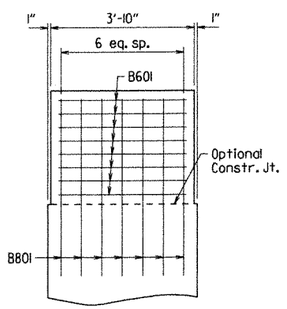

SECTION E-E

1/2" = 1'-0"

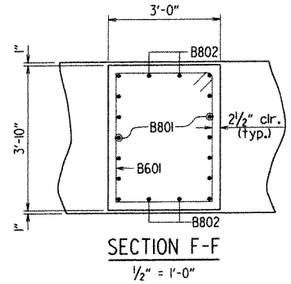

SECTION F-F

1/2" = 1'-0"

BAR LIST

MARK	NO. REQ'D.	LENGTH	P.D.
B501	18	19'-2"	2 1/2"
B502	72	16'-6"	2 1/2"
B503	12	14'-10"	2 1/2"
B504	16	41'-8"	Str.
B601	32	12'-10"	4 1/2"
B801	28	14'-5"	6"
B802	16	6'-2"	Str.
B1001	6	44'-6"	10"
B1002	6	41'-8"	Str.
C401	32	16'-11"	2"
C402	32	20'-9"	Str.
C501	3	1311'-9"	Spiral
C801	72	31'-6"	Str.
C802	144	15'-4"	6"
F501	60	13'-8"	3 3/4"
F502	23	11'-2"	3 3/4"
F503	23	4'-8"	3 3/4"
F504	344	4'-3"	3 3/4"
F601	18	42'-10"	4 1/2"
F602	14	12'-4"	4 1/2"
F603	7	23'-4"	Str.
F901	101	15'-0"	9"
F1001	31	44'-4"	10"

BENDING DIAGRAMS

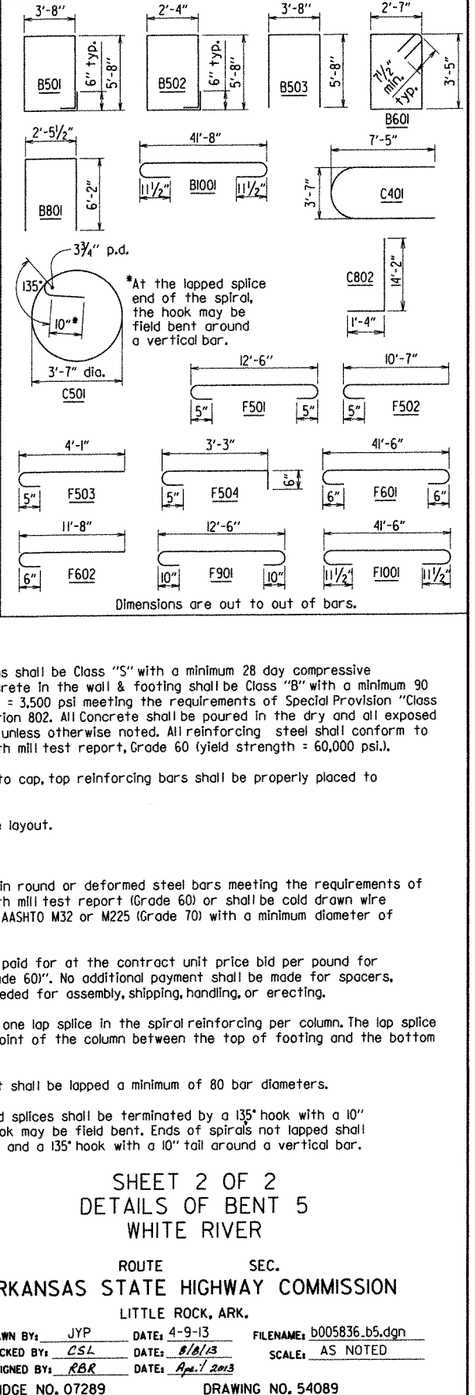

INTERMEDIATE BENT NOTES

Concrete in the cap & columns shall be Class "S" with a minimum 28 day compressive strength, f'c = 3,500 psi. Concrete in the wall & footing shall be Class "B" with a minimum 90 day compressive strength, f'c = 3,500 psi meeting the requirements of Special Provision "Class B Concrete - Bridge" and Section 802. All Concrete shall be poured in the dry and all exposed corners to be chamfered 3/4" unless otherwise noted. All reinforcing steel shall conform to AASHTO M31 or M322, Type A, with mill test report, Grade 60 (yield strength = 60,000 psi.).

If anchor bolts are drilled into cap, top reinforcing bars shall be properly placed to avoid damage.

For additional information see layout.

NOTES FOR SPIRAL REINFORCING

Spiral reinforcing shall be plain round or deformed steel bars meeting the requirements of AASHTO M31 or M322, Type A, with mill test report (Grade 60) or shall be cold drawn wire meeting the requirements of AASHTO M32 or M225 (Grade 70) with a minimum diameter of 0.625".

Spiral reinforcement shall be paid for at the contract unit price bid per pound for "Reinforcing Steel-Bridge (Grade 60)". No additional payment shall be made for spacers, optional splices, or bracing needed for assembly, shipping, handling, or erecting.

Contractor may elect to use one lap splice in the spiral reinforcing per column. The lap splice shall be located at the mid point of the column between the top of footing and the bottom of the cap.

Splices in spiral reinforcement shall be lapped a minimum of 80 bar diameters.

Spiral reinforcement at lapped splices shall be terminated by a 135° hook with a 10" tail around a vertical bar. Hook may be field bent. Ends of spirals not lapped shall be terminated with 1 1/2 turns and a 135° hook with a 10" tail around a vertical bar.

STATE OF ARKANSAS
Carl J. Puseliер
REGISTERED PROFESSIONAL ENGINEER
No. 7510
8/29/13
CARL J. PUSELIER

BRIDGE ENGINEER

SHEET 2 OF 2
DETAILS OF BENT 5
WHITE RIVER

ROUTE SEC.

ARKANSAS STATE HIGHWAY COMMISSION

LITTLE ROCK, ARK.

DRAWN BY: JYP DATE: 4-9-13 FILENAME: b005836.b5.dgn
CHECKED BY: CSL DATE: 8/8/13 SCALE: AS NOTED
DESIGNED BY: RBR DATE: Aug. 7 2013

BRIDGE NO. 07289 DRAWING NO. 54089

PRINT DATE: 8/27/2013

DATE REVISED	DATE FILMED	DATE REVISED	DATE FILMED	FED. ROAD DIST. NO.	STATE	FED. AID PROJ. NO.	SHEET NO.	TOTAL SHEETS
				6	ARK.			
				JOB NO.		005836	72	230
				① 07289 -		INT. BENTS	- 54090	

① Anchor bolts for 1220' Unit shall not be set until the seismic isolation bearing shop drawings are approved. Bearing seat elevations and C.L. bearing dimension shown are estimated. Actual values are to be determined by the Contractor based on approved seismic isolation bearing shop drawings. Anchor bolt layout is not shown, actual locations shall be based on approved seismic isolation bearing shop drawings.

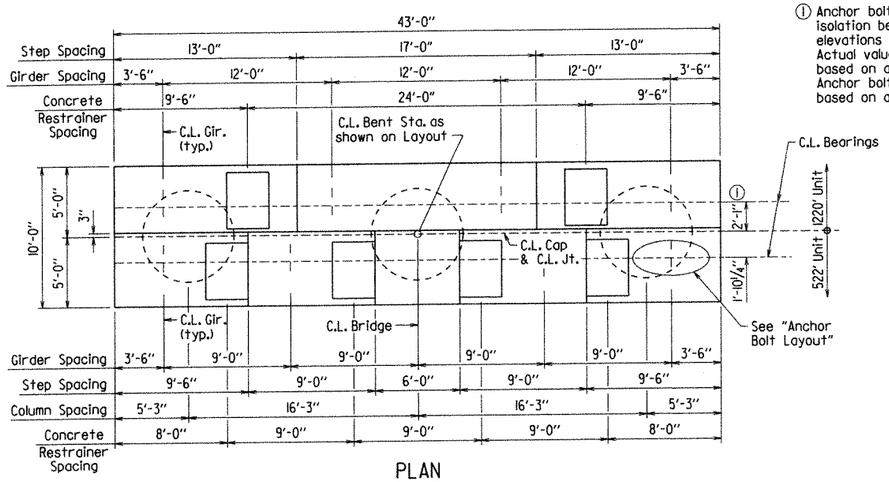

PLAN

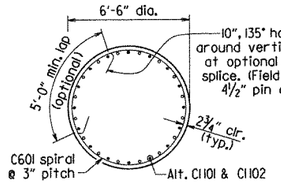

SECTION B-B

¼" = 1'-0"

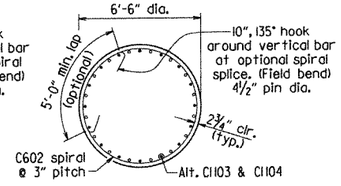

SECTION C-C

¼" = 1'-0"

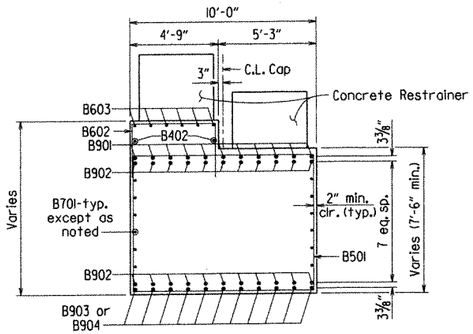

SECTION A-A

¼" = 1'-0"

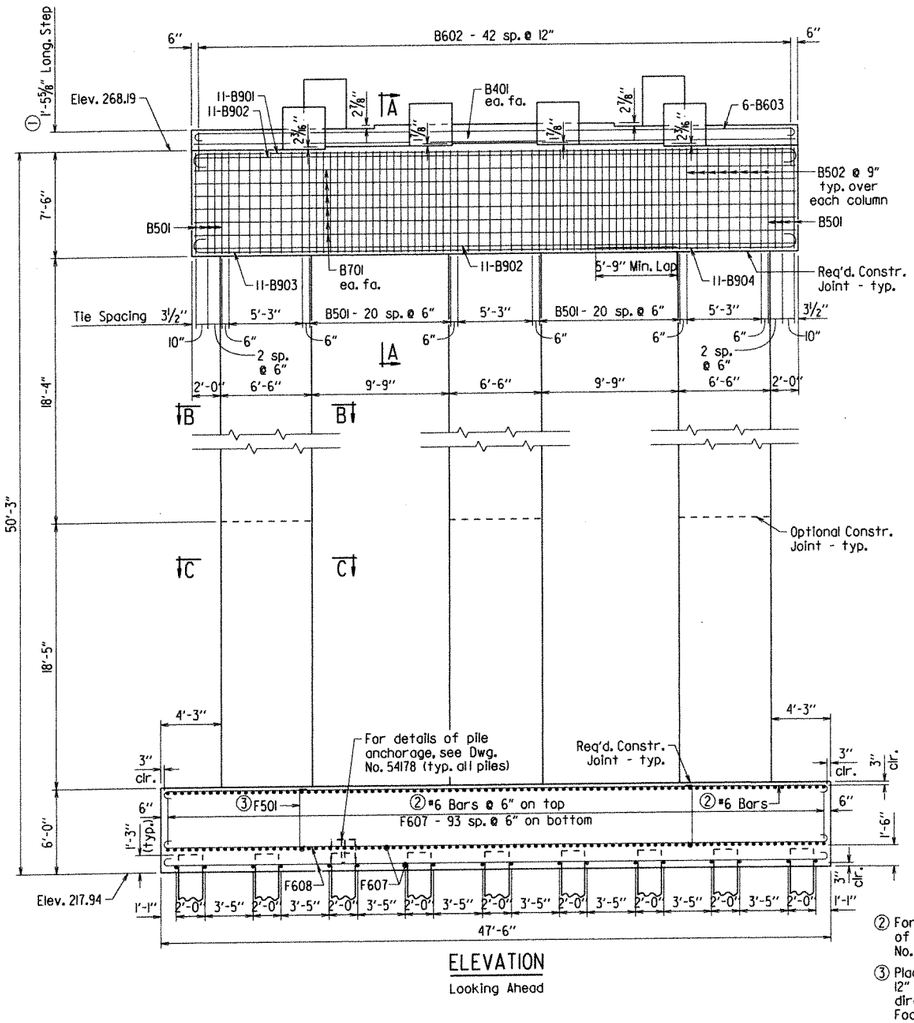

ELEVATION

Looking Ahead

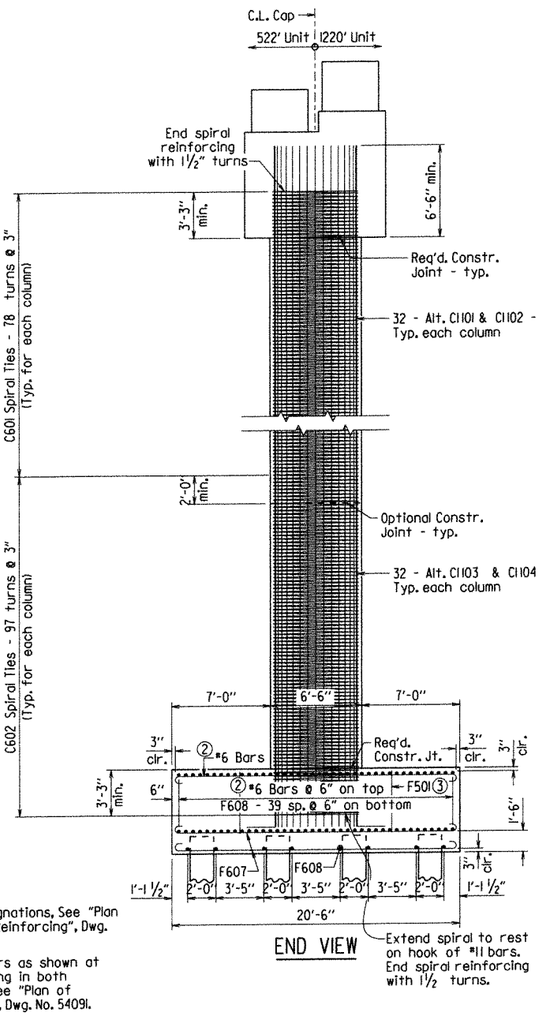

END VIEW

② For bar designations, See "Plan of Top Mat Reinforcing", Dwg. No. 54091.

③ Place F501 bars as shown at 12" max. spacing in both directions. See "Plan of Footing Ties", Dwg. No. 54091.

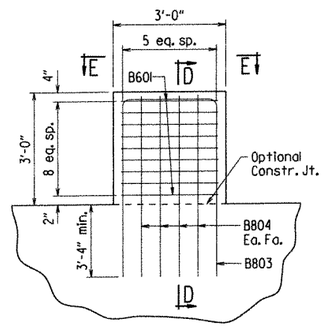

522' UNIT CONCRETE RESTRAINER DETAILS

No Scale

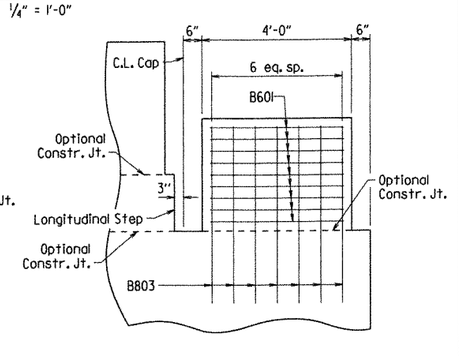

SECTION D-D

No Scale

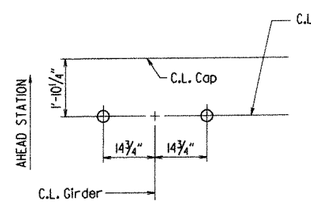

ANCHOR BOLT LAYOUT - 522' UNIT

No Scale

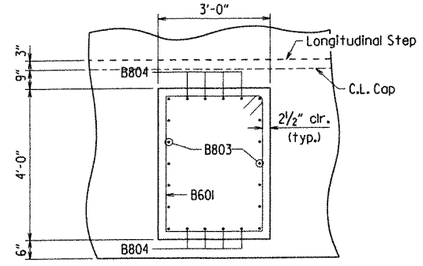

SECTION E-E

No Scale

SHEET 1 OF 2
DETAILS OF BENT 6
WHITE RIVER

STATE OF ARKANSAS
Carl J. Fuselier
REGISTERED PROFESSIONAL ENGINEER
No. 7510
8/29/13
CARL J. FUSELIER

BRIDGE ENGINEER

ROUTE SEC.

ARKANSAS STATE HIGHWAY COMMISSION

LITTLE ROCK, ARK.

DRAWN BY: JYP DATE: 4-17-13 FILENAME: b005836_b6.dgn

CHECKED BY: CSL DATE: 8/28/13 SCALE: 3/16" = 1'-0" or As Noted

DESIGNED BY: DHP DATE: 2-5-13

BRIDGE NO. 07289 DRAWING NO. 54090

PRINT DATE: 8/27/2013

DATE REVISED	DATE FILMED	DATE REVISED	DATE FILMED	FED. ROAD DIST. NO.	STATE	FED. AID PROJ. NO.	SHEET NO.	TOTAL SHEETS
				6	ARK.			
				JOB NO.		005836	73	230
				①	07289 -	INT. BENTS	- 54091	

BAR LIST

MARK	NO. REQ'D.	LENGTH	A	B	P.D.
B401	2	42'-8"			Str.
B501	50	34'-2"	9'-8"	7'-2"	2½"
B502	24	23'-10"	9'-8"	7'-2"	2½"
B601	56	13'-2"	2'-7"	3'-7"	4½"
B602	43	10'-7"	4'-8"	3'-1"	4½"
B603	6	44'-0"	42'-8"	6"	4½"
B701	12	42'-8"			Str.
B801	14	15'-5"	2'-5½"	6'-8"	6"
B802	16	6'-8"			Str.
B803	28	14'-5"	2'-5½"	6'-2"	6"
B804	32	6'-2"			Str.
B901	11	45'-2"	42'-8"	10"	9"
B902	22	42'-8"			Str.
B903	11	35'-6"	34'-3"	10"	9"
B904	11	15'-5"	14'-2"	10"	9"
C601	3	1534'-5"			Spiral
C602	3	1893'-10"			Spiral
① C1101	48	22'-10"			Str.
① C1102	48	19'-10"			Str.
① C1103	48	26'-6"	24'-10"	2'-0"	11¼"
① C1104	48	29'-6"	27'-10"	2'-0"	11¼"
F501	748	5'-4"	4'-4"	6"	3¾"
F601	56	21'-4"	20'-0"	6"	4½"
F602	76	6'-10"	6'-2"	6"	4½"
F603	38	12'-10"			Str.
F604	28	48'-4"	47'-0"	6"	4½"
F605	24	14'-11"	14'-3"	6"	4½"
F606	12	23'-8"			Str.
F607	112	21'-4"	20'-0"	6"	4½"
F608	48	48'-4"	47'-0"	6"	4½"

BENDING DIAGRAMS

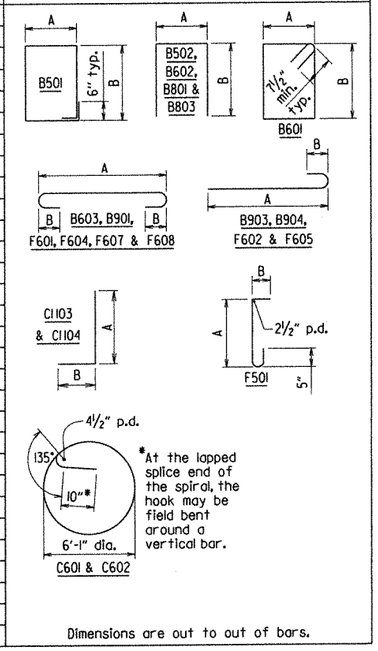

Dimensions are out to out of bars.

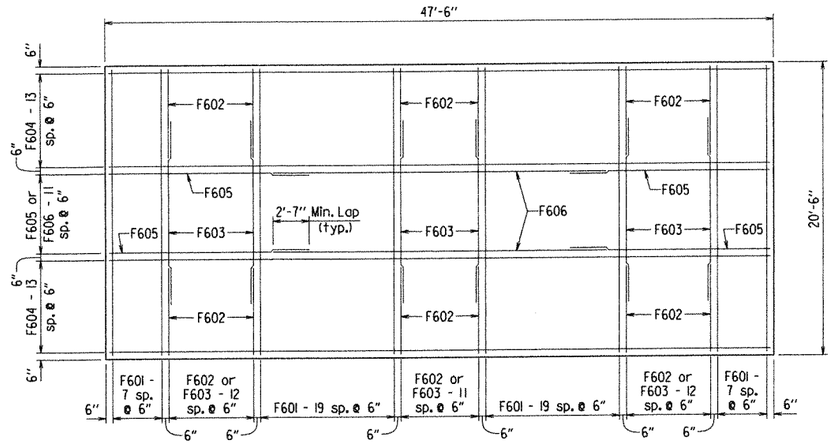

PLAN OF TOP MAT REINFORCING

① Dimensions shown are to Butt Splice and may vary based on mechanical coupler used.

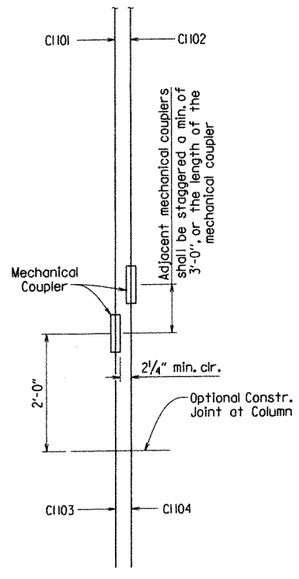

COLUMN BAR DETAIL

No Scale

Mechanical couplers in the column shall maintain the clearances shown. Their payment shall be subsidiary to the item "Reinforcing Steel-Bridge (Grade 60)". The QPL approved couplers shall develop at least 125% of the specified yield strength of the bar.

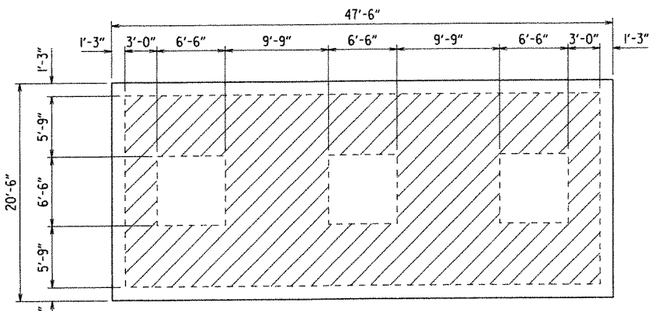

Place F501 bars within hatched area at 12" max. spacing in both directions. Alternate hooks between top and bottom mat.

PLAN OF FOOTING TIES

No Scale

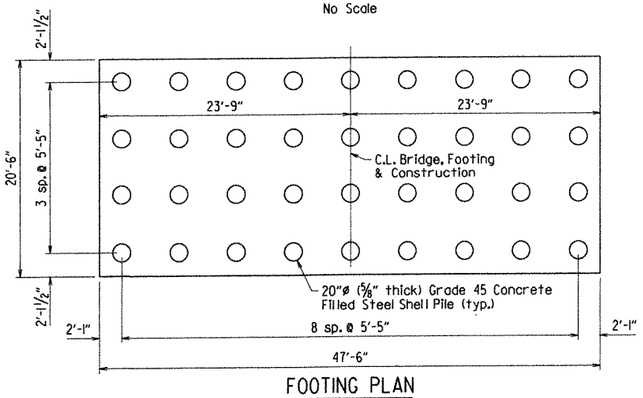

FOOTING PLAN

No Scale

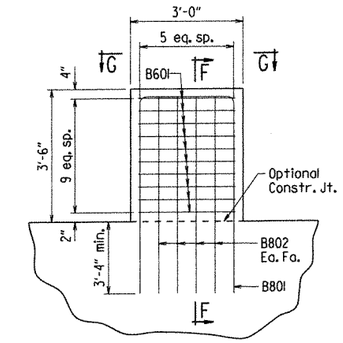

1220' UNIT CONCRETE RESTRAINER DETAILS

No Scale

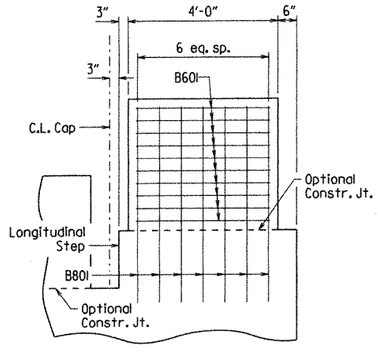

SECTION F-F

No Scale

STATE OF ARKANSAS
Carl E. Pugellier
REGISTERED PROFESSIONAL ENGINEER
No. 7510
8/28/13
CARL PUGELLIER

BRIDGE ENGINEER

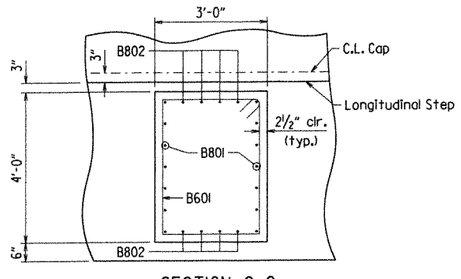

SECTION G-G

No Scale

INTERMEDIATE BENT NOTES

Concrete in the cap & column shall be Class "S" with a minimum 28 day compressive strength, f'c = 3,500 psi. Concrete in the footing shall be Class "B" with a minimum 90 day compressive strength, f'c = 3,500 psi meeting the requirements of Special Provision "Class B Concrete - Bridge" and Section 802. All Concrete shall be poured in the dry and all exposed corners to be chamfered ¾" unless otherwise noted.

All reinforcing steel shall conform to AASHTO M31 or M322, Type A, with mill test report. Grade 60 (yield strength = 60,000 psi.).

If anchor bolts are drilled into cap, top reinforcing bars shall be properly placed to avoid damage.

For additional information see layout.

NOTES FOR SPIRAL REINFORCING

Spiral reinforcing shall be plain round or deformed steel bars meeting the requirements of AASHTO M31 or M322, Type A, with mill test report (Grade 60) or shall be cold drawn wire meeting the requirements of AASHTO M32 or M225 (Grade 70) with a minimum diameter of 0.75".

Spiral reinforcement shall be paid for at the contract unit price bid per pound for "Reinforcing Steel-Bridge (Grade 60)". No additional payment shall be made for spacers, optional splices, or bracing needed for assembly, shipping, handling, or erecting.

Contractor may elect to use one lap splice in the spiral reinforcing per column. The lap splice shall be located at the mid-point of the column.

Splices in spiral reinforcement shall be lapped a minimum of 80 bar diameters.

Spiral reinforcement at lapped splices shall be terminated by a 135° hook with a 10" tail around a vertical bar. Hook may be field bent. Ends of spirals not lapped shall be terminated with 1½ turns and a 135° hook with a 10" tail around a vertical bar.

SHEET 2 OF 2
DETAILS OF BENT 6
WHITE RIVER

ROUTE SEC.

ARKANSAS STATE HIGHWAY COMMISSION

LITTLE ROCK, ARK.

DRAWN BY: JYP DATE: 4-17-13
CHECKED BY: CSL DATE: 8/28/13
DESIGNED BY: DHP DATE: 2-5-13

FILENAME: b005836_b6.dgn
SCALE: 3/16" = 1'-0" or As Noted

BRIDGE NO. 07289 DRAWING NO. 54091

PRINT DATE: 8/27/2013

DATE REVISED	DATE FILMED	DATE REVISED	DATE FILMED	FED. ROAD DIST. NO.	STATE	FED. AID PROJ. NO.	SHEET NO.	TOTAL SHEETS
				6	ARK.			
				JOB NO.		005836	74	230
				①	07289 -	INT. BENTS	- 54092	

① Anchor bolts for 1220' Unit shall not be set until the seismic isolation bearing shop drawings are approved. Bearing seat elevations shown are estimated. Actual values are to be determined by the Contractor based on approved seismic isolation bearing shop drawings. Anchor bolt layout is not shown, actual locations shall be based on approved seismic isolation bearing shop drawings.

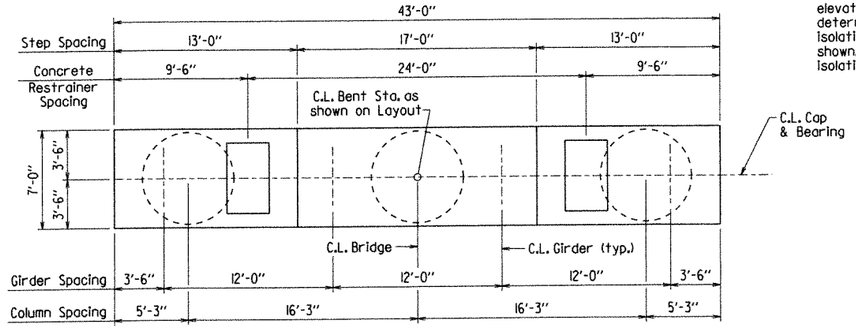

PLAN

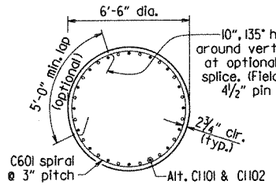

SECTION B-B

¼" = 1'-0"

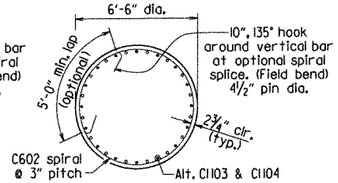

SECTION C-C

¼" = 1'-0"

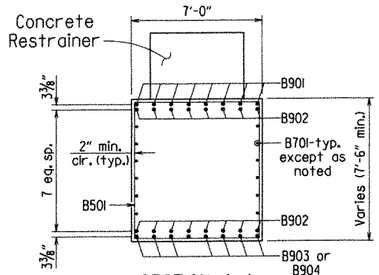

SECTION A-A

¼" = 1'-0"

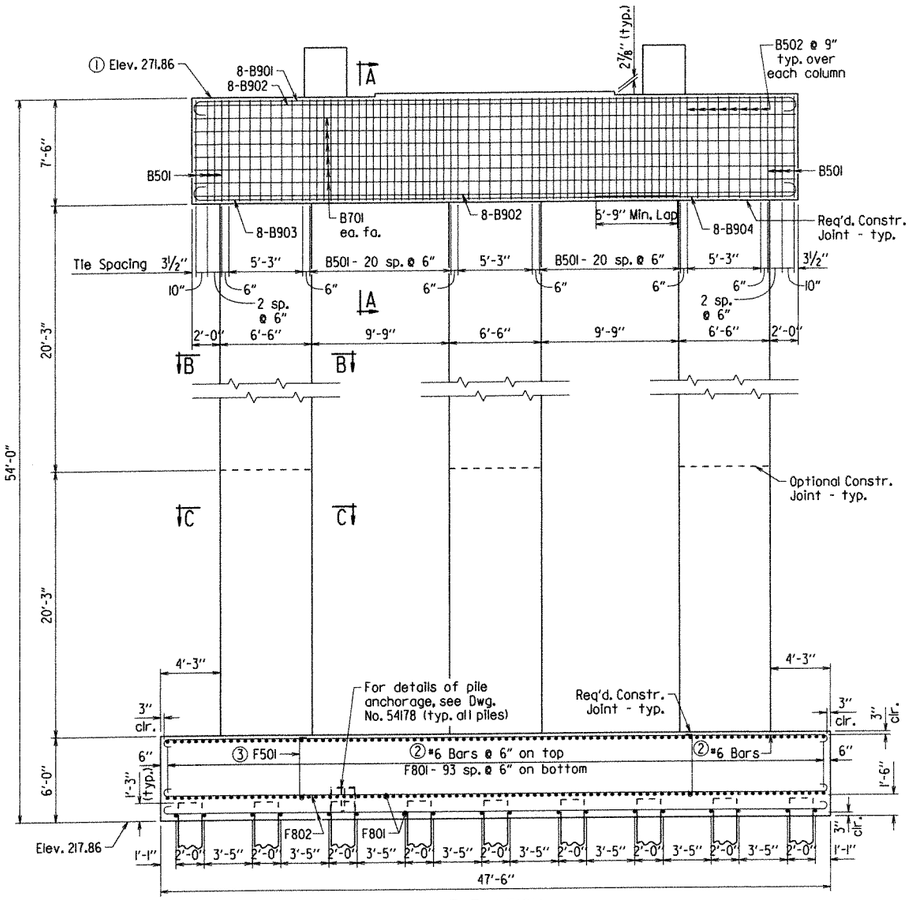

ELEVATION

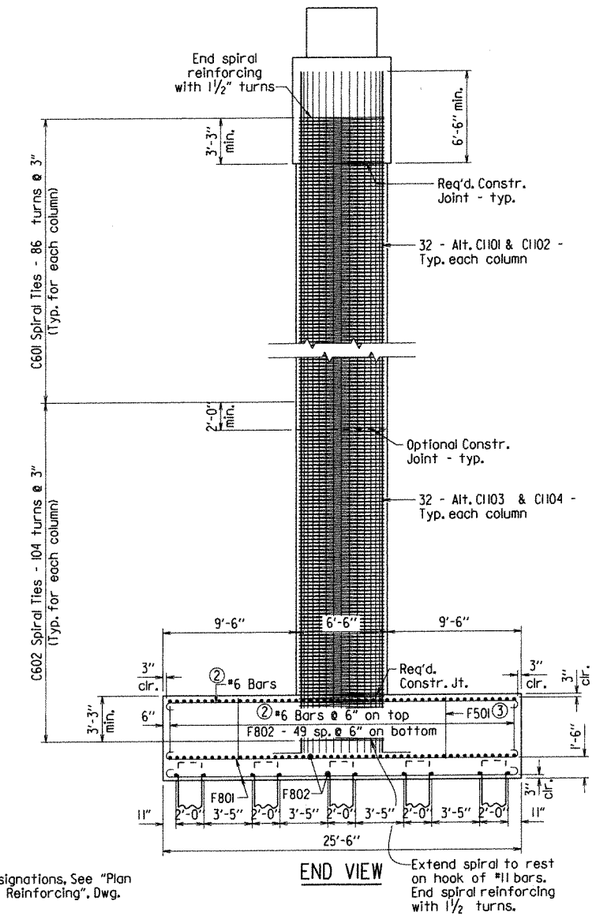

END VIEW

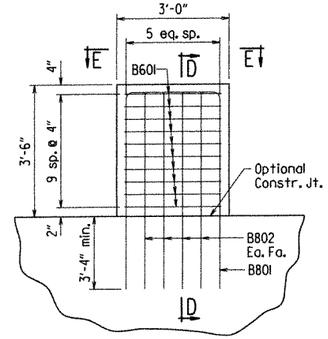

CONCRETE RESTRAINER DETAILS

½" = 1'-0"

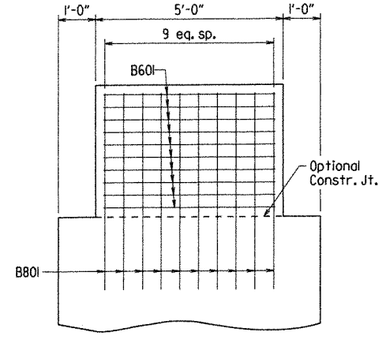

SECTION D-D

¼" = 1'-0"

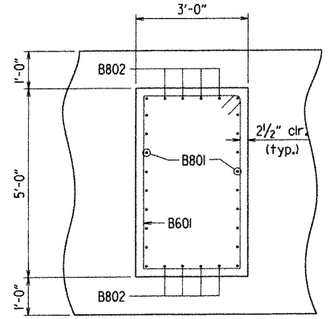

SECTION E-E

¼" = 1'-0"

② For bar designations, See "Plan of Top Mat Reinforcing", Dwg. No. 54093.

③ Place F501 bars as shown at 12" max. spacing in both directions. See "Plan of Footing Ties", Dwg. No. 54093.

STATE OF ARKANSAS
Carl J. Fuselier
REGISTERED PROFESSIONAL ENGINEER
No. 7510
8/28/13
CARL J. FUSELIER

BRIDGE ENGINEER

SHEET 1 OF 2
DETAILS OF BENT 7
WHITE RIVER

ROUTE SEC.

ARKANSAS STATE HIGHWAY COMMISSION

LITTLE ROCK, ARK.

DRAWN BY: JYP DATE: 4-17-13 FILENAME: b005836_b7.dgn

CHECKED BY: CSL DATE: 8/28/13 SCALE: 3/16" = 1'-0" or As Noted

DESIGNED BY: DHP DATE: 2-5-13

BRIDGE NO. 07289 DRAWING NO. 54092

PRINT DATE: 8/28/2013

DATE REVISED	DATE FILMED	DATE REVISED	DATE FILMED	FED. ROAD DIST. NO.	STATE	FED. AID PROJ. NO.	SHEET NO.	TOTAL SHEETS
				6	ARK.			
				JOB NO.		005836	15	230
				① 07289 -		INT. BENTS	- 54093	

BAR LIST

MARK	NO. REQ'D.	LENGTH	A	B	P.D.
B501	50	28'-2"	6'-8"	7'-2"	2½"
B502	24	20'-10"	6'-8"	7'-2"	2½"
B601	20	15'-2"	2'-7"	4'-7"	4½"
B701	12	42'-8"			Str.
B801	20	15'-5"	2'-5½"	6'-8"	6"
B802	16	6'-8"			Str.
B901	8	45'-2"	42'-8"	10"	9"
B902	16	42'-8"			Str.
B903	8	35'-6"	34'-3"	10"	9"
B904	8	15'-5"	14'-2"	10"	9"
C601	3	1685'-9"			Spiral
C602	3	2026'-3"			Spiral
① C1101	48	24'-9"			Str.
① C1102	48	21'-9"			Str.
① C1103	48	28'-3"	26'-7"	2'-0"	11¼"
① C1104	48	31'-3"	29'-7"	2'-0"	11¼"
F501	1024	5'-4"	4'-4"	6"	3¾"
F601	56	26'-4"	25'-0"	6"	4½"
F602	76	8'-1"	7'-5"	6"	4½"
F603	38	15'-4"			Str.
F604	38	48'-4"	47'-0"	6"	4½"
F605	24	14'-11"	14'-3"	6"	4½"
F606	12	23'-8"			Str.
F801	112	26'-10"	25'-0"	8"	6"
F802	60	48'-10"	47'-0"	8"	6"

BENDING DIAGRAMS

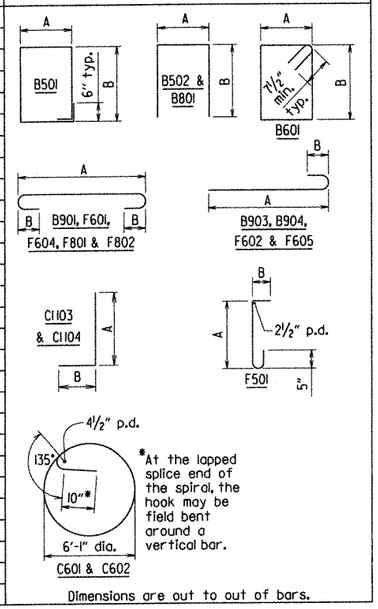

Dimensions are out to out of bars.

① Dimensions shown are to Butt Splice and may vary based on mechanical coupler used.

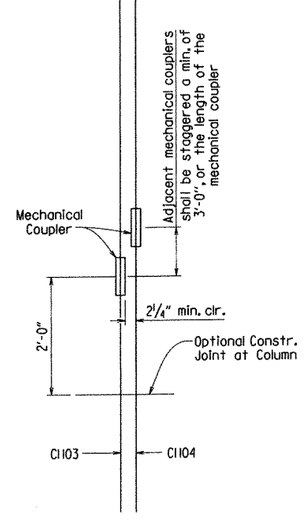

COLUMN BAR DETAIL

No Scale

Mechanical couplers in the column shall maintain the clearances shown. Their payment shall be subsidiary to the item "Reinforcing Steel-Bridge (Grade 60)". The OPL approved couplers shall develop at least 125% of the specified yield strength of the bar.

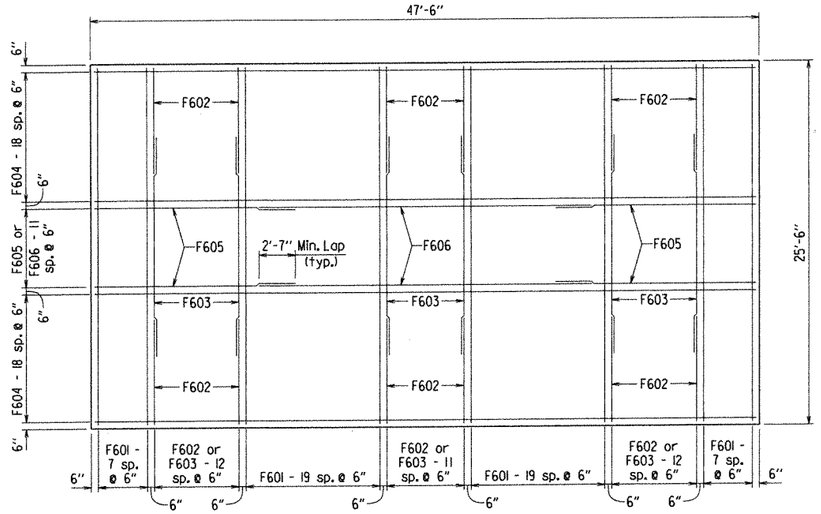

PLAN OF TOP MAT REINFORCING

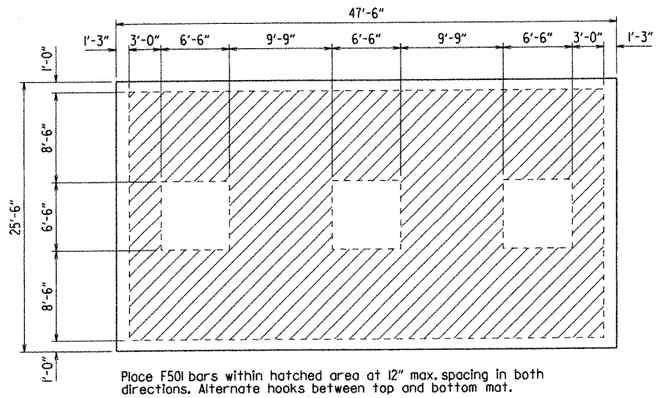

Place F501 bars within hatched area at 12" max. spacing in both directions. Alternate hooks between top and bottom mat.

PLAN OF FOOTING TIES

No Scale

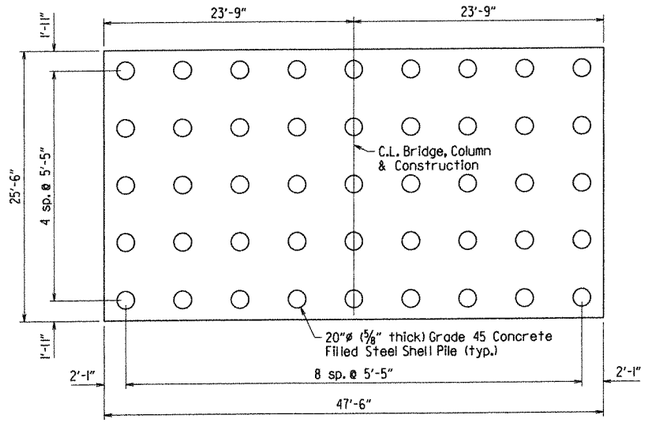

FOOTING PLAN

No Scale

INTERMEDIATE BENT NOTES

Concrete in the cap & column shall be Class "S" with a minimum 28 day compressive strength, f'c = 3,500 psi. Concrete in the footing shall be Class "B" with a minimum 90 day compressive strength, f'c = 3,500 psi meeting the requirements of Special Provision "Class B Concrete - Bridge" and Section 802. All Concrete shall be poured in the dry and all exposed corners to be chamfered ¾" unless otherwise noted.

All reinforcing steel shall conform to AASHTO M31 or M322, Type A, with mill test report, Grade 60 (yield strength = 60,000 psi.).

If anchor bolts are drilled into cap, top reinforcing bars shall be properly placed to avoid damage.

For additional information see layout.

NOTES FOR SPIRAL REINFORCING

Spiral reinforcing shall be plain round or deformed steel bars meeting the requirements of AASHTO M31 or M322, Type A, with mill test report (Grade 60) or shall be cold drawn wire meeting the requirements of AASHTO M32 or M225 (Grade 70) with a minimum diameter of 0.75".

Spiral reinforcement shall be paid for at the contract unit price bid per pound for "Reinforcing Steel-Bridge (Grade 60)". No additional payment shall be made for spacers, optional splices, or bracing needed for assembly, shipping, handling, or erecting.

Contractor may elect to use one lap splice in the spiral reinforcing per column. The lap splice shall be located at the mid-point of the column.

Splices in spiral reinforcement shall be lapped a minimum of 80 bar diameters.

Spiral reinforcement at lapped splices shall be terminated by a 135° hook with a 10" tail around a vertical bar. Hook may be field bent. Ends of spirals not lapped shall be terminated with 1½ turns and a 135° hook with a 10" tail around a vertical bar.

STATE OF ARKANSAS
Carl J. Fuselier
REGISTERED PROFESSIONAL ENGINEER
No. 7510
8/29/13
CARL J. FUSELIER

BRIDGE ENGINEER

SHEET 2 OF 2
DETAILS OF BENT 7
WHITE RIVER

ROUTE SEC.

ARKANSAS STATE HIGHWAY COMMISSION

LITTLE ROCK, ARK.

DRAWN BY: JYP DATE: 4-17-13 FILENAME: b005836_b7.dgn
CHECKED BY: CSL DATE: 8/28/13 SCALE: 3/16" = 1'-0" or As Noted
DESIGNED BY: DHP DATE: 2-5-13

BRIDGE NO. 07289 DRAWING NO. 54093

PRINT DATE:

DATE REVISED	DATE FILMED	DATE REVISED	DATE FILMED	FED. ROAD DIST. NO.	STATE	FED. AID PROJ. NO.	SHEET NO.	TOTAL SHEETS
				6	ARK.			
				JOB NO.		005836	76	230
				① 07289 -		PIERS	-	54094

① Anchor bolts for 1220' Unit shall not be set until the seismic isolation bearing shop drawings are approved. Bearing seat elevations shown are estimated. Actual values to be determined by the Contractor based on approved seismic isolation bearing shop drawings. Anchor bolt layout is not shown, actual locations shall be based on approved seismic isolation bearing shop drawings.

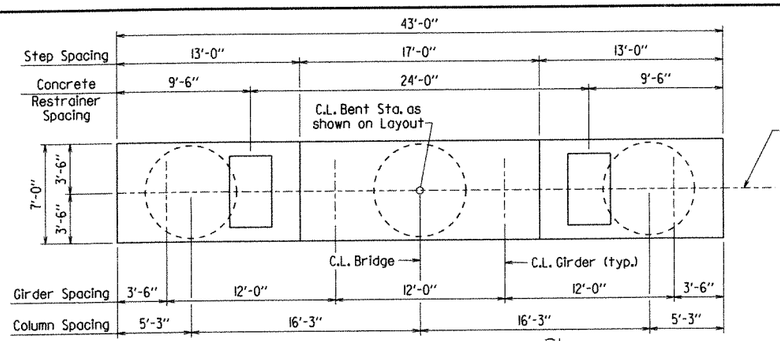

PLAN

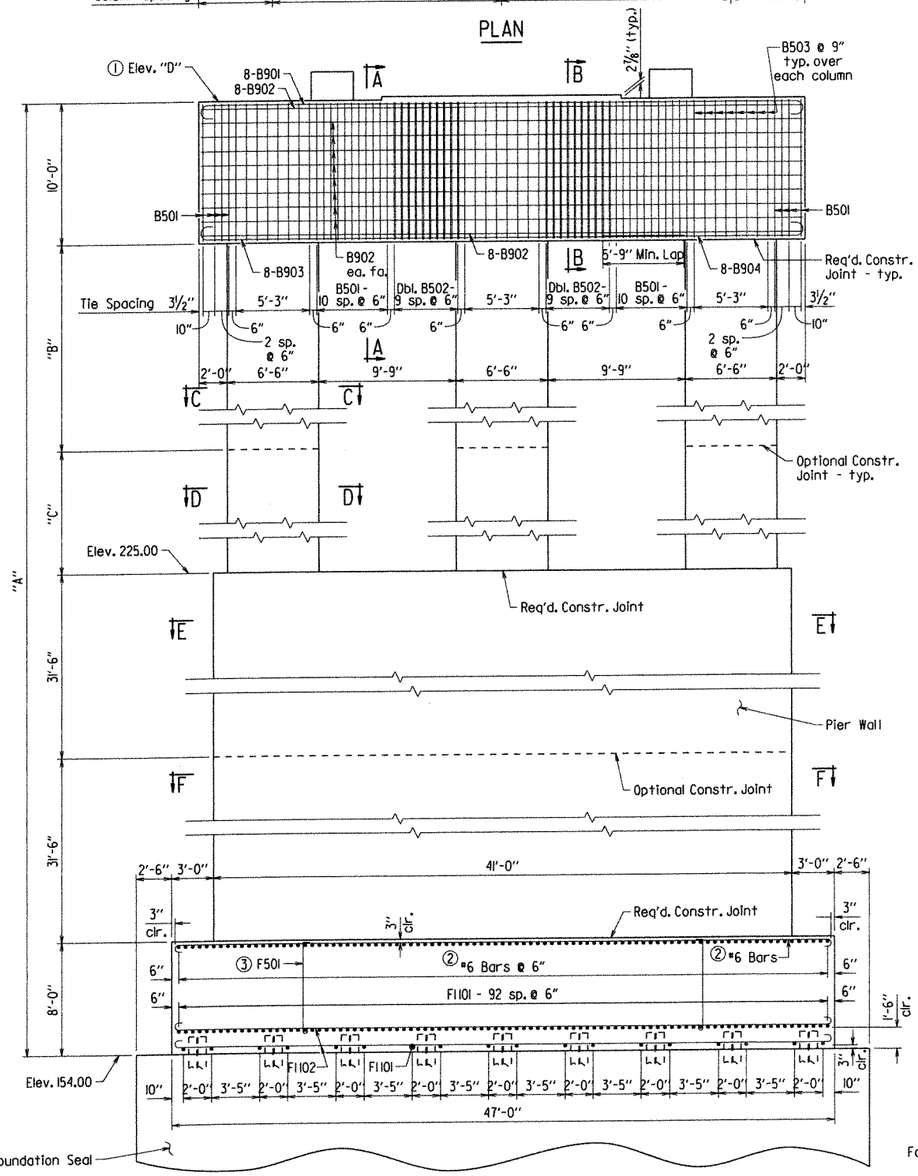

ELEVATION

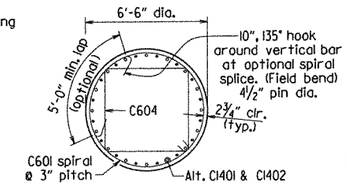

SECTION C-C
¼" = 1'-0"

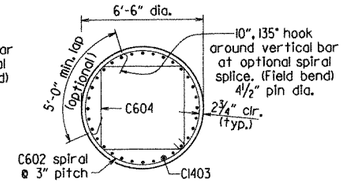

SECTION D-D
¼" = 1'-0"

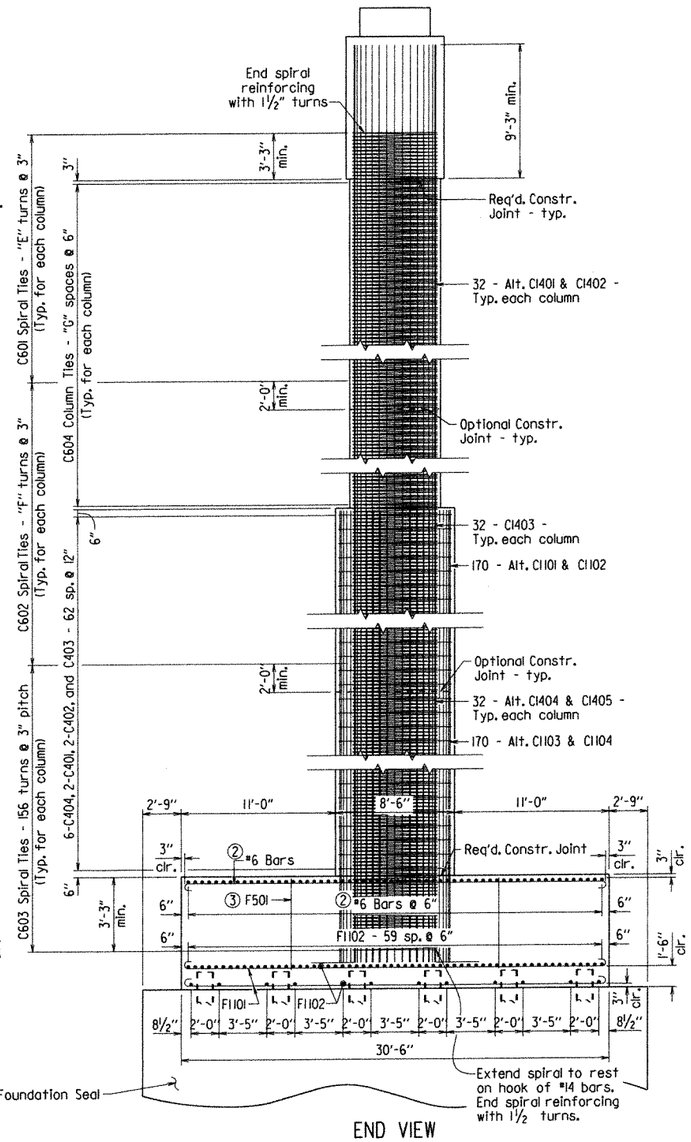

END VIEW

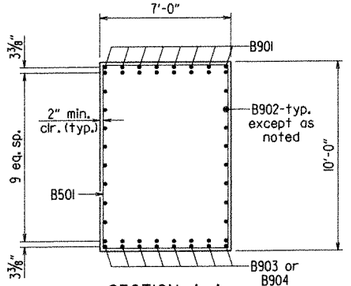

SECTION A-A
¼" = 1'-0"

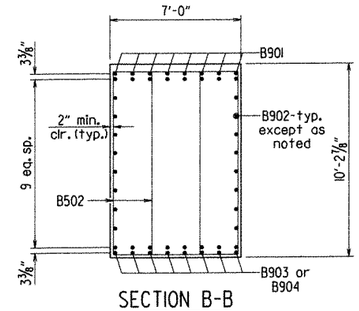

SECTION B-B
¼" = 1'-0"

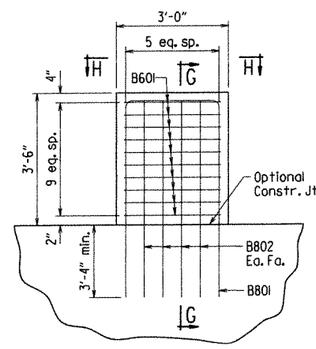

CONCRETE RESTRAINER DETAILS
½" = 1'-0"

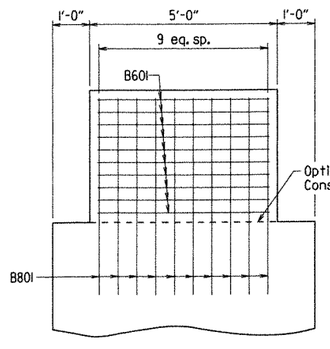

SECTION G-G
¼" = 1'-0"

For Details of Clearance Gauges, See Dwg. No. 54179.

② For bar designations, See "Plan of Top Mat Reinforcing", Dwg. No. 54095.

③ Place F501 bars as shown at 12" max. spacing in both directions. See "Plan of Footing Ties", Dwg. No. 54095.

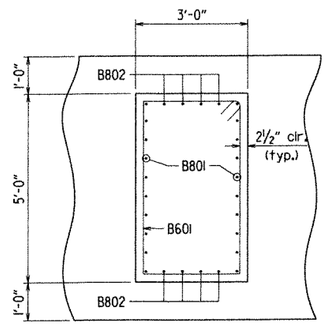

SECTION H-H
¼" = 1'-0"

STATE OF ARKANSAS
Carl J. Pusellier
REGISTERED PROFESSIONAL ENGINEER
No. 7510
8/28/13
CARL J. PUSELLIER

BRIDGE ENGINEER

SHEET 1 OF 3
DETAILS OF PIERS 1 & 2
WHITE RIVER

ROUTE SEC.

ARKANSAS STATE HIGHWAY COMMISSION
LITTLE ROCK, ARK.

DRAWN BY: JYP DATE: 4-17-13
CHECKED BY: CSL DATE: 8/28/13
DESIGNED BY: DHP DATE: 2-5-13
FILENAME: b005836_pl.dgn
SCALE: 3/16" = 1'-0" or As Noted

BRIDGE NO. 07289 DRAWING NO. 54094

PRINT DATE: 8/28/2013

DATE REVISED	DATE FILMED	DATE REVISED	DATE FILMED	FED. ROAD DIST. NO.	STATE	FED. AID PROJ. NO.	SHEET NO.	TOTAL SHEETS
				6	ARK.			
				JOB NO.		005836	77	230
				(1) 07289 -		PIERS	- 54095	

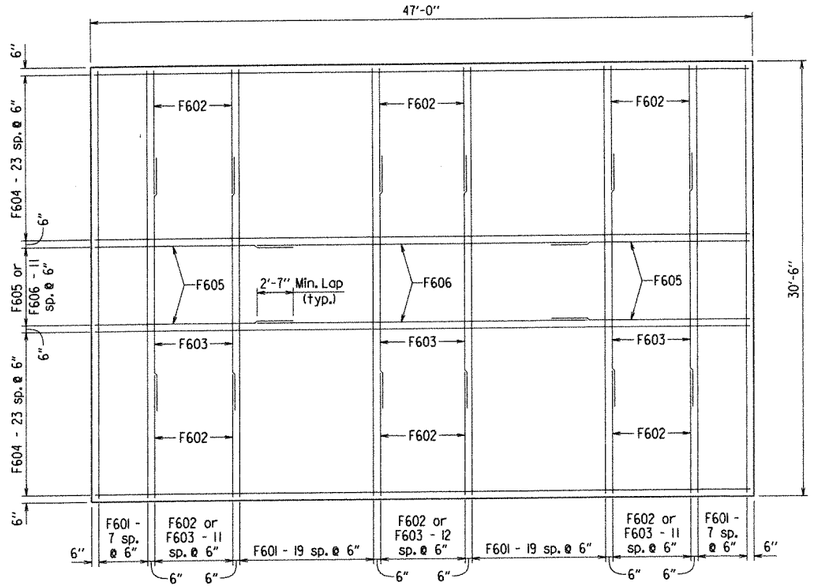

PLAN OF TOP MAT REINFORCING

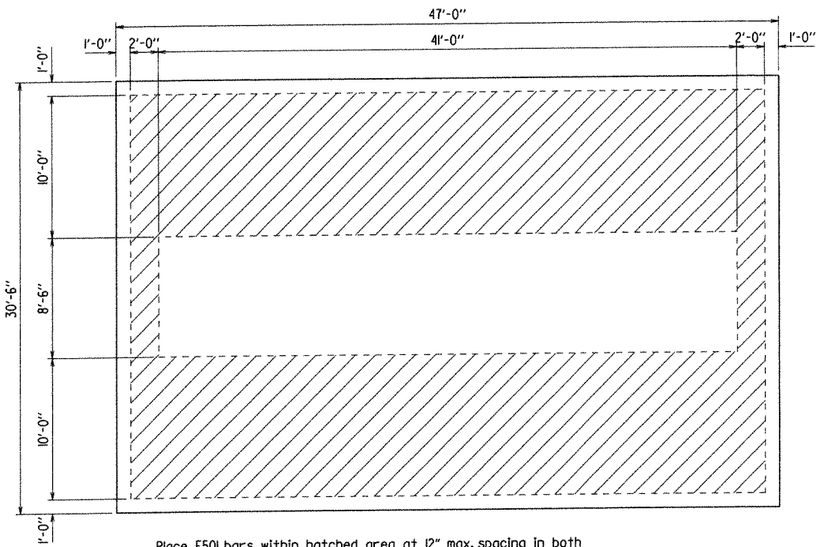

Place F501 bars within hatched area at 12" max. spacing in both directions. Alternate hooks between top and bottom mat.

PLAN OF FOOTING TIES

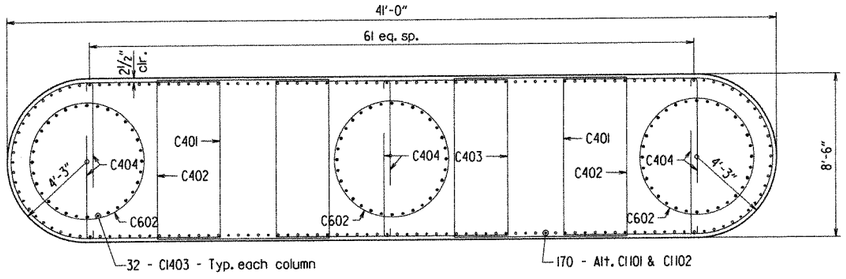

SECTION E-E

1/4" = 1'-0"

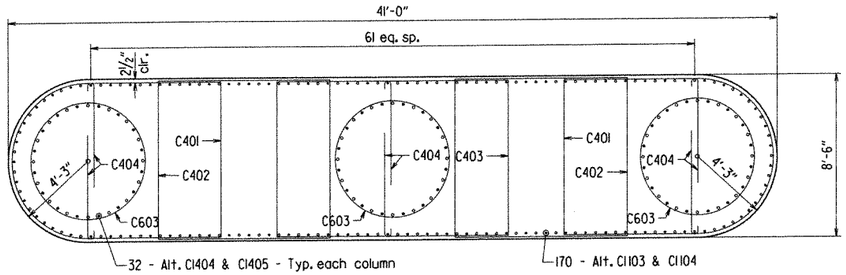

SECTION F-F

1/4" = 1'-0"

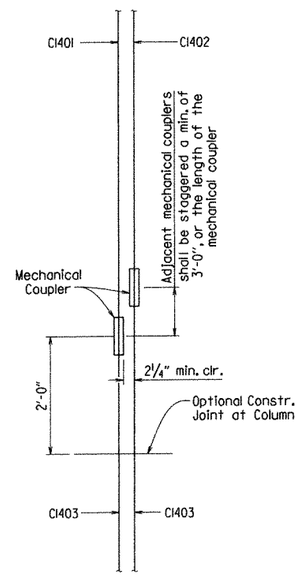

COLUMN BAR DETAIL

No Scale

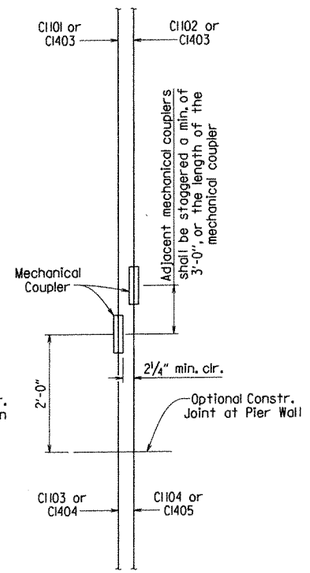

PIER WALL BAR DETAIL

No Scale

Mechanical couplers in the column shall maintain the clearances shown. Their payment shall be subsidiary to the item "Reinforcing Steel-Bridge (Grade 60)". The QPL approved couplers shall develop at least 125% of the specified yield strength of the bar.

INTERMEDIATE BENT NOTES

Concrete in the cap & columns shall be Class "S" with a minimum 28 day compressive strength, f'c = 3,500 psi. Concrete in the pier wall & footing shall be Class "B" with a minimum 90 day compressive strength, f'c = 3,500 psi meeting the requirements of Special Provision "Class B Concrete - Bridge" and Section 802. All Concrete shall be poured in the dry and al l exposed corners to be chamfered ¾" unless otherwise noted.

All reinforcing steel shall conform to AASHTO M31 or M322, Type A, with mill test report, Grade 60 (yield strength = 60,000 psi.).

If anchor bolts are drilled into cap, top reinforcing bars shall be properly placed to avoid damage.

For dewatering cofferdam, maximum water surface elevation is 218.0 ft. for the seal size shown.

¾"ø Anchors shall be placed in pier column for clearance gauge. For location, see Dwg. No. 54179.

For additional information see layout.

NOTES FOR SPIRAL REINFORCING

Spiral reinforcing shall be plain round or deformed steel bars meeting the requirements of AASHTO M31 or M322, Type A, with mill test report (Grade 60) or shall be cold drawn wire meeting the requirements of AASHTO M32 or M225 (Grade 70) with a minimum diameter of 0.75".

Spiral reinforcement shall be paid for at the contract unit price bid per pound for "Reinforcing Steel-Bridge (Grade 60)". No additional payment shall be made for spacers, optional splices, or bracing needed for assembly, shipping, handling, or erecting.

Contractor may elect to use a different number of spiral lapped splices per column. In no case shall a spiral be lapped within the top or bottom 1/4th of the column height and top 15' of the pier wall.

Splices in spiral reinforcement shall be lapped a minimum of 80 bar diameters.

Spiral reinforcement at lapped splices shall be terminated by a 135° hook with a 10" tail around a vertical bar. Hook may be field bent. Ends of spirals not lapped shall be terminated with 1½ turns and a 135° hook with a 10" tail around a vertical bar.

STATE OF ARKANSAS
Carl J. Fuselier
No. 7510
8/28/13
REGISTERED PROFESSIONAL ENGINEER
CARL J. FUSELIER

BRIDGE ENGINEER

SHEET 2 OF 3
DETAILS OF PIERS 1 & 2
WHITE RIVER

ROUTE SEC.

ARKANSAS STATE HIGHWAY COMMISSION

LITTLE ROCK, ARK.

DRAWN BY: JYP DATE: 4-17-13 FILENAME: b005836_pl.dgn
CHECKED BY: OSL DATE: 8/28/13 SCALE: 3/16" = 1'-0" or As Noted
DESIGNED BY: DHP DATE: 2-5-13

BRIDGE NO. 07289 DRAWING NO. 54095

PRINT DATE:

DATE REVISED	DATE FILMED	DATE REVISED	DATE FILMED	FED. ROAD DIST. NO.	STATE	FED. AID PROJ. NO.	SHEET NO.	TOTAL SHEETS
				6	ARK.			
				JOB NO.		005836	78	230
				① 07289 -		PIERS		- 54096

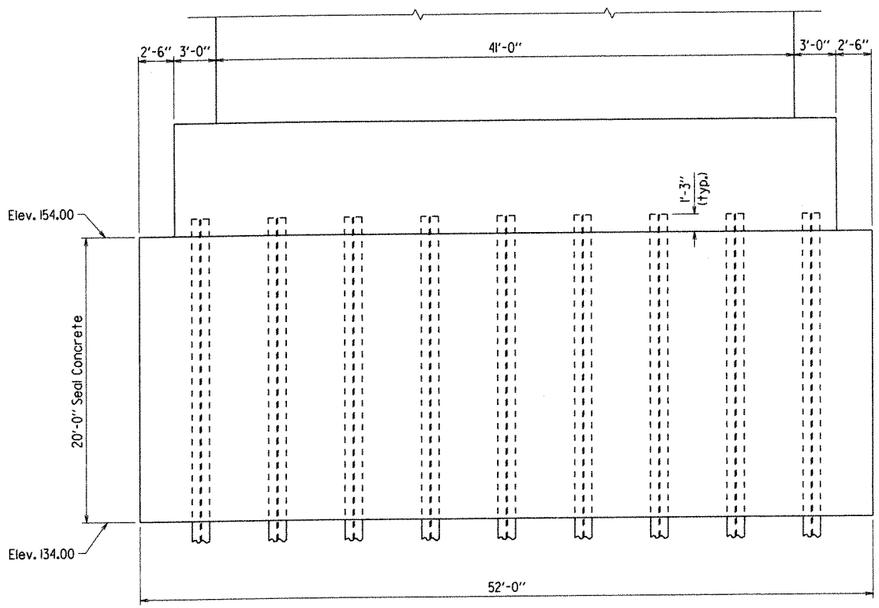

FOOTING ELEVATION

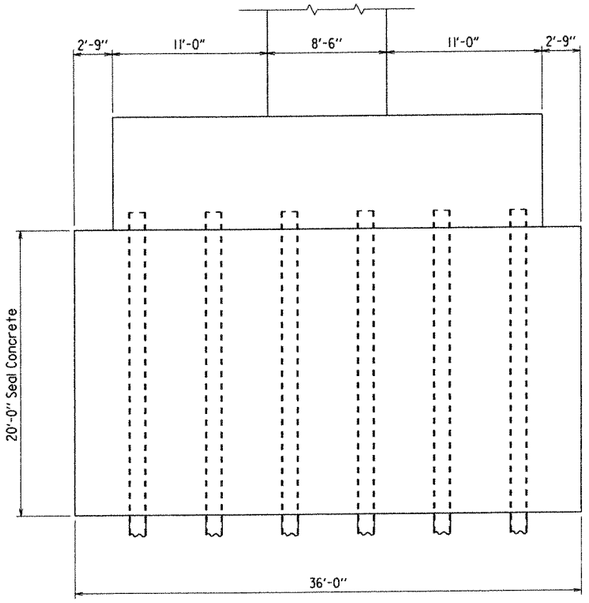

FOOTING END VIEW

BAR LIST - PER PIER

MARK	NO. REQ'D.	LENGTH	A	B	P.D.
B601	20	15'-2"	2'-7"	4'-7"	4½"
B501	30	33'-2"	6'-8"	9'-8"	2½"
B502	40	29'-2"	4'-8"	9'-8"	2½"
B503	24	25'-10"	6'-8"	9'-8"	2½"
B801	20	15'-5"	2'-5½"	6'-8"	6"
B802	16	6'-8"			Str.
B901	8	45'-2"	42'-8"	10"	9"
B902	32	42'-8"			Str.
B903	8	35'-6"	34'-3"	10"	9"
B904	8	15'-5"	14'-2"	10"	9"
C401	126	35'-5"	11'-2"	8'-1"	3"
C402	126	35'-2"	9'-3"	8'-1"	3"
C403	63	41'-8"	12'-6"	8'-1"	3"
C404	378	5'-6"	5'-0"	4½"	3"
C601	3	"H"			Spiral
C602	3	"J"			Spiral
C603	3	3010'-0"			Spiral
C604	"K"	18'-6"	4'-5"	4'-5"	4½"
① C1101	85	29'-4"			Str.
① C1102	85	26'-4"			Str.
① C1103	85	41'-6"	39'-10"	2'-0"	11¼"
① C1104	85	44'-6"	42'-10"	2'-0"	11¼"
① C1401	48	"L"			Str.
① C1402	48	"M"			Str.
① C1403	96	"N"			Str.
① C1404	48	41'-11"	39'-10"	2'-7"	18¼"
① C1405	48	44'-11"	42'-10"	2'-7"	18¼"
F501	1060	7'-4"	6'-4"	6"	3¾"
F601	56	31'-4"	30'-0"	6"	4½"
F602	74	9'-4"	8'-8"	6"	4½"
F603	37	17'-10"			Str.
F604	48	47'-10"	46'-6"	6"	4½"
F605	24	14'-9"	14'-1"	6"	4½"
F606	12	23'-6"			Str.
F701	216	4'-10"	2'-6"		5¼"
F1101	111	33'-0"	30'-0"	12½"	11¼"
F1102	72	49'-6"	46'-6"	12½"	11¼"

BENDING DIAGRAMS

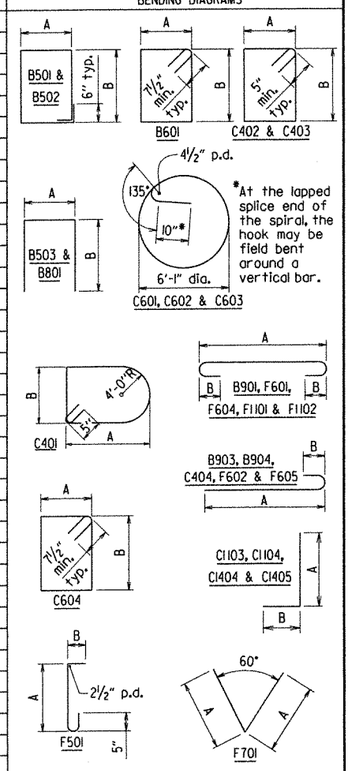

Dimensions are out to out of bars.

① Dimensions shown are to Butt Splice and may vary based on Mechanical Coupler used, See Dwg. No. 54095.

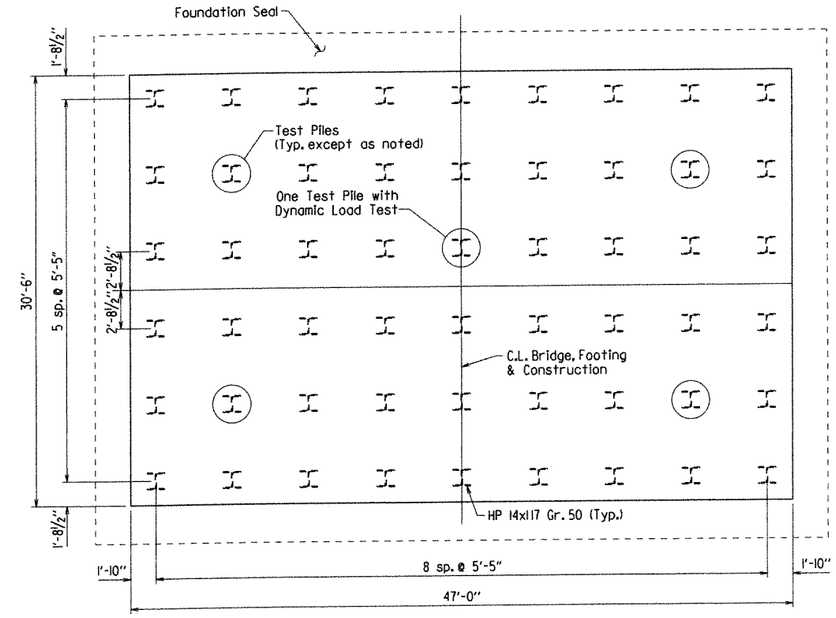

FOOTING PLAN

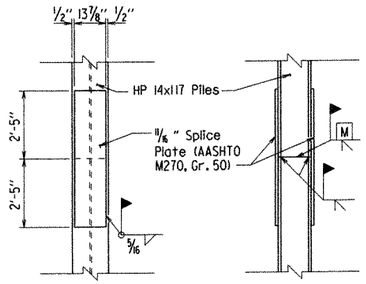

Note: The Contractor may for his convenience and at his own expense provide as many as three splices per pile. Minimum spacing between splices shall be 5 feet.

PILE SPLICE DETAIL
No Scale

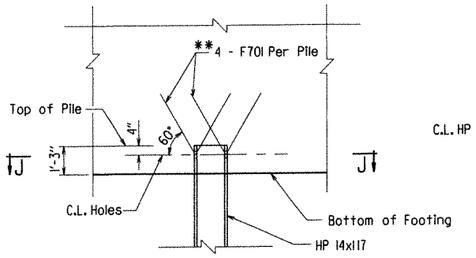

** Tie or wedge this reinforcing to bear at top of holes.

DETAIL AT PILE TIP
No Scale

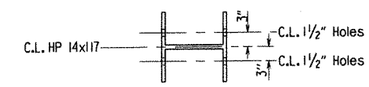

SECTION J-J
No Scale

TABLE OF VARIABLES

	"A"	"B"	"C"	Elev. "D"	"E"	"F"	"G"	"H"	"J"	"K"	"L"	"M"	"N"
PIER 1	114'-3¾"	16'-7¾"	16'-8"	268.31	72	193	66	1421'-1"	3709'-10"	201	23'-11"	20'-11"	48'-2"
PIER 2	112'-7 7/16"	15'-9 9/16"	15'-10"	266.62	68	190	62	1345'-5"	3653'-1"	189	23'-1"	20'-1"	47'-4"

STATE OF ARKANSAS
Carl J. Fusselier
REGISTERED PROFESSIONAL ENGINEER
No. 7510
6/20/13
CARL J. FUSSELIER

BRIDGE ENGINEER

SHEET 3 OF 3
DETAILS OF PIERS 1 & 2
WHITE RIVER

ROUTE SEC.

ARKANSAS STATE HIGHWAY COMMISSION
LITTLE ROCK, ARK.

DRAWN BY: JYP DATE: 4-17-13 FILENAME: b005836_pl.dgn
CHECKED BY: CJF DATE: 6/20/13 SCALE: 3/16" = 1'-0" or As Noted
DESIGNED BY: DHP DATE: 2-5-13

BRIDGE NO. 07289 DRAWING NO. 54096

PRINT DATE: 8/27/2013

DATE REVISED	DATE FILMED	DATE REVISED	DATE FILMED	FED. ROAD DIST. NO.	STATE	FED. AID PROJ. NO.	SHEET NO.	TOTAL SHEETS
				6	ARK.			
				JOB NO.		005836	79	230
				① 07289 -		INT. BENTS	- 54097	

① Anchor bolts for 1220' Unit shall not be set until the seismic isolation bearing shop drawings are approved. Bearing seat elevations shown are estimated. Actual values to be determined by the Contractor based on approved seismic isolation bearing shop drawings. Anchor bolt layout is not shown, actual locations shall be based on approved seismic isolation bearing shop drawings.

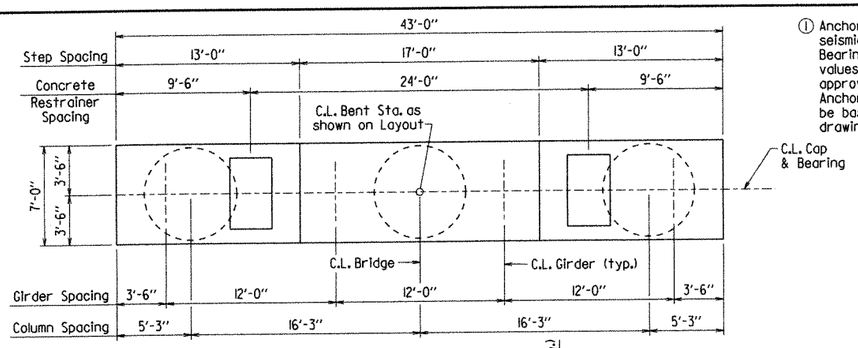

PLAN

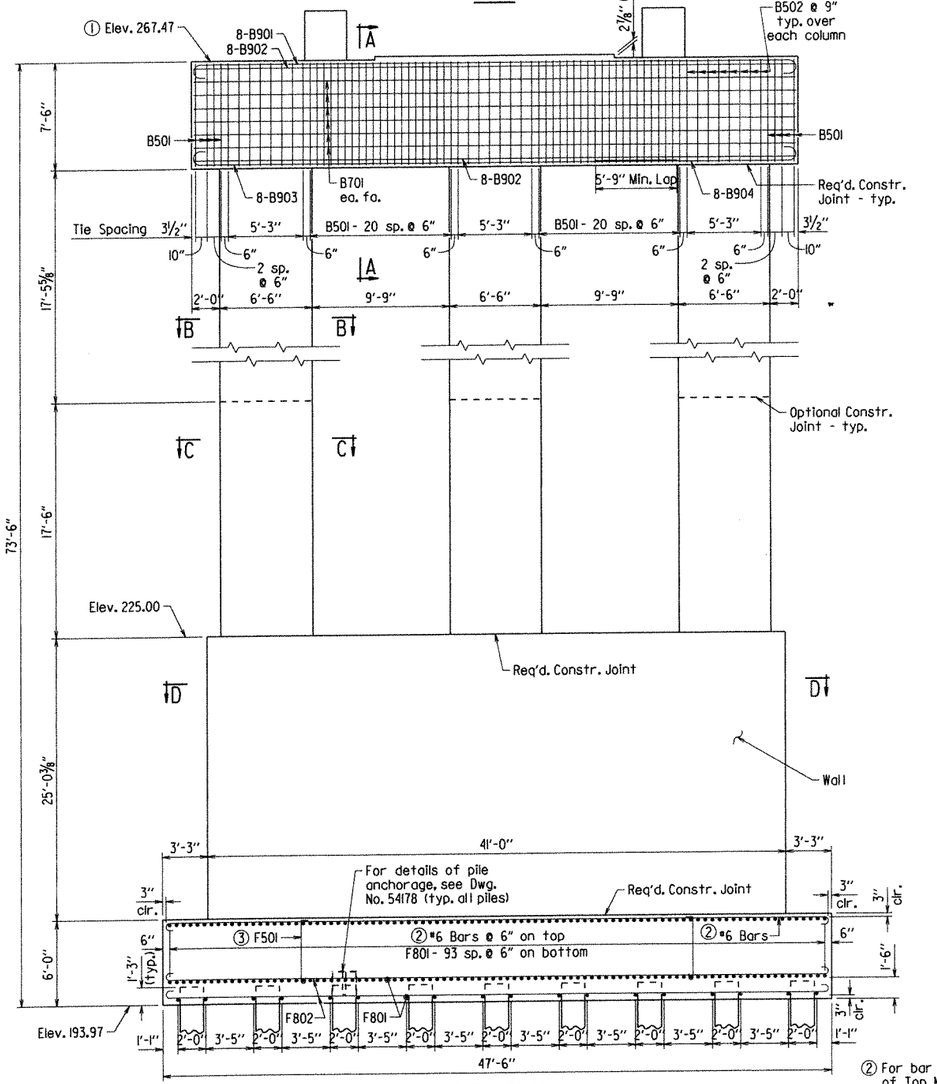

ELEVATION

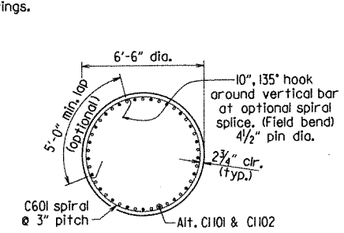

SECTION B-B
¼" = 1'-0"

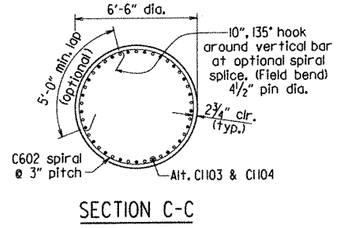

SECTION C-C
¼" = 1'-0"

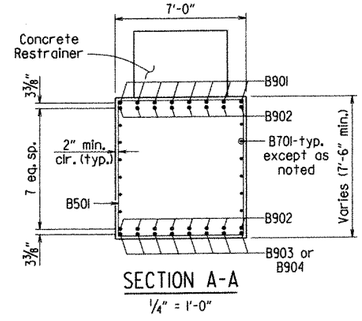

SECTION A-A
¼" = 1'-0"

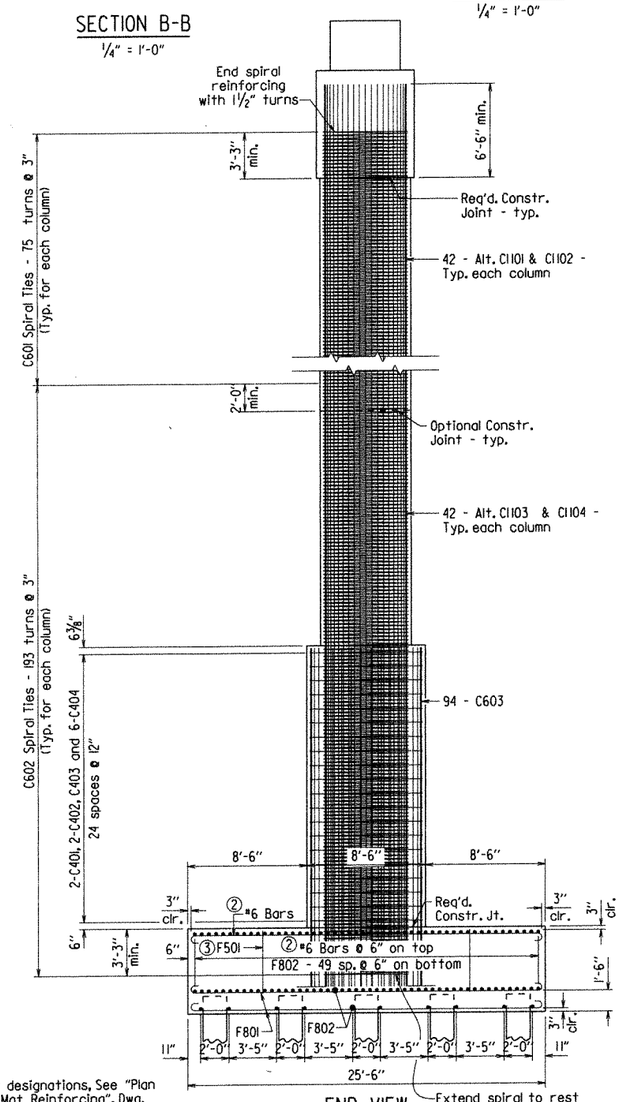

END VIEW

Extend spiral to rest on hook of #11 bars. End spiral reinforcing with 1½ turns.

② For bar designations, See "Plan of Top Mat Reinforcing", Dwg. No. 54098.

③ Place F501 bars as shown at 12" max. spacing in both directions. See "Plan of Footing Ties", Dwg. No. 54098.

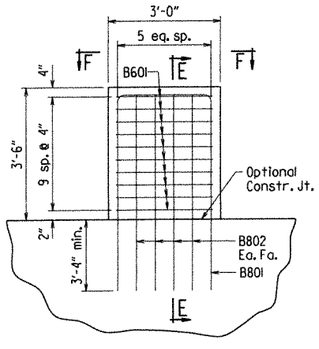

CONCRETE RESTRAINER DETAILS
½" = 1'-0"

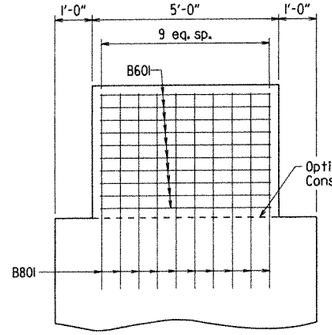

SECTION E-E
¼" = 1'-0"

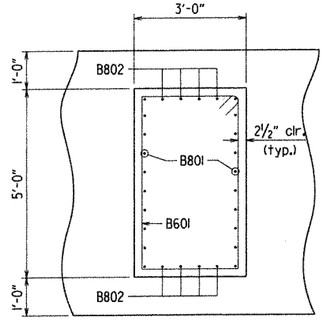

SECTION F-F
¼" = 1'-0"

SHEET 1 OF 2
DETAILS OF BENT 8
WHITE RIVER

STATE OF ARKANSAS
Carl J. Puselier
REGISTERED PROFESSIONAL ENGINEER
No. 7510
8/28/13
CARL J. PUSELIER
BRIDGE ENGINEER

ROUTE SEC.

ARKANSAS STATE HIGHWAY COMMISSION
LITTLE ROCK, ARK.

DRAWN BY: JYP DATE: 4-17-13 FILENAME: b005836_b8.dgn
CHECKED BY: CSL DATE: 8/28/13 SCALE: 3/16" = 1'-0" or As Noted
DESIGNED BY: DHP DATE: 2-5-13

BRIDGE NO. 07289 DRAWING NO. 54097

PRINT DATE: 8/28/2013

DATE REVISED	DATE FILMED	DATE REVISED	DATE FILMED	FED. ROAD DIST. NO.	STATE	FED. AID PROJ. NO.	SHEET NO.	TOTAL SHEETS
				6	ARK.			
				JOB NO.		005836	80	230
				①	07289 -	INT. BENTS	- 54098	

BAR LIST

MARK	NO. REQ'D.	LENGTH	A	B	P.D.
B501	50	28'-2"	6'-8"	7'-2"	2½"
B502	24	20'-10"	6'-8"	7'-2"	2½"
B601	20	15'-2"	2'-7"	4'-7"	4½"
B701	12	42'-8"			Str.
B801	20	15'-5"	2'-5½"	6'-8"	6"
B802	16	6'-8"			Str.
B901	8	45'-2"	42'-8"	10"	9"
B902	16	42'-8"			Str.
B903	8	35'-6"	34'-3"	10"	9"
B904	8	15'-5"	14'-2"	10"	9"
C401	50	34'-10"	10'-11"	8'-1"	3"
C402	50	34'-6"	8'-11"	8'-1"	3"
C403	25	44'-0"	13'-8"	8'-1"	3"
C404	150	5'-6"	5'-0"	4½"	3"
C601	3	1477'-10"			Spiral
C602	3	3709'-8"			Spiral
C603	94	30'-1"	29'-2"	12"	4½"
① C1101	63	22'-0"			Str.
① C1102	63	19'-0"			Str.
① C1103	63	50'-6"	48'-10"	2'-0"	11¼"
① C1104	63	53'-6"	51'-10"	2'-0"	11¼"
F501	790	5'-4"	4'-4"	6"	3¾"
F601	56	26'-4"	25'-0"	6"	4½"
F602	76	8'-1"	7'-5"	6"	4½"
F603	38	15'-4"			Str.
F604	38	48'-4"	47'-0"	6"	4½"
F605	24	14'-11"	14'-3"	6"	4½"
F606	12	23'-8"			Str.
F801	112	26'-10"	25'-0"	8"	6"
F802	60	48'-10"	47'-0"	8"	6"

BENDING DIAGRAMS

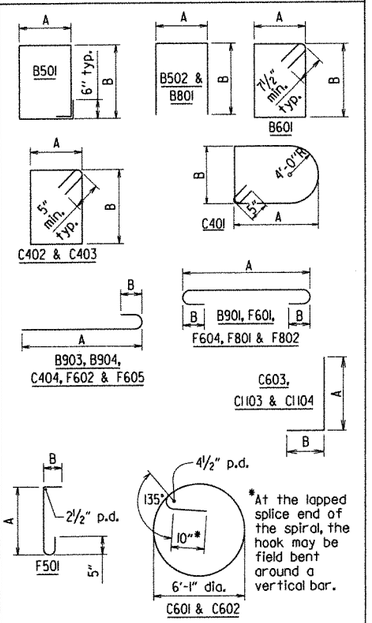

*At the lapped splice end of the spiral, the hook may be field bent around a vertical bar.

Dimensions are out to out of bars.

① Dimensions shown are to Butt Splice and may vary based on Mechanical Coupler used.

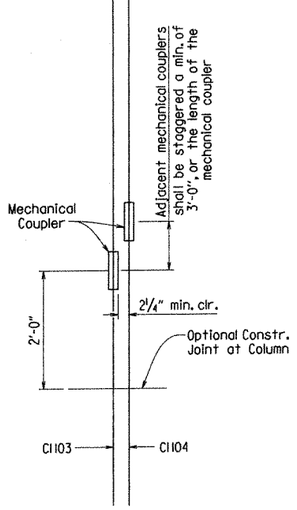

COLUMN BAR DETAIL

No Scale

Mechanical couplers in the column shall maintain the clearances shown. Their payment shall be subsidiary to the item "Reinforcing Steel-Bridge (Grade 60)". The QPL approved couplers shall develop at least 125% of the specified yield strength of the bar.

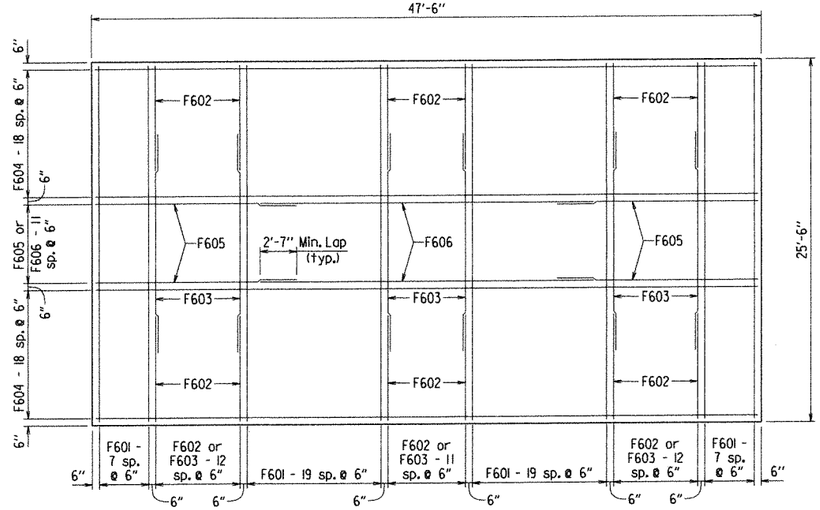

PLAN OF TOP MAT REINFORCING

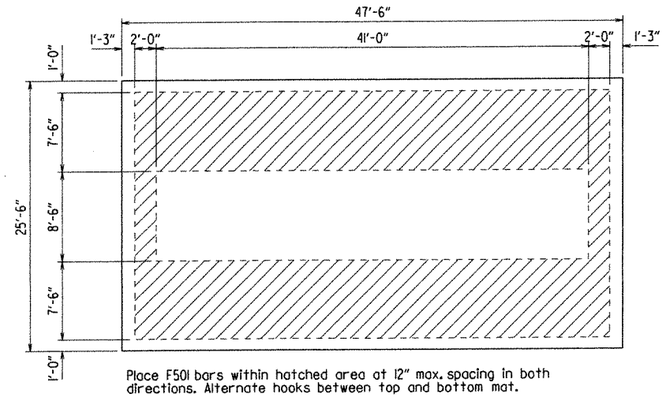

Place F501 bars within hatched area at 12" max. spacing in both directions. Alternate hooks between top and bottom mat.

PLAN OF FOOTING TIES

No Scale

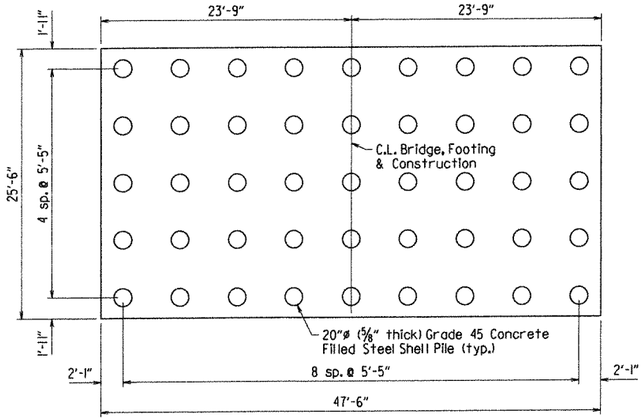

FOOTING PLAN

No Scale

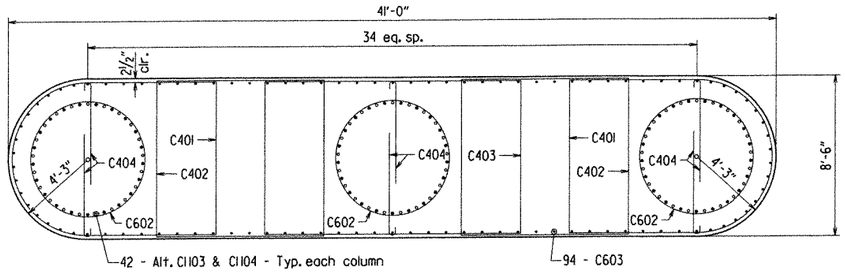

SECTION D-D

¼" = 1'-0"

INTERMEDIATE BENT NOTES

Concrete in the cap & columns shall be Class "S" with a minimum 28 day compressive strength, f'c = 3,500 psi. Concrete in the pier wall & footing shall be Class "B" with a minimum 90 day compressive strength, f'c = 3,500 psi meeting the requirements of Special Provision "Class B Concrete - Bridge" and Section 802. All Concrete shall be poured in the dry and all exposed corners to be chamfered ¾" unless otherwise noted.

All reinforcing steel shall conform to AASHTO M31 or M322, Type A, with mill test report, Grade 60 (yield strength = 60,000 psi.).

If anchor bolts are drilled into cap, top reinforcing bars shall be properly placed to avoid damage.

For additional information see layout.

NOTES FOR SPIRAL REINFORCING

Spiral reinforcing shall be plain round or deformed steel bars meeting the requirements of AASHTO M31 or M322, Type A, with mill test report (Grade 60) or shall be cold drawn wire meeting the requirements of AASHTO M32 or M225 (Grade 70) with a minimum diameter of 0.75".

Spiral reinforcement shall be paid for at the contract unit price bid per pound for "Reinforcing Steel-Bridge (Grade 60)". No additional payment shall be made for spacers, optional splices, or bracing needed for assembly, shipping, handling, or erecting.

Contractor may elect to use a different number of spiral lapped splices per column. In no case shall a spiral be lapped within the top or bottom ¼th of the column height. Spiral shall not be lapped within pier wall.

Splices in spiral reinforcement shall be lapped a minimum of 80 bar diameters.

Spiral reinforcement at lapped splices shall be terminated by a 135° hook with a 10" tail around a vertical bar. Hook may be field bent. Ends of spirals not lapped shall be terminated with 1½ turns and a 135° hook with a 10" tail around a vertical bar.

STATE OF ARKANSAS
Carl J. Fuselier
REGISTERED PROFESSIONAL ENGINEER
No. 7510
8/29/12
CARL J. FUSELIER

BRIDGE ENGINEER

SHEET 2 OF 2
DETAILS OF BENT 8
WHITE RIVER

ROUTE SEC.

ARKANSAS STATE HIGHWAY COMMISSION

LITTLE ROCK, ARK.

DRAWN BY: JYP DATE: 4-17-13
CHECKED BY: CSL DATE: 8/28/13
DESIGNED BY: DHP DATE: 2-5-13
FILENAME: b005836_b8.dgn
SCALE: 3/16" = 1'-0" or As Noted

BRIDGE NO. 07289 DRAWING NO. 54098

PRINT DATE:

DATE REVISED	DATE FILMED	DATE REVISED	DATE FILMED	FED. ROAD DIST. NO.	STATE	FED. AID PROJ. NO.	SHEET NO.	TOTAL SHEETS
				6	ARK.			
				JOB NO.		005836	8/	230
				① 07289 -		INT. BENTS	- 54099	

① Anchor bolts for 1220' Unit shall not be set until the seismic isolation bearing shop drawings are approved. Bearing seat elevations and C.L. bearing dimension shown are estimated. Actual values are to be determined by the Contractor based on approved seismic isolation bearing shop drawings. Anchor bolt layout is not shown, actual locations shall be based on approved seismic isolation bearing shop drawings.

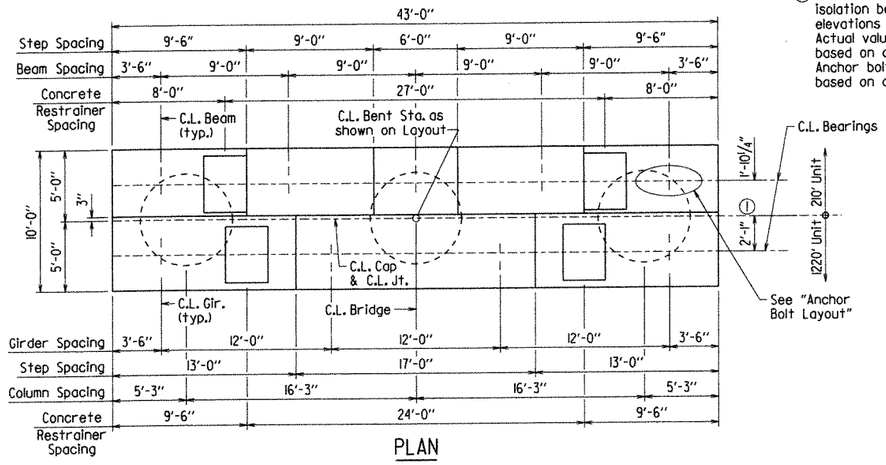

PLAN

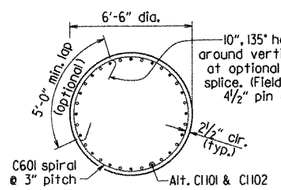

SECTION B-B
¼" = 1'-0"

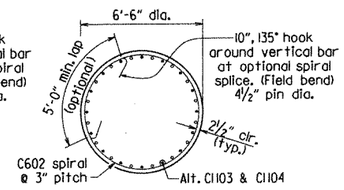

SECTION C-C
¼" = 1'-0"

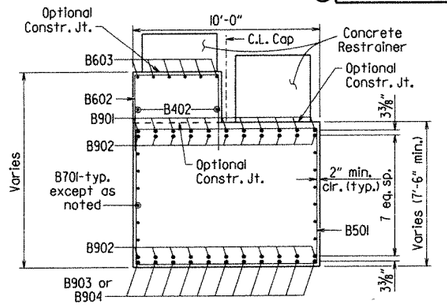

SECTION A-A
¼" = 1'-0"

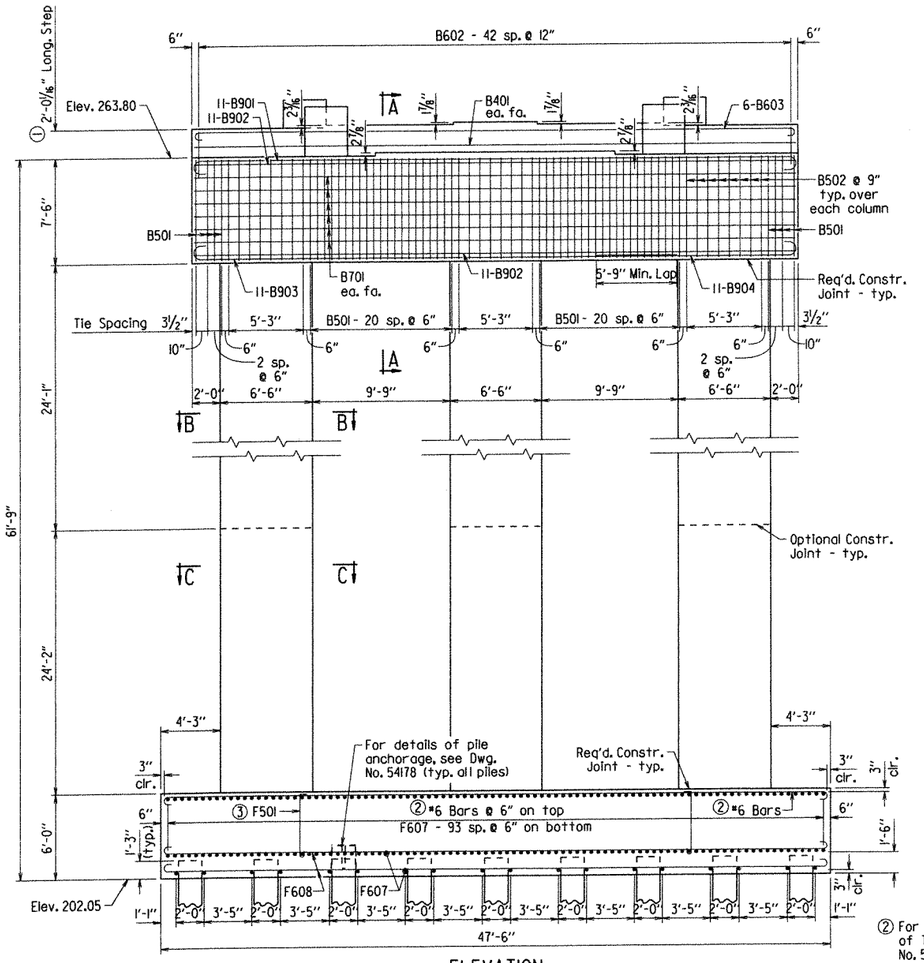

ELEVATION
Looking Ahead

② For bar designations, See "Plan of Top Mat Reinforcing", Dwg. No. 54100.

③ Place F501 bars as shown at 12" max. spacing in both directions. See "Plan of Footing Ties", Dwg. No. 54100.

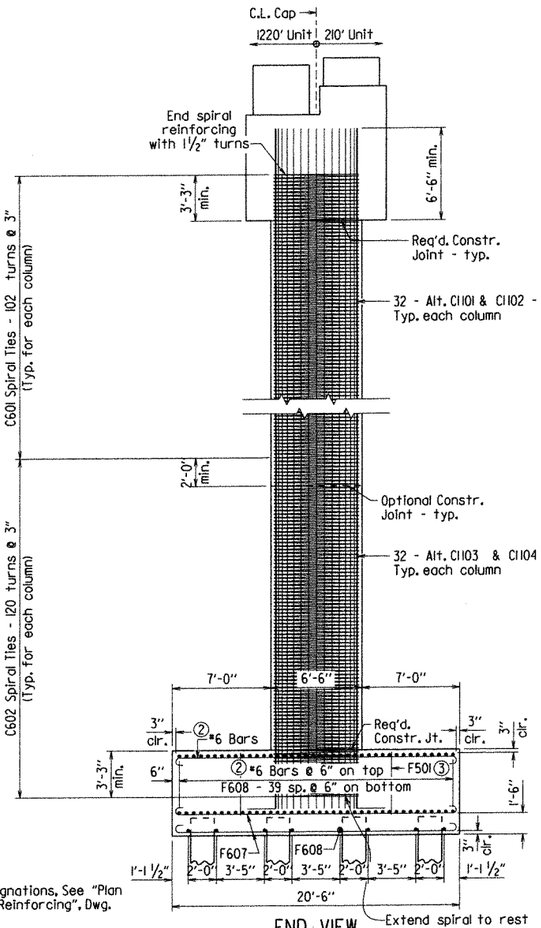

END VIEW

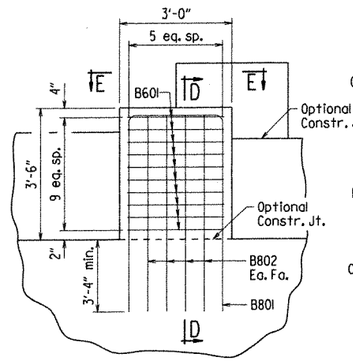

1220' UNIT CONCRETE RESTRAINER DETAILS
No Scale

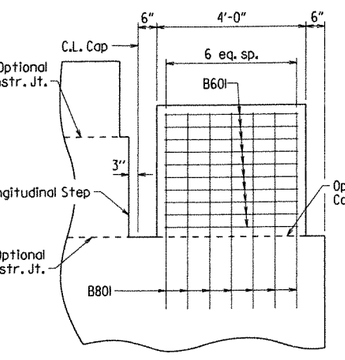

SECTION D-D
No Scale

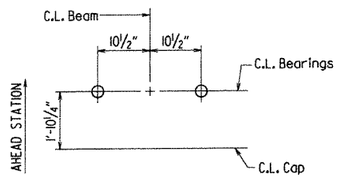

ANCHOR BOLT LAYOUT - 210' UNIT
No Scale

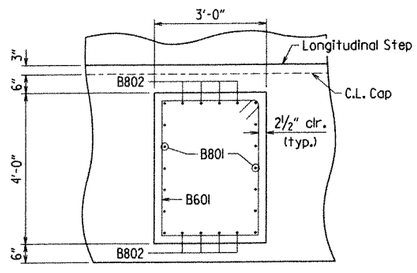

SECTION E-E
No Scale

SHEET 1 OF 2
DETAILS OF BENT 9
WHITE RIVER

ROUTE SEC.

ARKANSAS STATE HIGHWAY COMMISSION
LITTLE ROCK, ARK.

STATE OF ARKANSAS
Carl J. Fuselier
REGISTERED PROFESSIONAL ENGINEER
No. 7510
8/27/13
CARL J. FUSELIER
BRIDGE ENGINEER

DRAWN BY: JYP DATE: 4-17-13
CHECKED BY: CJF DATE: 8/28/13
DESIGNED BY: DHP DATE: 2-5-13
FILENAME: b005836_b9.dgn
SCALE: 3/16" = 1'-0" or As Noted

BRIDGE NO. 07289 DRAWING NO. 54099

PRINT DATE: 8/27/2013

DATE REVISED	DATE FILMED	DATE REVISED	DATE FILMED	FED. ROAD DIST. NO.	STATE	FED. AID PROJ. NO.	SHEET NO.	TOTAL SHEETS
				6	ARK.			
				JOB NO.		005836	82	280
				①	07289 -	INT. BENTS	- 54100	

BAR LIST

MARK	NO. REQ'D.	LENGTH	A	B	P.D.
B401	2	42'-8"			Str.
B501	50	34'-2"	9'-8"	7'-2"	2½"
B502	24	23'-10"	9'-8"	7'-2"	2½"
B601	32	13'-2"	2'-7"	3'-7"	4½"
B602	43	10'-7"	4'-8"	3'-1"	4½"
B603	6	44'-0"	42'-8"	6"	4½"
B701	12	42'-8"			Str.
B801	14	15'-5"	2'-5½"	6'-8"	6"
B802	16	6'-8"			Str.
B803	14	12'-5"	2'-5½"	5'-2"	6"
B804	16	5'-2"			Str.
B901	11	45'-2"	42'-8"	10"	9"
B902	22	42'-8"			Str.
B903	11	35'-6"	34'-3"	10"	9"
B904	11	15'-5"	14'-2"	10"	9"
C601	3	1988'-5"			Spiral
C602	3	2328'-11"			Spiral
① C1101	48	28'-7"			Str.
① C1102	48	25'-7"			Str.
① C1103	48	32'-3"	30'-7"	2'-0"	11¼"
① C1104	48	35'-3"	33'-7"	2'-0"	11¼"
F501	748	5'-4"	4'-4"	6"	3¾"
F601	56	21'-4"	20'-0"	6"	4½"
F602	76	6'-10"	6'-2"	6"	4½"
F603	38	12'-10"			Str.
F604	28	48'-4"	47'-0"	6"	4½"
F605	24	14'-11"	14'-3"	6"	4½"
F606	12	23'-8"			Str.
F607	112	21'-4"	20'-0"	6"	4½"
F608	48	48'-4"	47'-0"	6"	4½"

BENDING DIAGRAMS

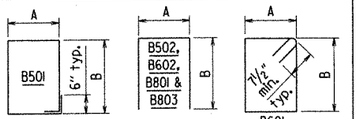

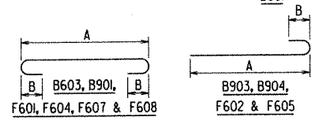

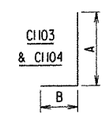

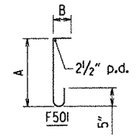

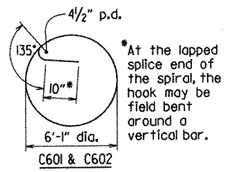

*At the lapped splice end of the spiral, the hook may be field bent around a vertical bar.

Dimensions are out to out of bars.

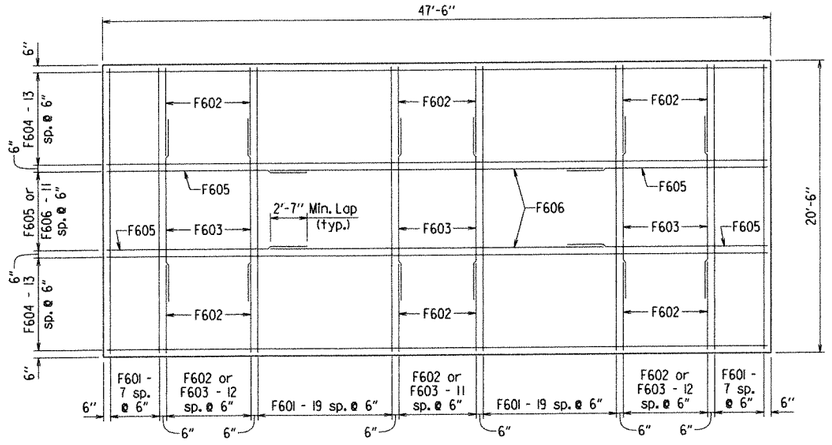

PLAN OF TOP MAT REINFORCING

① Dimensions shown are to Butt Splice and may vary based on mechanical coupler used.

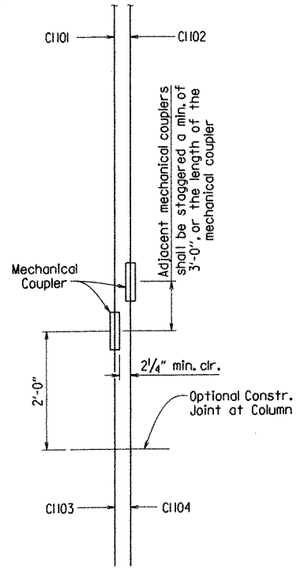

COLUMN BAR DETAIL

No Scale

Mechanical couplers in the column shall maintain the clearances shown. Their payment shall be subsidiary to the item "Reinforcing Steel-Bridge (Grade 60)". The QPL approved couplers shall develop at least 125% of the specified yield strength of the bar.

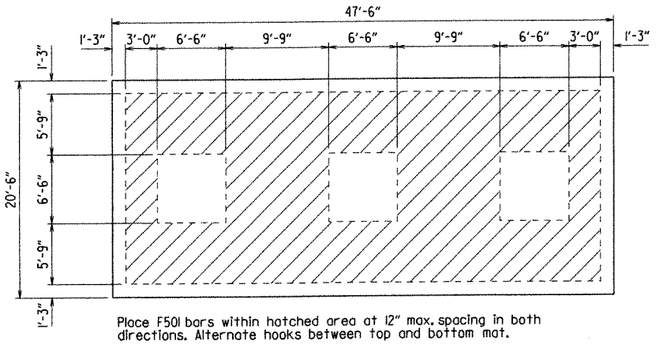

Place F501 bars within hatched area at 12" max. spacing in both directions. Alternate hooks between top and bottom mat.

PLAN OF FOOTING TIES

No Scale

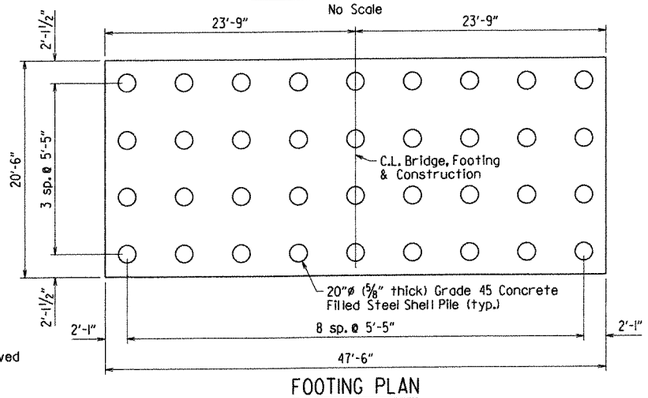

FOOTING PLAN

No Scale

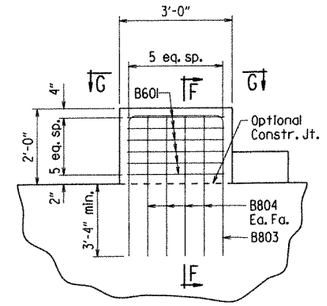

210' UNIT CONCRETE RESTRAINER DETAILS

No Scale

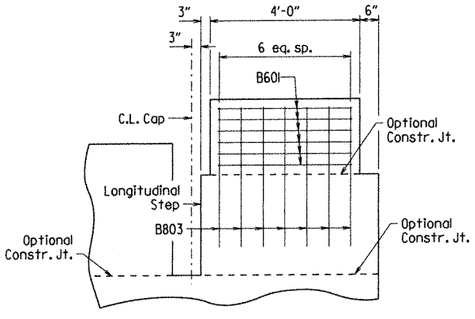

SECTION F-F

No Scale

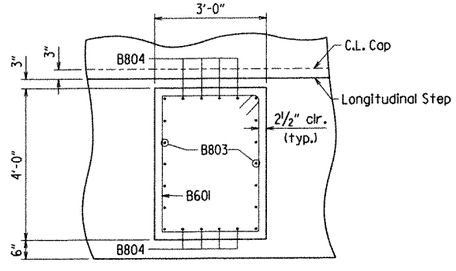

SECTION G-G

No Scale

INTERMEDIATE BENT NOTES

Concrete in the cap & column shall be Class "S" with a minimum 28 day compressive strength, f'c = 3,500 psi. Concrete in the footing shall be Class "B" with a minimum 90 day compressive strength, f'c = 3,500 psi meeting the requirements of Special Provision "Class B Concrete - Bridge" and Section 802. All Concrete shall be poured in the dry and all exposed corners to be chamfered ¾" unless otherwise noted.

All reinforcing steel shall conform to AASHTO M31 or M322, Type A, with mill test report, Grade 60 (yield strength = 60,000 psi.).

If anchor bolts are drilled into cap, top reinforcing bars shall be properly placed to avoid damage.

For additional information see layout.

NOTES FOR SPIRAL REINFORCING

Spiral reinforcing shall be plain round or deformed steel bars meeting the requirements of AASHTO M31 or M322, Type A, with mill test report (Grade 60) or shall be cold drawn wire meeting the requirements of AASHTO M32 or M225 (Grade 70) with a minimum diameter of 0.75".

Spiral reinforcement shall be paid for at the contract unit price bid per pound for "Reinforcing Steel-Bridge (Grade 60)". No additional payment shall be made for spacers, optional splices, or bracing needed for assembly, shipping, handling, or erecting.

Contractor may elect to use a different number of spiral lapped splices per column. In no case shall a spiral be lapped within the top or bottom 1/4th of the column height.

Splices in spiral reinforcement shall be lapped a minimum of 80 bar diameters.

Spiral reinforcement at lapped splices shall be terminated by a 135° hook with a 10" tail around a vertical bar. Hook may be field bent. Ends of spirals not lapped shall be terminated with 1½ turns and a 135° hook with a 10" tail around a vertical bar.

STATE OF ARKANSAS
Carl J. Fusselier
REGISTERED PROFESSIONAL ENGINEER
No. 7510
9/28/13
CARL J. FUSSELIER

BRIDGE ENGINEER

SHEET 2 OF 2
DETAILS OF BENT 9
WHITE RIVER

ROUTE SEC.

ARKANSAS STATE HIGHWAY COMMISSION

LITTLE ROCK, ARK.

DRAWN BY: JYP DATE: 4-17-13 FILENAME: b005836_b9.dgn
CHECKED BY: CSL DATE: 8/28/13 SCALE: 3/16" = 1'-0" or As Noted
DESIGNED BY: DHP DATE: 2-5-13

BRIDGE NO. 07289 DRAWING NO. 54100

PRINT DATE: 8/27/2013

DATE REVISED	DATE FILMED	DATE REVISED	DATE FILMED	FED. ROAD DIST. NO.	STATE	FED. AID PROJ. NO.	SHEET NO.	TOTAL SHEETS
				6	ARK.			
				JOB NO.		005836	83	230
				①	07289 -	INT. BENTS	- 54101	

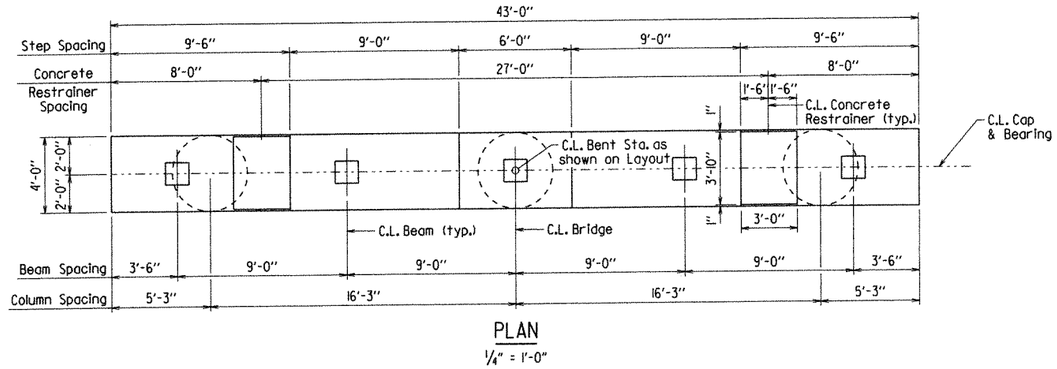

PLAN

1/4" = 1'-0"

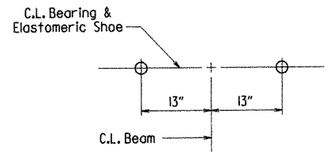

TYPICAL ANCHOR BOLT LAYOUT

No Scale

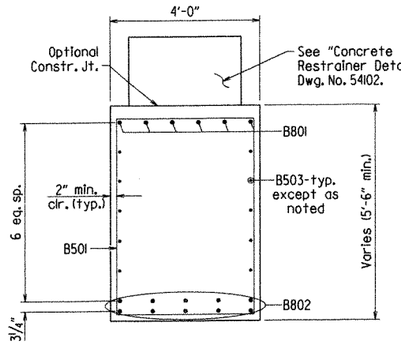

SECTION A-A

1/2" = 1'-0"

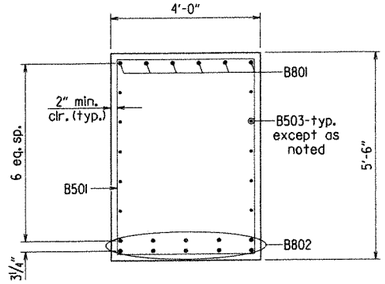

SECTION B-B

1/2" = 1'-0"

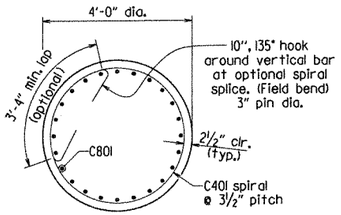

SECTION C-C

1/2" = 1'-0"

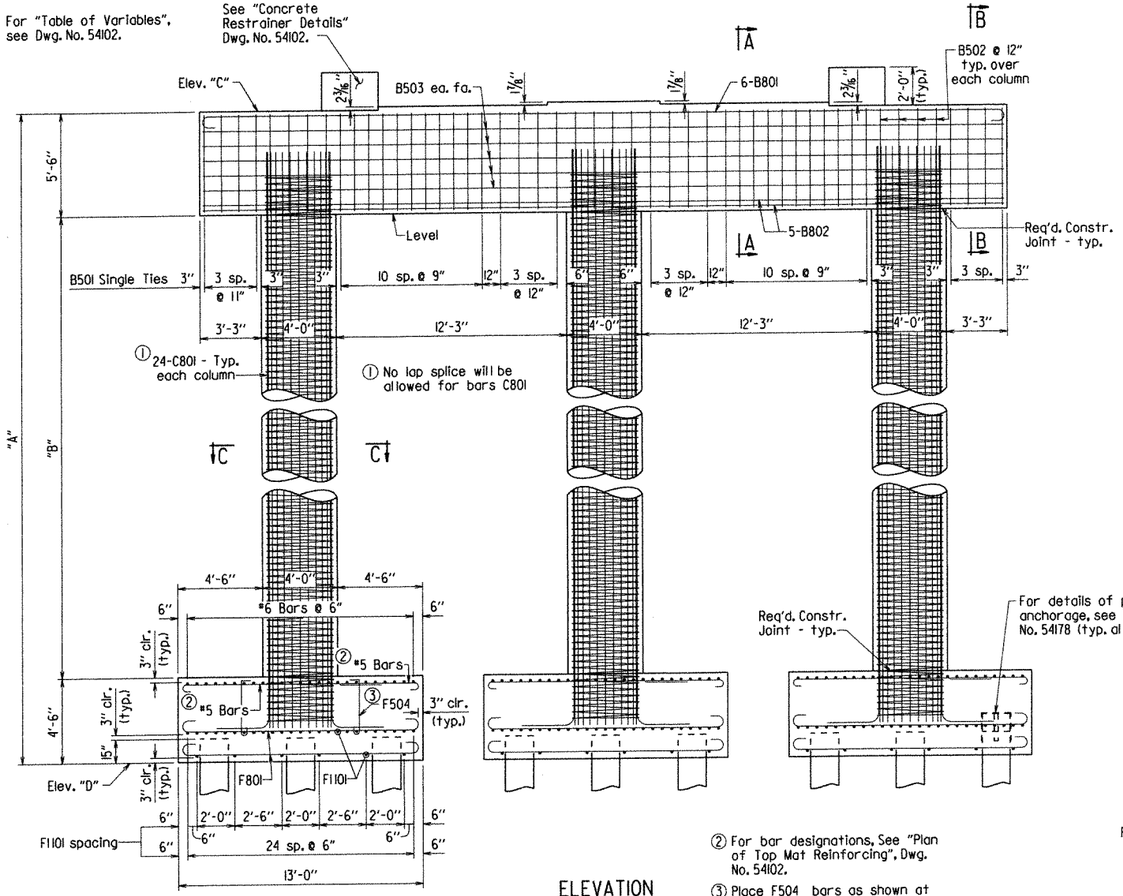

ELEVATION

1/4" = 1'-0"

② For bar designations, See "Plan of Top Mat Reinforcing", Dwg. No. 54102.

③ Place F504 bars as shown at 12" max. spacing in both directions. See "Plan of Footing Ties", Dwg. No. 54102.

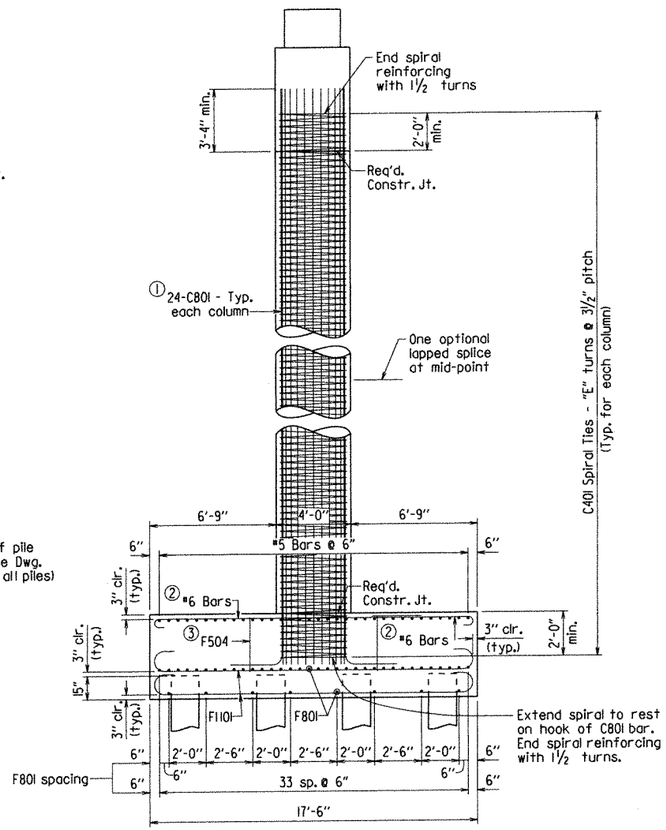

END VIEW

1/4" = 1'-0"

STATE OF ARKANSAS
Carl J. Fusselier
REGISTERED PROFESSIONAL ENGINEER
No. 7510
8/28/13
CARL J. FUSSELIER

BRIDGE ENGINEER

SHEET 1 OF 2
DETAILS OF BENTS 10, 11, 13, 14, 16 & 17 WHITE RIVER

ROUTE SEC.

ARKANSAS STATE HIGHWAY COMMISSION

LITTLE ROCK, ARK.

DRAWN BY: JYP DATE: 4-9-13
CHECKED BY: CJL DATE: 8/28/13
DESIGNED BY: RBR DATE: May 2013

FILENAME: b005836_b10.dgn
SCALE: AS NOTED

BRIDGE NO. 07289 DRAWING NO. 54101

PRINT DATE: 8/27/2013

DATE REVISED	DATE FILMED	DATE REVISED	DATE FILMED	FED. ROAD DIST. NO.	STATE	FED. AID PROJ. NO.	SHEET NO.	TOTAL SHEETS
				6	ARK.			
				JOB NO.		005836	84	230
				①	07289 -	INT. BENTS	- 54102	

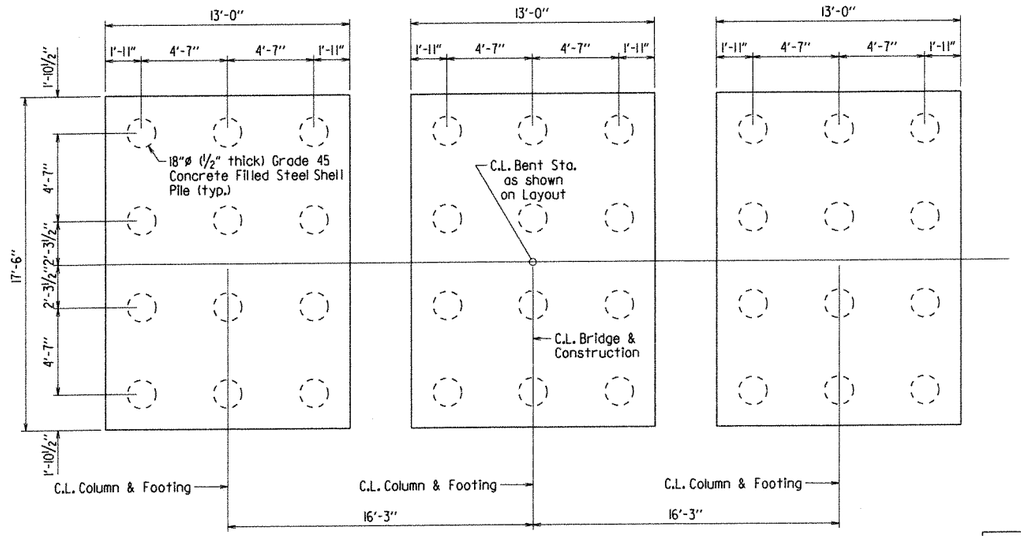

PLAN OF FOOTINGS

1/4" = 1'-0"

TABLE OF VARIABLES

	BENT 10	BENT 11	BENT 13	BENT 14	BENT 16	BENT 17
"A"	56'-6"	60'-0"	53'-0"	50'-6"	39'-9"	37'-6"
"B"	46'-6"	50'-0"	43'-0"	40'-6"	29'-9"	27'-6"
Elev. "C"	262.99	259.39	253.54	249.94	244.10	240.56
Elev. "D"	206.49	199.39	200.54	199.44	204.35	203.06
"E"	175	187	163	154	117	110
"F"	1983'-2"	2116'-9"	1849'-8"	1749'-6"	1337'-8"	1259'-9"
"G"	52'-8"	56'-2"	49'-2"	46'-8"	35'-10"	33'-8"
"H"	53'-10"	57'-4"	50'-4"	47'-10"	37'-0"	34'-10"

BAR LIST - PER BENT

MARK	NO. REQ'D.	LENGTH	P.D.
B501	38	18'-2"	2½"
B502	12	13'-10"	2½"
B503	10	42'-8"	Str.
B504	6	12'-8"	3¾"
B601	12	9'-8"	4½"
B602	12	3'-9"	Str.
B801	6	44'-6"	6"
B802	10	42'-8"	Str.
C401	3	"F"	Spiral
C801	72	"H"	6"
F501	78	13'-8"	3¾"
F502	24	11'-2"	3¾"
F503	24	4'-8"	3¾"
F504	468	3'-9"	3¾"
F601	54	18'-4"	4½"
F602	21	14'-11"	4½"
F603	21	6'-0"	4½"
F801	126	14'-4"	6"
F1101	93	20'-0"	11¼"

BENDING DIAGRAMS

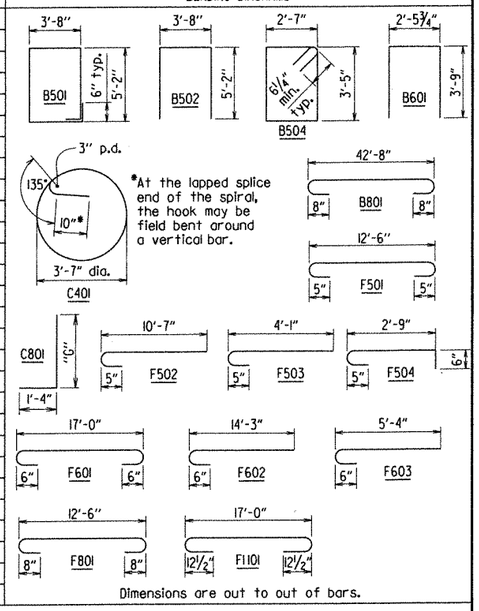

Dimensions are out to out of bars.

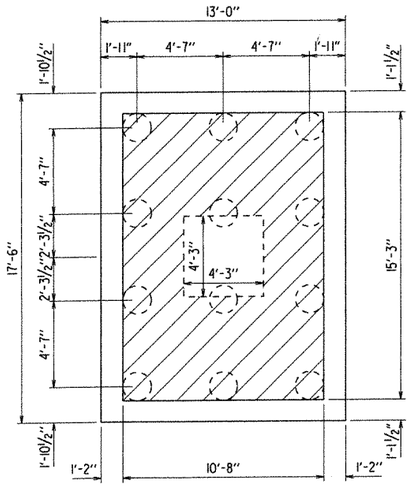

Place F504 bars within hatched area at 12" max. spacing in both directions. F504 bars not needed in area of spiral reinforcing. Alternate hooks between top and bottom mat.

PLAN OF FOOTING TIES

1/4" = 1'-0"

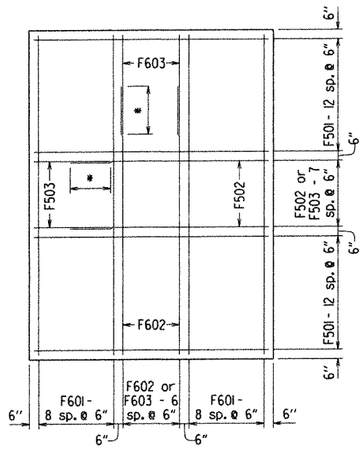

*2'-2" Min. Lap Length #5 bar
2'-7" Min. Lap Length #6 bar

PLAN OF TOP MAT REINFORCING

1/4" = 1'-0"

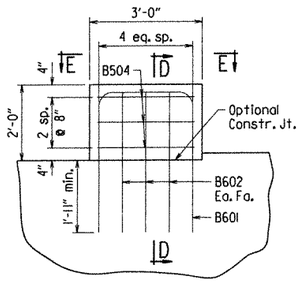

CONCRETE RESTRAINER DETAILS

½" = 1'-0"

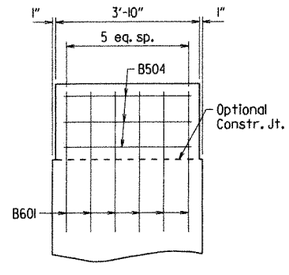

SECTION D-D

½" = 1'-0"

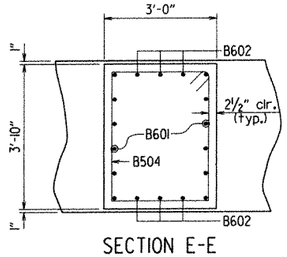

SECTION E-E

½" = 1'-0"

INTERMEDIATE BENT NOTES

All concrete in cap, column & footing shall be Class "S" with a minimum 28 day compressive strength, f'c = 3,500 psi. Class "S" Concrete shall be poured in the dry and all exposed corners to be chamfered ¾" unless otherwise noted. All reinforcing steel shall conform to AASHTO M31 or M322, Type A, with mill test report, Grade 60 (yield strength = 60,000 psi.).

If anchor bolts are drilled into cap, top reinforcing bars shall be properly placed to avoid damage.

For additional information see layout.

NOTES FOR SPIRAL REINFORCING

Spiral reinforcing shall be plain round or deformed steel bars meeting the requirements of AASHTO M31 or M322, Type A, with mill test report (Grade 60) or shall be cold drawn wire meeting the requirements of AASHTO M32 or M225 (Grade 70) with a minimum diameter of 0.5".

Spiral reinforcement shall be paid for at the contract unit price bid per pound for "Reinforcing Steel-Bridge (Grade 60)". No additional payment shall be made for spacers, optional splices, or bracing needed for assembly, shipping, handling, or erecting.

Contractor may elect to use one lap splice in the spiral reinforcing per column. The lap splice shall be located at the mid-point of the column.

Splices in spiral reinforcement shall be lapped a minimum of 80 bar diameters.

Spiral reinforcement at lapped splices shall be terminated by a 135° hook with a 10" tail around a vertical bar. Hook may be field bent. Ends of spirals not lapped shall be terminated with 1½ turns and a 135° hook with a 10" tail around a vertical bar.

STATE OF ARKANSAS
Carl J. Fusselier
REGISTERED PROFESSIONAL ENGINEER
No. 7510
1/29/13
CARL J. FUSSELIER

BRIDGE ENGINEER

SHEET 2 OF 2
DETAILS OF BENTS 10, 11, 13, 14, 16 & 17
WHITE RIVER

ROUTE SEC.

ARKANSAS STATE HIGHWAY COMMISSION

LITTLE ROCK, ARK.

DRAWN BY: JYP DATE: 4-9-13 FILENAME: b005836_bl0.dgn
CHECKED BY: CSL DATE: 8/28/13 SCALE: AS NOTED
DESIGNED BY: RBR DATE: May 2013

BRIDGE NO. 07289 DRAWING NO. 54102

PRINT DATE: 8/27/2013

DATE REVISED	DATE FILMED	DATE REVISED	DATE FILMED	FED. ROAD DIST. NO.	STATE	FED. AID PROJ. NO.	SHEET NO.	TOTAL SHEETS
				6	ARK.			
				JOB NO.		005836	85	230
				①	07289 -	INT. BENTS	- 54103	

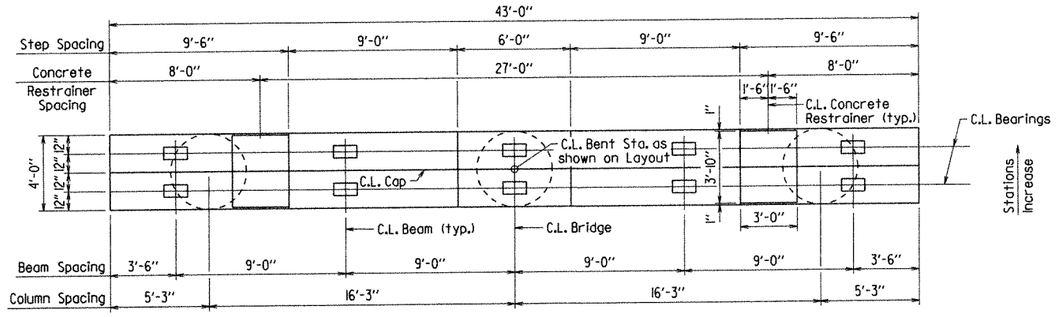

PLAN

1/4" = 1'-0"

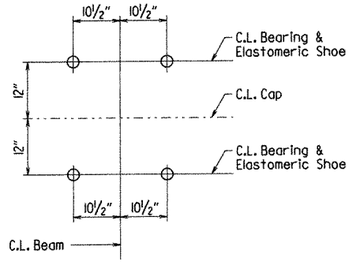

TYPICAL ANCHOR BOLT LAYOUT

No Scale

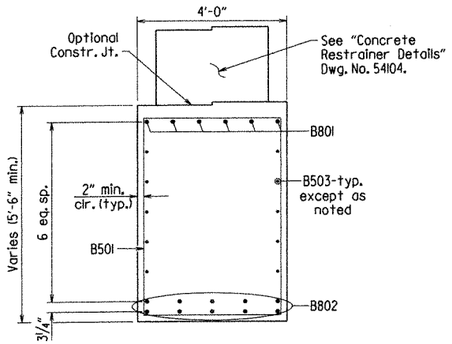

SECTION A-A

½" = 1'-0"

For "Table of Variables", see Dwg. No. 54104.

See "Concrete Restrainer Details" Dwg. No. 54169.

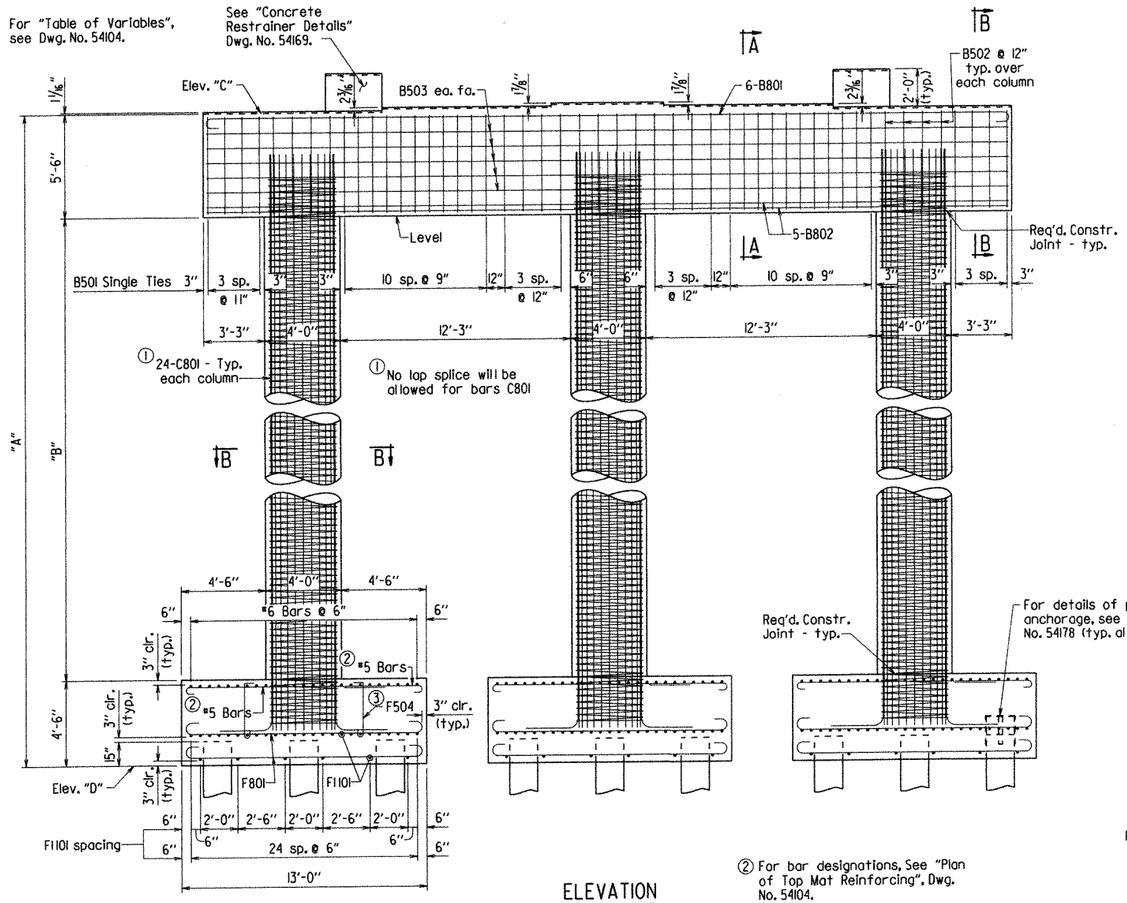

ELEVATION

Looking Ahead

1/4" = 1'-0"

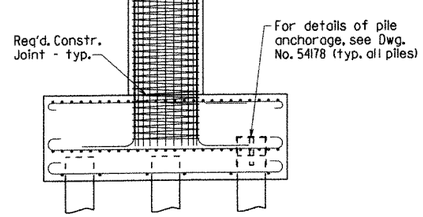

② For bar designations, See "Plan of Top Mat Reinforcing", Dwg. No. 54104.

③ Place F504 bars as shown at 12" max. spacing in both directions. See "Plan of Footing Ties", Dwg. No. 54104.

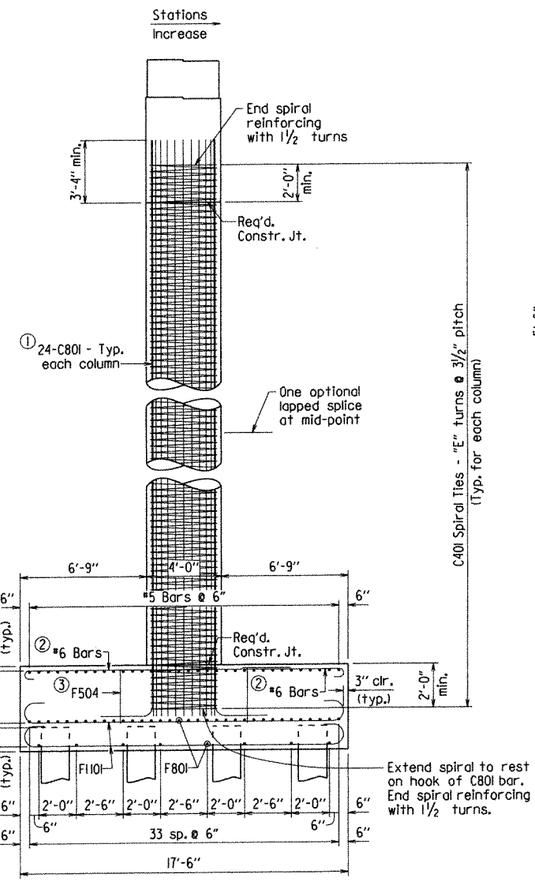

END VIEW

1/4" = 1'-0"

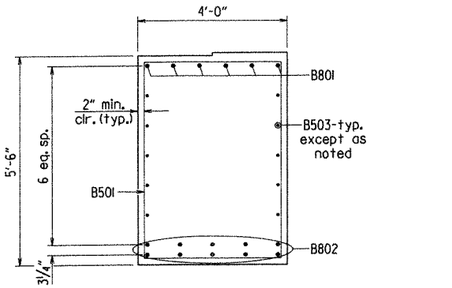

SECTION B-B

½" = 1'-0"

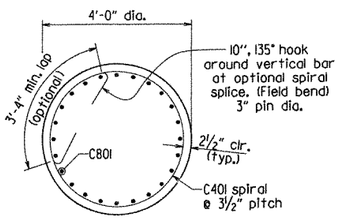

SECTION C-C

½" = 1'-0"

STATE OF ARKANSAS
Carl J. Puseliер
REGISTERED PROFESSIONAL ENGINEER
No. 7510
8/28/13
CARL J. PUSELIER

BRIDGE ENGINEER

SHEET 1 OF 2
DETAILS OF BENTS 12 & 15
WHITE RIVER

ROUTE SEC.

ARKANSAS STATE HIGHWAY COMMISSION

LITTLE ROCK, ARK.

DRAWN BY: JYP DATE: 4-9-13 FILENAME: b005836.bl2.dgn

CHECKED BY: OSL DATE: 8/28/13 SCALE: AS NOTED

DESIGNED BY: RBR DATE: May 2013

BRIDGE NO. 07289 DRAWING NO. 54103

PRINT DATE: 8/27/2013

DATE REVISED	DATE FILMED	DATE REVISED	DATE FILMED	FED. ROAD DIST. NO.	STATE	FED. AID PROJ. NO.	SHEET NO.	TOTAL SHEETS
				6	ARK.			
				JOB NO.		005836	86	230
				(1) 07289 -		INT. BENTS	- 54104	

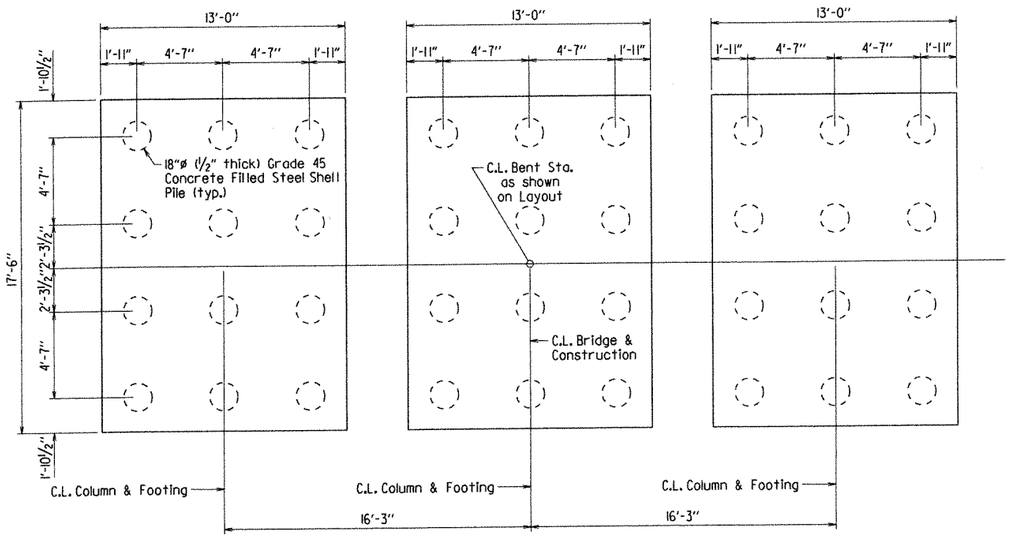

PLAN OF FOOTINGS

¼" = 1'-0"

TABLE OF VARIABLES

	BENT 12	BENT 15
"A"	59'-3"	40'-9"
"B"	49'-3"	30'-9"
Elev. "C"	256.40	246.95
Elev. "D"	197.15	206.20
"E"	184	121
"F"	2083'-5"	1382'-2"
"G"	55'-4"	36'-11"
"H"	56'-6"	38'-1"

BAR LIST - PER BENT

MARK	NO. REQ'D.	LENGTH	P.D.
B501	38	18'-2"	2½"
B502	12	13'-10"	2½"
B503	10	42'-8"	Str.
B504	12	8'-10"	3¾"
B601	20	9'-8"	4½"
B602	24	3'-9"	Str.
B801	6	44'-6"	6"
B802	10	42'-8"	Str.
C401	3	"F"	Spiral
C801	72	"H"	6"
F501	78	13'-8"	3¾"
F502	24	11'-2"	3¾"
F503	24	4'-8"	3¾"
F504	468	3'-9"	3¾"
F601	54	18'-4"	4½"
F602	21	14'-11"	4½"
F603	21	6'-0"	4½"
F801	126	14'-4"	6"
F1101	93	20'-0"	11¼"

BENDING DIAGRAMS

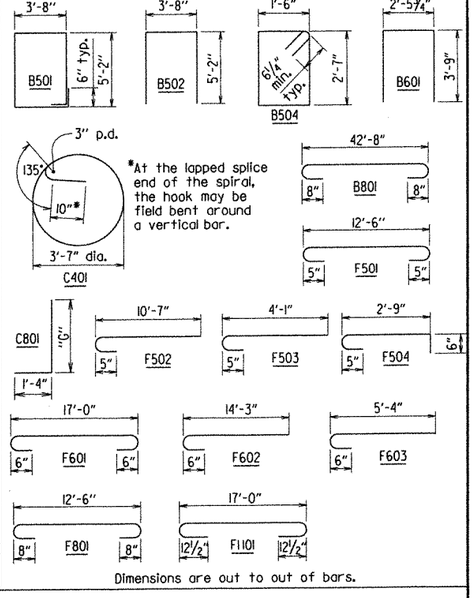

Dimensions are out to out of bars.

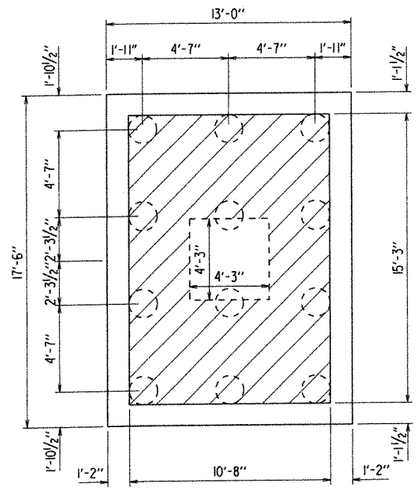

Place F504 bars within hatched area at 12" max. spacing in both directions. F504 bars not needed in area of spiral reinforcing. Alternate hooks between top and bottom mat.

PLAN OF FOOTING TIES

¼" = 1'-0"

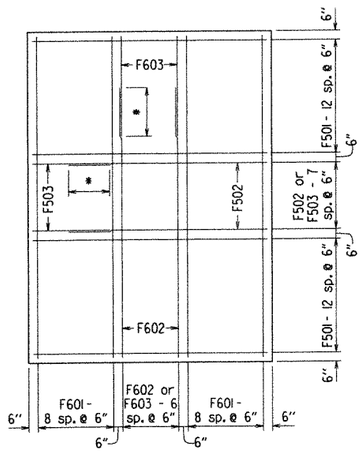

* 2'-2" Min. Lap Length #5 bar
2'-7" Min. Lap Length #6 bar

PLAN OF TOP MAT REINFORCING

¼" = 1'-0"

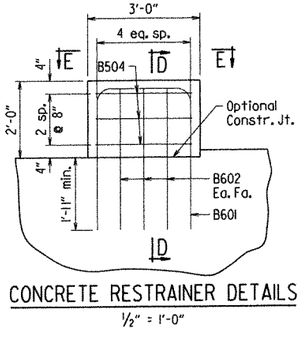

CONCRETE RESTRAINER DETAILS

½" = 1'-0"

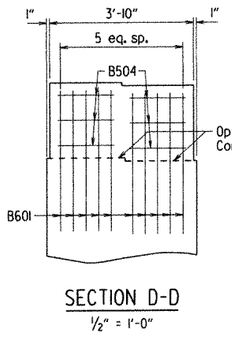

SECTION D-D

½" = 1'-0"

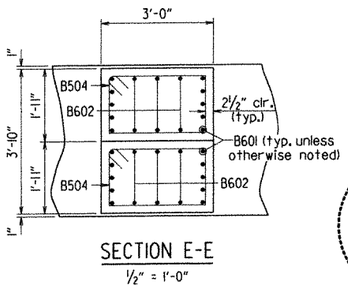

SECTION E-E

½" = 1'-0"

INTERMEDIATE BENT NOTES

All concrete in cap, column & footing shall be Class "S" with a minimum 28 day compressive strength, f'c = 3,500 psi. Class "S" Concrete shall be poured in the dry and all exposed corners to be chamfered ¾" unless otherwise noted. All reinforcing steel shall conform to AASHTO M31 or M322, Type A, with mill test report, Grade 60 (yield strength = 60,000 psi.).

If anchor bolts are drilled into cap, top reinforcing bars shall be properly placed to avoid damage.

For additional information see layout.

NOTES FOR SPIRAL REINFORCING

Spiral reinforcing shall be plain round or deformed steel bars meeting the requirements of AASHTO M31 or M322, Type A, with mill test report (Grade 60) or shall be cold drawn wire meeting the requirements of AASHTO M32 or M225 (Grade 70) with a minimum diameter of 0.5".

Spiral reinforcement shall be paid for at the contract unit price bid per pound for "Reinforcing Steel-Bridge (Grade 60)". No additional payment shall be made for spacers, optional splices, or bracing needed for assembly, shipping, handling, or erecting.

Contractor may elect to use one lap splice in the spiral reinforcing per column. The lap splice shall be located at the mid-point of the column.

Splices in spiral reinforcement shall be lapped a minimum of 80 bar diameters.

Spiral reinforcement at lapped splices shall be terminated by a 135° hook with a 10" tall around a vertical bar. Hook may be field bent. Ends of spirals not lapped shall be terminated with 1½ turns and a 135° hook with a 10" tall around a vertical bar.

STATE OF ARKANSAS
Carl J. Fusellier
REGISTERED PROFESSIONAL ENGINEER
No. 7510
CARL J. FUSELLIER 8/28/13

BRIDGE ENGINEER

SHEET 2 OF 2
DETAILS OF BENTS 12 & 15
WHITE RIVER

ROUTE SEC.

ARKANSAS STATE HIGHWAY COMMISSION

LITTLE ROCK, ARK.

DRAWN BY: JYP DATE: 4-9-13 FILENAME: b005836_bl2.dgn
CHECKED BY: CSL DATE: 7/18/13 SCALE: AS NOTED
DESIGNED BY: RBR DATE: May 2013

BRIDGE NO. 07289 DRAWING NO. 54104

PRINT DATE: 9/18/2013

DATE REVISED	DATE FILMED	DATE REVISED	DATE FILMED	FED. ROAD DIST. NO.	STATE	FED. AID PROJ. NO.	SHEET NO.	TOTAL SHEETS
				6	ARK.			
				JOB NO.		005836	87	230
				①	07289 - END BENT DETAILS - 54105			

Class I Protective Surface Treatment shall be applied to the top of the backwall and to the roadway face and top of the wing rails.

For Details of Wing and Rail, see Dwg. No. 54106.

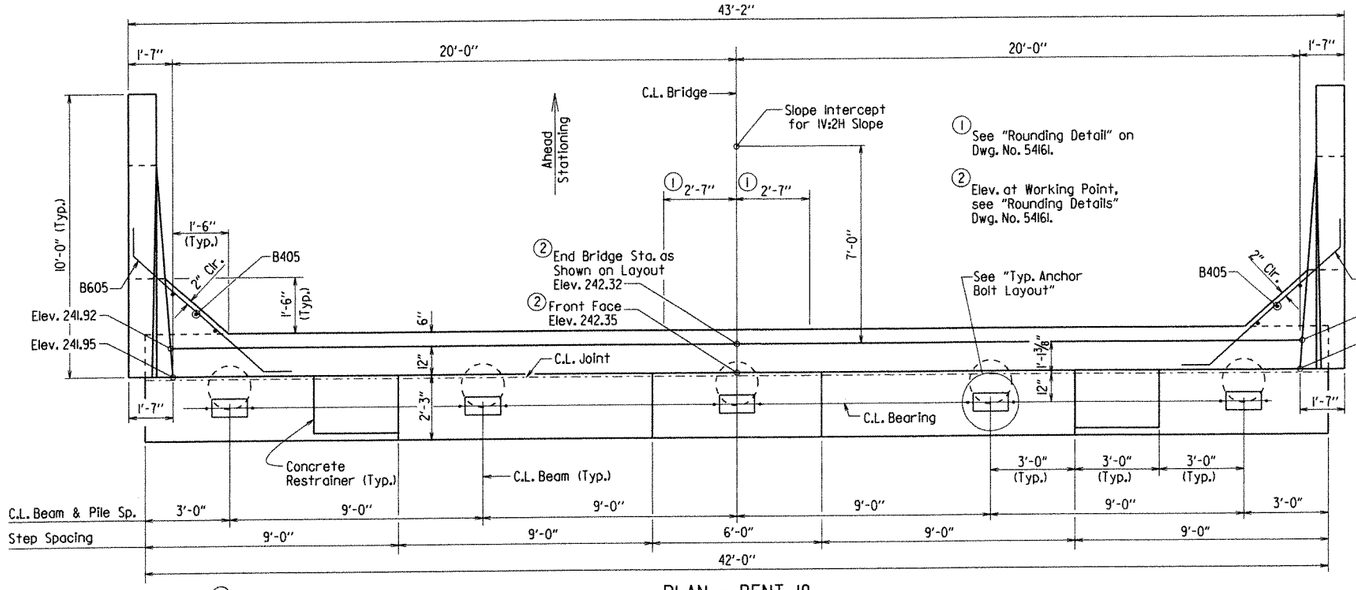

PLAN - BENT 18

⅜" = 1'-0"

④ Adjust spacing of D601E bars as necessary to provide 3" clear from the longitudinal construction joint between the approach slab and gutters.

For "Section A-A" and Bar List, See Dwg. No. 54106.

For General Notes, See Dwg. No. 54083.

Soil Reinforcement Note:

The Contractor shall provide soil reinforcement elements to resist the following concurrent horizontal forces and pressures, perpendicular to Bent 18.

- 65 psf per foot of depth equivalent fluid pressure
- A lateral force of 730 lb/ft at the top of cap
- A lateral live load surcharge of 260 psf

Soil reinforcement shall be attached at the back of End Bents. Type, size, and spacing of soil reinforcement shall be designed by the contractor. The design details and computations shall accompany the wall design submittal for review by the Engineer. Cost included with Item Special Provision Job 005836 "Retaining Walls". See Special Provision Job 005836 "Retaining Walls" for details.

Soil Reinforcement per MSE Wall manufacturer design (Subsidiary to Item "Retaining Walls"). See "BACKWALL SOIL REINFORCEMENT", Dwg. No. 54081 for additional details.

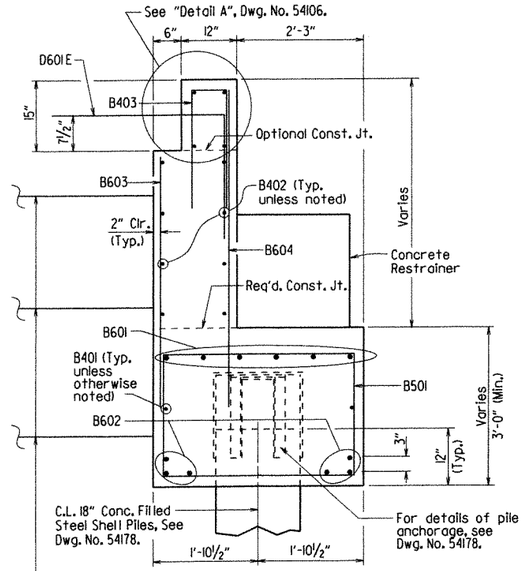

SECTION A-A

¾" = 1'-0"

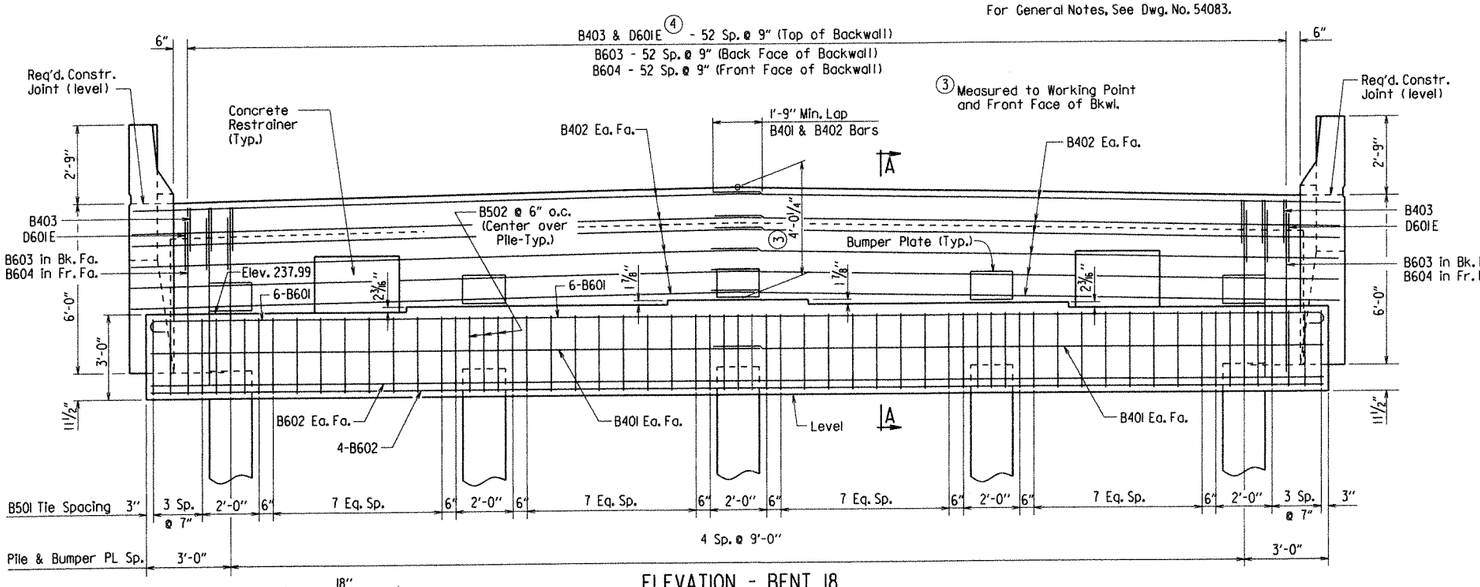

ELEVATION - BENT 18

Looking Ahead

⅜" = 1'-0"

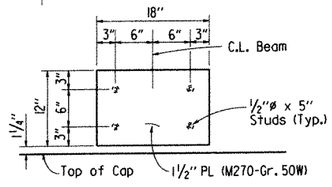

BUMPER PLATE DETAIL

1" = 1'-0"

Studs and plates shall meet the requirements of Section 807 and shall be measured and paid for as "Structural Steel in Beam Spans (M270, Gr. 50W)" or "Structural Steel in Plate Girder Spans (M270, Gr. 50W)".

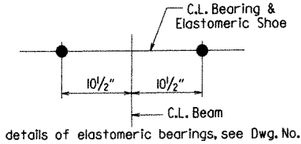

For details of elastomeric bearings, see Dwg. No. 54173.

TYP. ANCHOR BOLT LAYOUT

No Scale

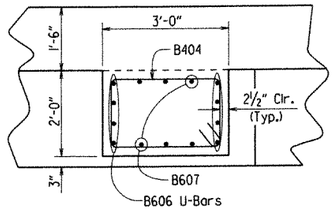

SECTION N-N

No Scale

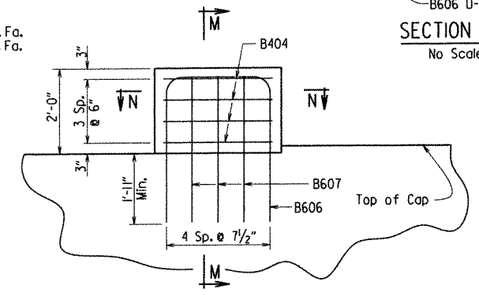

ELEVATION - CONCRETE RESTRAINER

Looking Ahead

No Scale

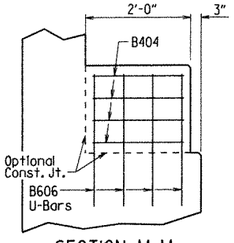

SECTION M-M

No Scale

STATE OF ARKANSAS
Carl J. Fuselier
REGISTERED PROFESSIONAL ENGINEER
No. 7510
8/28/13
CARL J. FUSELIER

BRIDGE ENGINEER

SHEET 1 OF 2
DETAILS OF BENT 18
WHITE RIVER

ROUTE SEC.

ARKANSAS STATE HIGHWAY COMMISSION

LITTLE ROCK, ARK.

DRAWN BY: MRE DATE: 04/23/13 FILENAME: b005836.bl.dgn
CHECKED BY: CSL DATE: 8/28/13 SCALE: ⅜" = 1'-0"
DESIGNED BY: RBR DATE: April 2013

BRIDGE NO. 07289 DRAWING NO. 54105

PRINT DATE: 8/27/2013

DATE REVISED	DATE FILMED	DATE REVISED	DATE FILMED	FED. ROAD DIST. NO.	STATE	FED. AID PROJ. NO.	SHEET NO.	TOTAL SHEETS
				6	ARK.			
				JOB NO.		005836	98	230

① 07289 - END BENT DETAILS - 54106

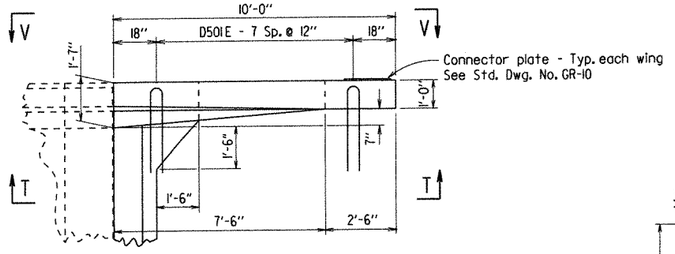

PLAN OF RAIL

Scale: 3/8" = 1'-0"

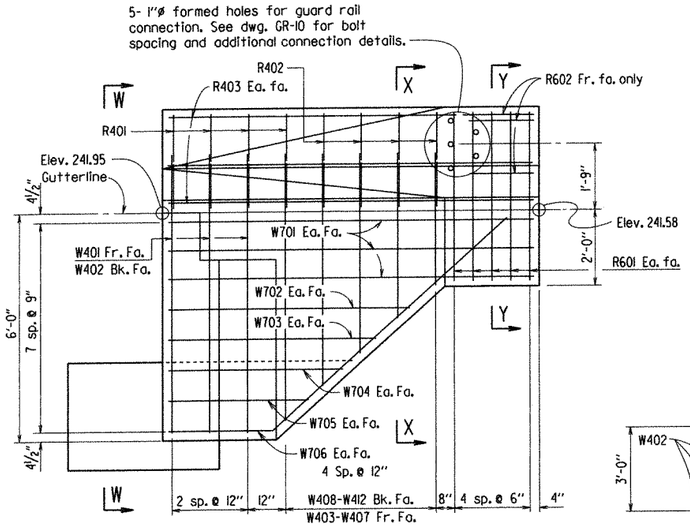

VIEW T-T

½"=1'-0"

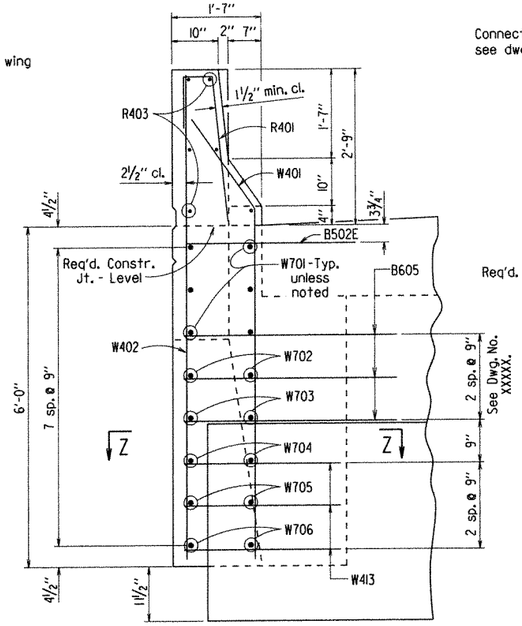

VIEW W-W

Scale: 3/4" = 1'-0"

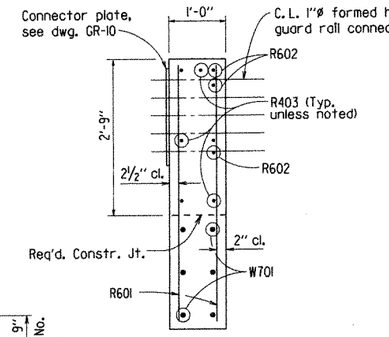

SECTION Y-Y

Scale: 3/4"= 1'-0"

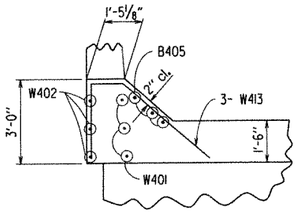

SECTION Z-Z

Scale: 3/8" = 1'-0"

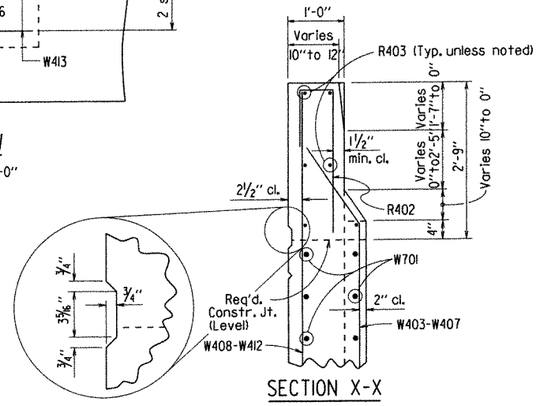

SECTION X-X

Scale: 3/4" = 1'-0"

BAR LIST - BENT 18

MARK	NO. REQ'D.	LENGTH	P.D.
B401	4	21'-9"	Str.
B402	24	22'-4"	Str.
B403	53	4'-10"	2"
B404	8	8'-10"	3"
B405	6	4'-5"	Str.
B501	40	12'-8"	2½"
B502	15	8'-7"	2½"
B601	6	43'-0"	4½"
B602	6	41'-8"	Str.
B603	53	4'-1"	Str.
B604	53	5'-4"	Str.
B605	6	8'-2"	4½"
B606	8	9'-8"	4½"
B607	12	3'-9"	Str.
R401	8	3'-11"	2"
R402	8	4'-0"	2"
R403	12	9'-8"	Str.
R601	20	4'-5"	Str.
R602	6	5'-0"	Str.
W401	6	8'-1"	2"
W402	6	8'-5"	Str.
W403-W407	2 each	Var. 3'-5" to 7'-5"	2"
W408-W412	2 each	Var. 4'-7" to 8'-2"	Str.
W413	6	7'-7"	2"
W701	12	9'-8"	Str.
W702	4	6'-5"	Str.
W703	4	5'-6"	Str.
W704	4	4'-8"	Str.
W705	4	3'-9"	Str.
W706	4	11'-0"	5¼"
D501E	16	6'-4"	3¾"
D601E	53	5'-10"	4½"

BENDING DIAGRAMS

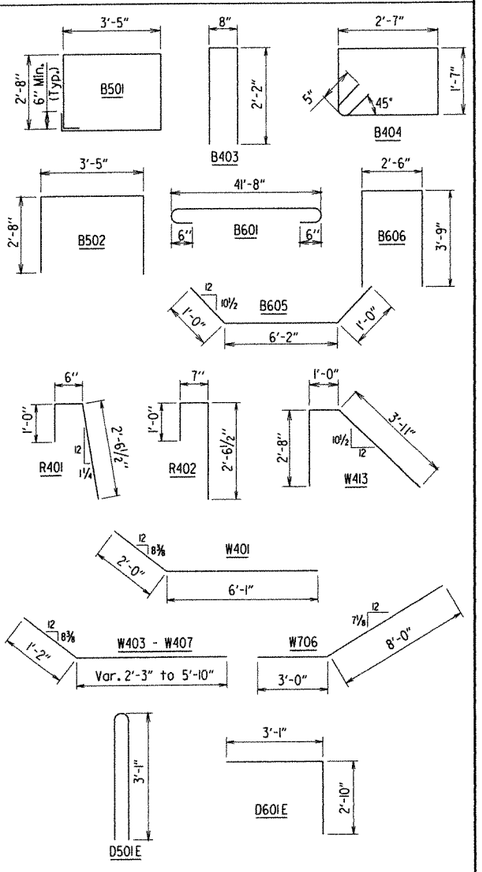

Dimensions are out to out of bars.

NOTE: Bars designated with an "E" suffix shall be epoxy coated.

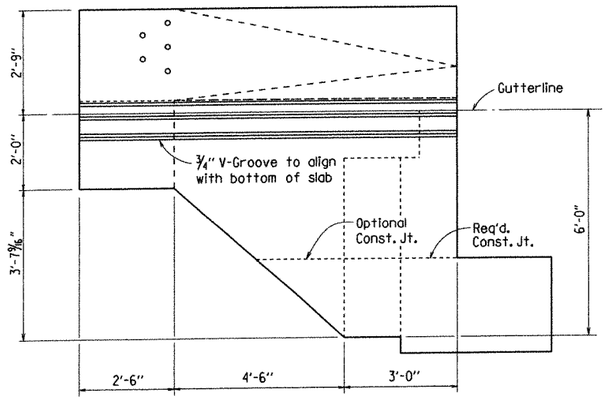

VIEW V-V

½"=1'-0"

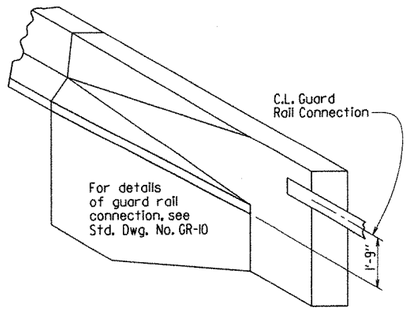

THREE DIMENSIONAL VIEW OF RAIL

No Scale

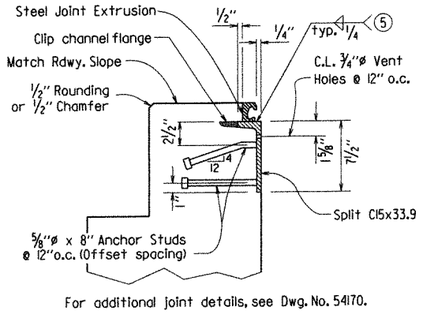

For additional joint details, see Dwg. No. 54170.

Transverse spacing between bent anchor studs and vent holes shall be 6".

Concrete shall be hand packed under the joint armor.

DETAIL A

No Scale

⑤ Shop Weld - See Special Provision Job 005836 "Armored Joint with Neoprene Strip Seal"

For General Notes see Dwg. No. 54083

STATE OF ARKANSAS
CARL J. PUSELLER
REGISTERED PROFESSIONAL ENGINEER
No. 7510
8/29/13

BRIDGE ENGINEER

SHEET 2 OF 2
DETAILS OF BENT 18
WHITE RIVER

ROUTE SEC.

ARKANSAS STATE HIGHWAY COMMISSION

LITTLE ROCK, ARK.

DRAWN BY: MRE DATE: 04/23/13 FILENAME: b005836.bl.dgn
CHECKED BY: CSL DATE: 8/28/13 SCALE: As Shown
DESIGNED BY: RBR DATE: April 2013

BRIDGE NO. 07289 DRAWING NO. 54106

PRINT DATE: 8/27/2013

DATE REVISED	DATE FILMED	DATE REVISED	DATE FILMED	FED. ROAD DIST. NO.	STATE	FED. AID PROJ. NO.	SHEET NO.	TOTAL SHEETS
				6	ARK.			
				JOB NO.		005836	89	230
				(1)	07289 - 246' CONT. UNIT - 54107			

SLAB REINFORCING

Transverse:
S501E - Top; S402E - Bottom @ 12" o.c. ——— Alternate
S502E @ 12" o.c. Bent up over girders ———
S503E @ 6" o.c. in top of overhang.

Longitudinal:
S401E as shown
S601E as shown centered over Int. Support

At the Contractor's option, one epoxy coated straight #5 bar top and bottom may be substituted for bar S502E. Payment will be based on weight of S502E bar.

Class I Protective Surface Treatment shall be applied to the Roadway Surface and to the Face & Top of the Concrete Parapet Rail.

① See "Adjustment for Slab Thickness Tolerance".

② Tolerance: Minus = 1/4"; Plus equal to the amount of slab thickening used to meet slab thickness tolerance. See "Adustment for Slab Thickness Tolerance".

③ See "Rounding Detail".

④ Working Point to Gutterline

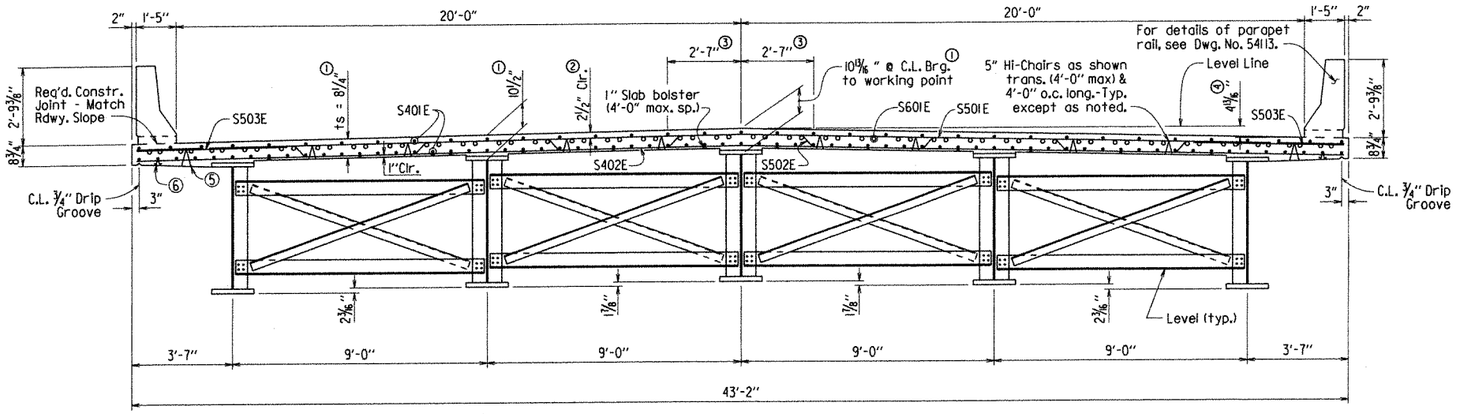

⑤ 6½" Hi-chairs at 4'-0" o.c. long.

⑥ 2" Hi-chairs at 4'-0" o.c. long.

TYPICAL ROADWAY SECTION

Looking Ahead
Scale: 3/8" = 1'-0"

The superstructure details shown are for use when Removable Deck Forming is used and are the basis for measurement of Class S(AE) Concrete.

For General Notes, see Dwg. No. 54172.

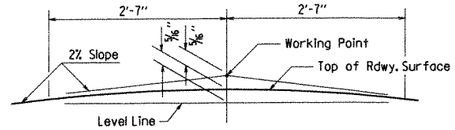

Working Point matches Theoretical Roadway Grade.

ROUNDING DETAIL

No Scale

TABLE FOR WELD

Material Thickness of Thicker Part Joined (Inches)	Minimum Size of Fillet Weld (Inches)	Single Pass Weld Must Be Used
To 3/4" Inclusive	1/4"	
Over 3/4"	5/16"	

When a fillet weld size, as shown on the plans, is larger than the minimum, the first pass shall be that specified for minimum size of fillet weld.

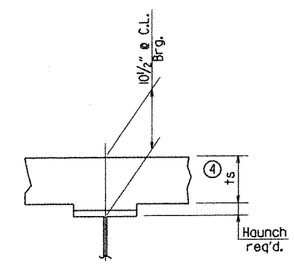

INTERIOR BEAM

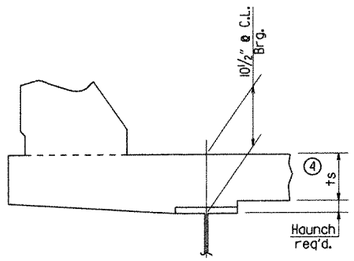

EXTERIOR BEAM

④ Tolerance when removable deck forming is used is +1/2", -1/4". Haunch forming is required and shall be adjusted to maintain slab thickness tolerance.

ts = slab thickness as shown in "Typical Roadway Section".

Haunch dimension may vary within the following limits to maintain the grade and slab thickness tolerance : Minimum - occurs when top flange contacts bottom reinforcing steel; Maximum - top flange thickness plus 1 1/8" for removable or permanent steel deck forms. No increase in concrete and structural steel quantities will be made to maintain tolerances.

Tolerances shown are applicable only when removable deck forming is used. See Std. Dwg. No. 14991 for tolerances when permanent steel deck forms are used unless noted otherwise. Payment for concrete shall be based on removable deck forming.

ADJUSTMENT FOR SLAB THICKNESS TOLERANCE

No Scale

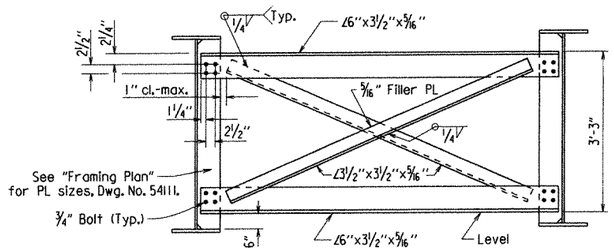

CROSSFRAME DETAIL

No Scale

STATE OF ARKANSAS
Carl J. Puseller
REGISTERED PROFESSIONAL ENGINEER
No. 7510
8/28/13
CARL J. PUSELLER
BRIDGE ENGINEER

SHEET 1 OF 7
DETAILS OF 246'-0" CONTINUOUS COMPOSITE PLATE GIRDER UNIT (UNIT 1)
WHITE RIVER

ROUTE SEC.

ARKANSAS STATE HIGHWAY COMMISSION
LITTLE ROCK, ARK.

DRAWN BY: RBR DATE: 09/20/12 FILENAME: b005836_sl.dgn
CHECKED BY: CSL DATE: 8/28/13 SCALE: 3/8"= 1'-0" or as shown
DESIGNED BY: RBR DATE: SEPT. 2012

BRIDGE NO. 07289 DRAWING NO. 54107

PRINT DATE: 8/28/2013

DATE REVISED	DATE FILMED	DATE REVISED	DATE FILMED	FED. ROAD DIST. NO.	STATE	FED. AID PROJ. NO.	SHEET NO.	TOTAL SHEETS
				6	ARK.			
				JOB NO.		005836	90	280
				(1)	07289 - 246' CONT. UNIT - 54108			

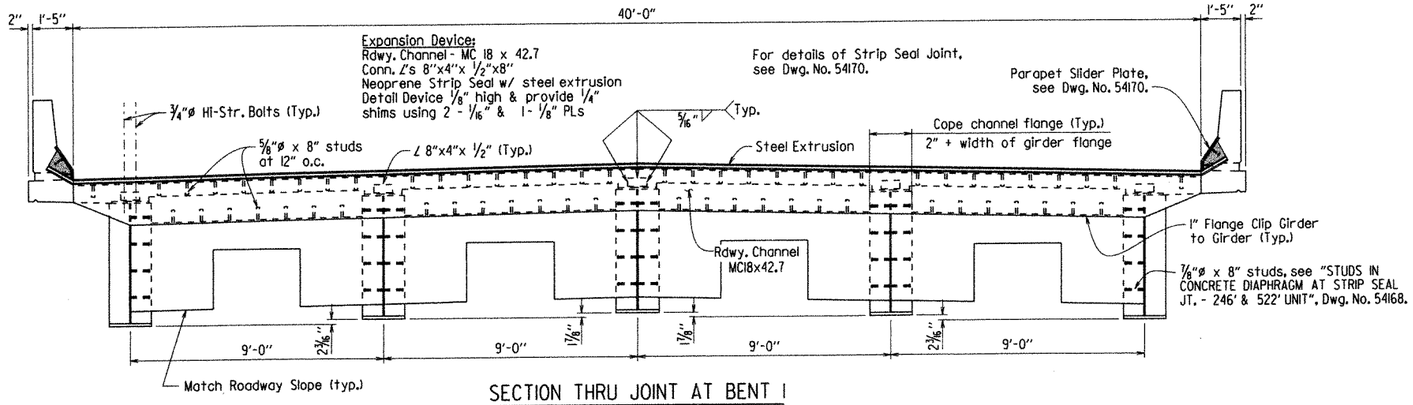

SECTION THRU JOINT AT BENT 1

Looking Ahead
Scale: ⅜" = 1'-0"

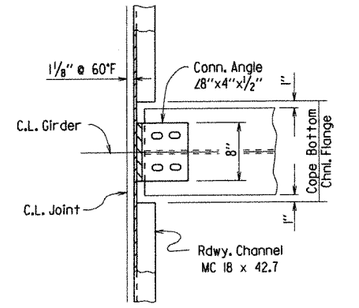

CHANNEL CONNECTION DETAIL - BENT 1 & 3

No Scale

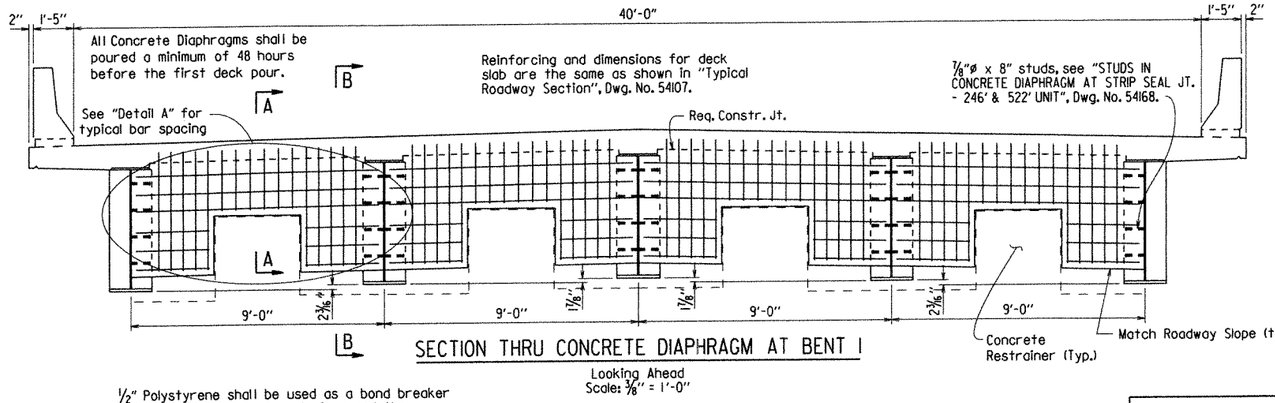

SECTION THRU CONCRETE DIAPHRAGM AT BENT 1

Looking Ahead
Scale: ⅜" = 1'-0"

½" Polystyrene shall be used as a bond breaker between the concrete restrainer and the concrete diaphragm and may remain in place.

REMOVABLE FORMS FOR DIAPHRAGMS SHALL BE USED

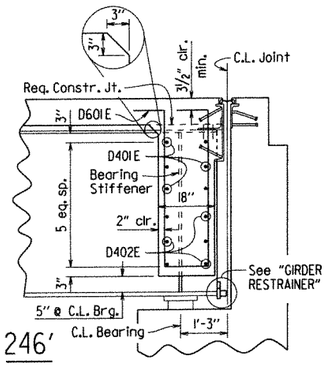

SECTION B-B

Scale: ½" = 1'-0"

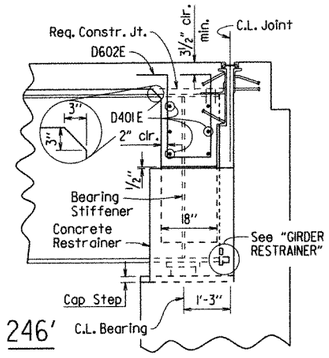

SECTION A-A

Scale: ½" = 1'-0"

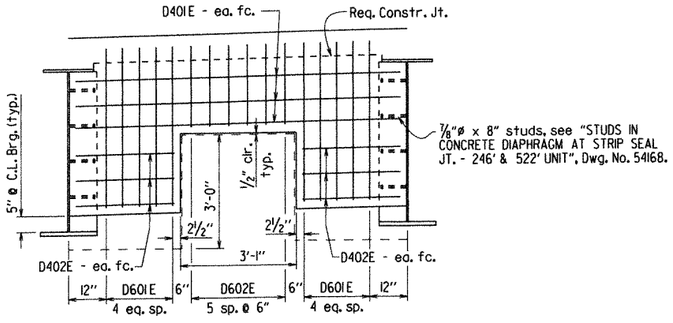

DETAIL A

Scale: ½" = 1'-0"

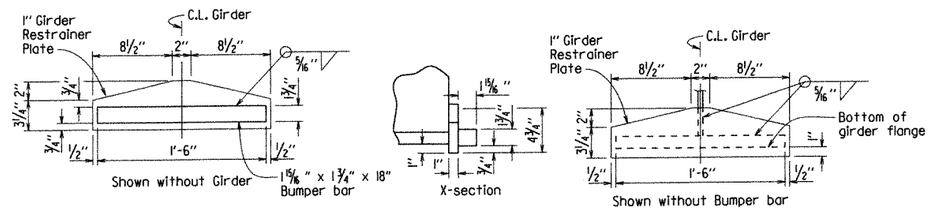

GIRDER RESTRAINER

Scale: 1½" = 1'-0"

STATE OF ARKANSAS
Carl J. Fuselier
REGISTERED PROFESSIONAL ENGINEER
No. 7510
CARL J. FUSELIER 9/28/13

BRIDGE ENGINEER

SHEET 2 OF 7
DETAILS OF 246'-0" CONTINUOUS COMPOSITE PLATE GIRDER UNIT (UNIT 1)
WHITE RIVER

ROUTE SEC.

ARKANSAS STATE HIGHWAY COMMISSION
LITTLE ROCK, ARK.

DRAWN BY: CSG DATE: JUNE 2013 FILENAME: b005836_sl.dgn
CHECKED BY: CMW DATE: 9/29/13 SCALE: AS NOTED
DESIGNED BY: RBR DATE: JUNE 2013

BRIDGE NO. 07289 DRAWING NO. 54108

PRINT DATE: 8/27/2013

DATE REVISED	DATE FILMED	DATE REVISED	DATE FILMED	FED. ROAD DIST. NO.	STATE	FED. AID PROJ. NO.	SHEET NO.	TOTAL SHEETS
				6	ARK.			
				JOB NO.		005836	91	230
				(1)	07289 - 246' CONT. UNIT - 54109			

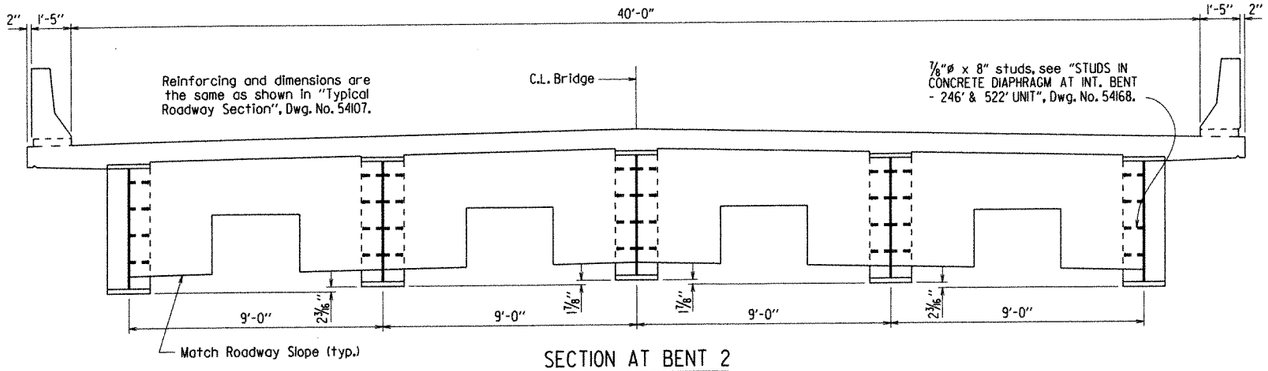

SECTION AT BENT 2

Looking Ahead
Scale: 3/8" = 1'-0"

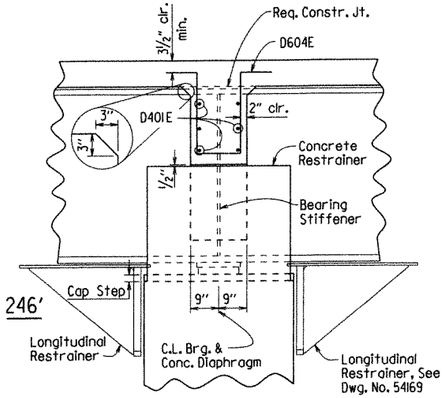

SECTION C-C

Scale: 1/2" = 1'-0"

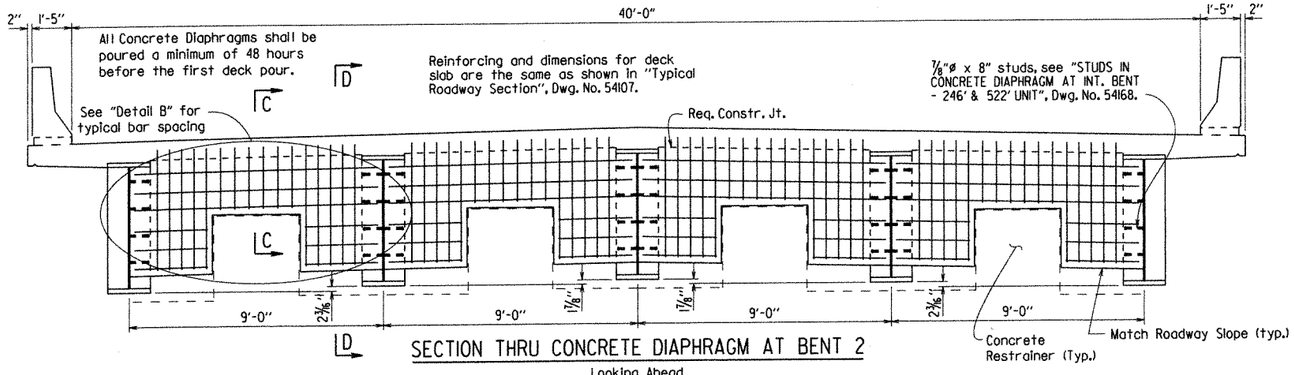

SECTION THRU CONCRETE DIAPHRAGM AT BENT 2

Looking Ahead
Scale: 3/8" = 1'-0"

1/2" Polystyrene shall be used as a bond breaker between the concrete restrainer and the concrete diaphragm and may remain in place.

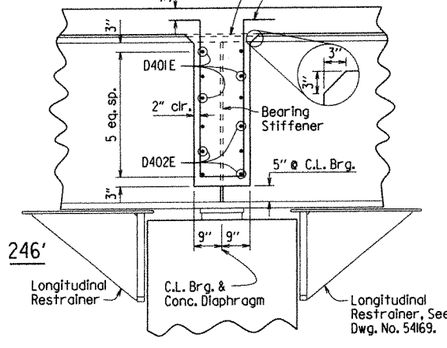

SECTION D-D

Scale: 1/2" = 1'-0"

REMOVABLE FORMS FOR DIAPHRAGMS SHALL BE USED

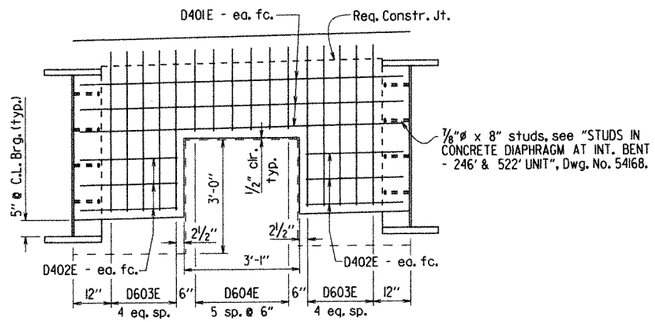

DETAIL B

Scale: 1/2" = 1'-0"

STATE OF ARKANSAS
Carl J. Fusselier
REGISTERED PROFESSIONAL ENGINEER
No. 7510
8/29/13
CARL J. FUSSELIER

BRIDGE ENGINEER

SHEET 3 OF 7
DETAILS OF 246'-0" CONTINUOUS COMPOSITE PLATE GIRDER UNIT (UNIT 1)
WHITE RIVER

ROUTE SEC.

ARKANSAS STATE HIGHWAY COMMISSION
LITTLE ROCK, ARK.

DRAWN BY: CSG DATE: JUNE 2013 FILENAME: b005836_sl.dgn
CHECKED BY: CMW DATE: 8/29/13 SCALE: AS NOTED
DESIGNED BY: RBR DATE: JUNE 2013

BRIDGE NO. 07289 DRAWING NO. 54109

PRINT DATE: 8/27/2013

DATE REVISED	DATE FILMED	DATE REVISED	DATE FILMED	FED. ROAD DIST. NO.	STATE	FED. AID PROJ. NO.	SHEET NO.	TOTAL SHEETS
				6	ARK.			
				JOB NO.		005836	92	230
				①	07289 - 246' CONT. UNIT - 54110			

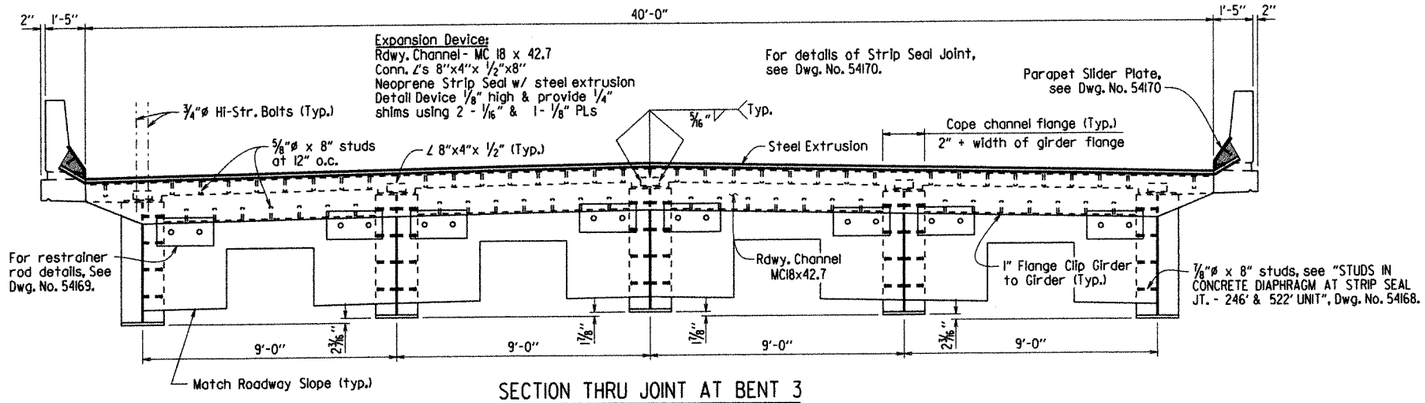

SECTION THRU JOINT AT BENT 3

Looking Back
Scale: ⅜" = 1'-0"

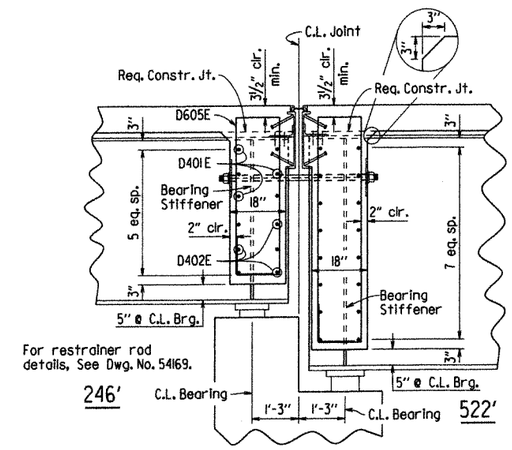

SECTION F-F

Scale: ½" = 1'-0"

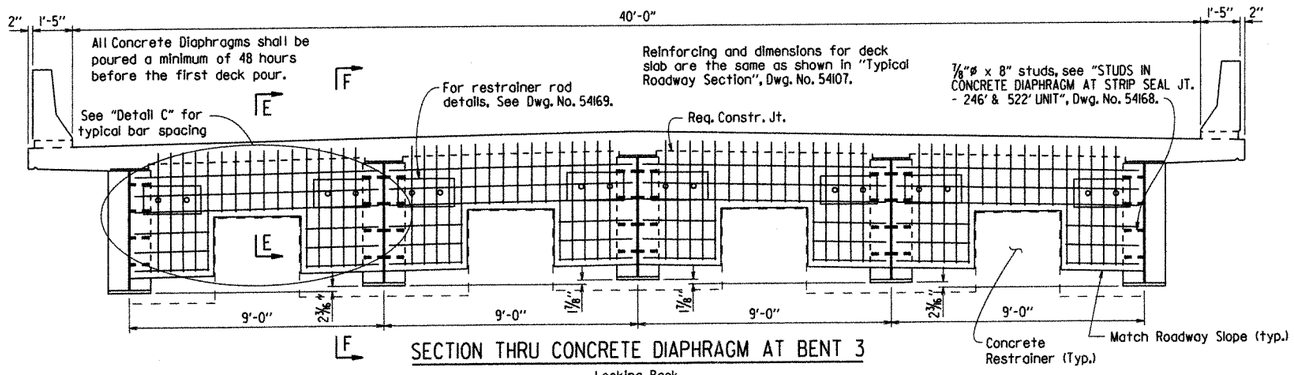

SECTION THRU CONCRETE DIAPHRAGM AT BENT 3

Looking Back
Scale: ⅜" = 1'-0"

½" Polystyrene shall be used as a bond breaker between the concrete restrainer and the concrete diaphragm and may remain in place.

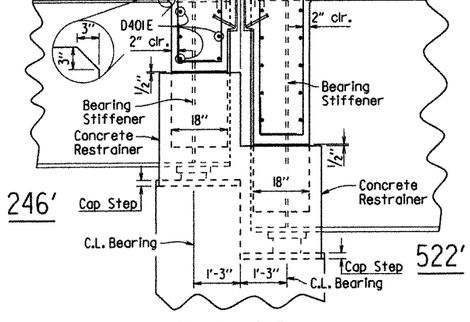

SECTION E-E

Scale: ½" = 1'-0"

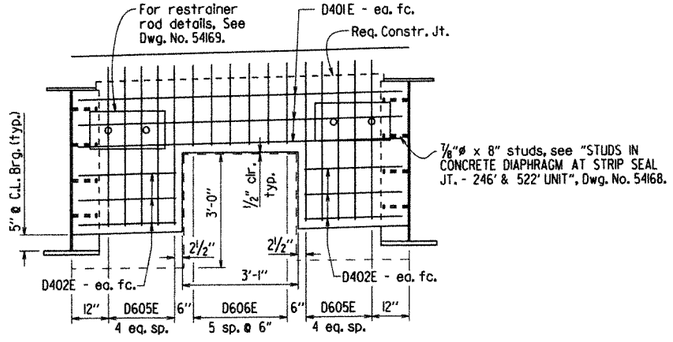

DETAIL C

Scale: ½" = 1'-0"

REMOVABLE FORMS FOR DIAPHRAGMS SHALL BE USED

STATE OF ARKANSAS
Carl T. Puseller
REGISTERED PROFESSIONAL ENGINEER
No. 7510
9/25/13
CARL T. PUSELLER
BRIDGE ENGINEER

SHEET 4 OF 7
DETAILS OF 246'-0" CONTINUOUS COMPOSITE PLATE GIRDER UNIT (UNIT 1)
WHITE RIVER

ROUTE SEC.

ARKANSAS STATE HIGHWAY COMMISSION
LITTLE ROCK, ARK.

DRAWN BY: CSG DATE: JUNE 2013 FILENAME: b005836_sl.dgn
CHECKED BY: CMW DATE: 9/23/13 SCALE: AS NOTED
DESIGNED BY: RBR DATE: JUNE 2013

BRIDGE NO. 07289 DRAWING NO. 54110

PRINT DATE: 8/27/2013

DATE REVISED	DATE FILMED	DATE REVISED	DATE FILMED	FED. ROAD DIST. NO.	STATE	FED. AID PROJ. NO.	SHEET NO.	TOTAL SHEETS
				6	ARK.			
				JOB NO.		005836	93	230
				①	07289 - 246' CONT. UNIT - 54111			

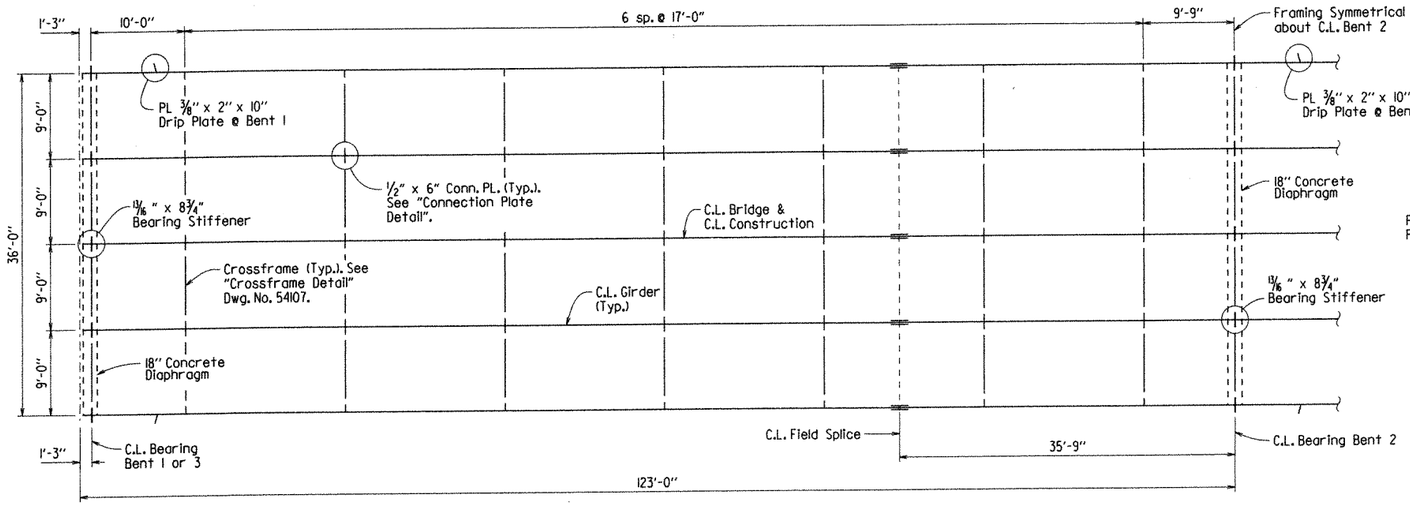

For Drip Plate details see "BOTTOM FLANGE DRIP PLATE", Dwg. No. 54169.

FRAMING PLAN

Scale 1/8" = 1'-0"

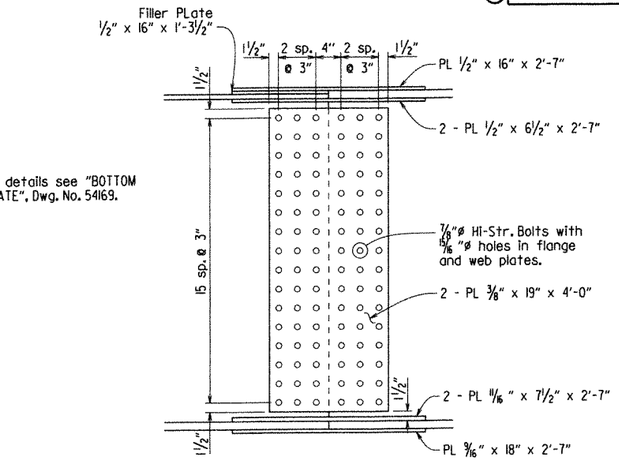

WEB SPLICE

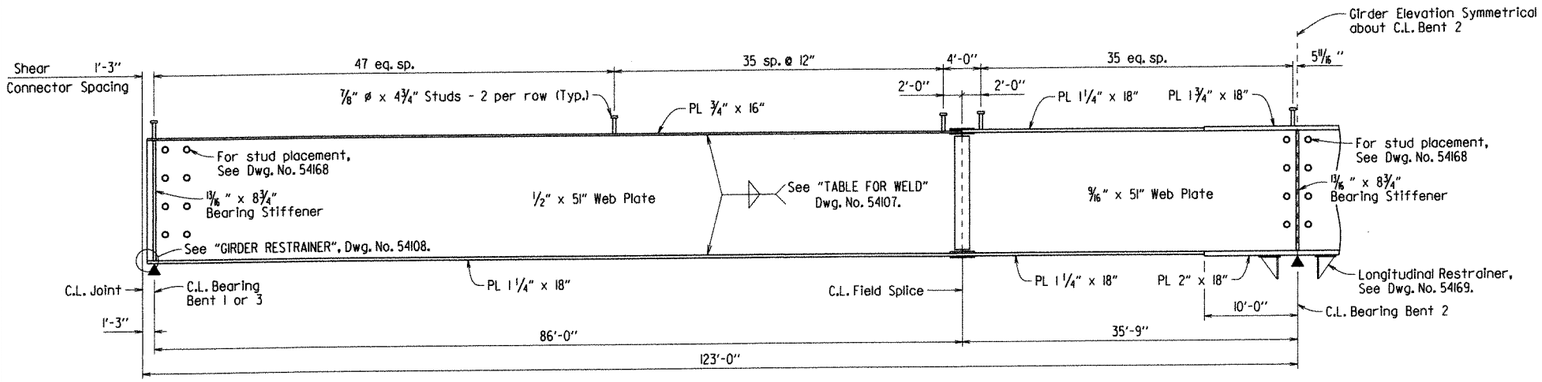

TYPICAL GIRDER ELEVATION

Scale 1/8" = 1'-0"

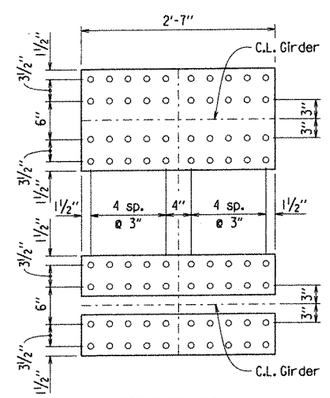

TOP FLANGE SPLICE

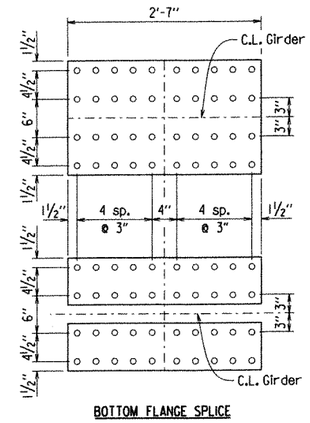

BOTTOM FLANGE SPLICE

DETAILS OF FIELD SPLICE

Scale 1" = 1'-0"

All Field Splice Plates shall be AASHTO M270, Gr. 50W
All Field Splice Bolts shall be 7/8"ø H.S. Bolts
All Field Splice Bolt Holes shall be 15/16"ø

All structural Steel shall be AASHTO M270, Gr. 50W unless otherwise noted. Bolted field splices may be eliminated or shop welded splices may be substituted with the approval of the Engineer. Payment will be made on the basis of plan quantities.

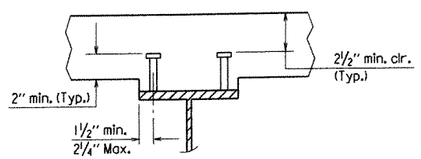

Stud Shear Connectors shown shall be 7/8"ø x 4 3/4" long, granular flux filled, solid fluxed or equal, and automatically end welded to the girder flange in accordance with the recommendations of the Manufacturer. 3/4"ø studs may be used in place of the 7/8"ø studs shown, at the ratio of 1.361 - 3/4"ø studs in place of one 7/8"ø stud. 7/8"ø studs will be used as basis for measurement of structural steel in shear connectors. Maximum stud spacing = 24"

SHEAR CONNECTOR DETAIL

No Scale

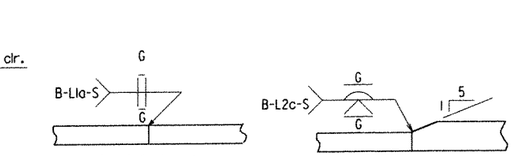

DETAILS OF WELDED SPLICES

No Scale

① If permanant deck forms are used, the fabricator shall clip the plate as necessary to accommodate the support angle.

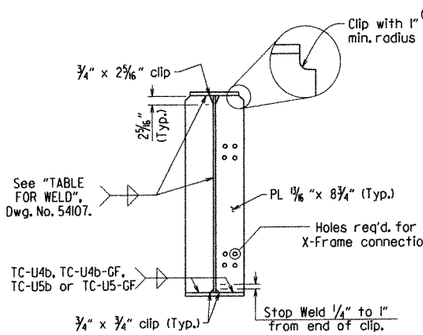

Bearing stiffeners to be fabricated so as to be vertical in their final position.

BEARING STIFFENER DETAIL

No Scale

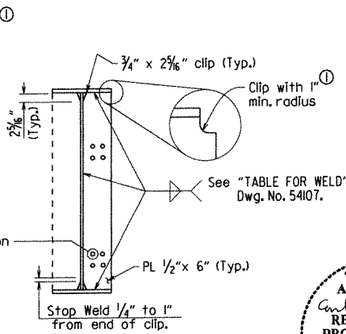

CONNECTION PLATE DETAIL

No Scale

STATE OF ARKANSAS
Carl J. Puseller
REGISTERED PROFESSIONAL ENGINEER
No. 7510
8/28/12
CARL J. PUSELLER

BRIDGE ENGINEER

SHEET 5 OF 7
DETAILS OF 246'-0" CONTINUOUS COMPOSITE PLATE GIRDER UNIT (UNIT 1) WHITE RIVER

ROUTE SEC.

ARKANSAS STATE HIGHWAY COMMISSION

LITTLE ROCK, ARK.

DRAWN BY: RBR DATE: SEPT. 2012 FILENAME: b005836_sl.dgn
CHECKED BY: CSL DATE: 8/28/13 SCALE: As shown
DESIGNED BY: RBR DATE: SEPT. 2012

BRIDGE NO. 07289 DRAWING NO. 54111

PRINT DATE: 8/28/2013

DATE REVISED	DATE FILMED	DATE REVISED	DATE FILMED	FED. ROAD DIST. NO.	STATE	FED. AID PROJ. NO.	SHEET NO.	TOTAL SHEETS
				6	ARK.			
				JOB NO.		005836	94	230
				①		07289 - 246' CONT. UNIT - 54112		

All concrete diaphragms shall be poured before first deck pour. Pours with the same number may be placed simultaneously or separately. All pours (1) must be placed before Pour (2) can be placed. 48 hours shall elapse between the end of a Pour and the start of the next pour. 72 hours shall elapse between the end of a pour and the start of an adjacent pour. Any railing pours made before the entire slab unit has been placed must be approved by the Engineer. Concrete in bridge superstructure shall be consolidated for the entire pour before any concrete has taken its initial set. This may require the use of a retarding agent. The Contractor must obtain approval from the Engineer for any deviations from the pouring sequence shown.

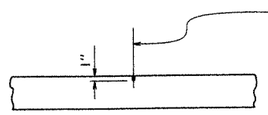

SLAB JOINT DETAIL

No Scale

½" x 1" Type 3, 4 or 6 Joint Sealer. See subsections 501.02 (h)(2) and 501.05 (j). Backer rod filler will not be required. Joint Sealer shall be measured and paid for as Class S (AE) Concrete-Bridge. Slab joints shall extend to the outside edge of the deck slab. Slab joint shall be installed before the parapet rail is poured. If slab joints are to be sawed, they shall be sawed as soon as the concrete has sufficiently set to allow sawing of the joint without damage to the slab. Slab joints shall be placed at all pouring sequence construction joints and required slab joint locations. Slab joints shall align with parapet open joints.

① C.L. Full-Depth Parapet Joint (¼" to 1" max.) Stop 4" from top of slab

② C.L. Partial-Depth Parapet Joint (¼" to 1" max.) Stop 1'-2" from top of slab

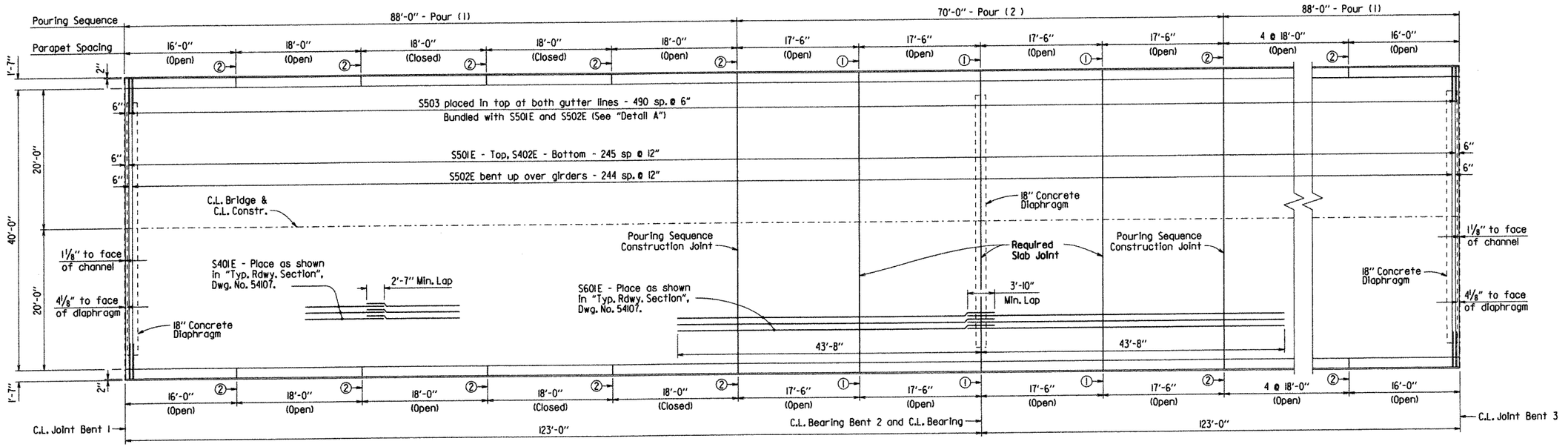

REINFORCING PLAN & DECK POURING SEQUENCE

Scale ⅛" = 1'-0"

TABLE OF DEAD LOAD DEFLECTIONS (INCHES)

Span	Point of Deflection	Interior & Exterior Girders: Str. Steel	Str. Steel + Slab	Str. Steel + Slab + Parapet
C.L. Unit →	0	0.000	0.000	0.000
	0.1	0.192	0.979	1.034
	0.2	0.352	1.791	1.893
	0.3	0.457	2.322	2.455
	0.4	0.495	2.513	2.658
	0.5	0.466	2.362	2.500
	0.6	0.380	1.922	2.036
	0.7	0.258	1.303	1.382
	0.8	0.132	0.664	0.706
	0.9	0.037	0.183	0.195
	0	0.000	0.000	0.000

Table is symmetrical about C.L. Unit

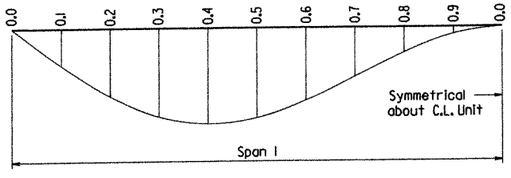

Camber for Dead Load Deflection plus Vertical curve +/-¼" tolerance. Deflections shown are along C.L. Girder from a chord from C.L. Bearing to C.L. Bearing. Vertical curve corrections not included.

DEAD LOAD DEFLECTION DIAGRAM

No Scale

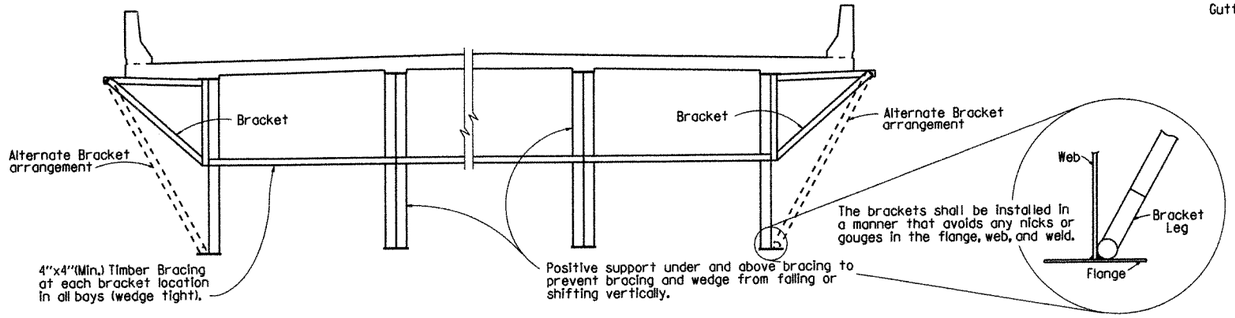

If a transverse finishing machine is used, the rail shall be supported directly over the exterior girders, or as an alternate, the rail may be supported by the overhang brackets if the above strutting system is used. The strutting system may be omitted if ½" x 6" web stiffeners are welded to the insides of the exterior girders at the location of each bracket or if the alternate bracket arrangement shown above is used. The Alternate Bracket arrangement shall extend down to the junction of the web and bottom flange. The stiffener shall conform to the details for crossframe connection plates shown on drawing No. 54107. No direct payment will be made for brackets, timber bracing, supports, or welded stiffeners. Payment shall be subsidiary to "Structural Steel in Plate Girder Spans (M270, Gr. 50W)."

SCREED RAIL SUPPORT

No Scale

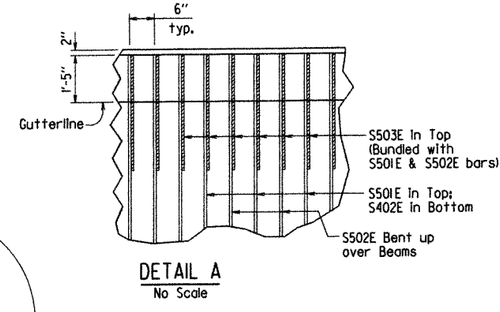

DETAIL A

No Scale

STATE OF ARKANSAS
Carl J. Fusselier
REGISTERED PROFESSIONAL ENGINEER
No. 7510
8/29/13
CARL J. FUSSELIER

BRIDGE ENGINEER

SHEET 6 OF 7
DETAILS OF 246'-0" CONTINUOUS COMPOSITE PLATE GIRDER UNIT (UNIT 1) WHITE RIVER

ROUTE SEC.

ARKANSAS STATE HIGHWAY COMMISSION

LITTLE ROCK, ARK.

DRAWN BY: RBR DATE: SEPT. 2012 FILENAME: b005836_sl.dgn

CHECKED BY: CMW DATE: 8/29/13 SCALE: As shown

DESIGNED BY: RBR DATE: SEPT. 2012

BRIDGE NO. 07289 DRAWING NO. 54112

PRINT DATE: 8/27/2013

DATE REVISED	DATE FILMED	DATE REVISED	DATE FILMED	FED. ROAD DIST. NO.	STATE	FED. AID PROJ. NO.	SHEET NO.	TOTAL SHEETS
				6	ARK.			
				JOB NO.		005836	95	220
				①		07289 - 246' CONT. UNIT - 54113		

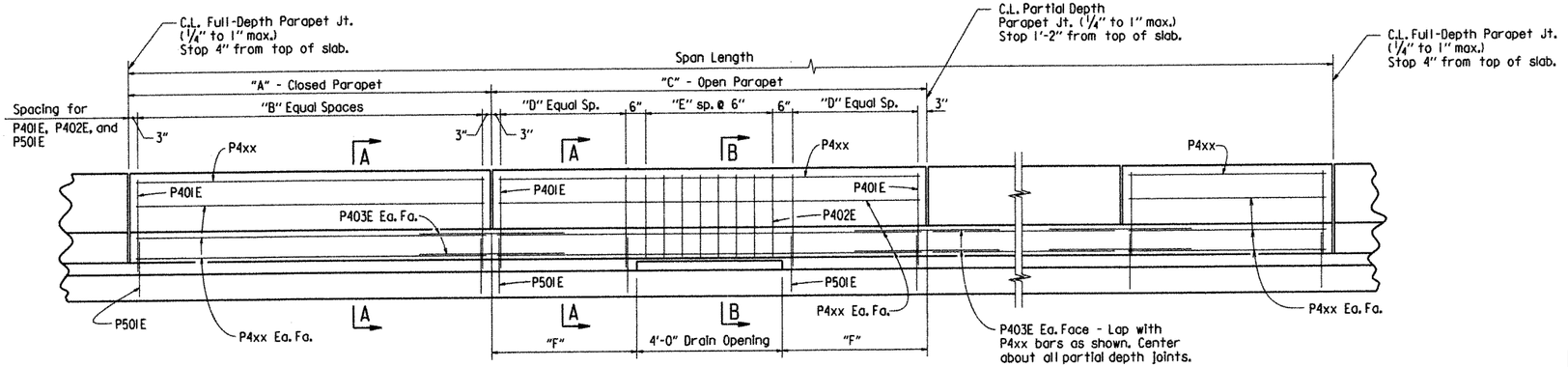

ELEVATION - CONCRETE PARAPET RAIL

1/2" = 1'-0"

For location of full and partial depth parapet joints, see Dwg. No. 54112.

TABLE OF PARAPET RAIL VARIABLES

Closed Rail Panels			Open Rail Panels				
"A"	"B"	P4xx Bar	"C"	"D"	"E"	"F"	P4xx Bar
			16'-0"	11	7	6'-0"	P404E
18'-0"	35	P405E	18'-0"	13	7	7'-0"	P405E
			17'-6"	12	8	6'-9"	P406E

For location of Open and Closed Parapet panels, see "Reinforcing Plan", Dwg. No. 54112.

BAR LIST

MARK	NO. REQ'D.	LENGTH	P.D.
P401E	784	5'-6"	3"
P402E	200	4'-10"	3"
P403E	80	5'-7"	Str.
P404E	28	15'-8"	Str.
P405E	112	17'-8"	Str.
P406E	56	17'-2"	Str.
P501E	784	4'-9"	3 3/4"
S401E	714	37'-4"	Str.
S402E	246	42'-10"	Str.
S501E	246	42'-10"	Str.
S502E	245	43'-10"	3"
S503E	982	5'-0"	Str.
S601E	136	45'-7"	Str.
D401E	72	8'-7"	Str.
D402E	144	2'-7"	Str.
D601E	40	10'-9"	4 1/2"
D602E	24	6'-6"	4 1/2"
D603E	40	10'-9"	4 1/2"
D604E	24	6'-7"	4 1/2"
D605E	40	12'-0"	4 1/2"
D606E	24	7'-10"	4 1/2"

BENDING DIAGRAMS

Dimensions are out to out of bars.

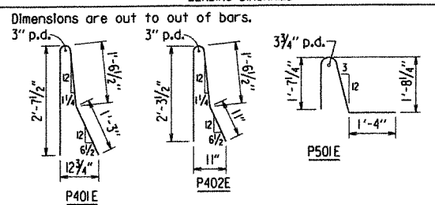

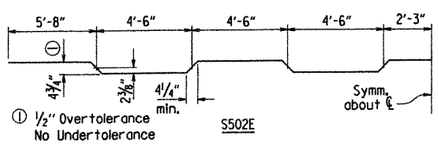

① 1/2" Overtolerance
No Undertolerance

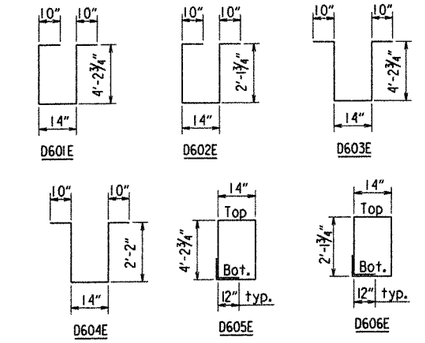

Note: Bars designated with an "E" suffix to be Epoxy Coated.

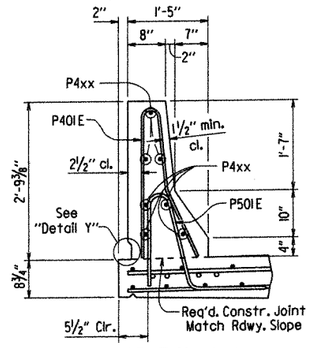

SECTION A-A

Scale: 3/4" = 1'-0"

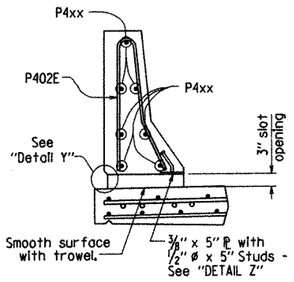

SECTION B-B

Scale: 3/4" = 1'-0"

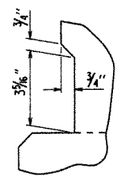

DETAIL Y

No Scale

Place Type D Bridge Name Plate on right parapet rail approx. 2'-0" from front face of backwall. (Beg. of bridge only)

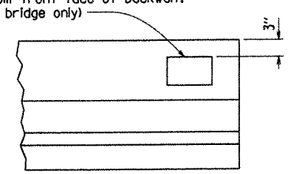

NAME PLATE DETAIL

No Scale

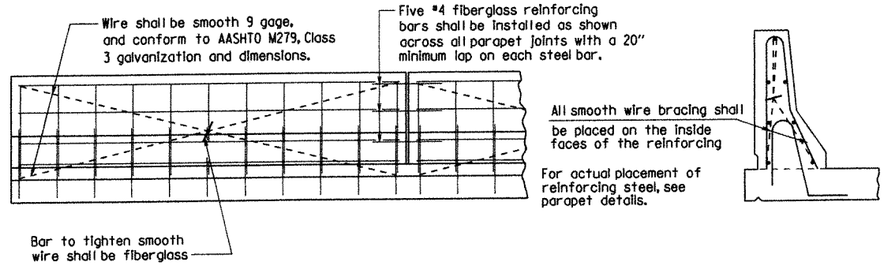

All panels shall be braced as required to prevent racking. All parapet joints shall be sawed as soon as practical to a minimum width of 1/4". To control cracking before sawing, all joints must be grooved before the concrete is set. Sawing of the joints must be controlled so it will follow the grooved joint.

The extruded parapet shall conform to the horizontal and vertical lines shown on the plans or as directed by the Engineer and shall present a smooth, uniform appearance and texture. Exposed surface may be given a light brush finish or a Class 3, Textured Coating Finish, in place of the Class 2, Rubbed Finish.

DETAILS OF OPTIONAL SLIPFORMING OF CONCRETE PARAPET RAIL

No Scale

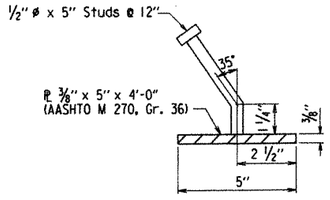

DETAIL Z

No Scale

The surfaces of the 3/8" plates which will not be in contact with concrete shall be painted with aluminum epoxy paint in accordance with Section 638, or as approved by the Engineer. Only one coat is required and shall be applied in the fabricator's shop. Painting will not be paid for directly, but will be considered subsidiary to "Structural Steel in Plate Girder Spans (M270, Gr. 50W)."

Parapet studs shall be 5" long, granular flux filled, solid fluxed or equal, and automatically end welded to the plate. Studs and plates shall meet the requirements of Section 807 and shall be measured and paid for as "Structural Steel in Plate Girder Spans (M270, Gr. 50W)."

STATE OF ARKANSAS
Carl J. Fuselier
REGISTERED PROFESSIONAL ENGINEER
No. 7510
8/28/13
CARL J. FUSELIER

BRIDGE ENGINEER

SHEET 7 OF 7
DETAILS OF 246'-0" CONTINUOUS COMPOSITE PLATE GIRDER UNIT (UNIT 1) WHITE RIVER

ROUTE SEC.

ARKANSAS STATE HIGHWAY COMMISSION
LITTLE ROCK, ARK.

DRAWN BY: RBR DATE: SEPT. 2012 FILENAME: b005836_sl.dgn
CHECKED BY: CMN DATE: 9/28/13 SCALE: As shown
DESIGNED BY: RBR DATE: SEPT. 2012

BRIDGE NO. 07289 DRAWING NO. 54113

PRINT DATE: 8/27/2013

DATE REVISED	DATE FILMED	DATE REVISED	DATE FILMED	FED. ROAD DIST. NO.	STATE	FED. AID PROJ. NO.	SHEET NO.	TOTAL SHEETS
				6	ARK.			
				JOB NO.		005836	96	230
				①	07289 - 522' CONT. UNIT - 54114			

SLAB REINFORCING

Transverse:
S502E @ 12" o.c. Bent up over girders — Alternate
S501E -Top & S402E -Bottom @ 12" o.c.
S503E @ 6" o.c. in top of overhang.

Longitudinal:
S401E - Top & Bottom as shown
S601E - Top as shown over Int. Support
See "Reinforcing Plan", Dwg. Nos. 54122 & 54123.

At the Contractor's option, one epoxy coated straight #5 bar top and bottom may be substituted for bar S502E. Payment will be based on weight of S502E bar.

Class I Protective Surface Treatment shall be applied to the Roadway Surface and to the Face & Top of the Concrete Parapet Rail.

① See "Adjustment for Slab Thickness Tolerance".
② Tolerance: Minus = 1/4"; Plus equal to the amount of slab thickening used to meet slab thickness tolerance. See "Adustment for Slab Thickness Tolerance".
③ See "Rounding Detail".
④ Working Point to Gutterline

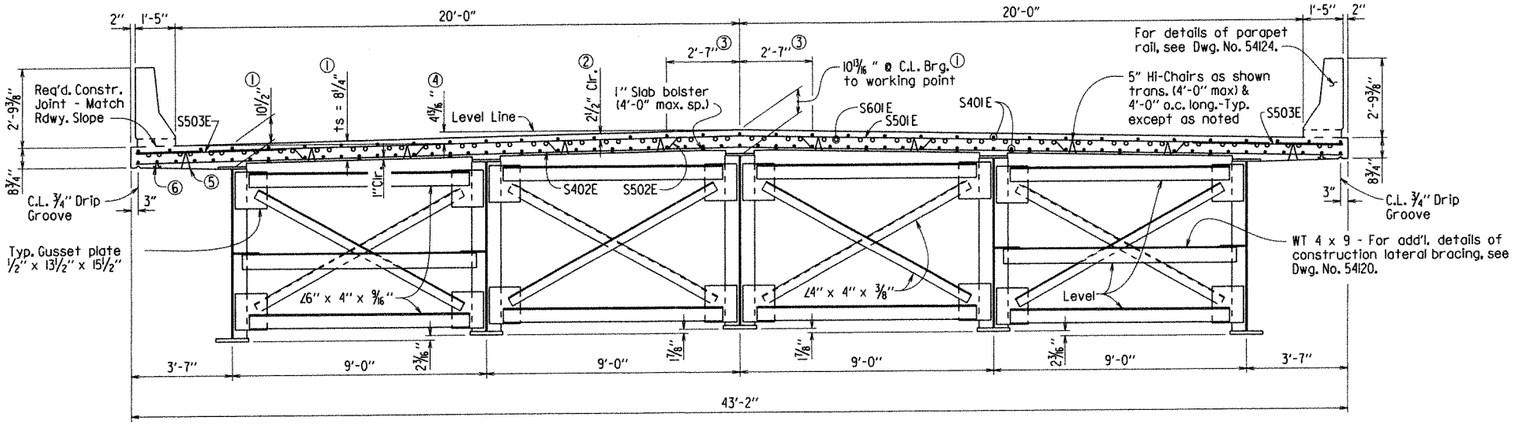

TYPICAL ROADWAY SECTION
Looking Ahead
Scale: 3/8" = 1'-0"

⑤ 6 1/2" Hi-chairs at 4'-0" o.c. long.
⑥ 2" Hi-chairs at 4'-0" o.c. long.

For add'l. details of X-Frames, see Dwg. No. 54120.

The superstructure details shown are for use when Removable Deck Forming is used and are the basis for measurement of Class S(AE) Concrete.

For General Notes, see Dwg. No. 54172.

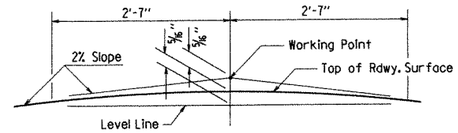

Working Point matches Theoretical Roadway Grade.

ROUNDING DETAIL
No Scale

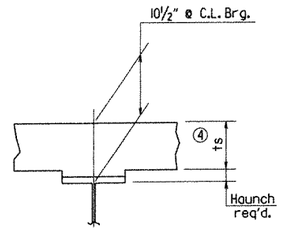

INTERIOR GIRDER

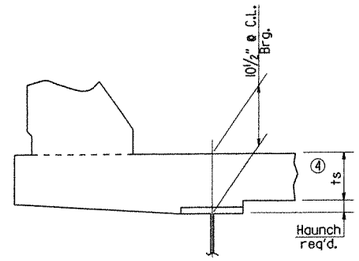

EXTERIOR GIRDER

④ Tolerance when removable deck forming is used is +1/2", -1/4". Haunch forming is required and shall be adjusted to maintain slab thickness tolerance.

NOTE : ts = slab thickness as shown in "Typical Roadway Section".

Haunch dimension may vary within the following limits to maintain the grade and slab thickness tolerance : Minimum -occurs when top flange contacts bottom reinforcing steel; Maximum - top flange thickness plus 1 1/4" for removable or permanent steel deck forms. No increase in concrete and structural steel quantities will be made to maintain tolerances.

Tolerances shown are applicable only when removable deck forming is used. See Std. Dwg. No. 14991 for tolerances when permanent steel deck forms are used unless otherwise noted. Payment for concrete shall be based on removable deck forming.

ADJUSTMENT FOR SLAB THICKNESS TOLERANCE
No Scale

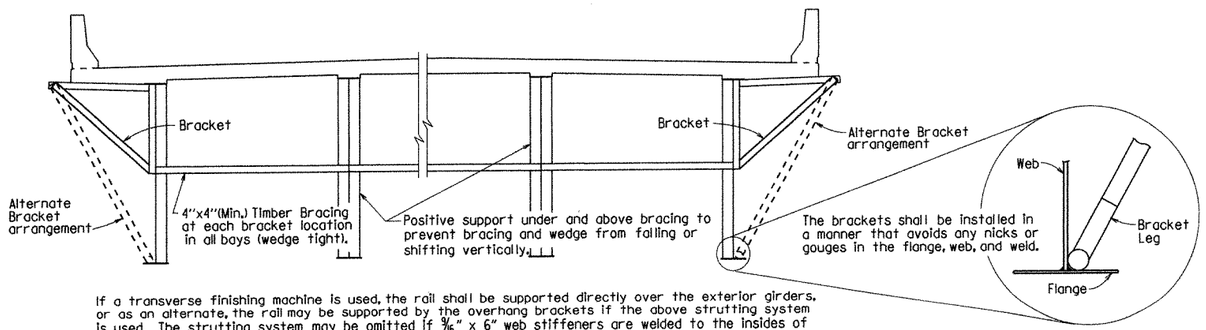

If a transverse finishing machine is used, the rail shall be supported directly over the exterior girders, or as an alternate, the rail may be supported by the overhang brackets if the above strutting system is used. The strutting system may be omitted if 9/16" x 6" web stiffeners are welded to the insides of the exterior girders at the location of each bracket or if the alternate bracket arrangement shown above is used. The Alternate Bracket arrangement shall extend down to the junction of the web and bottom flange. The stiffener shall conform to the details for crossframe connection plates shown in Dwg. No. 54121. No direct payment will be made for brackets, timber bracing, supports, or welded stiffeners. Payment shall be subsidiary to "Structural Steel in Plate Girder Spans (M270, Gr. 50W)."

SCREED RAIL SUPPORT
No Scale

STATE OF ARKANSAS
Carl J. Pusslier
REGISTERED PROFESSIONAL ENGINEER
No. 7510
8/28/13
CARL J. PUSSLIER

BRIDGE ENGINEER

SHEET 1 OF 11
DETAILS OF 522'-0" CONTINUOUS COMPOSITE PLATE GIRDER UNIT (UNIT 2) WHITE RIVER

ROUTE SEC.

ARKANSAS STATE HIGHWAY COMMISSION
LITTLE ROCK, ARK.

DRAWN BY: CSG DATE: MAR. 2013 FILENAME: b005836_s2.dgn
CHECKED BY: DHP DATE: 8-28-13 SCALE: AS NOTED
DESIGNED BY: DHP DATE: SEPT. 2012

BRIDGE NO. 07289 DRAWING NO. 54114

PRINT DATE: 8/28/2013

DATE REVISED	DATE FILMED	DATE REVISED	DATE FILMED	FED. ROAD DIST. NO.	STATE	FED. AID PROJ. NO.	SHEET NO.	TOTAL SHEETS
				6	ARK.			
				JOB NO.		005836	9	23
				(1)	07289 - 522' CONT. UNIT - 54115			

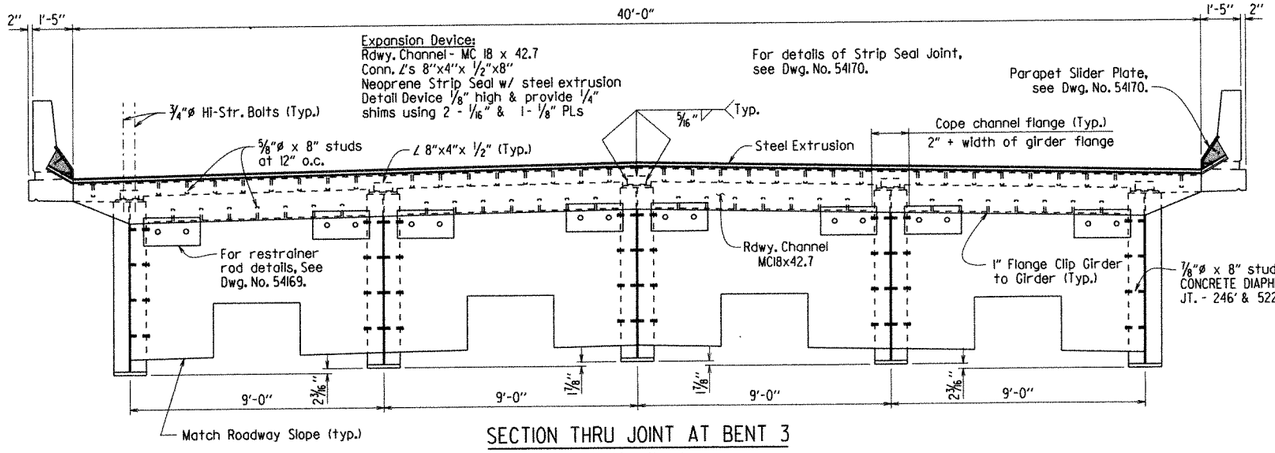

SECTION THRU JOINT AT BENT 3

Looking Ahead
Scale: ⅜" = 1'-0"

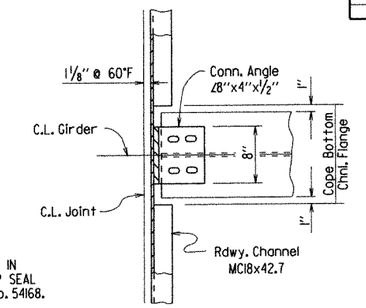

CHANNEL CONNECTION DETAIL - BENT 3

No Scale

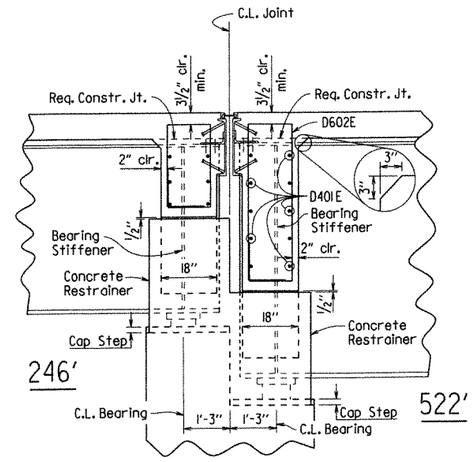

SECTION A-A

Scale: ½" = 1'-0"

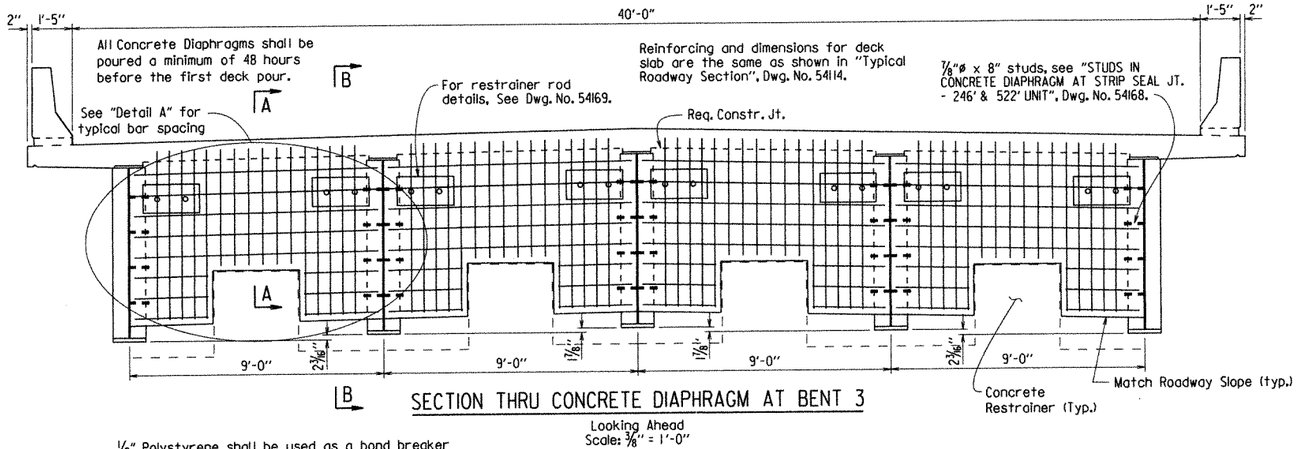

1B

SECTION THRU CONCRETE DIAPHRAGM AT BENT 3

Looking Ahead
Scale: ⅜" = 1'-0"

½" Polystyrene shall be used as a bond breaker between the concrete restrainer and the concrete diaphragm and may remain in place.

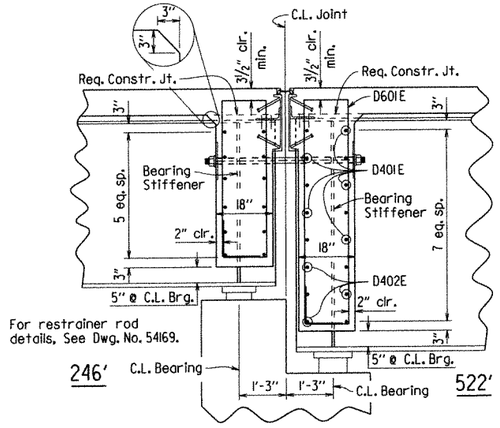

SECTION B-B

Scale: ½" = 1'-0"

REMOVABLE FORMS FOR DIAPHRAGMS SHALL BE USED

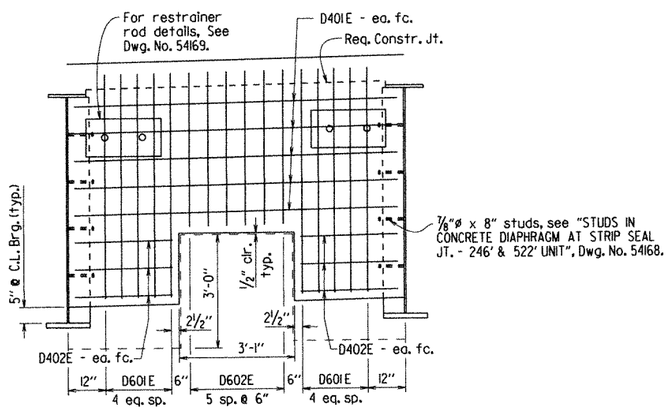

DETAIL A

Scale: ½" = 1'-0"

STATE OF ARKANSAS
Carl J. Puseljer
REGISTERED PROFESSIONAL ENGINEER
No. 7510
8/22/13
CARL J. PUSELJER

BRIDGE ENGINEER

SHEET 2 OF 11
DETAILS OF 522'-0" CONTINUOUS COMPOSITE PLATE GIRDER UNIT (UNIT 2)
WHITE RIVER

ROUTE SEC.

ARKANSAS STATE HIGHWAY COMMISSION
LITTLE ROCK, ARK.

DRAWN BY: CSG DATE: JUNE 2013 FILENAME: b005836_s2.dgn
CHECKED BY: DHP DATE: 8-28-13 SCALE: AS NOTED
DESIGNED BY: RBR DATE: JUNE 2013

BRIDGE NO. 07289 DRAWING NO. 54115

PRINT DATE: 8/27/2013

DATE REVISED	DATE FILMED	DATE REVISED	DATE FILMED	FED. ROAD DIST. NO.	STATE	FED. AID PROJ. NO.	SHEET NO.	TOTAL SHEETS
				6	ARK.			
				JOB NO.		005836	98	230
				①	07289 - 522' CONT. UNIT - 54116			

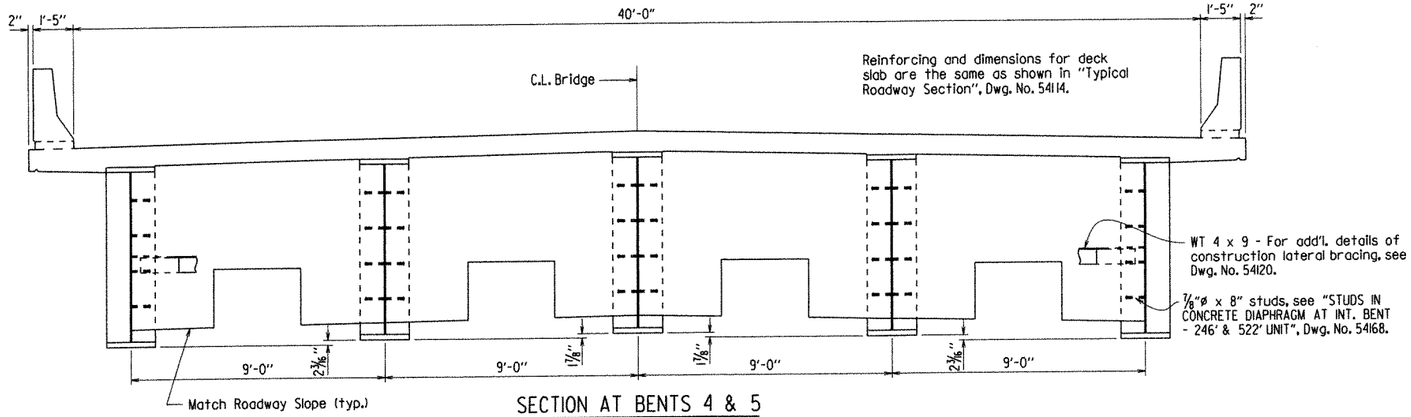

SECTION AT BENTS 4 & 5

Looking Ahead
Scale: ⅜" = 1'-0"

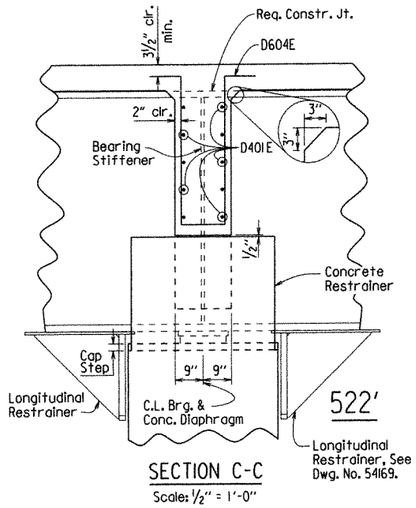

SECTION C-C

Scale: ½" = 1'-0"

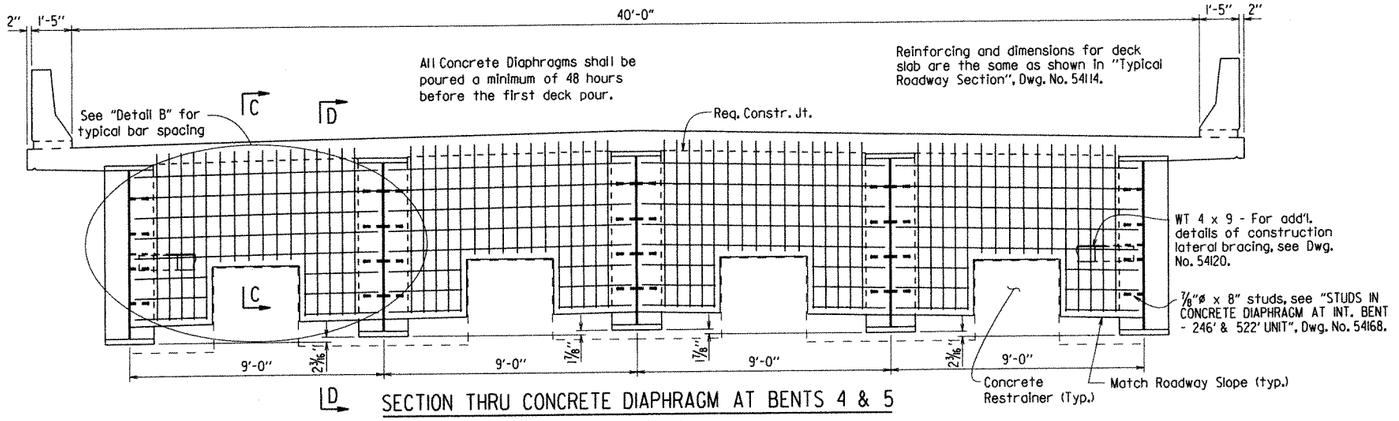

LD SECTION THRU CONCRETE DIAPHRAGM AT BENTS 4 & 5

Looking Ahead
Scale: ⅜" = 1'-0"

½" Polystyrene shall be used as a bond breaker between the concrete restrainer and the concrete diaphragm and may remain in place.

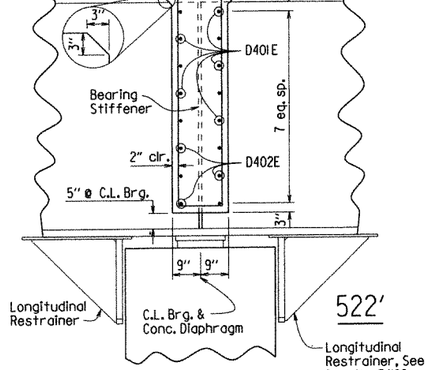

SECTION D-D

Scale: ½" = 1'-0"

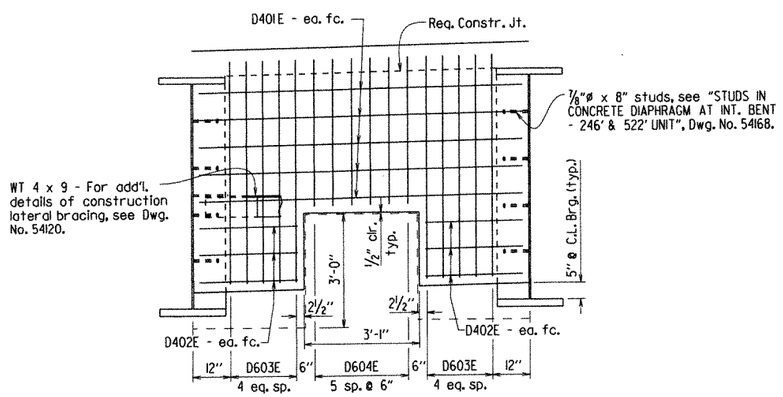

DETAIL B

Scale: ½" = 1'-0"

REMOVABLE FORMS FOR DIAPHRAGMS SHALL BE USED

STATE OF ARKANSAS
Carl E. Fuselier
REGISTERED PROFESSIONAL ENGINEER
No. 7510
8/28/13
CARL E. FUSELIER

BRIDGE ENGINEER

SHEET 3 OF 11
DETAILS OF 522'-0" CONTINUOUS COMPOSITE PLATE GIRDER UNIT
(UNIT 2)
WHITE RIVER

ROUTE SEC.

ARKANSAS STATE HIGHWAY COMMISSION
LITTLE ROCK, ARK.

DRAWN BY: CSG DATE: JUNE 2013 FILENAME: b005836_s2.dgn
CHECKED BY: DHP DATE: 8-28-13 SCALE: AS NOTED
DESIGNED BY: RBR DATE: JUNE 2013

BRIDGE NO. 07289 DRAWING NO. 54116

PRINT DATE: 8/27/2013

DATE REVISED	DATE FILMED	DATE REVISED	DATE FILMED	FED. ROAD DIST. NO.	STATE	FED. AID PROJ. NO.	SHEET NO.	TOTAL SHEETS
				6	ARK.			
				JOB NO.		005836	99	230
				①	07289 - 522' CONT. UNIT - 54117			

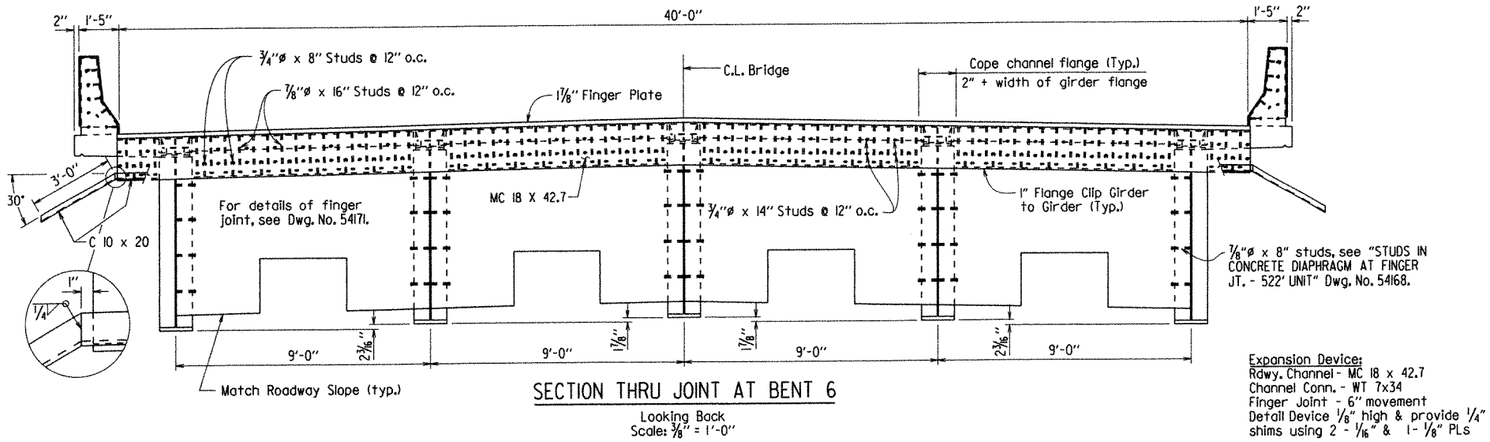

SECTION THRU JOINT AT BENT 6

Looking Back
Scale: ⅞" = 1'-0"

Expansion Device:
Rdwy. Channel - MC 18 x 42.7
Channel Conn. - WT 7x34
Finger Joint - 6" movement
Detail Device ⅛" high & provide ¼" shims using 2 - 1/16" & 1 - ⅛" PLs

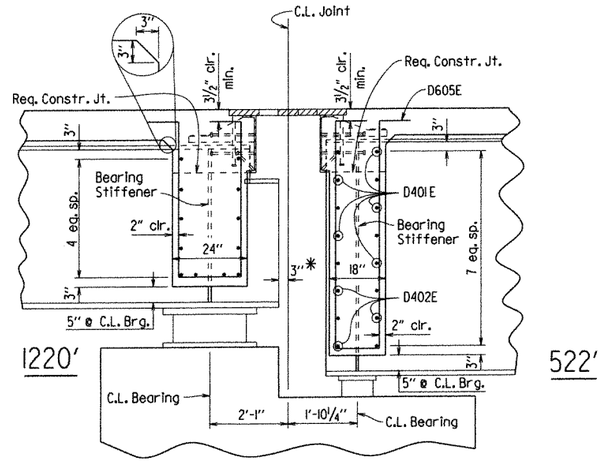

SECTION F-F

Scale: ½" = 1'-0"

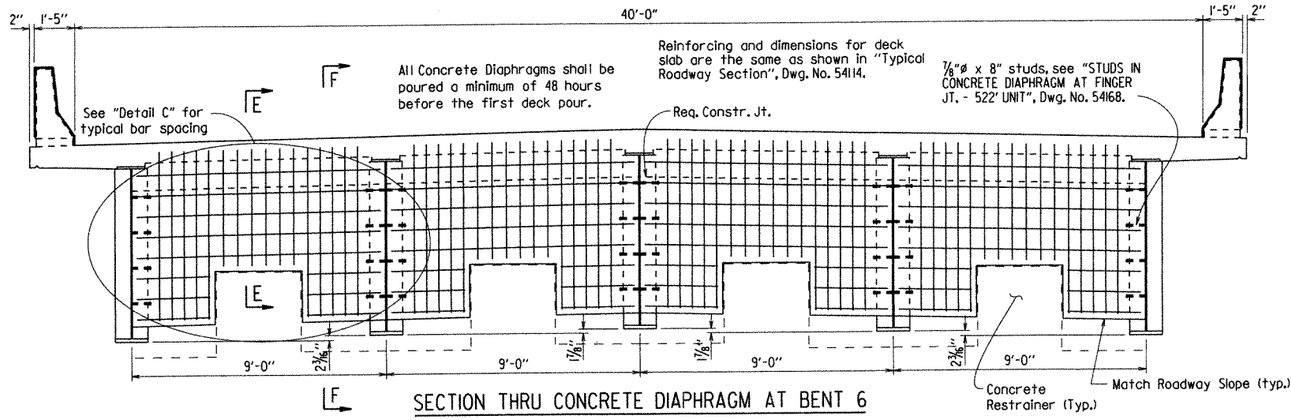

SECTION THRU CONCRETE DIAPHRAGM AT BENT 6

Looking Back
Scale: ⅜" = 1'-0"

½" Polystyrene shall be used as a bond breaker between the concrete restrainer and the concrete diaphragm and may remain in place.

REMOVABLE FORMS FOR DIAPHRAGMS SHALL BE USED

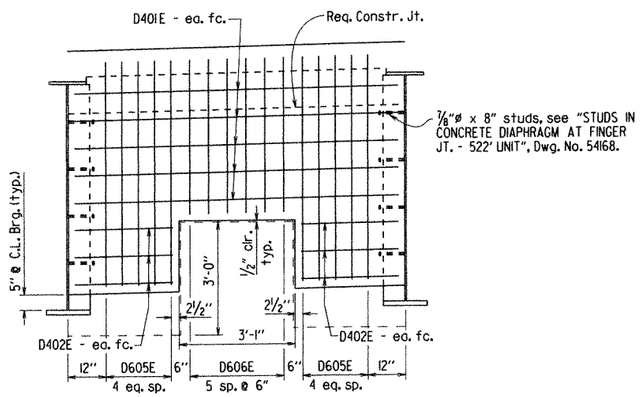

DETAIL C

Scale: ½" = 1'-0"

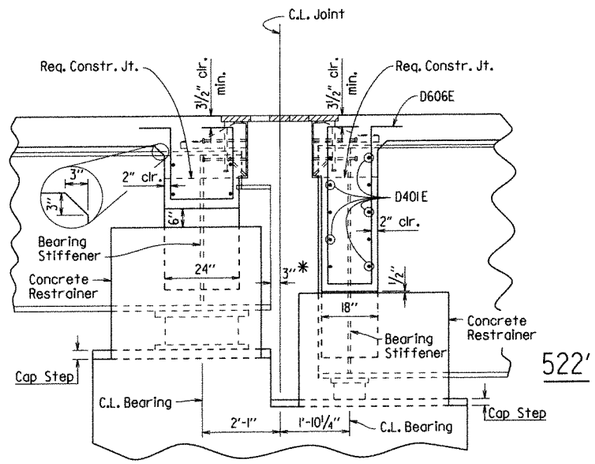

SECTION E-E

Scale: ½" = 1'-0"

STATE OF ARKANSAS
Carl J. Fuselier
REGISTERED PROFESSIONAL ENGINEER
No. 7510
8/29/13
CARL J. FUSELIER

BRIDGE ENGINEER

SHEET 4 OF 11
DETAILS OF 522'-0" CONTINUOUS COMPOSITE PLATE GIRDER UNIT (UNIT 2) WHITE RIVER

ROUTE SEC.

ARKANSAS STATE HIGHWAY COMMISSION
LITTLE ROCK, ARK.

DRAWN BY: CSG DATE: JUNE 2013 FILENAME: b005836_s2.dgn
CHECKED BY: DHP DATE: 8-28-13 SCALE: AS NOTED
DESIGNED BY: RBR DATE: JUNE 2013

BRIDGE NO. 07289 DRAWING NO. 54117

PRINT DATE: 8/27/2013

DATE REVISED	DATE FILMED	DATE REVISED	DATE FILMED	FED. ROAD DIST. NO.	STATE	FED. AID PROJ. NO.	SHEET NO.	TOTAL SHEETS
				6	ARK.			
				JOB NO.		005836	100	280
				①	07289 - 522' CONT. UNIT - 54118			

For Drip Plate details see "BOTTOM FLANGE DRIP PLATE", Dwg. No. 54169.

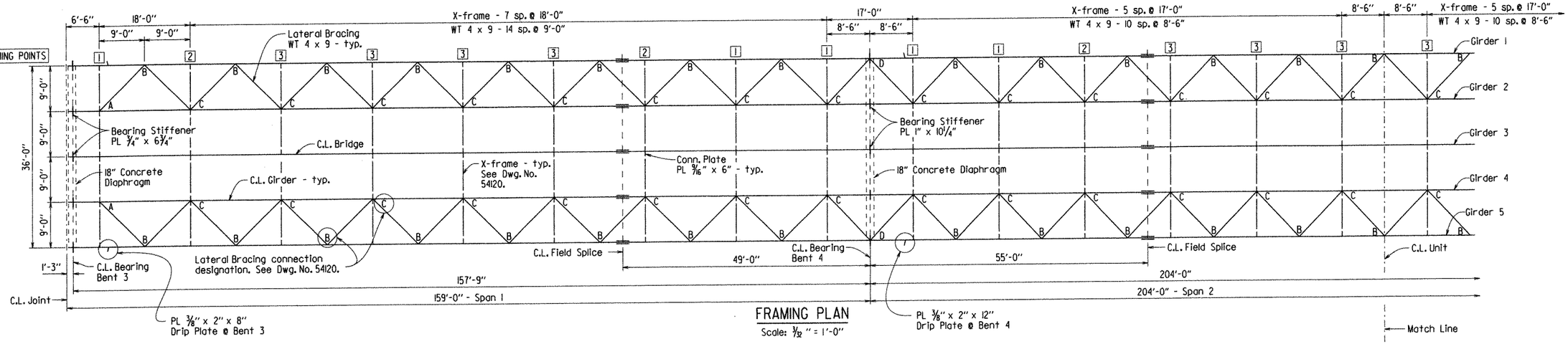

FRAMING PLAN

Scale: 3/32 " = 1'-0"

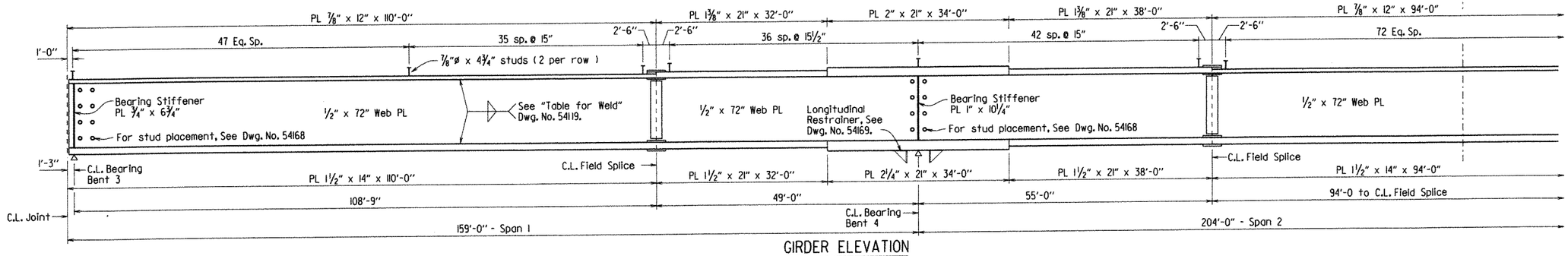

GIRDER ELEVATION

Scale: 3/32 " = 1'-0"

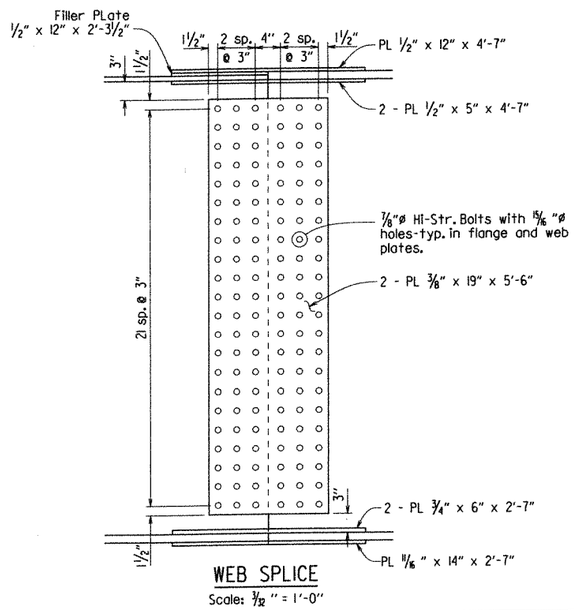

WEB SPLICE

Scale: 3/32 " = 1'-0"

All structural Steel shall be AASHTO M270, Gr. 50W unless otherwise noted. Bolted field splices may be eliminated or shop welded splices may be substituted with the approval of the Engineer. Payment will be made on the basis of plan quantities.

All field splice plates shall be AASHTO M270, Gr. 50W steel.
All field splice bolts shall be 7/8"ø H.S. Bolts
All field splice bolt holes shall be 15/16 "ø

For Details of Welded Splices, see Dwg. No. 54119.

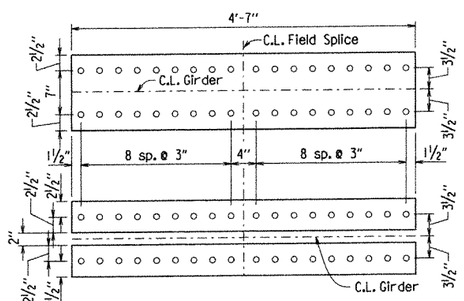

TOP FLANGE SPLICE

Scale: 3/32 " = 1'-0"

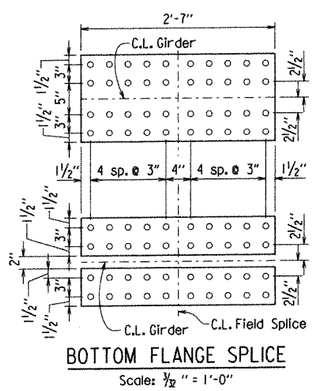

BOTTOM FLANGE SPLICE

Scale: 3/32 " = 1'-0"

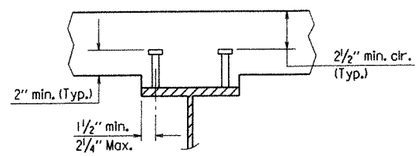

SHEAR CONNECTOR DETAIL

No Scale

Stud Shear Connectors shown shall be 7/8"ø x 4 3/4" long, granular flux filled, solid fluxed or equal, and automatically end welded to the girder flange in accordance with the recommendations of the Manufacturer. 3/4"ø studs may be used in place of the 7/8"ø studs shown, at the ratio of 1.361 - 3/4"ø studs in place of one 7/8"ø stud. 7/8"ø studs will be used as basis for measurement of structural steel in shear connectors. Maximum stud spacing = 24".

STATE OF ARKANSAS
Carl J. Fuselier
REGISTERED PROFESSIONAL ENGINEER
No. 7510
8/28/13
CARL J. FUSELIER

BRIDGE ENGINEER

SHEET 5 OF 11
DETAILS OF 522'-0" CONTINUOUS COMPOSITE PLATE GIRDER UNIT (UNIT 2) WHITE RIVER

ROUTE SEC.

ARKANSAS STATE HIGHWAY COMMISSION

LITTLE ROCK, ARK.

DRAWN BY: CSG DATE: MAR. 2013 FILENAME: b005836_s2.dgn
CHECKED BY: DHP DATE: 8-28-13 SCALE: AS NOTED
DESIGNED BY: DHP DATE: SEPT. 2012

BRIDGE NO. 07289 DRAWING NO. 54118

PRINT DATE: 8/28/2013

DATE REVISED	DATE FILMED	DATE REVISED	DATE FILMED

FED. ROAD DIST. NO.	STATE	FED. AID PROJ. NO.	SHEET NO.	TOTAL SHEETS
6	ARK.			
JOB NO.		005836	101	230
①	07289 - 522' CONT. UNIT - 54119			

For Drip Plate details see "BOTTOM FLANGE DRIP PLATE", Dwg. No. 54169.

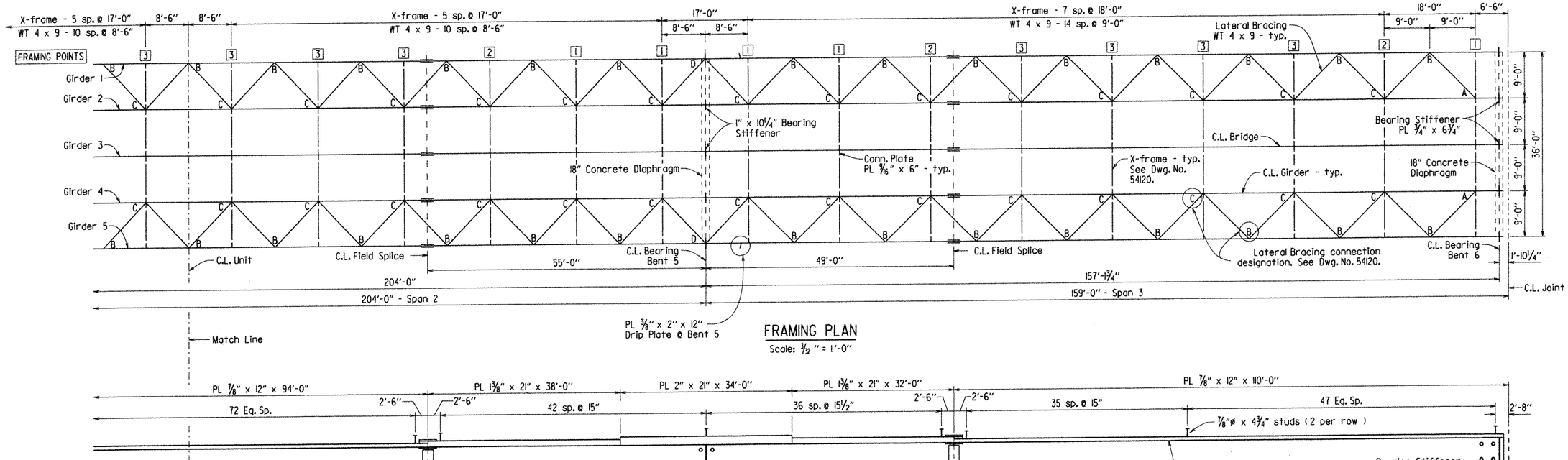

FRAMING PLAN

Scale: 3/32" = 1'-0"

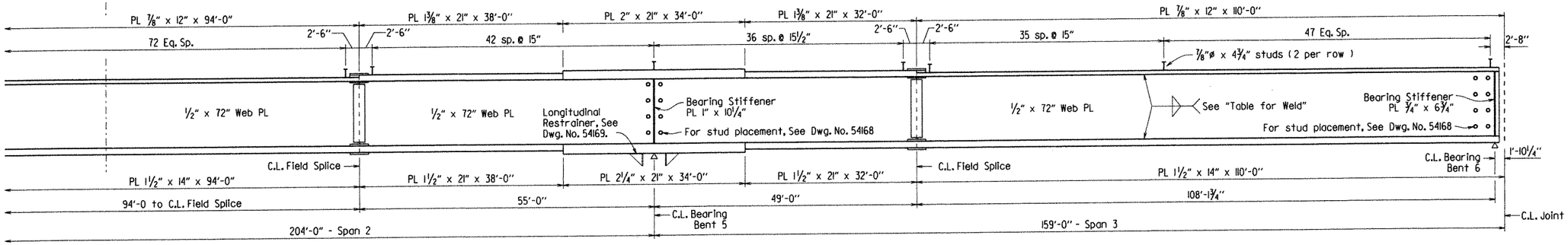

GIRDER ELEVATION

Scale: 3/32" = 1'-0"

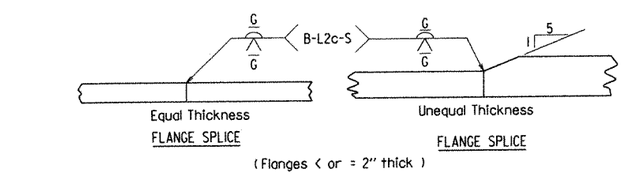

DETAILS OF WELDED SPLICES

No Scale

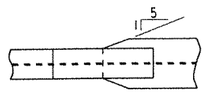

FIELD SPLICE AT UNEQUAL BOTTOM FLANGE WIDTHS

No Scale

TABLE FOR WELD

Material Thickness of Thicker Part Joined (Inches)	Minimum Size of Fillet Weld (Inches)	Single Pass Weld Must Be Used
To ¾" Inclusive	¼"	
Over ¾"	5/16"	

NOTE: When a fillet weld size, as shown on the plans, is larger than the minimum, the first pass shall be that specified for minimum size of fillet weld.

All structural Steel shall be AASHTO M270, Gr. 50W unless otherwise noted. Bolted field splices may be eliminated or shop welded splices may be substituted with the approval of the Engineer. Payment will be made on the basis of plan quantities.

All field splice plates shall be AASHTO M270, Gr. 50W steel.
All field splice bolts shall be ⅞"ø H.S. Bolts
All field splice bolt holes shall be 15/16"ø

STATE OF ARKANSAS
Carl J. Fuselier
REGISTERED PROFESSIONAL ENGINEER
No. 7510
F/2 P/12
CARL J. FUSELIER

BRIDGE ENGINEER

SHEET 6 OF 11
DETAILS OF 522'-0" CONTINUOUS COMPOSITE PLATE GIRDER UNIT (UNIT 2) WHITE RIVER

ROUTE SEC.

ARKANSAS STATE HIGHWAY COMMISSION

LITTLE ROCK, ARK.

DRAWN BY: CSG DATE: MAR. 2013 FILENAME: b005836_s2.dgn
CHECKED BY: DHP DATE: 8-28-13 SCALE: AS NOTED
DESIGNED BY: DHP DATE: SEPT. 2012

BRIDGE NO. 07289 DRAWING NO. 54119

PRINT DATE: 8/28/2013

DATE REVISED	DATE FILMED	DATE REVISED	DATE FILMED	FED. ROAD DIST. NO.	STATE	FED. AID PROJ. NO.	SHEET NO.	TOTAL SHEETS
				6	ARK.			
				JOB NO.		005836	102	230
				①		07289 - 522' CONT. UNIT - 54120		

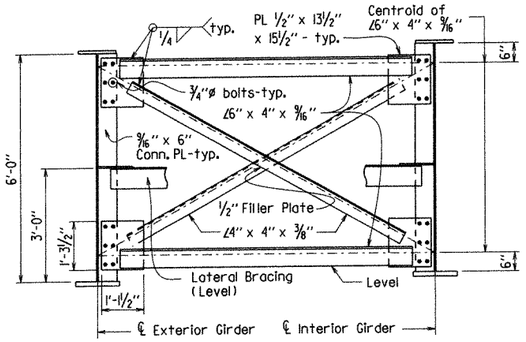

DETAILS OF X-FRAME

At Frame Point 1
Scale: ½" = 1'-0"

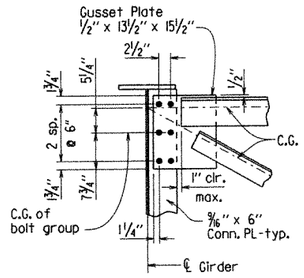

UPPER X-FRAME CONNECTION

At Frame Point 1
Scale: ¾" = 1'-0"

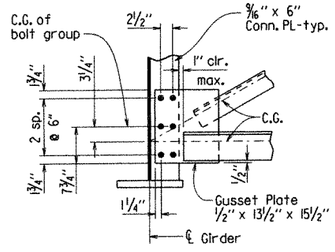

LOWER X-FRAME CONNECTION

At Frame Point 1
Scale: ¾" = 1'-0"

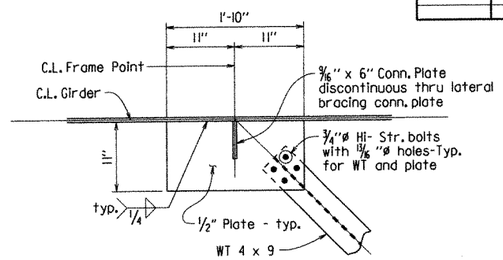

LATERAL BRACING CONNECTION A

Scale: 1" = 1'-0"

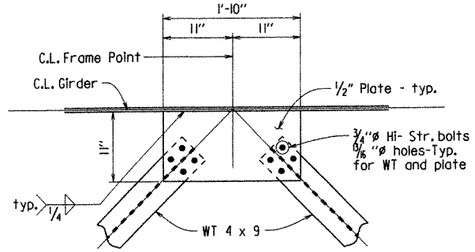

LATERAL BRACING CONNECTION B

Scale: 1" = 1'-0"

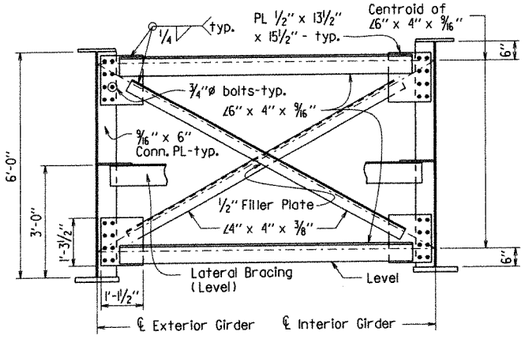

DETAILS OF X-FRAME

At Frame Point 2
Scale: ½" = 1'-0"

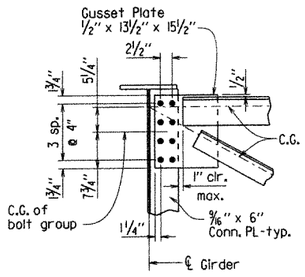

UPPER X-FRAME CONNECTION

At Frame Point 2
Scale: ¾" = 1'-0"

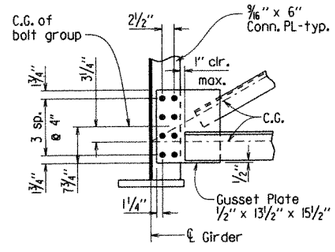

LOWER X-FRAME CONNECTION

At Frame Point 2
Scale: ¾" = 1'-0"

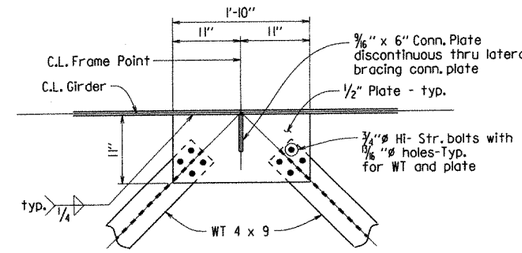

LATERAL BRACING CONNECTION C

Scale: 1" = 1'-0"

Ends of lateral bracing members shall be kept a minimum of 4" from the web and any stiffener or conn. plate.

At the contractor's option, holes in one end of the WT may be field drilled. Minimum clearance from C.L. bolt to edge of plate is 1½".

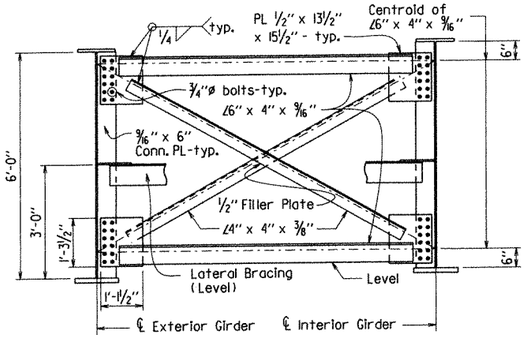

DETAILS OF X-FRAME

At Frame Point 3
Scale: ½" = 1'-0"

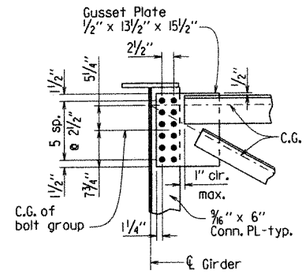

UPPER X-FRAME CONNECTION

At Frame Point 3
Scale: ¾" = 1'-0"

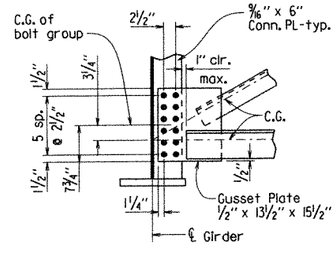

LOWER X-FRAME CONNECTION

At Frame Point 3
Scale: ¾" = 1'-0"

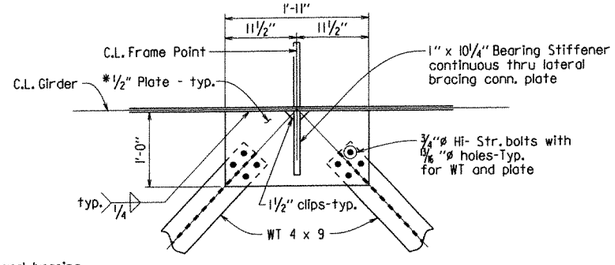

LATERAL BRACING CONNECTION D

Scale: 1" = 1'-0"

*The ½" lateral bracing connection plate shall be notched at these locations to allow for the bearing stiffener as required.

STATE OF ARKANSAS
Carl J. Fuselier
REGISTERED PROFESSIONAL ENGINEER
No. 7510
8/28/13
CARL J. FUSELIER

BRIDGE ENGINEER

SHEET 7 OF 11
DETAILS OF 522'-0" CONTINUOUS COMPOSITE PLATE GIRDER UNIT (UNIT 2)
WHITE RIVER

ROUTE SEC.

ARKANSAS STATE HIGHWAY COMMISSION
LITTLE ROCK, ARK.

DRAWN BY: CSG DATE: MAR. 2013 FILENAME: b005836_s2.dgn
CHECKED BY: DHP DATE: 8-28-13 SCALE: AS NOTED
DESIGNED BY: DHP DATE: SEPT. 2012

BRIDGE NO. 07289 DRAWING NO. 54120

PRINT DATE: 8/27/2013

DATE REVISED	DATE FILMED	DATE REVISED	DATE FILMED	FED. ROAD DIST. NO.	STATE	FED. AID PROJ. NO.	SHEET NO.	TOTAL SHEETS
				6	ARK.			
				JOB NO.		005836	103	230
				①	07289 - 522' CONT. UNIT - 54121			

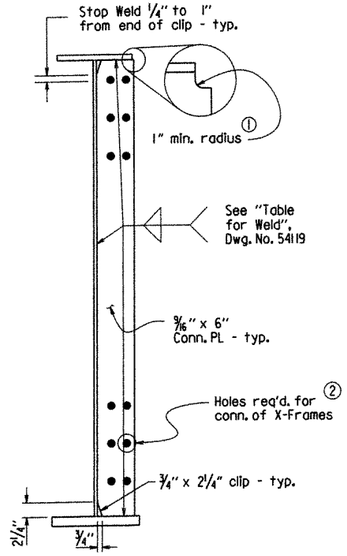

CONNECTION PLATES - GIRDERS 1 & 5

Scale: 1" = 1'-0"

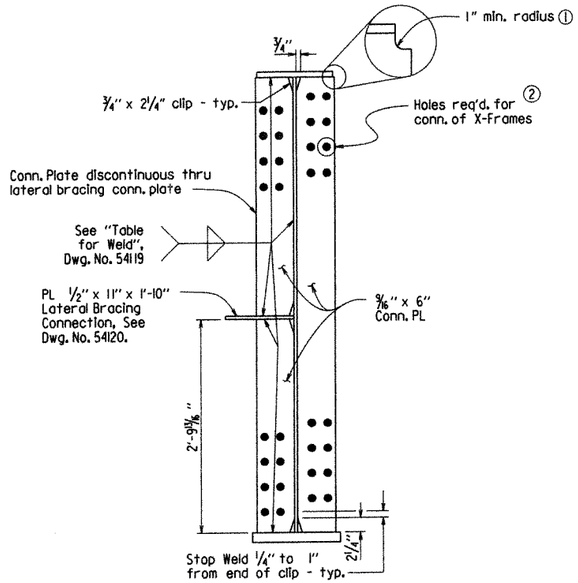

CONNECTION PLATES - GIRDERS 2 & 4

Scale: 1" = 1'-0"

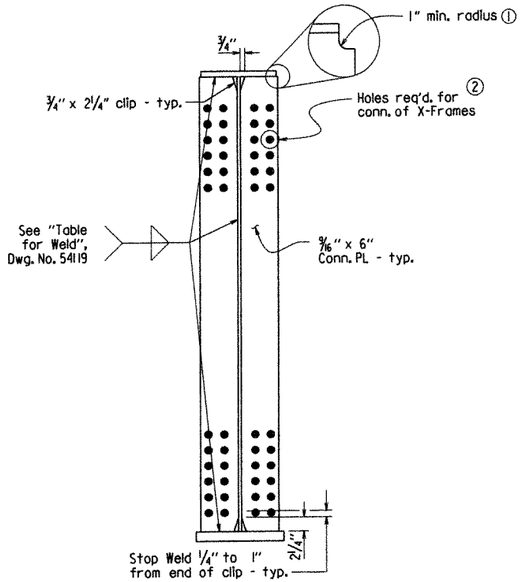

CONNECTION PLATES - GIRDER 3

Scale: 1" = 1'-0"

① If permanent steel bridge deck forms are used, the fabricator shall clip the plate as necessary to accomodate the deck form support.

② Connection plates along framing points will have 6, 8, or 12 holes as shown on Dwg. No. 54120.

Bearing stiffeners to be fabricated so as to be vertical in their final position.

Bolts in X-Frame connections shall be properly installed and tightened is accordance with Subsection 807.11 except as noted.

TABLE OF DEAD LOAD DEFLECTIONS (INCHES)

Span	Point of Deflection	Interior & Exterior Beams		
		Str. Steel	Str. Steel + Slab	Str. Steel + Slab + Parapet
1	0	0.000	0.000	0.000
	0.1	0.311	1.484	1.562
	0.2	0.571	2.733	2.879
	0.3	0.744	3.574	3.764
	0.4	0.808	3.896	4.101
	0.5	0.760	3.678	3.867
	0.6	0.619	2.982	3.131
	0.7	0.431	2.057	2.152
	0.8	0.238	1.140	1.183
	0.9	0.083	0.413	0.420
2	0	0.000	0.000	0.000
	0.1	0.062	0.164	0.219
	0.2	0.276	0.948	1.108
	0.3	0.538	1.940	2.211
	0.4	0.748	2.744	3.096
	0.5	0.830	3.053	3.435

C.L. Unit

Table is symmetrical about C.L. Unit

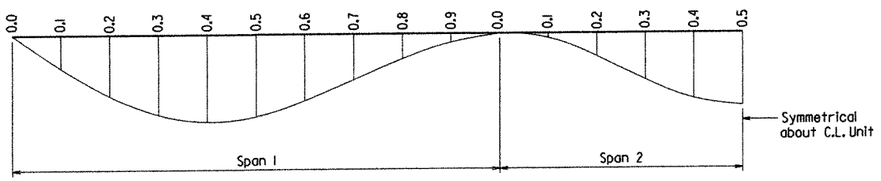

Camber for Dead Load Deflection plus Vertical curve +/-1/4" tolerance. Deflections shown are along C.L. Girder from a chord from C.L. Bearing to C.L. Bearing. Vertical curve corrections not included.

DEAD LOAD DEFLECTION DIAGRAM

No Scale

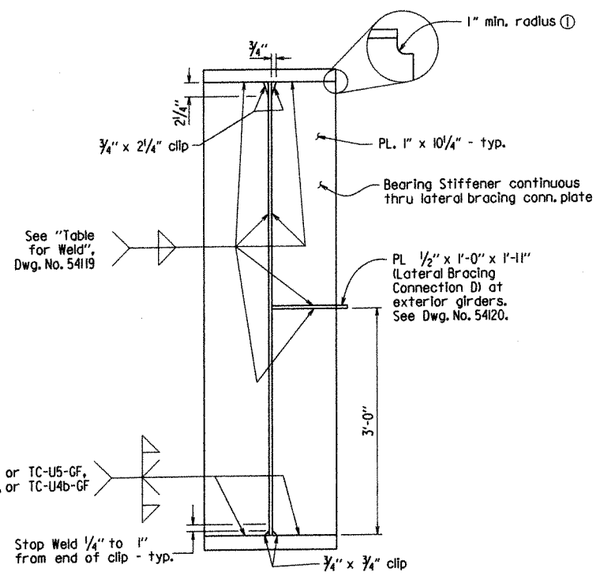

BEARING STIFFENER AT BENTS 4 & 5

Scale: 1" = 1'-0"

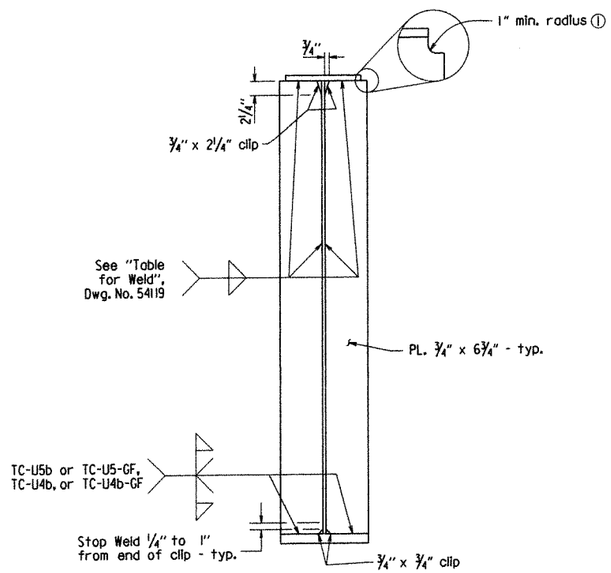

BEARING STIFFENER AT BENTS 3 & 6

Scale: 1" = 1'-0"

STATE OF ARKANSAS
Carl J. Puseliker
REGISTERED PROFESSIONAL ENGINEER
No. 7510
8/28/13
CARL J. PUSELIKER

BRIDGE ENGINEER

SHEET 8 OF 11
DETAILS OF 522'-0" CONTINUOUS COMPOSITE PLATE GIRDER UNIT (UNIT 2)
WHITE RIVER

ROUTE SEC.

ARKANSAS STATE HIGHWAY COMMISSION
LITTLE ROCK, ARK.

DRAWN BY: CSG DATE: MAR. 2013 FILENAME: b005836_s2.dgn
CHECKED BY: DHP DATE: 8-28-13 SCALE: AS NOTED
DESIGNED BY: DHP DATE: SEPT. 2012

BRIDGE NO. 07289 DRAWING NO. 54121

PRINT DATE: 8/27/2013

DATE REVISED	DATE FILMED	DATE REVISED	DATE FILMED	FED. ROAD DIST. NO.	STATE	FED. AID PROJ. NO.	SHEET NO.	TOTAL SHEETS
				6	ARK.			
				JOB NO.		005836	104	230
				(1)		07289 - 522' CONT. UNIT - 54122		

① C.L. Full Depth Parapet Joint (1/4" - 1" max.) Stop 4" from top of slab.

② C.L. Partial Depth Parapet Joint (1/4" - 1" max.) Stop 1'-2" from top of slab.

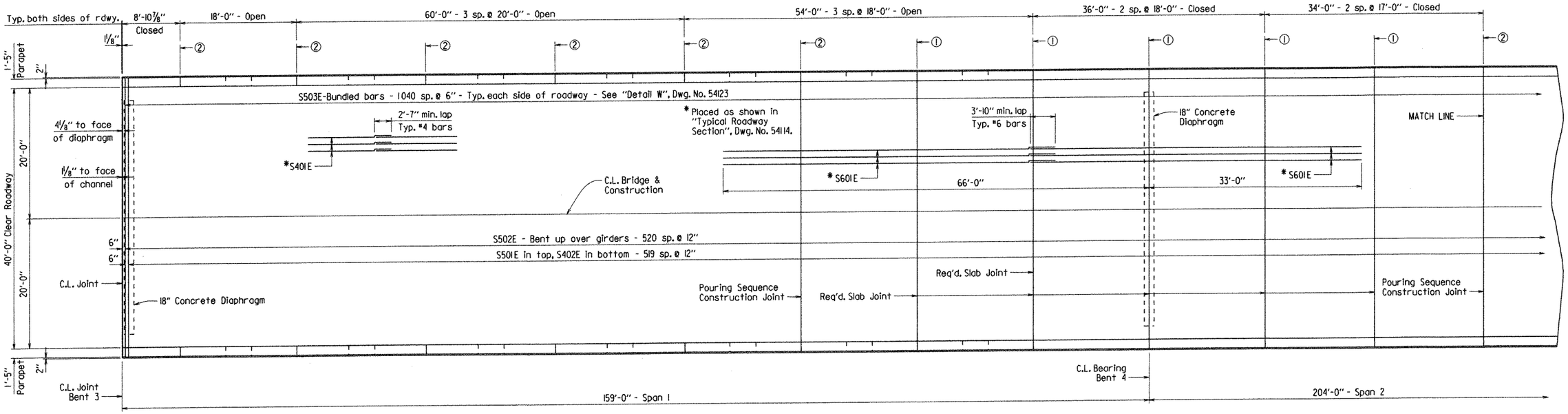

REINFORCING PLAN

Scale: 1/8" = 1'-0"

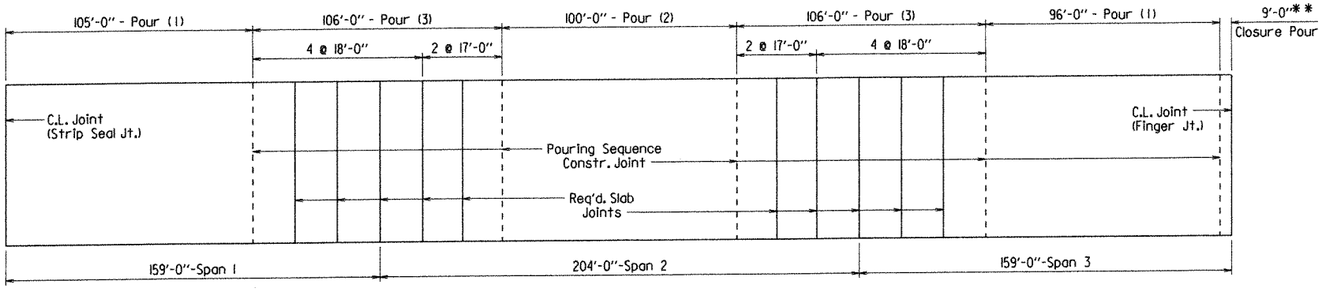

DECK POURING SEQUENCE

No Scale

All concrete diaphragms shall be poured before first deck pour. Pours must be placed in sequence shown. No deviations allowed. Deflections based on pouring sequence. A minimum of 48 hours shall elapse between the end of a pour and the start of the next pour. A minimum of 72 hours shall elapse between the end of a pour and the start of an adjacent pour. Any railing pours made before the entire slab unit has been placed must be approved by the Engineer.

Concrete in bridge superstructure shall be consolidated for the entire pour before any concrete has taken its initial set. This may require the use of a retarding agent.

** After all incremental pours on both Units adjacent to Finger Joint are complete, closure pours on each side of finger joint shall be poured simultaneously. A minimum of 48 hours shall elapse between the last incremental pour and the closure pours.

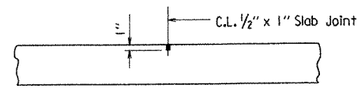

Use Type 3, 4, or 6 Joint Sealer. See Subsections 501.02 (h)(2) and 501.05 (j). Backer Rod filler will not be required. Joint Sealer shall be measured and paid for as Class S(AE) Concrete-Bridge. Slab joints shall extend to the outside edge of the deck slab. Slab joints shall be installed before the parapet rail is poured. If slab joints are to be sawed, they shall be sawed as soon as the concrete has sufficiently set to allow sawing of the joint without damage to the slab. Slab joints shall be placed at all pouring sequence construction joints and required slab joint locations. The joint sealer shall extend across the deck slab. No joint sealer shall be placed on the deck slab under the parapet rail. Slab joints shall align with parapet open joints except for slab joint at 9'-0" closure pour at finger joint.

SLAB JOINT DETAIL

No Scale

STATE OF ARKANSAS
Earl J. Fuselier
REGISTERED PROFESSIONAL ENGINEER
No. 7510
9/23/13
CARL J. FUSELIER

BRIDGE ENGINEER

SHEET 9 OF 11
DETAILS OF 522'-0" CONTINUOUS COMPOSITE PLATE GIRDER UNIT (UNIT 2) WHITE RIVER

ROUTE SEC.

ARKANSAS STATE HIGHWAY COMMISSION

LITTLE ROCK, ARK.

DRAWN BY: CSG DATE: MAR. 2013 FILENAME: b005836_s2.dgn
CHECKED BY: DHP DATE: 8-28-13 SCALE: AS NOTED
DESIGNED BY: DHP DATE: SEPT. 2012

BRIDGE NO. 07289 DRAWING NO. 54122

PRINT DATE: 8/27/2013

DATE REVISED	DATE FILMED	DATE REVISED	DATE FILMED	FED. ROAD DIST. NO.	STATE	FED. AID PROJ. NO.	SHEET NO.	TOTAL SHEETS
				6	ARK.			
				JOB NO.		005836	105	230
				①	07289 - 522' CONT. UNIT - 54123			

① C.L. Full Depth Parapet Joint (1/4" - 1" max.) Stop 4" from top of slab.

② C.L. Partial Depth Parapet Joint (1/4" - 1" max.) Stop 1'-2" from top of slab.

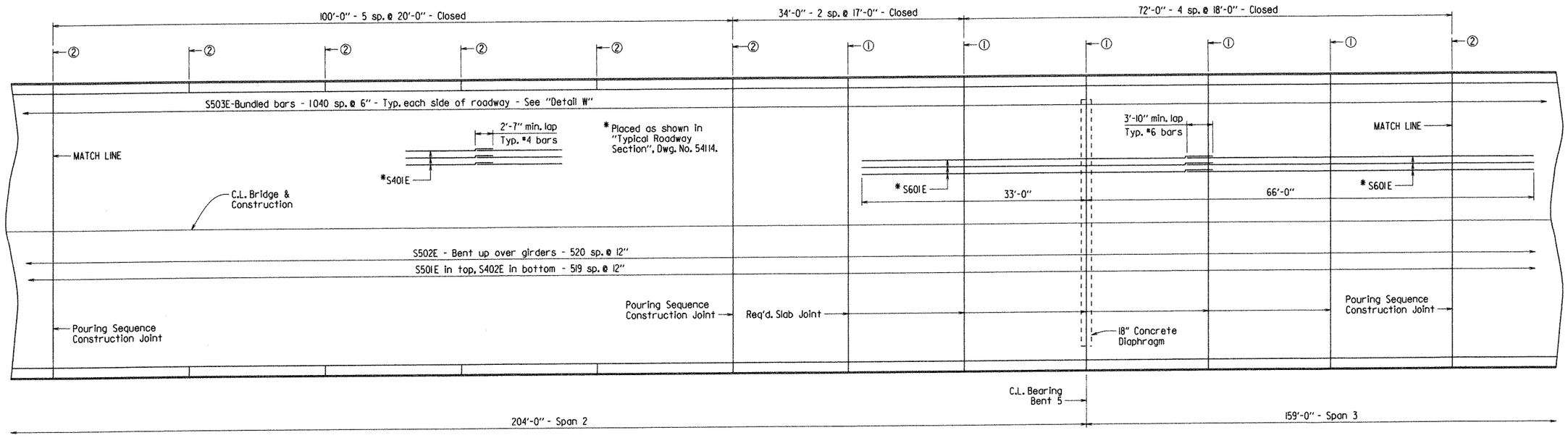

REINFORCING PLAN

Scale: 1/8" = 1'-0"

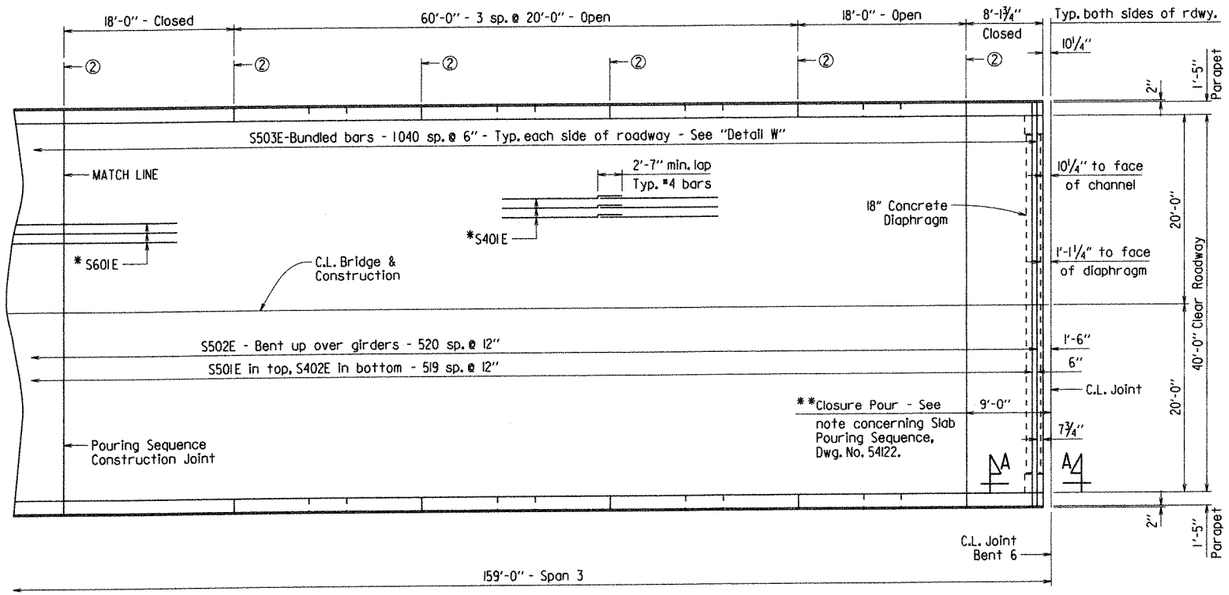

REINFORCING PLAN

Scale: 1/8" = 1'-0"

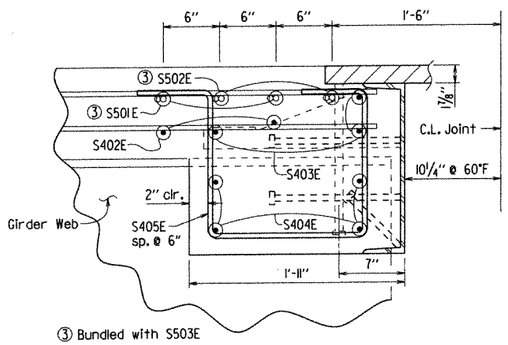

SECTION A-A

(In Cantilever Only)
No Scale

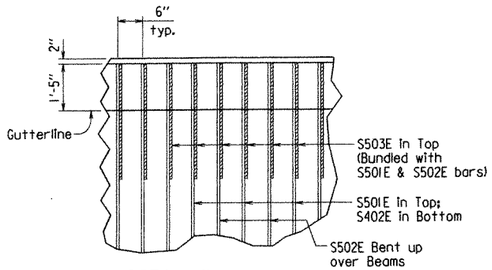

DETAIL W

No Scale

STATE OF ARKANSAS
Carl J. Fuselier
REGISTERED PROFESSIONAL ENGINEER
No. 7510
8/28/13
CARL J. FUSELIER

BRIDGE ENGINEER

SHEET 10 OF 11
DETAILS OF 522'-0" CONTINUOUS COMPOSITE PLATE GIRDER UNIT (UNIT 2)
WHITE RIVER

ROUTE SEC.

ARKANSAS STATE HIGHWAY COMMISSION
LITTLE ROCK, ARK.

DRAWN BY: CSG DATE: MAR. 2013 FILENAME: b005836_s2.dgn
CHECKED BY: DHP DATE: 8-28-13 SCALE: AS NOTED
DESIGNED BY: DHP DATE: SEPT. 2012

BRIDGE NO. 07289 DRAWING NO. 54123

PRINT DATE: 8/27/2013

DATE REVISED	DATE FILMED	DATE REVISED	DATE FILMED	FED. ROAD DIST. NO.	STATE	FED. AID PROJ. NO.	SHEET NO.	TOTAL SHEETS
				6	ARK.			
				JOB NO.		005836	106	230
				①	07289 - 522' CONT. UNIT - 54124			

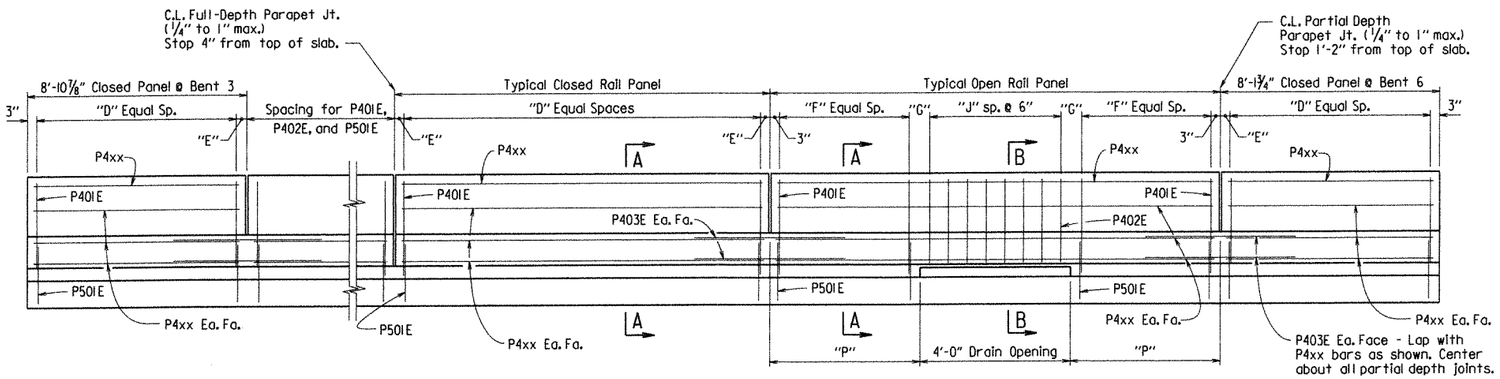

ELEVATION - CONCRETE PARAPET RAIL

Scale: 1/2" = 1'-0"

For location of full and partial depth parapet joints, see Dwg. No. 54122 & 54123.

TABLE OF VARIABLES

Closed Rail Panels				Open Rail Panels					
Panel Length	"D"	"E"	P4xx Bar	Panel Length	"F"	"G"	"J"	"P"	P4xx Bar
8'-1 3/4"	15	3"	P404E	18'-0"	13	6"	7	7'-0"	P407E
8'-10 7/8"	17	4 7/8"	P405E	20'-0"	15	6"	7	8'-0"	P408E
17'-0"	33	3"	P406E						
18'-0"	35	3"	P407E						
20'-0"	39	3"	P408E						

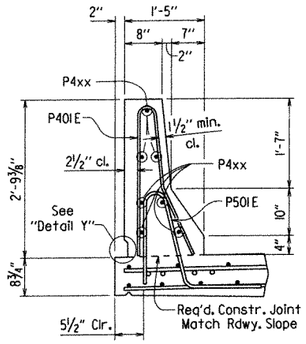

SECTION A-A

Scale: 3/4" = 1'-0"

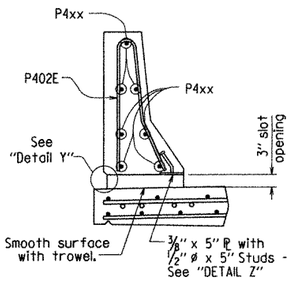

SECTION B-B

Scale: 3/4" = 1'-0"

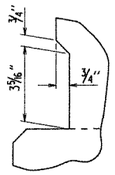

DETAIL Y

No Scale

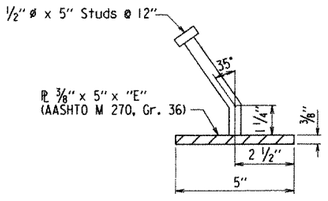

DETAIL Z

No Scale

The surfaces of the 3/8" plates which will not be in contact with concrete shall be painted with aluminum epoxy paint in accordance with Section 638, or as approved by the Engineer. Only one coat is required and shall be applied in the fabricator's shop. Painting will not be paid for directly, but will be considered subsidiary to "Structural Steel in Plate Girder Spans (M270, Gr. 50W)."

Parapet studs shall be 5" long, granular flux filled, solid fluxed or equal, and automatically end welded to the plate. Studs and plates shall meet the requirements of Section 807 and shall be measured and paid for as "Structural Steel in Plate Girder Spans (M270, Gr. 50W)."

BAR LIST

MARK	NO. REQ'D.	LENGTH	P.D.
P401E	1908	5'-6"	3"
P402E	176	4'-10"	3"
P403E	112	5'-7"	Str.
P404E	14	7'-9 1/2"	Str.
P405E	14	8'-6 1/2"	Str.
P406E	56	16'-8"	Str.
P407E	168	17'-8"	Str.
P408E	154	19'-8"	Str.
P501E	1908	4'-9"	3 3/4"
S401E	1326	42'-5"	Str.
S402E	520	42'-10"	Str.
S403E	6	2'-9"	Str.
S404E	8	1'-9"	Str.
S405E	6	5'-1"	2"
S501E	520	42'-10"	Str.
S502E	521	43'-8"	3"
S503E	2082	5'-1"	Str.
S601E	272	51'-5"	Str.
D401E	160	8'-7"	Str.
D402E	192	2'-7"	Str.
D601E	40	15'-5"	4 1/2"
D602E	24	11'-8"	4 1/2"
D603E	80	14'-1"	4 1/2"
D604E	48	10'-0"	4 1/2"
D605E	40	14'-1"	4 1/2"
D606E	24	10'-4"	4 1/2"

BENDING DIAGRAMS

Dimensions are out to out of bars.

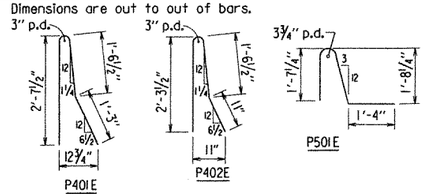

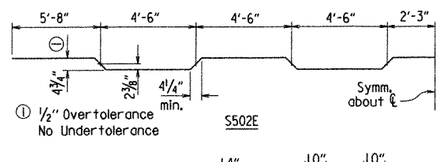

① 1/2" Overtolerance
No Undertolerance

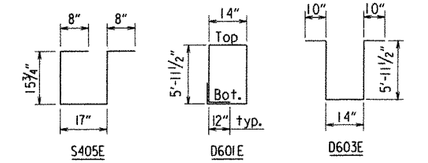

Note: Bars designated with an "E" suffix to be Epoxy Coated.

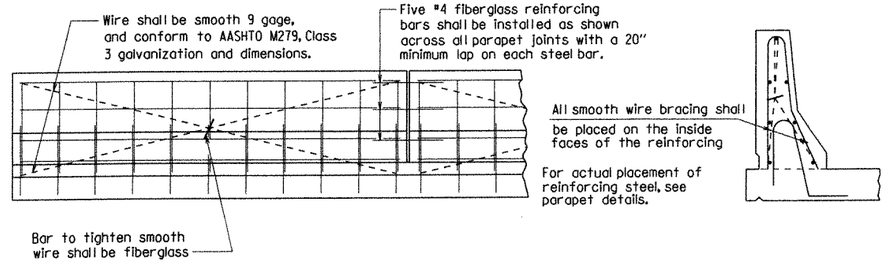

All panels shall be braced as required to prevent racking. All parapet joints shall be sawed as soon as practical to a minimum width of 1/4". To control cracking before sawing, all joints must be grooved before the concrete is set. Sawing of the joints must be controlled so it will follow the grooved joint.

The extruded parapet shall conform to the horizontal and vertical lines shown on the plans or as directed by the Engineer and shall present a smooth, uniform appearance and texture. Exposed surface may be given a light brush finish or a Class 3, Textured Coating Finish, in place of the Class 2, Rubbed Finish.

DETAILS OF OPTIONAL SLIPFORMING OF CONCRETE PARAPET RAIL

No Scale

STATE OF ARKANSAS
Carl J. Pusellier
REGISTERED PROFESSIONAL ENGINEER
No. 7510
8/27/13
CARL J. PUSELLIER

BRIDGE ENGINEER

SHEET 11 OF 11
DETAILS OF 522'-0" CONTINUOUS COMPOSITE PLATE GIRDER UNIT (UNIT 2) WHITE RIVER

ROUTE SEC.

ARKANSAS STATE HIGHWAY COMMISSION

LITTLE ROCK, ARK.

DRAWN BY: CSG DATE: MAR. 2013 FILENAME: b005836_s2.dgn
CHECKED BY: DHP DATE: 8-28-13 SCALE: AS NOTED
DESIGNED BY: DHP DATE: SEPT. 2012

BRIDGE NO. 07289 DRAWING NO. 54124

PRINT DATE: 8/27/2013

DATE REVISED	DATE FILMED	DATE REVISED	DATE FILMED	FED. ROAD DIST. NO.	STATE	FED. AID PROJ. NO.	SHEET NO.	TOTAL SHEETS
				6	ARK.			
				JOB NO.		005836	107	230
				①		07289 - 1220' CONT. UNIT - 54125		

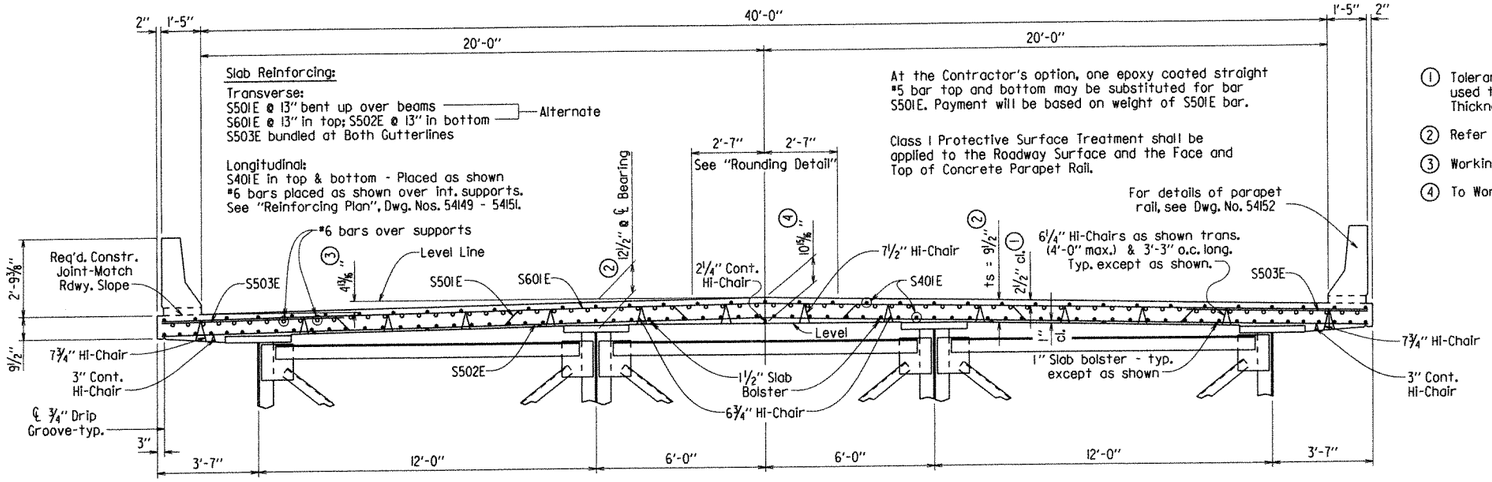

TYPICAL ROADWAY SECTION

Scale: ⅜" = 1'-0"

① Tolerance : Minus = ¼", Plus equal to amount of Slab Thickening used to meet Slab Thickness Tolerance - see "Adjustment for Slab Thickness Tolerance".

② Refer to "Adjustment for Slab Thickness Tolerance".

③ Working Point to Gutterline

④ To Working Point

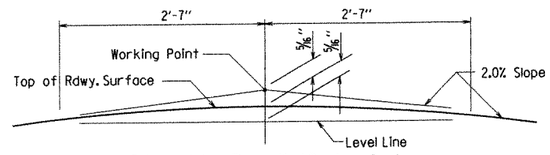

Working Point matches Theoretical Roadway Grade.

ROUNDING DETAIL

No Scale

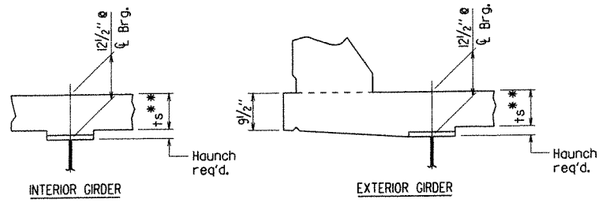

**Tolerance when removable deck forming is used is +½", -¼". Haunch forming is required and shall be adjusted to maintain slab thickness tolerance.

ts = slab thickness as shown in "Typical Roadway Section".

Haunch dimension may vary within the following limits to maintain the grade and slab thickness tolerance : Minimum - occurs when top flange contacts bottom reinforcing steel; Maximum - top flange thickness plus 1⅛" for removable or permanent steel deck forms. No increase in concrete and structural steel quantities will be made to maintain tolerances.

Tolerances shown are applicable only when removable deck forming is used. See Std. Dwg. No. 14991 for tolerances when permanent steel deck forms are used unless noted otherwise. Payment for concrete shall be based on removable deck forming.

ADJUSTMENT FOR SLAB THICKNESS TOLERANCE

No Scale

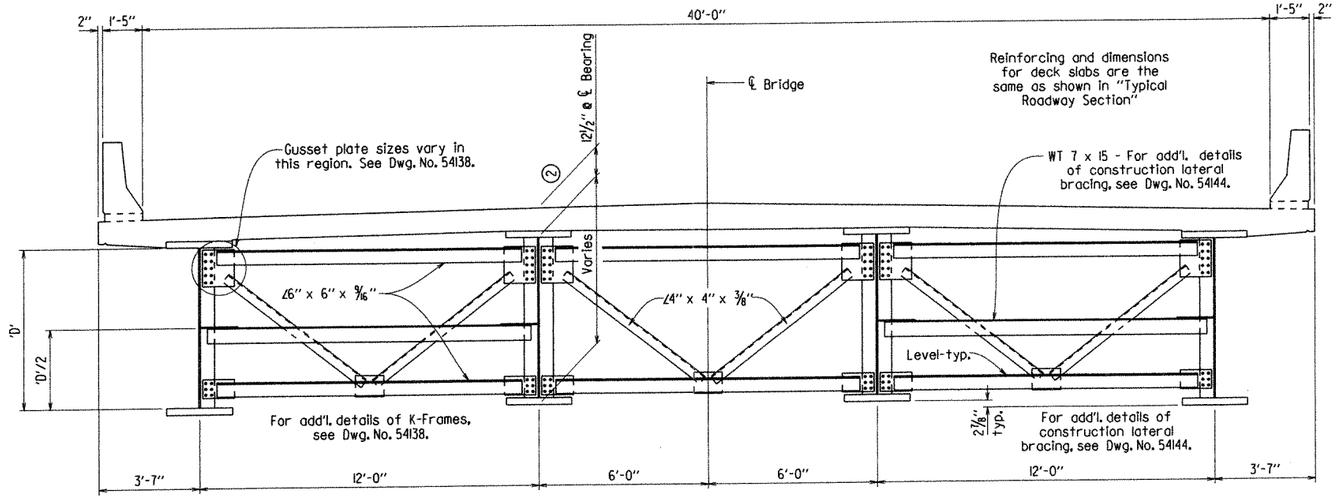

"D = Web Depth

SECTION THRU ROADWAY - REGION A

Scale: ⅜" = 1'-0"

For location of regions, see Dwg. Nos. 54134 - 54137.

STATE OF ARKANSAS
Carl J. Fuselier
REGISTERED PROFESSIONAL ENGINEER
No. 7510
8/28/13
CARL J. FUSELIER

BRIDGE ENGINEER

SHEET 1 OF 29
DETAILS OF 1220'-0" CONTINUOUS COMPOSITE PLATE GIRDER UNIT (UNIT 3)
WHITE RIVER

ROUTE SEC.

ARKANSAS STATE HIGHWAY COMMISSION
LITTLE ROCK, ARK.

DRAWN BY: KDH DATE: JULY 2012 FILENAME: b005836_s3.dgn
CHECKED BY: DHP DATE: 8-28-13 SCALE: AS NOTED
DESIGNED BY: DHP DATE: 3-6-12

BRIDGE NO. 07289 DRAWING NO. 54125

PRINT DATE: 8/28/2013

DATE REVISED	DATE FILMED	DATE REVISED	DATE FILMED	FED. ROAD DIST. NO.	STATE	FED. AID PROJ. NO.	SHEET NO.	TOTAL SHEETS
				6	ARK.			
				JOB NO.		005836	108	230
				①	07289 - 1220' CONT. UNIT - 54126			

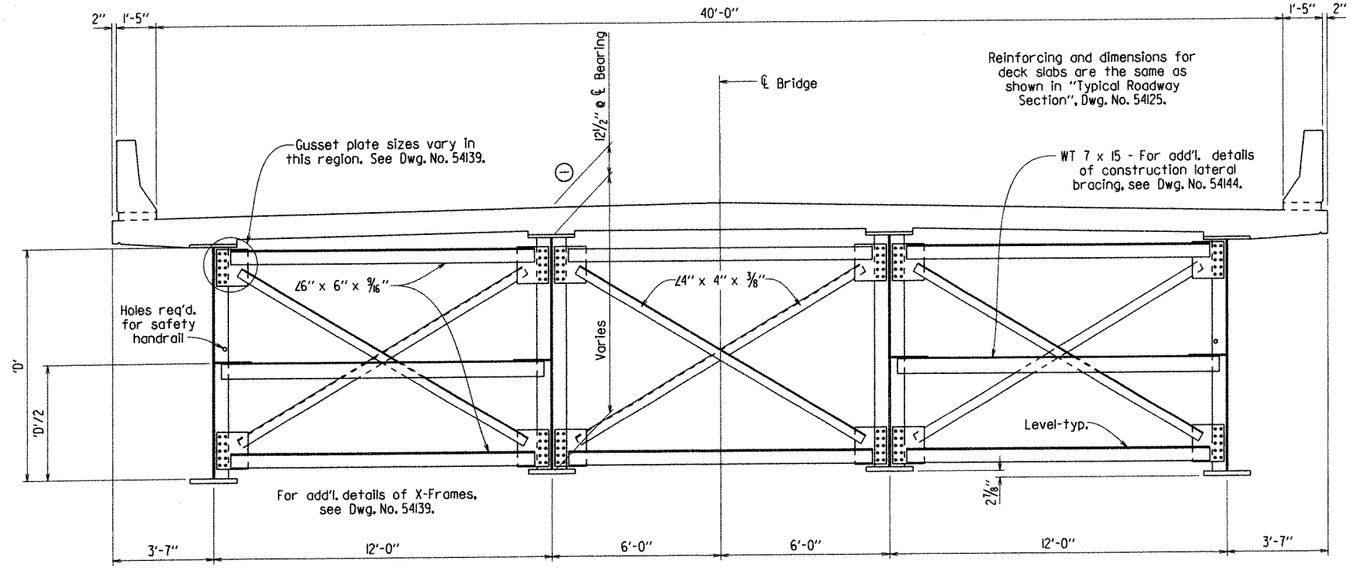

SECTION THRU ROADWAY - REGION B

Scale: ⅜" = 1'-0"

"D = Web Depth

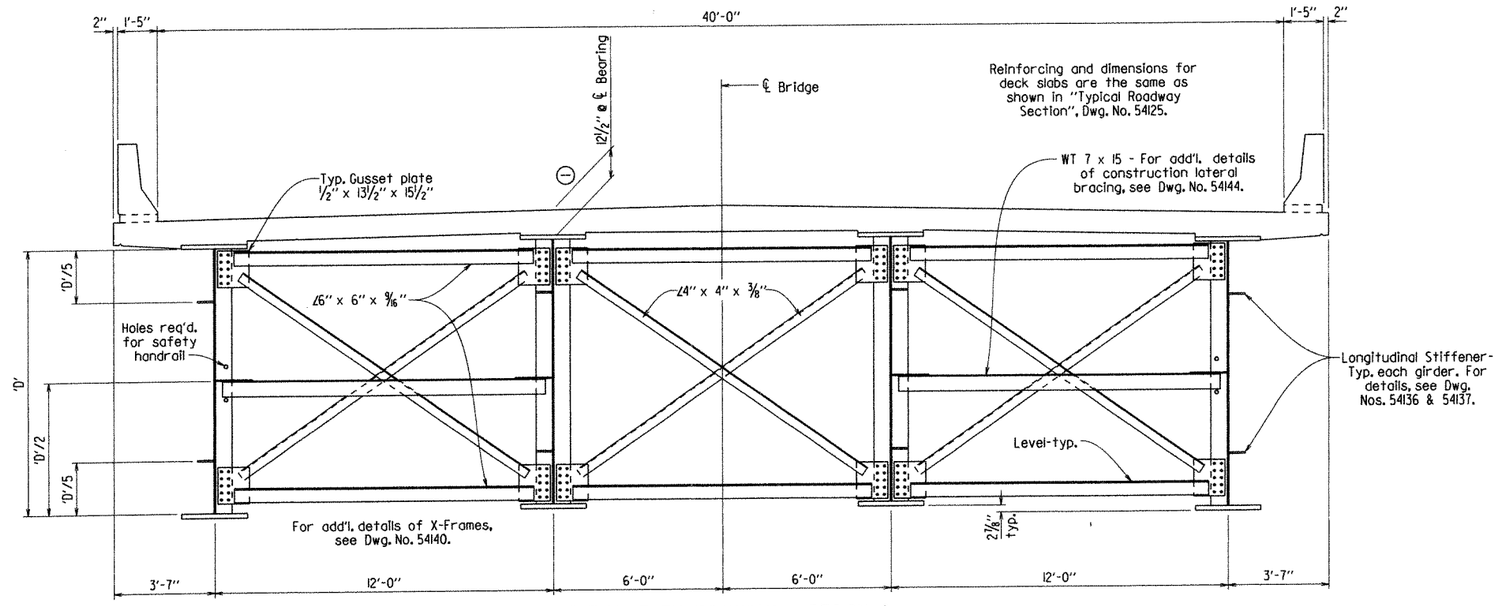

SECTION THRU ROADWAY - REGION C

Scale: ⅜" = 1'-0"

For location of regions, see Dwg. Nos. 54134 - 54137.

① See "Adjustment for Slab Thickness Tolerance", Dwg. No. 54125.

STATE OF ARKANSAS
REGISTERED PROFESSIONAL ENGINEER
No. 7510
8/28/13
CARL J. FUSELIER

BRIDGE ENGINEER

SHEET 2 OF 29
DETAILS OF 1220'-0" CONTINUOUS COMPOSITE PLATE GIRDER UNIT (UNIT 3)
WHITE RIVER

ROUTE SEC.

ARKANSAS STATE HIGHWAY COMMISSION
LITTLE ROCK, ARK.

DRAWN BY: KDH DATE: JULY 2012 FILENAME: b005836_s3.dgn
CHECKED BY: DHP DATE: 8-28-13 SCALE: AS NOTED
DESIGNED BY: DHP DATE: 3-6-12

BRIDGE NO. 07289 DRAWING NO. 54126

PRINT DATE: 8/27/2013

DATE REVISED	DATE FILMED	DATE REVISED	DATE FILMED

FED. ROAD DIST. NO.	STATE	FED. AID PROJ. NO.	SHEET NO.	TOTAL SHEETS
6	ARK.			
JOB NO.		005836	109	230
①	07289 - 1220' CONT. UNIT - 54127			

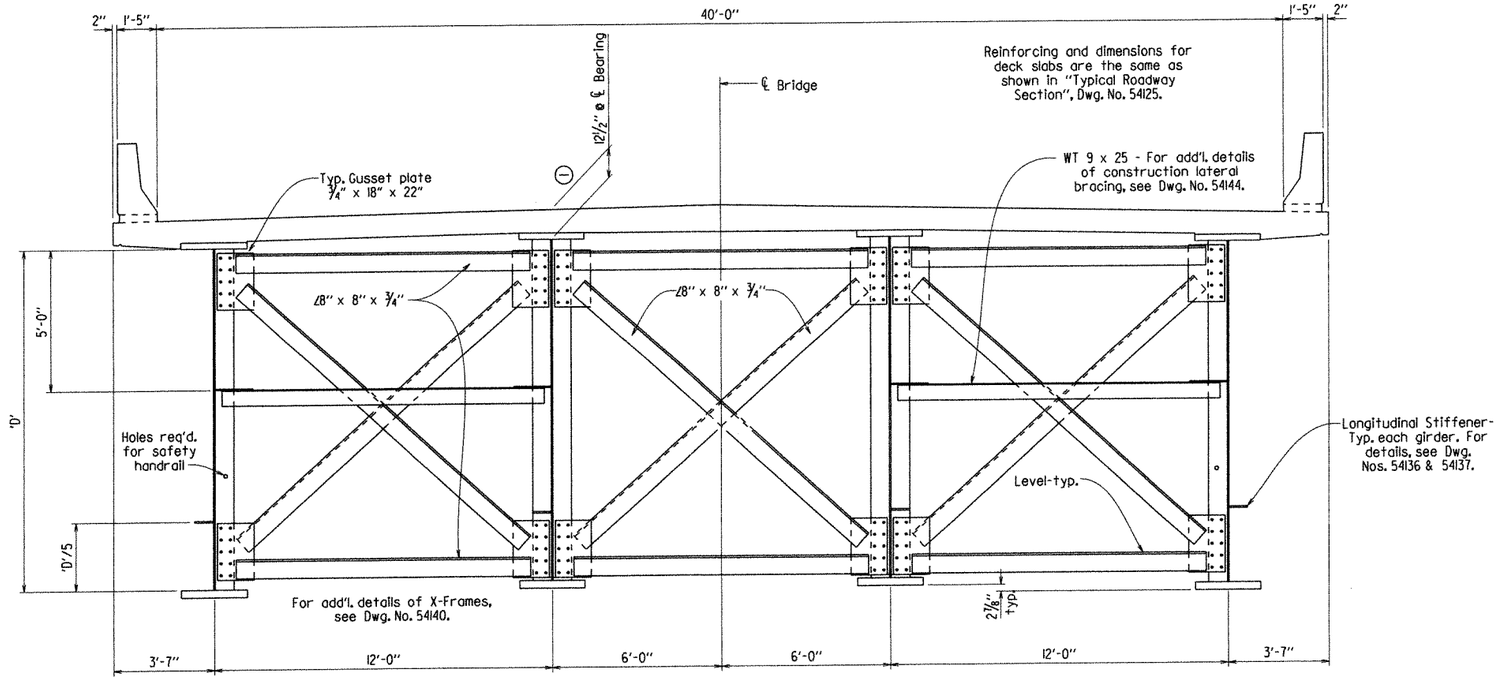

SECTION THRU ROADWAY - REGION D

Scale: ⅜" = 1'-0"

"D = Web Depth

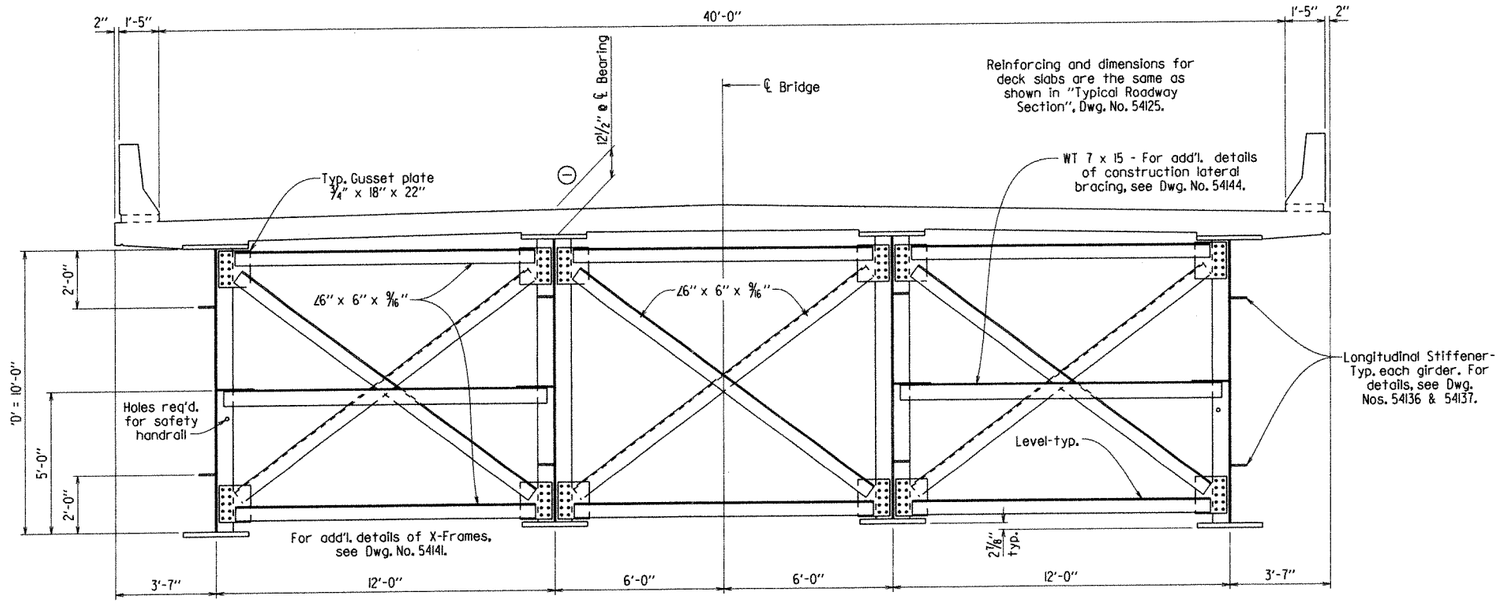

SECTION THRU ROADWAY - REGION E

Scale: ⅜" = 1'-0"

For location of regions, see Dwg. Nos. 54134 - 54137.

① See "Adjustment for Slab Thickness Tolerance", Dwg. No. 54125.

STATE OF ARKANSAS
Carl J. Fuselier
REGISTERED PROFESSIONAL ENGINEER
No. 7510
8/28/13
CARL J. FUSELIER

BRIDGE ENGINEER

SHEET 3 OF 29
DETAILS OF 1220'-0" CONTINUOUS COMPOSITE PLATE GIRDER UNIT (UNIT 3) WHITE RIVER

ROUTE SEC.

ARKANSAS STATE HIGHWAY COMMISSION

LITTLE ROCK, ARK.

DRAWN BY: KDH DATE: JULY 2012 FILENAME: b005836_s3.dgn
CHECKED BY: DHP DATE: 8-28-13 SCALE: AS NOTED
DESIGNED BY: DHP DATE: 3-6-12

BRIDGE NO. 07289 DRAWING NO. 54127

PRINT DATE: 8/27/2013

DATE REVISED	DATE FILMED	DATE REVISED	DATE FILMED	FED. ROAD DIST. NO.	STATE	FED. AID PROJ. NO.	SHEET NO.	TOTAL SHEETS
				6	ARK.			
				JOB NO.		005836	110	230
				①	07289 - 1220' CONT. UNIT - 54128			

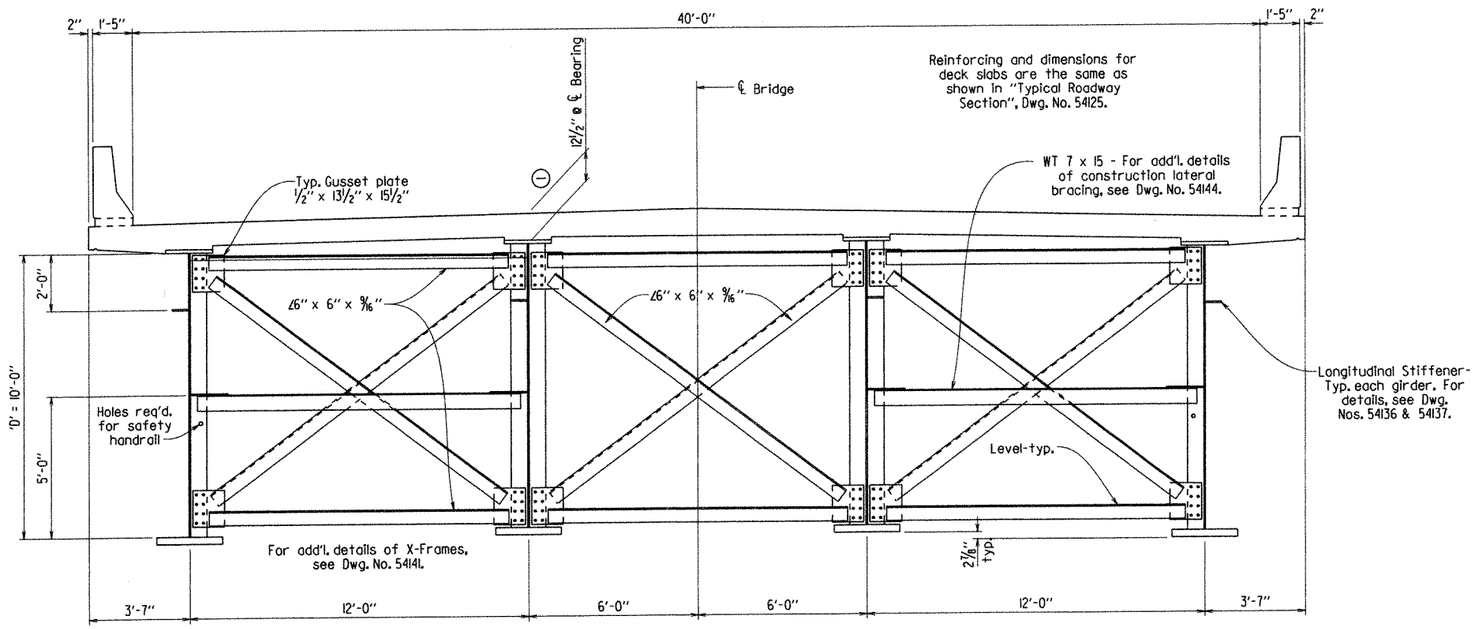

SECTION THRU ROADWAY - REGION F

Scale: ⅜" = 1'-0"

For location of regions, see Dwg. Nos. 54134 - 54137.

① See "Adjustment for Slab Thickness Tolerance", Dwg. No. 54125.

STATE OF ARKANSAS
Carl J. Fuselier
REGISTERED PROFESSIONAL ENGINEER
No. 7510
8/28/13
CARL J. FUSELIER

BRIDGE ENGINEER

SHEET 4 OF 29
DETAILS OF 1220'-0" CONTINUOUS COMPOSITE PLATE GIRDER UNIT (UNIT 3)
WHITE RIVER

ROUTE SEC.

ARKANSAS STATE HIGHWAY COMMISSION
LITTLE ROCK, ARK.

DRAWN BY: KDH DATE: JULY 2012 FILENAME: b005836_s3.dgn
CHECKED BY: DHP DATE: 8-28-13 SCALE: AS NOTED
DESIGNED BY: DHP DATE: 3-6-12

BRIDGE NO. 07289 DRAWING NO. 54128

PRINT DATE: 8/27/2013

DATE REVISED	DATE FILMED	DATE REVISED	DATE FILMED	FED. ROAD DIST. NO.	STATE	FED. AID PROJ. NO.	SHEET NO.	TOTAL SHEETS
				6	ARK.			
				JOB NO.		005836	111	230
				①		07289 - 1220' CONT. UNIT - 54129		

REMOVABLE FORMS FOR DIAPHRAGMS SHALL BE USED

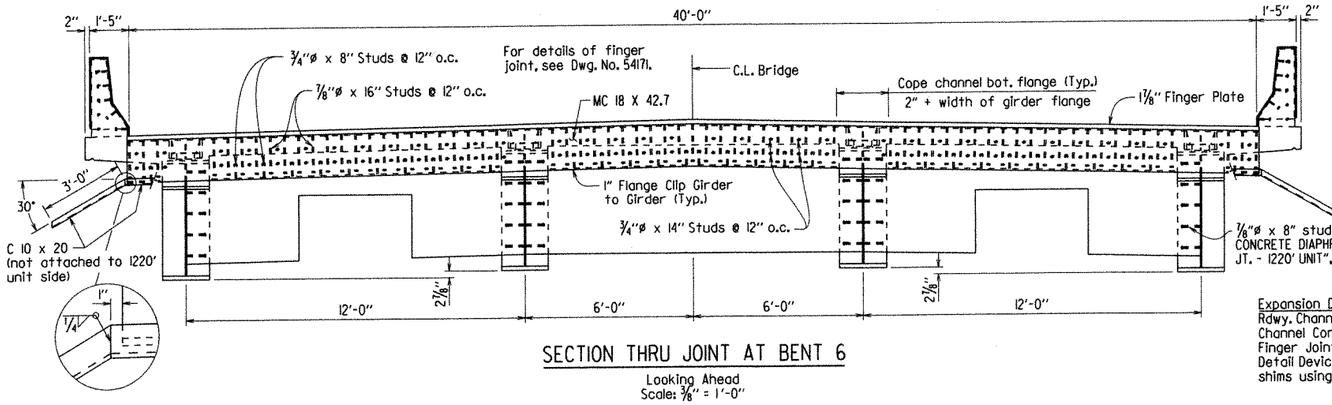

SECTION THRU JOINT AT BENT 6

Looking Ahead
Scale: 3/8" = 1'-0"

Expansion Device:
Rdwy. Channel - MC 18 x 42.7
Channel Conn. - WT 7x34
Finger Joint - 6" movement
Detail Device 1/8" high & provide 1/4" shims using 2 - 1/16" & 1 - 1/8" PLs

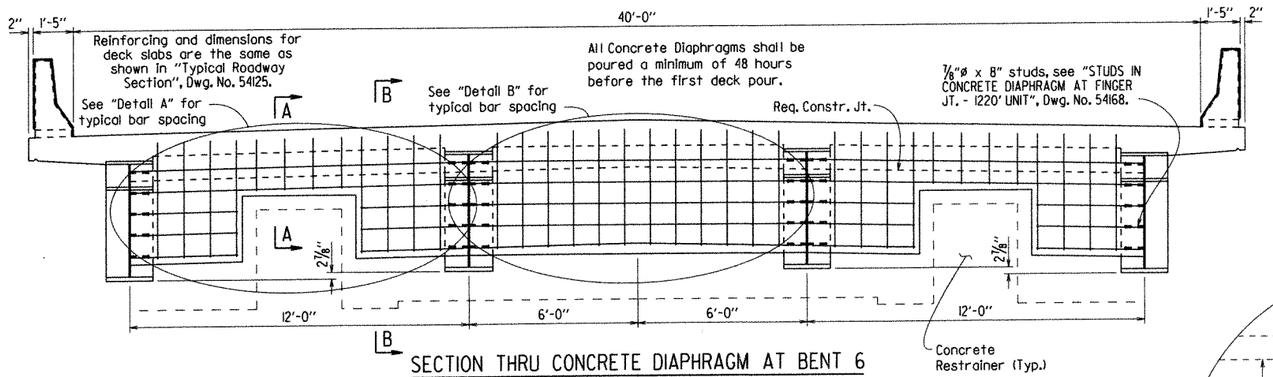

B

SECTION THRU CONCRETE DIAPHRAGM AT BENT 6

Looking Ahead
Scale: 3/8" = 1'-0"

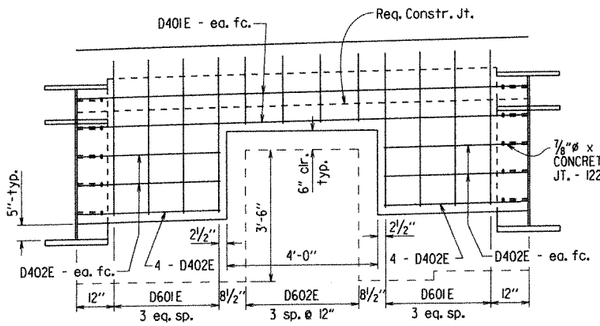

DETAIL A

Scale: 1/2" = 1'-0"

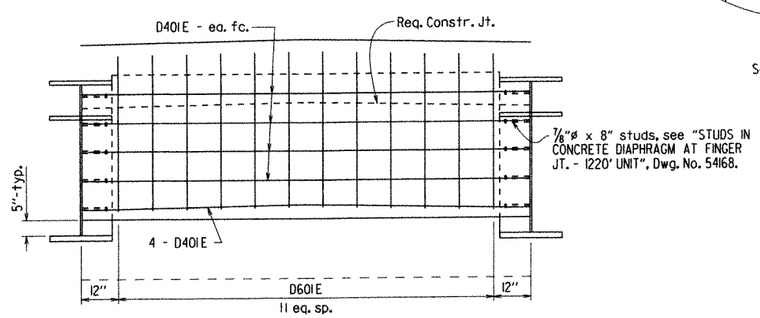

DETAIL B

Scale: 1/2" = 1'-0"

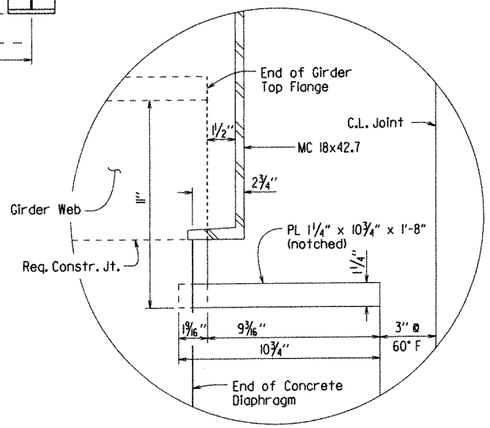

DETAIL P

Scale: 3" = 1'-0"

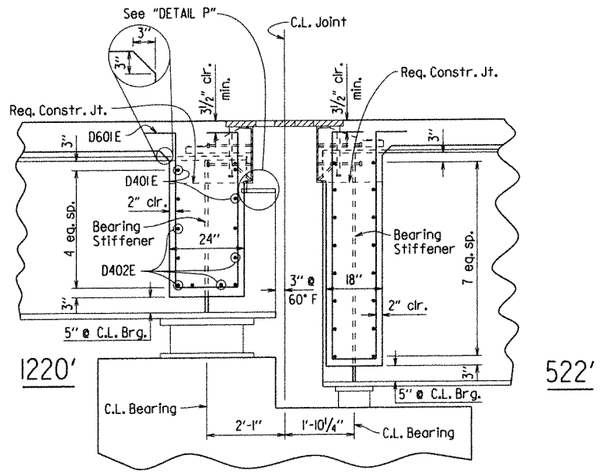

SECTION B-B

Scale: 1/2" = 1'-0"

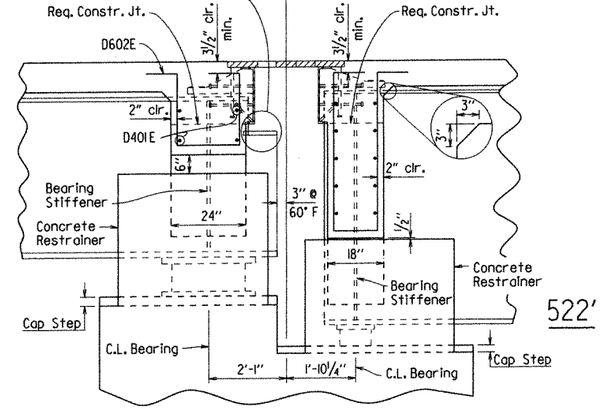

SECTION A-A

Scale: 1/2" = 1'-0"

STATE OF ARKANSAS
Carl J. Fuselier
REGISTERED PROFESSIONAL ENGINEER
No. 7510
9/27/13
CARL J. FUSELIER

BRIDGE ENGINEER

SHEET 5 OF 29
DETAILS OF 1220'-0" CONTINUOUS COMPOSITE PLATE GIRDER UNIT (UNIT 3)
WHITE RIVER

ROUTE SEC.

ARKANSAS STATE HIGHWAY COMMISSION
LITTLE ROCK, ARK.

DRAWN BY: CSG DATE: MAR. 2013 FILENAME: b005836_s3.dgn
CHECKED BY: DHP DATE: 8-28-13 SCALE: AS NOTED
DESIGNED BY: DHP DATE: 3-6-12

BRIDGE NO. 07289 DRAWING NO. 54129

PRINT DATE: 8/27/2013

DATE REVISED	DATE FILMED	DATE REVISED	DATE FILMED	FED. ROAD DIST. NO.	STATE	FED. AID PROJ. NO.	SHEET NO.	TOTAL SHEETS
				6	ARK.			
				JOB NO.		005836	112	730
				(1)		07289 - 1220' CONT. UNIT - 54130		

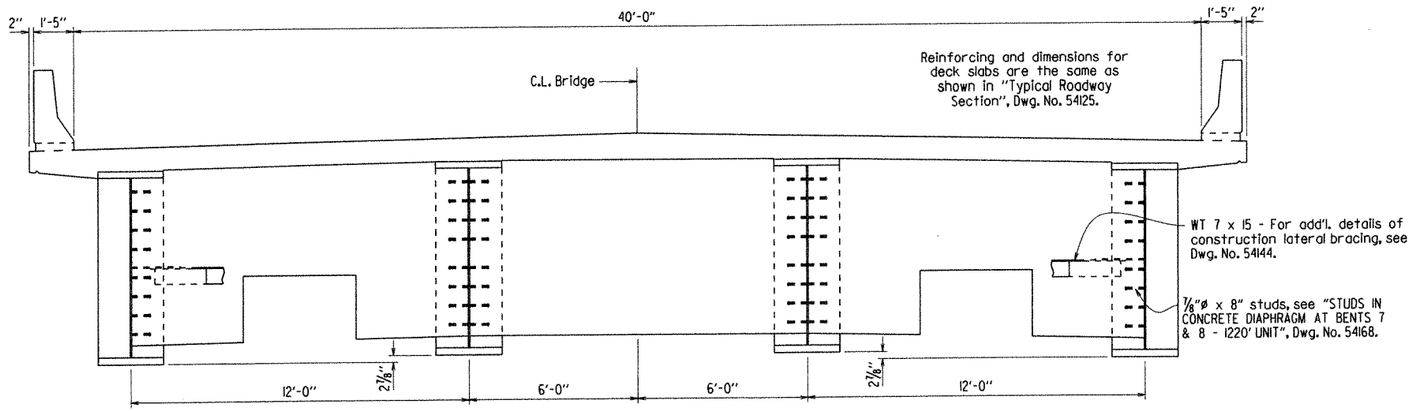

SECTION AT BENTS 7 & 8

Looking Ahead
Scale: 3/8" = 1'-0"

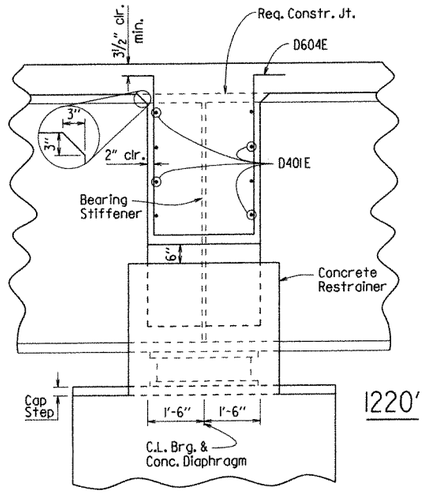

1220'

SECTION C-C

Scale: 1/2" = 1'-0"

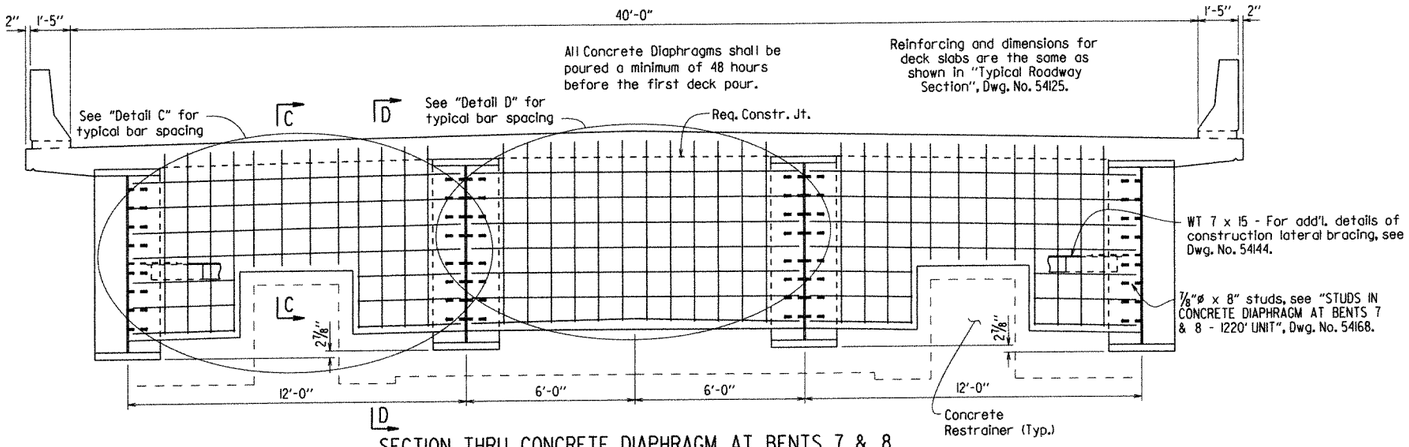

SECTION THRU CONCRETE DIAPHRAGM AT BENTS 7 & 8

Looking Ahead
Scale: 3/8" = 1'-0"

REMOVABLE FORMS FOR DIAPHRAGMS SHALL BE USED

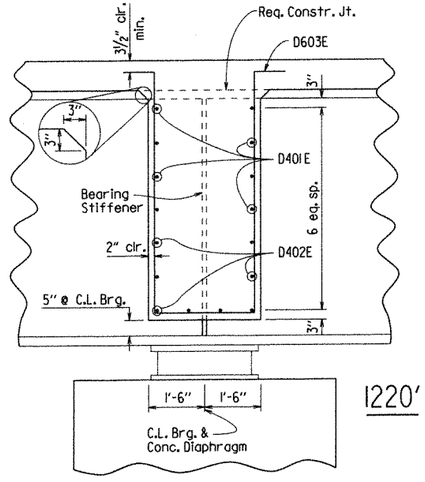

1220'

SECTION D-D

Scale: 1/2" = 1'-0"

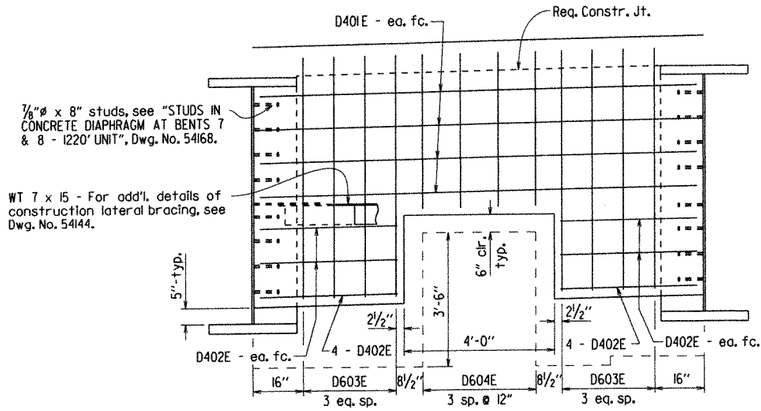

DETAIL C

Scale: 1/2" = 1'-0"

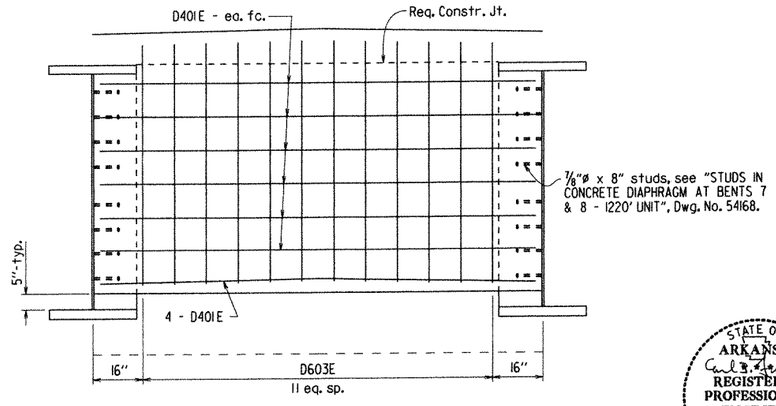

DETAIL D

Scale: 1/2" = 1'-0"

STATE OF ARKANSAS
Carl J. Pusellier
REGISTERED PROFESSIONAL ENGINEER
No. 7510
CARL J. PUSELLIER
8/28/13

BRIDGE ENGINEER

SHEET 6 OF 29
DETAILS OF 1220'-0" CONTINUOUS COMPOSITE PLATE GIRDER UNIT (UNIT 3)
WHITE RIVER

ROUTE SEC.

ARKANSAS STATE HIGHWAY COMMISSION
LITTLE ROCK, ARK.

DRAWN BY: CSG DATE: MAR. 2013 FILENAME: b005836_s3.dgn
CHECKED BY: DHP DATE: 8-28-13 SCALE: AS NOTED
DESIGNED BY: DHP DATE: 3-6-12

BRIDGE NO. 07289 DRAWING NO. 54130

PRINT DATE: 8/27/2013

DATE REVISED	DATE FILMED	DATE REVISED	DATE FILMED	FED. ROAD DIST. NO.	STATE	FED. AID PROJ. NO.	SHEET NO.	TOTAL SHEETS
				6	ARK.			
				JOB NO.		005836	113	230
				①		07289 - 1220' CONT. UNIT - 54131		

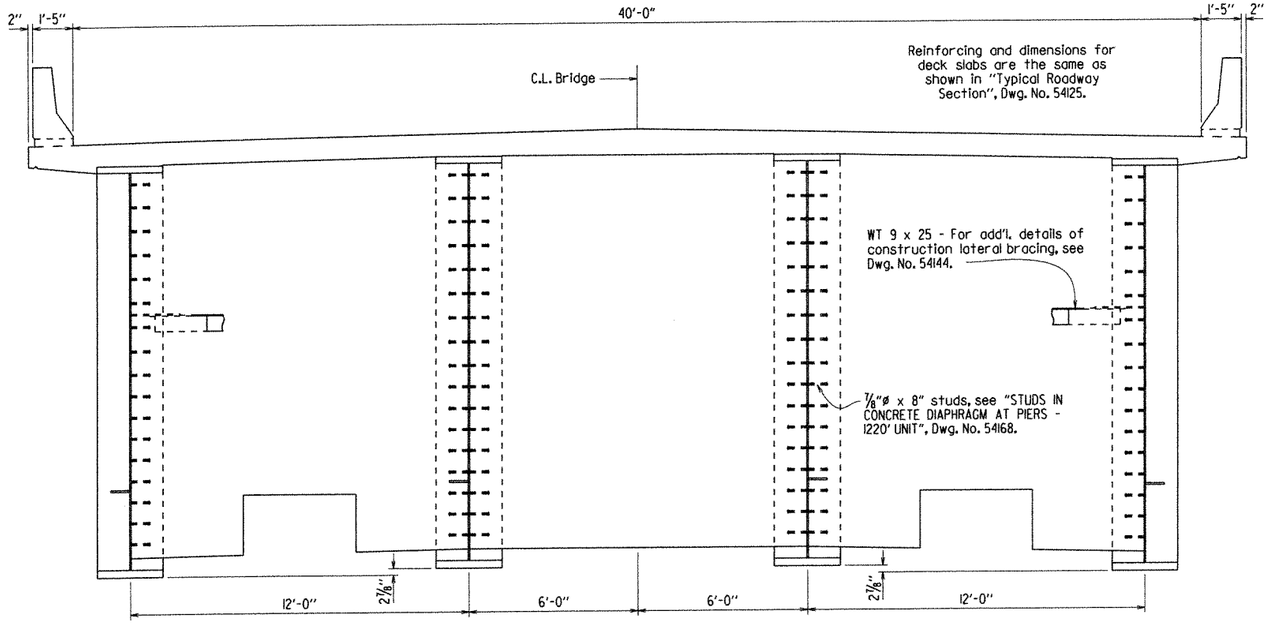

SECTION AT PIERS 1 & 2

Looking Ahead
Scale: ⅜" = 1'-0"

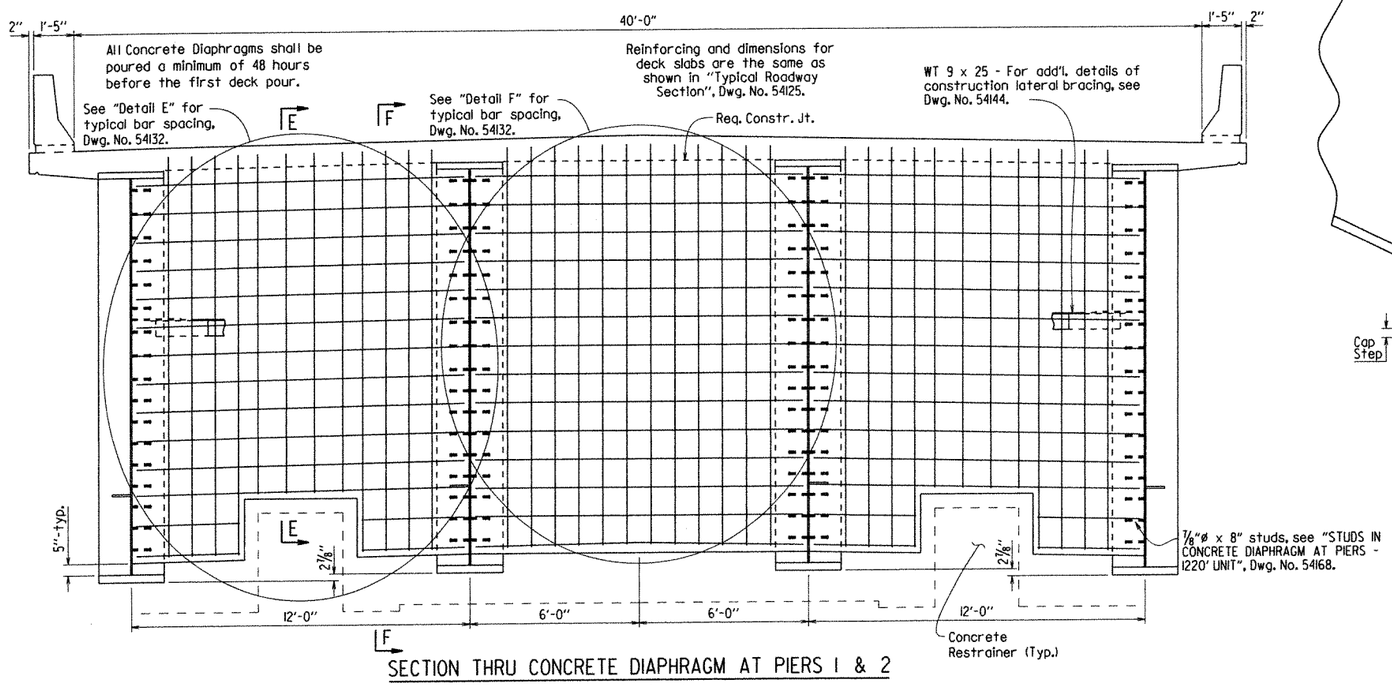

SECTION THRU CONCRETE DIAPHRAGM AT PIERS 1 & 2

Looking Ahead
Scale: ⅜" = 1'-0"

REMOVABLE FORMS FOR DIAPHRAGMS SHALL BE USED

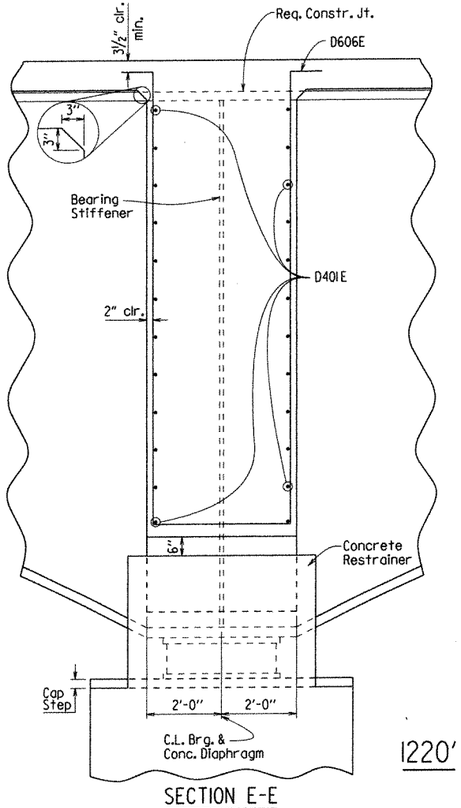

SECTION E-E

Scale: ½" = 1'-0"

1220'

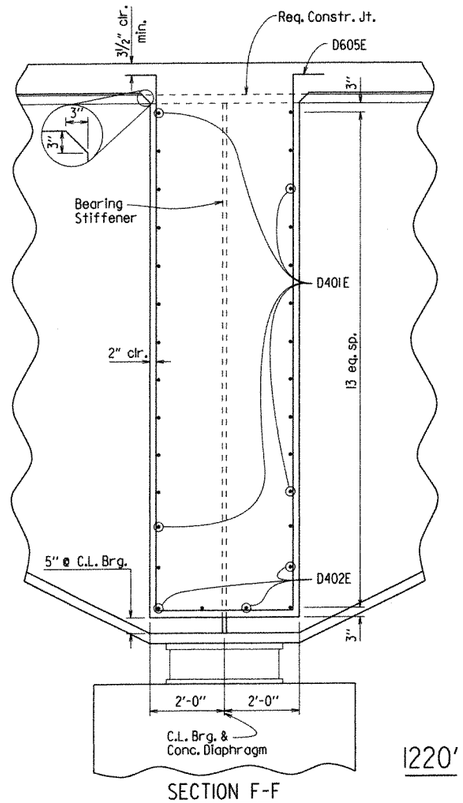

SECTION F-F

Scale: ½" = 1'-0"

1220'

STATE OF ARKANSAS
Carl J. Puselier
REGISTERED PROFESSIONAL ENGINEER
No. 7510
8/28/13
CARL J. PUSELIER

BRIDGE ENGINEER

SHEET 7 OF 29
DETAILS OF 1220'-0" CONTINUOUS COMPOSITE PLATE GIRDER UNIT (UNIT 3)
WHITE RIVER

ROUTE SEC.

ARKANSAS STATE HIGHWAY COMMISSION
LITTLE ROCK, ARK.

DRAWN BY: CSG DATE: MAR. 2013 FILENAME: b005836_s3.dgn
CHECKED BY: DHP DATE: 8-28-13 SCALE: AS NOTED
DESIGNED BY: DHP DATE: 3-6-12

BRIDGE NO. 07289 DRAWING NO. 54131

PRINT DATE: 8/27/2013

DATE REVISED	DATE FILMED	DATE REVISED	DATE FILMED	FED. ROAD DIST. NO.	STATE	FED. AID PROJ. NO.	SHEET NO.	TOTAL SHEETS
				6	ARK.			
				JOB NO.		005836	114	230
				①		07289 - 1220' CONT. UNIT - 54132		

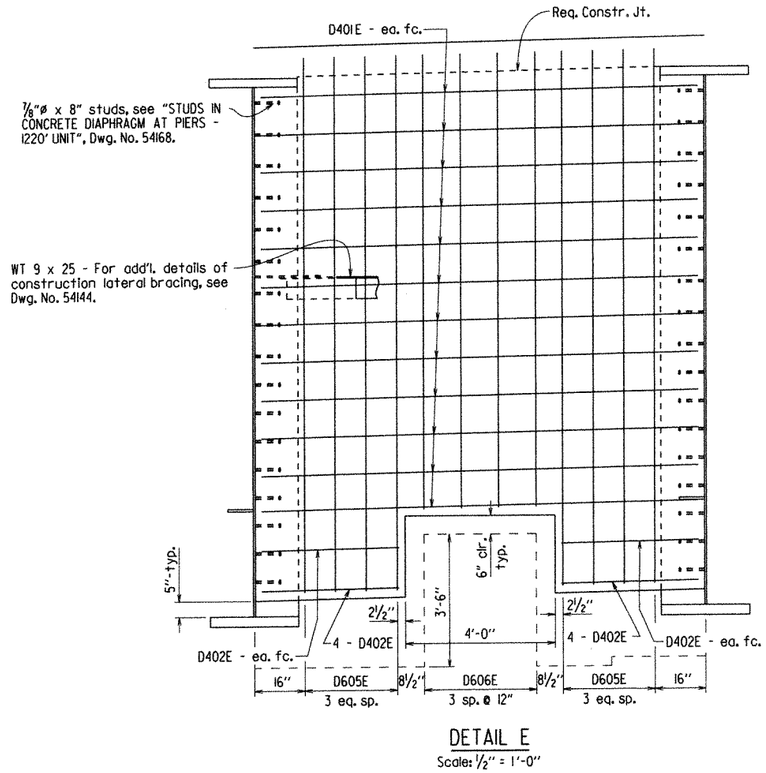

DETAIL E
Scale: ½" = 1'-0"

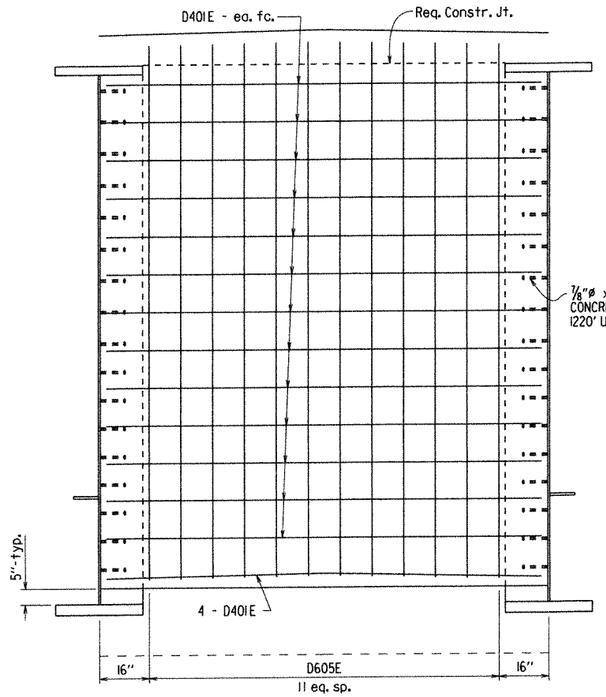

DETAIL F
Scale: ½" = 1'-0"

PRINT DATE: 8/27/2013

STATE OF ARKANSAS
Carl J. Fuselier
REGISTERED PROFESSIONAL ENGINEER
No. 7510
8/27/13
CARL J. FUSELIER

BRIDGE ENGINEER

SHEET 8 OF 29
DETAILS OF 1220'-0" CONTINUOUS COMPOSITE PLATE GIRDER UNIT (UNIT 3)
WHITE RIVER

ROUTE SEC.

ARKANSAS STATE HIGHWAY COMMISSION
LITTLE ROCK, ARK.

DRAWN BY: CSG DATE: MAR. 2013 FILENAME: b005836.s3.dgn
CHECKED BY: DHP DATE: 8-28-13 SCALE: AS NOTED
DESIGNED BY: DHP DATE: 3-6-12

BRIDGE NO. 07289 DRAWING NO. 54132

DATE REVISED	DATE FILMED	DATE REVISED	DATE FILMED	FED. ROAD DIST. NO.	STATE	FED. AID PROJ. NO.	SHEET NO.	TOTAL SHEETS
				6	ARK.			
				JOB NO.		005836	115	230
				①		07289 - 1220' CONT. UNIT - 54133		

REMOVABLE FORMS FOR DIAPHRAGMS SHALL BE USED

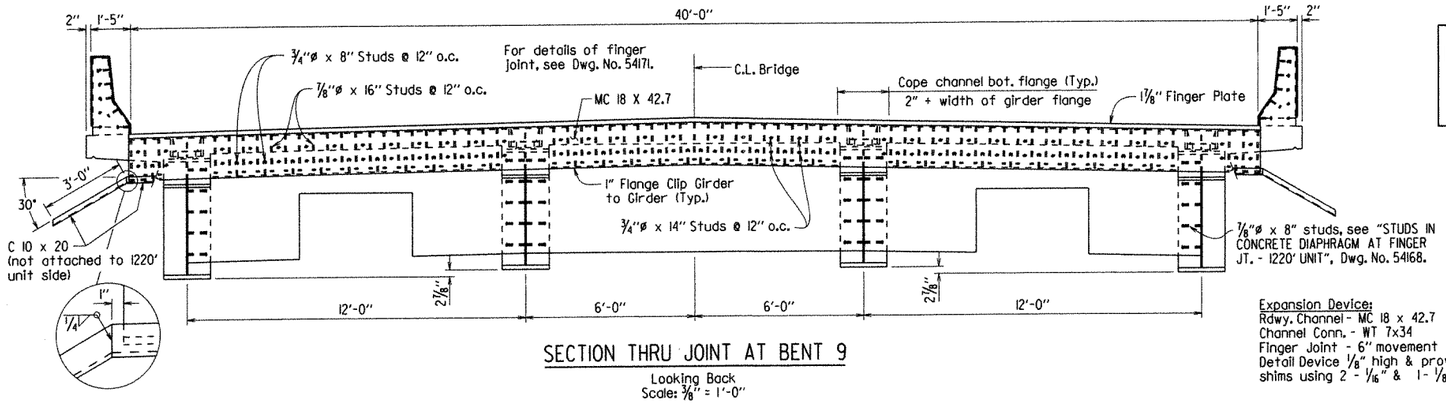

SECTION THRU JOINT AT BENT 9

Looking Back
Scale: ⅜" = 1'-0"

Expansion Device:
Rdwy. Channel - MC 18 x 42.7
Channel Conn. - WT 7x34
Finger Joint - 6" movement
Detail Device ⅛" high & provide ¼" shims using 2 - 1/16" & 1 - ⅛" PLs

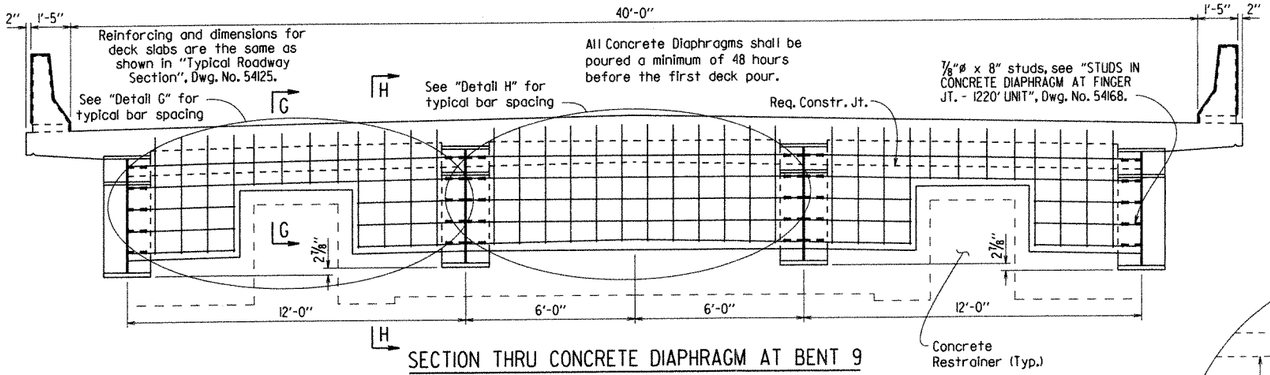

SECTION THRU CONCRETE DIAPHRAGM AT BENT 9

Looking Back
Scale: ⅜" = 1'-0"

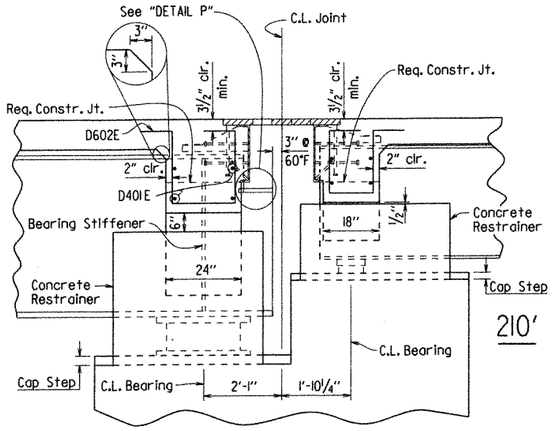

SECTION G-G

Scale: ½" = 1'-0"

SECTION H-H

Scale: ½" = 1'-0"

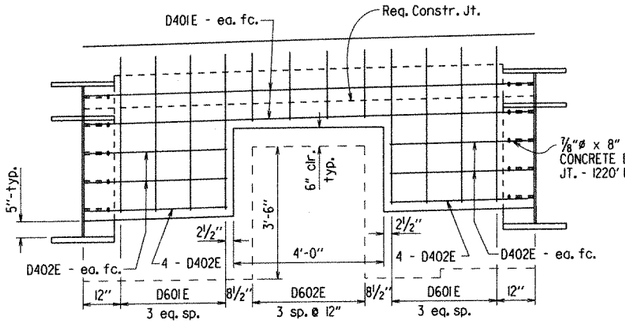

DETAIL G

Scale: ½" = 1'-0"

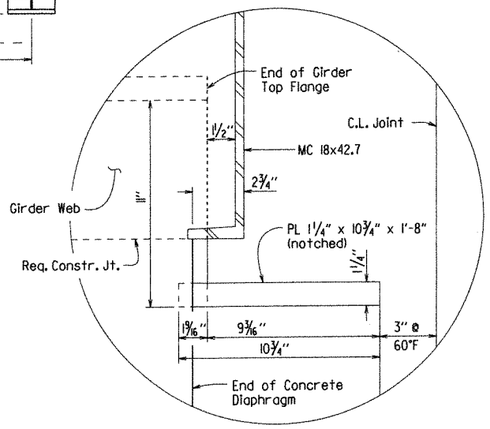

DETAIL P

Scale: 3" = 1'-0"

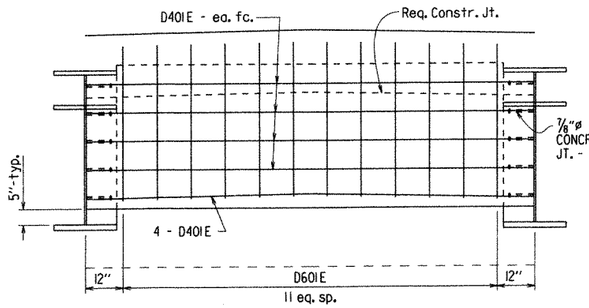

DETAIL H

Scale: ½" = 1'-0"

STATE OF ARKANSAS
Carl J. Fuselier
REGISTERED PROFESSIONAL ENGINEER
No. 7510
8/28/13
CARL J. FUSELIER

BRIDGE ENGINEER

SHEET 9 OF 29
DETAILS OF 1220'-0" CONTINUOUS COMPOSITE PLATE GIRDER UNIT (UNIT 3)
WHITE RIVER

ROUTE SEC.

ARKANSAS STATE HIGHWAY COMMISSION
LITTLE ROCK, ARK.

DRAWN BY: CSG DATE: MAR. 2013 FILENAME: b005836_s3.dgn
CHECKED BY: DHP DATE: 8-28-13 SCALE: AS NOTED
DESIGNED BY: DHP DATE: 3-6-12
BRIDGE NO. 07289 DRAWING NO. 54133

PRINT DATE: 8/27/2013

DATE REVISED	DATE FILMED	DATE REVISED	DATE FILMED	FED. ROAD DIST. NO.	STATE	FED. AID PROJ. NO.	SHEET NO.	TOTAL SHEETS
				6	ARK.			
				JOB NO.		005836	116	230
				①		07289 - 1220' CONT. UNIT - 54134		

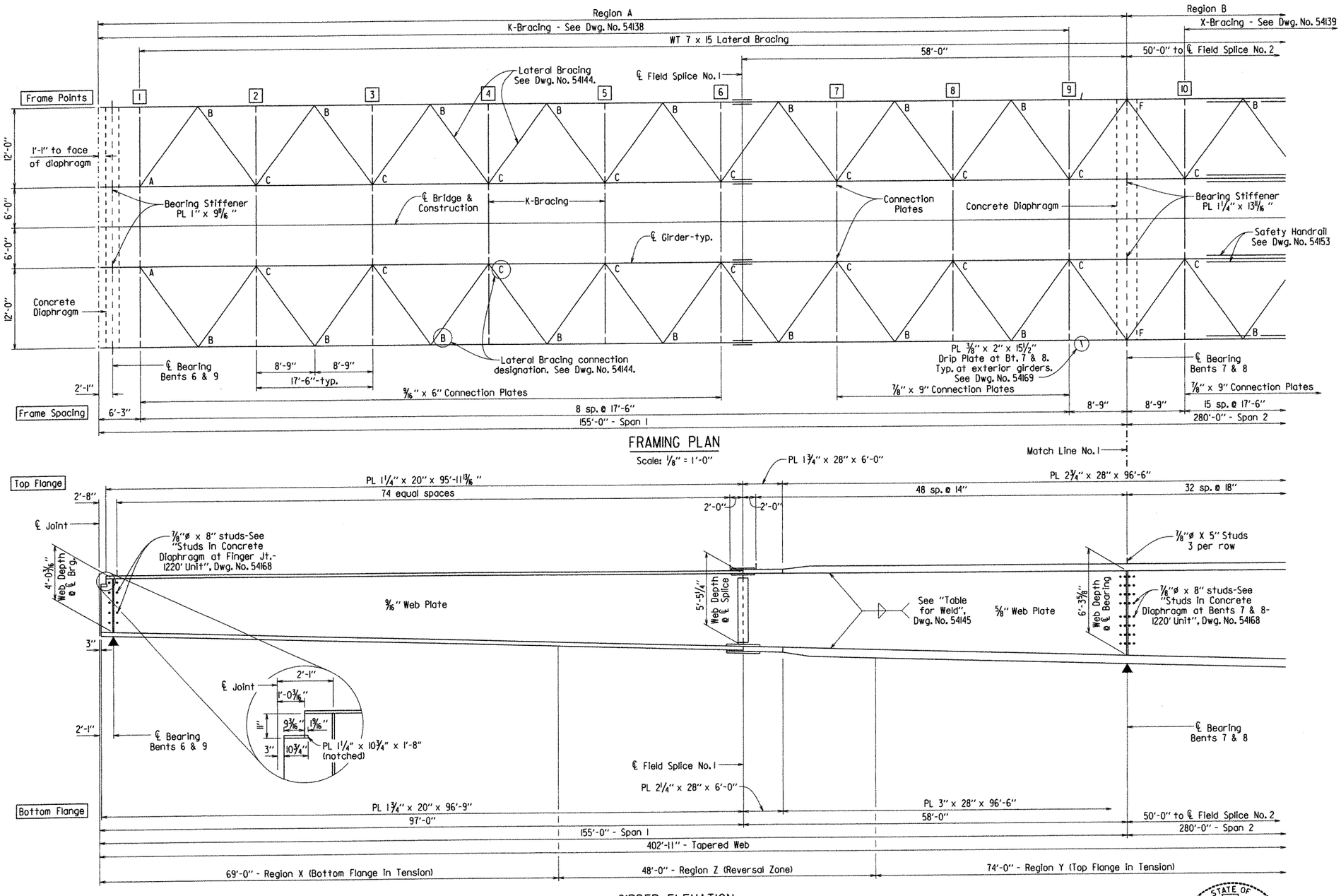

FRAMING PLAN

Scale: 1/8" = 1'-0"

GIRDER ELEVATION

No Scale

All structural Steel shall be AASHTO M270, Gr. 50W unless otherwise noted. Bolted field splices may be eliminated or shop welded splices may be substituted with the approval of the Engineer. Payment will be made on the basis of plan quantities.

All field splice plates shall be AASHTO M270, Gr. 50W steel.
All field splice bolts shall be 7/8"ø H.S. Bolts
All field splice bolt holes shall be 15/16"ø

STATE OF ARKANSAS
CARL J. FUSELIER
REGISTERED PROFESSIONAL ENGINEER
No. 7510
8/29/12

BRIDGE ENGINEER

SHEET 10 OF 29
DETAILS OF 1220'-0" CONTINUOUS COMPOSITE PLATE GIRDER UNIT (UNIT 3)
WHITE RIVER

ROUTE SEC.

ARKANSAS STATE HIGHWAY COMMISSION
LITTLE ROCK, ARK.

DRAWN BY: KDH DATE: AUG. 2012 FILENAME: b005836_s3.dgn
CHECKED BY: DHP DATE: 8-28-13 SCALE: AS NOTED
DESIGNED BY: DHP DATE: 3-6-12
BRIDGE NO. 07289 DRAWING NO. 54134

PRINT DATE: 8/27/2013

DATE REVISED	DATE FILMED	DATE REVISED	DATE FILMED

FED. ROAD DIST. NO.	STATE	FED. AID PROJ. NO.	SHEET NO.	TOTAL SHEETS
6	ARK.			
JOB NO.		005836	117	230
(1)	07289 - 1220' CONT. UNIT - 54135			

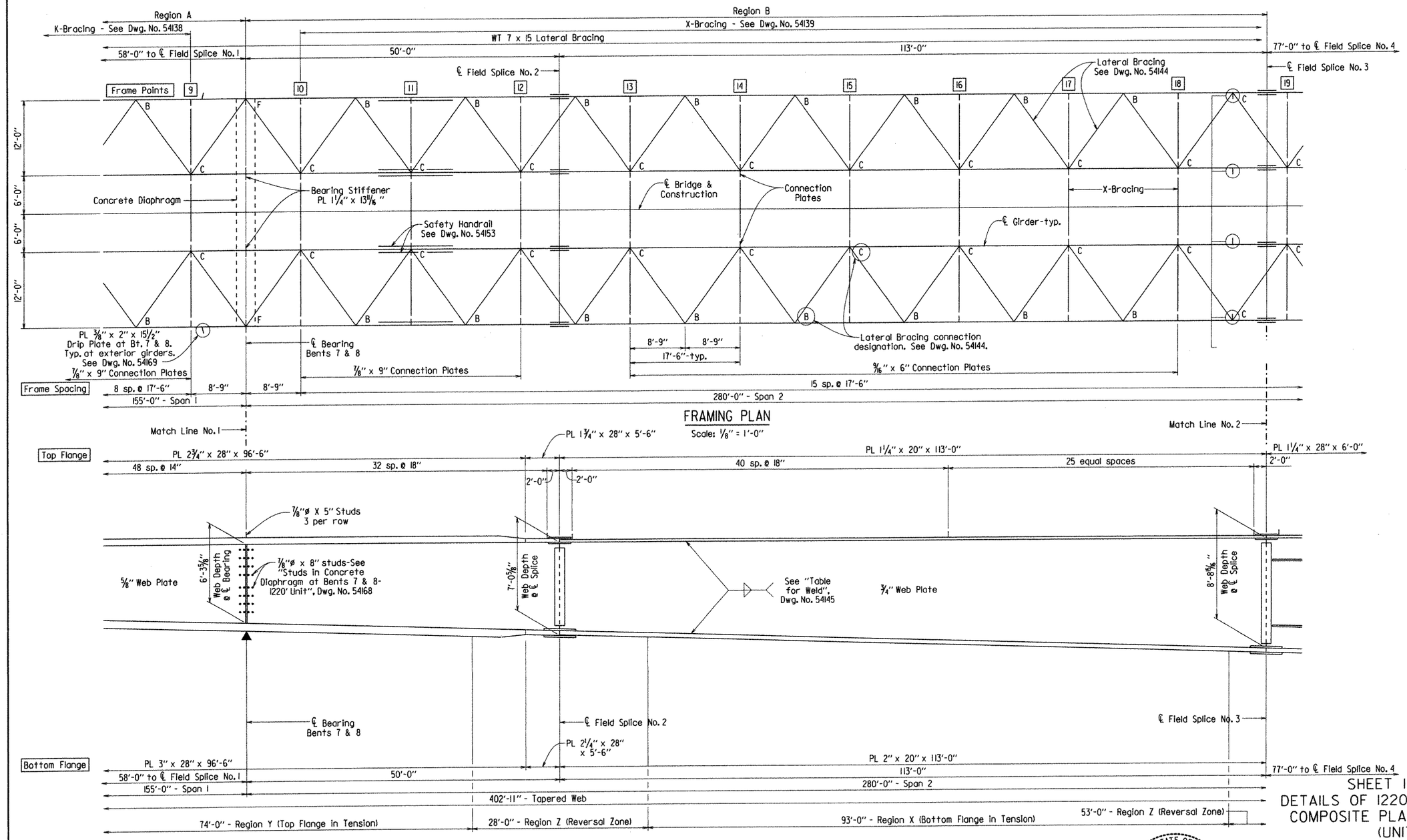

FRAMING PLAN

Scale: 1/8" = 1'-0"

GIRDER ELEVATION

No Scale

All structural Steel shall be AASHTO M270, Gr. 50W unless otherwise noted. Bolted field splices may be eliminated or shop welded splices may be substituted with the approval of the Engineer. Payment will be made on the basis of plan quantities.

All field splice plates shall be AASHTO M270, Gr. 50W steel.
All field splice bolts shall be ⅞"ø H.S. Bolts
All field splice bolt holes shall be 15/16 "ø

STATE OF ARKANSAS
Carl J. Fuselier
REGISTERED PROFESSIONAL ENGINEER
No. 7510
8/28/13
CARL J. FUSELIER

BRIDGE ENGINEER

SHEET 11 OF 29
DETAILS OF 1220'-0" CONTINUOUS COMPOSITE PLATE GIRDER UNIT (UNIT 3)
WHITE RIVER

ROUTE SEC.

ARKANSAS STATE HIGHWAY COMMISSION
LITTLE ROCK, ARK.

DRAWN BY: KDH DATE: AUG. 2012 FILENAME: b005836_s3.dgn
CHECKED BY: DHP DATE: 8-28-13 SCALE: AS NOTED
DESIGNED BY: DHP DATE: 3-6-12

BRIDGE NO. 07289 DRAWING NO. 54135

PRINT DATE: 8/27/2013

DATE REVISED	DATE FILMED	DATE REVISED	DATE FILMED	FED. ROAD DIST. NO.	STATE	FED. AID PROJ. NO.	SHEET NO.	TOTAL SHEETS
				6	ARK.			
				JOB NO.		005836	118	230
				①	07289 - 1220' CONT. UNIT - 54136			

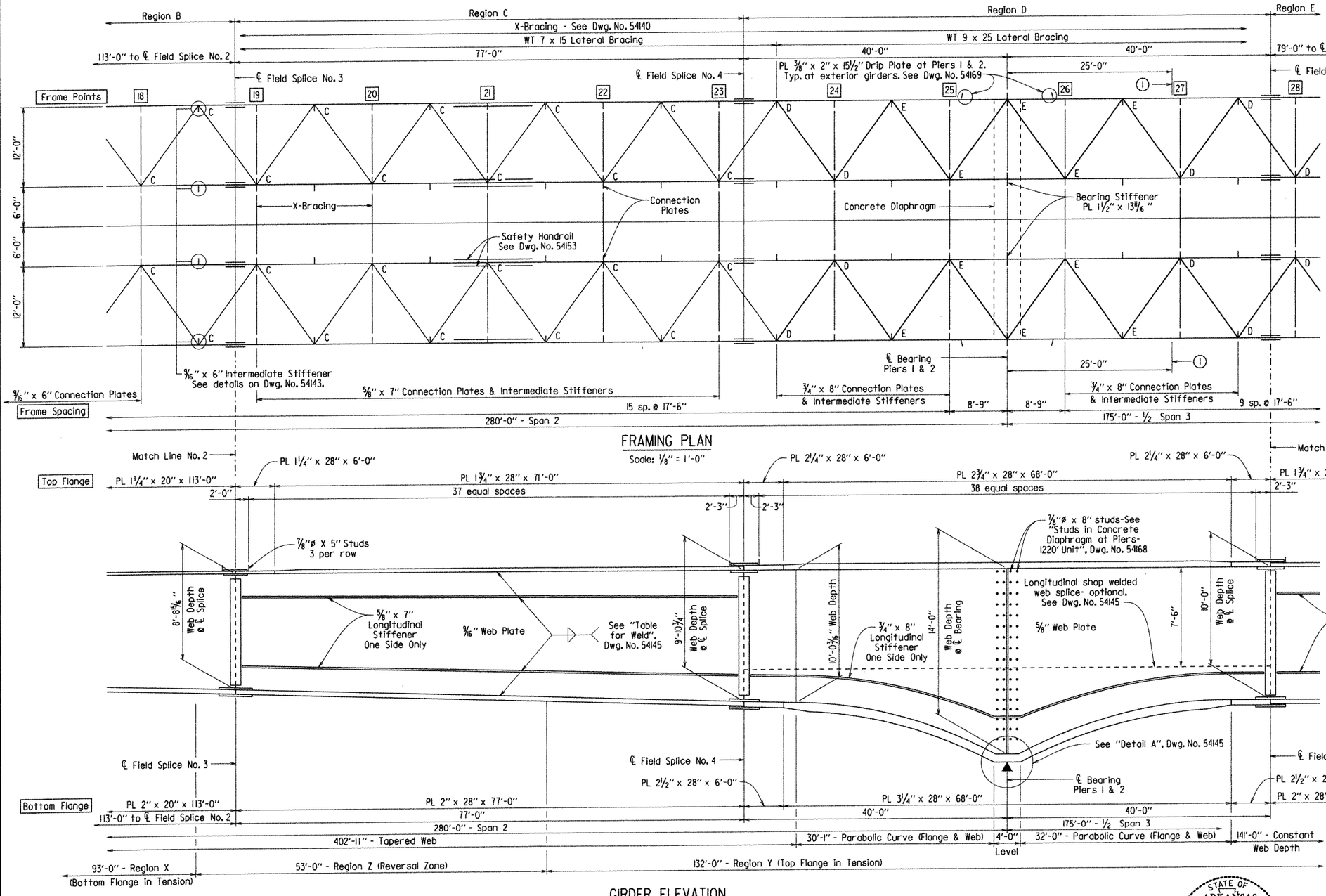

FRAMING PLAN

Scale: 1/8" = 1'-0"

GIRDER ELEVATION

No Scale

① ℄ holes for Retro-Reflective Panel, see Dwg. No. 54180.

All structural Steel shall be AASHTO M270, Gr. 50W unless otherwise noted. Bolted field splices may be eliminated or shop welded splices may be substituted with the approval of the Engineer. Payment will be made on the basis of plan quantities.

All field splice plates shall be AASHTO M270, Gr. 50W steel.
All field splice bolts shall be 7/8"ø H.S. Bolts
All field splice bolt holes shall be 15/16 "ø

STATE OF ARKANSAS
Carl J. Fuselier
REGISTERED PROFESSIONAL ENGINEER
No. 7510
8/22/12
CARL J. FUSELIER

BRIDGE ENGINEER

SHEET 12 OF 29
DETAILS OF 1220'-0" CONTINUOUS COMPOSITE PLATE GIRDER UNIT (UNIT 3)
WHITE RIVER

ROUTE SEC.

ARKANSAS STATE HIGHWAY COMMISSION
LITTLE ROCK, ARK.

DRAWN BY: KDH DATE: AUG. 2012 FILENAME: b005836_s3.dgn
CHECKED BY: DHP DATE: 8-28-13 SCALE: AS NOTED
DESIGNED BY: DHP DATE: 3-6-12

BRIDGE NO. 07289 DRAWING NO. 54136

PRINT DATE: 8/27/2013

DATE REVISED	DATE FILMED	DATE REVISED	DATE FILMED

FED. ROAD DIST. NO.	STATE	FED. AID PROJ. NO.	SHEET NO.	TOTAL SHEETS
6	ARK.			
JOB NO.		005836	119	230
①	07289 - 1220' CONT. UNIT - 54137			

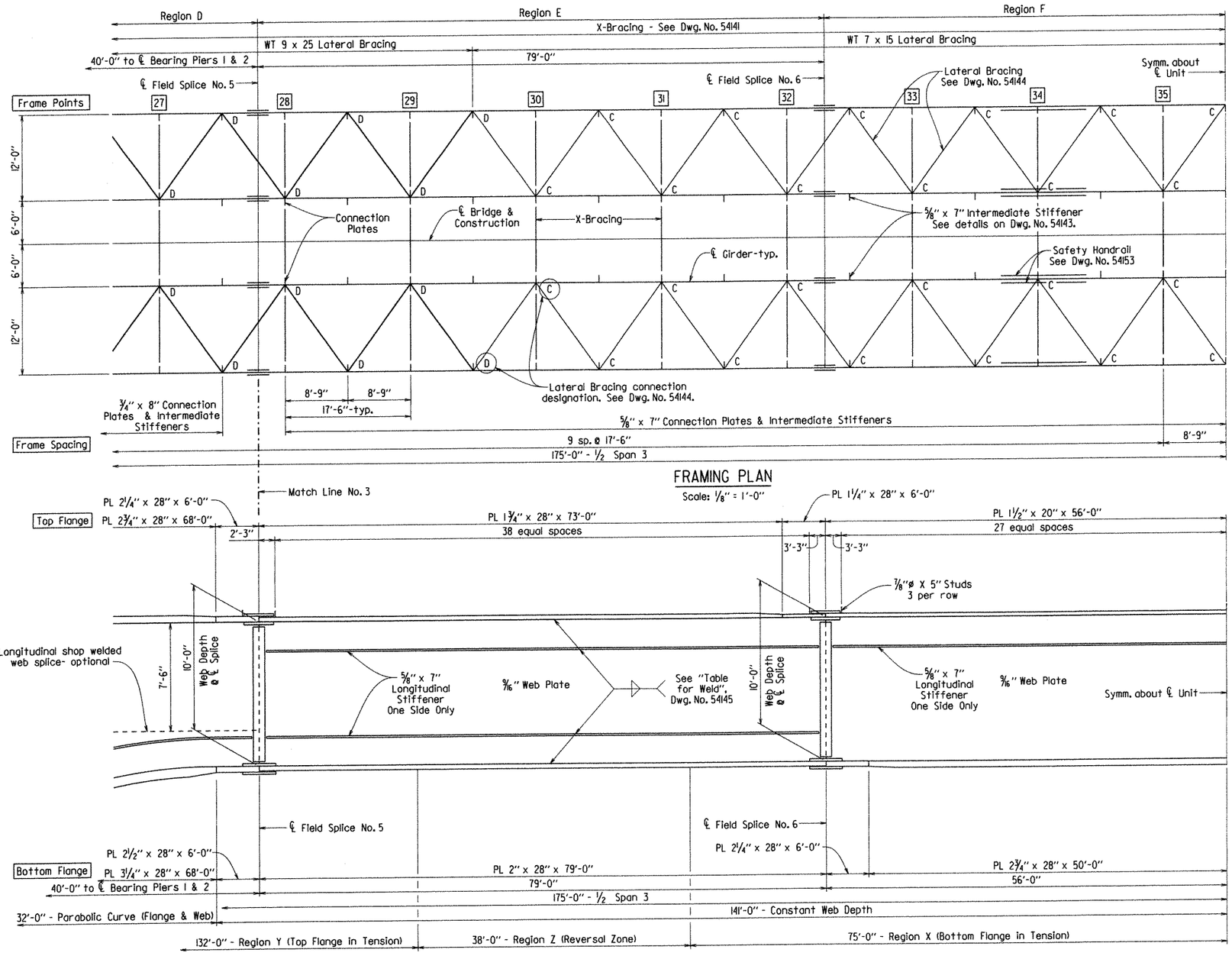

FRAMING PLAN

Scale: 1/8" = 1'-0"

GIRDER ELEVATION

No Scale

All structural Steel shall be AASHTO M270, Gr. 50W unless otherwise noted. Bolted field splices may be eliminated or shop welded splices may be substituted with the approval of the Engineer. Payment will be made on the basis of plan quantities.

All field splice plates shall be AASHTO M270, Gr. 50W steel.
All field splice bolts shall be 1/8"ø H.S. Bolts
All field splice bolt holes shall be 15/16"ø

STATE OF ARKANSAS
REGISTERED PROFESSIONAL ENGINEER
No. 7510
8/28/13
CARL J. FUSELIER

BRIDGE ENGINEER

SHEET 13 OF 29
DETAILS OF 1220'-0" CONTINUOUS COMPOSITE PLATE GIRDER UNIT (UNIT 3)
WHITE RIVER

ROUTE SEC.

ARKANSAS STATE HIGHWAY COMMISSION
LITTLE ROCK, ARK.

DRAWN BY: KDH DATE: AUG. 2012 FILENAME: b005836_s3.dgn
CHECKED BY: DHP DATE: 8-28-13 SCALE: AS NOTED
DESIGNED BY: DHP DATE: 3-6-12

BRIDGE NO. 07289 DRAWING NO. 54137

PRINT DATE: 8/27/2013

DATE REVISED	DATE FILMED	DATE REVISED	DATE FILMED	FED. ROAD DIST. NO.	STATE	FED. AID PROJ. NO.	SHEET NO.	TOTAL SHEETS
				6	ARK.			
				JOB NO.		005836	120	230
				①		07289 - 1220' CONT. UNIT - 54138		

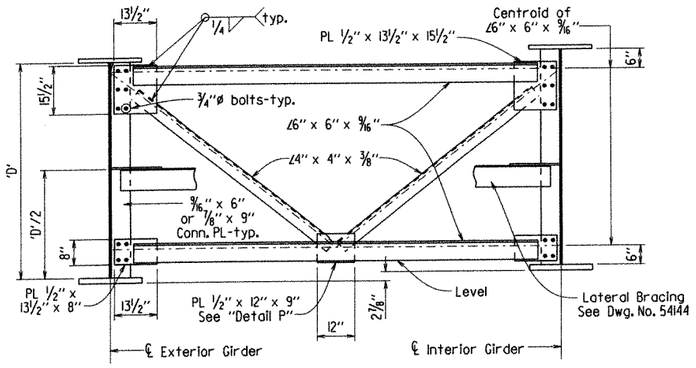

"D" = Web Depth

DETAILS OF K-FRAME

At Frame Points 1, 8 & 9
Scale: ½" = 1'-0"

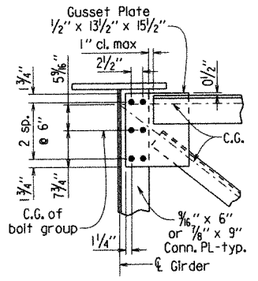

UPPER K-FRAME CONNECTION

At Frame Points 1, 8 & 9
Scale: ¾" = 1'-0"

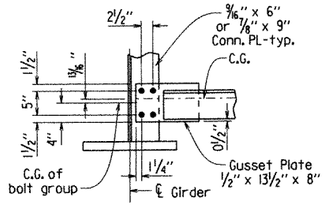

LOWER K-FRAME CONNECTION

At Frame Points 1, 8 & 9
Scale: ¾" = 1'-0"

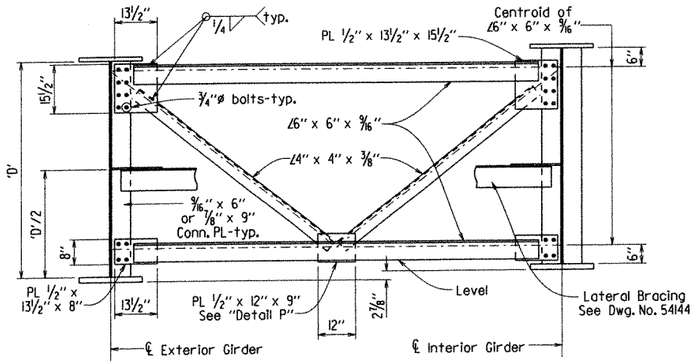

"D" = Web Depth

DETAILS OF K-FRAME

At Frame Points 2 & 7
Scale: ½" = 1'-0"

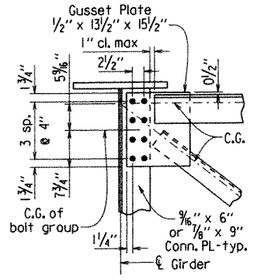

UPPER K-FRAME CONNECTION

At Frame Points 2 & 7
Scale: ¾" = 1'-0"

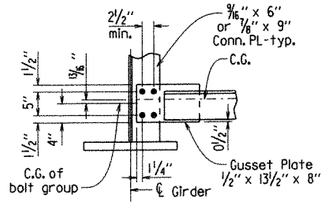

LOWER K-FRAME CONNECTION

At Frame Points 2 & 7
Scale: ¾" = 1'-0"

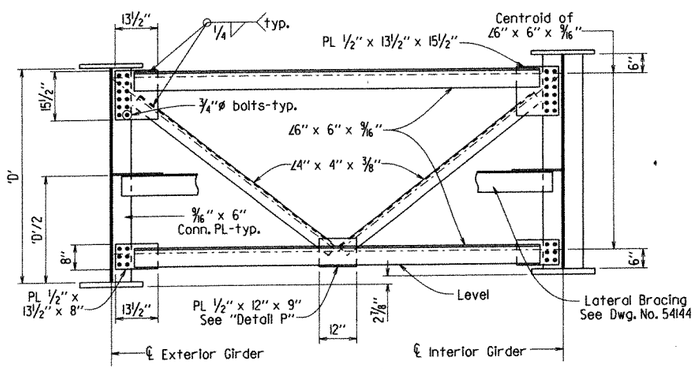

"D" = Web Depth

DETAILS OF K-FRAME

At Frame Points 3 - 5
Scale: ½" = 1'-0"

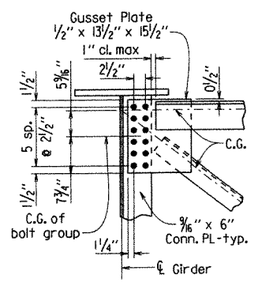

UPPER K-FRAME CONNECTION

At Frame Points 3 - 5
Scale: ¾" = 1'-0"

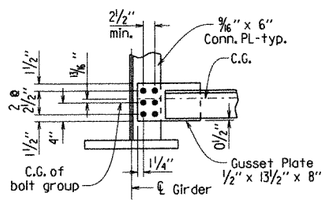

LOWER K-FRAME CONNECTION

At Frame Points 3 - 5
Scale: ¾" = 1'-0"

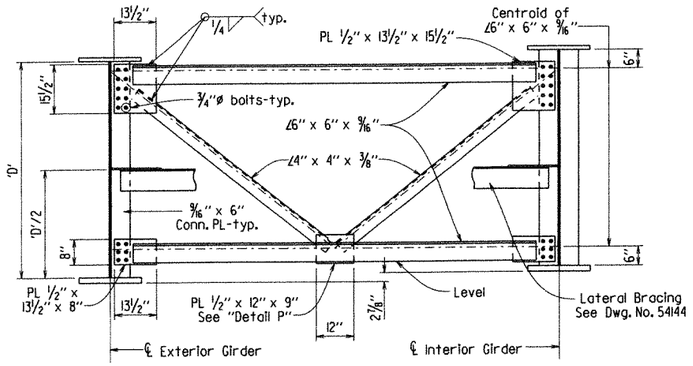

"D" = Web Depth

DETAILS OF K-FRAME

At Frame Point 6
Scale: ½" = 1'-0"

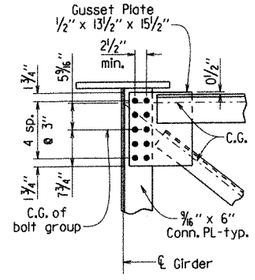

UPPER K-FRAME CONNECTION

At Frame Point 6
Scale: ¾" = 1'-0"

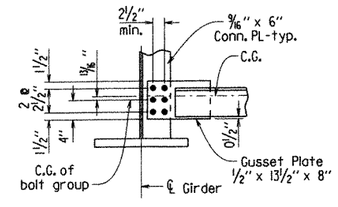

LOWER K-FRAME CONNECTION

At Frame Point 6
Scale: ¾" = 1'-0"

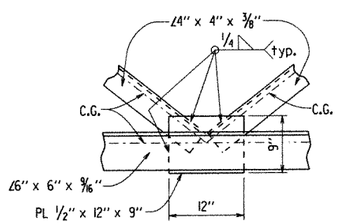

DETAIL P

Typ. at all K-Frames
Scale: 1" = 1'-0"

SHEET 14 OF 29
DETAILS OF 1220'-0" CONTINUOUS
COMPOSITE PLATE GIRDER UNIT
(UNIT 3)
WHITE RIVER

ROUTE SEC.

ARKANSAS STATE HIGHWAY COMMISSION
LITTLE ROCK, ARK.

STATE OF ARKANSAS
Carl J. Fuselier
REGISTERED PROFESSIONAL ENGINEER
No. 7510
8/28/13
CARL J. FUSELIER
BRIDGE ENGINEER

DRAWN BY: KDH DATE: SEPT. 2012 FILENAME: b005836_s3.dgn
CHECKED BY: DHP DATE: 8-28-13 SCALE: AS NOTED
DESIGNED BY: DHP DATE: 3-6-12
BRIDGE NO. 07289 DRAWING NO. 54138

PRINT DATE: 8/27/2013

DATE REVISED	DATE FILMED	DATE REVISED	DATE FILMED	FED. ROAD DIST. NO.	STATE	FED. AID PROJ. NO.	SHEET NO.	TOTAL SHEETS
				6	ARK.			
				JOB NO.		005836	121	230
				(1)		07289 - 1220' CONT. UNIT - 54139		

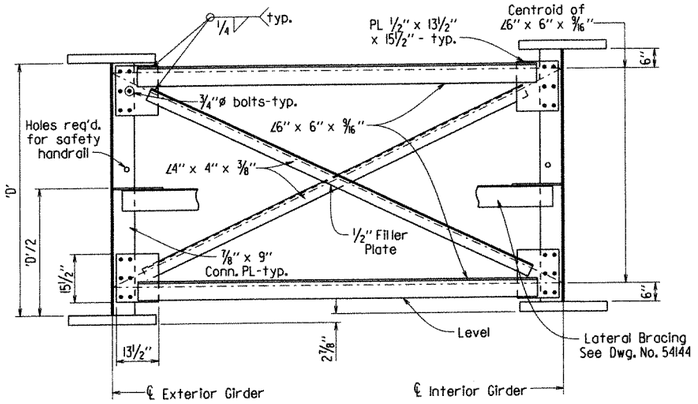

"D" = Web Depth

DETAILS OF X-FRAME

At Frame Points 10, 11, & 12
Scale: 1/2" = 1'-0"

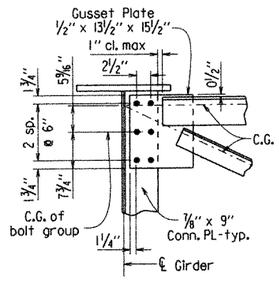

UPPER X-FRAME CONNECTION

At Frame Points 10, 11, & 12
Scale: 3/4" = 1'-0"

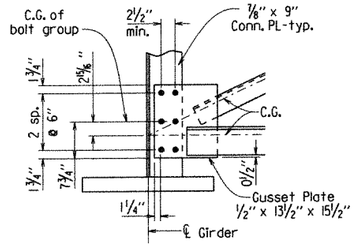

LOWER X-FRAME CONNECTION

At Frame Points 10, 11, & 12
Scale: 3/4" = 1'-0"

For details of safety handrail, see Dwg. No. 54153.

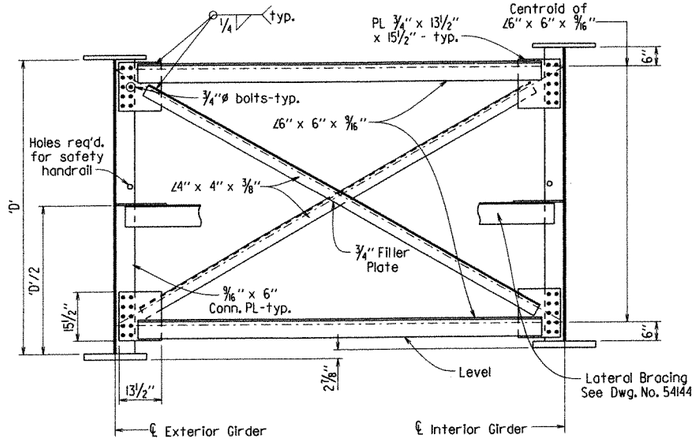

"D" = Web Depth

DETAILS OF X-FRAME

At Frame Points 14 - 17
Scale: 1/2" = 1'-0"

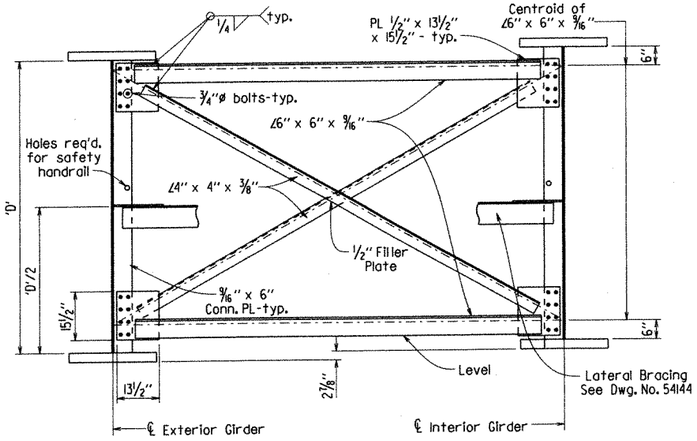

"D" = Web Depth

DETAILS OF X-FRAME

At Frame Points 13 & 18
Scale: 1/2" = 1'-0"

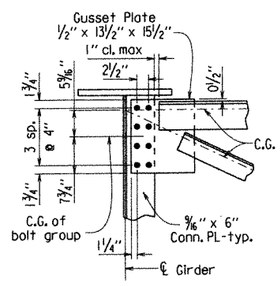

UPPER X-FRAME CONNECTION

At Frame Points 13 & 18
Scale: 3/4" = 1'-0"

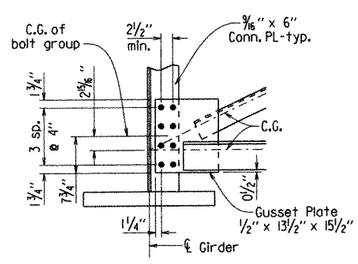

LOWER X-FRAME CONNECTION

At Frame Points 13 & 18
Scale: 3/4" = 1'-0"

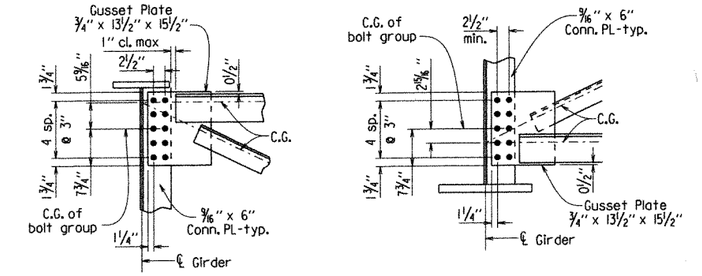

UPPER X-FRAME CONNECTION

At Frame Points 14 - 17
Scale: 3/4" = 1'-0"

LOWER X-FRAME CONNECTION

At Frame Points 14 - 17
Scale: 3/4" = 1'-0"

STATE OF ARKANSAS
Carl J. Fuselier
REGISTERED PROFESSIONAL ENGINEER
No. 7510
8/28/13
CARL J. FUSELIER

BRIDGE ENGINEER

SHEET 15 OF 29
DETAILS OF 1220'-0" CONTINUOUS COMPOSITE PLATE GIRDER UNIT (UNIT 3) WHITE RIVER

ROUTE SEC.

ARKANSAS STATE HIGHWAY COMMISSION
LITTLE ROCK, ARK.

DRAWN BY: KDH DATE: SEPT. 2012 FILENAME: b005836_s3.dgn
CHECKED BY: DHP DATE: 8-28-13 SCALE: AS NOTED
DESIGNED BY: DHP DATE: 3-6-12

BRIDGE NO. 07289 DRAWING NO. 54139

PRINT DATE: 8/27/2013

DATE REVISED	DATE FILMED	DATE REVISED	DATE FILMED	FED. ROAD DIST. NO.	STATE	FED. AID PROJ. NO.	SHEET NO.	TOTAL SHEETS
				6	ARK.			
				JOB NO.		005836	122	230
				1		07289 - 1220' CONT. UNIT - 54140		

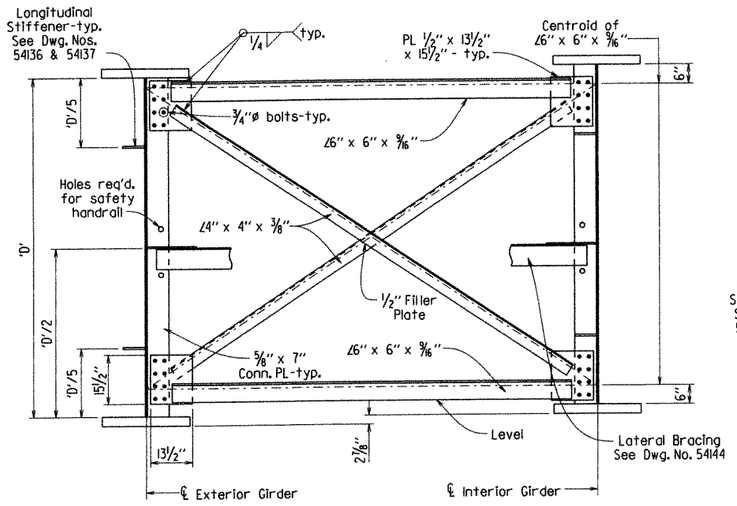

"D" = Web Depth

DETAILS OF X-FRAME

At Frame Points 19 & 20
Scale: 1/2" = 1'-0"

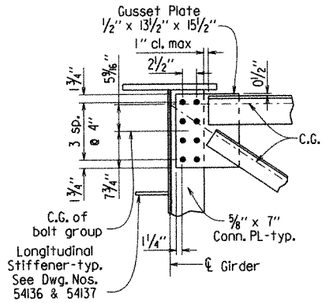

UPPER X-FRAME CONNECTION

At Frame Points 19 & 20
Scale: 3/4" = 1'-0"

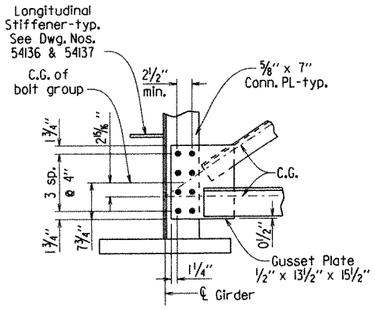

LOWER X-FRAME CONNECTION

At Frame Points 19 & 20
Scale: 3/4" = 1'-0"

For details of safety handrail, see Dwg. No. 54153.

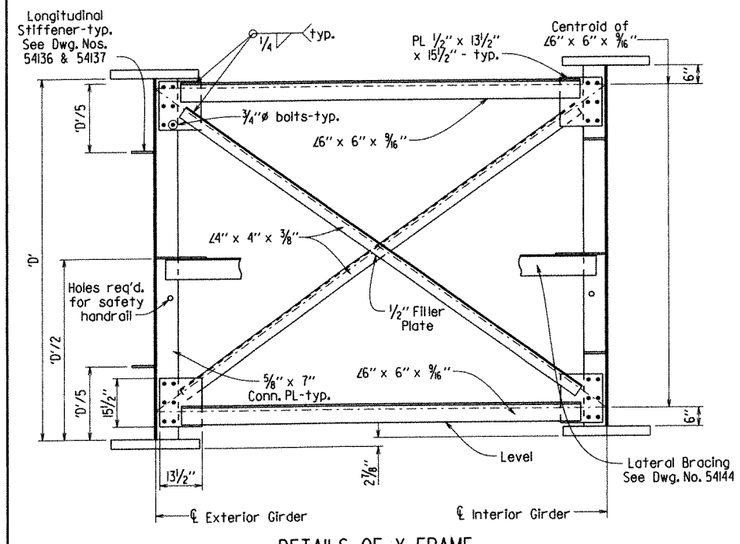

"D" = Web Depth

DETAILS OF X-FRAME

At Frame Points 21, 22 & 23
Scale: 1/2" = 1'-0"

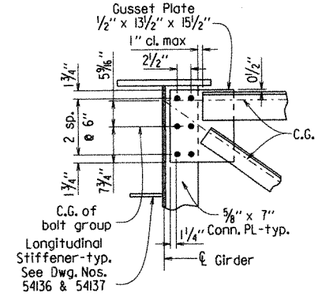

UPPER X-FRAME CONNECTION

At Frame Points 21, 22 & 23
Scale: 3/4" = 1'-0"

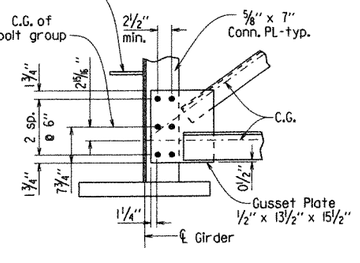

LOWER X-FRAME CONNECTION

At Frame Points 21, 22 & 23
Scale: 3/4" = 1'-0"

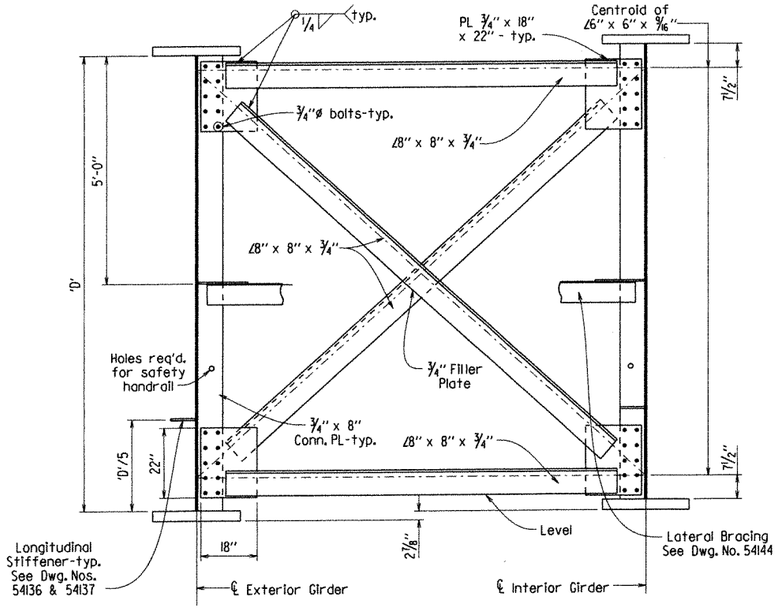

"D" = Web Depth

DETAILS OF X-FRAME

At Frame Points 24 - 27
Scale: 1/2" = 1'-0"

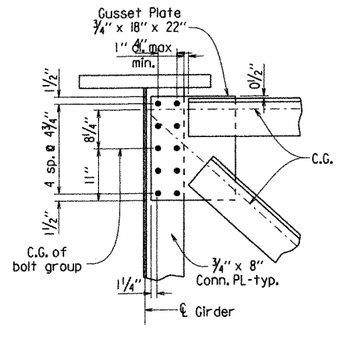

UPPER X-FRAME CONNECTION

At Frame Points 24 - 27
Scale: 3/4" = 1'-0"

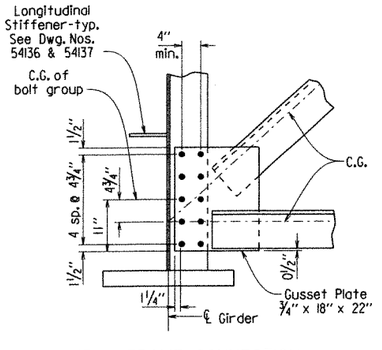

LOWER X-FRAME CONNECTION

At Frame Points 24 - 27
Scale: 3/4" = 1'-0"

STATE OF ARKANSAS
REGISTERED PROFESSIONAL ENGINEER
No. 7510
CARL J. FUSELIER
8/28/13

BRIDGE ENGINEER

SHEET 16 OF 29
DETAILS OF 1220'-0" CONTINUOUS COMPOSITE PLATE GIRDER UNIT
(UNIT 3)
WHITE RIVER

ROUTE SEC.

ARKANSAS STATE HIGHWAY COMMISSION
LITTLE ROCK, ARK.

DRAWN BY: KDH DATE: SEPT. 2012 FILENAME: b005836_s3.dgn
CHECKED BY: DHP DATE: 8-28-13 SCALE: AS NOTED
DESIGNED BY: DHP DATE: 3-6-12

BRIDGE NO. 07289 DRAWING NO. 54140

PRINT DATE: 8/27/2013

DATE REVISED	DATE FILMED	DATE REVISED	DATE FILMED	FED. ROAD DIST. NO.	STATE	FED. AID PROJ. NO.	SHEET NO.	TOTAL SHEETS
				6	ARK.			
				JOB NO.		005836	123	230
				①	07289 - 1220' CONT. UNIT - 54141			

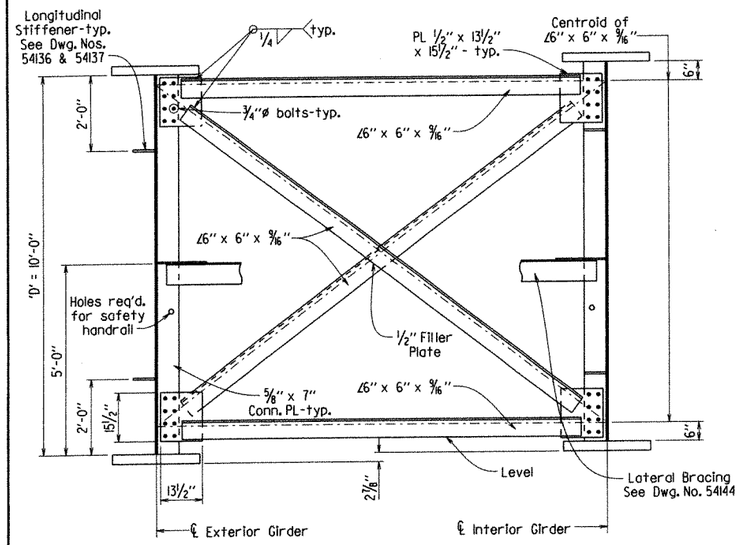

"D" = Web Depth

DETAILS OF X-FRAME

At Frame Points 28 - 32
Scale: 1/2" = 1'-0"

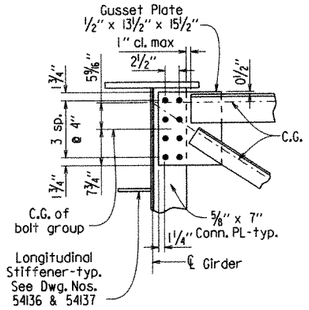

UPPER X-FRAME CONNECTION

At Frame Points 28 - 32
Scale: 3/4" = 1'-0"

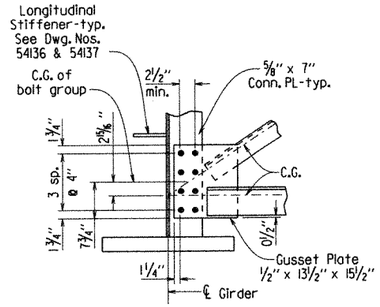

LOWER X-FRAME CONNECTION

At Frame Points 28 - 32
Scale: 3/4" = 1'-0"

For details of safety handrail, see Dwg. No. 54153.

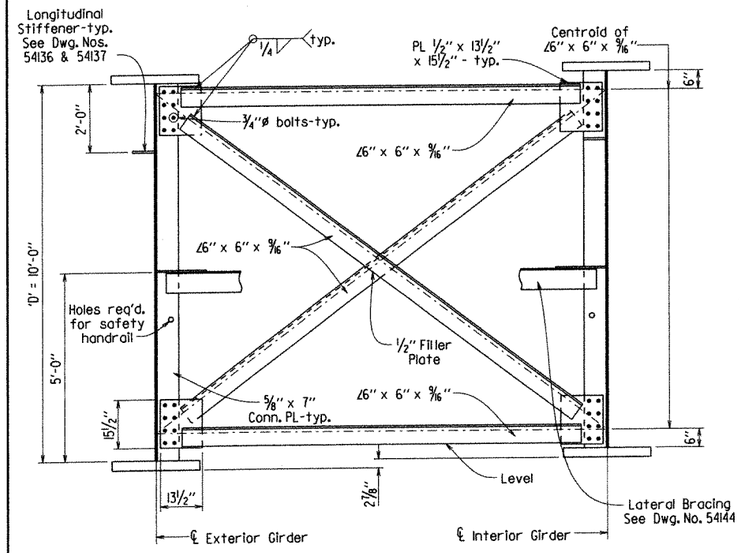

"D" = Web Depth

DETAILS OF X-FRAME

At Frame Points 33 - 35
Scale: 1/2" = 1'-0"

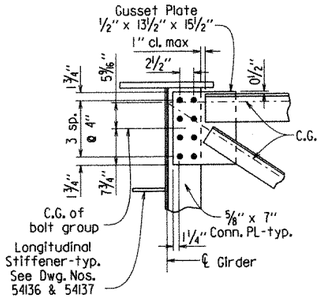

UPPER X-FRAME CONNECTION

At Frame Points 33 - 35
Scale: 3/4" = 1'-0"

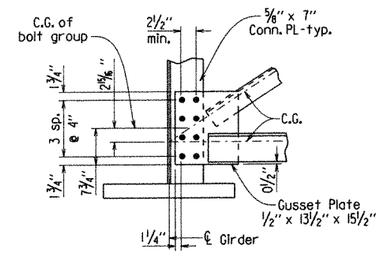

LOWER X-FRAME CONNECTION

At Frame Points 33 - 35
Scale: 3/4" = 1'-0"

PRINT DATE: 8/27/2013

STATE OF ARKANSAS
Carl J. Fuselier
REGISTERED PROFESSIONAL ENGINEER
No. 7510
8/29/13
CARL J. FUSELIER

BRIDGE ENGINEER

SHEET 17 OF 29
DETAILS OF 1220'-0" CONTINUOUS COMPOSITE PLATE GIRDER UNIT (UNIT 3)
WHITE RIVER

ROUTE SEC.

ARKANSAS STATE HIGHWAY COMMISSION
LITTLE ROCK, ARK.

DRAWN BY: KDH DATE: SEPT. 2012 FILENAME: b005836_s3.dgn
CHECKED BY: DHP DATE: 8-28-13 SCALE: AS NOTED
DESIGNED BY: DHP DATE: 3-6-12

BRIDGE NO. 07289 DRAWING NO. 54141

DATE REVISED	DATE FILMED	DATE REVISED	DATE FILMED	FED. ROAD DIST. NO.	STATE	FED. AID PROJ. NO.	SHEET NO.	TOTAL SHEETS
				6	ARK.			
				JOB NO.		005836	124	230
				①	07289 - 1220' CONT. UNIT - 54142			

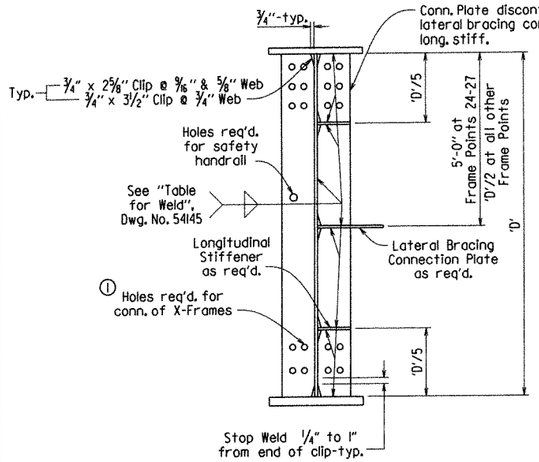

CONNECTION PLATES AT INTERIOR GIRDERS

With Lateral Bracing and Longitudinal Stiffeners

Scale: ¾" = 1'-0"

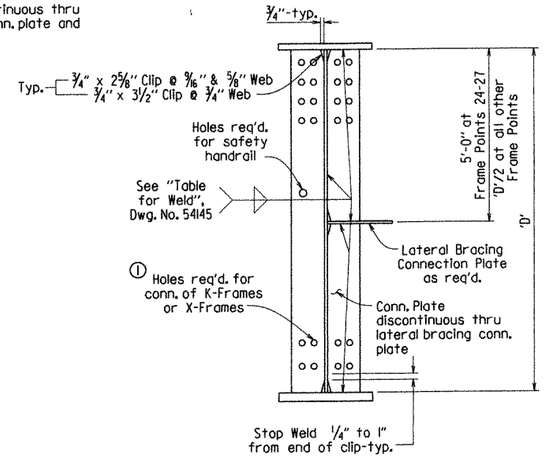

CONNECTION PLATES AT INTERIOR GIRDERS

With Lateral Bracing & without Longitudinal Stiffeners

Scale: ¾" = 1'-0"

For sizes of connection plates, see "Framing Plans", Dwg. Nos. 54134 - 54137.

For details of safety handrail, see Dwg. No. 54153.

"D" = Web Depth

① See K-frame and X-frame details on Dwg. No. 54138-54141 for actual location and number holes.

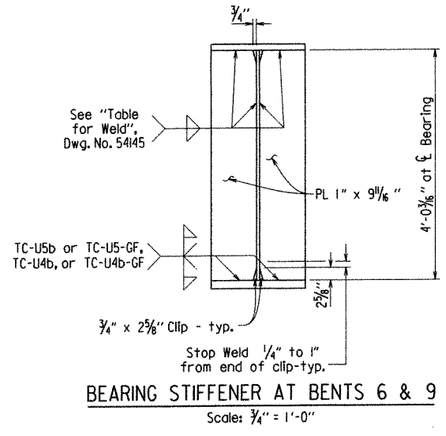

BEARING STIFFENER AT BENTS 6 & 9

Scale: ¾" = 1'-0"

All bearing stiffeners shall be vertical in their final position

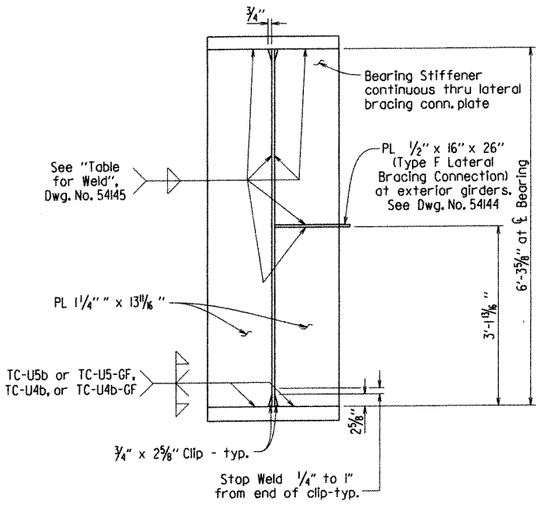

BEARING STIFFENER AT BENTS 7 & 8

Scale: ¾" = 1'-0"

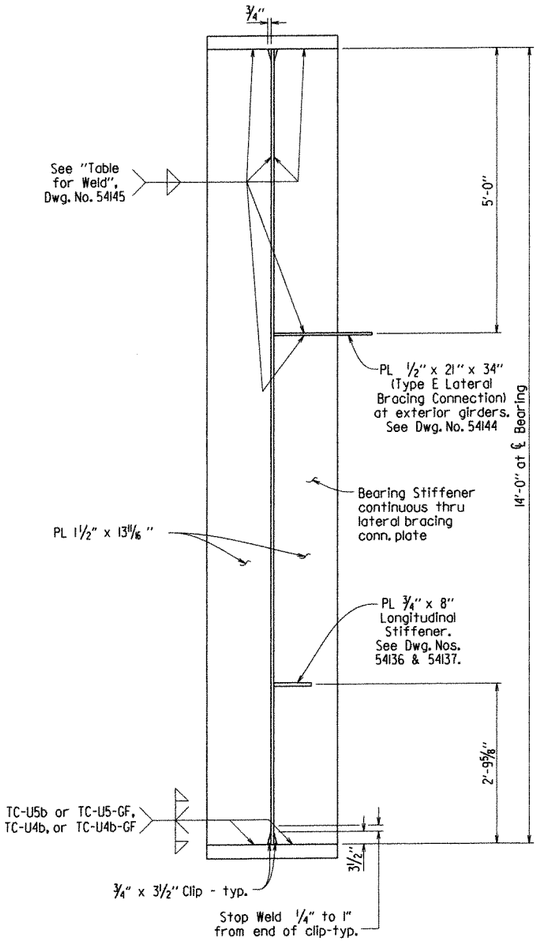

BEARING STIFFENER AT PIERS 1 & 2

Scale: ¾" = 1'-0"

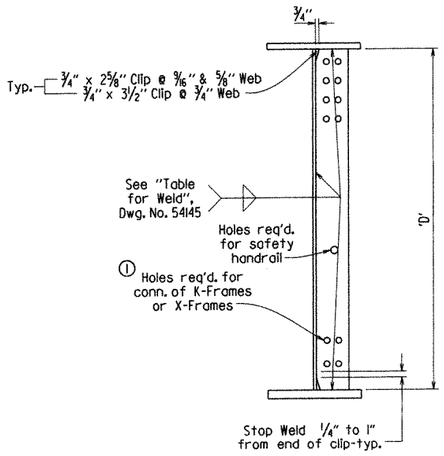

CONNECTION PLATES AT EXTERIOR GIRDERS

Scale: ¾" = 1'-0"

STATE OF ARKANSAS
Carl L. Fuselier
REGISTERED PROFESSIONAL ENGINEER
No. 7510
9/2/13
CARL L. FUSELIER

BRIDGE ENGINEER

SHEET 18 OF 29
DETAILS OF 1220'-0" CONTINUOUS COMPOSITE PLATE GIRDER UNIT (UNIT 3)
WHITE RIVER

ROUTE SEC.

ARKANSAS STATE HIGHWAY COMMISSION

LITTLE ROCK, ARK.

DRAWN BY: KDH DATE: SEPT. 2012 FILENAME: b005836_s3.dgn
CHECKED BY: DHP DATE: 8-28-13 SCALE: AS NOTED
DESIGNED BY: DHP DATE: 3-6-12

BRIDGE NO. 07289 DRAWING NO. 54142

PRINT DATE: 8/27/2013

DATE REVISED	DATE FILMED	DATE REVISED	DATE FILMED	FED. ROAD DIST. NO.	STATE	FED. AID PROJ. NO.	SHEET NO.	TOTAL SHEETS
				6	ARK.			
				JOB NO.		005836	125	230
				①	07289 - 1220' CONT. UNIT - 54143			

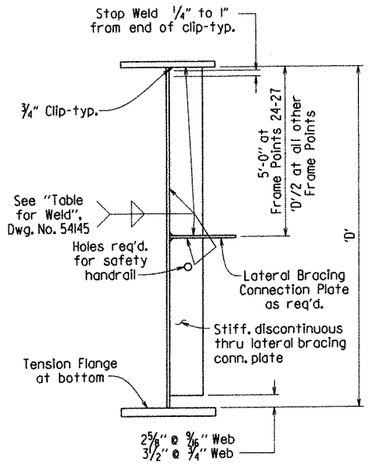

INTERMEDIATE STIFFENERS
AT EXTERIOR GIRDERS
REGION X
Scale: 3/4" = 1'-0"

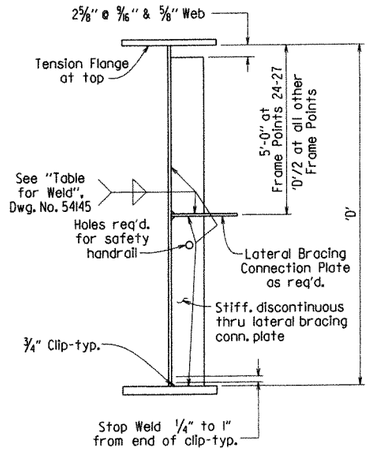

INTERMEDIATE STIFFENERS
AT EXTERIOR GIRDERS
REGION Y
Scale: 3/4" = 1'-0"

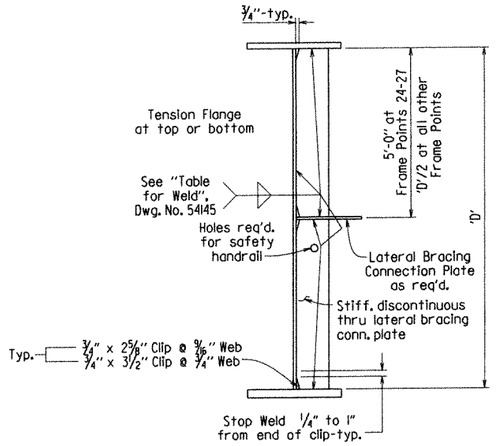

INTERMEDIATE STIFFENERS
AT EXTERIOR GIRDERS
REGION Z
Scale: 3/4" = 1'-0"

"D" = Web Depth

Note: For sizes of intermediate stiffeners, see "Framing Plans", Dwg. Nos. 54134 - 54153.

For details of safety handrail, see Dwg. No. 54153.

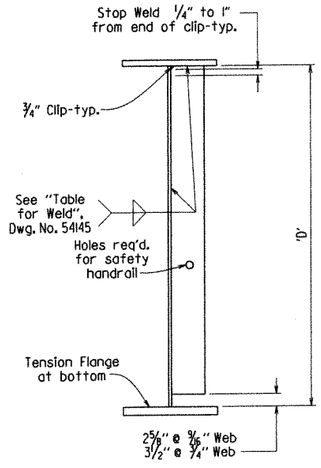

INTERMEDIATE STIFFENERS
AT INTERIOR GIRDERS
REGION X
Scale: 3/4" = 1'-0"

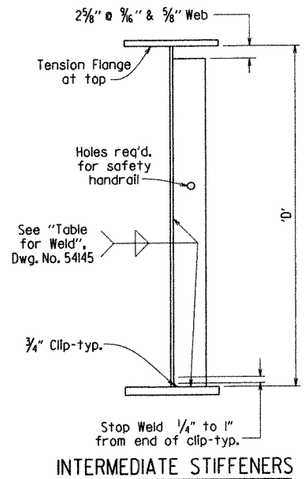

INTERMEDIATE STIFFENERS
AT INTERIOR GIRDERS
REGION Y
Scale: 3/4" = 1'-0"

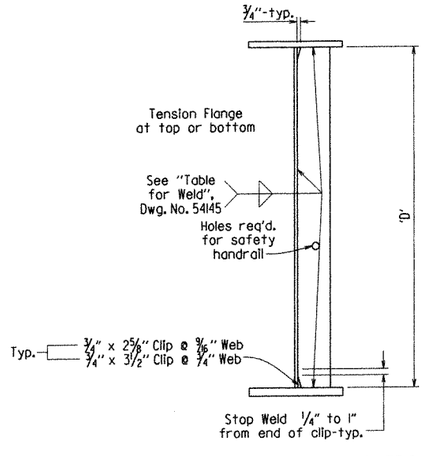

INTERMEDIATE STIFFENERS
AT INTERIOR GIRDERS
REGION Z
Scale: 3/4" = 1'-0"

PRINT DATE: 8/27/2013

STATE OF ARKANSAS
Carl H. Fuselier
REGISTERED PROFESSIONAL ENGINEER
No. 7510
8/29/13
CARL FUSELIER

BRIDGE ENGINEER

SHEET 19 OF 29
DETAILS OF 1220'-0" CONTINUOUS COMPOSITE PLATE GIRDER UNIT
(UNIT 3)
WHITE RIVER

ROUTE SEC.

ARKANSAS STATE HIGHWAY COMMISSION
LITTLE ROCK, ARK.

DRAWN BY: KDH DATE: SEPT. 2012 FILENAME: b005836_s3.dgn
CHECKED BY: DHP DATE: 8-28-13 SCALE: AS NOTED
DESIGNED BY: DHP DATE: 3-6-12

BRIDGE NO. 07289 DRAWING NO. 54143

DATE REVISED	DATE FILMED	DATE REVISED	DATE FILMED	FED. ROAD DIST. NO.	STATE	FED. AID PROJ. NO.	SHEET NO.	TOTAL SHEETS
				6	ARK.			
				JOB NO.		005836	126	230
				(1)	07289 - 1220' CONT. UNIT - 54144			

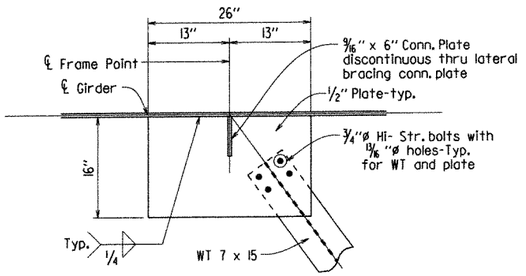

LATERAL BRACING CONNECTION A

Scale: 1" = 1'-0"

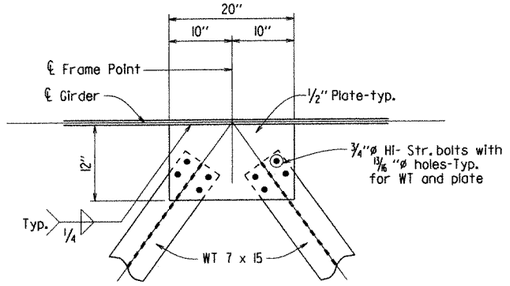

LATERAL BRACING CONNECTION B

Scale: 1" = 1'-0"

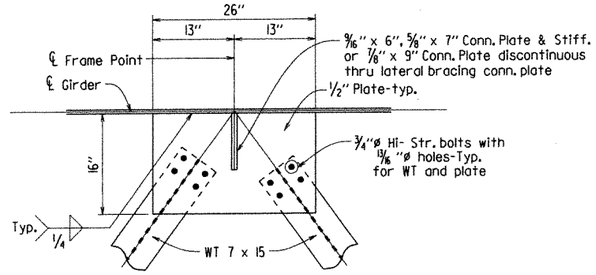

LATERAL BRACING CONNECTION C

Scale: 1" = 1'-0"

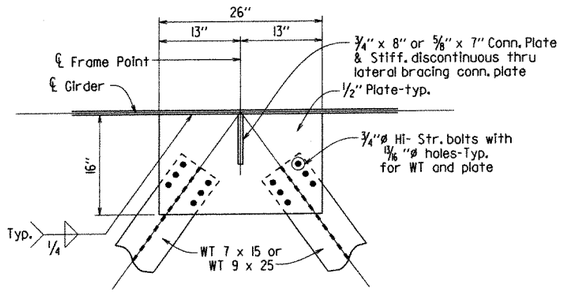

LATERAL BRACING CONNECTION D

Scale: 1" = 1'-0"

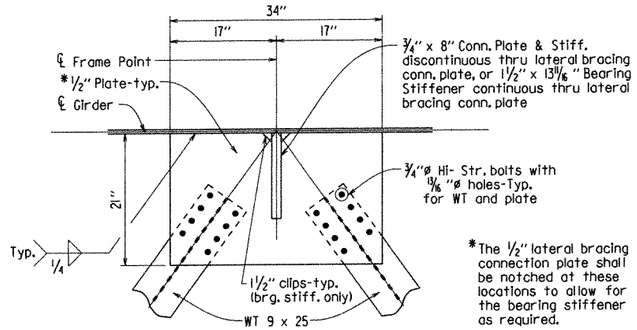

*The 1/2" lateral bracing connection plate shall be notched at these locations to allow for the bearing stiffener as required.

LATERAL BRACING CONNECTION E

Scale: 1" = 1'-0"

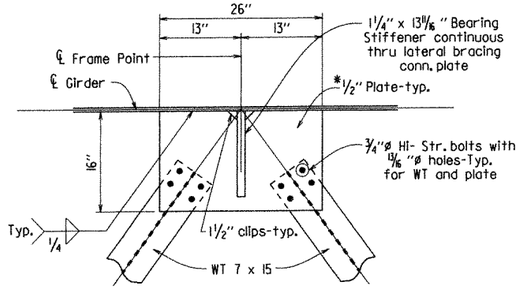

LATERAL BRACING CONNECTION F

Scale: 1" = 1'-0"

Note: At the Contractor's option holes in one end of the WT may be field drilled.
Minimum edge clearance from ℄ Bolt to Edge of Plate = 1 1/2"

Ends of lateral bracing members shall be kept a minimum of 4" from the web and any stiffener or conn. plate.

STATE OF ARKANSAS
REGISTERED PROFESSIONAL ENGINEER
No. 7510
8/28/13
CARL J. FUSELIER

BRIDGE ENGINEER

SHEET 20 OF 29
DETAILS OF 1220'-0" CONTINUOUS COMPOSITE PLATE GIRDER UNIT (UNIT 3)
WHITE RIVER

ROUTE SEC.

ARKANSAS STATE HIGHWAY COMMISSION
LITTLE ROCK, ARK.

DRAWN BY: KDH DATE: SEPT. 2012 FILENAME: b005836_s3.dgn
CHECKED BY: DHP DATE: 8-28-13 SCALE: AS NOTED
DESIGNED BY: DHP DATE: 3-6-12

BRIDGE NO. 07289 DRAWING NO. 54144

PRINT DATE: 8/27/2013

DATE REVISED	DATE FILMED	DATE REVISED	DATE FILMED	FED. ROAD DIST. NO.	STATE	FED. AID PROJ. NO.	SHEET NO.	TOTAL SHEETS
				6	ARK.			
				JOB NO.		005836	121	230
				①	07289 - 1220' CONT. UNIT - 54145			

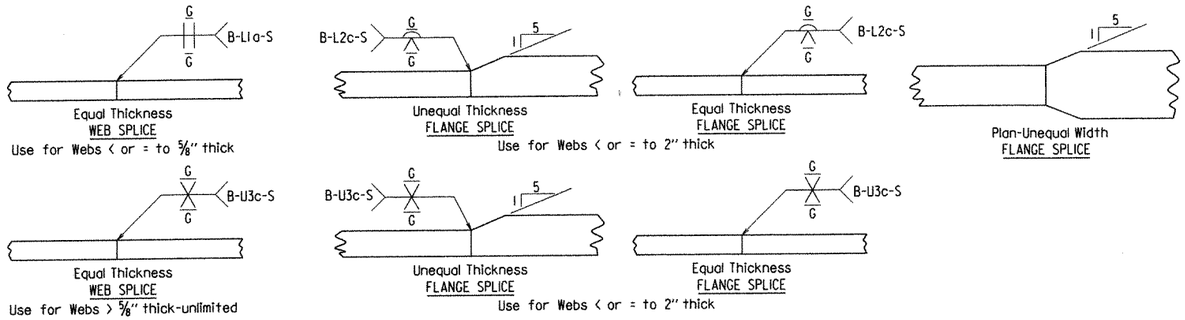

DETAILS OF WELDED SPLICES

No Scale

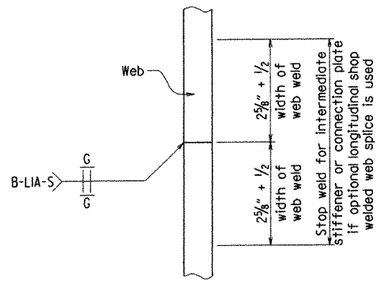

DETAILS OF OPTIONAL LONGITUDINAL SHOP WELDED WEB SPLICE

No Scale

TABLE FOR WELD

Material Thickness of Thicker Part Joined (Inches)	Minimum Size of Fillet Weld (Inches)	Single Pass Weld Must Be Used
To 3/4" Inclusive	1/4"	
Over 3/4"	5/16"	

When a fillet weld size, as shown on the plans, is larger than the minimum, the first pass shall be that specified for minimum size of fillet weld.

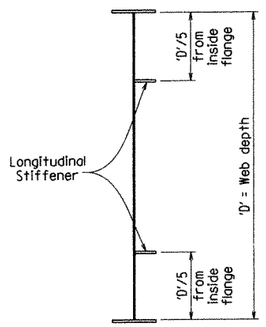

LONGITUDINAL STIFFENER PLACEMENT

No Scale

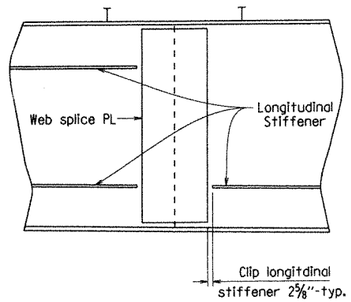

LONGITUDINAL STIFFENER CLIP AT WEB SPLICE

No Scale

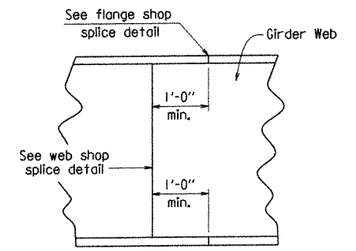

Web and flange shop splices shall be located a minimum of 8" from stiffener and connection plates.

LOCATION OF SHOP SPLICES

No Scale

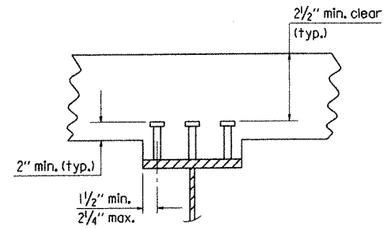

Stud Shear Connectors shown shall be 7/8"ø x 5" long, granular flux filled, solid fluxed or equal, and automatically end welded to the girder flange in accordance with the recommendations of the Manufacturer. 3/4"ø studs may be used in place of the 7/8"ø studs shown, at the ratio of 1.361 - 3/4"ø studs in place of one 7/8"ø stud. 7/8"ø studs will be used as basis for measurement of structural steel in shear connectors. Maximum stud spacing = 24".

SHEAR CONNECTOR DETAIL

No Scale

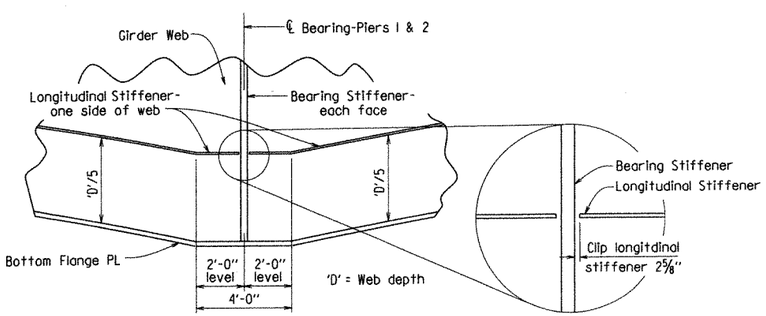

DETAIL A

No Scale

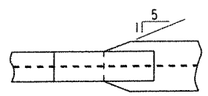

FIELD SPLICE AT UNEQUAL BOTTOM FLANGE WIDTHS

No Scale

STATE OF ARKANSAS
Carl J. Fuselier
REGISTERED PROFESSIONAL ENGINEER
No. 7510
8/29/13
CARL J. FUSELIER

BRIDGE ENGINEER

SHEET 21 OF 29
DETAILS OF 1220'-0" CONTINUOUS COMPOSITE PLATE GIRDER UNIT (UNIT 3)
WHITE RIVER

ROUTE SEC.

ARKANSAS STATE HIGHWAY COMMISSION
LITTLE ROCK, ARK.

DRAWN BY: KDH DATE: SEPT. 2012 FILENAME: b005836_s3.dgn
CHECKED BY: DHP DATE: 8-28-13 SCALE: AS NOTED
DESIGNED BY: DHP DATE: 3-6-12

BRIDGE NO. 07289 DRAWING NO. 54145

PRINT DATE: 8/27/2013

DATE REVISED	DATE FILMED	DATE REVISED	DATE FILMED	FED. ROAD DIST. NO.	STATE	FED. AID PROJ. NO.	SHEET NO.	TOTAL SHEETS
				6	ARK.			
				JOB NO.		005836	128	230
				①	07289 - 1220' CONT. UNIT - 54146			

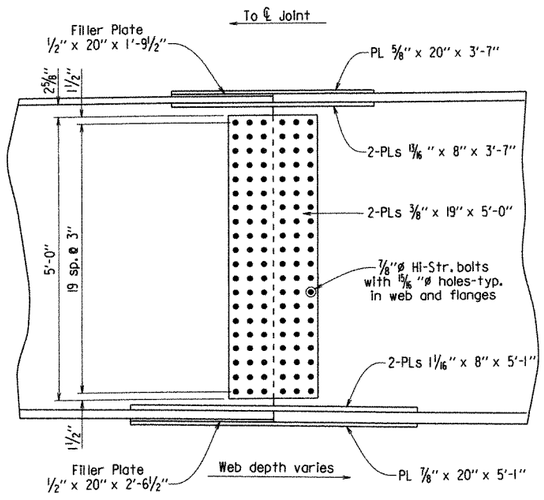

WEB SPLICE

FIELD SPLICE NO. 1

Scale: 3/4" = 1'-0"

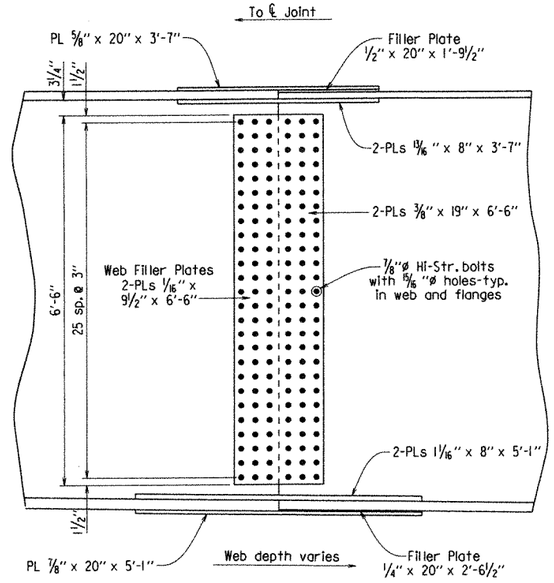

WEB SPLICE

FIELD SPLICE NO. 2

Scale: 3/4" = 1'-0"

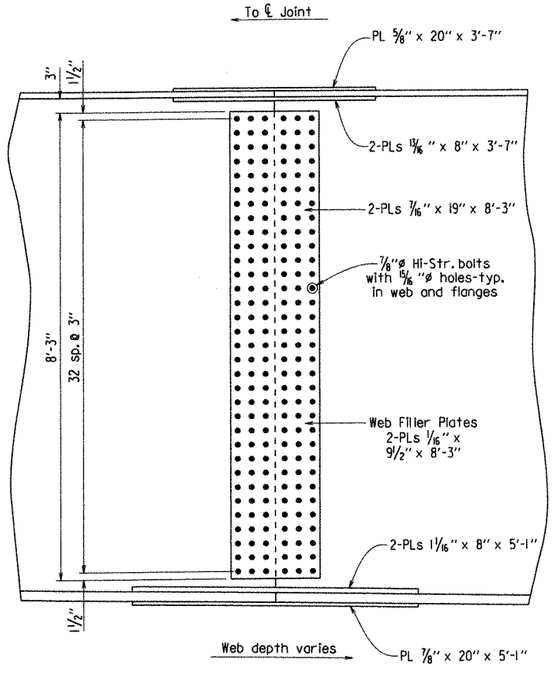

WEB SPLICE

FIELD SPLICE NO. 3

Scale: 3/4" = 1'-0"

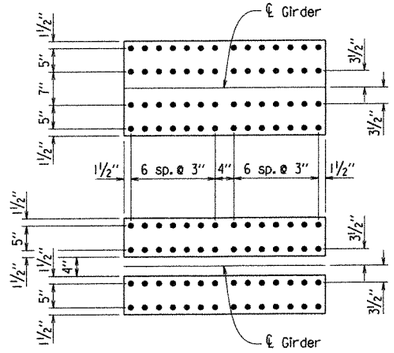

TOP FLANGE SPLICE

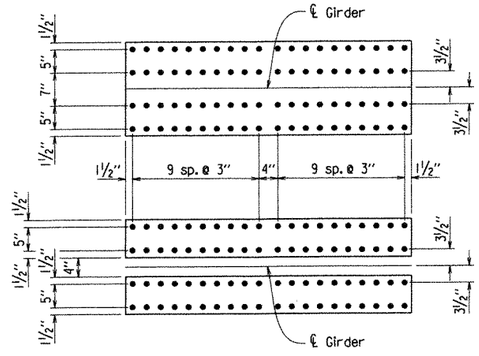

BOTTOM FLANGE SPLICE

FLANGE SPLICES FOR FIELD SPLICE NOS. 1 - 3

Scale: 3/4" = 1'-0"

STATE OF ARKANSAS
Carl J. Fuselier
REGISTERED PROFESSIONAL ENGINEER
No. 7510
8/28/12
CARL J. FUSELIER

BRIDGE ENGINEER

SHEET 22 OF 29
DETAILS OF 1220'-0" CONTINUOUS
COMPOSITE PLATE GIRDER UNIT
(UNIT 3)
WHITE RIVER

ROUTE SEC.

ARKANSAS STATE HIGHWAY COMMISSION
LITTLE ROCK, ARK.

DRAWN BY: KDH DATE: SEPT. 2012 FILENAME: b005836_s3.dgn
CHECKED BY: DHP DATE: 8-28-13 SCALE: AS NOTED
DESIGNED BY: DHP DATE: 3-6-12

BRIDGE NO. 07289 DRAWING NO. 54146

PRINT DATE: 8/27/2013

DATE REVISED	DATE FILMED	DATE REVISED	DATE FILMED	FED. ROAD DIST. NO.	STATE	FED. AID PROJ. NO.	SHEET NO.	TOTAL SHEETS
				6	ARK.			
				JOB NO.		005836	129	230
				(1)		07289 - 1220' CONT. UNIT - 54147		

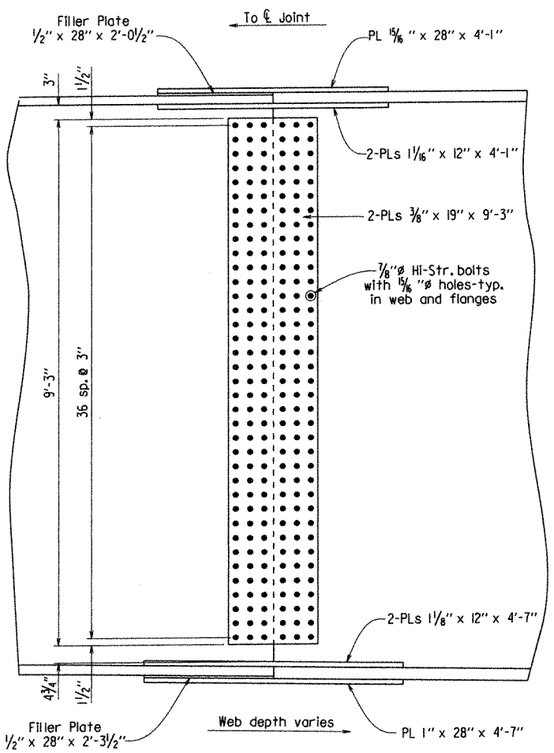

WEB SPLICE

FIELD SPLICE NO. 4

Scale: 3/4" = 1'-0"

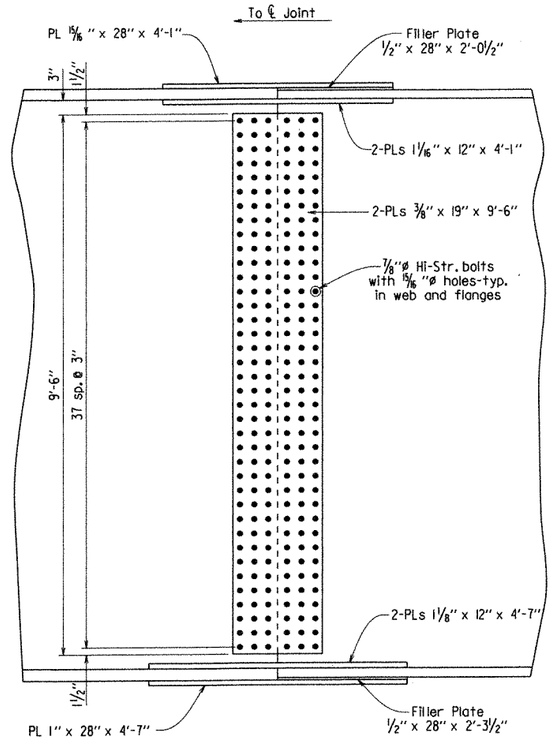

WEB SPLICE

FIELD SPLICE NO. 5

Scale: 3/4" = 1'-0"

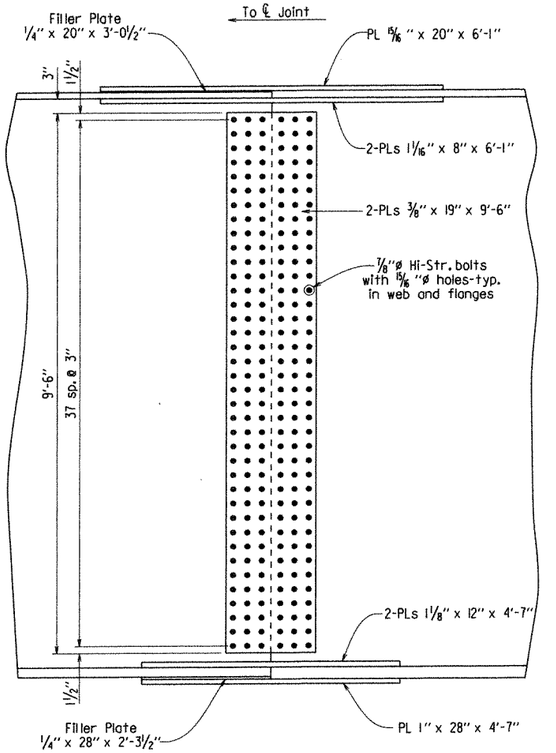

WEB SPLICE

FIELD SPLICE NO. 6

Scale: 3/4" = 1'-0"

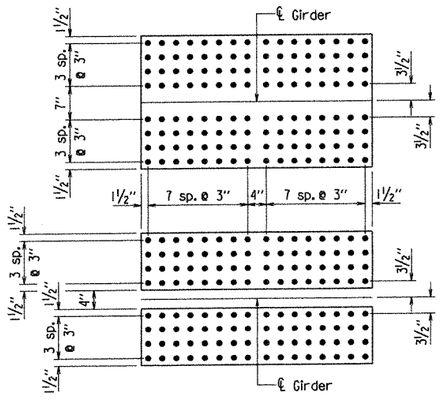

TOP FLANGE SPLICE

FIELD SPLICE NO. 4 & 5

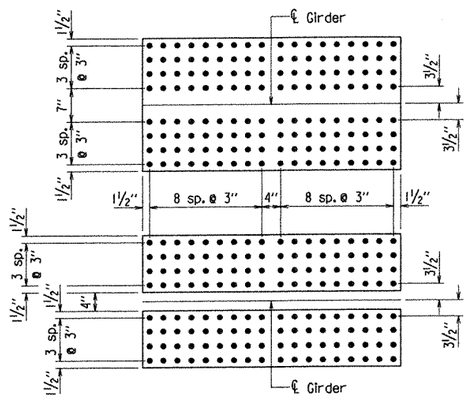

BOTTOM FLANGE SPLICE

FIELD SPLICE NOS. 4 - 6

FLANGE SPLICES FOR FIELD SPLICE NOS. 4 - 6

Scale: 3/4" = 1'-0"

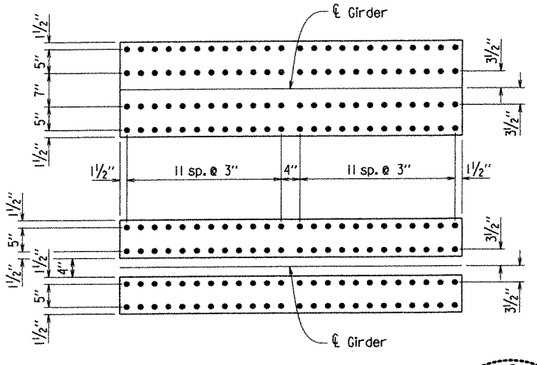

TOP FLANGE SPLICE

FIELD SPLICE NO. 6

STATE OF ARKANSAS
Carl J. Fuselier
REGISTERED PROFESSIONAL ENGINEER
No. 7510
12/28/12
CARL J. FUSELIER

BRIDGE ENGINEER

SHEET 23 OF 29
DETAILS OF 1220'-0" CONTINUOUS
COMPOSITE PLATE GIRDER UNIT
(UNIT 3)
WHITE RIVER

ROUTE SEC.

ARKANSAS STATE HIGHWAY COMMISSION

LITTLE ROCK, ARK.

DRAWN BY: KDH DATE: SEPT. 2012 FILENAME: b005836_s3.dgn
CHECKED BY: DHP DATE: 8-28-13 SCALE: AS NOTED
DESIGNED BY: DHP DATE: 3-6-12

BRIDGE NO. 07289 DRAWING NO. 54147

PRINT DATE: 8/27/2013

DATE REVISED	DATE FILMED	DATE REVISED	DATE FILMED	FED. ROAD DIST. NO.	STATE	FED. AID PROJ. NO.	SHEET NO.	TOTAL SHEETS
				6	ARK.			
				JOB NO.		005836	130	230
				(1)		07289 - 1220' CONT. UNIT - 54148		

TABLE OF DEAD LOAD DEFLECTIONS (INCHES)

Span	Point of Deflection	Structural Steel		Structural Steel + Slab		Structural Steel + Slab + Parapet	
		Interior	Exterior	Interior	Exterior	Interior	Exterior
1	0	0	0	0	0	0	0
	0.05	0.155	0.152	0.734	0.712	0.771	0.749
	0.10	0.292	0.287	1.387	1.346	1.458	1.417
	0.15	0.416	0.409	1.984	1.927	2.085	2.029
	0.20	0.513	0.504	2.455	2.385	2.580	2.510
	0.25	0.582	0.572	2.807	2.729	2.950	2.872
	0.30	0.622	0.611	3.024	2.940	3.177	3.093
	0.35	0.629	0.618	3.093	3.007	3.248	3.162
	0.40	0.612	0.601	3.047	2.961	3.198	3.112
	0.45	0.566	0.555	2.863	2.780	3.002	2.920
	0.50	0.506	0.496	2.604	2.526	2.729	2.651
	0.55	0.427	0.418	2.239	2.168	2.344	2.273
	0.60	0.347	0.339	1.864	1.802	1.948	1.887
	0.65	0.263	0.256	1.459	1.407	1.522	1.470
	0.70	0.186	0.181	1.085	1.042	1.129	1.086
	0.75	0.112	0.107	0.724	0.692	0.749	0.717
	0.80	0.052	0.049	0.428	0.405	0.438	0.415
	0.85	0.004	0.002	0.182	0.167	0.180	0.165
	0.90	-0.021	-0.022	0.028	0.021	0.020	0.014
	0.95	-0.022	-0.023	-0.032	-0.035	-0.039	-0.042
2	0	0	0	0	0	0	0
	0.05	0.148	0.147	0.452	0.444	0.491	0.483
	0.10	0.333	0.331	1.071	1.052	1.159	1.140
	0.15	0.585	0.580	1.955	1.920	2.107	2.072
	0.20	0.815	0.808	2.808	2.758	3.020	2.970
	0.25	1.046	1.037	3.718	3.655	3.990	3.927
	0.30	1.210	1.200	4.418	4.346	4.736	4.664
	0.35	1.312	1.301	4.935	4.855	5.285	5.205
	0.40	1.340	1.329	5.191	5.107	5.556	5.473
	0.45	1.287	1.276	5.168	5.083	5.531	5.446
	0.50	1.179	1.168	4.922	4.837	5.268	5.183
	0.55	0.995	0.985	4.391	4.311	4.703	4.623
	0.60	0.794	0.784	3.755	3.680	4.026	3.951
	0.65	0.556	0.547	2.939	2.874	3.157	3.093
	0.70	0.340	0.333	2.164	2.110	2.331	2.277
	0.75	0.127	0.121	1.366	1.324	1.478	1.436
	0.80	-0.025	-0.030	0.738	0.707	0.805	0.774
	0.85	-0.119	-0.121	0.268	0.250	0.299	0.281
	0.90	-0.146	-0.147	-0.012	-0.021	-0.005	-0.014
	0.95	-0.106	-0.106	-0.101	-0.104	-0.104	-0.107
	0	0	0	0	0	0	0

Span	Point of Deflection	Structural Steel		Structural Steel + Slab		Structural Steel + Slab + Parapet	
		Interior	Exterior	Interior	Exterior	Interior	Exterior
3	0	0	0	0	0	0	0
	0.05	0.221	0.220	0.384	0.378	0.408	0.402
	0.10	0.539	0.537	1.051	1.037	1.121	1.107
	0.15	0.991	0.987	2.105	2.075	2.250	2.220
	0.20	1.466	1.460	3.239	3.196	3.464	3.422
	0.25	2.008	2.000	4.567	4.512	4.887	4.832
	0.30	2.487	2.478	5.748	5.684	6.151	6.087
	0.35	2.933	2.923	6.861	6.789	7.341	7.269
	0.40	3.258	3.247	7.670	7.593	8.205	8.128
	0.45	3.472	3.461	8.202	8.121	8.772	8.691
	0.50	3.543	3.532	8.374	8.293	8.956	8.875
	0.55	3.473	3.462	8.187	8.106	8.757	8.676
	0.60	3.261	3.250	7.640	7.563	8.175	8.098
	0.65	2.937	2.927	6.819	6.747	7.299	7.227
	0.70	2.493	2.483	5.697	5.632	6.101	6.036
	0.75	2.014	2.006	4.512	4.456	4.833	4.777
	0.80	1.473	1.467	3.185	3.140	3.412	3.367
	0.85	0.996	0.992	2.054	2.022	2.200	2.168
	0.90	0.542	0.540	1.005	0.990	1.075	1.060
	0.95	0.222	0.221	0.356	0.350	0.380	0.374
4	0	0	0	0	0	0	0
	0.05	-0.106	-0.106	-0.072	-0.075	-0.075	-0.078
	0.10	-0.146	-0.147	0.049	0.040	0.056	0.047
	0.15	-0.120	-0.123	0.364	0.346	0.394	0.376
	0.20	-0.028	-0.033	0.872	0.843	0.938	0.909
	0.25	0.122	0.116	1.550	1.508	1.661	1.619
	0.30	0.335	0.327	2.405	2.351	2.571	2.517
	0.35	0.551	0.542	3.247	3.181	3.464	3.399
	0.40	0.790	0.780	4.139	4.063	4.409	4.333
	0.45	0.991	0.980	4.822	4.739	5.133	5.051
	0.50	1.172	1.161	5.384	5.297	5.729	5.642
	0.55	1.282	1.271	5.649	5.562	6.011	5.924
	0.60	1.337	1.326	5.677	5.591	6.042	5.956
	0.65	1.310	1.299	5.407	5.327	5.757	5.677
	0.70	1.210	1.200	4.861	4.788	5.179	5.106
	0.75	1.047	1.039	4.119	4.056	4.392	4.329
	0.80	0.819	0.812	3.154	3.104	3.367	3.317
	0.85	0.589	0.584	2.226	2.191	2.379	2.344
	0.90	0.335	0.332	1.250	1.232	1.338	1.320
	0.95	0.149	0.147	0.543	0.536	0.582	0.576
	0	0	0	0	0	0	0

Span	Point of Deflection	Structural Steel		Structural Steel + Slab		Structural Steel + Slab + Parapet	
		Interior	Exterior	Interior	Exterior	Interior	Exterior
5	0	0	0	0	0	0	0
	0.05	-0.026	-0.026	-0.095	-0.098	-0.103	-0.106
	0.10	-0.026	-0.027	-0.095	-0.103	-0.104	-0.112
	0.15	-0.001	-0.003	0.000	-0.014	-0.003	-0.017
	0.20	0.049	0.046	0.192	0.168	0.201	0.177
	0.25	0.110	0.105	0.426	0.393	0.450	0.417
	0.30	0.186	0.180	0.722	0.678	0.765	0.721
	0.35	0.264	0.257	1.029	0.977	1.092	1.040
	0.40	0.350	0.341	1.365	1.304	1.450	1.389
	0.45	0.429	0.420	1.661	1.593	1.766	1.698
	0.50	0.507	0.496	1.941	1.868	2.065	1.993
	0.55	0.565	0.555	2.147	2.070	2.286	2.209
	0.60	0.611	0.600	2.298	2.219	2.448	2.369
	0.65	0.628	0.617	2.352	2.274	2.506	2.428
	0.70	0.622	0.611	2.324	2.247	2.476	2.400
	0.75	0.585	0.574	2.183	2.111	2.326	2.254
	0.80	0.518	0.509	1.938	1.874	2.064	2.001
	0.85	0.423	0.416	1.587	1.533	1.690	1.636
	0.90	0.301	0.295	1.129	1.090	1.202	1.163
	0.95	0.161	0.158	0.604	0.583	0.643	0.622
	0	0	0	0	0	0	0

Dead Load Deflections based on removable forms. If non-matching stay-in-place forms are used, ribs shall be filled with a lightweight material positively attached to the forms.

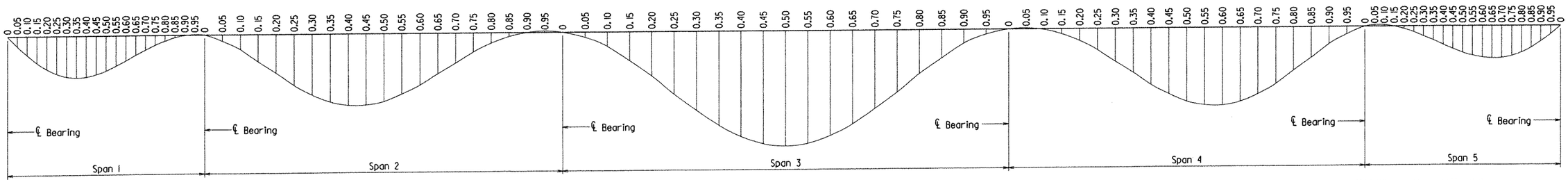

DEAD LOAD DEFLECTION DIAGRAM

No Scale

Note:
Camber for Dead Load Deflection plus Vertical curve ± 1/4" tolerance.
Deflections shown are from a chord from ℄ Bearing to ℄ Bearing.
Vertical curve corrections not included. Negative sign (-) indicates point above chord.

STATE OF ARKANSAS
Carl J. Puselier
REGISTERED PROFESSIONAL ENGINEER
No. 7510
8/28/13
CARL J. PUSELIER
BRIDGE ENGINEER

SHEET 24 OF 29
DETAILS OF 1220'-0" CONTINUOUS COMPOSITE PLATE GIRDER UNIT (UNIT 3)
WHITE RIVER

ROUTE SEC.

ARKANSAS STATE HIGHWAY COMMISSION
LITTLE ROCK, ARK.

DRAWN BY: KDH DATE: SEPT. 2012 FILENAME: b005836_s3.dgn
CHECKED BY: DHP DATE: 8-28-13 SCALE: AS NOTED
DESIGNED BY: DHP DATE: 3-6-12

BRIDGE NO. 07289 DRAWING NO. 54148

PRINT DATE: 8/27/2013

DATE REVISED	DATE FILMED	DATE REVISED	DATE FILMED	FED. ROAD DIST. NO.	STATE	FED. AID PROJ. NO.	SHEET NO.	TOTAL SHEETS
				6	ARK.			
				JOB NO.		005836	131	230
				①	07289 - 1220' CONT. UNIT - 54149			

① ℄ Full Depth Parapet Joint (¼" - 1" max.) Stop 4" from top of slab.

② ℄ Partial Depth Parapet Joint (¼" - 1" max.) Stop 1'-2" from top of slab.

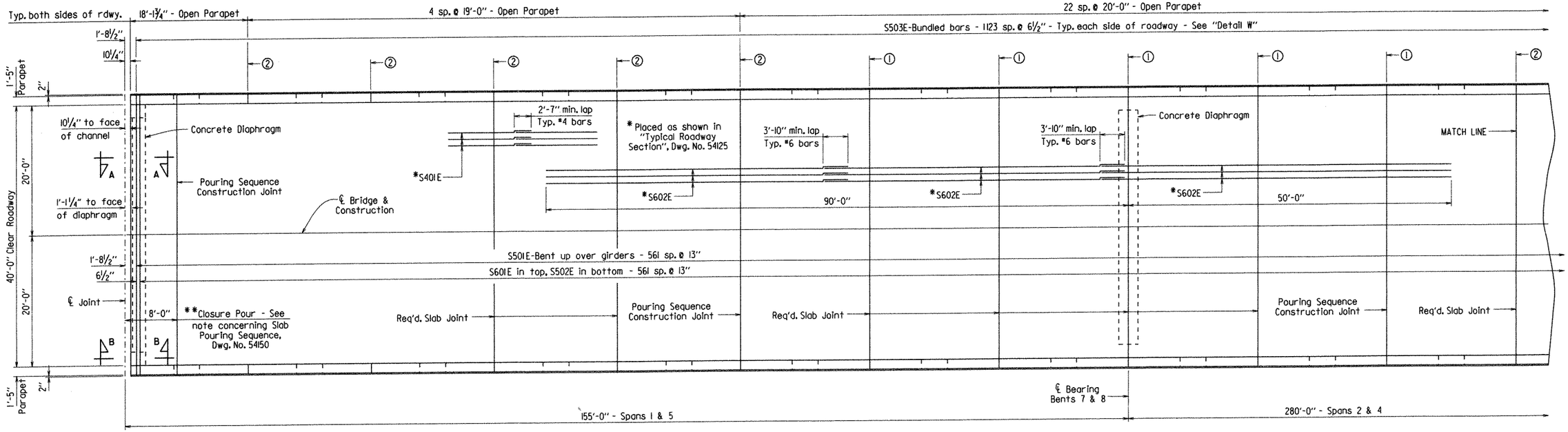

REINFORCING PLAN

Scale: ⅛" = 1'-0"

Use Type 3, 4, or 6 Joint Sealer. See subsections 501.02 (h)(2) and 501.05 (j). Backer Rod filler will not be required. Joint Sealer shall be measured and paid for as Class S(AE) Concrete-Bridge. Slab joints shall extend to the outside edge of the deck slab. Slab joints shall be installed before the parapet rail is poured. If slab joints are to be sawed, they shall be sawed as soon as the concrete has sufficiently set to allow sawing of the joint without damage to the slab. Slab joints shall be placed at all pouring sequence construction joints and required slab joint locations. The joint sealer shall extend across the deck slab (gutterline to gutterline). Slab joints shall align with parapet open joints except for slab joint at 8'-0" closure pour at finger joints.

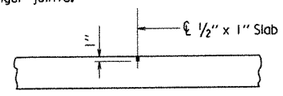

SLAB JOINT DETAIL

No Scale

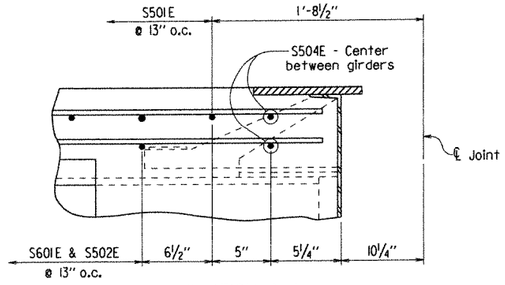

SECTION A-A

No Scale

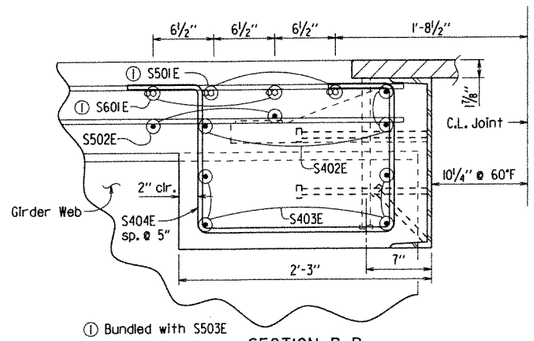

① Bundled with S503E

SECTION B-B

(In Cantilever Only)

No Scale

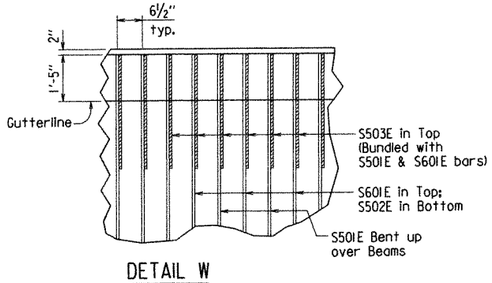

DETAIL W

No Scale

STATE OF ARKANSAS
Carl J. Fusselier
REGISTERED PROFESSIONAL ENGINEER
No. 7510
8/28/13
CARL J. FUSSELIER

BRIDGE ENGINEER

SHEET 25 OF 29

DETAILS OF 1220'-0" CONTINUOUS COMPOSITE PLATE GIRDER UNIT (UNIT 3) WHITE RIVER

ROUTE SEC.

ARKANSAS STATE HIGHWAY COMMISSION

LITTLE ROCK, ARK.

DRAWN BY: KDH DATE: SEPT. 2012 FILENAME: b005836_s3.dgn

CHECKED BY: DHP DATE: 8-28-13 SCALE: AS NOTED

DESIGNED BY: DHP DATE: 3-6-12

BRIDGE NO. 07289 DRAWING NO. 54149

PRINT DATE: 8/27/2013

DATE REVISED	DATE FILMED	DATE REVISED	DATE FILMED	FED. ROAD DIST. NO.	STATE	FED. AID PROJ. NO.	SHEET NO.	TOTAL SHEETS
				6	ARK.			
				JOB NO.		005836	122	230
				(1)		07289 - 1220' CONT. UNIT - 54150		

① ℄ Full Depth Parapet Joint (¼" - 1" max.) Stop 4" from top of slab.

② ℄ Partial Depth Parapet Joint (¼" - 1" max.) Stop 1'-2" from top of slab.

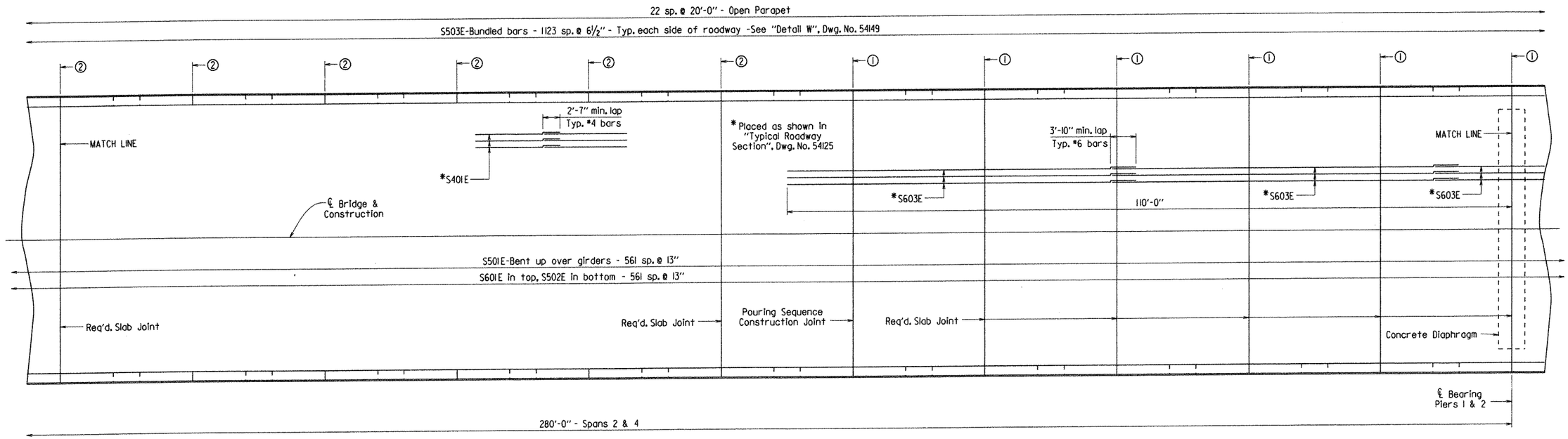

REINFORCING PLAN

Scale: ⅛" = 1'-0"

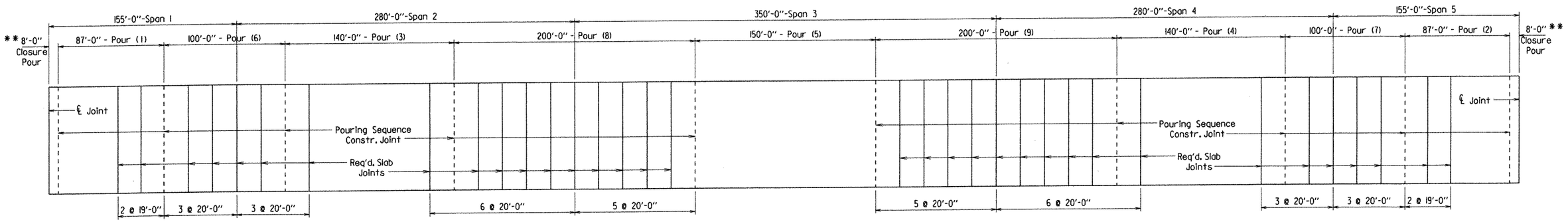

DECK POURING SEQUENCE

No Scale

All concrete diaphragms shall be poured before first deck pour. Pours must be placed in sequence shown. No deviations allowed. Deflections based on pouring sequence. A minimum of 48 hours shall elapse between the end of a pour and the start of the next pour. A minimum of 72 hours shall elapse between the end of a pour and the start of an adjacent pour. Any railing pours made before the entire slab unit has been placed must be approved by the Engineer.

Concrete in bridge superstructure shall be consolidated for the entire pour before any concrete has taken its initial set. This may require the use of a retarding agent.

** After all incremental pours on both Units adjacent to Finger Joint are complete, closure pours on each side of finger joint shall be poured simultaneously. A minimum of 48 hours shall elapse between the last incremental pour and the closure pours.

STATE OF ARKANSAS
Carl J. Fuselier
REGISTERED PROFESSIONAL ENGINEER
No. 7510
9/28/13
CARL J. FUSELIER

BRIDGE ENGINEER

SHEET 26 OF 29
DETAILS OF 1220'-0" CONTINUOUS COMPOSITE PLATE GIRDER UNIT (UNIT 3)
WHITE RIVER

ROUTE SEC.

ARKANSAS STATE HIGHWAY COMMISSION
LITTLE ROCK, ARK.

DRAWN BY: KDH DATE: SEPT. 2012 FILENAME: b005836.s3.dgn
CHECKED BY: DHP DATE: 8-28-13 SCALE: AS NOTED
DESIGNED BY: DHP DATE: 3-6-12

BRIDGE NO. 07289 DRAWING NO. 54150

PRINT DATE: 8/27/2013

DATE REVISED	DATE FILMED	DATE REVISED	DATE FILMED

FED. ROAD DIST. NO.	STATE	FED. AID PROJ. NO.	SHEET NO.	TOTAL SHEETS
6	ARK.			
JOB NO.		005836	133	230
(1)	07289 - 1220' CONT. UNIT - 54151			

① ℄ Full Depth Parapet Joint (¼" - 1" max.) Stop 4" from top of slab.

② ℄ Partial Depth Parapet Joint (¼" - 1" max.) Stop 1'-2" from top of slab.

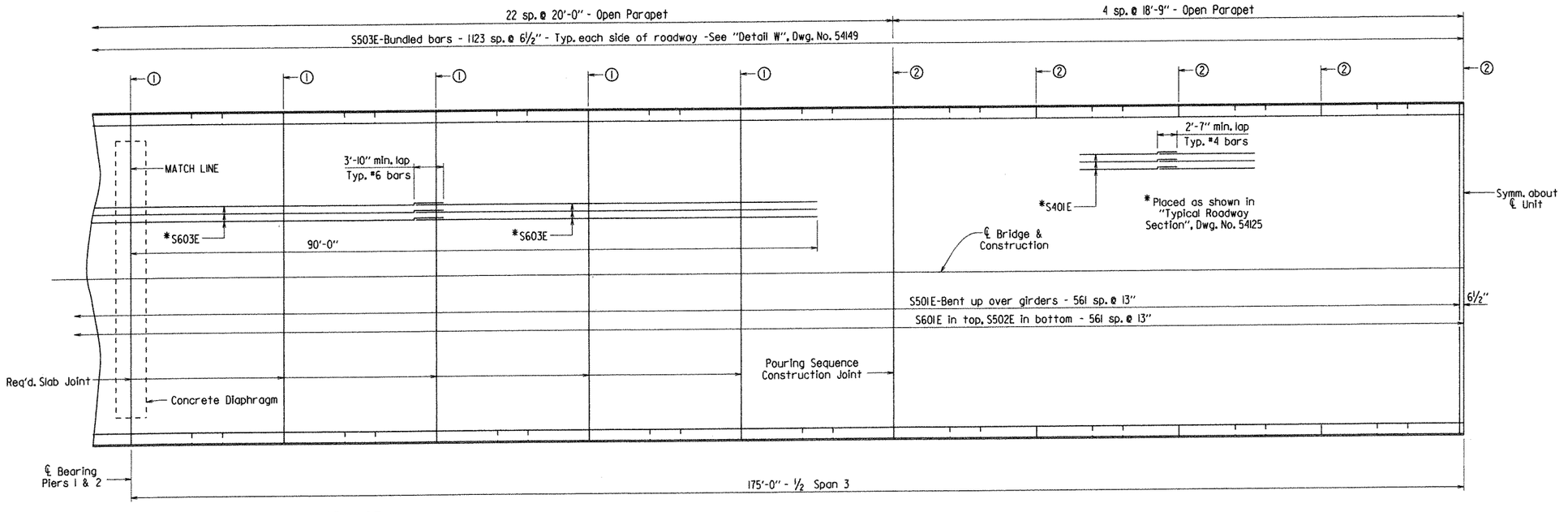

BAR LIST

MARK	NO. REQ'D.	LENGTH	P.D.
S401E	3531	39'-6"	Str.
S402E	6	2'-9"	Str.
S403E	8	1'-9"	Str.
S404E	6	5'-5"	2"
D401E	260	11'-7"	Str.
D402E	176	3'-7"	Str.
P401E	3888	5'-6"	3"
P402E	992	4'-10"	3"
P403E	280	5'-6"	Str.
P404E	112	18'-8"	Str.
P405E	616	19'-8"	Str.
P406E	112	18'-5"	Str.
P407E	28	17'-9"	Str.
P501E	3888	4'-11"	3¾"
S501E	1124	43'-9"	3"
S502E	1123	42'-10"	Str.
S503E	4494	4'-11"	Str.
S504E	12	10'-8"	Str.
S601E	1123	42'-10"	Str.
S602E	432	49'-3"	Str.
S603E	576	52'-11"	Str.
D601E	56	10'-10"	4½"
D602E	16	6'-4"	4½"
D603E	56	16'-6"	4½"
D604E	16	11'-10"	4½"
D605E	56	32'-10"	4½"
D606E	16	28'-8"	4½"

BENDING DIAGRAMS

Dimensions are out to out of bars.

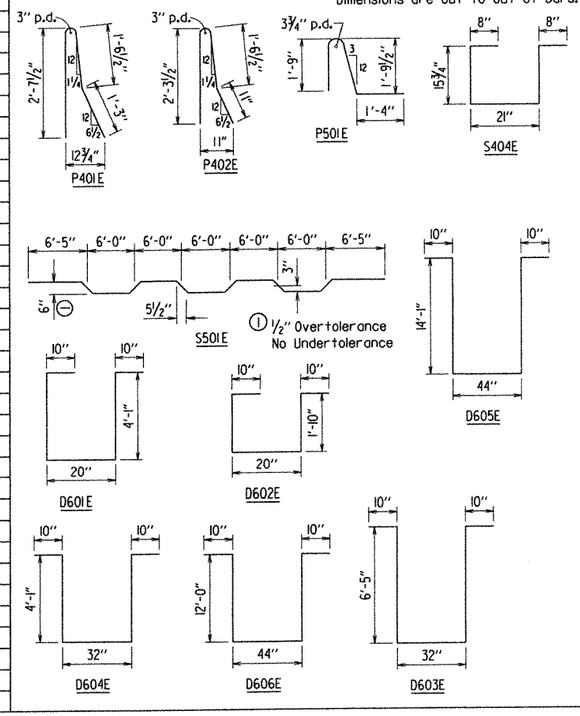

Note: Bars with an "E" suffix are to be epoxy coated.

REINFORCING PLAN

Scale: ⅛" = 1'-0"

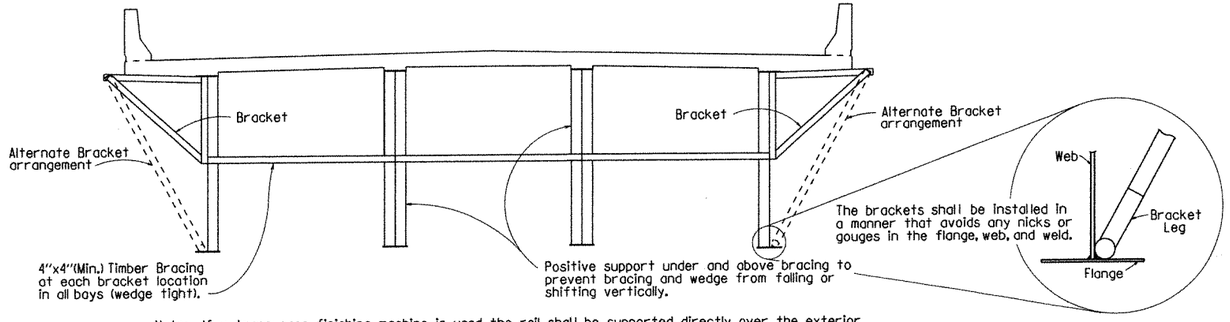

Note: If a transverse finishing machine is used, the rail shall be supported directly over the exterior girders, or as an alternate, the rail may be supported by the overhang brackets if the above strutting system is used. The strutting system may be omitted if web stiffeners are welded to the insides of the exterior girders at the location of each bracket or if the alternate bracket arrangement shown above is used. The Alternate Bracket arrangement shall extend down to the junction of the web and bottom flange. The stiffener shall conform to the details shown on "Int. Stiffener Detail", See Dwg. No. 54143. No direct payment will be made for brackets, timber bracing, supports, or welded stiffeners. Payment shall be subsidiary to "Structural Steel in Plate Girder Spans (M270 Gr. 50W)."

SCREED RAIL SUPPORT

No Scale

STATE OF ARKANSAS
Carl J. Fuselier
REGISTERED PROFESSIONAL ENGINEER
No. 7510
8/28/13
CARL J. FUSELIER

BRIDGE ENGINEER

SHEET 27 OF 29
DETAILS OF 1220'-0" CONTINUOUS COMPOSITE PLATE GIRDER UNIT (UNIT 3) WHITE RIVER

ROUTE SEC.

ARKANSAS STATE HIGHWAY COMMISSION

LITTLE ROCK, ARK.

DRAWN BY: KDH DATE: SEPT. 2012 FILENAME: b005836_s3.dgn

CHECKED BY: DHP DATE: 8-28-13 SCALE: AS NOTED

DESIGNED BY: DHP DATE: 3-6-12

BRIDGE NO. 07289 DRAWING NO. 54151

PRINT DATE: 8/27/2013

DATE REVISED	DATE FILMED	DATE REVISED	DATE FILMED

FED. ROAD DIST. NO.	STATE	FED. AID PROJ. NO.	SHEET NO.	TOTAL SHEETS
6	ARK.			
JOB NO.		005836	134	230
①	07289 - 1220' CONT. UNIT - 54152			

① ℄ Full-Depth Parapet Joint (1/4" to 1" max.) as shown in "Reinforcing Plan", Dwg. Nos. 54149 - 54151. Stop 4" from top of slab.

② ℄ Partial-Depth Parapet Joint (1/4" to 1" max.) as shown in "Reinforcing Plan", Dwg. Nos. 54149 - 54151. Stop 1'-2" from top of slab.

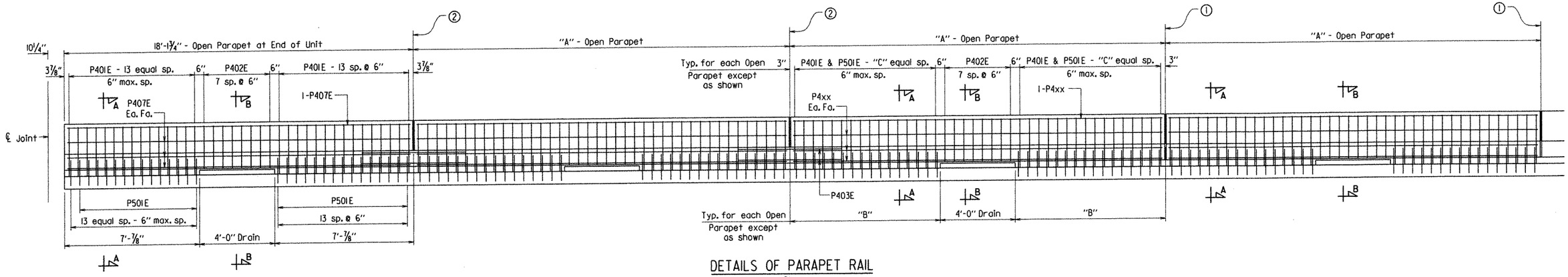

DETAILS OF PARAPET RAIL

Scale: 3/8" = 1'-0"

TABLE OF PARAPET RAIL VARIABLES

Except for Open Parapet at End of Unit

"A" Open Parapet	"B"	"C"	P4xx Bar
19'-0"	7'-6"	14	P404E
20'-0"	8'-0"	15	P405E
18'-9"	7'-4 1/2"	14	P406E

Note: For location of Open Parapet panels, see "Reinforcing Plan", Dwg. Nos. 54149 - 54151.

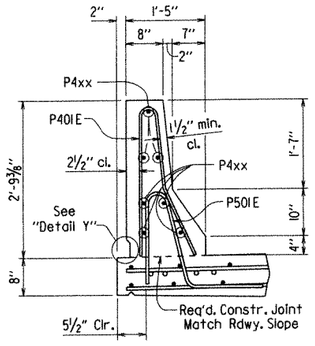

SECTION A-A

Scale: 3/4" = 1'-0"

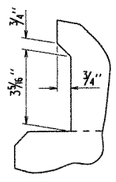

DETAIL Y

No Scale

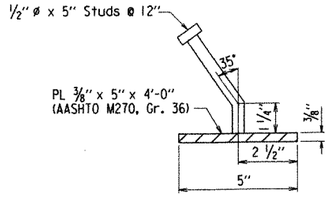

DETAIL Z

No Scale

The surfaces of the 3/8" plates which will not be in contact with concrete shall be painted with aluminum epoxy paint in accordance with Section 638, or as approved by the Engineer. Only one coat is required and shall be applied in the fabricator's shop. Painting will not be paid for directly, but will be considered subsidiary to "Structural Steel in Plate Girder Spans (M270, Gr. 50W)."

Parapet studs shall be 5" long, granular flux filled, solid fluxed or equal, and automatically end welded to the plate. Studs and plates shall meet the requirements of Section 807 and shall be measured and paid for as "Structural Steel in Plate Girder Spans (M270, Gr. 50W)."

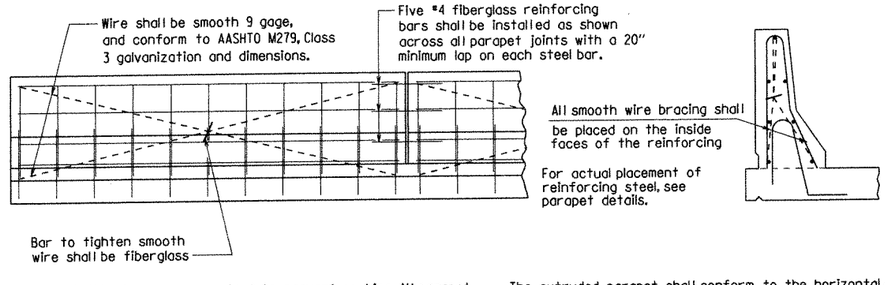

All panels shall be braced as required to prevent racking. All parapet joints shall be sawed as soon as practicalto a minimum width of 1/4". To control cracking before sawing, all joints must be grooved before the concrete is set. Sawing of the joints must be controlled so it will follow the grooved joint.

The extruded parapet shall conform to the horizontal and vertical lines shown on the plans or as directed by the Engineer and shall present a smooth, uniform appearance and texture. Exposed surface may be given a light brush finish or a Class 3, Textured Coating Finish, in place of the Class 2, Rubbed Finish.

DETAILS OF OPTIONAL SLIPFORMING OF CONCRETE PARAPET RAIL

No Scale

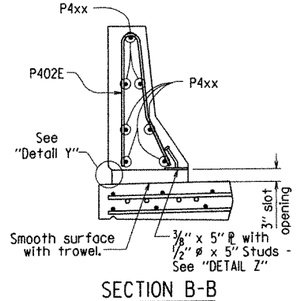

SECTION B-B

Scale: 3/4" = 1'-0"

STATE OF ARKANSAS
REGISTERED PROFESSIONAL ENGINEER
No. 7510
8/28/13
CARL J. FUSELIER

BRIDGE ENGINEER

SHEET 28 OF 29
DETAILS OF 1220'-0" CONTINUOUS COMPOSITE PLATE GIRDER UNIT (UNIT 3) WHITE RIVER

ROUTE SEC.

ARKANSAS STATE HIGHWAY COMMISSION

LITTLE ROCK, ARK.

DRAWN BY: KDH DATE: SEPT. 2012 FILENAME: b005836_s3.dgn
CHECKED BY: DHP DATE: 8-28-13 SCALE: AS NOTED
DESIGNED BY: DHP DATE: 3-6-12

BRIDGE NO. 07289 DRAWING NO. 54152

PRINT DATE: 8/27/2013

DATE REVISED	DATE FILMED	DATE REVISED	DATE FILMED

FED. ROAD DIST. NO.	STATE	FED. AID PROJ. NO.	SHEET NO.	TOTAL SHEETS
6	ARK.			
JOB NO.		005836	135	230
(1)	07289 - 1220' CONT. UNIT - 54153			

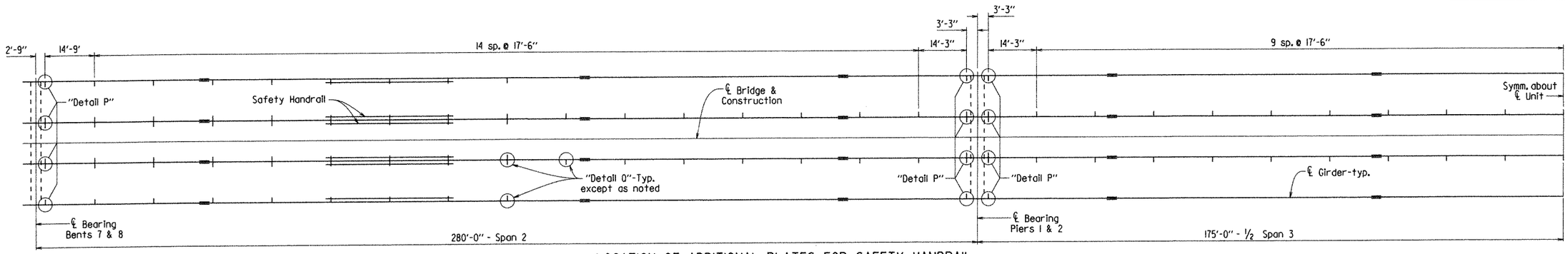

LOCATION OF ADDITIONAL PLATES FOR SAFETY HANDRAIL

No Scale

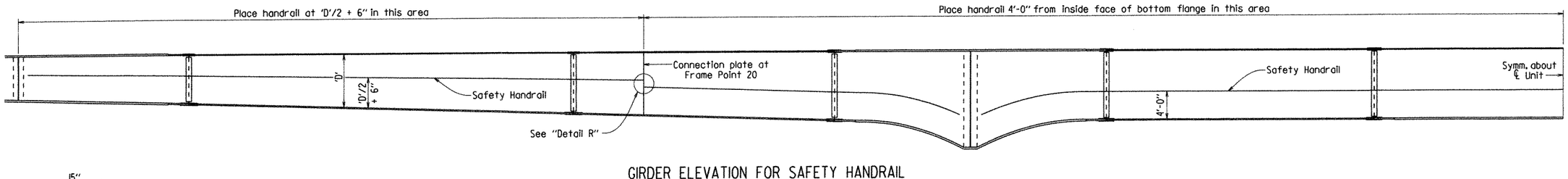

GIRDER ELEVATION FOR SAFETY HANDRAIL

No Scale

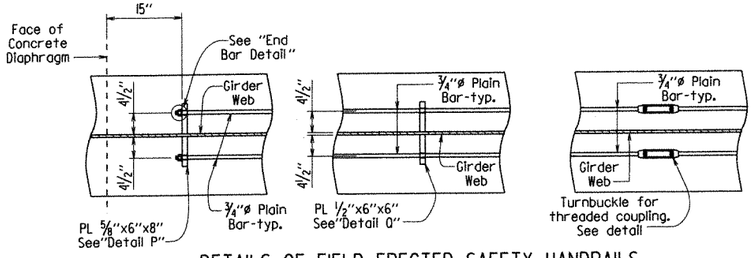

DETAILS OF FIELD ERECTED SAFETY HANDRAILS

No Scale

Unless otherwise noted, all structural steel in safety handrails shall conform to the requirements of AASHTO M270, GR. 36 and Section 807.

Structural steel, including ¾"ø plain bar and support plates, shall be included in the 1220' unit structural steel quantities. Turnbuckles shall not be paid for directly but shall be subsidiary to the item "Structural Steel in Plate Girder Spans (M270, Gr. 50W)".

The ¾" ø plain bar, turnbuckles and accessories shall be galvanized according to AASHTO M232, Class C or AASHTO M298, Class 50. All galvanizing will not be paid for directly, but will be subsidiary to the item of "Structural Steel in Plate Girder Spans (M270, Gr. 50W)"

All safety handrails shall be ¾"ø plain bars made continuous by using turnbuckle couplings.

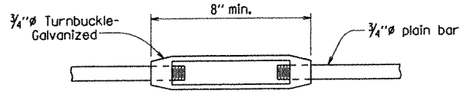

Turnbuckle to conform to ASTM F1145

TURNBUCKLE FOR THREADED COUPLING

No Scale

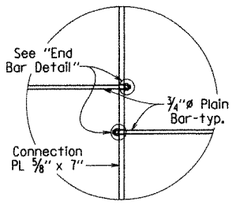

DETAIL R

No Scale

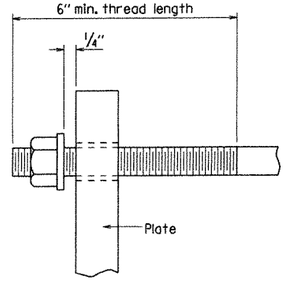

END BAR DETAIL

No Scale

¾"ø Heavy hex nust with standard washer. After gap width has been set, tack weld heavy hex nut to plain bar.

Gap width shall be set after slab has been poured

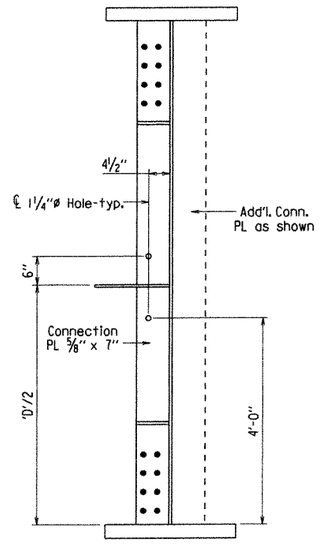

HANDRAIL CONNECTION AT FRAME POINT 20

No Scale

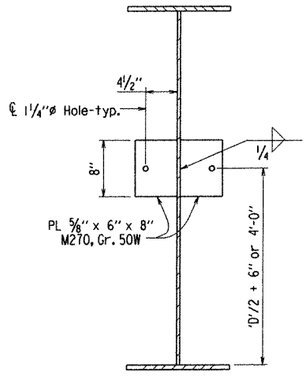

DETAIL P

No Scale

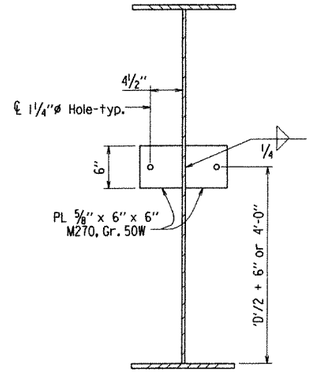

DETAIL Q

No Scale

STATE OF ARKANSAS
Carl J. Fuselier
REGISTERED PROFESSIONAL ENGINEER
No. 7510
8/28/13
CARL J. FUSELIER

BRIDGE ENGINEER

SHEET 29 OF 29
DETAILS OF 1220'-0" CONTINUOUS COMPOSITE PLATE GIRDER UNIT (UNIT 3) WHITE RIVER

ROUTE SEC.

ARKANSAS STATE HIGHWAY COMMISSION

LITTLE ROCK, ARK.

DRAWN BY: KDH DATE: SEPT. 2012 FILENAME: b005836_s3.dgn

CHECKED BY: DHP DATE: 8-28-13 SCALE: AS NOTED

DESIGNED BY: DHP DATE: 3-6-12

BRIDGE NO. 07289 DRAWING NO. 54153

PRINT DATE: 8/27/2013

DATE REVISED	DATE FILMED	DATE REVISED	DATE FILMED

FED. ROAD DIST. NO.	STATE	FED. AID PROJ. NO.	SHEET NO.	TOTAL SHEETS
6	ARK.			
JOB NO.		005836	136	230
①	07289 - 210' CONT. UNIT - 54154			

Class I Protective Surface Treatment shall be applied to the roadway surface and the roadway face and top of the concrete parapet rail.

Slab Reinforcing:

Longitudinal: S401E in top and bottom
S601E placed as shown over interior supports (See Reinf. Plan)

Transverse: S502E @ 12" o.c. bent up over beams — Alternate
S501E @ 12" o.c. in top, S402E @ 12" o.c. in bottom —
S503E @ 6" o.c. in top of overhang

At the Contractor's option, one epoxy coated straight #5 bar top and bottom may be substituted for bar S502E. Payment will be based on weight of S502E bar.

① See "ADJUSTMENT FOR SLAB THICKNESS TOLERANCE"

② Tolerance: Minus = 1/4"
Plus = Equal to amount of slab thickening used to meet slab thickness tolerance-
See "ADJUSTMENT FOR SLAB THICKNESS TOLERANCE"

③ Working Point to Gutter line

④ See "ROUNDING DETAIL"

The superstructure details shown are for use when Removable Deck Forming is used and are the basis for measurement of Class S(AE) Concrete.

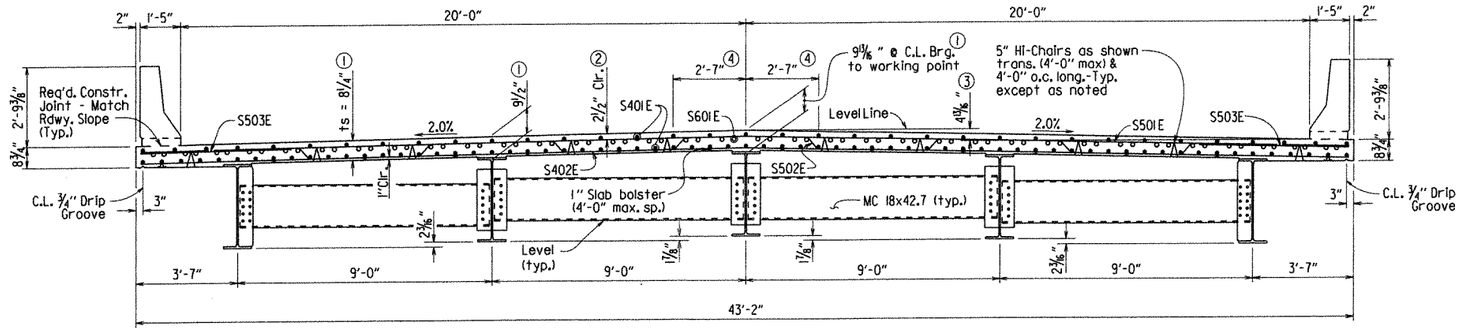

TYPICAL ROADWAY SECTION

Looking Ahead
Scale: ⅜" = 1'-0"

TABLE FOR WELD

Material Thickness Of Thicker Part Joined (Inches)	Minimum Size Of Fillet Weld (Inches)	Single Pass Weld Must Be Used
To ¾" Inclusive	¼"	
Over ¾"	5/16"	

When a fillet weld size, as shown on the Plans, is larger than the minimum, the First Pass shall be that specified for minimum size of fillet weld.

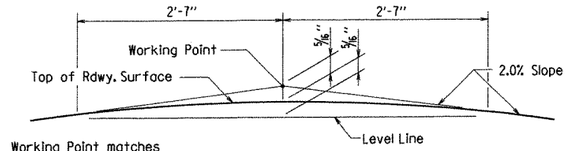

Working Point matches Theoretical Roadway Grade.

ROUNDING DETAIL

No Scale

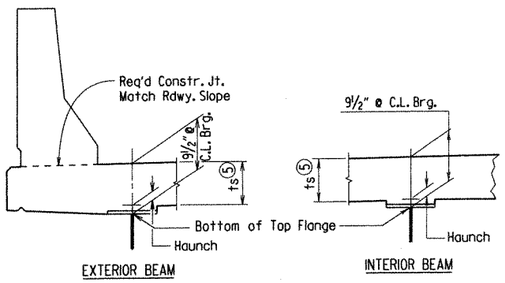

EXTERIOR BEAM — INTERIOR BEAM

ts = slab thickness as shown on superstructure detail drawings

⑤ Tolerance when removable deck forming is used is + ½", - ¼". Haunch forming is required and shall be adjusted to maintain slab thickness tolerance.

Haunch dimension may vary within the following limits to maintain the grade and slab thickness tolerance : Minimum - occurs when top flange contacts bottom reinforcing steel; Maximum - top flange thickness plus 1½" for removable or permanent steel deck forms. No increase in concrete and structural steel quantities will be made to maintain tolerances.

Tolerances shown are applicable only when removable deck forming is used. See Std. Dwg. No. 14991 for tolerances when permanent steel deck forms are used unless noted otherwise. Payment for concrete shall be based on removable deck forming.

ADJUSTMENT FOR SLAB THICKNESS TOLERANCE

No Scale

⑥ If permanent steel bridge deck forms are used, the fabricator shall clip the plate as necessary to accommodate the deck form support.

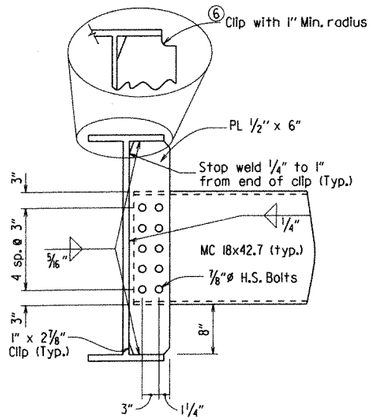

DETAIL M

No Scale

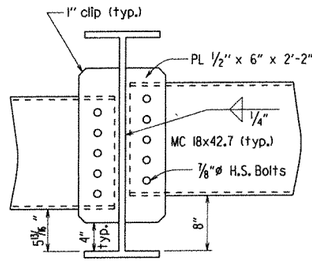

DETAIL N

No Scale

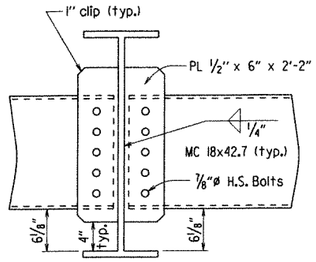

DETAIL O

No Scale

STATE OF ARKANSAS
Carl J. Fuselier
REGISTERED PROFESSIONAL ENGINEER
No. 7510
3/28/13
CARL J. FUSELIER

BRIDGE ENGINEER

SHEET 1 OF 7
DETAILS OF 210'-0" CONTINUOUS COMPOSITE W-BEAM UNIT (UNIT 4)
WHITE RIVER

ROUTE SEC.

ARKANSAS STATE HIGHWAY COMMISSION
LITTLE ROCK, ARK.

DRAWN BY: CMW DATE: 08/28/12
CHECKED BY: CSL DATE: 8/28/13
DESIGNED BY: CMW DATE: 8/12

FILENAME: b005836_s4.dgn
SCALE: ⅜"= 1'-0" or as shown

BRIDGE NO. 07289 DRAWING NO. 54154

PRINT DATE: 8/28/2013

DATE REVISED	DATE FILMED	DATE REVISED	DATE FILMED	FED. ROAD DIST. NO.	STATE	FED. AID PROJ. NO.	SHEET NO.	TOTAL SHEETS
				6	ARK.			
				JOB NO.		005836	137	230
				①	07289 - 210' CONT. UNIT - 54155			

REMOVABLE FORMS FOR DIAPHRAGMS SHALL BE USED

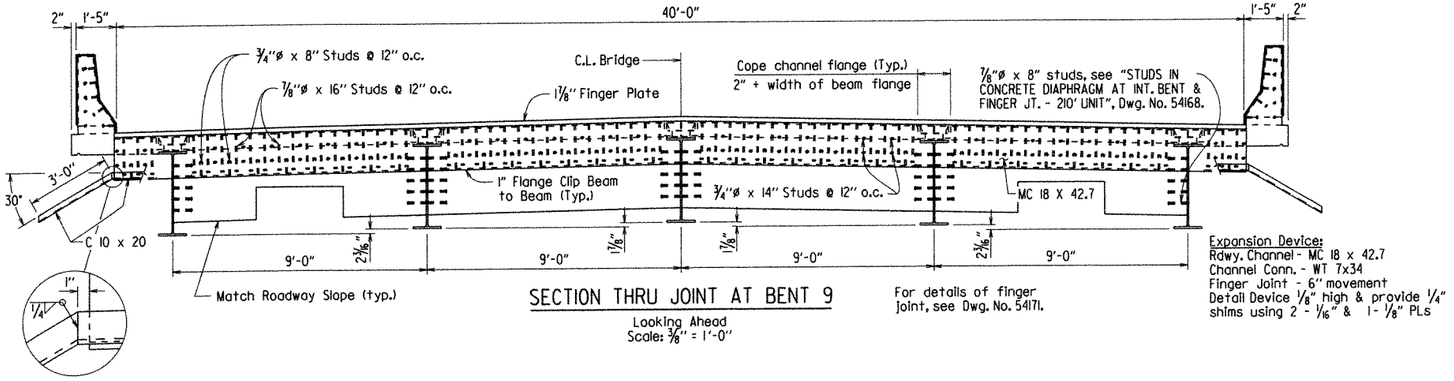

SECTION THRU JOINT AT BENT 9

Looking Ahead
Scale: ⅜" = 1'-0"

For details of finger joint, see Dwg. No. 54171.

Expansion Device:
Rdwy. Channel - MC 18 x 42.7
Channel Conn. - WT 7x34
Finger Joint - 6" movement
Detail Device ⅛" high & provide ¼" shims using 2 - 1/16" & 1 - ⅛" PLs

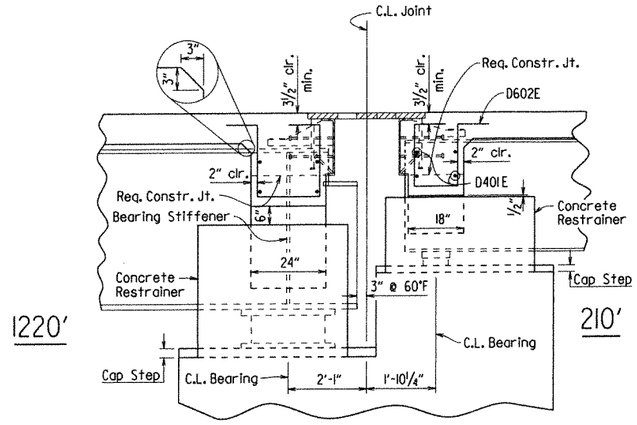

SECTION A-A

Scale: ½" = 1'-0"

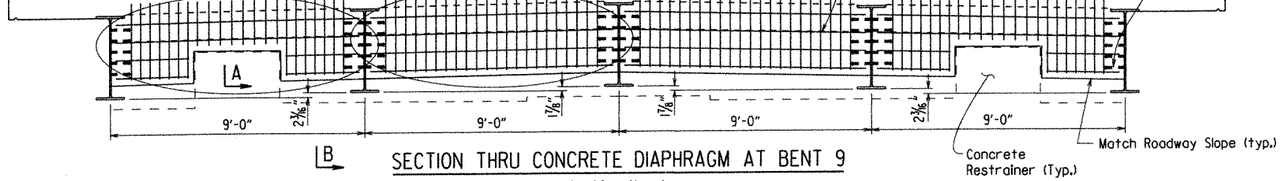

SECTION THRU CONCRETE DIAPHRAGM AT BENT 9

Looking Ahead
Scale: ⅜" = 1'-0"

½" Polystyrene shall be used as a bond breaker between the concrete restrainer and the concrete diaphragm and may remain in place.

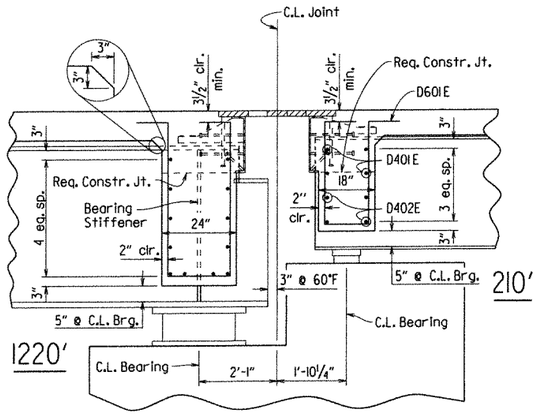

SECTION B-B

Scale: ½" = 1'-0"

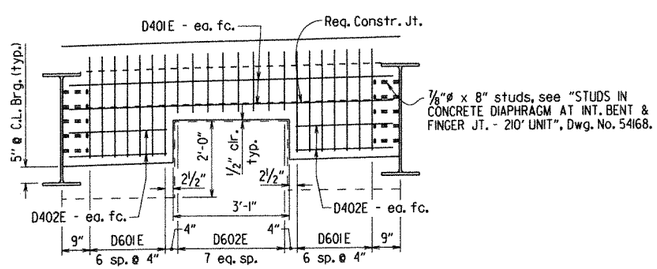

DETAIL A

Scale: ½" = 1'-0"

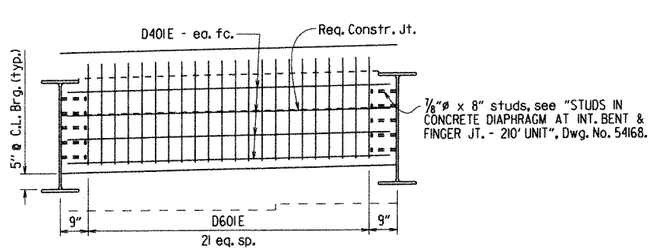

DETAIL B

Scale: ½" = 1'-0"

STATE OF ARKANSAS
REGISTERED PROFESSIONAL ENGINEER
No. 7510
8/28/13
CARL J. FUSELIER

BRIDGE ENGINEER

SHEET 2 OF 7
DETAILS OF 210'-0" CONTINUOUS COMPOSITE W-BEAM UNIT
(UNIT 4)
WHITE RIVER

ROUTE SEC.

ARKANSAS STATE HIGHWAY COMMISSION
LITTLE ROCK, ARK.

DRAWN BY: CSG DATE: MAR. 2013 FILENAME: b005836_s4.dgn
CHECKED BY: CSL DATE: 8/28/13 SCALE: AS NOTED
DESIGNED BY: CMW DATE: 8/13

BRIDGE NO. 07289 DRAWING NO. 54155

PRINT DATE: 8/27/2013

DATE REVISED	DATE FILMED	DATE REVISED	DATE FILMED	FED. ROAD DIST. NO.	STATE	FED. AID PROJ. NO.	SHEET NO.	TOTAL SHEETS
				6	ARK.			
				JOB NO.		005836	138	230
				①	07289 - 210' CONT. UNIT - 54156			

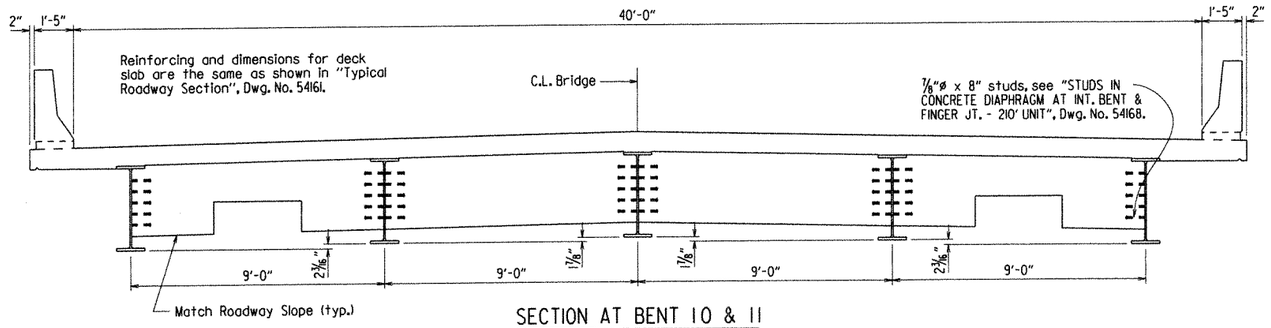

SECTION AT BENT 10 & 11

Looking Ahead
Scale: 3/8" = 1'-0"

REMOVABLE FORMS FOR DIAPHRAGMS SHALL BE USED

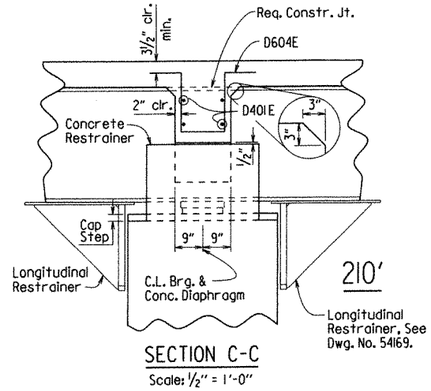

SECTION C-C

Scale: 1/2" = 1'-0"

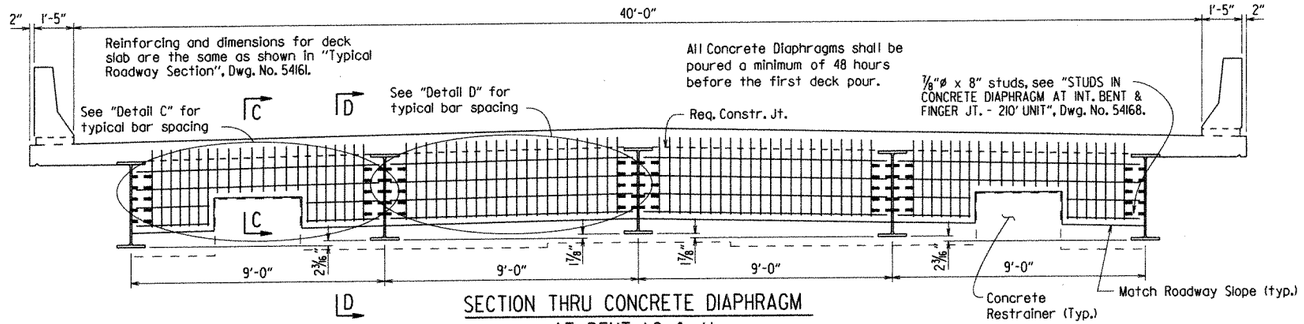

SECTION THRU CONCRETE DIAPHRAGM AT BENT 10 & 11

Looking Ahead
Scale: 3/8" = 1'-0"

1/2" Polystyrene shall be used as a bond breaker between the concrete restrainer and the concrete diaphragm and may remain in place.

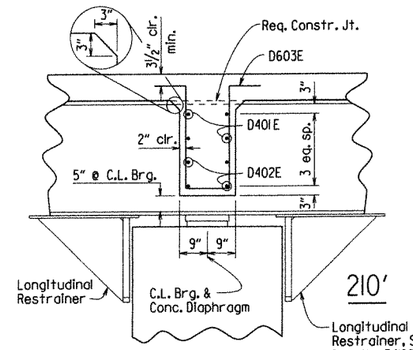

SECTION D-D

Scale: 1/2" = 1'-0"

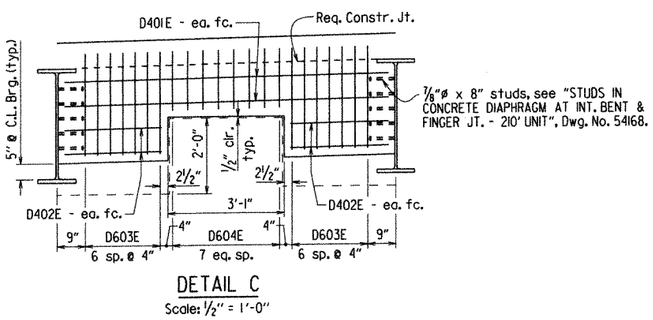

DETAIL C

Scale: 1/2" = 1'-0"

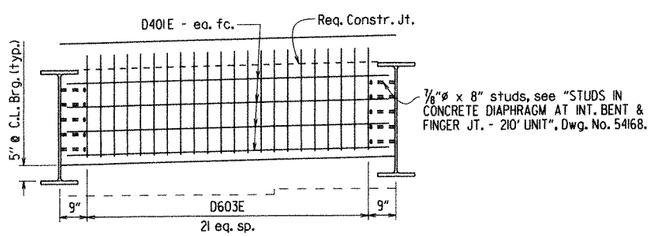

DETAIL D

Scale: 1/2" = 1'-0"

STATE OF ARKANSAS
Carl J. Fuselier
REGISTERED PROFESSIONAL ENGINEER
No. 7510
8/28/13
CARL J. FUSELIER

BRIDGE ENGINEER

SHEET 3 OF 7
DETAILS OF 210'-0" CONTINUOUS COMPOSITE W-BEAM UNIT (UNIT 4)
WHITE RIVER

ROUTE SEC.

ARKANSAS STATE HIGHWAY COMMISSION
LITTLE ROCK, ARK.

DRAWN BY: CSG DATE: MAR. 2013 FILENAME: b005836_s4.dgn
CHECKED BY: CSL DATE: 8/28/13 SCALE: AS NOTED
DESIGNED BY: CMW DATE: 8/12

BRIDGE NO. 07289 DRAWING NO. 54156

PRINT DATE: 8/27/2013

DATE REVISED	DATE FILMED	DATE REVISED	DATE FILMED	FED. ROAD DIST. NO.	STATE	FED. AID PROJ. NO.	SHEET NO.	TOTAL SHEETS
				6	ARK.			
				JOB NO.		005836	139	230
				①	07289 - 210' CONT. UNIT - 54157			

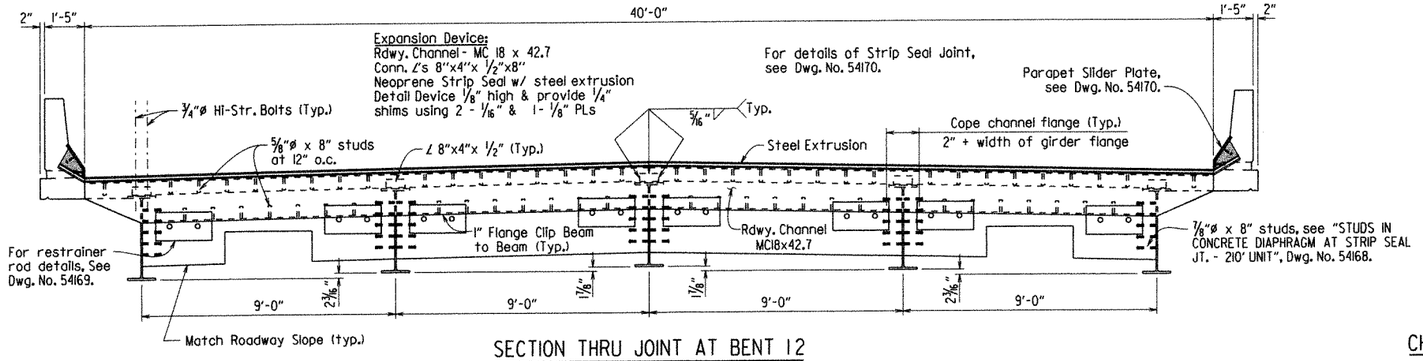

SECTION THRU JOINT AT BENT 12

Looking Back
Scale: ⅜" = 1'-0"

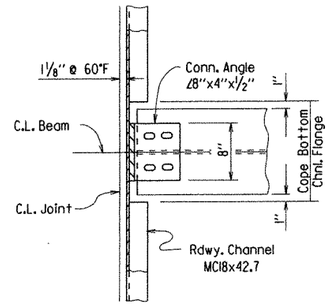

CHANNEL CONNECTION DETAIL - BENT 12

No Scale

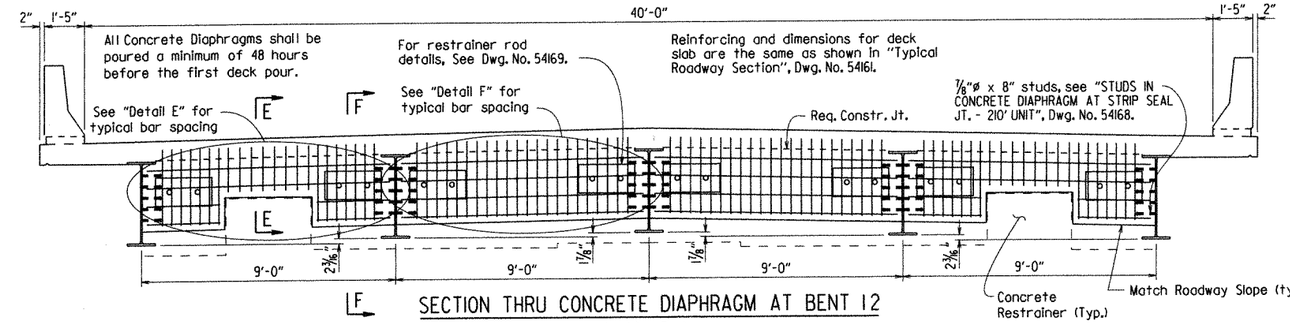

F SECTION THRU CONCRETE DIAPHRAGM AT BENT 12

Looking Back
Scale: ⅜" = 1'-0"

½" Polystyrene shall be used as a bond breaker between the concrete restrainer and the concrete diaphragm and may remain in place.

REMOVABLE FORMS FOR DIAPHRAGMS SHALL BE USED

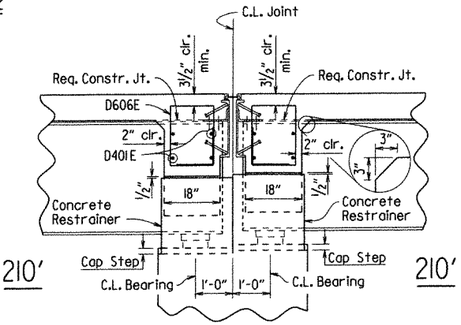

SECTION E-E

Scale: ½" = 1'-0"

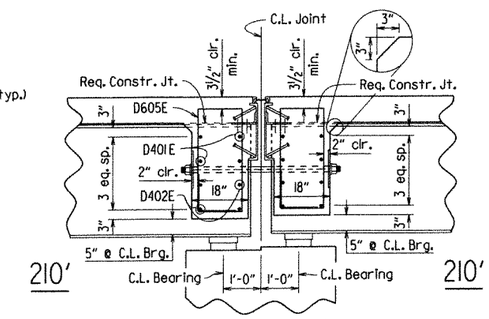

SECTION F-F

Scale: ½" = 1'-0"

For restrainer rod details, See Dwg. No. 54169.

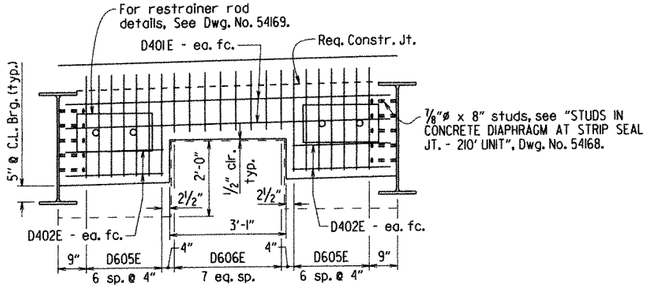

DETAIL E

Scale: ½" = 1'-0"

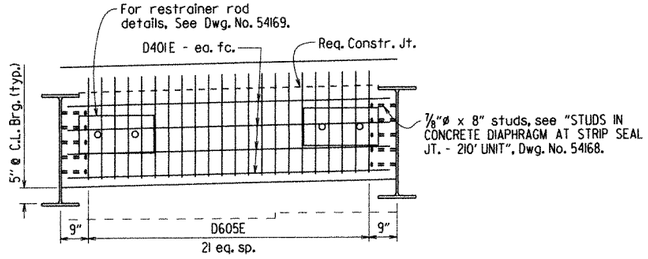

DETAIL F

Scale: ½" = 1'-0"

STATE OF ARKANSAS
Carl J. Fuselier
REGISTERED PROFESSIONAL ENGINEER
No. 7510
8/28/13
CARL J. FUSELIER

BRIDGE ENGINEER

SHEET 4 OF 7
DETAILS OF 210'-0" CONTINUOUS COMPOSITE W-BEAM UNIT (UNIT 4) WHITE RIVER

ROUTE SEC.

ARKANSAS STATE HIGHWAY COMMISSION

LITTLE ROCK, ARK.

DRAWN BY: CSG DATE: MAR. 2013 FILENAME: b005836_s4.dgn
CHECKED BY: CSL DATE: 8/28/13 SCALE: AS NOTED
DESIGNED BY: CMW DATE: 8/12

BRIDGE NO. 07289 DRAWING NO. 54157

PRINT DATE: 8/27/2013

DATE REVISED	DATE FILMED	DATE REVISED	DATE FILMED	FED. ROAD DIST. NO.	STATE	FED. AID PROJ. NO.	SHEET NO.	TOTAL SHEETS
				6	ARK.			
				JOB NO.		005836	140	230
				(1)	07289 - 210' CONT. UNIT - 54158			

For Drip Plate details see "BOTTOM FLANGE DRIP PLATE", Dwg. No. 54169.

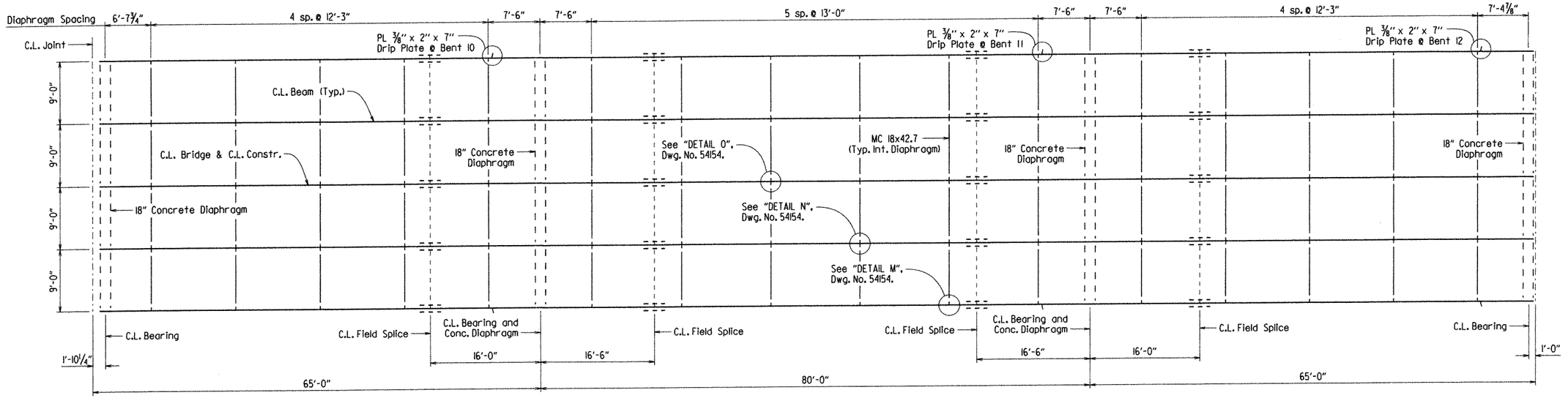

FRAMING PLAN

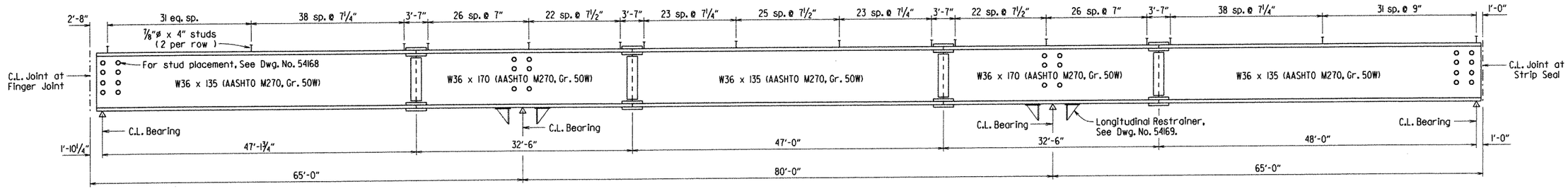

BEAM ELEVATION

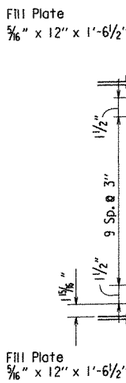

WEB SPLICE

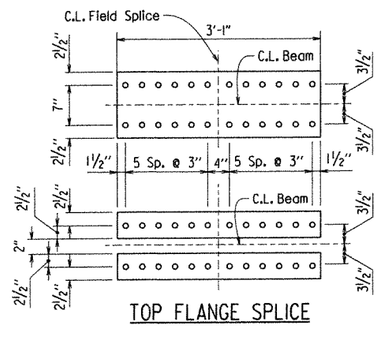

TOP FLANGE SPLICE

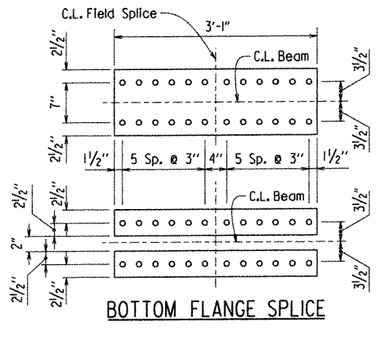

BOTTOM FLANGE SPLICE

All Field Splice Plates shall be AASHTO M270, Gr. 50W steel
All Field Splice Bolts shall be ⅞"ø H.S. Bolts
All Field Splice Bots Holes shall be 15/16 "ø

FIELD SPLICE - DETAILS

Scale: 1" = 1'-0"

All structural Steel shall be AASHTO M270, Gr. 50W unless otherwise noted. Bolted field splices may be eliminated or shop welded splices may be substituted with the approval of the Engineer. Payment will be made on the basis of plan quantities.

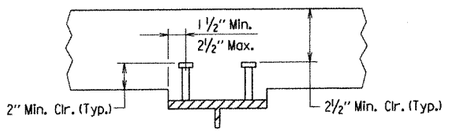

Stud Shear Connectors shown shall be ⅞"ø x 4" long, granular flux filled, solid fluxed or equal, and automatically end welded to the beam flange in accordance with the recommendations of the Manufacturer. ¾"ø studs may be used in place of the ⅞"ø studs shown, at the ratio of 1.361 - ¾"ø studs in place of one ⅞"ø stud. ⅞"ø studs will be used as basis for measurement of structural steel in shear connectors. Maximum stud spacing = 24".

SHEAR CONNECTOR DETAIL

No Scale

STATE OF ARKANSAS
Carl J. Fuselier
REGISTERED PROFESSIONAL ENGINEER
No. 7510
8/28/13
CARL J. FUSELIER

BRIDGE ENGINEER

SHEET 5 OF 7
DETAILS OF 210'-0" CONTINUOUS COMPOSITE W-BEAM UNIT (UNIT 4)
WHITE RIVER

ROUTE SEC.

ARKANSAS STATE HIGHWAY COMMISSION

LITTLE ROCK, ARK.

DRAWN BY: CMW DATE: 08/28/2012 FILENAME: b005836_s4.dgn
CHECKED BY: CSL DATE: 8/28/13 SCALE: ⅛" = 1'-0" or as shown
DESIGNED BY: CMW DATE: 8/12

BRIDGE NO. 07289 DRAWING NO. 54158

PRINT DATE: 8/27/2013

All concrete diaphragms shall be poured before first deck pour. Pours with the same number may be placed simultaneously or separately. All pours (1) must be placed before Pour (2) can be placed. 48 hours shall elapse between the end of a Pour and the start of the next pour. 72 hours shall elapse between the end of a pour and the start of an adjacent pour. Any railing pours made before the entire slab unit has been placed must be approved by the Engineer. Concrete in bridge superstructure shall be consolidated for the entire pour before any concrete has taken its initial set. This may require the use of a retarding agent. The Contractor must obtain approval from the Engineer for any deviations from the pouring sequence shown.

** After all incremental pours on both Units adjacent to Finger Joint are complete, closure pours on each side of finger joint shall be poured simultaneously. A minimum of 48 hours shall elapse between the last incremental pour and the closure pours.

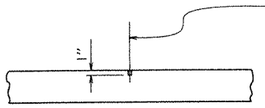

SLAB JOINT DETAIL

No Scale

½" x 1" Type 3, 4 or 6 Joint Sealer. See Subsections 501.02 (h)(2) and 501.05 (j). Backer rod filler will not be required. Joint Sealer shall be measured and paid for as Class S (AE) Concrete-Bridge. Slab joints shall extend to the outside edge of the deck slab. Slab joint shall be installed before the parapet rail is poured. If slab joints are to be sawed, they shall be sawed as soon as the concrete has sufficiently set to allow sawing of the joint without damage to the slab. Slab joints shall be placed at all pouring sequence construction joints and required slab joint locations. Slab Joints shall align with parapet open joints except for slab joint at 7'-6" closure pour at finger joint.

DATE REVISED	DATE FILMED	DATE REVISED	DATE FILMED	FED. ROAD DIST. NO.	STATE	FED. AID PROJ. NO.	SHEET NO.	TOTAL SHEETS
				6	ARK.			
				JOB NO.		005836	141	230
				①	07289 - 210' CONT. UNIT - 54159			

① C.L. Full-Depth Parapet Joint (1/4" to 1" max.) Stop 4" from top of slab

② C.L. Partial-Depth Parapet Joint (1/4" to 1" max.) Stop 1'-2" from top of slab

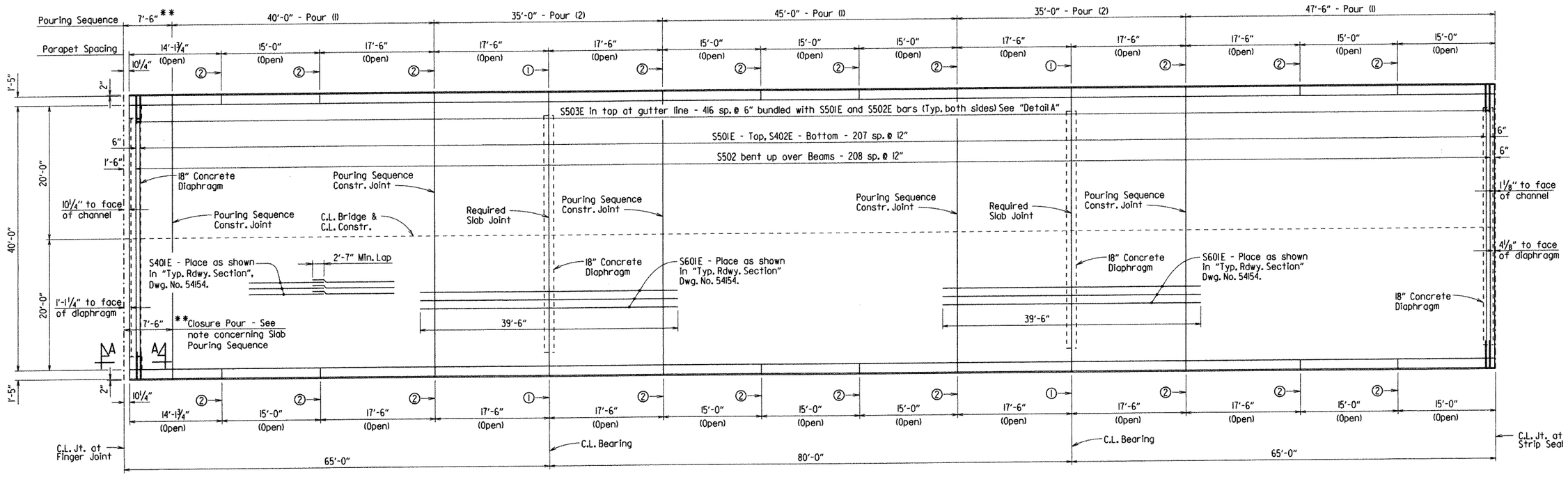

REINFORCING PLAN & DECK POURING SEQUENCE

TABLE OF DEAD LOAD DEFLECTIONS (INCHES)

Span	Point of Deflection	Interior & Exterior Beams: Str. Steel	Str. Steel + Slab	Str. Steel + Slab + Parapet
1	0	0.000	0.000	0.000
	0.1	0.041	0.264	0.278
	0.2	0.076	0.486	0.512
	0.3	0.099	0.633	0.667
	0.4	0.108	0.691	0.728
	0.5	0.103	0.658	0.694
	0.6	0.085	0.546	0.576
	0.7	0.059	0.381	0.402
	0.8	0.032	0.205	0.216
	0.9	0.009	0.060	0.063
½ of 2	0	0.000	0.000	0.000
	0.1	0.016	0.095	0.101
	0.2	0.050	0.302	0.320
	0.3	0.086	0.531	0.561
	0.4	0.114	0.703	0.743
	0.5	0.124	0.766	0.810

C.L. Unit

Table is symmetrical about C.L. Unit

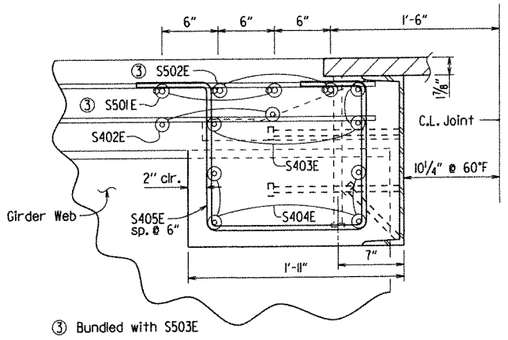

SECTION A-A

(In Cantilever Only)
No Scale

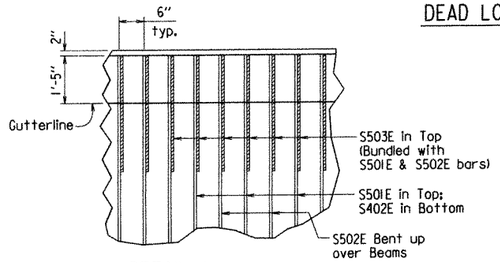

DETAIL A

No Scale

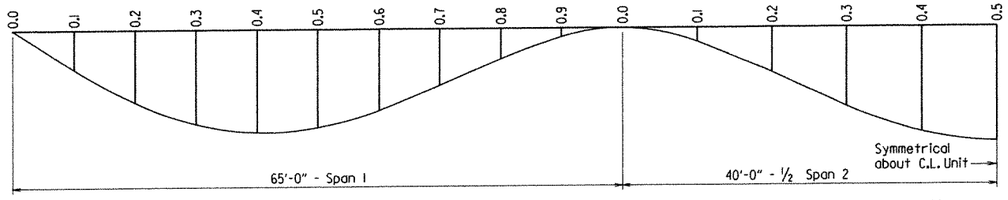

DEAD LOAD DEFLECTION DIAGRAM

No Scale

Camber for Dead Load Deflection plus Vertical curve +/-¼" tolerance. Deflections shown are along C.L. Beam from a chord from C.L. Bearing to C.L. Bearing. Vertical curve corrections not included.

STATE OF ARKANSAS
Carl J. Fuselier
REGISTERED PROFESSIONAL ENGINEER
No. 7510
8/28/13
CARL J. FUSELIER

BRIDGE ENGINEER

SHEET 6 OF 7
DETAILS OF 210'-0" CONTINUOUS COMPOSITE W-BEAM UNIT (UNIT 4) WHITE RIVER

ROUTE SEC.

ARKANSAS STATE HIGHWAY COMMISSION

LITTLE ROCK, ARK.

DRAWN BY: CMW DATE: 08/28/2012 FILENAME: b005836_s4.dgn

CHECKED BY: CSL DATE: 8/28/13 SCALE: 1/8" = 1'-0" or as shown

DESIGNED BY: CMW DATE: 8/12

BRIDGE NO. 07289 DRAWING NO. 54159

PRINT DATE: 8/27/2013

DATE REVISED	DATE FILMED	DATE REVISED	DATE FILMED

FED. ROAD DIST. NO.	STATE	FED. AID PROJ. NO.	SHEET NO.	TOTAL SHEETS
6	ARK.			
JOB NO.		005836	142	230
①	07289 - 210' CONT. UNIT - 54160			

① ℄ Full-Depth Parapet Joint (1/4" to 1" max.) as shown in "Reinforcing Plan", Dwg. No. 54159. Stop 4" from top of slab.

② ℄ Partial-Depth Parapet Joint (1/4" to 1" max.) as shown in "Reinforcing Plan", Dwg. No. 54159. Stop 1'-2" from top of slab.

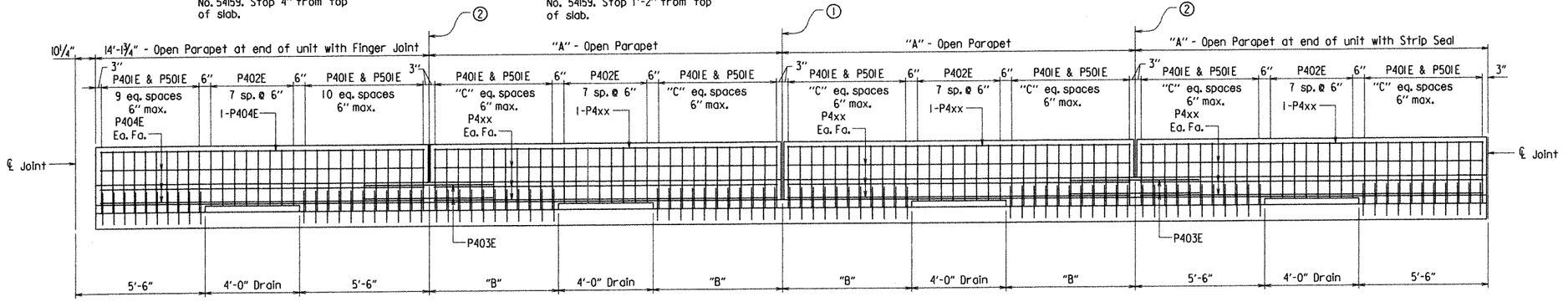

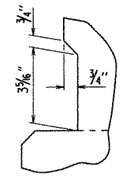

DETAIL Y
No Scale

TABLE OF PARAPET RAIL VARIABLES

"A" Open Parapet	"B"	"C"	P4xx Bar
15'-0"	5'-6"	10	P405E
17'-6"	6'-9"	13	P406E

Note: For location of Open Parapet panels, see "Reinforcing Plan", Dwg. No. 54159.

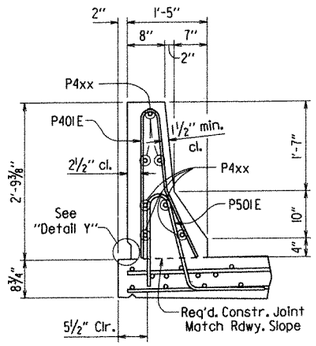

SECTION A-A
Scale: 3/4" = 1'-0"

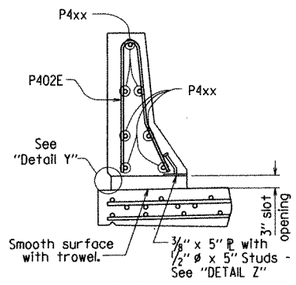

SECTION B-B
Scale: 3/4" = 1'-0"

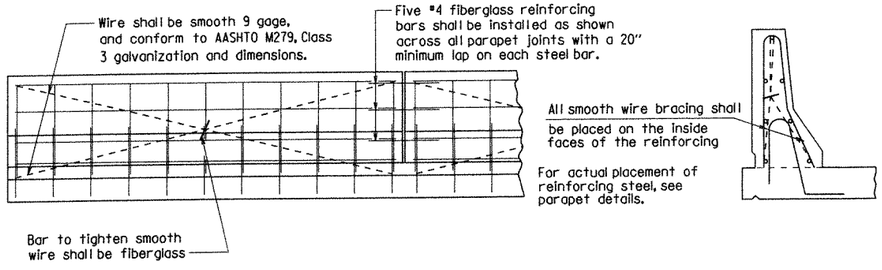

All panels shall be braced as required to prevent racking. All parapet joints shall be sawed as soon as practicalto a minimum width of 1/4". To control cracking before sawing, all joints must be grooved before the concrete is set. Sawing of the joints must be controlled so it will follow the grooved joint.

The extruded parapet shall conform to the horizontal and vertical lines shown on the plans or as directed by the Engineer and shall present a smooth, uniform appearance and texture. Exposed surface may be given a light brush finish or a Class 3, Textured Coating Finish, in place of the Class 2, Rubbed Finish.

DETAILS OF OPTIONAL SLIPFORMING OF CONCRETE PARAPET RAIL
No Scale

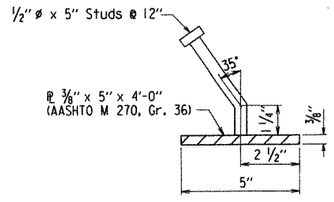

DETAIL Z
No Scale

Note:
The surfaces of the 3/8" plates which will not be in contact with concrete shall be painted with aluminum epoxy paint in accordance with Section 638, or as approved by the Engineer. Only one coat is required and shall be applied in the fabricator's shop. Painting will not be paid for directly, but will be considered subsidiary to "Structural Steel in Beam Spans (M270, Gr. 50W)."

Parapet studs shall be 5" long, granular flux filled, solid fluxed or equal, and automatically end welded to the plate. Studs and plates shall meet the requirements of Section 807 and shall be measured and paid for as "Structural Steel in Beam Spans (M270, Gr. 50W)."

BAR LIST

MARK	NO. REQ'D.	LENGTH	P.D.
S401E	612	36'-11"	Str.
S402E	208	42'-10"	Str.
S403E	6	2'-9"	Str.
S404E	8	1'-9"	Str.
S405E	6	5'-1"	2"
P401E	642	5'-6"	3"
P402E	208	4'-10"	3"
P403E	80	5'-6"	Str.
P404E	14	13'-9"	Str.
P405E	84	14'-8"	Str.
P406E	84	17'-2"	Str.
D401E	96	8'-7"	Str.
D402E	64	2'-7"	Str.
S501E	208	42'-10"	Str.
S502E	209	43'-10"	3"
S503E	834	5'-1"	Str.
P501E	642	4'-9"	3 3/4"
S601E	136	39'-6"	Str.
D601E	72	7'-8"	4 1/2"
D602E	16	5'-4"	4 1/2"
D603E	144	7'-8"	4 1/2"
D604E	32	5'-4"	4 1/2"
D605E	72	8'-11"	4 1/2"
D606E	16	6'-7"	4 1/2"

BENDING DIAGRAMS

Dimensions are out to out of bars.

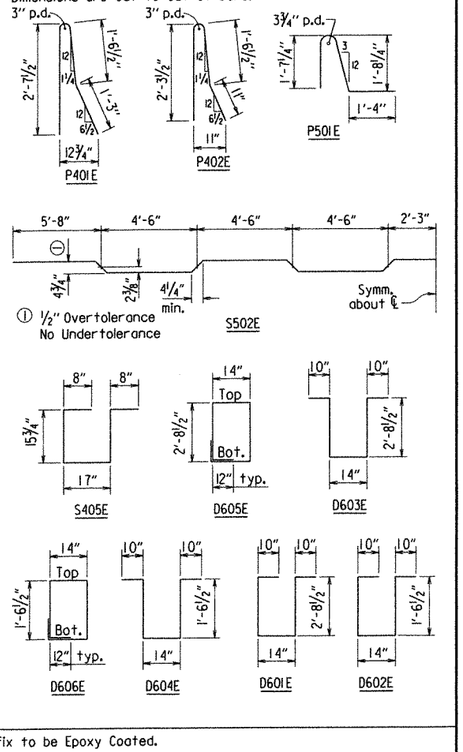

Note: Bars designated with an "E" suffix to be Epoxy Coated.

STATE OF ARKANSAS
Carl J. Fuselier
REGISTERED PROFESSIONAL ENGINEER
No. 7510
8/29/13
CARL J. FUSELIER

BRIDGE ENGINEER

SHEET 7 OF 7
DETAILS OF 210'-0" CONTINUOUS COMPOSITE W-BEAM UNIT (UNIT 4) WHITE RIVER

ROUTE SEC.

ARKANSAS STATE HIGHWAY COMMISSION
LITTLE ROCK, ARK.

DRAWN BY: CMW DATE: 08/28/2012 FILENAME: b005836_s4.dgn
CHECKED BY: CSL DATE: 8/28/13 SCALE: As Shown
DESIGNED BY: CMW DATE: 8/12

BRIDGE NO. 07289 DRAWING NO. 54160

PRINT DATE: 8/27/2013

DATE REVISED	DATE FILMED	DATE REVISED	DATE FILMED	FED. ROAD DIST. NO.	STATE	FED. AID PROJ. NO.	SHEET NO.	TOTAL SHEETS
				6	ARK.			
				JOB NO.		005836	143	230
				①	07289 - 210' CONT. UNIT - 54161			

Class I Protective Surface Treatment shall be applied to the roadway surface and the roadway face and top of the concrete parapet rail.

Slab Reinforcing:

Longitudinal: S401E in top and bottom
S601E placed as shown over interior supports (See Reinf. Plan)

Transverse: S502E @ 12" o.c. bent up over beams — Alternate
S501E @ 12" o.c. in top, S402E @ 12" o.c. in bottom —
S503E @ 6" o.c. in top of overhang

① See "ADJUSTMENT FOR SLAB THICKNESS TOLERANCE"

② Tolerance: Minus = 1/4"
Plus = Equal to amount of slab thickening used to meet slab thickness tolerance- See "ADJUSTMENT FOR SLAB THICKNESS TOLERANCE"

③ Working Point to Gutterline

④ See "ROUNDING DETAIL"

The superstructure details shown are for use when Removable Deck Forming is used and are the basis for measurement of Class S(AE) Concrete.

At the Contractor's option, one epoxy coated straight #5 bar top and bottom may be substituted for bar S502E. Payment will be based on weight of S502E bar.

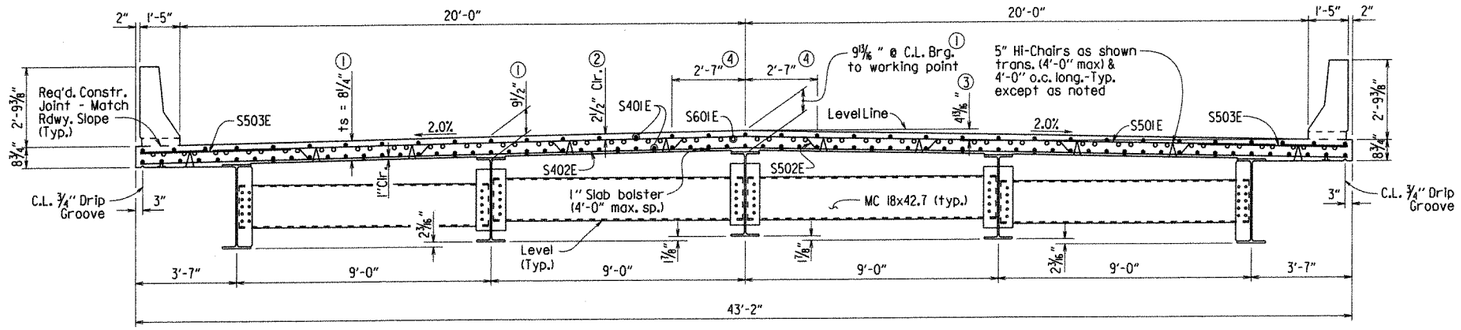

TYPICAL ROADWAY SECTION

Looking Ahead
Scale: 3/8" = 1'-0"

TABLE FOR WELD

Material Thickness Of Thicker Part Joined (Inches)	Minimum Size Of Fillet Weld (Inches)	Single Pass Weld Must Be Used
To 3/4" Inclusive	1/4"	
Over 3/4"	5/16"	

When a fillet weld size, as shown on the Plans, is larger than the minimum, the First Pass shall be that specified for minimum size of fillet weld.

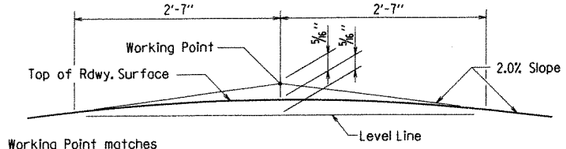

Working Point matches Theoretical Roadway Grade.

ROUNDING DETAIL

No Scale

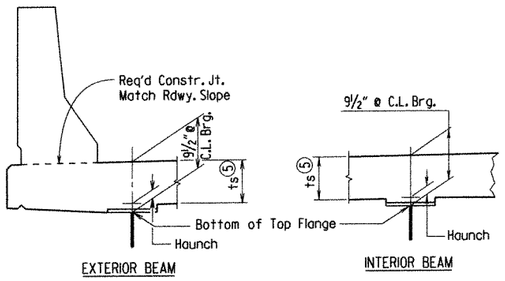

EXTERIOR BEAM — INTERIOR BEAM

ts = slab thickness as shown on superstructure detail drawings

⑤ Tolerance when removable deck forming is used is + 1/2", - 1/4". Haunch forming is required and shall be adjusted to maintain slab thickness tolerance.

Haunch dimension may vary within the following limits to maintain the grade and slab thickness tolerance : Minimum - occurs when top flange contacts bottom reinforcing steel; Maximum - top flange thickness plus 1 1/2" for removable or permanent steel deck forms. No increase in concrete and structural steel quantities will be made to maintain tolerances.

Tolerances shown are applicable only when removable deck forming is used. See Std. Dwg. No. 14991 for tolerances when permanent steel deck forms are used unless noted otherwise. Payment for concrete shall be based on removable deck forming.

ADJUSTMENT FOR SLAB THICKNESS TOLERANCE

No Scale

⑥ If permanent steel bridge deck forms are used, the fabricator shall clip the plate as necessary to accommodate the deck form support.

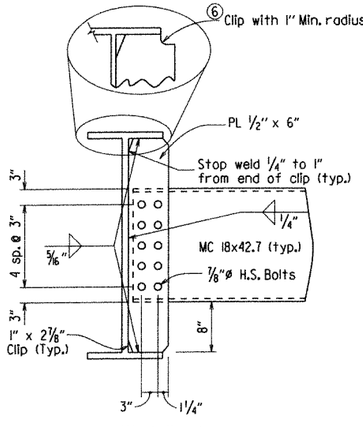

DETAIL M

No Scale

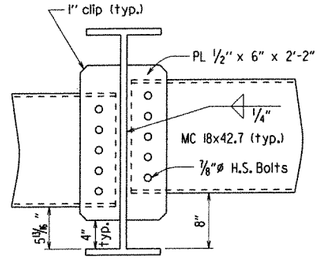

DETAIL N

No Scale

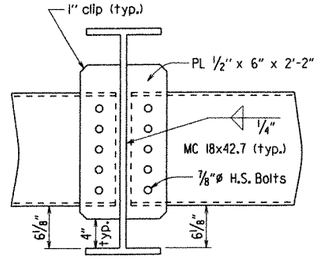

DETAIL O

No Scale

STATE OF ARKANSAS
Carl J. Fuselier
REGISTERED PROFESSIONAL ENGINEER
No. 7510
8/28/13
CARL J. FUSELIER

BRIDGE ENGINEER

SHEET 1 OF 7
DETAILS OF 210'-0" CONTINUOUS COMPOSITE W-BEAM UNIT (UNIT 5 & 6)
WHITE RIVER

ROUTE SEC.

ARKANSAS STATE HIGHWAY COMMISSION

LITTLE ROCK, ARK.

DRAWN BY: CMW DATE: 08/28/12 FILENAME: b005836_s4.dgn
CHECKED BY: CSL DATE: 08/28/13 SCALE: 3/8"= 1'-0" or as shown
DESIGNED BY: CMW DATE: 8/12

BRIDGE NO. 07289 DRAWING NO. 54161

PRINT DATE: 8/28/2013

DATE REVISED	DATE FILMED	DATE REVISED	DATE FILMED	FED. ROAD DIST. NO.	STATE	FED. AID PROJ. NO.	SHEET NO.	TOTAL SHEETS
				6	ARK.			
				JOB NO.		005836	144	230
				①	07289 - 210' CONT. UNIT		- 54162	

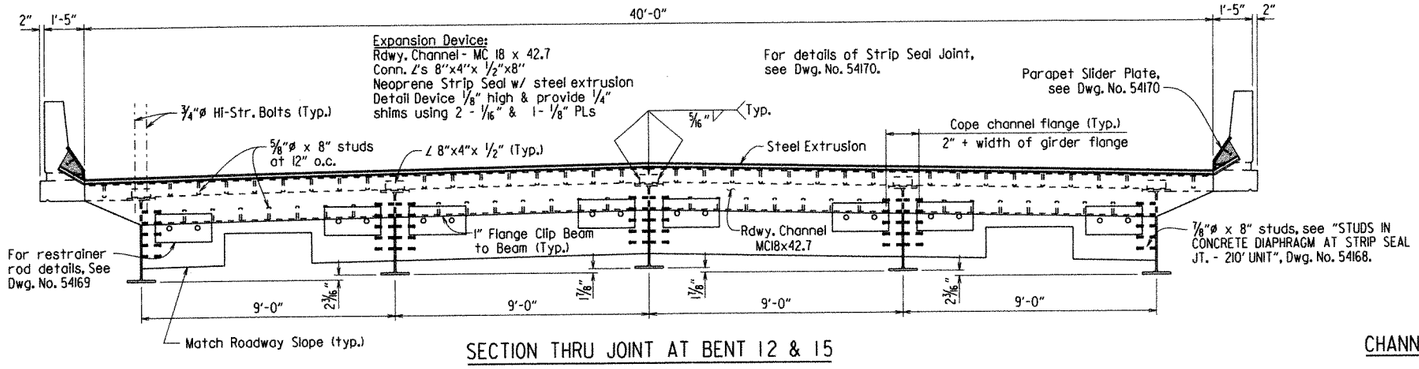

SECTION THRU JOINT AT BENT 12 & 15

Looking Ahead
Scale: ⅜" = 1'-0"

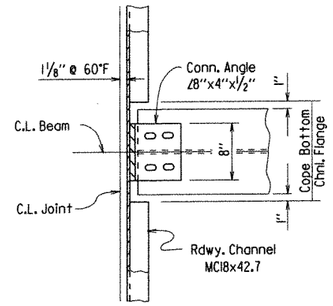

CHANNEL CONNECTION DETAIL - BENT 12,15 & 18

No Scale

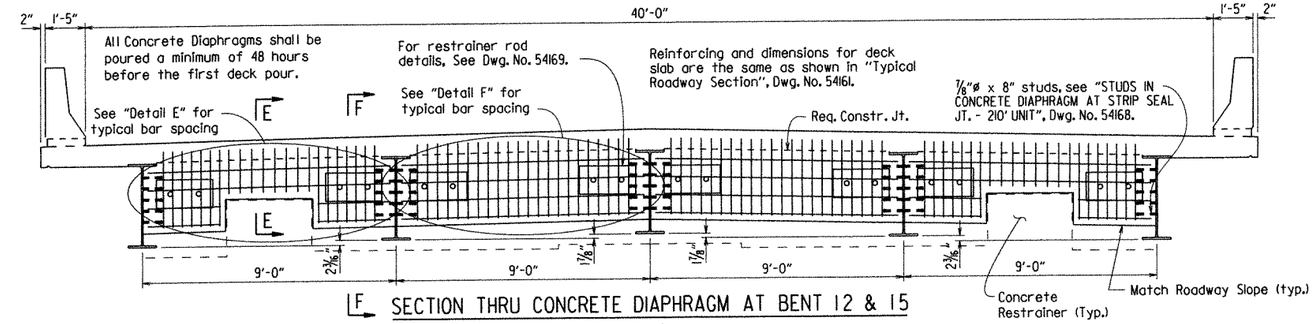

LF SECTION THRU CONCRETE DIAPHRAGM AT BENT 12 & 15

Looking Ahead
Scale: ⅜" = 1'-0"

½" Polystyrene shall be used as a bond breaker between the concrete restrainer and the concrete diaphragm and may remain in place.

REMOVABLE FORMS FOR DIAPHRAGMS SHALL BE USED

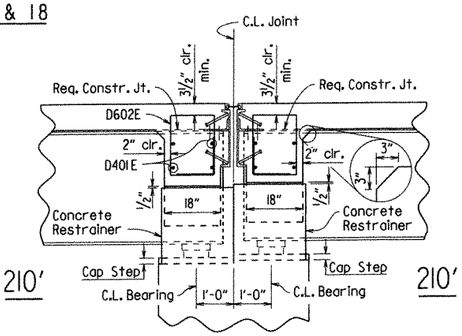

SECTION E-E

Scale: ½" = 1'-0"

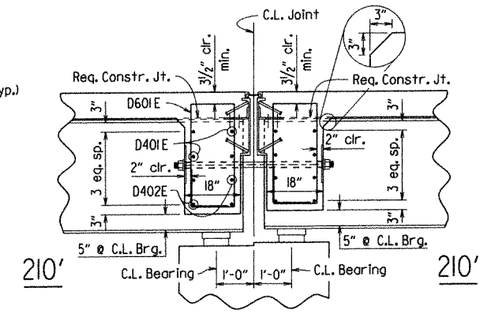

SECTION F-F

Scale: ½" = 1'-0"

For restrainer rod details, See Dwg. No. 54169.

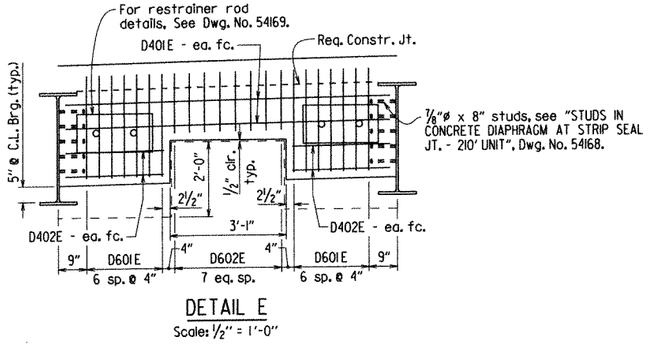

DETAIL E

Scale: ½" = 1'-0"

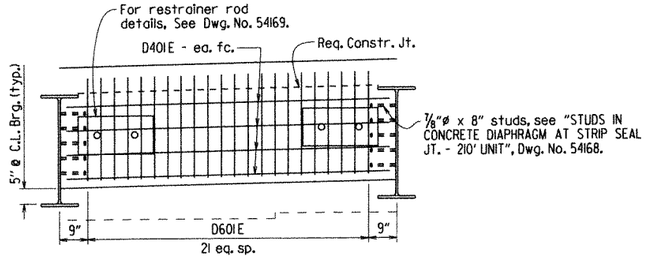

DETAIL F

Scale: ½" = 1'-0"

STATE OF ARKANSAS
Carl J. Fuselier
REGISTERED PROFESSIONAL ENGINEER
No. 7510
8/28/13
CARL J. FUSELIER

BRIDGE ENGINEER

SHEET 2 OF 7
DETAILS OF 210'-0" CONTINUOUS COMPOSITE W-BEAM UNIT (UNIT 5 & 6)
WHITE RIVER

ROUTE SEC.

ARKANSAS STATE HIGHWAY COMMISSION
LITTLE ROCK, ARK.

DRAWN BY: CSG DATE: MAR. 2013 FILENAME: b005836_s4.dgn
CHECKED BY: CSL DATE: 8/28/13 SCALE: AS NOTED
DESIGNED BY: CMW DATE: 8/12

BRIDGE NO. 07289 DRAWING NO. 54162

PRINT DATE: 8/27/2013

DATE REVISED	DATE FILMED	DATE REVISED	DATE FILMED	FED. ROAD DIST. NO.	STATE	FED. AID PROJ. NO.	SHEET NO.	TOTAL SHEETS
				6	ARK.			
				JOB NO.		005836	145	230
				(1) 07289 - 210' CONT. UNIT - 54163				

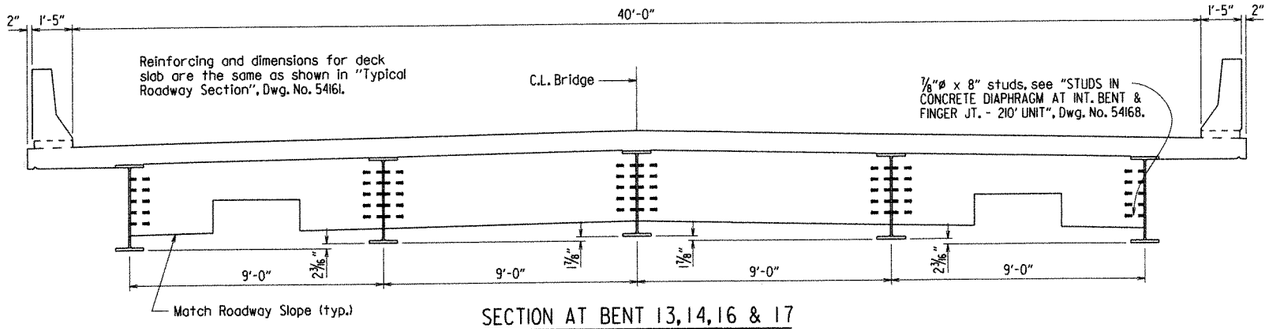

SECTION AT BENT 13,14,16 & 17

Looking Ahead
Scale: 3/8" = 1'-0"

REMOVABLE FORMS FOR DIAPHRAGMS SHALL BE USED

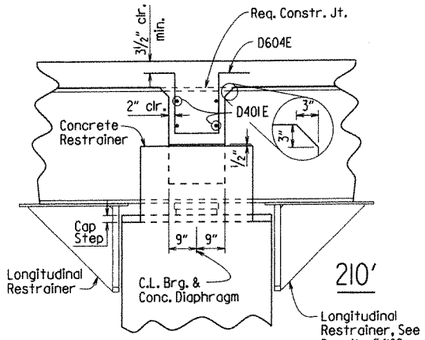

SECTION C-C

Scale: 1/2" = 1'-0"

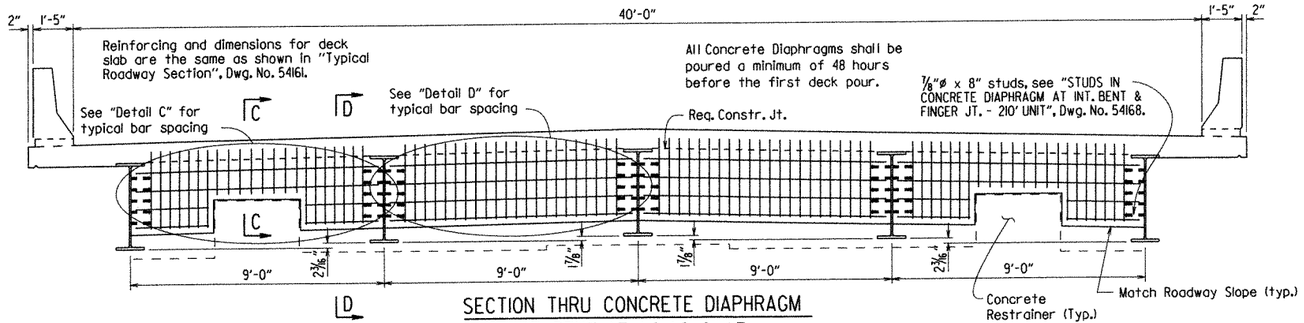

SECTION THRU CONCRETE DIAPHRAGM AT BENT 13,14,16 & 17

Looking Ahead
Scale: 3/8" = 1'-0"

1/2" Polystyrene shall be used as a bond breaker between the concrete restrainer and the concrete diaphragm and may remain in place.

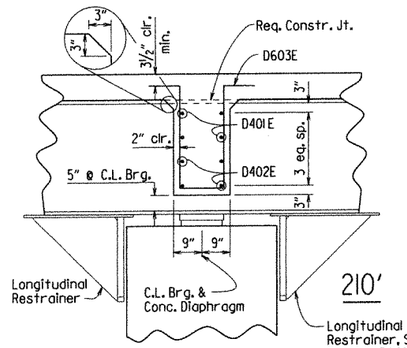

SECTION D-D

Scale: 1/2" = 1'-0"

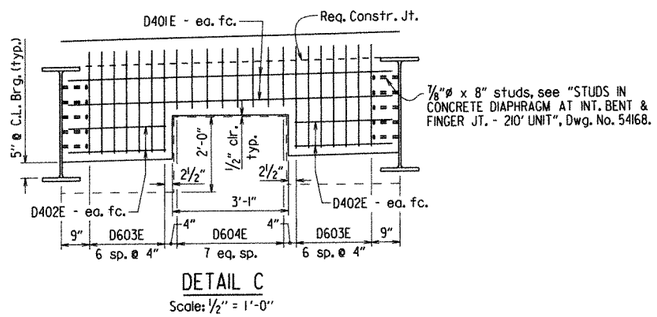

DETAIL C

Scale: 1/2" = 1'-0"

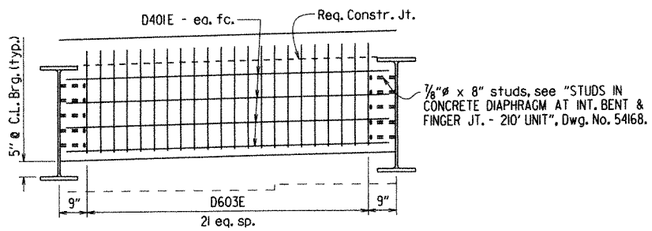

DETAIL D

Scale: 1/2" = 1'-0"

STATE OF ARKANSAS
Carl J. Fuselier
REGISTERED PROFESSIONAL ENGINEER
No. 7510
8/28/13
CARL J. FUSELIER

BRIDGE ENGINEER

SHEET 3 OF 7
DETAILS OF 210'-0" CONTINUOUS COMPOSITE W-BEAM UNIT (UNIT 5 & 6)
WHITE RIVER

ROUTE SEC.

ARKANSAS STATE HIGHWAY COMMISSION
LITTLE ROCK, ARK.

DRAWN BY: CSG DATE: MAR. 2013 FILENAME: b005836_s4.dgn
CHECKED BY: CSL DATE: 8/28/13 SCALE: AS NOTED
DESIGNED BY: CMW DATE: 8/13

BRIDGE NO. 07289 DRAWING NO. 54163

PRINT DATE: 8/27/2013

DATE REVISED	DATE FILMED	DATE REVISED	DATE FILMED	FED. ROAD DIST. NO.	STATE	FED. AID PROJ. NO.	SHEET NO.	TOTAL SHEETS
				6	ARK.			
				JOB NO.		005836	146	230
				①	07289 - 210' CONT. UNIT - 54164			

REMOVABLE FORMS FOR DIAPHRAGMS SHALL BE USED

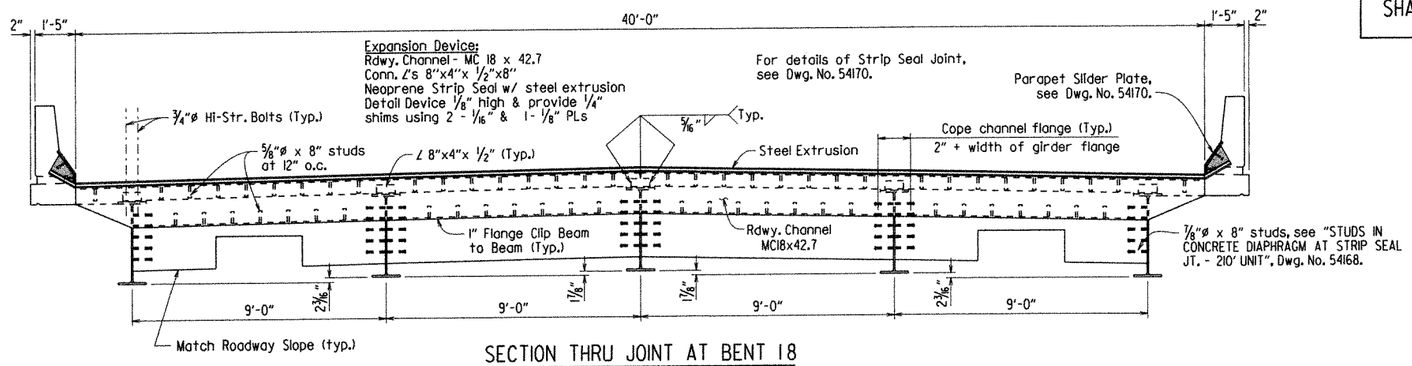

SECTION THRU JOINT AT BENT 18

Looking Back
Scale: ⅜" = 1'-0"

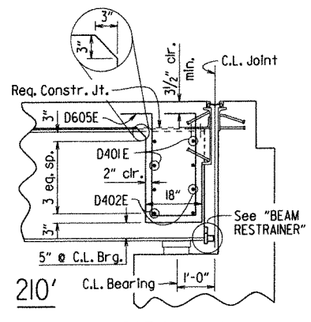

SECTION H-H

Scale: ½" = 1'-0"

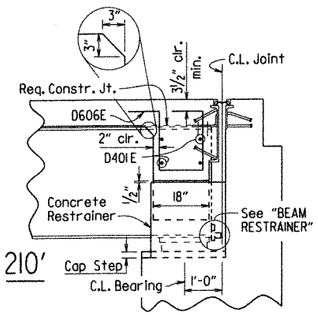

SECTION G-G

Scale: ½" = 1'-0"

SECTION THRU CONCRETE DIAPHRAGM AT BENT 18

Looking Back
Scale: ⅜" = 1'-0"

½" Polystyrene shall be used as a bond breaker between the concrete restrainer and the concrete diaphragm and may remain in place.

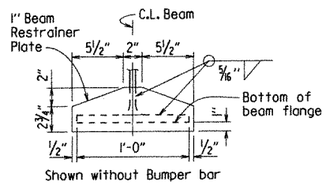

Shown without Bumper bar

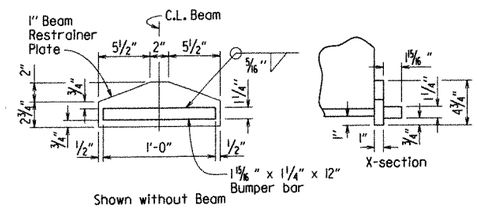

Shown without Beam

BEAM RESTRAINER

Scale: 1½" = 1'-0"

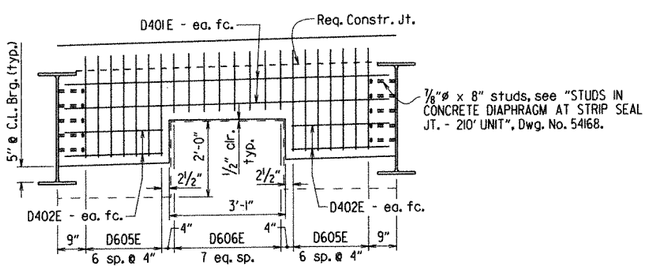

DETAIL G

Scale: ½" = 1'-0"

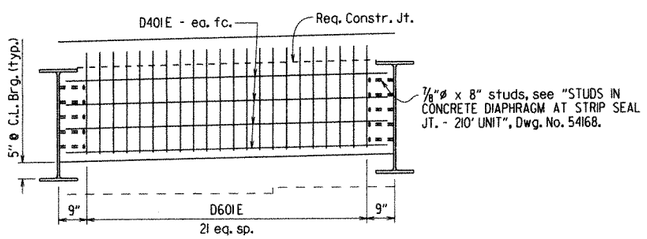

DETAIL H

Scale: ½" = 1'-0"

STATE OF ARKANSAS
Carl J. Puseller
REGISTERED PROFESSIONAL ENGINEER
No. 7510
8/28/13
CARL J. PUSELLER

BRIDGE ENGINEER

SHEET 4 OF 7
DETAILS OF 210'-0" CONTINUOUS COMPOSITE W-BEAM UNIT (UNIT 5 & 6)
WHITE RIVER

ROUTE SEC.

ARKANSAS STATE HIGHWAY COMMISSION
LITTLE ROCK, ARK.

DRAWN BY: CSG DATE: MAR. 2013 FILENAME: b005836_s4.dgn
CHECKED BY: CSL DATE: 8/28/13 SCALE: AS NOTED
DESIGNED BY: CMW DATE: 8/12

BRIDGE NO. 07289 DRAWING NO. 54164

PRINT DATE: 8/27/2013

DATE REVISED	DATE FILMED	DATE REVISED	DATE FILMED	FED. ROAD DIST. NO.	STATE	FED. AID PROJ. NO.	SHEET NO.	TOTAL SHEETS
				6	ARK.			
				JOB NO.		005836	147	230
				(1)	07289 - 210' CONT. UNIT - 54165			

For Drip Plate details see "BOTTOM FLANGE DRIP PLATE", Dwg. No. 54169.

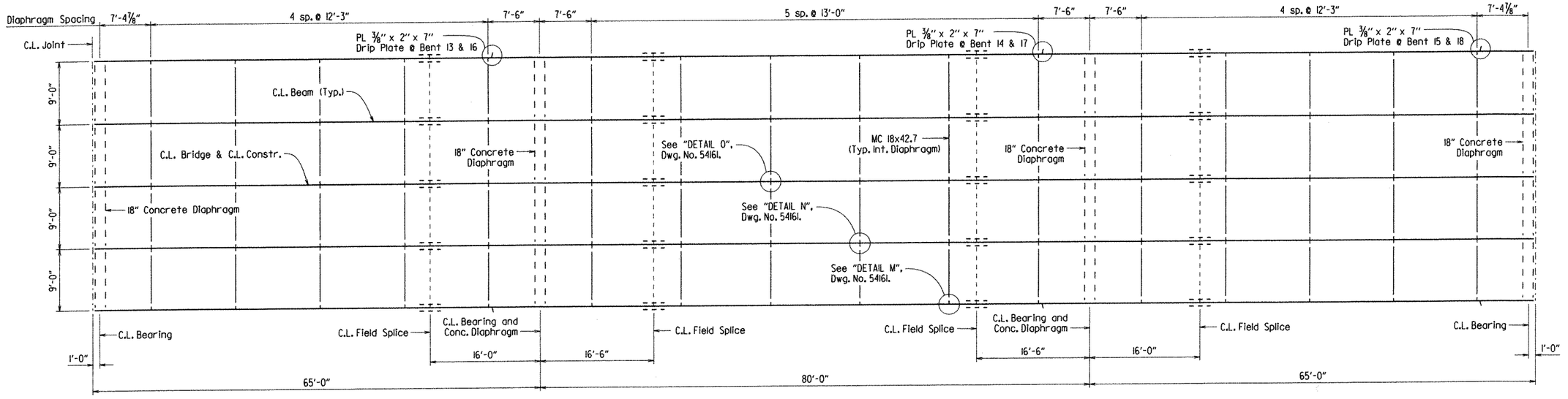

FRAMING PLAN

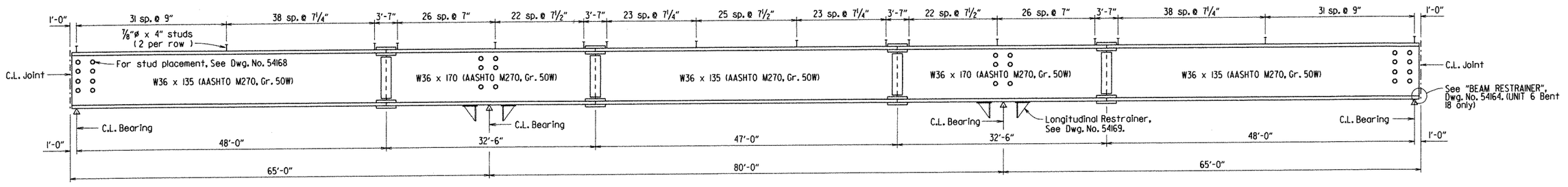

BEAM ELEVATION

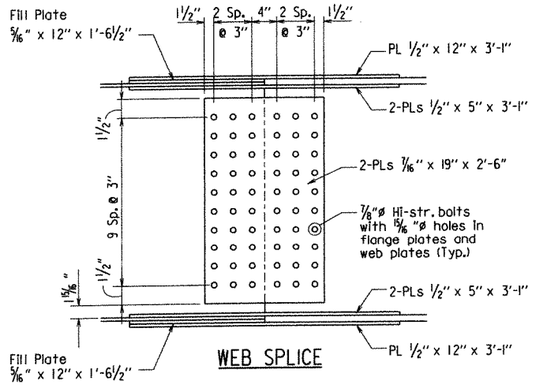

WEB SPLICE

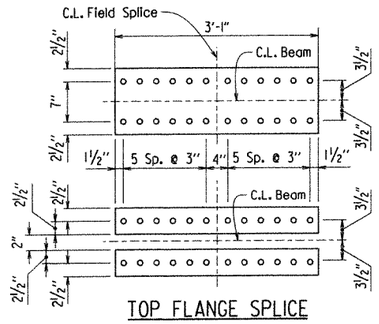

TOP FLANGE SPLICE

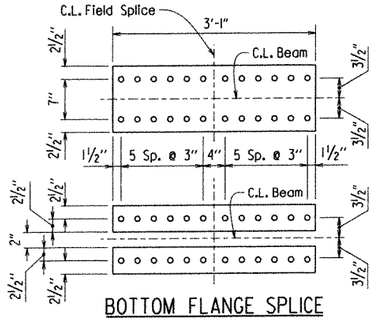

BOTTOM FLANGE SPLICE

All Field Splice Plates shall be AASHTO M270, Gr. 50W steel
All Field Splice Bolts shall be ⅞"ø H.S. Bolts
All Field Splice Bots Holes shall be 15/16 "ø

FIELD SPLICE - DETAILS

Scale: 1" = 1'-0"

All structural Steel shall be AASHTO M270, Gr. 50W unless otherwise noted. Bolted field splices may be eliminated or shop welded splices may be substituted with the approval of the Engineer. Payment will be made on the basis of plan quantities.

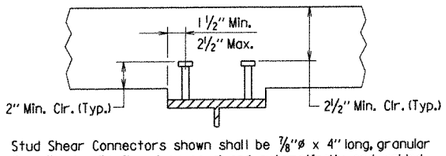

Stud Shear Connectors shown shall be ⅞"ø x 4" long, granular flux filled, solid fluxed or equal, and automatically end welded to the beam flange in accordance with the recommendations of the Manufacturer. ¾"ø studs may be used in place of the ⅞"ø studs shown, at the ratio of 1.361 - ¾"ø studs in place of one ⅞"ø stud. ⅞"ø studs will be used as basis for measurement of structural steel in shear connectors. Maximum stud spacing = 24".

SHEAR CONNECTOR DETAIL

No Scale

STATE OF ARKANSAS
Carl J. Fuselier
REGISTERED PROFESSIONAL ENGINEER
No. 7510
9/27/12
CARL J. FUSELIER

BRIDGE ENGINEER

SHEET 5 OF 7
DETAILS OF 210'-0" CONTINUOUS COMPOSITE W-BEAM UNIT (UNIT 5 & 6) WHITE RIVER

ROUTE SEC.

ARKANSAS STATE HIGHWAY COMMISSION

LITTLE ROCK, ARK.

DRAWN BY: CMW DATE: 08/28/2012 FILENAME: b005836_s4.dgn
CHECKED BY: CSL DATE: 8/28/13 SCALE: ⅛" = 1'-0" or as shown
DESIGNED BY: CMW DATE: 8/12

BRIDGE NO. 07289 DRAWING NO. 54165

PRINT DATE: 8/27/2013

DATE REVISED	DATE FILMED	DATE REVISED	DATE FILMED	FED. ROAD DIST. NO.	STATE	FED. AID PROJ. NO.	SHEET NO.	TOTAL SHEETS
				6	ARK.			
				JOB NO.		005836	148	230
				①	07289 - 210' CONT. UNIT - 54166			

All concrete diaphragms shall be poured before first deck pour. Pours with the same number may be placed simultaneously or separately. All pours (1) must be placed before Pour (2) can be placed. 48 hours shall elapse between the end of a Pour and the start of the next pour. 72 hours shall elapse between the end of a pour and the start of an adjacent pour. Any railing pours made before the entire slab unit has been placed must be approved by the Engineer. Concrete in bridge superstructure shall be consolidated for the entire pour before any concrete has taken its initial set. This may require the use of a retarding agent. The Contractor must obtain approval from the Engineer for any deviations from the pouring sequence shown.

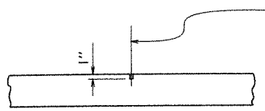

SLAB JOINT DETAIL

No Scale

½" x 1" Type 3, 4 or 6 Joint Sealer. See Subsections 501.02 (h)(2) and 501.05 (j). Backer rod filler will not be required. Joint Sealer shall be measured and paid for as Class S (AE) Concrete-Bridge. Slab joints shall extend to the outside edge of the deck slab. Slab joint shall be installed before the parapet rail is poured. If slab joints are to be sawed, they shall be sawed as soon as the concrete has sufficiently set to allow sawing of the joint without damage to the slab. Slab joints shall be placed at all pouring sequence construction joints and required slab joint locations. Slab Joints shall align with parapet open joints.

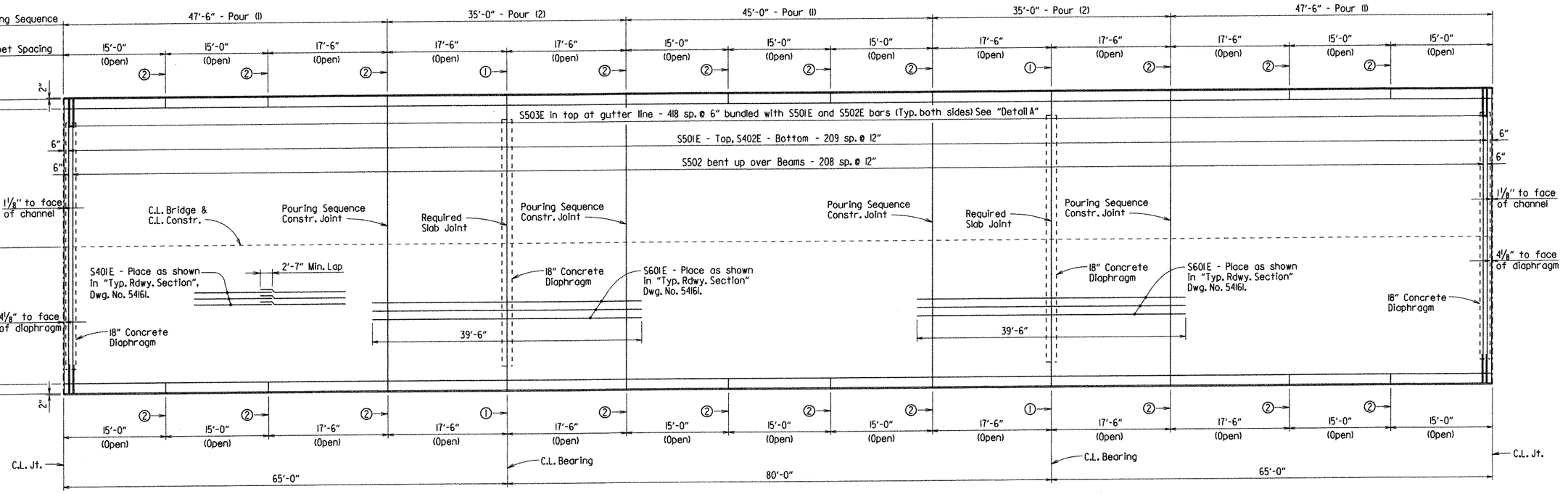

① C.L. Full-Depth Parapet Joint (¼" to 1" max.) Stop 4" from top of slab

② C.L. Partial-Depth Parapet Joint (¼" to 1" max.) Stop 1'-2" from top of slab

REINFORCING PLAN & DECK POURING SEQUENCE

TABLE OF DEAD LOAD DEFLECTIONS (INCHES)

Span	Point of Deflection	Interior & Exterior Beams: Str. Steel	Str. Steel + Slab	Str. Steel + Slab + Parapet
1	0	0.000	0.000	0.000
	0.1	0.041	0.264	0.278
	0.2	0.076	0.486	0.512
	0.3	0.099	0.633	0.667
	0.4	0.108	0.691	0.728
	0.5	0.103	0.658	0.694
	0.6	0.085	0.546	0.576
	0.7	0.059	0.381	0.402
	0.8	0.032	0.205	0.216
	0.9	0.009	0.060	0.063
½ of 2	0	0.000	0.000	0.000
	0.1	0.016	0.095	0.101
	0.2	0.050	0.302	0.320
	0.3	0.086	0.531	0.561
	0.4	0.114	0.703	0.743
C.L. Unit →	0.5	0.124	0.766	0.810

Table is symmetrical about C.L. Unit

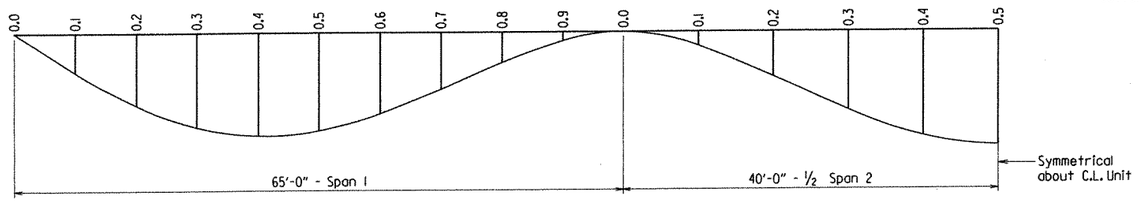

Camber for Dead Load Deflection plus Vertical curve +/-¼" tolerance. Deflections shown are along C.L. Girder from a chord from C.L. Bearing to C.L. Bearing. Vertical curve corrections not included.

DEAD LOAD DEFLECTION DIAGRAM

No Scale

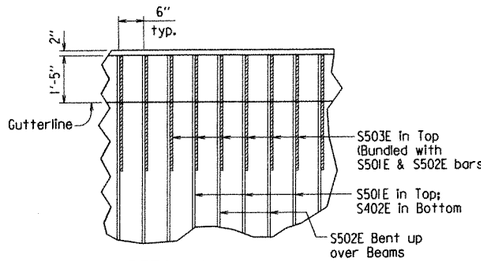

DETAIL A

No Scale

STATE OF ARKANSAS
Carl J. Fuselier
REGISTERED PROFESSIONAL ENGINEER
No. 7510
8/28/13
CARL J. FUSELIER

BRIDGE ENGINEER

SHEET 6 OF 7
DETAILS OF 210'-0" CONTINUOUS COMPOSITE W-BEAM UNIT (UNIT 5 & 6) WHITE RIVER

ROUTE SEC.

ARKANSAS STATE HIGHWAY COMMISSION

LITTLE ROCK, ARK.

DRAWN BY: CMW DATE: 08/28/2012 FILENAME: b005836_s4.dgn

CHECKED BY: CSL DATE: 8/28/13 SCALE: ⅛" = 1'-0" or as shown

DESIGNED BY: CMW DATE: 8/12

BRIDGE NO. 07289 DRAWING NO. 54166

PRINT DATE: 8/27/2013

DATE REVISED	DATE FILMED	DATE REVISED	DATE FILMED

FED. ROAD DIST. NO.	STATE	FED. AID PROJ. NO.	SHEET NO.	TOTAL SHEETS
6	ARK.			
JOB NO.		005836	149	230
①	07289 - 210' CONT. UNIT - 54167			

① ℄ Full-Depth Parapet Joint (1/4" to 1" max.) as shown in "Reinforcing Plan", Dwg. No. 54166. Stop 4" from top of slab.

② ℄ Partial-Depth Parapet Joint (1/4" to 1" max.) as shown in "Reinforcing Plan", Dwg. No. 54166. Stop 1'-2" from top of slab.

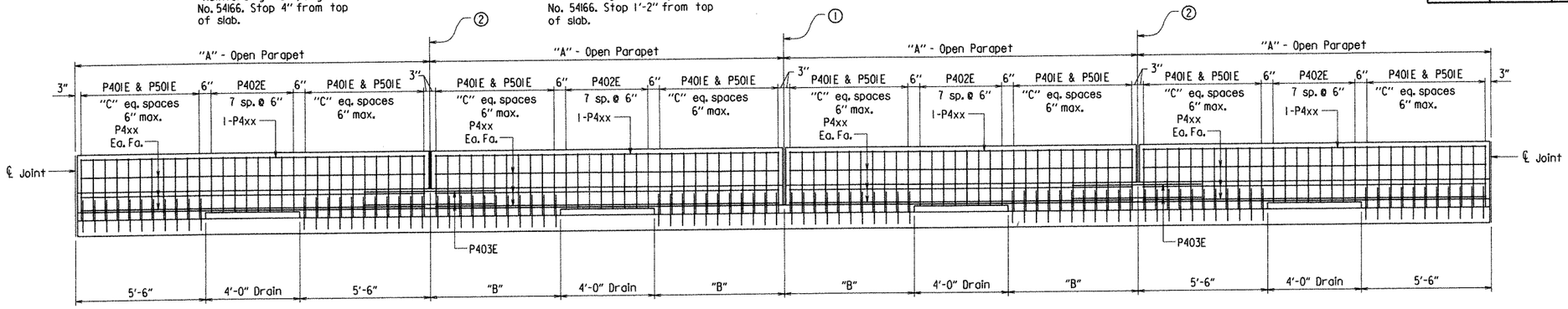

TABLE OF PARAPET RAIL VARIABLES

"A" Open Parapet	"B"	"C"	P4xx Bar
15'-0"	5'-6"	10	P404E
17'-6"	6'-9"	13	P405E

For location of Open Parapet panels, see "Reinforcing Plan", Dwg. No. 54166.

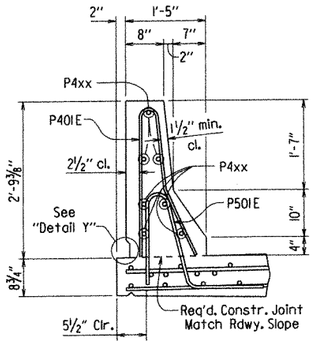

SECTION A-A

Scale: ¾" = 1'-0"

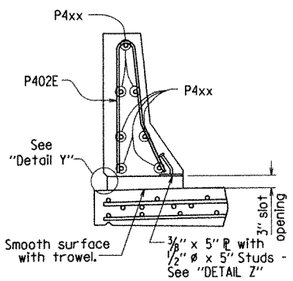

SECTION B-B

Scale: ¾" = 1'-0"

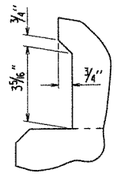

DETAIL Y

No Scale

BAR LIST

MARK	NO. REQ'D. UNIT 5	NO. REQ'D. UNIT 6	LENGTH	P.D.
S401E	612	612	37'-1"	Str.
S402E	210	210	42'-10"	Str.
P401E	644	644	5'-6"	3"
P402E	208	208	4'-10"	3"
P403E	80	80	5'-6"	Str.
P404E	98	98	14'-8"	Str.
P405E	84	84	17'-2"	Str.
D401E	96	96	8'-7"	Str.
D402E	68	68	2'-7"	Str.
S501E	210	210	42'-10"	Str.
S502E	209	209	43'-10"	3"
S503E	419	419	5'-1"	Str.
P501E	644	644	4'-9"	3¾"
S601E	136	136	39'-6"	Str.
D601E	144	72	8'-11"	4½"
D602E	32	16	6'-7"	4½"
D603E	144	144	7'-8"	4½"
D604E	32	32	5'-4"	4½"
D605E	-	72	7'-8"	4½"
D606E	-	16	5'-4"	4½"

BENDING DIAGRAMS

Dimensions are out to out of bars.

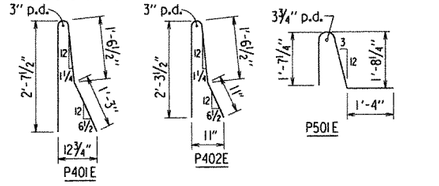

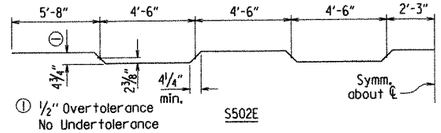

① ½" Overtolerance
No Undertolerance

S502E

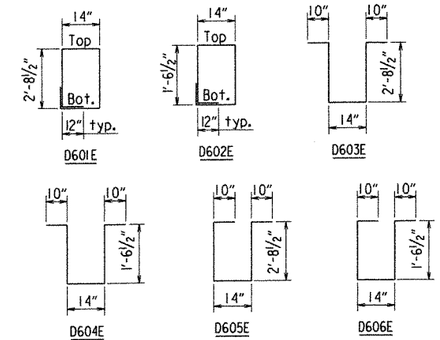

Note: Bars designated with an "E" suffix to be Epoxy Coated.

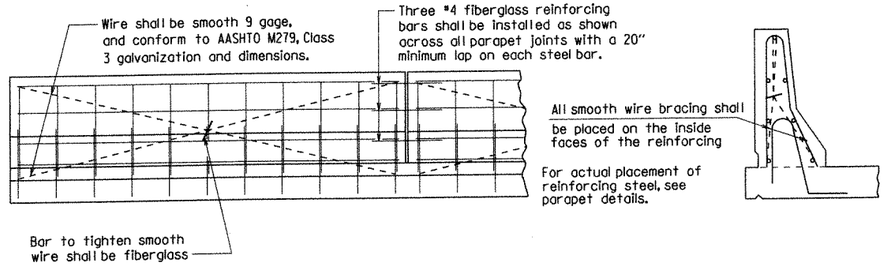

All panels shall be braced as required to prevent racking. All parapet joints shall be sawed as soon as practical to a minimum width of 1/4". To control cracking before sawing, all joints must be grooved before the concrete is set. Sawing of the joints must be controlled so it will follow the grooved joint.

The extruded parapet shall conform to the horizontal and vertical lines shown on the plans or as directed by the Engineer and shall present a smooth, uniform appearance and texture. Exposed surface may be given a light brush finish or a Class 3, Textured Coating Finish, in place of the Class 2, Rubbed Finish.

DETAILS OF OPTIONAL SLIPFORMING OF CONCRETE PARAPET RAIL

No Scale

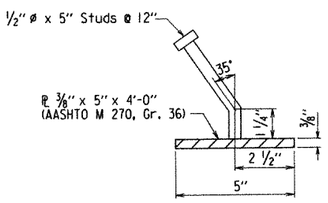

DETAIL Z

No Scale

The surfaces of the ⅜" plates which will not be in contact with concrete shall be painted with aluminum epoxy paint in accordance with Section 638, or as approved by the Engineer. Only one coat is required and shall be applied in the fabricator's shop. Painting will not be paid for directly, but will be considered subsidiary to "Structural Steel in Beam Spans (M270, Gr. 50W)."

Parapet studs shall be 5" long, granular flux filled, solid fluxed or equal, and automatically end welded to the plate. Studs and plates shall meet the requirements of Section 807 and shall be measured and paid for as "Structural Steel in Beam Spans (M270, Gr. 50W)."

STATE OF ARKANSAS
Carl J. Puseliер
REGISTERED PROFESSIONAL ENGINEER
No. 7510
8/29/13
CARL J. PUSELIER

BRIDGE ENGINEER

SHEET 7 OF 7
DETAILS OF 210'-0" CONTINUOUS COMPOSITE W-BEAM UNIT (UNIT 5 & 6)
WHITE RIVER

ROUTE SEC.

ARKANSAS STATE HIGHWAY COMMISSION
LITTLE ROCK, ARK.

DRAWN BY: CMW DATE: 08/28/2012 FILENAME: b005836_s4.dgn
CHECKED BY: CSL DATE: 8/29/13 SCALE: As Shown
DESIGNED BY: CMW DATE: 8/13

BRIDGE NO. 07289 DRAWING NO. 54167

PRINT DATE: 8/27/2013

DATE REVISED	DATE FILMED	DATE REVISED	DATE FILMED	FED. ROAD DIST. NO.	STATE	FED. AID PROJ. NO.	SHEET NO.	TOTAL SHEETS
				6	ARK.			
				JOB NO.		005836	150	230
				① 07289 -		STUD DETAILS		- 54168

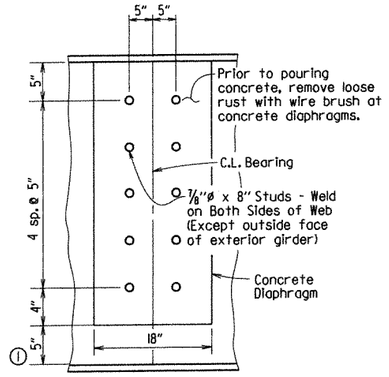

STUDS IN CONCRETE DIAPHRAGM AT INT. BENT & FINGER JT. - 210' UNIT

No Scale

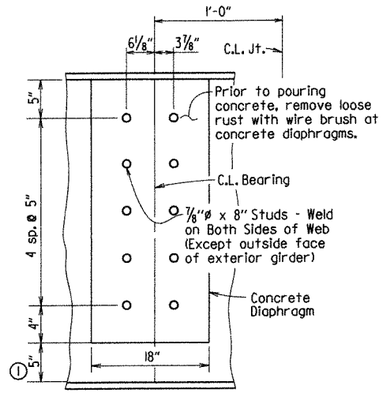

STUDS IN CONCRETE DIAPHRAGM AT STRIP SEAL JT. - 210' UNIT

No Scale

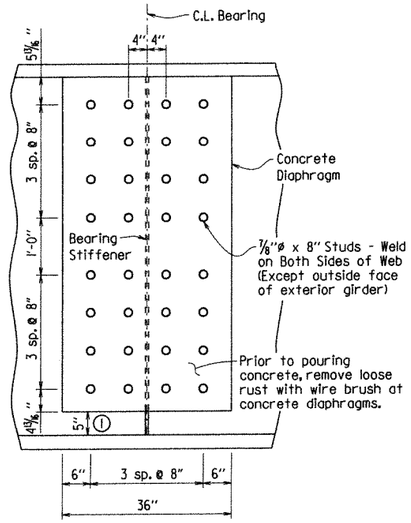

STUDS IN CONCRETE DIAPHRAGM AT BENTS 7 & 8 - 1220' UNIT

No Scale

① Dimension at C.L. Bearing

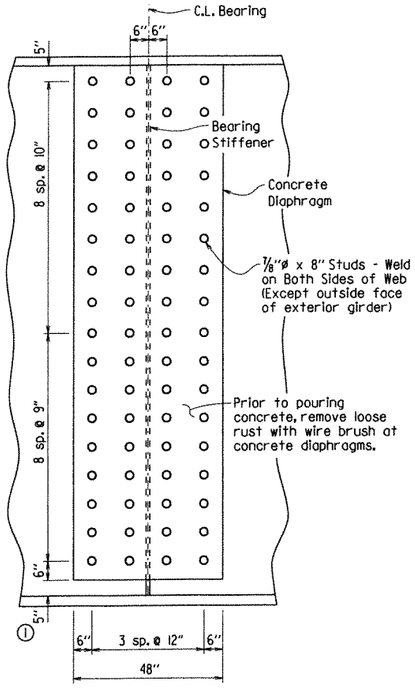

STUDS IN CONCRETE DIAPHRAGM AT PIERS - 1220' UNIT

No Scale

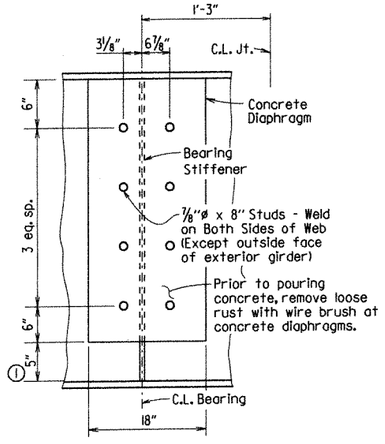

STUDS IN CONCRETE DIAPHRAGM AT STRIP SEAL JT. - 246' & 522' UNIT

No Scale

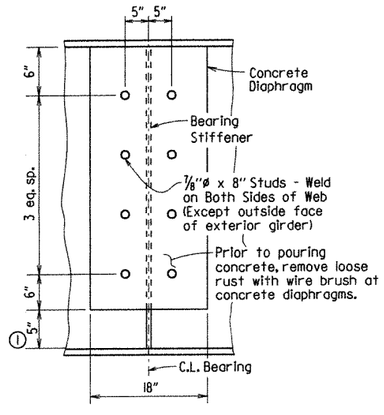

STUDS IN CONCRETE DIAPHRAGM AT INT. BENT - 246' & 522' UNIT

No Scale

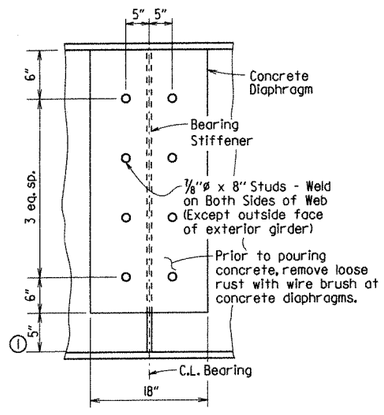

STUDS IN CONCRETE DIAPHRAGM AT FINGER JT. - 522' UNIT

No Scale

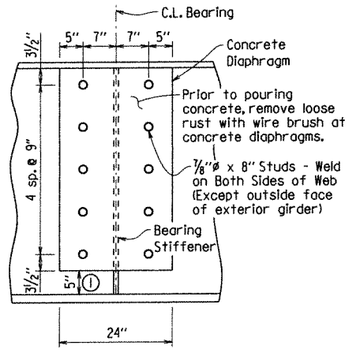

STUDS IN CONCRETE DIAPHRAGM AT FINGER JT. - 1220' UNIT

No Scale

STATE OF ARKANSAS
Carl J. Fuselier
REGISTERED PROFESSIONAL ENGINEER
No. 7510
8/28/13
CARL J. FUSELIER

BRIDGE ENGINEER

DETAILS OF STUDS IN CONCRETE DIAPHRAGMS WHITE RIVER

ROUTE SEC.

ARKANSAS STATE HIGHWAY COMMISSION

LITTLE ROCK, ARK.

DRAWN BY: CSG DATE: MAR. 2013 FILENAME: b005836.cd.dgn

CHECKED BY: DHP DATE: 8-28-13 SCALE: AS NOTED

DESIGNED BY: DHP DATE: 3-6-12

BRIDGE NO. 07289 DRAWING NO. 54168

PRINT DATE: 8/27/2013

DATE REVISED	DATE FILMED	DATE REVISED	DATE FILMED	FED. ROAD DIST. NO.	STATE	FED. AID PROJ. NO.	SHEET NO.	TOTAL SHEETS
				6	ARK.			
				JOB NO.		005836	151	230
				①	07289 - RESTRAINER DETAILS - 54169			

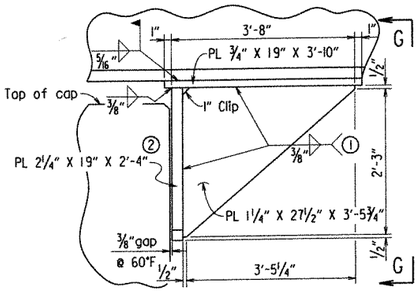

LONGITUDINAL RESTRAINER DETAILS - BENT 2

No Scale

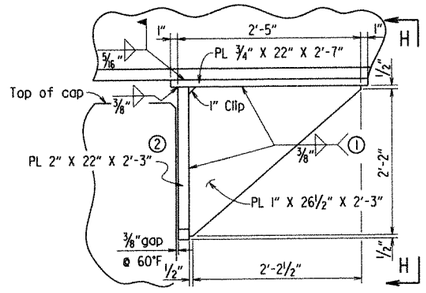

LONGITUDINAL RESTRAINER DETAILS - BENTS 4 & 5

No Scale

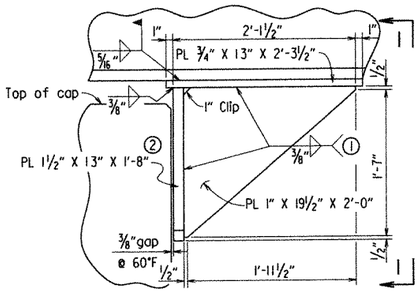

LONGITUDINAL RESTRAINER DETAILS - BENTS 10, 11, 13, 14, 16 & 17

No Scale

① Stop weld 1/2" from clip

② Longitudinal restrainer shall be fabricated to account for grade such that the final position of this plate will be vertical.

Deck slab shall be poured in its entirety before welding longitudinal restrainers.

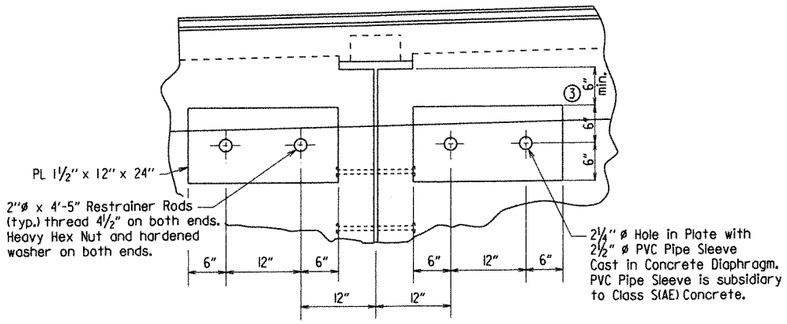

RESTRAINER ROD ASSEMBLY DETAIL

Scale: 1"= 1'-0"

Longitudinal Restrainer Rod shall conform to AASHTO M270, Grade 50 with threads conforming to American Standard Course, Class 2 Fit, ASA Specification B.1. Washers for longitudinal restrainer rod shall conform to AASHTO M293. Nuts for longitudinal restrainers shall conform to Subsection 807.06. Rods, Nuts and Washers for the longitudinal restrainers shall be galvanized in accordance with AASHTO M232 class C or AASHTO M298 class 50. See "Restrainer Rod Installation Detail". Restrainer rod, nut, washers and plate shall be paid for as "Structural Steel in Beam Spans (M270, Gr. 50W)" or "Structural Steel in Plate Girder Spans (M270, Gr. 50W)".

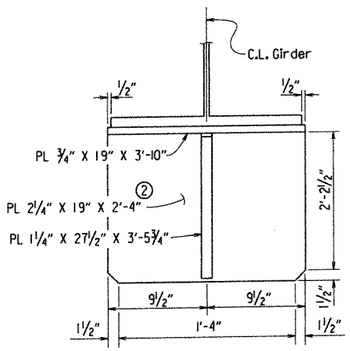

SECTION G-G

No Scale

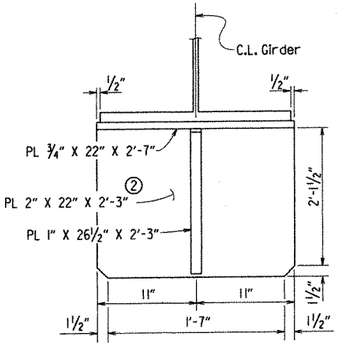

SECTION H-H

No Scale

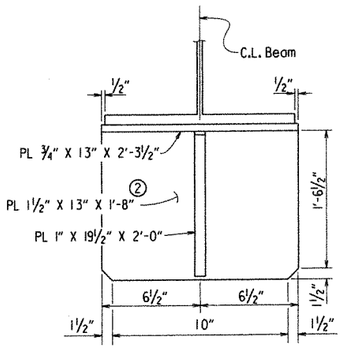

SECTION I - I

No Scale

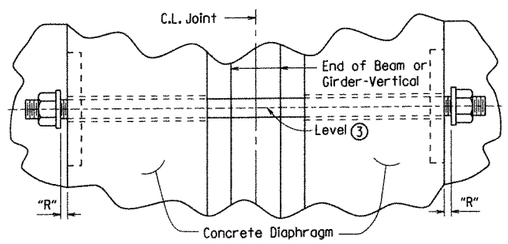

After gap width has been set, tack weld heavy hex nut to restrainer rod.

RESTRAINER ROD INSTALLATION DETAIL

No Scale

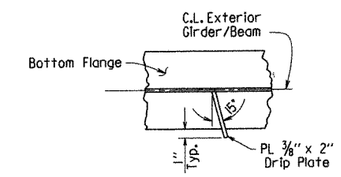

PLAN

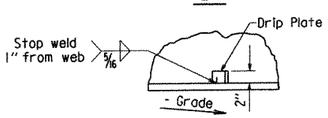

ELEVATION

BOTTOM FLANGE DRIP PLATE

No Scale

Bottom flange drip plate to be welded to the outside flange of the exterior girders/beams only. Locate drip plate 7'-0" from CL. Bearing on the high side of each bent.

TABLE A

Bent	"R" - Gap Width at 24 hour average temp. of: 40° F	60° F	80° F
3	11/16"	1"	15/16"
12 & 15	7/16"	5/8"	3/4"

③ Restrainer rods shall be cast in concrete diaphragms so as to be level and slide freely across both units in final condition.

STATE OF ARKANSAS
Carl J. Fuselier
REGISTERED PROFESSIONAL ENGINEER
No. 7510
8/28/13
CARL J. FUSELIER

BRIDGE ENGINEER

DETAILS OF RESTRAINERS
WHITE RIVER

ROUTE SEC.

ARKANSAS STATE HIGHWAY COMMISSION

LITTLE ROCK, ARK.

DRAWN BY: CSG DATE: MAR. 2013 FILENAME: b005836.cd.dgn

CHECKED BY: DHP DATE: 8-28-13 SCALE: AS NOTED

DESIGNED BY: RBR DATE: Jan 2013

BRIDGE NO. 07289 DRAWING NO. 54169

PRINT DATE: 8/27/2013

DATE REVISED	DATE FILMED	DATE REVISED	DATE FILMED	FED. ROAD DIST. NO.	STATE	FED. AID PROJ. NO.	SHEET NO.	TOTAL SHEETS
				6	ARK.			
				JOB NO.		005836	152	230
				(1)	07289 -	STRIP SEAL	- 54170	

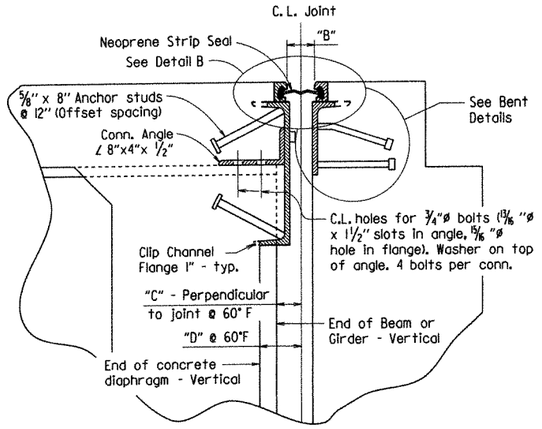

DETAILS OF JOINT AT BENTS 1 & 18

No Scale

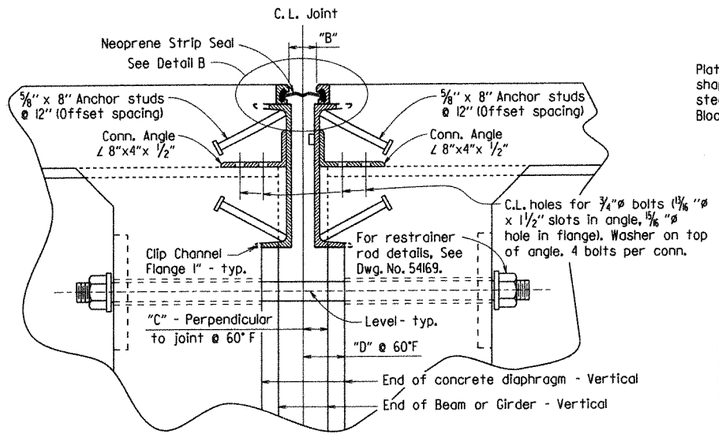

DETAILS OF JOINT AT BENTS 3, 12 & 15

No Scale

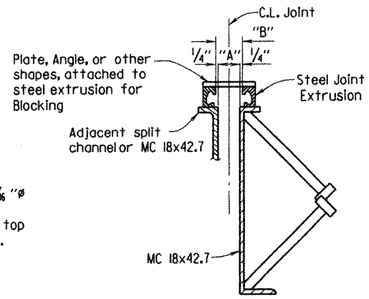

Each expansion joint device shall be blocked in the Shop by the Fabricator to the dimension "A", and the blocking details shall be shown on the Shop Drawings. Blocking shall be placed within 2 feet of each end of the device and with a maximum spacing of 8 feet.

DETAILS FOR BLOCKING EXPANSION JOINT DEVICE AT STRIP SEAL JOINTS

No Scale

STRIP SEAL DATA

Bent Number	* "A" width perpendicular to joint at 24 hour average temperature of:			"B" Joint width perpendicular to joint at 60° F	Movement Rating	"C" perpendicular to joint	"D" perpendicular to joint
	40°	60°	80°				
1	2 7/16"	2 1/4"	2 1/16"	2 3/4"	4"	3 5/16"	4 1/8"
3	2 7/8"	2 1/4"	1 5/8"	2 3/4"	4"	3 5/16"	4 1/8"
12	2 9/16"	2 1/4"	1 15/16"	2 3/4"	4"	3 5/16"	4 1/8"
15	2 9/16"	2 1/4"	1 15/16"	2 3/4"	4"	3 5/16"	4 1/8"
18	2 7/16"	2 1/4"	2 1/16"	2 3/4"	4"	3 5/16"	4 1/8"

The temperature used to set the joint opening shall be the approximate average air temperature during the 24 hour period immediately before the bolts are tightened. The Engineer shall establish the temperature. Interpolation of the table may be necessary.

EXPANSION DEVICE INSTALLATION

Bent 1 & 18

The Contractor may elect to install the expansion device using one of the following two alternatives.

1) The concrete span pour adjacent to joint shall be placed before the end bent backwall is placed. After the end bent backwall forms are in place and the beams or girders erected, the blocked expansion device shall be installed and adjusted for grade. All connection bolts shall be fully tightened prior to placing the diaphragm concrete at the bent. Immediately prior to pouring the backwall concrete, the blocking shall be removed, the opening adjusted for temperature, and the backwall constructed.

2) The backwall shall be poured to the optional construction joint after beams or girders are erected. The blocked expansion device shall be installed and adjusted for grade. All connection bolts shall be fully tightened prior to placing the diaphragm concrete at the bent. Immediately prior to pouring the remainder of the backwall concrete, the blocking shall be removed and the opening adjusted for temperature. Backfill shall not be placed behind the backwall until the deck concrete on the adjacent span has been placed.

Bent 3, 12 & 15

After all beams or girders on both sides of the joint are erected, the blocked expansion device shall be installed and adjusted for grade. Connection bolts shall be tightened only on the unit whose concrete will be poured first. Connection bolts on the second unit shall be loosely installed to allow for thermal movements and for end rotation of the beams or girders of the first unit while the concrete deck is poured. After the concrete on the first unit has hardened and immediately prior to pouring concrete for the second unit concrete diaphragm, the blocking shall be removed and the joint width shall be adjusted for temperature. Joint openings shown are for when concrete is poured at an air temperature of 60° F. If concrete is poured at other temperatures, set the joint width by interpolation of "STRIP SEAL DATA" table. After the joint width has been set, the connection bolts on the second unit shall be tightened and concrete in the second unit can then be poured. A joint opening adjustment is not required for end rotation of the beams or girders caused by the weight of the slab and parapets.

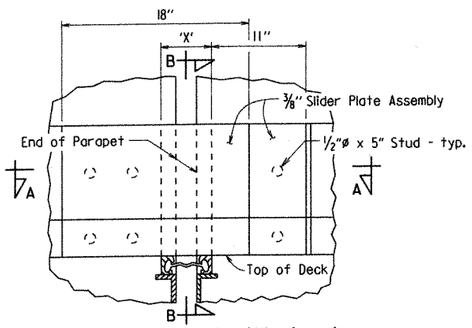

Dimension 'X' equals the width of opening in parapet at curb to allow for removal or repair of joint.

DETAIL OF NEOPRENE STRIP SEAL AT CURB

No Scale

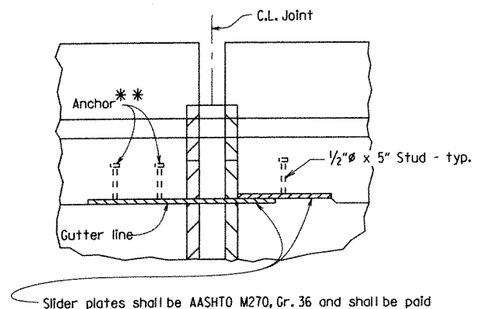

Slider plates shall be AASHTO M270, Gr. 36 and shall be paid for as "Structural Steel in Plate Girder Spans (M270, Gr. 50W)" or "Structural Steel in Beam Spans (M270, Gr. 50W)". The surfaces of the plates which will not be in contact with the concrete shall be cleaned and painted in accordance with Section 638, or as directed by the Engineer. Only one coat is required and shall be applied in the fabricator's shop. Painting shall not be paid for directly, but will be considered subsidiary to "Structural Steel in Plate Girder Spans (M270, Gr. 50W)" or "Structural Steel in Beam Spans (M270, Gr. 50W)".

SECTION A-A

No Scale

Details of Joint turn-up in curb and parapet are general and show basic design controls only. See SP Job 005836, "Armored Joint with Neoprene Strip Seal". Method of installation and fabrication shall be determined by the manufacturer.

* * The method of attachment of the slider plate assembly must be such that it may be removed in order to provide for future replacement of the neoprene seal.

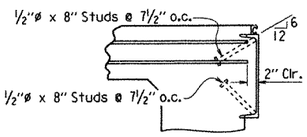

As an alternate to 5/8"ø studs, 1/2"ø x 8" studs spaced as shown may be used. Use weight of 5/8"ø stud as basis of measurement of structural steel in anchors.

DETAILS OF ALTERNATE ANCHORS AND PLACEMENT OF LONGITUDINAL REINFORCING

No Scale

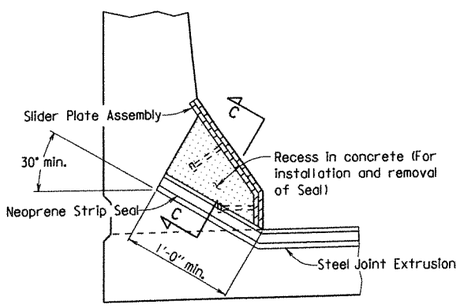

SECTION B-B

Scale: 1 1/2" = 1'-0"

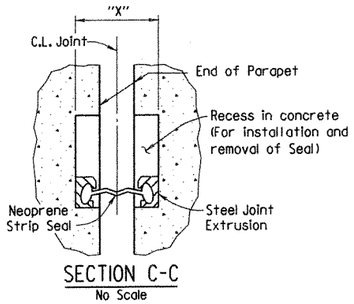

SECTION C-C

No Scale

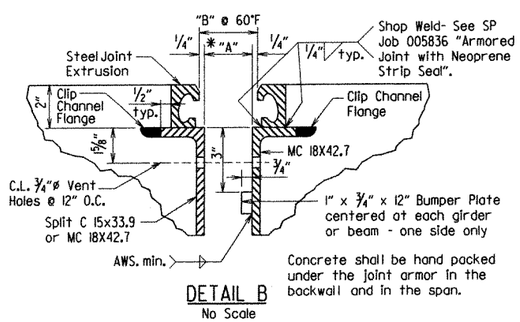

DETAIL B

No Scale

Concrete shall be hand packed under the joint armor in the backwall and in the span.

STATE OF ARKANSAS
Carl J. Fussellier
REGISTERED PROFESSIONAL ENGINEER
No. 7510
8/29/13
CARL J. FUSSELLIER

BRIDGE ENGINEER

DETAILS OF STRIP SEAL JOINTS WHITE RIVER

ROUTE SEC.

ARKANSAS STATE HIGHWAY COMMISSION

LITTLE ROCK, ARK.

DRAWN BY: CSG DATE: MAR. 2013 FILENAME: b005836_cd.dgn

CHECKED BY: DHP DATE: 8-28-13 SCALE: AS NOTED

DESIGNED BY: RBR DATE: Jan 2013

BRIDGE NO. 07289 DRAWING NO. 54170

PRINT DATE: 8/27/2013

DATE REVISED	DATE FILMED	DATE REVISED	DATE FILMED	FED. ROAD DIST. NO.	STATE	FED. AID PROJ. NO.	SHEET NO.	TOTAL SHEETS
				6	ARK.			
				JOB NO.		005836	153	230
				①	07289 -	FINGER JOINT	- 54171	

** The temperature used to set the joint opening shall be the approximate average air temperature during the 24 hour period immediately before the bolts are tightened. The Engineer shall establish the temperature. Interpolation of the table may be necessary.

Temp.	"A"	"B"	
	1220' UNIT BENT 6 & 9	522' UNIT BENT 6	210' UNIT BENT 9
40° F	3 15/16"	3 1/16"	3 3/16"
60° F	3"	3"	3"
80° F	2 1/16"	2 9/16"	2 13/16"

	1220' UNIT BENT 6 & 9	522' UNIT BENT 6	210' UNIT BENT 9
"C"	12 1/2"	10 1/2"	9 1/2"
"D"	2 3/4"	3"	3"

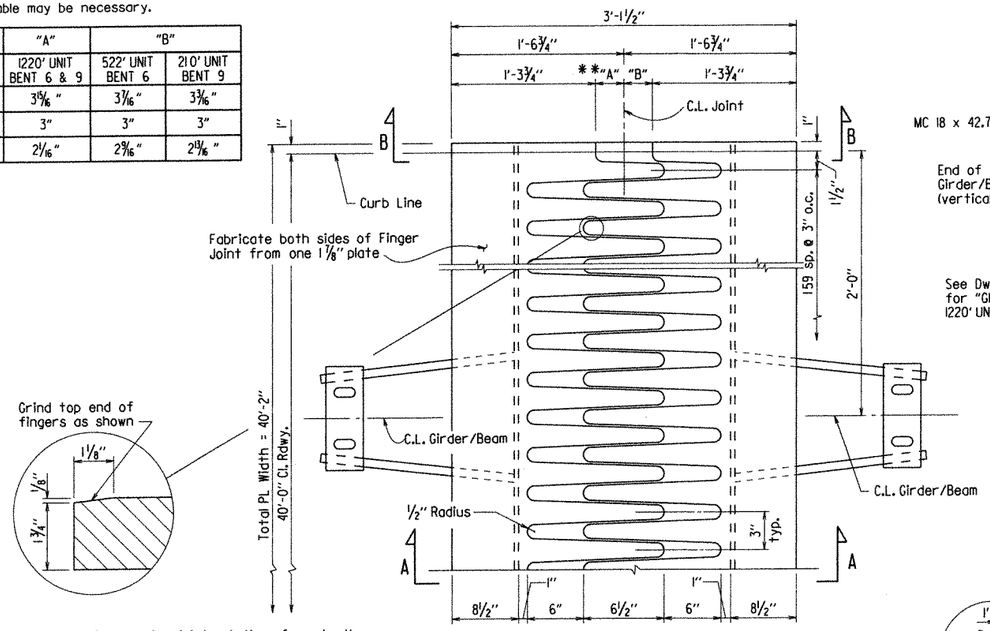

Top of expansion joints shall conform to the profile grade of the roadway surfaces. Dimensions shown are at 60° F.

EXPANSION PLATE DETAIL*

N.T.S.

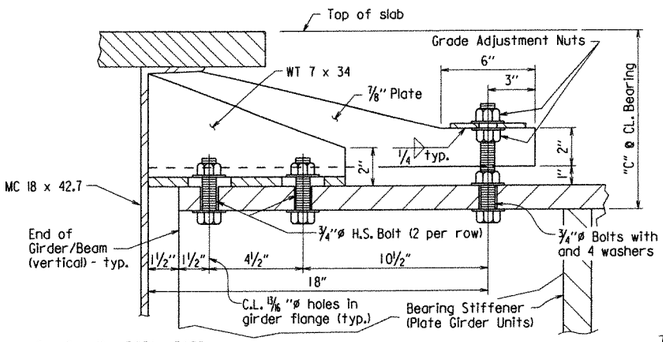

See Dwg. Nos. 54134 - 54137 for "GIRDER ELEVATION" of 1220' UNIT.

SECTION E-E AT GIRDER

N.T.S.

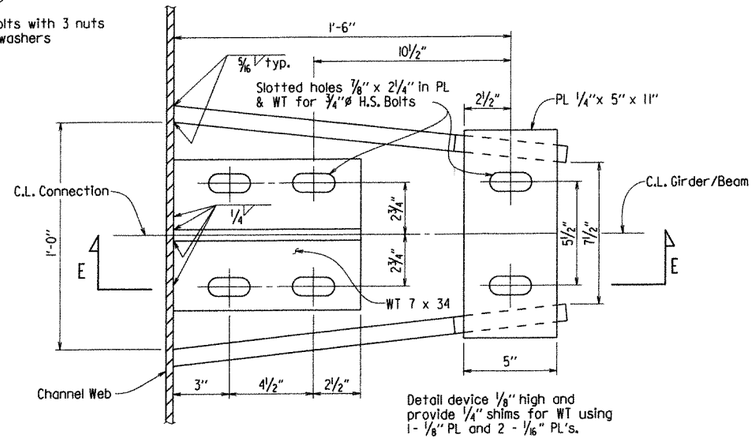

Detail device 1/8" high and provide 1/4" shims for WT using 1- 1/8" PL and 2 - 1/16" PL's.

PLAN OF CONNECTION TO GIRDER

Scale: 3" = 1'-0"

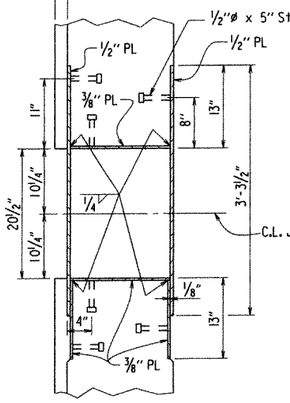

SECTION D-D*

N.T.S.

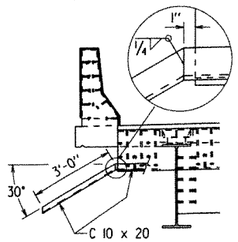

DRAIN DETAIL

N.T.S.

* at 60° F

Concrete shall be hand packed under parapet slider plates.

All structural Steel, except parapet slider plates, shall be AASHTO M270, Gr. 50W and galvanized in accordance with AASHTO M 111 after fabrication. Parapet slider plates shall be AASHTO M270, Gr. 36 and shall be paid for as "Structural Steel in Plate Girder Spans (M270, Gr. 50W)" or "Structural Steel in Beam Spans (M270, Gr. 50W)". The surfaces of the parapet slider plates which will not be in contact with the concrete shall be cleaned and painted in accordance with Section 638, or as directed by the Engineer. Only one coat is required and shall be applied in the fabricator's shop. Galvanizing and painting shall not be paid for directly, but will be considered subsidiary to "Structural Steel in Plate Girder Spans (M270, Gr. 50W)" or "Structural Steel in Beam Spans (M270, Gr. 50W)".

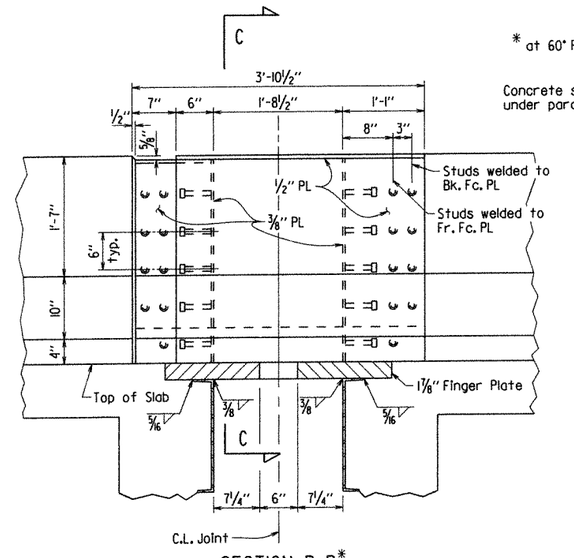

SECTION B-B*

N.T.S.

The 1/2"ø studs shall be granular flux filled, solid fluxed, or equal and automatically end welded to the PL's in accordance with recommendations of the manufacturer.

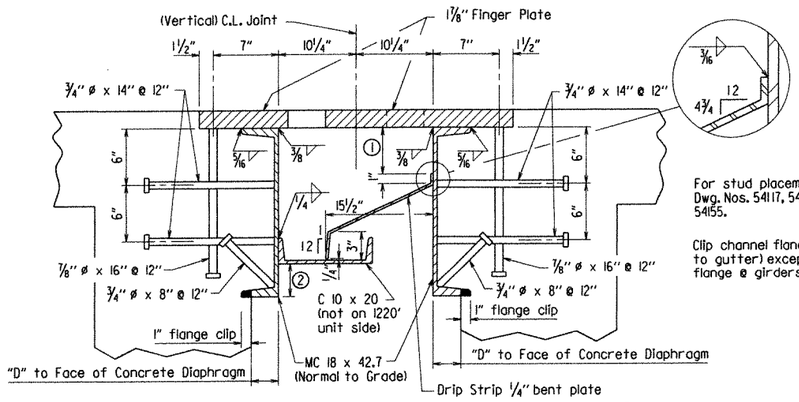

The Studs shown shall be granular flux filled, solid fluxed, or equal, and automatically end welded to the channel in accordance with recommendations of the manufacturer.

SECTION A-A*

N.T.S.

For stud placement details, see Dwg. Nos. 54117, 54129, 54133 & 54155.

Clip channel flange 1" (gutter to gutter) except clip entire flange @ girders/beams.

① Varies - 2" @ C.L. Bridge to 7" @ end of roadway channel

② Varies - 5 1/2" @ C.L. Bridge to 1/2" @ end of roadway channel.

Drip Strip and channel shall be located on the expansion device to provide maximum slope for runoff.

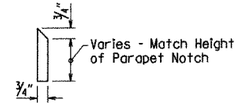

Notch parapet plates as shown.

DETAIL Y

N.T.S.

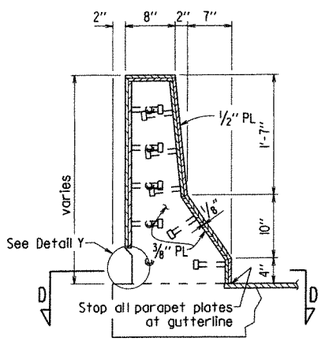

SECTION C-C

Scale: 1"= 1'-0"

Concrete shall be hand packed under parapet slider plates.

STATE OF ARKANSAS
Carl J. Fuselier
REGISTERED PROFESSIONAL ENGINEER
No. 7510
9/2/2013
CARL J. FUSELIER

BRIDGE ENGINEER

DETAILS OF FINGER JOINTS WHITE RIVER

ROUTE SEC.

ARKANSAS STATE HIGHWAY COMMISSION

LITTLE ROCK, ARK.

DRAWN BY: CSG DATE: MAR. 2013 FILENAME: b005836_cd.dgn

CHECKED BY: DHP DATE: 8-28-13 SCALE: AS NOTED

DESIGNED BY: CSL DATE: Jan 2013

BRIDGE NO. 07289 DRAWING NO. 54171

PRINT DATE: 8/27/2013

DATE REVISED	DATE FILMED	DATE REVISED	DATE FILMED	FED. ROAD DIST. NO.	STATE	FED. AID PROJ. NO.	SHEET NO.	TOTAL SHEETS
				6	ARK.			
				JOB NO.		005836	154	230

(1) 07289 - SUPER. GENERAL NOTES - 54172

GENERAL NOTES

CONSTRUCTION SPECIFICATIONS: Arkansas State Highway and Transportation Department Standard Specifications for Highway Construction (2003 Edition) with applicable supplemental specifications and special provisions.

DESIGN SPECIFICATIONS: AASHTO LRFD Bridge Design Specifications 5th Edition (2010), with 2010 Interims.

LIVE LOADING: HL-93

MATERIALS AND STRENGTHS:
Concrete: All concrete shall be Class S(AE) with a minimum 28 day strength f'c = 4,000 psi.

Reinforcing Steel: All reinforcing steel shall be Grade 60 (yield strength = 60,000 psi) conforming to AASHTO M31 or M322, Type A, with mill test reports.

Structural Steel: Structural steel shall conform to AASHTO M270, Gr. 50W (Fy = 50,000 psi.) or AASHTO M270, Gr. 36 (Fy = 36,000 psi.).

STRUCTURAL STEEL:
All Structural Steel shall be AASHTO M270, Gr. 50W unless otherwise noted. All structural steel shall be paid for as "Structural Steel in Plate Girder Spans (M270, Gr. 50W)" or "Structural Steel in W-Beam Spans (M270, Gr. 50W)". Structural Steel completely embedded in concrete may be AASHTO M270, Gr. 36 or Gr 50. All exposed surfaces shall be cleaned in accordance with Subsection 807.84 (e) unless noted otherwise.

Requests for substitution of structural steel shapes shown with shapes of greater size must be submitted by the Contractor to the Engineer for approval. Steels of equal or greater strengths will be accepted only when shown on the approved shop drawings. Payment will be based on the basis of shapes and materials shown in the plans, and no additional compensation will be made for any adjustments due to substitutions.

Beams and Girders including all field splice plates and longitudinal stiffeners are considered main load carrying members and shall meet the Longitudinal Charpy V-Notch Test specified in Subsection 807.05. This work and material will not be paid for directly, but shall be considered subsidiary to the item "Structural Steel in Plate Girder Spans (M270, Gr. 50W)" or "Structural Steel in W-Beam Spans (M270, Gr. 50W)".

Steel plates for main members shall be cut and fabricated so that the primary direction of rolling is parallel to the direction of the main tensile and/or compressive stresses.

Drawings show general features of design only. Shop drawings shall be made in accordance with Subsection 807.04, submitted and approval secured before fabrication is begun. Girder webs may be made by shop splicing with minimum lengths of 25'-0" for sections. Flange plates longer than 50'-0" may be made by shop splicing with minimum lengths of 25'-0" for sections. Material specifications and location of shop-welded splices, if any, shall be shown on the shop drawings. No additional payment for welds for these splices will be made.

All stud shear connectors shall be granular flux filled, solid fluxed, or equal and shall be automatically end welded in accordance with the recommendations of the manufacturer.

All Girders and Beams shall be blocked in their true position in the shop as specified in Subsection 807.54 (b)(2). The camber, length of sections, distance between bearings, and opening of joints shall be measured with the beams or girders in their true position and this information shall become part of the permanent record of this job. Match marks shall be placed on the component parts in this assembly and shown on the erection diagram. All beam or girder dimensions are based on a temperature of 60°F. A tolerance of +/- 1/4" is allowed for camber.

Field connections shall be bolted with high-strength bolts. Bolts shall be 3/4" diameter, except as noted, and open holes shall be 15/16", unless noted otherwise. Holes for 3/4" diameter bolts may be 15/16" diameter if a washer is supplied for use under both the nut and head of the bolt. Bolt spacing shall be 2 1/2" for 3/4" diameter bolts unless otherwise noted. For Field Splices, bolts shall be 7/8" diameter bolts unless otherwise noted. Open holes shall be 15/16" unless noted otherwise. Bolt spacing shall be 3" for 7/8" diameter bolts unless otherwise noted. Bolts shall be placed with heads on the outside face of the exterior beam or girder web and on the bottom of the beam or girder flanges.

All welding that is to be done during fabrication of structural steel, including temporary welds, shall be detailed on the shop drawings and submitted for approval. If additional welds are required, whether permanent or temporary, a formal request with detailed drawings shall be submitted to the Engineer for approval; however, additional welds used for attaching falsework support devices or screed rail supports to the structural steel that do not exceed the limitations of Subsection 802.13 will not require approval prior to construction. All welding shall conform to Subsection 807.26.

Groove welds in main plate girder members shall be Quality Control (Q.C.) tested by nondestructive testing, as required by the Standard Specifications. Fillet welds at flange to web plate and long. stiffener to web plate connections shall be Q.C. tested by the magnetic particle method. All Quality Control (Q.C.) testing is at the contractor's expense.

Crossframes and diaphragms shall be installed as girders and beams are erected. All bolts in crossframes, diaphragms and field splices shall be installed and tightened in accordance with Subsection 807.71.

All Bearings shall be seated in accordance with Subsection 808.08. This work and material will not be paid for directly but will be considered subsidiary to the item "Structural Steel in Plate Girder Spans (M270, Gr. 50W)" or "Structural Steel in W-Beam Spans (M270, Gr. 50W)".

REINFORCING STEEL:
All reinforcing steel shall be Grade 60 (yield strength = 60,000 psi) conforming to AASHTO M31 or M322, Type A, with mill test reports. The reinforcing steel shall be accurately located in the forms and firmly held in place by steel wire supports, sufficient in number and size to prevent displacement during the course of construction. The wire supports will not be paid for directly, but will be considered subsidiary to the item of "Epoxy Coated Reinforcing Steel (Grade 60)".

CONCRETE:
All concrete shall be Class S(AE) with a minimum 28 day compressive strength f'c = 4,000 psi. Concrete shall be poured in the dry and all exposed corners to be chamfered 3/4" unless otherwise noted.

Concrete in bridge superstructure shall be placed, consolidated, and screeded off for the entire pour before any concrete has taken its initial set. This may require the use of a retarding agent.

The concrete deck shall be given a Tine Finish in accordance with Subsection 802.19 for Class 5, Tined Bridge Roadway Surface Finish. Movement of the finishing machine across new concrete shall be on planks placed on the surface and shall be prohibited for 72 hours after finishing the pour. Sufficient concrete must be placed ahead of the strike-off to fully load the beam or girder. If a longitudinal strike-off is used, a vertical camber adjustment must be made in the strike-off to account for the future dead load deflection due to the parapet railing.

CLASS I PROTECTIVE SURFACE TREATMENT: Class I protective surface treatment shall be applied to the roadway surface and to the roadway face and top of concrete parapet rail.

PRINT DATE: 8/27/2013

STATE OF ARKANSAS
Carl J. Puseliер
REGISTERED PROFESSIONAL ENGINEER
No. 7510
8/29/13
CARL J. PUSELIER

BRIDGE ENGINEER

SUPERSTRUCTURE GENERAL NOTES
WHITE RIVER

ROUTE SEC.

ARKANSAS STATE HIGHWAY COMMISSION
LITTLE ROCK, ARK.

DRAWN BY: CMW DATE: 07/11/13 FILENAME: b005836_notes.dgn
CHECKED BY: DHP DATE: 8-28-13 SCALE: No Scale
DESIGNED BY: — DATE: —

BRIDGE NO. 07289 DRAWING NO. 54172

DATE REVISED	DATE FILMED	DATE REVISED	DATE FILMED	FED. ROAD DIST. NO.	STATE	FED. AID PROJ. NO.	SHEET NO.	TOTAL SHEETS
				6	ARK.			
				JOB NO.		005836	155	230

① 07289 ELASTOMERIC BEARINGS 54173

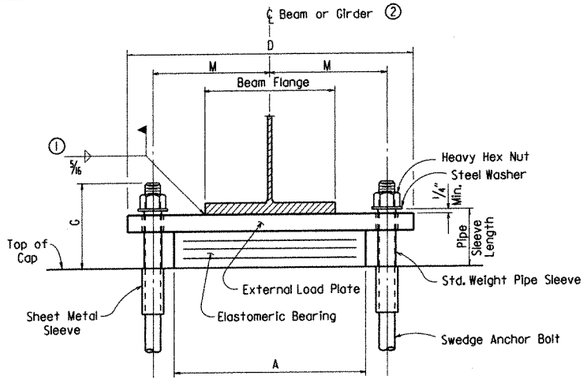

FRONT VIEW - AT BENT NOS. 9ah, 12bk, 12ah, 15bk, 15ah, & 18

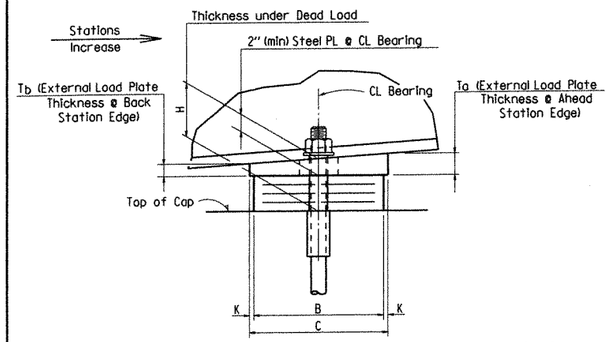

SIDE VIEW - AT BENT NOS. 9ah, 12bk, 12ah, 15bk, 15ah, & 18

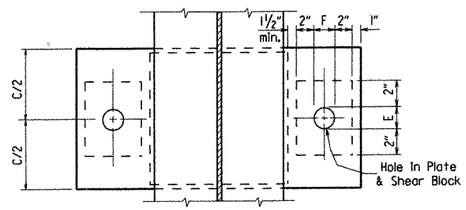

PLAN VIEW - AT BENT NOS. 2, 4, 5, 10, 11, 13, 14, 16 & 17

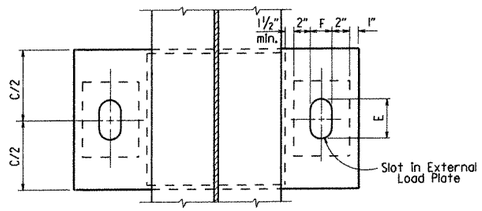

PLAN VIEW - AT BENT NOS. 1, 3bk, 3ah & 6bk

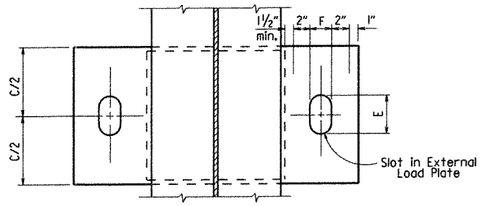

PLAN VIEW - AT BENT NOS. 9ah, 12bk, 12ah, 15bk, 15ah & 18

TABLE A

Bent No.	10	11	13	14	16	17
T_a	1.69"	1.69"	1.69"	1.69"	1.69"	1.71"
T_b	2.32"	2.32"	2.32"	2.32"	2.32"	2.30"

① Care shall be taken to ensure that the external load plate is in full and complete contact with the beam or girder flange before welding begins.

② Centerline Beam or Girder shall align with centerline bearing.

bk = Back of Centerline Bent
ah = Ahead of Centerline Bent

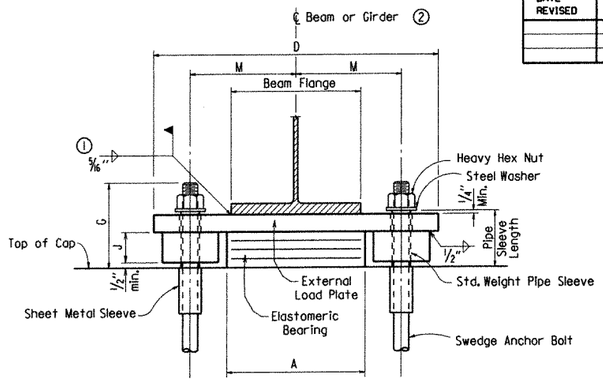

FRONT VIEW - AT BENT NOS. 1, 2, 3bk, 3ah, 4, 5, 6bk, 10, 11, 13, 14, 16 & 17

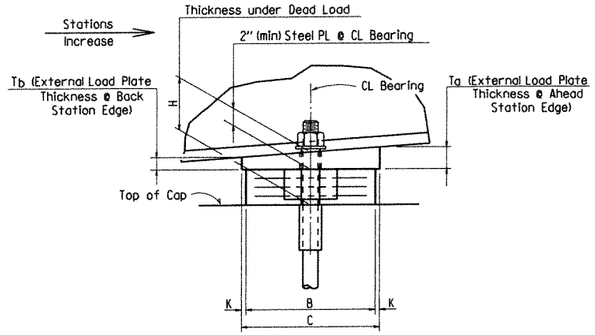

SIDE VIEW - AT BENT NOS. 1, 2, 3bk, 3ah, 4, 5, 6bk, 10, 11, 13, 14, 16 & 17

The direction of bevel of the external load plate may not be accurately depicted with respect to Ta and Tb values shown in "TABLE OF FABRICATOR VARIABLES".

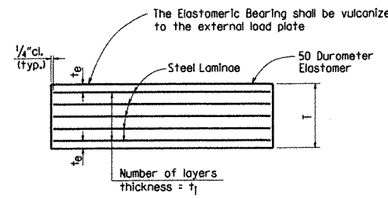

t_e = thickness of elastomer cover on top and bottom of pad
t_l = thickness of elastomer between steel laminae
N = number of elastomer layers of thickness t_l

ELASTOMERIC BEARING

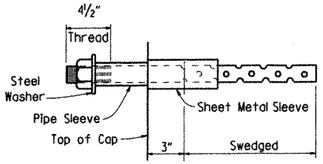

ANCHOR BOLT DETAIL

NOTE: Anchor Bolts may be cast in place or drilled and grouted into place. If Anchor Bolts are to be cast in place, the Galvanized Sheet Metal Sleeves will not be required.

If Anchor Bolts are to be drilled and grouted in place, the Galvanized Sheet Metal Sleeves shall be cast in place as shown. Sleeves shall be dry packed with styrofoam, urethane foam or approved equal prior to pouring of concrete. After pouring of the cap and prior to erection of Structural Steel, the dry pack shall be removed and holes for the anchor bolts shall be accurately drilled into the masonry. Bolts placed in drilled holes shall be accurately set and fixed using a OPL approved epoxy or non-shrink grout that completely fills the holes. Galvanized Sheet Metal Sleeves will not be paid for directly, but will be considered subsidiary to the item "Structural Steel in Beam Spans (M 270, Gr. 50W)" or "Structural Steel in Plate Girder Spans (M270, Gr. 50W)".

GENERAL NOTES

Elastomeric Bearings shall conform to Section 808 and shall be paid for at the unit price bid for "Elastomeric Bearings".

External load plates and shear blocks shall conform to AASHTO M 270, Grade 50W. Pipe sleeves shall be ASTM A53, Grade B, and shall be galvanized to conform to AASHTO M 232, Class C or AASHTO M 298, Class 50.

External load plates and external load plates with shear blocks shall be completely fabricated (including bevel and bolt holes) and shall be cleaned before vulcanizing to the elastomeric bearing. Surfaces in contact with the elastomeric bearing shall be cleaned in accordance with Subsection 808.03. Other surfaces shall be blast cleaned in accordance with Subsection 807.84(e) for unpainted weathering steel.

Anchor Bolts, Washers and Nuts shall conform to subsection 807.07. The anchor bolt grade of steel shall be as specified in the "Table of Fabricator Variables". Indentations shall be circular with rounded bottoms and staggered as shown in the details.

Pipe Sleeves, Anchor Bolts, Washers and Nuts shall be paid for at the unit price bid for "Structural Steel in Beam Spans (M270, Gr. 50W)" or "Structural Steel in Plate Girder Spans (M270, Gr. 50W)". External load plates and shear blocks will not be measured or paid for separately but will be considered included in the unit bid price for "Elastomeric Bearings".

TABLE OF FABRICATOR VARIABLES

BRIDGE NO.	LOCATION BENT NO(S).	UNIT	BEAM NO.	BEARING TYPE	NO. of BEARINGS EACH BENT	*MAXIMUM DESIGN LOAD (KIPS)	ELASTOMERIC PAD G	H	A	B	N	t_l	t_e	NO. & THICKNESS OF STEEL LAMINAE	T	EXTERNAL LOAD PLATE C	D	E	F	J	K	M	T_a	T_b	ANCHOR BOLT (ø x L)	ANCHOR BOLT GRADE	PIPE SLEEVE SIZE (ø x L)	SHEET METAL SLEEVE SIZE (ø x L)	STEEL WASHER SIZE (O.D.)
07289	1	246'	1-5	Exp	5	169.00	7½"	4⅜"	22"	8"	3	½"	¼"	4 @ 12 Ga.	2 7/16"	10¾"	40¾"	4⅝"	2⅝"	1½"	1⅜"	16"	2.24"	1.76"	1¾"ø x 27"	55	2"ø x 4⅝"	4"ø x 6"	3⅜"
	2	246'	1-5	Fix	5	414.00	7"	3¾"	22"	13"	2	½"	¼"	3 @ 12 Ga.	1 13/16"	14"	41¾"	3⅛"	3⅛"	1¼"	½"	16¼"	2.32"	1.68"	2"ø x 29"	55	2½"ø x 4"	4"ø x 6"	3¾"
	3 bk	246'	1-5	Exp	5	169.00	7½"	4⅜"	22"	8"	3	½"	¼"	4 @ 12 Ga.	2 7/16"	10¾"	40¾"	4⅝"	2⅝"	1½"	1⅜"	16"	2.24"	1.76"	1¾"ø x 27"	55	2"ø x 4⅝"	4"ø x 6"	3⅜"
	3 ah	522'	1-5	Exp	5	102.00	9½"	6¾"	18"	9"	7	½"	¼"	8 @ 12 Ga.	4 13/16"	12¼"	35¾"	6¼"	2¼"	4¼"	1⅝"	13¾"	2.28"	1.72"	1½"ø x 26"	55	1½"ø x 7"	3"ø x 6"	3"
	4	522'	1-5	Fix	5	361.00	7½"	3 11/16"	25"	14½"	2	½"	¼"	3 @ 12 Ga.	1 13/16"	15½"	44¾"	3⅛"	3⅛"	1¼"	½"	17¾"	2.35"	1.65"	2¼"ø x 32"	55	2½"ø x 4⅛"	4"ø x 6"	4"
	5	522'	1-5	Fix	5	361.00	7½"	3 11/16"	25"	14½"	2	½"	¼"	3 @ 12 Ga.	1 13/16"	15½"	44¾"	3⅛"	3⅛"	1¼"	½"	17¾"	2.35"	1.65"	2¼"ø x 32"	55	2½"ø x 4⅛"	4"ø x 6"	4"
	6 bk	522'	1-5	Exp	5	102.00	9½"	6¾"	20"	10"	7	½"	¼"	8 @ 12 Ga.	4 13/16"	12¼"	37¾"	6¼"	2¼"	4¼"	1⅛"	14¾"	2.21"	1.79"	1½"ø x 26"	55	1½"ø x 7"	3"ø x 6"	3"
	10, 11, 13, 14, 16 & 17	210'	1-5	Fix	5	239.00	7"	3 11/16"	16"	13"	2	½"	¼"	3 @ 12 Ga.	1 13/16"	14"	34¾"	2⅝"	2⅝"	1¼"	½"	13"	See Table A		1¾"ø x 27"	55	2"ø x 4⅛"	4"ø x 6"	3⅜"
	12 & 15 (bk&ah) & 9 ah	210'	1-5	Exp	5	107.00	7½"	4⅜"	16"	8"	3	½"	¼"	4 @ 12 Ga.	2 7/16"	9"	27"	4½"	2⅝"	NA	½"	10½"	1.80"	2.20"	1¾"ø x 27"	55	2"ø x 4⅝"	4"ø x 6"	3⅜"
	18	210'	1-5	Exp	5	107.00	7½"	4⅜"	16"	8"	3	½"	¼"	4 @ 12 Ga.	2 7/16"	9"	27"	4½"	2⅝"	NA	½"	10½"	1.83"	2.17"	1¾"ø x 27"	55	2"ø x 4⅝"	4"ø x 6"	3⅜"

*Maximum Design Load = Service I Limit State

Tabular Data by : RBR Date: 6/03/2012
Checked by : DHP Date: 8-28-13
Designed by : DHP Date: 3-6-12

STATE OF ARKANSAS Carl J. Fuselier REGISTERED PROFESSIONAL ENGINEER No. 7510 8/2 Plus CARL J. FUSELIER

BRIDGE ENGINEER

DETAILS OF ELASTOMERIC BEARINGS
WHITE RIVER
ROUTE SEC.
ARKANSAS STATE HIGHWAY COMMISSION
LITTLE ROCK, ARK.

DRAWN BY: RBR DATE: 06/03/2012 FILENAME: b005836_el.dgn
CHECKED BY: DHP DATE: 8-28-13 SCALE: No Scale
DESIGNED BY: Std. DATE:

BRIDGE NO. 07289 DRAWING NO. 54173

PRINT DATE: 8/27/2013

DATE REVISED	DATE FILMED	DATE REVISED	DATE FILMED	FED. ROAD DIST. NO.	STATE	FED. AID PROJ. NO.	SHEET NO.	TOTAL SHEETS
				6	ARK.			
				JOB NO.		005836	156	230

① 07289 - ISOLATION BEARINGS - 54174

GENERAL NOTES

Seismic Isolation Bearing assemblies and anchor bolts shall be designed in conformance with the AASHTO LRFD Bridge Design Specification, 5th Edition (2010) with 2010 Interims, the AASHTO Guide Specifications for Seismic Isolation Bearings, Third Edition, July 2010 and Special Provision Job 005836 Seismic Isolation Bearings. Bearings fabrication, delivery, storage, and handling shall be in accordance with Special Provision Job 005836 "Seismic Isolation Bearings".

Cross hatched components of the Seismic Isolation Bearings (isolators) are shown for representative purposes only. A circular lead core elastomeric bearing is required. The actual details and configuration of the components will be dependent upon the specific isolator as furnished by the manufacturer. The isolators provided shall have a capacity sufficient to control all load combination forces, rotations and movements as provided in the isolation bearing design table on this sheet. Horizontal thermal forces are dependent on specific isolator supplied and are not included in the "Table for Seismic Isolation Bearing Design Requirements". The isolator manufacturer shall include applicable thermal forces in bearing design.

Sole plates and masonry plates shall conform to the requirements of AASHTO M 270, Grade 50W,

Swedged anchors with threaded ends shall conform to AASHTO M 314, Grade 105. Headed anchor bolts shall be heavy hex conforming to the requirements of ASTM A325 or ASTM A449, Type 1. For headed anchor bolts, the requirements for rotational capacity test in accordance with subsection 807.06(b) shall be waived. Threaded coupler nuts shall conform to the requirements of ASTM A563, Grade DH or DH3 or AASHTO M292, Grade 2H. Washers shall conform to ASTM F436. Swedged anchors with threaded ends, headed anchor bolts, coupling nuts and washers shall be hot dip galvanized in accordance with AASHTO M232, Class C or ASTM B695, Class 50. Any damage to the galvanized surfaces shall be repaired in accordance with subsection 807.88 of the Standard Specifications.

All welding that is to be done during fabrication of isolators shall be detailed on the shop drawings and submitted for approval. All welding shall conform to subsection 807.26

The continuous weld connecting the girder bottom flange to the beveled sole plate shall be allowed to cool after each pass. The temperature of the steel adjacent to the elastomer shall not exceed 200°F. Temperature shall be controlled by the welding procedures and monitored by temperature indicating crayons or other devices approved by the engineer. Quenching to accelerate cooling is not permitted.

The size of the longitudinal welds between the bottom flange and the beveled sole plate shall be as shown. The transverse joints between the girder bottom flange and the sole plate shall be filled with an approved non-hardening caulk compound.

The contractor shall protect the isolators from damage due to shear deformation and rotation of the bearing caused by the application of the girder self-weight and deck dead load. The method of protection shall be defined in the bearing installation scheme, including considerations for thermal displacements at the time of installation, to be submitted as a working drawing in accordance with Section 105.03 of the Standard Specifications.

The fillet weld between the girder bottom flange and the beveled sole plate shall be made after the deck has been poured and the bearing assemblies have been set into final position.

MT indicates Magnetic Particle Testing. MT 10% indicates that for welds 10 foot or greater in length, at least 12 inches in every 10 foot shall be Magnetic Partical Tested. For welds less than 10 foot but greater than 1 foot in length, a minimum of 12 inches of weld shall be Magnetic Partical Tested. For welds 1 foot or less in length, a minimum of 2 inches of weld shall be Magnetic Partical Tested.

If anchor bolts are to be drilled and grouted in place, galvanized sheet metal sleeves shall be cast in place as shown. Sleeves shall be dry packed with styrofoam, urethane foam or approved equal prior to pouring of concrete. After pouring of the cap and prior to erection of structural steel, the dry pack shall be removed and holes for the anchor bolts shall be accurately drilled into the masonry. Bolts placed in drilled holes shall be accurately set and fixed using a QPL approved Resin Anchor System that completely fills the holes. Galvanized sheet metal sleeves will not be paid for directly, but will be considered subsidiary to the item "Seismic Isolation Bearings".

Permitted movement is the maximum one way movement (expansion or contraction) plus 1 inch of tolerance.

Sole plate shall be beveled as necessary to accommodate the vertical geometry of the superstructure. The bottom of the sole plate shall be level. A minimum plate thickness of 1½" shall be maintained.

Sole plates and masonry plates shall be designed and furnished by the bearing manufacturer. Masonry plates shall be designed to bear on the substructure based on the concrete design strength as specified in the plans.

Dimension "H2" represents the assumed height of the bearing assembly under dead load between the sole plate and the masonry plate. The Contractor shall adjust the bearing seat elevations based on the exact height of the bearing assemblies and the sole plate and masonry plate thicknesses as provided by the bearing manufacturer. Adjustment shall be at no additional cost to the Department.

Bearing seats shall not be poured until the bearings are selected, the bearing working drawings are approved, and the seat elevations have been approved by the Engineer.

Design and final location of the anchor bolts are to be determined by the Contractor based on approved bearing assembly and masonry plate shop drawings. The minimum number of anchor bolts per bearing assembly shall be four. Locations shall be set to avoid conflict and interference with substructure reinforcement, bearing components, and structural steel during installation and tightening of the anchor bolts. Methods of anchor bolt installation shall be clearly depicted on the Contractor's working drawings.

Final location and installation of anchor bolts as determined by the Contractor shall allow for the future removal of the hex headed anchor bolt for replacement of the bearing assembly. Thread engagement shall be adequate to develop the strength of the bolt.

Masonry plates shall be set such that they will be located at the substructure unit centerline of bearing and the centerline of girder web. Sole plates shall be set such that they will be located at the centerline of girder web and at the centerline of the bearing stiffener unless otherwise approved by the Engineer.

The performance characteristics shown in the "Table for Seismic Isolation Bearing Requirements" was specified by the Engineer to derive satisfactory seismic performance of the global structure system during the design seismic event. The isolation bearing fabricator shall design the bearing to meet these minimum performance characteristics. Where the fabricator's proposed bearing design may vary from these characteristics by more that 10% the Engineer will analyze the global model and advise the fabricator as to whether the proposed revised performance characteristics are acceptable. The Engineer shall have sole judgement of whether or not the proposed characteristics are acceptable.

PRINT DATE: 9/12/2013

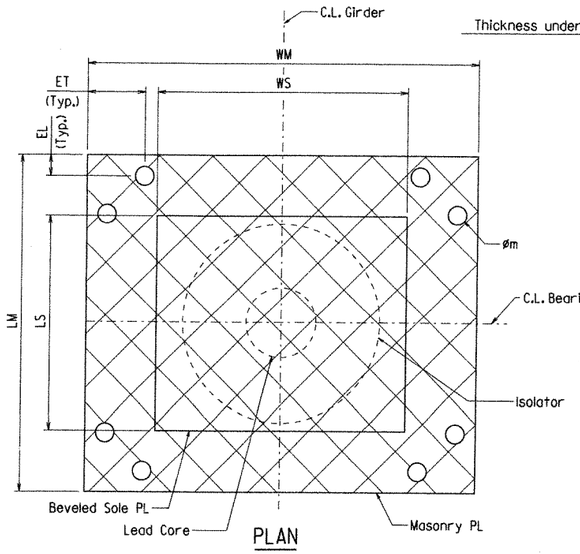

PLAN

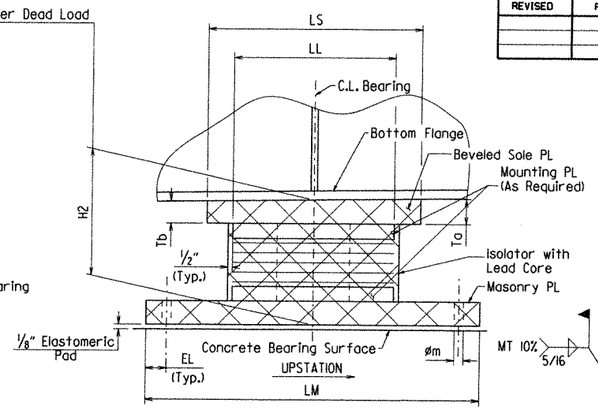

SIDE VIEW

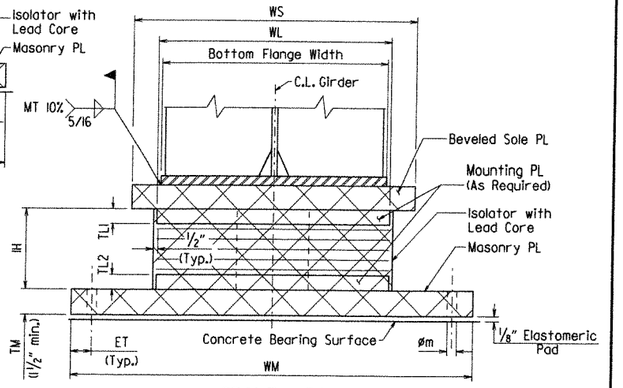

FRONT VIEW

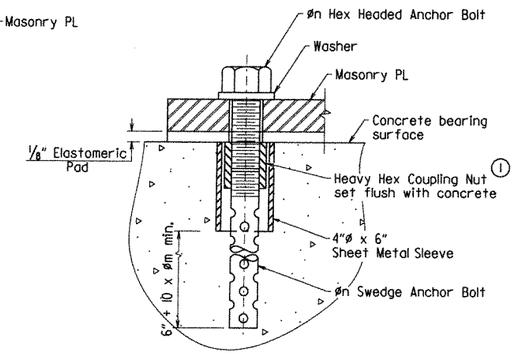

ANCHOR BOLT DETAIL

① The threads of the Swedge Anchor Bolts and Hex Headed Anchor Bolts shall engage the Heavy Hex Coupling Nut a distance equal to ½ the length of the Coupling Nut supplied.

② Service Limit State

③ Values to be added and Drawing to be revised after approval of Siesmic Isolation Bearing Shop Drawings.

④ Includes vertical curve and slope of tapered girder.

ACCELERATION RESPONSE SPECTRUM

T (sec)	0.0	0.1	0.2	0.3	0.4	0.5	0.6	0.7	0.8	0.9	1.0
Sa (g)	0.364	0.825	0.903	0.903	0.903	0.903	0.882	0.754	0.661	0.587	0.529

Site-Specific Acceleration Response Spectrum corresponding to a 7% probability or exceedence in 75 years.

② TABLE FOR SEISMIC ISOLATION BEARING DESIGN REQUIREMENTS

Description	Units	Bearing Designation					
		Bents		Bents		Piers	
		6	9	7	8	1	2
Number of Bearings	Each	4	4	4	4	4	4
Estimated Overall Bearing Height (H2)	IN	11.8		10.5		12.5	
Maximum Dead Load	KIP	113.29		581.05		907.55	
Maximum Live Load	KIP	98.51		225.87		285.75	
Minimum Dead Load	KIP	101.93		526.59		826.80	
Minimum Live Load	KIP	-15.68		-18.27		-18.25	
Live Load Rotation (Longitudinal)	RAD	0.0028		0.0016		0.0000	
Fabrication Misalignment Rotation	RAD	0.007		0.007		0.007	
Horizontal Thermal Displacement (Longitudinal)	IN	2.9		2.2		0.9	
Horizontal Thermal Force (Longitudinal)	KIP	58.8		39.5		17.6	
Horizontal - Braking Force (Longitudinal)	KIP	2.3		2.3		2.3	
Maximum Horizontal Wind on Live Load Force (Transverse)	KIP	1.9		5.4		7.9	
Maximum Horizontal Wind on Superstructure Force (Transverse)	KIP	13.9		42.5		124.6	
Maximum Horizontal Wind on Live Load Force (Longitudinal)	KIP	0.1		1.8		2.7	
Maximum Horizontal Wind on Superstructure Force (Longitudinal)	KIP	5.3		16.2		47.3	
Maximum Horizontal Non-Seismic Displacement (Any Direction)	IN	5.7		4.3		1.64	
Maximum Seismic Displacement (Any Direction)	IN	5.8		5.8		5.8	
Maximum Horizontal Seismic Force (Any Direction)	KIP	92.4		145.9		228.4	
Minimum Seismic Characteristic Strength	KIP	44.3		44.3		124.7	
Minimum Seismic Elastic Stiffness	KIP/IN	90.9		192.2		196.3	
Minimum Post-Elastic Stiffness	KIP/IN	9.1		19.2		19.6	
Effective Stiffness, Seismic Loading	KIP/IN	17.5		27.6		43.2	
Minimum Energy Dissipated Per Cycle	KIP-IN	841.1		891.5		2282.7	
Slope at Center Line Bearing ④	Percent	3.426	-4.390	2.443	-3.407	0.643	-1.607

②③ AS BUILT ISOLATION BEARING TABLE

Description	Units	Bearing Designation		
		Bents 6 or 9	Bents 7 or 8	Piers 1 or 2
Overall Bearing Height - Under Dead Load (H2)	IN			
Isolator Height (IH)	IN			
Masonry Plate Thickness (TM)	IN			
Masonry Plate Width (WM)	IN			
Masonry Plate Length (LM)	IN			
Masonry Plate Anchor Bolt Hole Diameter (øm)	IN			
Masonry Plate Bolt Long. Edge Distance (EL)	IN			
Masonry Plate Bolt Trans. Edge Distance (ET)	IN			
Sole Plate Width (WS)	IN			
Sole Plate Length (LS)	IN			
Sole Plate Upstation Thickness (Ta) 1½" Minimum	IN			
Sole Plate Downstation Thickness (Tb) 1½" Minimum	IN			
Mounting Plate Width (WL)	IN			
Mounting Plate Length (LL)	IN			
Top Mounting Plate Thickness (TL1) where required	IN			
Bottom Mounting Plate Thickness (TL2) where required	IN			
Anchor Bolt Diameter (øn)	IN			
Bolts Per Bearing	EA.			
Minimum Seismic Characteristic Strength	KIP			
Minimum Seismic Elastic Stiffness	KIP/IN			
Minimum Post-Elastic Stiffness	KIP/IN			
Effective Stiffness, Seismic Loading	KIP/IN			
Minumum Energy Dissipated Per Cycle	KIP-IN			

STATE OF ARKANSAS
Carl L. Puseller
REGISTERED PROFESSIONAL ENGINEER
No. 7510
8/28/13
CARL L. PUSELLER
BRIDGE ENGINEER

DETAILS OF SEISMIC ISOLATION BEARINGS WHITE RIVER

ROUTE SEC.

ARKANSAS STATE HIGHWAY COMMISSION

LITTLE ROCK, ARK.

DRAWN BY: RBR DATE: 07/26/2013 FILENAME: b005836_lb2.dgn

CHECKED BY: CSL DATE: 8/28/13 SCALE: No Scale

DESIGNED BY: CSL DATE: June 2013

BRIDGE NO. 07289 DRAWING NO. 54174

DATE REVISED	DATE FILMED	DATE REVISED	DATE FILMED

FED. ROAD DIST. NO.	STATE	FED. AID PROJ. NO.	SHEET NO.	TOTAL SHEETS
6	ARK.			
JOB NO.		005836	151	230
(1)	07289 - ARPR. GUTTERS		- 54175	

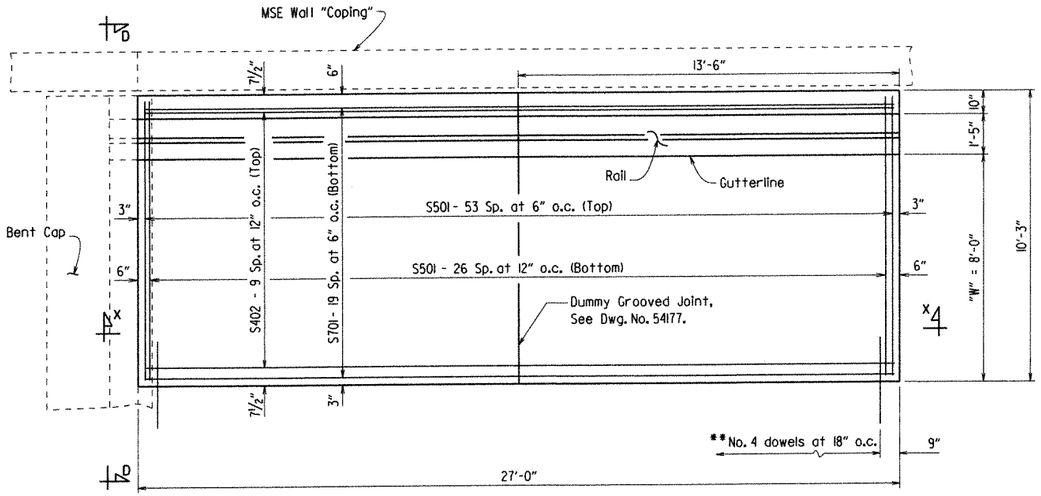

** No. 4 dowels are bars S404 from Type Special Approach Slab, Dwg. No. 54177.

PLAN OF APPROACH GUTTER

Scale: ⅜" = 1'-0"

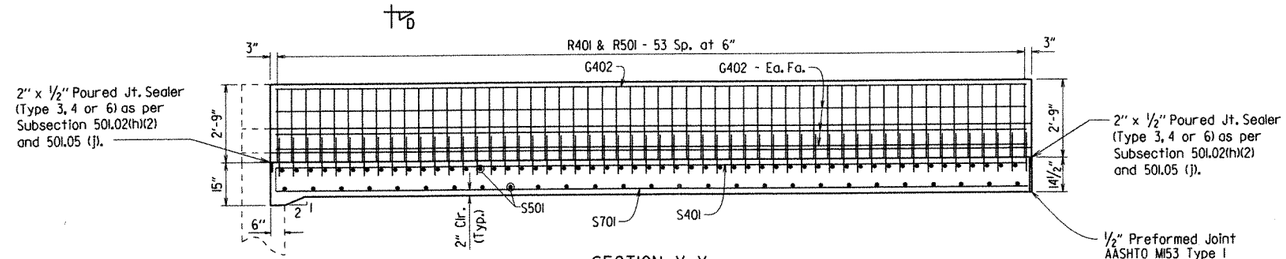

SECTION X-X

Scale: ⅜" = 1'-0"

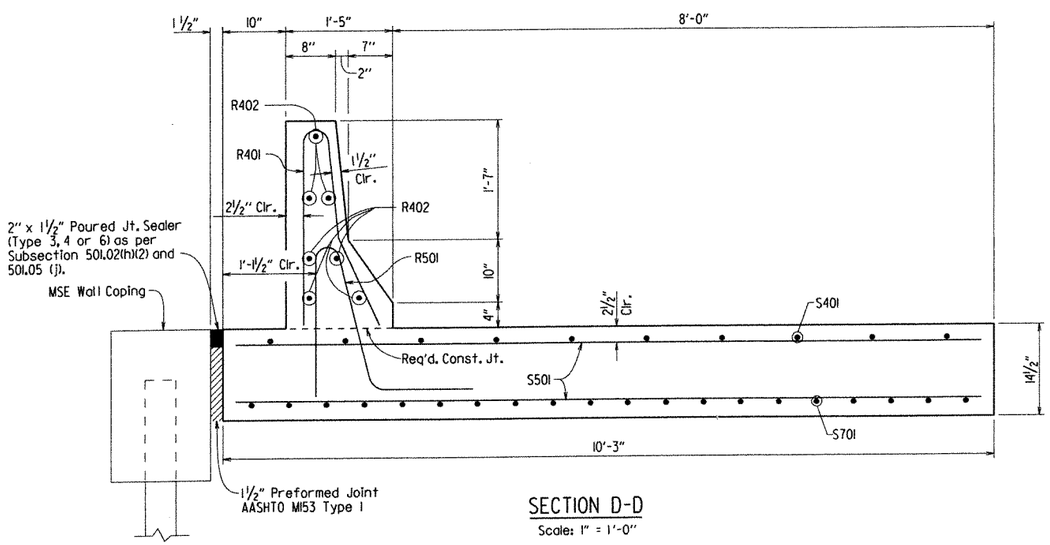

SECTION D-D

Scale: 1" = 1'-0"

BAR LIST

MARK	NO. REQ'D.	LENGTH	P.D.	BENDING DIAGRAMS
R401	54	5'-6"	3"	
R402	7	26'-8"	Str.	
R501	54	5'-5"	3¾"	
S401	10	26'-8"	Str.	
S501	81	9'-11"	Str.	
S701	20	26'-8"	Str.	

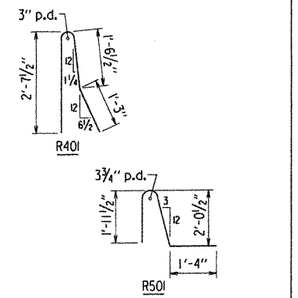

Dimensions are out to out of bars.

TABLE OF QUANTITIES FOR ONE TYPE SPECIAL I APPROACH GUTTER

(FOR INFORMATION ONLY)

Reinforcing Steel	Concrete (Cu. Yds.)
2,734 lbs.	15.00

GENERAL NOTES

Concrete shall be Class S (AE) (f'c = 4,000 psi).

Reinforcement Steel shall be Grade 60 (yield strength = 60,000 psi) conforming to AASHTO M31 or M322, Type A, with mill test reports.

Approach Gutters will be measured and paid for in accordance with Section 504.

All exposed edges of the barrier wall shall have a ¾" chamfer.

STATE OF ARKANSAS
CARL J. FUSELIER
REGISTERED PROFESSIONAL ENGINEER
No. 7510
8/28/13

BRIDGE ENGINEER

DETAILS OF TYPE SPECIAL I APPROACH GUTTERS WHITE RIVER

ROUTE SEC.

ARKANSAS STATE HIGHWAY COMMISSION

LITTLE ROCK, ARK.

DRAWN BY: LJB DATE: 4/30/13 FILENAME: b005836_agl.dgn

CHECKED BY: DHP DATE: 8-28-13 SCALE: AS NOTED

DESIGNED BY: Std. DATE:

BRIDGE NO. 07289 DRAWING NO. 54175

PRINT DATE: 8/27/2013

DATE REVISED	DATE FILMED	DATE REVISED	DATE FILMED	FED. ROAD DIST. NO.	STATE	FED. AID PROJ. NO.	SHEET NO.	TOTAL SHEETS
				6	ARK.			
				JOB NO.		005836	158	230
				①	07289 - APPR. GUTTERS - 54176			

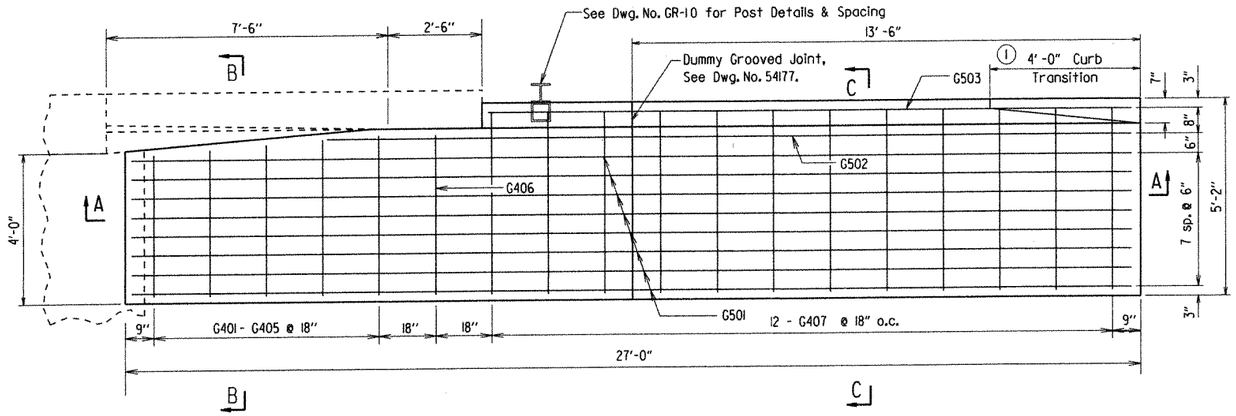

HALF PLAN OF APPROACH GUTTERS

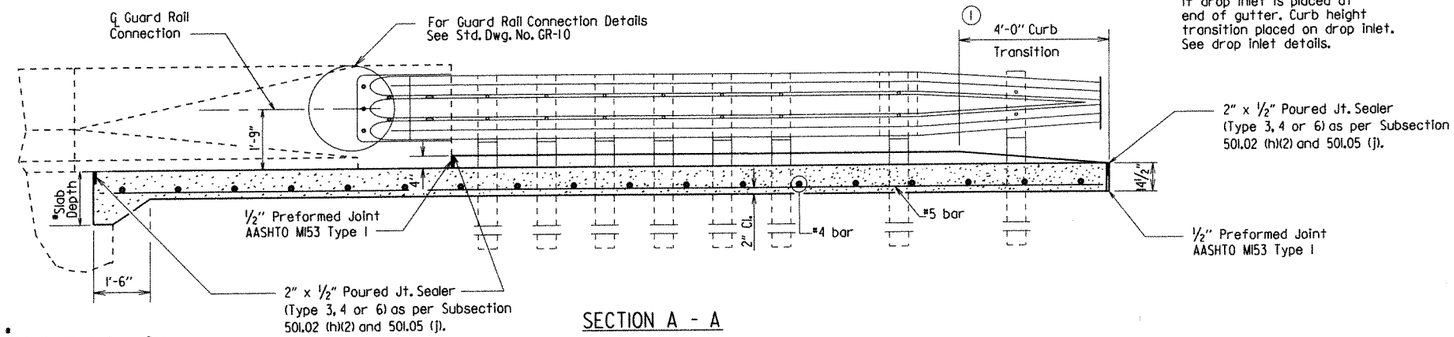

SECTION A - A

Slab Depth Varies - See Span and Bent Details

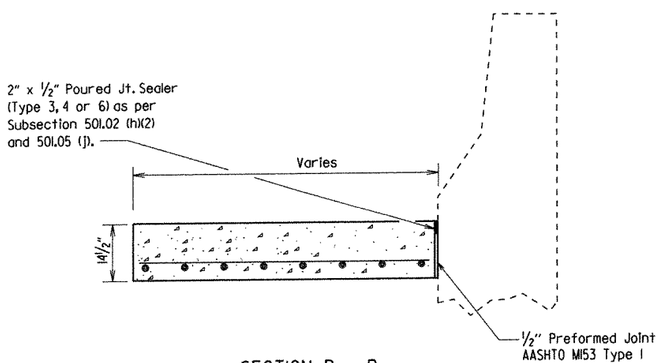

SECTION B - B

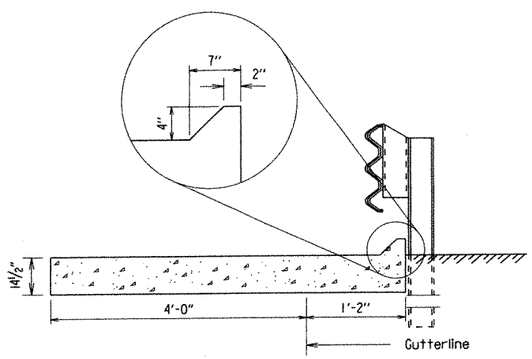

SECTION C - C

① Construct gutter curb with height-transition as shown if drop inlet is not placed at end of gutter.

Construct gutter curb full height (no height-transition) if drop inlet is placed at end of gutter. Curb height transition placed on drop inlet. See drop inlet details.

BAR LIST
ONE TYPE SPECIAL 2 APPROACH GUTTER

Mark	No. Required	Length
G401 - G405	1 each	3'-9" to 4'-3"
G406	1	4'-3"
G407	12	4'-10"
G501	8	26'-8"
G502	1	21'-11"
G503	1	17'-2"

QUANTITIES FOR ONE TYPE SPECIAL 2 APPROACH GUTTER

(FOR INFORMATION ONLY)

Reinforcing Steel (lbs.)	Concrete (cubic yards)
318	6.00

GENERAL NOTES

Concrete shall be Class S(AE) (f'c = 4,000 psi).

Reinforcement Steel shall be Grade 60 (yield strength = 60,000 psi) conforming to AASHTO M31 or M322, Type A, with mill test reports.

Approach Gutters will be measured and paid for in accordance with Section 504 of the Standard Specifications.

STATE OF ARKANSAS
CARL J. FUSELIER
No. 7510
REGISTERED PROFESSIONAL ENGINEER
8/28/13

BRIDGE ENGINEER

DETAILS OF TYPE SPECIAL 2 APPROACH GUTTERS WHITE RIVER

ROUTE SEC.

ARKANSAS STATE HIGHWAY COMMISSION

LITTLE ROCK, ARK.

DRAWN BY: LJB DATE: 4/30/13 FILENAME: b005836_ag2.dgn

CHECKED BY: DHP DATE: 8-28-13 SCALE: NONE

DESIGNED BY: SAV DATE:

BRIDGE NO. 07289 DRAWING NO. 54176

PRINT DATE: 8/27/2013

DATE REVISED	DATE FILMED	DATE REVISED	DATE FILMED	FED. ROAD DIST. NO.	STATE	FED. AID PROJ. NO.	SHEET NO.	TOTAL SHEETS
				6	ARK.			
				JOB NO.		005836	159	230
				①		07289 - APPR. SLAB - 54177		

① If slab joints are to be sawed, they shall be sawed as soon as the concrete has set enough to allow sawing of the joints without damaging the slab.

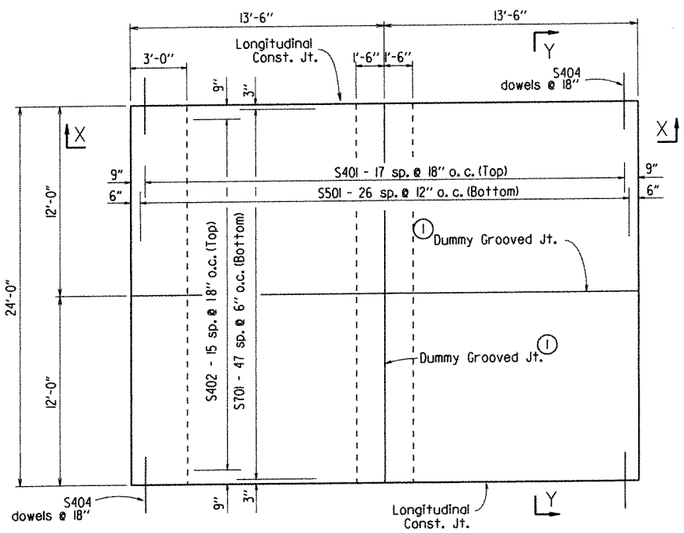

PLAN - APPROACH SLAB

1/4" = 1'-0"

Surface finish for Approach Slabs shall match that used on the bridge deck.

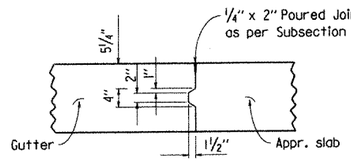

DETAILS OF LONGITUDINAL CONSTRUCTION JOINT

3/4" = 1'-0"

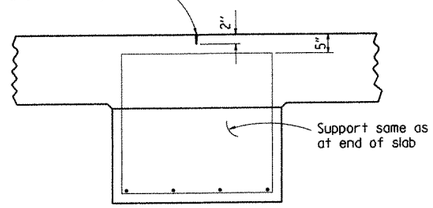

DETAILS OF DUMMY GROOVED JOINT

3/4" = 1'-0"

BAR LIST

Mark	No. Req'd.	Length	Bending Diagrams
S401	26	23'-8"	
S402	16	26'-8"	
S403	48	10'-4"	
S404	36	3'-0"	
S501	27	23'-8"	
S701	48	26'-8"	

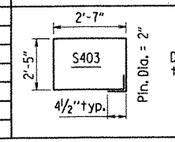

Dimensions are out to out of bar.

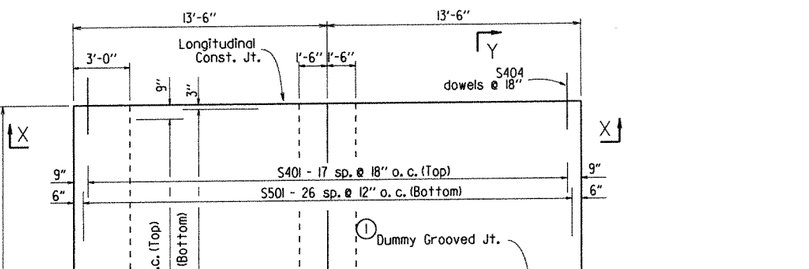

SECTION X - X

1/4" = 1'-0"

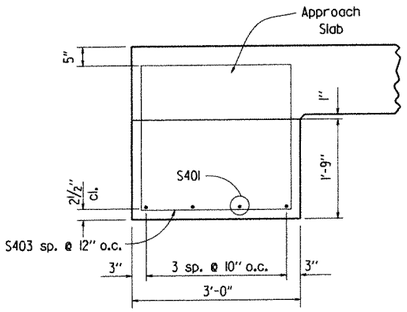

DETAILS OF SUPPORT AT END OF SLAB

3/4" = 1'-0"

TABLE OF QUANTITIES FOR ONE APPROACH SLAB

(FOR INFORMATION ONLY)

Slab Width	Reinforcing Steel	Concrete (Cu. Yds.)
24'-0"	4,382 lbs.	38.80

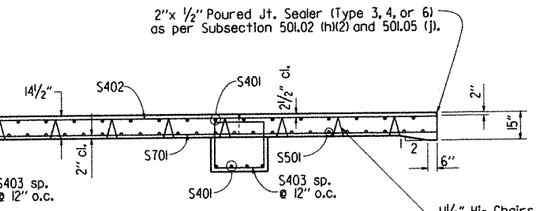

SECTION Y - Y

1/4" = 1'-0"

GENERAL NOTES

Concrete shall be Class S (AE) (f'c = 4,000 psi).

Reinforcement Steel shall be Grade 60 (yield strength = 60,000 psi) conforming to AASHTO M31 or M322, Type A, with mill test reports.

Approach Slabs will be measured and paid for in accordance with Section 504.

STATE OF ARKANSAS
Carl J. Fuselier
No. 7510
REGISTERED PROFESSIONAL ENGINEER
8/2 DATE
CARL J. FUSELIER

BRIDGE ENGINEER

DETAILS OF TYPE SPECIAL APPROACH SLAB WHITE RIVER

ROUTE SEC.

ARKANSAS STATE HIGHWAY COMMISSION

LITTLE ROCK, ARK.

DRAWN BY: LJB DATE: 4/30/13 FILENAME: b005836_as.dgn

CHECKED BY: DHP DATE: 8-28-13 SCALE: AS SHOWN

DESIGNED BY: SAC DATE:

BRIDGE NO. 07289 DRAWING NO. 54177

PRINT DATE: 27-AUG-2013

DATE REVISED	DATE FILMED	DATE REVISED	DATE FILMED	FED. ROAD DIST. NO.	STATE	FED. AID PROJ. NO.	SHEET NO.	TOTAL SHEETS
				6	ARK.			
				JOB NO.		005836	160	230
				(1)	07289 - STEEL SHELL PILES - 54178			

NOTE: Steel pile tip will not be paid for directly, but shall be subsidiary to the item "Steel Shell Piling".

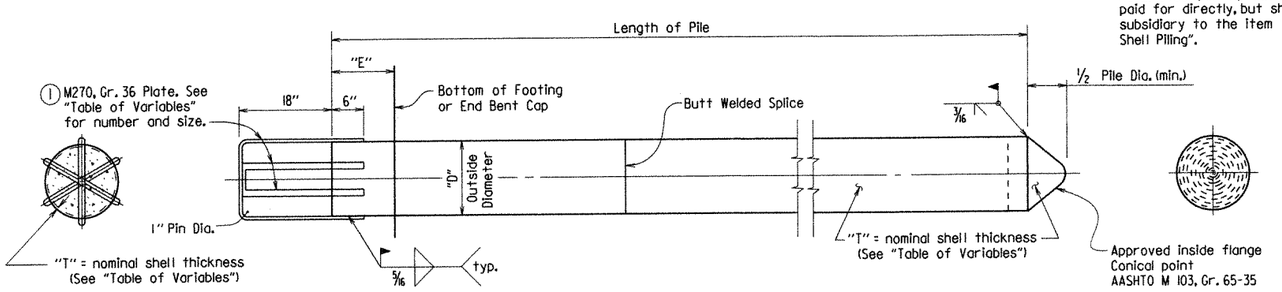

CONCRETE FILLED STEEL SHELL PILE

(1) Pile anchorage shall be placed to minimize interference with anchor bolts and reinforcing in cap or footing.

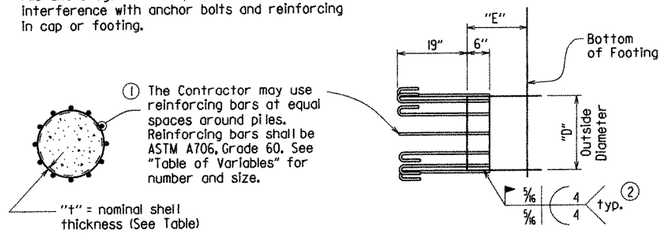

(2) Welding shall comply with ANSI/AWS D1.4 Structural Welding Code-Reinforcing Steel and applicable portions of ANSI/AWS D1.5 Bridge Welding Code.

GENERAL NOTES FOR CONCRETE FILLED STEEL SHELL PILES:

Steel shells shall conform ASTM A252, Grade 3 (Fy = 45,000 psi.).

Concrete used for filling of steel shell shall be Class S with a minimum 28-day compressive strength, f'c = 3,500 psi. and shall be poured in the dry.

See Bridge Layout for size and estimated length of steel shell piles and for additional driving information.

Concrete, structural steel, and reinforcing steel (including welding) will not be paid for separately, but will be considered subsidiary to the item "Steel Shell Piling".

ALTERNATE PILE ANCHORAGE DETAIL

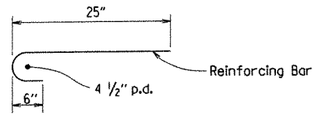

HOOKED BAR DETAIL

TABLE OF VARIABLES

BRIDGE NUMBER	OUTSIDE DIAMETER "D"	NOMINAL SHELL THICKNESS "T"	PLATE THICKNESS "X"	PLATE THICKNESS "Y"	PILE STRAPS		EMBEDMENT "E"	
					PLATE	REINFORCING	END BENT	INT. BENT
07289	18"	0.50"	1 1/4"	1"	3 @ 1/2" x 2"	9 - #6	12"	15"
07289	20"	0.625"	2"	1 1/4"	3 @ 1/2" x 2"	9 - #6	-	15"

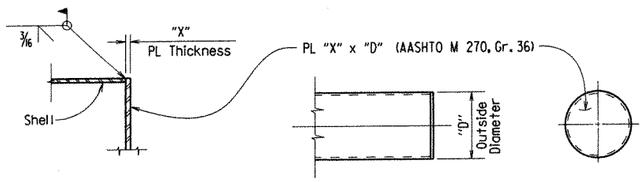

PART SECTION

ELEVATION

ALTERNATE FLAT TIP DETAIL

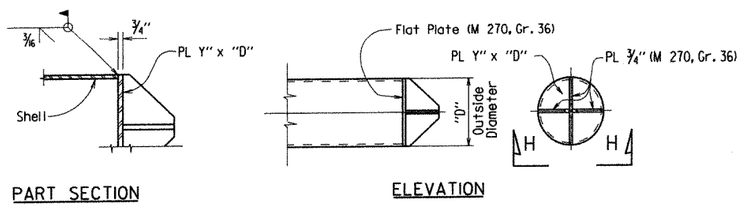

PART SECTION

ELEVATION

ALTERNATE VANED TIP DETAIL

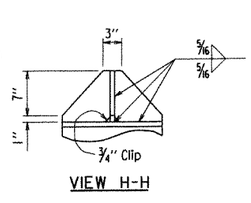

VIEW H-H

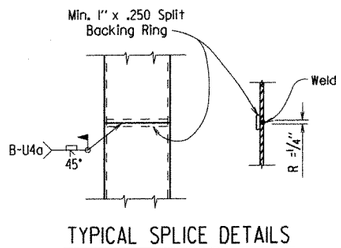

TYPICAL SPLICE DETAILS

STATE OF ARKANSAS
Carl J. Puselier
REGISTERED PROFESSIONAL ENGINEER
No. 7510
8/28/13
CARL J. PUSELIER

BRIDGE ENGINEER

DETAILS OF CONCRETE FILLED STEEL SHELL PILES WHITE RIVER

ROUTE SEC.

ARKANSAS STATE HIGHWAY COMMISSION

LITTLE ROCK, ARK.

DRAWN BY: RBR DATE: 06/13/2013 FILENAME: b005836_cl.dgn

CHECKED BY: DHP DATE: 8-28-13 SCALE: NONE

DESIGNED BY: DHP DATE: 2-5-13

BRIDGE NO. 07289 DRAWING NO. 54178

PRINT DATE: 8/27/2013

DATE REVISED	DATE FILMED	DATE REVISED	DATE FILMED	FED. ROAD DIST. NO.	STATE	FED. AID PROJ. NO.	SHEET NO.	TOTAL SHEETS
				6	ARK.			
				JOB NO.		005836	161	230
				①	07289 - CLEARANCE GAUGE - 54179			

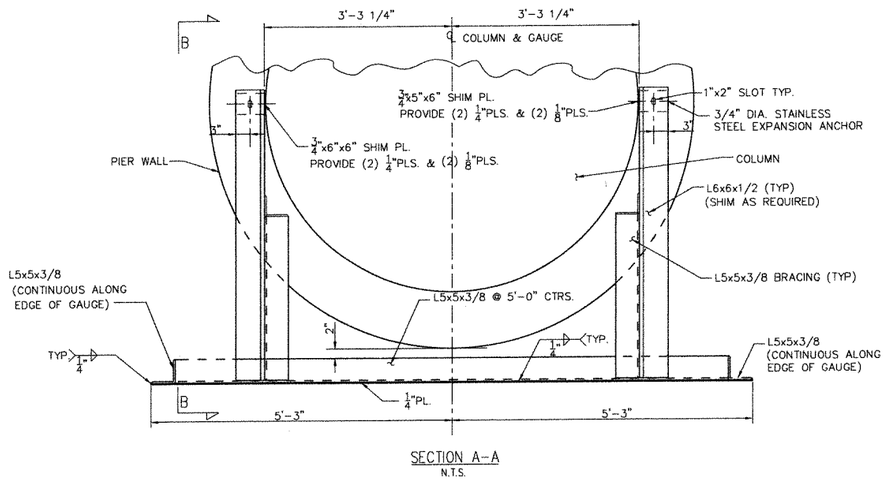

SECTION A-A
N.T.S.

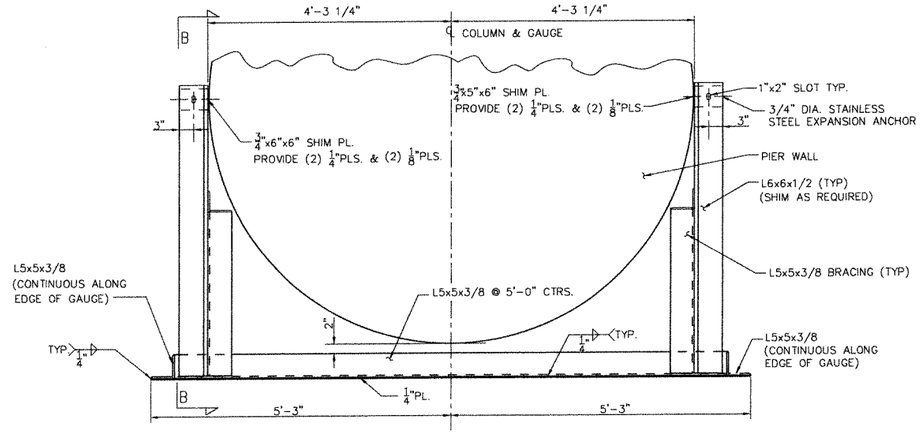

SECTION D-D
N.T.S.

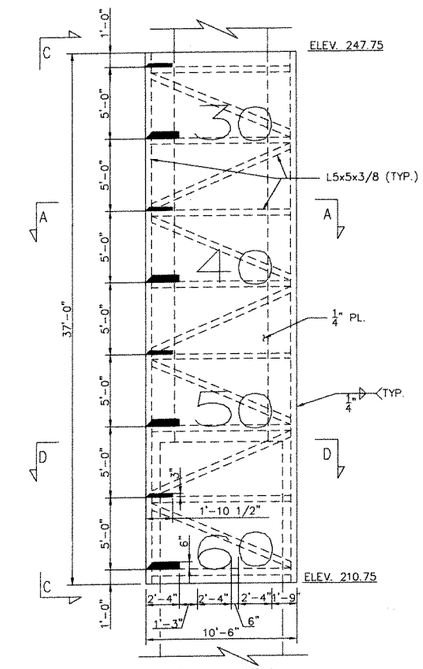

FRONT ELEVATION
UPSTREAM SIDE - PIER 2
DOWNSTREAM SIDE - PIER 1
1/4"=1'-0"

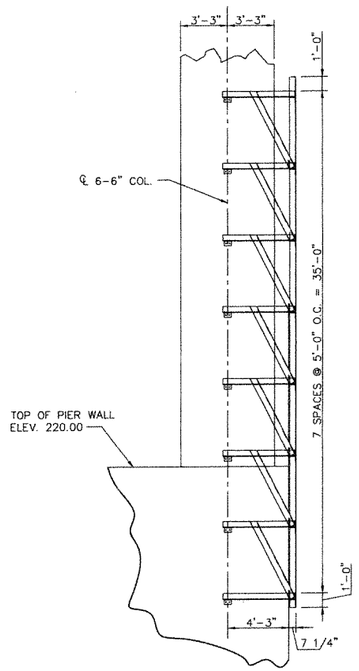

VIEW C-C
1/4"=1'-0"

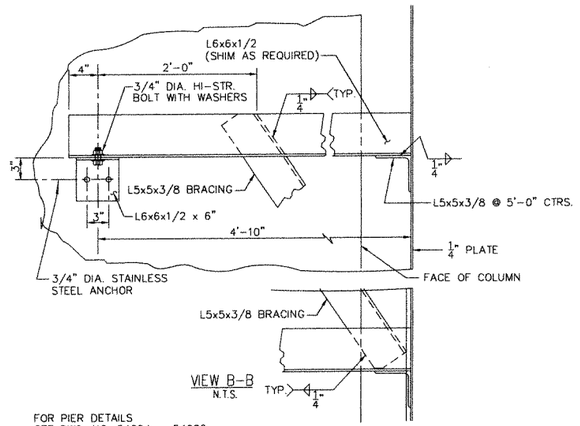

VIEW B-B
N.T.S.

FOR PIER DETAILS
SEE DWG. NO. 54094 - 54096

CLEARANCE GAUGE TO BE INSTALLED BEFORE ERECTION OF SUPERSTRUCTURE BEGINS.

NUMERALS ON CLEARANCE GAUGES SHALL BE 30 INCH HIGH, SERIES E, AS SHOWN IN STANDARD ALPHABETS FOR HIGHWAY SIGNS' PUBLISHED BY THE FEDERAL HIGHWAY ADMINISTRATION, U.S. DEPARTMENT OF TRANSPORTATION.

ALL STRUCTURAL STEEL SHALL CONFORM TO ASTM M270, GR.36 AND SHALL BE FABRICATED ACCORDING TO SECTION 807. THE 1/4" PLATE AND SUPPORT BRACING SHALL BE CLEANED IN ACCORDANCE WITH SUBSECTION 807.84(B). THE FINISH COAT SHALL BE WHITE. THE PAINT FOR THE NUMERALS AND THE FOOTMARKS SHALL BE BLACK. ALL COATS OF PAINT WILL BE APPLIED IN THE SHOP. PAINTING SHALL BE IN CONFORMANCE WITH SUBSECTION 807.75. SEE SP JOB 005836 "CLEARANCE GUAGES" FOR METHOD OF MEASUREMENT AND PAYMENT.

ANCHORS SHALL BE INSTALLED ACCORDING TO THE MANUFACTURER SPECIFICATIONS AND SHALL HAVE THE FOLLOWING ULTIMATE CAPACITIES.

SHEAR 10,000 LBS. TENSION 9,000 LBS.

ANCHORS MAY BE CAST INTO PLACE OR DRILLED AND GROUTED INTO PLACE. IF ANCHORS ARE DRILLED AND GROUTED INTO PLACE, THE ANCHORS SHALL BE SET AND FIXED USING A QPL APPROVED EPOXY OR NON-SHRINK GROUT THAT COMPLETELY FILLS THE HOLES.

STAINLESS STEEL SHALL CONFORM TO ASTM A193 OR A320, GR. B 8.

STATE OF ARKANSAS
Carl J. Pusellier
REGISTERED PROFESSIONAL ENGINEER
No. 7510
8/2/13
CARL J. PUSELLIER

BRIDGE ENGINEER

DETAILS OF CLEARANCE GAUGES WHITE RIVER

ROUTE SEC.

ARKANSAS STATE HIGHWAY COMMISSION

LITTLE ROCK, ARK.

DRAWN BY: CSL DATE: 2/14/13 FILENAME: b005836_g4.dgn
CHECKED BY: D H P DATE: 8-28-13 SCALE: 1/4" = 1'-0"
DESIGNED BY: Std. DATE:

BRIDGE NO. 07289 DRAWING NO. 54179

PRINT DATE: 8/27/2013

DATE REVISED	DATE FILMED	DATE REVISED	DATE FILMED	FED. ROAD DIST. NO.	STATE	FED. AID PROJ. NO.	SHEET NO.	TOTAL SHEETS
				6	ARK.			
				JOB NO.		005836	162	230
				(1)	07289 - REFECT PANELS - 54180			

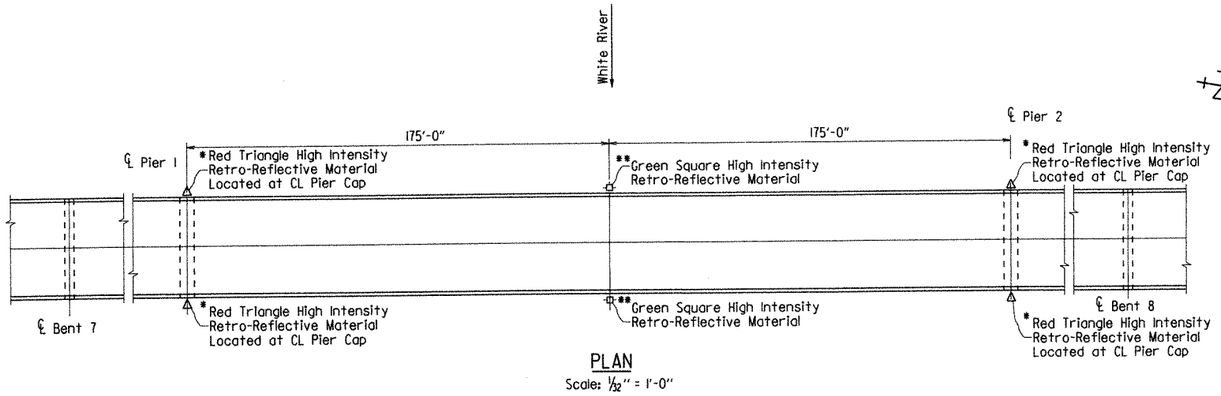

PLAN
Scale: 1/32" = 1'-0"

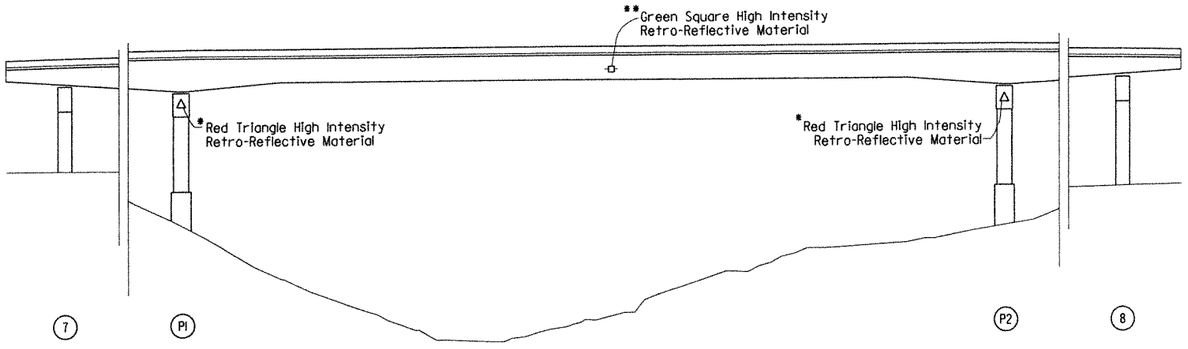

ELEVATION
Scale: 1/32" = 1'-0"

*15" Red equilateral triangle High Intensity Retro-Reflective material shall be installed according to the manufacturer's recommendations. Retro-Reflective material will not be paid for separately but shall be considered subsidiary to the item "Structural Steel in Plate Girder Spans (M270, Grade 50W). See Red Triangle Panel Location Detail.

**12" Green Square High Intensity Retro-Reflective material shall be installed according to the manufacturer's recommendations. Retro-Reflective material will not be paid for separately but shall be considered subsidiary to the item "Structural Steel in Plate Girder Spans (M270, Grade 50W). See Support Mounting Detail.

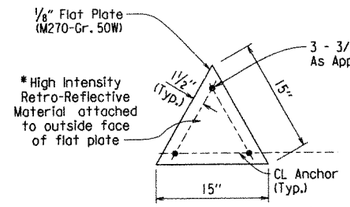

RED TRIANGLE PANEL DETAIL
No Scale

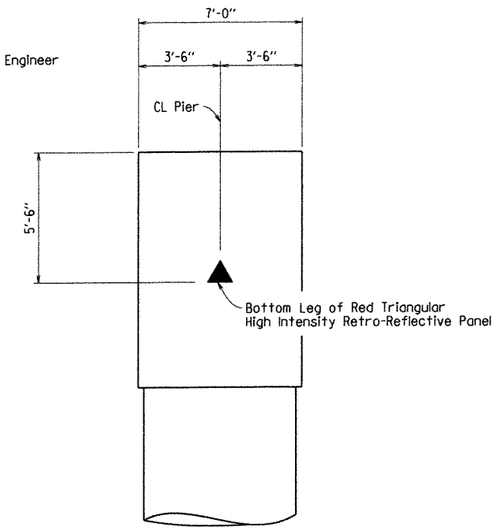

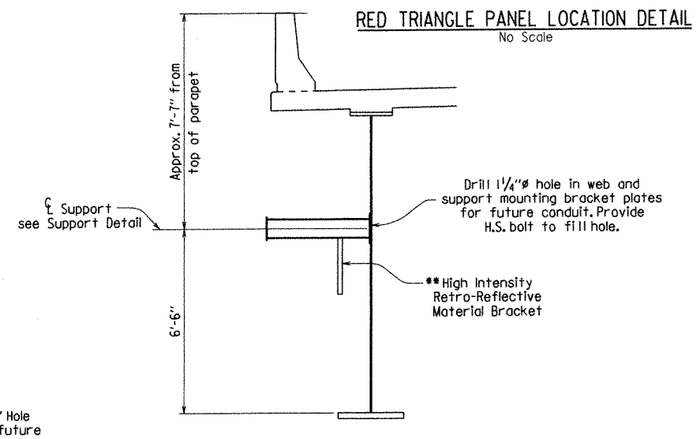

RED TRIANGLE PANEL LOCATION DETAIL
No Scale

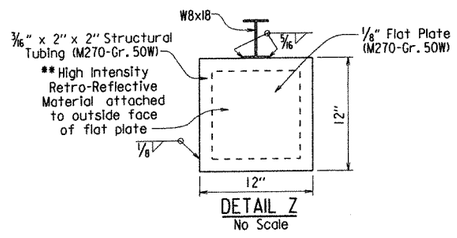

DETAIL Z
No Scale

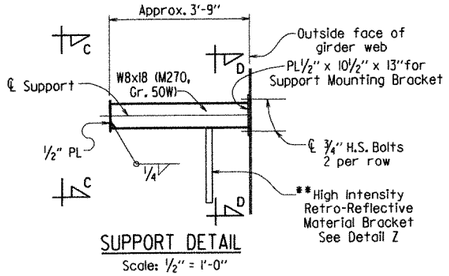

SUPPORT DETAIL
Scale: 1/2" = 1'-0"

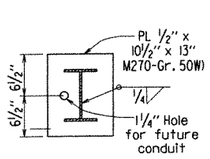

VIEW C-C
Scale: 1" = 1'-0"

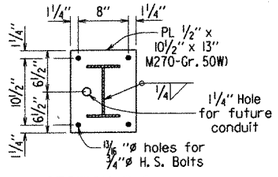

SECTION D-D
Scale: 1" = 1'-0"

SUPPORT MOUNTING DETAIL
Scale: 3/8" = 1'-0"

All Structural Steel shall be paid for at the unit price bid for "Structural Steel in Plate Girder Spans (M270, Gr. 50W)".

STATE OF ARKANSAS
Carl L. Fuselier
REGISTERED PROFESSIONAL ENGINEER
No. 7510
CARL L. FUSELIER
8/29/13

BRIDGE ENGINEER

DETAILS OF REFLECTIVE PANELS WHITE RIVER

ROUTE SEC.

ARKANSAS STATE HIGHWAY COMMISSION

LITTLE ROCK, ARK.

DRAWN BY: CSL DATE: JULY 3, 2013 FILENAME: b005836_nav.dgn
CHECKED BY: DHP DATE: 9-17-13 SCALE: No Scale
DESIGNED BY: --- DATE: ---

BRIDGE NO. 07289 DRAWING NO. 54180

PRINT DATE: 9/17/2013

DATE REVISED	DATE FILMED	DATE REVISED	DATE FILMED	FED. ROAD DIST. NO.	STATE	FED. AID PROJ. NO.	SHEET NO.	TOTAL SHEETS
				6	ARK.			
				JOB NO.		005836	163	230
				(1) 07289	CHAIN LINK FENCE DETAILS			54181

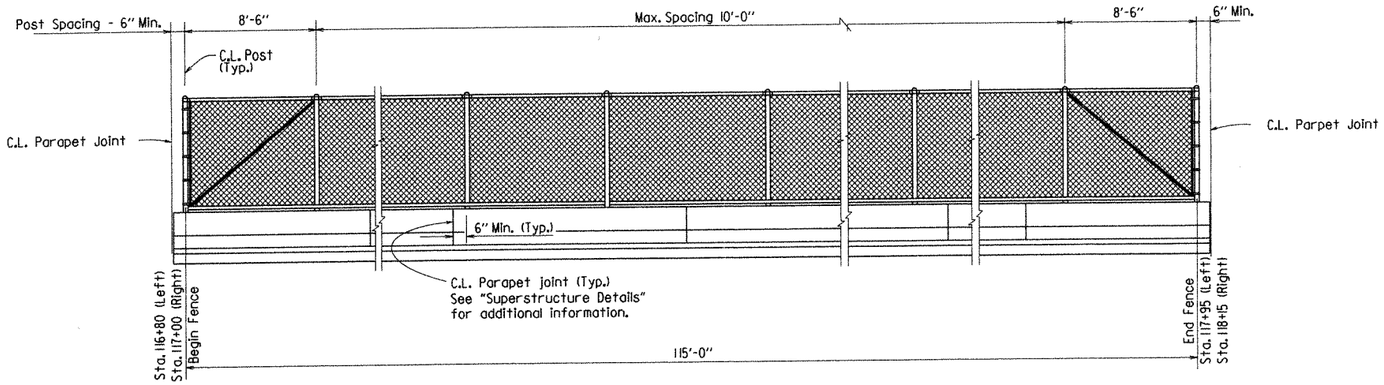

LONGITUDINAL VIEW OF CHAIN LINK FENCE

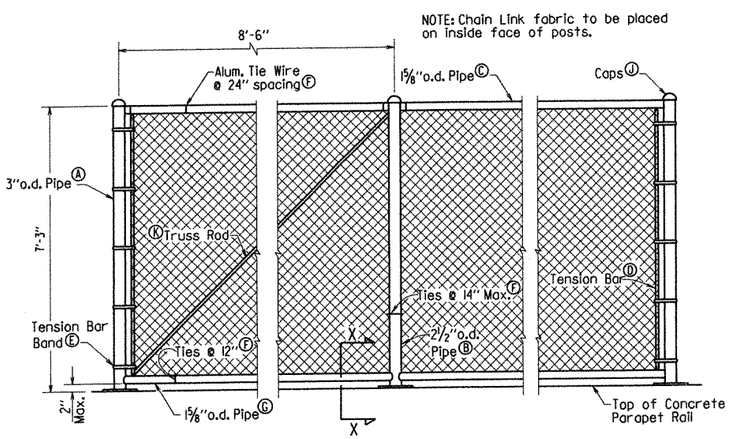

DETAIL OF CHAIN LINK FENCE

Ⓐ END POST: 3" O.D.
Ⓑ LINE POST: 2½" O.D.
Ⓒ TOP RAIL: 1⅝"O.D.
Ⓓ TENSION BAR: ⅜" x ¾" Bar
Ⓔ TENSION BAR BAND: ¾"x .074 w/⅝"ø x 1¼" Bolt (1 Band Top and Bottom w/15" Max. spaces)
Ⓕ TIE WIRE: 9 Ga. Aluminum
Ⓖ BOTTOM RAIL: 1⅝" O.D.
Ⓗ FABRIC: 9 Ga. 2" Mesh w/Knucklug or Twisting Selvage
Ⓙ CAPS: All Posts shall be Capped and Shall Conform to ASTM F626-84
Ⓚ TRUSS ROD: Min. of ⅝" Round with Tighteners and Fittings

NOTE : Chain Link Fence attached to Bridge and including tapered panel section shall be paid for as "7' Steel Chain Link Fence". For additional details of Chain Link Fence, See Standard Drawing WF-3.

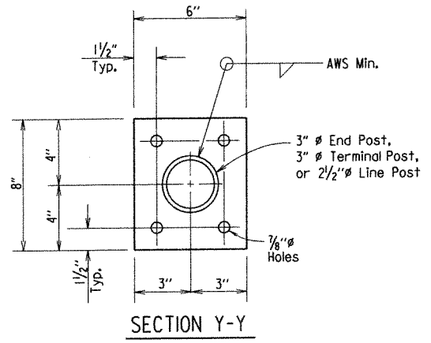

SECTION Y-Y

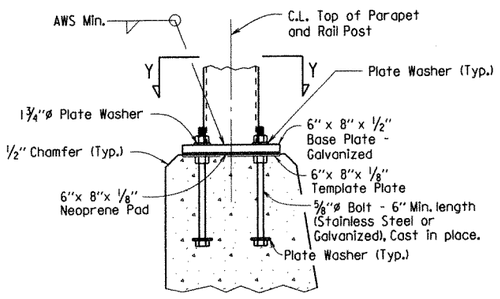

SECTION X-X

DETAILS OF POST ANCHOR SYSTEM

NOTES:

Fence layout shall conform to the vertical and horizontal bridge alignments. Fence posts shall be set plumb (true vertical position). Parapet rail concrete shall be at least 7 days old before stretching and securing fabric to posts.

Cast in place anchor bolts shall be of stainless steel or high strength steel. Stainless steel anchor bolts shall conform to ASTM A193 or A320-Grade B8 with a minimum yield strength of 80,000 psi. High strength steel anchor bolts shall conform to AASHTO M164 or ASTM A354-Grade BC galvanized in accordance with AASHTO M232, or M298, Class 40 or 50.

Nuts: Nuts shall conform to AASHTO M292, Gr. 8A (stainless steel) or AASHTO M232 or M298, Class 40 or 50 (galvanized).

Threads: Threads on bolts, screws, and nuts shall conform to American Standard Course Series, Class 2 Fit, ASA Specification B1.1.

Washers: Washers shall be stainless steel and conform to the requirements of ASTM A167-Type 302 with dimensions meeting ASTM F436, or high strength steel conforming to AASHTO M293 and galvanized in accordance with AASHTO M232 or M298, Class 40 or 50.

Base plates shall not be placed upon areas that are improperly finished, deformed, or irregular.

Plate Washers shall be stainless steel and conform to the requirements of ASTM A167-Type 302 or AASHTO M270, Gr. 36, galvanized in accordance with AASHTO M232 or M298, Class 40 or 50. Plate Washers shall have dimensions meeting the requirements of ANSI/ASME B18.22.1, Type A plain washer (Wide Series).

Chain Link Fence attached to Bridge and including tapered panel section shall be paid for as "7' Steel Chain Link Fence". For additional details of Chain Link Fence, See Standard Drawing WF-3.

Neoprene pad and template plates shall not be paid for directly, but shall be considered incidental to the unit price bid for item "7' Steel Chain Link Fence".

Mixing of stainless steel and galvanized fasteners will not be permitted.

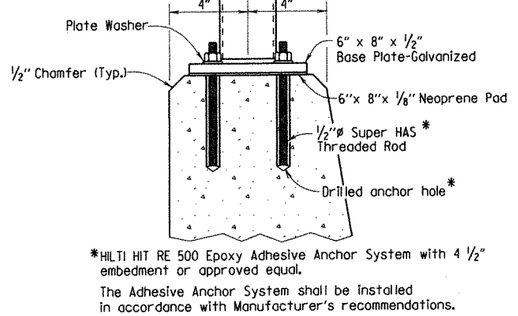

*HILTI HIT RE 500 Epoxy Adhesive Anchor System with 4 ½" embedment or approved equal.

The Adhesive Anchor System shall be installed in accordance with Manufacturer's recommendations.

SECTION X-X

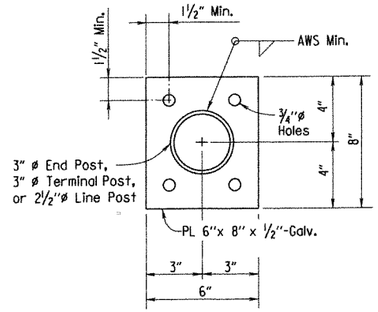

SECTION Y-Y

DETAILS OF ALTERNATE POST ANCHOR SYSTEM
(EPOXY ADHESIVE ANCHORS)

STATE OF ARKANSAS
Carl J. Fuselier
REGISTERED PROFESSIONAL ENGINEER
No. 7510
8/28/13
CARL J. FUSELIER

BRIDGE ENGINEER

DETAILS OF CHAIN LINK FENCE
WHITE RIVER

ROUTE SEC.

ARKANSAS STATE HIGHWAY COMMISSION
LITTLE ROCK, ARK.

DRAWN BY: CSL DATE: 11/18/10
CHECKED BY: DHP DATE: 8-28-13
DESIGNED BY: Std. DATE: 08/22/02
FILENAME: b005836_fl.dgn
SCALE: No Scale

BRIDGE NO. 07289 DRAWING NO. 54181

PRINT DATE: 8/28/2013

DATE REVISED	DATE FILMED	DATE REVISED	DATE FILMED	FED. ROAD DIST. NO.	STATE	FED. AID PROJ. NO.	SHEET NO.	TOTAL SHEETS
04-10-2003				6	ARK.		164	
				JOB NO.				

① EMBANKMENT & BACKFILL 1888A

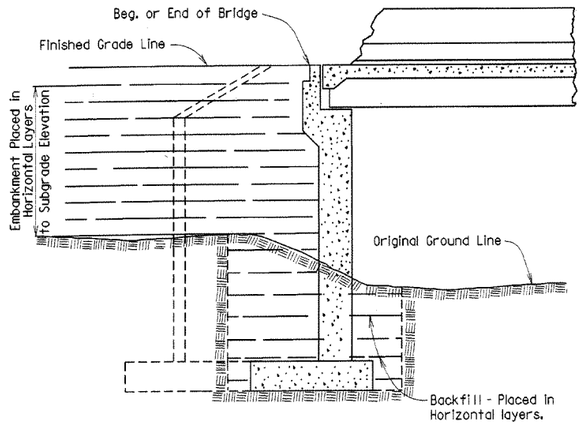

EMBANKMENT CONSTRUCTION AND FOOTING BACKFILL AT VERTICAL WALL ABUTMENTS

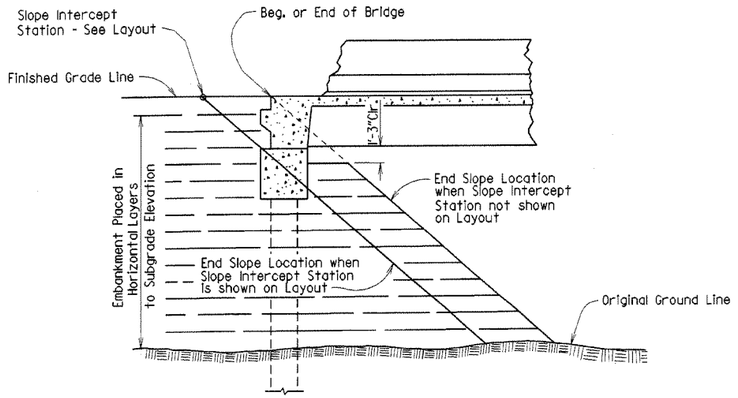

EMBANKMENT CONSTRUCTION AT SPILL-THROUGH PILE END BENTS

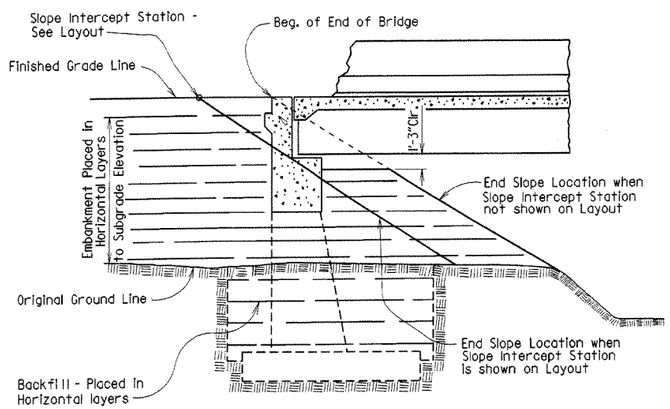

EMBANKMENT CONSTRUCTION AND FOOTING BACKFILL AT SPILL-THROUGH END BENTS

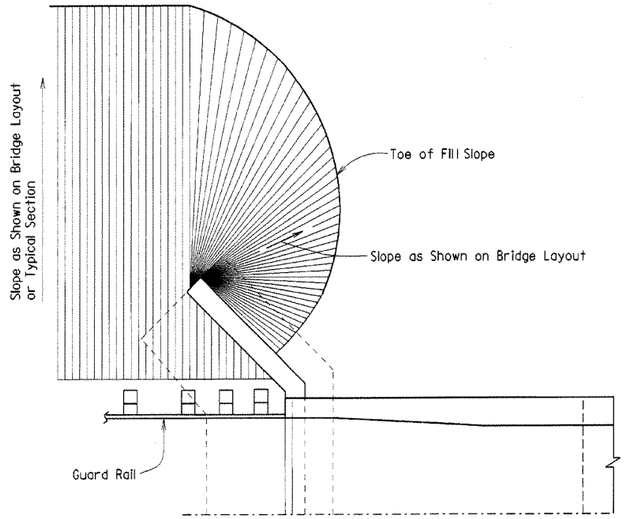

VERTICAL WALL ABUTMENTS

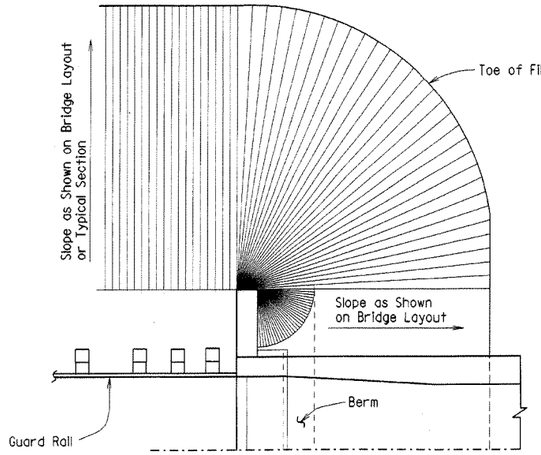

SPILL-THROUGH END BENTS WITH STUB WING

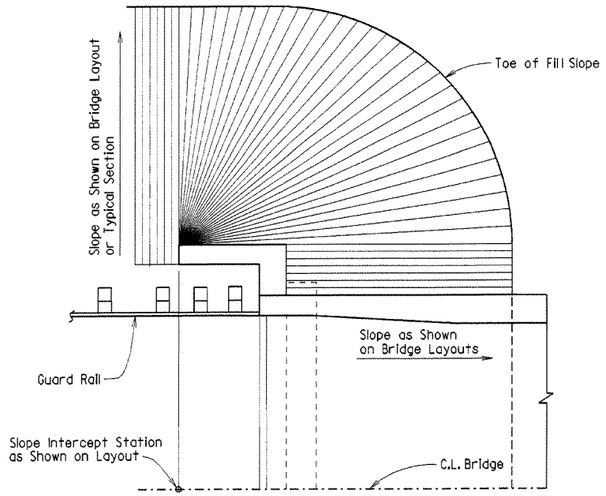

SPILL-THROUGH END BENTS WITH TURNBACK WING

SPILL-THROUGH END BENTS WITH TRANSITION WING

METHOD OF DETERMINING FILL SLOPE LOCATION AT BRIDGE ENDS

GENERAL NOTES

The Bridge End Embankment shall be defined as a section of embankment, not less than 20 feet long adjacent to the bridge end, together with the side slopes and slopes under the bridge end including around the end of wingwalls. Embankment adjacent to structures shall be constructed in 4 inch horizontal layers (loose measure) and compacted by the use of mechanical equipment to the satisfaction of the Engineer. Refer to subsections 210.09, 210.10 and 801.08 of the Specifications for construction requirements.

⚠ Revised and redrawn MJT 04-10-2003
Chk'd. By: CJF 04-10-2003

STATE OF ARKANSAS
REGISTERED PROFESSIONAL ENGINEER
No. 4337
CHARLES P. BRAND

BRIDGE ENGINEER

EMBANKMENT CONSTRUCTION AND BACKFILL AT BRIDGE ENDS

ROUTE SEC.

ARKANSAS STATE HIGHWAY COMMISSION

LITTLE ROCK, ARK.

DRAWN BY: MJT DATE: 04-10-2003 FILENAME: BI888A.STD
CHECKED BY: CJF DATE: 04-10-2003 SCALE: NO SCALE
DESIGNED BY: STD. DATE: ——

BRIDGE NO. DRAWING NO. 1888A

BI888A.STD

DATE REVISED	DATE FILMED	DATE REVISED	DATE FILMED	FED. ROAD DIST. NO.	STATE	FED. AID PROJ. NO.	SHEET NO.	TOTAL SHEETS
04-10-2003				6	ARK.		165	
				JOB NO.				

(1) RIP. & EXCAV. 1891F

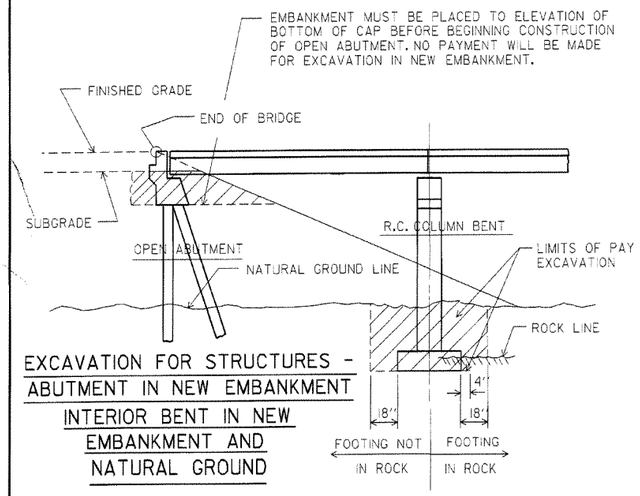

EXCAVATION FOR STRUCTURES - ABUTMENT IN NEW EMBANKMENT INTERIOR BENT IN NEW EMBANKMENT AND NATURAL GROUND

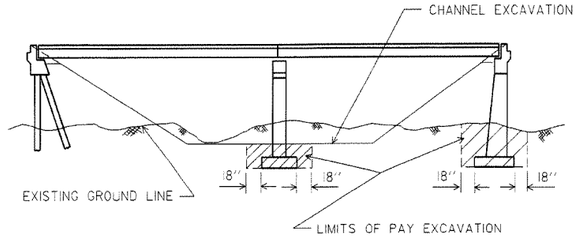

EXCAVATION FOR STRUCTURES - BRIDGE LOCATION WITH DESIGNATED CHANNEL CHANGE

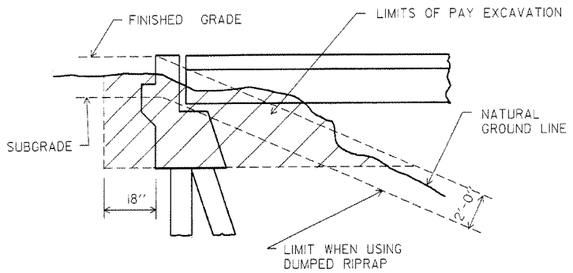

EXCAVATION FOR STRUCTURES - ABUTMENT IN NATURAL GROUND

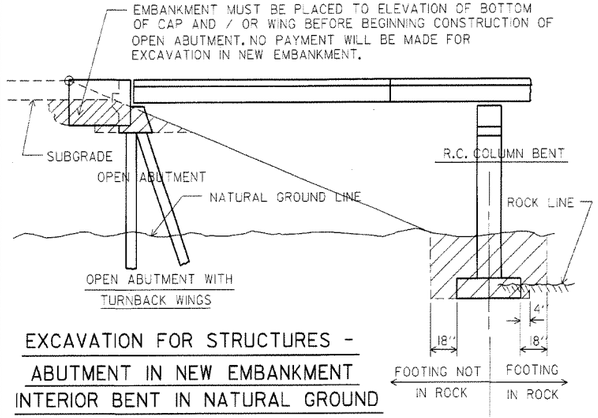

EXCAVATION FOR STRUCTURES - ABUTMENT IN NEW EMBANKMENT INTERIOR BENT IN NATURAL GROUND

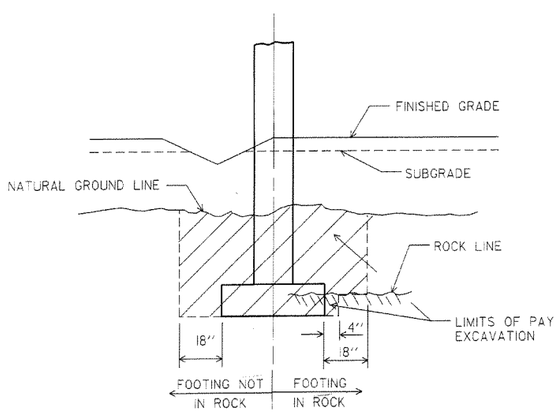

EXCAVATION FOR STRUCTURES - BENT IN ROADWAY FILL SECTION AND NATURAL GROUND

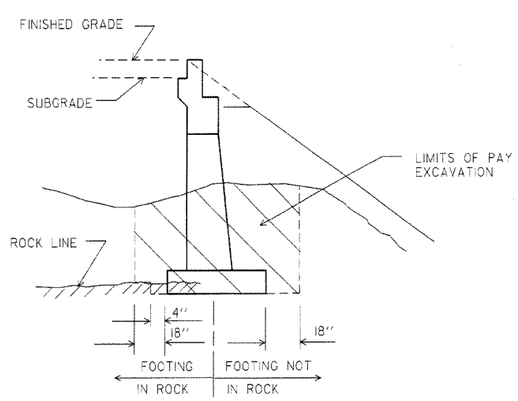

EXCAVATION FOR STRUCTURES - ABUTMENT IN NATURAL GROUND AND NEW EMBANKMENT

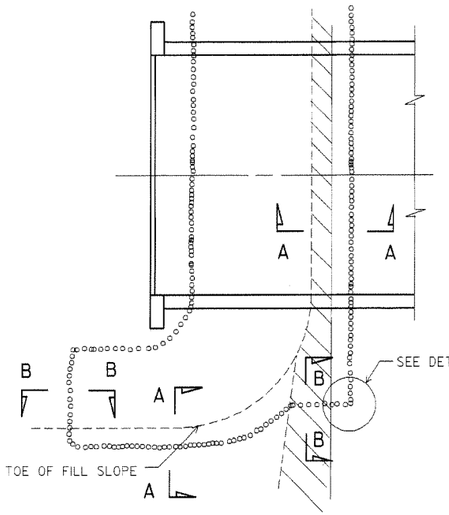

PLAN OF DUMPED RIPRAP

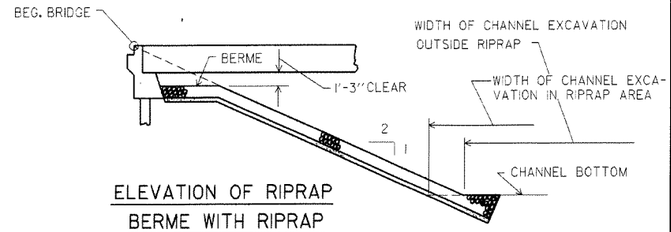

ELEVATION OF RIPRAP BERME WITH RIPRAP

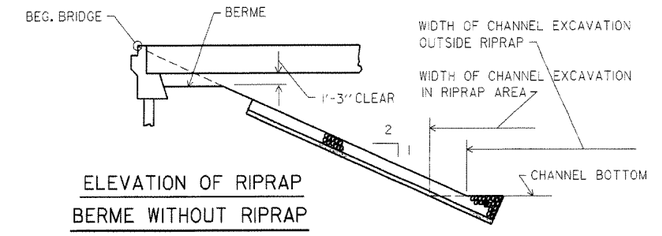

ELEVATION OF RIPRAP BERME WITHOUT RIPRAP

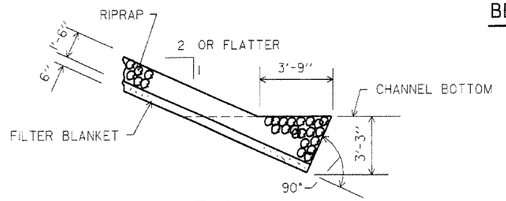

SECTION A-A

(TOE EXCAVATION IN SOIL)

EXCAVATION FOR TOES IS NOT A PAY ITEM

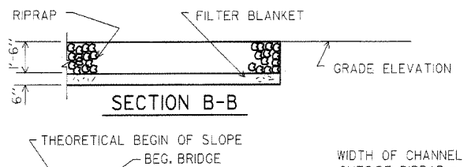

SECTION B-B

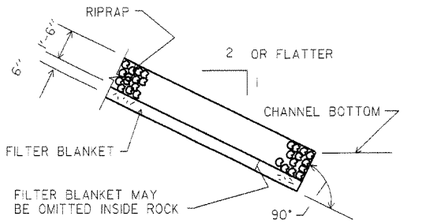

SECTION A-A

(TOE EXCAVATION IN ROCK)

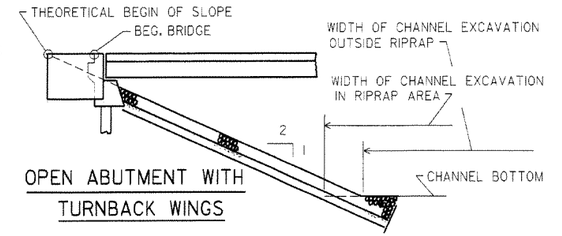

OPEN ABUTMENT WITH TURNBACK WINGS

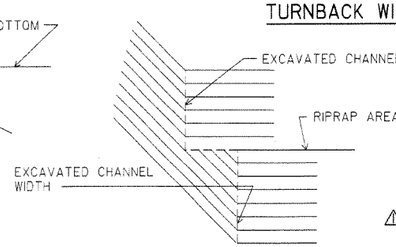

DETAIL C

NOTE : USE THIS TYPE OF TOE WHEN ROCK IS ENCOUNTERED WHICH IS IN A STABLE CONDITION.

NOTE : IN LIEU OF AN AGGREGATE FILTER BLANKET, A SYNTHETIC FIBER GEOTEXTILE FABRIC COMPLYING WITH THE REQUIREMENTS OF SUBSECTION 816.02(e) MAY BE USED.

NOTE : DETAILS FOR COMPUTING EXCAVATION FOR STRUCTURES ARE INCLUDED FOR INFORMATION AS TO HOW PLAN QUANTITIES WERE CALCULATED AND FOR USE WHEN ADJUSTING QUANTITIES WHEN CHANGING FOOTING ELEVATION.

STATE OF ARKANSAS
REGISTERED PROFESSIONAL ENGINEER
No. 4337
CHARLES E. BRAND

BRIDGE ENGINEER

⚠ Revised and redrawn MJT 04-10-2003
Chk'd. By: CJF 04-10-2003

DETAILS FOR DUMPED RIPRAP AND FILTER BLANKET AND DETAILS FOR COMPUTING EXCAVATION FOR STRUCTURES

ROUTE SEC.

ARKANSAS STATE HIGHWAY COMMISSION

LITTLE ROCK, ARK.

DRAWN BY: MJT DATE: 04-10-2003 FILENAME: B1891F.STD
CHECKED BY: CJF DATE: 04-10-2003 SCALE: NO SCALE
DESIGNED BY: STD. DATE: ——

BRIDGE NO. DRAWING NO. 1891F

B1891F.STD

DATE REVISED	DATE FILMED	DATE REVISED	DATE FILMED	FED. ROAD DIST. NO.	STATE	FED. AID PROJ. NO.	SHEET NO.	TOTAL SHEETS
9-8-11				6	ARK.		166	
1-3-13				JOB NO.				
1-10-13								

(1) NAME PLATE 2387

The name of the bridge as shown on the plans shall be placed on Lines 1 - 3 using 1/8" raised letters and numerals 3/8" high.

	Example 1	Example 2	Example 3	Example 4
Line 1	Red River	Southern	Saline	
Line 2	Relief	Railroad	River	Highway 5
Line 3		Overpass	Relief	

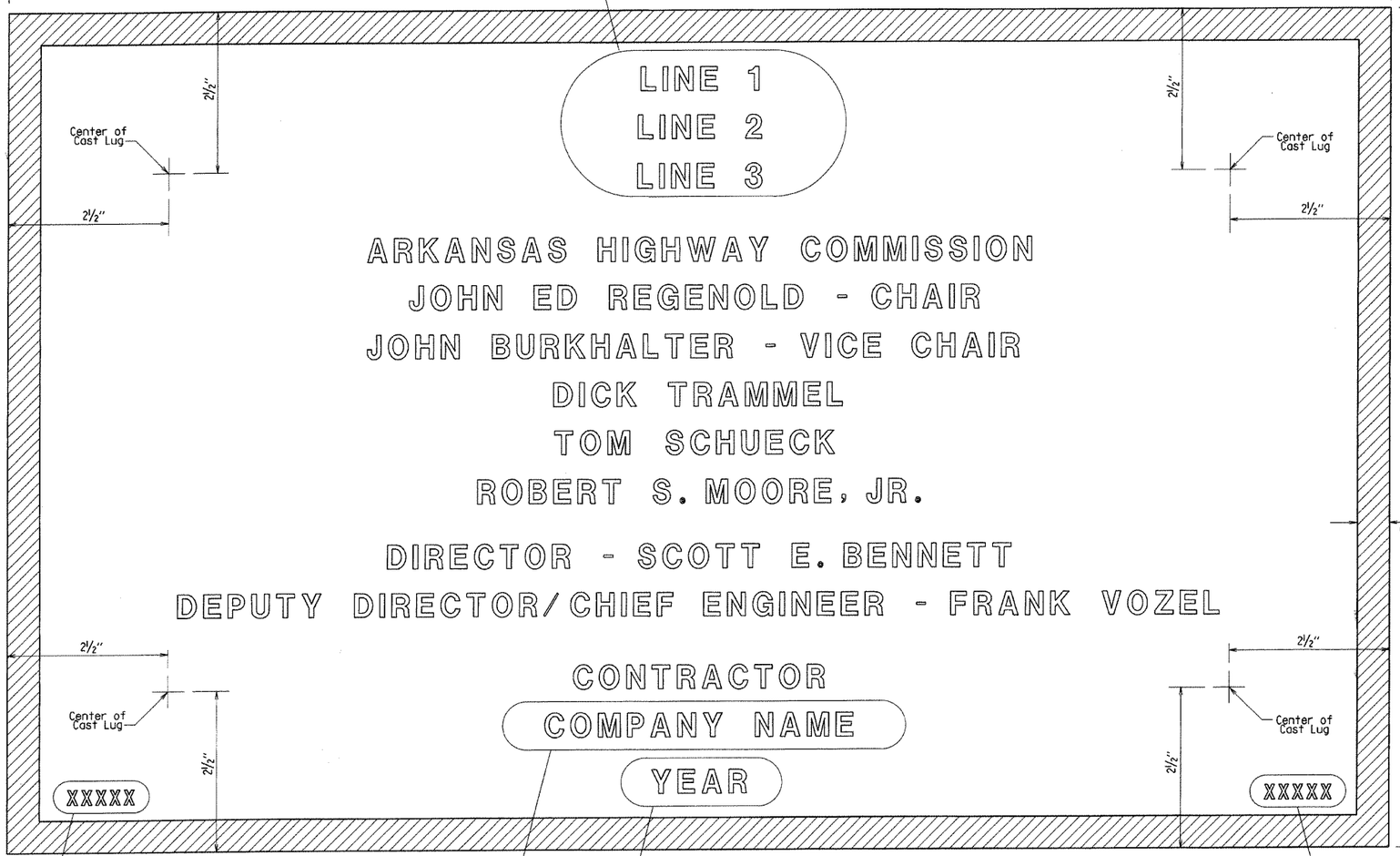

TYPICAL BRIDGE NAME PLATE

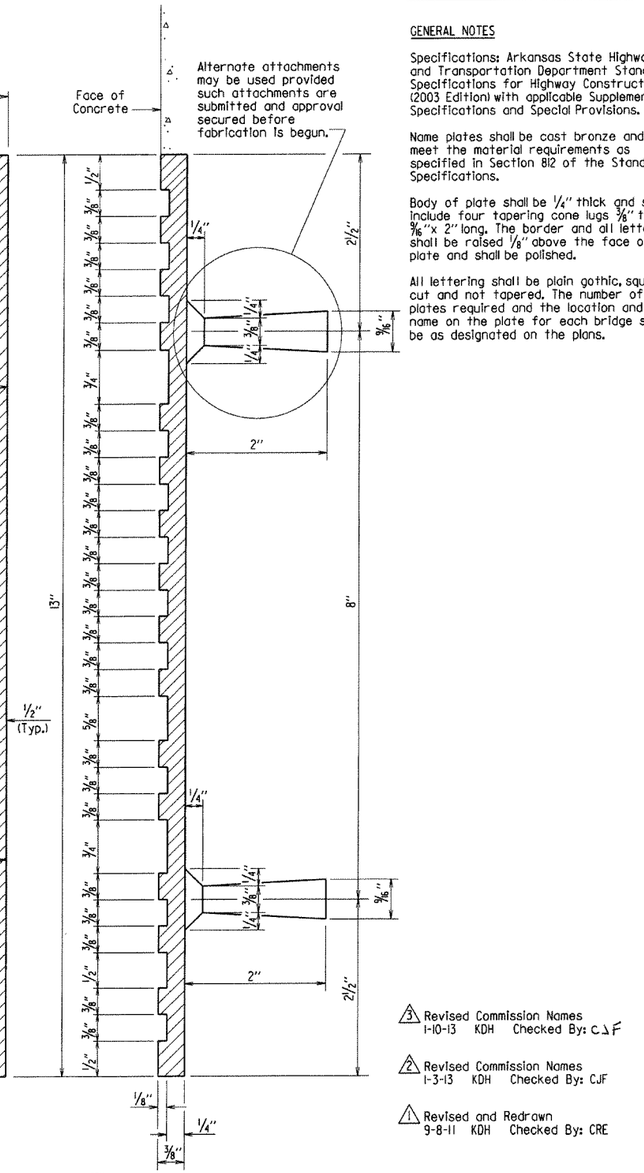

GENERAL NOTES

Specifications: Arkansas State Highway and Transportation Department Standard Specifications for Highway Construction, (2003 Edition) with applicable Supplemental Specifications and Special Provisions.

Name plates shall be cast bronze and shall meet the material requirements as specified in Section 812 of the Standard Specifications.

Body of plate shall be 1/4" thick and shall include four tapering cone lugs 3/8" to 9/16" x 2" long. The border and all lettering shall be raised 1/8" above the face of plate and shall be polished.

All lettering shall be plain gothic, square cut and not tapered. The number of plates required and the location and name on the plate for each bridge shall be as designated on the plans.

3 Revised Commission Names 1-10-13 KDH Checked By: CJF

2 Revised Commission Names 1-3-13 KDH Checked By: CJF

1 Revised and Redrawn 9-8-11 KDH Checked By: CRE

STATE OF ARKANSAS
REGISTERED PROFESSIONAL ENGINEER
No. 7510
CARL J. FUSELIER
BRIDGE ENGINEER

DETAILS OF STANDARD TYPE D
BRIDGE NAME PLATE
ROUTE SEC.
ARKANSAS STATE HIGHWAY COMMISSION
LITTLE ROCK, ARK.

DRAWN BY: KDH DATE: 9-8-11 FILENAME: b2387_std.dgn
CHECKED BY: CRE DATE: 9-8-11 SCALE: 1'-0" = 1'-0" OR AS NOTED
DESIGNED BY: STD. DATE: —

BRIDGE NO. DRAWING NO. 2387

PRINT DATE: 1/18/2013

DATE REVISED	DATE FILMED	DATE REVISED	DATE FILMED	DATE REVISED	DATE FILMED
11-27-96					
04-10-2003					

FED. ROAD DIST. NO.	STATE	FED. AID PROJ. NO.	SHEET NO.	TOTAL SHEETS
6	ARK.		167	
JOB NO.				

① BR. DECK FORMS 14991

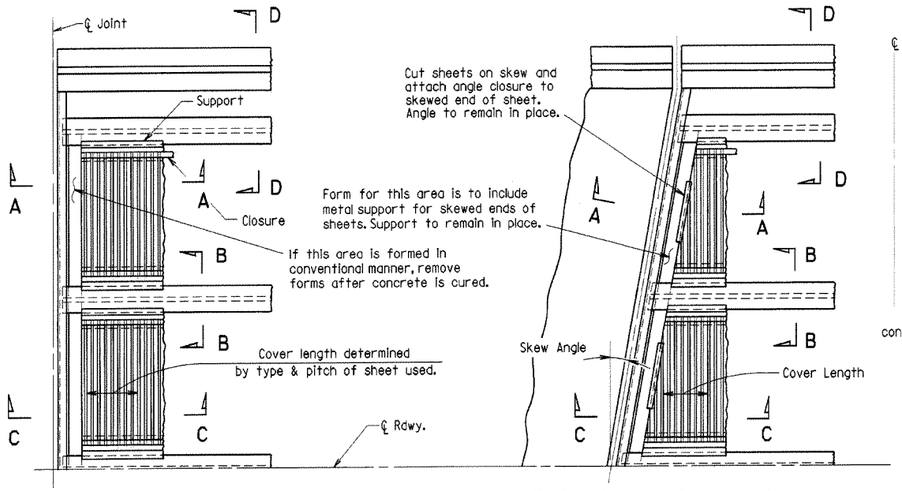

PART PLAN - SQUARE SPAN
3/8" = 1'-0"

PART PLAN - SKEWED SPAN
3/8" = 1'-0"

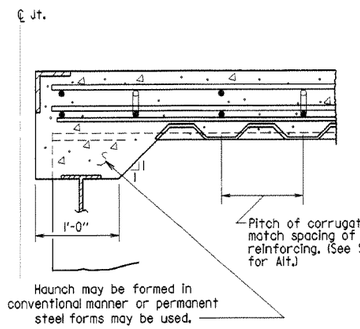

SECTION A-A
N.T.S.
(Angle at end of span)

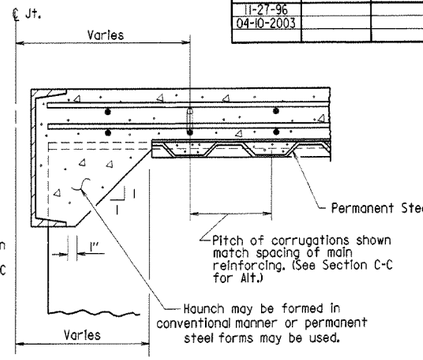

SECTION A-A
N.T.S.
(Channel at end of span)

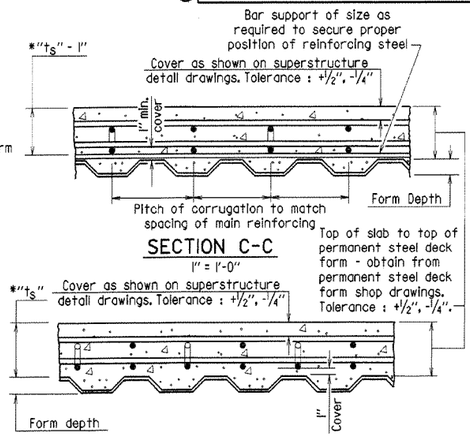

SECTION C-C
1" = 1'-0"

SECTION C-C - ALTERNATE
1" = 1'-0"
(Applicable when corrugations do not match spacing of main reinforcement)

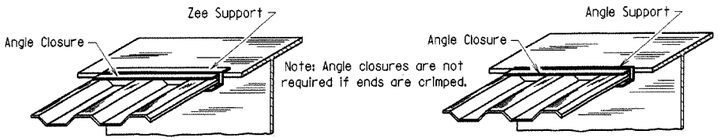

SKETCH OF PERMISSIBLE SUPPORTS
N.T.S.

*t_s = slab thickness as shown on superstructure detail drawings.

GENERAL NOTES

Permanent steel deck forms may be used at the Contractor's option and shall be at no additional cost to the Department. Such use may result in changes to the dead load deflection of the girder. Any cost for adjustments due to a change in the dead load deflection will be borne by the Contractor. Payment for deck concrete and structural steel will not be increased due to use of permanent steel deck forms.

Permanent steel deck forms shall conform to subsection 802.14(b) of the Standard Specifications. Detailed plans, including detailed calculations and manufacturer's technical brochure, shall be submitted to and approved by the Bridge Engineer before work of forming the bridge deck is started.

Welding of form supports to the tension flange of steel girders will be permitted only in areas where shear connectors are used. When welding is not allowed, the method of fastening Z or ∠ supports to the flange must be approved by the Bridge Engineer.

Form sheets shall be fastened to supporting members and to each other with galvanized metal screws sufficient in size and number to provide a secure attachment. Alternate methods of attachment must be approved by the Bridge Engineer.

When the pitch of form corrugations match the reinforcing spacing, transversely align form sheets across the bridge to maintain the correct orientation of continuous reinforcing bars in the corrugations.

Bar support rods, when used, shall be sized and spaced to adequately support the bottom reinforcing mat at the required position.

High chairs shall be sized to support the top mat of reinforcing at the proper position. High chairs shall be placed at locations shown on the detail drawings.

⚠2 Specifications: Arkansas State Highway and Transportation Department Standard Specifications for Highway Construction (2003 Edition), with applicable supplemental specifications and special provisions.

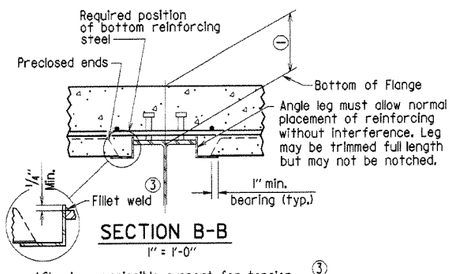

SECTION B-B
1" = 1'-0"
(Showing permissible support for tension flange where shear connectors are used, and for all compression flanges)

③ Minimum weld: 1/8" x 1" @ 18". More weld may be required; maximum length per weld = 1 1/2" (typ.)

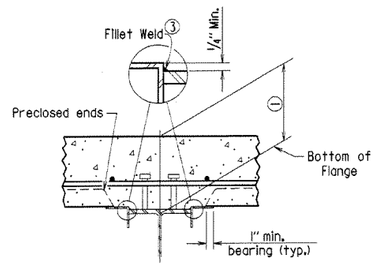

SECTION B-B
1" = 1'-0"
(Showing permissible support for tension flange where shear connectors are used and for all compression flanges)

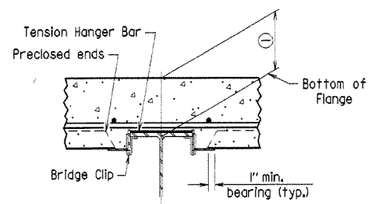

SECTION B-B
1" = 1'-0"
(Showing permissible support for tension flange where shear connectors are not used)

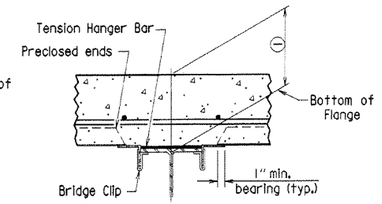

SECTION B-B
1" = 1'-0"
(Showing permissible support for tension flange where shear connectors are not used)

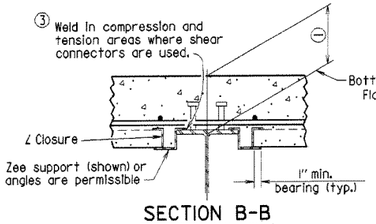

SECTION B-B
1" = 1'-0"
(Showing ∠ Closure)

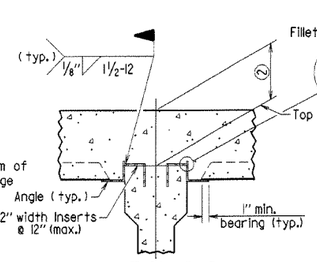

SECTION B-B
(FOR CONCRETE GIRDERS)
1" = 1'-0"
(Showing support by insert cast in girder)

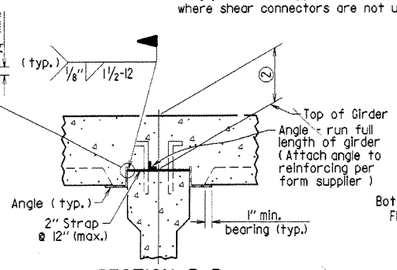

SECTION B-B
(FOR CONCRETE GIRDERS)
1" = 1'-0"
(Showing support by Strap)

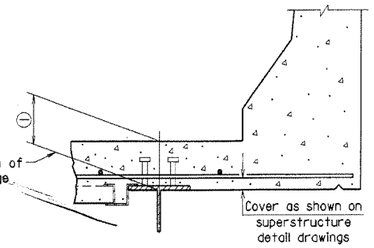

SECTION D-D
1" = 1'-0"
Note: Only Bottom Reinforcing is shown.

① Distance from top of slab to bottom of top flange as measured at centerline girder and as shown on superstructure detail drawings. This dimension may vary within the following limits to maintain the grade and slab thickness tolerances : Minimum - occurs when either the top flange or the support angle leg contacts the bottom reinforcing steel; Maximum = t_s + 1 3/4" + flange thickness. See Section C-C for slab thickness tolerance between adjacent girder flanges.

② Distance from top of slab to top of girder as measured at centerline girder and as shown on superstructure detail drawings. This dimension may vary within the following limits to maintain the grade and slab thickness tolerances : Minimum - occurs when either the top of girder or the support angle leg contacts the bottom reinforcing steel; Maximum - value shown on the superstructure detail drawings when removable forms are used. See Section C-C for slab thickness tolerance between adjacent girder flanges.

⚠2 Revised for 2003 AHTD Construction Specifications and CPB Seal. MJT 04-10-2003
Chk'd. By: CJF 04-10-2003

⚠1 Redrawn and revised 11/27/96; MJT

STATE OF ARKANSAS
REGISTERED PROFESSIONAL ENGINEER
No. 4337
CHARLES P. BRAND
BRIDGE ENGINEER

DETAILS OF PERMISSIBLE TYPE PERMANENT STEEL BRIDGE DECK FORMS FOR STEEL & CONCRETE GIRDER SPANS

ROUTE SEC.

ARKANSAS STATE HIGHWAY COMMISSION

LITTLE ROCK, ARK.

DRAWN BY: MJT DATE: 10-17-96
CHECKED BY: CPB DATE: 10-17-96 SCALE: as noted
DESIGNED BY: STD. DATE: —

BRIDGE NO. DRAWING NO. 14991

B14991.STD

DATE REVISED	DATE FILMED	DATE REVISED	DATE FILMED	FED. ROAD DIST. NO.	STATE	FED. AID PROJ. NO.	SHEET NO.	TOTAL SHEETS
04-10-2003				6	ARK.		168	
				JOB NO.				

1 RIPRAP & PILE - 14995A

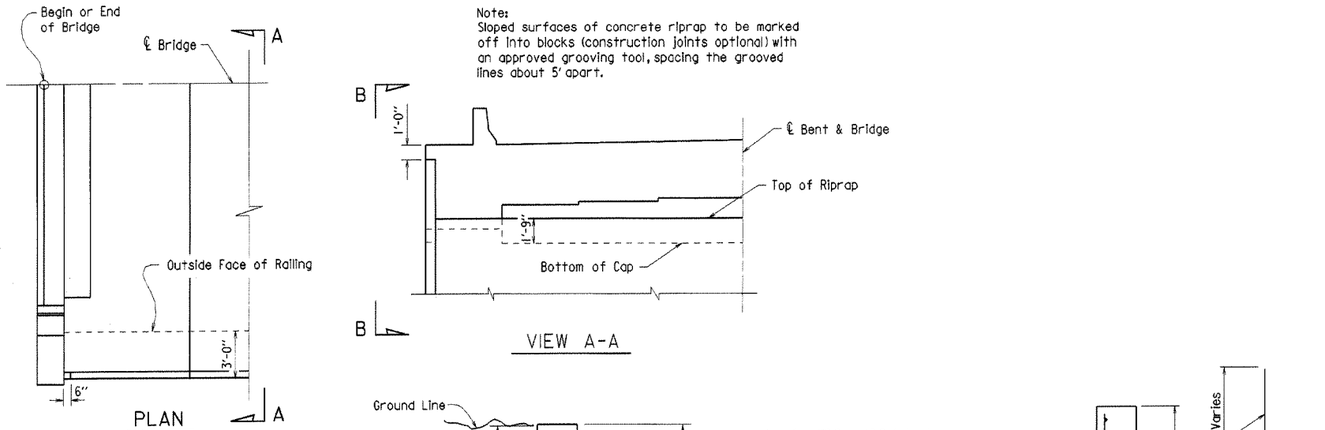

DETAILS OF CONCRETE RIPRAP

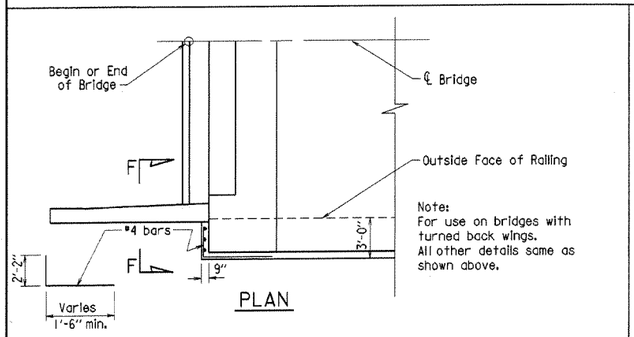

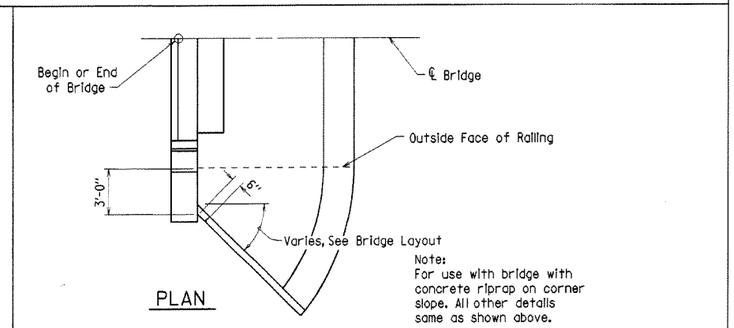

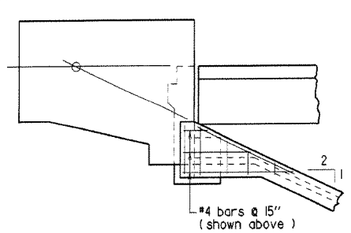

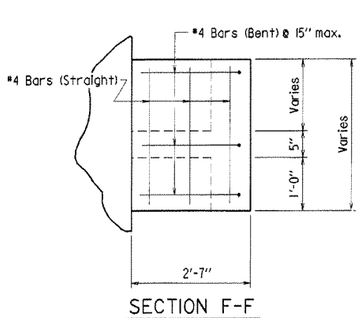

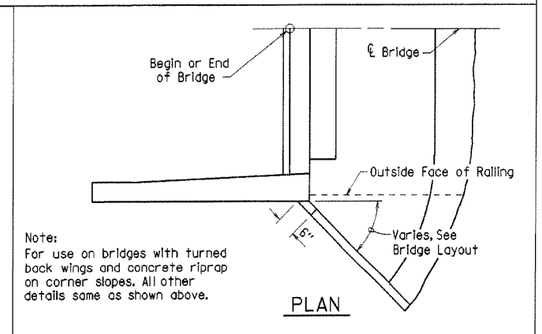

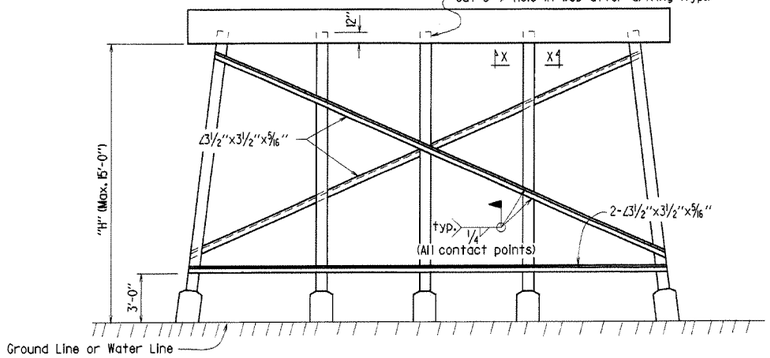

Note:
All bracing shall be cut and welded in the field. Each brace shall be furnished in one piece. Payment shall be made under Item 807.

Omit bottom bracing where "H" is less than 10 ft. Omit all bracing where "H" is less than 5 ft.

Note:
Where required by the bridge layout sheet, pile encasements shall be constructed.

Omit bracing (and V-groove in cap) where pile encasement is extended to bottom of bent cap.

TYPICAL BRACING FOR INT. STEEL PILE BENTS

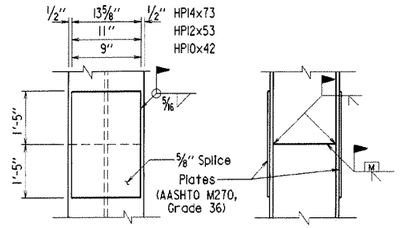

Note:
The contractor may for his own convenience and at this own expense provide as many as three splices per pile for steel bearing piling. Minimum spacing between splices shall be 5 ft.

PILE SPLICE DETAIL

Scale : 1" = 1'-0"

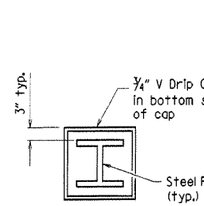

VIEW X-X

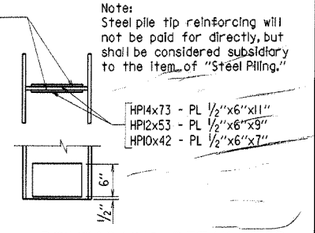

Note:
Steel pile tip reinforcing will not be paid for directly, but shall be considered subsidiary to the item of "Steel Piling."

REINFORCING DETAIL FOR STEEL PILE TIP

Scale : 1" = 1'-0"

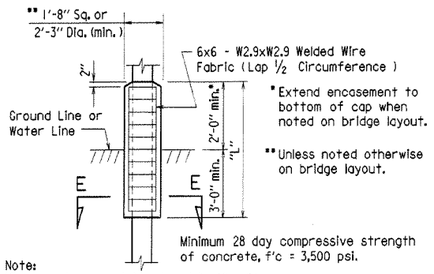

Note:
If concrete cannot be placed in the dry, seal concrete may be deposited under water. Concrete & welded wire fabric or reinforcing in encasements shall be paid for at the contract unit price per linear foot bid for "Pile Encasement."

PILE ENCASEMENT DETAIL

Reinforcing Alternate
#3 Vertical - 8 per encasement
#3 ties @ 12" ctrs.
Yield Strength , fy = 60,000 psi.

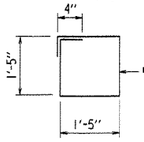

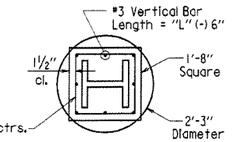

SECTION E-E
REINF. ALTERNATE

⚠ Revised and redrawn MJT 04-10-2003
Chk'd. By: CJF 04-10-2003

STATE OF ARKANSAS
REGISTERED PROFESSIONAL ENGINEER
No. 4537
CHARLES P. ABAND

BRIDGE ENGINEER

DETAILS OF CONCRETE RIPRAP AND MISC. DETAILS OF STEEL PILING

ROUTE SEC.

ARKANSAS STATE HIGHWAY COMMISSION

LITTLE ROCK, ARK.

DRAWN BY: MJT DATE: 04-10-2003 FILENAME: BI14995A.STD
CHECKED BY: CJF DATE: 04-10-2003 SCALE: No Scale or As Noted
DESIGNED BY: STD. DATE: —

BRIDGE NO. DRAWING NO. 14995A

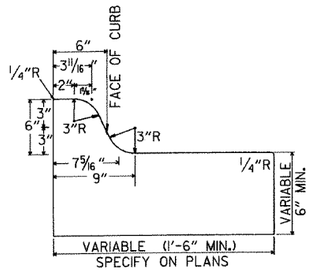

TYPE A

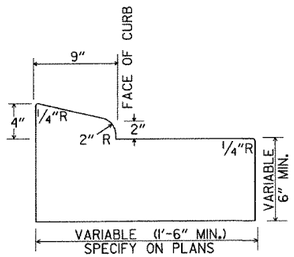

TYPE B-1

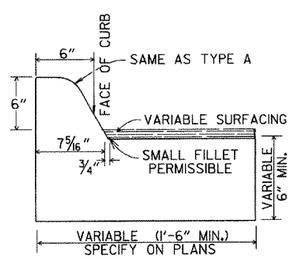

TYPE C

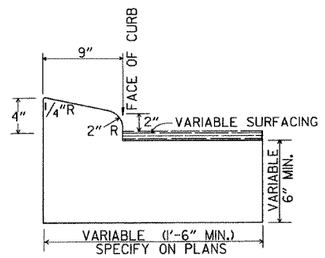

TYPE B-2

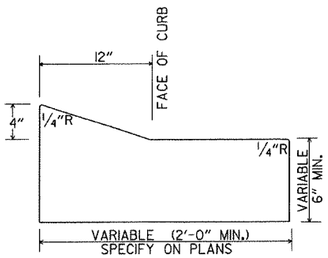

TYPE E-1

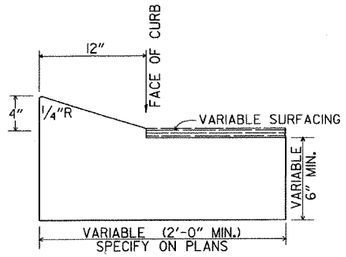

TYPE E-2

CONCRETE COMBINATION CURB AND GUTTER

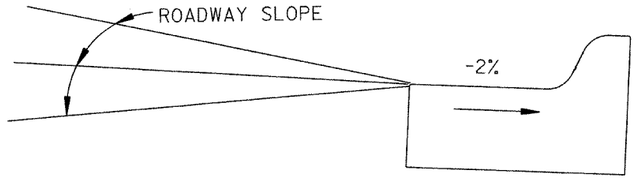

DETAIL OF GUTTER SLOPE

GUTTER SHALL BE CONSTRUCTED ON 2% SLOPE AWAY FROM ROADWAY, REGARDLESS OF ROADWAY SLOPE.

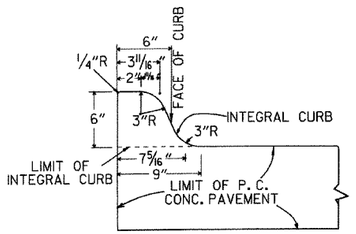

TYPE A

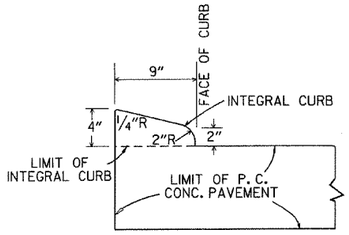

TYPE B

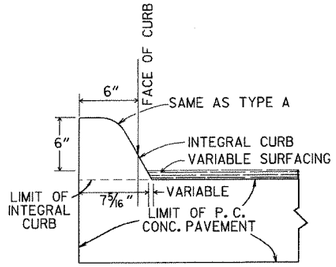

TYPE C

INTEGRAL CURB

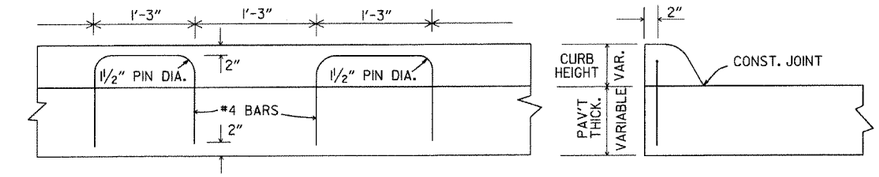

LONGITUDINAL SECTION

ELEVATION

ALTERNATE CONSTRUCTION METHOD FOR INTEGRAL CURB

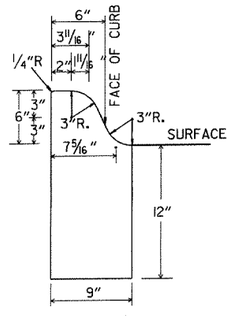

TYPE A

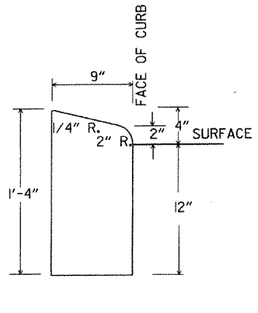

TYPE B

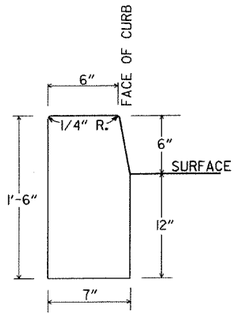

TYPE D

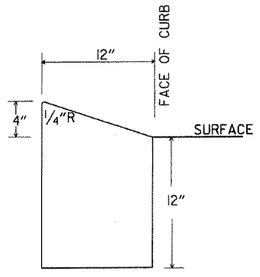

TYPE E

CONCRETE CURB

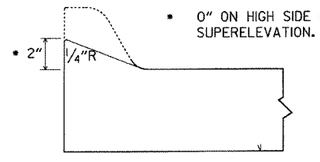

NOTE: USE MODIFIED CURB AS SPECIFIED ON STD. DR-1. COMPENSATION FOR MODIFIED CURB WILL BE CONSIDERED INCLUDED IN THE PRICE BID FOR THE TYPE OF CURB OR CURB AND GUTTER SPECIFIED.

DETAILS OF MODIFIED CURB

DATE	REVISION	DATE FILMED
11-29-07	REVISED GUTTER SLOPE & MODIFIED CURB DETAILS	
11-10-05	ADDED DETAILS OF TYPE E CURBS	
11-16-01	REVISED CONCRETE CURB TYPE B	
11-18-98	REVISED MODIFIED CURB	
6-2-94	ADDED NOTE TO SPECIAL MODIFIED CURB	
8-5-93	CORRECTED GUTTER SLOPE	8-5-93
10-1-92	ADDED DETAILS OF GUTTER SLOPE	10-1-92
5-24-90	ADDED DETAILS OF MODIFIED CURB	5-24-90
11-30-89	VARIBLE DEPTH TYPE A & B	11-30-89
7-15-88	REVISED MODIFIED CURB	630-7-15-88
11-1-73	REVISED MODIFIED CURB	500-11-1-73
10-2-72	REVISED AND REDRAWN	512-10-2-72

ARKANSAS STATE HIGHWAY COMMISSION

CURBING DETAILS

STANDARD DRAWING CG-1

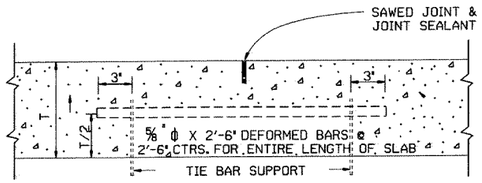

LONGITUDINAL JOINT

NOTE: THE TIE BAR SUPPORT SHOWN ABOVE MAY BE ELIMINATED IF OTHER APPROVED METHODS FOR PLACING AND SUPPORTING THE TIE BARS ARE PROVIDED.
TIE BARS SHALL BE 15" FROM TRANSVERSE JOINTS.

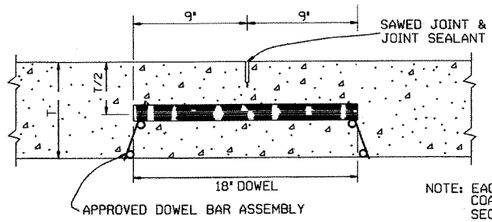

NOTE: EACH DOWEL TO BE COATED ACCORDING TO SECTION 502 OF THE STANDARD SPECIFICATIONS.

ROUND STEEL BAR DOWEL
1¼" DIA. WHEN T<10"
1½" DIA. WHEN T≥10"

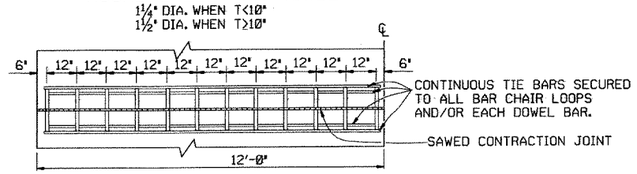

ONE-HALF 24' PAVEMENT
12 DOWELS
PLAN

NOTE: FOR 20' PAVEMENT USE 20 DOWELS @ 12" CTRS. WITH 6" SPACING FROM C.L. AND EDGE OF SLAB TO FIRST BAR. FOR 15' PAVEMENT USE 15 DOWELS @ 12" CTRS. WITH 6" SPACING FROM C.L. AND EDGE OF SLAB TO FIRST BAR. FOR 26' PAVEMENT USE 26 DOWELS @ 12" CTRS. WITH 6" SPACING FROM C.L. AND EDGE OF SLAB TO FIRST BAR. FOR PAVEMENT WIDTHS OTHER THAN THOSE SHOWN ABOVE, USE DOWELS AT 12" CTRS. WITH 6" MAX. SPACING FROM C.L. TO FIRST BAR. DISTANCE FROM EDGE OF SLAB TO FIRST BAR SHALL BE ADJUSTED TO MAINTAIN 12" DOWEL BAR SPACING

CONTRACTION JOINT DETAILS

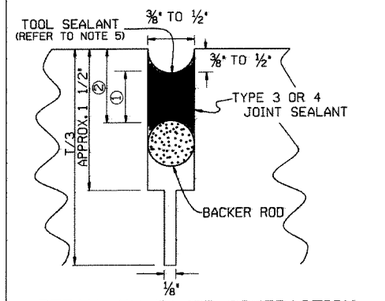

DETAIL OF SAWED CONTRACTION JOINT

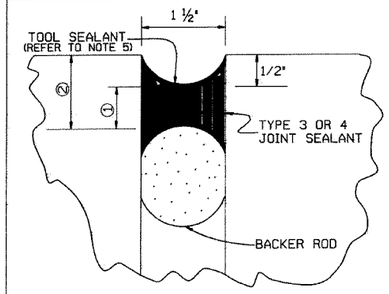

DETAIL OF EXPANSION JOINT

JOINT CONFIGURATION FOR TYPE 3 OR 4 JOINT SEALANT

JOINT WIDTH	SEALANT THICKNESS ①	BACKER ROD DIAMETER	BACKER ROD PLACEMENT DEPTH ②
INCHES			
¼	¼	⅜	½
⅜	¼	½	½
½	¼	⅝	½
⅝	⅝	¾	⅝
¾	⅜	⅞	⅞
⅞	⅜	⅞	⅞
1 ½	¾	2	1 ¼

JOINT CONFIGURATION FOR TYPE 5 JOINT SEALANT

JOINT WIDTH	SEALANT THICKNESS ①	BACKER ROD DIAMETER	BACKER ROD PLACEMENT DEPTH ②
INCHES			
¼	½	⅜	¾
¾	¾	½	1

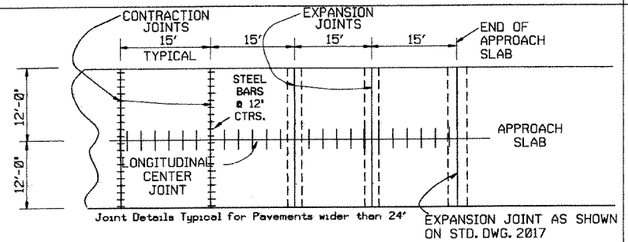

PLAN SHOWING EXPANSION JOINTS AT BRIDGE APPROACH SLABS

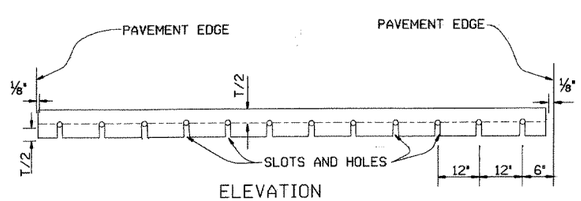

ELEVATION

NOTE: ALL DOWEL BARS SHALL CONFORM TO THE DETAILS FOR CONTRACTION JOINTS.

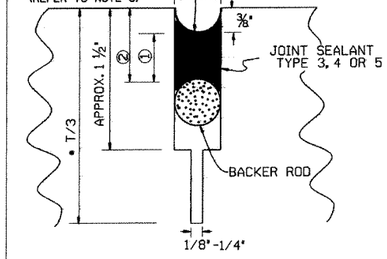

*NOTE: T/3 SAW CUT NOT REQUIRED FOR LONGITUDINAL CONSTRUCTION JOINT.

DETAIL OF SAWED LONGITUDINAL JOINT AND LONGITUDINAL CONSTRUCTION JOINT

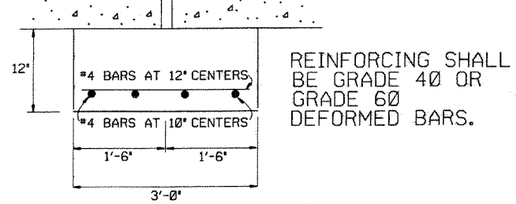

REINFORCING SHALL BE GRADE 40 OR GRADE 60 DEFORMED BARS.

DETAIL OF JOINT SUPPORT FOR EXPANSION JOINTS

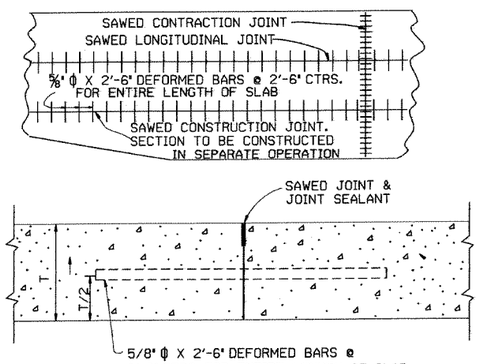

NOTE: TIE BARS SHALL BE 15" FROM TRANSVERSE JOINTS.

LONGITUDINAL CONSTRUCTION JOINT

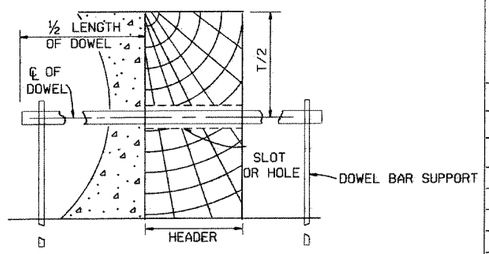

SECTION

TRANSVERSE CONSTRUCTION JOINT

GENERAL NOTES
1. 'T' DENOTES THICKNESS OF SLAB.
2. DOWEL BARS SHALL BE PLACED IN ACCORDANCE WITH THE DIMENSIONS SHOWN. A TOLERANCE OF PLUS OR MINUS ONE INCH WILL BE ALLOWED FOR THE VERTICAL AND LATERAL PLACEMENT AND A TOLERANCE OF PLUS OR MINUS ¼" WILL BE ALLOWED FOR THE TILT AND SKEW. DOWEL BARS SHALL BE FIELD COATED FOR A MINIMUM DISTANCE OF 2" GREATER THAN HALF THE LENGTH OF THE BAR WITH AN APPROVED GREASE AS A BOND BREAKER JUST PRIOR TO PLACEMENT OF CONCRETE.
3. THE EXPANSION JOINT SUPPORT MAY BE CONSTRUCTED WITH CLASS 'A', 'S' OR PAVING CONCRETE. PAYMENT FOR THE JOINT SUPPORT SHALL BE FOR THE CONTRACT UNIT PRICE BID FOR THE CLASS OF CONCRETE SPECIFIED IN THE PLANS. PAYMENT FOR ALL OTHER WORK AND MATERIALS REQUIRED FOR THE CONSTRUCTION OF THE JOINT SUPPORT SHALL BE INCLUDED IN THE PRICE BID FOR THE ABOVE ITEMS.
4. CONTRACTION JOINTS SHALL BE CONSTRUCTED ON 15' CENTERS.
5. TOOLING NOT REQUIRED FOR SELF-LEVELING SILICONE.
6. UNLESS OTHERWISE SPECIFIED IN THE PLANS, CONCRETE SHOULDERS SHALL BE CONSTRUCTED ACCORDING TO THE DETAILS SHOWN HEREON. CONTRACTION JOINTS SHALL MATCH CONTRACTION JOINTS IN THE LANES.
7. TIE WIRES IN DOWEL BAR ASSEMBLIES SHALL NOT BE CUT PRIOR TO PLACEMENT OF PAVING CONCRETE.

DATE	REVISION	DATE FILMED
5-25-06	ADDED GENERAL NOTE 7	
10-9-03	REMOVED TIE BAR COATING & REVISED GENERAL NOTES	
11-16-01	ADDED TOOL SEALANT AND NOTE 5; REVISED NOTE 3	
4-26-96	REVISED CONTRACTION JOINT NOTE	
11- 3-94	ADDED NOTE RE: REINF. BARS	
4- 1-93	REVISED DOWEL BARS & GEN. NOTES	4- 1-93
10- 1-92	REVISED DOWEL SPACING	10- 1-92
8- 15-91	ADDED SPAC FOR CONTR JTS & DEL KEYWAY	
05-24-90	REVISED TIE BAR, DOWEL & JOINT SIZE	
01-25-90	ADDED EXPANSION JOINT	01-25-90
11-30-89	CHANGED T/4+1 TO T/3+1	11-30-89
03-23-89	ALTERED SAWED JOINT & ADDED NOTE	512-03-23-89
07-15-88	REVISED AND REDRAWN	632-07-15-88

ARKANSAS STATE HIGHWAY COMMISSION

TRANSVERSE & LONGITUDINAL JOINTS FOR CONCRETE PAVEMENT (NON-REINFORCED)

STANDARD DRAWING CPTJ - 6A

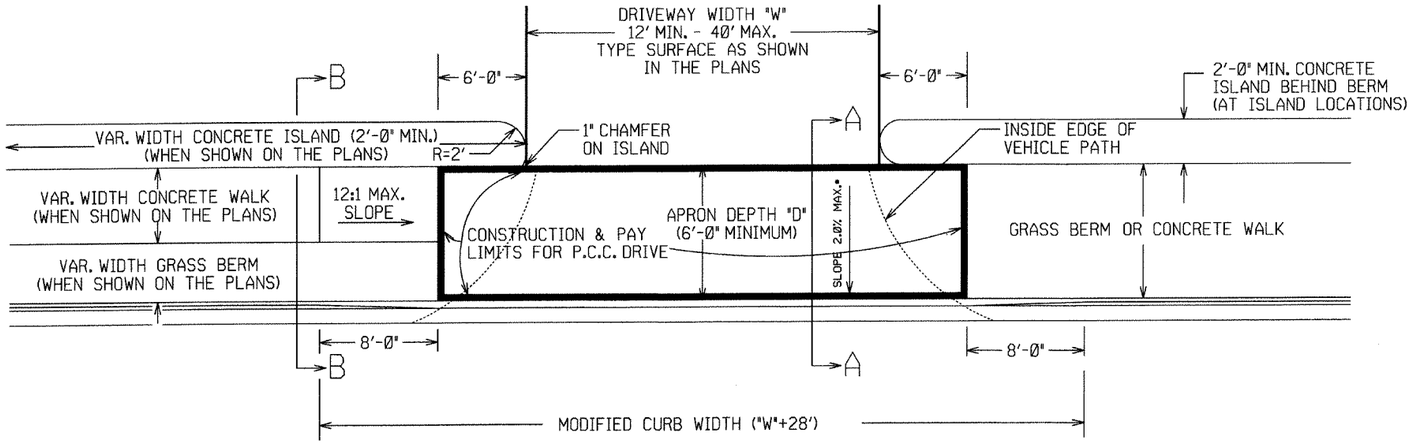

PLAN VIEW

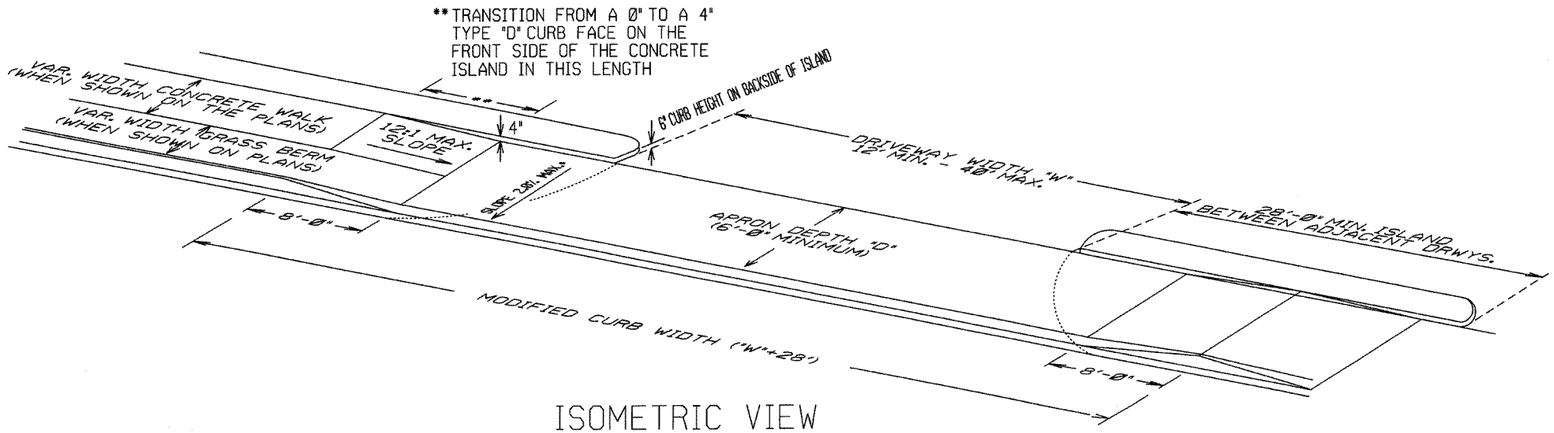

ISOMETRIC VIEW

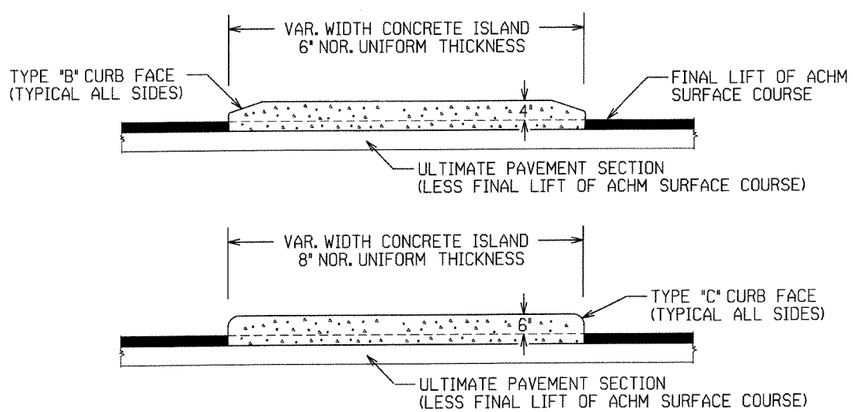

CURBED ISLANDS FOR CHANNELIZATION

REFER TO PLANS FOR TYPE OF CURB FACE TO BE USED. NO DIRECT PAYMENT WILL BE MADE FOR THE CURB FACES SHOWN ON THE ISLAND DETAILS. PAYMENT FOR THE CURB FACE WILL BE INCLUDED IN THE UNIT PRICE BID FOR THE ITEM "CONCRETE ISLAND".

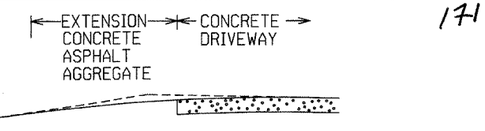

EXTENSION TYPICAL SECTIONS

1: CONCRETE - 6" P.C. CONCRETE DRIVEWAY

2: ASPHALT - 2" ACHM SURFACE COURSE (1/2")
4" ACHM BINDER COURSE.(1") OR
4" ACHM BASE COURSE (1-1/2")

3: ASPHALT - 2" ACHM SURFACE COURSE (1/2")
7" AGGREGATE BASE COURSE

4: AGGREGATE - 6" AGGREGATE BASE COURSE

THE TYPE OF EXTENSION SHALL BE AS SHOWN IN THE PLANS. THE CONTRACTOR MAY, WITH THE APPROVAL OF THE ENGINEER, SUBSTITUTE A LOWER NUMBERED TYPE OF EXTENSION IN LIEU OF THE TYPE SPECIFIED IN THE PLANS, BUT AT NO ADDITIONAL COST TO THE DEPARTMENT.

DRIVEWAY EXTENSION DETAILS

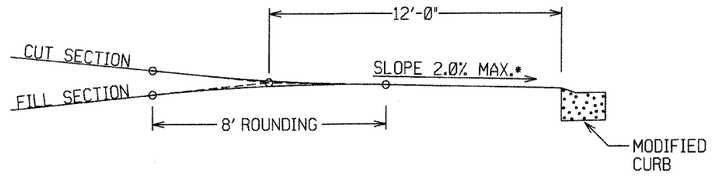

DRIVEWAY VERTICAL ALIGNMENT DETAILS

* NOTE: DRIVEWAYS MAY NOT BE SLOPED AWAY FROM THE ROADWAY UNLESS APPROVED BY THE ENGINEER.

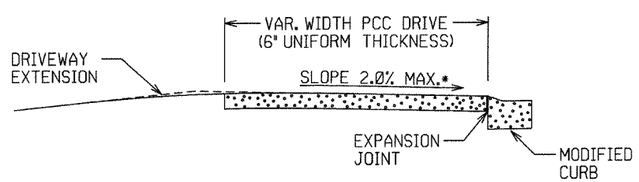

SECTION A-A

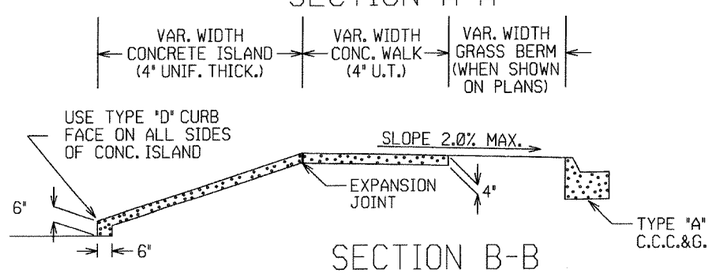

SECTION B-B
CURBED ISLAND BEHIND WALK

DATE REV	DATE FILMED	DESCRIPTION
11-29-07		ADDED CHANNELIZATION ISLAND WITH TYPE C CURB FACE & REVISED DRIVEWAY SLOPE NOTE & VERTICAL ALIGNMENT DETAIL
11-10-05		REV. APRON SLOPE & DEPTH OF AGG. BASE.
8-22-02		ADDED ISLAND DETAILS & NOTES
3-30-00		REV. MOD. CURB WIDTH & TRANS. NOTE
11-19-98		REVISED NOTES
11-18-98		REDRAWN AND REISSUED

ARKANSAS STATE HIGHWAY COMMISSION
DETAILS OF DRIVEWAYS & ISLANDS
STANDARD DRAWING DR-1

4'-0" LENGTH DROP INLET

PIPE SIZE	MIN. WIDTH	HEIGHT 5'-0" CLASS A CONC. CU. YDS.	HEIGHT 5'-0" REINF. STEEL POUNDS	PLUS OR MINUS PER LIN. FT. OF HEIGHT CLASS A CONC. CU. YDS.	PLUS OR MINUS PER LIN. FT. OF HEIGHT REINF. STEEL POUNDS
18"	2'-6"	1.77	156	0.28	22
24"	2'-6"	1.79	156	0.28	22
30"	3'-2"	2.39	205	0.30	26
36"	3'-8"	2.63	236	0.32	28
42"	4'-4"	2.95	250	0.34	30
48"	4'-10"	3.21	265	0.36	32

NOTE: QUANTITIES ARE APPROXIMATE AND ARE SHOWN FOR BIDDER INFORMATION ONLY.

DROP INLET EXTENSION

4'-0" CLASS A CONC. CU. YDS.	4'-0" REINF. STEEL POUNDS	8'-0" CLASS A CONC. CU. YDS.	8'-0" REINF. STEEL POUNDS
0.58	38	0.87	72
DEDUCT FROM QUANTITY COMPUTED FOR EACH EXTENSION ADDED.			
0.04	3		

DEDUCT FROM QUANTITY COMPUTED FOR EACH PIPE ENTERING INLET		
INSIDE DIA. PIPE	CLASS A CONC.	REINF. STEEL
INCHES	CU. YDS.	POUNDS
18	0.05	2
24	0.09	3
30	0.13	4
42	0.24	8

BAR DIAGRAM

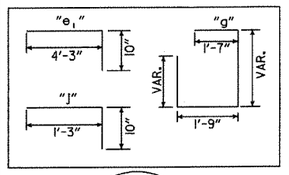

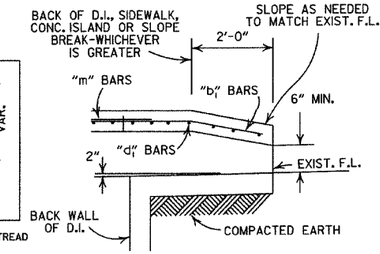

BACK OPENING

WHEN OPENING IN BACK IS CALLED FOR ON PLANS EXTEND OPENING AS SHOWN IN DETAIL. PAYMENT TO BE INCLUDED IN PRICE BID FOR DROP INLET (TYPE C).

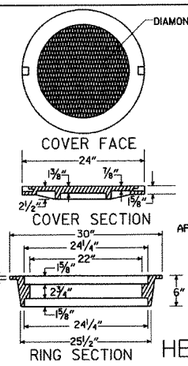

APPROXIMATE TOTAL WEIGHT = 333 LBS.

HEAVY DUTY RING & COVER

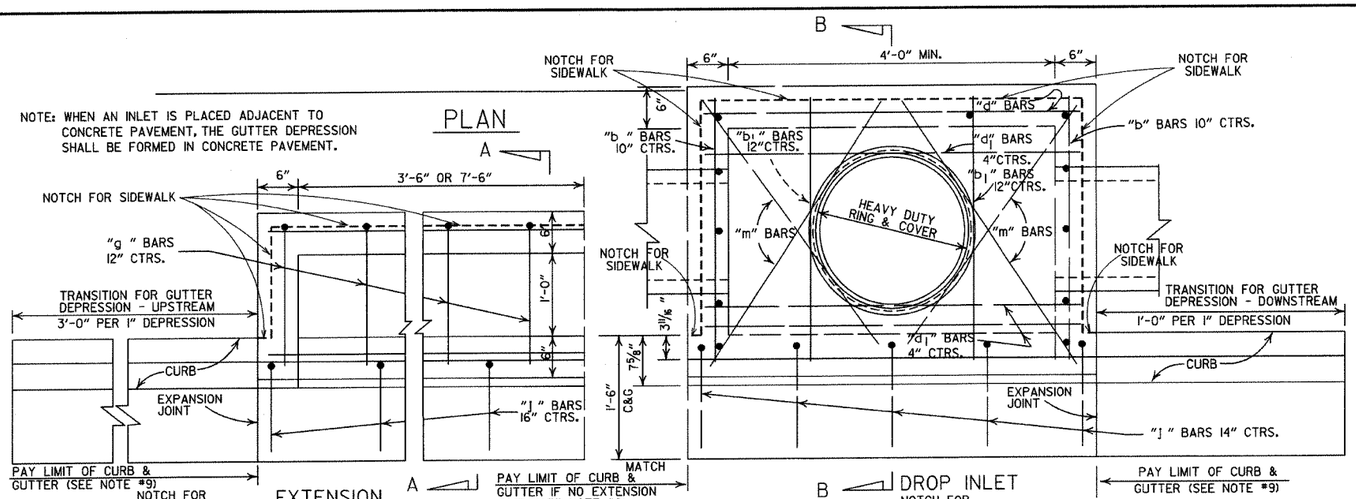

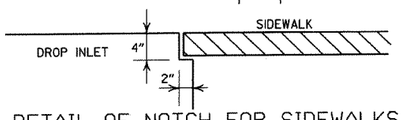

DETAIL OF NOTCH FOR SIDEWALKS

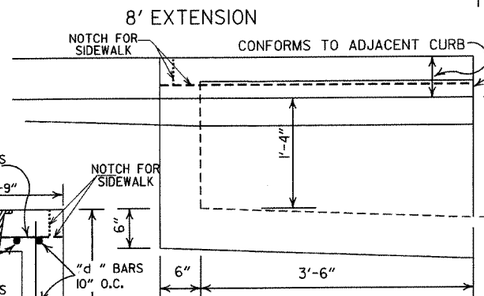

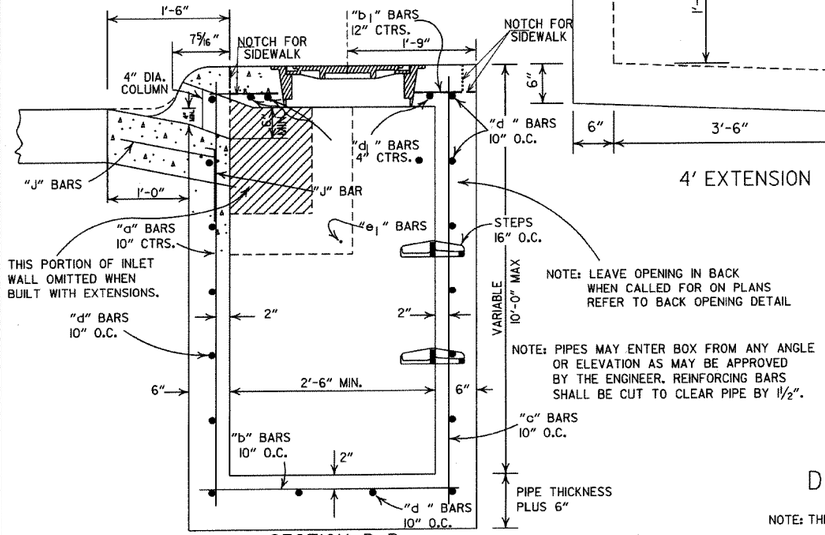

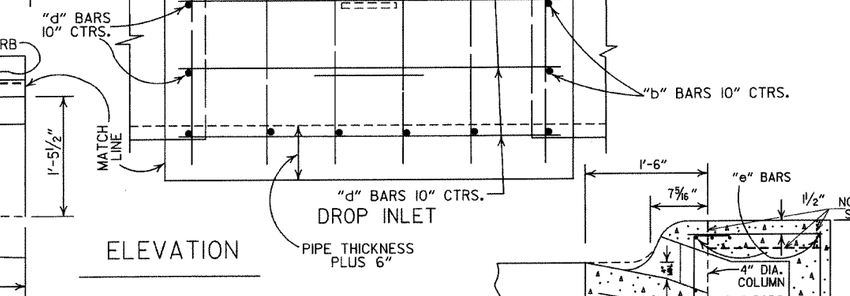

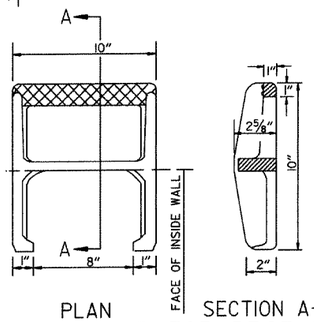

DETAIL OF STEP FOR DROP INLET

APPROX. WEIGHT = 11 LBS. (CAST IRON)

NOTE: THIS DETAIL IS TYPICAL. OTHERS MAY BE USED WITH PRIOR APPROVAL OF THE ENGINEER.

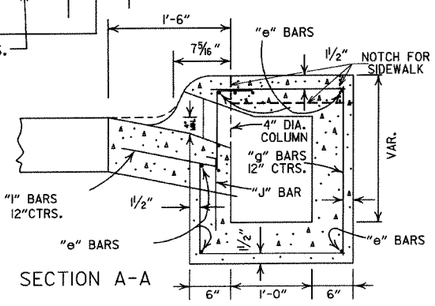

GENERAL NOTES:

1. ALL EXPOSED CORNERS TO HAVE ¾" CHAMFER.
2. STEPS SHALL BE INSTALLED IN ALL INLETS 4'-0" HIGH AND OVER OF AS APPROVED BY THE ENGINEER.
3. ALL REINF. BARS SHALL BE #4 AND HAVE 1½" COVER.
4. DROP INLETS AND EXTENSION ON CURVED SECTIONS SHALL CONFORM TO THE CURVATURE OF THE CURB.
5. THIS DROP INLET MAY BE CONSTRUCTED ON NEW OR EXISTING R.C. BOX CULVERT AS SHOWN ON F.P.C.-9.
6. WHEN PLANS CALL FOR DROP INLET OVER 10'-0" HIGH, FLOOR AND WALLS SHALL BE CONSTRUCTED AS SHOWN FOR TYPE "RM" DROP INLET (F.P.C.-9D).
7. HEAVY DUTY RING SHALL ALWAYS BE INSTALLED WITH FLANGE ON TOP.
8. DURING CONSTRUCTION OF THE ROADWAY THE CONTRACTOR SHALL MAINTAIN DRAINAGE INTO OR AROUND THE DROP INLET AS APPROVED BY THE ENGINEER.
9. PAYMENT FOR CURB AND/OR CURB AND GUTTER WITHIN THE LIMITS OF DROP INLETS AND DROP INLET EXTENSIONS SHALL BE CONSIDERED INCLUDED IN PAYMENT MADE FOR DROP INLETS AND/OR DROP INLET EXTENSIONS.
10. HEAVY DUTY RING AND COVER SHALL BE CONSTRUCTED OF CAST IRON AND SHALL CONFORM TO THE REQUIREMENTS OF THE STANDARD SPECIFICATIONS FOR GRAY IRON CASTINGS AASHTO M105 CLASS 35B & AASHTO M306.
11. HEAVY DUTY RING AND COVER SHALL NOT BE PAINTED.
12. 4"x2" NOTCH SHALL BE FORMED IN ALL DROP INLETS TO SUPPORT SIDEWALK CONSTRUCTION. REFER TO DETAIL OF NOTCH FOR SIDEWALKS.
13. DIMENSIONS SHOWN FOR RING AND COVER ARE TYPICAL. THE CONTRACTOR MAY SUBSTITUTE SIMILAR CASTINGS WITH THE APPROVAL OF THE ENGINEER. REQUESTING APPROVAL FOR CASTING DESIGNS MAY BE MADE BY REFERRING TO PREVIOUSLY APPROVED DRAWINGS.

DATE REV.	REVISION	DATE FILMED
8-22-02	ADDED PAY LIMIT CURB NOTES TO SECTIONS A-A & B-B	
11-16-01	ADDED NOTE 13; REVISED SECTION B-B	
1-12-00	CORRECTED DIMENSION ON SECTION B-B & REVISED RING & COVER	
5-13-99	ADDED DETAIL OF NOTCH FOR SIDEWALKS	
7-02-98	REPLACED RING & COVER W/HEAVY DUTY RING & COVER ADDED NOTES 9,10,&11	
10-18-96	CORRECTED SPELLING	
4-26-96	ADDED NOTE 8 & REVISED (4')(8') EXTENSION TITLES	10-18-96
4-1-93	REVISED BACK OPENING & NOTE	
8-15-91	DELETE TYPE IV GRATE	
7-15-88	REVISED STEP DETAIL	
5-20-83	REVISED DETAILS OF GRATES (TYPE IV & IV-A)	
2-4-83	ADDED GENERAL NOTE NO. 4	
3-2-81	ADDED TYPE IV-A GRATE	
5-22-74	DELETED INLET (TYPE F) & GRATE (TYPE III)	
10-2-72	REVISED AND REDRAWN	

ARKANSAS STATE HIGHWAY COMMISSION

DETAILS OF DROP INLETS

(TYPE C)

STANDARD DRAWING FPC-9E

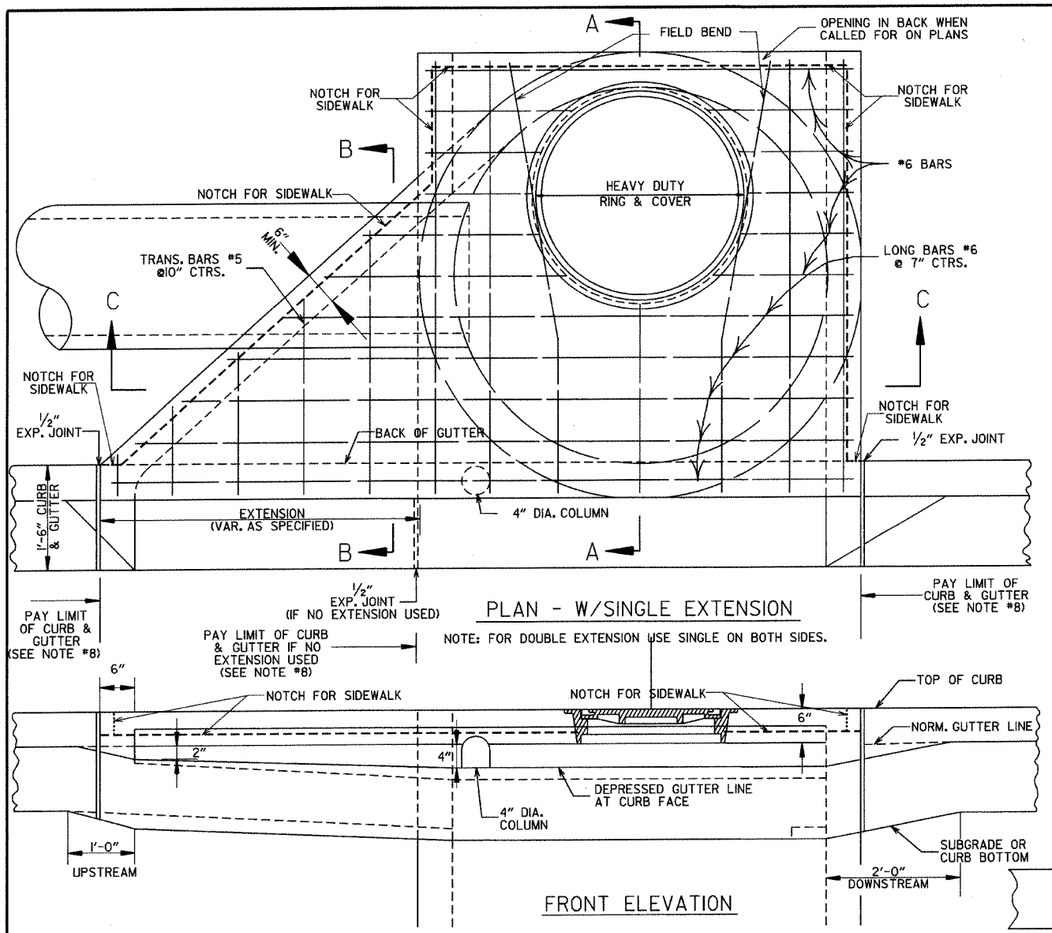

PLAN - W/SINGLE EXTENSION

NOTE: FOR DOUBLE EXTENSION USE SINGLE ON BOTH SIDES.

FRONT ELEVATION

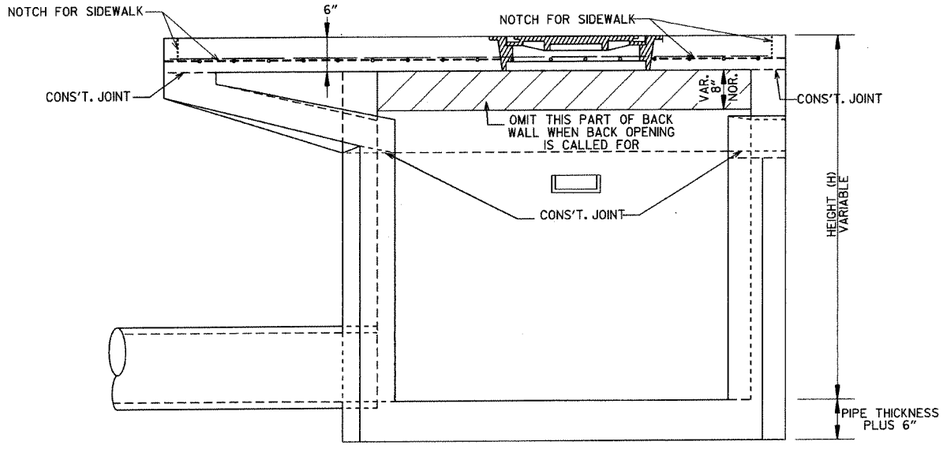

SECTION C-C

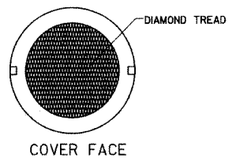

APPROXIMATE TOTAL WEIGHT = 333 LBS.

HEAVY DUTY RING & COVER

1. HEAVY DUTY RING AND COVER SHALL BE CONSTRUCTED OF CAST IRON AND SHALL CONFORM TO THE REQUIREMENTS OF THE STANDARD SPECIFICATIONS FOR GRAY IRON CASTINGS AASHTO M105 CLASS 35B & AASHTO M306.
2. HEAVY DUTY RING AND COVER SHALL NOT BE PAINTED.
3. HEAVY DUTY RING SHALL ALWAYS BE INSTALLED WITH FLANGE ON TOP.

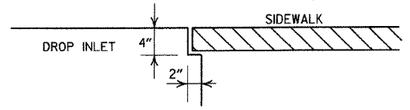

DETAIL OF NOTCH FOR SIDEWALKS

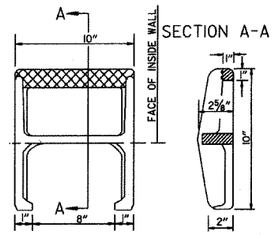

APPROX. WEIGHT = 11 LBS. (CAST IRON)

PLAN

NOTE: THIS DETAIL IS TYPICAL. OTHERS MAY BE USED WITH PRIOR APPROVAL OF THE ENGINEER.

DETAIL OF STEP FOR DROP INLET

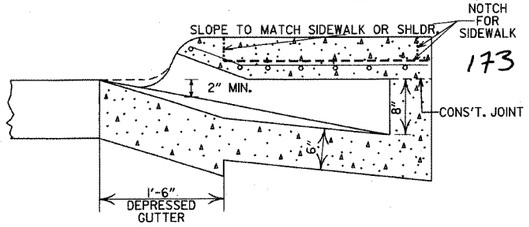

SECTION B-B

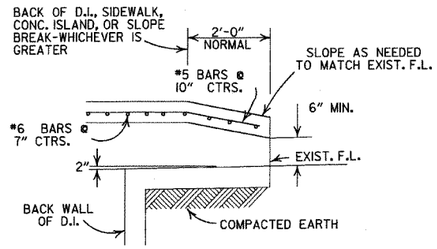

BACK OPENING

WHEN OPENING IN BACK IS CALLED FOR ON PLANS EXTEND OPENING AS SHOWN IN DETAIL. PAYMENT TO BE INCLUDED IN PRICE BID FOR DROP INLET (TYPE MO).

GENERAL NOTES:

1. ALL EXPOSED CORNERS TO HAVE 3/4" CHAMFER.
2. STEPS SHALL BE INSTALLED IN ALL INLETS 4'-0" HIGH AND OVER OR AS DIRECTED BY THE ENGINEER.
3. ALL REINFORCING BARS SHALL BE GRADE 60 AND HAVE MIN. 1 1/2" COVER.
4. DROP INLETS AND EXTENSION ON CURVED SECTIONS SHALL CONFORM TO THE CURVATURE OF THE CURB.
5. 4" DIA. COLUMNS SPACED AT MAX. 4'-0" INTERVALS SHALL BE INSTALLED ALONG INLET AND EXTENSION TO SUPPORT TOP.
6. BASE AND INLET WALLS SHALL BE CAST MONOLITHICALLY.
7. THE THROAT SHALL BE CAST INTEGRALLY WITH THE GUTTER.
8. PAYMENT FOR CURB AND/OR CURB AND GUTTER WITHIN THE LIMITS OF DROP INLETS AND DROP INLET EXTENSIONS SHALL BE CONSIDERED INCLUDED IN PAYMENT MADE FOR DROP INLETS AND/OR DROP INLET EXTENSIONS.
9. PIPES MAY ENTER DROP INLET FROM ANY ANGLE OR ELEVATION AS MAY BE APPROVED BY THE ENGINEER.
10. APPROPRIATE SIZE TYPE C DROP INLETS MAY BE SUBSTITUTED FOR TYPE MO DROP INLETS AS APPROVED BY THE ENGINEER. PAYMENT TO BE AS DROP INLET (TYPE MO).
11. DURING CONSTRUCTION OF THE ROADWAY THE CONTRACTOR SHALL MAINTAIN DRAINAGE INTO OR AROUND THE DROP INLET AS APPROVED BY THE ENGINEER.
12. 4"x2" NOTCH SHALL BE FORMED IN ALL DROP INLETS TO SUPPORT SIDEWALK CONSTRUCTION. REFER TO DETAIL OF NOTCH FOR SIDEWALKS.
13. DIMENSIONS SHOWN FOR RING AND COVER ARE TYPICAL. THE CONTRACTOR MAY SUBSTITUTE SIMILAR CASTINGS WITH THE APPROVAL OF THE ENGINEER. REQUESTING APPROVAL FOR CASTING DESIGNS MAY BE MADE BY REFERRING TO PREVIOUSLY APPROVED DRAWINGS.

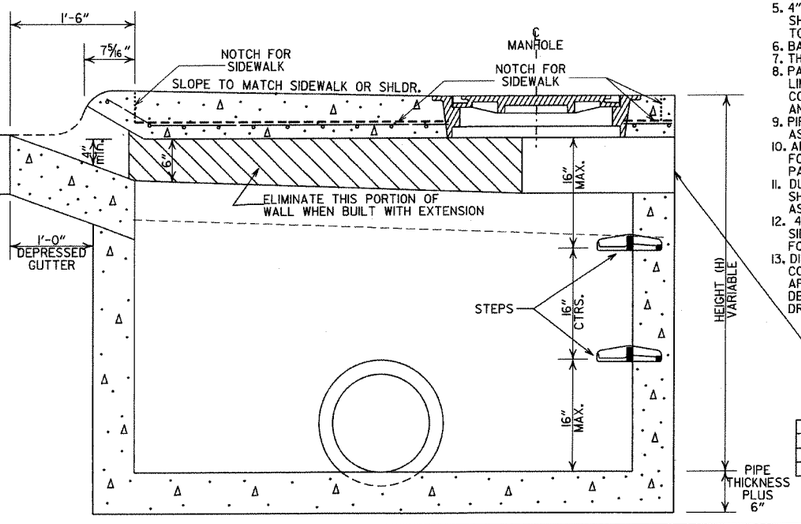

SECTION A-A

DIA. OF D.I.	DIA. OF OUTLET PIPE	MINIMUM WALL THICKNESS CAST IN PLACE	MINIMUM WALL THICKNESS PRECAST
4' I.D.	12" THRU 27"	6"	5"
5' I.D.	30" THRU 42"	8"	6"
6' I.D.	48" THRU 54"	8"	7"

DATE	REVISIONS	DATE FILMED
8-22-02	ADDED PAY LIMIT CURB NOTES TO SECTIONS A-A & B-B	
11-16-01	ADDED NOTE 13	
1-12-00	REVISED HEAVY DUTY RING & COVER	
5-13-99	ADDED NOTCH DETAIL FOR SIDEWALKS	
7-02-98	REP. NOTE 8, REM. PLAN DET., REV. PICTURE FOR NEW RING & COVER, ADDED HEAVY DUTY RING & COVER AND DETAIL OF STEP FOR DROP INLET	
4-26-96	ADDED NOTE 11, ADJ. OPENING DIMENSION	
10-12-95	CORRECTED #6 BAR SPACING	
7-20-95	CORRECTED DIAMETER OF D.I. IN BOX	
2-2-95	TYPE C TO MO (OPEN BACK DETAIL)	
11-1-94	REVISED GENERAL NOTES	11-3-94
4-1-93	REV. BACK OPEN DETAIL & NOTE	4-1-93
8-15-91	REVISED NOTES 1,12 & ADDED BK.OPEN DETAIL	8-15-91
11-30-89	ADDED NOTE NO. 12	11-30-89
5-23-89	ADDED NOTE & MINIMUM WALL THICKNESS	513-5-23-89
7-15-88	ADDED EXTEND NOTE TO SECTION A-A	639-7-15-88
1-14-87	MODIFIED WALL THICKNESS	783-1-14-87
6-12-87	ISSUED	4-6-12-87

ARKANSAS STATE HIGHWAY COMMISSION

DETAILS OF DROP INLET (TYPE MO)

STANDARD DRAWING FPC-9M

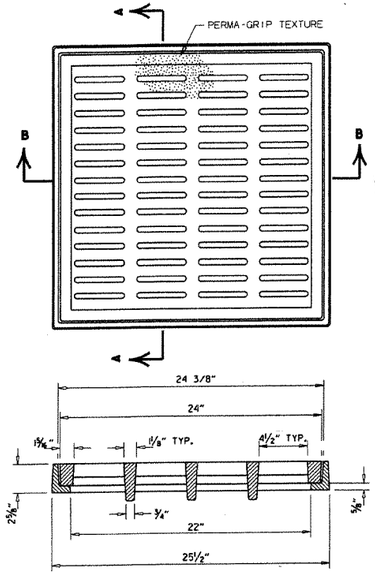

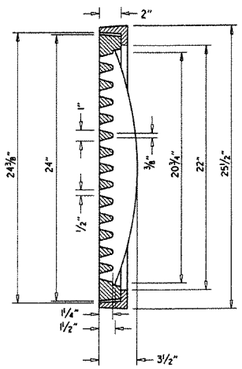

SECTION A-A

SECTION B-B

DETAILS OF PEDESTRIAN GRATE AND FRAME

GENERAL NOTES (PEDESTRIAN GRATE & FRAME)

1. THE PEDESTRIAN GRATE SHALL BE ORIENTED IN THE TOP OF THE DROP INLET SO THAT THE ½" OPENINGS ARE PERPENDICULAR TO THE PATH OF PEDESTRIAN TRAVEL.
2. THE PEDESTRIAN GRATE AND FRAME SHALL BE CONSTRUCTED OF CAST IRON AND SHALL CONFORM TO THE REQUIREMENTS OF THE STANDARD SPECIFICATIONS FOR GRAY IRON CASTINGS AASHTO M 105, CLASS 35B, & AASHTO M 306.
3. THE GRATE AND FRAME SHALL NOT BE PAINTED.
4. THE GRATE AND FRAME SHALL BE INSTALLED IN THE DROP INLET IN THE ASSEMBLED POSITION.
5. THE APPROXIMATE WEIGHT OF THE GRATE AND FRAME SHALL BE 211LBS.
6. THE MINIMUM WATERWAY OPENING SHALL BE 122 SQ. IN.

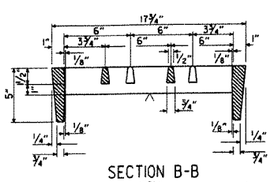

SECTION B-B

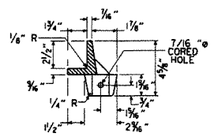

SECTION THRU FRAME

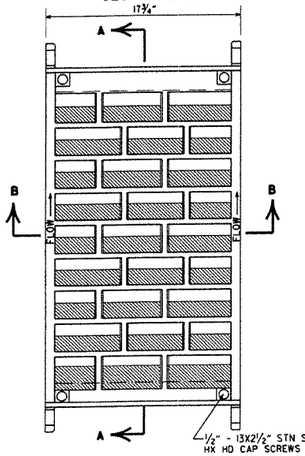

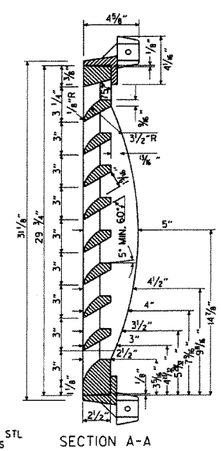

SECTION A-A

DETAILS OF RIBBED VANE GRATE AND FRAME

GENERAL NOTES (RIBBED VANE GRATE & FRAME)

1. RIBBED VANE GRATE AND FRAME SHALL BE CONSTRUCTED OF CAST IRON AND SHALL CONFORM TO THE REQUIREMENTS OF THE STANDARD SPECIFICATIONS FOR GRAY IRON CASTINGS AASHTO M 105, CLASS 35B, & AASHTO M 306.
2. GRATE AND FRAME SHALL NOT BE PAINTED.
3. GRATE AND FRAME SHALL BE INSTALLED IN DROP INLET IN ASSEMBLED POSITION.
4. APPROXIMATE WEIGHT OF GRATE SHALL BE 170 LBS.

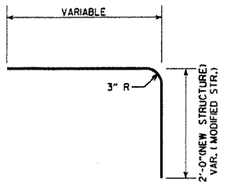

DETAIL OF BENT "b" BAR

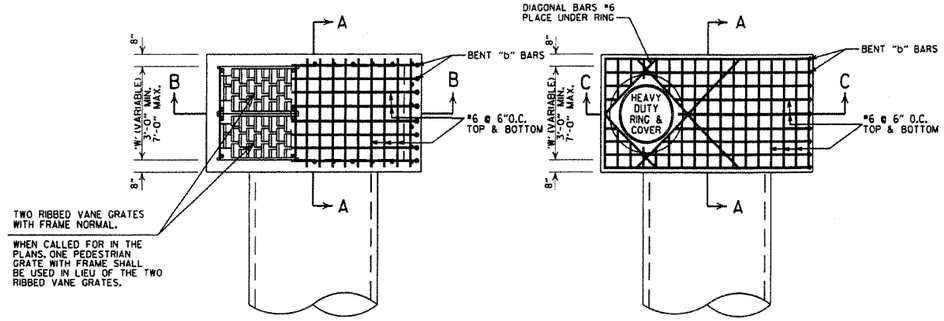

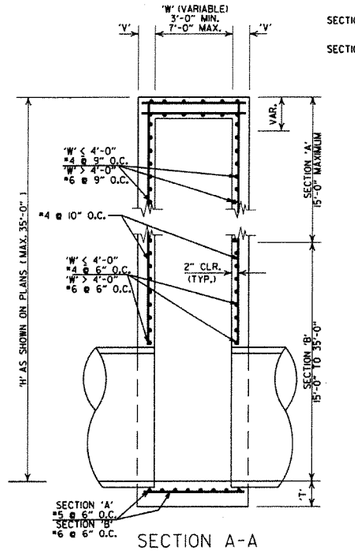

SECTION A-A

SECTION 'A' 'V' = 8"
SECTION 'B' (W≤4'-0") 'V' = 8"
SECTION 'B' (W>4'-0") 'V' = 10"

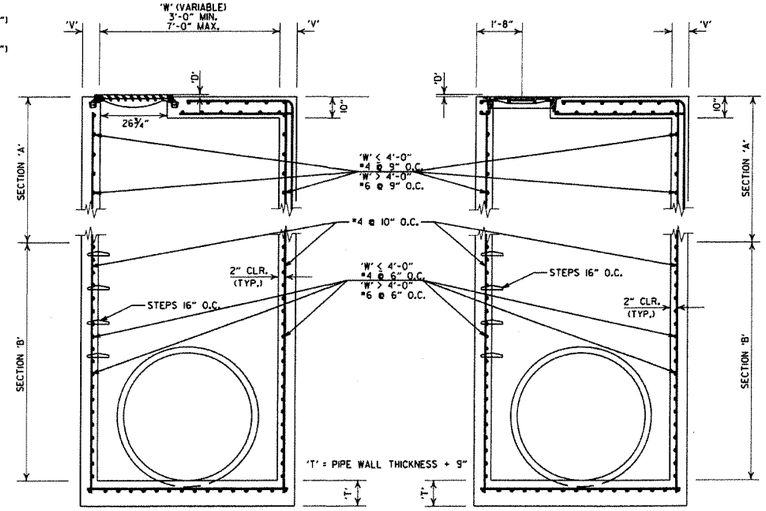

SECTION B-B

SECTION C-C

DETAILS OF DROP INLET (TYPE ST)

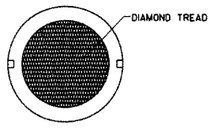

COVER FACE

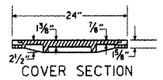

COVER SECTION

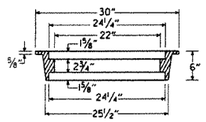

RING SECTION

HEAVY DUTY RING & COVER

APPROXIMATE TOTAL WEIGHT = 333 LBS.

DETAILS OF JUNCTION BOX (TYPE ST)

GENERAL NOTES (TYPE ST DROP INLET & JUNCTION BOX)

1. THE 'D' DIMENSION SHALL MATCH THE FINAL LIFT OF ACHM SURFACE COURSE SHOWN IN THE PLANS WHEN ASPHALT PAVING SURROUNDS THE GRATE OR RING COVER, AND SHALL BE 0" AT OTHER INSTALLATIONS.
2. THE STEPS SHALL BE OMITTED WHERE 'H' IS LESS THAN 4'-0".
3. ALL EXPOSED CORNERS ARE TO HAVE A ¾" CHAMFER.

GENERAL NOTES (HEAVY DUTY RING & COVER):

1. HEAVY DUTY RING AND COVER SHALL BE CONSTRUCTED OF CAST IRON AND SHALL CONFORM TO THE REQUIREMENTS OF THE STANDARD SPECIFICATIONS FOR GRAY IRON CASTINGS AASHTO M 105, CLASS 35B, & AASHTO M 306.
2. HEAVY DUTY RING AND COVER SHALL NOT BE PAINTED.
3. HEAVY DUTY RING SHALL ALWAYS BE INSTALLED WITH FLANGE ON TOP.
4. DIMENSIONS SHOWN FOR RING AND COVER ARE TYPICAL. THE CONTRACTOR MAY SUBSTITUTE SIMILAR CASTINGS WITH THE APPROVAL OF THE ENGINEER. REQUESTING APPROVAL FOR CASTING DESIGNS MAY BE MADE BY REFERRING TO PREVIOUSLY APPROVED DRAWINGS.

DATE REVISED	DATE FILMED	DESCRIPTION
7-26-12		REMOVED NOTE 4, REVISED 'T', REVISED BOTTOM SLAB REBAR FOR SECTION 'A', SHOWED REBAR CLEARANCE IN SECTIONS
11-16-01		ADDED NOTE 4
1-12-00		REVISED HEAVY DUTY RING & COVER
5-13-99		ADDED PEDESTRIAN FRAME & GRATE
7-02-98		REMOVED NOTE 5, REV. DIMENSIONS, ADDED HEAVY DUTY RING & COVER ADDED AASHTO REF. REVISED GRATE
10-18-96		REVISED ASTM REF. TO AASHTO
10-1-92		REVISED & REISSUED
8-15-91	8-15-91	REVISED & REISSUED

ARKANSAS STATE HIGHWAY COMMISSION

DETAILS OF DROP INLET & JUNCTION BOX (TYPE ST)

STANDARD DRAWING FPC-9S

PLAN

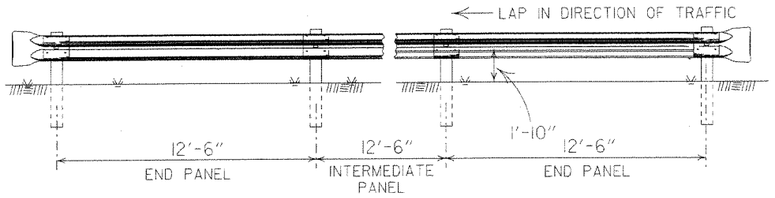

ELEVATION

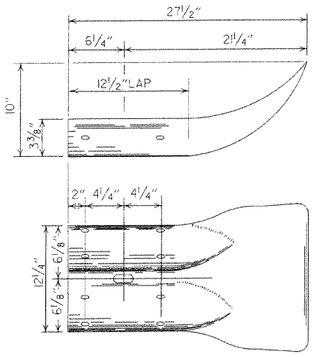

TERMINAL SECTION

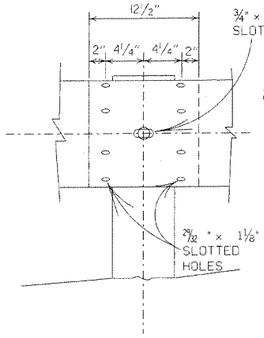

RAIL SPLICE

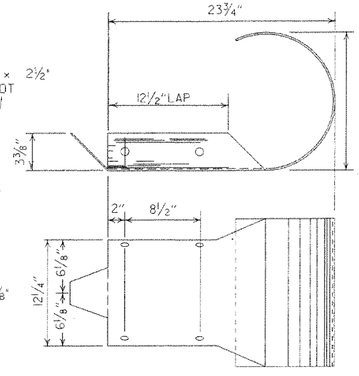

TERMINAL SECTION

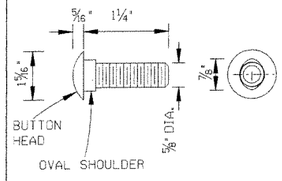

SPLICE BOLT

NOTE: POST BOLT SAME EXCEPT LENGTH.

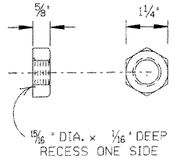

NUT

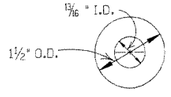

CUT STEEL WASHER

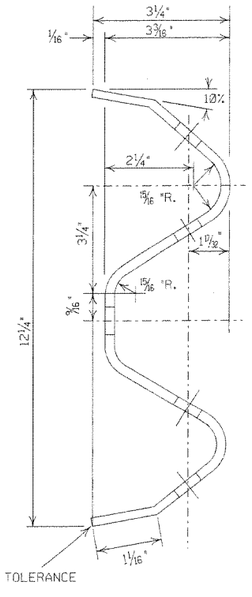

SECTION THRU RAIL

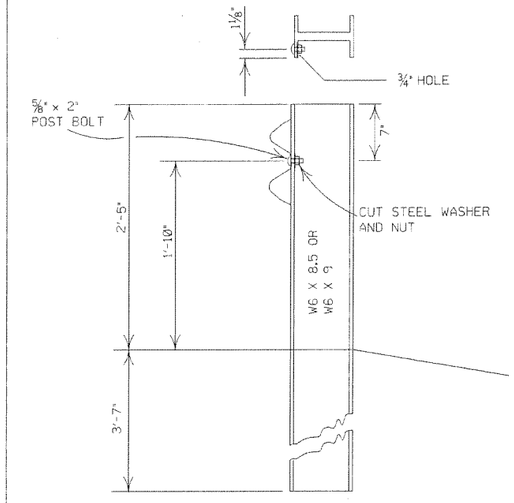

BOLT TO BE ON SIDE AWAY FROM APPROACHING TRAFFIC WHERE FEASIBLE.

STEEL POST

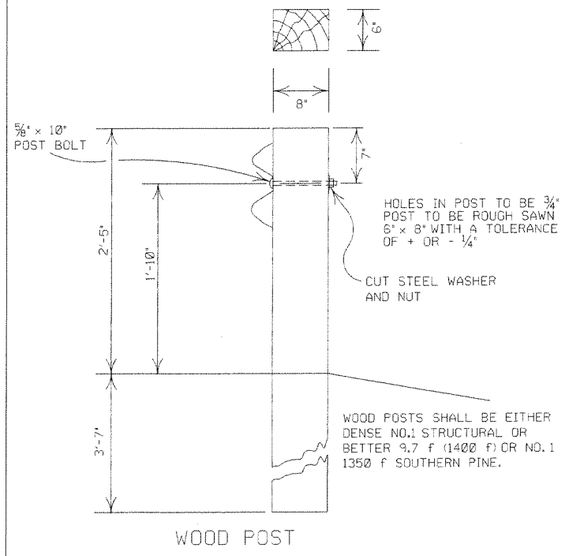

WOOD POST

DETAILS OF POST CONNECTIONS

DATE	REVISION	DATE FILM
7-14-10	RAISED HEIGHT OF GUARD RAIL 1"	
8-22-02	REVISED DIMENSION ON STEEL POST	
11-16-01	REVISED STEEL AND WOOD POST	
8-12-98	REMOVED CONCRETE POST	
10-18-96	CHANGED WOOD POST NOTE	10-18-96
6-2-94	ADDED ALTERNATE STEEL POST SIZE	
8-5-93	REVISED STEEL POSTS SIZE	8-5-93
8-15-91	DELETE STEEL PLATE WASHER & ADDED TYPE C TO TITLE	8-15-91
10-30-87	REMOVED DET. PLCMNT. ON HWY.	555-11-20-87
1-4-83	GRADE FOR WOOD POSTS	679-1-4-83
10-1-77	HARDENED WASHER	922-10-1-72
10-2-72	REVISED & REDRAWN	521-10-2-72

ARKANSAS STATE HIGHWAY COMMISSION

GUARD RAIL DETAILS (TYPE C)

STREET / ROAD BARRICADE OR TEMPORARY INSTALLATION

STANDARD DRAWING GR-7

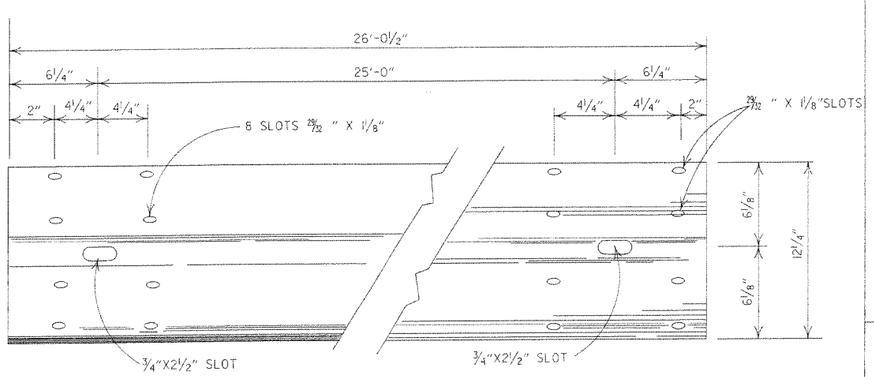

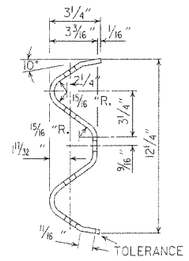

DETAILS OF W-BEAM GUARD RAIL

RAIL SECTION OF CLOSELY SIMILAR DIMENSIONS AND COMPARABLE STRENGTH MAY BE SUBSTITUTED IF APPROVED BY THE ENGINEER.

SPLICE BOLT
POST BOLT - SAME EXCEPT LENGTH

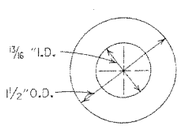

CUT STEEL WASHER

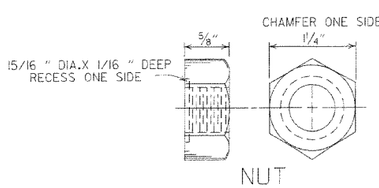

NUT

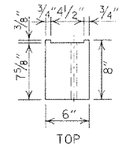

WOOD BLOCKOUT USED WITH WOOD POSTS SHALL BE 6"x8"x1'-2" WITH NO NOTCH REQUIRED.

TOP

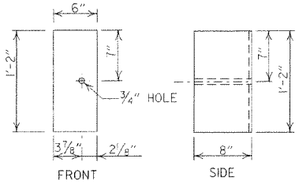

WOOD BLOCKOUT (W-BEAM)

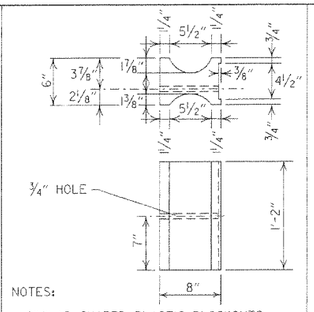

NOTES:

1. SIMILAR SHAPED PLASTIC BLOCKOUTS MAY BE USED AS LONG AS THEY MEET NCHRP-350 TEST LEVEL 3 SPECIFICATIONS OR REQUIREMENTS FOR MANUAL FOR ASSESSING SAFETY HARDWARE (MASH).
2. DIMENSIONS ARE SUBJECT TO MANUFACTURERS TOLERANCES.

PLASTIC BLOCKOUT (W-BEAM)

HOLES IN POSTS AND BLOCKS TO BE 3/4" DIA.

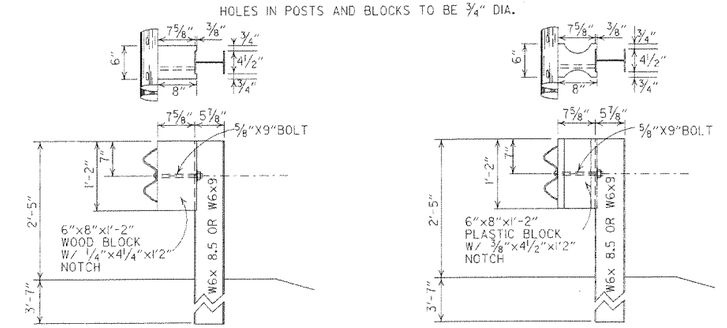

WOOD BLOCKOUT CONNECTIONS

PLASTIC BLOCKOUT CONNECTIONS

DETAILS OF STEEL LINE POST CONNECTIONS (W-BEAM)

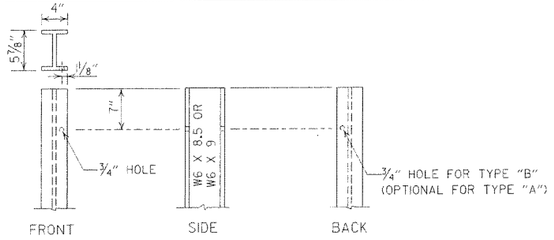

STEEL POST

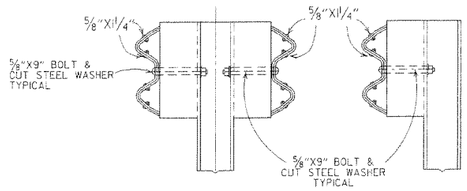

TYPE "B" TYPE "A"

DETAILS OF STEEL LINE POST CONNECTIONS (W-BEAM)

HOLES IN POSTS AND BLOCKS TO BE 3/4" DIA.

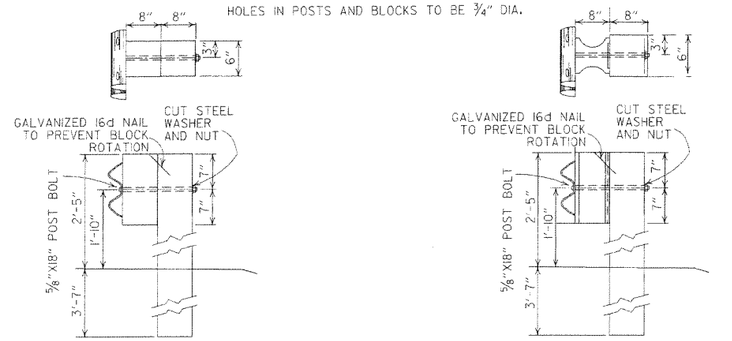

POSTS AND BLOCKS TO BE ROUGH SAWN 6"X8" WITH A TOLERANCE OF + OR - 1/4".

WOOD BLOCKOUT CONNECTIONS

PLASTIC BLOCKOUT CONNECTIONS

DETAILS OF WOOD LINE POST CONNECTIONS (W-BEAM)

-GENERAL NOTES-

ALL BOLTS SHALL BE SUFFICIENT LENGTH TO EXTEND THROUGH THE FULL THICKNESS OF THE NUT AND NO MORE THAN 3/4" BEYOND IT.

WHERE W-BEAM GUARD RAIL CONTINUES, THE INTERMEDIATE SECTIONS SHALL HAVE A POST SPACING OF 6'-3" UNLESS OTHERWISE NOTED.

W-BEAM GUARD RAIL REPRESENTING INTERMEDIATE SECTIONS WILL BE MEASURED ALONG THE ROADWAY FACE FROM CENTERLINE OF POST TO CENTERLINE OF POST.

USE W-BEAM GUARD RAIL COMPONENTS OF SAME MATERIAL FOR ENTIRE JOB. FOR EXTENSIONS OR MODIFICATION OF EXISTING GUARD RAIL, W-BEAM GUARD RAIL COMPONENTS OF THE SAME TYPE AS THOSE EXISTING SHALL BE USED.

ANY BACKFILLING UNDER OR AROUND POST SHALL BE DAMP SAND THOROUGHLY TAMPED IN PLACE.

WOOD POSTS & WOOD BLOCKS SHALL BE EITHER DENSE NO. 1 STRUCTURAL OR BETTER 9.7# (1400 f) OR NO. 1 1350 f SOUTHERN PINE.

CONTRACTOR SHALL HAVE THE OPTION OF USING WOOD BLOCKOUTS FOR W-BEAM GUARD RAIL OR PLASTIC BLOCKOUTS, AS LONG AS BLOCKOUT USED MEETS NCHRP-350 TEST LEVEL 3 SPECIFICATIONS OR REQUIREMENTS FOR MANUAL FOR ASSESSING SAFETY HARDWARE (MASH) FOR W-BEAM GUARD RAIL.

DATE	REVISION	DATE FILM
7-14-10	RAISED HEIGHT OF GUARD RAIL 1"	
10-15-09	ADDED REFERENCE TO MASH	
4-10-03	REVISED GENERAL NOTES	
8-22-02	REVISED DIMENSION ON WOOD & PLASTIC BLOCKOUT CONNECTIONS & ON STEEL POST	
11-16-01	REVISED WOOD BLOCKOUT & DETAILS OF WOOD LINE POST CONNECTIONS	
3-30-00	REMOVED GUARD RAIL AT BRIDGE ENDS	
1-12-00	ADDED PLASTIC BLOCKOUT	
8-12-98	REV. BLOCKOUTS TO WOOD, DELETED CONC. POST & REV. GENERAL NOTE, DELETED DET. OF GUARD RAIL REPLACE. BEHIND CURB & DET. OF POST PLACE. IN SOLID ROCK, & ADDED DETAILS OF STEEL LINE POST CONN. REMOVED BACK-UP PLATE, REVISED HOLES IN STEEL POLES	
4-3-97	REMOVED "LAP IN DIRECTION OF TRAFFIC" NOTE & PLACED ARROWS ON WASHERS	
10-18-96	REVISED WOOD POST NOTE	
6-2-94	ADDED ALT. STEEL POST SIZE	
8-5-93	REVISED STEEL POST SIZE	8-5-93
10-1-92	REDRAWN & REVISED	10-1-92
8-15-91	REVISED WASHER NOTE	8-15-91
8-2-90	REV. GEN. NOTE & DEPHT OF ANC. POST IN ROCK	8-2-90
7-15-88	REVISED SECTION 3 & GENERAL NOTES	
5-4-88	REV. ANCHOR POST, ELEV. NOTES & POST IN ROCK	780-3-4-88
10-30-87	REVISED WOOD LINE POST DETAIL	546-10-30-87
10-9-87	REDRAWN & REVISED	802-10-9-87

ARKANSAS STATE HIGHWAY COMMISSION

GUARD RAIL DETAILS

STANDARD DRAWING GR-8

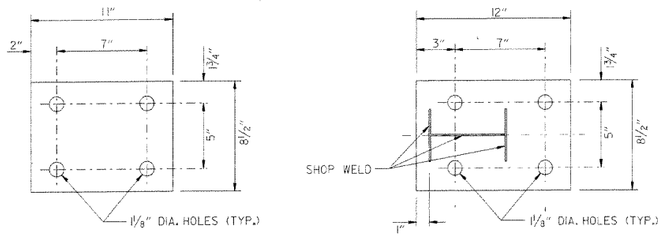

WASHER PLATE

BASE PLATE

Note: Bolts, nuts, washers and plates shall be galvanized in accordance with Section 807 of the Standard Specifications.

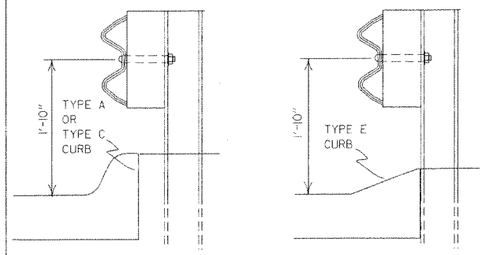

DETAIL OF GUARD RAIL PLACEMENT BEHIND CURB (W-BEAM)

FOR DESIGN SPEEDS OF 50 MPH OR LESS ALL CURB FACES, AS SHOWN ON STD. DRWG. CG-1, MAY BE USED. FOR DESIGN SPEEDS OF 55 MPH OR MORE TYPE "E" CURB FACE SHALL BE USED.

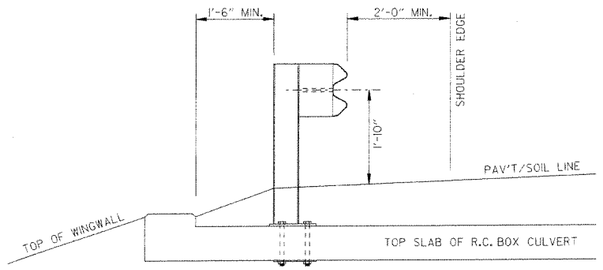

SECTION A-A

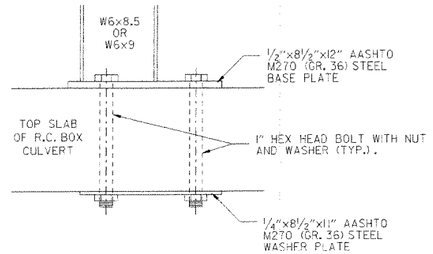

DETAIL OF CONNECTION

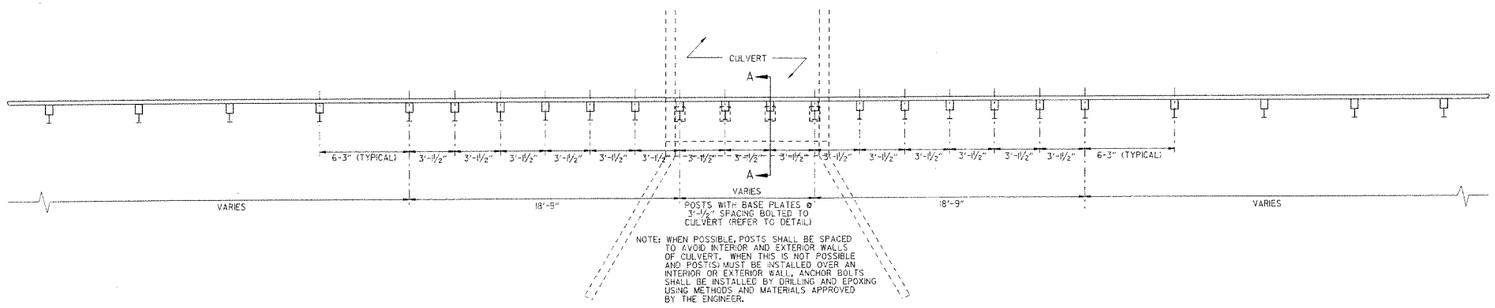

PLAN LAYOUT OF TYPE A GUARD RAIL AT LOW-FILL CULVERTS

NOTE: THIS DETAIL IS TO BE USED ONLY WHEN THE COVER OVER THE CULVERT DOES NOT PERMIT FULL EMBEDMENT OF GUARD RAIL POSTS AS SHOWN ON STD. DWG. GR-8.

Case 1

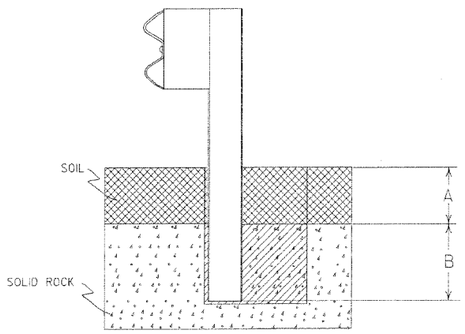

Case 2

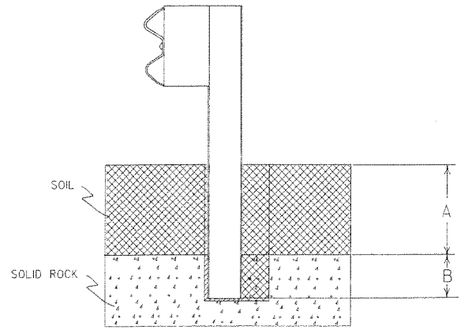

Plan View Steel Posts

Either hole configuration acceptable

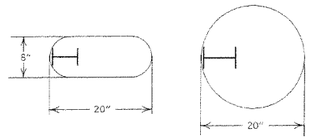

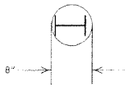

Plan View Wood Posts

Either hole configuration acceptable

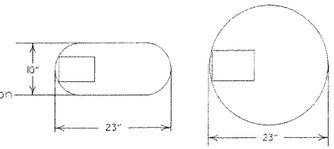

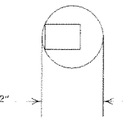

Notes: For overlying soil depths (A) ranging from 0 to 18", the depth of required drilling (B) is equal to 24".

Zone A:
Backfill according to Section 617.03(a).

Zone B:
Backfill hole in 6" lifts with material meeting the requirements of Section 802.02(c) - Alternate gradation. Compact to 95% maximum dry density per ASTM D-698.

Notes: For overlying soil depths (A) ranging from 18" to 44", the depth of required drilling (B) is equal to either 12" or 44" minus the depth of soil whichever is less.

Zone A & B:
Backfill according to Section 617.03(a).

DETAIL OF POST PLACEMENT IN SOLID ROCK (W-BEAM)

DATE	REVISION	DATE FILM
7-14-10	RAISED HEIGHT OF GUARD RAIL 1"	
4-12-07	REVISED DETAIL OF GUARD RAIL PLACEMENT BEHIND CURB	
11-10-05	ADDED GUARD RAIL PLACEMENT BEHIND CURB; REVISED DETAIL OF CONNECTION	
11-18-04	REVISED POST PLACEMENT IN ROCK & CULVERT CONNECTION DETAILS. ADDED DETAIL FOR GUARD RAIL PLACEMENT AT LOW-FILL CULVERTS	
3-30-00	REMOVED CONCRETE INSERT ANCHOR	
8-12-98	CHANGED STEEL SPACER BLOCK TO WOOD BLOCKOUT, ADD. DET. OF GUARD RAIL CONNECTION TO R.C. BOX CULV'T. DELETED DET. OF STEEL LINE POST CONN.& ADDED DET. OF GUARD RAIL PLACE. BEHIND CURB & DET. OF POST PLACE. IN SOLID ROCK	
4-3-96	PLACED ARROWS AT CUT STEEL WASHERS	4-3-96
10-18-96	REV. ASTM REF. TO AASHTO	
11-22-95	ADDED OPTIONAL HOLES	
6-2-94	REVISED ALTERNATE POST SIZE	
8-6-93	REVISED STEEL POST SIZE	
10-1-92	REDRAWN & REVISED	10-1-92
8-2-90	DEL. WASHER ON ANCHOR ASSEMBLY	8-2-90
7-15-88	CONFORMED TO 1988 SPECS	
3-4-88	REVISED ANCHOR NOTE	
10-30-87	REVISED ANCHOR ASSEMBLY	712-10-30-87
10-30-87	REVISED PLACEMENT BEHIND CURB	547-10-30-87
10-9-87	REDRAWN & REVISED	803-10-9-87

ARKANSAS STATE HIGHWAY COMMISSION

GUARD RAIL DETAILS

STANDARD DRAWING GR-8A

NOTE: GUARD RAIL WITH GUARD RAIL TERMINAL (TYPE I) TO BE INSTALLED ONLY AT LOCATIONS SHOWN ON PLANS.

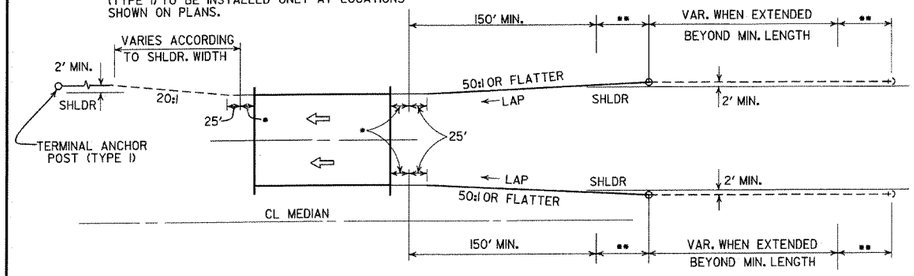

ONE-WAY TRAFFIC

••• LAP OF GUARD RAIL SHALL BE AS SHOWN FOR A DISTANCE OF UP TO 200', CHANGE TO LAP IN DIRECTION OF TRAVEL.

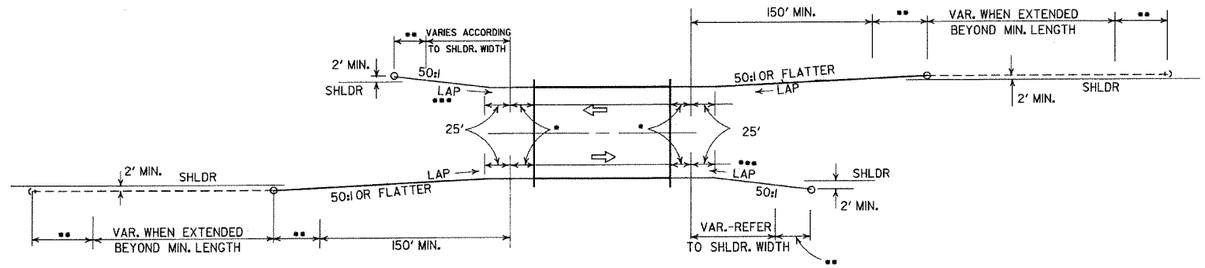

TWO-WAY TRAFFIC

METHODS OF INSTALLATION OF GUARD RAIL AT LESS THAN FULL SHOULDER WIDTH BRIDGES USING GUARD RAIL TERMINAL (TYPE 2)

••• LAP OF GUARD RAIL SHALL BE AS SHOWN FOR A DISTANCE OF UP TO 200', CHANGE TO LAP IN DIRECTION OF TRAVEL.

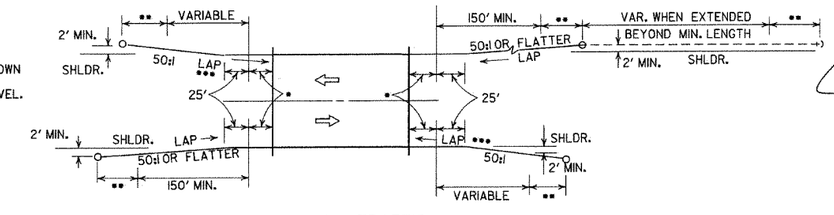

TWO-WAY TRAFFIC

NOTE: GUARD RAIL WITH GUARD RAIL TERMINAL (TYPE I) TO BE INSTALLED ONLY AT LOCATIONS SHOWN ON PLANS.

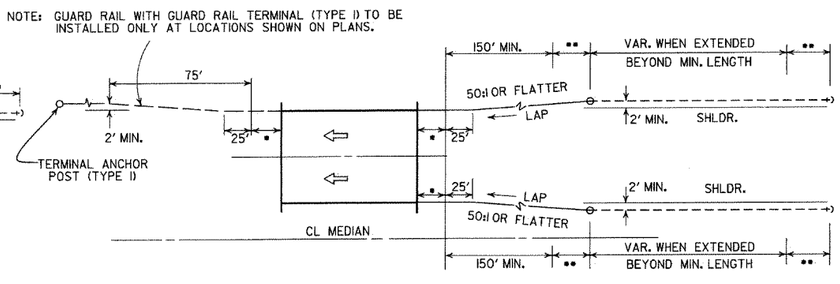

ONE-WAY TRAFFIC

METHOD OF INSTALLATION OF GUARD RAIL AT FULL SHOULDER WIDTH BRIDGES USING GUARD RAIL TERMINAL (TYPE 2)

••• LAP OF GUARD RAIL SHALL BE AS SHOWN FOR A DISTANCE OF UP TO 200', CHANGE TO LAP IN DIRECTION OF TRAVEL.

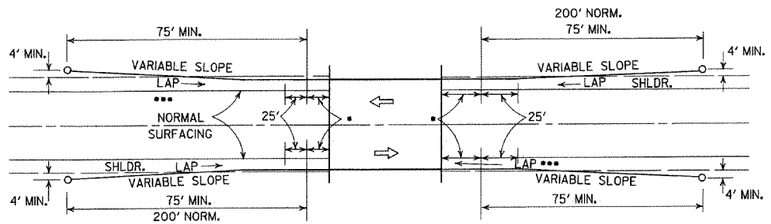

METHOD OF INSTALLATION OF GUARD RAIL USING GUARD RAIL TERMINAL (TYPE I) (FULL SHOULDER WIDTH OR LESS BRIDGES)

LEGEND

- • THRIE BEAM GUARD RAIL TERMINAL
- •• GUARD RAIL TERMINAL (TYPE 2)

DATE	REVISION	DATE FILM
4-17-08	REVISED LAYOUTS	
11-10-05	REMOVED GUARD RAIL NOTES AND DETAILS	
11-16-01	DELETED NOTE-METHOD OF INSTALLATION OF GUARD RAIL USING GUARD RAIL TERM. (TY. I)	
1-12-00	ADDED CONSTRUCTION NOTE	1-12-00
6-26-97	REVISED LAYOUT	
10-1-92	REDRAWN & REVISED	10-1-92
	ADDED NOTE	
10-9-87	REDRAWN & REVISED	

ARKANSAS STATE HIGHWAY COMMISSION

GUARD RAIL DETAILS

STANDARD DRAWING GR-9

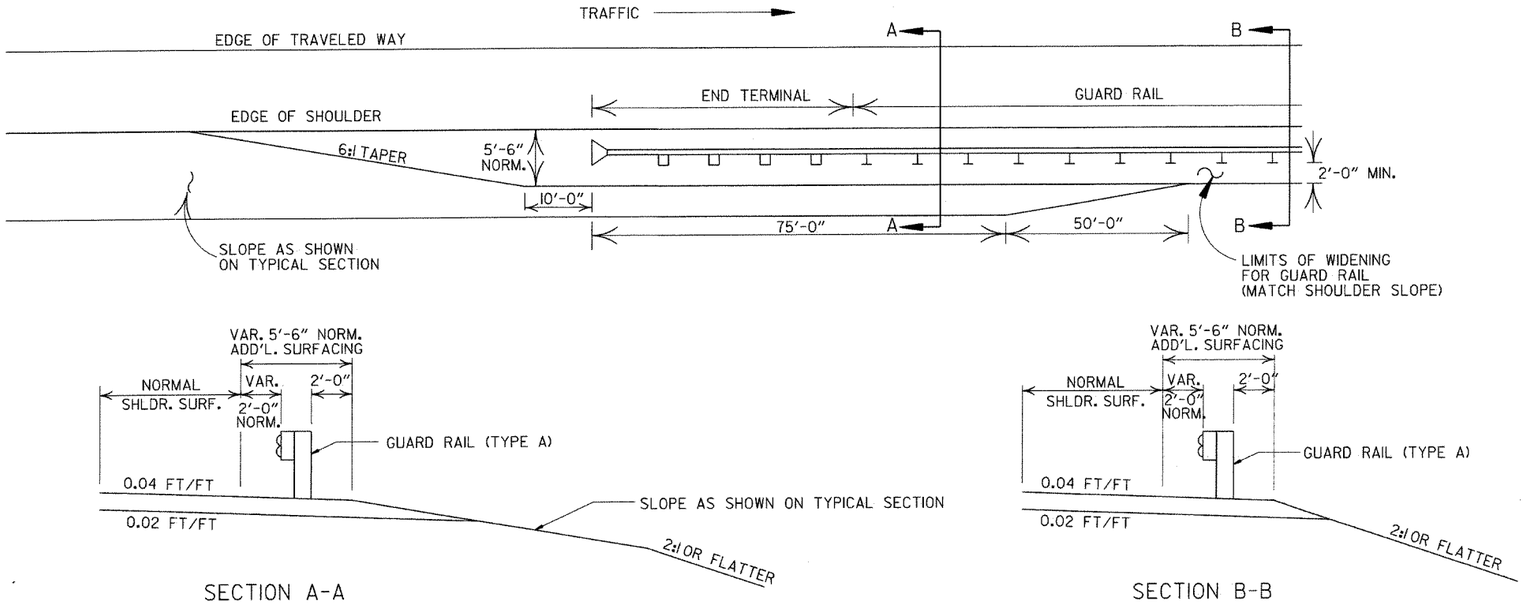

DETAILS OF WIDENING FOR GUARD RAIL

NOTE: NORMAL SECTION TO BE WIDENED APPROX. 5'-6" EACH SIDE TO SUPPORT GUARD RAIL.

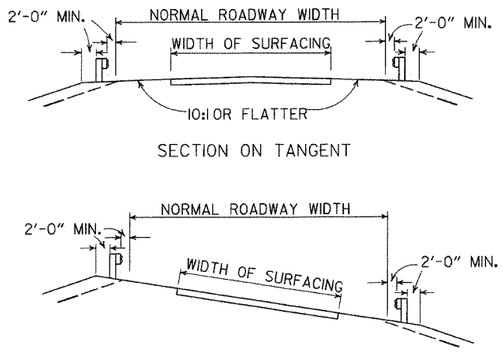

DETAILS SHOWING POSITION OF GUARD RAIL ON HIGHWAY

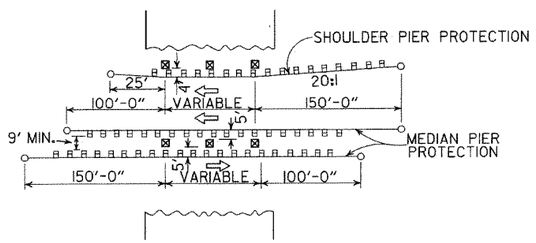

METHOD OF INSTALLATION OF GUARD RAIL AT FIXED OBSTACLE

DATE	REVISION	DATE FILM
4-17-08	MINOR REVISION	
11-10-05	DRAWN	

ARKANSAS STATE HIGHWAY COMMISSION

GUARD RAIL DETAILS

STANDARD DRAWING GR-9A

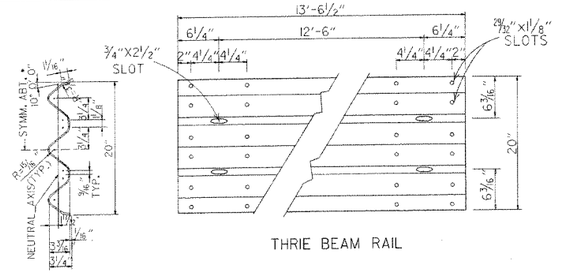

THRIE BEAM RAIL

SECTION THRU
THRIE BEAM RAIL

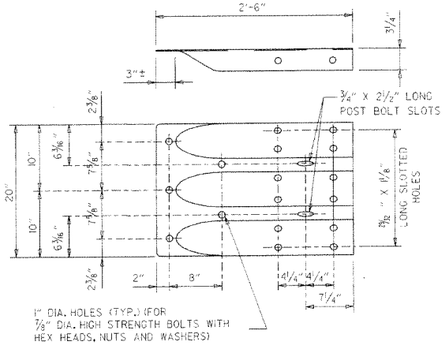

1" DIA. HOLES (TYP.) FOR 7/8" DIA. HIGH STRENGTH BOLTS WITH HEX HEADS, NUTS AND WASHERS)

SPECIAL END SHOE

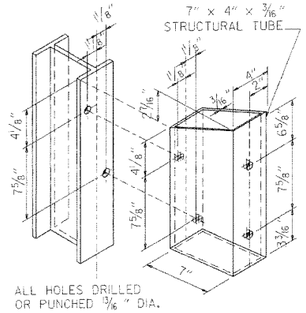

ALL HOLES DRILLED OR PUNCHED ⅜" DIA.

STRUCTURAL STEEL TUBING BLOCKOUT DETAIL

ATTACH BLOCKOUT TO POST USING ⅝" DIA. HEX HEAD BOLTS WITH 1½" O.D. CUT STEEL WASHERS AND NUT.

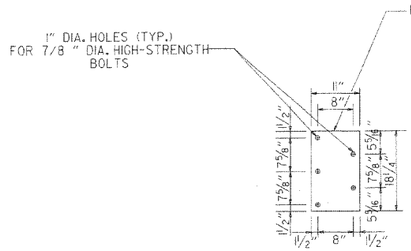

CONNECTOR PLATE

NOTE:
SEE STANDARD DRAWING GR-10A FOR GUARD RAIL POST EMBEDMENT DEPTHS.

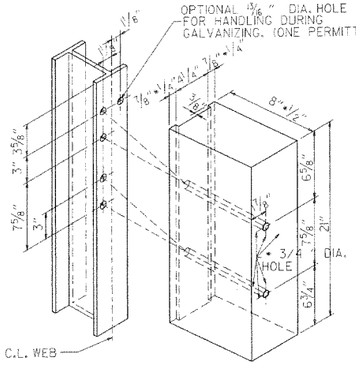

ALL HOLES 13/16" DIAMETER EXCEPT AS NOTED

HOLE PUNCHING DETAIL
FOR STEEL POST & WOOD
OR PLASTIC BLOCKOUTS

NOTE: BLOCKS SHALL BE THE SAME TYPE THROUGHOUT THE PROJECT LIMITS.

CONNECTOR PLATE SHALL BE AASHTO M270, GR. 36 AND SHALL BE GALVANIZED AFTER FABRICATION. GALVANIZING SHALL CONFORM TO SUBSECTION 807.19 OF THE STANDARD SPECIFICATIONS. CONNECTOR PLATE TO BE BOLTED TO SPECIAL END SHOE USING ⅞" DIA. HIGH STRENGTH BOLTS, WITH THE HEADS PLACED ON THE TRAFFIC FACE. WASHERS SHALL BE USED UNDER THE HEAD AND NUT. BOLTS, NUTS AND WASHERS SHALL BE GALVANIZED AND SHALL CONFORM TO SUBSECTION 807.06.

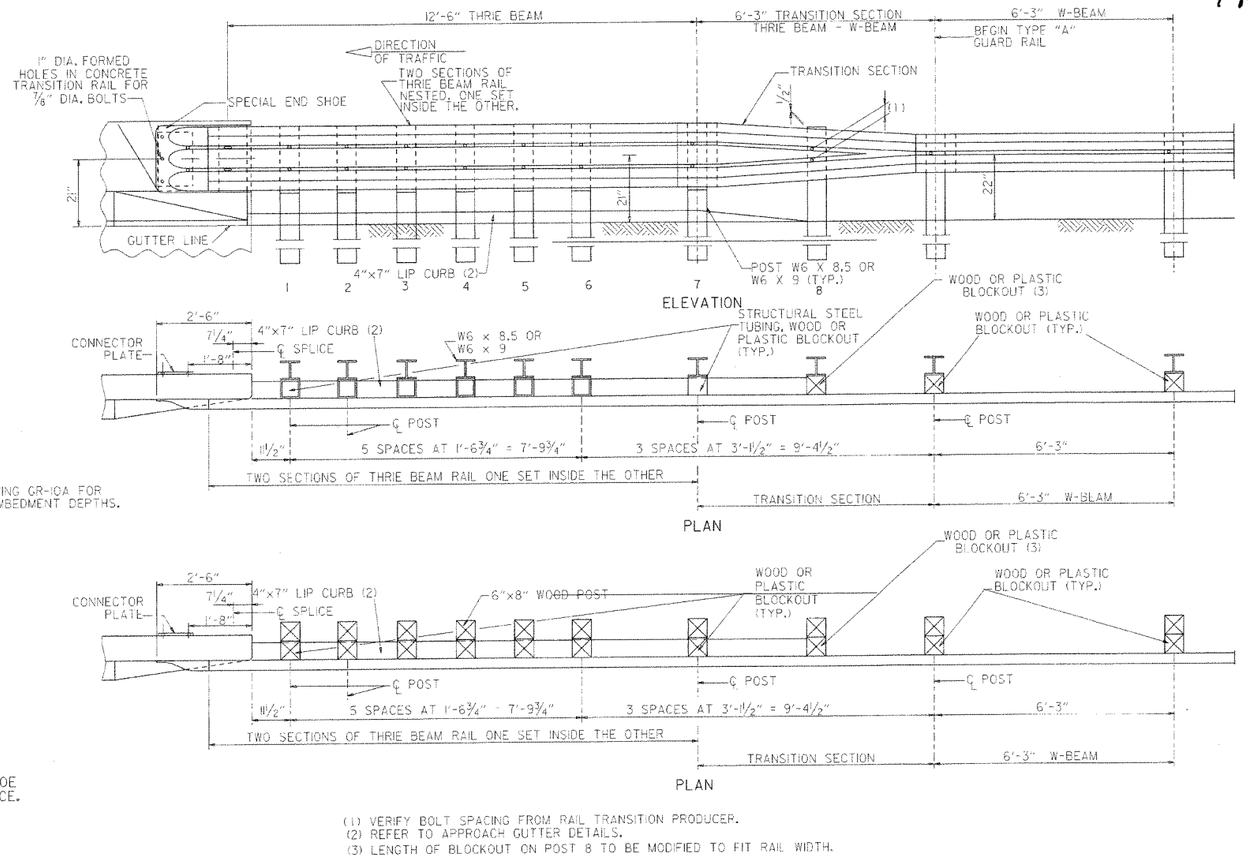

(1) VERIFY BOLT SPACING FROM RAIL TRANSITION PRODUCER.
(2) REFER TO APPROACH GUTTER DETAILS.
(3) LENGTH OF BLOCKOUT ON POST 8 TO BE MODIFIED TO FIT RAIL WIDTH.

THRIE BEAM GUARD RAIL CONNECTION AT BRIDGE ENDS

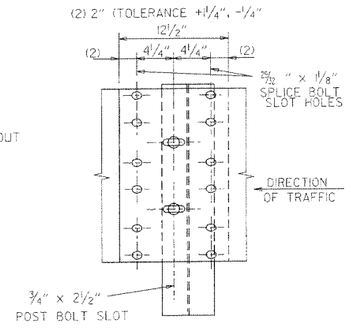

THRIE BEAM RAIL
SPLICE AT POST

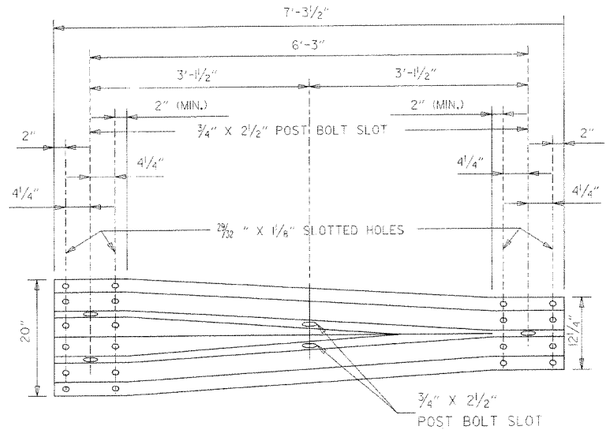

TRANSITION SECTION

GENERAL NOTES:

THE THRIE BEAM RAIL, SPECIAL END SHOE, AND THE TRANSITION SECTION SHALL BE MADE OF STEEL AND SHALL BE 12 GAGE. ZINC COATING SHALL BE TYPE I.

RAIL POSTS SHALL BE SET PERPENDICULAR TO THE ROADWAY PROFILE GRADE AND VERTICALLY IN CROSS SECTION.

ALL BOLTS SHALL BE SUFFICIENT LENGTH TO EXTEND THROUGH THE FULL THICKNESS OF THE NUT AND NO MORE THAN ¾" BEYOND IT.

ALL LAP SPLICES, INCLUDING SPECIAL END SHOES, SHALL BE MADE IN THE DIRECTION SHOWN ON STANDARD DRAWINGS GR-9 & GR-11.

WOOD POSTS & WOOD BLOCKS SHALL BE EITHER DENSE NO. 1 STRUCTURAL OR BETTER 9.7# (1400 f) OR NO. 1 1350 f SOUTHERN PINE.

REFER TO STD. DRWG. GR-10A FOR POST DETAILS.

USE THRIE BEAM GUARD RAIL COMPONENTS OF SAME MATERIAL FOR ENTIRE JOB.

THRIE BEAM POSTS SHALL BE SAME MATERIAL AS W-BEAM POSTS FOR ENTIRE JOB.

DATE	REVISION	DATE FILM
7-14-10	RAISED HEIGHT OF W-BEAM 1"	
11-29-07	ADDED PLASTIC BLOCKOUTS	
11-10-05	ADDED NOTE FOR ATTACHING STEEL BLOCKOUT	
11-18-04	REVISED GENERAL NOTES	
10-9-03	REVISED GENERAL NOTES	
4-10-03	REVISED GENERAL NOTES	
8-22-02	REVISED NOTE (2)	
6-29-00	MOVED DIMENSION LINES	
5-18-00	ADDED NOTE	
3-30-00	DRAWN & ISSUED	

ARKANSAS STATE HIGHWAY COMMISSION

GUARD RAIL DETAILS

STANDARD DRAWING GR-10

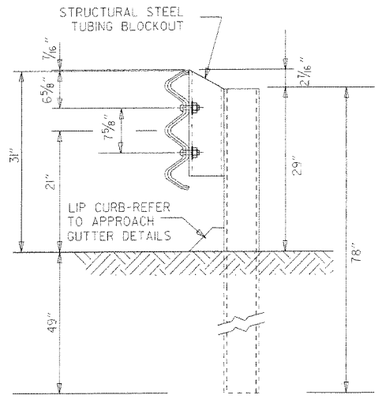

THRIE BEAM RAIL WITH STEEL TUBING BLOCKOUT
AND STEEL POST
POSTS 1-7

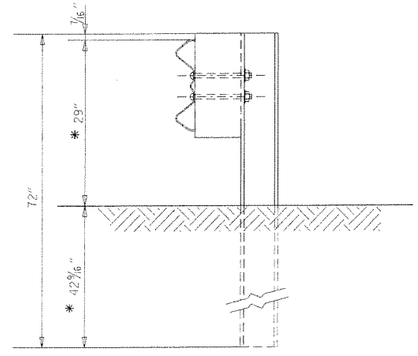

W-BEAM TO THRIE BEAM TRANSITION RAIL
WITH WOOD OR PLASTIC BLOCKOUT AND STEEL POST
POST 8

* NOTE:
THESE DIMENSIONS WILL NEED TO BE ADJUSTED IN THE FIELD TO MAKE THE TRANSITION FROM 21" MID POINT OF THRIE BEAM TO 22" MID POINT OF W-BEAM.

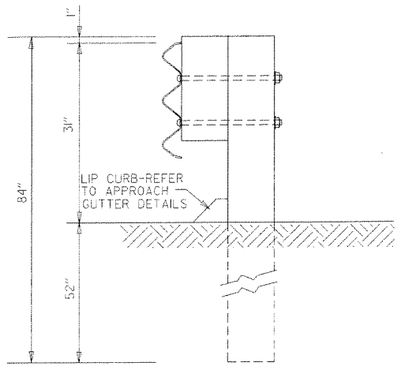

THRIE BEAM RAIL
WITH WOOD OR PLASTIC
BLOCKOUTS & WOOD POSTS
POSTS 1-6

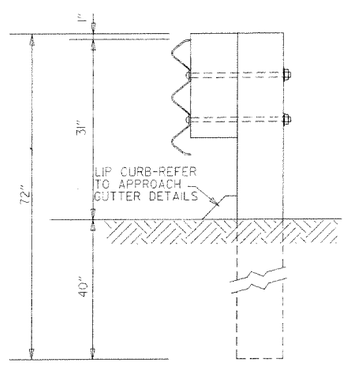

THRIE BEAM RAIL
WITH WOOD OR PLASTIC
BLOCKOUT & WOOD POST
POST 7

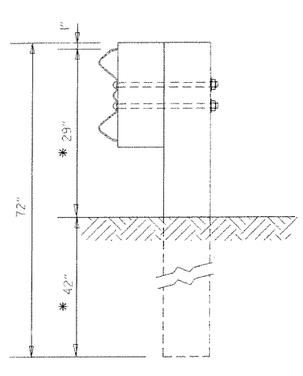

W-BEAM TO THRIE BEAM
TRANSITION RAIL WITH WOOD OR
PLASTIC BLOCKOUT & WOOD POST
POST 8

GENERAL NOTES:

RAIL POSTS SHALL BE SET PERPENDICULAR TO THE ROADWAY PROFILE GRADE AND VERTICALLY IN CROSS SECTION.

WOOD POSTS & WOOD BLOCKS SHALL BE EITHER DENSE NO. 1 STRUCTURAL OR BETTER 9.7f (1400 f) OR NO. 1 (1350 f SOUTHERN PINE.

DATE	REVISION	DATE FILM
7-14-10	REVISED POST 8 DIMENSIONS	
11-29-07	ADDED PLASTIC BLOCKOUTS	
8-22-02	REVISED LIP CURB NOTE	
3-30-00	DRAWN & ISSUED	

ARKANSAS STATE HIGHWAY COMMISSION

GUARD RAIL DETAILS

STANDARD DRAWING GR-10A

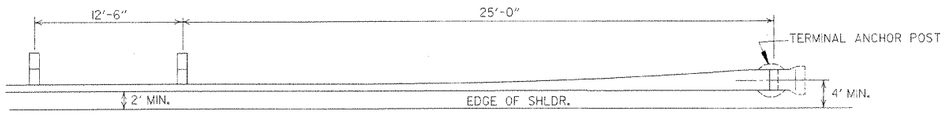

PLAN - GUARD RAIL TERMINAL (TYPE I)

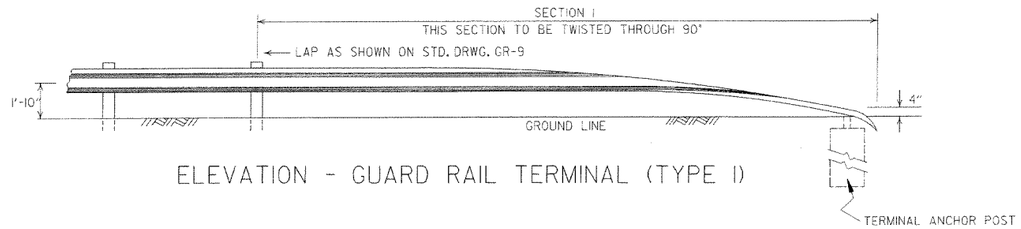

ELEVATION - GUARD RAIL TERMINAL (TYPE I)

NOTE:
SECTIONS 1 AND 2 OF GUARD RAIL TERMINAL SHALL BE PAID FOR AT THE PRICE BID PER LINEAR FOOT OF THE TYPE OF GUARD RAIL SPECIFIED.

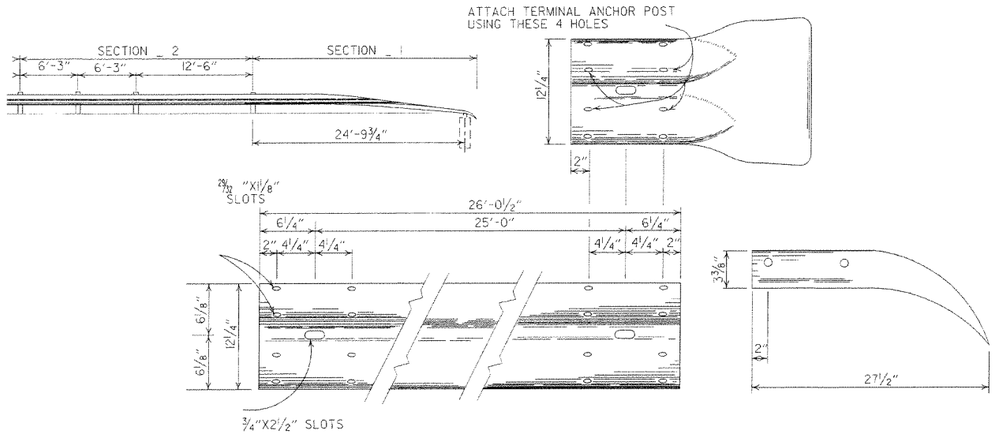

SECTION 1

TERMINAL SECTION

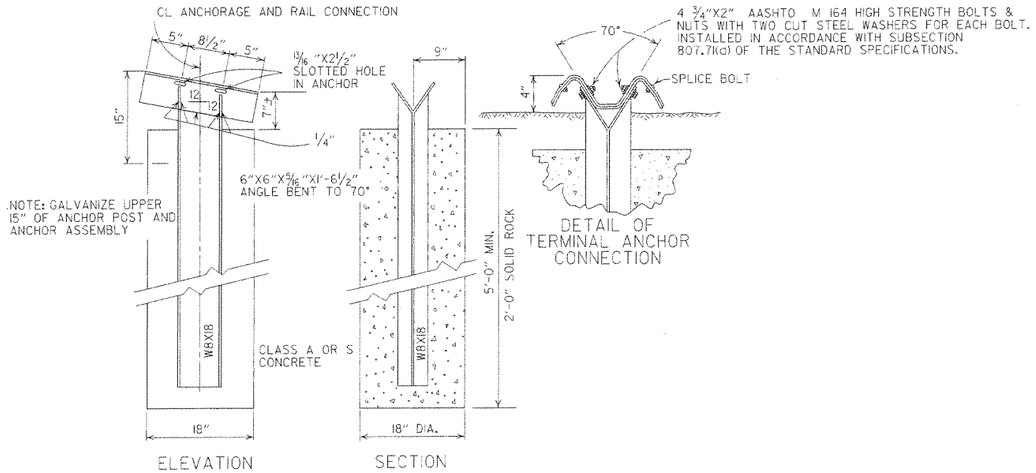

NOTE: RAIL MEMBERS MAY BE BOLTED TO ANGLE AT TERMINAL ANCHOR AND THE TWO ASSEMBLIES POSITIONED TO PROPER ALIGNMENT PRIOR TO PLACING CONCRETE AROUND 8 WF 17 POST IF CONTRACTOR SO DESIRES.

DETAIL OF TERMINAL ANCHOR POST (TYPE I)

DATE	REVISION	DATE FILM
7-14-10	RAISED HEIGHT OF GUARD RAIL 1"	
6-26-97	REVISED LAP NOTE	
10-18-96	REVISED ASTM REF. TO AASHTO	
11-3-94	DIMENSION TERMINAL DETAIL	
11-11-92	ADDED NOTE FOR PAYMENT	11-11-92
10-1-92	DRAWN & ISSUED	10-1-92

ARKANSAS STATE HIGHWAY COMMISSION

GUARD RAIL DETAILS

STANDARD DRAWING GRT-1

REINFORCED CONCRETE ARCH PIPE DIMENSIONS

EQUIV. DIA.	SPAN		RISE	
	AASHTO M 206	AHTD NOMINAL	AASHTO M 206	AHTD NOMINAL
INCHES	INCHES			
15	18	18	11	11
18	22	22	13½	14
21	26	26	15½	16
24	28½	29	18	18
30	36¼	36	22½	23
36	43⅜	44	26⅝	27
42	51⅛	51	31⅝	31
48	58½	59	36	36
54	65	65	40	40
60	73	73	45	45
72	88	88	54	54
84	102	102	62	62
90	115	115	72	72
96	122	122	77½	77
108	138	138	87⅛	87
120	154	154	96⅞	97
132	168¾	169	106½	107

THE MEASURED SPAN AND RISE SHALL NOT VARY MORE THAN ± 2 PERCENT FROM THE VALUES SPECIFIED BY AASHTO M206.

REINFORCED CONCRETE HORIZONTAL ELLIPTICAL PIPE DIMENSIONS

EQUIV. DIA.	AASHTO M 207	
	SPAN	RISE
INCHES	INCHES	
18	23	14
24	30	19
27	34	22
30	38	24
33	42	27
36	45	29
39	49	32
42	53	34
48	60	38
54	68	43
60	76	48
66	83	53
72	91	58
78	98	63
84	106	68

THE MEASURED SPAN AND RISE SHALL NOT VARY MORE THAN ± 2 PERCENT FROM THE VALUES SPECIFIED BY AASHTO M207.

CONSTRUCTION SEQUENCE

1. PLACE STRUCTURAL BEDDING MATERIAL TO GRADE. DO NOT COMPACT.
2. INSTALL PIPE TO GRADE.
3. COMPACT STRUCTURAL BEDDING OUTSIDE THE MIDDLE THIRD OF THE PIPE.
4. PLACE AND COMPACT THE HAUNCH AREA UP TO THE MIDDLE OF THE PIPE.
5. COMPLETE BACKFILL ACCORDING TO SUBSECTION 606.03.(f)(10).

NOTE: HAUNCH AND STRUCTURAL BEDDING MATERIAL WILL NOT BE PAID FOR SEPARATELY, BUT COMPENSATION WILL BE CONSIDERED TO BE INCLUDED IN THE PRICE BID PER LINEAR FOOT OF CONCRETE PIPE.

- LEGEND -

D_1 = NORMAL INSIDE DIAMETER OF PIPE
D_o = OUTSIDE DIAMETER OF PIPE
H = FILL COVER HEIGHT OVER PIPE (FEET)
MIN. = MINIMUM
= UNDISTURBED SOIL

INSTALLATION TYPE	MATERIAL REQUIREMENTS FOR HAUNCH AND STRUCTURAL BEDDING
TYPE 1	AGGREGATE BASE COURSE (CLASS 5 OR CLASS 7)
TYPE 2	SELECTED MATERIALS (CLASS SM-1, SM-2, OR SM-4) OR TYPE 1 INSTALLATION MATERIAL*
TYPE 3**	AASHTO CLASSIFICATION A-1 THRU A-6 SOIL OR TYPE 1 OR 2 INSTALLATION MATERIAL

*SM-3 WILL NOT BE ALLOWED.

**MATERIALS SHALL NOT INCLUDE ORGANIC MATERIALS OR STONES LARGER THAN 3 INCHES.

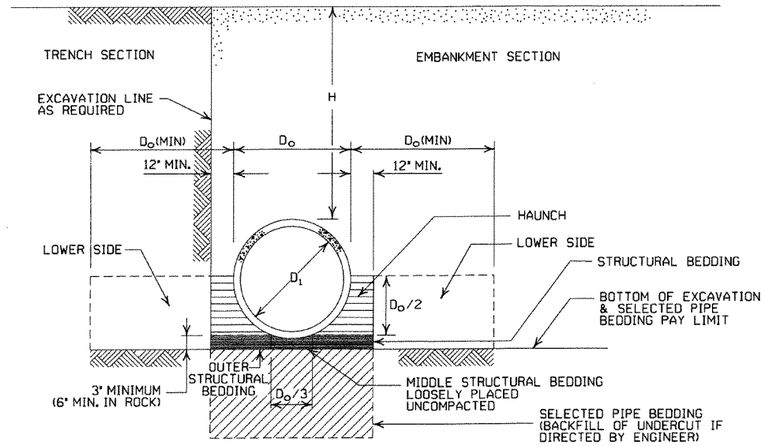

EMBANKMENT AND TRENCH INSTALLATIONS

1. MATERIAL IN THE HAUNCH AND OUTER STRUCTURAL BEDDING SHALL BE COMPACTED TO 95% OF THE MAXIMUM DENSITY ACCORDING TO THE TYPE OR CLASS OF MATERIAL USED.
2. FOR TRENCHES WITH WALLS OF NATURAL SOIL, THE DENSITY OF THE SOIL IN THE LOWER SIDE ZONE SHALL BE AS FIRM AS THE 95% DENSITY REQUIRED FOR THE HAUNCH. IF THE EXISTING SOIL DOES NOT MEET THIS CRITERIA, IT SHALL BE REMOVED AND RECOMPACTED TO 95% OF THE MAXIMUM DENSITY ACCORDING TO THE TYPE OF MATERIAL USED.
3. FOR EMBANKMENTS, THE MATERIAL IN THE LOWER SIDE ZONE SHALL BE COMPACTED TO 95% OF THE MAXIMUM DENSITY ACCORDING TO THE TYPE OR CLASS OF MATERIAL USED.

GENERAL NOTES

1. CONCRETE PIPE CULVERT CONSTRUCTION SHALL CONFORM TO ARKANSAS STATE HIGHWAY AND TRANSPORTATION DEPARTMENT STANDARD SPECIFICATIONS FOR HIGHWAY CONSTRUCTION (2003 EDITION), WITH APPLICABLE SUPPLEMENTAL SPECIFICATIONS AND SPECIAL PROVISIONS. UNLESS OTHERWISE NOTED IN THE PLANS, SECTION AND SUBSECTION REFER TO THE STANDARD CONSTRUCTION SPECIFICATIONS.
2. CONCRETE PIPE CULVERT DESIGN SHALL CONFORM TO AASHTO LRFD BRIDGE DESIGN SPECIFICATIONS, FIFTH EDITION (2010) WITH 2010 INTERIMS.
3. ALL PIPE SHALL CONFORM TO SECTION 606. CIRCULAR R.C. PIPE CULVERTS SHALL CONFORM TO AASHTO M170, R.C. ARCH PIPE CULVERTS SHALL CONFORM TO AASHTO M206 AND HORIZONTAL ELLIPTICAL PIPE CULVERTS SHALL CONFORM TO AASHTO M207.
4. ALL PIPE SHALL BE PROTECTED DURING CONSTRUCTION BY A COVER SUFFICIENT TO PREVENT DAMAGE FROM PASSAGE OF EQUIPMENT.
5. THE MINIMUM TRENCH WIDTH SHALL BE THE OUTSIDE DIAMETER OF THE PIPE PLUS 24 INCHES. THE MAXIMUM ALLOWABLE TRENCH WIDTH SHALL BE THE MINIMUM WIDTH PRACTICABLE FOR WORKING CONDITIONS.
6. MULTIPLE PIPE CULVERTS SHALL BE INSTALLED WITH A MINIMUM CLEARANCE OF 24 INCHES BETWEEN STRINGS OF PIPE. REFER TO STD. DWG. FES-2 FOR MINIMUM CLEARANCE WHERE FLARED END SECTIONS ARE USED.
7. IMPERVIOUS MATERIAL SHOULD BE PLACED AS DIRECTED BY THE ENGINEER AT THE ENDS OF THE CULVERT TO PREVENT LOSS OF STRUCTURAL BEDDING WHEN PERVIOUS MATERIAL IS USED FOR STRUCTURAL BEDDING AND/OR BACKFILL.
8. NOT MORE THAN ONE LIFTING HOLE MAY BE PROVIDED IN CONCRETE PIPE TO FACILITATE HANDLING. HOLE MAY BE CAST IN PLACE, CUT INTO THE FRESH CONCRETE AFTER FORMS ARE REMOVED, OR DRILLED. THE HOLE SHALL NOT BE MORE THAN TWO INCHES IN DIAMETER OR TWO INCHES SQUARE. CUTTING OR DISPLACEMENT OF REINFORCEMENT WILL NOT BE PERMITTED. SPALLED AREAS AROUND THE HOLE SHALL BE REPAIRED IN A WORKMANLIKE MANNER. LIFTING HOLE SHALL BE FILLED WITH MORTAR, CONCRETE, OR OTHER METHOD AS APPROVED BY THE ENGINEER.
9. WHEN DIRECTED BY THE ENGINEER, UNSUITABLE MATERIAL THAT IS ENCOUNTERED AT THE BOTTOM OF THE EXCAVATED TRENCH (BELOW THE AREA IDENTIFIED AS "STRUCTURAL BEDDING" ABOVE) WILL BE EXCAVATED AND REPLACED WITH SELECTED PIPE BEDDING. THE QUANTITY OF MATERIAL REQUIRED TO BACKFILL THE UNDERCUT AREA UP TO THE SELECTED PIPE BEDDING PAY LIMIT DESIGNATED ABOVE WILL BE MEASURED AND PAID FOR AS "SELECTED PIPE BEDDING."
10. WHEN THE EXISTING MATERIAL EXCAVATED FOR THE PIPE TRENCH IS DETERMINED BY THE ENGINEER TO BE UNSUITABLE FOR BACKFILLING THE PIPE (ABOVE THE AREA IDENTIFIED ABOVE AS THE HAUNCH), BORROW MATERIAL OR MATERIAL FROM THE ROADWAY EXCAVATION WILL BE USED TO BACKFILL THE PIPE. IF SUITABLE MATERIAL IS NOT AVAILABLE, THE ENGINEER MAY AUTHORIZE THE USE OF "SELECTED PIPE BACKFILL."

MINIMUM HEIGHT OF FILL "H" OVER CIRCULAR R.C. PIPE CULVERTS

	CLASS OF PIPE			
	CLASS III		CLASS IV	CLASS V
INSTALLATION TYPE	TYPE 1 OR 2	TYPE 3	ALL	ALL
PIPE ID (IN.)	FEET			
12-15	2	2.5	2	1
18-24	2.5	3	2	1
27-33	3	4	2	1
36-42	3.5	5	2	1
48	4.5	5.5	2	1
54-60	5	7	2	1
66-78	6	8	2	1
84-108	7.5	8	2	1

NOTE: FOR MINIMUM COVER VALUES, "H" SHALL INCLUDE A MINIMUM OF 12" OF PAVEMENT AND/OR BASE.

MAXIMUM HEIGHT OF FILL "H" OVER CIRCULAR R.C. PIPE CULVERTS

INSTALLATION TYPE	CLASS OF PIPE		
	CLASS III	CLASS IV	CLASS V
	FEET		
TYPE 1	21	32	50
TYPE 2	16	25	39
TYPE 3	12	20	30

NOTE: IF FILL HEIGHT EXCEEDS 50 FEET, A SPECIAL DESIGN CONCRETE PIPE WILL BE REQUIRED USING TYPE 1 INSTALLATION.

MINIMUM HEIGHT OF FILL "H" OVER R.C. ARCH & HORIZONTAL ELLIPTICAL PIPE CULVERTS

INSTALLATION TYPE	CLASS OF PIPE	
	CLASS III	CLASS IV
	FEET	
TYPE 2 OR TYPE 3	2.5	1.5

NOTE: TYPE 1 INSTALLATION WILL NOT BE ALLOWED FOR ARCH & HORIZONTAL ELLIPTICAL PIPE CULVERTS.

NOTE: FOR MINIMUM COVER VALUES, "H" SHALL INCLUDE A MINIMUM OF 12" OF PAVEMENT AND/OR BASE.

MAXIMUM HEIGHT OF FILL "H" OVER R.C. ARCH & HORIZONTAL ELLIPTICAL PIPE CULVERTS

INSTALLATION TYPE	CLASS OF PIPE	
	CLASS III	CLASS IV
	FEET	
TYPE 2	13	21
TYPE 3	10	16

NOTE: TYPE 1 INSTALLATION WILL NOT BE ALLOWED FOR ARCH & HORIZONTAL ELLIPTICAL PIPE CULVERTS.

DATE	REVISION	DATE FILMED
12-15-11	REVISED FOR LRFD DESIGN SPECIFICATIONS	
5-18-00	REVISED TYPE 3 BEDDING & ADDED NOTE	
3-30-00	REVISED INSTALLATIONS	
11-06-97	ISSUED	

ARKANSAS STATE HIGHWAY COMMISSION

CONCRETE PIPE CULVERT FILL HEIGHTS & BEDDING

STANDARD DRAWING PCC-1

CORRUGATED STEEL PIPE (ROUND)

PIPE DIAMETER (INCHES)	① MINUMUM COVER TOP OF PIPE TO TOP OF GROUND "H" (FEET)	MAX. FILL HEIGHT "H" ABOVE TOP OF PIPE (FEET)				
		METAL THICKNESS (INCHES)				
		0.064	0.079	0.109	0.138	0.168
2⅔ INCH BY ½ INCH CORRUGATION RIVETED, WELDED, OR HELICAL LOCK-SEAM						
12	1	84	91			
15	1	67	73			
18	1	56	61			
24	1	42	46	59		
30	2	34	36	47		
36	2		30	39	41	
42	2		43	67	70	73
48	2		37	58	61	64
② 3 INCH BY 1 INCH OR 5 INCH BY 1 INCH CORRUGATION RIVETED, WELDED, BOLTED, OR HELICAL LOCK-SEAM						
36	1	48	60	88	111	118
42	1	41	51	72	90	102
48	1	36	45	64	77	85
54	2	32	40	59	71	79
60	2	29	36	53	64	71
66	2	26	33	47	58	64
72	2	24	30	44	53	59
78	2		28	41	49	54
84	2		26	38	45	51
90	2		24	35	43	45
96	2		22	33	40	44
102	2			31	38	42
108	2			30	35	39
114	2			28	34	37
120	2			27	32	35

CORRUGATED ALUMINUM PIPE (ROUND)

PIPE DIAMETER (INCHES)	① MINUMUM COVER TOP OF PIPE TO TOP OF GROUND "H" (FEET)	MAX. FILL HEIGHT "H" ABOVE TOP OF PIPE (FEET)				
		METAL THICKNESS IN INCHES				
		0.060	0.075	0.105	0.135	0.164
		2⅔ INCH BY ½ INCH CORRUGATION RIVETED OR HELICAL LOCK-SEAM				
12	1	45	45			
18	2	30	30	52		
24	2	22	22	39	41	
30	2		18	31	32	34
36	2.5		15	26	27	28
42	2			43	43	44
48	2			40	41	43
54	2			35	37	38
60	2				33	34
66	2					31
72	2					29

CORRUGATED METAL PIPE ARCHES

EQUIV. DIA. (INCHES)	PIPE DIMENSION SPAN X RISE (INCHES)	MINUMUM CORNER RADIUS (INCHES)	STEEL			ALUMINUM		
			MIN. THICKNESS REQUIRED INCHES	① MIN. HEIGHT OF FILL, "H" (FT.)	MAX. HEIGHT OF FILL, "H" (FT.)	MIN. THICKNESS REQUIRED INCHES	① MIN. HEIGHT OF FILL, "H" (FT.)	MAX. HEIGHT OF FILL, "H" (FT.)
				INSTALLATION	INSTALLATION		INSTALLATION	INSTALLATION
				TYPE 1	TYPE 1		TYPE 1	TYPE 1
			2 ⅔ INCH BY ½ INCH CORRUGATION RIVETED, WELDED, OR HELICAL LOCK-SEAM			2 ⅔ INCH BY ½ INCH CORRUGATION RIVETED OR HELICAL LOCK-SEAM		
15	17x13	3	0.064	2	15	0.060	2	15
18	21x15	3	0.064	2	15	0.060	2	15
21	24x18	3	0.064	2.25	15	0.060	2.25	15
24	28x20	3	0.064	2.5	15	0.075	2.5	15
30	35x24	3	0.079	3	12	0.075	3	12
36	42x29	3½	0.079	3	12	0.105	3	12
42	49x33	4	0.079	3	12	0.105	3	12
48	57x38	5	0.109	3	13	0.135	3	13
54	64x43	6	0.109	3	14	0.135	3	14
60	71x47	7	0.138	3	15	0.164	3	15
66	77x52	8	0.168	3	15			
72	83x57	9	0.168	3	15			
			② 3 INCH BY 1 INCH OR 5 INCH BY 1 INCH CORRUGATION RIVETED, WELDED, OR HELICAL LOCK-SEAM					
				INSTALLATION	INSTALLATION			
				TYPE 2 / TYPE 1	TYPE 2 / TYPE 1			
36	40x31	5	0.079	3 / 2	12 / 15			
42	46x36	6	0.079	3 / 2	13 / 15			
48	53x41	7	0.079	3 / 2	13 / 15			
54	60x46	8	0.079	3 / 2	13 / 15			
60	66x51	9	0.079	3 / 2	13 / 15			
66	73x55	12	0.079	3 / 2	15 / 15			
72	81x59	14	0.079	3 / 2	15 / 15			
78	87x63	14	0.079	3 / 2	15 / 15			
84	95x67	16	0.109	3 / 2	15 / 15			
90	103x71	16	0.109	3 / 2	15 / 15			
96	112x75	18	0.109	3 / 2	15 / 15			
102	117x79	18	0.109	3 / 2	15 / 15			
108	128x83	18	0.138	3 / 2	15 / 15			

CONSTRUCTION SEQUENCE

1. PLACE STRUCTURAL BEDDING MATERIAL TO GRADE. DO NOT COMPACT.
2. INSTALL PIPE TO GRADE.
3. COMPACT STRUCTURAL BEDDING OUTSIDE THE MIDDLE THIRD OF THE PIPE.
4. COMPLETE STRUCTURAL BACKFILL OPERATION BY WORKING FROM SIDE TO SIDE OF THE PIPE. THE SIDE TO SIDE STRUCTURAL BACKFILL DIFFERENTIAL SHALL NOT EXCEED 24 INCHES OR 1/3 THE SIZE OF THE PIPE, WHICHEVER IS LESS.

NOTE: STRUCTURAL BACKFILL AND STRUCTURAL BEDDING MATERIAL WILL NOT BE PAID FOR SEPARATELY, BUT COMPENSATION WILL BE CONSIDERED TO BE INCLUDED IN THE PRICE BID PER LINEAR FOOT OF METAL PIPE.

INSTALLATION TYPE	MATERIAL REQUIREMENTS FOR STRUCTURAL BACKFILL AND STRUCTURAL BEDDING
TYPE 1	AGGREGATE BASE COURSE (CLASS 4, 5, 6, OR 7)
TYPE 2	SELECTED MATERIALS (CLASS SM-1, SM-2, OR SM-4) OR TYPE 1 INSTALLATION MATERIAL ③

③ SM-3 WILL NOT BE ALLOWED.

EQUIVALENT METAL THICKNESSES AND GAUGES

METAL THICKNESS IN INCHES			GAUGE NUMBER
STEEL			
ZINC COATED	UNCOATED	ALUMINUM	
0.064	0.0598	0.060	16
0.079	0.0747	0.075	14
0.109	0.1046	0.105	12
0.138	0.1345	0.135	10
0.168	0.1644	0.164	8

- LEGEND -

D_o = OUTSIDE DIAMETER OF PIPE
MAX. = MAXIMUM
MIN. = MINIMUM
= STRUCTURAL BACKFILL MATERIAL
= UNDISTURBED SOIL
EQUIV. DIA. = EQUIVALENT DIAMETER
H = FILL COVER HEIGHT OVER PIPE (FEET)

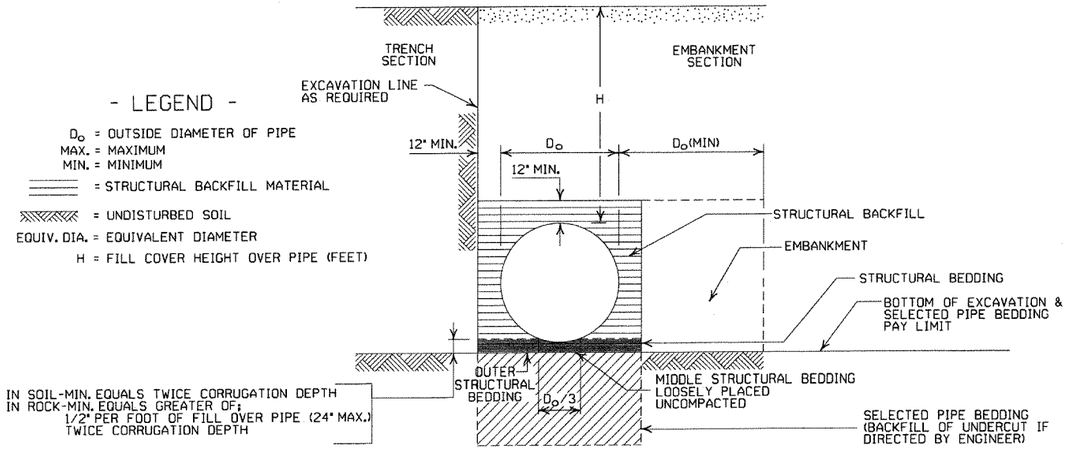

EMBANKMENT AND TRENCH INSTALLATIONS

1. STRUCTURAL BACKFILL, EMBANKMENT, AND OUTER STRUCTURAL BEDDING MATERIAL SHALL BE COMPACTED TO 95% OF THE MAXIMUM DENSITY ACCORDING TO THE TYPE OR CLASS OF MATERIAL USED.
2. INSTALLATION TYPE 1 OR 2 MAY BE USED FOR CORRUGATED STEEL OR ALUMINUM PIPE (ROUND).
3. INSTALALTION TYPE 1 SHALL BE USED FOR CORRUGATED STEEL OR ALUMINUM PIPE ARCHES WITH 2⅔" X ½" CORRUGATION.
4. INSTALLATION TYPE 1 OR 2 MAY BE USED FOR CORRUGATED STEEL OR ALUMINUM PIPE ARCHES WITH 3" X 1" OR 5" X 1" CORRUGATION.

GENERAL NOTES

1. METAL PIPE CULVERT CONSTRUCTION SHALL CONFORM TO ARKANSAS STATE HIGHWAY AND TRANSPORTATION DEPARTMENT STANDARD SPECIFICATIONS FOR HIGHWAY CONSTRUCTION (2003 EDITION), WITH APPLICABLE SUPPLEMENTAL SPECIFICATIONS AND SPECIAL PROVISIONS. UNLESS OTHERWISE NOTED IN THE PLANS, SECTION AND SUBSECTION REFER TO THE STANDARD CONSTRUCTION SPECIFICATIONS.
2. METAL PIPE CULVERT DESIGN SHALL CONFORM TO AASHTO LRFD BRIDGE DESIGN SPECIFICATIONS, FIFTH EDITION (2010) WITH 2010 INTERIMS.
3. METAL PIPE CULVERT MATERIALS AND INSTALLATIONS SHALL CONFORM TO SECTION 606 AND JOB SPECIAL PROVISION "METAL PIPE".
4. ALL PIPE SHALL BE PROTECTED DURING CONSTRUCTION BY A COVER SUFFICIENT TO PREVENT DAMAGE FROM PASSAGE OF EQUIPMENT.
5. THE MINIMUM TRENCH WIDTH SHALL BE THE OUTSIDE DIAMETER OF THE PIPE PLUS 24 INCHES. THE MAXIMUM ALLOWABLE TRENCH WIDTH SHALL BE THE MINIMUM WIDTH PRACTICABLE FOR WORKING CONDITIONS.
6. MULTIPLE PIPE CULVERTS SHALL BE INSTALLED WITH A MINIMUM CLEARANCE OF 24 INCHES BETWEEN STRINGS OF PIPE. REFER TO STD. DWG. FES-2 FOR MINIMUM CLEARANCE WHERE FLARED END SECTIONS ARE USED.
7. IMPERVIOUS MATERIAL SHOULD BE PLACED AS DIRECTED BY THE ENGINEER AT THE ENDS OF THE CULVERT TO PREVENT LOSS OF STRUCTURAL BEDDING WHEN PERVIOUS MATERIAL IS USED FOR STRUCTURAL BEDDING AND/OR BACKFILL.
8. WHEN DIRECTED BY THE ENGINEER, UNSUITABLE MATERIAL THAT IS ENCOUNTERED AT THE BOTTOM OF THE EXCAVATED TRENCH (BELOW THE AREA IDENTIFIED AS "STRUCTURAL BEDDING" ABOVE) WILL BE EXCAVATED AND REPLACED WITH SELECTED PIPE BEDDING. THE QUANTITY OF MATERIAL REQUIRED TO BACKFILL THE UNDERCUT AREA UP TO THE SELECTED PIPE BEDDING PAY LIMIT DESIGNATED ABOVE WILL BE MEASURED AND PAID FOR AS "SELECTED PIPE BEDDING."
9. WHEN THE EXISTING MATERIAL EXCAVATED FOR THE PIPE TRENCH IS DETERMINED BY THE ENGINEER TO BE UNSUITABLE FOR BACKFILLING THE PIPE (ABOVE THE AREA IDENTIFIED AS STRUCTURAL BACKFILL), BORROW MATERIAL OR MATERIAL FROM THE ROADWAY EXCAVATION WILL BE USED TO BACKFILL THE PIPE. IF SUITABLE MATERIAL IS NOT AVAILABLE, THE ENGINEER MAY AUTHORIZE THE USE OF "SELECTED PIPE BACKFILL."

① FOR MINIMUM COVER VALUES, "H" SHALL INCLUDE A MINIMUM 12" OF PAVEMENT AND/OR BASE.

② WHERE THE STANDARD 2 2/3"x ½" CORRUGATION AND GAUGE IS SPECIFIED FOR A GIVEN DIAMETER, A PIPE OF THE SAME DIAMETER WITH A 3" x 1" OR 5" x 1" CORRUGATION MAY BE SUBSTITUTED, PROVIDING IT IS GAUGED FOR A FILL HEIGHT CONDITION EQUAL TO OR GREATER THAN THE MAXIMUM FILL HEIGHT CONDITION FOR THE SPECIFIED GAUGE AND CORRUGATION.

DATE	REVISION	DATE FILMED
12-15-11	REVISED FOR LRFD DESIGN SPECS	
3-30-00	REVISED INSTALLATIONS	
11-06-97	ISSUED	

ARKANSAS STATE HIGHWAY COMMISSION

METAL PIPE CULVERT FILL HEIGHTS & BEDDING

STANDARD DRAWING PCM-1

INSTALLATION TYPE	•• MATERIAL REQUIREMENTS FOR STRUCTURAL BACKFILL AND STRUCTURAL BEDDING
TYPE 2	•SELECTED MATERIALS (CLASS SM-1, SM-2 OR SM-4)

• AGGREGATE BASE COURSE (CLASS 4, 5, 6, OR 7) MAY BE USED IN LIEU OF SELECTED MATERIAL.

SM3 WILL NOT BE ALLOWED.

•• STRUCTURAL BEDDING MATERIAL SHALL HAVE A MAXIMUM PARTICLE SIZE OF 1 INCH. STRUCTURAL BACKFILL MATERIAL SHALL BE FREE OF ORGANIC MATERIAL, STONES LARGER THAN 1.50 INCH IN GREATEST DIMENSION, OR FROZEN LUMPS.

STRUCTURAL BACKFILL AND STRUCTURAL BEDDING MATERIAL WILL NOT BE PAID FOR SEPARATELY, BUT COMPENSATION WILL BE CONSIDERED TO BE INCLUDED IN THE PRICE BID PER LINEAR FOOT OF HDPE PIPE.

MULTIPLE INSTALLATION OF HIGH DENSITY POLYETHYLENE PIPES

PIPE DIAMETER	CLEAR DISTANCE BETWEEN PIPES
18"	1'-6"
24"	2'-0"
30"	2'-6"
36"	3'-0"
42"	3'-6"
48"	4'-0"

MINIMUM TRENCH WIDTH BASED ON FILL HEIGHT "H"

PIPE DIAMETER	TRENCH WIDTH (FEET)	
	"H" < 10'-0"	"H" >OR= 10'-0"
18"	4'-6"	4'-6"
24"	5'-0"	6'-0"
30"	5'-6"	7'-6"
36"	6'-0"	9'-0"
42"	7'-0"	10'-6"
48"	8'-0"	12'-0"

①NOTE:
18" MIN. (18" - 30" DIAMETERS)
24" MIN. (36" - 48" DIAMETERS)

MINIMUM COVER VALUES, "H" SHALL INCLUDE A MINIMUM 12" OF PAVEMENT AND/OR BASE.

MINIMUM COVER FOR CONSTRUCTION LOADS

PIPE DIAMETER	② MIN. COVER (FEET) FOR INDICATED CONSTRUCTION LOADS			
	18.0-50.0 (KIPS)	50.0-75.0 (KIPS)	75.0-110.0 (KIPS)	110.0-175.0 (KIPS)
36" OR LESS	2'-0"	2'-6"	3'-0"	3'-0"
42" OR GREATER	3'-0"	3'-0"	3'-6"	4'-0"

②MINIMUM COVER SHALL BE MEASURED FROM TOP OF PIPE TO TOP OF THE MAINTAINED CONSTRUCTION ROADWAY SURFACE. THE SURFACE SHALL BE MAINTAINED.

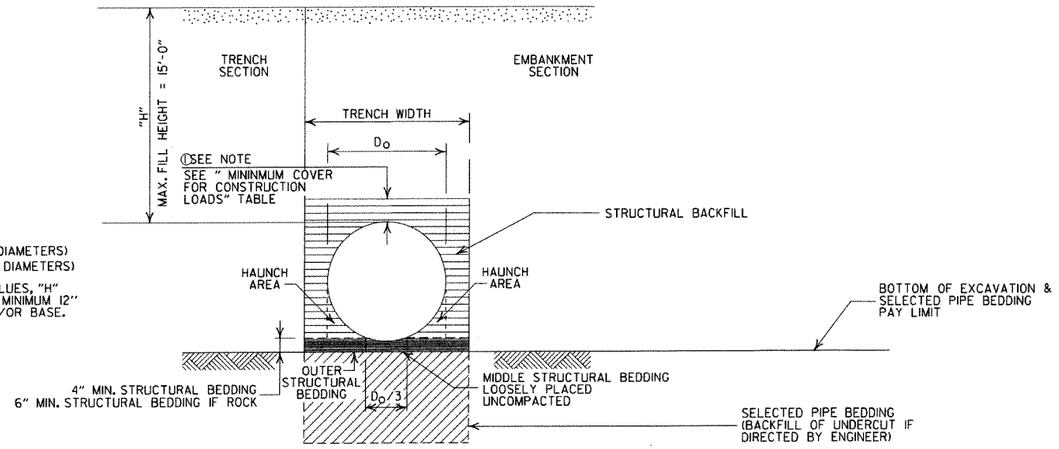

TYPE 2 EMBANKMENT AND TRENCH INSTALLATIONS

1. STRUCTURAL BACKFILL, EMBANKMENT, AND OUTER STRUCTURAL BEDDING MATERIAL SHALL BE COMPACTED TO 95% OF THE MAXIMUM DENSITY ACCORDING TO THE TYPE OR CLASS OF MATERIAL USED.

CONSTRUCTION SEQUENCE

1. PLACE STRUCTURAL BEDDING MATERIAL TO GRADE. DO NOT COMPACT.
2. INSTALL PIPE TO GRADE.
3. COMPACT STRUCTURAL BEDDING OUTSIDE THE MIDDLE THIRD OF THE PIPE.
4. THE STRUCTURAL BACKFILL SHALL BE PLACED AND COMPACTED IN LAYERS NOT EXCEEDING 8". THE LAYERS SHALL BE BROUGHT UP EVENLY AND SIMULTANEOUSLY TO THE ELEVATION OF THE MINIMUM COVER.
5. PIPE INSTALLATION MAY REQUIRE THE USE OF RESTRAINTS, WEIGHTING OR OTHER APPROVED METHODS IN ORDER TO HELP MAINTAIN GRADE AND ALIGNMENT.

GENERAL NOTES

1. PIPE SHALL CONFORM TO AASHTO M294, TYPE S. INSTALLATION SHALL CONFROM TO JOB SPECIAL PROVISION "PLASTIC PIPE" AND SECTION 606 OF THE STANDARD SPECIFICIATIONS FOR HIGHWAY CONSTRUCTION, 2003 EDITION.
2. PLASTIC PIPE CULVERT DESIGN SHALL CONFORM TO AASHTO LRFD BRIDGE DESIGN SPECIFICATIONS, FIFTH EDITION (2010) WITH 2010 INTERIMS.
3. THE MAXIMUM ALLOWABLE TRENCH WIDTH SHALL BE THE MINIMUM WIDTH PLUS A SUFFICIENT WIDTH TO ENSURE WORKING ROOM TO PROPERLY AND SAFELY PLACE AND COMPACT HAUNCHING AND OTHER BACKFILL MATERIAL.
4. IMPERVIOUS MATERIAL SHOULD BE PLACED AS DIRECTED BY THE ENGINEER AT THE ENDS OF THE CULVERT TO PREVENT LOSS OF STRUCTURAL BEDDING WHEN PERVIOUS MATERIAL IS USED FOR STRUCTURAL BEDDING AND/OR BACKFILL.
5. WHEN DIRECTED BY THE ENGINEER, UNSUITABLE MATERIAL THAT IS ENCOUNTERED AT THE BOTTOM OF THE EXCAVATED TRENCH (BELOW THE AREA IDENTIFIED AS "STRUCTURAL BEDDING" ABOVE) WILL BE EXCAVATED AND REPLACED WITH SELECTED PIPE BEDDING. THE QUANTITY OF MATERIAL REQUIRED TO BACKFILL THE UNDERCUT AREA UP TO THE SELECTED PIPE BEDDING PAY LIMIT DESIGNATED ABOVE WILL BE MEASURED AND PAID FOR AS "SELECTED PIPE BEDDING."
6. WHEN THE EXISTING MATERIAL EXCAVATED FOR THE PIPE TRENCH IS DETERMINED BY THE ENGINEER TO BE UNSUITABLE FOR BACKFILLING THE PIPE (ABOVE THE AREA IDENTIFIED ABOVE AS STRUCTURAL BACKFILL), BORROW MATERIAL OR MATERIAL FROM THE ROADWAY EXCAVATION WILL BE USED TO BACKFILL THE PIPE. IF SUITABLE MATERIAL IS NOT AVAILABLE, THE ENGINEER MAY AUTHORIZE THE USE OF "SELECTED PIPE BACKFILL."
7. FOR PIPE TYPES THAT ARE NOT SMOOTH ON THE OUTSIDE (CORRUGATED OR PROFILE WALLS), BACKFILL GRADATIONS SHOULD BE SELECTED THAT WILL PERMIT THE FILLING OF THE CORRUGATION OR PROFILE VALLEY.
8. HIGH DENSITY POLYETHYLENE PIPES OF DIAMETERS OTHER THAN SHOWN WILL NOT BE ALLOWED.
9. JOINTS FOR HDPE PIPE SHALL MEET THE REQUIREMENTS FOR SOIL TIGHTNESS AS SPECIFIED IN AASHTO SECTION 26.4.2.4 AND 30.4.2 "AASHTO LRFD BRIDGE CONSTRUCTION SPECIFICATIONS." JOINTS SHALL BE INSTALLED PER MANUFACTURER'S RECOMMENDATIONS.

- LEGEND -

H = FILL HEIGHT (FT.)
Ø = OUTSIDE DIAMETER OF PIPE
MAX. = MAXIMUM
MIN. = MINIMUM

= STRUCTURAL BACKFILL MATERIAL

= UNDISTURBED SOIL

DATE	REVISION	DATE FILMED
12-15-11	REVISED GENERAL NOTES & MINIMUM COVER NOTE	
11-17-10	ISSUED	

ARKANSAS STATE HIGHWAY COMMISSION

PLASTIC PIPE CULVERT (HIGH DENSITY POLYETHYLENE)

STANDARD DRAWING PCP-1

INSTALLATION TYPE	•• MATERIAL REQUIREMENTS FOR STRUCTURAL BACKFILL AND STRUCTURAL BEDDING
TYPE 2	•SELECTED MATERIALS (CLASS SM-1, SM-2, OR SM-4)

• AGGREGATE BASE COURSE (CLASS 4, 5, 6, OR 7) MAY BE USED IN LIEU OF SELECTED MATERIAL.

SM3 WILL NOT BE ALLOWED.

•• STRUCTURAL BEDDING MATERIAL SHALL HAVE A MAXIMUM PARTICLE SIZE OF 1INCH. STRUCTURAL BACKFILL MATERIAL SHALL BE FREE OF ORGANIC MATERIAL, STONES LARGER THAN 1.50 INCH IN GREATEST DIMENSION, OR FROZEN LUMPS.

STRUCTURAL BACKFILL AND STRUCTURAL BEDDING MATERIAL WILL NOT BE PAID FOR SEPARATELY, BUT COMPENSATION WILL BE CONSIDERED TO BE INCLUDED IN THE PRICE BID PER LINEAR FOOT OF PVC PIPE.

MINIMUM TRENCH WIDTH BASED ON FILL HEIGHT "H"

PIPE DIAMETER	TRENCH WIDTH (FEET) "H" < 10'-0"	"H" >OR= 10'-0"
18"	4'-6"	4'-6"
24"	5'-0"	6'-0"
30"	5'-6"	7'-6"
36"	6'-0"	9'-0"

MULTIPLE INSTALLATION OF PVC PIPES

PIPE DIAMETER	CLEAR DISTANCE BETWEEN PIPES
18"	1'-6"
24"	2'-0"
30"	2'-6"
36"	3'-0"

MAXIMUM FILL HEIGHT BASED ON STRUCTURAL BACKFILL

PIPE DIAMETER	"H"
18"	45'-0"
24"	45'-0"
30"	40'-0"
36"	40'-0"

① NOTE:
12" MIN. (18" - 36" DIAMETERS)
MINIMUM COVER VALUE, "H" SHALL INCLUDE A MINIMUM 12" OF PAVEMENT AND/OR BASE.

MINIMUM COVER FOR CONSTRUCTION LOADS

PIPE DIAMETER	② MIN. COVER (FEET) FOR INDICATED CONSTRUCTION LOADS 18.0-50.0 (KIPS)	50.0-75.0 (KIPS)	75.0-110.0 (KIPS)	110.0-175.0 (KIPS)
18" THRU 36"	2'-0"	2'-6"	3'-0"	3'-0"

②MINIMUM COVER SHALL BE MEASURED FROM TOP OF PIPE TO TOP OF THE MAINTAINED CONSTRUCTION ROADWAY SURFACE. THE SURFACE SHALL BE MAINTAINED.

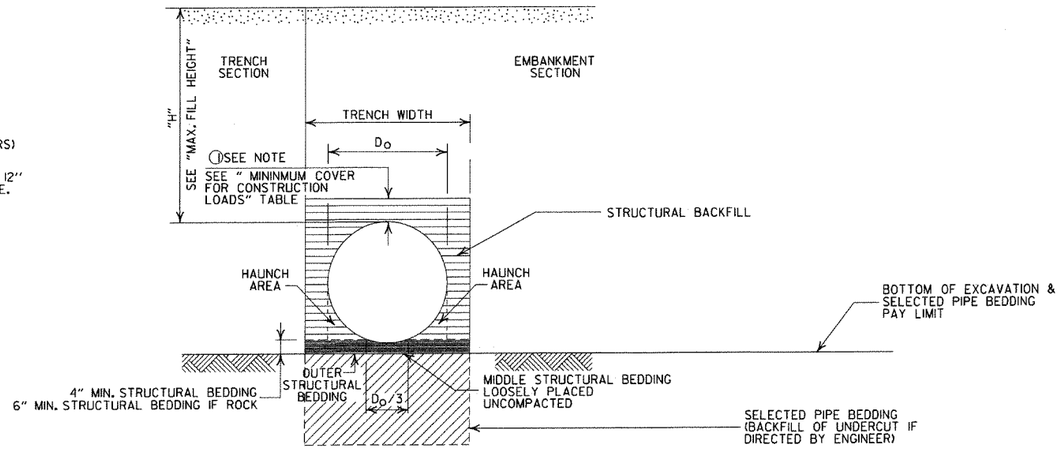

TYPE 2 EMBANKMENT AND TRENCH INSTALLATIONS

1. STRUCTURAL BACKFILL, EMBANKMENT, AND OUTER STRUCTURAL BEDDING MATERIAL SHALL BE COMPACTED TO 95% OF THE MAXIMUM DENSITY ACCORDING TO THE TYPE OR CLASS OF MATERIAL USED.

CONSTRUCTION SEQUENCE

1. PLACE STRUCTURAL BEDDING MATERIAL TO GRADE. DO NOT COMPACT.
2. INSTALL PIPE TO GRADE.
3. COMPACT STRUCTURAL BEDDING OUTSIDE THE MIDDLE THIRD OF THE PIPE.
4. THE STRUCTURAL BACKFILL SHALL BE PLACED AND COMPACTED IN LAYERS NOT EXCEEDING 8". THE LAYERS SHALL BE BROUGHT UP EVENLY AND SIMULTANEOUSLY TO THE ELEVATION OF THE MINIMUM COVER.
5. PIPE INSTALLATION MAY REQUIRE THE USE OF RESTRAINTS, WEIGHTING OR OTHER APPROVED METHODS IN ORDER TO HELP MAINTAIN GRADE AND ALIGNMENT.

GENERAL NOTES

1. PIPE SHALL CONFORM TO ASTM F949, CELL CLASS 12454. INSTALLATION SHALL CONFROM TO JOB SPECIAL PROVISION "PLASTIC PIPE" AND SECTION 606 OF THE STANDARD SPECIFICIATIONS FOR HIGHWAY CONSTRUCTION, 2003 EDITION.
2. PLASTIC PIPE CULVERT DESIGN SHALL CONFORM TO AASHTO LRFD BRIDGE DESIGN SPECIFICATIONS, FIFTH EDITION (2010) WITH 2010 INTERIMS.
3. THE MAXIMUM ALLOWABLE TRENCH WIDTH SHALL BE THE MINIMUM WIDTH PLUS A SUFFICIENT WIDTH TO ENSURE WORKING ROOM TO PROPERLY AND SAFELY PLACE AND COMPACT HAUNCHING AND OTHER BACKFILL MATERIAL.
4. IMPERVIOUS MATERIAL SHOULD BE PLACED AS DIRECTED BY THE ENGINEER AT THE ENDS OF THE CULVERT TO PREVENT LOSS OF STRUCTURAL BEDDING WHEN PERVIOUS MATERIAL IS USED FOR STRUCTURAL BEDDING AND/OR BACKFILL.
5. WHEN DIRECTED BY THE ENGINEER, UNSUITABLE MATERIAL THAT IS ENCOUNTERED AT THE BOTTOM OF THE EXCAVATED TRENCH (BELOW THE AREA IDENTIFIED AS "STRUCTURAL BEDDING" ABOVE) WILL BE EXCAVATED AND REPLACED WITH SELECTED PIPE BEDDING. THE QUANTITY OF MATERIAL REQUIRED TO BACKFILL THE UNDERCUT AREA UP TO THE SELECTED PIPE BEDDING PAY LIMIT DESIGNATED ABOVE WILL BE MEASURED AND PAID FOR AS "SELECTED PIPE BEDDING."
6. WHEN THE EXISTING MATERIAL EXCAVATED FOR THE PIPE TRENCH IS DETERMINED BY THE ENGINEER TO BE UNSUITABLE FOR BACKFILLING THE PIPE (ABOVE THE AREA IDENTIFIED ABOVE AS STRUCTURAL BACKFILL), BORROW MATERIAL OR MATERIAL FROM THE ROADWAY EXCAVATION WILL BE USED TO BACKFILL THE PIPE. IF SUITABLE MATERIAL IS NOT AVAILABLE, THE ENGINEER MAY AUTHORIZE THE USE OF "SELECTED PIPE BACKFILL."
7. FOR PIPE TYPES THAT ARE NOT SMOOTH ON THE OUTSIDE (CORRUGATED OR PROFILE WALLS), BACKFILL GRADATIONS SHOULD BE SELECTED THAT WILL PERMIT THE FILLING OF THE CORRUGATION OR PROFILE VALLEY.
8. PVC PIPES OF DIAMETERS OTHER THAN SHOWN WILL NOT BE ALLOWED.
9. JOINTS FOR PVC PIPE SHALL MEET THE REQUIREMENTS FOR SOIL TIGHTNESS AS SPECIFIED IN AASHTO SECTION 26.4.2.4 AND 30.4.2 "AASHTO LRFD BRIDGE CONSTRUCTION SPECIFICATIONS." JOINTS SHALL BE INSTALLED PER MANUFACTURER'S RECOMMENDATIONS.

- LEGEND -

H = FILL HEIGHT (FT.)
D_O = OUTSIDE DIAMETER OF PIPE
MAX. = MAXIMUM
MIN. = MINIMUM

= STRUCTURAL BACKFILL MATERIAL
= UNDISTURBED SOIL

DATE	REVISION	DATE FILMED
12-15-11	REV GENERAL NOTES & MINIMUM COVER NOTE; DELETED SM3 MATERIAL	
11-17-10	ISSUED	

ARKANSAS STATE HIGHWAY COMMISSION

PLASTIC PIPE CULVERT (PVC F949)

STANDARD DRAWING PCP-2

NOTES:

1. ALL LINES SHALL HAVE A WIDTH OF 4 INCHES.
2. THE THICKNESS AND RATE OF PAINT APPLICATION SHALL BE AS SPECIFIED IN SECTION 718 OF THE STANDARD SPECIFICATIONS.
3. THIS DRAWING SHALL BE USED IN CONJUNCTION WITH THE LATEST REVISED ADDITION OF THE "MANUAL ON UNIFORM TRAFFIC CONTROL DEVICES."
4. RAISED PAVEMENT MARKERS SHALL BE CENTERED BETWEEN SKIP LINES ON 40 FEET SPACING UNLESS OTHERWISE SHOWN ON THE PLANS.

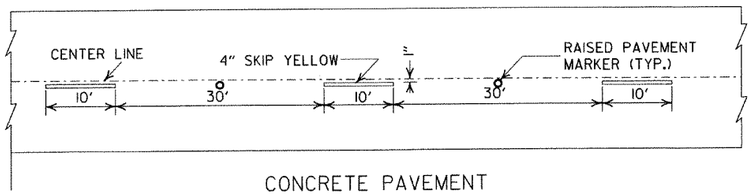

CONCRETE PAVEMENT

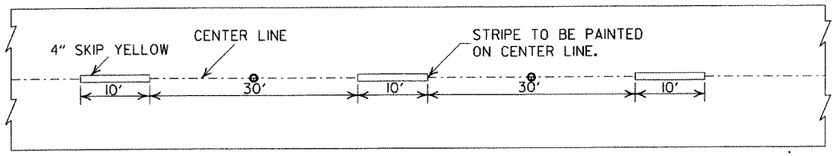

ASPHALT PAVEMENT

BROKEN LINE STRIPING

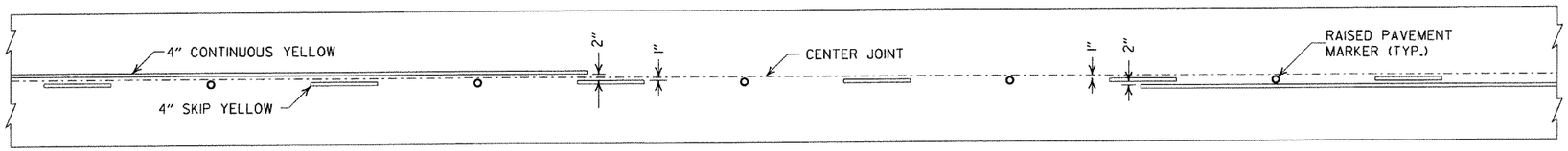

SOLID LINE STRIPING ON CONCRETE PAVEMENT

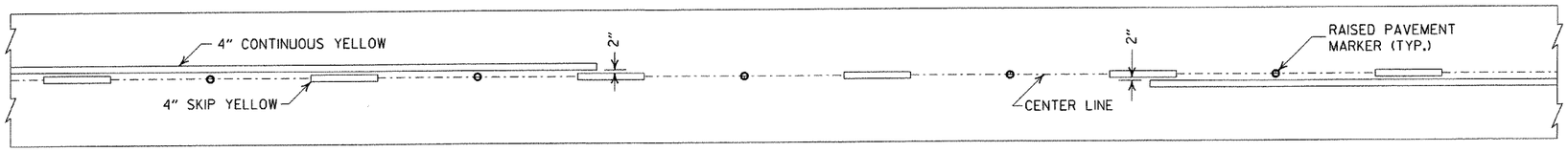

SOLID LINE STRIPING ON ASPHALT PAVEMENT

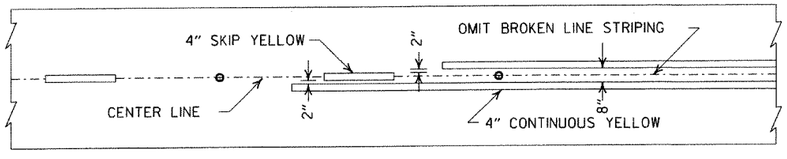

ASPHALT PAVEMENT

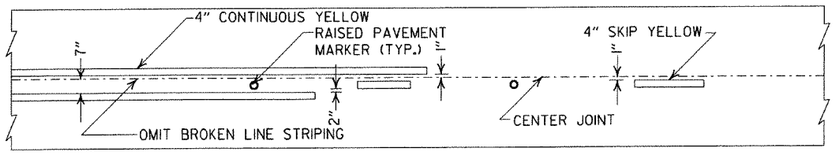

CONCRETE PAVEMENT

GENERAL NOTES:

THIS DRAWING SHOULD BE CONSIDERED AS TYPICAL ONLY AND THE FINAL LOCATION OF THE STRIPING AND RAISED PAVEMENT MARKERS SHALL BE DETERMINED BY THE ENGINEER.

THIS DRAWING SHOULD BE USED IN CONJUNCTION WITH THE "MANUAL ON UNIFORM TRAFFIC CONTROL DEVICES", LATEST REVISION.

NOTE:

DIMENSIONS SHOWN FOR RAISED PAVEMENT MARKERS ARE TYPICAL. THE CONTRACTOR MAY SUBSTITUTE SIMILAR MARKERS WITH THE APPROVAL OF THE ENGINEER. REQUESTING APPROVAL FOR SIMILAR MARKERS MAY BE MADE BY REFERRING TO THE AHTD QUALIFIED PRODUCTS LIST.

STRIPING AT ADJACENT NO PASSING LANES

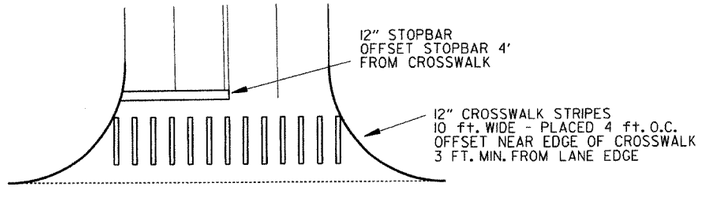

CROSSWALK AND STOPBAR DETAILS

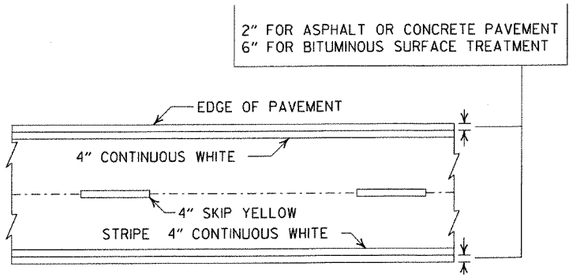

PAVEMENT EDGE LINE MARKING

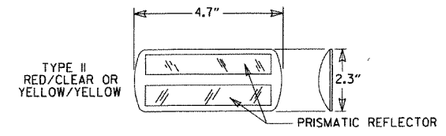

NOTE:
THE RED LENS OF THE TYPE II R.P.M. SHALL FACE THE INCORRECT TRAFFIC MOVEMENT.

DETAIL OF STANDARD RAISED PAVEMENT MARKERS

DATE	REVISION	
9-12-13	REVISED DETAIL OF STANDARD RAISED PAVEMENT MARKERS	
11-17-10	REVISED GENERAL NOTES & REMOVED PLOWABLE PVMT MRKRS	
11-18-04	REVISED NOTE 2 & GENERAL NOTES	
8-22-02	ADDED CROSSWALK & STOPBAR DTLS.	
7-02-98	ADDED DETAILS OF STD. RAISED PAV'T. MARKERS	
4-26-96	REV. NOTES 3&4; ADDED R.P.M.	
9-30-80	DRAWN	1-9-30-80
		FILMED

ARKANSAS STATE HIGHWAY COMMISSION

PAVEMENT MARKING DETAILS

STANDARD DRAWING PM-1

NOTE:
1. GRANULAR BACKFILL TO BE SUBSIDIARY TO PIPE UNDERDRAIN.

2. UNLESS OTHERWISE SPECIFIED ON THE PLANS, THE UNDERDRAIN COVER SHALL BE THOROUGHLY COMPACTED EARTH AND SHALL BE SUBSIDIARY TO PIPE UNDERDRAIN.

3. GRANULAR MATERIAL SHALL BE WRAPPED WITH GEOTEXTILE FABRIC. LAP FABRIC 12" OR THE WIDTH OF THE TRENCH AT THE TOP.

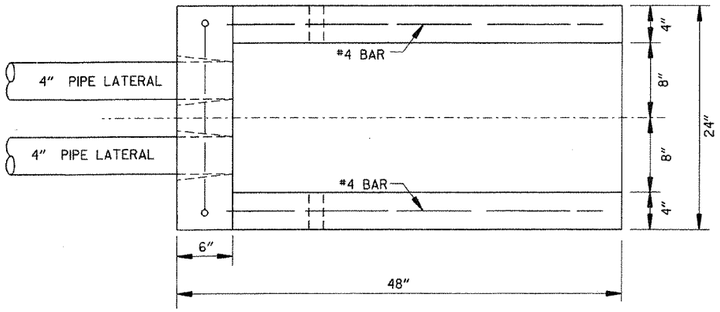

PLAN VIEW

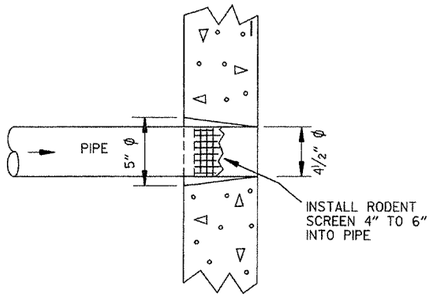

DETAIL OF HOLE FOR 4" PIPE

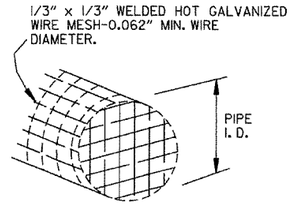

DETAIL OF RODENT SCREEN

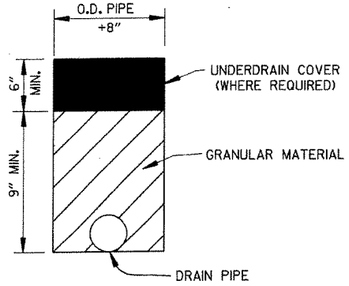

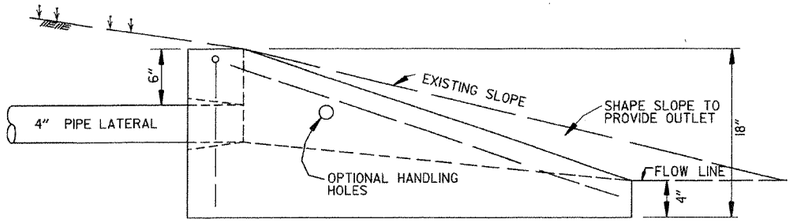

SIDE VIEW

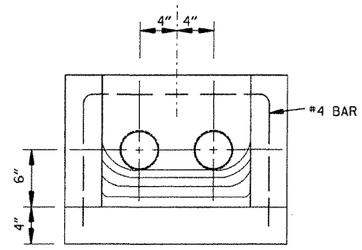

FRONT VIEW

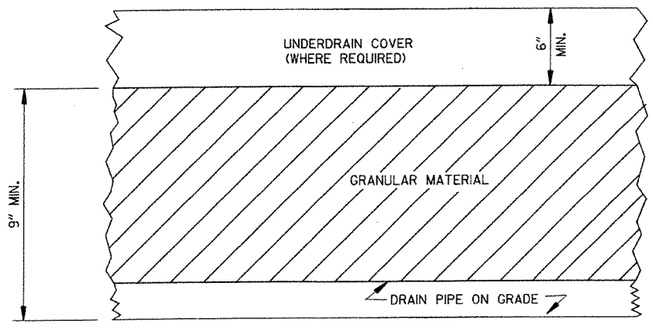

DETAILS OF PIPE UNDERDRAIN

UNDERDRAIN OUTLET PROTECTORS

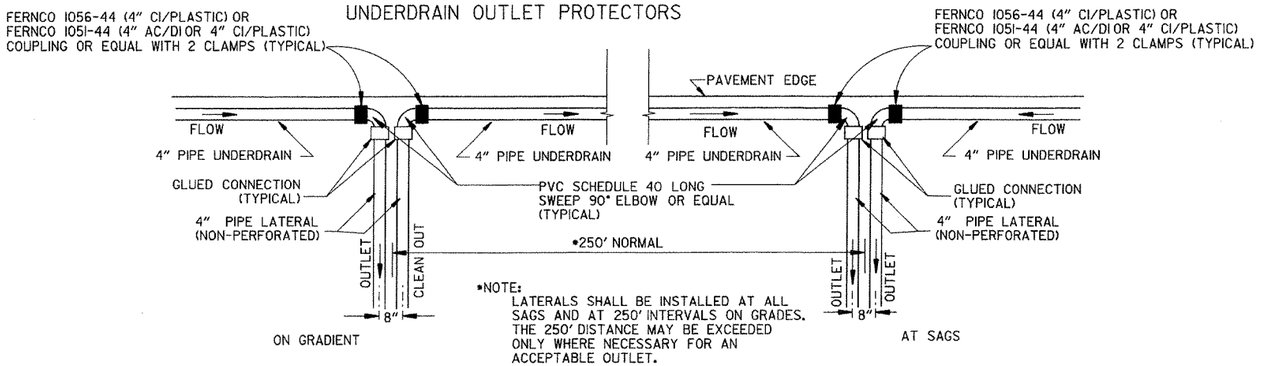

DETAIL OF PIPE UNDERDRAIN LATERALS WHEN PLACED ALONG PAVEMENT EDGE

NOTE: PVC PIPE FOR LATERALS SHALL MEET THE REQUIREMENTS OF ASTM D 1785 (LATEST REVISION) FOR SCHEDULE 40 PIPE.

DATE	REVISION	DATE FILMED
4-10-03	REVISED NOTE 3	
1-12-00	REVISED DETAIL OF UNDERDRAIN LATERALS	
11-18-98	REVISED NOTE	
10-18-96	REVISED MIN. DEPTH & GEOTEXTILE FABRIC	
4-26-96	ADDED LATERAL NOTE; 5½" TO 5"	
11-22-95	REVISED LATERALS	
7-20-95	REVISED LATERALS & ADDED NOTE	
11- 3-94	REVISED FOR DUAL LATERALS	11- 3-94
10- 1-92	SUBSTITUTED GEOTEXTILE	10- 1-92
8-15-91	ADDED POLYEDTHYLENE PIPE	8-15-91
11- 8-90	DELETED ALTERNATE NOTE	11- 8-90
1-25-90	ADDED 4" SNAP ADAPTER	1-25-90
11-30-89	DEL. (SUBGRADE); ADDED (WHERE REQUIRED)	11-30-89
7-15-88	ISSUED P.L.M.	647-7-15-88

ARKANSAS STATE HIGHWAY COMMISSION

DETAILS OF PIPE UNDERDRAIN

STANDARD DRAWING PU-1

7-20-95 INSTD.PUI

SUPERELEVATION TABLE FOR TWO - WAY TRAFFIC

DEGREE OF CURVE	30 MPH e	30 MPH Ls (FT) MINIMUM	30 MPH Ls (FT) DESIRABLE	40 MPH e	40 MPH Ls (FT) MINIMUM	40 MPH Ls (FT) DESIRABLE	50 MPH e	50 MPH Ls (FT) MINIMUM	50 MPH Ls (FT) DESIRABLE	55 MPH e	55 MPH Ls (FT) MINIMUM	55 MPH Ls (FT) DESIRABLE	60 MPH e	60 MPH Ls (FT) MINIMUM	60 MPH Ls (FT) DESIRABLE	70 MPH e	70 MPH Ls (FT) MINIMUM	70 MPH Ls (FT) DESIRABLE
0° 15′	N.C.			N.C.			N.C.			N.C.			N.C.			N.C.		
0° 30′	N.C.			N.C.			N.C.			N.C.			N.C.			N.C.		
0° 45′	N.C.			N.C.			N.C.			N.C.			N.C.			N.C.		
1° 00′	N.C.			N.C.			R.C.			0.022			0.023			0.028		
1° 15′	N.C.			R.C.			0.021			0.026			0.030			0.037	275	300
1° 30′	N.C.			0.021			0.026			0.032			0.037	250	300	0.046		
1° 45′	N.C.			0.025	175		0.031	200		0.037	225		0.043			0.054		
2° 00′	R.C.			0.028			0.036			0.043			0.048			0.062		
2° 15′	R.C.			0.031			0.040			0.048			0.055			0.070		
2° 30′	0.021			0.034			0.045			0.053			0.061			0.078	300	
2° 45′	0.023			0.037			0.049			0.058			0.067			0.085	315	350
3° 00′	0.025			0.040			0.053			0.063			0.072			0.091	335	
3° 15′	0.027	150		0.043			0.057			0.067	230		0.077	260		0.096	350	400
3° 30′	0.029			0.046			0.061			0.072	245		0.082	275		0.098	360	
3° 45′	0.031			0.049			0.065	205		0.076	255		0.086	285		0.100	360	
4° 00′	0.033			0.051			0.069	215		0.080	265		0.090	295	350			
4° 30′	0.037			0.056			0.072	225		0.083	270		0.093	305				
5° 00′	0.040			0.061			0.078	240		0.087	280		0.096	315				
5° 30′	0.043			0.066	185		0.083	250		0.091	295		0.098	320				
6° 00′	0.046			0.070	190		0.088	260		0.094	300	350						
6° 30′	0.050			0.074	200		0.092	270		0.096	305							
7° 00′	0.053			0.078	210		0.095	280	300	0.100	315							
7° 30′	0.056			0.081	215		0.098	285										
8° 00′	0.058			0.084	220		0.099	290										
8° 30′	0.061			0.087	225	250	0.100	290										
9° 00′	0.063			0.089	230													
10° 00′	0.068	160		0.094	235													
11° 00′	0.072	170		0.097	250													
12° 00′	0.076	175		0.099	250													
13° 00′	0.080	180		0.100	250													
14° 00′	0.083	190																
15° 00′	0.086	195																
16° 00′	0.089	200																
17° 00′	0.091	200																
18° 00′	0.093	205																
19° 00′	0.095	210																
20° 00′	0.097	215	250															
21° 00′	0.098	215																
22° 00′	0.099	215																
23° 00′	0.099	215																
24° 00′	0.100	220																

D MAX = 24° 45′ | D MAX = 13° 15′ | D MAX = 8° 15′ | D MAX = 6° 30′ | D MAX = 5° 15′ | D MAX = 3° 30′

ABBREVIATIONS

NC - NORMAL CROWN
RC - REVERSE CROWN, SUPERELEVATION AT NORMAL CROWN SLOPE
e - RATE OF SUPERELEVATION (FT. PER FT.)
Ls - LENGTH OF SUPERELEVATION TRANSITION (FT.)
L - DISTANCE FROM BEGINNING OF SUPERELEVATION TRANSITION TO ANY POINT (FT.)
d - WIDTH OF PAVEMENT (FT.) OR WIDTH OF SUBGRADE (FT.)
C - NORMAL CROWN (FT.)

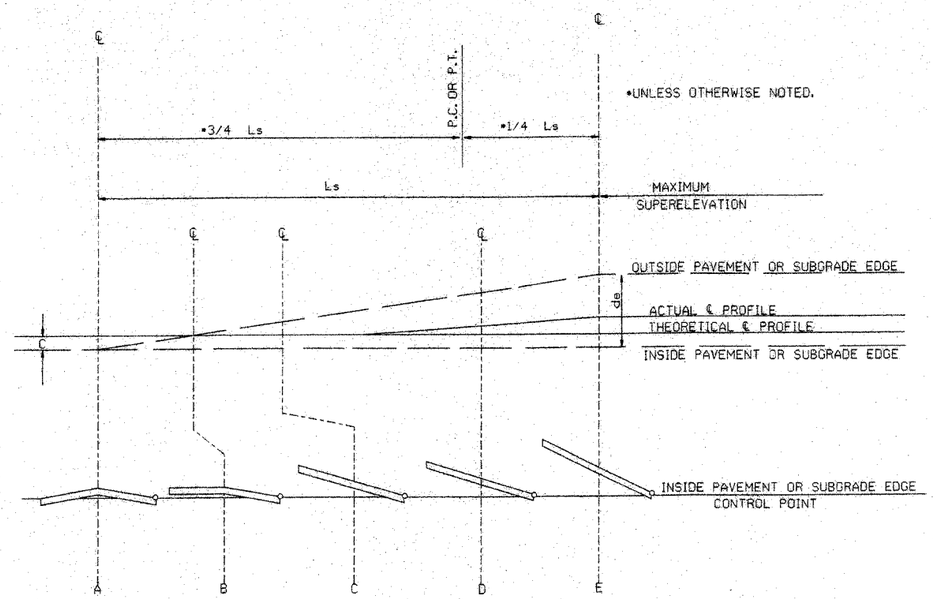

•UNLESS OTHERWISE NOTED.

STANDARD METHOD WHEN SUPERELEVATION REVOLVES AROUND INNER SUBGRADE POINT OR INNER PAVEMENT EDGE

NOTE: MAINTAIN NORMAL CROWN ON INSIDE UNTIL SUPERELEVATION EXCEEDS 2C.

GENERAL NOTES

1. ON PAVEMENT WITH TWO-WAY TRAFFIC, THE SUPERELEVATION SHALL BE REVOLVED ON THE INSIDE PAVEMENT EDGE UNLESS OTHERWISE NOTED ON THE PLANS
2. SUPERELEVATION VALUES SHOWN ON THE CROSS SECTIONS ARE VALUES (+) OR (-) TO BE ADDED TO OR SUBTRACTED FROM THE POINT OF CONTROL.
3. LENGTHS FOR L MAY BE ROUNDED IN MULTIPLES OF 25 FT. OR 50 FT. TO PERMIT SIMPLER CALCULATIONS.
4. PAVEMENTS WIDER THAN 2 LANES SHALL HAVE ADDITIONAL TRANSITION LENGTHS AS FOLLOWS:

3 LANE UNDIVIDED - - - - - +20%
4 LANE UNDIVIDED - - - - - +50%
5 LANE UNDIVIDED - - - - - +80%
6 LANE UNDIVIDED - - - - - +100%

NOTE: MAINTAIN NORMAL CROWN ON INSIDE UNTIL SUPERELEVATION EXCEEDS 2C.

RATE OF SUPERELEVATION SHALL BE COMPUTED ON STRAIGHT LINE METHOD USING APPLICABLE Ls.

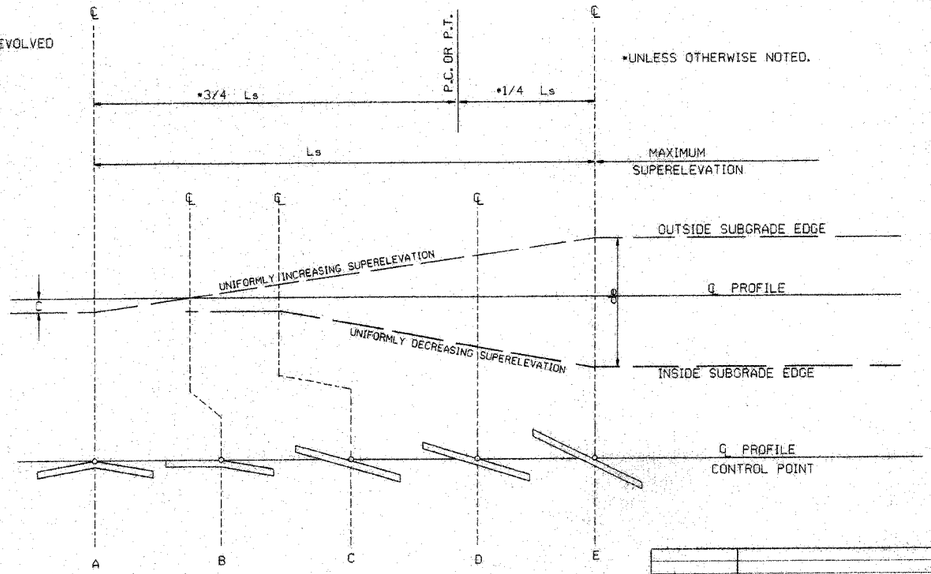

•UNLESS OTHERWISE NOTED.

STANDARD METHOD WHEN SUPERELEVATION REVOLVES AROUND CENTER LINE

SUPERELEVATION FORMULA = $\frac{Lde}{Ls}$

DATE	REVISION	DATE FILMED
10-18-96	ADDED FORMULA	10-18-96
01-09-87	ISSUED	534-1-9-87

ARKANSAS STATE HIGHWAY COMMISSION

TABLES AND METHOD OF SUPERELEVATION FOR TWO-WAY TRAFFIC

STANDARD DRAWING SE-2

FILE STDSE2.DGN

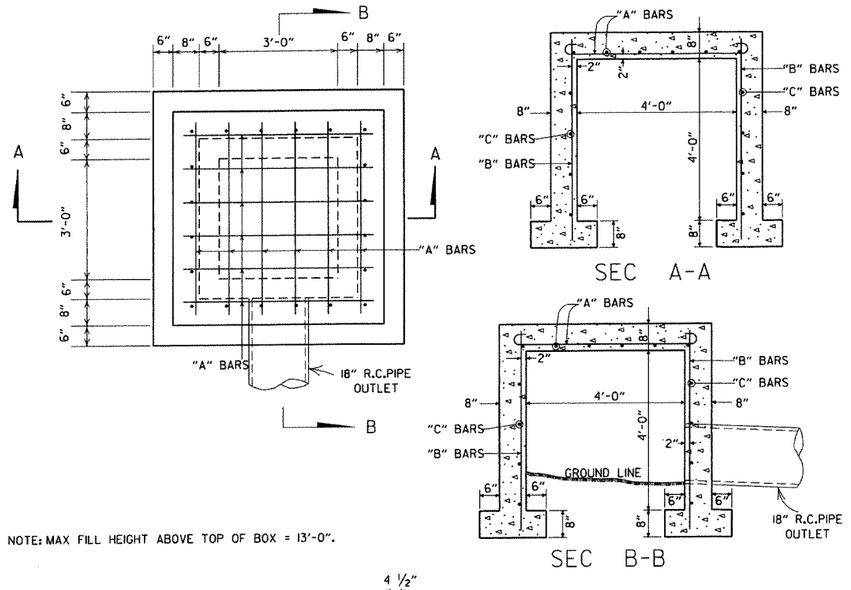

NOTE: MAX FILL HEIGHT ABOVE TOP OF BOX = 13'-0".

STEEL SCHEDULE

BARS	NUMBER	LENGTH	SPACING
"A"	12	6'-0"	10"
"B"	20	5'-0"	10 ½"
"C"	16	5'-0"	12"

ALL STEEL TO BE #4 BARS

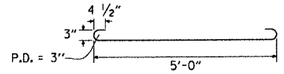

QUANTITIES

CONCRETE 3.31 CU. YDS.
REINFORCING STEEL 168 LB.

GENERAL NOTE:
THE PAY ITEMS FOR REINFORCED CONCRETE SPRING BOXES SHALL BE FOR THE QUANTITTIES OF CONCRETE OF THE CLASS SPECIFIED, REINFORCING STEEL, EXCAVATION FOR STRUCTURES AND 18" R.C. PIPE CULVERT.

REINFORCED CONCRETE SPRING BOX

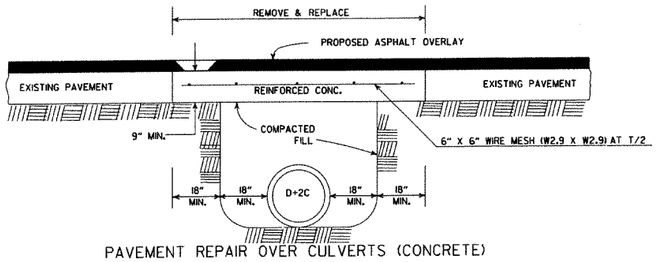

PAVEMENT REPAIR OVER CULVERTS (CONCRETE)

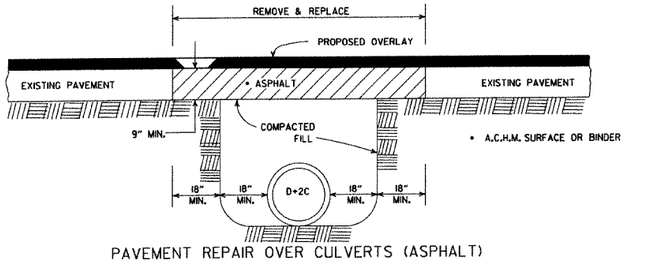

PAVEMENT REPAIR OVER CULVERTS (ASPHALT)

DETAIL SHOWING REPAIR OF EXISTING PAVEMENT AT CULVERT INSTALLATIONS

• A 2" MIN. HIGH CURB IS REQUIRED WHEN CONCRETE WALK IS ADJACENT TO THE HAND RAILING. PAYMENT FOR CURB SHALL BE CONSIDERED INCLUDED IN THE PRICE BID FOR CONCRETE WALKS.

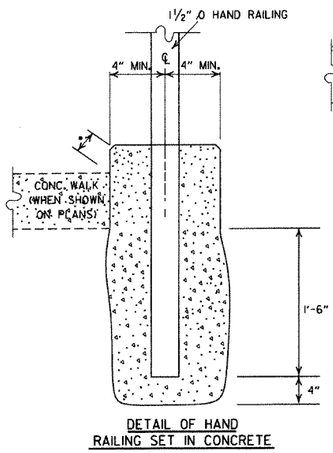

DETAIL OF HAND RAILING SET IN CONCRETE

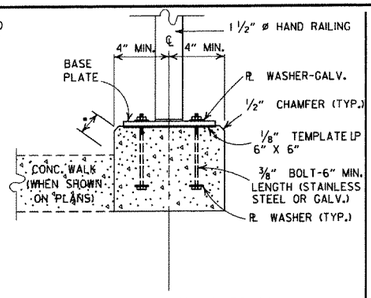

POST CONNECTION TO WALL

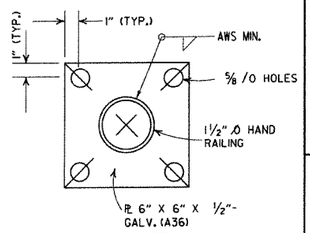

BASE PLATE

POST CONNECTION DETAILS

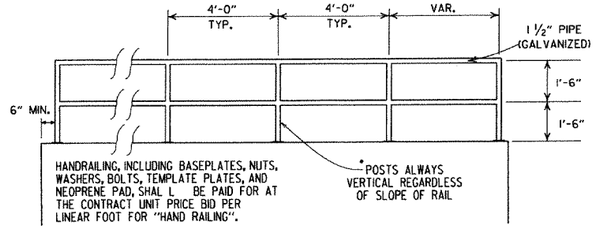

HAND RAILING SHALL CONFORM TO SECTION 633.

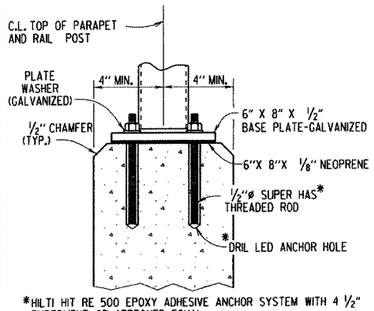

*HILTI HIT RE 500 EPOXY ADHESIVE ANCHOR SYSTEM WITH 4 ½" EMBEDMENT OR APPROVED EQUAL.

THE ADHESIVE ANCHOR SYSTEM SHALL BE INSTALLED IN ACCORDANCE WITH MANUFACTURER'S RECOMMENDATIONS.

POST CONNECTION TO WALL

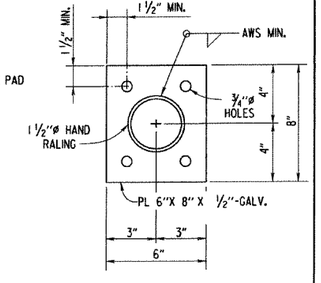

BASE PLATE

DETAILS OF ALTERNATE POST ANCHOR SYSTEM
(EPOXY ADHESIVE ANCHORS)

HAND RAILING DETAILS

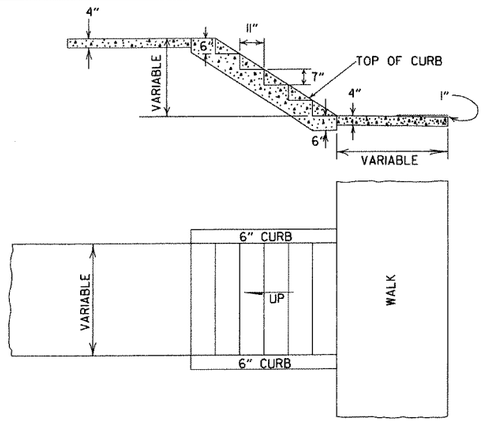

GENERAL NOTES

1. RISE AND TREAD DIMENSIONS OF STEPS MAY BE VARIED AS DIRECTED BY THE ENGINEER, HOWEVER, TREAD WIDTHS SHALL BE 11" MIN. ALL STEPS IN A FLIGHT SHALL HAVE CONSISTENT TREAD & RISER DIMENSIONS.
2. 1" TRANSVERSE EXPANSION JOINTS SHALL BE PLACED IN CONCRETE WALKS AT 45' INTERVALS.

DETAILS OF CONCRETE STEPS & WALKS

DATE	REVISION	DATE FILMED
9-12-13	REVISED REINFORCED CONCRETE SPRING BOX	
7-26-12	REMOVED RETAINING WALL DETAILS & REVISED HAND RAILING DETAILS	
4-17-08	REV. JOINT & FOOTING STEP DETAILS	
11-29-07	REVISED RETAINING WALL DRAINAGE	
5-25-06	REVISED PVMT REPAIR OVER CULVERTS (CONC); REVISED REINFORCED CONC SPRING BOX	
10-9-03	REVISED PIPE RAILING DETAILS TO HAND RAILING DETAILS	
4-10-03	REVISED RETAINING WALL DRAWING	
8-22-02	ADDED HAND RAILING DETAIL	
11-16-01	REVISED PVMT REPAIR OVER CULVERTS (CONC); CORRECTED SPELLING IN GENERAL NOTES	
11-18-98	ADDED GENERAL NOTES TO CONCRETE STEPS & WALKS	
7-02-98	ENLARGED PIPE	
4-03-97	ADDED NOTE TO STEEL BAR SCHED.	
10-18-96	CORRECTED SPELLING	
4-26-96	ADD WEEP HOLE; REV. JOINT SPACING IN RET. WALL	
6-2-94	CHANGED CONST. TO CONTRACTION JOINT	
10-1-92	CHANGED MESH FABRIC TO WIRE MESH	10-1-92
8-15-91	DELETED HDWL MODIFICATION DETAIL	8-15-91
11-8-90	DELETED COLD MIX FROM CULV'T. REPAIR	11-8-90
11-30-89	REV. RETAINING WALL STEEL SCHEDULE	11-30-89
11-17-88	V. BARS BEHIND ARROW	665-11-17-88
7-15-88	REV. PAVEMENT REPAIR ADDED HDWL. MODS, DEL. PIPE UNDERDRAINS	649-7-15-88
11-1-84	REV. TRENCH FOR PIPE UNDERDRAIN	510-11-1-84
1-4-83	ELIMINATED CONC. CLASS & ADDED CHAMFER NOTE	682-1-4-83
3-2-81	SPELLING OF "UNDERDRAIN"	721-3-2-81
4-20-79	REV. UNDERDRAIN DET& PAVEMENT REPAIR	674-4-20-79
2-2-76	12"MIN. GRAN. MAT'L. OVER PIPE	919-2-2-76
4-10-75	REM. SPECS. FOR GRAN. MAT'L.	568-4-10-75-853
5-22-74	GRANULAR MAT'L. TO BE SB-3	567-5-22-74-740
10-2-72	REVISED AND REDRAWN	564-10-16-72

ARKANSAS STATE HIGHWAY COMMISSION

DETAILS OF SPECIAL ITEMS

STANDARD DRAWING SI-1

R1-1

STANDARD 30"X30"
EXPRESSWAY 36"X36"
SPECIAL 48"X48"

R1-2

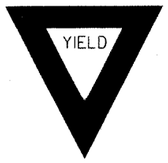

STD. 36"X36"X36"
EXPWY. 48"X48"X48"
FWY. 60"X60"X60"

R2-1

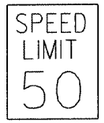

STD. 24"X30"
EXPWY. 36"X48"
FWY. 48"X60"

R2-5A

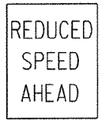

STD. 24"X30"
EXPWY. 36"X48"
FWY. 48"X60"

R2-5C

STD. 24"X30"
EXPWY. 36"X48"
FWY. 48"X60"

R4-1

STD. 24"X30"
EXPWY. 36"X48"
FWY. 48"X60"

R4-2

STD. 24"X30"
EXPWY. 36"X48"
FWY. 48"X60"

R5-1

STD. 30"X30"
EXPWY. 36"X36"
SPECIAL 48"X48"

RII-2

48"X30"

RII-3A

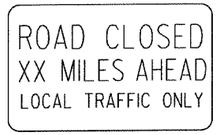

60"X30"

RII-4

60"X30"

RSP-1

48"X30"

WI-1

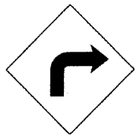

STD. 36"X36"
FWY. 48"X48"

WI-2

STD. 36"X36"
FWY. 48"X48"

WI-3

STD. 48"X48"

WI-4

STD. 48"X48"

WI-6

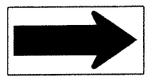

STD. 48"X24"
SPECIAL 60"X30"

WI-8

STD. 18"X24"
SPECIAL 24"X30"
EXPWY. 30"X36"
FWY. 36"X48"

W3-1

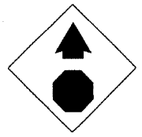

STD. 36"X36"
SPECIAL 48"X48"

W3-2

STD. 36"X36"
SPECIAL 48"X48"

W4-2

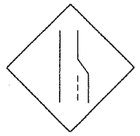

STD. 36"X36"
FWY. 48"X48"

W5-1

STD. 36"X36"
SPECIAL 48"X48"

W6-3

EXPWY. 36"X36"
SPECIAL 48"X48"

W8-7

EXPWY. 36"X36"
FWY. 48"X48"

W9-2

STD. 36"X36"
FWY. 48"X48"

WI3-1

STD. 24"X24"

W20-1

STD. 48"X48"

W20-2

STD. 48"X48"

W20-3

STD. 48"X48"

W20-4

STD. 48"X48"

W20-5

STD. 48"X48"

W20-7a

STD. 36"X36"
FWY. 48"X48"

W21-2

STD. 30"X30"
SPECIAL 36"X36"

W21-5

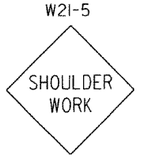

STD. 30"X30"
SPECIAL 36"X36"

W24-1

STD. 36"X36"

WI-4b

STD. 48"X48"

R56-1

STD. 18"X18"

W8-11

STD. 36"X36"
FWY. 48"X48"

W8-9

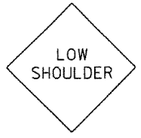

STD. 36"X36"
FWY. 48"X48"

G20-1

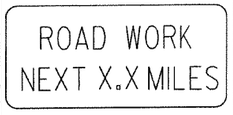

60"X24"

G20-2

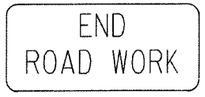

48"X24"

OM-3L OM-3R

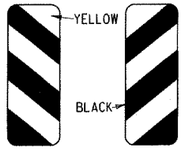

12"X36"

M4-9

STD. 30"X24"
SPECIAL 48"X36"
SPECIAL 60"X48"

M4-10

48"X18"

R55-1

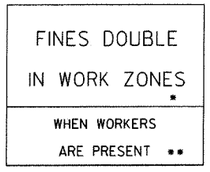

36"X60"

* USE 6" C LETTERS
** USE 4" D LETTERS

ADVANCE DISTANCES
(XXXX)

500 FT	1/2 MILE
1000 FT	3/4 MILE
1500 FT	1 MILE
	AHEAD

GENERAL NOTES:

1. ALL TRAFFIC CONTROL DEVICES USED ON ROAD CONSTRUCTION SHALL CONFORM TO THE MANUAL ON UNIFORM TRAFFIC CONTROL DEVICES, LATEST EDITION, AND TO THE STANDARD HIGHWAY SIGNS, LATEST EDITION, OR AS APPROVED BY THE FEDERAL HIGHWAY ADMINISTRATION.

2. TRAFFIC CONTROL DEVICES SHALL BE SET UP JUST BEFORE THE START OF CONSTRUCTION OPERATIONS AND SHALL BE PROPERLY MAINTAINED DURING THE TIME SUCH CONDITIONS EXIST. THEY SHALL REMAIN IN PLACE ONLY AS LONG AS NEEDED AND REMOVED THEREAFTER.

3. EXISTING SIGNS AND CONSTRUCTION SIGNS SHALL BE KEPT IN PROPER POSITION, AND BE CLEAN AND LEGIBLE AT ALL TIMES. SIGNS THAT DO NOT APPLY TO EXISTING CONDITIONS SHALL BE REMOVED. SIGNS THAT ARE DAMAGED, DEFACED, OR THAT ACCUMULATE DIRT DURING CONSTRUCTION SHALL BE CLEANED, REPAIRED, OR REPLACED.

• 4. SIGNS ARE USUALLY MOUNTED ON A SINGLE POST, ALTHOUGH THOSE WIDER THAN 36" OR LARGER THAN 10 SQ. FT. SHALL BE MOUNTED ON TWO POSTS OR ABOVE A TYPE III BARRICADE.

• 5. SIGN POSTS DIRECT BURIED IN SOIL SHALL BE 2 LB. MINIMUM CHANNEL POST OR 4"x4" WOOD POSTS. CHANNEL POSTS SHALL BE PAINTED GREEN. WOOD POSTS SHALL BE PAINTED WHITE. ALL POSTS SHALL BE NEATLY CONSTRUCTED, AND SHALL BE REPLUMBED, CLEANED, OR REPAIRED AS NEEDED FOR THE DURATION OF THE JOB. THERE SHALL NOT BE MORE THAN 2 POSTS IN A 7' PATH FOR WOOD OR CHANNEL POSTS. ANY CHANNEL POST SPLICE SHALL BE IN ACCORDANCE WITH STANDARD DRAWING TC-3.

6. POST MOUNTED SIGNS IN RURAL AREAS SHALL BE CONSTRUCTED WITH THE NEAR EDGE OF THE SIGN FROM 6 TO 12 FEET FROM THE PAVEMENT EDGE. SIGNS IN URBAN AREAS AND BARRICADE MOUNTED SIGNS SHALL BE MOUNTED A MINIMUM OF 2 FEET FROM THE PAVEMENT EDGE.

7. ALL POST AND BARRICADE MOUNTED SIGNS MOUNTED IN URBAN AREAS SHALL BE MOUNTED A MINIMUM DISTANCE OF 7' FROM THE BOTTOM OF THE SIGN TO THE ROADWAY SURFACE. ALL POST AND BARRICADE MOUNTED SIGNS MOUNTED IN RURAL AREAS SHALL BE MOUNTED A MINIMUM DISTANCE OF 7' FROM THE BOTTOM OF THE SIGN TO THE ROADWAY SURFACE, EXCEPT A MINIMUM OF 6' SHALL BE USED WHEN MOUNTING AN ADVISORY SIGN BELOW A WARNING SIGN. TEMPORARY SIGNS MAY BE MOUNTED ON PORTABLE SUPPORTS FOR INTERMEDIATE TERM STATIONARY WORK CONDITIONS. THE SIGNS MINIMUM MOUNTING HEIGHT SHALL BE 5'. RETROREFLECTIVE DEVICES SHALL BE USED. TEMPORARY SIGNS MAY BE MOUNTED ON PORTABLE SUPPORTS FOR SHORT-TERM, SHORT DURATION, AND MOBILE CONDITIONS. THEY SHALL BE NO LESS THAN ONE (1) FOOT ABOVE THE TRAVELED WAY. LONG-TERM STATIONARY SIGNS SHALL BE DIRECT BURIED IN SOIL, UNLESS CONDITIONS NECESSITATE THE USE OF PORTABLE SIGNS, OR AS APPROVED BY THE ENGINEER. CONCRETE PADS, CONCRETE OR ROCK BALLAST, OR OTHER SOLID MATERIALS SHALL NOT BE UTILIZED WITH PORTABLE SIGN SUPPORTS.

8. FLAGGERS SHALL USE REFLECTORIZED STOP-SLOW PADDLES. FLAGS MAY BE USED ONLY FOR EMERGENCY SITUATIONS.

9. MOST OF THE SIGNS SHOWN ARE ORIENTED TO THE RIGHT. HOWEVER, THIS DOES NOT PRECLUDE THE USE OF MIRROR IMAGES OF THESE SIGNS WHERE THE REVERSE ORIENTATION MIGHT BETTER CONVEY TO MOTORISTS THE PROPER DIRECTION OF MOVEMENT.

10. R55-1 SIGNS SHALL BE PLACED AT LEAST 1500' BUT NOT MORE THAN 1 MILE IN ADVANCE OF THE WORK ZONE. IF A SPEED LIMIT REDUCTION IS IN EFFECT, THE SIGN SHALL BE PLACED A MINIMUM OF 500' IN ADVANCE OF THE "REDUCED SPEED AHEAD" SIGN.

• NOTE: SUPPORTS FOR SIGNS, BARRICADES, AND VERTICAL PANELS THAT ARE DIFFERENT FROM THE REQUIREMENTS SHOWN IN NOTES 4 & 5, BUT MEET THE REQUIREMENTS OF NCHRP-350 OR MANUAL FOR ASSESSING SAFETY HARDWARE (MASH), WILL BE ACCEPTED. COMPLIANCE WITH THE REQUIREMENTS OF NCHRP-350 OR MANUAL FOR ASSESSING SAFETY HARDWARE (MASH) IS REQUIRED FOR ALL PROJECTS.

DATE	REVISION	FILMED
12-15-11	REVISED W24-1	
11-17-10	DELETED W8-9a & ADDED W8-9	
10-15-09	ADDED REFERENCE TO MASH & ADDED SIGN W24-1	
4-17-08	REVISED SIGN DESIGNATIONS	
11-18-04	REVISED NOTES	
10-9-03	REVISED NOTE 1	
11-16-01	REVISED NOTE 7	
9-28-00	REVISED NOTE	
11-18-98	ADDED NOTE	
6-26-97	REVISED NOTE 5	
4-03-97	REVISED NOTE 5	
10-18-96	ADDED CONTROLLED ACCESS HWY. SIGN & TO NOTE 7	
10-12-95	ADDED R55-1	
6-8-95	REVISED TO CORRECT SIGN ILLUSTRATIONS	6-8-95
2-2-95	REVISED PER PART VI, MUTCD SEPT. 3, 1993	
8-15-91	DRAWN AND PLACED IN USE	

ARKANSAS STATE HIGHWAY COMMISSION

STANDARD TRAFFIC CONTROLS FOR HIGHWAY CONSTRUCTION

STANDARD DRAWING TC-1

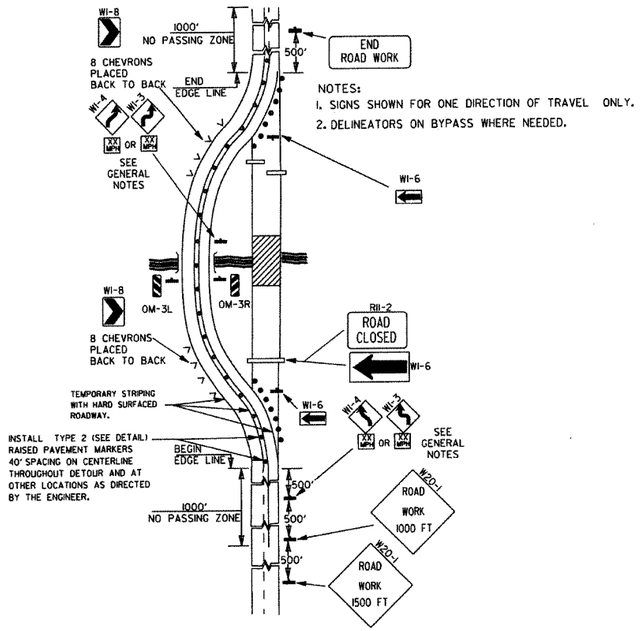

NOTES:
1. SIGNS SHOWN FOR ONE DIRECTION OF TRAVEL ONLY.
2. DELINEATORS ON BYPASS WHERE NEEDED.

(A) TYPICAL APPLICATION OF TRAFFIC CONTROL DEVICES ON A 2-LANE HIGHWAY WHERE THE ENTIRE ROADWAY IS CLOSED AND A BYPASS DETOUR IS PROVIDED.

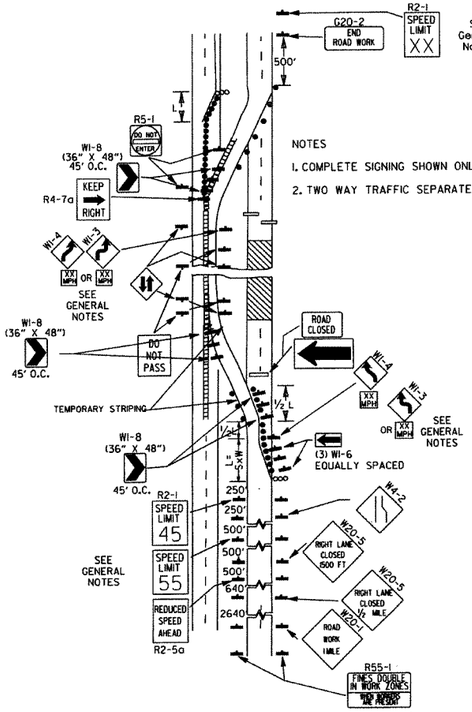

NOTES
1. COMPLETE SIGNING SHOWN ONLY IN CROSSOVER DIRECTION.
2. TWO WAY TRAFFIC SEPARATED WITH POSITIVE BARRIER.

(B) TYPICAL APPLICATION - 4-LANE DIVIDED ROADWAY WHERE ONE ROADWAY IS CLOSED.

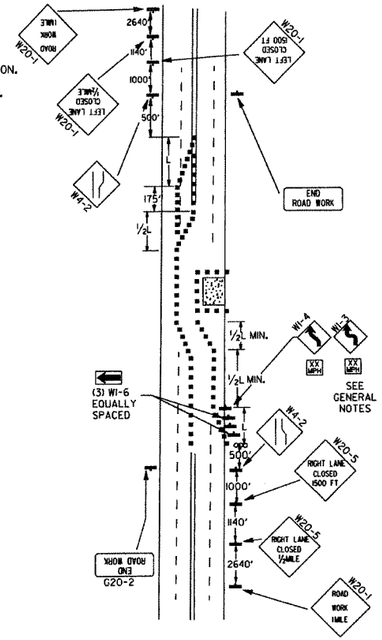

(C) TYPICAL APPLICATION - 4-LANE UNDIVIDED ROADWAY WHERE HALF OF THE ROADWAY IS CLOSED.

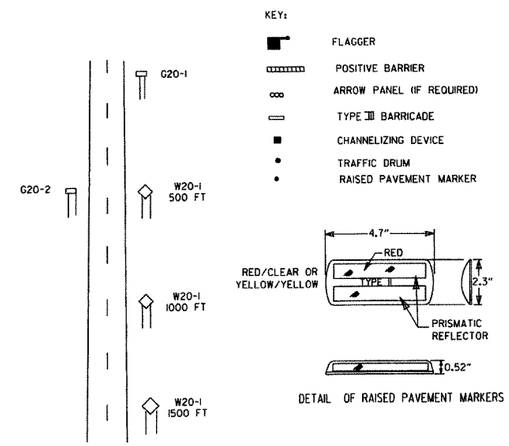

DETAIL OF RAISED PAVEMENT MARKERS

TYPICAL ADVANCE WARNING SIGN PLACEMENT

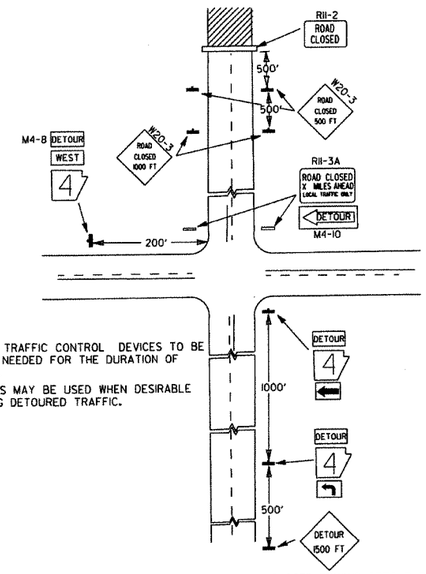

NOTES:
1. REGULATORY TRAFFIC CONTROL DEVICES TO BE MODIFIED AS NEEDED FOR THE DURATION OF THE DETOUR.
2. STREET NAMES MAY BE USED WHEN DESIRABLE FOR DIRECTING DETOURED TRAFFIC.

(D) TYPICAL APPLICATION - ROADWAY CLOSED BEYOND DETOUR POINT.

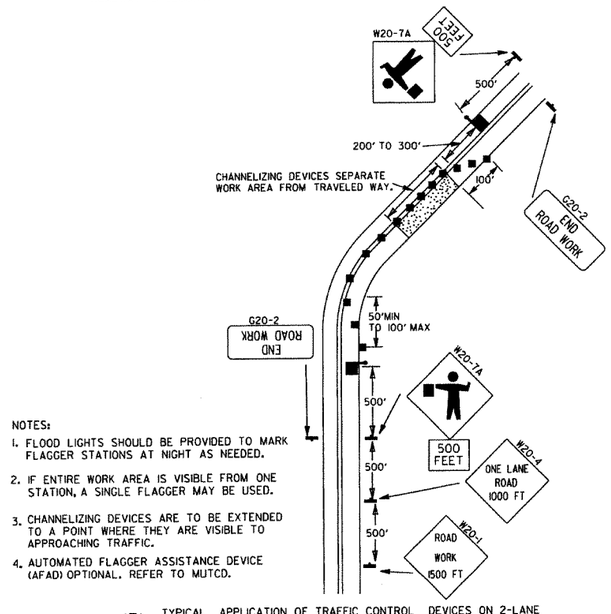

NOTES:
1. FLOOD LIGHTS SHOULD BE PROVIDED TO MARK FLAGGER STATIONS AT NIGHT AS NEEDED.
2. IF ENTIRE WORK AREA IS VISIBLE FROM ONE STATION, A SINGLE FLAGGER MAY BE USED.
3. CHANNELIZING DEVICES ARE TO BE EXTENDED TO A POINT WHERE THEY ARE VISIBLE TO APPROACHING TRAFFIC.
4. AUTOMATED FLAGGER ASSISTANCE DEVICE (AFAD) OPTIONAL. REFER TO MUTCD.

(E) TYPICAL APPLICATION OF TRAFFIC CONTROL DEVICES ON 2-LANE HIGHWAY WHERE ONE LANE IS CLOSED AND FLAGGING IS PROVIDED.

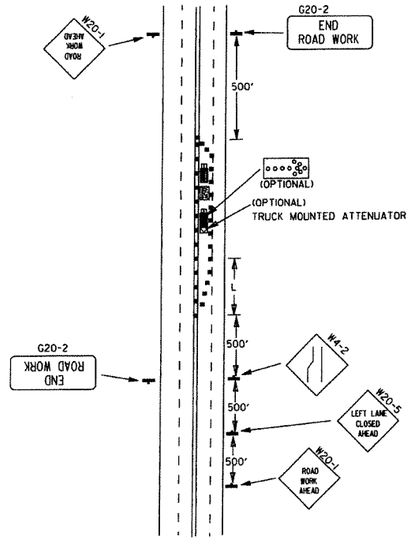

(F) TYPICAL APPLICATION - 4-LANE UNDIVIDED ROADWAY WITH INSIDE LANE CLOSED.

TAPER FORMULAE:

L=SXW FOR SPEEDS OF 45MPH OR MORE.

$L = \frac{WS^2}{60}$ FOR SPEEDS OF 40MPH OR LESS.

WHERE:
L= MINIMUM LENGTH OF TAPER.
S= NUMERICAL VALUE OF POSTED SPEED LIMIT PRIOR TO WORK OR 85TH PERCENTILE SPEED.
W= WIDTH OF OFFSET.

GENERAL NOTES:

1. ADVISORY SPEED POSTED ON W1-3 OR W1-4 CURVE WARNING SIGNS TO BE DETERMINED AT SITE. USE W1-4 WHEN SPEED IS GREATER THAN 30MPH AND W1-3 WHEN 30MPH OR LESS.
2. WHEN THE EXISTING SPEED LIMIT IS 55MPH AND THE PLANS REQUIRE A SPEED LIMIT OF 45MPH, THE R2-1(55) SHALL BE OMITTED AND THE R2-5A SHALL BE INSTALLED AT THAT LOCATION. ADDITIONAL R2-1 45MPH SPEED LIMIT SIGNS SHALL BE INSTALLED AT A MAXIMUM OF 1MILE INTERVALS. AT THE END OF THE WORK AREA A R2-1(XX) SHALL BE INSTALLED TO MATCH ORIGINAL SPEED LIMIT.
3. WHEN THE EXISTING SPEED LIMIT IS 65MPH AND THE PLANS REQUIRE A SPEED LIMIT OF 55MPH, THE R2-1(45) SHALL BE OMITTED. ADDITIONAL R2-1 55MPH SPEED LIMIT SIGNS SHALL BE INSTALLED AT A MAXIMUM OF 1MILE INTERVALS. AT THE END OF THE WORK AREA A R2-1(XX) SHALL BE INSTALLED TO MATCH ORIGINAL SPEED LIMIT.
4. THE MAXIMUM SPACING BETWEEN CHANNELIZING DEVICES IN A TAPER SHOULD BE APPROXIMATELY EQUAL IN FEET TO THE SPEED LIMIT. BEYOND THE TAPER, MAXIMUM SPACING SHALL BE TWO TIMES THE SPEED LIMIT, OR AS DIRECTED BY THE ENGINEER.
5. WARNING LIGHTS AND/OR FLAGS MAY BE MOUNTED TO SIGNS OR CHANNELIZING DEVICES AT NIGHT AS NEEDED.
6. PAVEMENT MARKINGS NO LONGER APPLICABLE WHICH MIGHT CREATE CONFUSION IN THE MINDS OF VEHICLE OPERATORS SHALL BE REMOVED OR OBLITERATED AS SOON AS PRACTICABLE.
7. TRAILER MOUNTED DEVICES SUCH AS ARROW PANELS AND PORTABLE CHANGEABLE MESSAGE SIGNS SHALL BE DELINEATED BY AFFIXING CONSPICUITY MATERIAL IN A CONTINUOUS LINE ON THE FACE OF THE TRAILER. WHEN PLACED ON OR ADJACENT TO THE SHOULDER AND NOT BEHIND A POSITIVE BARRIER, THESE DEVICES SHALL BE DELINEATED BY PLACING FIVE (5) TRAFFIC DRUMS, EQUALLY SPACED ALONG THE TRAFFIC SIDE OF THE DEVICE.

DATE	REVISION	FILMED
9-12-13	REVISED DETAIL OF RAISED PAVEMENT MARKERS	
3-11-10	ADDED (AFAD)	
11-20-08	REVISED SIGN DESIGNATIONS	
11-18-04	ADDED GENERAL NOTE	
10-18-96	ADDED R55-1	
4-26-96	CORRECTED (a) BEHIND G20-2	
6-8-95	CORRECTED SIGN IDENT. ON W1-4A	6-8-95
2-2-95	REVISED PER PART VI, MUTCD, SEPT. 3, 1993	
8-15-91	DRAWN AND PLACED IN USE	

ARKANSAS STATE HIGHWAY COMMISSION

STANDARD TRAFFIC CONTROLS FOR HIGHWAY CONSTRUCTION

STANDARD DRAWING TC-2

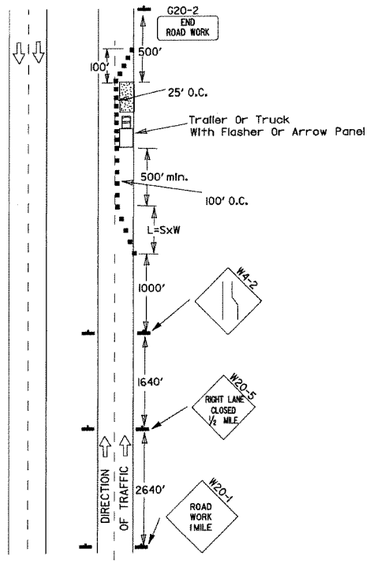

(A) Typical application - daytime maintenance operations of short duration on a 4-lane divided roadway where half of the roadway is closed.

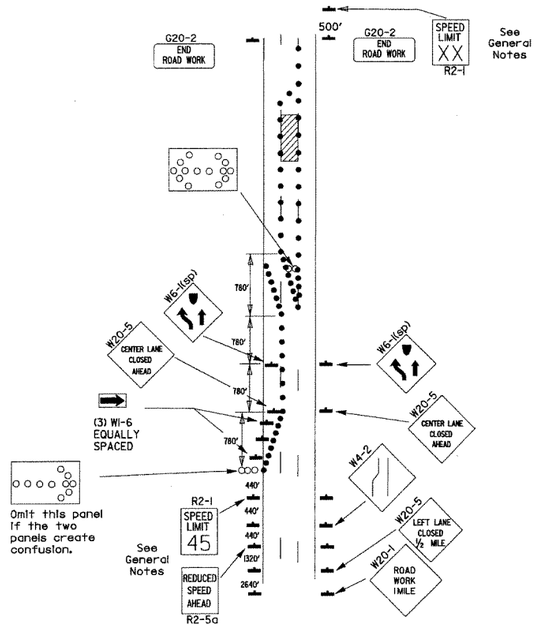

(B) Typical application - 3-lane oneway roadway where center lane is closed.

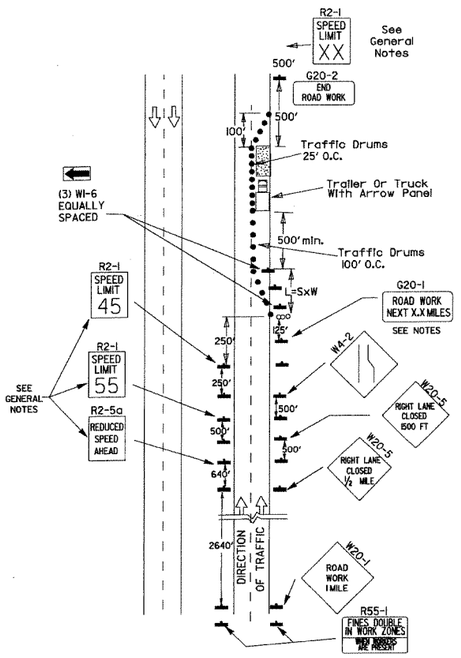

(C) Typical application - construction operations of intermediate to long term duration on a 4-lane divided roadway where half of the roadway is closed.

KEY:

○○○ Arrow Panel (if Required)

■ Channelizing Device

● Traffic drum

GENERAL NOTES:

1. A speed limit reduction may be implemented ONLY when designated in the plan or when recommended by the Roadway Design Division.
2. When the existing speed limit is 55mph and the plans require a speed limit of 45mph, the R2-1(55) shall be omitted and the R2-5A shall be installed at that location. Additional R2-1 45mph speed limit signs shall be installed at a maximum of 1 mile intervals. At the end of the work area a R2-1(XX) shall be installed to match original speed limit.
3. When the existing speed limit is 65mph and the plans require a speed limit of 55mph, the R2-1(45) shall be omitted. Additional R2-1 55mph speed limit signs shall be installed at a maximum of 1 mile intervals. At the end of the work area a R2-1(XX) shall be installed to match original speed limit.
4. The maximum spacing between channelizing devices in a taper should be approximately equal in feet to the speed limit. Beyond the taper, maximum spacing shall be two times the speed limit or as directed by the Engineer.
5. Warning lights and/or flags may be mounted to signs or channelizing devices at night as needed.
6. Pavement markings no longer applicable which might create confusion in the minds of vehicle operators shall be removed or obliterated as soon as practicable.
7. The G20-1 sign will be required on jobs of over two miles in length. When the lane closure is not at the beginning of the project, the G20-1 sign shall be erected 125' in advance of the job limit. Additional W20-1 (1 MILE) signs are not required in advance of lane closures that begin inside the project limits.
8. Flaggers shall use STOP/SLOW paddles for controlling traffic through work zones. Flags may be used only for emergency situations.
9. All plastic drums and cones shall meet the requirements of NCHRP-350 or Manual For Assessing Safety Hardware (MASH).
10. Trailer mounted devices such as arrow panels and portable changeable message signs shall be delineated by affixing conspicuity material in a continuous line on the face of the trailer. When placed on or adjacent to the shoulder and not behind a positive barrier, these devices shall be delineated by placing five (5) traffic drums, equally spaced along the traffic side of the device.

Channelizing devices

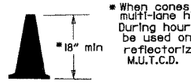

* When cones are used on freeways and multi-lane highways, they shall be 28" min. During hours of darkness, 28" cones shall be used on all roadways, and shall be reflectorized in accordance with the M.U.T.C.D.

CONES

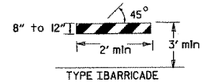

TYPE I BARRICADE

PLASTIC DRUM

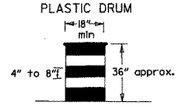

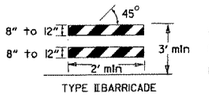

TYPE II BARRICADE

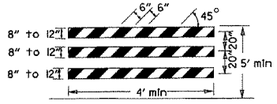

TYPE III BARRICADE

NOTE:
For all road closures, the Type III barricades shall be of sufficient length to extend across entire roadway.

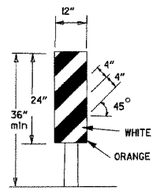

VERTICAL PANEL
VP-1R

VERTICAL PANEL PLACEMENT

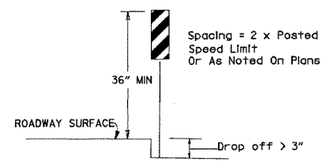

TRAFFIC CONTROL DEVICES
FOR
VERTICAL PAVEMENT DIFFERENTIALS

VERTICAL DIFFERENTIAL	LOCATIONS	TRAFFIC CONTROL
1" to 3"	Centerline, lane lines	W8-11
1" to 3"	Edge of shoulder	W8-9
Greater than 3"	Lane lines	Standard lane closure required
Greater than 3"	Edge of traveled lane	*RSP-1 and vertical panels, drums or concrete barrier
Greater than 3"	Edge of shoulder	*Vertical panels, drums or concrete barrier

* When shown on the plans concrete barrier will be used.

When the shoulder area is used as part of the traveled lane and there is insufficient width to place drums on the remaining shoulder width, then vertical panels shall be used.

FLAG

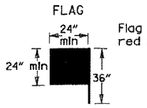

Flag shall be of good grade red material

STOP SLOW PADDLE

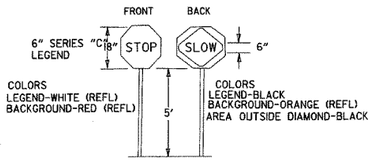

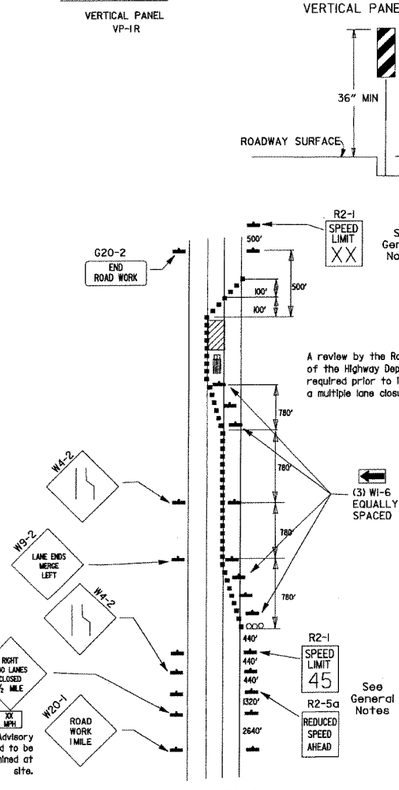

(D) Typical application - closing multiple lanes of a multilane highway.

DETAIL OF SPLICES

NOTES: USE SPLICES ONLY WHEN NECESSARY FOR INSTALLATION. TYPICAL INSTALLATION SHOULD HAVE NO SPLICES (SEE STD. DRAWING NO. SHS-2)

NORMAL INSTALLATIONS WILL REQUIRE 1/4" DIA. BOLTS TO MOUNT SIGNS TO POST AND 5/16" DIA. BOLTS TO ASSEMBLE THE VARIOUS POST SUPPORTS. EACH OF THESE BOLTS SHALL BE CARRIAGE BOLTS.

SIGN POSTS SHALL BE PAINTED GREEN; SIGNS SHALL NOT BE PAINTED, AND ALL SIGN POSTS SHALL BE PLUMB.

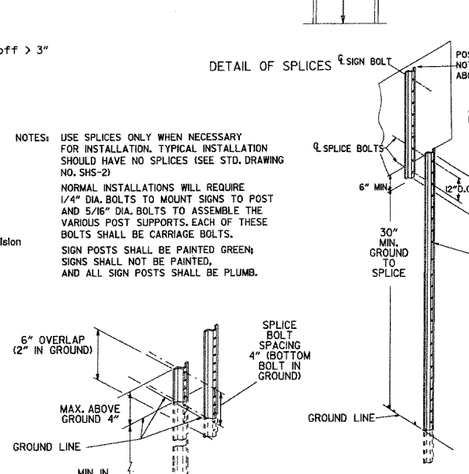

DATE	REVISION	FILMED
10-15-09	ADDED REFERENCE TO MASH	
11-20-08	REVISED SIGN DESIGNATIONS	
11-18-04	ADDED NOTE	
10-1-98	ADDED NOTE	
4-03-97	ADDED (SP) TO W6-1& REVISED TRAFFIC CONTROL DEVICES NOTE	
10-18-96	ADDED R55-1	
10-12-95	MOVED UPPER SPLICE	
6-8-95	REVISED SPLICE DETAIL, TEXT	6-8-95
2-2-95	REVISED PER PART VI, MUTCD, SEPT. 3, 1993	
8-15-91	DRAWN AND PLACED IN USE	

ARKANSAS STATE HIGHWAY COMMISSION

STANDARD TRAFFIC CONTROLS FOR HIGHWAY CONSTRUCTION

STANDARD DRAWING TC-3

GENERAL NOTES

INSTALL A MINIMUM OF 2 UPSLOPE STAKES AND 4 DOWNSLOPE STAKES AT AN ANGLE TO WEDGE WATTLE TO BOTTOM OF DITCH.

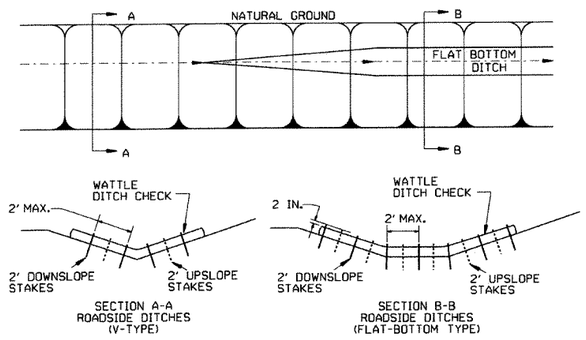

WATTLE DITCH CHECK (E-1)

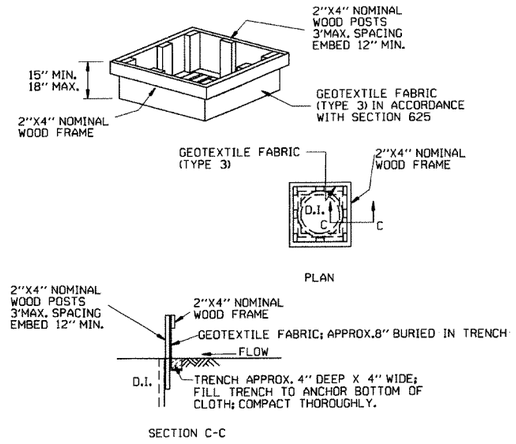

DROP INLET SILT FENCE (E-7)

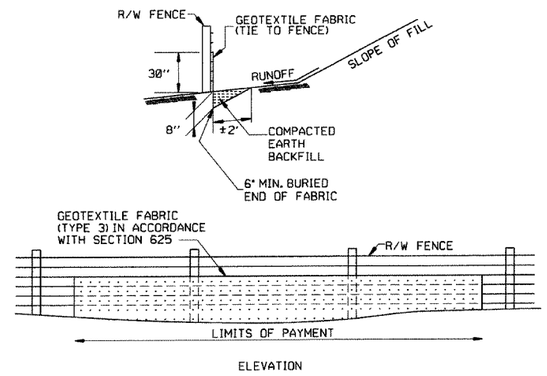

SILT FENCE ON R/W FENCE (E-4)

GENERAL NOTES

GEOTEXTILE FABRIC SHALL BE SPLICED TOGETHER WITH A SEWN SEAM ONLY AT A SUPPORT POST, OR TWO SECTIONS OF FENCE MAY BE OVERLAPPED INSTEAD. PAYMENT OF ADDITIONAL MATERIAL FOR OVERLAP WILL NOT BE MADE.

GENERAL NOTES

1. STRAW BALES SHALL BE INSTALLED SO THAT THE BINDINGS ARE ORIENTED AROUND THE SIDES RATHER THAN ALONG THE TOPS AND BOTTOMS OF THE BALES. THE BALES SHALL BE A MINIMUM OF 30 INCHES IN LENGTH.

2. NO GAPS SHALL BE LEFT BETWEEN BALES.

3. BALED STRAW FILTER BARRIERS COMPLETED AND ACCEPTED WILL BE MEASURED BY THE BALE IN PLACE AS AUTHORIZED BY THE ENGINEER AND WILL BE PAID FOR AT THE CONTRACT UNIT PRICE BID PER BALE FOR BALED STRAW DITCH CHECKS.

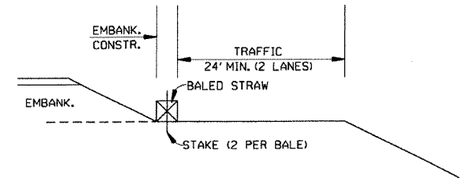

BALED STRAW FILTER BARRIER (E-2)

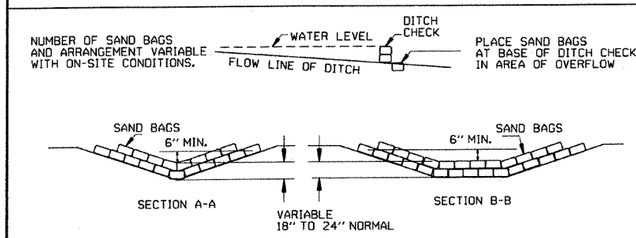

SAND BAG DITCH CHECK (E-5)

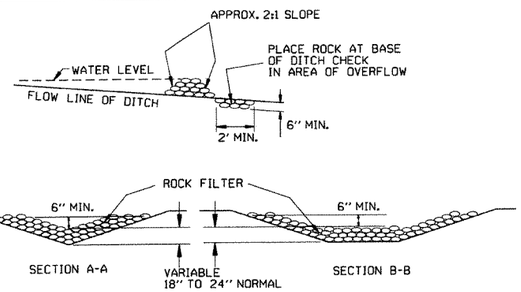

ROCK DITCH CHECK (E-6)

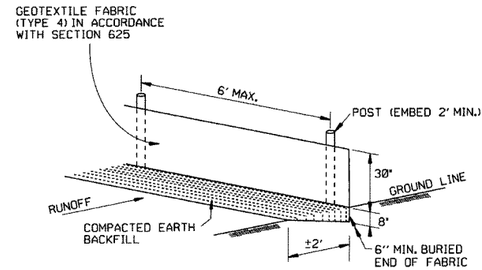

SILT FENCE (E-11)

GENERAL NOTES

GEOTEXTILE FABRIC SHALL BE SPLICED TOGETHER WITH A SEWN SEAM ONLY AT A SUPPORT POST OR TWO SECTIONS OF FENCE MAY BE OVERLAPPED INSTEAD. PAYMENT OF ADDITIONAL MATERIAL FOR OVERLAP WILL NOT BE MADE.

DATE	REVISION	FILMED
12-15-11	DELETED BALED STRAW DITCH CHECK & ADDED WATTLE DITCH CHECK	
11-18-98	ADDED NOTES	
7-02-98	ADDED BALED STRAW FILTER BARRIER (E-2)	
7-20-95	REVISED SILT FENCE E-4 AND E-11	7-20-95
7-15-94	REV. E-4 & E-11 MIN. 13" BURIED END OF FABRIC	
6-2-94	REVISED E-1,4.7 & 11; DELETED E-2 & 3	6-2-94
4-1-93	REDRAWN	
10-1-92	REDRAWN	
8-2-76	ISSUED R.D.M.	298-7-28-76

ARKANSAS STATE HIGHWAY COMMISSION

TEMPORARY EROSION CONTROL DEVICES

STANDARD DRAWING TEC-1

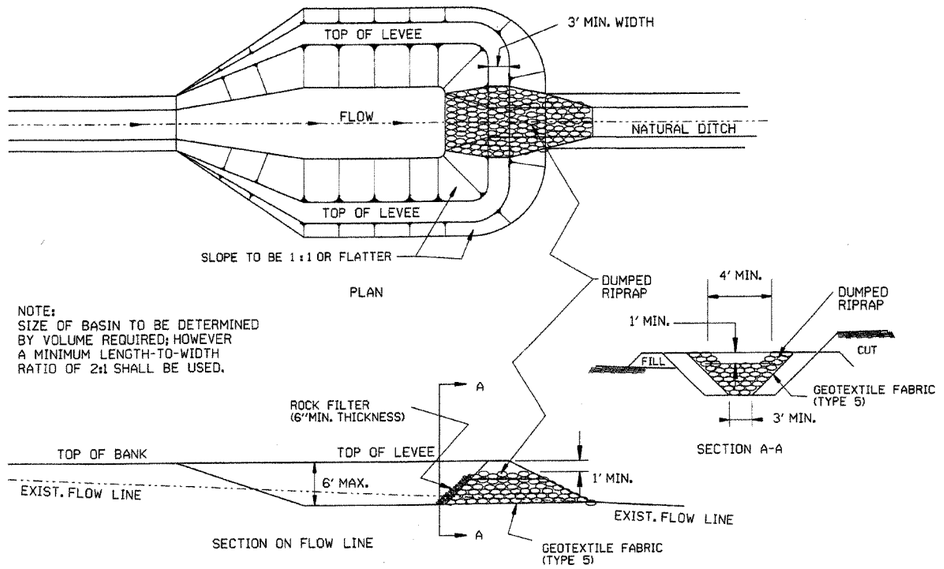

SEDIMENT BASIN WITH RIPRAP OUTLET (E-9)

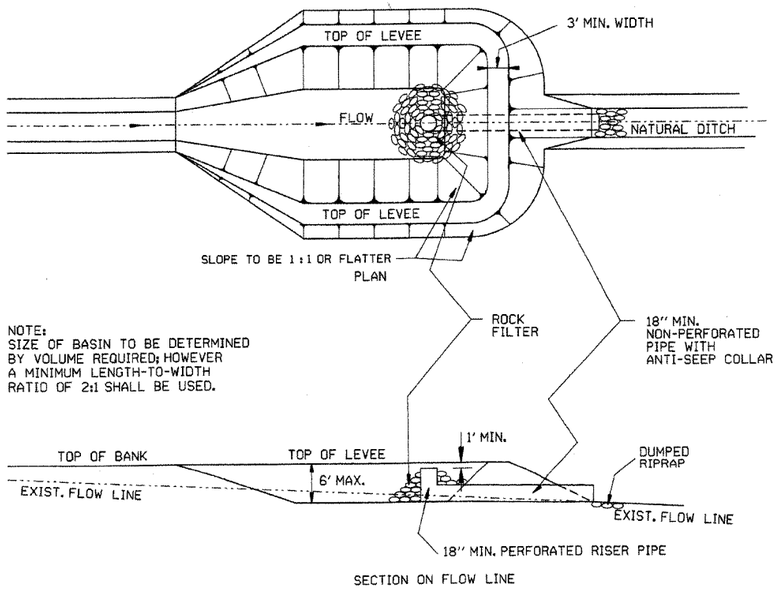

SEDIMENT BASIN WITH PIPE OUTLET (E-10)

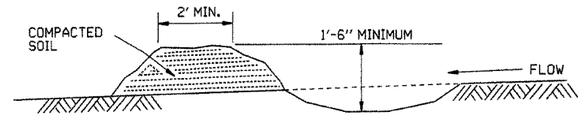

DIVERSION DITCH (E-8)

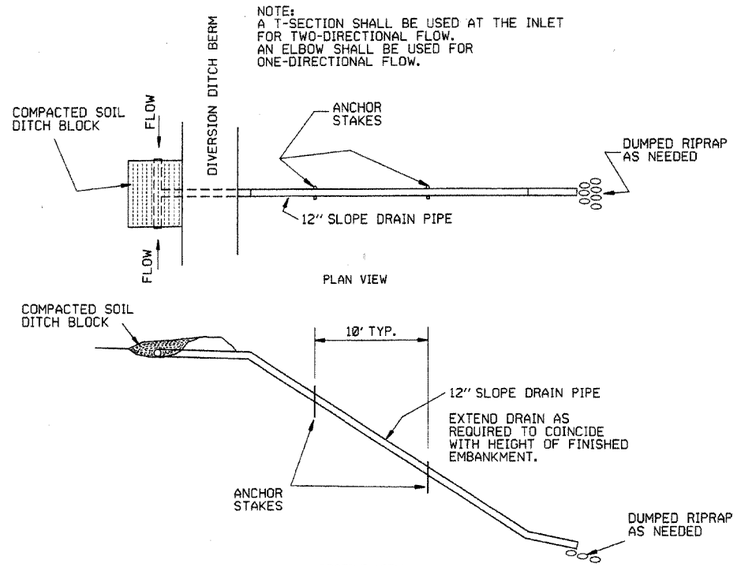

SLOPE DRAIN (E-12)

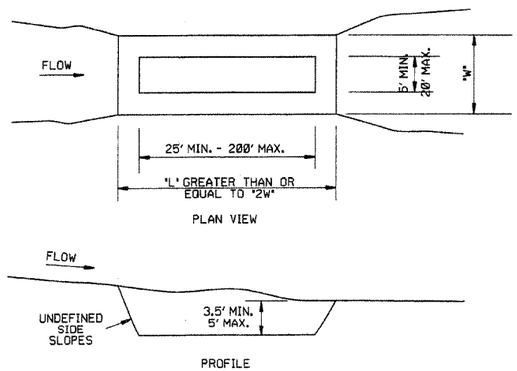

SEDIMENT BASIN (E-14)

DATE	REVISION	FILMED
6-2-94	Revised E-8 & E-12; Added E-14 & Deleted E-13	
4-1-93	ISSUED	

ARKANSAS STATE HIGHWAY COMMISSION

TEMPORARY EROSION CONTROL DEVICES

STANDARD DRAWING TEC-2

CLEARING AND GRUBBING

CONSTRUCTION SEQUENCE

1. PLACE PERIMETER CONTROLS (I.E. SILT FENCES , DIVERSION DITCHES, SEDIMENT BASINS, ETC.)
2. PERFORM CLEARING AND GRUBBING OPERATION.

EXCAVATION

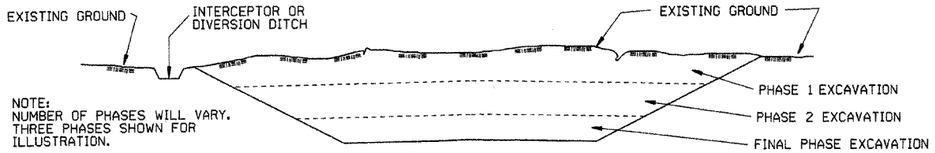

GENERAL NOTE

ALL CUT SLOPES SHALL BE DRESSED, PREPARED, SEEDED, AND MULCHED AS THE WORK PROGRESSES. SLOPES SHALL BE EXCAVATED AND STABILIZED IN EQUAL INCREMENTS NOT TO EXCEED 25 FEET, MEASURED VERTICALLY.

CONSTRUCTION SEQUENCE

1. EXCAVATE AND STABILIZE INTERCEPTOR AND/OR DIVERSION DITCHES.
2. PERFORM PHASE 1 EXCAVATION. PLACE PERMANENT OR TEMPORARY SEEDING.
3. PERFORM PHASE 2 EXCAVATION. PLACE PERMANENT OR TEMPORARY SEEDING.
4. PERFORM FINAL PHASE OF EXCAVATION. PLACE PERMANENT OR TEMPORARY SEEDING. STABILIZE DITCHES. CONSTRUCT DITCH CHECKS, DIVERSION DITCHES, SEDIMENT BASINS, OR OTHER EROSION CONTROL DEVICES AS REQUIRED.

EMBANKMENT

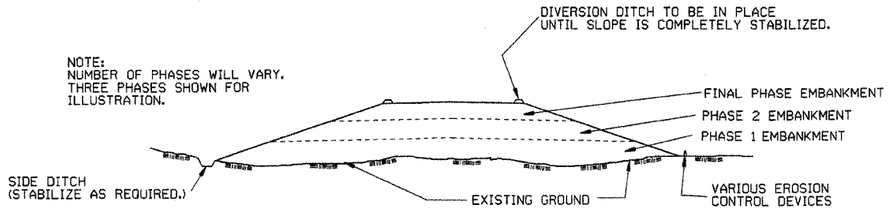

GENERAL NOTE

ALL EMBANKMENT SLOPES SHALL BE DRESSED, PREPARED, SEEDED, AND MULCHED AS THE WORK PROGRESSES. SLOPES SHALL BE CONSTRUCTED AND STABILIZED IN EQUAL INCREMENTS NOT TO EXCEED 25 FEET, MEASURED VERTICALLY.

CONSTRUCTION SEQUENCE

1. CONSTRUCT DIVERSION DITCHES, DITCH CHECKS, SEDIMENT BASINS, SILT FENCES, OR OTHER EROSION CONTROL DEVICES AS SPECIFIED.
2. PLACE PHASE 1 EMBANKMENT WITH PERMANENT OR TEMPORARY SEEDING. PROVIDE DIVERSION DITCHES AND SLOPE DRAINS IF EMBANKMENT CONSTRUCTION IS TO BE TEMPORARILY ABANDONED FOR A PERIOD OF GREATER THAN 21 DAYS.
3. PLACE PHASE 2 EMBANKMENT WITH PERMANENT OR TEMPORARY SEEDING. PROVIDE DIVERSION DITCHES AND SLOPE DRAINS IF EMBANKMENT CONSTRUCTION IS TO BE TEMPORARILY ABANDONED FOR A PERIOD OF GREATER THAN 21 DAYS.
4. PLACE FINAL PHASE OF EMBANKMENT WITH PERMANENT OR TEMPORARY SEEDING. PLACE DIVERSION DITCHES AND SLOPE DRAINS AND MAINTAIN UNTIL ENTIRE SLOPE IS STABILIZED.

DATE	REVISION	FILMED
11-03-94	CORRECTED SPELLING	
6-2-94	Drawn & Issued	6-2-94

ARKANSAS STATE HIGHWAY COMMISSION

TEMPORARY EROSION CONTROL DEVICES

STANDARD DRAWING TEC-3

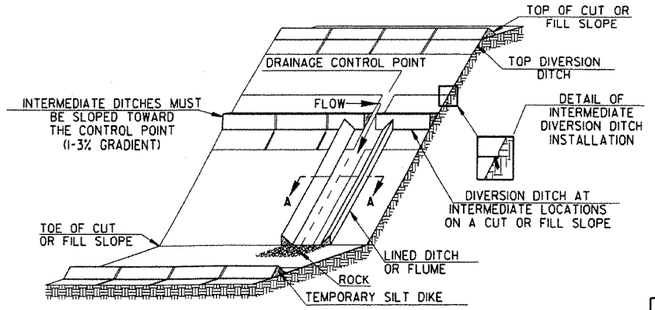

TRIANGULAR SILT DIKE INSTALLATION
FOR
DIVERSION DITCH AND/OR DITCH LINER

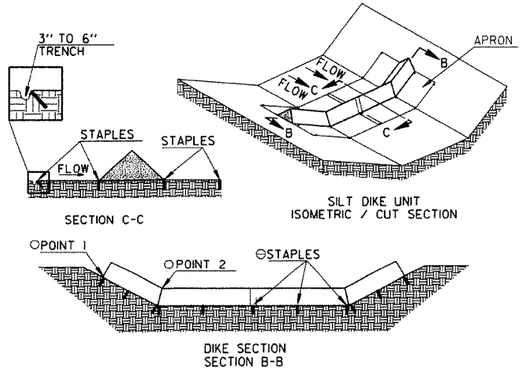

TRIANGULAR SILT DIKE INSTALLATION
FOR
ROADWAY DITCH OR DRAINAGE DITCH

○ POINT "1" MUST BE HIGHER THAN POINT "2" TO ENSURE THAT WATER FLOWS OVER THE DIKE AND NOT AROUND THE ENDS.

⊖ STAPLES SHALL BE PLACED WHERE THE UNITS OVERLAP AND IN THE CENTER OF THE UNIT AS SHOWN ON THE DIAGRAM.

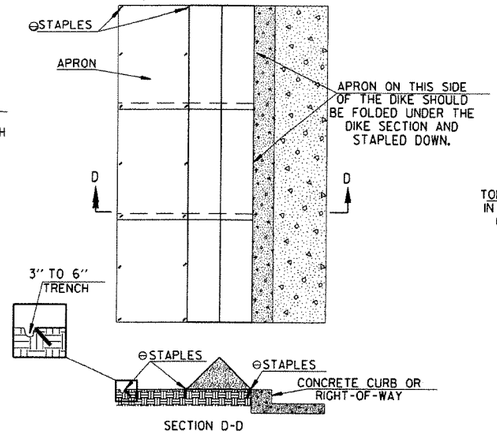

TRIANGULAR SILT DIKE INSTALLATION
FOR
CONTINUOUS BARRIER

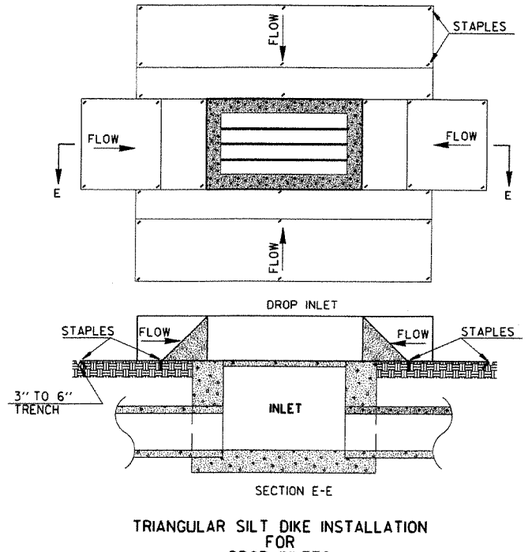

TRIANGULAR SILT DIKE INSTALLATION
FOR
DROP INLETS

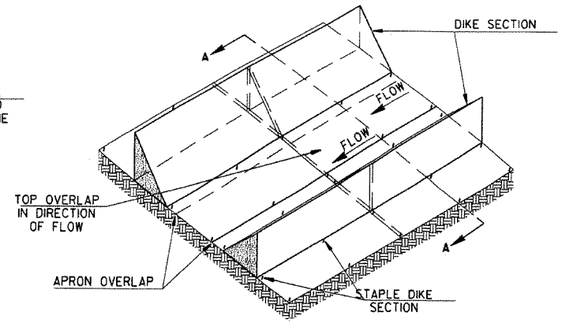

TRIANGULAR SILT DIKE INSTALLATION
FOR
TEMPORARY DITCH LINER

SYMBOLOGY

SYMBOL TO BE USED TO DENOTE DEVICE ON PLANS

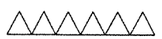

NOTE: SILT DIKE SHOULD ONLY BE USED FOR DROP INLETS IN SUMP LOCATIONS.

GENERAL NOTES

1. THIS WORK SHALL CONSIST OF FURNISHING, INSTALLING, AND MAINTAINING THE TRIANGULAR SILT DIKE. THE DIKES SHALL BE USED AS A CONTINUOUS LINE BARRIER AT THE TOE OF SLOPE OR ACROSS THE ROADWAY DITCH TO CONTAIN SEDIMENT AND MINIMIZE EROSION, OR AS DIRECTED BY THE ENGINEER. THESE DIKES SHALL BE INSTALLED AND LOCATED AS SOON AS CONSTRUCTION WILL ALLOW OR AS DIRECTED BY THE ENGINEER.

2. TRIANGULAR SILT DIKE SHALL BE TRIANGULAR SHAPED HAVING A HEIGHT OF AT LEAST 8" TO 10" IN THE CENTER WITH EQUAL SIDES AND A 16" TO 20" BASE. THE TRIANGULAR SHAPED INNER MATERIAL SHALL BE URETHANE FOAM. THE OUTER COVER SHALL BE A WOVEN GEOTEXTILE FABRIC PLACED AROUND THE INNER MATERIAL & ALLOWED TO EXTEND BEYOND BOTH SIDES OF THE TRIANGLE 24" TO 36". THIS FABRIC SHOULD BE MILDEW RESISTANT, ROT-PROOF AND RESISTANT TO HEAT AND ULTRAVIOLET RADIATION MEETING REQUIREMENTS FOR SEDIMENT CONTROL IN AASHTO M288. THE DIKES SHALL BE ATTACHED TO THE GROUND WITH WIRE STAPLES. THE STAPLES SHALL BE NO. 11 GAUGE WIRE AND BE AT LEAST 6" TO 8" LONG. STAPLES SHALL BE PLACED AS SHOWN ON THESE DETAILS.

   THE CONTRACTOR SHALL INSPECT ALL DIKES AFTER EACH RAINFALL EVENT OF AT LEAST 0.5" OR GREATER. ANY DEFICIENCIES OR DAMAGE SHALL BE REPAIRED BY THE CONTRACTOR. ACCUMULATED SILT OR DEBRIS SHALL BE REMOVED AND RELOCATED AS DIRECTED BY THE ENGINEER. IF THE DIKES ARE DAMAGED OR INADVERTENTLY MOVED DURING THE SILT REMOVAL PROCESS, THE CONTRACTOR SHALL IMMEDIATELY REPLACE AFTER DAMAGE OCCURS.

3. ACCEPTED TRIANGULAR SILT DIKE, MEASURED AS PROVIDED ABOVE, WILL BE PAID FOR AT THE CONTRACT UNIT PRICE BID FOR TRIANGULAR SILT DIKE. PRICE BID WILL INCLUDE THE COST OF FURNISHING THE DIKES, INSTALLING, MAINTAINING AND REMOVAL WHEN DIRECTED BY THE ENGINEER.

DATE	REVISION	FILMED
7-26-12	REVISED GENERAL NOTE 2.	
12-15-11	ISSUED	

ARKANSAS STATE HIGHWAY COMMISSION

TEMPORARY EROSION CONTROL DEVICES

STANDARD DRAWING TEC-4

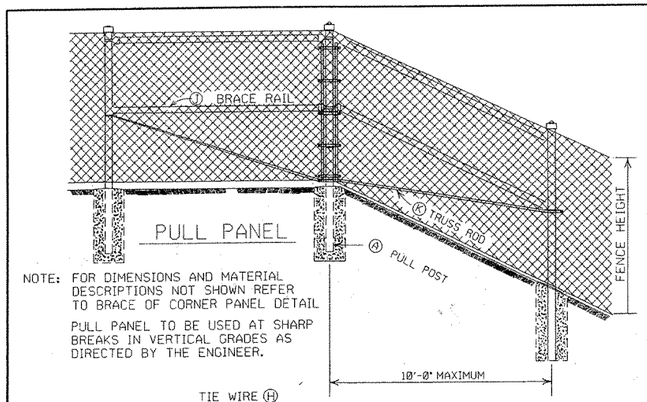

NOTE: FOR DIMENSIONS AND MATERIAL DESCRIPTIONS NOT SHOWN REFER TO BRACE OF CORNER PANEL DETAIL

PULL PANEL TO BE USED AT SHARP BREAKS IN VERTICAL GRADES AS DIRECTED BY THE ENGINEER.

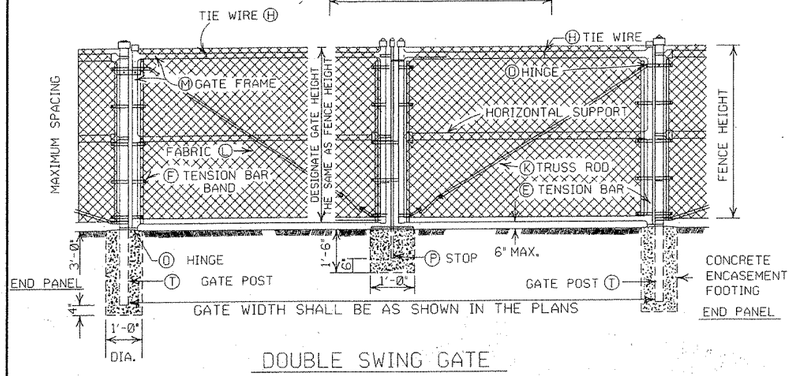

DOUBLE SWING GATE

POST SPACING DETAIL

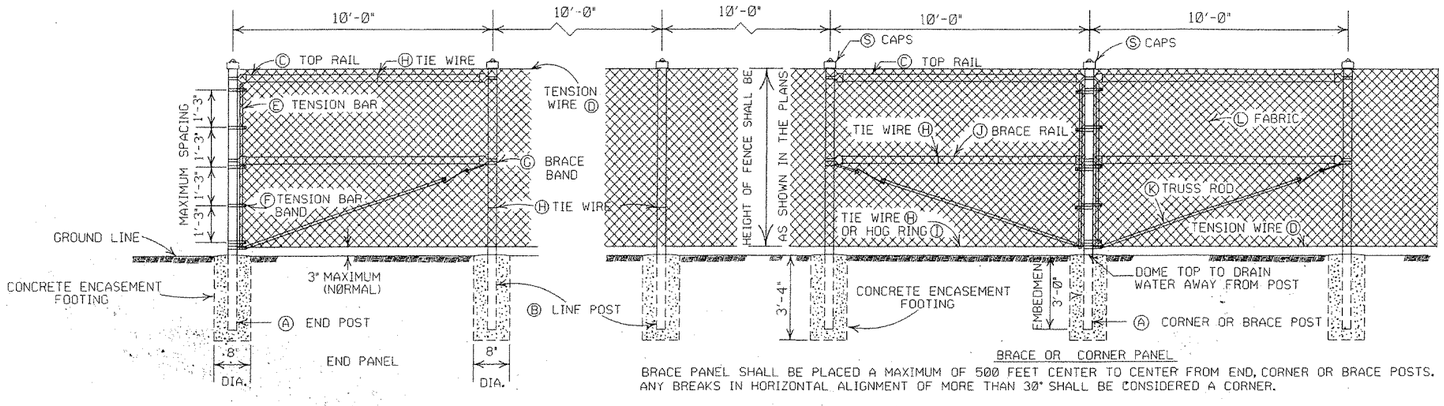

BRACE OR CORNER PANEL

BRACE PANEL SHALL BE PLACED A MAXIMUM OF 500 FEET CENTER TO CENTER FROM END, CORNER OR BRACE POSTS. ANY BREAKS IN HORIZONTAL ALIGNMENT OF MORE THAN 30° SHALL BE CONSIDERED A CORNER.

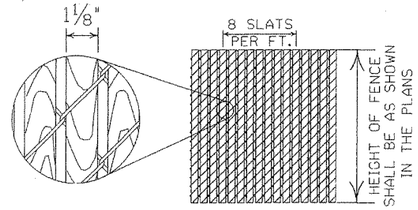

1⅛" X ¼" REDWOOD SLATS (LENGTH TO MATCH HEIGHT OF FENCE)

DETAIL OF REDWOOD SLAT INSTALLATION

(WHERE APPLICABLE)

GENERAL NOTES:

(C) CHAIN LINK FENCE BEING PLACED ON PRIVATE PROPERTY SHALL INCLUDE A TOP RAIL. ALL LABOR, MATERIALS, EQUIPMENT, TOOLS, AND INCIDENTALS NECESSARY TO COMPLETE THE WORK WILL BE PAID FOR AT THE CONTRACT UNIT PRICE BID PER LIN. FT. OF CHAIN LINK FENCE.

(D) TENSION WIRE: SHALL BE SECURED TO ALL TERMINAL, PULL, BRACE OR CORNER POSTS WITH TENSION BAR BANDS.

(J) BRACE RAIL: BRACE RAILS SHALL BE PROVIDED AT ALL TERMINAL, PULL, BRACE OR CORNER POSTS HALFWAY BETWEEN THE TOP RAIL AND GROUND LEVEL WHEN TOPRAIL IS SPECIFIED AND TWELVE INCHES (12") DOWN FROM TOP OF FABRIC WHEN TOP TENSION WIRE IS SPECIFIED. BRACE RAIL SHALL EXTEND FROM SUCH POST TO THE FIRST ADJACENT LINE POST.

(L) FABRIC: SHALL CONFORM TO THE SPECIFICATIONS.

(M) GATE FRAMES: SHALL BE CONSTRUCTED OF TUBULAR MEMBERS ASSEMBLED BY USE OF HEAVY PRESSED STEEL, MALLEABLE FITTINGS OR BY WELDING. ALL GATES SHALL HAVE ONE HORIZONTAL SUPPORT EXTENDING THE WIDTH OF THE GATE AT THE MIDPOINTS OF VERTICAL FRAME MEMBERS. THE COMPLETE FRAME SHALL BE RIGID AND HAVE AMPLE STRENGTH TO BE FREE FROM SAG AND TWIST.

(O) HINGES: SHALL BE OF HEAVY PATTERN, OF ADEQUATE STRENGTH FOR GATE, AND WITH LARGE BEARING SURFACES FOR CLAMPING IN POSITION. THE HINGE SHALL BE OF THE PROPER TYPE TO ALLOW FOR THE DESIGNATED DEGREE OF SWING. THE HINGE SHALL NOT TWIST OR TURN UNDER THE ACTION OF THE GATE. THE GATES SHALL BE CAPABLE OF BEING OPENED AND CLOSED EASILY BY ONE PERSON.

(P) LATCHES AND STOPS: SHALL BE PROVIDED FOR ALL GATES. GATES SHALL HAVE A DROP BAR LATCH. LATCHES SHALL BE ARRANGED FOR LOCKING. THE STOP FOR DROP BAR LATCHES SHALL BE SET IN CONCRETE AND ENGAGE THE PLUNGER OF THE BAR LATCH.

(S) CAPS: ALL POSTS, EXCEPT ROLL FORMED POSTS AND "T" POSTS SHALL BE CAPPED OVER THE EXTERIOR OF THE POST, AND SHALL CONFORM TO ASTM F626.

CONCRETE REQUIRED FOR THE EMBEDMENT OF ALL POSTS SHALL NOT BE PAID FOR DIRECTLY BUT SHALL BE INCLUDED IN THE CONTRACT UNIT PRICE BID FOR CHAIN LINK FENCE.

POSTS SHALL BE SPACED EQUIDISTANT ON A MAXIMUM OF 10' CENTERS.

EXCAVATION FOR POSTS: IN OTHER THAN ROCK SHALL BE OF THE DIMENSIONS INDICATED. IF ROCK IS ENCOUNTERED BEFORE REACHING THE REQUIRED DEPTH, THE EXCAVATION SHALL BE CONTINUED TO THE DEPTH INDICATED OR 1'-6" INTO THE ROCK, WHICHEVER IS LESS, AND SHALL BE A MINIMUM OF 8 INCHES IN DIAMETER.

HEIGHT OF FENCE FABRIC	(A) END, PULL CORNER OR BRACE POST	(B) LINE POSTS SIZE	(B) LINE POSTS TIE SPACING	(C) TOP RAIL SIZE	(C) TOP RAIL TIE SPACING	(C) TOP RAIL MIN. LENGTH	(D) TENSION WIRE SIZE	(D) TENSION WIRE TIE SPACING	(E) TENSION BAR SIZE	(E) TENSION BAR LENGTH	(F) TENSION BAR BAND SIZE	(F) TENSION BAR BAND BOLT SIZE	(F) TENSION BAR BAND SPACING	(G) BRACE BAND SIZE	(G) BRACE BAND BOLT SIZE
6' AND LESS	2½" O.D.	2" O.D.	1 TIE EVERY 1'-2" OF FABRIC HEIGHT	1⅝" O.D.	1 TIE EVERY 2'-0"	10'-0"	7 GAUGE COIL SPRING WIRE	1 TIE EVERY 1'-0"	MIN. OF ⅜" X ¾"	MIN. OF 2" LESS THAN FABRIC HEIGHT	MIN. OF ¾" X 0.074	⅝"X 1¼"	1 BAND AT TOP AND BOTTOM 15" MAX. INTERVAL BETWEEN BANDS	MIN. OF ¾" X 0.105	⅝" X 1¼"
OVER 6' TO 12' INCL.	3 " O.D.	2½" O.D.													

HEIGHT OF FENCE FABRIC	(H) TIE WIRE	(I) HOG RING	(J) BRACE RAIL SIZE	(J) BRACE RAIL TIE SPACING	(K) TRUSS ROD	(L) FABRIC SIZE	(L) FABRIC MESH	(L) FABRIC SELVAGE	(M) GATE FRAME SIZE	(M) GATE FRAME TIE SPACING	(N) HORIZONTAL SUPPORT SIZE	(N) HORIZONTAL SUPPORT TIE SPACING	(O) HINGE TYPE 180° SWING	(T) GATE POST GATE WIDTH 12' AND LESS	(T) GATE POST GATE WIDTH OVER 12' TO 24' INCL.
6' AND LESS	MIN. OF 12 GA. STEEL OR 9 GA. ALUM.	SAME GAUGE AS FABRIC	1⅝" O.D.	1 TIE EVERY 2'-0"	MIN. OF ⅝" ROUND WITH TIGHTNERS AND FITTINGS	9 GA.	2"	KNUCK -ING AND/OR TWIST -ING	2" O.D.	1 TIE EVERY 1'-0"	2" O.D.	1 TIE EVERY 1'-0"	OFFSET	3" O.D.	4" O.D.
OVER 6' TO 12' INCL.														4" O.D.	

NOTE: POST SIZES SHOWN ARE FOR STEEL. WHERE ALUMINUM IS PROVIDED, LINE POSTS SHALL HAVE AN OUT SIDE DIAMETER OF 2½" FOR FENCE HEIGHT OF 6' AND LESS, AN OUTSIDE DIAMETER OF 3" FOR FENCE HEIGHT OF 6' TO 12'. END, PULL, CORNER OR BRACE POSTS SHALL HAVE AN OUTSIDE DIAMETER OF 3" FOR FENCE HEIGHT OF 6' AND LESS; AN OUTSIDE DIAMETER OF 3½" FOR FENCE HEIGHTS OF 6' TO 12'. GATE POSTS WHERE GATE WIDTH IS 12' AND LESS SHALL HAVE AN OUTSIDE DIAMETER OF 3½" FOR FENCE HEIGHT OF 6' AND LESS. ALUMINUM TENSION WIRE SHALL BE 0.192" IN DIAMETER. MINIMUM THICKNESS OF MATERIAL FROM WHICH EXPANSION SLEEVES SHALL BE MADE WILL BE 0.078". POSTS AND RAILS MAY HAVE ANY CROSS-SECTIONAL SHAPE THAT WILL MEET THE SPECIFICATIONS.

OTHER DETAILS APPLY TO BOTH STEEL AND ALUMINUM FENCE.

ALL MISCELLANEOUS FITTINGS AND HARDWARE SHALL MEET THE REQUIREMENTS AND PRODUCTION TOLERANCES AS SET FORTH IN THE SPECIFICATIONS. 9 GAUGE ALUMINUM WIRE SHALL BE ACCEPTABLE FOR TIEING FABRIC TO TUBULAR AND ROLL FORMED MEMBERS OF STEEL FENCE.

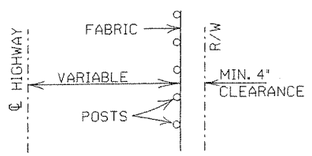

INSTALLATION MAY BE MODIFIED AS SHOWN IN THE PLANS

TYPICAL INSTALLATION DIAGRAM

POSTS AND RAILS

SIZE O.D.	GRADE 1 AND ALUMINUM ALLOY O.D. INCHES	WALL THICKNESS	LBS. PER LINEAR FT. STEEL	LBS. PER LINEAR FT. ALUMINUM	GRADE 2 O.D. INCHES	WALL THICKNESS	LBS. PER LINEAR FT.
1⅝	1.660	0.140	2.27	0.786	1.660	0.111	1.84
2	1.900	0.145	2.72	0.940	1.900	0.120	2.28
2½	2.375	0.154	3.65	1.264	2.375	0.130	3.11
3	2.875	0.203	5.79	2.004	2.875	0.160	4.64
3½	3.500	0.216	7.58	2.621	3.500	0.160	5.71
4	4.000	0.226	9.11	3.151	4.000	0.160	6.56

TOLERANCES ON DIMENSIONS AND WEIGHTS ACCORDING TO AASHTO M 181

DATE	REVISION	FILMED
11-17-10	REVISED TRUSS ROD	
12-10-09	REVISED POSTS & RAILS TABLE	
5-21-09	ADDED TABLE & GEN. NOTE (C)	
8-22-02	REVISED NOTES, REMOVED TABLE, & REMOVED FENCE ALTERNATE	
4-3-97	REVISED BRACE RAIL NOTE	
10-18-96	REVISED AASHTO & ASTM REF.	
11-3-94	REVISED NOTE (L)	
10-1-92	DELETED ALTERNATE POST	10-1-92
8-15-91	DELETED ROLL FORMED POST DETAIL & ADDED NOTE	8-15-91
11-30-89	DELETED CLASS CONCRETE	11-30-89
11-17-88	REVISED O.D. SIZES	668-11-17-88
10-30-87	GENERAL REVISIONS	548-10-30-87
4-20-79	REVISED TOP RAIL & TENSION WIRE	695-4-20-79
10-2-72	REVISED AND REDRAWN	530-10-2-72

ARKANSAS STATE HIGHWAY COMMISSION

CHAIN LINK FENCE

STANDARD DRAWING WF-3

TYPE C FENCE (WOOD POSTS)

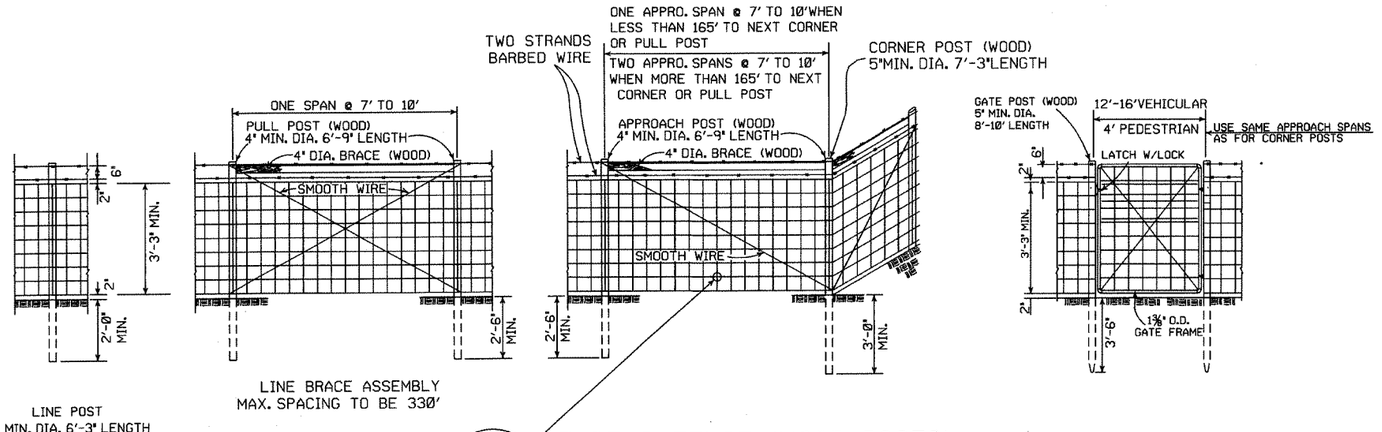

NOTE: STEEL LINE POSTS SHALL BE 6'-6" MINIMUM LENGTH.

GENERAL NOTES:

STEEL LINE POSTS SHALL BE PAINTED OR GALVANIZED.
TUBULAR END, CORNER, PULL, OR DIAGONAL BRACES MUST CONFORM TO THE DIMENSIONS AND WEIGHTS SPECIFIED ON STANDARD DRAWING WF-3 (CHAIN LINK). APPROVED ALTERNATES ARE ACCEPTABLE.
AN ACCEPTABLE TOLERANCE IN LENGTH OF TUBULAR OR WOODEN POSTS SHALL BE - 1" TO +2".
TUBULAR POSTS MUST BE PAINTED OR GALVANIZED.

THE CONTRACTOR SHALL FURNISH AT LEAST 25% OF TIMBER LINE POSTS OF 7 FOOT LENGTHS IN ORDER TO PROVIDE SUFFICIENT SET IN SOFT GROUND OR SMALL DEPRESSIONS.

DRIVEWAY GATES, EITHER SINGLE 12' TO 16' OR DOUBLE 6' TO 8' OPENING OF THE SAME TYPE AS THE PEDESTRIAN GATE, SHALL BE INSTALLED ON THE RIGHT SIDE OF EACH THROUGH LANE ROAD AT LARGE CULVERTS OR BRIDGE CROSS FENCE, FOR USE OF MAINTENANCE EQUIPMENT. LOCATION OF GATES TO BE SHOWN ON PLANS OR AS DESIGNATED BY THE ENGINEER.

AT STREAM CROSSINGS, THE FENCE SHALL NOT BE CONSTRUCTED ACROSS LARGE STREAMS. WHERE CLEARANCE IS SUFFICIENT FROM THE TOP OF THE BANK TO THE BRIDGE STRUCTURE A CROSS CONNECTION SHALL BE CONSTRUCTED BETWEEN THE FENCE ON EACH SIDE OF THE ROAD. WHERE THE CLEARANCE IS NOT SUFFICIENT, THE FENCE SHALL BE TERMINATED WITH CROSS CONNECTIONS AND END POSTS ADJACENT TO BRIDGE ABUTMENTS OR CULVERT WINGWALLS.

SPLICE FOR BARBED WIRE BETWEEN PULL POST ASSEMBLY SHALL BE BY THE "EYE METHOD" AS DESCRIBED AS FOLLOWS: THE ENDS OF THE BARBED WIRE SHALL BE BENT TO FORM A LOOP. THE LOOPS SHALL BE CONNECTED. AFTER THE LOOPS ARE CONNECTED THE ENDS OF THE WIRE SHALL BE WRAPPED AROUND THE PROJECTING WIRES A MINIMUM OF 4 TIMES FOR EACH WIRE LOOP.

SPLICE FOR WOVEN WIRE BETWEEN PULL POST SHALL BE BY THE "WESTERN UNION METHOD" AS DESCRIBED AS FOLLOWS: THE VERTICAL WIRES FOR EACH END OF THE FENCE FABRIC SHALL BE PLACED SIDE BY SIDE AND THE PROJECTING HORIZONTAL WIRES SHALL BE WRAPPED A MINIMUM OF 4 TIMES AROUND THE HORIZONTAL WIRES OF THE FIRST WEB.

STAPLE AT LEAST TOP, BOTTOM AND ALTERNATE WIRES OF WOVEN FABRIC FOR WOOD LINE POSTS.

TYPE C FENCE (STEEL POSTS)

4 STRANDS BARBED WIRE (D)
5 STRANDS BARBED WIRE (D-1)
6 STRANDS BARBED WIRE (D-2)

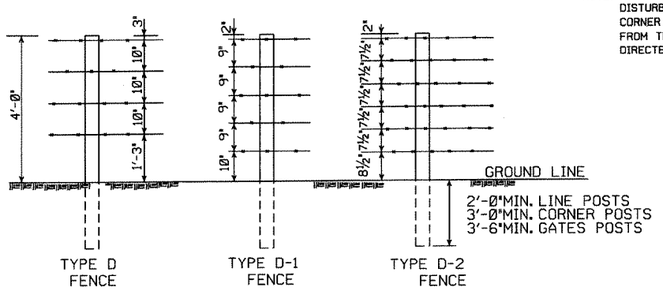

NOTE: SPACING AND SIZE (EXCEPT LENGTH) OF POSTS, APPROACH SPANS, PULL POST ASSEMBLIES, AND CORNER BRACING FOR TYPE D FENCE SHALL CONFORM TO TYPE C FENCE. USE GALVANIZED STAPLES ON WOOD POSTS AND APPROVED FASTENERS ON STEEL POSTS.

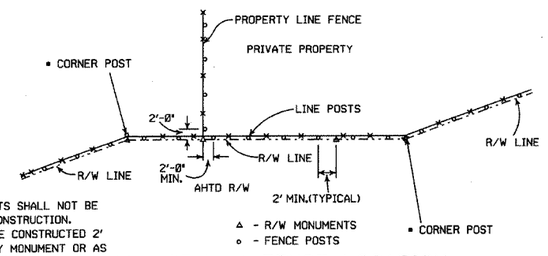

• NOTE: RIGHT-OF-WAY MONUMENTS SHALL NOT BE DISTURBED BY FENCE CONSTRUCTION. CORNER POSTS SHALL BE CONSTRUCTED 2' FROM THE RIGHT-OF-WAY MONUMENT OR AS DIRECTED BY THE ENGINEER.

RIGHT-OF-WAY FENCE LOCATION

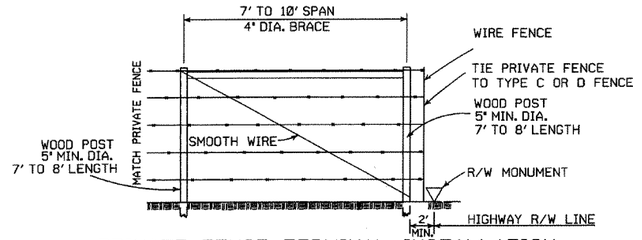

PRIVATE FENCE TERMINAL INSTALLATION

WHERE EXISTING FENCE CONSISTS OF STEEL POSTS, USE END POST ASSEMBLY AS SHOWN IN TYPE C FENCE OR OTHER END POST ASSEMBLY AS APPROVED BY THE ENGINEER.

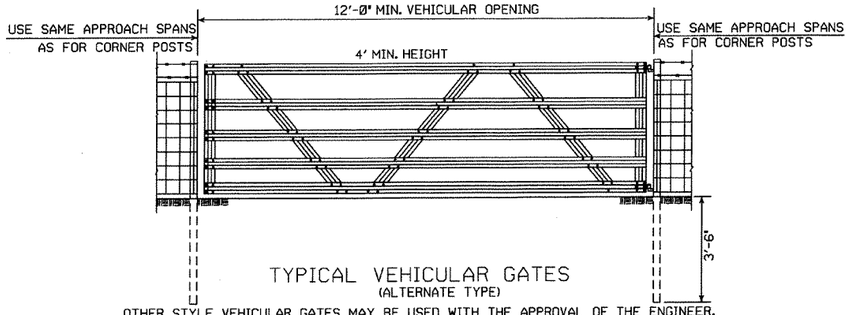

TYPICAL VEHICULAR GATES
(ALTERNATE TYPE)

OTHER STYLE VEHICULAR GATES MAY BE USED WITH THE APPROVAL OF THE ENGINEER.
THE METHOD OF SECURING GATE (LATCH AND/OR LOCK) SHALL MEET THE APPROVAL OF THE ENGINEER.

DATE	REVISION	FILMED
8-22-02	REVISED GENERAL NOTES	
10-18-96	REVISED AASHTO	
11-22-95	REVISED R-O-W LOCATION DETAIL	
6-2-94	REVISED BARB WIRE AND ADDED CORNER POST NOTES	6-2-94
8-5-93	REVISED R/W INSTALLATION FENCE	8-5-93
10-1-92	ADDED STAPLE NOTE	10-1-92
8-15-91	ADDED TYPE D-2 FENCE	8-15-91
11-30-89	DELETED CLASS CONCRETE	11-30-89
7-15-88	ADDED SPLICE NOTE	700-7-15-88
10-30-87	GENERAL REVISIONS	549-10-30-87
11-1-84	MAX. POST SPACING MIN. WIRE GAUGE	507-11-1-84
1-4-83	MIN. DIA. LINE POST	648-1-4-83
3-2-81	TOLERANCE FOR POST LENGTH	722-3-2-81
12-1-72	ADDED D-1 & FENCE INSTALLATION	564-12-1-72
10-2-72	REVISED AND REDRAWN	540-10-2-72

ARKANSAS STATE HIGHWAY COMMISSION

WIRE FENCE
TYPE C AND D

STANDARD DRAWING WF-4

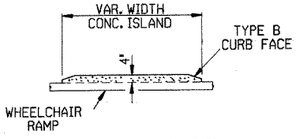

CONCRETE ISLAND DETAIL

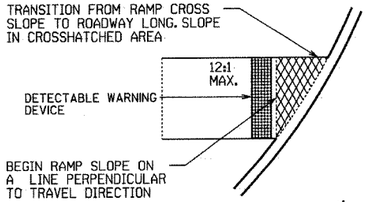

SLOPE TRANSITION DETAILS

TYPE 1 RAMP DIMENSIONS AND QUANTITIES

RADIUS "R" FEET	DISTANCE "X" FEET	DISTANCE "Y" FEET	LENGTH "L" FEET	RAMP AREA "A" SQ. YD.
15	11.67	18.82	32.18	26.21
20	11.52	22.28	35.46	30.07
25	11.43	26.60	38.77	33.80
30	11.37	30.26	40.93	36.90
35	11.33	33.51	43.11	39.77
40	11.30	36.45	45.26	42.45
45	11.27	39.16	47.34	44.97
50	11.25	41.69	49.36	47.35
55	11.24	44.07	51.31	49.63
60	11.22	46.33	53.21	51.80

GENERAL NOTES FOR DETECTABLE WARNING DEVICES

THE DETECTABLE WARNING DEVICE SHALL BE LOCATED SO THAT THE NEAREST EDGE OF THE DEVICE IS 6 TO 8 INCHES FROM THE FACE OF THE CURB.
TRUNCATED DOMES IN THE DETECTABLE WARNING SURFACE SHALL MEET THE REQUIREMENTS OF THE GEOMETRIC CONFIGURATION SHOWN.
DOMES SHALL BE ALIGNED ON A SQUARE GRID IN THE PREDOMINANT DIRECTION OF TRAVEL TO PERMIT WHEELS TO ROLL BETWEEN DOMES.
DETECTABLE WARNING DEVICE SHALL BE 24 INCHES IN THE DIRECTION OF TRAVEL AND EXTEND THE FULL WIDTH OF THE CURB RAMP OR FLUSH SURFACE.
DETECTABLE WARNING DEVICE SHALL BE ON THE AHTD QUALIFIED PRODUCTS LIST FOR CAST-IN-PLACE TACTILE PANELS (ADA DETECTABLE WARNING).

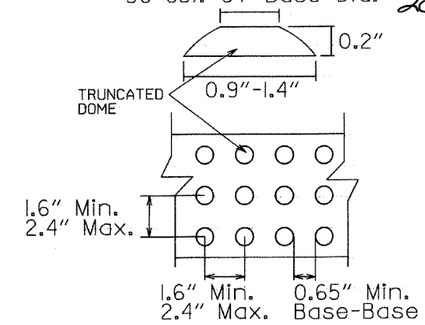

DETECTABLE WARNING DEVICE DETAIL

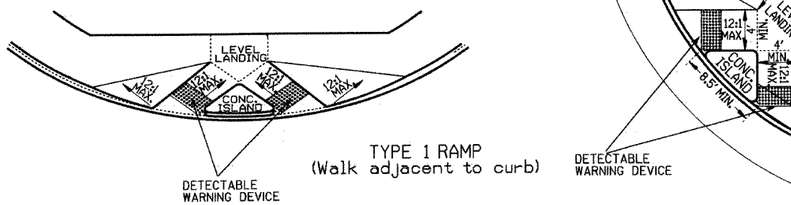

TYPE 1 RAMP
(Walk adjacent to curb)

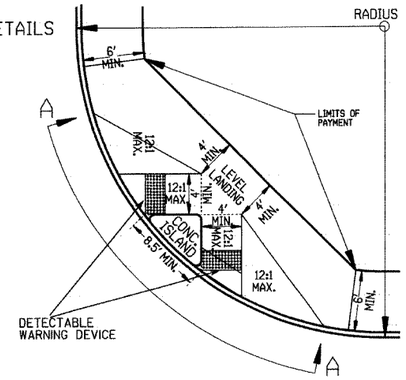

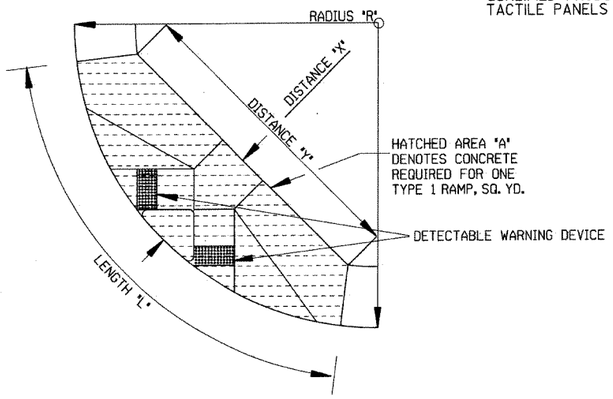

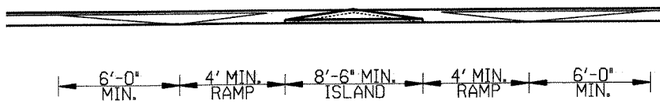

SECTION A-A

NOTE:
THE CROSS SLOPE OF THE RAMPS, LEVEL LANDINGS, AND SIDEWALKS SHALL NOT EXCEED 2.0% UNLESS REQUIRED TO MATCH STREET LONGTITUDINAL GRADE.

GENERAL NOTES:

IN NEW CONSTRUCTION, UNLESS OTHERWISE INDICATED ON THE PLANS, WHEELCHAIR RAMPS ARE TO BE PROVIDED AT ALL CORNERS OF CURBED STREET INTERSECTIONS AND MID-BLOCK CROSSWALK LOCATIONS.
IN ALTERATIONS WHEELCHAIR RAMPS ARE TO BE PROVIDED AT CURBED STREET INTERSECTIONS WITH PEDESTRIAN TRAFFIC AND MID-BLOCK CROSSWALK LOCATIONS.
THE LENGTH OF THE RAMP SHALL BE SUCH THAT THE SLOPE DOES NOT EXCEED 12:1. THE SURFACE TEXTURE OF THE RAMP SHALL CONFORM TO A CLASS 6 FINISH ACCORDING TO SECTION 802.19.
THE NORMAL GUTTER GRADE SHALL BE MAINTAINED THROUGH THE AREA OF THE RAMP.
ALL PAVEMENT MARKINGS SHALL BE IN ACCORDANCE WITH THE LATEST EDITION OF THE MANUAL OF UNIFORM TRAFFIC CONTROL DEVICES PUBLISHED BY THE FEDERAL HIGHWAY ADMINISTRATION.
THE MINIMUM THICKNESS OF THE RAMP, WALK, & LANDING SHALL BE 4".
THE MINIMUM WIDTH OF THE RAMPS SHALL BE THE WALK WIDTH OR 36", WHICHEVER IS GREATER.
RAMPS SHALL BE MODIFIED AS NECESSARY TO INSURE THAT THEY ARE PARALLEL TO A LINE DRAWN FROM THE CENTER OF ONE RAMP TO THE CENTER OF THE RAMP ON THE OPPOSITE SIDE OF THE INTERSECTION.
THE DIMENSIONS AND QUANTITIES SHOWN ON THIS DRAWING ARE FOR A 90° INTERSECTION ONLY. DIMENSIONS AND QUANTITIES FOR SKEWED INTERSECTIONS WILL VARY, AND ARE TO BE DETERMINED BY THE ENGINEER.

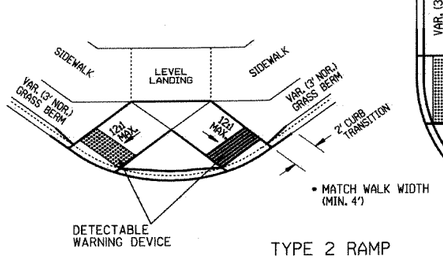

TYPE 2 RAMP

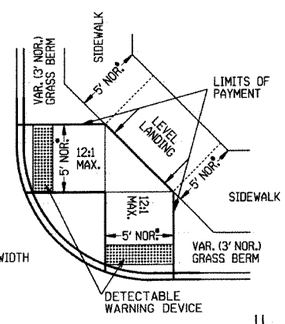

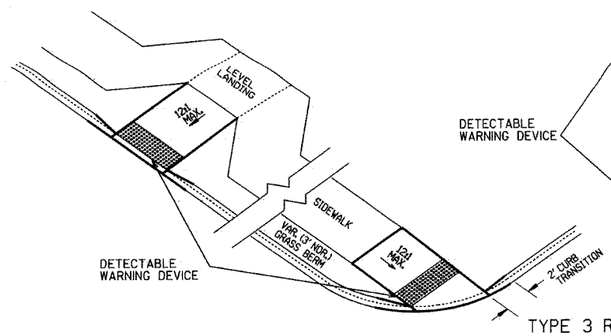

TYPE 3 RAMP

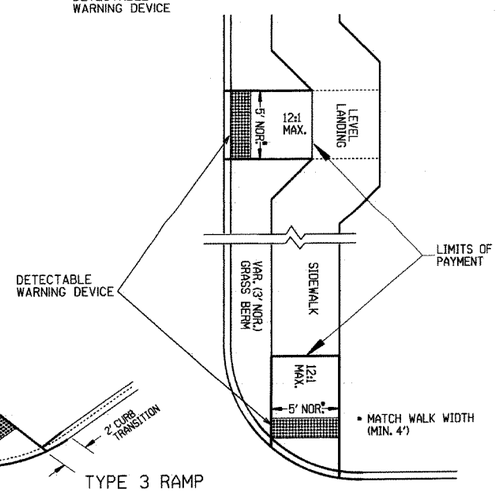

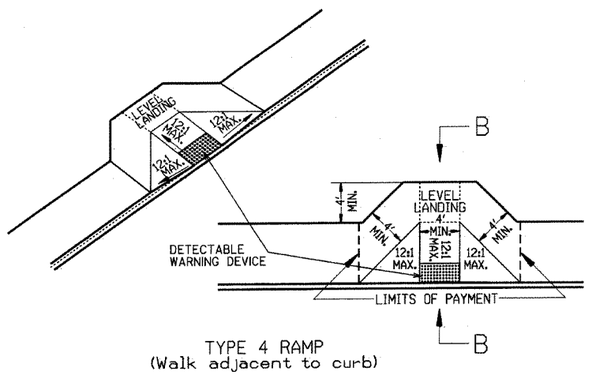

TYPE 4 RAMP
(Walk adjacent to curb)

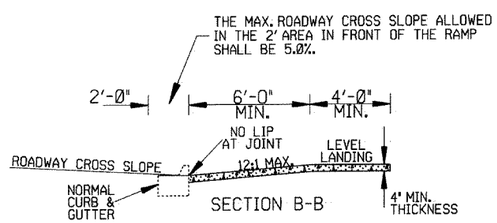

SECTION B-B

RAMP SELECTION CRITERIA

FIRST CHOICE	TYPE 1	CORNER LOCATIONS WITH THE WALK ADJACENT TO THE CURB (BOTH NEW CONSTRUCTION AND ALTERATIONS).
	TYPE 2	CORNER LOCATIONS WITH THE WALK OFFSET FROM THE CURB A DISTANCE INSUFFICIENT TO ALLOW THE REQUIRED RAMP SLOPE (BOTH NEW CONSTRUCTION AND ALTERATIONS).
	TYPE 3	CORNER LOCATIONS WITH THE WALK OFFSET FROM THE CURB A DISTANCE SUFFICIENT TO ALLOW THE REQUIRED RAMP SLOPE (BOTH NEW CONSTRUCTION AND ALTERATIONS).
	TYPE 4	TANGENT LOCATIONS (BOTH NEW CONSTRUCTION AND ALTERATIONS).
SECOND CHOICE	TYPE 5	TANGENT LOCATIONS (ALTERATIONS ONLY).
THIRD CHOICE	TYPE 6	CORNER LOCATIONS (ALTERATIONS ONLY). THIS RAMP MAY BE USED ONLY IF THE TYPE 5 RAMPS CANNOT BE PLACED AT THE ENDS OF THE RADIUS.
FOURTH CHOICE		IF SITE CONSTRAINTS PREVENT THE CONSTRUCTION OF ANY OF THE TYPES LISTED, THEN AND ONLY THEN CAN THE 12:1 MAX. SLOPE ON THE RAMP BE EXCEEDED TO PROVIDE ACCESS TO THE STREET LEVEL (ALTERATIONS ONLY). THE SLOPE CAN BE STEEPENED TO A 10:1 MAX. FOR A MAX. LENGTH OF 5' OR A 8:1 MAX. FOR A MAX. LENGTH OF 2'. SLOPES STEEPER THAN 8:1 ARE NOT ALLOWED UNDER ANY CIRCUMSTANCES.

NOTE: IN ALTERATIONS, THE SELECTION OF THE TYPE OF WHEELCHAIR RAMP TO BE CONSTRUCTED SHALL BE BASED ON THE AMOUNT OF RIGHT-OF-WAY AVAILABLE, AND ON THE PRESENCE OF OTHER SITE CONSTRAINTS (UTILITIES, BUILDINGS, ETC.). THE TABLE ABOVE LISTS THE ORDER IN WHICH THE RAMPS ARE TO BE CONSIDERED.
AN ALTERATION IS DEFINED AS A PROJECT THAT CHANGES OR AFFECTS THE USE OF A PEDESTRIAN PATHWAY (OVERLAYS, SIGNALIZATION PROJECTS, ETC.) BUT DOES NOT REQUIRE THE PURCHASE OF ADDITIONAL RIGHT-OF-WAY. ALL PROJECTS THAT REQUIRE THE PURCHASE OF ADDITIONAL RIGHT-OF-WAY WILL USUALLY BE CONSIDERED NEW CONSTRUCTION FOR THE PURPOSES OF THE CHART ABOVE.

DATE	REVISION	DATE FILM
11-10-05	REVISED TO NEW SIDEWALK POLICY	
10-9-03	REVISED GEN. NOTES & ADDED NOTE	
4-10-03	REV. DETECTABLE WARNING DEVICES	
8-22-02	ADD DETECTABLE WARNING DEVICES	
3-30-00	ADD.SLOPE TRANS. & REV. ISL. DIMS.	
11-18-98	REVISED NOTES	
8-12-98	REVISED TEXTURE	
7-02-98	REDRAWN & REISSUED	
10-18-96	CORRECTED DIMENSIONS	10-18-96
5-24-90	FROM#UTO2/MAX.SLOPES	5-24-90
7-15-88	ADJUSTED MAX. SLOPE	652-7-15-88
7-14-88	INCLUD."CONC. ISLD."IN PAY ITEM	------
6-02-76	ISSUED-P.H.D.	299-7-28-76

ARKANSAS STATE HIGHWAY COMMISSION

WHEELCHAIR RAMPS NEW CONSTRUCTION AND ALTERATIONS

STANDARD DRAWING WR-1

DATE REVISED	DATE FILMED	DATE REVISED	DATE FILMED	FED.RD. DIST.NO.	STATE	FED.AID PROJ.NO.	SHEET NO.	TOTAL SHEETS
				6	ARK.			
				JOB NO.		005836	201	230

(2) CROSS SECTIONS

STAGE 1 STAGE 2 STAGE 3

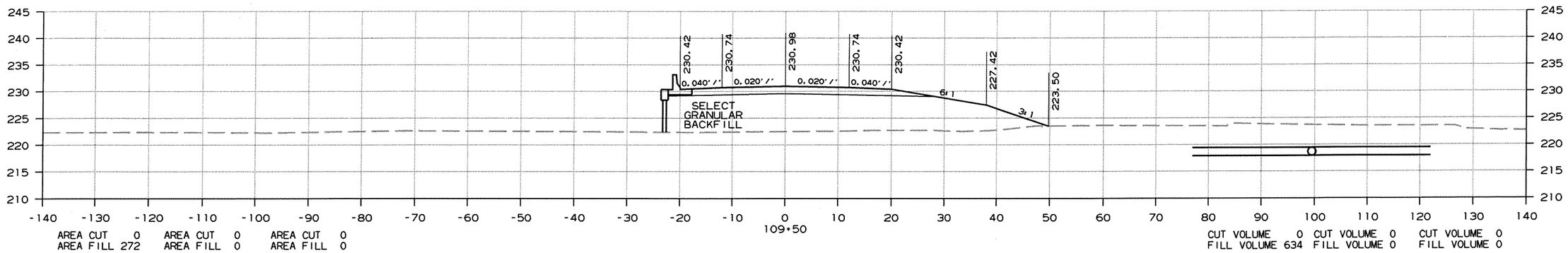

AREA CUT 0 AREA CUT 0 AREA CUT 0
AREA FILL 272 AREA FILL 0 AREA FILL 0

CUT VOLUME 0 CUT VOLUME 0 CUT VOLUME 0
FILL VOLUME 634 FILL VOLUME 0 FILL VOLUME 0

STAGE 1 STAGE 2 STAGE 3

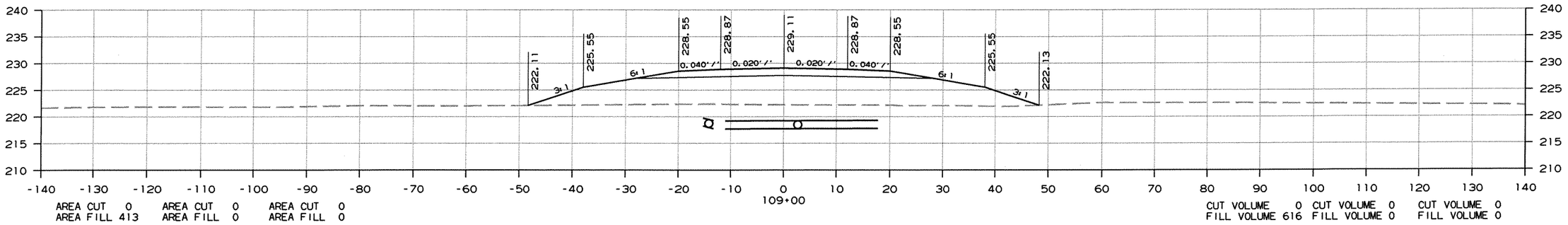

AREA CUT 0 AREA CUT 0 AREA CUT 0
AREA FILL 413 AREA FILL 0 AREA FILL 0

CUT VOLUME 0 CUT VOLUME 0 CUT VOLUME 0
FILL VOLUME 616 FILL VOLUME 0 FILL VOLUME 0

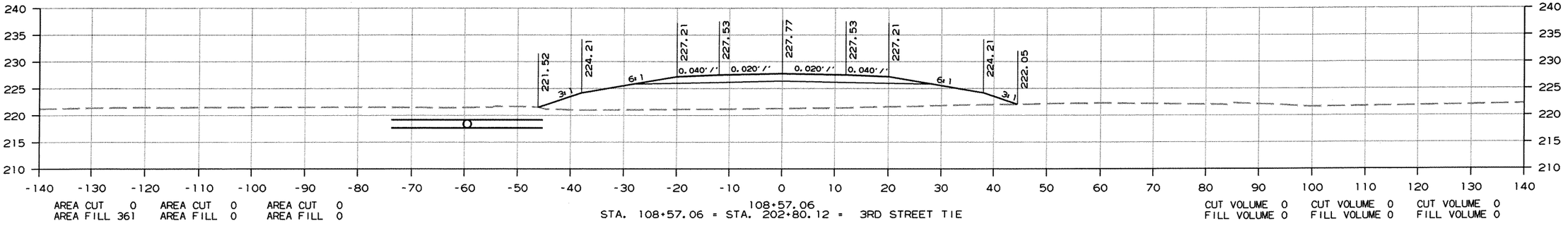

AREA CUT 0 AREA CUT 0 AREA CUT 0
AREA FILL 361 AREA FILL 0 AREA FILL 0

CUT VOLUME 0 CUT VOLUME 0 CUT VOLUME 0
FILL VOLUME 0 FILL VOLUME 0 FILL VOLUME 0

STA. 108+57.06 = STA. 202+80.12 = 3RD STREET TIE

BEGIN JOB 005836

CROSS SECTION STA. 108+57 TO STA. 109+50

9/20/2013

R005836.DGN

DATE REVISED	DATE FILMED	DATE REVISED	DATE FILMED	FED.RD. DIST.NO.	STATE	FED.AID PROJ.NO.	SHEET NO.	TOTAL SHEETS
				6	ARK.			
				JOB NO.		005836	202	230

(2) CROSS SECTIONS

STAGE 1 STAGE 2 STAGE 3

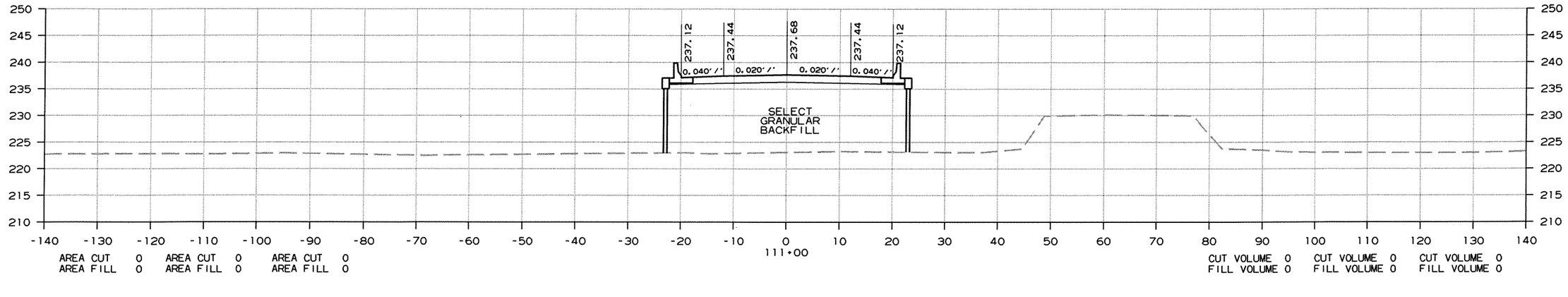

AREA CUT 0 AREA CUT 0 AREA CUT 0
AREA FILL 0 AREA FILL 0 AREA FILL 0

CUT VOLUME 0 CUT VOLUME 0 CUT VOLUME 0
FILL VOLUME 0 FILL VOLUME 0 FILL VOLUME 0

STAGE 1 STAGE 2 STAGE 3

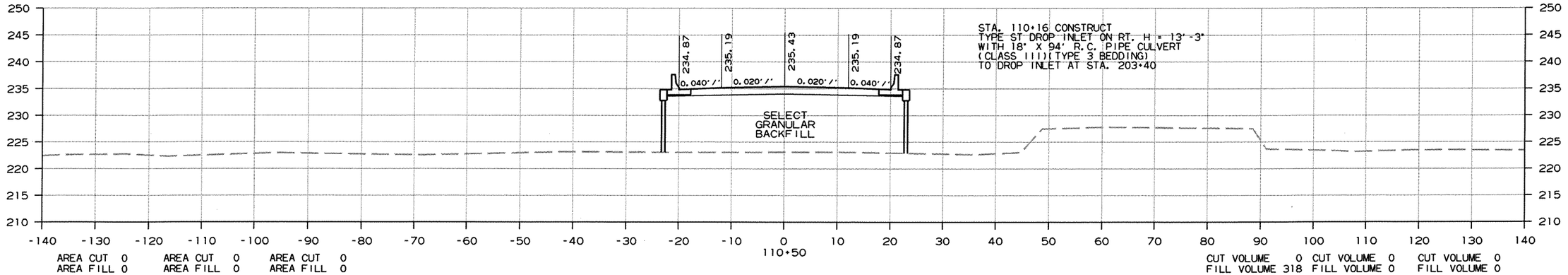

AREA CUT 0 AREA CUT 0 AREA CUT 0
AREA FILL 0 AREA FILL 0 AREA FILL 0

CUT VOLUME 0 CUT VOLUME 0 CUT VOLUME 0
FILL VOLUME 318 FILL VOLUME 0 FILL VOLUME 0

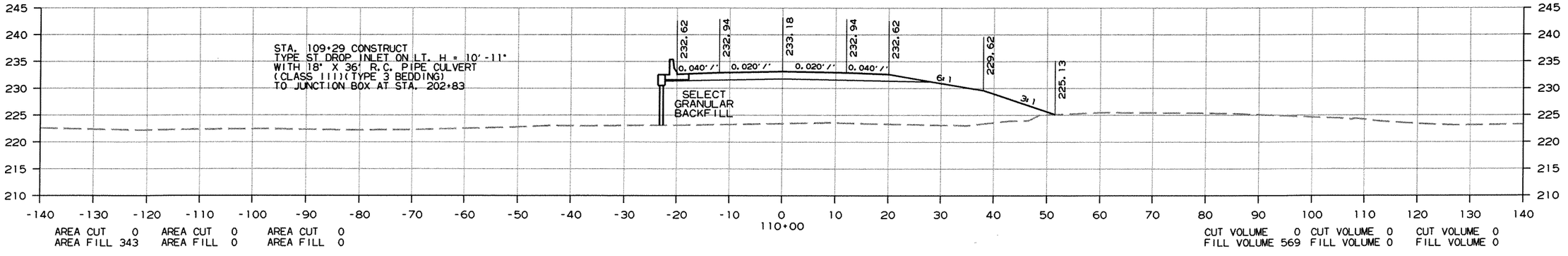

AREA CUT 0 AREA CUT 0 AREA CUT 0
AREA FILL 343 AREA FILL 0 AREA FILL 0

CUT VOLUME 0 CUT VOLUME 0 CUT VOLUME 0
FILL VOLUME 569 FILL VOLUME 0 FILL VOLUME 0

CROSS SECTION STA. 110+00 TO STA. 111+00

9/20/2013

R005836.DGN

DATE REVISED	DATE FILMED	DATE REVISED	DATE FILMED	FED.RD. DIST.NO.	STATE	FED.AID PROJ.NO.	SHEET NO.	TOTAL SHEETS
				6	ARK.			
				JOB NO.		005836	203	230

(2) CROSS SECTIONS

STAGE 1 STAGE 2 STAGE 3

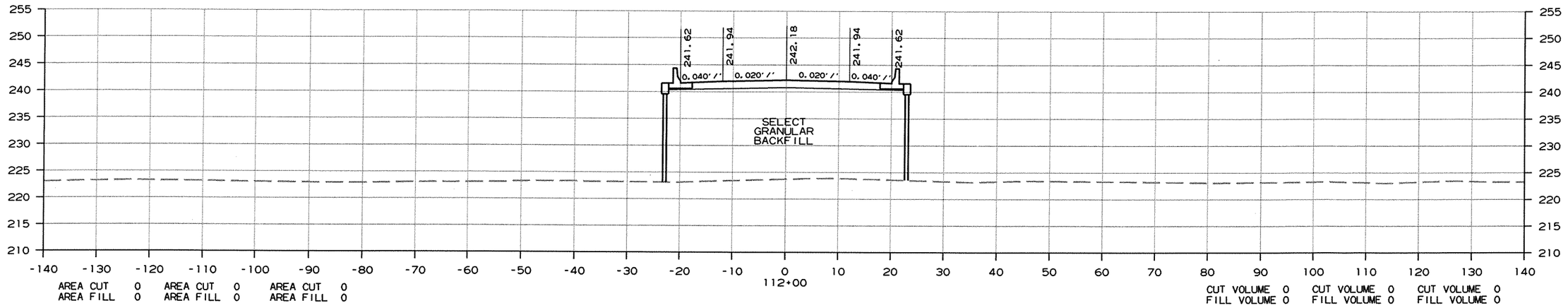

STAGE 1 STAGE 2 STAGE 3

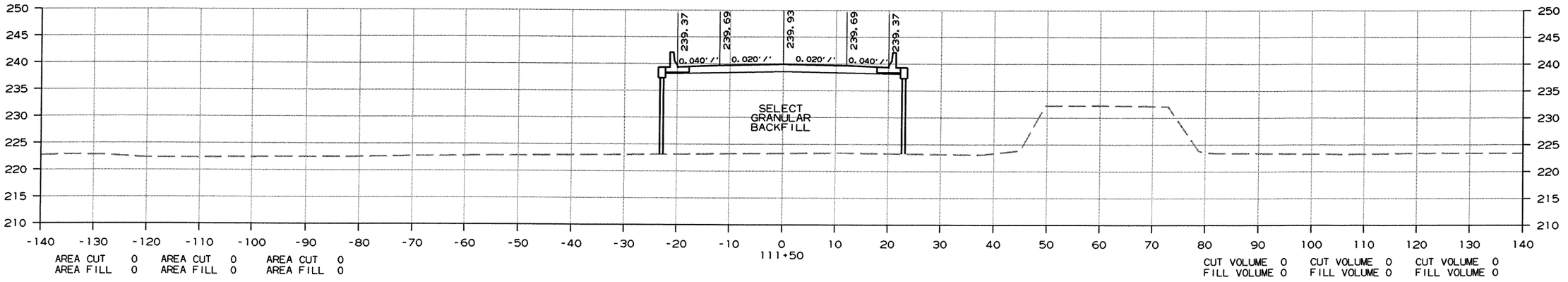

CROSS SECTION STA. 111+50 TO STA. 112+00

9/11/2013

R005836.DGN

DATE REVISED	DATE FILMED	DATE REVISED	DATE FILMED	FED.RD. DIST.NO.	STATE	FED.AID PROJ.NO.	SHEET NO.	TOTAL SHEETS
				6	ARK.			
				JOB NO.		005836	204	230

(2) CROSS SECTIONS

STAGE 1 STAGE 2 STAGE 3

STAGE 1 STAGE 2 STAGE 3

STA. 112+05.91 TO STA. 138+26.09 CONSTRUCT
2620'-2 " X 40' CLEAR ROADWAY BRIDGE NO. 07289
246' CONTINUOUS COMPOSITE PLATE GIRDER UNIT (123',123')
522' CONTINUOUS COMPOSITE PLATE GIRDER UNIT (159',204',159')
1220' CONTINUOUS COMPOSITE PLATE GIRDER UNIT (155',280',350',280',155')
210' CONTINUOUS COMPOSITE PLATE GIRDER UNIT (65',80',65')
210' CONTINUOUS COMPOSITE PLATE GIRDER UNIT (65',80',65')

STA. 111+54.33 TO STA. 138+00.83 IN PLACE
2831-8" X 24' CLEAR ROADWAY
BRIDGE NO. 00612
CONCRETE SPANS W/STEEL TRUSS UNIT
RETAIN

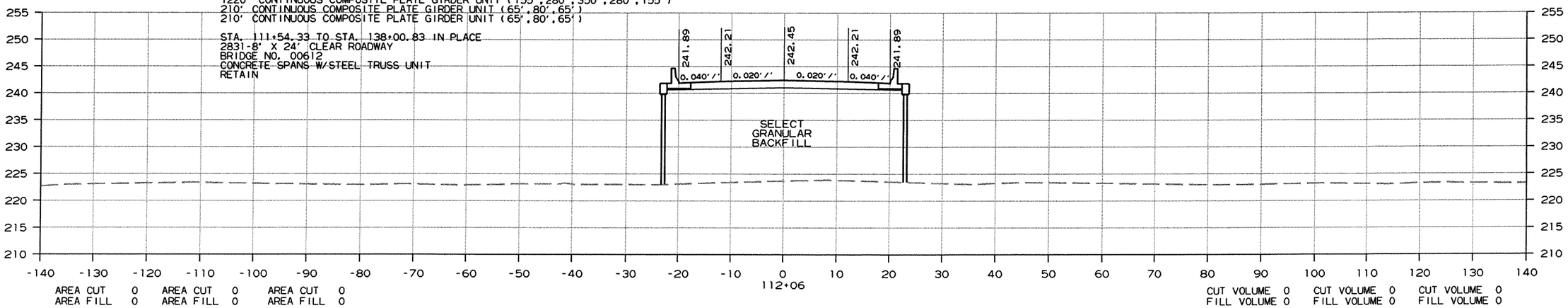

AREA CUT 0 AREA CUT 0 AREA CUT 0
AREA FILL 0 AREA FILL 0 AREA FILL 0

CUT VOLUME 0 CUT VOLUME 0 CUT VOLUME 0
FILL VOLUME 0 FILL VOLUME 0 FILL VOLUME 0

CROSS SECTION STA. 112+06 TO STA. 112+06

9/11/2013

R005836.DGN

DATE REVISED	DATE FILMED	DATE REVISED	DATE FILMED	FED.RD. DIST.NO.	STATE	FED.AID PROJ.NO.	SHEET NO.	TOTAL SHEETS
				6	ARK.			
				JOB NO.		005836	205	230

(2) CROSS SECTIONS

STAGE 1 STAGE 2 STAGE 3

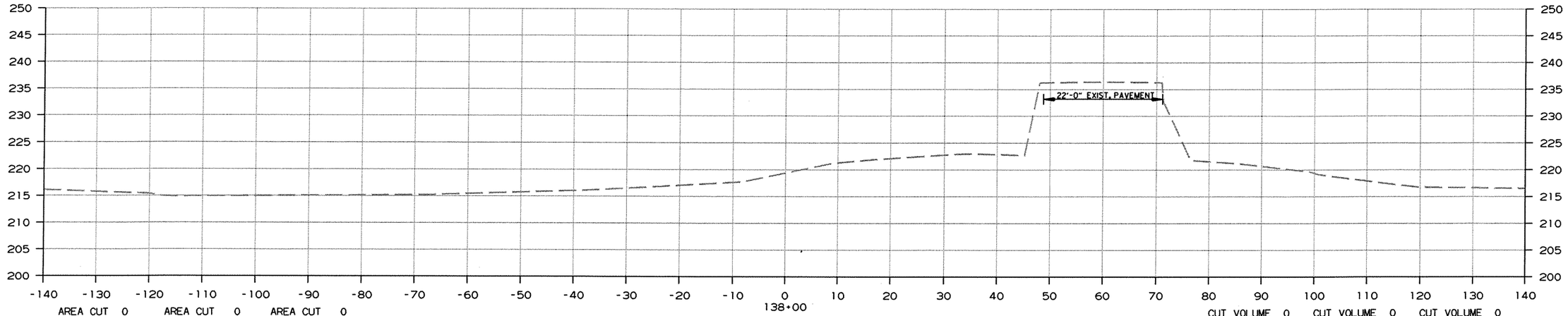

AREA CUT 0 AREA FILL 0 | AREA CUT 0 AREA FILL 0 | AREA CUT 0 AREA FILL 0

CUT VOLUME 0 FILL VOLUME 0 | CUT VOLUME 0 FILL VOLUME 0 | CUT VOLUME 0 FILL VOLUME 0

STAGE 1 STAGE 2 STAGE 3

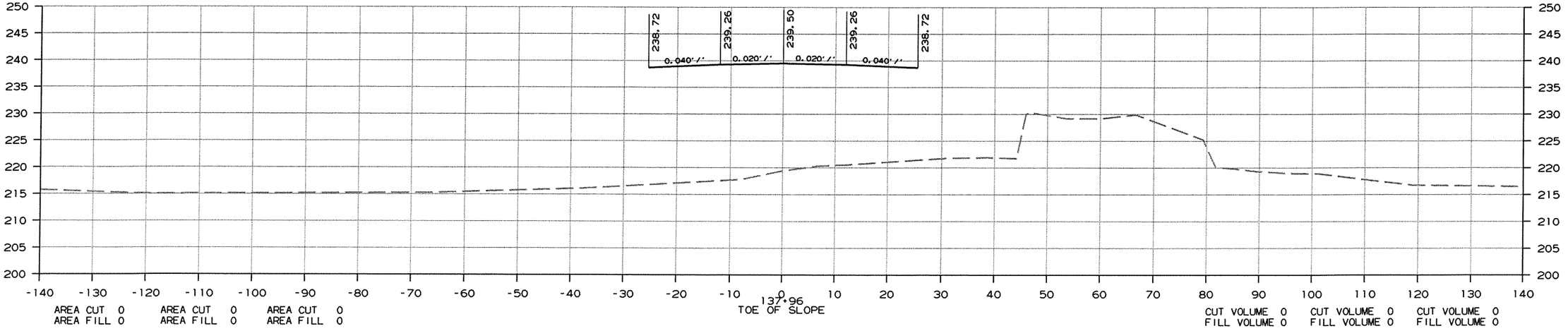

AREA CUT 0 AREA FILL 0 | AREA CUT 0 AREA FILL 0 | AREA CUT 0 AREA FILL 0

CUT VOLUME 0 FILL VOLUME 0 | CUT VOLUME 0 FILL VOLUME 0 | CUT VOLUME 0 FILL VOLUME 0

CROSS SECTION STA. 137+96 TO STA. 138+00

9/11/2013

R005836.DGN

DATE REVISED	DATE FILMED	DATE REVISED	DATE FILMED	FED.RD. DIST.NO.	STATE	FED.AID PROJ.NO.	SHEET NO.	TOTAL SHEETS
				6	ARK.			
				JOB NO.		005836	206	230

(2) CROSS SECTIONS

STAGE 1 STAGE 2 STAGE 3

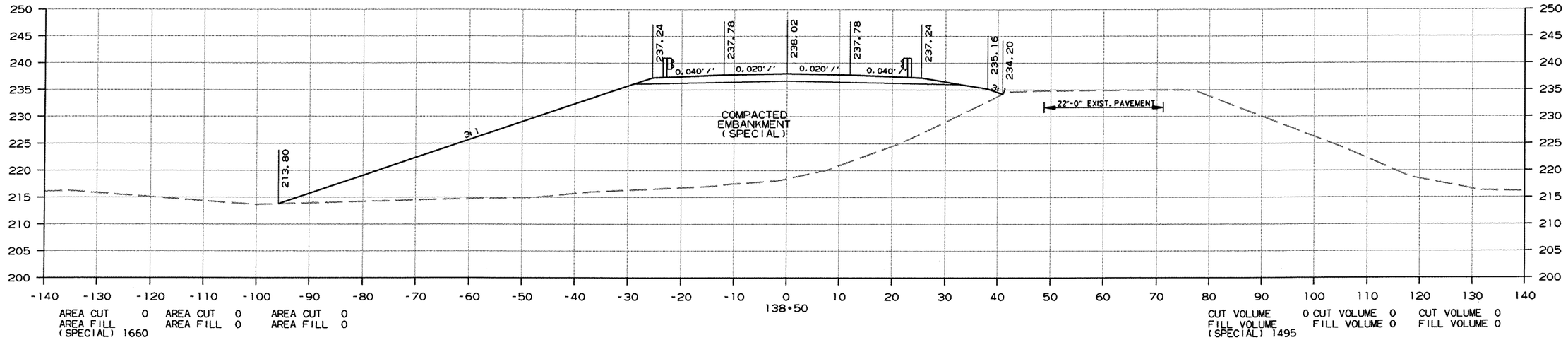

STAGE 1 STAGE 2 STAGE 3

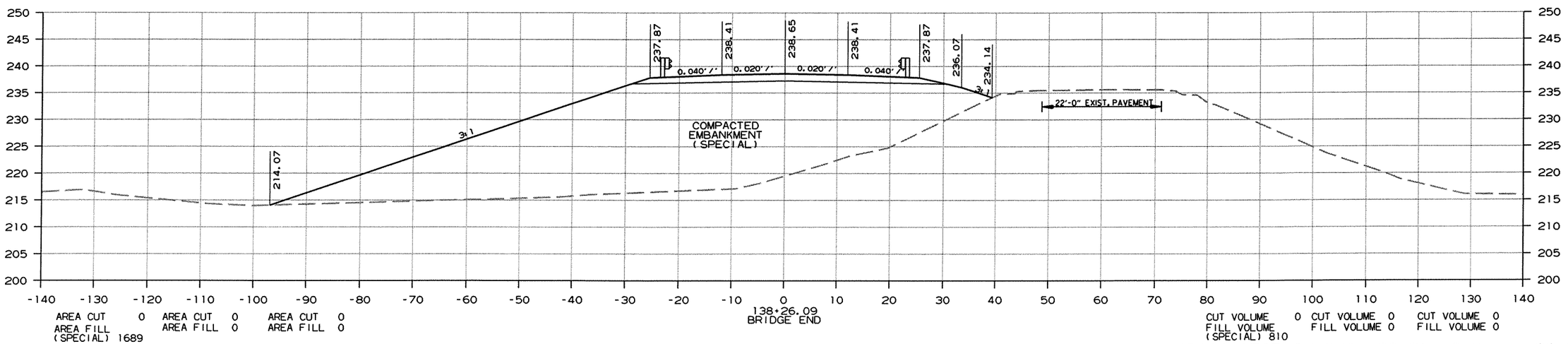

CROSS SECTION STA. 138+26 TO STA. 138+50

9/11/2013

R005836.DGN

DATE REVISED	DATE FILMED	DATE REVISED	DATE FILMED	FED.RD. DIST.NO.	STATE	FED.AID PROJ.NO.	SHEET NO.	TOTAL SHEETS
				6	ARK.			
				JOB NO.		005836	207	230

(2) CROSS SECTIONS

STAGE 1 STAGE 2 STAGE 3

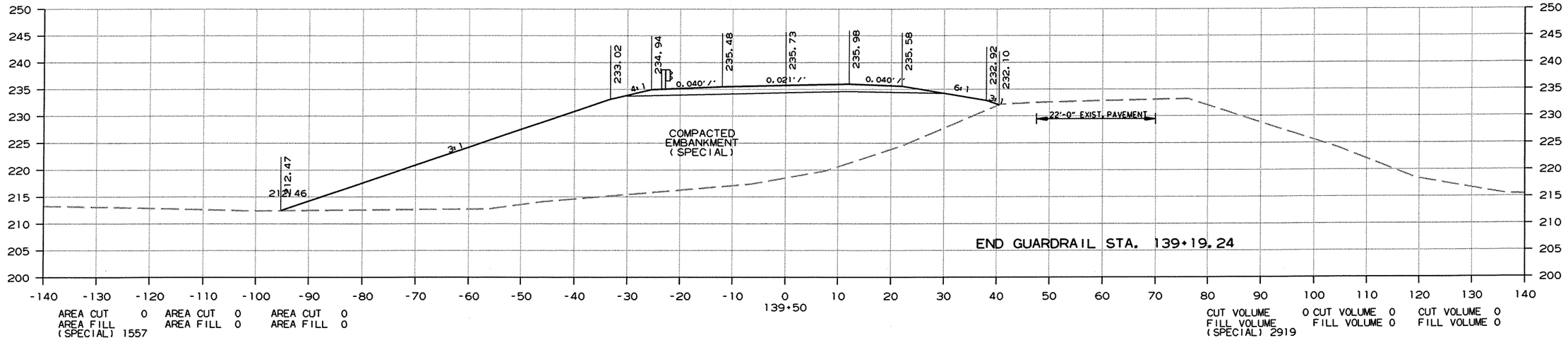

STAGE 1 STAGE 2 STAGE 3

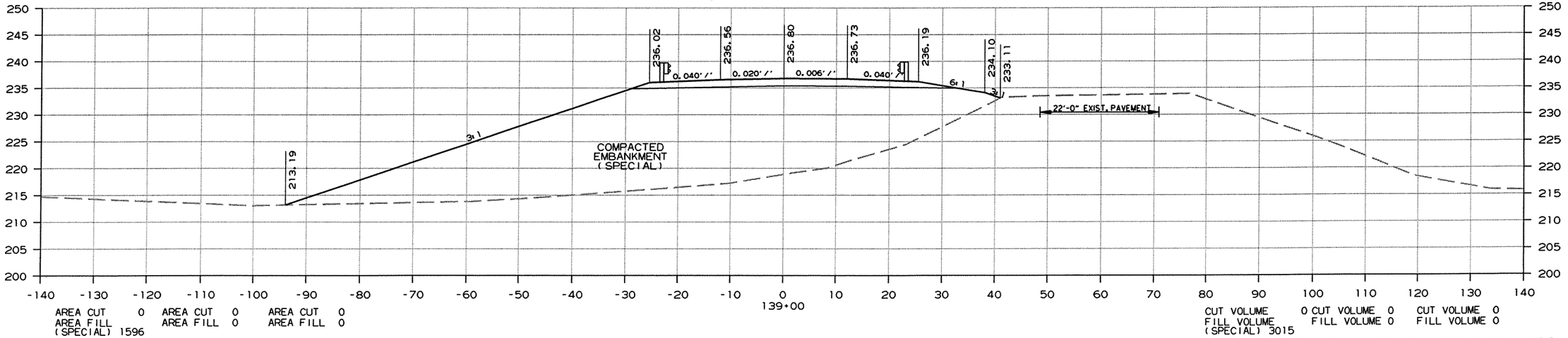

CROSS SECTION STA. 139+00 TO STA. 139+50

9/11/2013

R005836.DGN

DATE REVISED	DATE FILMED	DATE REVISED	DATE FILMED	FED.RD. DIST.NO.	STATE	FED.AID PROJ.NO.	SHEET NO.	TOTAL SHEETS
				6	ARK.			
				JOB NO.		005836	208	230

(2) CROSS SECTIONS

STAGE 1 STAGE 2 STAGE 3

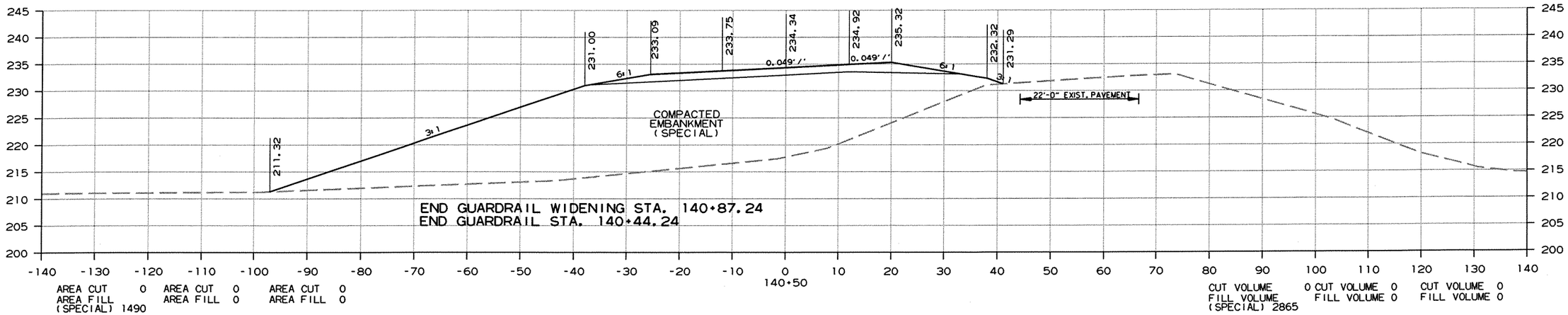

STAGE 1 STAGE 2 STAGE 3

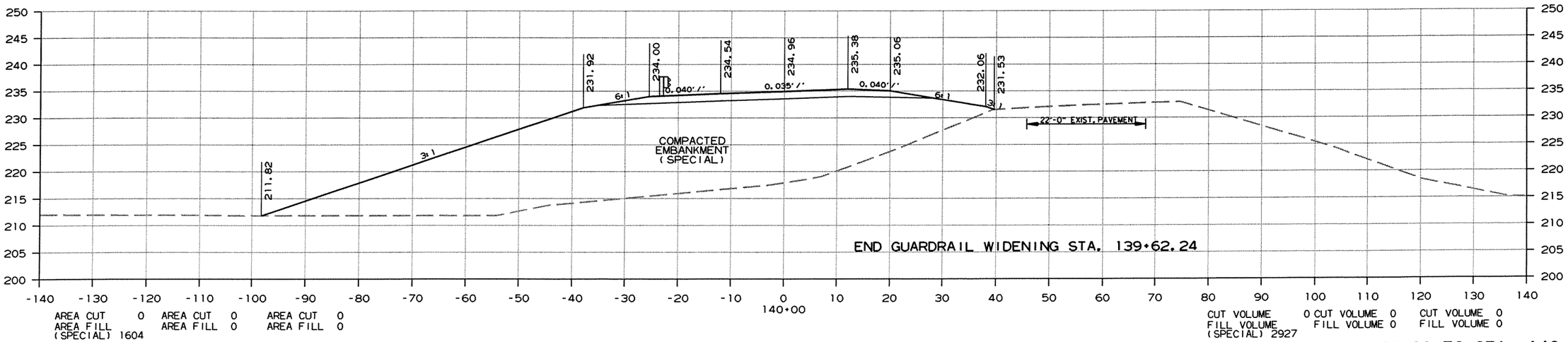

CROSS SECTION STA. 140+00 TO STA. 140+50

9/11/2013

R005836.DGN

DATE REVISED	DATE FILMED	DATE REVISED	DATE FILMED	FED.RD. DIST.NO.	STATE	FED.AID PROJ.NO.	SHEET NO.	TOTAL SHEETS
				6	ARK.			
				JOB NO.		005836	209	230

(2) CROSS SECTIONS

STAGE 1 STAGE 2 STAGE 3

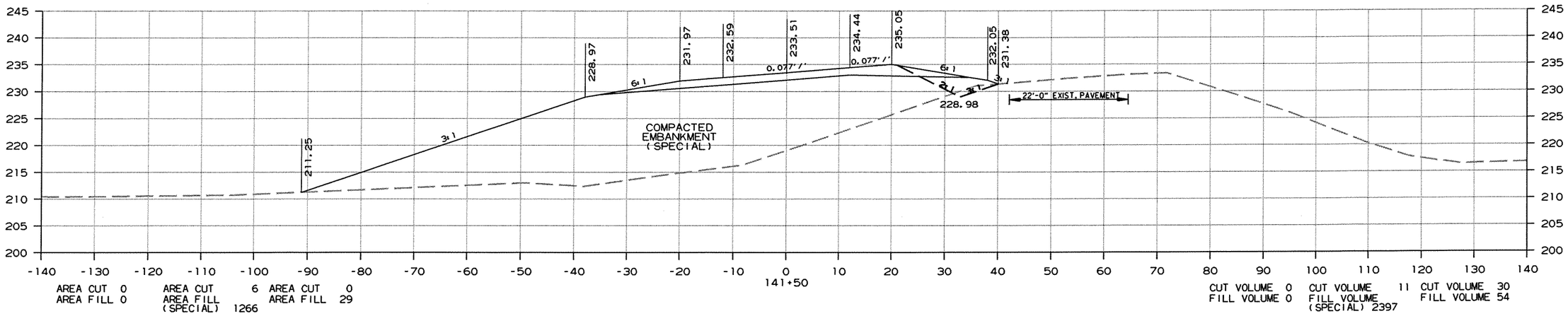

AREA CUT 0 AREA FILL 0 | AREA CUT 6 AREA FILL (SPECIAL) 1266 | AREA CUT 0 AREA FILL 29

CUT VOLUME 0 FILL VOLUME 0 | CUT VOLUME 11 FILL VOLUME (SPECIAL) 2397 | CUT VOLUME 30 FILL VOLUME 54

STAGE 1 STAGE 2 STAGE 3

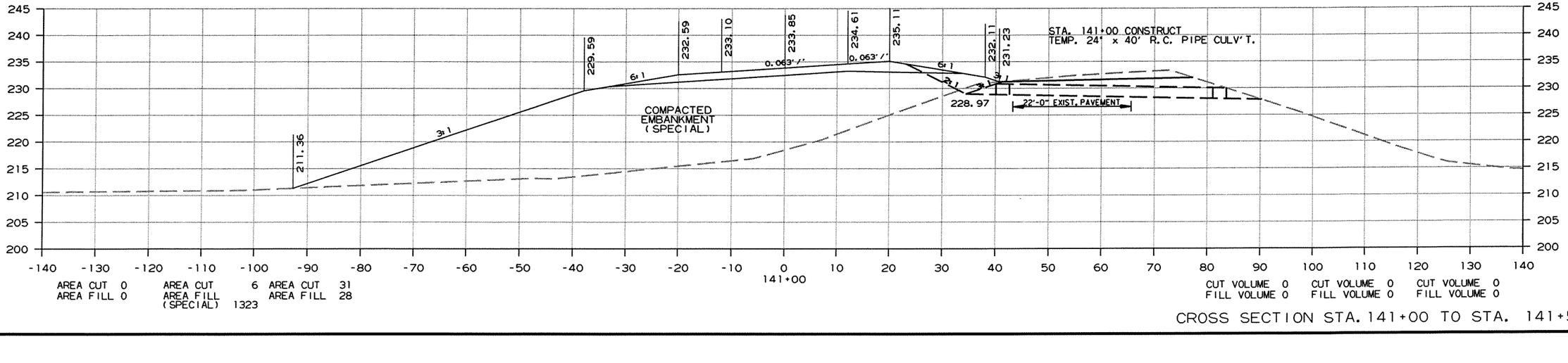

AREA CUT 0 AREA FILL 0 | AREA CUT 6 AREA FILL (SPECIAL) 1323 | AREA CUT 31 AREA FILL 28

CUT VOLUME 0 FILL VOLUME 0 | CUT VOLUME 0 FILL VOLUME 0 | CUT VOLUME 0 FILL VOLUME 0

CROSS SECTION STA. 141+00 TO STA. 141+50

9/11/2013

R005836.DGN

DATE REVISED	DATE FILMED	DATE REVISED	DATE FILMED	FED.RD. DIST.NO.	STATE	FED.AID PROJ.NO.	SHEET NO.	TOTAL SHEETS
				6	ARK.			
				JOB NO.		005836	210	230

(2) CROSS SECTIONS

STAGE 1 STAGE 2 STAGE 3

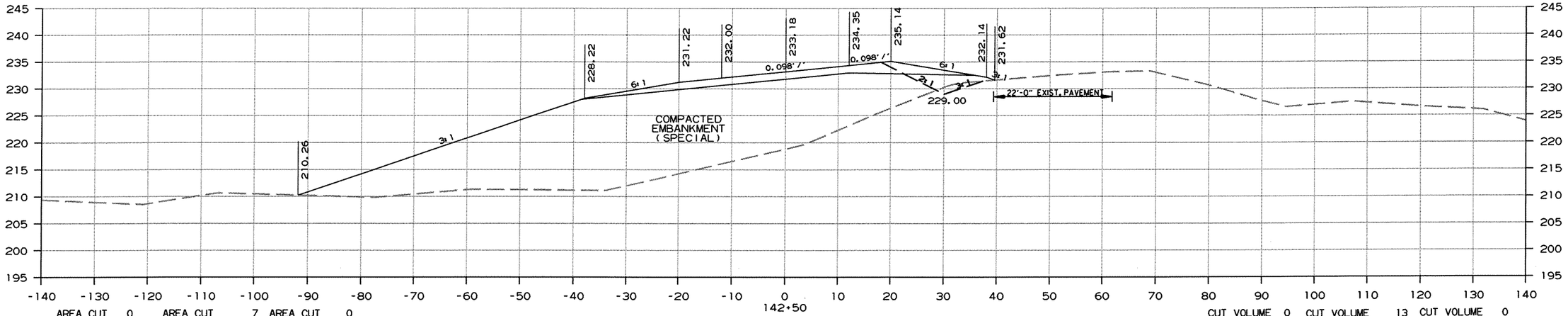

AREA CUT 0 AREA FILL 0 | AREA CUT 7 AREA FILL (SPECIAL) 1280 | AREA CUT 0 AREA FILL 31

CUT VOLUME 0 FILL VOLUME 0 | CUT VOLUME 13 FILL VOLUME (SPECIAL) 2335 | CUT VOLUME 0 FILL VOLUME 57

STAGE 1 STAGE 2 STAGE 3

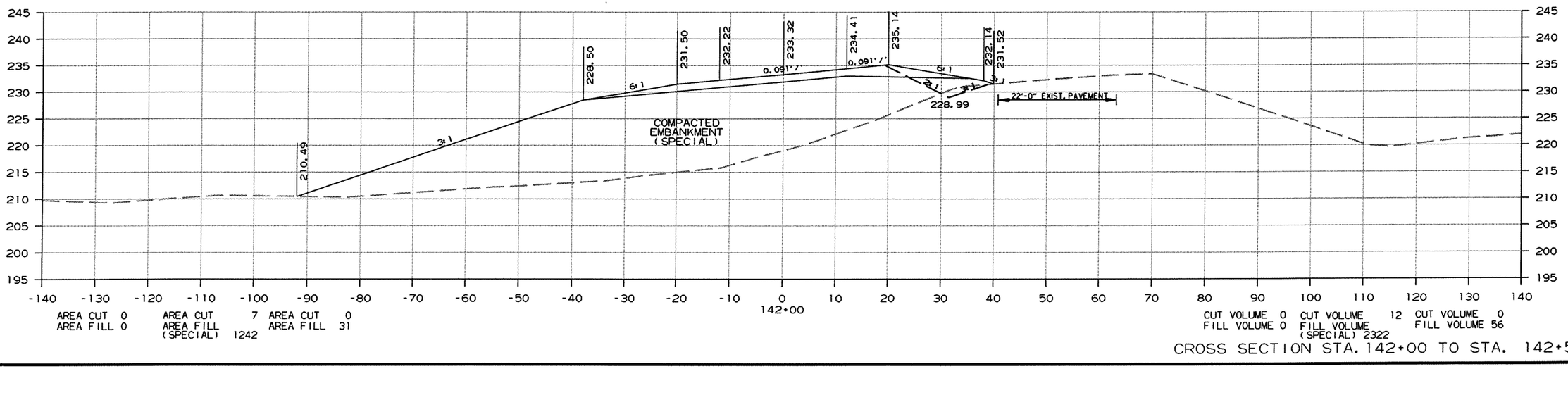

AREA CUT 0 AREA FILL 0 | AREA CUT 7 AREA FILL (SPECIAL) 1242 | AREA CUT 0 AREA FILL 31

CUT VOLUME 0 FILL VOLUME 0 | CUT VOLUME 12 FILL VOLUME (SPECIAL) 2322 | CUT VOLUME 0 FILL VOLUME 56

CROSS SECTION STA. 142+00 TO STA. 142+50

9/11/2013

R005836.DGN

DATE REVISED	DATE FILMED	DATE REVISED	DATE FILMED	FED.RO. DIST.NO.	STATE	FED.AID PROJ.NO.	SHEET NO.	TOTAL SHEETS
				6	ARK.			
				JOB NO.		005836	211	230

(2) CROSS SECTIONS

STAGE 1 STAGE 2 STAGE 3

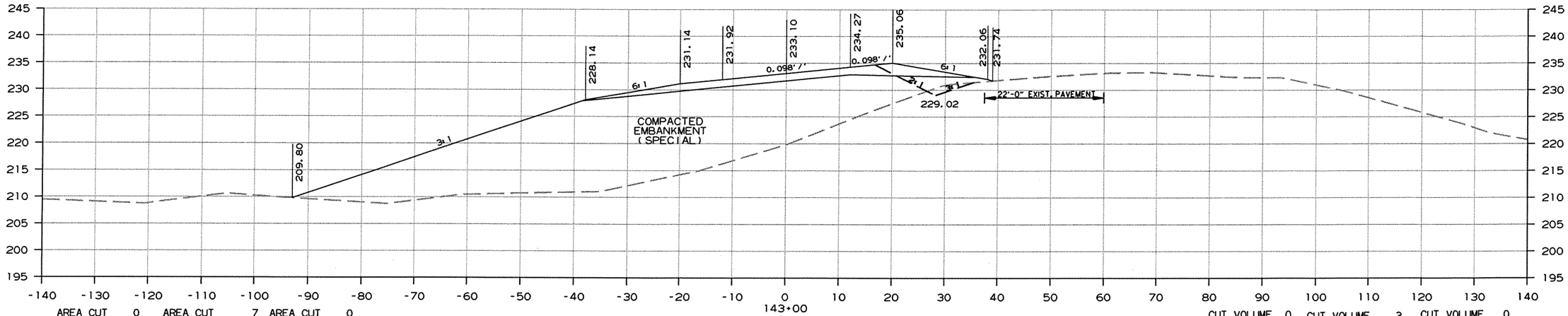

AREA CUT 0 AREA CUT 7 AREA CUT 0
AREA FILL 0 AREA FILL (SPECIAL) 1263 AREA FILL 33

CUT VOLUME 0 CUT VOLUME 3 CUT VOLUME 0
FILL VOLUME 0 FILL VOLUME (SPECIAL) 469 FILL VOLUME 12

STAGE 1 STAGE 2 STAGE 3

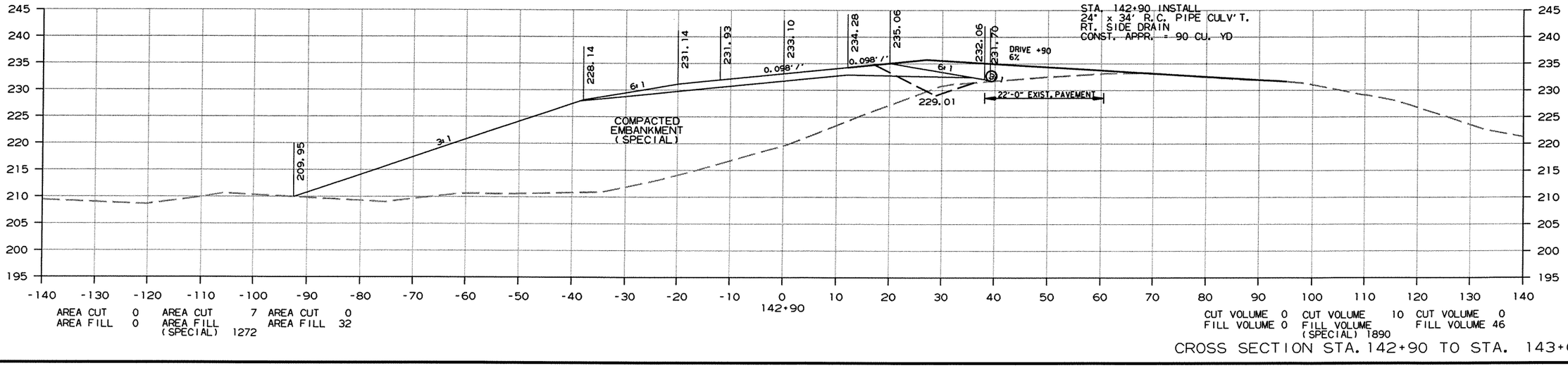

AREA CUT 0 AREA CUT 7 AREA CUT 0
AREA FILL 0 AREA FILL (SPECIAL) 1272 AREA FILL 32

CUT VOLUME 0 CUT VOLUME 10 CUT VOLUME 0
FILL VOLUME 0 FILL VOLUME (SPECIAL) 1890 FILL VOLUME 46

CROSS SECTION STA. 142+90 TO STA. 143+00

9/11/2013

R005836.DGN

DATE REVISED	DATE FILMED	DATE REVISED	DATE FILMED	FED.RD. DST.NO.	STATE	FED.AID PROJ.NO.	SHEET NO.	TOTAL SHEETS
				6	ARK.			
				JOB NO.		005836	212	230

(2) CROSS SECTIONS

STAGE 1 STAGE 2 STAGE 3

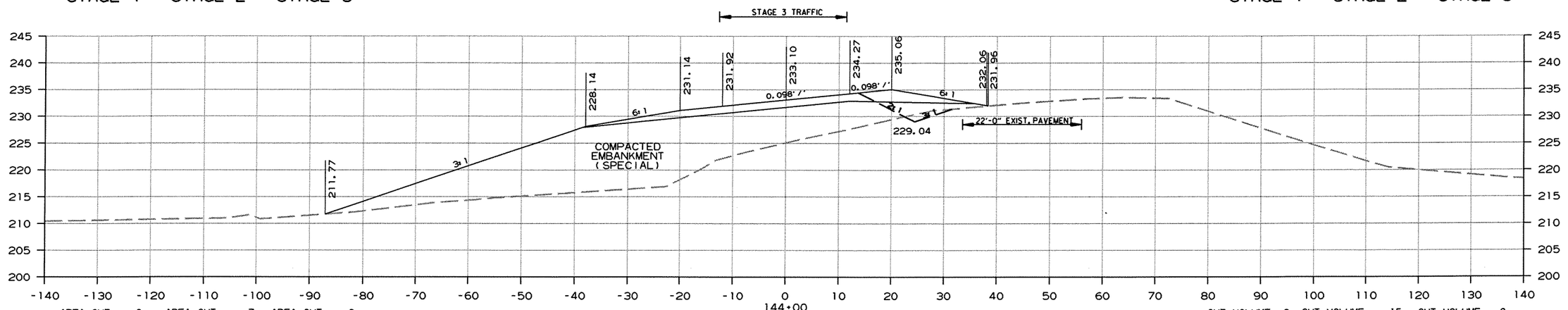

AREA CUT 0 AREA CUT 7 AREA CUT 0
AREA FILL 0 AREA FILL (SPECIAL) 786 AREA FILL 33

+00.00 BEGIN RT. DITCH GRADE

CUT VOLUME 0 CUT VOLUME 15 CUT VOLUME 0
FILL VOLUME 0 FILL VOLUME (SPECIAL) 1735 FILL VOLUME 63

STAGE 1 STAGE 2 STAGE 3

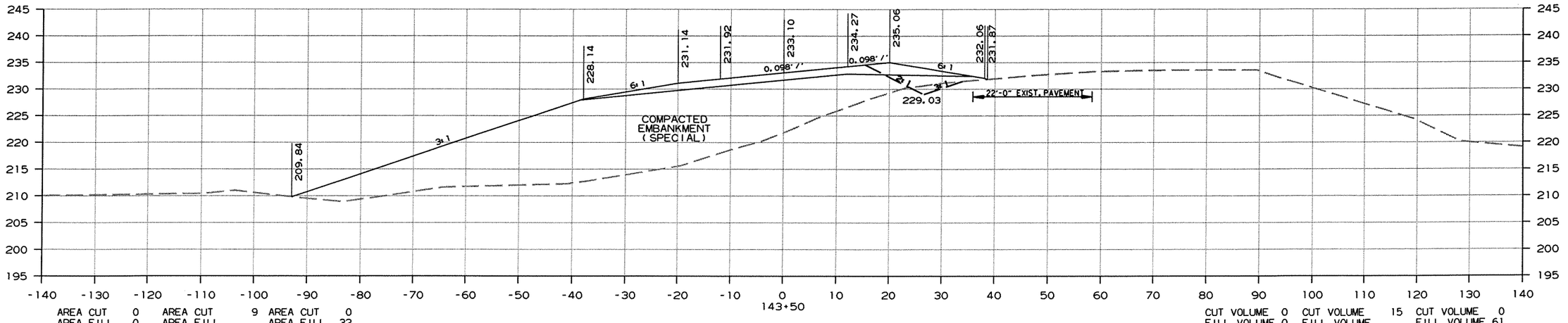

AREA CUT 0 AREA CUT 9 AREA CUT 0
AREA FILL 0 AREA FILL (SPECIAL) 1088 AREA FILL 32

CUT VOLUME 0 CUT VOLUME 15 CUT VOLUME 0
FILL VOLUME 0 FILL VOLUME (SPECIAL) 2177 FILL VOLUME 61

CROSS SECTION STA. 143+50 TO STA. 144+00

9/11/2013

R005836.DGN

DATE REVISED	DATE FILMED	DATE REVISED	DATE FILMED	FED.RD. DIST.NO.	STATE	FED.AID PROJ.NO.	SHEET NO.	TOTAL SHEETS
				6	ARK.			
				JOB NO.		005836	213	230

(2) CROSS SECTIONS

STAGE 1 STAGE 2 STAGE 3

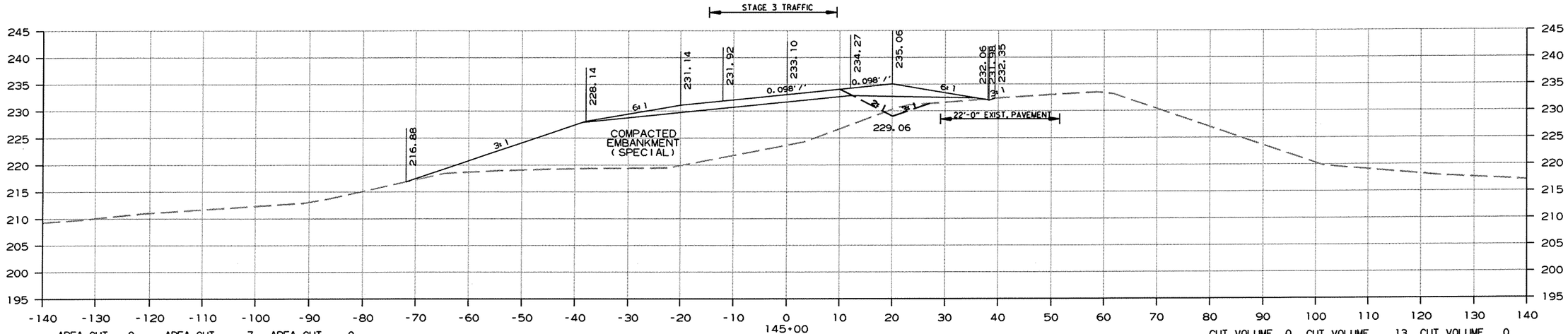

AREA CUT 0 AREA FILL 0 | AREA CUT 7 AREA FILL (SPECIAL) 579 | AREA CUT 0 AREA FILL 37

CUT VOLUME 0 FILL VOLUME 0 | CUT VOLUME 13 FILL VOLUME (SPECIAL) 1139 | CUT VOLUME 0 FILL VOLUME 70

STAGE 1 STAGE 2 STAGE 3

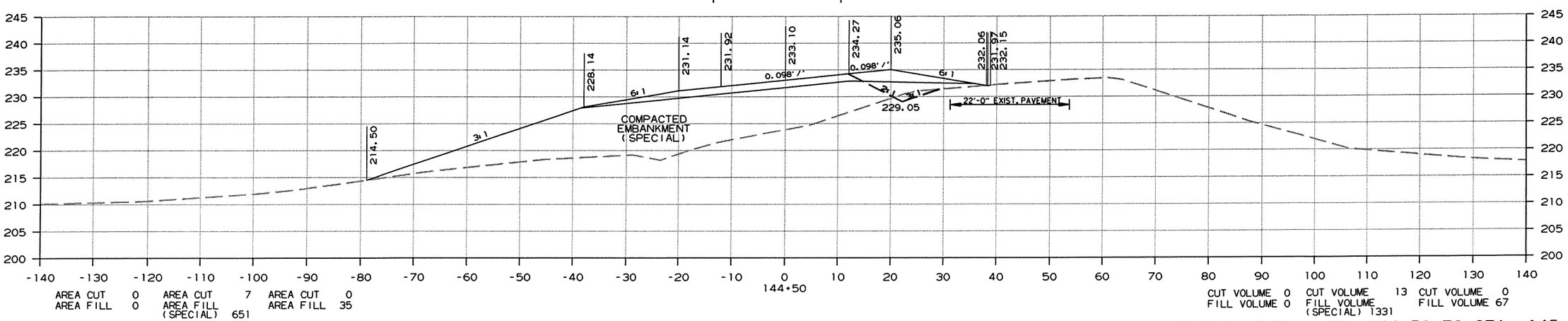

AREA CUT 0 AREA FILL 0 | AREA CUT 7 AREA FILL (SPECIAL) 651 | AREA CUT 0 AREA FILL 35

CUT VOLUME 0 FILL VOLUME 0 | CUT VOLUME 13 FILL VOLUME (SPECIAL) 1331 | CUT VOLUME 0 FILL VOLUME 67

CROSS SECTION STA. 144+50 TO STA. 145+00

9/11/2013

R005836.DGN

DATE REVISED	DATE FILMED	DATE REVISED	DATE FILMED	FED.RD. DIST.NO.	STATE	FED.AID PROJ.NO.	SHEET NO.	TOTAL SHEETS
				6	ARK.			
				JOB NO.		005836	214	230

(2) CROSS SECTIONS

STAGE 1 STAGE 2 STAGE 3

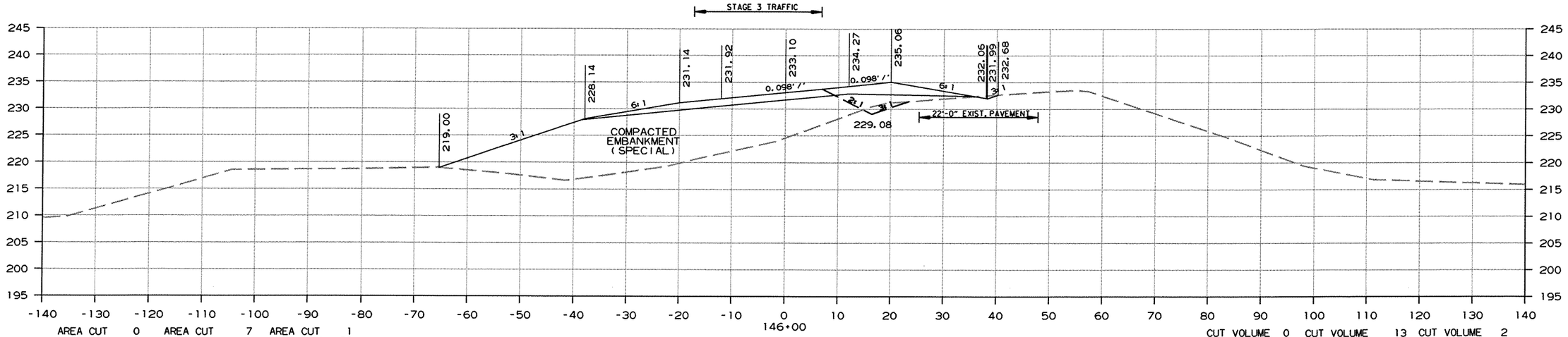

AREA CUT 0 AREA CUT 7 AREA CUT 1
AREA FILL 0 AREA FILL (SPECIAL) 588 AREA FILL 39

CUT VOLUME 0 CUT VOLUME 13 CUT VOLUME 2
FILL VOLUME 0 FILL VOLUME (SPECIAL) 1061 FILL VOLUME 74

STAGE 1 STAGE 2 STAGE 3

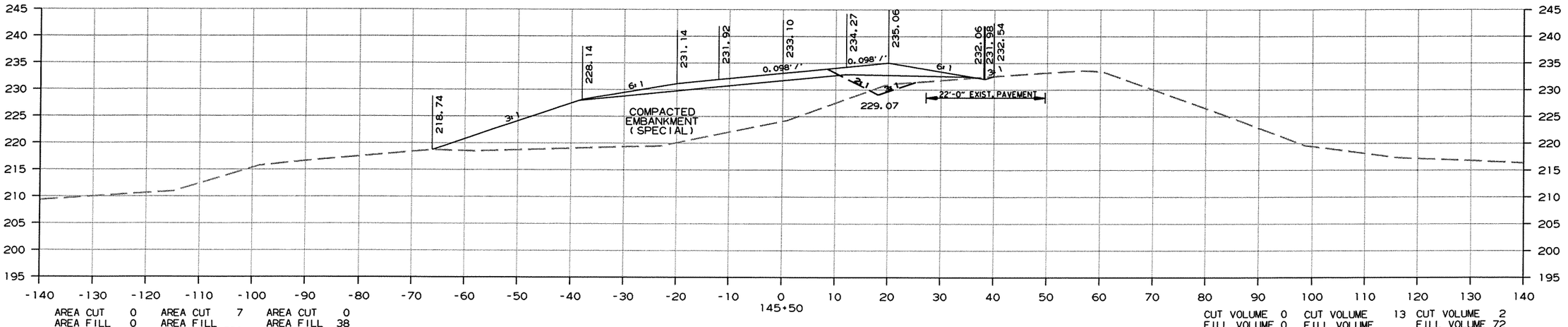

AREA CUT 0 AREA CUT 7 AREA CUT 0
AREA FILL 0 AREA FILL (SPECIAL) 558 AREA FILL 38

CUT VOLUME 0 CUT VOLUME 13 CUT VOLUME 2
FILL VOLUME 0 FILL VOLUME (SPECIAL) 13 FILL VOLUME 72

CROSS SECTION STA. 145+50 TO STA. 146+00

9/11/2013

R005836.DGN

DATE REVISED	DATE FILMED	DATE REVISED	DATE FILMED	FED.RD. DIST.NO.	STATE	FED.AID PROJ.NO.	SHEET NO.	TOTAL SHEETS
				6	ARK.			
				JOB NO.		005836	215	230

(2) CROSS SECTIONS

STAGE 1 STAGE 2 STAGE 3

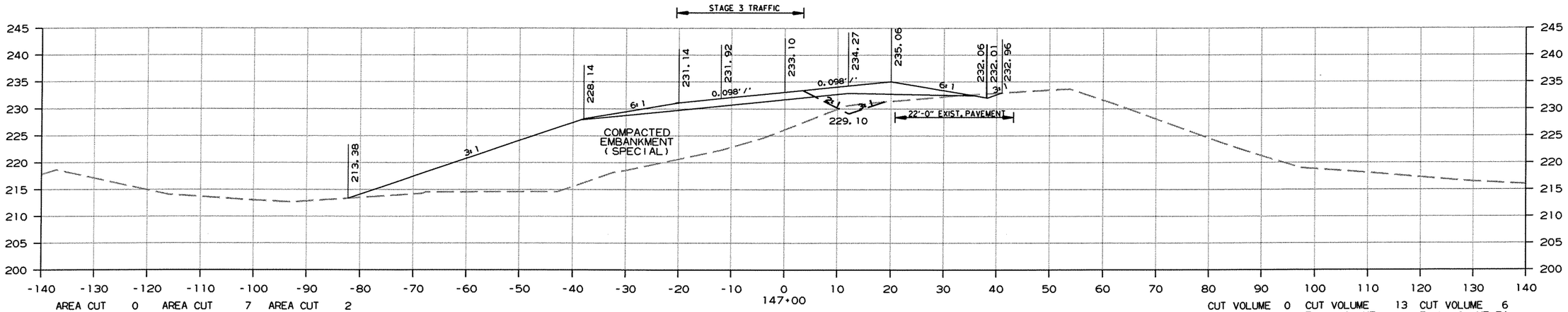

STAGE 1 STAGE 2 STAGE 3

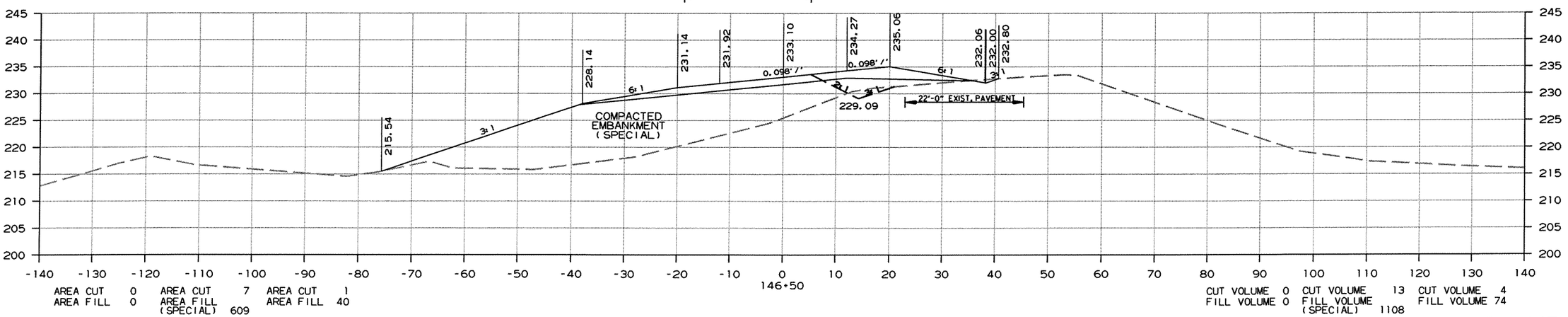

CROSS SECTION STA. 146+50 TO STA. 147+00

9/11/2013

R005836.DGN

DATE REVISED	DATE FILMED	DATE REVISED	DATE FILMED	FED.RD. DIST.NO.	STATE	FED.AID PROJ.NO.	SHEET NO.	TOTAL SHEETS
				6	ARK.			
				JOB NO.		005836	216	230

(2) CROSS SECTIONS

STAGE 1 STAGE 2 STAGE 3

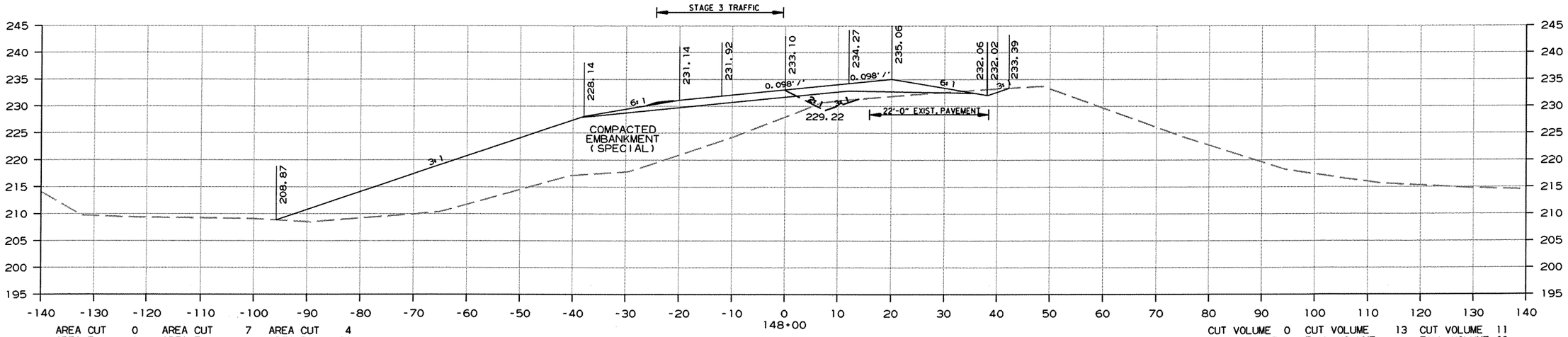

AREA CUT 0 AREA CUT 7 AREA CUT 4
AREA FILL 0 AREA FILL (SPECIAL) 730 AREA FILL 38

CUT VOLUME 0 CUT VOLUME 13 CUT VOLUME 11
FILL VOLUME 0 FILL VOLUME (SPECIAL) 1363 FILL VOLUME 69

STAGE 1 STAGE 2 STAGE 3

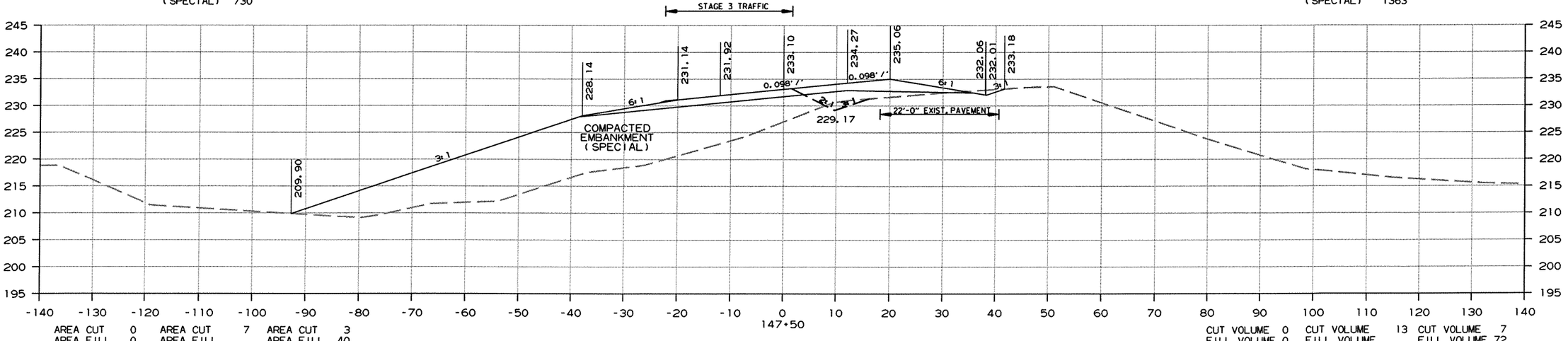

AREA CUT 0 AREA CUT 7 AREA CUT 3
AREA FILL 0 AREA FILL (SPECIAL) 742 AREA FILL 40

CUT VOLUME 0 CUT VOLUME 13 CUT VOLUME 7
FILL VOLUME 0 FILL VOLUME (SPECIAL) 1292 FILL VOLUME 72

CROSS SECTION STA. 147+50 TO STA. 148+00

9/11/2013

R005836.DGN

DATE REVISED	DATE FILMED	DATE REVISED	DATE FILMED	FED.RD. DIST.NO.	STATE	FED.AID PROJ.NO.	SHEET NO.	TOTAL SHEETS
				6	ARK.			
				JOB NO.		005836	217	230

(2) CROSS SECTIONS

STAGE 1 STAGE 2 STAGE 3

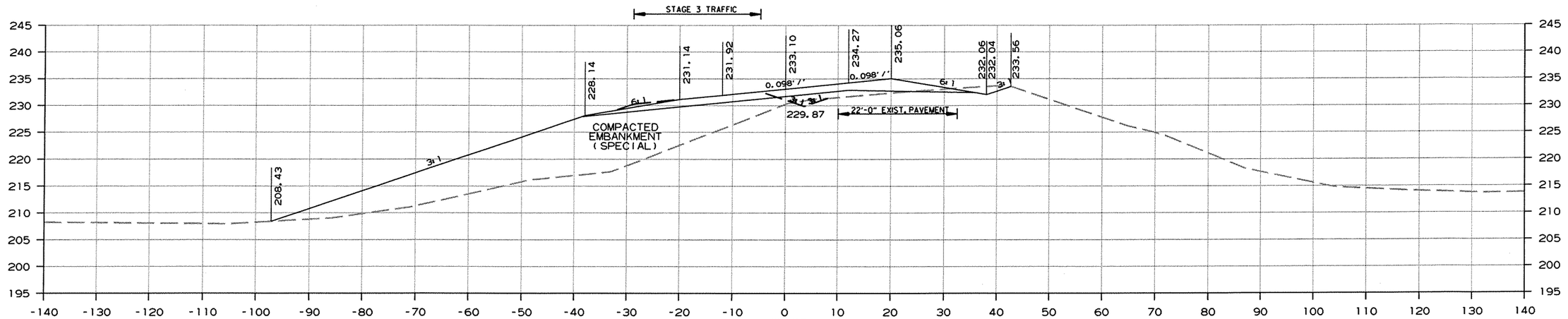

AREA CUT 0 AREA FILL 361 | AREA CUT 4 AREA FILL (SPECIAL) 609 | AREA CUT 11 AREA FILL 29

CUT VOLUME 0 FILL VOLUME 0 | CUT VOLUME 7 FILL VOLUME (SPECIAL) 1170 | CUT VOLUME 26 FILL VOLUME 50

STAGE 1 STAGE 2 STAGE 3

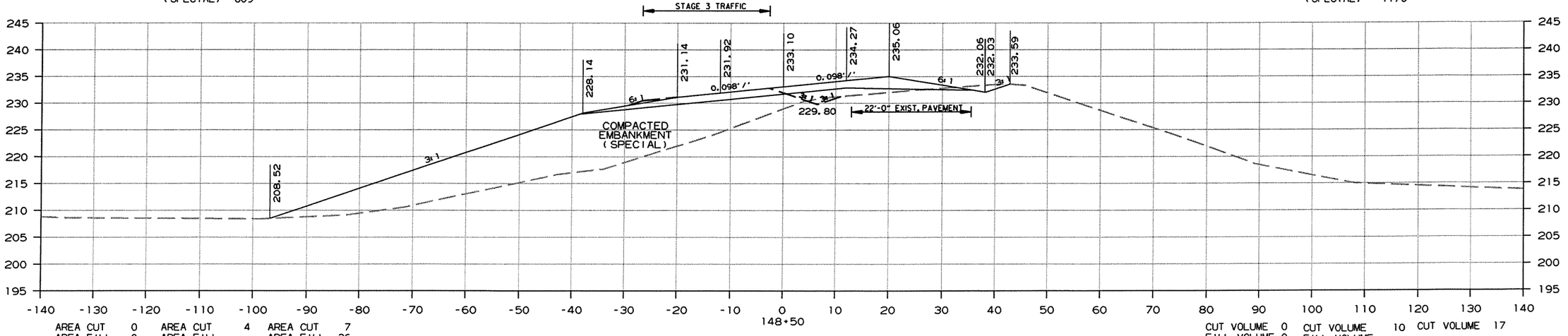

AREA CUT 0 AREA FILL 0 | AREA CUT 4 AREA FILL (SPECIAL) 655 | AREA CUT 7 AREA FILL 36

CUT VOLUME 0 FILL VOLUME 0 | CUT VOLUME 10 FILL VOLUME (SPECIAL) 1282 | CUT VOLUME 17

CROSS SECTION STA. 148+50 TO STA. 149+00

9/11/2013

R005836.DGN

DATE REVISED	DATE FILMED	DATE REVISED	DATE FILMED	FED.RD. DIST.NO.	STATE	FED.AID PROJ.NO.	SHEET NO.	TOTAL SHEETS
				6	ARK.			
				JOB NO.		005836	218	230

(2) CROSS SECTIONS

STAGE 1 STAGE 2 STAGE 3

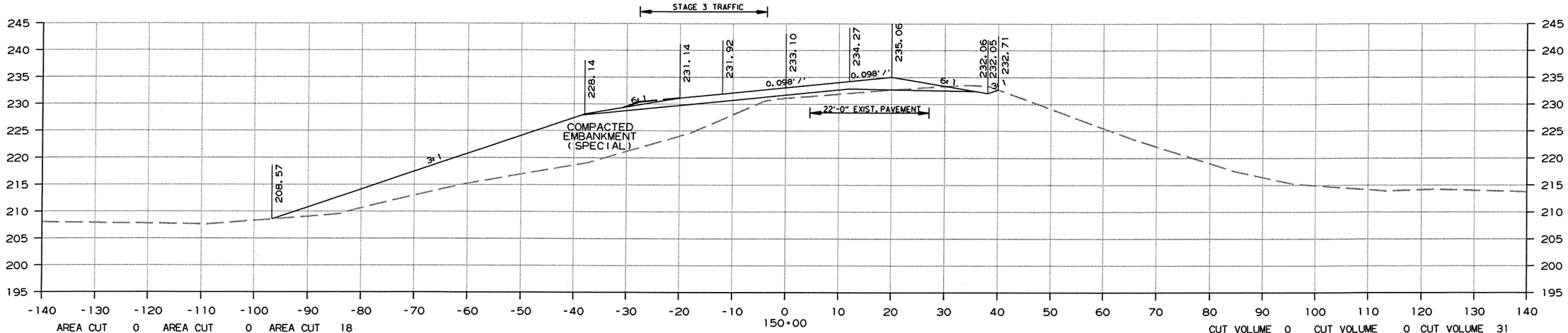

STAGE 1 STAGE 2 STAGE 3

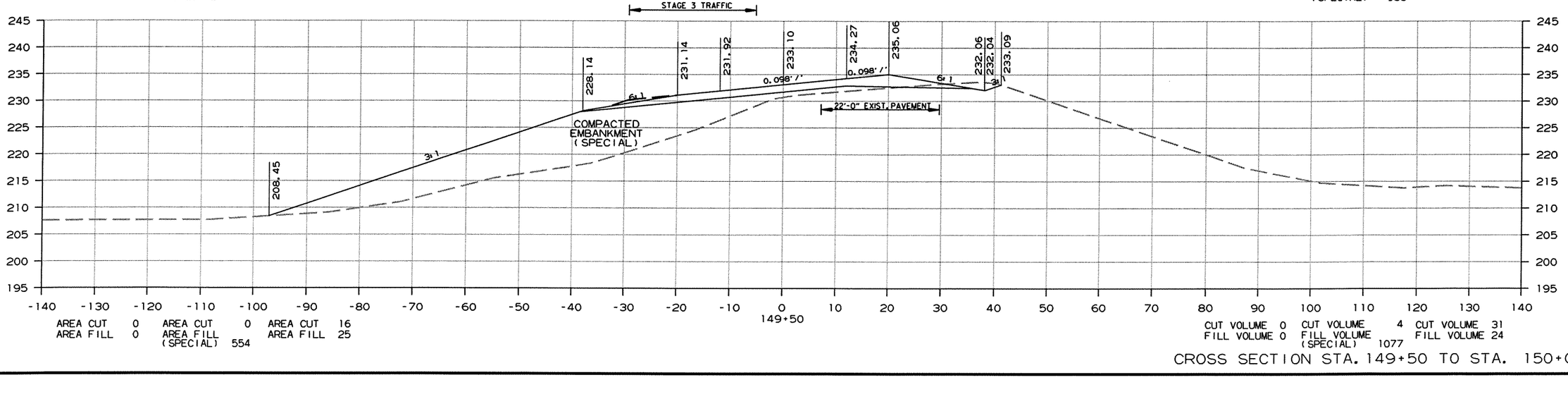

CROSS SECTION STA. 149+50 TO STA. 150+00

9/11/2013

R005836.DGN

DATE REVISED	DATE FILMED	DATE REVISED	DATE FILMED	FED.RD. DST.NO.	STATE	FED.AID PROJ.NO.	SHEET NO.	TOTAL SHEETS
				6	ARK.			
				JOB NO.		005836	219	230

(2) CROSS SECTIONS

STAGE 1 STAGE 2 STAGE 3

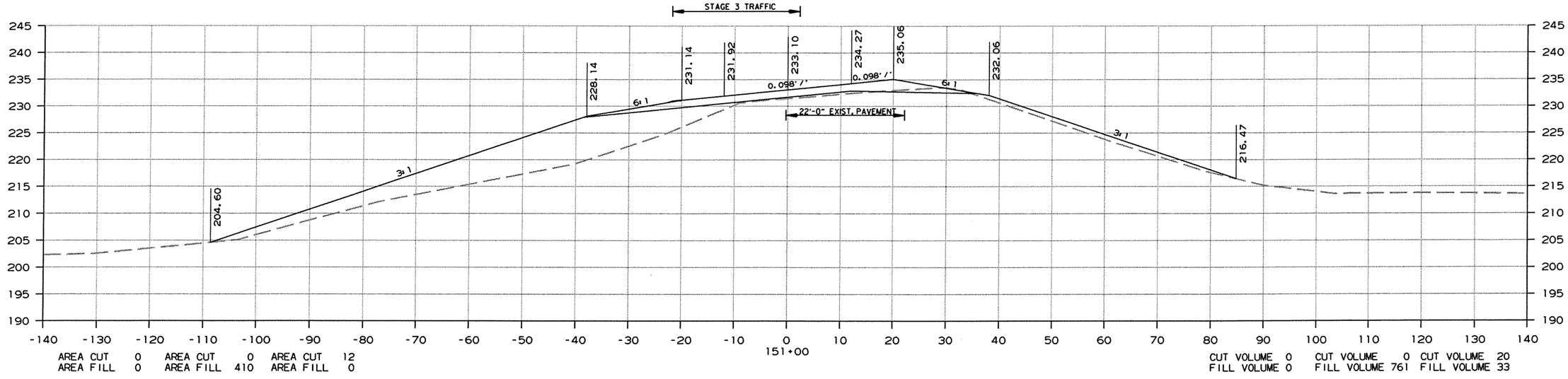

AREA CUT 0 AREA CUT 0 AREA CUT 12
AREA FILL 0 AREA FILL 410 AREA FILL 0

STAGE 1 STAGE 2 STAGE 3

CUT VOLUME 0 CUT VOLUME 0 CUT VOLUME 20
FILL VOLUME 0 FILL VOLUME 761 FILL VOLUME 33

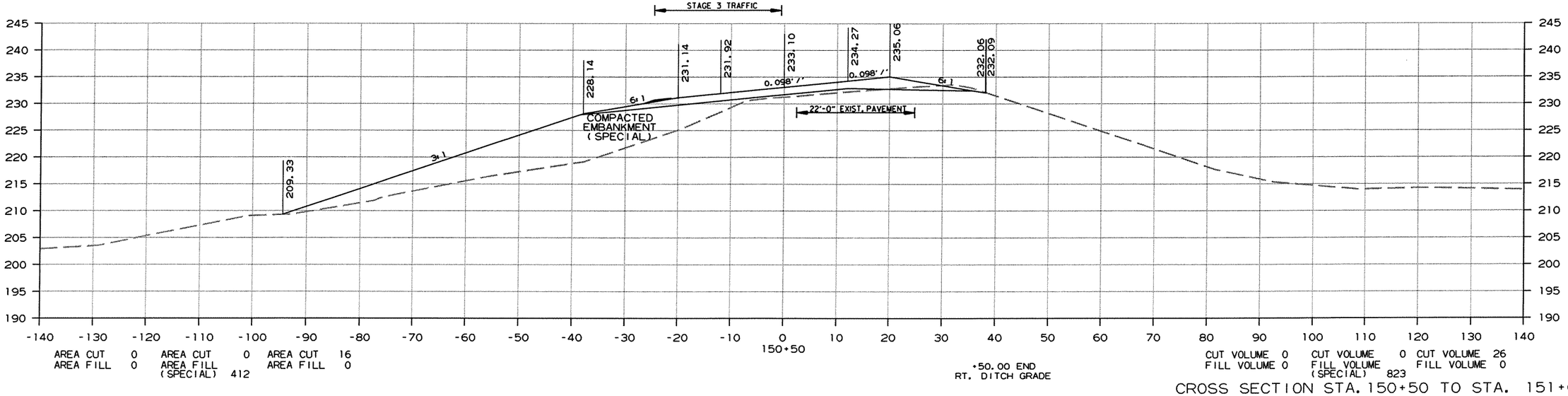

AREA CUT 0 AREA CUT 0 AREA CUT 16
AREA FILL 0 AREA FILL (SPECIAL) 412 AREA FILL 0

+50.00 END
RT. DITCH GRADE

CUT VOLUME 0 CUT VOLUME 0 CUT VOLUME 26
FILL VOLUME 0 FILL VOLUME (SPECIAL) 823 FILL VOLUME 0

CROSS SECTION STA. 150+50 TO STA. 151+00

9/11/2013

R005836.DGN

DATE REVISED	DATE FILMED	DATE REVISED	DATE FILMED	FED.RD. DIST.NO.	STATE	FED.AID PROJ.NO.	SHEET NO.	TOTAL SHEETS
				6	ARK.			
				JOB NO.		005836	220	230

(2) CROSS SECTIONS

STAGE 1 STAGE 2 STAGE 3

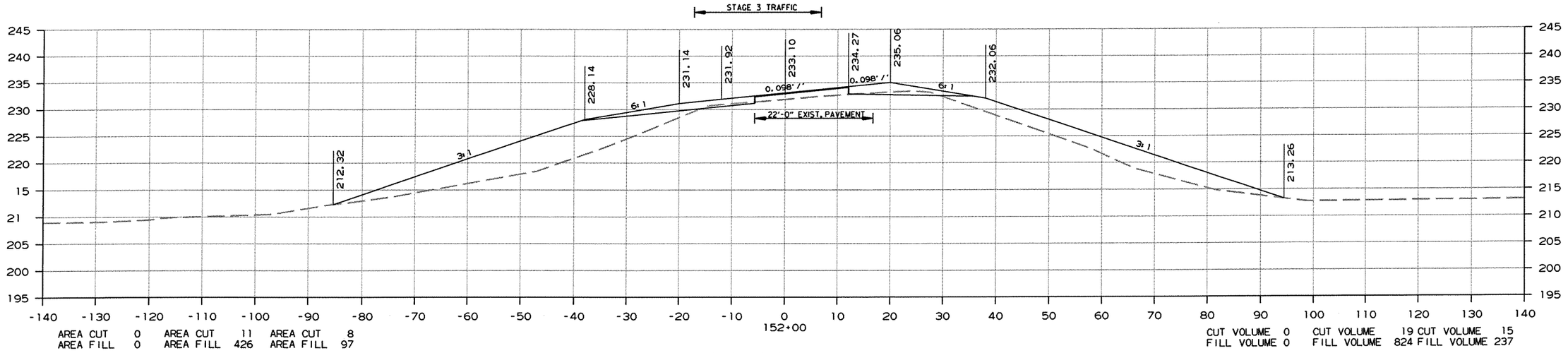

STAGE 1 STAGE 2 STAGE 3

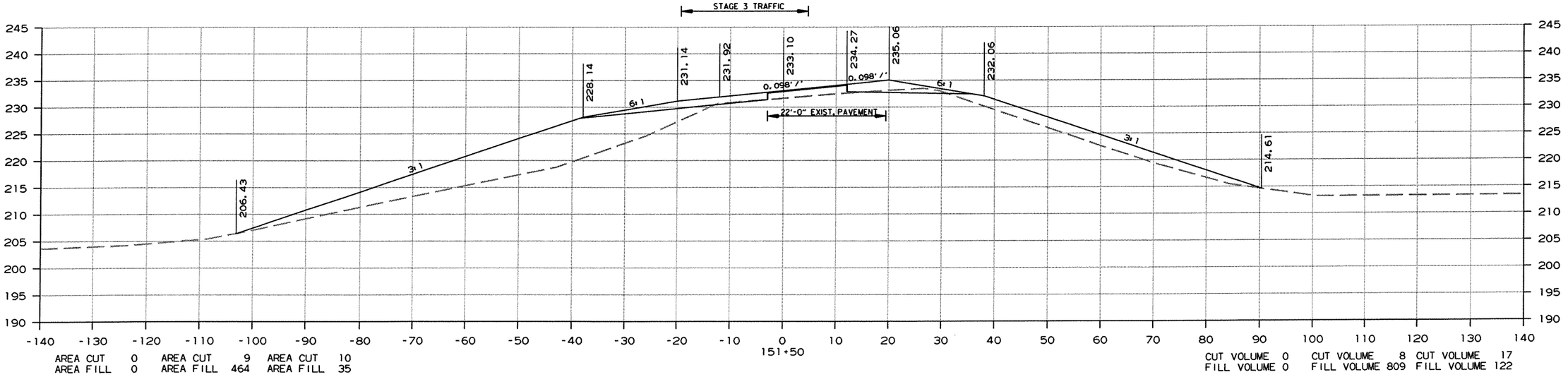

CROSS SECTION STA. 151+50 TO STA. 152+00

9/11/2013

R005836.DGN

DATE REVISED	DATE FILMED	DATE REVISED	DATE FILMED	FED.RD. DIST.NO.	STATE	FED.AID PROJ.NO.	SHEET NO.	TOTAL SHEETS
				6	ARK.			
				JOB NO.		005836	221	230

(2) CROSS SECTIONS

STAGE 1 STAGE 2 STAGE 3

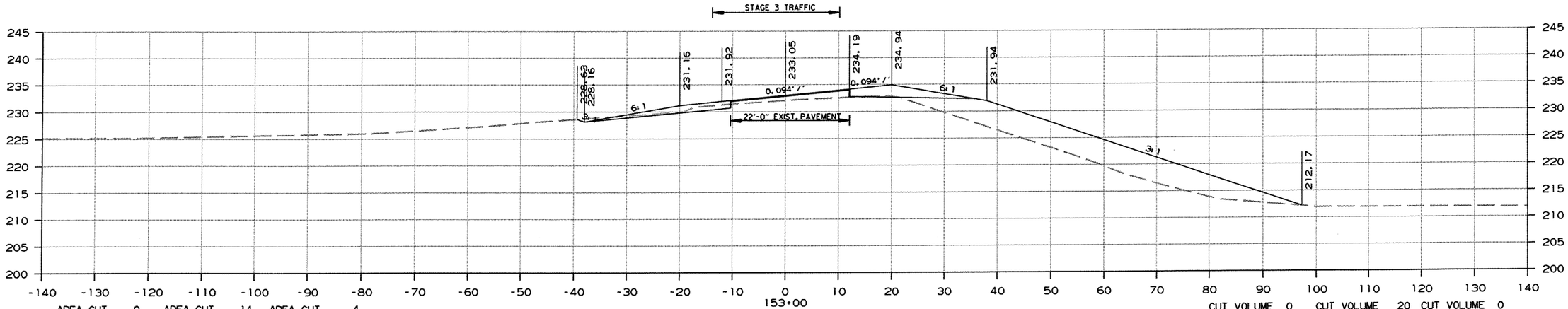

AREA CUT 0 AREA CUT 14 AREA CUT 4
AREA FILL 0 AREA FILL 279 AREA FILL 225

CUT VOLUME 0 CUT VOLUME 20 CUT VOLUME 0
FILL VOLUME 0 FILL VOLUME 538 FILL VOLUME 0

STAGE 1 STAGE 2 STAGE 3

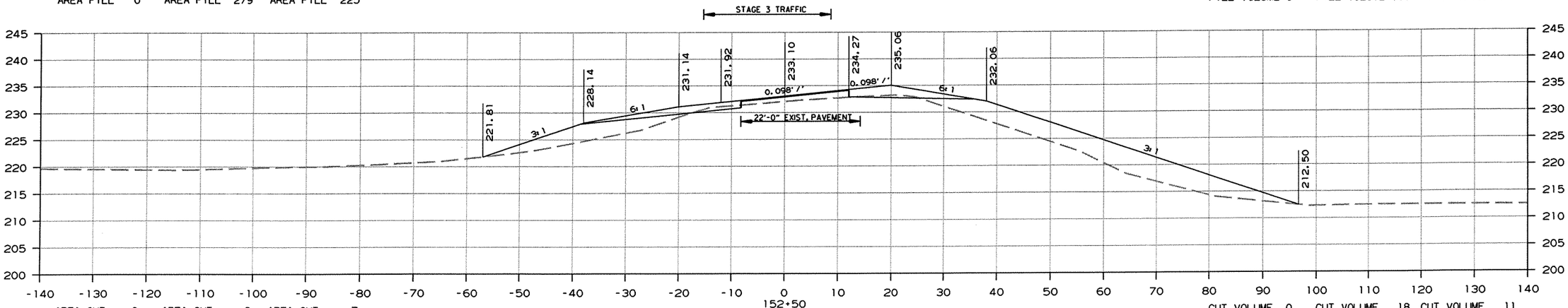

AREA CUT 0 AREA CUT 8 AREA CUT 7
AREA FILL 0 AREA FILL 302 AREA FILL 158

CUT VOLUME 0 CUT VOLUME 18 CUT VOLUME 11
FILL VOLUME 0 FILL VOLUME 674 FILL VOLUME 356

CROSS SECTION STA. 152+50 TO STA. 153+00

9/11/2013

R005836.DGN

DATE REVISED	DATE FILMED	DATE REVISED	DATE FILMED	FED.RD. DIST.NO.	STATE	FED.AID PROJ.NO.	SHEET NO.	TOTAL SHEETS
				6	ARK.			
				JOB NO.		005836	222	230

(2) CROSS SECTIONS

STAGE 1 STAGE 2 STAGE 3

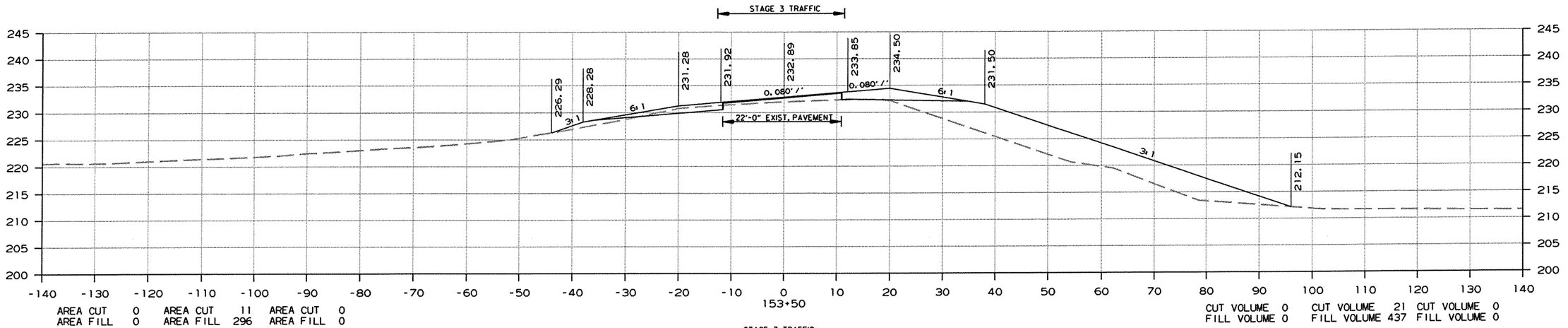

AREA CUT 0 AREA CUT 11 AREA CUT 0
AREA FILL 0 AREA FILL 296 AREA FILL 0

CUT VOLUME 0 CUT VOLUME 21 CUT VOLUME 0
FILL VOLUME 0 FILL VOLUME 437 FILL VOLUME 0

STAGE 1 STAGE 2 STAGE 3

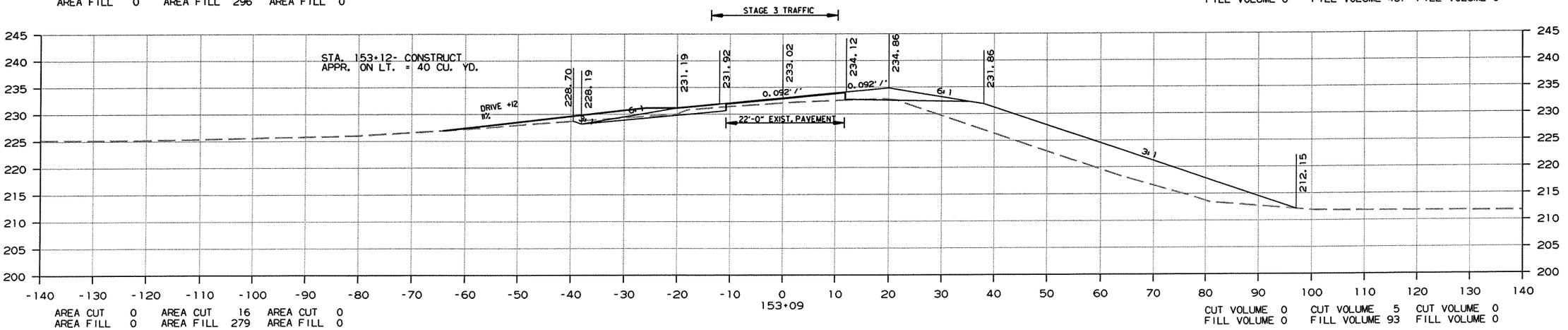

AREA CUT 0 AREA CUT 16 AREA CUT 0
AREA FILL 0 AREA FILL 279 AREA FILL 0

CUT VOLUME 0 CUT VOLUME 5 CUT VOLUME 0
FILL VOLUME 0 FILL VOLUME 93 FILL VOLUME 0

CROSS SECTION STA. 153+09 TO STA. 153+50

9/11/2013

R005836.DGN

DATE REVISED	DATE FILMED	DATE REVISED	DATE FILMED	FED.RD. DIST.NO.	STATE	FED.AID PROJ.NO.	SHEET NO.	TOTAL SHEETS
				6	ARK.			
				JOB NO.		005836	223	230

(2) CROSS SECTIONS

STAGE 1 STAGE 2 STAGE 3

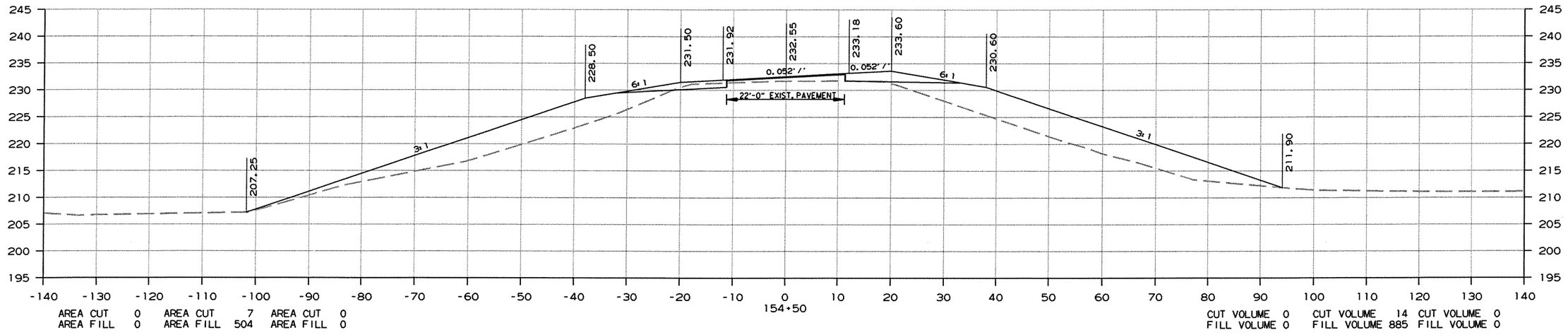

AREA CUT 0 AREA CUT 7 AREA CUT 0
AREA FILL 0 AREA FILL 504 AREA FILL 0

CUT VOLUME 0 CUT VOLUME 14 CUT VOLUME 0
FILL VOLUME 0 FILL VOLUME 885 FILL VOLUME 0

STAGE 1 STAGE 2 STAGE 3

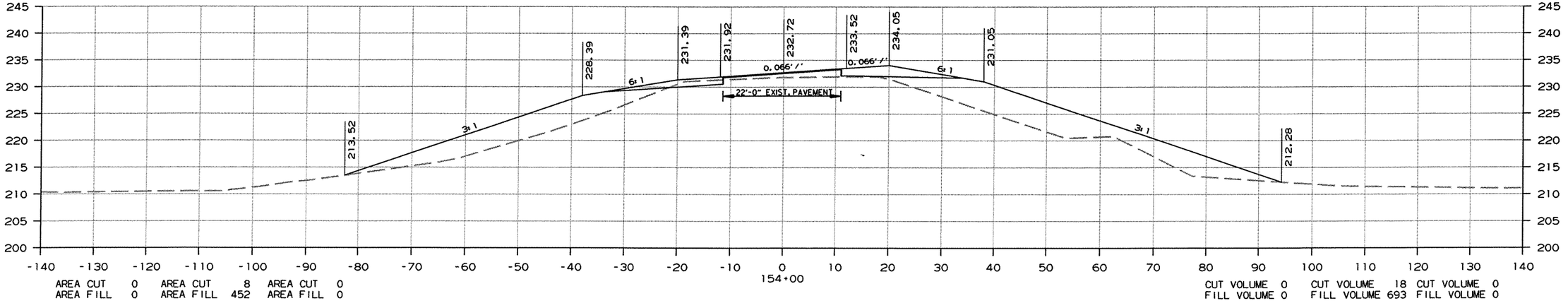

AREA CUT 0 AREA CUT 8 AREA CUT 0
AREA FILL 0 AREA FILL 452 AREA FILL 0

CUT VOLUME 0 CUT VOLUME 18 CUT VOLUME 0
FILL VOLUME 0 FILL VOLUME 693 FILL VOLUME 0

CROSS SECTION STA. 154+00 TO STA. 154+50

9/11/2013

R005836.DGN

DATE REVISED	DATE FILMED	DATE REVISED	DATE FILMED	FED.RD. DIST.NO.	STATE	FED.AID PROJ.NO.	SHEET NO.	TOTAL SHEETS
				6	ARK.			
				JOB NO.		005836	224	230

(2) CROSS SECTIONS

STAGE 1 STAGE 2 STAGE 3

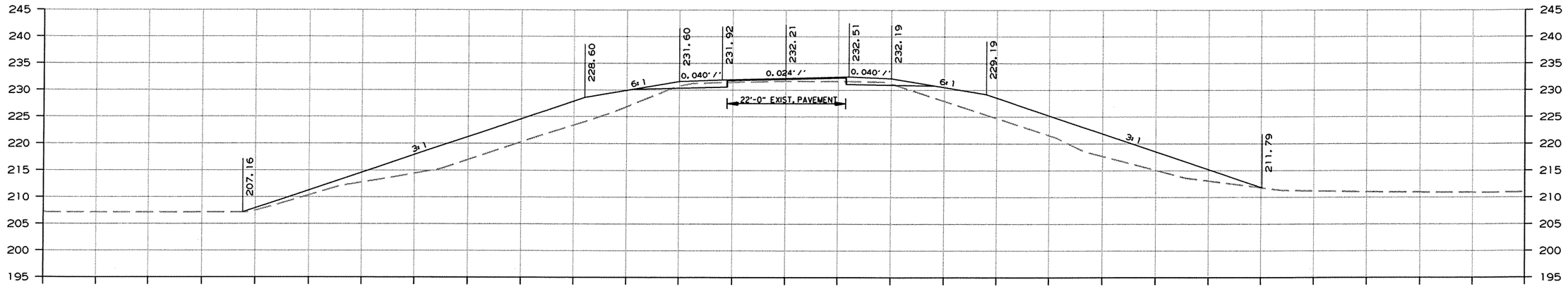

AREA CUT 0 AREA CUT 12 AREA CUT 0
AREA FILL 0 AREA FILL 430 AREA FILL 0

CUT VOLUME 0 CUT VOLUME 19 CUT VOLUME 0
FILL VOLUME 0 FILL VOLUME 826 FILL VOLUME 0

STAGE 1 STAGE 2 STAGE 3

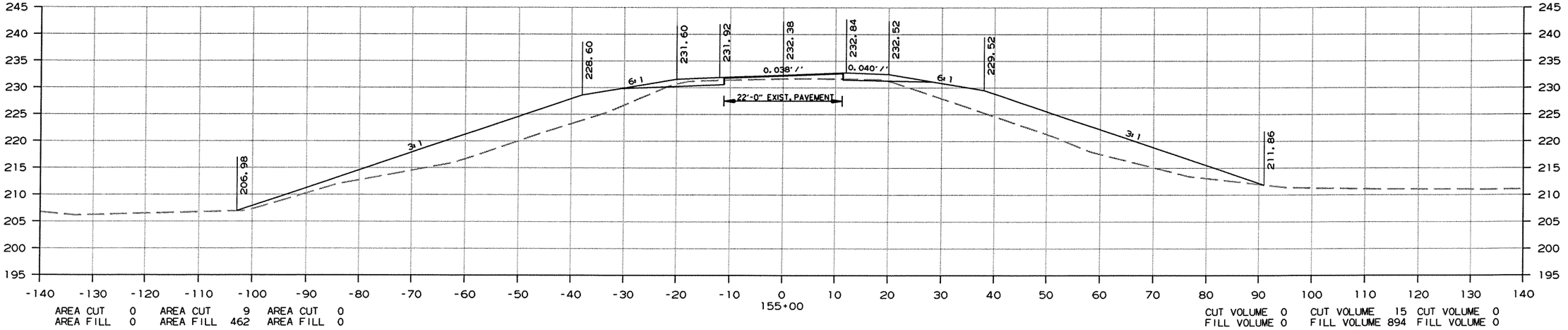

AREA CUT 0 AREA CUT 9 AREA CUT 0
AREA FILL 0 AREA FILL 462 AREA FILL 0

CUT VOLUME 0 CUT VOLUME 15 CUT VOLUME 0
FILL VOLUME 0 FILL VOLUME 894 FILL VOLUME 0

CROSS SECTION STA. 155+00 TO STA. 155+50

9/11/2013

R005836.DGN

DATE REVISED	DATE FILMED	DATE REVISED	DATE FILMED	FED.RD. DIST.NO.	STATE	FED.AID PROJ.NO.	SHEET NO.	TOTAL SHEETS
				6	ARK.			
				JOB NO.		005836	225	230

(2) CROSS SECTIONS

STAGE 1 STAGE 2 STAGE 3

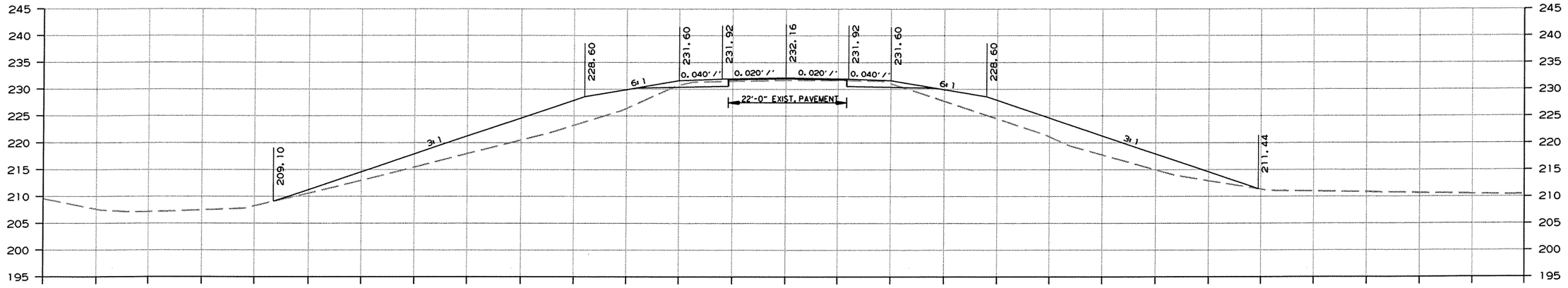

AREA CUT 0 AREA CUT 17 AREA CUT 0
AREA FILL 0 AREA FILL 377 AREA FILL 0

156+50

END JOB 005836

CUT VOLUME 0 CUT VOLUME 13 CUT VOLUME 0
FILL VOLUME 0 FILL VOLUME 379 FILL VOLUME 0

STAGE 1 STAGE 2 STAGE 3

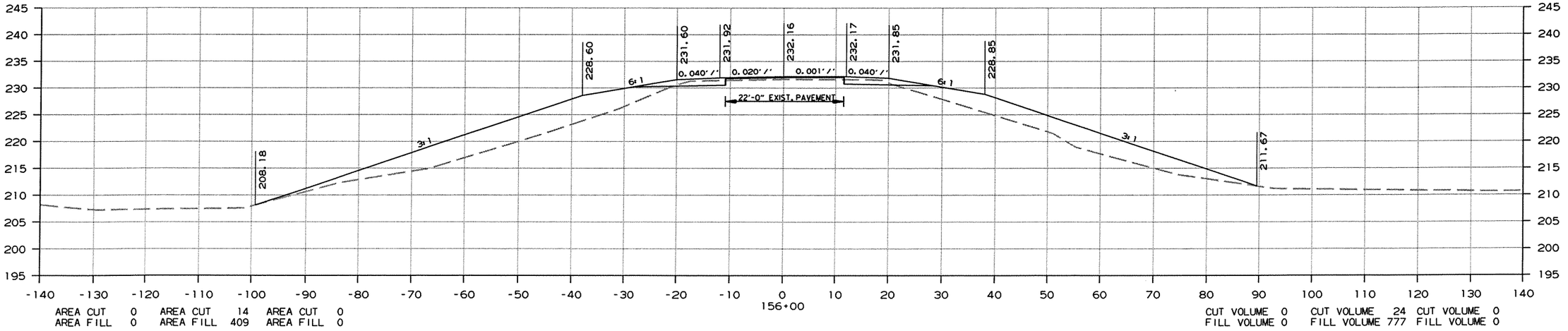

AREA CUT 0 AREA CUT 14 AREA CUT 0
AREA FILL 0 AREA FILL 409 AREA FILL 0

156+00

CUT VOLUME 0 CUT VOLUME 24 CUT VOLUME 0
FILL VOLUME 0 FILL VOLUME 777 FILL VOLUME 0

CROSS SECTION STA. 156+00 TO STA. 156+50

9/11/2013

R005836.DGN

DATE REVISED	DATE FILMED	DATE REVISED	DATE FILMED	FED.RD. DIST.NO.	STATE	FED.AID PROJ.NO.	SHEET NO.	TOTAL SHEETS
				6	ARK.			
				JOB NO.		005836	226	230

(2) CROSS SECTIONS

STAGE 2

STAGE 2

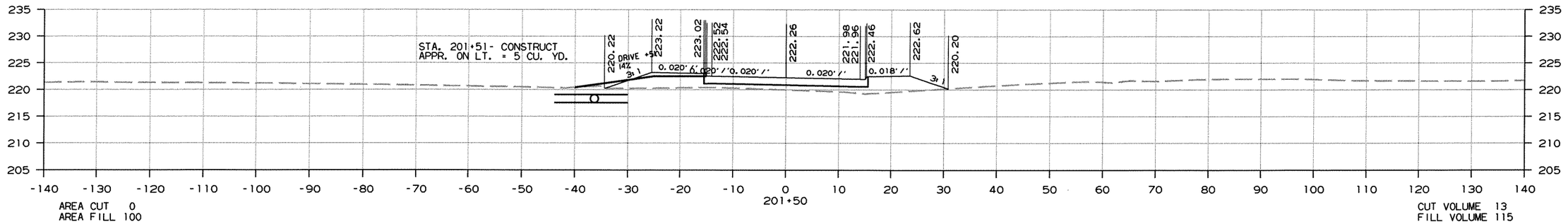

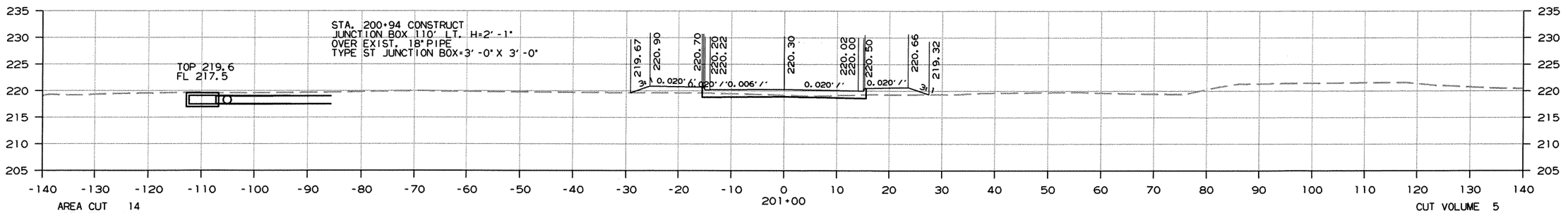

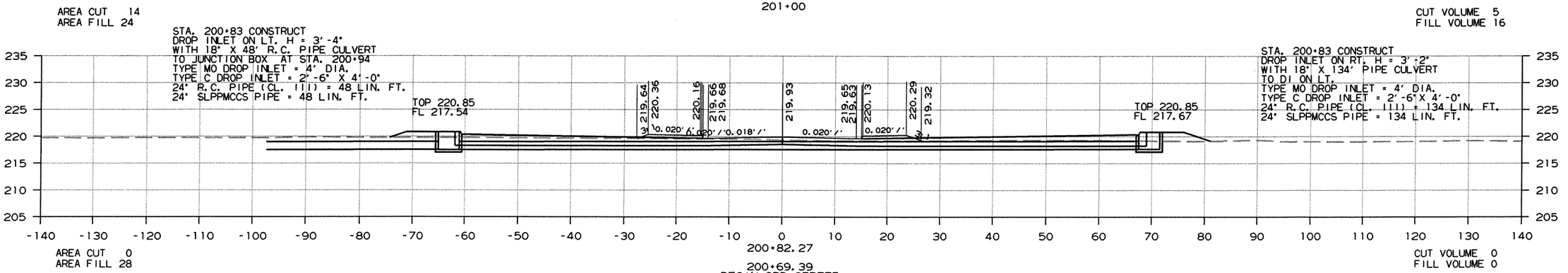

CROSS SECTION STA. 200+83 TO STA. 201+50

9/20/2013

R005836.DGN

DATE REVISED	DATE FILMED	DATE REVISED	DATE FILMED	FED.RD. DIST.NO.	STATE	FED.AID PROJ.NO.	SHEET NO.	TOTAL SHEETS
				6	ARK.			
				JOB NO.		005836	227	230

(2) CROSS SECTIONS

STAGE 2

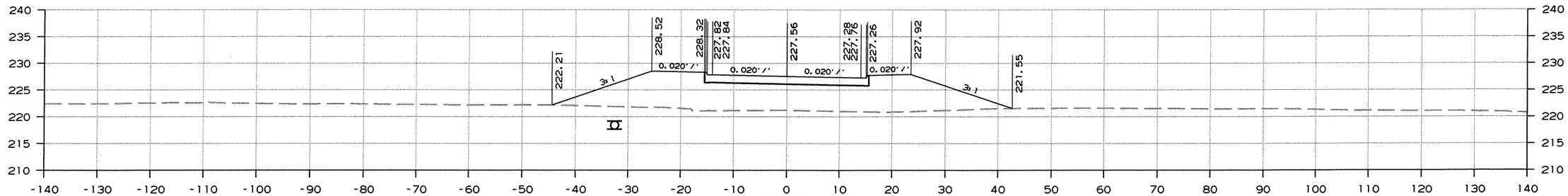

AREA CUT 0
AREA FILL 400

CUT VOLUME 0
FILL VOLUME 241

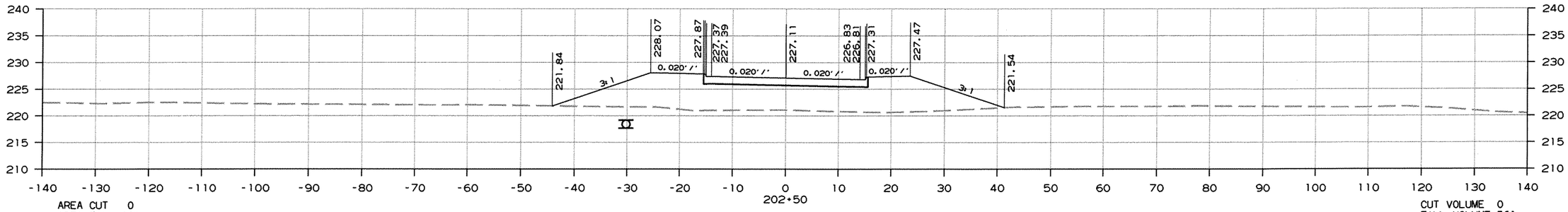

AREA CUT 0
AREA FILL 380

CUT VOLUME 0
FILL VOLUME 561

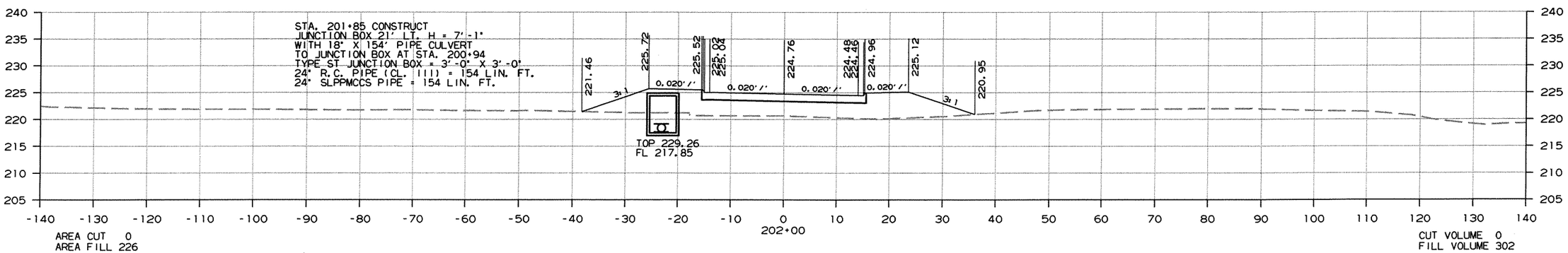

STA. 201+85 CONSTRUCT
JUNCTION BOX 21' LT. H = 7'-1"
WITH 18" X 154' PIPE CULVERT
TO JUNCTION BOX AT STA. 200+94
TYPE ST JUNCTION BOX = 3'-0" X 3'-0"
24" R.C. PIPE (CL. III) = 154 LIN. FT.
24" SLPPMCCS PIPE = 154 LIN. FT.

AREA CUT 0
AREA FILL 226

CUT VOLUME 0
FILL VOLUME 302

CROSS SECTION STA. 202+00 TO STA. 202+67

9/20/2013

R005836.DGN

DATE REVISED	DATE FILMED	DATE REVISED	DATE FILMED	FED.RD. DIST.NO.	STATE	FED.AID PROJ.NO.	SHEET NO.	TOTAL SHEETS
				6	ARK.			
				JOB NO.		005836	228	230

(2) CROSS SECTIONS

STAGE 2

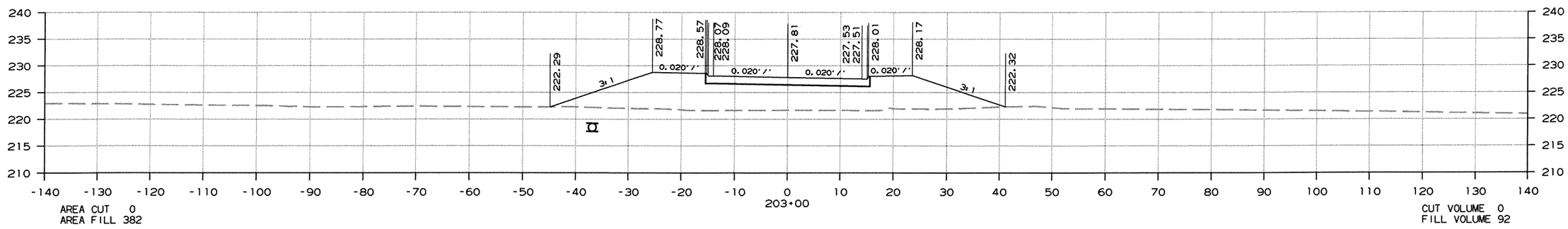

AREA CUT 0
AREA FILL 382

CUT VOLUME 0
FILL VOLUME 92

STAGE 2

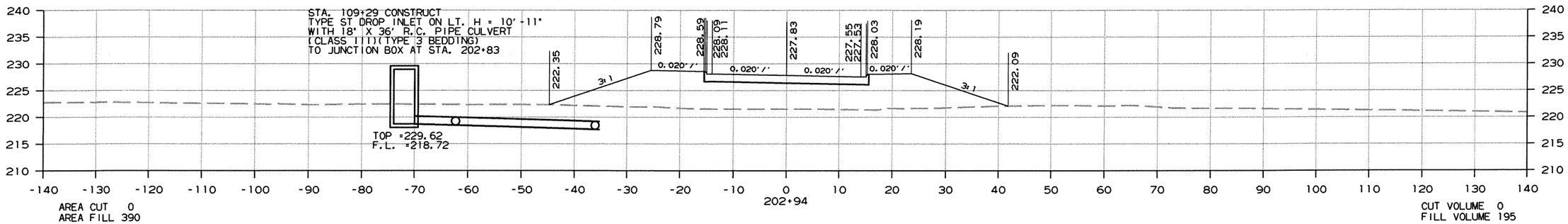

AREA CUT 0
AREA FILL 390

CUT VOLUME 0
FILL VOLUME 195

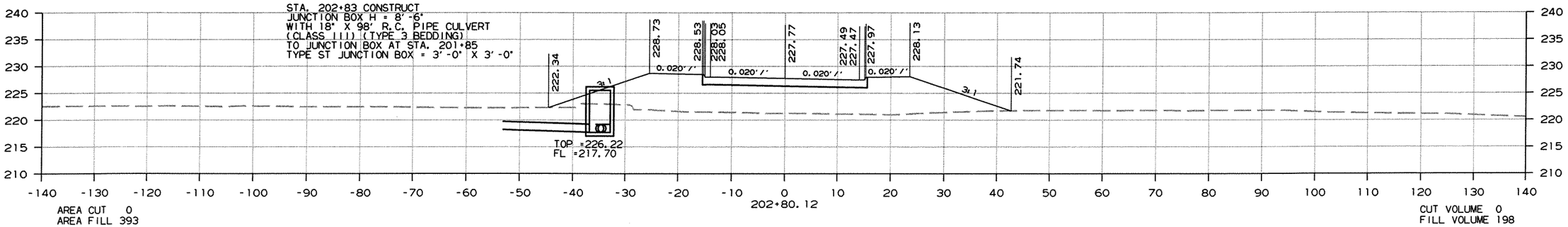

AREA CUT 0
AREA FILL 393

CUT VOLUME 0
FILL VOLUME 198

STA. 202+80.12 = STA. 108+57.06 HWY. 367 TIE

CROSS SECTION STA. 202+80 TO STA. 203+00

9/20/2013

R005836.DGN

DATE REVISED	DATE FILMED	DATE REVISED	DATE FILMED	FED.RD. DIST.NO.	STATE	FED.AID PROJ.NO.	SHEET NO.	TOTAL SHEETS
				6	ARK.			
				JOB NO.		005836	229	230

(2) CROSS SECTIONS

STAGE 2

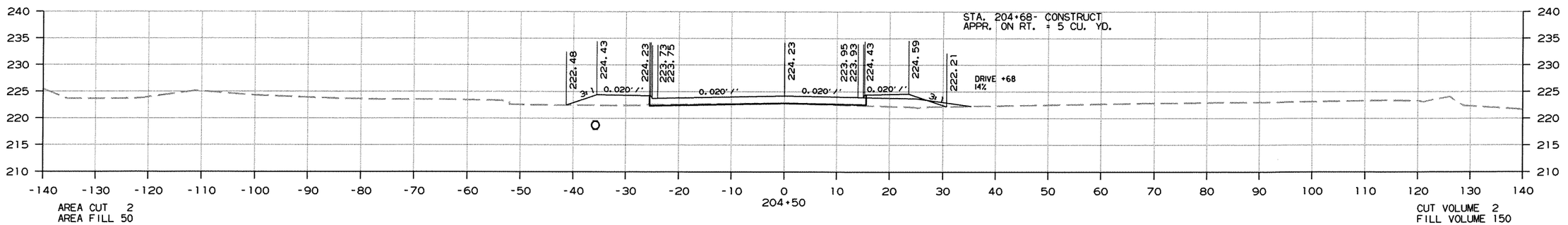

AREA CUT 2
AREA FILL 50

CUT VOLUME 2
FILL VOLUME 150

STAGE 2

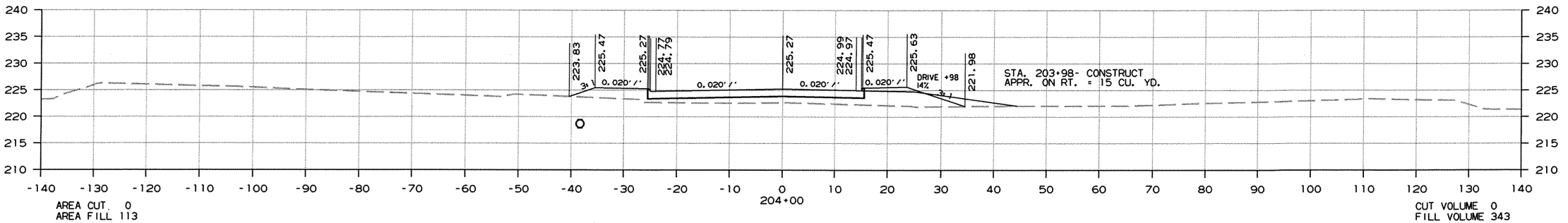

AREA CUT 0
AREA FILL 113

CUT VOLUME 0
FILL VOLUME 343

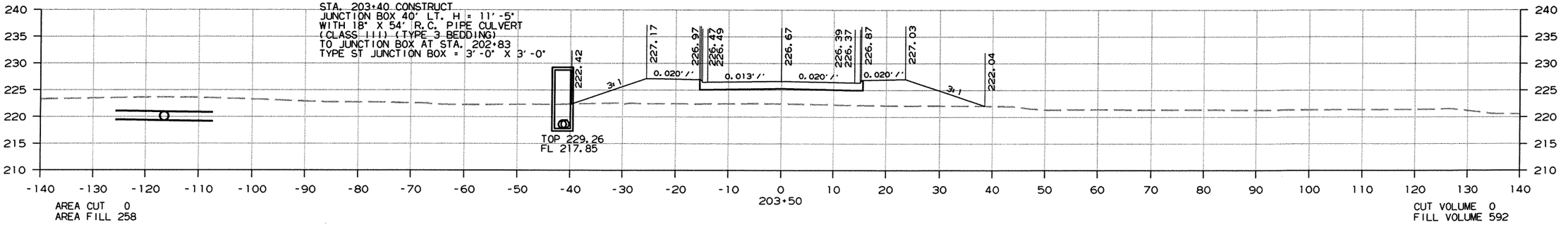

AREA CUT 0
AREA FILL 258

CUT VOLUME 0
FILL VOLUME 592

CROSS SECTION STA. 203+50 TO STA. 204+50

9/20/2013

R005836.DGN

DATE REVISED	DATE FILMED	DATE REVISED	DATE FILMED	FED.RD. DIST.NO.	STATE	FED.AID PROJ.NO.	SHEET NO.	TOTAL SHEETS
				6	ARK.			
				JOB NO.		005836	230	230

(2) CROSS SECTIONS

STAGE 2

STA. 206+30 CONSTRUCT
DROP INLET ON LT. H=5'-4"
WITH 18" X 292' R.C. PIPE CULVERT
(CLASS III (TYPE 3 BEDDING)
TO DI AT STA. 203+40
TYPE MP DROP INLET=4' DIA.
TYPE C DROP INLET=2'-6" X 4'-0"

STA. 206+26 CONSTRUCT
DROP INLET ON RT. H=5'-4"
WITH 18" X 18' R.C. PIPE CULVERT
(CLASS III (TYPE 3 BEDDING)
TO JUNCTION BOX AT STA. 206+30
TYPE MO DROP INLET = 4' DIA.
TYPE C DROP INLET = 2'-6" X 4'-0"

STA. 206+30 CONSTRUCT
JUNCTION BOX H=5'-1"
WITH 18" X 36' R.C. PIPE CULVERT
(CLASS III (TYPE 3 BEDDING)
TO DI ON LT.
TYPW ST JUNCTION BOX = 1 EACH

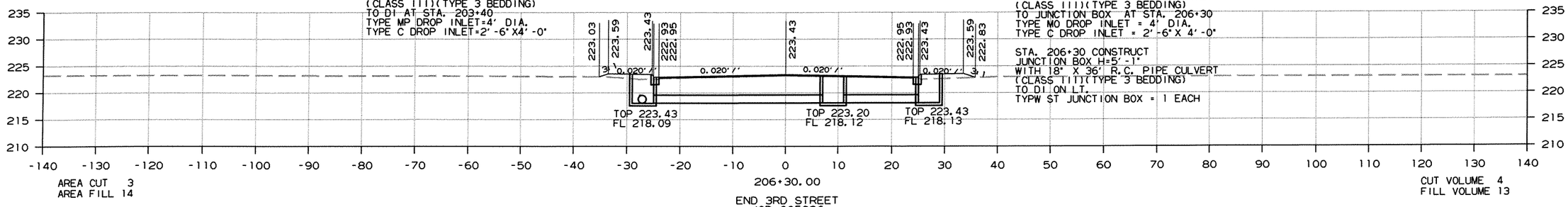

AREA CUT 3
AREA FILL 14

206+30.00

END 3RD STREET
JOB 005836

CUT VOLUME 4
FILL VOLUME 13

STAGE 2

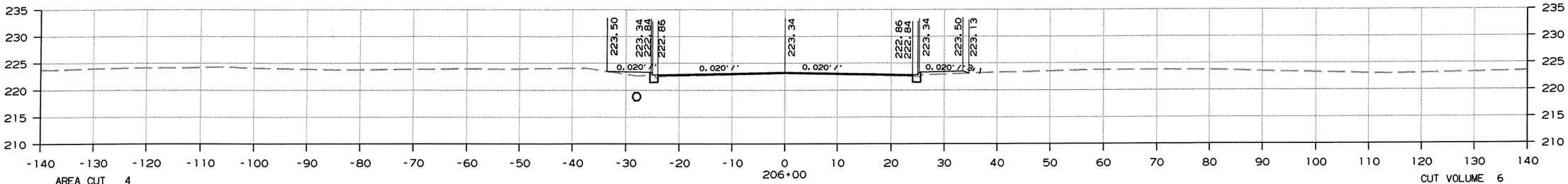

AREA CUT 4
AREA FILL 8

206+00

CUT VOLUME 6
FILL VOLUME 29

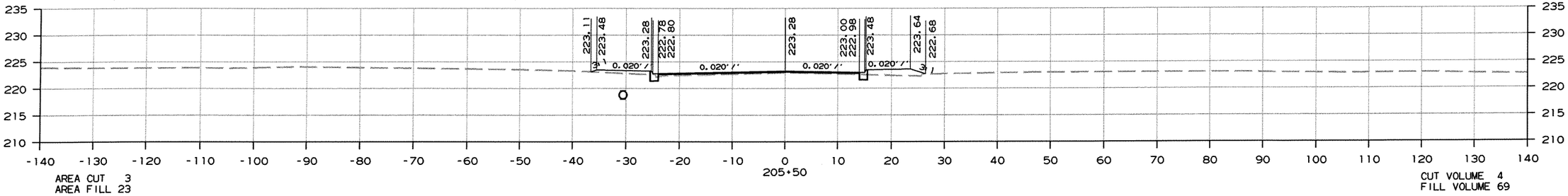

AREA CUT 3
AREA FILL 23

205+50

CUT VOLUME 4
FILL VOLUME 69

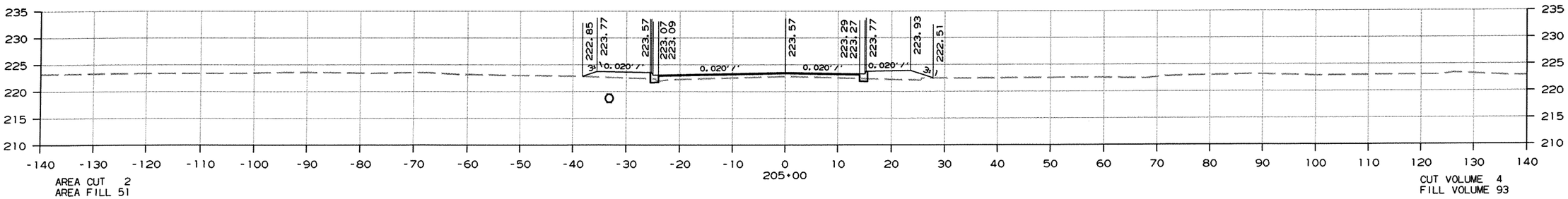

AREA CUT 2
AREA FILL 51

205+00

CUT VOLUME 4
FILL VOLUME 93

CROSS SECTION STA. 205+00 TO STA. 206+30

9/20/2013

R005836.DGN