DATE REVISED	DATE FILMED	DATE REVISED	DATE FILMED	FED.RD. DIST.NO.	STATE	FED.AID PROJ.NO.	SHEET NO.	TOTAL SHEETS
				6	ARK.			
				JOB NO.		BB0414	1	886
				(2) PORTER RD.-HWY. 112/71B WIDENING & INTCHNG. IMPVTS. (S)				

PROJECT LOCATION

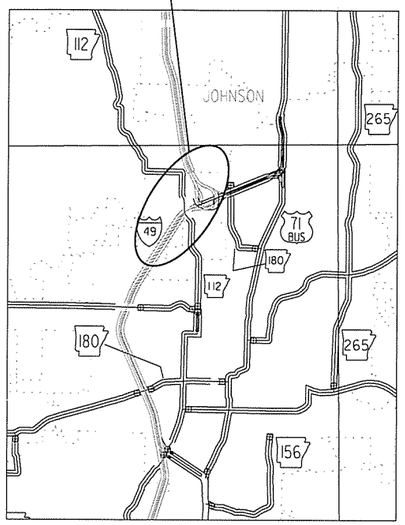

VICINITY MAP

"A FULLY CONTROLLED ACCESS FACILITY"
ARKANSAS STATE HIGHWAY AND TRANSPORTATION DEPARTMENT
CONSTRUCTION PLANS FOR STATE HIGHWAY

PORTER RD.-HWY. 112/71B WIDENING & INTCHNG. IMPVTS. (S)

WASHINGTON COUNTY

ROUTE 49 SECTION 28

FEDERAL AID PROJECT NHPP-540-1(262)66

JOB BB0414

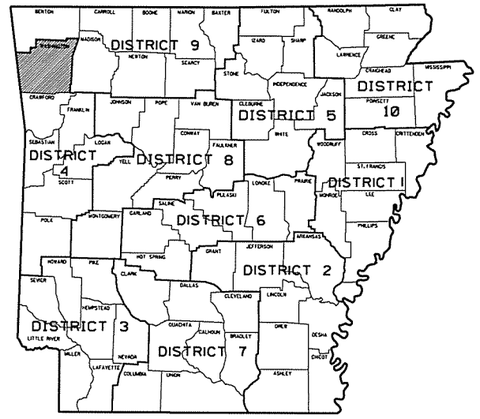

ARKANSAS HIGHWAY DISTRICT 4

BRIDGE DATA

(1) STA. 17+86.80 BRIDGE END
BRIDGE NO. 05692 HWY. 112 OVER INTERSTATE 49
303'-0" CONT. COMP. W-BEAM UNIT (71',83',98',51')
305'-5 3/4" BRIDGE LENGTH
58'-0" CLEAR ROADWAY
STA. 20+92.28 BRIDGE END

(2) STA. 312+08.76 BRIDGE END
BRIDGE NO. 07379 HWY. 112 TO NB I-49 RAMP
OVER NB I-49 TO HWY. 71B RAMP
536'-0" CONT. COMP. PLATE GIRDER UNIT (152',232',152')
45°00'00" RT. FORWARD SKEW
539'-0 3/4" BRIDGE LENGTH
31'-0" CLEAR ROADWAY
STA. 317+47.82 BRIDGE END

(3) STA. 323+99.59 BRIDGE END
BRIDGE NO. A7380 I-49 OVER HIGHWAY 71B
364'-0" CONT. COMP. PLATE GIRDER UNIT (182',182')
45°00'00" RT. FORWARD SKEW
366'-9 15/16" BRIDGE LENGTH
58'-0" CLEAR ROADWAY
STA. 327+77.50 BRIDGE END

(4) STA. 325+10.53 BRIDGE END
BRIDGE NO. B7380 I-49 OVER HIGHWAY 71B
306'-0" CONT. COMP. PLATE GIRDER UNIT (153',153')
40°00'00" RT. FORWARD SKEW
308'-8 1/4" BRIDGE LENGTH
58'-0" CLEAR ROADWAY
STA. 328+10.96 BRIDGE END

(5) STA. 364+37.64 BRIDGE END
BRIDGE NO. B7381 I-49 OVER VAN ASCHE DR.
118'-0" COMPOSITE PLATE GIRDER SPAN
27°31'00" LT. FORWARD SKEW
120'-5 3/8" BRIDGE LENGTH
82'-0" CLEAR ROADWAY
STA. 365+58.09 BRIDGE END

(6) STA. 364+79.31 BRIDGE END
BRIDGE NO. A7381 I-49 OVER VAN ASCHE DR.
118'-0" COMPOSITE PLATE GIRDER SPAN
27°31'00" LT. FORWARD SKEW
120'-5 3/8" BRIDGE LENGTH
70'-0" CLEAR ROADWAY
STA. 365+99.76 BRIDGE END

NOT TO SCALE

STA. 393+16.01
END JOB BB0414
LOG MILE 67.94

STA. 239+77.13
BEGIN JOB BB0414
LOG MILE 65.03

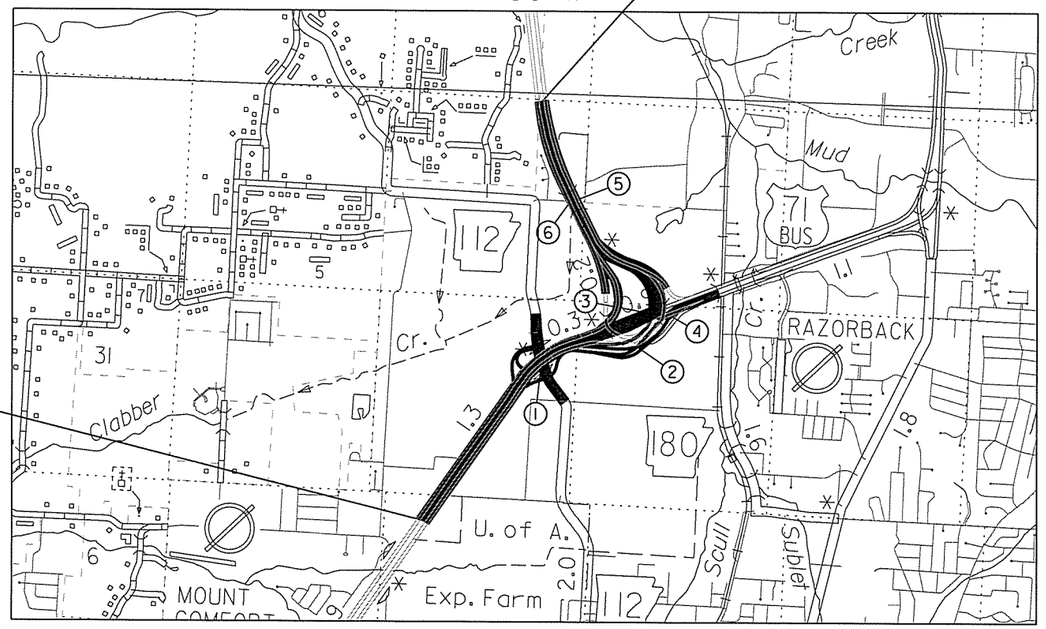

N

DESIGN TRAFFIC DATA — I-49

DESIGN YEAR	2036
2016 ADT	78,000
2036 ADT	135,000
2036 DHV	14,850
DIRECTIONAL DISTRIBUTION	60%
TRUCKS	12%
DESIGN SPEED	60 MPH

PROJECT COORDINATES

	BEGIN	MID-POINT	END
LATITUDE	N 36°05'38"	N 36°06'27"	N 36°07'29"
LONGITUDE	W 94°11'23"	W 94°10'19"	W 94°10'48"
STATION	239+77.13	316+46.57	393+16.01

LENGTH COMPUTED ALONG C.L. MEDIAN

GROSS LENGTH OF PROJECT	15,338.88 FEET	OR	2.905 MILES
NET LENGTH OF ROADWAY	14,879.26 FEET	OR	2.818 MILES
NET LENGTH OF BRIDGES	459.62 FEET	OR	0.087 MILES
NET LENGTH OF PROJECT	15,338.88 FEET	OR	2.905 MILES

CERTIFICATE OF AUTHORIZATION
GARVER LLC
No. 766
ARKANSAS ENGINEER

STATE OF ARKANSAS
LICENSED PROFESSIONAL ENGINEER
No. 13422
JOHN F. CANTABERY
4-22-16

P.E. JOB BB0414

AEWierciak 4/22/2016 9:02:12 AM
WORKSPACE: AHTD
L:\ROW\107107 - I-540 Widening & Interchange Improvement\Drawings\rBB0414_MS_CO.dgn
REVISED DATE:

DATE REVISED	DATE FILMED	DATE REVISED	DATE FILMED	FED.RD. DIST.NO.	STATE	FED.AID PROJ.NO.	SHEET NO.	TOTAL SHEETS
				6	ARK.			
				JOB NO.		BB0414	2	886
				(2)	INDEX OF SHEETS			

STATE OF ARKANSAS
LICENSED PROFESSIONAL ENGINEER
No.13422
JOHN F. CANTABERY
3-20-16

INDEX OF SHEETS (BOX 1 OF 5)

SHEET NO.	TITLE	BRIDGE NO.	DRAWING NO.	DATE
1	TITLE SHEET			
2 - 4	INDEX OF SHEETS, GOVERNING SPECIFICATIONS, AND GENERAL NOTES			
5 - 49	TYPICAL SECTIONS OF IMPROVEMENT			
50 - 84	SPECIAL DETAILS			
85 - 123	TEMPORARY EROSION CONTROL DETAILS			
124 - 200	MAINTENANCE OF TRAFFIC DETAILS			
201 - 208	PERMANENT PAVEMENT MARKING DETAILS			
209 - 236	SIGN PLACEMENT SHEETS			
237 - 240	SIGNING QUANTITIES			
241	SOIL BORING LOGS			
242 - 255	QUANTITIES AND REVISION			
256	SCHEDULE OF BRIDGE QUANTITIES (SHEET 1 OF 2)	05692, 07379, A7380, B7380, A7381, B7381	58097	
257	SCHEDULE OF BRIDGE QUANTITIES (SHEET 2 OF 2)	05692, 07379, A7380, B7380, A7381, B7381	58098	
258 - 260	SUMMARY OF QUANTITIES AND REVISIONS			
261 - 271	SURVEY CONTROL DETAILS			
272 - 323	PLAN AND PROFILE SHEETS			
324	TRAFFIC SIGNAL NOTES AND SUMMARY OF TRAFFIC SIGNAL QUANTITIES			
325 - 326	TRAFFIC SIGNAL QUANTITIES			
327	MAST ARM MOUNTED SIGNS			
328	SYSTEM MAP			
329 - 373	SIGNALIZATION PLANS			
374 - 375	CULVERT DIAGRAMS			
376	GENERAL NOTES (SHEET 1 OF 2)	05692, 07379, A7380, B7380, A7381, B7381	58099	
377	GENERAL NOTES (SHEET 2 OF 2)	05692, 07379, A7380, B7380, A7381, B7381	58100	
378	LAYOUT OF BRIDGE HIGHWAY 112 OVER INTERSTATE 49	05692	58101	
379	DETAILS OF STAGE CONSTRUCTION HIGWAY 112 OVER INTERSTATE 49 (SHEET 1 OF 4)	05692	58102	
380	DETAILS OF STAGE CONSTRUCTION HIGWAY 112 OVER INTERSTATE 49 (SHEET 2 OF 4)	05692	58103	
381	DETAILS OF STAGE CONSTRUCTION HIGWAY 112 OVER INTERSTATE 49 (SHEET 3 OF 4)	05692	58104	
382	DETAILS OF STAGE CONSTRUCTION HIGWAY 112 OVER INTERSTATE 49 (SHEET 4 OF 4)	05692	58105	
383	DETAILS OF END BENTS (SHEET 1 OF 7)	05692	58106	
384	DETAILS OF END BENTS (SHEET 2 OF 7)	05692	58107	
385	DETAILS OF END BENTS (SHEET 3 OF 7)	05692	58108	
386	DETAILS OF END BENTS (SHEET 4 OF 7)	05692	58109	
387	DETAILS OF END BENTS (SHEET 5 OF 7)	05692	58110	
388	DETAILS OF END BENTS (SHEET 6 OF 7)	05692	58111	
389	DETAILS OF END BENTS (SHEET 7 OF 7)	05692	58112	
390	DETAILS OF TRANSITIONAL APPROACH RAILING	05692	58113	
391	DETAILS OF INTERMEDIATE BENTS (SHEET 1 OF 8)	05692	58114	
392	DETAILS OF INTERMEDIATE BENTS (SHEET 2 OF 8)	05692	58115	
393	DETAILS OF INTERMEDIATE BENTS (SHEET 3 OF 8)	05692	58116	
394	DETAILS OF INTERMEDIATE BENTS (SHEET 4 OF 8)	05692	58117	
395	DETAILS OF INTERMEDIATE BENTS (SHEET 5 OF 8)	05692	58118	
396	DETAILS OF INTERMEDIATE BENTS (SHEET 6 OF 8)	05692	58119	
397	DETAILS OF INTERMEDIATE BENTS (SHEET 7 OF 8)	05692	58120	
398	DETAILS OF INTERMEDIATE BENTS (SHEET 8 OF 8)	05692	58121	
399	DETAILS OF 303'-0" CONTINUOUS COMPOSITE W-BEAM UNIT (SHEET 1 OF 15)	05692	58122	
400	DETAILS OF 303'-0" CONTINUOUS COMPOSITE W-BEAM UNIT (SHEET 2 OF 15)	05692	58123	
401	DETAILS OF 303'-0" CONTINUOUS COMPOSITE W-BEAM UNIT (SHEET 3 OF 15)	05692	58124	
402	DETAILS OF 303'-0" CONTINUOUS COMPOSITE W-BEAM UNIT (SHEET 4 OF 15)	05692	58125	
403	DETAILS OF 303'-0" CONTINUOUS COMPOSITE W-BEAM UNIT (SHEET 5 OF 15)	05692	58126	
404	DETAILS OF 303'-0" CONTINUOUS COMPOSITE W-BEAM UNIT (SHEET 6 OF 15)	05692	58127	
405	DETAILS OF 303'-0" CONTINUOUS COMPOSITE W-BEAM UNIT (SHEET 7 OF 15)	05692	58128	
406	DETAILS OF 303'-0" CONTINUOUS COMPOSITE W-BEAM UNIT (SHEET 8 OF 15)	05692	58129	
407	DETAILS OF 303'-0" CONTINUOUS COMPOSITE W-BEAM UNIT (SHEET 9 OF 15)	05692	58130	
408	DETAILS OF 303'-0" CONTINUOUS COMPOSITE W-BEAM UNIT (SHEET 10 OF 15)	05692	58131	
409	DETAILS OF 303'-0" CONTINUOUS COMPOSITE W-BEAM UNIT (SHEET 11 OF 15)	05692	58132	
410	DETAILS OF 303'-0" CONTINUOUS COMPOSITE W-BEAM UNIT (SHEET 12 OF 15)	05692	58133	
411	DETAILS OF 303'-0" CONTINUOUS COMPOSITE W-BEAM UNIT (SHEET 13 OF 15)	05692	58134	
412	DETAILS OF 303'-0" CONTINUOUS COMPOSITE W-BEAM UNIT (SHEET 14 OF 15)	05692	58135	
413	DETAILS OF 303'-0" CONTINUOUS COMPOSITE W-BEAM UNIT (SHEET 15 OF 15)	05692	58136	
414	DETAILS OF ELASTOMERIC BEARINGS	05692	58137	
415	LAYOUT OF BRIDGE HWY. 112 TO NB I-49 OVER NB I-49 TO HWY. 71B (SHEET 1 OF 2)	07379	58138	
416	LAYOUT OF BRIDGE HWY. 112 TO NB I-49 OVER NB I-49 TO HWY. 71B (SHEET 2 OF 2)	07379	58139	
417	DETAILS OF END BENT NO. 1 (SHEET 1 OF 4)	07379	58140	
418	DETAILS OF END BENT NO. 1 (SHEET 2 OF 4)	07379	58141	
419	DETAILS OF END BENT NO. 1 (SHEET 3 OF 4)	07379	58142	
420	XDETAILS OF END BENT NO. 1 (SHEET 3 OF 4)	07379	58143	
421	DETAILS OF END BENT NO. 4 (SHEET 1 OF 5)	07379	58144	
422	DETAILS OF END BENT NO. 4 (SHEET 2 OF 5)	07379	58145	
423	DETAILS OF END BENT NO. 4 (SHEET 3 OF 5)	07379	58146	
424	DETAILS OF END BENT NO. 4 (SHEET 4 OF 5)	07379	58147	
425	DETAILS OF END BENT NO. 4 (SHEET 5 OF 5)	07379	58148	
426	DETAILS OF INTERMEDIATE BENT NOS. 2 & 3 (SHEET 1 OF 2)	07379	58149	
427	DETAILS OF INTERMEDIATE BENT NOS. 2 & 3 (SHEET 2 OF 2)	07379	58150	
428	DETAILS OF 536'-0" CONTINUOUS COMPOSITE PLATE GIRDER UNIT (SHEET 1 OF 16)	07379	58151	

INDEX OF SHEETS (BOX 2 OF 5)

SHEET NO.	TITLE	BRIDGE NO.	DRAWING NO.	DATE
429	DETAILS OF 536'-0" CONTINUOUS COMPOSITE PLATE GIRDER UNIT (SHEET 2 OF 16)	07379	58152	
430	DETAILS OF 536'-0" CONTINUOUS COMPOSITE PLATE GIRDER UNIT (SHEET 3 OF 16)	07379	58153	
431	DETAILS OF 536'-0" CONTINUOUS COMPOSITE PLATE GIRDER UNIT (SHEET 4 OF 16)	07379	58154	
432	DETAILS OF 536'-0" CONTINUOUS COMPOSITE PLATE GIRDER UNIT (SHEET 5 OF 16)	07379	58155	
433	DETAILS OF 536'-0" CONTINUOUS COMPOSITE PLATE GIRDER UNIT (SHEET 6 OF 16)	07379	58156	
434	DETAILS OF 536'-0" CONTINUOUS COMPOSITE PLATE GIRDER UNIT (SHEET 7 OF 16)	07379	58157	
435	DETAILS OF 536'-0" CONTINUOUS COMPOSITE PLATE GIRDER UNIT (SHEET 8 OF 16)	07379	58158	
436	DETAILS OF 536'-0" CONTINUOUS COMPOSITE PLATE GIRDER UNIT (SHEET 9 OF 16)	07379	58159	
437	DETAILS OF 536'-0" CONTINUOUS COMPOSITE PLATE GIRDER UNIT (SHEET 10 OF 16)	07379	58160	
438	DETAILS OF 536'-0" CONTINUOUS COMPOSITE PLATE GIRDER UNIT (SHEET 11 OF 16)	07379	58161	
439	DETAILS OF 536'-0" CONTINUOUS COMPOSITE PLATE GIRDER UNIT (SHEET 12 OF 16)	07379	58162	
440	DETAILS OF 536'-0" CONTINUOUS COMPOSITE PLATE GIRDER UNIT (SHEET 13 OF 16)	07379	58163	
441	DETAILS OF 536'-0" CONTINUOUS COMPOSITE PLATE GIRDER UNIT (SHEET 14 OF 16)	07379	58164	
442	DETAILS OF 536'-0" CONTINUOUS COMPOSITE PLATE GIRDER UNIT (SHEET 15 OF 16)	07379	58165	
443	DETAILS OF 536'-0" CONTINUOUS COMPOSITE PLATE GIRDER UNIT (SHEET 16 OF 16)	07379	58166	
444	DETAILS OF STRIP SEAL JOINT	07379	58167	
445	DETAILS OF ELASTOMERIC BEARINGS	07379	58168	
446	LAYOUT OF BRIDGE A INTERSTATE 49 OVER HIGHWAY 71B	A7380	58169	
447	LAYOUT OF BRIDGE B INTERSTATE 49 OVER HIGHWAY 71B	B7380	58170	
448	LAYOUT OF BRIDGE INTERSTATE 49 OVER HIGHWAY 71B	A7380 & B7380	58171	
449	DETAILS OF END BENT NO. 1A (SHEET 1 OF 5)	A7380	58172	
450	DETAILS OF END BENT NO. 1A (SHEET 2 OF 5)	A7380	58173	
451	DETAILS OF END BENT NO. 1A (SHEET 3 OF 5)	A7380	58174	
452	DETAILS OF END BENT NO. 1A (SHEET 4 OF 5)	A7380	58175	
453	DETAILS OF END BENT NO. 1A (SHEET 5 OF 5)	A7380	58176	
454	DETAILS OF END BENT NO. 3 (SHEET 1 OF 7)	A7380 & B7380	58177	
455	DETAILS OF END BENT NO. 3 (SHEET 2 OF 7)	A7380 & B7380	58178	
456	DETAILS OF END BENT NO. 3 (SHEET 3 OF 7)	A7380 & B7380	58179	
457	DETAILS OF END BENT NO. 3 (SHEET 4 OF 7)	A7380 & B7380	58180	
458	DETAILS OF END BENT NO. 3 (SHEET 5 OF 7)	A7380 & B7380	58181	
459	DETAILS OF END BENT NO. 3 (SHEET 6 OF 7)	A7380 & B7380	58182	
460	DETAILS OF END BENT NO. 3 (SHEET 7 OF 7)	A7380 & B7380	58183	
461	DETAILS OF END BENT NO. 1B (SHEET 1 OF 5)	B7380	58184	
462	DETAILS OF END BENT NO. 1B (SHEET 2 OF 5)	B7380	58185	
463	DETAILS OF END BENT NO. 1B (SHEET 3 OF 5)	B7380	58186	
464	DETAILS OF END BENT NO. 1B (SHEET 4 OF 5)	B7380	58187	
465	DETAILS OF END BENT NO. 1B (SHEET 5 OF 5)	B7380	58188	
466	DETAILS OF INTERMEDIATE BENT NO. 2A	A7380	58189	
467	DETAILS OF INTERMEDIATE BENT NO. 2B	B7380	58190	
468	COMMON DETAILS OF INTERMEDIATE BENTS (SHEET 1 OF 2)	A7380 & B7380	58191	
469	COMMON DETAILS OF INTERMEDIATE BENTS (SHEET 2 OF 2)	A7380 & B7380	58192	
470	DETAILS OF 364'-0" CONTINUOUS COMPOSITE PLATE GIRDER UNIT (SHEET 1 OF 13)	A7380	58193	
471	DETAILS OF 364'-0" CONTINUOUS COMPOSITE PLATE GIRDER UNIT (SHEET 2 OF 13)	A7380	58194	
472	DETAILS OF 364'-0" CONTINUOUS COMPOSITE PLATE GIRDER UNIT (SHEET 3 OF 13)	A7380	58195	
473	DETAILS OF 364'-0" CONTINUOUS COMPOSITE PLATE GIRDER UNIT (SHEET 4 OF 13)	A7380	58196	
474	DETAILS OF 364'-0" CONTINUOUS COMPOSITE PLATE GIRDER UNIT (SHEET 5 OF 13)	A7380	58197	
475	DETAILS OF 364'-0" CONTINUOUS COMPOSITE PLATE GIRDER UNIT (SHEET 6 OF 13)	A7380	58198	
476	DETAILS OF 364'-0" CONTINUOUS COMPOSITE PLATE GIRDER UNIT (SHEET 7 OF 13)	A7380	58199	
477	DETAILS OF 364'-0" CONTINUOUS COMPOSITE PLATE GIRDER UNIT (SHEET 8 OF 13)	A7380	58200	
478	DETAILS OF 364'-0" CONTINUOUS COMPOSITE PLATE GIRDER UNIT (SHEET 9 OF 13)	A7380	58201	
479	DETAILS OF 364'-0" CONTINUOUS COMPOSITE PLATE GIRDER UNIT (SHEET 10 OF 13)	A7380	58202	
480	DETAILS OF 364'-0" CONTINUOUS COMPOSITE PLATE GIRDER UNIT (SHEET 11 OF 13)	A7380	58203	
481	DETAILS OF 364'-0" CONTINUOUS COMPOSITE PLATE GIRDER UNIT (SHEET 12 OF 13)	A7380	58204	
482	DETAILS OF 364'-0" CONTINUOUS COMPOSITE PLATE GIRDER UNIT (SHEET 13 OF 13)	A7380	58205	
483	COMMON DETAILS OF CONTINUOUS COMPOSITE PLATE GIRDER UNIT (SHEET 1 OF 2)	A7380 & B7380	58206	
484	COMMON DETAILS OF CONTINUOUS COMPOSITE PLATE GIRDER UNIT (SHEET 2 OF 2)	A7380 & B7380	58207	
485	DETAILS OF 306'-0" CONTINUOUS COMPOSITE PLATE GIRDER UNIT (SHEET 1 OF 13)	B7380	58208	
486	DETAILS OF 306'-0" CONTINUOUS COMPOSITE PLATE GIRDER UNIT (SHEET 2 OF 13)	B7380	58209	
487	DETAILS OF 306'-0" CONTINUOUS COMPOSITE PLATE GIRDER UNIT (SHEET 3 OF 13)	B7380	58210	
488	DETAILS OF 306'-0" CONTINUOUS COMPOSITE PLATE GIRDER UNIT (SHEET 4 OF 13)	B7380	58211	
489	DETAILS OF 306'-0" CONTINUOUS COMPOSITE PLATE GIRDER UNIT (SHEET 5 OF 13)	B7380	58212	
490	DETAILS OF 306'-0" CONTINUOUS COMPOSITE PLATE GIRDER UNIT (SHEET 6 OF 13)	B7380	58213	
491	DETAILS OF 306'-0" CONTINUOUS COMPOSITE PLATE GIRDER UNIT (SHEET 7 OF 13)	B7380	58214	
492	DETAILS OF 306'-0" CONTINUOUS COMPOSITE PLATE GIRDER UNIT (SHEET 8 OF 13)	B7380	58215	
493	DETAILS OF 306'-0" CONTINUOUS COMPOSITE PLATE GIRDER UNIT (SHEET 9 OF 13)	B7380	58216	
494	DETAILS OF 306'-0" CONTINUOUS COMPOSITE PLATE GIRDER UNIT (SHEET 10 OF 13)	B7380	58217	
495	DETAILS OF 306'-0" CONTINUOUS COMPOSITE PLATE GIRDER UNIT (SHEET 11 OF 13)	B7380	58218	
496	DETAILS OF 306'-0" CONTINUOUS COMPOSITE PLATE GIRDER UNIT (SHEET 12 OF 13)	B7380	58219	
497	DETAILS OF 306'-0" CONTINUOUS COMPOSITE PLATE GIRDER UNIT (SHEET 13 OF 13)	B7380	58220	

INDEX OF SHEETS

AEWerclok 3/20/2016 11:50:58 AM
WORKSPACE: AHTD
L:\20IN\BD1707 - I-540 Widening & Interchange Improvement\Drawings\r-BB0414_IDX_01.dgn
REVISED DATE:

DATE REVISED	DATE FILMED	DATE REVISED	DATE FILMED	FED.RD. DIST.NO.	STATE	FED.AID PROJ.NO.	SHEET NO.	TOTAL SHEETS
				6	ARK.			
				JOB NO.		BB0414	3	886

(2) INDEX OF SHEETS

STATE OF ARKANSAS
LICENSED PROFESSIONAL ENGINEER
No. 13422
JOHN F. CANTABERY
4-22-16

INDEX OF SHEETS (BOX 3 OF 5)

SHEET NO.	TITLE	BRIDGE NO.	DRAWING NO.	DATE
498	DETAILS OF POURED SILICONE JOINT	A7380 & B7380	58221	
499	DETAILS OF ELASTOMERIC BEARINGS	A7380 & B7380	58222	
500	LAYOUT OF BRIDGE A INTERSTATE 49 OVER VAN ASCHE DRIVE	A7381	58223	
501	LAYOUT OF BRIDGE B INTERSTATE 49 OVER VAN ASCHE DRIVE	B7381	58224	
502	DETAILS OF STAGE CONSTRUCTION (SHEET 1 OF 4)	A7381 & B7381	58225	
503	DETAILS OF STAGE CONSTRUCTION (SHEET 2 OF 4)	A7381 & B7381	58226	
504	DETAILS OF STAGE CONSTRUCTION (SHEET 3 OF 4)	A7381 & B7381	58227	
505	DETAILS OF STAGE CONSTRUCTION (SHEET 4 OF 4)	A7381 & B7381	58228	
506	DETAILS OF END BENT NO. 1 (SHEET 1 OF 6)	A7381 & B7381	58229	
507	DETAILS OF END BENT NO. 1 (SHEET 2 OF 6)	A7381 & B7381	58230	
508	DETAILS OF END BENT NO. 1 (SHEET 3 OF 6)	A7381 & B7381	58231	
509	DETAILS OF END BENT NO. 1 (SHEET 4 OF 6)	A7381 & B7381	58232	
510	DETAILS OF END BENT NO. 1 (SHEET 5 OF 6)	A7381 & B7381	58233	
511	DETAILS OF END BENT NO. 1 (SHEET 6 OF 6)	A7381 & B7381	58234	
512	DETAILS OF END BENT NO. 2 (SHEET 1 OF 6)	A7381 & B7381	58235	
513	DETAILS OF END BENT NO. 2 (SHEET 2 OF 6)	A7381 & B7381	58236	
514	DETAILS OF END BENT NO. 2 (SHEET 3 OF 6)	A7381 & B7381	58237	
515	DETAILS OF END BENT NO. 2 (SHEET 4 OF 6)	A7381 & B7381	58238	
516	DETAILS OF END BENT NO. 2 (SHEET 5 OF 6)	A7381 & B7382	58239	
517	DETAILS OF END BENT NO. 2 (SHEET 6 OF 6)	A7381 & B7383	58240	
518	DETAILS OF 118'-0" COMPOSITE PLATE GIRDER SPAN (SHEET 1 OF 12)	A7381	58241	
519	DETAILS OF 118'-0" COMPOSITE PLATE GIRDER SPAN (SHEET 2 OF 12)	A7381	58242	
520	DETAILS OF 118'-0" COMPOSITE PLATE GIRDER SPAN (SHEET 3 OF 12)	A7381	58243	
521	DETAILS OF 118'-0" COMPOSITE PLATE GIRDER SPAN (SHEET 4 OF 12)	A7381	58244	
522	DETAILS OF 118'-0" COMPOSITE PLATE GIRDER SPAN (SHEET 5 OF 12)	B7381	58245	
523	DETAILS OF 118'-0" COMPOSITE PLATE GIRDER SPAN (SHEET 6 OF 12)	B7381	58246	
524	DETAILS OF 118'-0" COMPOSITE PLATE GIRDER SPAN (SHEET 7 OF 12)	B7381	58247	
525	DETAILS OF 118'-0" COMPOSITE PLATE GIRDER SPAN (SHEET 8 OF 12)	B7381	58248	
526	DETAILS OF 118'-0" COMPOSITE PLATE GIRDER SPAN (SHEET 9 OF 12)	A7381 & B7381	58249	
527	DETAILS OF 118'-0" COMPOSITE PLATE GIRDER SPAN (SHEET 10 OF 12)	A7381 & B7381	58250	
528	DETAILS OF 118'-0" COMPOSITE PLATE GIRDER SPAN (SHEET 11 OF 12)	A7381 & B7381	58251	
529	DETAILS OF 118'-0" COMPOSITE PLATE GIRDER SPAN (SHEET 12 OF 12)	A7381 & B7381	58252	
530	DETAILS OF ELASTOMERIC BEARINGS	A7381 & B7381	58253	
531	DETAILS OF TYPE SPECIAL APPROACH GUTTERS (SHEET 1 OF 7)	07379	58254	
532	DETAILS OF TYPE SPECIAL APPROACH GUTTERS (SHEET 2 OF 7)	07379	58255	
533	DETAILS OF TYPE SPECIAL APPROACH GUTTERS (SHEET 3 OF 7)	A7380 & B7380	58256	
534	DETAILS OF TYPE SPECIAL APPROACH GUTTERS (SHEET 4 OF 7)	A7380 & B7380	58257	
535	DETAILS OF TYPE SPECIAL APPROACH GUTTERS (SHEET 5 OF 7)	A7380 & B7380	58258	
536	DETAILS OF TYPE SPECIAL APPROACH GUTTERS (SHEET 6 OF 7)	A7380 & B7380	58259	
537	DETAILS OF TYPE SPECIAL APPROACH GUTTERS (SHEET 7 OF 7)	A7381 & B7381	58260	
538	DETAILS OF TYPE SPECIAL APPROACH SLABS (SHEET 1 OF 16)	05692	58261	
539	DETAILS OF TYPE SPECIAL APPROACH SLABS (SHEET 2 OF 16)	05692	58262	
540	DETAILS OF TYPE SPECIAL APPROACH SLABS (SHEET 3 OF 16)	07379	58263	
541	DETAILS OF TYPE SPECIAL APPROACH SLABS (SHEET 4 OF 16)	07379	58264	
542	DETAILS OF TYPE SPECIAL APPROACH SLABS (SHEET 5 OF 16)	A7380	58265	
543	xDETAILS OF TYPE SPECIAL APPROACH SLABS (SHEET 6 OF 16)	B7380	58266	
544	DETAILS OF TYPE SPECIAL APPROACH SLABS (SHEET 7 OF 16)	A7380	58267	
545	DETAILS OF TYPE SPECIAL APPROACH SLABS (SHEET 8 OF 16)	B7380	58268	
546	DETAILS OF TYPE SPECIAL APPROACH SLABS (SHEET 9 OF 16)	A7381 & B7381	58269	
547	DETAILS OF TYPE SPECIAL APPROACH SLABS (SHEET 10 OF 16)	A7381 & B7381	58270	
548	DETAILS OF TYPE SPECIAL APPROACH SLABS (SHEET 11 OF 16)	B7381	58271	
549	DETAILS OF TYPE SPECIAL APPROACH SLABS (SHEET 12 OF 16)	A7381 & B7381	58272	
550	DETAILS OF TYPE SPECIAL APPROACH SLABS (SHEET 13 OF 16)	A7381 & B7381	58273	
551	DETAILS OF TYPE SPECIAL APPROACH SLABS (SHEET 14 OF 16)	B7381	58274	
552	DETAILS OF TYPE SPECIAL APPROACH SLABS (SHEET 15 OF 16)	A7381 & B7381	58275	
553	DETAILS OF TYPE SPECIAL APPROACH SLABS (SHEET 16 OF 16)	A7381 & B7381	58276	
554	RETAINING WALL DETAILS (SHEET 1 OF 15)		58277	
555	RETAINING WALL DETAILS (SHEET 2 OF 15)		58278	
556	RETAINING WALL DETAILS (SHEET 3 OF 15)		58279	
557	RETAINING WALL DETAILS (SHEET 4 OF 15)		58280	
558	RETAINING WALL DETAILS (SHEET 5 OF 15)		58281	
559	RETAINING WALL DETAILS (SHEET 6 OF 15)		58282	
560	RETAINING WALL DETAILS (SHEET 7 OF 15)		58283	
561	RETAINING WALL DETAILS (SHEET 8 OF 15)		58284	
562	RETAINING WALL DETAILS (SHEET 9 OF 15)		58285	
563	RETAINING WALL DETAILS (SHEET 10 OF 15)		58286	
564	RETAINING WALL DETAILS (SHEET 11 OF 15)		58287	
565	RETAINING WALL DETAILS (SHEET 12 OF 15)		58288	
566	RETAINING WALL DETAILS (SHEET 13 OF 15)		58289	
567	RETAINING WALL DETAILS (SHEET 14 OF 15)		58290	
568	RETAINING WALL DETAILS (SHEET 15 OF 15)		58291	
569	DETAILS FOR 60' TO 85' STEEL OVERHEAD SIGN STRUCTURES WITH MEDIAN FOUNDATION SHEET 1 OF 5	OH-049-72-01, OH-049-72-02, OH-049-72-03, OH-049-72-07, OH-071-72-03, OH-071-72-04	58292	
570	DETAILS FOR 60' TO 85' STEEL OVERHEAD SIGN STRUCTURES WITH MEDIAN FOUNDATION (SHEET 2 OF 5)	OH-049-72-01, OH-049-72-02, OH-049-72-03, OH-049-72-07, OH-071-72-03, OH-071-72-04	58293	

INDEX OF SHEETS (BOX 4 OF 5)

SHEET NO.	TITLE	BRIDGE NO.	DRAWING NO.	DATE
571	DETAILS FOR 60' TO 85' STEEL OVERHEAD SIGN STRUCTURES WITH MEDIAN FOUNDATION (SHEET 3 OF 5)	OH-049-72-01, OH-049-72-02, OH-049-72-03, OH-049-72-07, OH-071-72-03, OH-071-72-04	58294	
572	DETAILS FOR 60' TO 85' STEEL OVERHEAD SIGN STRUCTURES WITH MEDIAN FOUNDATION (SHEET 4 OF 5)	OH-049-72-01, OH-049-72-02, OH-049-72-03, OH-049-72-07, OH-071-72-03, OH-071-72-04	58295	
573	DETAILS FOR 60' TO 85' STEEL OVERHEAD SIGN STRUCTURES WITH MEDIAN FOUNDATION (SHEET 5 OF 5)	OH-049-72-01, OH-049-72-02, OH-049-72-03, OH-049-72-07, OH-071-72-03, OH-071-72-04	58296	
574	DETAILS FOR 86' TO 95' STEEL OVERHEAD SIGN STRUCTURES WITH MEDIAN FOUNDATION (SHEET 1 OF 5)	OH-049-072-06, OH-049-072-09	58297	
575	DETAILS FOR 86' TO 95' STEEL OVERHEAD SIGN STRUCTURES WITH MEDIAN FOUNDATION (SHEET 2 OF 5)	OH-049-072-06, OH-049-072-09	58298	
576	DETAILS FOR 86' TO 95' STEEL OVERHEAD SIGN STRUCTURES WITH MEDIAN FOUNDATION (SHEET 3 OF 5)	OH-049-072-06, OH-049-072-09	58299	
577	DETAILS FOR 86' TO 95' STEEL OVERHEAD SIGN STRUCTURES WITH MEDIAN FOUNDATION (SHEET 4 OF 5)	OH-049-072-06, OH-049-072-09	58300	
578	DETAILS FOR 86' TO 95' STEEL OVERHEAD SIGN STRUCTURES WITH MEDIAN FOUNDATION (SHEET 5 OF 5)	OH-049-072-06, OH-049-072-09	58301	
579	DETAILS FOR 35' STEEL CANTILEVER SIGN STRUCTURE (SHEET 1 OF 5)	CL-049-72-05 & CL-049-72-08	58302	
580	DETAILS FOR 35' STEEL CANTILEVER SIGN STRUCTURE (SHEET 2 OF 5)	CL-049-72-05 & CL-049-72-08	58303	
581	DETAILS FOR 35' STEEL CANTILEVER SIGN STRUCTURE (SHEET 3 OF 5)	CL-049-72-05 & CL-049-72-08	58304	
582	DETAILS FOR 35' STEEL CANTILEVER SIGN STRUCTURE (SHEET 4 OF 5)	CL-049-72-05 & CL-049-72-08	58305	
583	DETAILS FOR 35' STEEL CANTILEVER SIGN STRUCTURE (SHEET 5 OF 5)	CL-049-72-05 & CL-049-72-08	58306	
584	DETAILS FOR 35' STEEL CANTILEVER SIGN STRUCTURE WITH SPECIAL FOUNDATION (SHEET 1 OF 5)	CL-049-72-04	58307	
585	DETAILS FOR 35' STEEL CANTILEVER SIGN STRUCTURE WITH SPECIAL FOUNDATION (SHEET 2 OF 5)	CL-049-72-04	58308	
586	DETAILS FOR 35' STEEL CANTILEVER SIGN STRUCTURE WITH SPECIAL FOUNDATION (SHEET 3 OF 5)	CL-049-72-04	58309	
587	DETAILS FOR 35' STEEL CANTILEVER SIGN STRUCTURE WITH SPECIAL FOUNDATION (SHEET 4 OF 5)	CL-049-72-04	58310	
588	DETAILS FOR 35' STEEL CANTILEVER SIGN STRUCTURE WITH SPECIAL FOUNDATION (SHEET 5 OF 5)	CL-049-72-04	58311	
589	DETAILS FOR BRIDGE MOUNTED SIGN STRUCTURE (SHEET 1 OF 3)	BM-049-72-01 & BM-049-72-02	58312	
590	DETAILS FOR BRIDGE MOUNTED SIGN STRUCTURE (SHEET 2 OF 3)	BM-049-72-01 & BM-049-72-02	58313	
591	DETAILS FOR BRIDGE MOUNTED SIGN STRUCTURE (SHEET 3 OF 3)	BM-049-72-01 & BM-049-72-02	58314	
592	STANDARD DETAILS FOR EMBANKMENT CONSTRUCTION AND BACKFILL AT BRIDGE ENDS		55000	2/27/14
593	STANDARD DETAILS FOR DUMPED RIPRAP AND FILTER BLANKET AND COMPUTING EXCAVATION FOR STRUCTURES		55001	2/27/14
594	STANDARD DETAILS FOR CONCRETE RIPRAP		55002	2/27/14
595	STANDARD DETAILS FOR PERMANENT STEEL BRIDGE DECK FORMS FOR STEEL & CONCRETE GIRDER SPANS		55005	3/24/16
596	STANDARD DETAILS FOR TYPE D BRIDGE NAME PLATE		55010	1/14/15
597	STANDARD DETAILS FOR STEEL H-PILES AND PILE ENCASEMENTS		55020	3/24/16
598	CONCRETE DITCH PAVING		CDP-1	11/17/10
599	CURBING DETAILS		CG-1	11/29/07
600	DETAILS OF DRIVEWAYS AND ISLANDS		DR-1	02/27/14
601	FLARED END SECTION		FES-1	10/18/96
602	FLARED END SECTION		FES-2	10/18/96
603	DETAILS OF DROP INLETS & JUNCTION BOXES		FPC-9	11/16/01
604	DETAILS OF DROP INLETS		FPC-9D	08/22/02
605	DETAILS OF DROP INLETS (TYPE C)		FPC-9E	08/22/02
606	DETAILS OF DROP INLETS (TYPE MO)		FPC-9M	08/22/02
607	DETAILS OF DROP INLETS AND SPILLWAY OUTLETS		FPC-9N	07/02/98
608	DETAILS OF DROP INLETS & JUNCTION BOX (TYPE ST)		FPC-9S	07/26/12
609	GUARD RAIL DETAILS		GR-8	07/14/10
610	GUARD RAIL DETAILS		GR-8A	07/14/10
611	GUARD RAIL DETAILS		GR-9	04/17/08
612	GUARD RAIL DETAILS		GR-9A	04/17/08
613	GUARD RAIL DETAILS		GR-10	07/14/10
614	GUARD RAIL DETAILS		GR-10A	07/14/10
615	GUARD RAIL DETAILS		GRT-1	07/14/10
616	MAILBOX DETAILS		MB-1	11/18/04
617	PRECAST CONCRETE BOX CULVERTS		PBC-1	01/28/15
618	CONCRETE PIPE CULVERT FILL HEIGHTS & BEDDING		PCC-1	02/27/14
619	METAL PIPE CULVERT FILL HEIGHTS & BEDDING		PCM-1	02/27/14
620	PAVEMENT MARKING DETAILS		PM-1	09/12/13
621	PERMANENT PAVEMENT MARKING ON ACCESS CONTROLLED ROADWAYS		PM-2	09/12/13
622	DETAILS OF PIPE UNDERDRAIN		PU-1	04/10/03
623	REINFORCED CONCRETE BOX CULVERT DETAILS		RCB-1	07/26/12
624	EXCAVATION PAY LIMITS, BACKFILL, & SOLID SODDING FOR BOX CULVERTS		RCB-2	11/20/03
625	METHOD OF EXTENDING EXISTING R.C. BOX CULVERTS		RCB-3	10/12/95
626	LOOP DETECTOR INSTALLATION		SD-4	09/12/13
627	CONTROLLER CABINET UTILITY DRAWER		SD-5	09/12/13
628	HEAVY DUTY PULL BOX		SD-6	09/02/15
629	SPAN WIRE ASSEMBLY WOOD POLE		SD-7	02/27/14
630	SIGNAL HEAD PLACEMENT		SD-8	09/12/13
631	SERVICE POINT		SD-9	09/12/13
632	STEEL POLE WITH MAST ARM		SD-11	02/27/14
633	TABLES AND METHOD OF SUPERELEVATION FOR ONE-WAY TRAFFIC		SE-1	01/09/87
634	TABLES AND METHOD OF SUPERELEVATION FOR TWO-WAY TRAFFIC		SE-2	10/18/96
635	STANDARD HIGHWAY SIGNS AND SUPPORT ASSEMBLIES		SHS-1	09/12/13
636	U-CHANNEL POST ASSEMBLIES		SHS-2	02/27/14

INDEX OF SHEETS

AEWierciak 4/22/2016 9:09:51 AM
WORKSPACE: AHTD
L:\2011\1011707 - I-540 Widening & Interchange Improvement\Drawings\rBB0414_IDX_01.dgn
REVISED DATE:

DATE REVISED	DATE FILMED	DATE REVISED	DATE FILMED	FED.RD. DIST.NO.	STATE	FED.AID PROJ.NO.	SHEET NO.	TOTAL SHEETS
				6	ARK.			
				JOB NO.		BB0414	4	886

(2) INDEX OF SHEETS, GOV. SPECS., & GEN. NOTES

INDEX OF SHEETS (BOX 5 OF 5)

SHEET NO.	TITLE	BRIDGE NO.	DRAWING NO.	DATE
637	DETAIL OF BREAKAWAY SIGN SUPPORTS FOR GUIDE SIGNS		SHS-3	09/12/13
638	DETAIL OF BREAKAWAY SIGN SUPPORTS FOR STANDARD SIGNS		SHS-4	09/12/13
639	DETAILS OF GUIDE SIGN PANELS		SHS-5	09/12/13
640	MOUNTING DETAILS FOR DEMOUNTABLE LEGEND ON GUIDE SIGNS		SHS-6	09/12/13
641	DETAIL OF OMNI-DIRECTIONAL BREAKAWAY SIGN SUPPORTS		SHS-7	09/12/13
642	TYPICAL DELINEATOR PLACEMENT ALONG THE INTERSTATE SYSTEM		SHS-8	09/12/13
643	DETAILS OF SPECIAL ITEMS		SI-I	09/12/13
644	STANDARD TRAFFIC CONTROLS FOR HIGHWAY CONSTRUCTION		TC-1	09/02/15
645	STANDARD TRAFFIC CONTROLS FOR HIGHWAY CONSTRUCTION		TC-2	09/02/15
646	STANDARD TRAFFIC CONTROLS FOR HIGHWAY CONSTRUCTION		TC-3	09/02/15
647	STANDARD TRAFFIC CONTROLS FOR HIGHWAY CONSTRUCTION-TEMPORARY PRECAST BARRIER		TC-4	2/27/14
648	STANDARD TRAFFIC CONTROLS FOR HIGHWAY CONSTRUCTION-TEMPORARY PRECAST BARRIER		TC-5	10/15/09
649	TEMPORARY EROSION CONTROL DEVICES		TEC-1	12/15/11
650	TEMPORARY EROSION CONTROL DEVICES		TEC-2	6/2/94
651	TEMPORARY EROSION CONTROL DEVICES		TEC-3	11/3/94
652	TEMPORARY EROSION CONTROL DEVICES		TEC-4	7/26/12
653	DETAILS OF STANDARD TURNOUT FOR ENTRANCE & EXIT RAMPS		TR-1A	8/22/02
654	WIRE FENCE TYPE A AND B		WF-1	8/22/02
655	WIRE FENCE WATER GAPS		WF-2	4/20/79
656	WHEELCHAIR RAMPS NEW CONSTRUCTION AND ALTERATIONS		WR-1	11/10/05
657	STANDARD WINGS FOR STRAIGHT BARRELS		W-X003-1	5/10/66
658	STANDARD BARREL SECTIONS FOR STRAIGHT BARRELS		R-100X-X1	10/10/62
659	STANDARD BARREL SECTIONS FOR STRAIGHT BARRELS		R-200X-0	2/15/63
660	STANDARD BARREL SECTIONS FOR STRAIGHT BARRELS		R-200X-X4	1/8/65
661	STANDARD WINGS FOR 15° SKEW BARRELS		W-X15	6/13/63
662	STANDARD WINGS FOR 15° SKEW BARRELS		W-X153-1	5/10/66
663	STANDARD BARREL SECTIONS FOR 15° SKEW BARRELS		R-215X-0	8/23/63
664	STANDARD WINGS FOR 30° SKEW BARRELS		W-X30	7/15/63
665	STANDARD WINGS FOR 30° SKEW BARRELS		W-X303-1	5/10/66
666	STANDARD BARREL SECTIONS FOR 30° SKEW BARRELS		R-130X-0	2/24/64
667	STANDARD BARREL SECTIONS FOR 30° SKEW BARRELS		R-130X-1	1/24/64
668	STANDARD WINGS FOR 45° SKEW BARRELS		W-X45	6/15/64
669	STANDARD WINGS FOR 45° SKEW BARRELS		W-X453-1	6/15/64
670 - 886	CROSS SECTIONS			

NOTE: CROSS SECTIONS NOT NORMALLY INCLUDED IN PLANS SOLD TO PROSPECTIVE BIDDERS BUT MAY BE HAD UPON REQUEST.

GENERAL NOTES:

1. GRADE LINE DENOTES FINISHED GRADE WHERE SHOWN ON PLANS.
2. ALL PIPE LINES, POWER, TELEPHONE, AND TELEGRAPH LINES TO BE MOVED OR LOWERED BY THE RESPECTIVE OWNERS AS PER AGREEMENT WITH SUCH OWNERS.
3. ANY EQUIPMENT OR APPURTENANCE THAT INTERFERES WITH THE PROPOSED CONSTRUCTION AND WHICH MAY BE THE PROPERTY OF UTILITY SERVICE ORGANIZATIONS SHALL BE MOVED BY THE OWNERS UNLESS OTHERWISE PROVIDED.
4. THE CONTRACTOR SHALL BE RESPONSIBLE FOR MAINTAINING U.S. MAILBOXES WITHIN THE PROJECT LIMITS IN SUCH A MANNER THAT THE PUBLIC MAY RECEIVE CONTINUED MAIL SERVICE. PAYMENT WILL BE CONSIDERED INCLUDED IN THE PRICE BID FOR THE VARIOUS BID ITEMS.
5. ALL LAND MONUMENTS LOCATED WITHIN THE CONSTRUCTION AREA SHALL BE PROTECTED IN ACCORDANCE WITH SECTION 107.12 OF THE STANDARD SPECIFICATIONS.
6. ALL TREES THAT DO NOT DIRECTLY INTERFERE WITH THE PROPOSED CONSTRUCTION SHALL BE SPARED AS DIRECTED BY THE ENGINEER. CARE AND DISCRETION SHALL BE USED TO INSURE THAT ALL TREES NOT TO BE REMOVED SHALL BE HARMED AS LITTLE AS POSSIBLE DURING THE CONSTRUCTION OPERATIONS.
7. THE CONTRACTOR SHALL BE RESPONSIBLE FOR PROVIDING A FENCE TO CONTROL LIVESTOCK IN AREAS WHERE PASTURES ARE SEVERED. WIRE FENCE MAY BE CONSTRUCTED INITIALLY, OR IN LIEU THEREOF, THE CONTRACTOR AT HIS OWN EXPENSE, MAY ELECT TO PROVIDE TEMPORARY FENCING SUITABLE TO CONTAIN LIVESTOCK.
8. THE EXISTING ASPHALT PAVEMENT TO BE REMOVED FROM THE REMAINING PAVEMENT SHALL BE SEPARATED BY SAWING ALONG A NEAT LINE. AFTER SAWING, THE PAVEMENT TO BE REMOVED SHALL BE CAREFULLY REMOVED IN A MANNER THAT WILL NOT DAMAGE THE PAVEMENT THAT IS TO REMAIN. ANY DAMAGE OF THE ASPHALT PAVEMENT THAT IS TO REMAIN IN PLACE SHALL BE REPAIRED AT THE CONTRACTOR'S EXPENSE.
9. ALL FLEXIBLE BASE AND ASPHALTIC PAVEMENT REMOVED SHALL BE PAID FOR UNDER PAY ITEM 210 - EXCAVATION AND EMBANKMENT, UNLESS OTHERWISE NOTED.
10. THIS PROJECT IS COVERED UNDER A SECTION 404 LETTER OF PERMISSION PERMIT. REFER TO SECTION 110 OF THE STANDARD SPECIFICATIONS, EDITION OF 2014, FOR PERMIT REQUIREMENTS.

GOVERNING SPECIFICATIONS

ARKANSAS STATE HIGHWAY COMMISSION STANDARD SPECIFICATIONS FOR HIGHWAY CONSTRUCTION, EDITION OF 2014, AND THE FOLLOWING SPECIAL PROVISIONS AND SUPPLEMENTAL SPECIFICATIONS.

NUMBER	TITLE
ERRATA	ERRATA FOR THE BOOK OF STANDARD SPECIFICATIONS
FHWA-1273	REQUIRED CONTRACT PROVISIONS FEDERAL-AID CONSTRUCTION CONTRACTS
FHWA-1273	SUPPLEMENT - EQUAL EMPLOYMENT OPPORTUNITY - NOTICE TO CONTRACTORS
FHWA-1273	SUPPLEMENT - SPECIFIC EQUAL EMPLOYMENT OPPORTUNITY RESPONSIBILITIES (23 U.S.C. 140)
FHWA-1273	SUPPLEMENT - EQUAL EMPLOYMENT OPPORTUNITY - GOALS AND TIMETABLES
FHWA-1273	SUPPLEMENT - EQUAL EMPLOYMENT OPPORTUNITY - FEDERAL STANDARDS
FHWA-1273	SUPPLEMENT - TRAINING PROGRAM - JOB BB0414
FHWA-1273	SUPPLEMENT - POSTERS AND NOTICES REQUIRED FOR FEDERAL-AID PROJECTS
FHWA-1273	SUPPLEMENT - WAGE RATE DETERMINATION
100-3	CONTRACTOR'S LICENSE
108-1	LIQUIDATED DAMAGES
108-2	WORK ALLOWED PRIOR TO ISSUANCE OF WORK ORDER
303-1	AGGREGATE BASE COURSE
400-1	TACK COATS
410-1	CONSTRUCTION REQUIREMENTS AND ACCEPTANCE OF ASPHALT CONCRETE PLANT MIX COURSES
604-1	RETROREFLECTIVE SHEETING FOR TRAFFIC CONTROL DEVICES IN CONSTRUCTION ZONES
620-1	MULCH COVER
JOB BB0414	AIRPORT CLEARANCE REQUIREMENTS
JOB BB0414	ARCHITECTURAL FINISH
JOB BB0414	AUTOMATED WORK ZONE INFORMATION SYSTEM
JOB BB0414	BIDDING REQUIREMENTS AND CONDITIONS
JOB BB0414	BROADBAND INTERNET SERVICE FOR ASPHALT CONCRETE PLANT
JOB BB0414	BROADBAND INTERNET SERVICE FOR FIELD OFFICE
JOB BB0414	CABINET DRAWER ASSEMBLY
JOB BB0414	CARGO PREFERENCE ACT REQUIREMENTS
JOB BB0414	CHANNEL POST SIGN SUPPORT
JOB BB0414	CONCRETE BARRIER WALL
JOB BB0414	CONSTRUCTION IN SPECIAL FLOOD HAZARD AREAS
JOB BB0414	CONTAINMENT SYSTEM
JOB BB0414	CONTRACTOR CERTIFICATION
JOB BB0414	COORDINATION OF WORK
JOB BB0414	DELAY IN RIGHT OF WAY OCCUPANCY
JOB BB0414	DIRECT TENSION INDICATORS FOR HIGH STRENGTH BOLT ASSEMBLIES
JOB BB0414	DISADVANTAGED BUSINESS ENTERPRISE BIDDER'S RESPONSIBILITIES
JOB BB0414	EDGE CARD VIDEO PROCESSOR
JOB BB0414	ELECTRICAL CONDUCTORS FOR LUMINAIRES
JOB BB0414	ELECTRICAL CONDUCTORS-IN-CONDUIT
JOB BB0414	EMPLOYMENT REPORTING
JOB BB0414	EXCAVATION AND EMBANKMENT
JOB BB0414	EXTENSION FOR PIPE CULVERTS
JOB BB0414	FURNISH AND OPERATION OF MOBILE SPEED NOTIFICATION SYSTEM
JOB BB0414	GOALS FOR DISADVANTAGED BUSINESS ENTERPRISE PARTICIPATION
JOB BB0414	HIGH PERFORMANCE PAVEMENT MARKING
JOB BB0414	LED COUNTDOWN PEDESTRIAN SIGNAL HEAD
JOB BB0414	LED LUMINAIRE ASSEMBLY (BUG U0 TYPE)
JOB BB0414	LED TRAFFIC SIGNAL HEAD
JOB BB0414	LOCAL RADIO WITH ANTENNA
JOB BB0414	MAINTENANCE OF TRAFFIC
JOB BB0414	MANDATORY ELECTRONIC CONTRACT
JOB BB0414	MANDATORY ELECTRONIC DOCUMENT SUBMITTAL
JOB BB0414	MODIFICATION OF EXISTING BARRIER WALL
JOB BB0414	MSE RETAINING WALLS
JOB BB0414	NESTING SITES OF MIGRATORY BIRDS
JOB BB0414	OFF-SITE RESTRAINING CONDITIONS FOR BATS
JOB BB0414	OMNI-DIRECTIONAL BREAKAWAY SIGN SUPPORT
JOB BB0414	PAINT CONTRACTOR LABEL
JOB BB0414	PARTNERING REQUIREMENTS
JOB BB0414	PERCENT WITHIN LIMITS/PAVEMENT SMOOTHNESS
JOB BB0414	PIPE CULVERTS
JOB BB0414	PROSECUTION AND PROGRESS - CALENDAR DAY CONTRACT WITH CPM
JOB BB0414	REMOVAL AND DISPOSAL OF GUARDRAIL
JOB BB0414	REMOVAL AND DISPOSAL OF PLOWABLE PAVEMENT MARKER
JOB BB0414	REMOVAL AND DISPOSAL OF WIRE ROPE SAFETY FENCE
JOB BB0414	REMOVAL OF TRAFFIC SIGNAL EQUIPMENT
JOB BB0415	ROCK FILL
JOB BB0414	SERVICE POINT ASSEMBLY (TRAFFIC CONTROL DEVICES)
JOB BB0414	SHORING
JOB BB0414	SHORING FOR CULVERTS
JOB BB0414	SIGN PANEL MATERIALS AND FABRICATION
JOB BB0414	SITE USE (A+C METHOD) - CALENDAR DAY CONTRACT
JOB BB0414	SOIL NAIL WALL
JOB BB0414	SOIL STABILIZATION
JOB BB0414	SPECIAL SAFETY REQUIREMENTS FOR BRIDGES
JOB BB0414	SPECIAL SAFETY REQUIREMENTS FOR OVERHEAD SIGNS
JOB BB0414	STEEL SIGN STRUCTURES
JOB BB0414	STORM WATER POLLUTION PREVENTION PLAN
JOB BB0414	STREET NAME SIGN (MAST ARM MOUNTED)
JOB BB0414	SUBMISSION OF ASPHALT CONCRETE HOT MIX ACCEPTANCE TEST RESULTS
JOB BB0414	SYSTEM LOCAL CONTROLLER
JOB BB0414	TEMPORARY RETAINING WALLS
JOB BB0414	TEXTURED COATING FINISH
JOB BB0414	TRAFFIC CONTROL DEVICES IN CONSTRUCTION ZONES
JOB BB0414	TRIANGULAR SILT DIKE
JOB BB0414	UTILITY ADJUSTMENTS
JOB BB0414	VALUE ENGINEERING
JOB BB0414	VIDEO DETECTOR (COLOR)
JOB BB0414	WARM MIX ASPHALT

STATE OF ARKANSAS
LICENSED PROFESSIONAL ENGINEER
No. 13422
JOHN F. CANTABERY
5-18-16

AEWierciak 5/18/2016 9:59:00 AM
WORKSPACE: AHTD
L:\2011\1101770 7 - I-540 Widening & Interchange Improvement\Drawings\rBB0414_IDX_01.dgn
REVISED DATE:

DATE REVISED	DATE FILMED	DATE REVISED	DATE FILMED	FED.RD. DIST.NO.	STATE	FED.AID PROJ.NO.	SHEET NO.	TOTAL SHEETS
				6	ARK.			
				JOB NO.		BB0414	5	886

(2) TYPICAL SECTIONS OF IMPROVEMENT

3-20-16

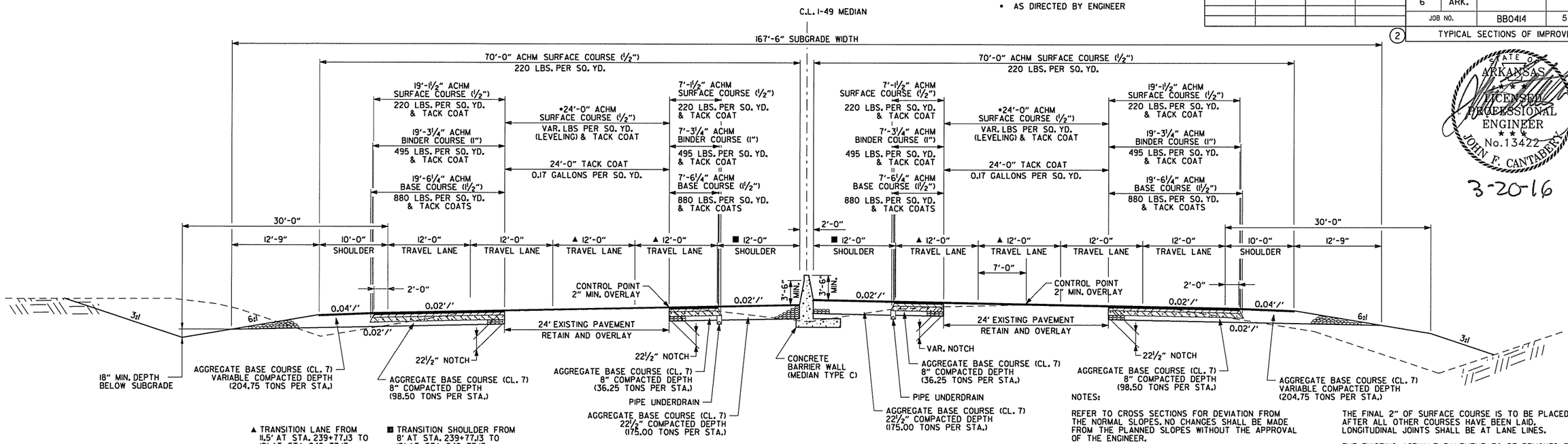

I-49 NOTCH AND WIDEN TYPICAL SECTION

STA. 239+77.13 TO STA. 242+77.13
STA. 280+20.84 TO STA. 281+69.33

NOTES:

REFER TO CROSS SECTIONS FOR DEVIATION FROM THE NORMAL SLOPES. NO CHANGES SHALL BE MADE FROM THE PLANNED SLOPES WITHOUT THE APPROVAL OF THE ENGINEER.

THE THICKNESS OF AGGREGATE BASE COURSE SHALL BE WITHIN PLUS OR MINUS ONE INCH OF THE PLAN THICKNESS SHOWN. THE CONTRACTOR WILL CORRECT ANY DEFICIENT THICKNESS THAT DOES NOT MEET TOLERANCE INDICATED. PAYMENT WILL NOT BE MADE FOR MATERIAL PLACED IN EXCESS OF THE TOLERANCE INDICATED.

ASPHALT FOR LEVELING OF EXISTING PAVEMENT SHALL BE PLACED ONLY IF AND WHERE DIRECTED BY THE ENGINEER. CALCULATIONS FOR THE AMOUNT OF LEVELING AND/OR LEVELING OPERATIONS SHALL BE PERFORMED BEFORE CONSTRUCTING NOTCH AND WIDENING. CALCULATIONS WILL NOT BE PAID FOR DIRECTLY, BUT PAYMENT WILL BE CONSIDERED INCLUDED IN THE VARIOUS PAY ITEMS.

THE FINAL 2" OF SURFACE COURSE IS TO BE PLACED AFTER ALL OTHER COURSES HAVE BEEN LAID. LONGITUDINAL JOINTS SHALL BE AT LANE LINES.

THE EXISTING ASPHALT PAVEMENT TO BE REMOVED FROM THE REMAINING PAVEMENT SHALL BE SEPARATED BY SAWING ALONG A NEAT LINE. AFTER SAWING, THE PAVEMENT TO BE REMOVED SHALL BE CAREFULLY REMOVED IN A MANNER THAT WILL NOT DAMAGE THE PAVEMENT THAT IS TO REMAIN. ANY DAMAGE OF THE ASPHALT PAVEMENT THAT IS TO REMAIN IN PLACE SHALL BE REPAIRED AT THE CONTRACTOR'S EXPENSE.

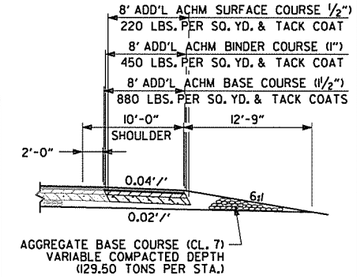

FULL DEPTH SHOULDER DETAIL

STA. 268+00.00 TO STA. 270+20.84 OUTSIDE RT.

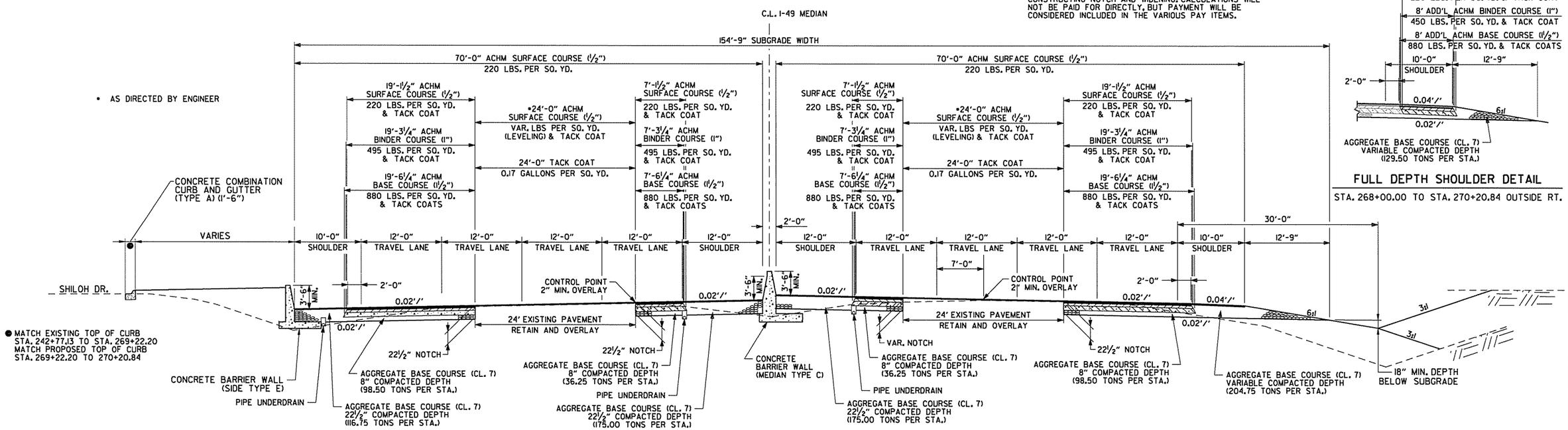

I-49 NOTCH AND WIDEN TYPICAL SECTION

STA. 242+77.13 TO STA. 270+20.84

TYPICAL SECTIONS OF IMPROVEMENT

AEWierdak 3/20/2016 11:51:24 AM
WORKSPACE: AHTD
L:\20I\10I1707 - I-540 Widening & Interchange Improvement\Drawings\rBB0414_TS_ALL.dgn
REVISED DATE:

DATE REVISED	DATE FILMED	DATE REVISED	DATE FILMED

FED.RD. DIST.NO.	STATE	FED.AID PROJ.NO.	SHEET NO.	TOTAL SHEETS
6	ARK.			
JOB NO.		BB0414	6	886

(2) TYPICAL SECTIONS OF IMPROVEMENT

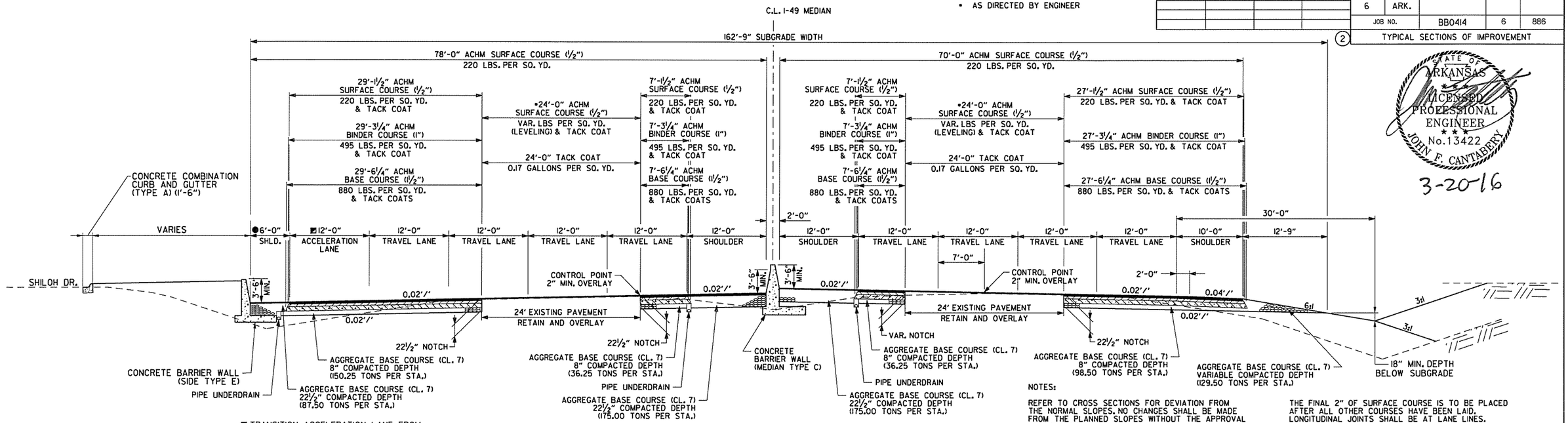

◪ TRANSITION ACCELERATION LANE FROM 0' AT STA. 270+20.84 TO 12' AT STA. 273+20.74

● TRANSITION SHOULDER FROM 10' AT STA. 270+20.84 TO 6' AT STA. 273+20.84

I-49 NOTCH AND WIDEN TYPICAL SECTION

STA. 270+20.84 TO STA. 280+20.84

• AS DIRECTED BY ENGINEER

NOTES:

REFER TO CROSS SECTIONS FOR DEVIATION FROM THE NORMAL SLOPES. NO CHANGES SHALL BE MADE FROM THE PLANNED SLOPES WITHOUT THE APPROVAL OF THE ENGINEER.

THE THICKNESS OF AGGREGATE BASE COURSE SHALL BE WITHIN PLUS OR MINUS ONE INCH OF THE PLAN THICKNESS SHOWN. THE CONTRACTOR WILL CORRECT ANY DEFICIENT THICKNESS THAT DOES NOT MEET TOLERANCE INDICATED. PAYMENT WILL NOT BE MADE FOR MATERIAL PLACED IN EXCESS OF THE TOLERANCE INDICATED.

ASPHALT FOR LEVELING OF EXISTING PAVEMENT SHALL BE PLACED ONLY IF AND WHERE DIRECTED BY THE ENGINEER. CALCULATIONS FOR THE AMOUNT OF LEVELING AND/OR LEVELING OPERATIONS SHALL BE PERFORMED BEFORE CONSTRUCTING NOTCH AND WIDENING. CALCULATIONS WILL NOT BE PAID FOR DIRECTLY, BUT PAYMENT WILL BE CONSIDERED INCLUDED IN THE VARIOUS PAY ITEMS.

THE FINAL 2" OF SURFACE COURSE IS TO BE PLACED AFTER ALL OTHER COURSES HAVE BEEN LAID. LONGITUDINAL JOINTS SHALL BE AT LANE LINES.

THE EXISTING ASPHALT PAVEMENT TO BE REMOVED FROM THE REMAINING PAVEMENT SHALL BE SEPARATED BY SAWING ALONG A NEAT LINE. AFTER SAWING, THE PAVEMENT TO BE REMOVED SHALL BE CAREFULLY REMOVED IN A MANNER THAT WILL NOT DAMAGE THE PAVEMENT THAT IS TO REMAIN. ANY DAMAGE OF THE ASPHALT PAVEMENT THAT IS TO REMAIN IN PLACE SHALL BE REPAIRED AT THE CONTRACTOR'S EXPENSE.

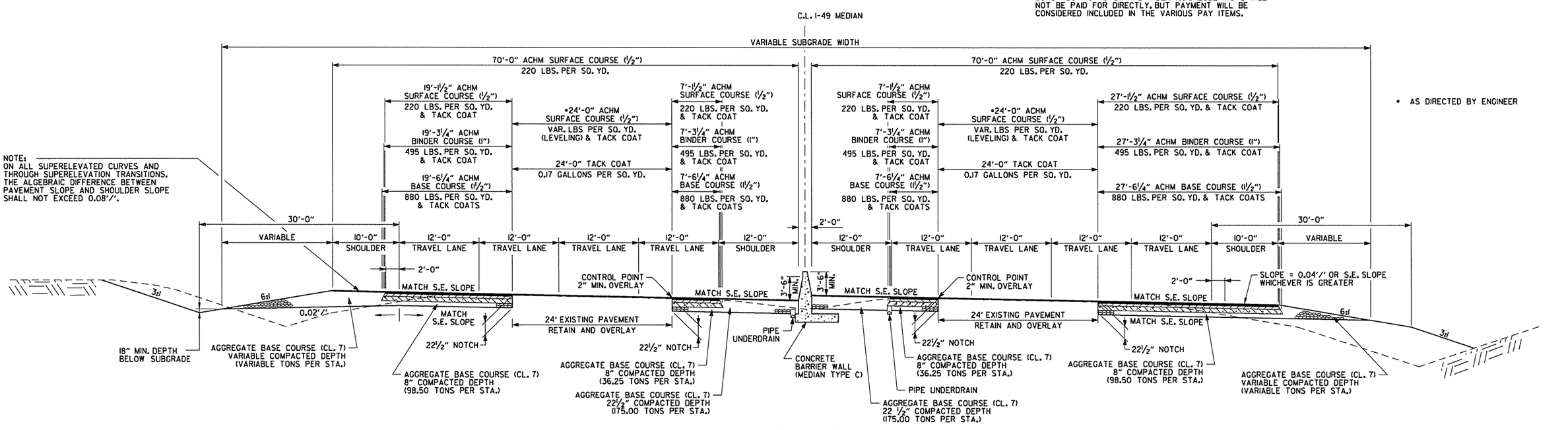

NOTE:
ON ALL SUPERELEVATED CURVES AND THROUGH SUPERELEVATION TRANSITIONS, THE ALGEBRAIC DIFFERENCE BETWEEN PAVEMENT SLOPE AND SHOULDER SLOPE SHALL NOT EXCEED 0.08'/'.

I-49 NOTCH AND WIDEN TYPICAL SUPERELEVATED SECTION

STA. 281+69.33 TO STA. 283+16.55

• AS DIRECTED BY ENGINEER

TYPICAL SECTIONS OF IMPROVEMENT

AEWlerclark 3/20/2016 11:51:24 AM
WORKSPACE: AHTD
L:\201\100707 - I-540 Widening & Interchange Improvement\Drawings\rBB0414_TS_ALL.dgn
REVISED DATE:

DATE REVISED	DATE FILMED	DATE REVISED	DATE FILMED	FED.RD. DIST.NO.	STATE	FED.AID PROJ.NO.	SHEET NO.	TOTAL SHEETS
				6	ARK.			
				JOB NO.		BB0414	7	886
				(2)	TYPICAL SECTIONS OF IMPROVEMENT			

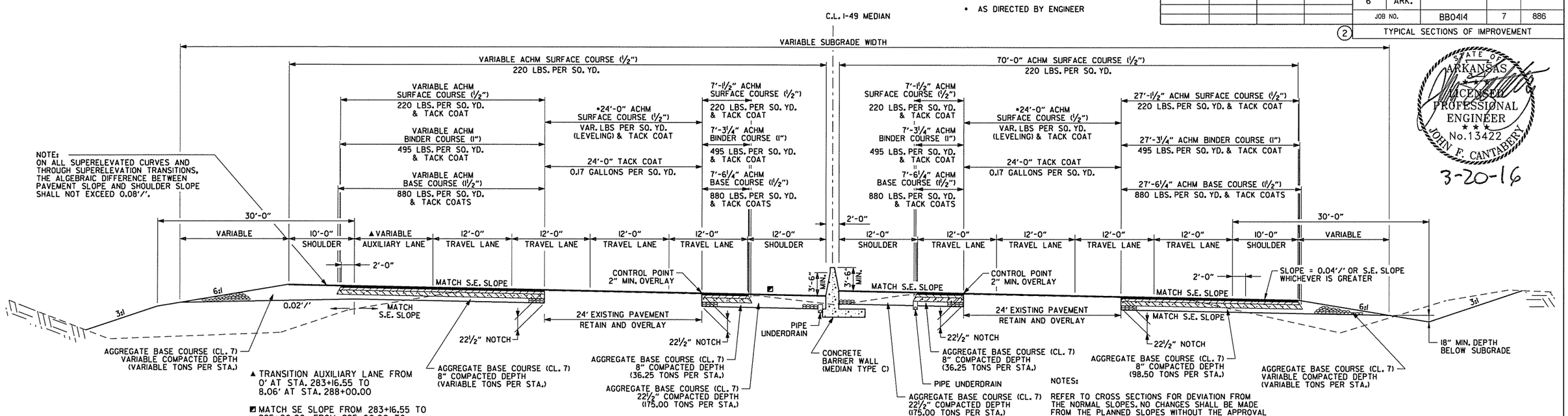

I-49 NOTCH AND WIDEN
TYPICAL SUPERELEVATED SECTION

STA. 283+16.55 TO STA. 288+00.00

NOTES:

REFER TO CROSS SECTIONS FOR DEVIATION FROM THE NORMAL SLOPES. NO CHANGES SHALL BE MADE FROM THE PLANNED SLOPES WITHOUT THE APPROVAL OF THE ENGINEER.

THE THICKNESS OF AGGREGATE BASE COURSE SHALL BE WITHIN PLUS OR MINUS ONE INCH OF THE PLAN THICKNESS SHOWN. THE CONTRACTOR WILL CORRECT ANY DEFICIENT THICKNESS THAT DOES NOT MEET TOLERANCE INDICATED. PAYMENT WILL NOT BE MADE FOR MATERIAL PLACED IN EXCESS OF THE TOLERANCE INDICATED.

ASPHALT FOR LEVELING OF EXISTING PAVEMENT SHALL BE PLACED ONLY IF AND WHERE DIRECTED BY THE ENGINEER. CALCULATIONS FOR THE AMOUNT OF LEVELING AND/OR LEVELING OPERATIONS SHALL BE PERFORMED BEFORE CONSTRUCTING NOTCH AND WIDENING. CALCULATIONS WILL NOT BE PAID FOR DIRECTLY, BUT PAYMENT WILL BE CONSIDERED INCLUDED IN THE VARIOUS PAY ITEMS.

THE FINAL 2" OF SURFACE COURSE IS TO BE PLACED AFTER ALL OTHER COURSES HAVE BEEN LAID. LONGITUDINAL JOINTS SHALL BE AT LANE LINES.

THE EXISTING ASPHALT PAVEMENT TO BE REMOVED FROM THE REMAINING PAVEMENT SHALL BE SEPARATED BY SAWING ALONG A NEAT LINE. AFTER SAWING, THE PAVEMENT TO BE REMOVED SHALL BE CAREFULLY REMOVED IN A MANNER THAT WILL NOT DAMAGE THE PAVEMENT THAT IS TO REMAIN. ANY DAMAGE OF THE ASPHALT PAVEMENT THAT IS TO REMAIN IN PLACE SHALL BE REPAIRED AT THE CONTRACTOR'S EXPENSE.

STATE OF ARKANSAS
LICENSED PROFESSIONAL ENGINEER
No.13422
JOHN F. CANTABERY
3-20-16

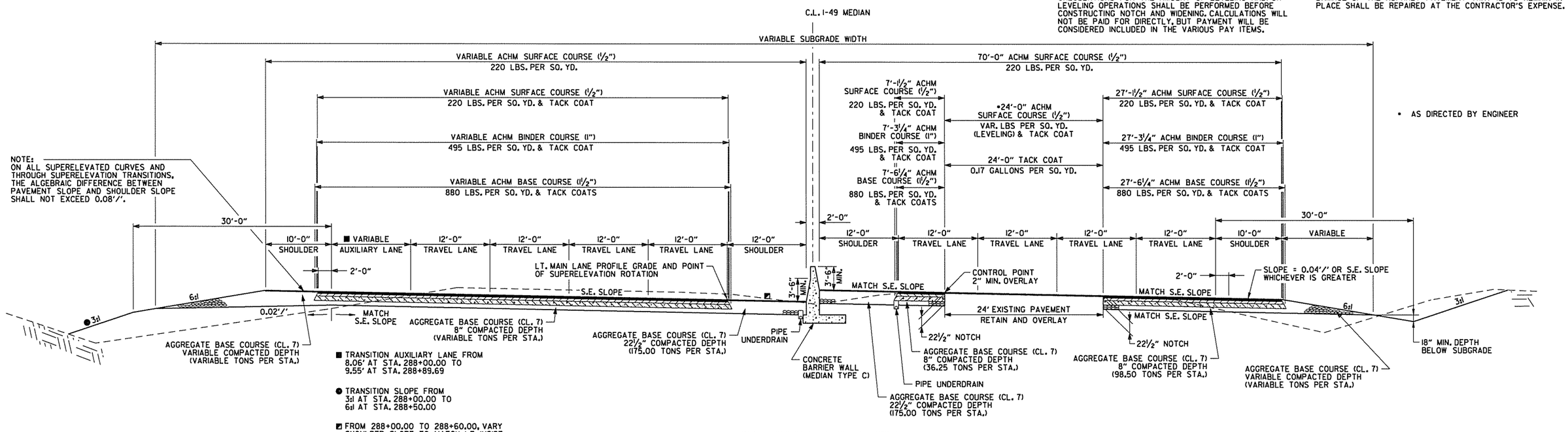

I-49 NOTCH AND WIDEN
TYPICAL SUPERELEVATED SECTION

STA. 288+00.00 TO STA. 288+89.69

TYPICAL SECTIONS OF IMPROVEMENT

AEWerclok 3/20/2016 11:51:25 AM
WORKSPACE: AHTD
L:\20IN\10\T07 - I-540 Widening & Interchange Improvement\Drawings\r-BB0414_TS_ALL.dgn
REVISED DATE:

DATE REVISED	DATE FILMED	DATE REVISED	DATE FILMED	FED.RD. DIST.NO.	STATE	FED.AID PROJ.NO.	SHEET NO.	TOTAL SHEETS
				6	ARK.			
				JOB NO.		BB0414	8	886

(2) TYPICAL SECTIONS OF IMPROVEMENT

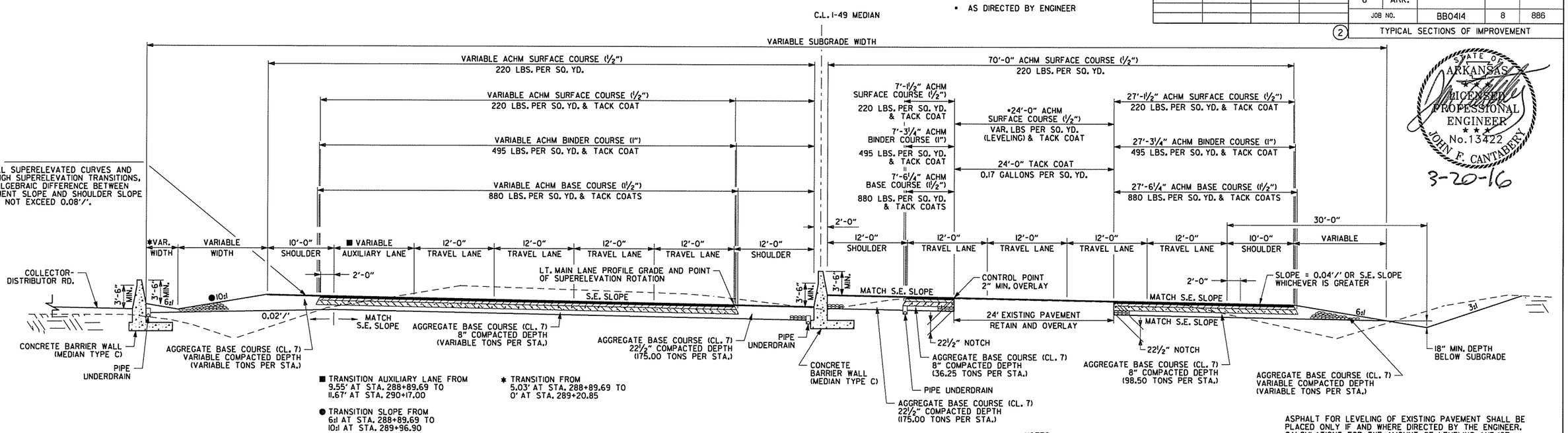

I-49 TYPICAL SUPERELEVATED SECTION

STA. 288+89.69 TO STA. 290+17.00

NOTES:

REFER TO CROSS SECTIONS FOR DEVIATION FROM THE NORMAL SLOPES. NO CHANGES SHALL BE MADE FROM THE PLANNED SLOPES WITHOUT THE APPROVAL OF THE ENGINEER.

THE THICKNESS OF AGGREGATE BASE COURSE SHALL BE WITHIN PLUS OR MINUS ONE INCH OF THE PLAN THICKNESS SHOWN. THE CONTRACTOR WILL CORRECT ANY DEFICIENT THICKNESS THAT DOES NOT MEET TOLERANCE INDICATED. PAYMENT WILL NOT BE MADE FOR MATERIAL PLACED IN EXCESS OF THE TOLERANCE INDICATED.

ASPHALT FOR LEVELING OF EXISTING PAVEMENT SHALL BE PLACED ONLY IF AND WHERE DIRECTED BY THE ENGINEER. CALCULATIONS FOR THE AMOUNT OF LEVELING AND/OR LEVELING OPERATIONS SHALL BE PERFORMED BEFORE CONSTRUCTING NOTCH AND WIDENING. CALCULATIONS WILL NOT BE PAID FOR DIRECTLY, BUT PAYMENT WILL BE CONSIDERED INCLUDED IN THE VARIOUS PAY ITEMS.

THE FINAL 2" OF SURFACE COURSE IS TO BE PLACED AFTER ALL OTHER COURSES HAVE BEEN LAID. LONGITUDINAL JOINTS SHALL BE AT LANE LINES.

THE EXISTING ASPHALT PAVEMENT TO BE REMOVED FROM THE REMAINING PAVEMENT SHALL BE SEPARATED BY SAWING ALONG A NEAT LINE. AFTER SAWING, THE PAVEMENT TO BE REMOVED SHALL BE CAREFULLY REMOVED IN A MANNER THAT WILL NOT DAMAGE THE PAVEMENT THAT IS TO REMAIN. ANY DAMAGE OF THE ASPHALT PAVEMENT THAT IS TO REMAIN IN PLACE SHALL BE REPAIRED AT THE CONTRACTOR'S EXPENSE.

STATE OF ARKANSAS
LICENSED PROFESSIONAL ENGINEER
No.13422
JOHN F. CANTABERY
3-20-16

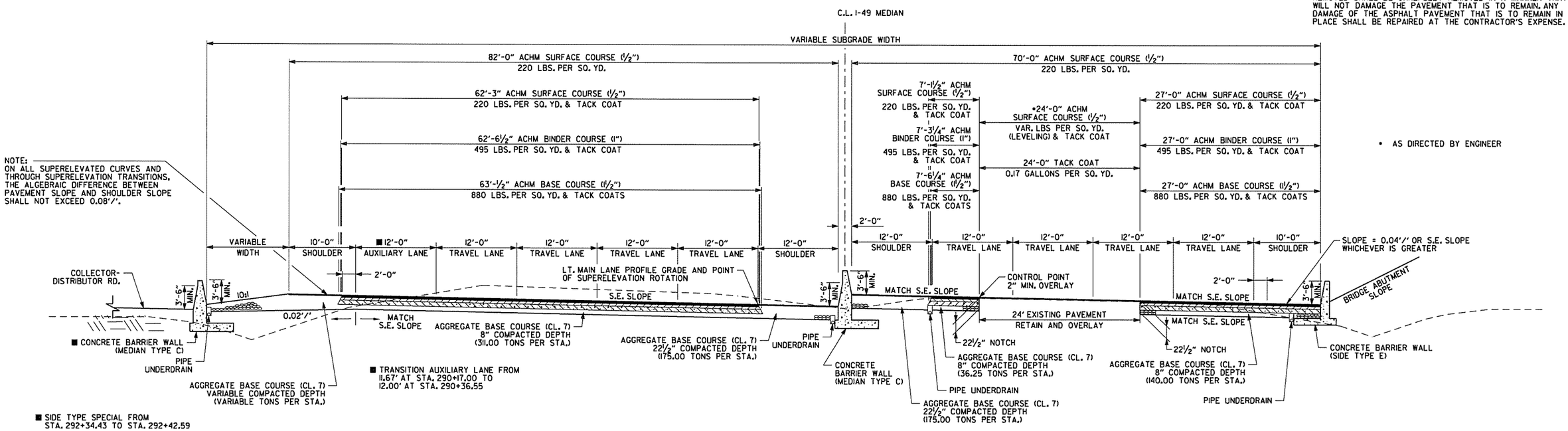

I-49 TYPICAL SUPERELEVATED SECTION

STA. 290+17.00 TO STA. 292+42.59

• AS DIRECTED BY ENGINEER

TYPICAL SECTIONS OF IMPROVEMENT

AEWier-clak 3/20/2016 5:13:05 PM
WORKSPACE: AHTD
L:\20IN\I0I7707 - I-540 Widening & Interchange Improvement\Drawings\rBB0414_TS_ALL.dgn
REVISED DATE:

DATE REVISED	DATE FILMED	DATE REVISED	DATE FILMED	FED.RD. DIST.NO.	STATE	FED.AID PROJ.NO.	SHEET NO.	TOTAL SHEETS
				6	ARK.			
				JOB NO.		BB0414	9	886

(2) TYPICAL SECTIONS OF IMPROVEMENT

STATE OF ARKANSAS
JOHN F. CANTABERY
LICENSED PROFESSIONAL ENGINEER
No. 13422
3-20-16

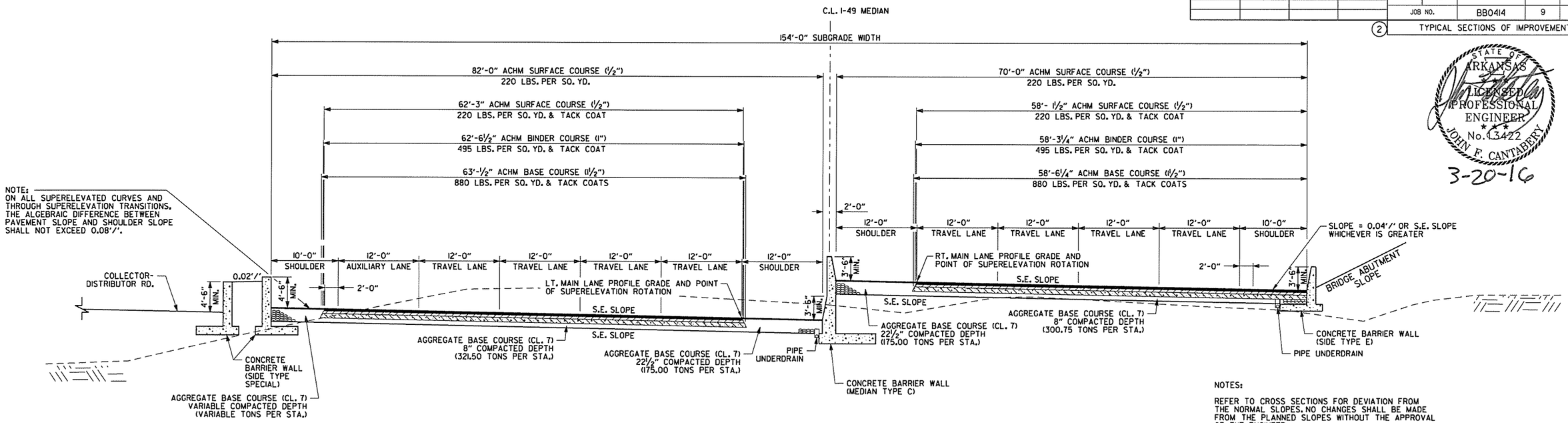

I-49 TYPICAL SUPERELEVATED SECTION

STA. 292+42.59 TO STA. 293+00.00

NOTES:

REFER TO CROSS SECTIONS FOR DEVIATION FROM THE NORMAL SLOPES. NO CHANGES SHALL BE MADE FROM THE PLANNED SLOPES WITHOUT THE APPROVAL OF THE ENGINEER.

THE THICKNESS OF AGGREGATE BASE COURSE SHALL BE WITHIN PLUS OR MINUS ONE INCH OF THE PLAN THICKNESS SHOWN. THE CONTRACTOR WILL CORRECT ANY DEFICIENT THICKNESS THAT DOES NOT MEET TOLERANCE INDICATED. PAYMENT WILL NOT BE MADE FOR MATERIAL PLACED IN EXCESS OF THE TOLERANCE INDICATED.

THE FINAL 2" OF SURFACE COURSE IS TO BE PLACED AFTER ALL OTHER COURSES HAVE BEEN LAID. LONGITUDINAL JOINTS SHALL BE AT LANE LINES.

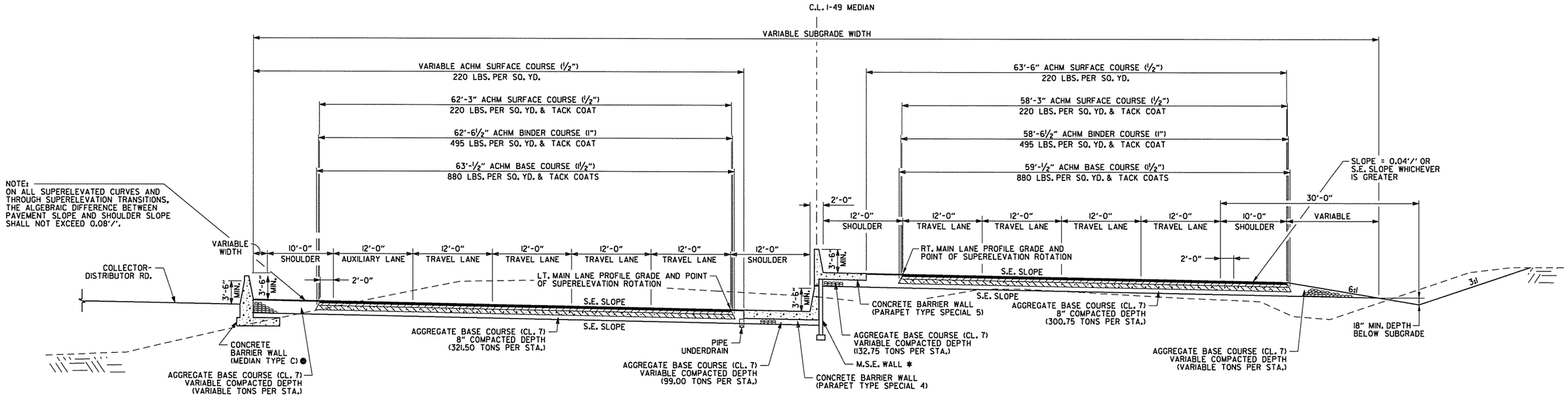

● SIDE TYPE SPECIAL FROM STA. 293+00.00 TO STA. 294+29.50

* CONCRETE MEDIAN BARRIER FROM 293+00.00 TO 293+41.79

I-49 TYPICAL SUPERELEVATED SECTION

STA. 293+00.00 TO STA. 300+36.55

TYPICAL SECTIONS OF IMPROVEMENT

AEWierclak 3/20/2016 5:15:36 PM
WORKSPACE: AHTD
L:\2014\140707 - I-540 Widening & Interchange Improvement\Drawings\r-BB0414_TS_ALL.dgn
REVISED DATE:

DATE REVISED	DATE FILMED	DATE REVISED	DATE FILMED	FED.RD. DIST.NO.	STATE	FED.AID PROJ.NO.	SHEET NO.	TOTAL SHEETS
				6	ARK.			
				JOB NO.		BB0414	10	886
				(2)	TYPICAL SECTIONS OF IMPROVEMENT			

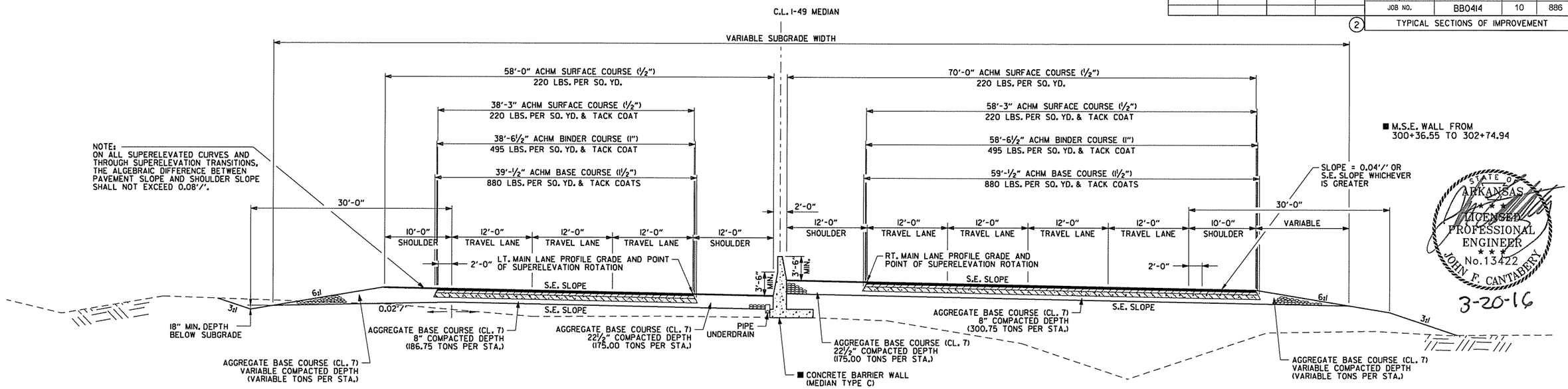

I-49 TYPICAL SUPERELEVATED SECTION

STA. 300+36.55 TO STA. 308+21.16

NOTES:

REFER TO CROSS SECTIONS FOR DEVIATION FROM THE NORMAL SLOPES. NO CHANGES SHALL BE MADE FROM THE PLANNED SLOPES WITHOUT THE APPROVAL OF THE ENGINEER.

THE THICKNESS OF AGGREGATE BASE COURSE SHALL BE WITHIN PLUS OR MINUS ONE INCH OF THE PLAN THICKNESS SHOWN. THE CONTRACTOR WILL CORRECT ANY DEFICIENT THICKNESS THAT DOES NOT MEET TOLERANCE INDICATED. PAYMENT WILL NOT BE MADE FOR MATERIAL PLACED IN EXCESS OF THE TOLERANCE INDICATED.

THE FINAL 2" OF SURFACE COURSE IS TO BE PLACED AFTER ALL OTHER COURSES HAVE BEEN LAID. LONGITUDINAL JOINTS SHALL BE AT LANE LINES.

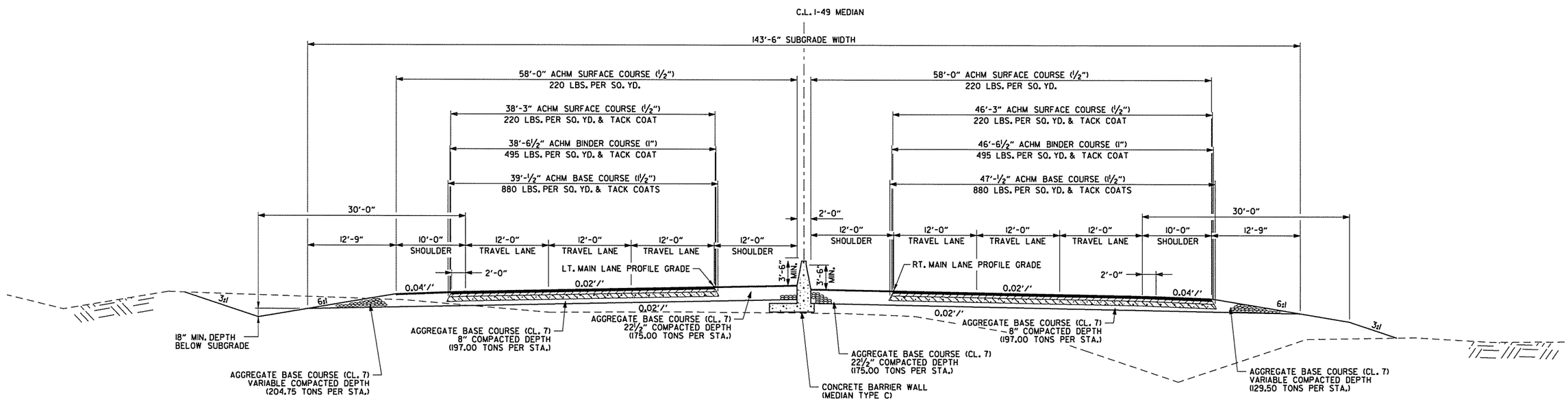

I-49 TYPICAL SECTION

STA. 308+21.16 TO STA. 308+91.56

TYPICAL SECTIONS OF IMPROVEMENT

STATE OF ARKANSAS
LICENSED PROFESSIONAL ENGINEER
No.13422
JOHN F. CANTABERY
3-20-16

AEWerclok 3/20/2016 11:51:26 AM
WORKSPACE: AHTD
L:\20II\II0I707 - I-540 Widening & Interchange Improvement\Drawings\rBB0414_TS_ALL.dgn
REVISED DATE:

DATE REVISED	DATE FILMED	DATE REVISED	DATE FILMED	FED.RD. DIST.NO.	STATE	FED.AID PROJ.NO.	SHEET NO.	TOTAL SHEETS
				6	ARK.			
				JOB NO.		BB0414	11	886

(2) TYPICAL SECTIONS OF IMPROVEMENT

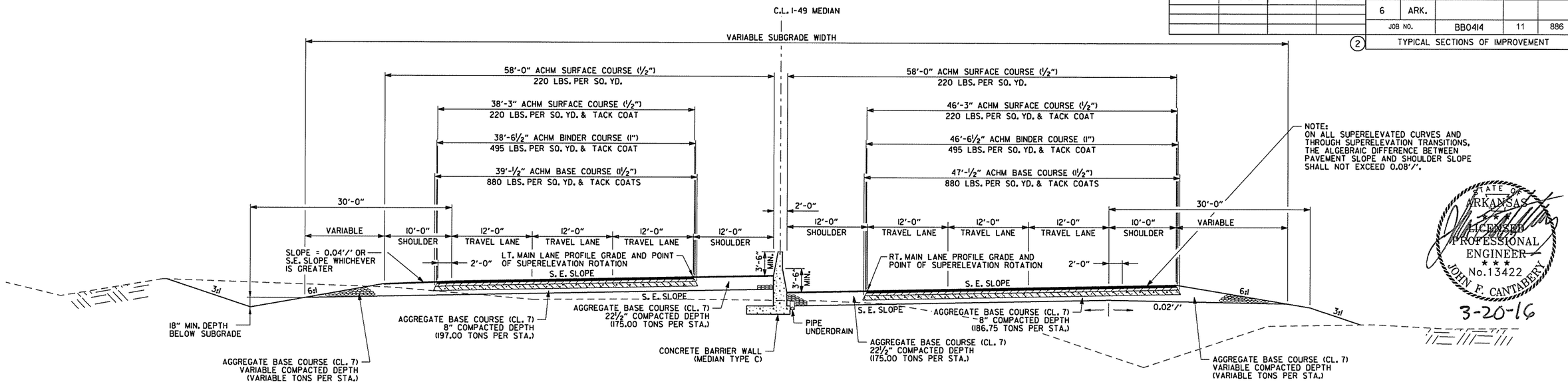

I-49 TYPICAL SUPERELEVATED SECTION

STA. 308+91.56 TO STA. 319+35.00

STATE OF ARKANSAS
LICENSED PROFESSIONAL ENGINEER
No.13422
JOHN F. CANTABERY
3-20-16

NOTES:

REFER TO CROSS SECTIONS FOR DEVIATION FROM THE NORMAL SLOPES. NO CHANGES SHALL BE MADE FROM THE PLANNED SLOPES WITHOUT THE APPROVAL OF THE ENGINEER.

THE THICKNESS OF AGGREGATE BASE COURSE SHALL BE WITHIN PLUS OR MINUS ONE INCH OF THE PLAN THICKNESS SHOWN. THE CONTRACTOR WILL CORRECT ANY DEFICIENT THICKNESS THAT DOES NOT MEET TOLERANCE INDICATED. PAYMENT WILL NOT BE MADE FOR MATERIAL PLACED IN EXCESS OF THE TOLERANCE INDICATED.

THE FINAL 2" OF SURFACE COURSE IS TO BE PLACED AFTER ALL OTHER COURSES HAVE BEEN LAID. LONGITUDINAL JOINTS SHALL BE AT LANE LINES.

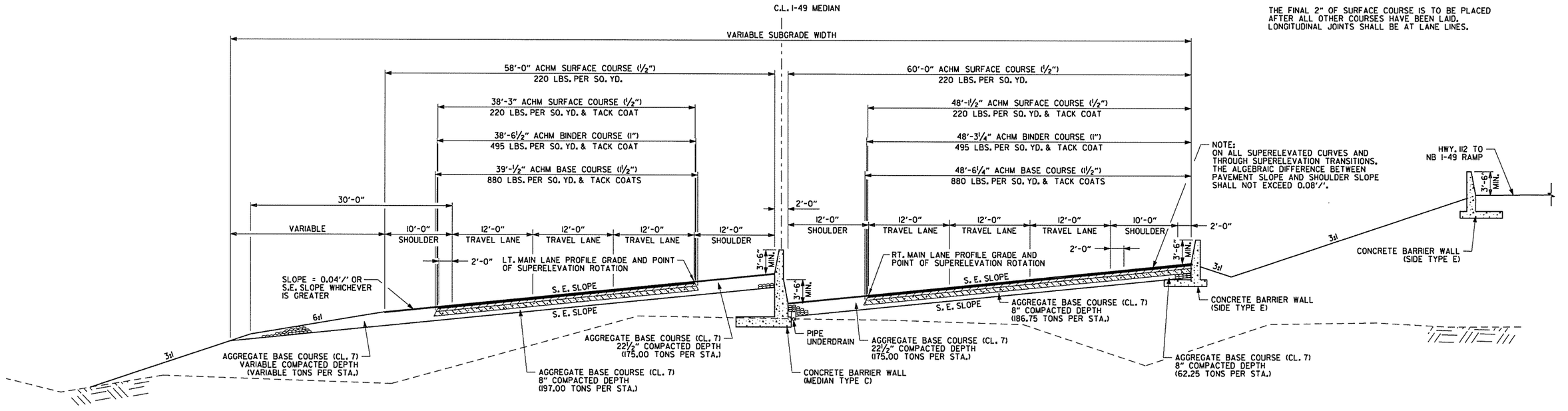

I-49 TYPICAL SUPERELEVATED SECTION

STA. 319+35.00 TO STA. 321+32.00

TYPICAL SECTIONS OF IMPROVEMENT

AEWiercIak 3/20/2016 11:51:26 AM
WORKSPACE: AHTD
L:\201\101707 - I-540 Widening & Interchange Improvement\Drawings\rBB0414_TS_ALL.dgn
REVISED DATE:

DATE REVISED	DATE FILMED	DATE REVISED	DATE FILMED	FED.RD. DIST.NO.	STATE	FED.AID PROJ.NO.	SHEET NO.	TOTAL SHEETS
				6	ARK.			
				JOB NO.		BB0414	12	886

(2) TYPICAL SECTIONS OF IMPROVEMENT

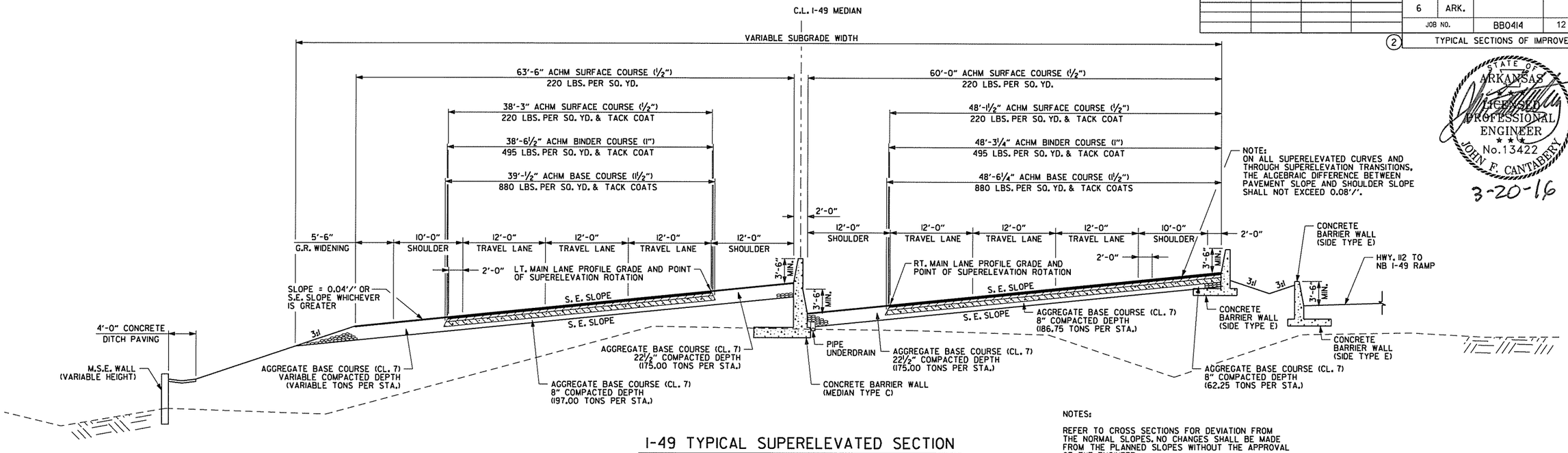

I-49 TYPICAL SUPERELEVATED SECTION

STA. 321+32.00 TO 323+43.41 LT. LANES
STA. 321+32.00 TO 324+60.28 RT. LANES

NOTES:

REFER TO CROSS SECTIONS FOR DEVIATION FROM THE NORMAL SLOPES. NO CHANGES SHALL BE MADE FROM THE PLANNED SLOPES WITHOUT THE APPROVAL OF THE ENGINEER.

THE THICKNESS OF AGGREGATE BASE COURSE SHALL BE WITHIN PLUS OR MINUS ONE INCH OF THE PLAN THICKNESS SHOWN. THE CONTRACTOR WILL CORRECT ANY DEFICIENT THICKNESS THAT DOES NOT MEET TOLERANCE INDICATED. PAYMENT WILL NOT BE MADE FOR MATERIAL PLACED IN EXCESS OF THE TOLERANCE INDICATED.

THE FINAL 2" OF SURFACE COURSE IS TO BE PLACED AFTER ALL OTHER COURSES HAVE BEEN LAID. LONGITUDINAL JOINTS SHALL BE AT LANE LINES.

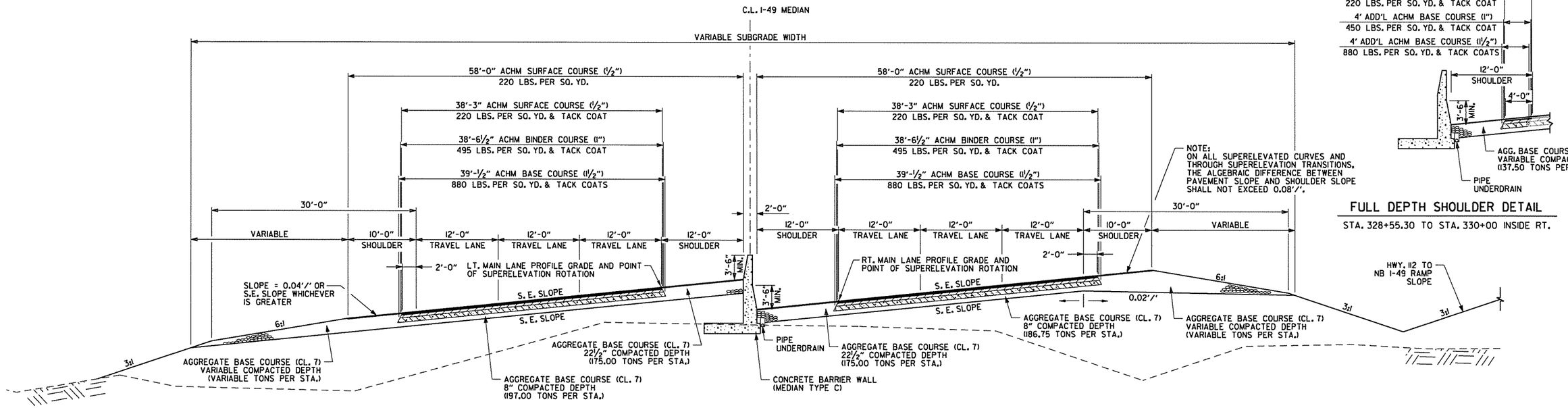

I-49 TYPICAL SUPERELEVATED SECTION

STA. 328+25.14 TO 339+00.00 LT. LANES
STA. 328+55.30 TO 339+00.00 RT. LANES

FULL DEPTH SHOULDER DETAIL

STA. 328+55.30 TO STA. 330+00 INSIDE RT.

TYPICAL SECTIONS OF IMPROVEMENT

STATE OF ARKANSAS
LICENSED PROFESSIONAL ENGINEER
No. 13422
JOHN F. CANTABERY
3-20-16

AEWerclok 3/20/2016 11:51:26 AM
WORKSPACE: AHTD
L:\2011\11077.07 - I-540 Widening & Interchange Improvement\Drawings\r-BB0414_TS_ALL.dgn
REVISED DATE:

DATE REVISED	DATE FILMED	DATE REVISED	DATE FILMED	FED.RD. DIST.NO.	STATE	FED.AID PROJ.NO.	SHEET NO.	TOTAL SHEETS
				6	ARK.			
				JOB NO.		BB0414	13	886

(2) TYPICAL SECTIONS OF IMPROVEMENT

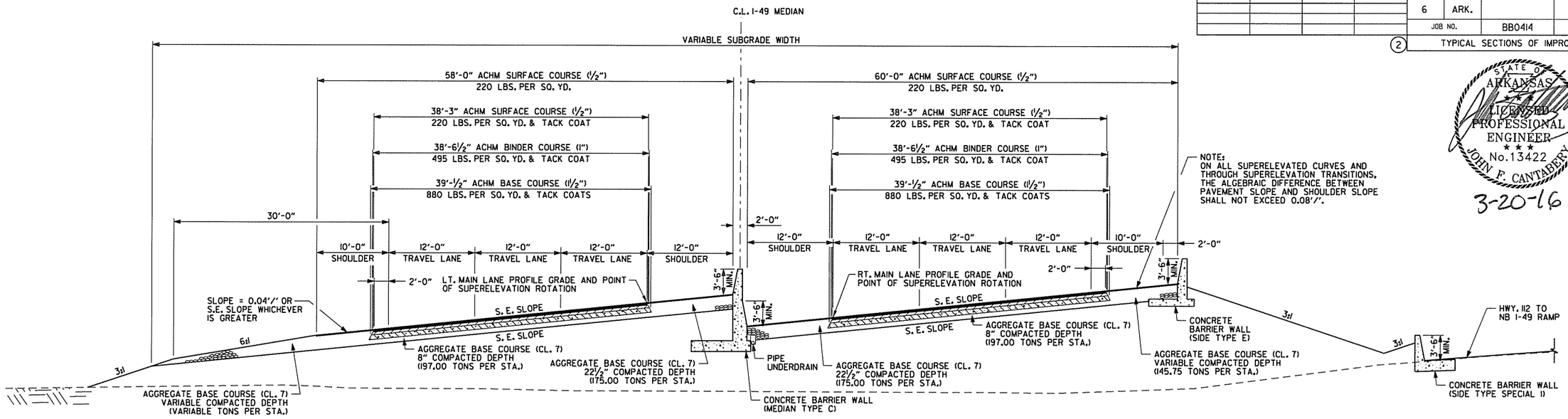

I-49 TYPICAL SUPERELEVATED SECTION

STA. 339+00.00 TO STA. 341+20.00

NOTES:

REFER TO CROSS SECTIONS FOR DEVIATION FROM THE NORMAL SLOPES. NO CHANGES SHALL BE MADE FROM THE PLANNED SLOPES WITHOUT THE APPROVAL OF THE ENGINEER.

THE THICKNESS OF AGGREGATE BASE COURSE SHALL BE WITHIN PLUS OR MINUS ONE INCH OF THE PLAN THICKNESS SHOWN. THE CONTRACTOR WILL CORRECT ANY DEFICIENT THICKNESS THAT DOES NOT MEET TOLERANCE INDICATED. PAYMENT WILL NOT BE MADE FOR MATERIAL PLACED IN EXCESS OF THE TOLERANCE INDICATED.

THE FINAL 2" OF SURFACE COURSE IS TO BE PLACED AFTER ALL OTHER COURSES HAVE BEEN LAID. LONGITUDINAL JOINTS SHALL BE AT LANE LINES.

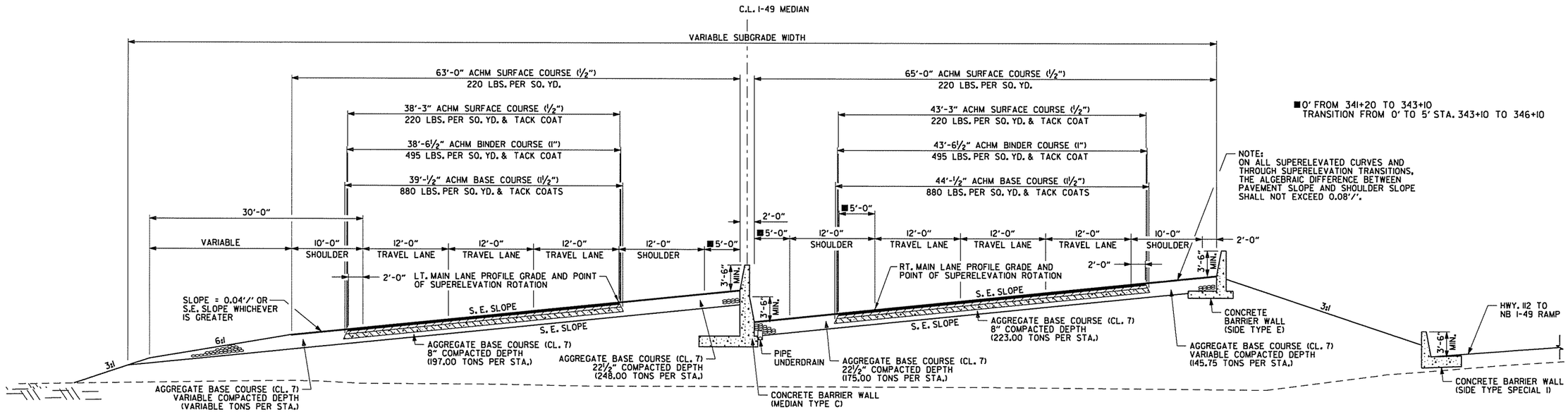

I-49 TYPICAL SUPERELEVATED SECTION

STA. 341+20.00 TO STA. 346+10.00

TYPICAL SECTIONS OF IMPROVEMENT

AEWierdak 3/20/2016 11:51:26 AM
WORKSPACE: AHTD
L:\20II\II07707 - I-540 Widening & Interchange Improvement\Drawings\rBB0414_TS_ALL.dgn
REVISED DATE:

DATE REVISED	DATE FILMED	DATE REVISED	DATE FILMED	FED.RD. DIST.NO.	STATE	FED.AID PROJ.NO.	SHEET NO.	TOTAL SHEETS
				6	ARK.			
				JOB NO.		BB0414	14	886

(2) TYPICAL SECTIONS OF IMPROVEMENT

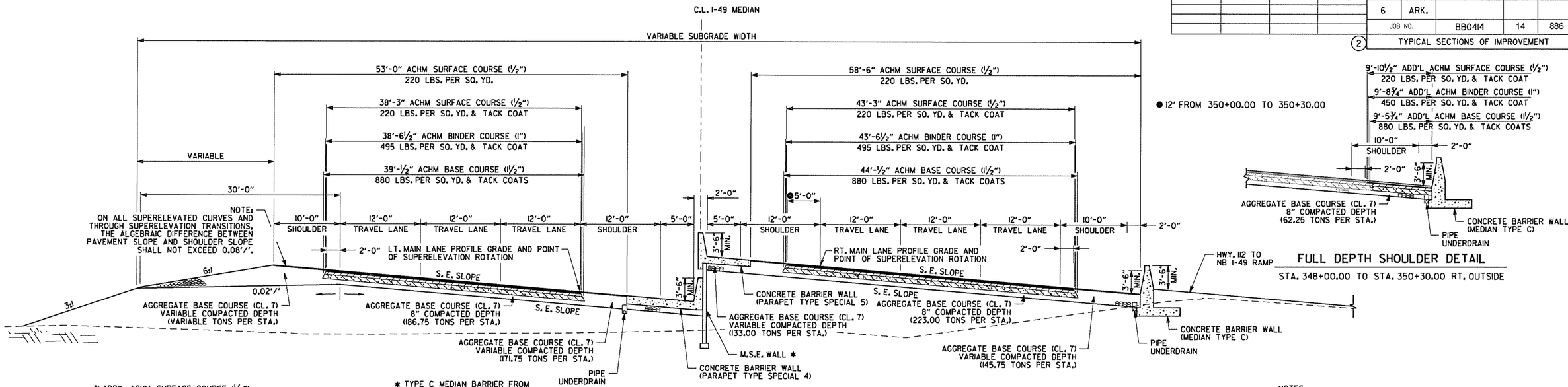

I-49 TYPICAL SUPERELEVATED SECTION

STA. 346+10.00 TO STA. 350+30.00

FULL DEPTH SHOULDER DETAIL

STA. 348+00.00 TO STA. 350+30.00 RT. OUTSIDE

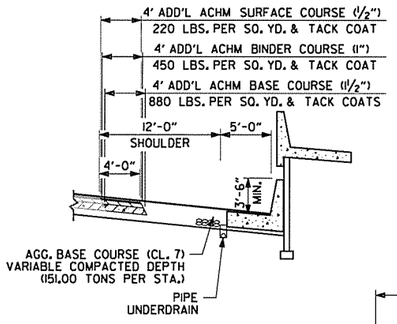

FULL DEPTH SHOULDER DETAIL

STA. 352+00 TO STA. 352+86.42 INSIDE LT.

NOTES:

REFER TO CROSS SECTIONS FOR DEVIATION FROM THE NORMAL SLOPES. NO CHANGES SHALL BE MADE FROM THE PLANNED SLOPES WITHOUT THE APPROVAL OF THE ENGINEER.

THE THICKNESS OF AGGREGATE BASE COURSE SHALL BE WITHIN PLUS OR MINUS ONE INCH OF THE PLAN THICKNESS SHOWN. THE CONTRACTOR WILL CORRECT ANY DEFICIENT THICKNESS THAT DOES NOT MEET TOLERANCE INDICATED. PAYMENT WILL NOT BE MADE FOR MATERIAL PLACED IN EXCESS OF THE TOLERANCE INDICATED.

THE FINAL 2" OF SURFACE COURSE IS TO BE PLACED AFTER ALL OTHER COURSES HAVE BEEN LAID. LONGITUDINAL JOINTS SHALL BE AT LANE LINES.

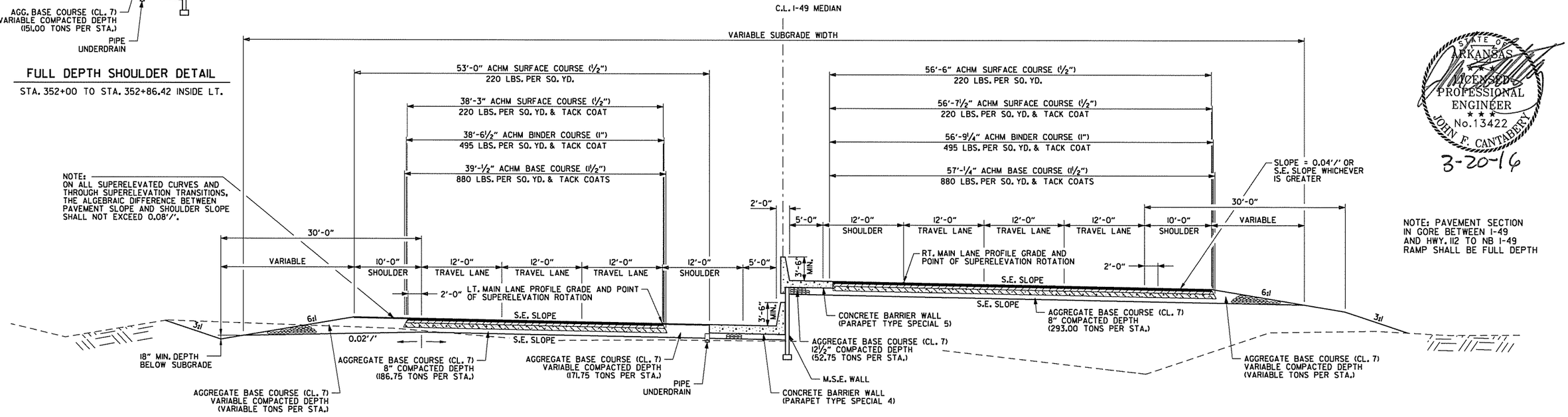

I-49 TYPICAL SUPERELEVATED SECTION

STA. 350+30.00 TO STA. 352+86.42

NOTE: PAVEMENT SECTION IN GORE BETWEEN I-49 AND HWY. 112 TO NB I-49 RAMP SHALL BE FULL DEPTH

STATE OF ARKANSAS
LICENSED PROFESSIONAL ENGINEER
No. 13422
JOHN F. CANTABERY
3-20-16

TYPICAL SECTIONS OF IMPROVEMENT

AEWierclok 3/20/2016 11:51:27 AM
WORKSPACE: AHTD
L:\2011\101707 - I-540 Widening & Interchange Improvement\Drawings\r-BB0414_TS_ALL.dgn
REVISED DATE:

DATE REVISED	DATE FILMED	DATE REVISED	DATE FILMED	FED.RD. DIST.NO.	STATE	FED.AID PROJ.NO.	SHEET NO.	TOTAL SHEETS
				6	ARK.			
				JOB NO.		BB0414	15	886

(2) TYPICAL SECTIONS OF IMPROVEMENT

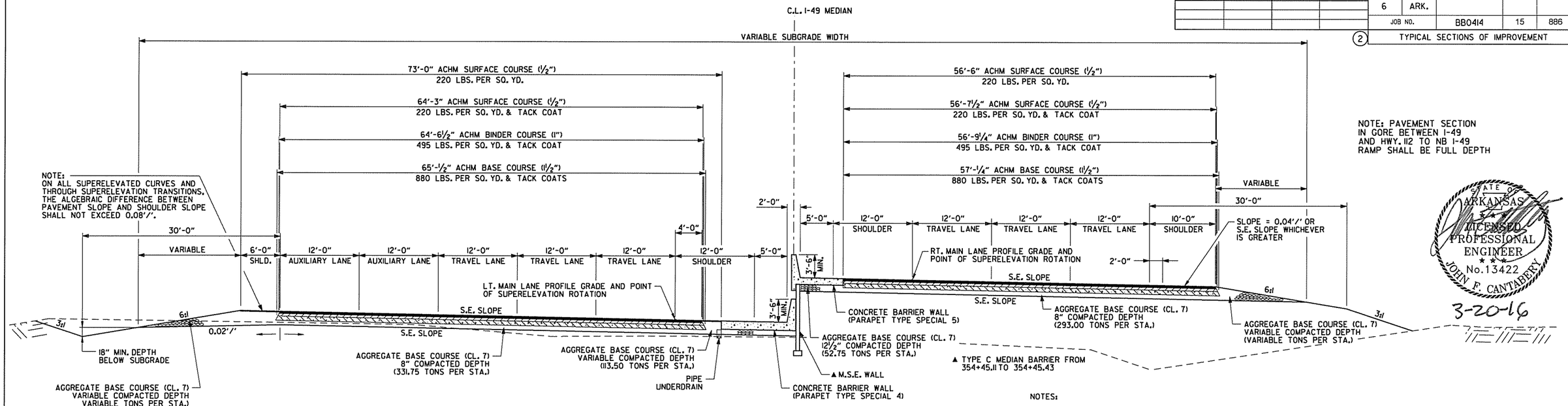

I-49 TYPICAL SUPERELEVATED SECTION

STA. 352+86.42 TO STA. 354+52.43

NOTE: PAVEMENT SECTION IN GORE BETWEEN I-49 AND HWY. 112 TO NB I-49 RAMP SHALL BE FULL DEPTH

STATE OF ARKANSAS LICENSED PROFESSIONAL ENGINEER No.13422 JOHN F. CANTABERY 3-20-16

NOTES:

REFER TO CROSS SECTIONS FOR DEVIATION FROM THE NORMAL SLOPES. NO CHANGES SHALL BE MADE FROM THE PLANNED SLOPES WITHOUT THE APPROVAL OF THE ENGINEER.

THE THICKNESS OF AGGREGATE BASE COURSE SHALL BE WITHIN PLUS OR MINUS ONE INCH OF THE PLAN THICKNESS SHOWN. THE CONTRACTOR WILL CORRECT ANY DEFICIENT THICKNESS THAT DOES NOT MEET TOLERANCE INDICATED. PAYMENT WILL NOT BE MADE FOR MATERIAL PLACED IN EXCESS OF THE TOLERANCE INDICATED.

ASPHALT FOR LEVELING OF EXISTING PAVEMENT SHALL BE PLACED ONLY IF AND WHERE DIRECTED BY THE ENGINEER. CALCULATIONS FOR THE AMOUNT OF LEVELING AND/OR LEVELING OPERATIONS SHALL BE PERFORMED BEFORE CONSTRUCTING NOTCH AND WIDENING. CALCULATIONS WILL NOT BE PAID FOR DIRECTLY, BUT PAYMENT WILL BE CONSIDERED INCLUDED IN THE VARIOUS PAY ITEMS.

THE FINAL 2" OF SURFACE COURSE IS TO BE PLACED AFTER ALL OTHER COURSES HAVE BEEN LAID. LONGITUDINAL JOINTS SHALL BE AT LANE LINES.

THE EXISTING ASPHALT PAVEMENT TO BE REMOVED FROM THE REMAINING PAVEMENT SHALL BE SEPARATED BY SAWING ALONG A NEAT LINE. AFTER SAWING, THE PAVEMENT TO BE REMOVED SHALL BE CAREFULLY REMOVED IN A MANNER THAT WILL NOT DAMAGE THE PAVEMENT THAT IS TO REMAIN. ANY DAMAGE OF THE ASPHALT PAVEMENT THAT IS TO REMAIN IN PLACE SHALL BE REPAIRED AT THE CONTRACTOR'S EXPENSE.

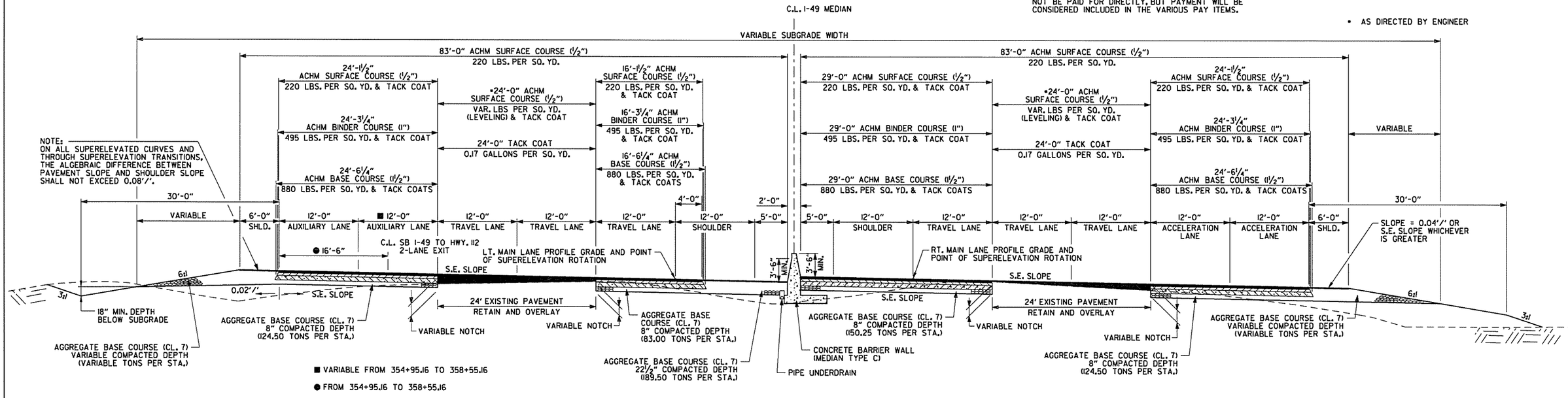

■ VARIABLE FROM 354+95.16 TO 358+55.16

● FROM 354+95.16 TO 358+55.16

I-49 TYPICAL SUPERELEVATED SECTION

STA. 354+52.43 TO STA. 358+55.16

TYPICAL SECTIONS OF IMPROVEMENT

AEWier-clark 3/20/2016 11:51:27 AM
WORKSPACE: AHTD
L:\20IN\01\707 - I-540 Widening & Interchange Improvement\Drawings\rBB0414_TS_ALL.dgn
REVISED DATE:

DATE REVISED	DATE FILMED	DATE REVISED	DATE FILMED	FED.RD. DIST.NO.	STATE	FED.AID PROJ.NO.	SHEET NO.	TOTAL SHEETS
				6	ARK.			
				JOB NO.		BB0414	16	886

(2) TYPICAL SECTIONS OF IMPROVEMENT

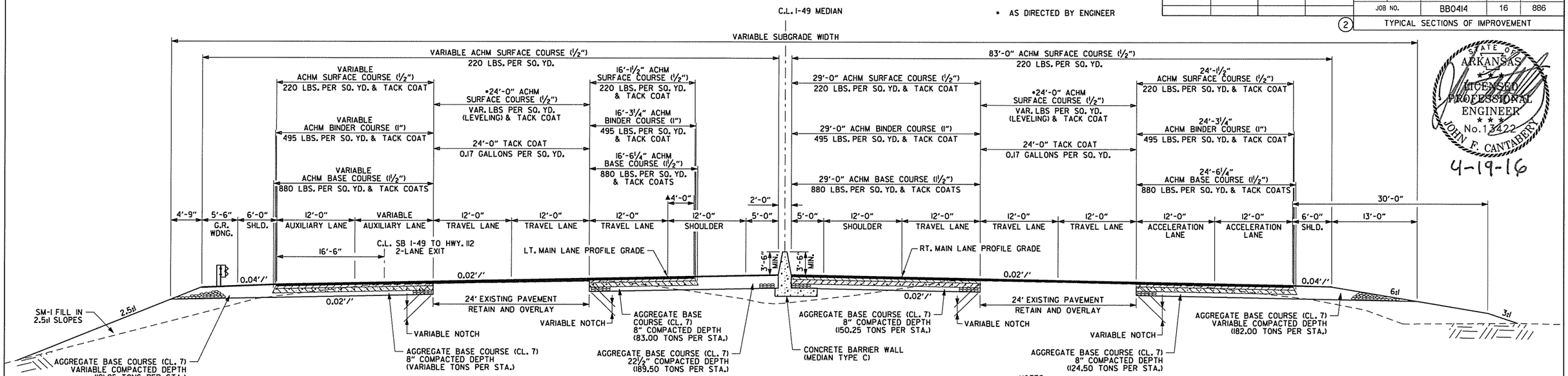

▲ 17' FROM 359+00 TO 362+36.71

I-49 TYPICAL SECTION

STA. 358+55.16 TO STA. 362+36.71

NOTE:

SEPARATE PROFILE GRADES END AT STA. 358+75.00.

• AS DIRECTED BY ENGINEER

NOTES:

REFER TO CROSS SECTIONS FOR DEVIATION FROM THE NORMAL SLOPES. NO CHANGES SHALL BE MADE FROM THE PLANNED SLOPES WITHOUT THE APPROVAL OF THE ENGINEER.

THE THICKNESS OF AGGREGATE BASE COURSE SHALL BE WITHIN PLUS OR MINUS ONE INCH OF THE PLAN THICKNESS SHOWN. THE CONTRACTOR WILL CORRECT ANY DEFICIENT THICKNESS THAT DOES NOT MEET TOLERANCE INDICATED. PAYMENT WILL NOT BE MADE FOR MATERIAL PLACED IN EXCESS OF THE TOLERANCE INDICATED.

ASPHALT FOR LEVELING OF EXISTING PAVEMENT SHALL BE PLACED ONLY IF AND WHERE DIRECTED BY THE ENGINEER. CALCULATIONS FOR THE AMOUNT OF LEVELING AND/OR LEVELING OPERATIONS SHALL BE PERFORMED BEFORE CONSTRUCTING NOTCH AND WIDENING. CALCULATIONS WILL NOT BE PAID FOR DIRECTLY, BUT PAYMENT WILL BE CONSIDERED INCLUDED IN THE VARIOUS PAY ITEMS.

THE FINAL 2" OF SURFACE COURSE IS TO BE PLACED AFTER ALL OTHER COURSES HAVE BEEN LAID. LONGITUDINAL JOINTS SHALL BE AT LANE LINES.

THE EXISTING ASPHALT PAVEMENT TO BE REMOVED FROM THE REMAINING PAVEMENT SHALL BE SEPARATED BY SAWING ALONG A NEAT LINE. AFTER SAWING, THE PAVEMENT TO BE REMOVED SHALL BE CAREFULLY REMOVED IN A MANNER THAT WILL NOT DAMAGE THE PAVEMENT THAT IS TO REMAIN. ANY DAMAGE OF THE ASPHALT PAVEMENT THAT IS TO REMAIN IN PLACE SHALL BE REPAIRED AT THE CONTRACTOR'S EXPENSE.

STATE OF ARKANSAS LICENSED PROFESSIONAL ENGINEER JOHN F. CANTAFERRY No. 13422 4-19-16

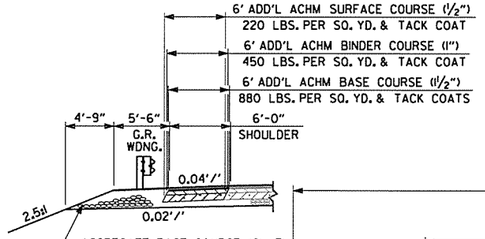

SHOULDER WIDENING DETAIL

STA. 359+25.00 TO STA. 364+00.00 OUTSIDE LT.

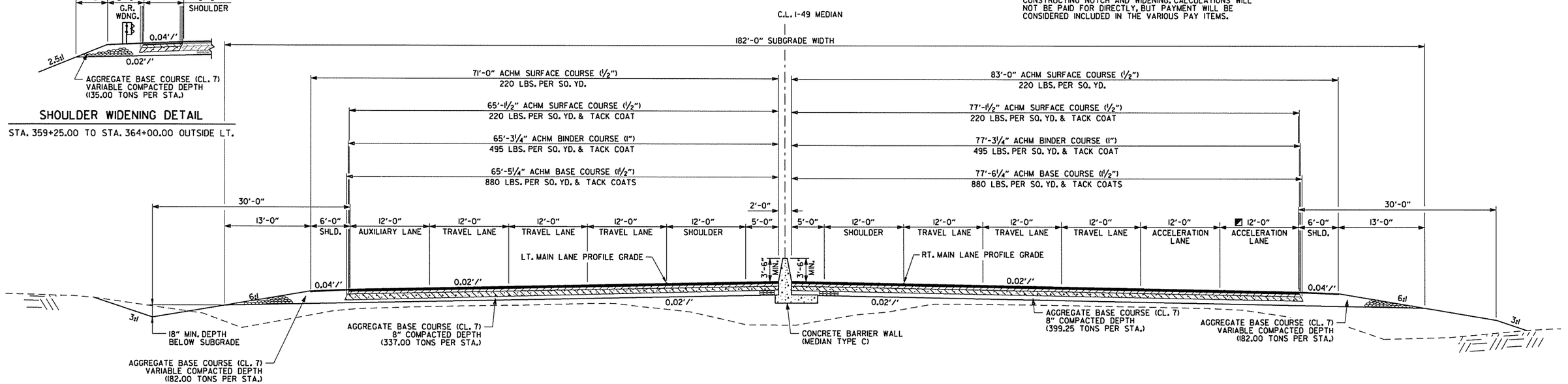

I-49 TYPICAL SECTION

STA. 362+36.71 TO STA. 364+32.92 LT. LANES
STA. 366+51.36 TO STA. 368+70.03 LT. LANES
STA. 362+86.42 TO STA. 363+82.91 RT. LANES
STA. 366+07.60 TO STA. 368+70.03 RT. LANES

■ TRANSITION ACCELERATION LANE STRIPING FROM 12' AT STA. 363+52.43 TO 0' AT STA. 366+52.43

TRANSITION ACCELERATION LANE PAVING FROM 12' AT STA. 365+70.03 TO 0' AT STA. 368+70.03

TYPICAL SECTIONS OF IMPROVEMENT

AEWercloh 4/14/2016 2:30:02 PM
WORKSPACE: AHTD
L:\20IN\10\7\07 - I-540 Widening & Interchange Improvement\Drawings\r-BB0414_TS_ALL.dgn
REVISED DATE:

DATE REVISED	DATE FILMED	DATE REVISED	DATE FILMED	FED.RD. DIST.NO.	STATE	FED.AID PROJ.NO.	SHEET NO.	TOTAL SHEETS
				6	ARK.			
				JOB NO.		BB0414	17	886

(2) TYPICAL SECTIONS OF IMPROVEMENT

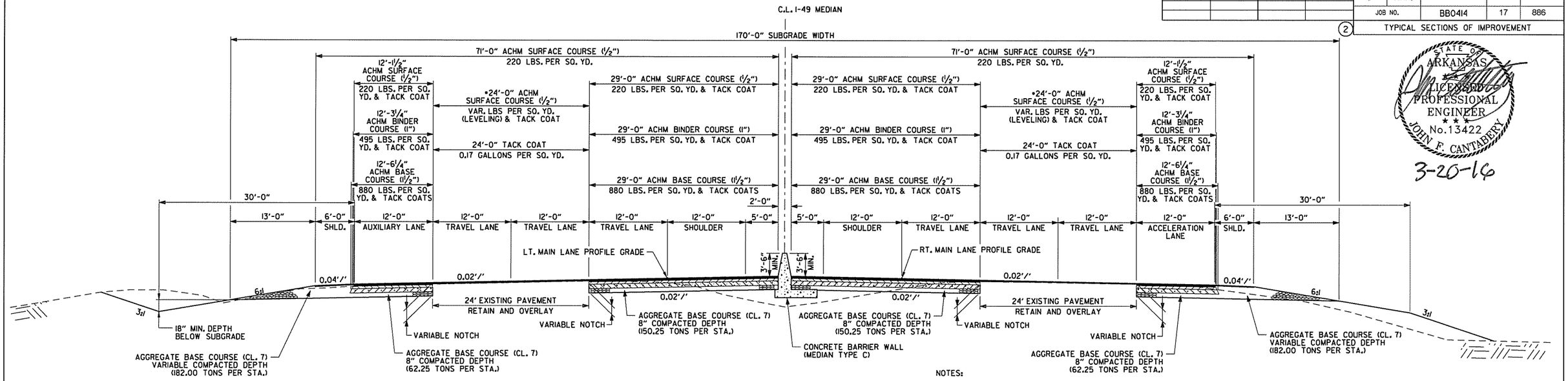

I-49 TYPICAL SECTION

STA. 368+70.03 TO STA. 369+00.00

NOTES:

REFER TO CROSS SECTIONS FOR DEVIATION FROM THE NORMAL SLOPES. NO CHANGES SHALL BE MADE FROM THE PLANNED SLOPES WITHOUT THE APPROVAL OF THE ENGINEER.

THE THICKNESS OF AGGREGATE BASE COURSE SHALL BE WITHIN PLUS OR MINUS ONE INCH OF THE PLAN THICKNESS SHOWN. THE CONTRACTOR WILL CORRECT ANY DEFICIENT THICKNESS THAT DOES NOT MEET TOLERANCE INDICATED. PAYMENT WILL NOT BE MADE FOR MATERIAL PLACED IN EXCESS OF THE TOLERANCE INDICATED.

ASPHALT FOR LEVELING OF EXISTING PAVEMENT SHALL BE PLACED ONLY IF AND WHERE DIRECTED BY THE ENGINEER. CALCULATIONS FOR THE AMOUNT OF LEVELING AND/OR LEVELING OPERATIONS SHALL BE PERFORMED BEFORE CONSTRUCTING NOTCH AND WIDENING. CALCULATIONS WILL NOT BE PAID FOR DIRECTLY, BUT PAYMENT WILL BE CONSIDERED INCLUDED IN THE VARIOUS PAY ITEMS.

THE FINAL 2" OF SURFACE COURSE IS TO BE PLACED AFTER ALL OTHER COURSES HAVE BEEN LAID. LONGITUDINAL JOINTS SHALL BE AT LANE LINES.

THE EXISTING ASPHALT PAVEMENT TO BE REMOVED FROM THE REMAINING PAVEMENT SHALL BE SEPARATED BY SAWING ALONG A NEAT LINE. AFTER SAWING, THE PAVEMENT TO BE REMOVED SHALL BE CAREFULLY REMOVED IN A MANNER THAT WILL NOT DAMAGE THE PAVEMENT THAT IS TO REMAIN. ANY DAMAGE OF THE ASPHALT PAVEMENT THAT IS TO REMAIN IN PLACE SHALL BE REPAIRED AT THE CONTRACTOR'S EXPENSE.

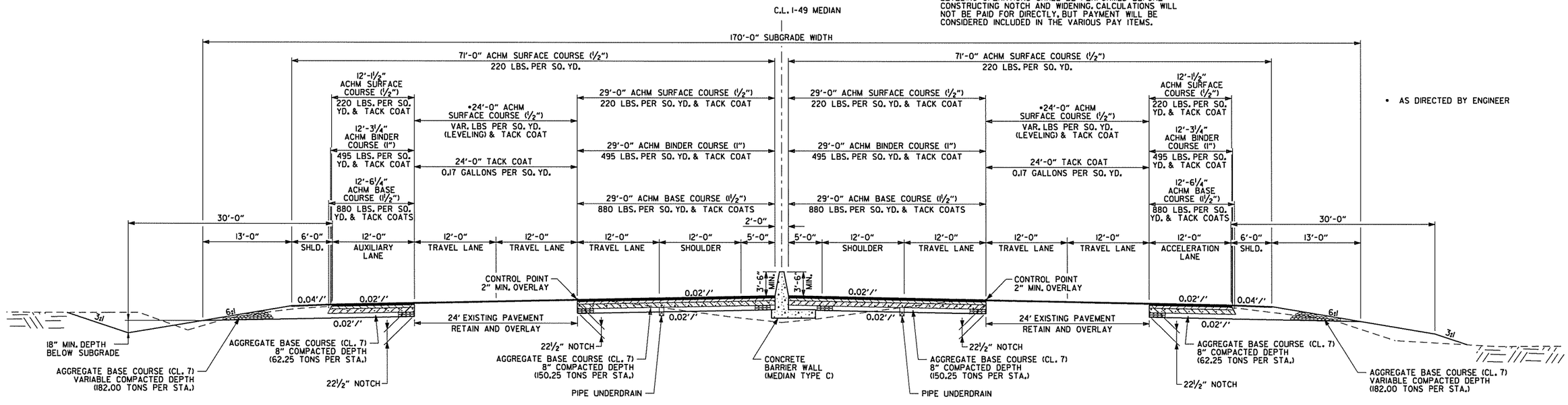

I-49 TYPICAL NOTCH AND WIDEN SECTION

STA. 369+00.00 TO STA. 369+36.58

TYPICAL SECTIONS OF IMPROVEMENT

AEWierciak 3/20/2016 11:51:28 AM
WORKSPACE: AHTD
L:\20INV\01707 - I-540 Widening & Interchange Improvement\Drawings\rBB0414_TS_ALL.dgn
REVISED DATE:

DATE REVISED	DATE FILMED	DATE REVISED	DATE FILMED	FED.RD. DIST.NO.	STATE	FED.AID PROJ.NO.	SHEET NO.	TOTAL SHEETS
				6	ARK.			
				JOB NO.		BB0414	18	886

(2) TYPICAL SECTIONS OF IMPROVEMENT

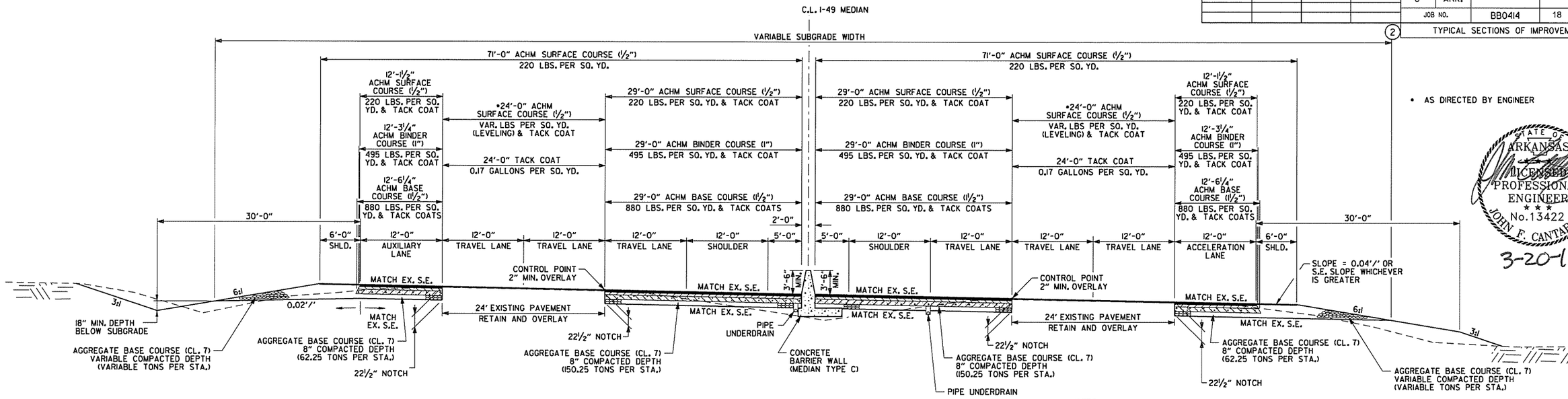

I-49 SUPERELEVATED NOTCH AND WIDEN SECTION

STA. 369+36.58 TO STA. 370+30.00

NOTES:

REFER TO CROSS SECTIONS FOR DEVIATION FROM THE NORMAL SLOPES. NO CHANGES SHALL BE MADE FROM THE PLANNED SLOPES WITHOUT THE APPROVAL OF THE ENGINEER.

THE THICKNESS OF AGGREGATE BASE COURSE SHALL BE WITHIN PLUS OR MINUS ONE INCH OF THE PLAN THICKNESS SHOWN. THE CONTRACTOR WILL CORRECT ANY DEFICIENT THICKNESS THAT DOES NOT MEET TOLERANCE INDICATED. PAYMENT WILL NOT BE MADE FOR MATERIAL PLACED IN EXCESS OF THE TOLERANCE INDICATED.

ASPHALT FOR LEVELING OF EXISTING PAVEMENT SHALL BE PLACED ONLY IF AND WHERE DIRECTED BY THE ENGINEER. CALCULATIONS FOR THE AMOUNT OF LEVELING AND/OR LEVELING OPERATIONS SHALL BE PERFORMED BEFORE CONSTRUCTING NOTCH AND WIDENING. CALCULATIONS WILL NOT BE PAID FOR DIRECTLY, BUT PAYMENT WILL BE CONSIDERED INCLUDED IN THE VARIOUS PAY ITEMS.

THE FINAL 2" OF SURFACE COURSE IS TO BE PLACED AFTER ALL OTHER COURSES HAVE BEEN LAID. LONGITUDINAL JOINTS SHALL BE AT LANE LINES.

THE EXISTING ASPHALT PAVEMENT TO BE REMOVED FROM THE REMAINING PAVEMENT SHALL BE SEPARATED BY SAWING ALONG A NEAT LINE. AFTER SAWING, THE PAVEMENT TO BE REMOVED SHALL BE CAREFULLY REMOVED IN A MANNER THAT WILL NOT DAMAGE THE PAVEMENT THAT IS TO REMAIN. ANY DAMAGE OF THE ASPHALT PAVEMENT THAT IS TO REMAIN IN PLACE SHALL BE REPAIRED AT THE CONTRACTOR'S EXPENSE.

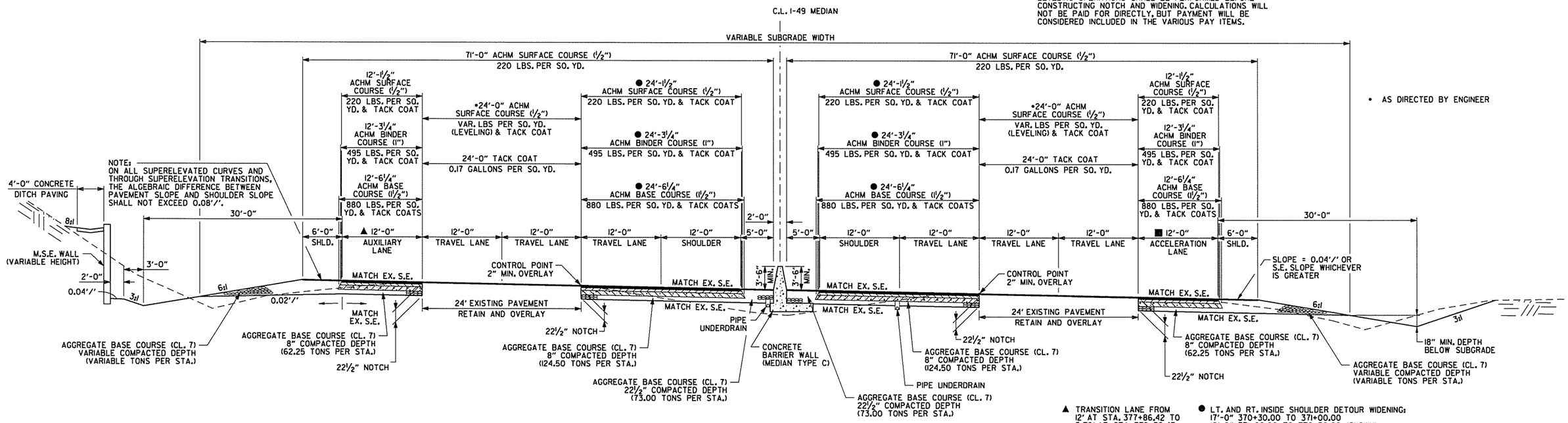

I-49 SUPERELEVATED NOTCH AND WIDEN SECTION

STA. 370+30.00 TO STA. 379+52.43

▲ TRANSITION LANE FROM 12' AT STA. 377+86.42 TO 5.36' AT STA. 379+52.43

■ TRANSITION LANE FROM 12' AT STA. 376+52.43 TO 0' AT STA. 379+52.43

● LT. AND RT. INSIDE SHOULDER DETOUR WIDENING:
17'-0" 370+30.00 TO 371+00.00
12'-0" 371+00.00 TO 376+50.00 (SHOWN)
0'-0" 376+50.00 TO 379+52.43

TYPICAL SECTIONS OF IMPROVEMENT

AEWierclok 3/20/2016 11:51:28 AM
WORKSPACE: AHTD
L:\2014\101707 - I-540 Widening & Interchange Improvement\Drawings\rBB0414_TS_ALL.dgn
REVISED DATE:

DATE REVISED	DATE FILMED	DATE REVISED	DATE FILMED	FED.RD. DIST.NO.	STATE	FED.AID PROJ.NO.	SHEET NO.	TOTAL SHEETS
				6	ARK.			
				JOB NO.		BB0414	19	886

(2) TYPICAL SECTIONS OF IMPROVEMENT

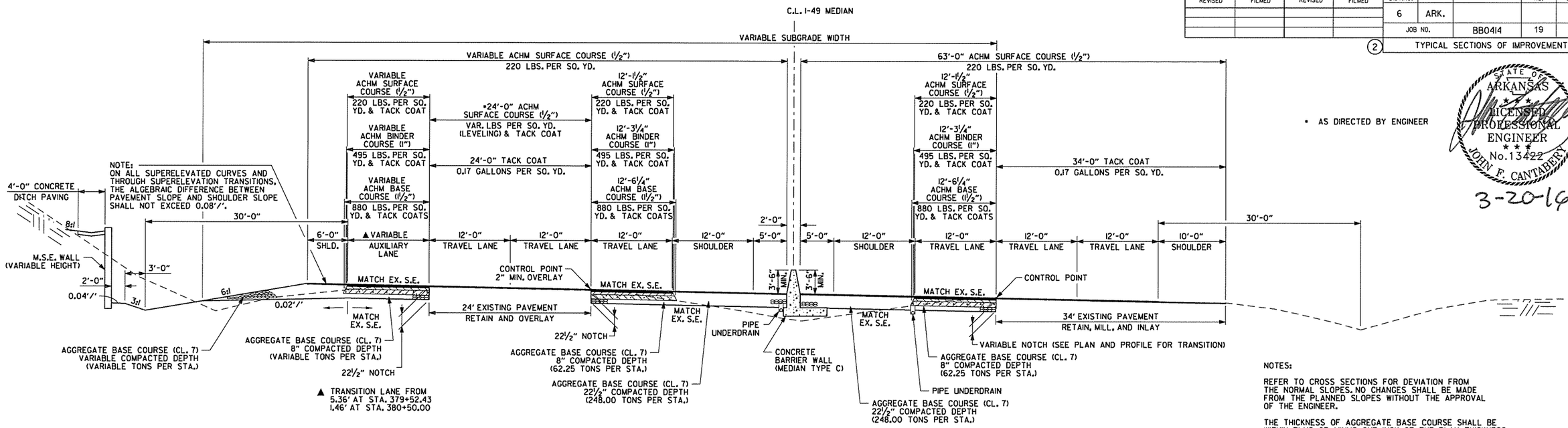

I-49 SUPERELEVATED NOTCH AND WIDEN SECTION

STA. 379+52.43 TO STA. 380+50.00

• AS DIRECTED BY ENGINEER

STATE OF ARKANSAS LICENSED PROFESSIONAL ENGINEER No.13422 JOHN F. CANTABERY

3-20-16

NOTES:

REFER TO CROSS SECTIONS FOR DEVIATION FROM THE NORMAL SLOPES. NO CHANGES SHALL BE MADE FROM THE PLANNED SLOPES WITHOUT THE APPROVAL OF THE ENGINEER.

THE THICKNESS OF AGGREGATE BASE COURSE SHALL BE WITHIN PLUS OR MINUS ONE INCH OF THE PLAN THICKNESS SHOWN. THE CONTRACTOR WILL CORRECT ANY DEFICIENT THICKNESS THAT DOES NOT MEET TOLERANCE INDICATED. PAYMENT WILL NOT BE MADE FOR MATERIAL PLACED IN EXCESS OF THE TOLERANCE INDICATED.

ASPHALT FOR LEVELING OF EXISTING PAVEMENT SHALL BE PLACED ONLY IF AND WHERE DIRECTED BY THE ENGINEER. CALCULATIONS FOR THE AMOUNT OF LEVELING AND/OR LEVELING OPERATIONS SHALL BE PERFORMED BEFORE CONSTRUCTING NOTCH AND WIDENING. CALCULATIONS WILL NOT BE PAID FOR DIRECTLY, BUT PAYMENT WILL BE CONSIDERED INCLUDED IN THE VARIOUS PAY ITEMS.

THE FINAL 2" OF SURFACE COURSE IS TO BE PLACED AFTER ALL OTHER COURSES HAVE BEEN LAID. LONGITUDINAL JOINTS SHALL BE AT LANE LINES.

THE EXISTING ASPHALT PAVEMENT TO BE REMOVED FROM THE REMAINING PAVEMENT SHALL BE SEPARATED BY SAWING ALONG A NEAT LINE. AFTER SAWING, THE PAVEMENT TO BE REMOVED SHALL BE CAREFULLY REMOVED IN A MANNER THAT WILL NOT DAMAGE THE PAVEMENT THAT IS TO REMAIN. ANY DAMAGE OF THE ASPHALT PAVEMENT THAT IS TO REMAIN IN PLACE SHALL BE REPAIRED AT THE CONTRACTOR'S EXPENSE.

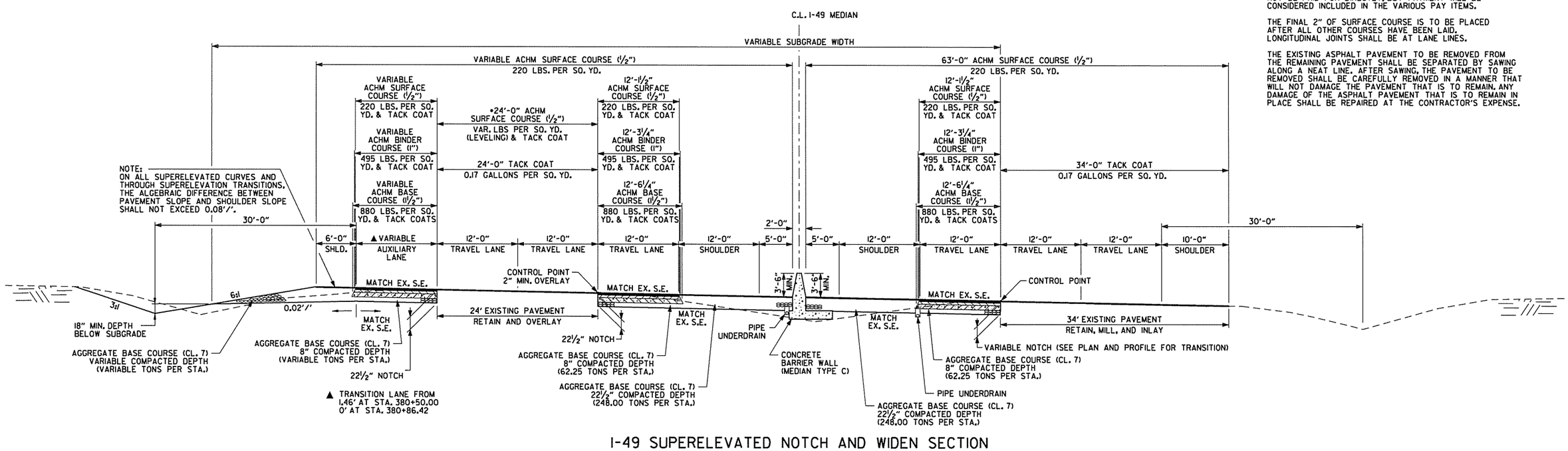

I-49 SUPERELEVATED NOTCH AND WIDEN SECTION

STA. 380+50.00 TO STA. 380+86.42

TYPICAL SECTIONS OF IMPROVEMENT

AEWierciak 3/20/2016 11:51:28 AM
WORKSPACE: AHTD
L:\2016\16017707 - I-540 Widening & Interchange Improvement\Drawings\rBB0414_TS_ALL.dgn
REVISED DATE:

DATE REVISED	DATE FILMED	DATE REVISED	DATE FILMED	FED.RD. DIST.NO.	STATE	FED.AID PROJ.NO.	SHEET NO.	TOTAL SHEETS
				6	ARK.			
				JOB NO.		BB0414	20	886

(2) TYPICAL SECTIONS OF IMPROVEMENT

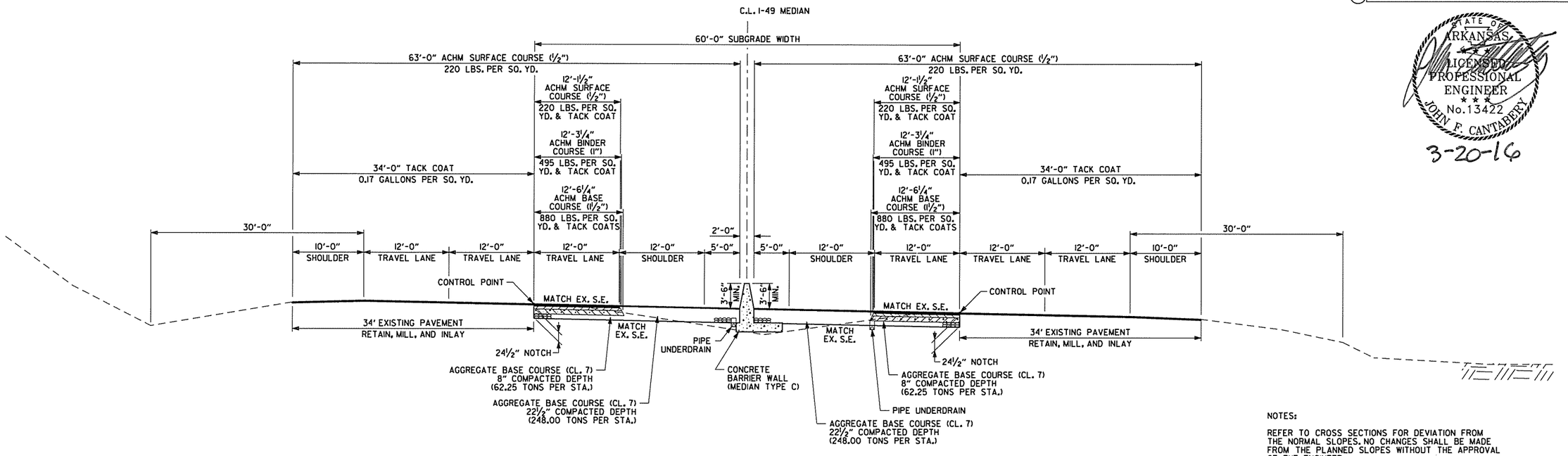

I-49 SUPERELEVATED NOTCH AND WIDEN SECTION

STA. 380+86.42 TO STA. 393+16.01

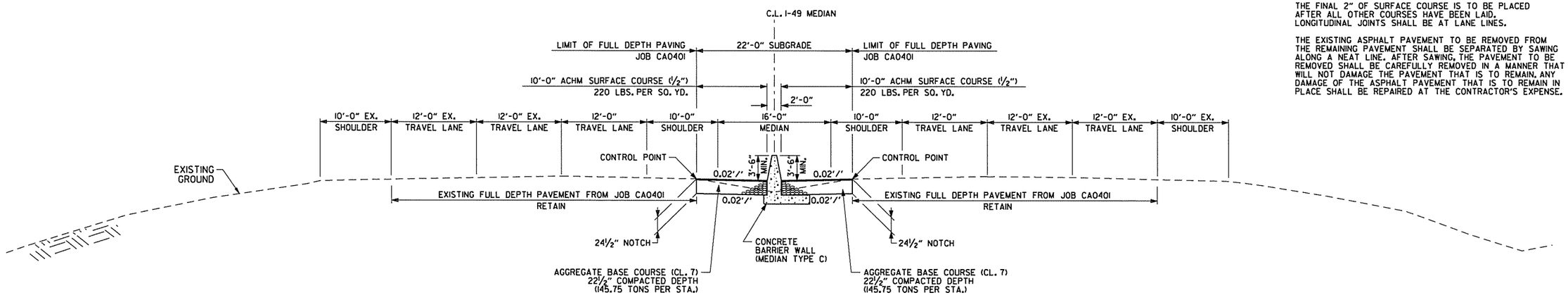

I-49 INSIDE SHOULDER CONSTRUCTION

STA. 393+16.01 TO STA. 393+66.01

NOTES:

REFER TO CROSS SECTIONS FOR DEVIATION FROM THE NORMAL SLOPES. NO CHANGES SHALL BE MADE FROM THE PLANNED SLOPES WITHOUT THE APPROVAL OF THE ENGINEER.

THE THICKNESS OF AGGREGATE BASE COURSE SHALL BE WITHIN PLUS OR MINUS ONE INCH OF THE PLAN THICKNESS SHOWN. THE CONTRACTOR WILL CORRECT ANY DEFICIENT THICKNESS THAT DOES NOT MEET TOLERANCE INDICATED. PAYMENT WILL NOT BE MADE FOR MATERIAL PLACED IN EXCESS OF THE TOLERANCE INDICATED.

ASPHALT FOR LEVELING OF EXISTING PAVEMENT SHALL BE PLACED ONLY IF AND WHERE DIRECTED BY THE ENGINEER. CALCULATIONS FOR THE AMOUNT OF LEVELING AND/OR LEVELING OPERATIONS SHALL BE PERFORMED BEFORE CONSTRUCTING NOTCH AND WIDENING. CALCULATIONS WILL NOT BE PAID FOR DIRECTLY, BUT PAYMENT WILL BE CONSIDERED INCLUDED IN THE VARIOUS PAY ITEMS.

THE FINAL 2" OF SURFACE COURSE IS TO BE PLACED AFTER ALL OTHER COURSES HAVE BEEN LAID. LONGITUDINAL JOINTS SHALL BE AT LANE LINES.

THE EXISTING ASPHALT PAVEMENT TO BE REMOVED FROM THE REMAINING PAVEMENT SHALL BE SEPARATED BY SAWING ALONG A NEAT LINE. AFTER SAWING, THE PAVEMENT TO BE REMOVED SHALL BE CAREFULLY REMOVED IN A MANNER THAT WILL NOT DAMAGE THE PAVEMENT THAT IS TO REMAIN. ANY DAMAGE OF THE ASPHALT PAVEMENT THAT IS TO REMAIN IN PLACE SHALL BE REPAIRED AT THE CONTRACTOR'S EXPENSE.

TYPICAL SECTIONS OF IMPROVEMENT

AEWierciak 3/20/2016 11:51:28 AM
WORKSPACE: AHTD
L:\20IN\00I707 - I-540 Widening & Interchange Improvement\Drawings\rBB0414_TS_ALL.dgn
REVISED DATE:

DATE REVISED	DATE FILMED	DATE REVISED	DATE FILMED	FED.RD. DIST.NO.	STATE	FED.AID PROJ.NO.	SHEET NO.	TOTAL SHEETS
				6	ARK.			
				JOB NO.		BB0414	21	886
				(2)	TYPICAL SECTIONS OF IMPROVEMENT			

DETOUR WIDENING HWY. 112 TO NB I-49 RAMP 289+00 TO 296+00 RT.
CHECK ALSO WIDENING ON EXISTING ON OTHER SIDE.
DETOUR WIDENING C-D RD. STAGE 3/3A LT. WIDENING.

STATE OF ARKANSAS
LICENSED PROFESSIONAL ENGINEER
No. 13422
JOHN F. CANTABERY
3-20-16

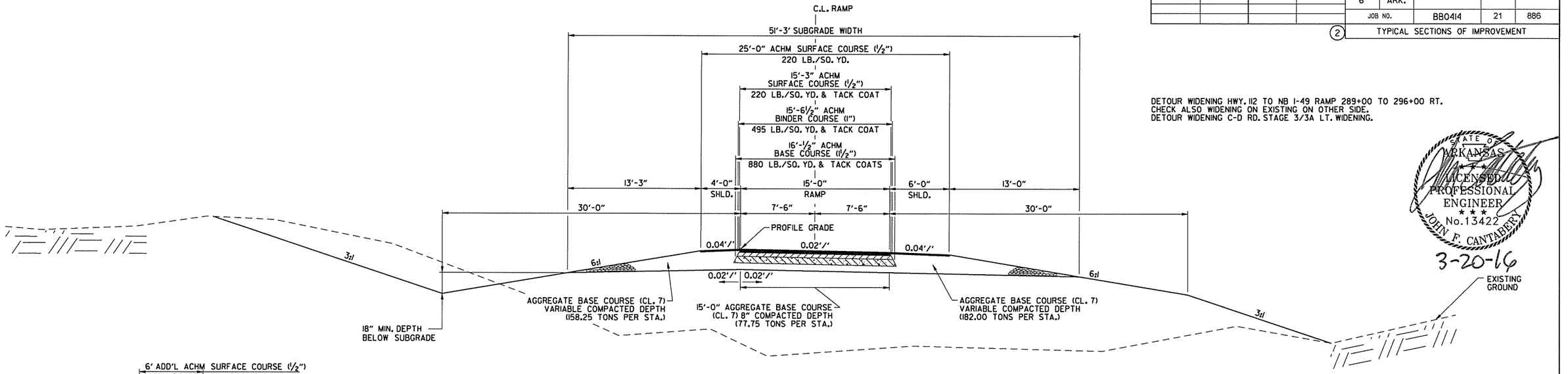

SINGLE LANE RAMP TYPICAL SECTION

(SHOWN IN THE DIRECTION OF TRAFFIC)

HWY. 112 TO NB I-49 RAMP STA. 300+15.56 TO STA. 306+24.59
HWY. 112 TO HWY. 71B RAMP STA. 304+30.21 TO STA. 306+39.22
SB I-49 TO HWY. 112 RAMP STA. 344+75.93 TO STA. 346+06.22
SB I-49 TO HWY. 71B RAMP STA. 338+96.34 TO STA. 339+00.99
COLLECTOR-DISTRIBUTOR RD. STA. 317+20.56 TO STA. 319+06.98

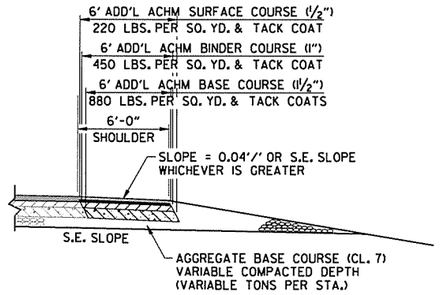

OUTSIDE SHOULDER FULL DEPTH DETAIL - SUPERELEVATED

HWY. 112 RAMP 1 STA. 280+52.42 TO STA. 286+90.00
HWY. 112 RAMP 4 STA. 282+74.25 TO STA. 285+50.00
HWY. 112 TO NB I-49 RAMP STA. 291+68.55 TO STA. 296+00.00
COLLECTOR-DISTRIBUTOR RD. STA. 285+61.04 TO STA. 288+37.46

NOTES:

REFER TO CROSS SECTIONS FOR DEVIATION FROM THE NORMAL SLOPES. NO CHANGES SHALL BE MADE FROM THE PLANNED SLOPES WITHOUT THE APPROVAL OF THE ENGINEER.

THE THICKNESS OF AGGREGATE BASE COURSE SHALL BE WITHIN PLUS OR MINUS ONE INCH OF THE PLAN THICKNESS SHOWN. THE CONTRACTOR WILL CORRECT ANY DEFICIENT THICKNESS THAT DOES NOT MEET TOLERANCE INDICATED. PAYMENT WILL NOT BE MADE FOR MATERIAL PLACED IN EXCESS OF THE TOLERANCE INDICATED.

THE FINAL 2" OF SURFACE COURSE IS TO BE PLACED AFTER ALL OTHER COURSES HAVE BEEN LAID. LONGITUDINAL JOINTS SHALL BE AT LANE LINES.

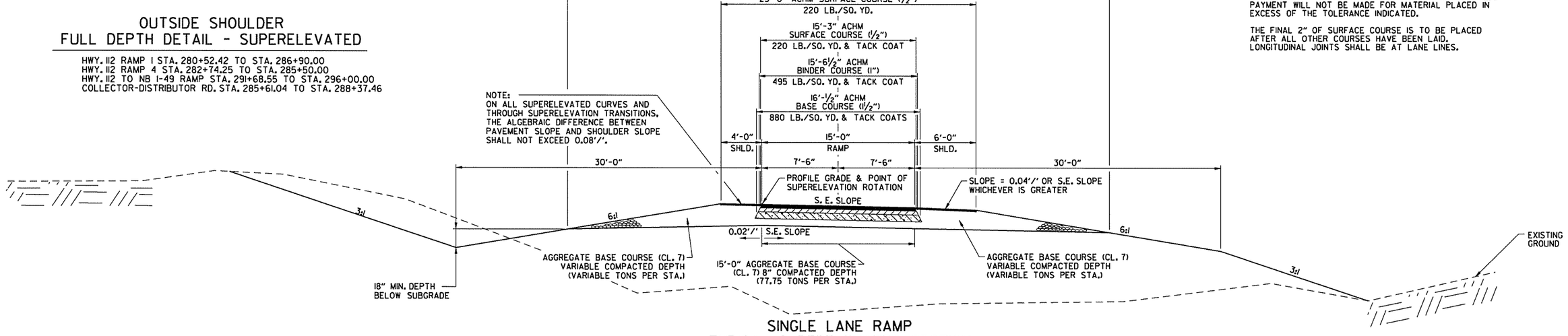

SINGLE LANE RAMP TYPICAL SUPERELEVATED SECTION

(SHOWN IN THE DIRECTION OF TRAFFIC)

HWY. 112 RAMP 1 STA. 280+52.42 TO STA. 286+90.00
HWY. 112 RAMP 4 STA. 282+74.25 TO STA. 285+50.00
HWY. 112 RAMP 4 STA. 296+50.00 TO STA. 298+06.90
SB I-49 TO HWY. 112 RAMP STA. 328+24.05 TO STA. 334+58.94
SB I-49 TO HWY. 112 RAMP STA. 343+00.00 TO STA. 344+75.93
HWY. 112 TO NB I-49 RAMP STA. 291+68.55 TO STA. 300+15.56

HWY. 112 TO NB I-49 RAMP STA. 306+24.59 TO STA. 310+36.62
HWY. 112 TO HWY. 71B RAMP STA. 306+39.22 TO STA. 319+57.61
SB I-49 TO HWY. 71B RAMP STA. 335+50.00 TO STA. 338+96.34
SB I-49 TO HWY. 71B RAMP STA. 339+00.99 TO STA. 346+15.71
COLLECTOR-DISTRIBUTOR RD. STA. 285+61.04 TO STA. 288+37.46
COLLECTOR-DISTRIBUTOR RD. STA. 311+70.00 TO STA. 317+20.56

TYPICAL SECTIONS OF IMPROVEMENT

AEWierdak 3/20/2016 11:51:29 AM
WORKSPACE: AHTD
L:\20II\II0TT07 - I-540 Widening & Interchange Improvement\Drawings\rBB0414_TS_ALL.dgn
REVISED DATE:

DATE REVISED	DATE FILMED	DATE REVISED	DATE FILMED	FED.RD. DIST.NO.	STATE	FED.AID PROJ.NO.	SHEET NO.	TOTAL SHEETS
				6	ARK.			
				JOB NO.		BB0414	22	886
				(2)	TYPICAL SECTIONS OF IMPROVEMENT			

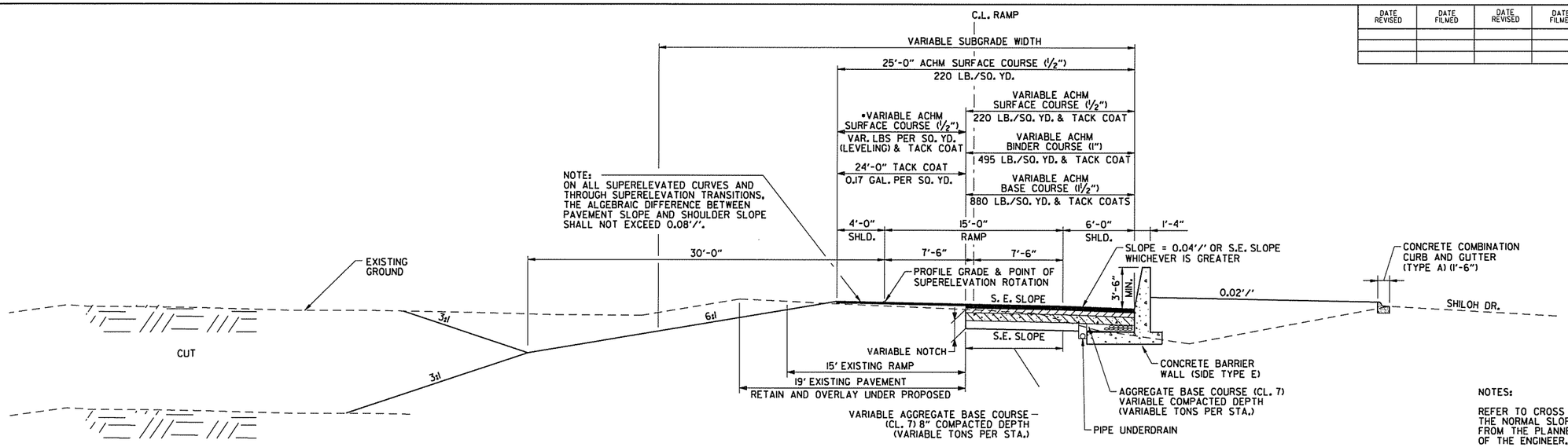

SINGLE LANE RAMP
TYPICAL SUPERELEVATED SECTION WITH BARRIER RT.

(SHOWN IN THE DIRECTION OF TRAFFIC)

HWY. 112 RAMP 4 STA. 280+20.12 TO STA. 282+74.25

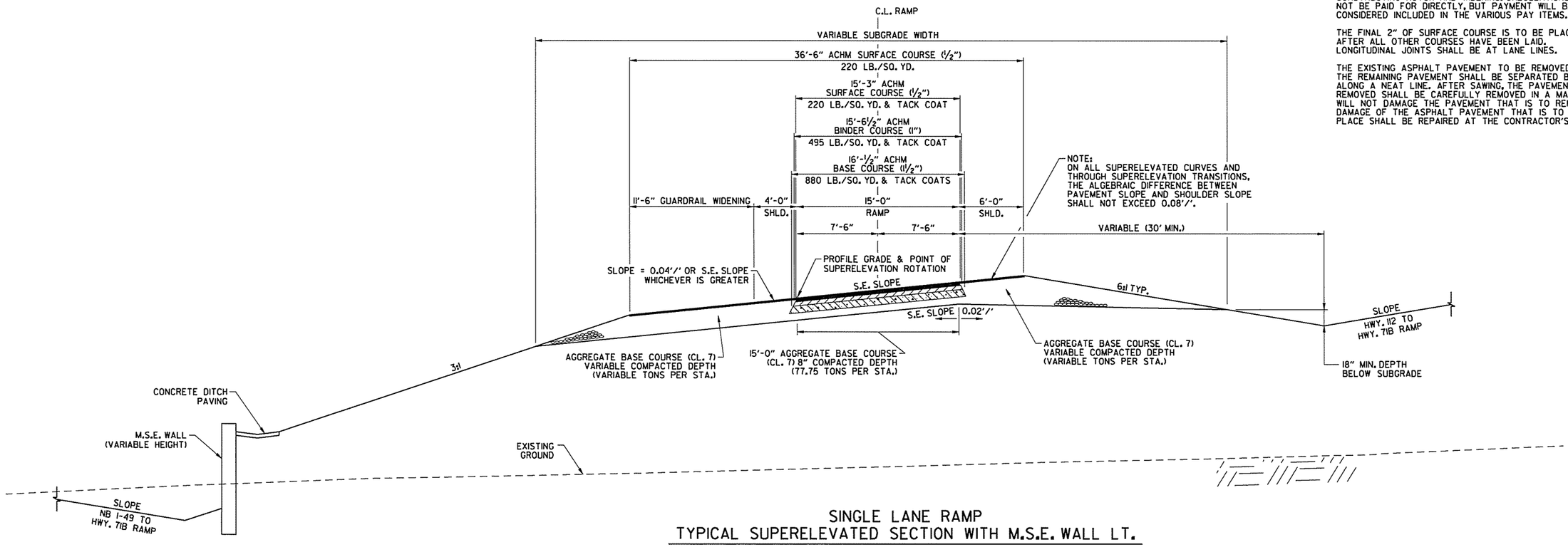

SINGLE LANE RAMP
TYPICAL SUPERELEVATED SECTION WITH M.S.E. WALL LT.

(SHOWN IN THE DIRECTION OF TRAFFIC)

HWY. 112 TO NB I-49 RAMP STA. 310+36.62 TO STA. 311+64.20

NOTES:

REFER TO CROSS SECTIONS FOR DEVIATION FROM THE NORMAL SLOPES. NO CHANGES SHALL BE MADE FROM THE PLANNED SLOPES WITHOUT THE APPROVAL OF THE ENGINEER.

THE THICKNESS OF AGGREGATE BASE COURSE SHALL BE WITHIN PLUS OR MINUS ONE INCH OF THE PLAN THICKNESS SHOWN. THE CONTRACTOR WILL CORRECT ANY DEFICIENT THICKNESS THAT DOES NOT MEET TOLERANCE INDICATED. PAYMENT WILL NOT BE MADE FOR MATERIAL PLACED IN EXCESS OF THE TOLERANCE INDICATED.

ASPHALT FOR LEVELING OF EXISTING PAVEMENT SHALL BE PLACED ONLY IF AND WHERE DIRECTED BY THE ENGINEER. CALCULATIONS FOR THE AMOUNT OF LEVELING AND/OR LEVELING OPERATIONS SHALL BE PERFORMED BEFORE CONSTRUCTING NOTCH AND WIDENING. CALCULATIONS WILL NOT BE PAID FOR DIRECTLY, BUT PAYMENT WILL BE CONSIDERED INCLUDED IN THE VARIOUS PAY ITEMS.

THE FINAL 2" OF SURFACE COURSE IS TO BE PLACED AFTER ALL OTHER COURSES HAVE BEEN LAID. LONGITUDINAL JOINTS SHALL BE AT LANE LINES.

THE EXISTING ASPHALT PAVEMENT TO BE REMOVED FROM THE REMAINING PAVEMENT SHALL BE SEPARATED BY SAWING ALONG A NEAT LINE. AFTER SAWING, THE PAVEMENT TO BE REMOVED SHALL BE CAREFULLY REMOVED IN A MANNER THAT WILL NOT DAMAGE THE PAVEMENT THAT IS TO REMAIN. ANY DAMAGE OF THE ASPHALT PAVEMENT THAT IS TO REMAIN IN PLACE SHALL BE REPAIRED AT THE CONTRACTOR'S EXPENSE.

STATE OF ARKANSAS
LICENSED PROFESSIONAL ENGINEER
No.13422
JOHN F. CANTABERY
3-20-16

AEWierciak 3/20/2016 11:51:29 AM
WORKSPACE: AHTD
L:\20\N\0\1707 - I-540 Widening & Interchange Improvement\Drawings\rBB0414_TS_ALL.dgn
REVISED DATE:

DATE REVISED	DATE FILMED	DATE REVISED	DATE FILMED	FED.RD. DIST.NO.	STATE	FED.AID PROJ.NO.	SHEET NO.	TOTAL SHEETS
				6	ARK.			
				JOB NO.		BB0414	23	886
				(2)	TYPICAL SECTIONS OF IMPROVEMENT			

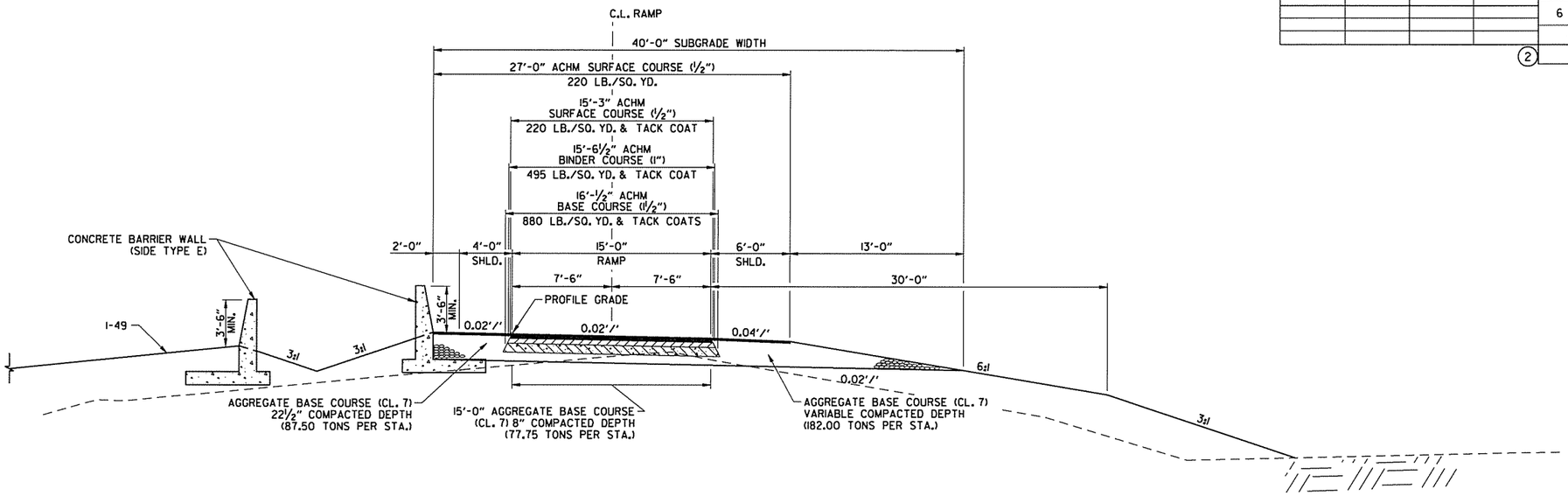

SINGLE LANE RAMP
TYPICAL SECTION WITH BARRIER WALL LT.

(SHOWN IN THE DIRECTION OF TRAFFIC)

HWY. 112 TO NB I-49 RAMP STA. 318+95.23 TO STA. 319+67.50

NOTES:

REFER TO CROSS SECTIONS FOR DEVIATION FROM THE NORMAL SLOPES. NO CHANGES SHALL BE MADE FROM THE PLANNED SLOPES WITHOUT THE APPROVAL OF THE ENGINEER.

THE THICKNESS OF AGGREGATE BASE COURSE SHALL BE WITHIN PLUS OR MINUS ONE INCH OF THE PLAN THICKNESS SHOWN. THE CONTRACTOR WILL CORRECT ANY DEFICIENT THICKNESS THAT DOES NOT MEET TOLERANCE INDICATED. PAYMENT WILL NOT BE MADE FOR MATERIAL PLACED IN EXCESS OF THE TOLERANCE INDICATED.

THE FINAL 2" OF SURFACE COURSE IS TO BE PLACED AFTER ALL OTHER COURSES HAVE BEEN LAID. LONGITUDINAL JOINTS SHALL BE AT LANE LINES.

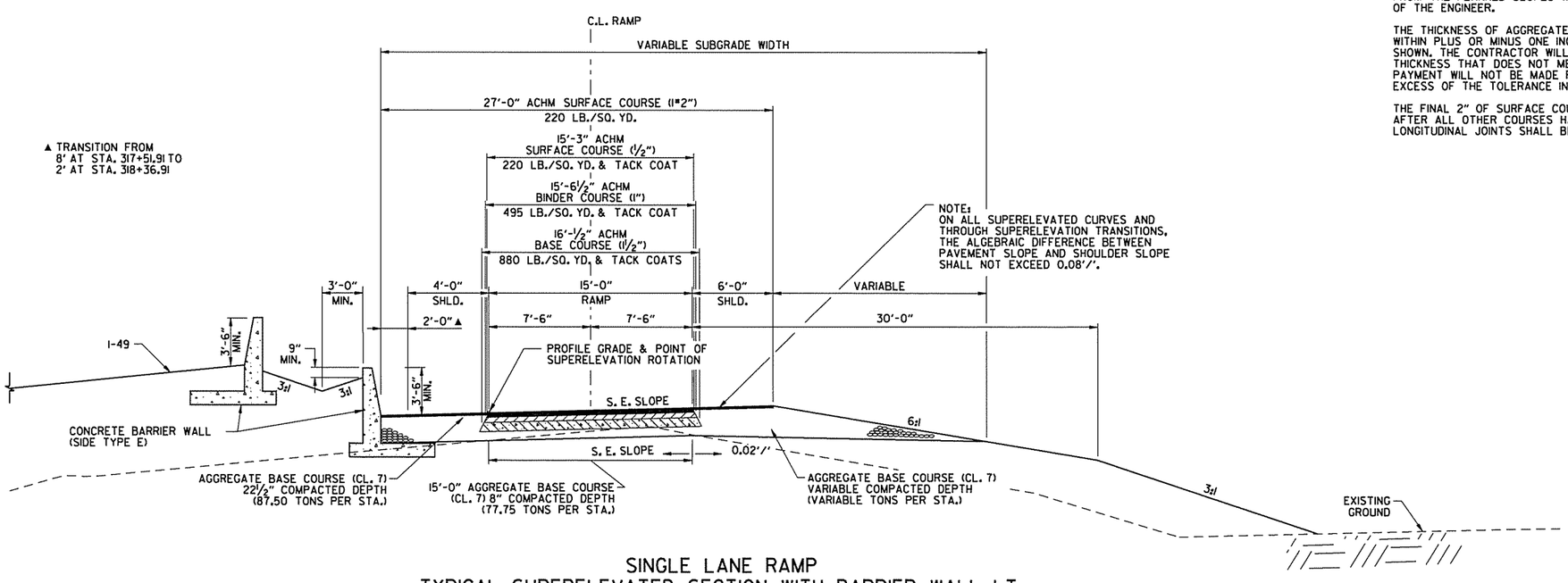

SINGLE LANE RAMP
TYPICAL SUPERELEVATED SECTION WITH BARRIER WALL LT.

(SHOWN IN THE DIRECTION OF TRAFFIC)

HWY. 112 TO NB I-49 RAMP STA. 317+76.83 TO STA. 318+95.23
HWY. 112 TO NB I-49 RAMP STA. 319+67.50 TO STA. 322+87.50

TYPICAL SECTIONS OF IMPROVEMENT

STATE OF ARKANSAS LICENSED PROFESSIONAL ENGINEER No.13422 JOHN F. CANTABERY

3-20-16

AEWierciak 3/20/2016 11:51:29 AM
WORKSPACE: AHTD
L:\20IN\I017107 - I-540 Widening & Interchange Improvement\Drawings\rBB0414_TS_ALL.dgn
REVISED DATE:

DATE REVISED	DATE FILMED	DATE REVISED	DATE FILMED	FED.RD. DIST.NO.	STATE	FED.AID PROJ.NO.	SHEET NO.	TOTAL SHEETS
				6	ARK.			
				JOB NO.		BB0414	24	886
				(2)	TYPICAL SECTIONS OF IMPROVEMENT			

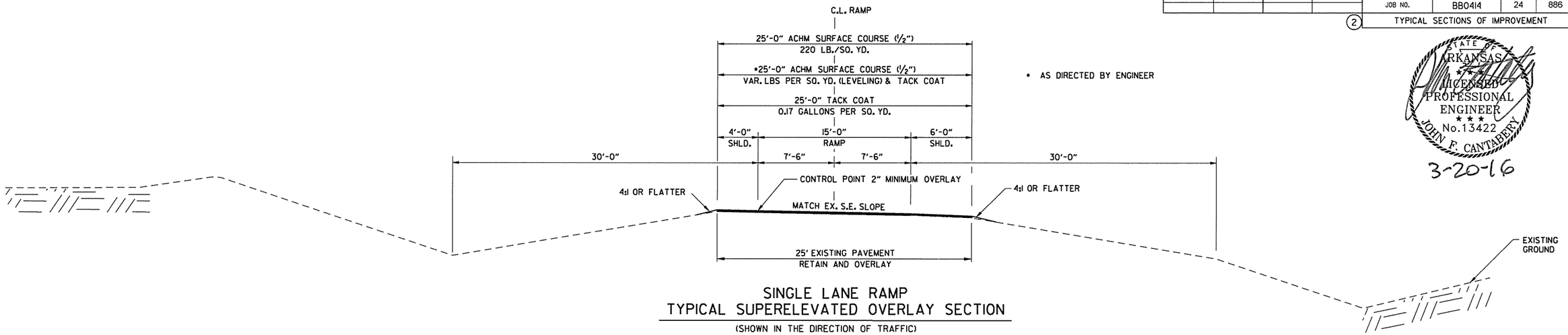

• AS DIRECTED BY ENGINEER

STATE OF ARKANSAS
LICENSED PROFESSIONAL ENGINEER
No.13422
JOHN F. CANTABERY
3-20-16

SINGLE LANE RAMP
TYPICAL SUPERELEVATED OVERLAY SECTION

(SHOWN IN THE DIRECTION OF TRAFFIC)

HWY. 71B TO NB I-49 RAMP STA. 336+00.00 TO STA. 338+57.01

NOTES:

REFER TO CROSS SECTIONS FOR DEVIATION FROM THE NORMAL SLOPES. NO CHANGES SHALL BE MADE FROM THE PLANNED SLOPES WITHOUT THE APPROVAL OF THE ENGINEER.

ASPHALT FOR LEVELING OF EXISTING PAVEMENT SHALL BE PLACED ONLY IF AND WHERE DIRECTED BY THE ENGINEER. CALCULATIONS FOR THE AMOUNT OF LEVELING AND/OR LEVELING OPERATIONS SHALL BE PERFORMED BEFORE CONSTRUCTING NOTCH AND WIDENING. CALCULATIONS WILL NOT BE PAID FOR DIRECTLY, BUT PAYMENT WILL BE CONSIDERED INCLUDED IN THE VARIOUS PAY ITEMS.

THE FINAL 2" OF SURFACE COURSE IS TO BE PLACED AFTER ALL OTHER COURSES HAVE BEEN LAID. LONGITUDINAL JOINTS SHALL BE AT LANE LINES.

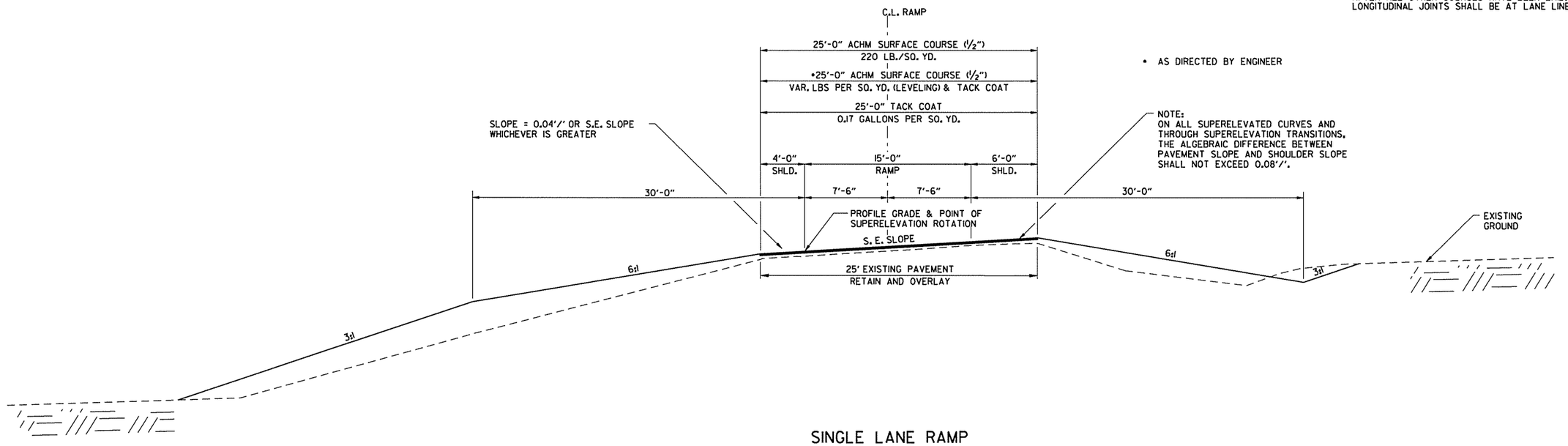

• AS DIRECTED BY ENGINEER

SINGLE LANE RAMP
TYPICAL SUPERELEVATED OVERLAY SECTION

(SHOWN IN THE DIRECTION OF TRAFFIC)

HWY. 112 TO NB I-49 RAMP STA. 287+50.69 TO STA. 291+68.55

AEWierciak 3/20/2016 11:51:29 AM
WORKSPACE: AHTD
L:\201\101707 - I-540 Widening & Interchange Improvement\Drawings\rBB0414_TS_ALL.dgn
REVISED DATE:

DATE REVISED	DATE FILMED	DATE REVISED	DATE FILMED	FED.RD. DIST.NO.	STATE	FED.AID PROJ.NO.	SHEET NO.	TOTAL SHEETS
				6	ARK.			
				JOB NO.		BB0414	25	886

(2) TYPICAL SECTIONS OF IMPROVEMENT

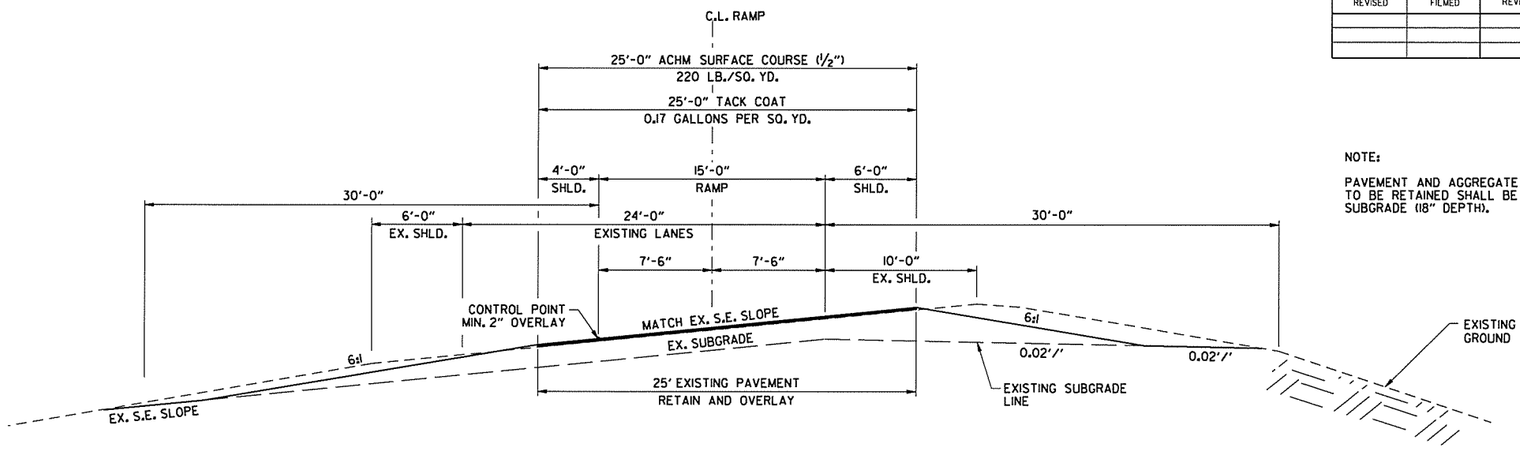

NOTE:

PAVEMENT AND AGGREGATE BASE BEYOND 25' SECTION TO BE RETAINED SHALL BE REMOVED TO EXISTING SUBGRADE (18" DEPTH).

STATE OF ARKANSAS
LICENSED PROFESSIONAL ENGINEER
No. 13422
JOHN F. CANTABERY
3-20-16

SINGLE LANE RAMP
TYPICAL OVERLAY OF EX. TWO LANE RAMP SECTION

(SHOWN IN THE DIRECTION OF TRAFFIC)

HWY. 112 TO NB I-49 RAMP STA. 328+70.31 TO STA. 335+13.00
SB I-49 TO HWY. 112 RAMP STA. 334+58.94 TO STA. 343+00.00

NOTES:

REFER TO CROSS SECTIONS FOR DEVIATION FROM THE NORMAL SLOPES. NO CHANGES SHALL BE MADE FROM THE PLANNED SLOPES WITHOUT THE APPROVAL OF THE ENGINEER.

THE THICKNESS OF AGGREGATE BASE COURSE SHALL BE WITHIN PLUS OR MINUS ONE INCH OF THE PLAN THICKNESS SHOWN. THE CONTRACTOR WILL CORRECT ANY DEFICIENT THICKNESS THAT DOES NOT MEET TOLERANCE INDICATED. PAYMENT WILL NOT BE MADE FOR MATERIAL PLACED IN EXCESS OF THE TOLERANCE INDICATED.

ASPHALT FOR LEVELING OF EXISTING PAVEMENT SHALL BE PLACED ONLY IF AND WHERE DIRECTED BY THE ENGINEER. CALCULATIONS FOR THE AMOUNT OF LEVELING AND/OR LEVELING OPERATIONS SHALL BE PERFORMED BEFORE CONSTRUCTING NOTCH AND WIDENING. CALCULATIONS WILL NOT BE PAID FOR DIRECTLY, BUT PAYMENT WILL BE CONSIDERED INCLUDED IN THE VARIOUS PAY ITEMS.

THE FINAL 2" OF SURFACE COURSE IS TO BE PLACED AFTER ALL OTHER COURSES HAVE BEEN LAID. LONGITUDINAL JOINTS SHALL BE AT LANE LINES.

THE EXISTING ASPHALT PAVEMENT TO BE REMOVED FROM THE REMAINING PAVEMENT SHALL BE SEPARATED BY SAWING ALONG A NEAT LINE. AFTER SAWING, THE PAVEMENT TO BE REMOVED SHALL BE CAREFULLY REMOVED IN A MANNER THAT WILL NOT DAMAGE THE PAVEMENT THAT IS TO REMAIN. ANY DAMAGE OF THE ASPHALT PAVEMENT THAT IS TO REMAIN IN PLACE SHALL BE REPAIRED AT THE CONTRACTOR'S EXPENSE.

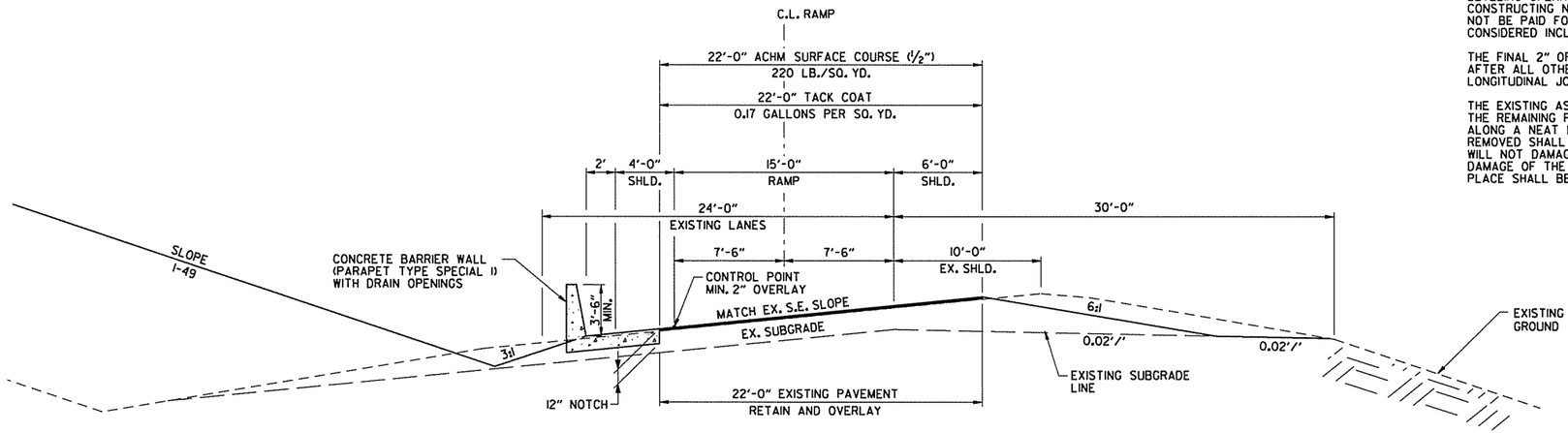

NOTE:

PAVEMENT AND AGGREGATE BASE BEYOND 27' SECTION TO BE RETAINED SHALL BE REMOVED TO EXISTING SUBGRADE (18" DEPTH).

SINGLE LANE RAMP
TYPICAL OVERLAY OF EX. TWO LANE RAMP SECTION WITH BARRIER WALL LT.

(SHOWN IN THE DIRECTION OF TRAFFIC)

HWY. 112 TO NB I-49 RAMP STA. 335+13.00 TO STA. 338+59.82

AEWierclck 3/20/2016 11:51:30 AM
WORKSPACE: AHTD
L:\2016\160707 - I-540 Widening & Interchange Improvement\Drawings\rBB0414_TS_ALL.dgn
REVISED DATE:

DATE REVISED	DATE FILMED	DATE REVISED	DATE FILMED	FED.RD. DIST.NO.	STATE	FED.AID PROJ.NO.	SHEET NO.	TOTAL SHEETS
				6	ARK.			
				JOB NO.		BB0414	26	886
				(2)	TYPICAL SECTIONS OF IMPROVEMENT			

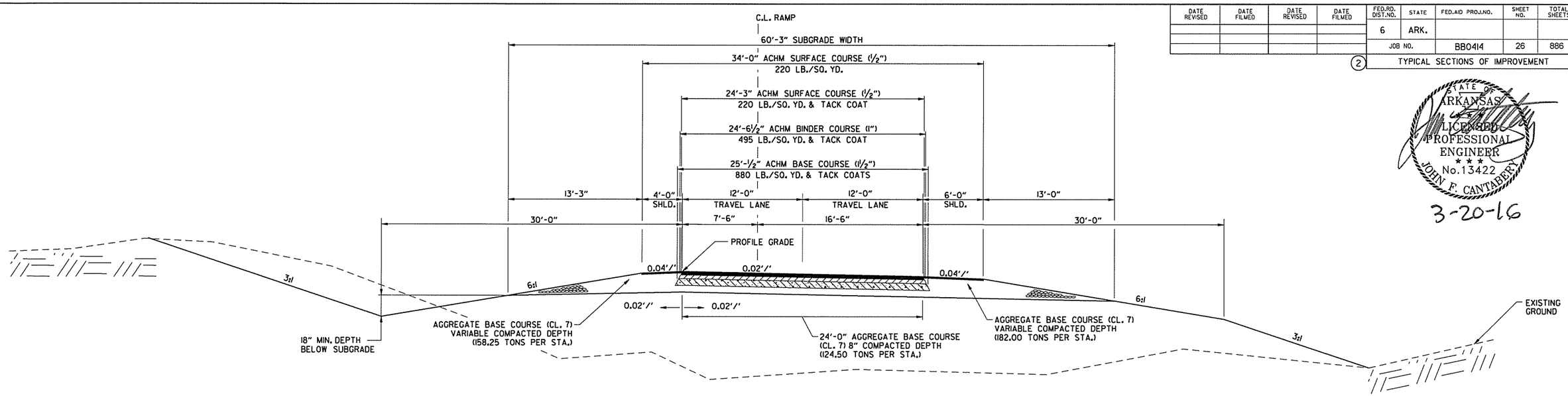

TWO LANE RAMP TYPICAL SECTION

(SHOWN IN THE DIRECTION OF TRAFFIC)

NB I-49 TO HWY. 71B RAMP STA. 308+21.79 TO STA. 311+11.68
SB I-49 TO HWY. 112 RAMP STA. 346+06.22 TO STA. 349+74.48

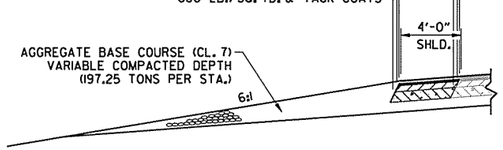

FULL DEPTH SHOULDER DETAIL

NB I-49 TO HWY. 71B RAMP STA. 319+00.00 TO STA. 321+00.00

NOTES:

REFER TO CROSS SECTIONS FOR DEVIATION FROM THE NORMAL SLOPES. NO CHANGES SHALL BE MADE FROM THE PLANNED SLOPES WITHOUT THE APPROVAL OF THE ENGINEER.

THE THICKNESS OF AGGREGATE BASE COURSE SHALL BE WITHIN PLUS OR MINUS ONE INCH OF THE PLAN THICKNESS SHOWN. THE CONTRACTOR WILL CORRECT ANY DEFICIENT THICKNESS THAT DOES NOT MEET TOLERANCE INDICATED. PAYMENT WILL NOT BE MADE FOR MATERIAL PLACED IN EXCESS OF THE TOLERANCE INDICATED.

THE FINAL 2" OF SURFACE COURSE IS TO BE PLACED AFTER ALL OTHER COURSES HAVE BEEN LAID. LONGITUDINAL JOINTS SHALL BE AT LANE LINES.

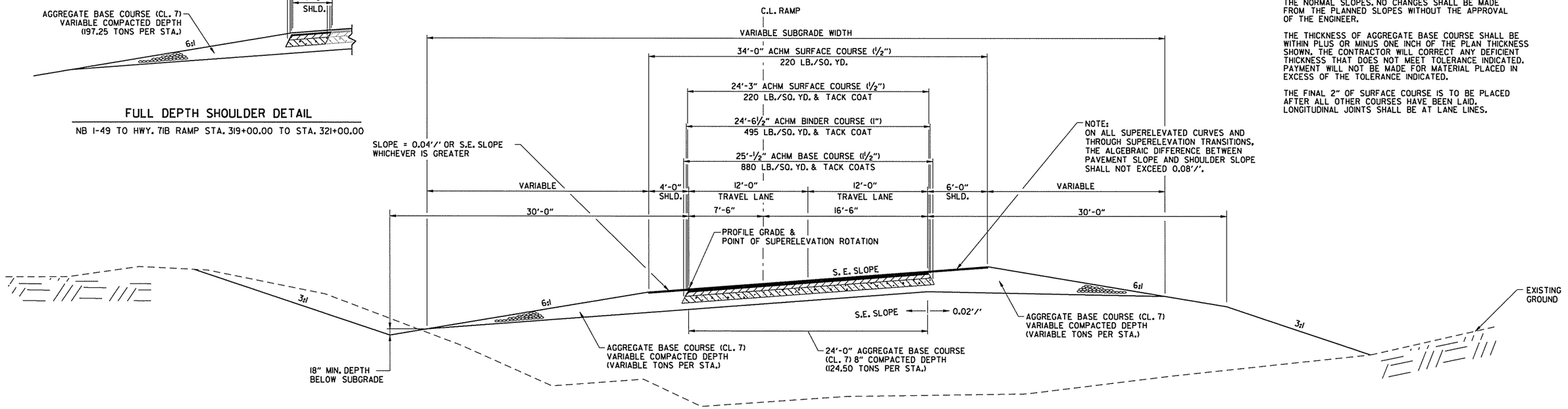

TWO LANE RAMP TYPICAL SUPERELEVATED SECTION

(SHOWN IN THE DIRECTION OF TRAFFIC)

NB I-49 TO HWY. 71B RAMP STA. 311+11.68 TO STA. 322+46.58
HWY. 112 TO NB I-49 RAMP STA. 350+61.25 TO STA. 354+55.26
SB I-49 TO HWY. 112 RAMP STA. 349+74.48 TO STA. 352+74.48

TYPICAL SECTIONS OF IMPROVEMENT

STATE OF ARKANSAS
LICENSED PROFESSIONAL ENGINEER
No.13422
JOHN F. CANTABERY
3-20-16

AEWerclok 3/20/2016 11:51:30 AM
WORKSPACE: AHTD
L:\2011\11017107 - I-540 Widening & Interchange Improvement\Drawings\r-BB0414_TS_ALL.dgn
REVISED DATE:

DATE REVISED	DATE FILMED	DATE REVISED	DATE FILMED	FED.RD. DIST.NO.	STATE	FED.AID PROJ.NO.	SHEET NO.	TOTAL SHEETS
				6	ARK.			
				JOB NO.		BB0414	27	886

(2) TYPICAL SECTIONS OF IMPROVEMENT

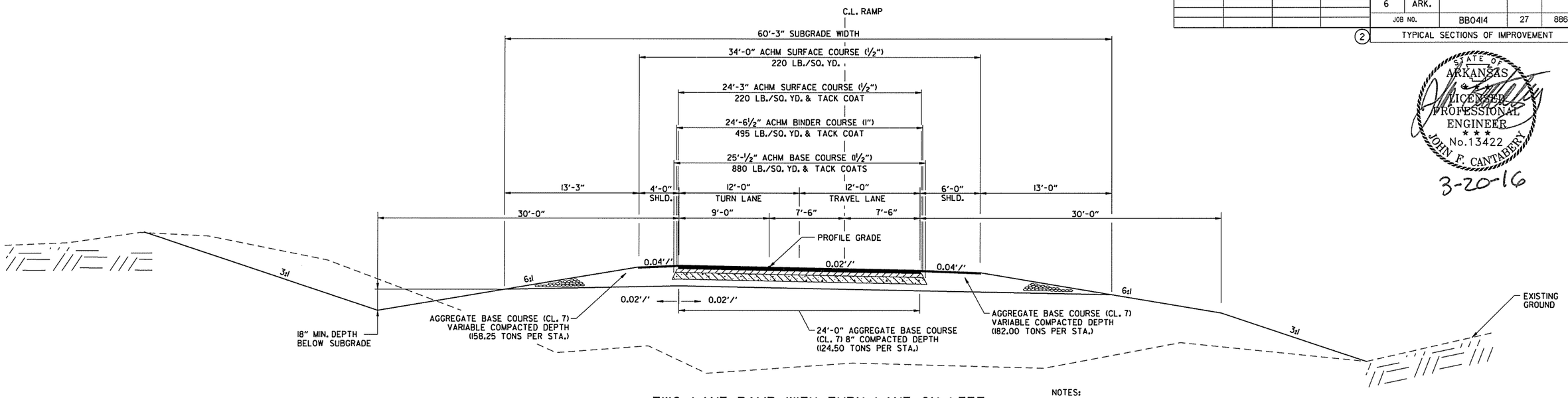

TWO LANE RAMP WITH TURN LANE ON LEFT TYPICAL SECTION

(SHOWN IN THE DIRECTION OF TRAFFIC)

HWY. 112 RAMP 1 STA. 289+36.29 TO STA. 290+68.59

NOTES:

REFER TO CROSS SECTIONS FOR DEVIATION FROM THE NORMAL SLOPES. NO CHANGES SHALL BE MADE FROM THE PLANNED SLOPES WITHOUT THE APPROVAL OF THE ENGINEER.

THE THICKNESS OF AGGREGATE BASE COURSE SHALL BE WITHIN PLUS OR MINUS ONE INCH OF THE PLAN THICKNESS SHOWN. THE CONTRACTOR WILL CORRECT ANY DEFICIENT THICKNESS THAT DOES NOT MEET TOLERANCE INDICATED. PAYMENT WILL NOT BE MADE FOR MATERIAL PLACED IN EXCESS OF THE TOLERANCE INDICATED.

THE FINAL 2" OF SURFACE COURSE IS TO BE PLACED AFTER ALL OTHER COURSES HAVE BEEN LAID. LONGITUDINAL JOINTS SHALL BE AT LANE LINES.

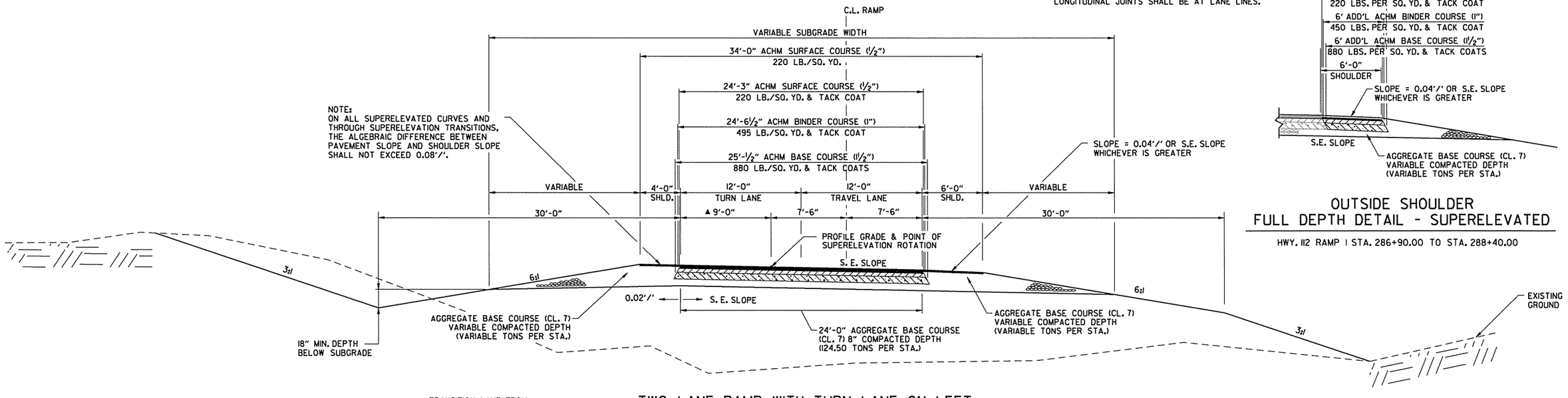

▲ TRANSITION LANE FROM 0' AT STA. 286+90.00 TO 9' AT STA. 288+40.00

TWO LANE RAMP WITH TURN LANE ON LEFT TYPICAL SUPERELEVATED SECTION

(SHOWN IN THE DIRECTION OF TRAFFIC)

HWY. 112 RAMP 1 STA. 286+90.00 TO STA. 289+36.29

OUTSIDE SHOULDER FULL DEPTH DETAIL - SUPERELEVATED

HWY. 112 RAMP 1 STA. 286+90.00 TO STA. 288+40.00

STATE OF ARKANSAS LICENSED PROFESSIONAL ENGINEER No.13422 JOHN F. CANTABERY

3-20-16

TYPICAL SECTIONS OF IMPROVEMENT

AEWerclok 3/20/2016 11:5:30 AM
WORKSPACE: AHTD
L:\20IN\10I7707 - I-540 Widening & Interchange Improvement\Drawings\rBB0414_TS_ALL.dgn
REVISED DATE:

DATE REVISED	DATE FILMED	DATE REVISED	DATE FILMED	FED.RD. DIST.NO.	STATE	FED.AID PROJ.NO.	SHEET NO.	TOTAL SHEETS
				6	ARK.			
				JOB NO.		BB0414	28	886
				(2)	TYPICAL SECTIONS OF IMPROVEMENT			

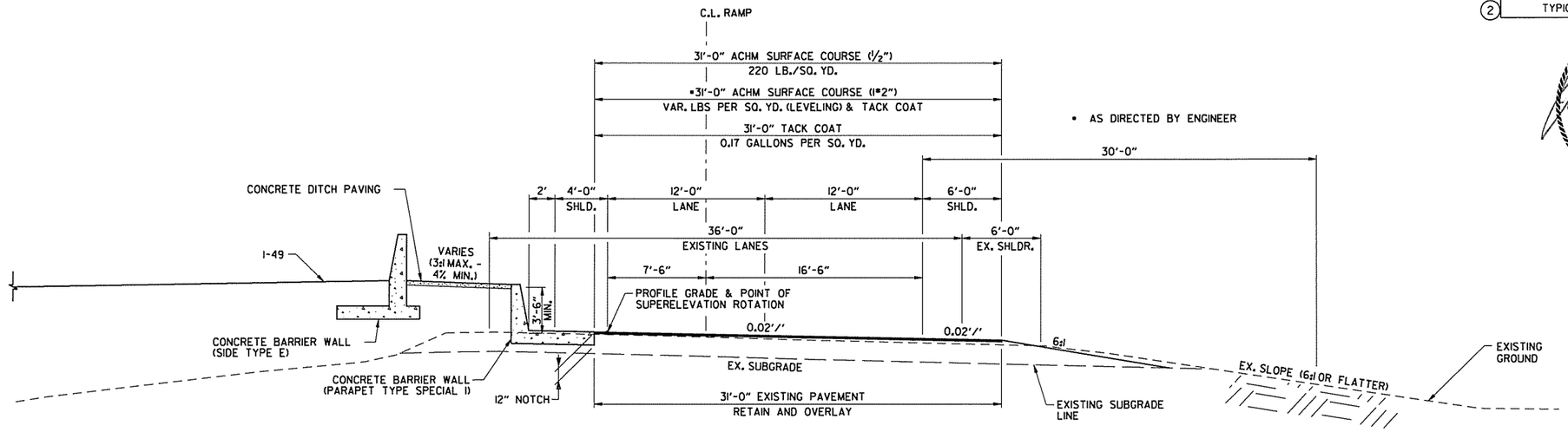

TWO LANE RAMP
TYPICAL SECTION WITH BARRIER WALL LT.

(SHOWN IN THE DIRECTION OF TRAFFIC)

HWY. 112 TO NB I-49 RAMP STA. 344+25.00 TO STA. 344+89.08

NOTES:

REFER TO CROSS SECTIONS FOR DEVIATION FROM THE NORMAL SLOPES. NO CHANGES SHALL BE MADE FROM THE PLANNED SLOPES WITHOUT THE APPROVAL OF THE ENGINEER.

THE THICKNESS OF AGGREGATE BASE COURSE SHALL BE WITHIN PLUS OR MINUS ONE INCH OF THE PLAN THICKNESS SHOWN. THE CONTRACTOR WILL CORRECT ANY DEFICIENT THICKNESS THAT DOES NOT MEET TOLERANCE INDICATED. PAYMENT WILL NOT BE MADE FOR MATERIAL PLACED IN EXCESS OF THE TOLERANCE INDICATED.

ASPHALT FOR LEVELING OF EXISTING PAVEMENT SHALL BE PLACED ONLY IF AND WHERE DIRECTED BY THE ENGINEER. CALCULATIONS FOR THE AMOUNT OF LEVELING AND/OR LEVELING OPERATIONS SHALL BE PERFORMED BEFORE CONSTRUCTING NOTCH AND WIDENING. CALCULATIONS WILL NOT BE PAID FOR DIRECTLY, BUT PAYMENT WILL BE CONSIDERED INCLUDED IN THE VARIOUS PAY ITEMS.

THE FINAL 2" OF SURFACE COURSE IS TO BE PLACED AFTER ALL OTHER COURSES HAVE BEEN LAID. LONGITUDINAL JOINTS SHALL BE AT LANE LINES.

THE EXISTING ASPHALT PAVEMENT TO BE REMOVED FROM THE REMAINING PAVEMENT SHALL BE SEPARATED BY SAWING ALONG A NEAT LINE. AFTER SAWING, THE PAVEMENT TO BE REMOVED SHALL BE CAREFULLY REMOVED IN A MANNER THAT WILL NOT DAMAGE THE PAVEMENT THAT IS TO REMAIN. ANY DAMAGE OF THE ASPHALT PAVEMENT THAT IS TO REMAIN IN PLACE SHALL BE REPAIRED AT THE CONTRACTOR'S EXPENSE.

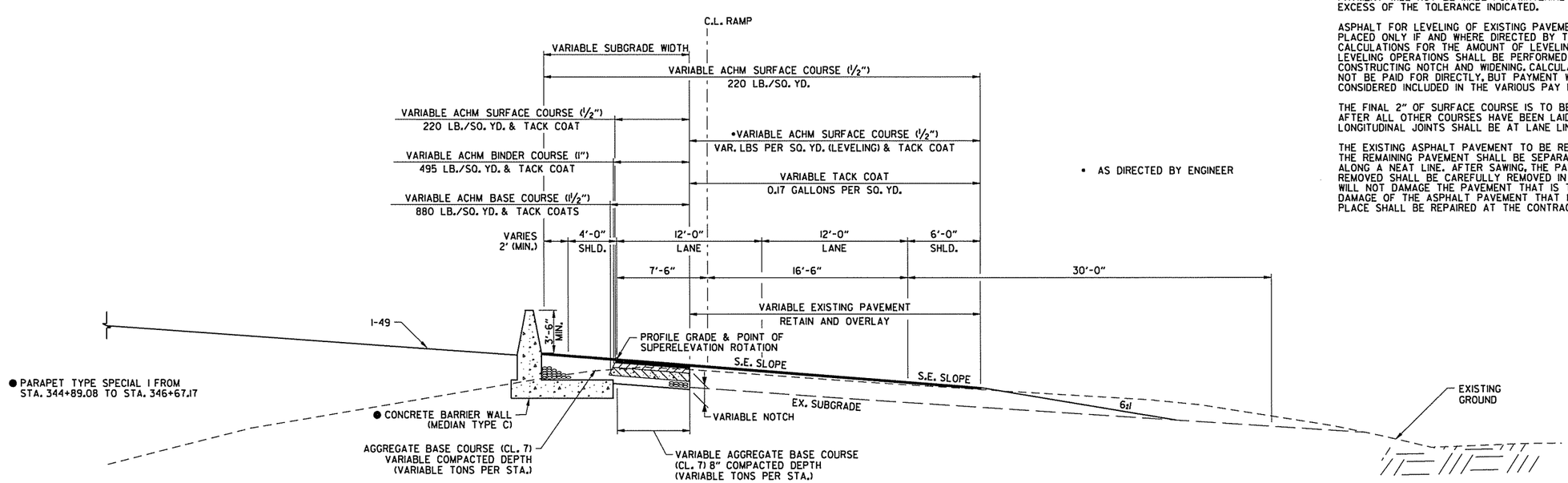

TWO LANE RAMP
SUPERELEVATED SECTION WITH BARRIER WALL LT.

(SHOWN IN THE DIRECTION OF TRAFFIC)

HWY. 112 TO NB I-49 RAMP STA. 344+89.08 TO STA. 350+61.25

TYPICAL SECTIONS OF IMPROVEMENT

STATE OF ARKANSAS
LICENSED PROFESSIONAL ENGINEER
No. 13422
JOHN F. CANTABERY
3-20-16

AEWterclok 3/20/2016 11:51:30 AM
WORKSPACE: AHTD
L:\2011\101707 - I-540 Widening & Interchange Improvement\Drawings\rBB0414_TS_ALL.dgn
REVISED DATE:

DATE REVISED	DATE FILMED	DATE REVISED	DATE FILMED	FED.RD. DIST.NO.	STATE	FED.AID PROJ.NO.	SHEET NO.	TOTAL SHEETS
				6	ARK.			
				JOB NO.		BB0414	29	886

(2) TYPICAL SECTIONS OF IMPROVEMENT

STATE OF ARKANSAS
LICENSED PROFESSIONAL ENGINEER
No.13422
JOHN F. CANTABERY
3-20-16

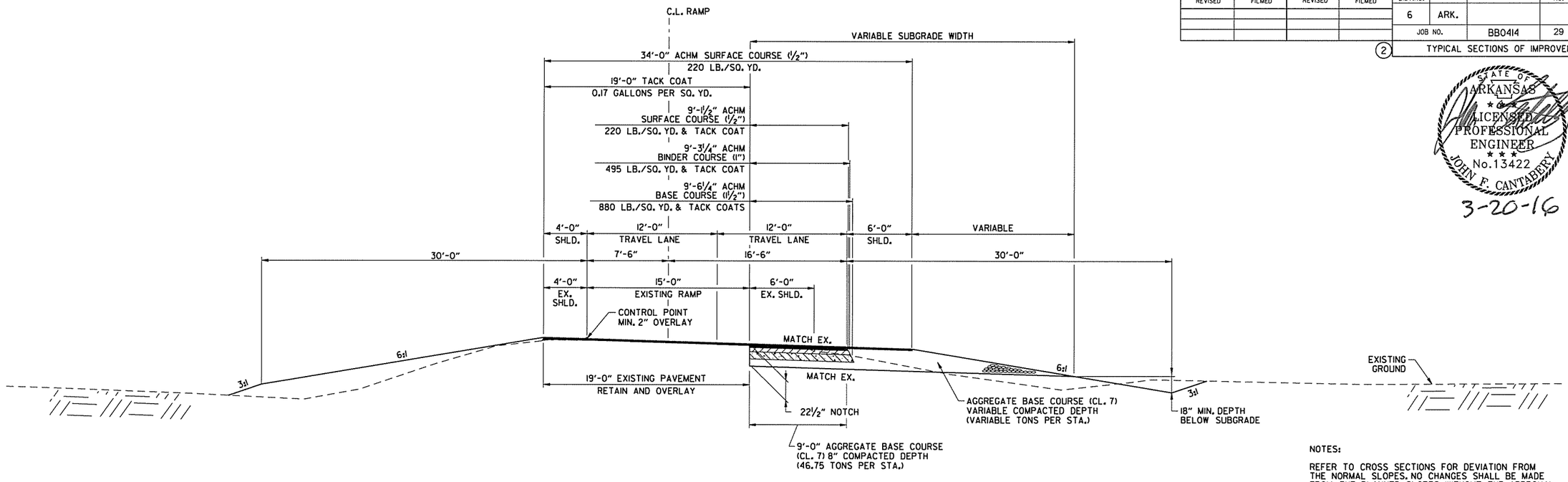

TWO LANE RAMP
NOTCH AND WIDEN SECTION

(SHOWN IN THE DIRECTION OF TRAFFIC)

NB I-49 TO HWY. 71B RAMP STA. 332+46.58 TO STA. 334+73.46

NOTES:

REFER TO CROSS SECTIONS FOR DEVIATION FROM THE NORMAL SLOPES. NO CHANGES SHALL BE MADE FROM THE PLANNED SLOPES WITHOUT THE APPROVAL OF THE ENGINEER.

THE THICKNESS OF AGGREGATE BASE COURSE SHALL BE WITHIN PLUS OR MINUS ONE INCH OF THE PLAN THICKNESS SHOWN. THE CONTRACTOR WILL CORRECT ANY DEFICIENT THICKNESS THAT DOES NOT MEET TOLERANCE INDICATED. PAYMENT WILL NOT BE MADE FOR MATERIAL PLACED IN EXCESS OF THE TOLERANCE INDICATED.

ASPHALT FOR LEVELING OF EXISTING PAVEMENT SHALL BE PLACED ONLY IF AND WHERE DIRECTED BY THE ENGINEER. CALCULATIONS FOR THE AMOUNT OF LEVELING AND/OR LEVELING OPERATIONS SHALL BE PERFORMED BEFORE CONSTRUCTING NOTCH AND WIDENING. CALCULATIONS WILL NOT BE PAID FOR DIRECTLY, BUT PAYMENT WILL BE CONSIDERED INCLUDED IN THE VARIOUS PAY ITEMS.

THE FINAL 2" OF SURFACE COURSE IS TO BE PLACED AFTER ALL OTHER COURSES HAVE BEEN LAID. LONGITUDINAL JOINTS SHALL BE AT LANE LINES.

THE EXISTING ASPHALT PAVEMENT TO BE REMOVED FROM THE REMAINING PAVEMENT SHALL BE SEPARATED BY SAWING ALONG A NEAT LINE. AFTER SAWING, THE PAVEMENT TO BE REMOVED SHALL BE CAREFULLY REMOVED IN A MANNER THAT WILL NOT DAMAGE THE PAVEMENT THAT IS TO REMAIN. ANY DAMAGE OF THE ASPHALT PAVEMENT THAT IS TO REMAIN IN PLACE SHALL BE REPAIRED AT THE CONTRACTOR'S EXPENSE.

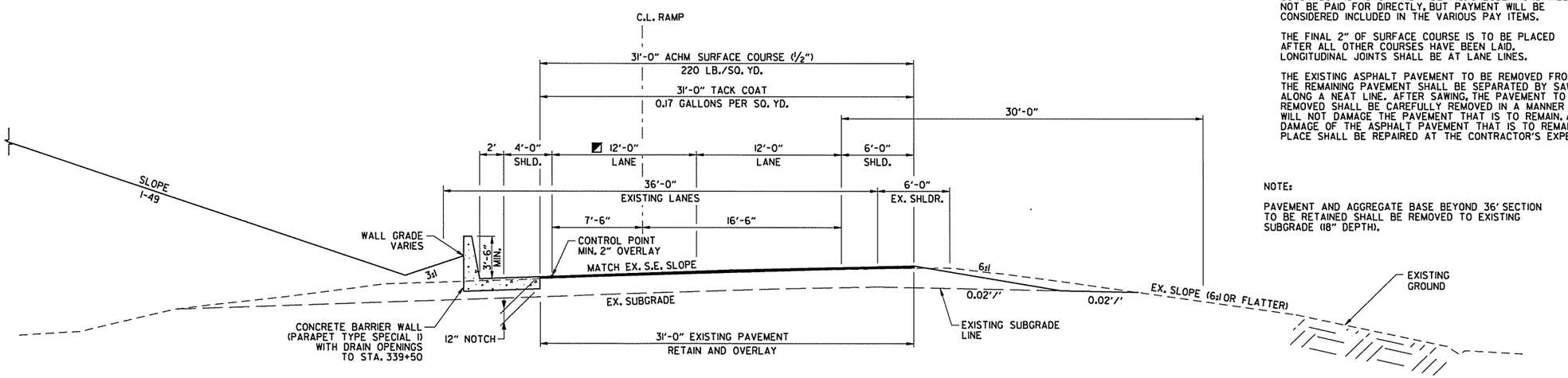

NOTE:

PAVEMENT AND AGGREGATE BASE BEYOND 36' SECTION TO BE RETAINED SHALL BE REMOVED TO EXISTING SUBGRADE (18" DEPTH).

■ TRANSITION LANE FROM 15' AT STA. 341+49.46 TO 12' AT STA. 342+99.46

TWO LANE RAMP
TYPICAL OVERLAY OF EX. THREE LANE RAMP SECTION WITH BARRIER WALL LT.

(SHOWN IN THE DIRECTION OF TRAFFIC)

HWY. 112 TO NB I-49 RAMP STA. 338+59.82 TO STA. 344+25.00

TYPICAL SECTIONS OF IMPROVEMENT

AEWterclok 3/20/2016 11:51:30 AM
WORKSPACE: AHTD
L:\208\10171707 - I-540 Widening & Interchange Improvement\Drawings\r-BB0414_TS_ALL.dgn
REVISED DATE:

DATE REVISED	DATE FILMED	DATE REVISED	DATE FILMED	FED.RD. DIST.NO.	STATE	FED.AID PROJ.NO.	SHEET NO.	TOTAL SHEETS
				6	ARK.			
				JOB NO.		BB0414	30	886

(2) TYPICAL SECTIONS OF IMPROVEMENT

STATE OF ARKANSAS
LICENSED PROFESSIONAL ENGINEER
No. 13422
JOHN F. CANTABERY
3-20-16

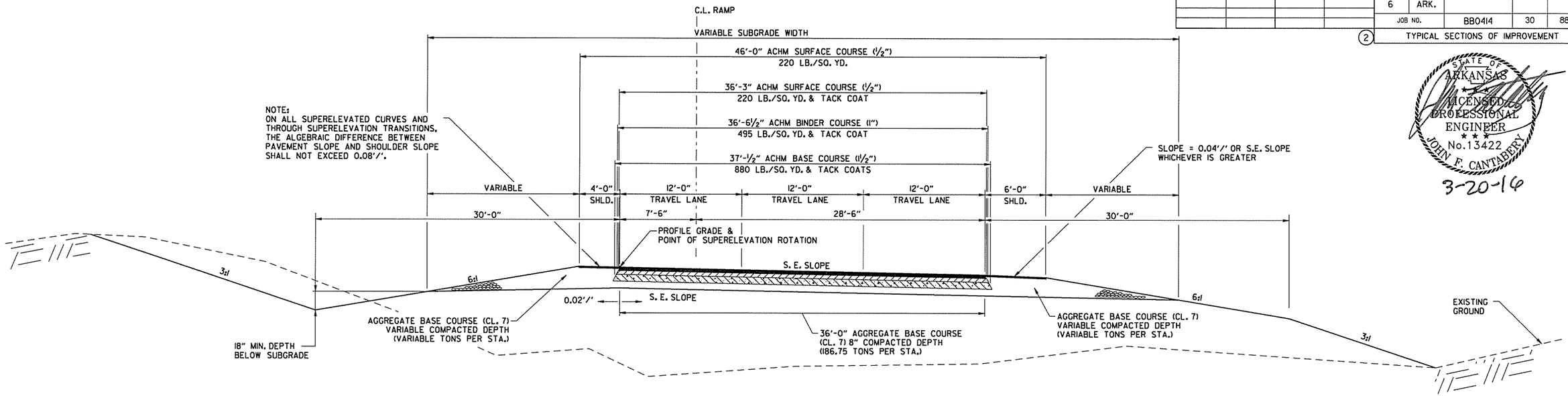

THREE LANE RAMP
TYPICAL SUPERELEVATED SECTION

(SHOWN IN THE DIRECTION OF TRAFFIC)

NB I-49 TO HWY. 71B RAMP STA. 322+46.58 TO STA. 327+00.00

NOTES:

REFER TO CROSS SECTIONS FOR DEVIATION FROM THE NORMAL SLOPES. NO CHANGES SHALL BE MADE FROM THE PLANNED SLOPES WITHOUT THE APPROVAL OF THE ENGINEER.

THE THICKNESS OF AGGREGATE BASE COURSE SHALL BE WITHIN PLUS OR MINUS ONE INCH OF THE PLAN THICKNESS SHOWN. THE CONTRACTOR WILL CORRECT ANY DEFICIENT THICKNESS THAT DOES NOT MEET TOLERANCE INDICATED. PAYMENT WILL NOT BE MADE FOR MATERIAL PLACED IN EXCESS OF THE TOLERANCE INDICATED.

ASPHALT FOR LEVELING OF EXISTING PAVEMENT SHALL BE PLACED ONLY IF AND WHERE DIRECTED BY THE ENGINEER. CALCULATIONS FOR THE AMOUNT OF LEVELING AND/OR LEVELING OPERATIONS SHALL BE PERFORMED BEFORE CONSTRUCTING NOTCH AND WIDENING. CALCULATIONS WILL NOT BE PAID FOR DIRECTLY, BUT PAYMENT WILL BE CONSIDERED INCLUDED IN THE VARIOUS PAY ITEMS.

THE FINAL 2" OF SURFACE COURSE IS TO BE PLACED AFTER ALL OTHER COURSES HAVE BEEN LAID. LONGITUDINAL JOINTS SHALL BE AT LANE LINES.

THE EXISTING ASPHALT PAVEMENT TO BE REMOVED FROM THE REMAINING PAVEMENT SHALL BE SEPARATED BY SAWING ALONG A NEAT LINE. AFTER SAWING, THE PAVEMENT TO BE REMOVED SHALL BE CAREFULLY REMOVED IN A MANNER THAT WILL NOT DAMAGE THE PAVEMENT THAT IS TO REMAIN. ANY DAMAGE OF THE ASPHALT PAVEMENT THAT IS TO REMAIN IN PLACE SHALL BE REPAIRED AT THE CONTRACTOR'S EXPENSE.

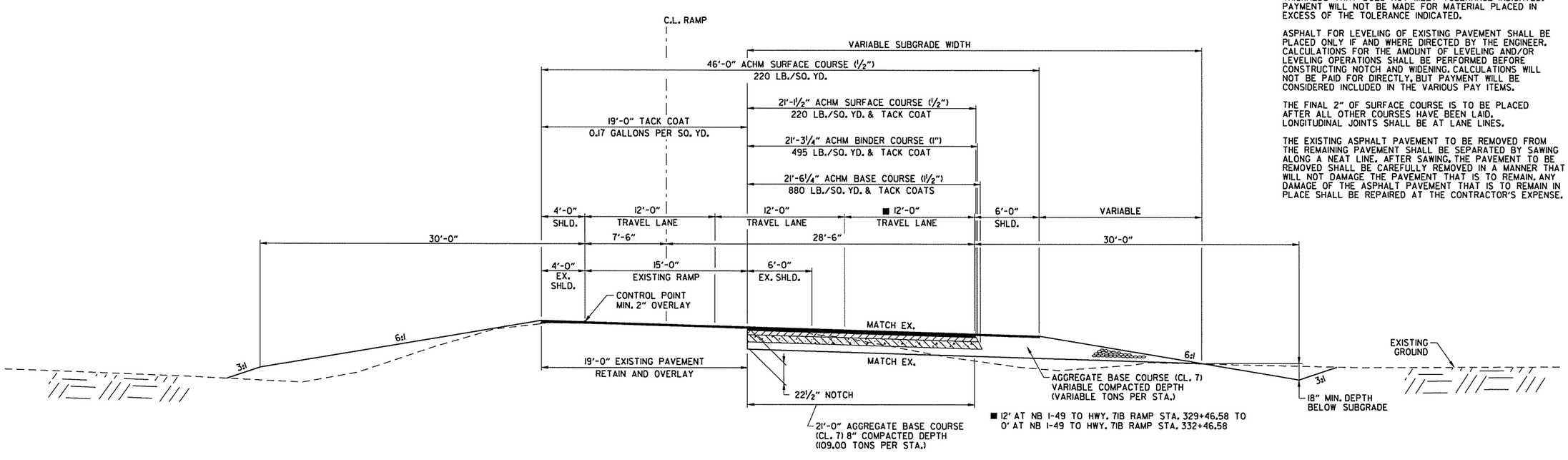

■ 12' AT NB I-49 TO HWY. 71B RAMP STA. 329+46.58 TO 0' AT NB I-49 TO HWY. 71B RAMP STA. 332+46.58

THREE LANE RAMP
NOTCH AND WIDEN SECTION

(SHOWN IN THE DIRECTION OF TRAFFIC)

NB I-49 TO HWY. 71B RAMP STA. 327+00.00 TO STA. 332+46.58

TYPICAL SECTIONS OF IMPROVEMENT

AEWierclak 3/20/2016 11:51:31 AM
WORKSPACE: AHTD
L:\201\100707 - I-540 Widening & Interchange Improvement\Drawings\r-BB0414_TS_ALL.dgn
REVISED DATE:

DATE REVISED	DATE FILMED	DATE REVISED	DATE FILMED	FED.RD. DIST.NO.	STATE	FED.AID PROJ.NO.	SHEET NO.	TOTAL SHEETS
				6	ARK.			
				JOB NO.		BB0414	31	886
				(2)	TYPICAL SECTIONS OF IMPROVEMENT			

STATE OF ARKANSAS
LICENSED PROFESSIONAL ENGINEER
No.13422
JOHN F. CANTABERY

3-20-16

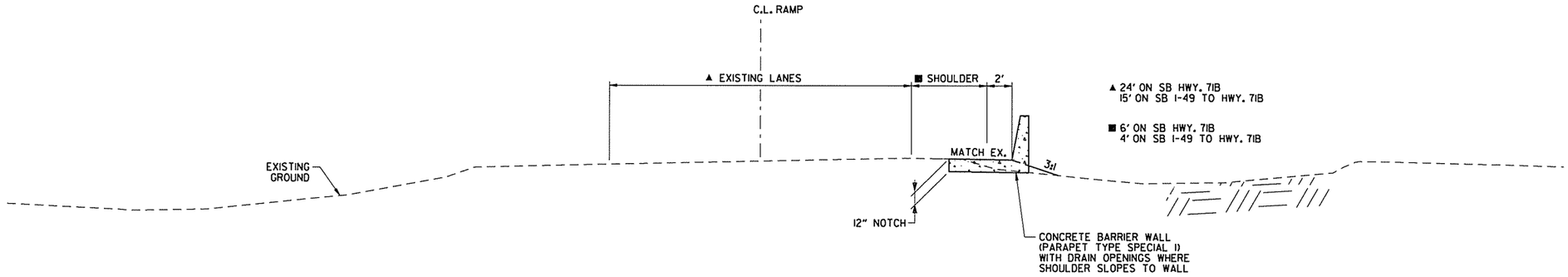

SHOULDER WIDENING FOR BARRIER WALL SECTION

(SHOWN IN THE DIRECTION OF STATIONING)

SB HWY. 71B STA. 324+30.00 TO STA. 326+80.00
SB I-49 TO HWY. 71B STA. 313+40.49 TO STA. 316+60.49

NOTES:

REFER TO CROSS SECTIONS FOR DEVIATION FROM THE NORMAL SLOPES. NO CHANGES SHALL BE MADE FROM THE PLANNED SLOPES WITHOUT THE APPROVAL OF THE ENGINEER.

THE THICKNESS OF AGGREGATE BASE COURSE SHALL BE WITHIN PLUS OR MINUS ONE INCH OF THE PLAN THICKNESS SHOWN. THE CONTRACTOR WILL CORRECT ANY DEFICIENT THICKNESS THAT DOES NOT MEET TOLERANCE INDICATED. PAYMENT WILL NOT BE MADE FOR MATERIAL PLACED IN EXCESS OF THE TOLERANCE INDICATED.

TYPICAL SECTIONS OF IMPROVEMENT

AEWier-clark 3/20/2016 11:51:31 AM
WORKSPACE: AHTD
L:\20IN\10\7707 - I-540 Widening & Interchange Improvement\Drawings\rBB0414_TS_ALL.dgn
REVISED DATE:

DATE REVISED	DATE FILMED	DATE REVISED	DATE FILMED	FED.RD. DIST.NO.	STATE	FED.AID PROJ.NO.	SHEET NO.	TOTAL SHEETS
				6	ARK.			
				JOB NO.		BB0414	32	886
				(2)	TYPICAL SECTIONS OF IMPROVEMENT			

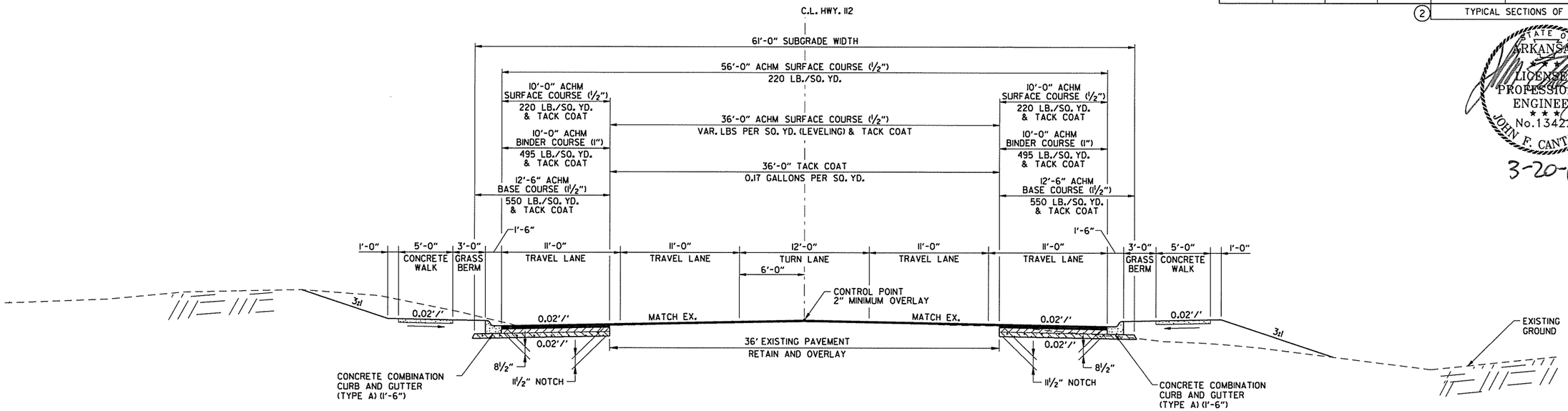

HWY. 112 TYPICAL SECTION

STA. 27+90.47 TO STA. 29+99.23

NOTES:

REFER TO CROSS SECTIONS FOR DEVIATION FROM THE NORMAL SLOPES. NO CHANGES SHALL BE MADE FROM THE PLANNED SLOPES WITHOUT THE APPROVAL OF THE ENGINEER.

ASPHALT FOR LEVELING OF EXISTING PAVEMENT SHALL BE PLACED ONLY IF AND WHERE DIRECTED BY THE ENGINEER. CALCULATIONS FOR THE AMOUNT OF LEVELING AND/OR LEVELING OPERATIONS SHALL BE PERFORMED BEFORE CONSTRUCTING NOTCH AND WIDENING. CALCULATIONS WILL NOT BE PAID FOR DIRECTLY, BUT PAYMENT WILL BE CONSIDERED INCLUDED IN THE VARIOUS PAY ITEMS.

THE FINAL 2" OF SURFACE COURSE IS TO BE PLACED AFTER ALL OTHER COURSES HAVE BEEN LAID. LONGITUDINAL JOINTS SHALL BE AT LANE LINES.

THE EXISTING ASPHALT PAVEMENT TO BE REMOVED FROM THE REMAINING PAVEMENT SHALL BE SEPARATED BY SAWING ALONG A NEAT LINE. AFTER SAWING, THE PAVEMENT TO BE REMOVED SHALL BE CAREFULLY REMOVED IN A MANNER THAT WILL NOT DAMAGE THE PAVEMENT THAT IS TO REMAIN. ANY DAMAGE OF THE ASPHALT PAVEMENT THAT IS TO REMAIN IN PLACE SHALL BE REPAIRED AT THE CONTRACTOR'S EXPENSE.

PRIOR TO AND DURING PLACEMENT OF PAVEMENT IN FRONT OF THE CURB AND GUTTER, THE CONTRACTOR SHALL PROVIDE POSITIVE DRAINAGE AT ALL TIMES. THE METHOD(S) USED SHALL BE APPROVED BY THE ENGINEER. PAYMENT FOR THIS WORK SHALL BE CONSIDERED INCLUDED IN THE PRICE BID FOR THE VARIOUS CONTRACT ITEMS.

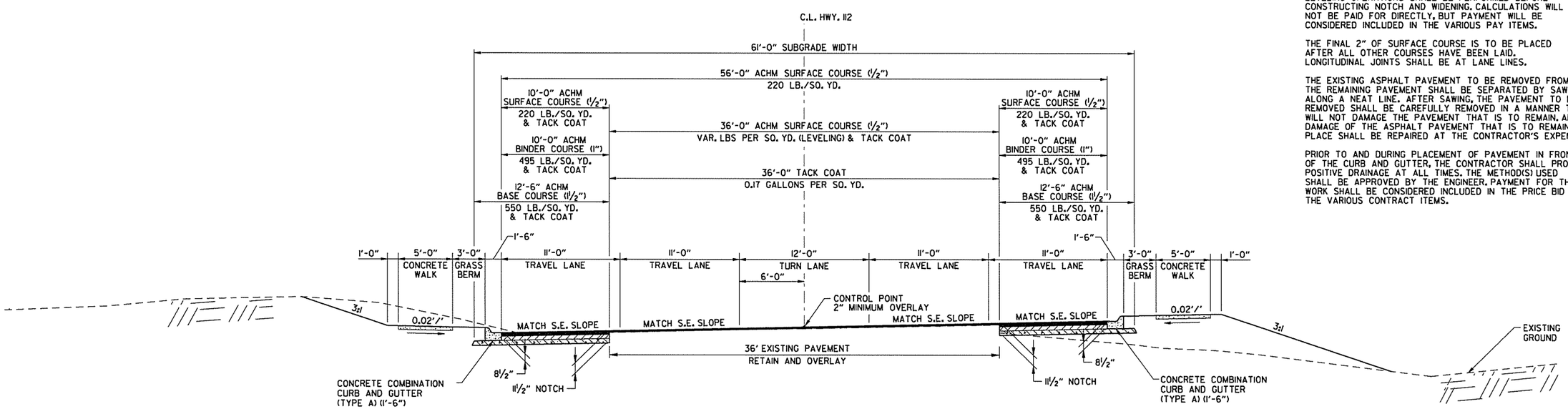

HWY. 112 TYPICAL SUPERELEVATED SECTION

STA. 6+77.03 TO STA. 10+80.00
STA. 29+99.23 TO STA. 31+07.40

AEWercl ok 3/20/2016 11:51:31 AM
WORKSPACE: AHTD
L:\201\101\707 - I-540 Widening & Interchange Improvement\Drawings\rBB0414_TS_ALL.dgn
REVISED DATE:

DATE REVISED	DATE FILMED	DATE REVISED	DATE FILMED	FED.RD. DIST.NO.	STATE	FED.AID PROJ.NO.	SHEET NO.	TOTAL SHEETS
				6	ARK.			
				JOB NO.		BB0414	33	886

(2) TYPICAL SECTIONS OF IMPROVEMENT

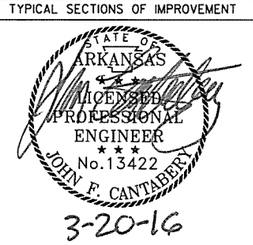

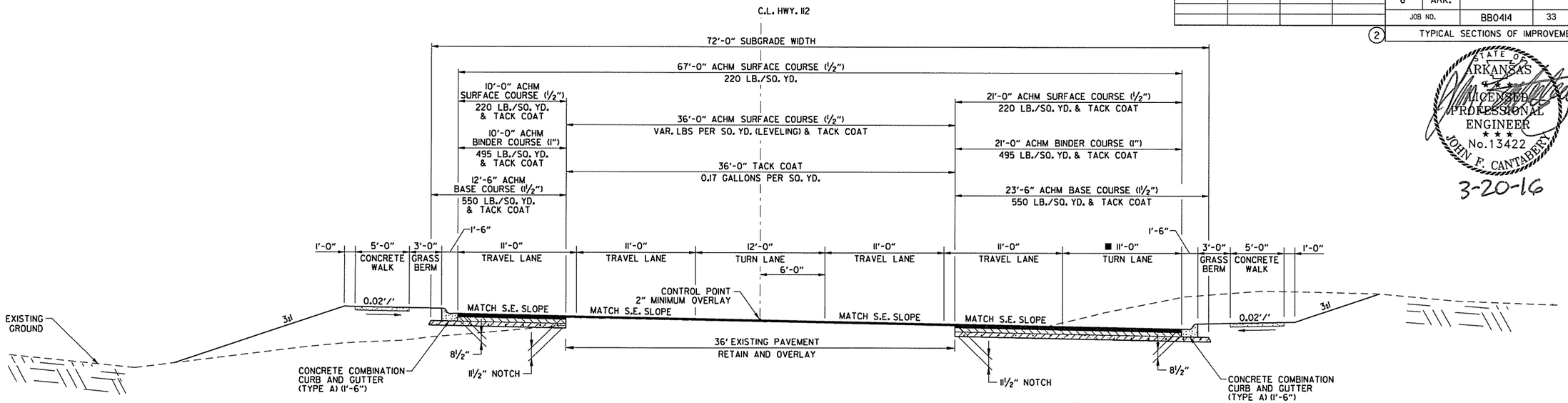

HWY. 112 TYPICAL SUPERELEVATED SECTION W/TURN LANE ON RT.

STA. 10+80.00 TO STA. 14+83.32

■ TRANSITION LANE FROM 0' AT STA. 10+80.00 TO 12' AT STA. 11+80.00

NOTES:

REFER TO CROSS SECTIONS FOR DEVIATION FROM THE NORMAL SLOPES. NO CHANGES SHALL BE MADE FROM THE PLANNED SLOPES WITHOUT THE APPROVAL OF THE ENGINEER.

ASPHALT FOR LEVELING OF EXISTING PAVEMENT SHALL BE PLACED ONLY IF AND WHERE DIRECTED BY THE ENGINEER. CALCULATIONS FOR THE AMOUNT OF LEVELING AND/OR LEVELING OPERATIONS SHALL BE PERFORMED BEFORE CONSTRUCTING NOTCH AND WIDENING. CALCULATIONS WILL NOT BE PAID FOR DIRECTLY, BUT PAYMENT WILL BE CONSIDERED INCLUDED IN THE VARIOUS PAY ITEMS.

THE FINAL 2" OF SURFACE COURSE IS TO BE PLACED AFTER ALL OTHER COURSES HAVE BEEN LAID. LONGITUDINAL JOINTS SHALL BE AT LANE LINES.

THE EXISTING ASPHALT PAVEMENT TO BE REMOVED FROM THE REMAINING PAVEMENT SHALL BE SEPARATED BY SAWING ALONG A NEAT LINE. AFTER SAWING, THE PAVEMENT TO BE REMOVED SHALL BE CAREFULLY REMOVED IN A MANNER THAT WILL NOT DAMAGE THE PAVEMENT THAT IS TO REMAIN. ANY DAMAGE OF THE ASPHALT PAVEMENT THAT IS TO REMAIN IN PLACE SHALL BE REPAIRED AT THE CONTRACTOR'S EXPENSE.

PRIOR TO AND DURING PLACEMENT OF PAVEMENT IN FRONT OF THE CURB AND GUTTER, THE CONTRACTOR SHALL PROVIDE POSITIVE DRAINAGE AT ALL TIMES. THE METHOD(S) USED SHALL BE APPROVED BY THE ENGINEER. PAYMENT FOR THIS WORK SHALL BE CONSIDERED INCLUDED IN THE PRICE BID FOR THE VARIOUS CONTRACT ITEMS.

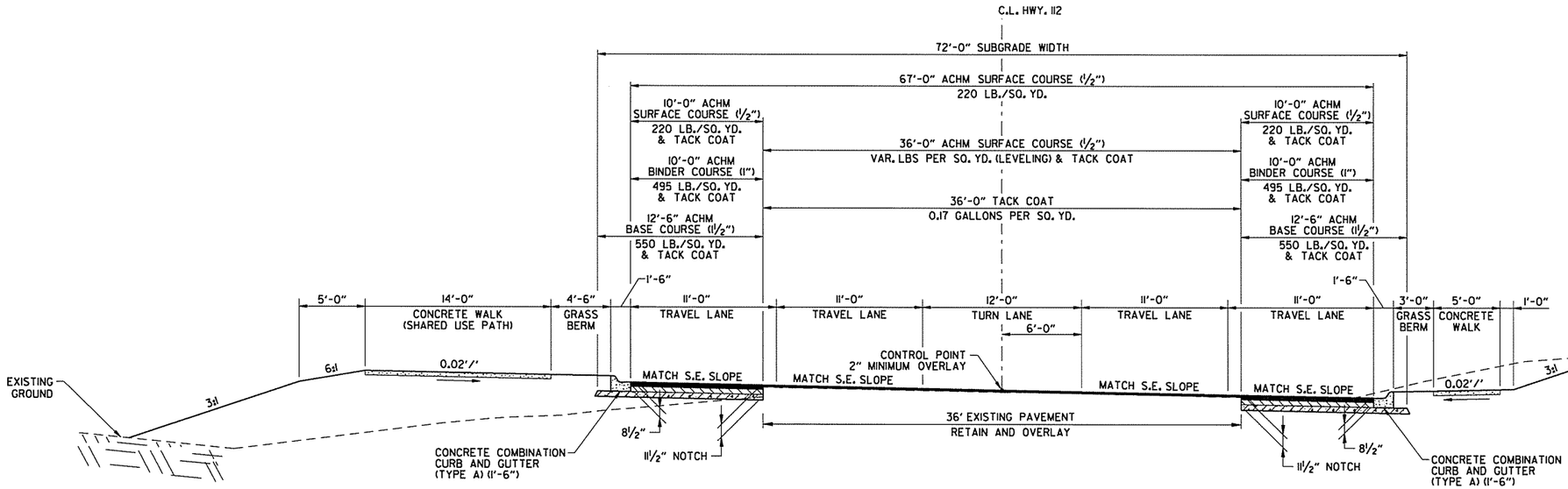

HWY. 112 TYPICAL SUPERELEVATED SECTION W/SHARED USE PATH ON LT.

STA. 14+83.32 TO STA. 17+51.79
STA. 21+27.27 TO STA. 24+76.53

TYPICAL SECTIONS OF IMPROVEMENT

AEWerclok 3/20/2016 11:51:31 AM
WORKSPACE: AHTD
L:\2016\160717.07 - I-540 Widening & Interchange Improvement\Drawings\r-BB0414_TS_ALL.dgn
REVISED DATE:

DATE REVISED	DATE FILMED	DATE REVISED	DATE FILMED	FED.RD. DIST.NO.	STATE	FED.AID PROJ.NO.	SHEET NO.	TOTAL SHEETS
				6	ARK.			
				JOB NO.		BB0414	34	886

(2) TYPICAL SECTIONS OF IMPROVEMENT

3-20-16

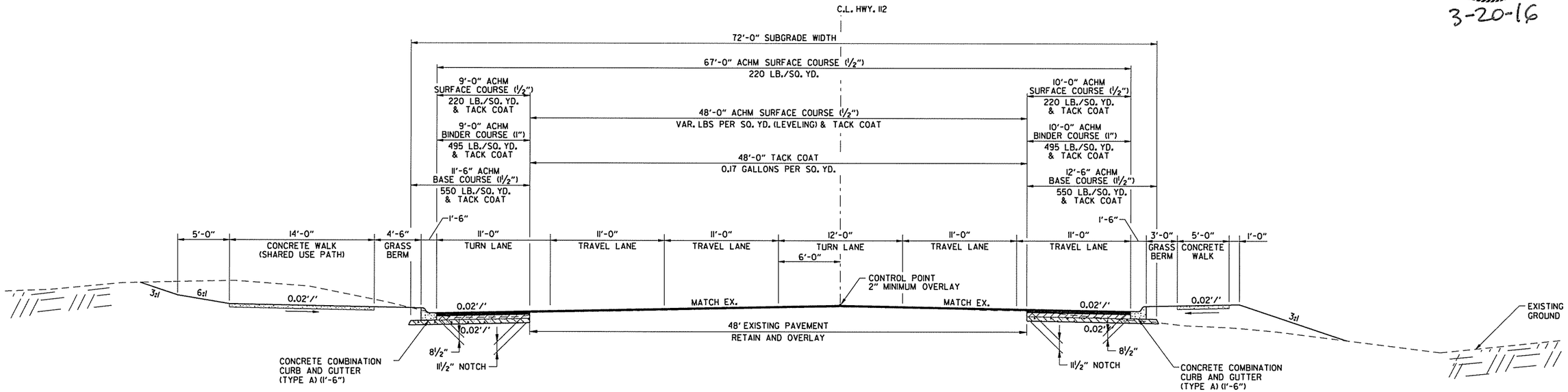

HWY. 112 TYPICAL SECTION W/TURN LANE ON LT. & SHARED USE PATH ON LT.

STA. 24+76.53 TO STA. 27+90.47

NOTES:

REFER TO CROSS SECTIONS FOR DEVIATION FROM THE NORMAL SLOPES. NO CHANGES SHALL BE MADE FROM THE PLANNED SLOPES WITHOUT THE APPROVAL OF THE ENGINEER.

ASPHALT FOR LEVELING OF EXISTING PAVEMENT SHALL BE PLACED ONLY IF AND WHERE DIRECTED BY THE ENGINEER. CALCULATIONS FOR THE AMOUNT OF LEVELING AND/OR LEVELING OPERATIONS SHALL BE PERFORMED BEFORE CONSTRUCTING NOTCH AND WIDENING. CALCULATIONS WILL NOT BE PAID FOR DIRECTLY, BUT PAYMENT WILL BE CONSIDERED INCLUDED IN THE VARIOUS PAY ITEMS.

THE FINAL 2" OF SURFACE COURSE IS TO BE PLACED AFTER ALL OTHER COURSES HAVE BEEN LAID. LONGITUDINAL JOINTS SHALL BE AT LANE LINES.

THE EXISTING ASPHALT PAVEMENT TO BE REMOVED FROM THE REMAINING PAVEMENT SHALL BE SEPARATED BY SAWING ALONG A NEAT LINE. AFTER SAWING, THE PAVEMENT TO BE REMOVED SHALL BE CAREFULLY REMOVED IN A MANNER THAT WILL NOT DAMAGE THE PAVEMENT THAT IS TO REMAIN. ANY DAMAGE OF THE ASPHALT PAVEMENT THAT IS TO REMAIN IN PLACE SHALL BE REPAIRED AT THE CONTRACTOR'S EXPENSE.

PRIOR TO AND DURING PLACEMENT OF PAVEMENT IN FRONT OF THE CURB AND GUTTER, THE CONTRACTOR SHALL PROVIDE POSITIVE DRAINAGE AT ALL TIMES. THE METHOD(S) USED SHALL BE APPROVED BY THE ENGINEER. PAYMENT FOR THIS WORK SHALL BE CONSIDERED INCLUDED IN THE PRICE BID FOR THE VARIOUS CONTRACT ITEMS.

TYPICAL SECTIONS OF IMPROVEMENT

AEWierciak 3/20/2016 11:51:31 AM
WORKSPACE: AHTD
L:\20IN\10\7107 - I-540 Widening & Interchange Improvement\Drawings\r-BB0414_TS_ALL.dgn
REVISED DATE:

DATE REVISED	DATE FILMED	DATE REVISED	DATE FILMED	FED.RD. DIST.NO.	STATE	FED.AID PROJ.NO.	SHEET NO.	TOTAL SHEETS
				6	ARK.			
				JOB NO.		BB0414	35	886
				(2)	TYPICAL SECTIONS OF IMPROVEMENT			

STATE OF ARKANSAS
LICENSED PROFESSIONAL ENGINEER
No. 13422
JOHN F. CANTABERY
3-20-16

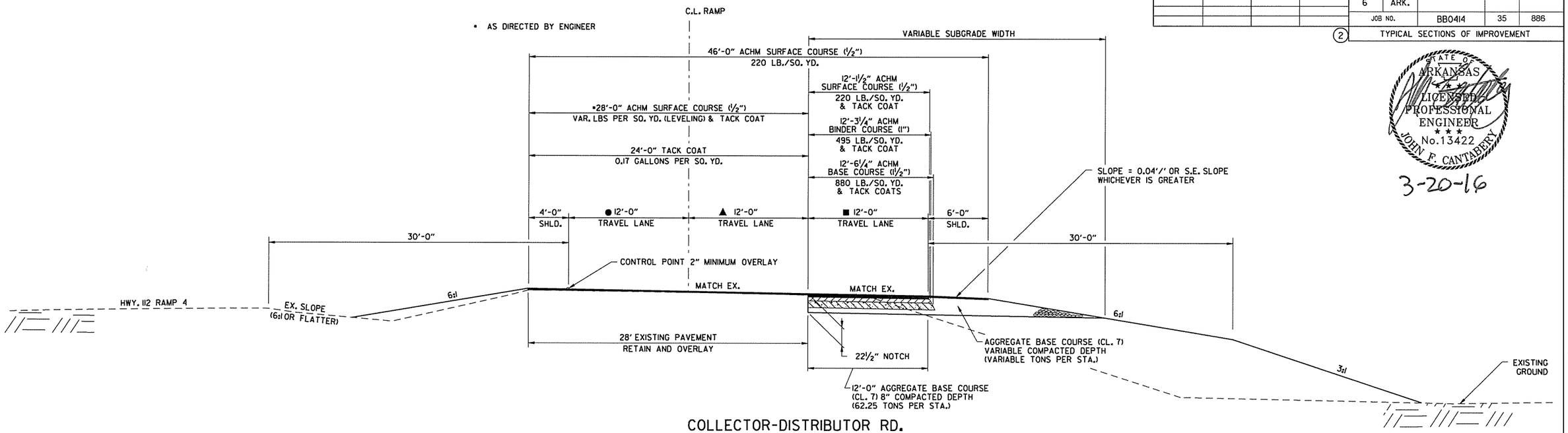

COLLECTOR-DISTRIBUTOR RD.
THREE LANE NOTCH AND WIDEN SECTION

(SHOWN IN THE DIRECTION OF TRAFFIC)

COLLECTOR-DISTRIBUTOR RD. STA. 276+14.98 TO STA. 280+79.57

▲ TRANSITION LANE FROM
12' AT COLLECTOR-DISTRIBUTOR RD. STA. 279+29.57 TO
7.5' AT COLLECTOR-DISTRIBUTOR RD. STA. 280+79.57

■ TRANSITION LANE FROM
20' AT COLLECTOR-DISTRIBUTOR RD. STA. 277+60.27 TO
12' AT COLLECTOR-DISTRIBUTOR RD. STA. 278+40.27

12' AT COLLECTOR-DISTRIBUTOR RD. STA. 279+29.57 TO
0' AT COLLECTOR-DISTRIBUTOR RD. STA. 280+79.57

● TRANSITION LANE FROM
12' AT COLLECTOR-DISTRIBUTOR RD. STA. 279+29.57 TO
7.5' AT COLLECTOR-DISTRIBUTOR RD. STA. 280+79.57

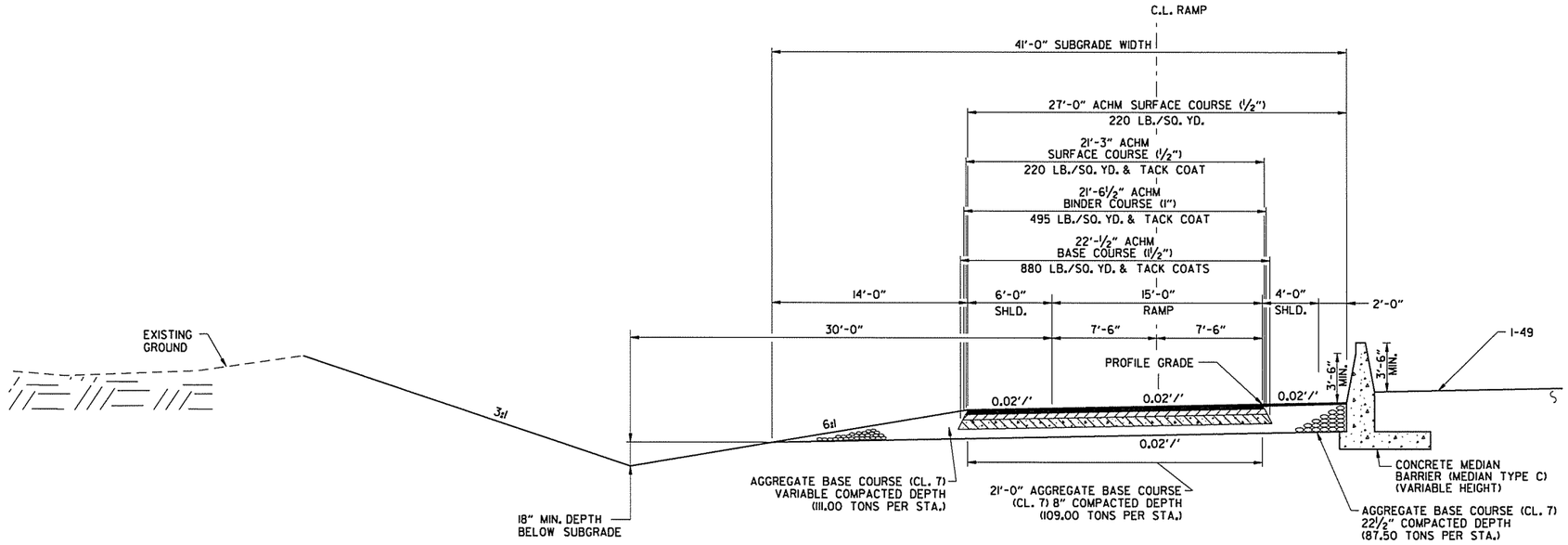

COLLECTOR-DISTRIBUTOR RD.
TYPICAL SECTION W/BARRIER RT.

(SHOWN IN THE DIRECTION OF STATIONING)

STA. 290+62.46 TO STA. 291+26.60

NOTES:

REFER TO CROSS SECTIONS FOR DEVIATION FROM THE NORMAL SLOPES. NO CHANGES SHALL BE MADE FROM THE PLANNED SLOPES WITHOUT THE APPROVAL OF THE ENGINEER.

THE THICKNESS OF AGGREGATE BASE COURSE SHALL BE WITHIN PLUS OR MINUS ONE INCH OF THE PLAN THICKNESS SHOWN. THE CONTRACTOR WILL CORRECT ANY DEFICIENT THICKNESS THAT DOES NOT MEET TOLERANCE INDICATED. PAYMENT WILL NOT BE MADE FOR MATERIAL PLACED IN EXCESS OF THE TOLERANCE INDICATED.

ASPHALT FOR LEVELING OF EXISTING PAVEMENT SHALL BE PLACED ONLY IF AND WHERE DIRECTED BY THE ENGINEER. CALCULATIONS FOR THE AMOUNT OF LEVELING AND/OR LEVELING OPERATIONS SHALL BE PERFORMED BEFORE CONSTRUCTING NOTCH AND WIDENING. CALCULATIONS WILL NOT BE PAID FOR DIRECTLY, BUT PAYMENT WILL BE CONSIDERED INCLUDED IN THE VARIOUS PAY ITEMS.

THE FINAL 2" OF SURFACE COURSE IS TO BE PLACED AFTER ALL OTHER COURSES HAVE BEEN LAID. LONGITUDINAL JOINTS SHALL BE AT LANE LINES.

THE EXISTING ASPHALT PAVEMENT TO BE REMOVED FROM THE REMAINING PAVEMENT SHALL BE SEPARATED BY SAWING ALONG A NEAT LINE. AFTER SAWING, THE PAVEMENT TO BE REMOVED SHALL BE CAREFULLY REMOVED IN A MANNER THAT WILL NOT DAMAGE THE PAVEMENT THAT IS TO REMAIN. ANY DAMAGE OF THE ASPHALT PAVEMENT THAT IS TO REMAIN IN PLACE SHALL BE REPAIRED AT THE CONTRACTOR'S EXPENSE.

TYPICAL SECTIONS OF IMPROVEMENT

AEWerclok 3/20/2016 11:51:32 AM
WORKSPACE: AHTD
L:\20IN\16I1707 - I-540 Widening & Interchange Improvement\Drawings\rBB0414_TS_ALL.dgn
REVISED DATE:

DATE REVISED	DATE FILMED	DATE REVISED	DATE FILMED	FED.RD. DIST.NO.	STATE	FED.AID PROJ.NO.	SHEET NO.	TOTAL SHEETS
				6	ARK.			
				JOB NO.		BB0414	36	886
				(2)	TYPICAL SECTIONS OF IMPROVEMENT			

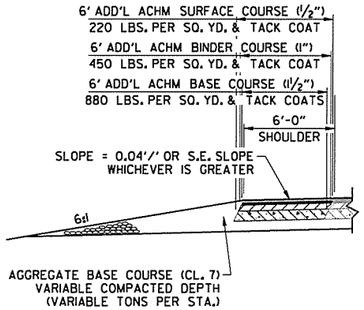

OUTSIDE SHOULDER
FULL DEPTH DETAIL - SUPERELEVATED

STA. 288+37.46 TO STA. 290+62.46

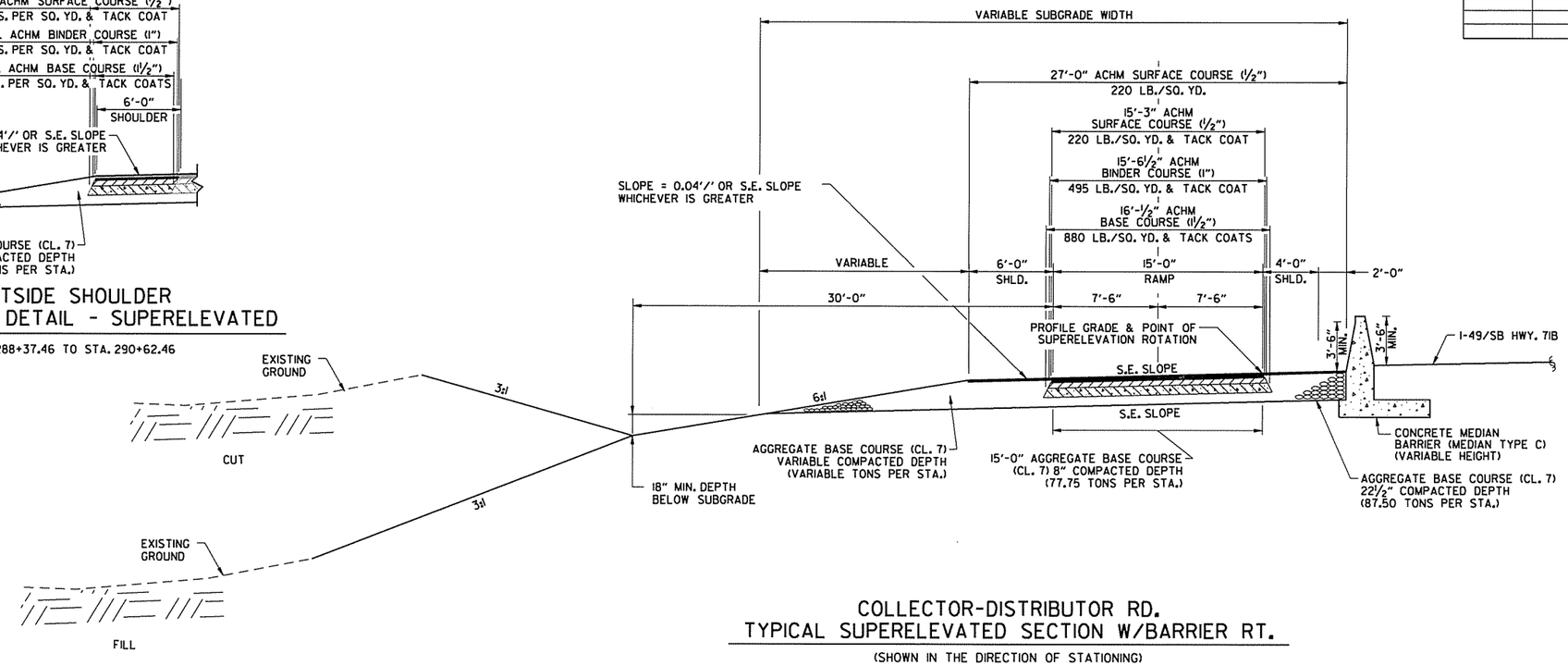

COLLECTOR-DISTRIBUTOR RD.
TYPICAL SUPERELEVATED SECTION W/BARRIER RT.

(SHOWN IN THE DIRECTION OF STATIONING)

STA. 288+37.46 TO STA. 290+62.46
STA. 309+87.16 TO STA. 311+70.00

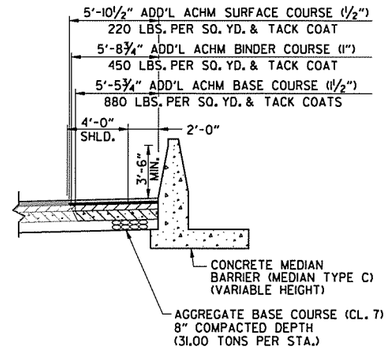

INSIDE SHOULDER
FULL DEPTH DETAIL

STA. 309+87.16 TO STA. 311+70.00

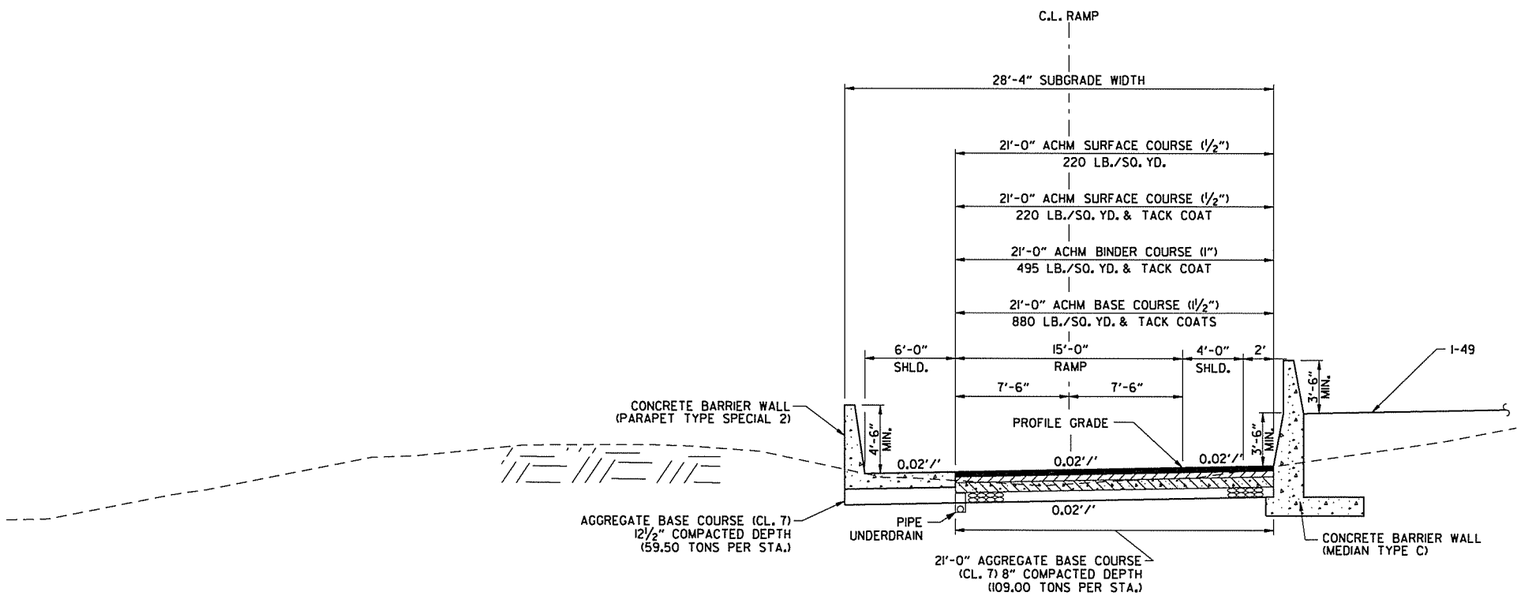

COLLECTOR-DISTRIBUTOR RD.
TYPICAL SECTION W/BARRIER LT. & RT.

(SHOWN IN THE DIRECTION OF STATIONING)

STA. 291+26.60 TO STA. 291+73.09

NOTES:

REFER TO CROSS SECTIONS FOR DEVIATION FROM THE NORMAL SLOPES. NO CHANGES SHALL BE MADE FROM THE PLANNED SLOPES WITHOUT THE APPROVAL OF THE ENGINEER.

THE THICKNESS OF AGGREGATE BASE COURSE SHALL BE WITHIN PLUS OR MINUS ONE INCH OF THE PLAN THICKNESS SHOWN. THE CONTRACTOR WILL CORRECT ANY DEFICIENT THICKNESS THAT DOES NOT MEET TOLERANCE INDICATED. PAYMENT WILL NOT BE MADE FOR MATERIAL PLACED IN EXCESS OF THE TOLERANCE INDICATED.

THE FINAL 2" OF SURFACE COURSE IS TO BE PLACED AFTER ALL OTHER COURSES HAVE BEEN LAID. LONGITUDINAL JOINTS SHALL BE AT LANE LINES.

3-20-16

TYPICAL SECTIONS OF IMPROVEMENT

AEWerclok 3/20/2016 11:51:32 AM
WORKSPACE: AHTD
L:\2011\1101707 - I-540 Widening & Interchange Improvement\Drawings\r-BB0414_TS_ALL.dgn
REVISED DATE:

DATE REVISED	DATE FILMED	DATE REVISED	DATE FILMED	FED.RD. DIST.NO.	STATE	FED.AID PROJ.NO.	SHEET NO.	TOTAL SHEETS
				6	ARK.			
				JOB NO.		BB0414	37	886

(2) TYPICAL SECTIONS OF IMPROVEMENT

STATE OF ARKANSAS
LICENSED PROFESSIONAL ENGINEER
No. 13422
JOHN F. CANTABERRY
3-20-16

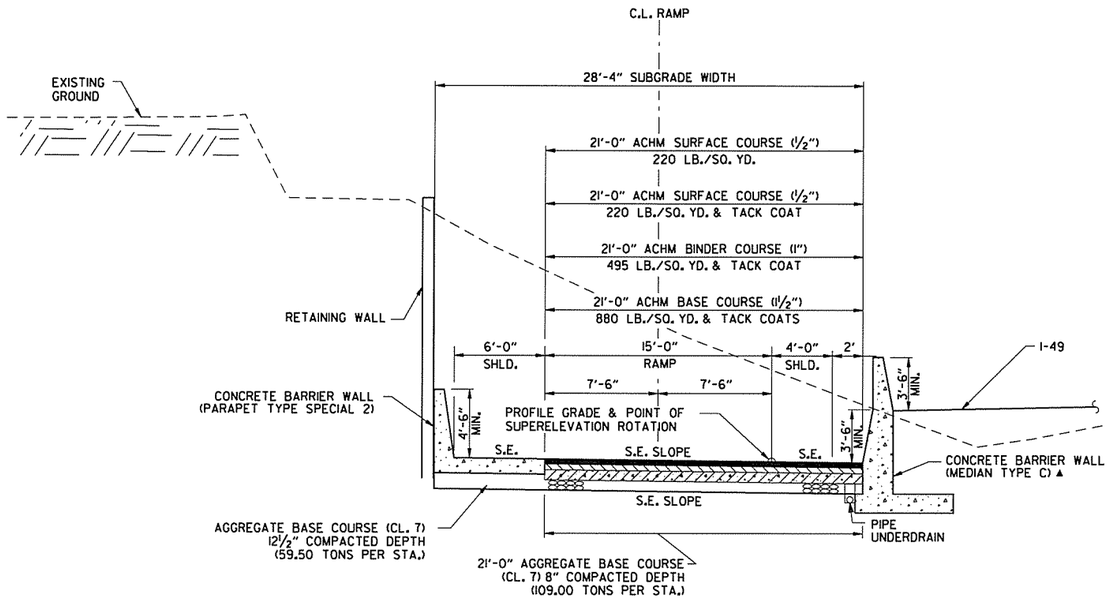

▲ SIDE TYPE SPECIAL FROM STA. 291+94.68 TO STA. 293+85.65

COLLECTOR-DISTRIBUTOR RD.
TYPICAL SUPERELEVATED SECTION W/BARRIER LT. & RT.

(SHOWN IN THE DIRECTION OF STATIONING)

STA. 291+73.09 TO STA. 293+85.65

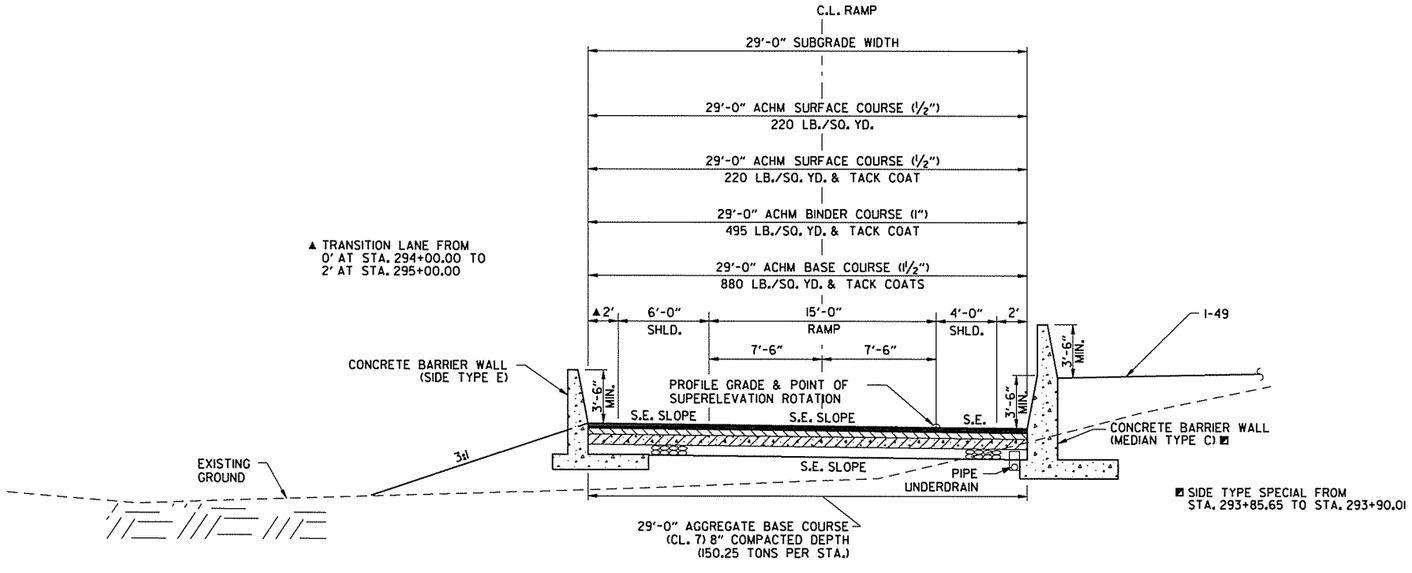

◪ SIDE TYPE SPECIAL FROM STA. 293+85.65 TO STA. 293+90.01

COLLECTOR-DISTRIBUTOR RD.
TYPICAL SUPERELEVATED SECTION W/BARRIER LT. & RT.

(SHOWN IN THE DIRECTION OF STATIONING)

STA. 293+85.65 TO STA. 295+00.00

NOTES:

REFER TO CROSS SECTIONS FOR DEVIATION FROM THE NORMAL SLOPES. NO CHANGES SHALL BE MADE FROM THE PLANNED SLOPES WITHOUT THE APPROVAL OF THE ENGINEER.

THE THICKNESS OF AGGREGATE BASE COURSE SHALL BE WITHIN PLUS OR MINUS ONE INCH OF THE PLAN THICKNESS SHOWN. THE CONTRACTOR WILL CORRECT ANY DEFICIENT THICKNESS THAT DOES NOT MEET TOLERANCE INDICATED. PAYMENT WILL NOT BE MADE FOR MATERIAL PLACED IN EXCESS OF THE TOLERANCE INDICATED.

THE FINAL 2" OF SURFACE COURSE IS TO BE PLACED AFTER ALL OTHER COURSES HAVE BEEN LAID. LONGITUDINAL JOINTS SHALL BE AT LANE LINES.

TYPICAL SECTIONS OF IMPROVEMENT

AEWierciak 3/20/2016 5:13:12 PM
WORKSPACE: AHTD
L:\20IN\10I7I07 - I-540 Widening & Interchange Improvement\Drawings\rBB0414_TS_ALL.dgn
REVISED DATE:

DATE REVISED	DATE FILMED	DATE REVISED	DATE FILMED	FED.RD. DIST.NO.	STATE	FED.AID PROJ.NO.	SHEET NO.	TOTAL SHEETS
				6	ARK.			
				JOB NO.		BB0414	38	886
				(2)	TYPICAL SECTIONS OF IMPROVEMENT			

STATE OF ARKANSAS
JOHN F. CANTABERY
LICENSED PROFESSIONAL ENGINEER
No. 13422

3-20-16

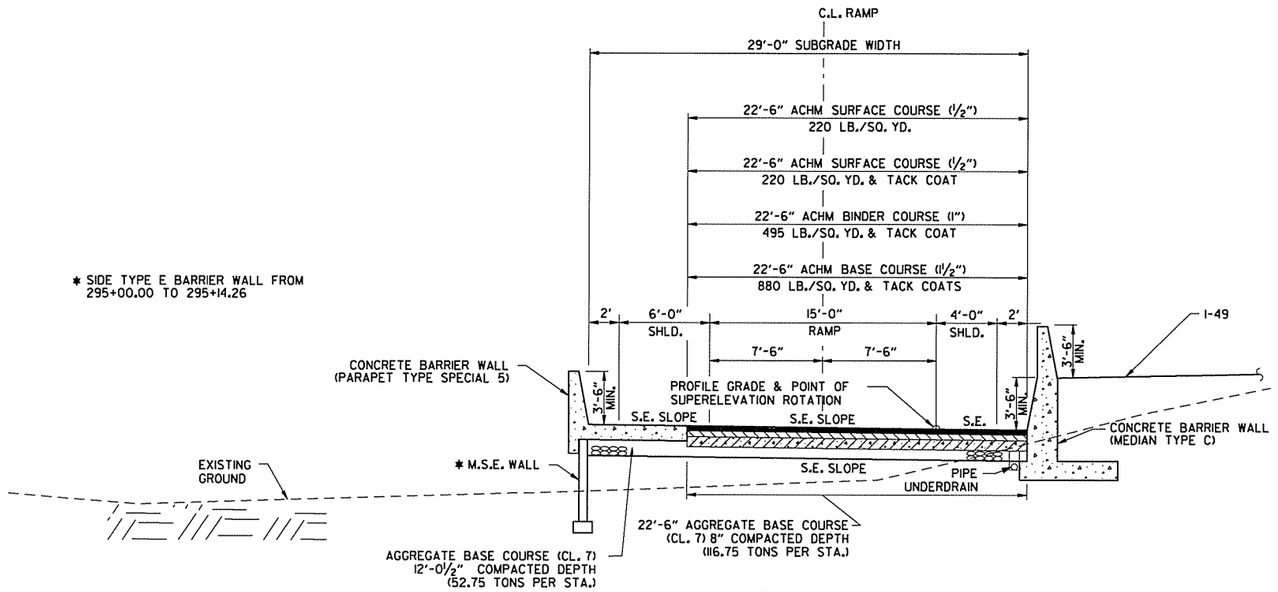

COLLECTOR-DISTRIBUTOR RD.
TYPICAL SUPERELEVATED SECTION W/BARRIER LT. & RT.

(SHOWN IN THE DIRECTION OF STATIONING)

STA. 295+00.00 TO STA. 299+87.16

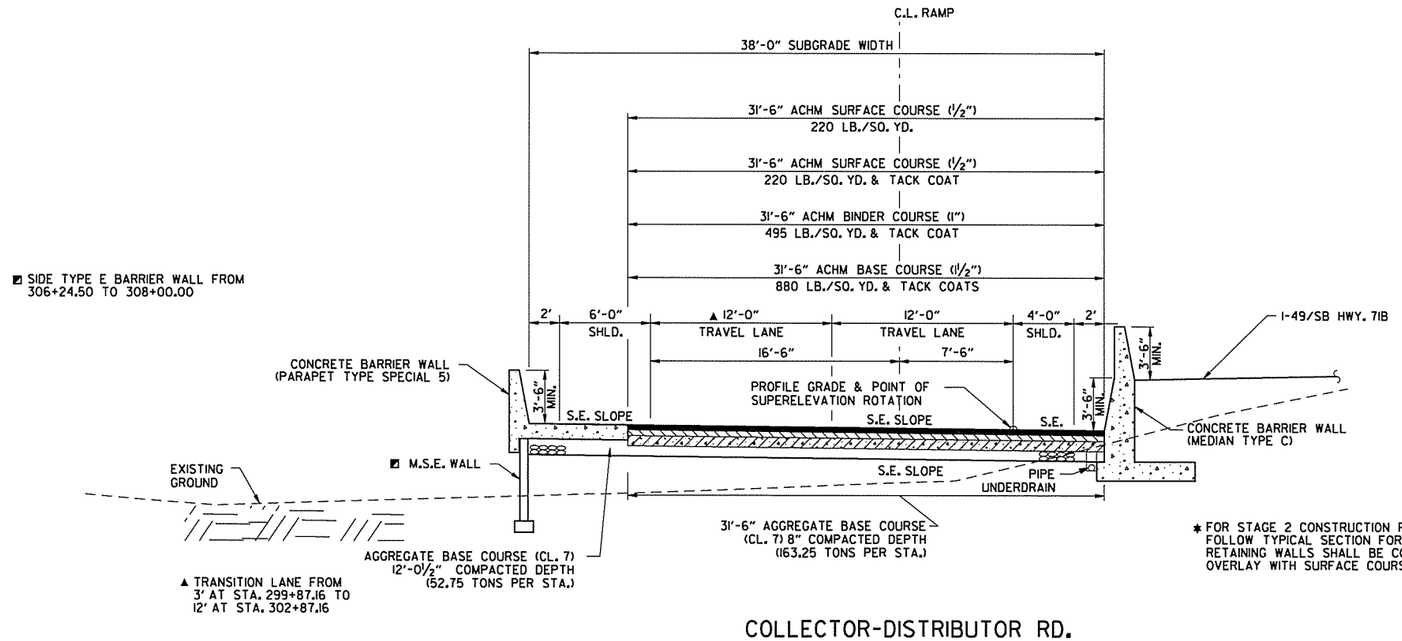

NOTES:

REFER TO CROSS SECTIONS FOR DEVIATION FROM THE NORMAL SLOPES. NO CHANGES SHALL BE MADE FROM THE PLANNED SLOPES WITHOUT THE APPROVAL OF THE ENGINEER.

THE THICKNESS OF AGGREGATE BASE COURSE SHALL BE WITHIN PLUS OR MINUS ONE INCH OF THE PLAN THICKNESS SHOWN. THE CONTRACTOR WILL CORRECT ANY DEFICIENT THICKNESS THAT DOES NOT MEET TOLERANCE INDICATED. PAYMENT WILL NOT BE MADE FOR MATERIAL PLACED IN EXCESS OF THE TOLERANCE INDICATED.

THE FINAL 2" OF SURFACE COURSE IS TO BE PLACED AFTER ALL OTHER COURSES HAVE BEEN LAID. LONGITUDINAL JOINTS SHALL BE AT LANE LINES.

* FOR STAGE 2 CONSTRUCTION FROM 307+00.00 TO 308+00.00, FOLLOW TYPICAL SECTION FOR TEMP. SB I-49 TO C-D RD. RAMP. RETAINING WALLS SHALL BE CONSTRUCTED TO FINAL C-D RD. GRADE. OVERLAY WITH SURFACE COURSE TO FINAL GRADES IN STAGE 3A.

COLLECTOR-DISTRIBUTOR RD.
TYPICAL TWO LANE SUPERELEVATED SECTION W/BARRIER LT. & RT.

(SHOWN IN THE DIRECTION OF STATIONING)

STA. 299+87.16 TO STA. 301+18.52
STA. 302+85.21 TO STA. 308+00.00 *

TYPICAL SECTIONS OF IMPROVEMENT

AEWlarcisk 3/20/2016 11:51:32 AM
WORKSPACE: AHTD
L:\201\101707 - I-540 Widening & Interchange Improvement\Drawings\rBB0414_TS_ALL.dgn
REVISED DATE:

DATE REVISED	DATE FILMED	DATE REVISED	DATE FILMED	FED.RD. DIST.NO.	STATE	FED.AID PROJ.NO.	SHEET NO.	TOTAL SHEETS
				6	ARK.			
				JOB NO.		BB0414	39	886
				(2)	TYPICAL SECTIONS OF IMPROVEMENT			

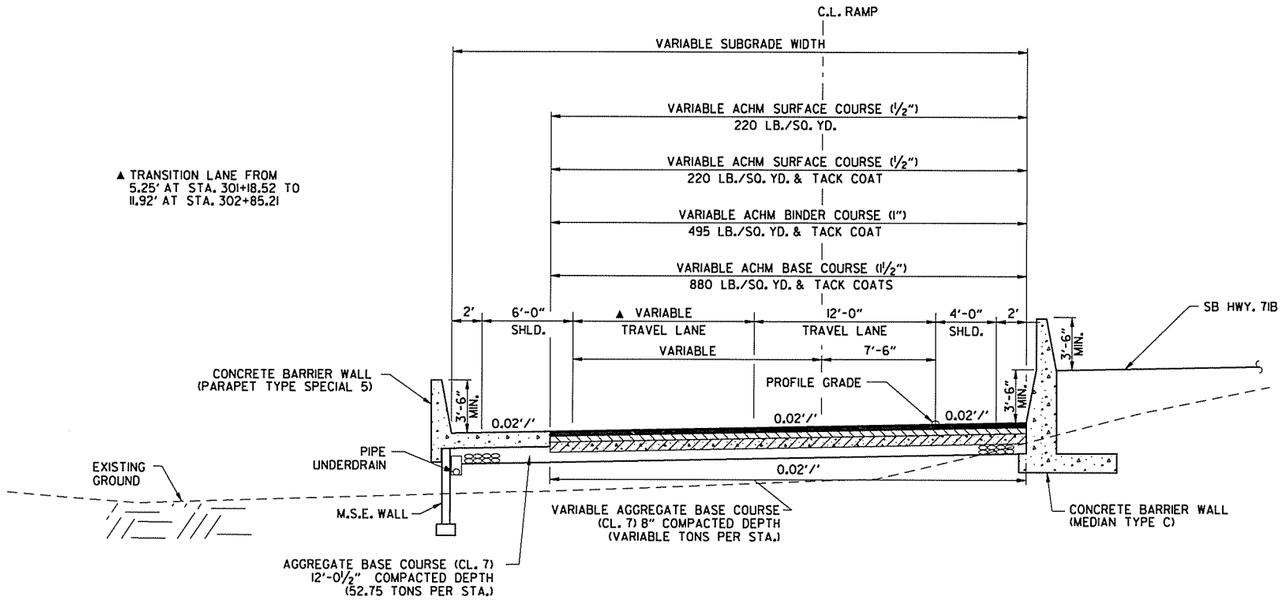

COLLECTOR-DISTRIBUTOR RD.
TYPICAL TWO LANE SECTION W/BARRIER LT. & RT.

(SHOWN IN THE DIRECTION OF STATIONING)

STA. 301+18.52 TO STA. 302+85.21

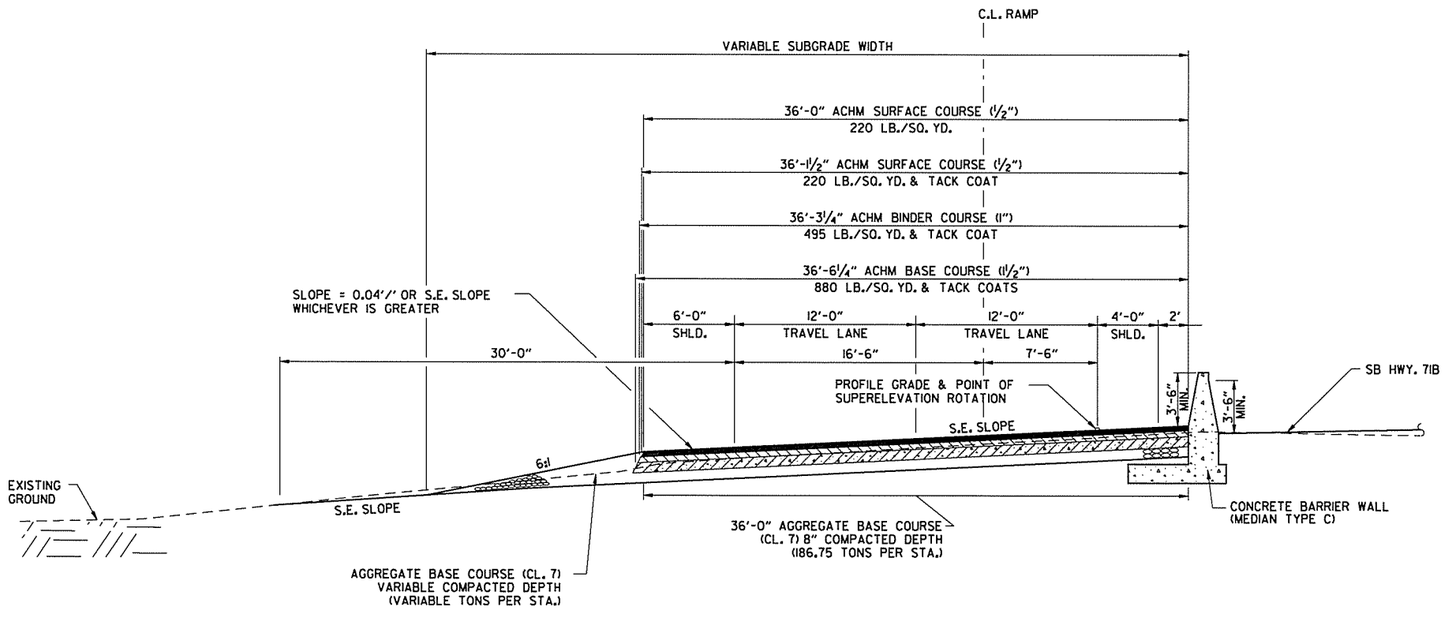

COLLECTOR-DISTRIBUTOR RD.
TYPICAL TWO LANE SUPERELEVATED SECTION W/BARRIER RT.

(SHOWN IN THE DIRECTION OF STATIONING)

STA. 308+00.00 TO STA. 309+87.16

NOTES:

REFER TO CROSS SECTIONS FOR DEVIATION FROM THE NORMAL SLOPES. NO CHANGES SHALL BE MADE FROM THE PLANNED SLOPES WITHOUT THE APPROVAL OF THE ENGINEER.

THE THICKNESS OF AGGREGATE BASE COURSE SHALL BE WITHIN PLUS OR MINUS ONE INCH OF THE PLAN THICKNESS SHOWN. THE CONTRACTOR WILL CORRECT ANY DEFICIENT THICKNESS THAT DOES NOT MEET TOLERANCE INDICATED. PAYMENT WILL NOT BE MADE FOR MATERIAL PLACED IN EXCESS OF THE TOLERANCE INDICATED.

THE FINAL 2" OF SURFACE COURSE IS TO BE PLACED AFTER ALL OTHER COURSES HAVE BEEN LAID. LONGITUDINAL JOINTS SHALL BE AT LANE LINES.

TYPICAL SECTIONS OF IMPROVEMENT

STATE OF ARKANSAS
LICENSED PROFESSIONAL ENGINEER
No.13422
JOHN F. CANTABERY
3-20-16

AEWierdak 3/20/2016 11:51:33 AM
WORKSPACE: AHTD
L:\20I\10I707 - I-540 Widening & Interchange Improvement\Drawings\r-BB0414_TS_ALL.dgn
REVISED DATE:

DATE REVISED	DATE FILMED	DATE REVISED	DATE FILMED	FED.RD. DIST.NO.	STATE	FED.AID PROJ.NO.	SHEET NO.	TOTAL SHEETS
				6	ARK.			
				JOB NO.		BB0414	40	886
				(2)	TYPICAL SECTIONS OF IMPROVEMENT			

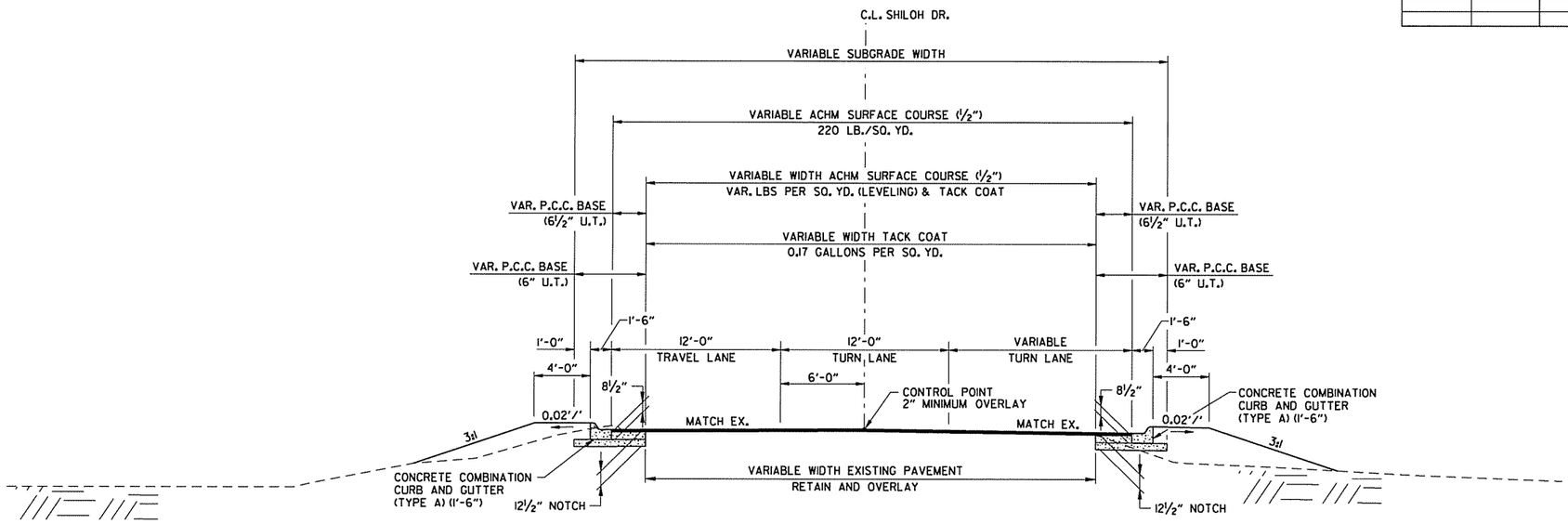

SHILOH DR. TYPICAL SECTION

STA. 73+53.04 TO STA. 74+72.00

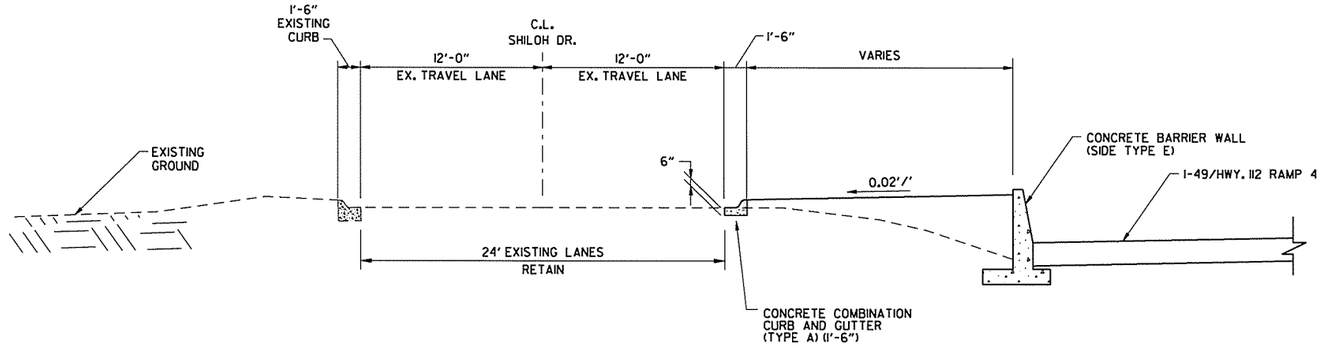

SHILOH DR. TYPICAL SECTION

STA. 43+15.90 TO STA. 56+42.00

NOTES:

REFER TO CROSS SECTIONS FOR DEVIATION FROM THE NORMAL SLOPES. NO CHANGES SHALL BE MADE FROM THE PLANNED SLOPES WITHOUT THE APPROVAL OF THE ENGINEER.

THE THICKNESS OF AGGREGATE BASE COURSE SHALL BE WITHIN PLUS OR MINUS ONE INCH OF THE PLAN THICKNESS SHOWN. THE CONTRACTOR WILL CORRECT ANY DEFICIENT THICKNESS THAT DOES NOT MEET TOLERANCE INDICATED. PAYMENT WILL NOT BE MADE FOR MATERIAL PLACED IN EXCESS OF THE TOLERANCE INDICATED.

ASPHALT FOR LEVELING OF EXISTING PAVEMENT SHALL BE PLACED ONLY IF AND WHERE DIRECTED BY THE ENGINEER. CALCULATIONS FOR THE AMOUNT OF LEVELING AND/OR LEVELING OPERATIONS SHALL BE PERFORMED BEFORE CONSTRUCTING NOTCH AND WIDENING. CALCULATIONS WILL NOT BE PAID FOR DIRECTLY, BUT PAYMENT WILL BE CONSIDERED INCLUDED IN THE VARIOUS PAY ITEMS.

THE FINAL 2" OF SURFACE COURSE IS TO BE PLACED AFTER ALL OTHER COURSES HAVE BEEN LAID. LONGITUDINAL JOINTS SHALL BE AT LANE LINES.

THE EXISTING ASPHALT PAVEMENT TO BE REMOVED FROM THE REMAINING PAVEMENT SHALL BE SEPARATED BY SAWING ALONG A NEAT LINE. AFTER SAWING, THE PAVEMENT TO BE REMOVED SHALL BE CAREFULLY REMOVED IN A MANNER THAT WILL NOT DAMAGE THE PAVEMENT THAT IS TO REMAIN. ANY DAMAGE OF THE ASPHALT PAVEMENT THAT IS TO REMAIN IN PLACE SHALL BE REPAIRED AT THE CONTRACTOR'S EXPENSE.

PRIOR TO AND DURING PLACEMENT OF PAVEMENT IN FRONT OF THE CURB AND GUTTER, THE CONTRACTOR SHALL PROVIDE POSITIVE DRAINAGE AT ALL TIMES. THE METHOD(S) USED SHALL BE APPROVED BY THE ENGINEER. PAYMENT FOR THIS WORK SHALL BE CONSIDERED INCLUDED IN THE PRICE BID FOR THE VARIOUS CONTRACT ITEMS.

STATE OF ARKANSAS
LICENSED PROFESSIONAL ENGINEER
No. 13422
JOHN F. CANTABERRY
3-20-16

AEWierciak 3/20/2016 11:51:33 AM
WORKSPACE: AHTD
L:\20I\10I707 - I-540 Widening & Interchange Improvement\Drawings\rBB0414_TS_ALL.dgn
REVISED DATE:

DATE REVISED	DATE FILMED	DATE REVISED	DATE FILMED	FED.RD. DIST.NO.	STATE	FED.AID PROJ.NO.	SHEET NO.	TOTAL SHEETS
				6	ARK.			
				JOB NO.		BB0414	41	886
				(2)	TYPICAL SECTIONS OF IMPROVEMENT			

STATE OF ARKANSAS
LICENSED PROFESSIONAL ENGINEER
No. 13422
JOHN F. CANTABERY
3-20-16

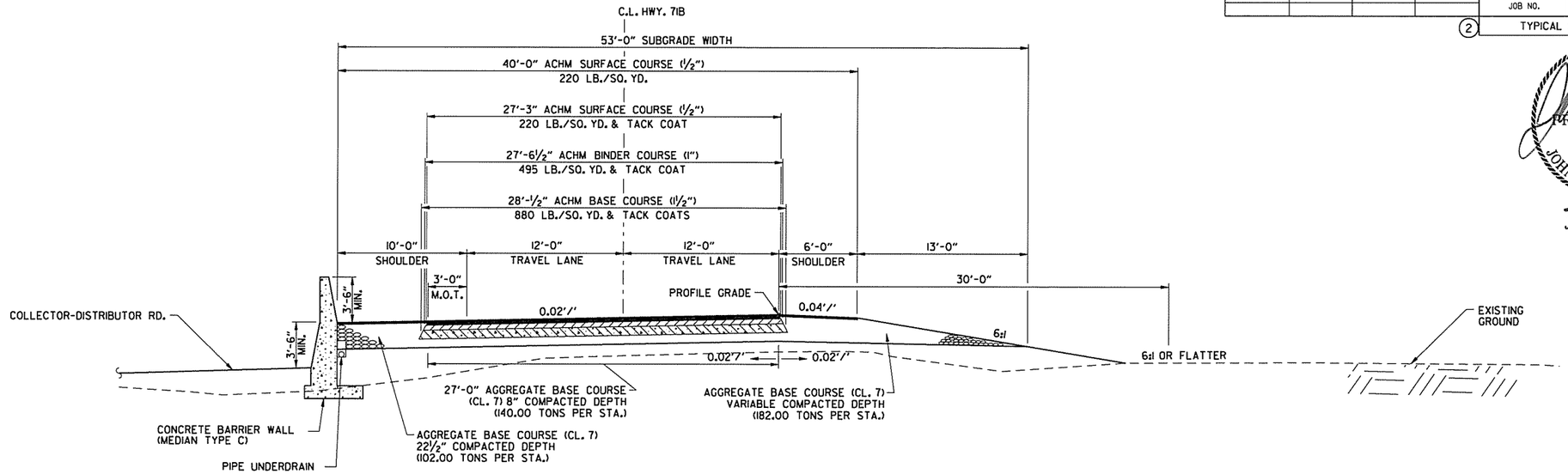

SB HWY. 71B TYPICAL SECTION W/BARRIER

(SHOWN IN THE DIRECTION OF STATIONING)

STA. 302+83.27 TO STA. 302+89.35
STA. 308+54.19 TO STA. 309+00.00

NOTES:

REFER TO CROSS SECTIONS FOR DEVIATION FROM THE NORMAL SLOPES. NO CHANGES SHALL BE MADE FROM THE PLANNED SLOPES WITHOUT THE APPROVAL OF THE ENGINEER.

THE THICKNESS OF AGGREGATE BASE COURSE SHALL BE WITHIN PLUS OR MINUS ONE INCH OF THE PLAN THICKNESS SHOWN. THE CONTRACTOR WILL CORRECT ANY DEFICIENT THICKNESS THAT DOES NOT MEET TOLERANCE INDICATED. PAYMENT WILL NOT BE MADE FOR MATERIAL PLACED IN EXCESS OF THE TOLERANCE INDICATED.

THE FINAL 2" OF SURFACE COURSE IS TO BE PLACED AFTER ALL OTHER COURSES HAVE BEEN LAID. LONGITUDINAL JOINTS SHALL BE AT LANE LINES.

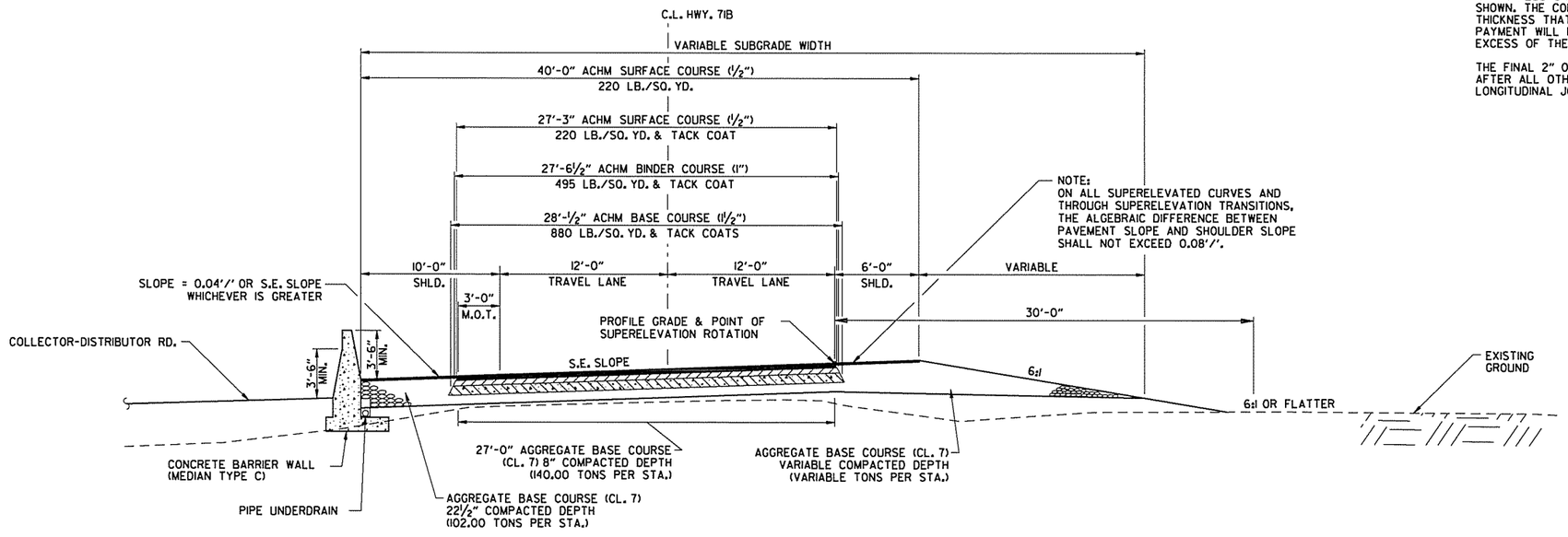

SB HWY. 71B TYPICAL SUPERELEVATED SECTION W/BARRIER

(SHOWN IN THE DIRECTION OF STATIONING)

STA. 300+40.27 TO STA. 302+83.27
STA. 302+89.35 TO STA. 308+54.19

TYPICAL SECTIONS OF IMPROVEMENT

AEWierciak 3/20/2016 11:51:33 AM
WORKSPACE: AHTD
L:\20IN\I0I7I0T - I-540 Widening & Interchange Improvement\Drawings\rBB0414_TS_ALL.dgn
REVISED DATE:

DATE REVISED	DATE FILMED	DATE REVISED	DATE FILMED	FED.RD. DIST.NO.	STATE	FED.AID PROJ.NO.	SHEET NO.	TOTAL SHEETS
				6	ARK.			
				JOB NO.		BB0414	42	886

(2) TYPICAL SECTIONS OF IMPROVEMENT

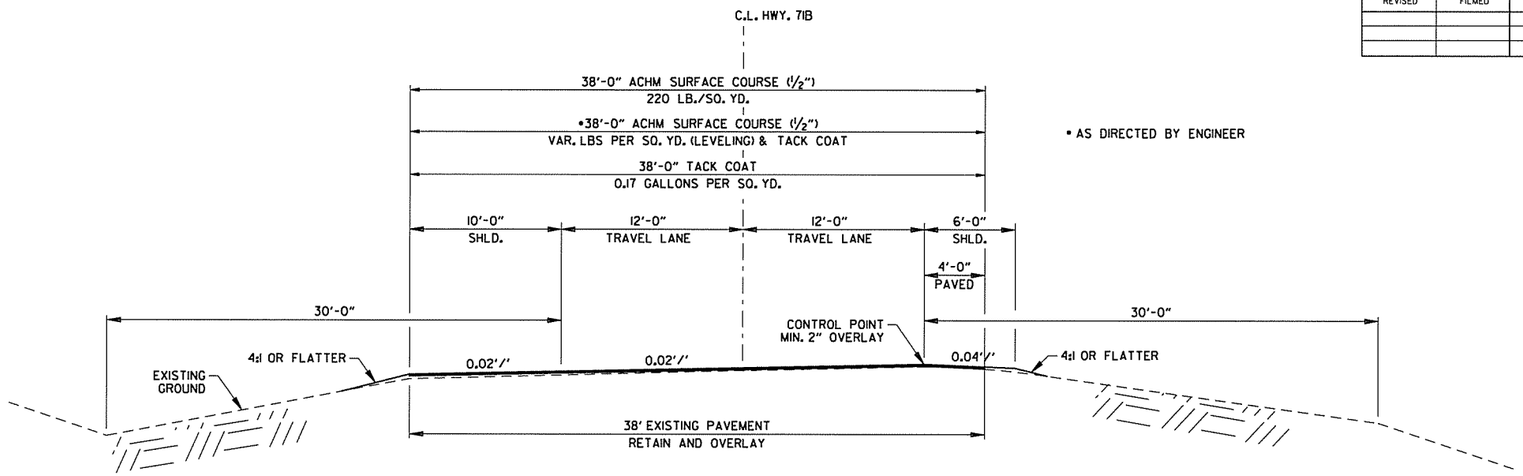

• AS DIRECTED BY ENGINEER

SB HWY. 71B TYPICAL OVERLAY SECTION

(SHOWN IN THE DIRECTION OF STATIONING)
STA. 309+00.00 TO STA. 317+37.90

NOTES:

REFER TO CROSS SECTIONS FOR DEVIATION FROM THE NORMAL SLOPES. NO CHANGES SHALL BE MADE FROM THE PLANNED SLOPES WITHOUT THE APPROVAL OF THE ENGINEER.

THE THICKNESS OF AGGREGATE BASE COURSE SHALL BE WITHIN PLUS OR MINUS ONE INCH OF THE PLAN THICKNESS SHOWN. THE CONTRACTOR WILL CORRECT ANY DEFICIENT THICKNESS THAT DOES NOT MEET TOLERANCE INDICATED. PAYMENT WILL NOT BE MADE FOR MATERIAL PLACED IN EXCESS OF THE TOLERANCE INDICATED.

ASPHALT FOR LEVELING OF EXISTING PAVEMENT SHALL BE PLACED ONLY IF AND WHERE DIRECTED BY THE ENGINEER. CALCULATIONS FOR THE AMOUNT OF LEVELING AND/OR LEVELING OPERATIONS SHALL BE PERFORMED BEFORE CONSTRUCTING NOTCH AND WIDENING. CALCULATIONS WILL NOT BE PAID FOR DIRECTLY, BUT PAYMENT WILL BE CONSIDERED INCLUDED IN THE VARIOUS PAY ITEMS.

THE FINAL 2" OF SURFACE COURSE IS TO BE PLACED AFTER ALL OTHER COURSES HAVE BEEN LAID. LONGITUDINAL JOINTS SHALL BE AT LANE LINES.

THE EXISTING ASPHALT PAVEMENT TO BE REMOVED FROM THE REMAINING PAVEMENT SHALL BE SEPARATED BY SAWING ALONG A NEAT LINE. AFTER SAWING, THE PAVEMENT TO BE REMOVED SHALL BE CAREFULLY REMOVED IN A MANNER THAT WILL NOT DAMAGE THE PAVEMENT THAT IS TO REMAIN. ANY DAMAGE OF THE ASPHALT PAVEMENT THAT IS TO REMAIN IN PLACE SHALL BE REPAIRED AT THE CONTRACTOR'S EXPENSE.

STATE OF ARKANSAS
LICENSED PROFESSIONAL ENGINEER
No. 13422
JOHN F. CANTABERY
3-20-16

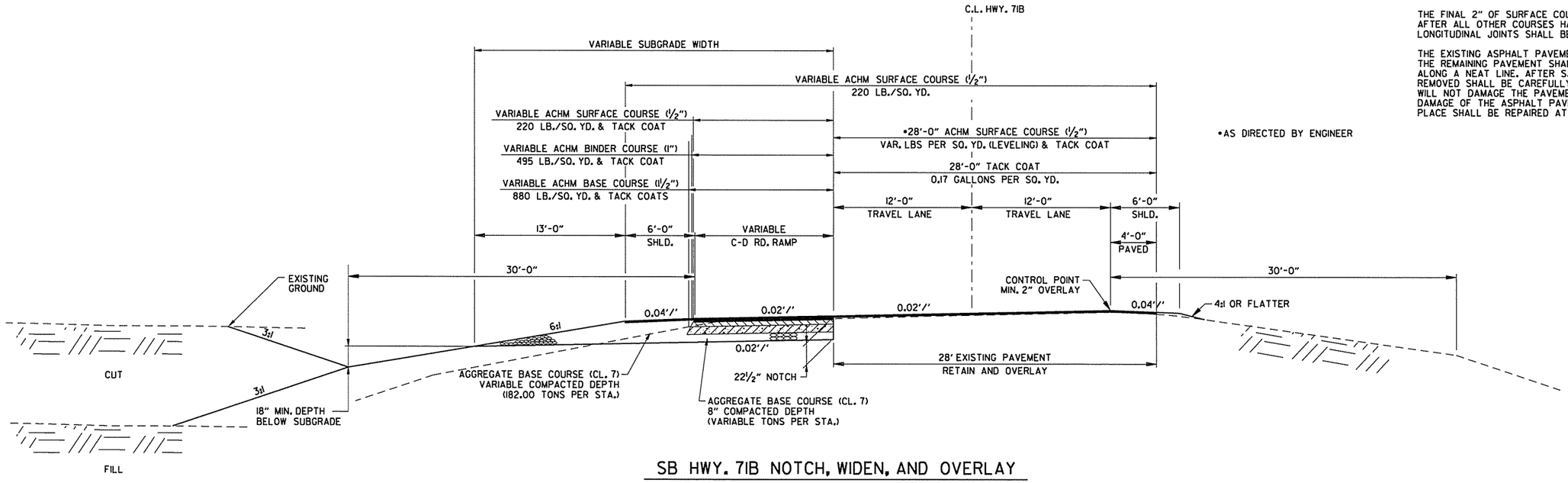

• AS DIRECTED BY ENGINEER

SB HWY. 71B NOTCH, WIDEN, AND OVERLAY

(SHOWN IN THE DIRECTION OF STATIONING)
STA. 317+37.90 TO STA. 323+41.74

TYPICAL SECTIONS OF IMPROVEMENT

AEWierciak 3/20/2016 11:51:33 AM
WORKSPACE: AHTD
L:\20\10\1707 - I-540 Widening & Interchange Improvement\Drawings\r-BB0414_TS_ALL.dgn
REVISED DATE:

DATE REVISED	DATE FILMED	DATE REVISED	DATE FILMED	FED.RD. DIST.NO.	STATE	FED.AID PROJ.NO.	SHEET NO.	TOTAL SHEETS
				6	ARK.			
				JOB NO.		BB0414	43	886

(2) TYPICAL SECTIONS OF IMPROVEMENT

STATE OF ARKANSAS
LICENSED PROFESSIONAL ENGINEER
No. 13422
JOHN F. CANTABERY
3-20-16

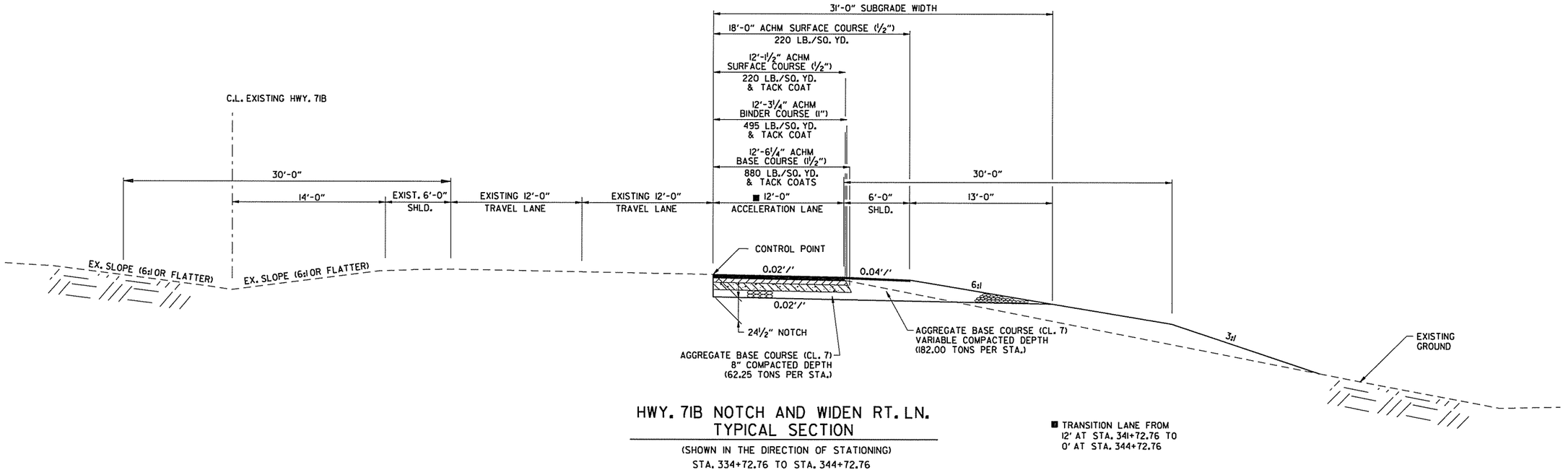

HWY. 71B NOTCH AND WIDEN RT. LN. TYPICAL SECTION

(SHOWN IN THE DIRECTION OF STATIONING)
STA. 334+72.76 TO STA. 344+72.76

■ TRANSITION LANE FROM 12' AT STA. 341+72.76 TO 0' AT STA. 344+72.76

AEWierciak 3/20/2016 11:51:33 AM
WORKSPACE: AHTD
L:\20\N\101707 - I-540 Widening & Interchange Improvement\Drawings\r-BB0414_TS_ALL.dgn
REVISED DATE:

DATE REVISED	DATE FILMED	DATE REVISED	DATE FILMED	FED.RD. DIST.NO.	STATE	FED.AID PROJ.NO.	SHEET NO.	TOTAL SHEETS
				6	ARK.			
				JOB NO.		BB0414	44	886
				(2)	TYPICAL SECTIONS OF IMPROVEMENT			

STATE OF ARKANSAS
LICENSED PROFESSIONAL ENGINEER
No.13653
ADAM E. WIERCIAK
3/20/16

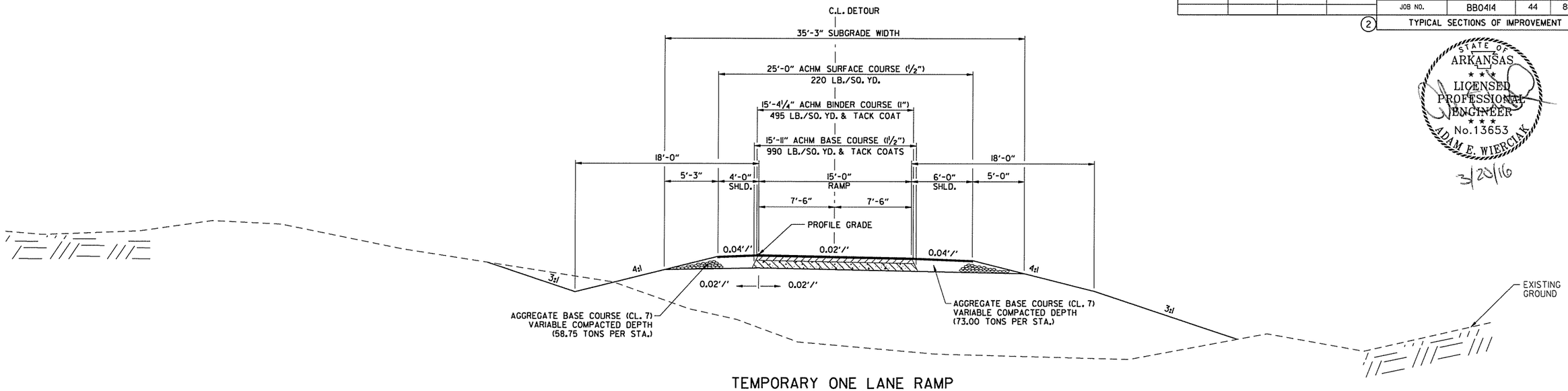

TEMPORARY ONE LANE RAMP
TYPICAL SECTION

(SHOWN IN THE DIRECTION OF TRAFFIC)

STAGE IA - TEMP. NB I-49 TO HWY. 71B RAMP STA. 314+72.29 TO STA. 315+17.84

NOTES:

REFER TO CROSS SECTIONS FOR DEVIATION FROM THE NORMAL SLOPES. NO CHANGES SHALL BE MADE FROM THE PLANNED SLOPES WITHOUT THE APPROVAL OF THE ENGINEER.

THE THICKNESS OF AGGREGATE BASE COURSE SHALL BE WITHIN PLUS OR MINUS ONE INCH OF THE PLAN THICKNESS SHOWN. THE CONTRACTOR WILL CORRECT ANY DEFICIENT THICKNESS THAT DOES NOT MEET TOLERANCE INDICATED. PAYMENT WILL NOT BE MADE FOR MATERIAL PLACED IN EXCESS OF THE TOLERANCE INDICATED.

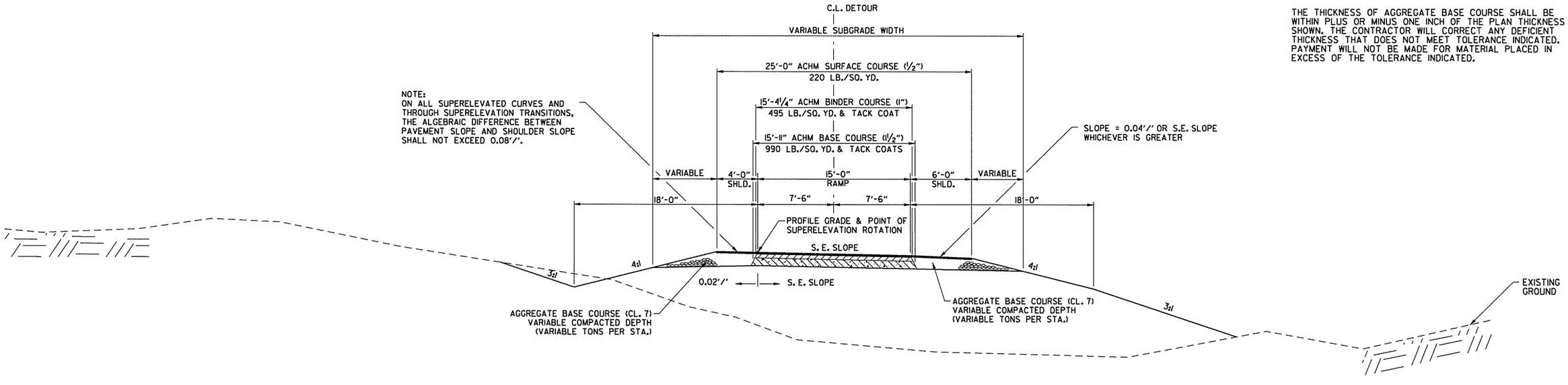

TEMPORARY ONE LANE RAMP
TYPICAL SUPERELEVATED SECTION

(SHOWN IN THE DIRECTION OF TRAFFIC)

STAGE IA - TEMP. NB I-49 TO HWY. 71B RAMP STA. 312+83.27 TO STA. 314+72.29
STAGE IA - TEMP. NB I-49 TO HWY. 71B RAMP STA. 315+17.84 TO STA. 319+28.25

TYPICAL SECTIONS OF IMPROVEMENT

AEWierciak 3/20/2016 11:51:34 AM
WORKSPACE: AHTD
L:\20IN\10I707 - I-540 Widening & Interchange Improvement\Drawings\rBB0414_TS_MOT.dgn
REVISED DATE:

DATE REVISED	DATE FILMED	DATE REVISED	DATE FILMED	FED.RD. DIST.NO.	STATE	FED.AID PROJ.NO.	SHEET NO.	TOTAL SHEETS
				6	ARK.			
				JOB NO.		BB0414	45	886
				(2)	TYPICAL SECTIONS OF IMPROVEMENT			

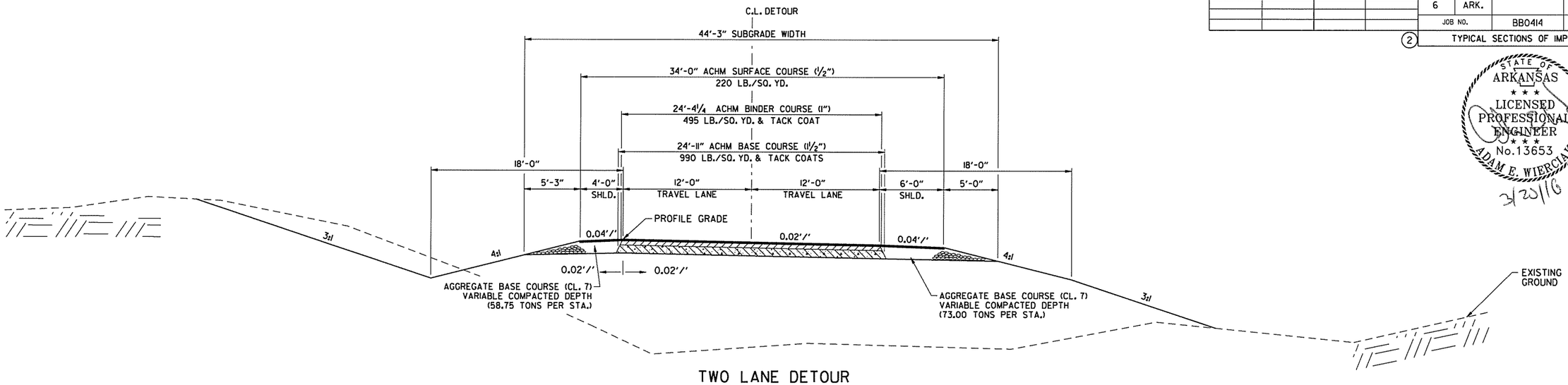

TWO LANE DETOUR
TYPICAL SECTION

(SHOWN IN THE DIRECTION OF TRAFFIC)

STAGE I- TEMP. SB I-49 DETOUR STA. 344+14.04 TO STA. 356+83.23
STAGE IA - TEMP. C-D RD. TO SB I-49 RAMP STA. 282+53.00 TO STA. 290+00.00 ●

● STA. 290+00.00 TO 291+10.81: CONSTRUCT C-D RD. PAVEMENT SECTION WITH FINAL 2" SURFACE COURSE LIFT OMITTED. CONSTRUCT TEMPORARY SURFACE COURSE LIFT TO MATCH TEMP C-D RD. TO SB I-49 DETOUR GRADES. IN STAGES 3 AND 3A, MILL TEMPORARY LIFT AND PLACE FINAL LIFT TO C-D ROAD GRADES.

NOTES:

REFER TO CROSS SECTIONS FOR DEVIATION FROM THE NORMAL SLOPES. NO CHANGES SHALL BE MADE FROM THE PLANNED SLOPES WITHOUT THE APPROVAL OF THE ENGINEER.

THE THICKNESS OF AGGREGATE BASE COURSE SHALL BE WITHIN PLUS OR MINUS ONE INCH OF THE PLAN THICKNESS SHOWN. THE CONTRACTOR WILL CORRECT ANY DEFICIENT THICKNESS THAT DOES NOT MEET TOLERANCE INDICATED. PAYMENT WILL NOT BE MADE FOR MATERIAL PLACED IN EXCESS OF THE TOLERANCE INDICATED.

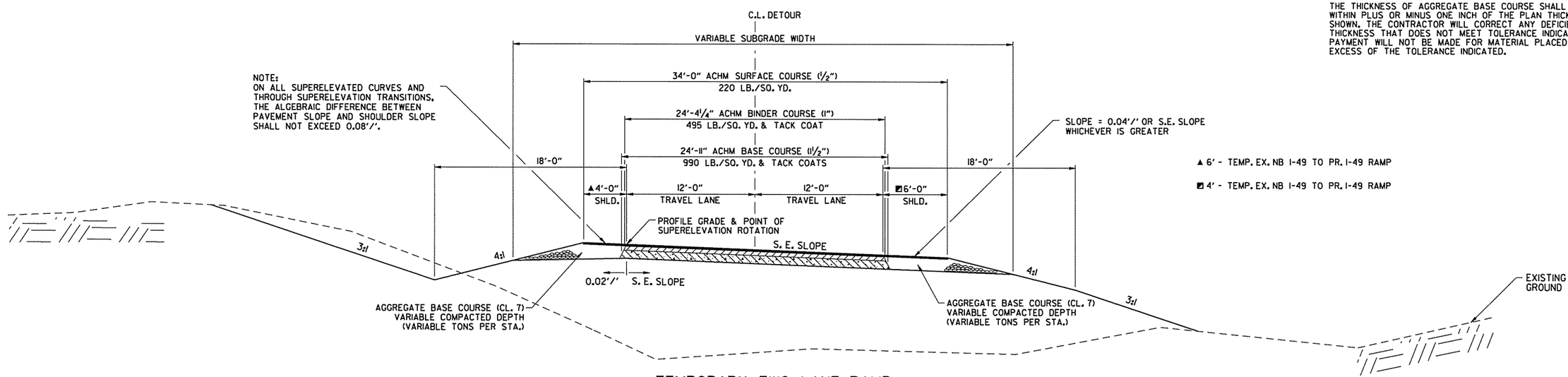

▲ 6' - TEMP. EX. NB I-49 TO PR. I-49 RAMP

◩ 4' - TEMP. EX. NB I-49 TO PR. I-49 RAMP

TEMPORARY TWO LANE RAMP
TYPICAL SUPERELEVATED SECTION

(SHOWN IN THE DIRECTION OF TRAFFIC)

STAGE I- TEMP. I-49 SB DETOUR STA. 342+88.70 TO STA. 344+30.53
STAGE IA - TEMP. C-D RD. TO SB I-49 RAMP STA. 281+93.00 TO STA. 282+53.00
STAGE IA - TEMP. EX. NB I-49 TO PR. I-49 RAMP STA. 320+00.78 TO STA. 324+60.28

TYPICAL SECTIONS OF IMPROVEMENT

STATE OF ARKANSAS
LICENSED PROFESSIONAL ENGINEER
No. 13653
ADAM E. WIERCIAK
3/20/16

AEWiercIak 3/20/2016 11:51:34 AM
WORKSPACE: AHTD
L:\20IN\I0I7\OT - I-540 Widening & Interchange Improvement\Drawings\rBB0414_TS_MOT.dgn
REVISED DATE:

DATE REVISED	DATE FILMED	DATE REVISED	DATE FILMED	FED.RD. DIST.NO.	STATE	FED.AID PROJ.NO.	SHEET NO.	TOTAL SHEETS
				6	ARK.			
				JOB NO.		BB0414	46	886
				(2)	TYPICAL SECTIONS OF IMPROVEMENT			

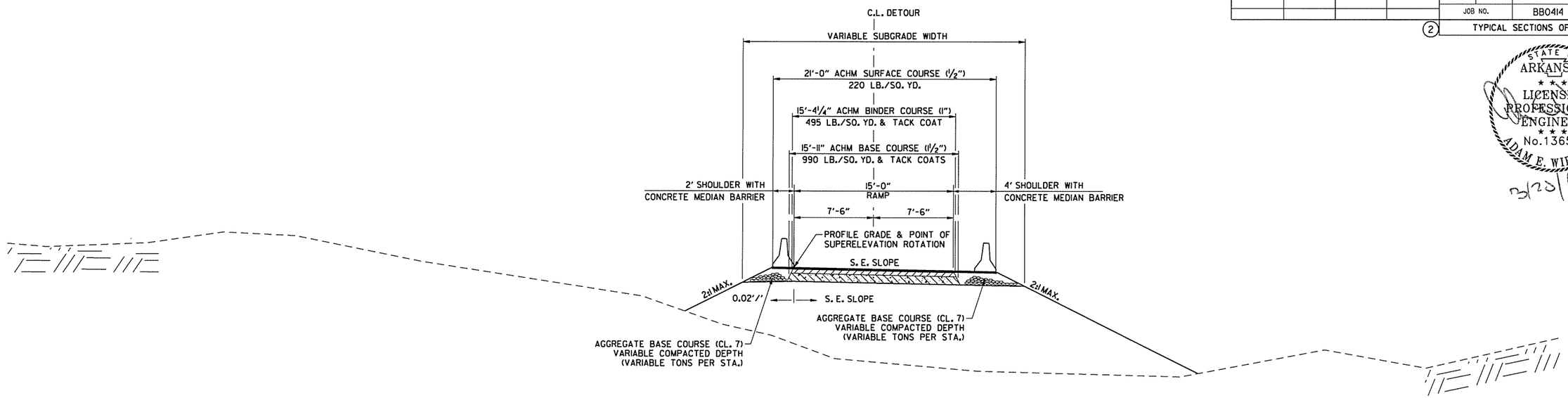

TEMPORARY ONE LANE RAMP W/BARRIER EACH SIDE TYPICAL SUPERELEVATED SECTION

(SHOWN IN THE DIRECTION OF TRAFFIC)

STAGE 1A - TEMP. HWY 71B TO NB I-49 RAMP STA. 346+17.63 TO STA. 348+00.00

NOTES:

REFER TO CROSS SECTIONS FOR DEVIATION FROM THE NORMAL SLOPES. NO CHANGES SHALL BE MADE FROM THE PLANNED SLOPES WITHOUT THE APPROVAL OF THE ENGINEER.

THE THICKNESS OF AGGREGATE BASE COURSE SHALL BE WITHIN PLUS OR MINUS ONE INCH OF THE PLAN THICKNESS SHOWN. THE CONTRACTOR WILL CORRECT ANY DEFICIENT THICKNESS THAT DOES NOT MEET TOLERANCE INDICATED. PAYMENT WILL NOT BE MADE FOR MATERIAL PLACED IN EXCESS OF THE TOLERANCE INDICATED.

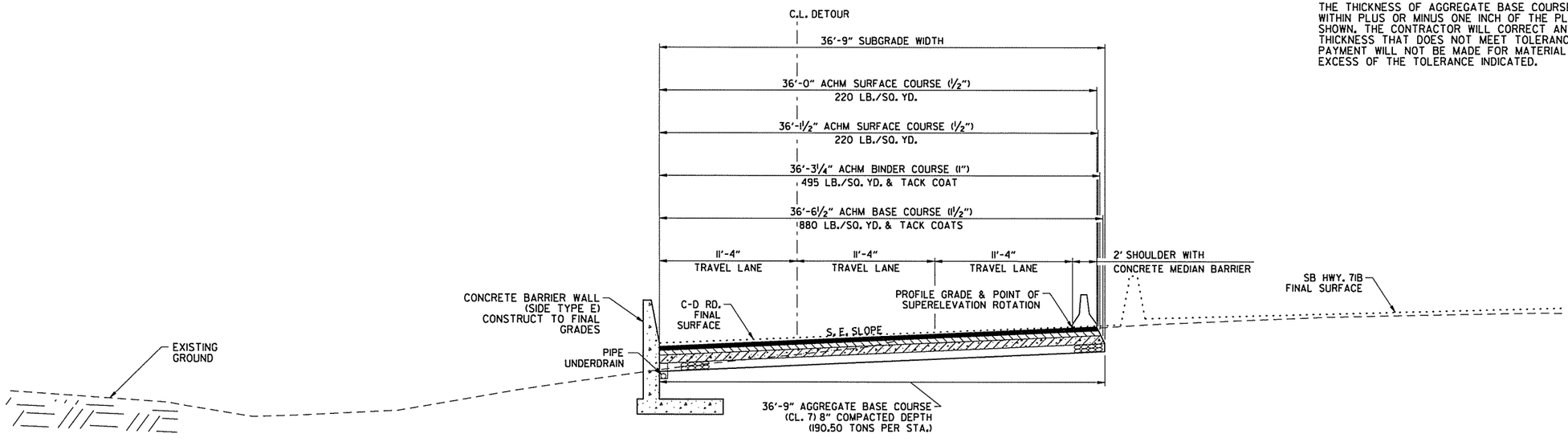

TEMPORARY THREE LANE RAMP W/BARRIER LEFT SIDE TYPICAL SUPERELEVATED SECTION

(SHOWN IN THE DIRECTION OF STATIONING)

STAGE 2 - TEMP. SB I-49 TO C-D RD. RAMP STA. 307+00.00 TO STA. 308+00.00

TYPICAL SECTIONS OF IMPROVEMENT

STATE OF ARKANSAS
LICENSED PROFESSIONAL ENGINEER
No. 13653
ADAM E. WIERCIAK
3/23/16

AEWiercIak 3/20/2016 11:51:34 AM
WORKSPACE: AHTD
L:\201\101707 - I-540 Widening & Interchange Improvement\Drawings\r-BB0414_TS_MOT.dgn
REVISED DATE:

DATE REVISED	DATE FILMED	DATE REVISED	DATE FILMED	FED.RD. DIST.NO.	STATE	FED.AID PROJ.NO.	SHEET NO.	TOTAL SHEETS
				6	ARK.			
				JOB NO.		BB0414	47	886

(2) TYPICAL SECTIONS OF IMPROVEMENT

▲ HWY. 112 RAMP I
TRANSITION SHOULDER PAVING
4' FROM STA. 283+50 TO 284+50
4' TO 8'-6" STA. 284+50 TO 286+00
8'-6" FROM STA. 286+00 TO 287+00
8'-6" TO 4' AT STA. 287+00 TO 288+10
4' FROM STA. 288+10 TO 288+55

HWY. 112 TO NB I-49 RAMP
4' FROM STA. 289+50 TO 295+00

◪ HWY. 112 TO NB I-49 RAMP
6' FROM STA. 289+00 TO 291+68.55

STATE OF ARKANSAS
LICENSED PROFESSIONAL ENGINEER
No. 13653
ADAM E. WIERCIAK
3/20/16

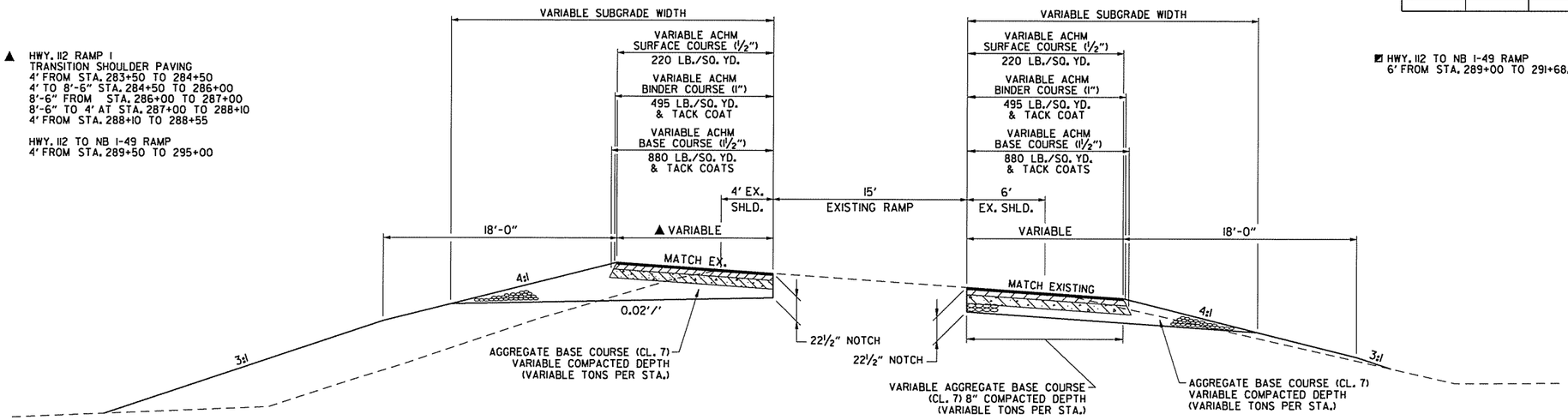

FULL DEPTH SHOULDER WIDENING TYPICAL SECTION

(SHOWN IN THE DIRECTION OF TRAFFIC)

STAGE I- HWY. 112 RAMP I STA. 283+50.00 TO STA. 288+55.00 LT.
STAGE I- HWY. 112 TO NB I-49 RAMP STA. 289+50.00 TO STA. 295+00.00 LT.
STAGE IA - NB I-49 STA. 200+40.00 TO STA. 208+55.00
STAGE IA - HWY. 112 TO NB I-49 RAMP STA. 289+00.00 TO STA. 291+68.55 RT.

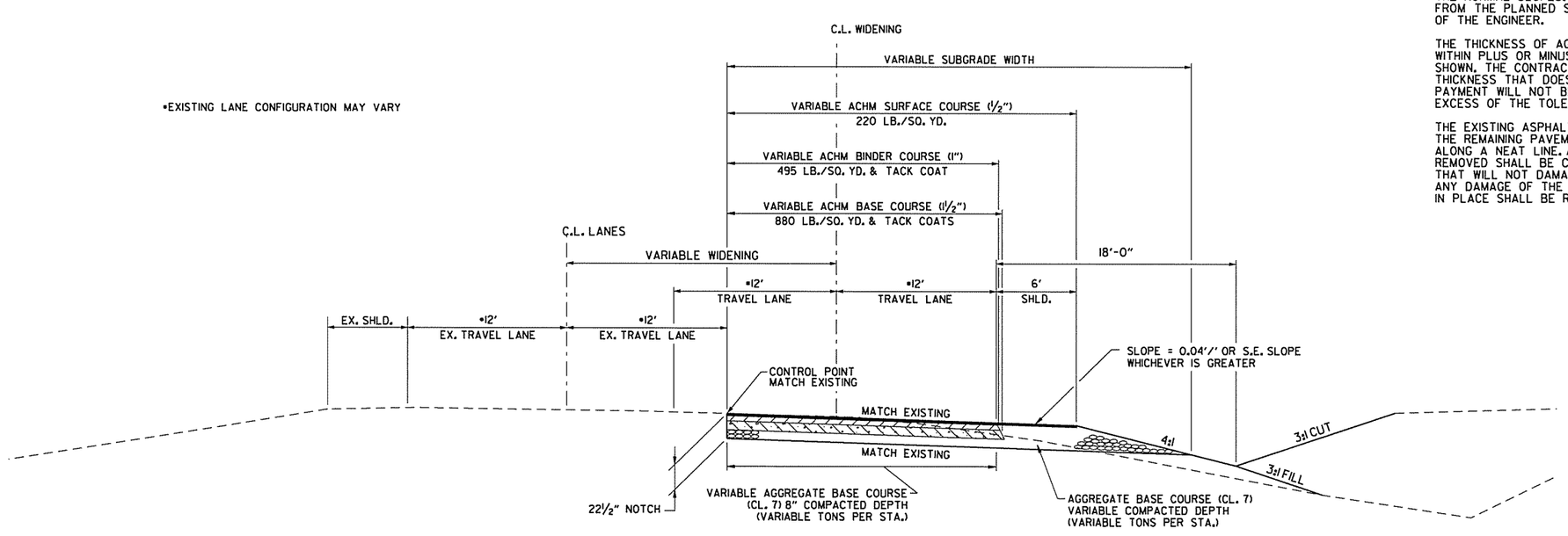

•EXISTING LANE CONFIGURATION MAY VARY

DETOUR WIDENING WITH SHOULDER TYPICAL SECTION

(SHOWN IN THE DIRECTION OF TRAFFIC)

STAGE I- STAGE I WIDENING NB I-49 STA. 348+51.45 TO STA. 356+85.24
STAGE I- NB I-49 STA. 356+85.24 TO STA. 364+17.45
STAGE I- SB I-49 STA. 359+25.00 TO STA. 364+74.32
STAGE I- NB I-49 STA. 365+81.52 TO STA. 369+00.00
STAGE I- SB I-49 STA. 366+38.58 TO STA. 369+00.00
STAGE I- TEMP. SB I-49 DETOUR STA. 339+36.65 TO STA. 342+88.70
STAGE I- TEMP. SB I-49 DETOUR STA. 356+83.23 TO STA. 358+53.10

STAGE I- TEMP. SB I-49 TO HWY. 71B RAMP STA. 343+65.00 TO STA. 346+76.11
STAGE IA - TEMP. C-D RD. TO SB I-49 RAMP STA. 280+29.37 TO STA. 281+93.00
STAGE IA - TEMP. C-D RD. TO HWY. 112 RAMP STA. 284+02.90 TO STA. 287+97.54
STAGE IA - TEMP. EX. I-49 TO PR. I-49 RAMP STA. 314+87.51 TO STA. 320+00.78 (LT. SHOULDER)
STAGE IA - TEMP. NB I-49 TO HWY. 71B STA. 310+48.91 TO STA. 312+83.27
STAGE 2 - TEMP. SB I-49 TO C-D RD. RAMP STA. 308+00.00 TO STA. 311+08.92

NOTES:

REFER TO CROSS SECTIONS FOR DEVIATION FROM THE NORMAL SLOPES. NO CHANGES SHALL BE MADE FROM THE PLANNED SLOPES WITHOUT THE APPROVAL OF THE ENGINEER.

THE THICKNESS OF AGGREGATE BASE COURSE SHALL BE WITHIN PLUS OR MINUS ONE INCH OF THE PLAN THICKNESS SHOWN. THE CONTRACTOR WILL CORRECT ANY DEFICIENT THICKNESS THAT DOES NOT MEET TOLERANCE INDICATED. PAYMENT WILL NOT BE MADE FOR MATERIAL PLACED IN EXCESS OF THE TOLERANCE INDICATED.

THE EXISTING ASPHALT PAVEMENT TO BE REMOVED FROM THE REMAINING PAVEMENT SHALL BE SEPARATED BY SAWING ALONG A NEAT LINE. AFTER SAWING, THE PAVEMENT TO BE REMOVED SHALL BE CAREFULLY REMOVED IN A MANNER THAT WILL NOT DAMAGE THE PAVEMENT THAT IS TO REMAIN. ANY DAMAGE OF THE ASPHALT PAVEMENT THAT IS TO REMAIN IN PLACE SHALL BE REPAIRED AT THE CONTRACTOR'S EXPENSE.

TYPICAL SECTIONS OF IMPROVEMENT

AEWiercick 3/20/2016 11:51:34 AM
WORKSPACE: AHTD
L:\20IN\10I7707 - I-540 Widening & Interchange Improvement\Drawings\rBB0414_TS_MOT.dgn
REVISED DATE:

DATE REVISED	DATE FILMED	DATE REVISED	DATE FILMED	FED.RD. DIST.NO.	STATE	FED.AID PROJ.NO.	SHEET NO.	TOTAL SHEETS
				6	ARK.			
				JOB NO.		BB0414	48	886
				(2)	TYPICAL SECTIONS OF IMPROVEMENT			

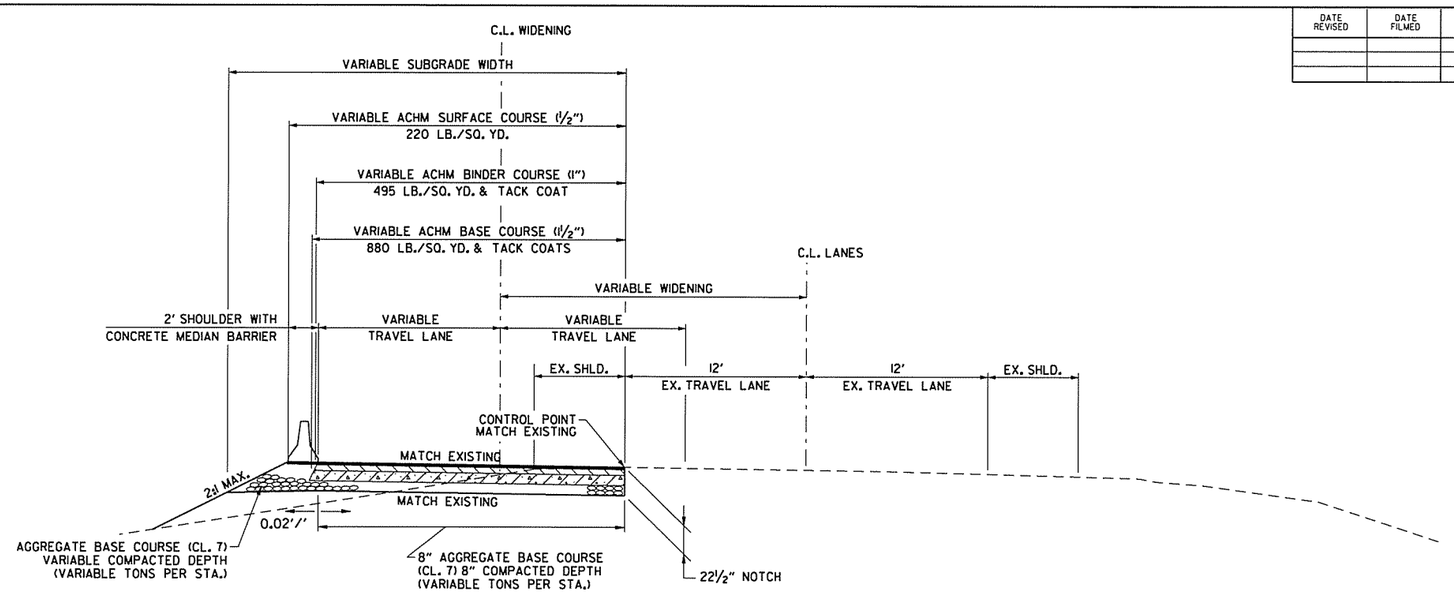

INSIDE DETOUR WIDENING WITH BARRIER WALL TYPICAL SECTION

(SHOWN IN THE DIRECTION OF TRAFFIC)

STAGE IA - SB HWY. 71B STA. 306+44.19 TO STA. 308+53.32 (EX. I-49)
STAGE IA - SB I-49 TO HWY. 112 RAMP STA. 326+86.42 TO STA. 335+46.91
STAGE IA - TEMP. HWY. 71B TO NB I-49 RAMP STA. 343+70.26 TO STA. 346+17.63
STAGE 2 - NB I-49 STA. 289+50.00 TO STA. 302+55.20

NOTES:

REFER TO CROSS SECTIONS FOR DEVIATION FROM THE NORMAL SLOPES. NO CHANGES SHALL BE MADE FROM THE PLANNED SLOPES WITHOUT THE APPROVAL OF THE ENGINEER.

THE THICKNESS OF AGGREGATE BASE COURSE SHALL BE WITHIN PLUS OR MINUS ONE INCH OF THE PLAN THICKNESS SHOWN. THE CONTRACTOR WILL CORRECT ANY DEFICIENT THICKNESS THAT DOES NOT MEET TOLERANCE INDICATED. PAYMENT WILL NOT BE MADE FOR MATERIAL PLACED IN EXCESS OF THE TOLERANCE INDICATED.

THE EXISTING ASPHALT PAVEMENT TO BE REMOVED FROM THE REMAINING PAVEMENT SHALL BE SEPARATED BY SAWING ALONG A NEAT LINE. AFTER SAWING, THE PAVEMENT TO BE REMOVED SHALL BE CAREFULLY REMOVED IN A MANNER THAT WILL NOT DAMAGE THE PAVEMENT THAT IS TO REMAIN. ANY DAMAGE OF THE ASPHALT PAVEMENT THAT IS TO REMAIN IN PLACE SHALL BE REPAIRED AT THE CONTRACTOR'S EXPENSE.

STATE OF ARKANSAS
LICENSED PROFESSIONAL ENGINEER
No.13653
ADAM E. WIERCIAK
3/23/16

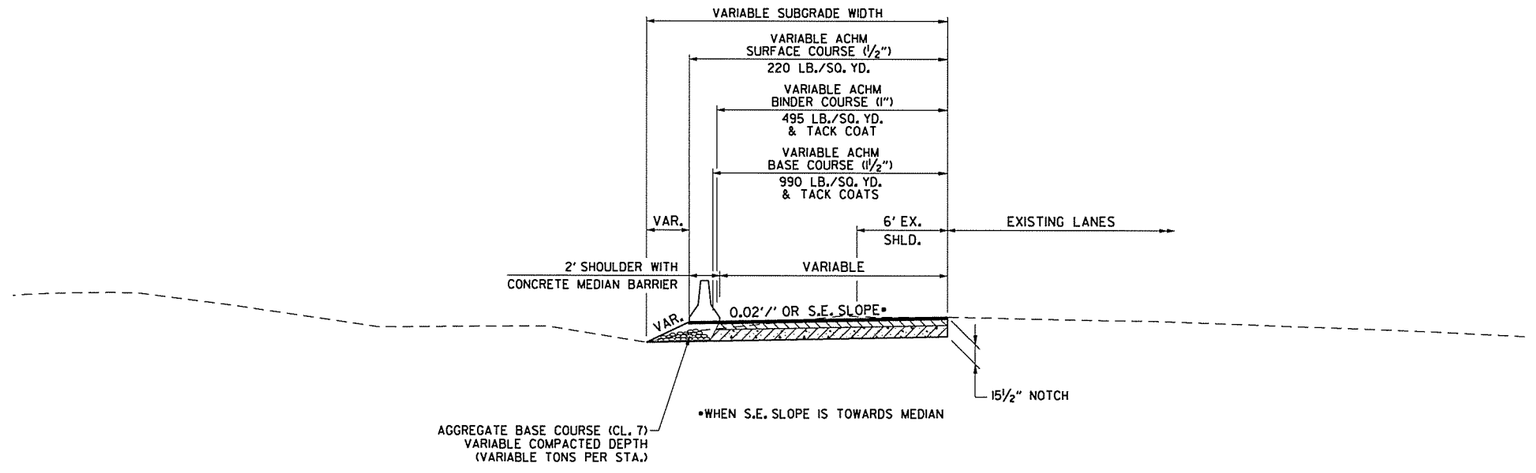

INSIDE DETOUR WIDENING WITH BARRIER WALL TYPICAL SECTION

(SHOWN IN THE DIRECTION OF TRAFFIC)

STAGE 1- SB I-49 STA. 298+96.50 TO STA. 299+33.27
STAGE 1- SB HWY. 71B STA. 299+33.27 TO STA. 314+56.01

TYPICAL SECTIONS OF IMPROVEMENT

AEWierciak 3/20/2016 11:51:34 AM
WORKSPACE: AHTD
L:\2011\1017707 - I-540 Widening & Interchange Improvement\Drawings\rBB0414_TS_MOT.dgn
REVISED DATE:

DATE REVISED	DATE FILMED	DATE REVISED	DATE FILMED	FED.RD. DIST.NO.	STATE	FED.AID PROJ.NO.	SHEET NO.	TOTAL SHEETS
				6	ARK.			
				JOB NO.		BB0414	49	886

(2) TYPICAL SECTIONS OF IMPROVEMENT

STATE OF ARKANSAS
LICENSED PROFESSIONAL ENGINEER
No.13653
ADAM E. WIERCIAK
3/23/16

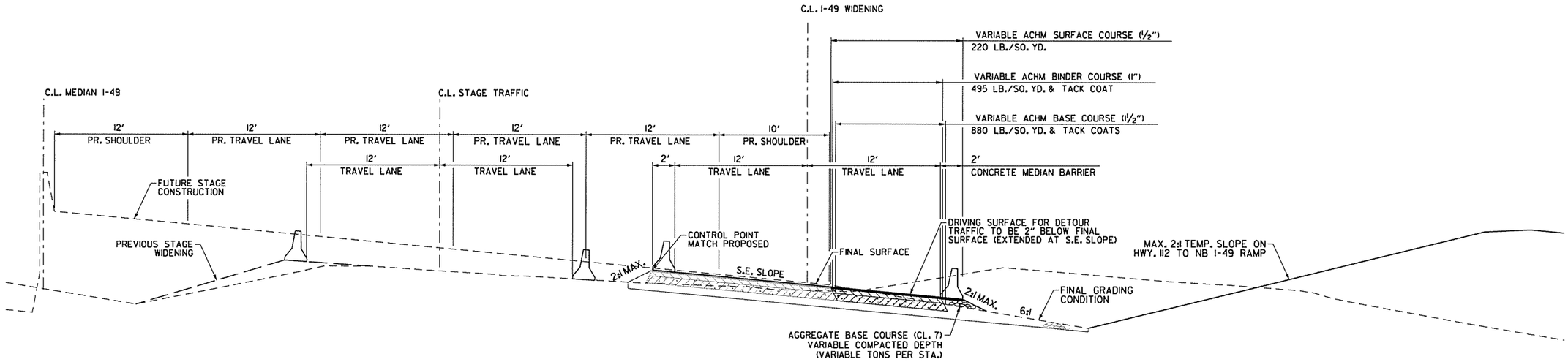

I-49 DETOUR WIDENING FROM PROPOSED GRADE TYPICAL SECTION

(SHOWN IN THE DIRECTION OF TRAFFIC)

STAGE 2B - I-49 STA. 293+00.00 TO STA. 307+02.67 (RT. OUTSIDE SHOULDER)

NOTES:

REFER TO CROSS SECTIONS FOR DEVIATION FROM THE NORMAL SLOPES. NO CHANGES SHALL BE MADE FROM THE PLANNED SLOPES WITHOUT THE APPROVAL OF THE ENGINEER.

THE THICKNESS OF AGGREGATE BASE COURSE SHALL BE WITHIN PLUS OR MINUS ONE INCH OF THE PLAN THICKNESS SHOWN. THE CONTRACTOR WILL CORRECT ANY DEFICIENT THICKNESS THAT DOES NOT MEET TOLERANCE INDICATED. PAYMENT WILL NOT BE MADE FOR MATERIAL PLACED IN EXCESS OF THE TOLERANCE INDICATED.

THE EXISTING ASPHALT PAVEMENT TO BE REMOVED FROM THE REMAINING PAVEMENT SHALL BE SEPARATED BY SAWING ALONG A NEAT LINE. AFTER SAWING, THE PAVEMENT TO BE REMOVED SHALL BE CAREFULLY REMOVED IN A MANNER THAT WILL NOT DAMAGE THE PAVEMENT THAT IS TO REMAIN. ANY DAMAGE OF THE ASPHALT PAVEMENT THAT IS TO REMAIN IN PLACE SHALL BE REPAIRED AT THE CONTRACTOR'S EXPENSE.

AEWierciak 3/20/2016 11:51:34 AM
WORKSPACE: AHTD
L:\2011\110171\07 - I-540 Widening & Interchange Improvement\Drawings\r-BB0414_TS_MOT.dgn
REVISED DATE:

DATE REVISED	DATE FILMED	DATE REVISED	DATE FILMED	FED.RD. DIST.NO.	STATE	FED.AID PROJ.NO.	SHEET NO.	TOTAL SHEETS
				6	ARK.			
				JOB NO.		BB0414	50	886

(2) SPECIAL DETAILS

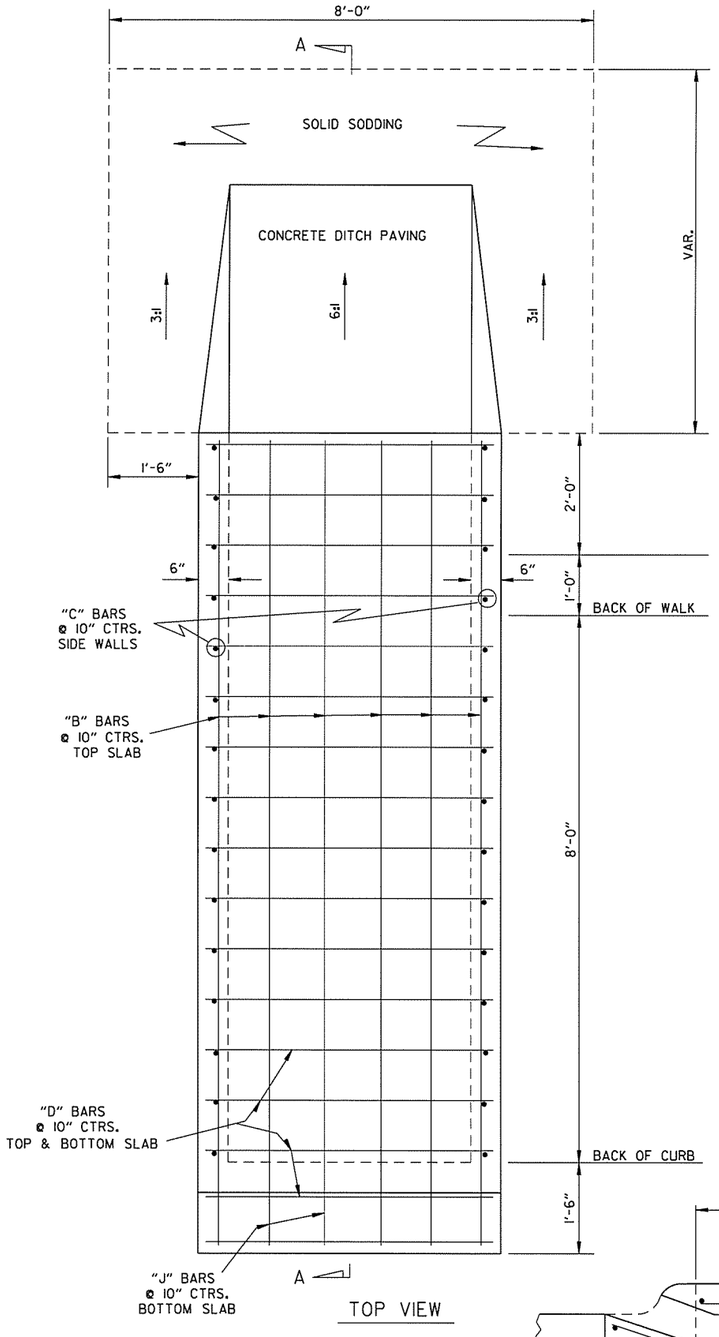

TOP VIEW

BAR DIAGRAM

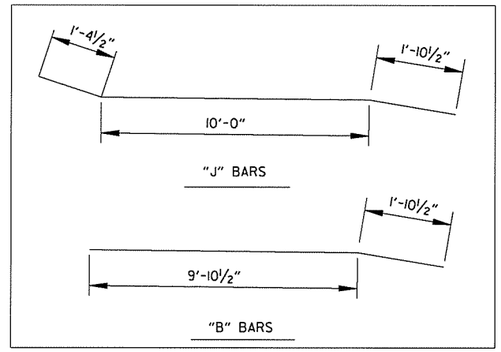

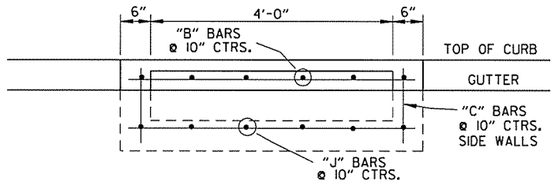

FRONT VIEW

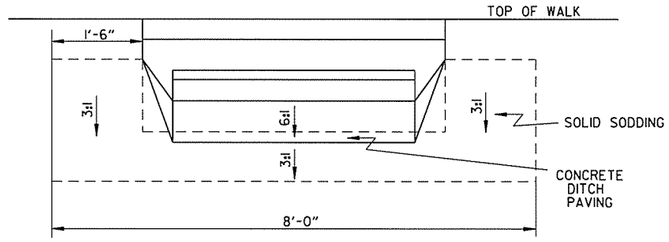

BACK VIEW

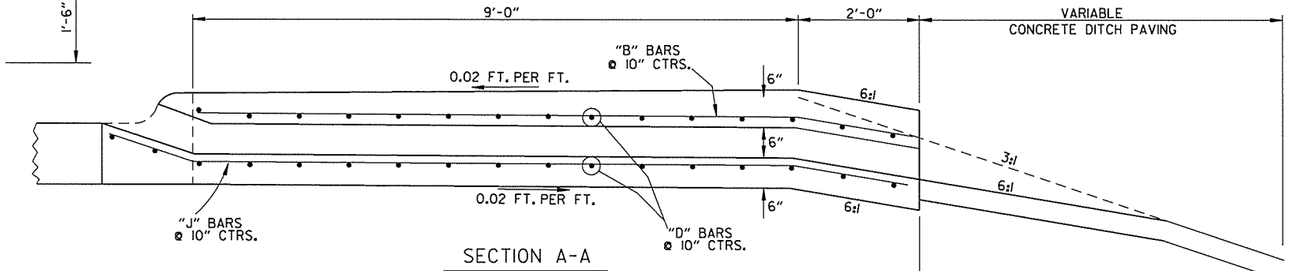

SECTION A-A

GENERAL NOTES:

1. ALL EXPOSED CORNERS TO HAVE ¾" CHAMFER.
2. ALL REINF. BARS SHALL BE #4 AND HAVE 1½" COVER.
3. DROP INLETS AND EXTENSION ON CURVED SECTIONS SHALL CONFORM TO THE CURVATURE OF THE CURB.
4. DURING CONSTRUCTION OF THE ROADWAY THE CONTRACTOR SHALL MAINTAIN DRAINAGE INTO OR AROUND THE DROP INLET AS APPROVED BY THE ENGINEER.
5. PAYMENT FOR CURB AND/OR CURB AND GUTTER WITHIN THE LIMITS OF DROP INLETS AND DROP INLET EXTENSIONS SHALL BE CONSIDERED INCLUDED IN PAYMENT MADE FOR DROP INLETS AND/OR DROP INLET EXTENSIONS.
6. CONCRETE DITCH PAVING & SOLID SODDING SHALL BE PAID FOR SEPARATELY.
7. CONSTRUCT EXTENSIONS UPSTREAM OF DROP INLET UNLESS OTHERWISE SPECIFIED.

DROP INLET (TYPE SPECIAL)

SPECIAL DETAILS

AEWierdak 3/20/2016 11:51:35 AM
WORKSPACE: AHTD
L:\20IN\10I7T07 - I-540 Widening & Interchange Improvement\Drawings\rBB0414_SD_01.dgn
REVISED DATE:

DATE REVISED	DATE FILMED	DATE REVISED	DATE FILMED	FED.RD. DIST.NO.	STATE	FED.AID PROJ.NO.	SHEET NO.	TOTAL SHEETS
				6	ARK.			
				JOB NO.		BB0414	51	886
				(2)	SPECIAL DETAILS			

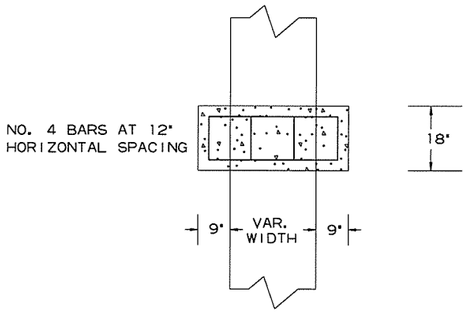

TOP VIEW

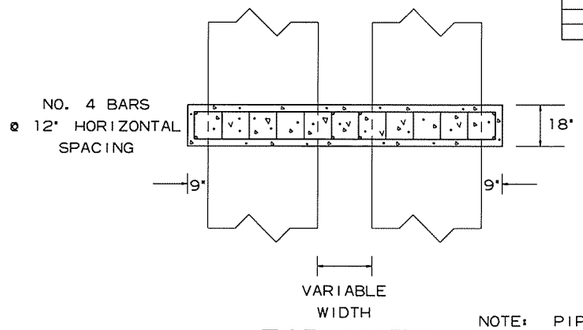

TOP VIEW

NOTE: PIPE COLLAR TO BE UTILIZED AS APPROVED BY THE ENGINEER.

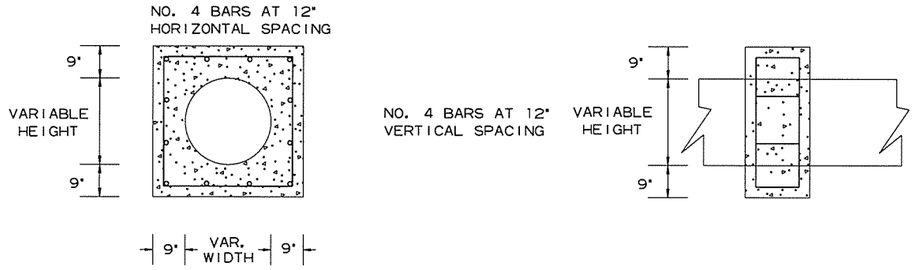

FRONT VIEW SIDE VIEW

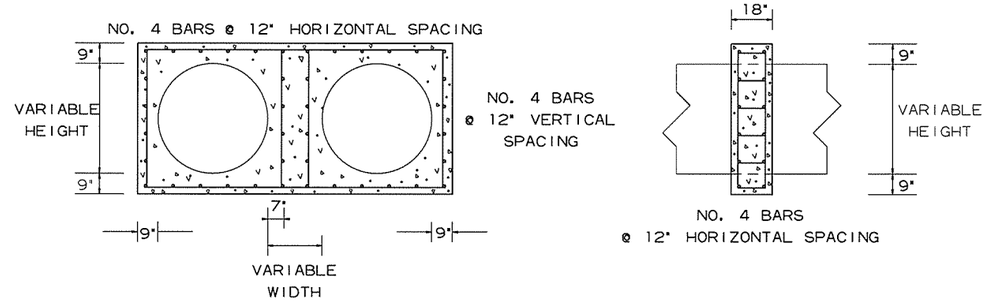

FRONT VIEW SIDE VIEW

SINGLE PIPE EXTENSION
REINFORCED CONCRETE COLLAR DETAIL

DOUBLE PIPE EXTENSION
REINFORCED CONCRETE COLLAR DETAIL

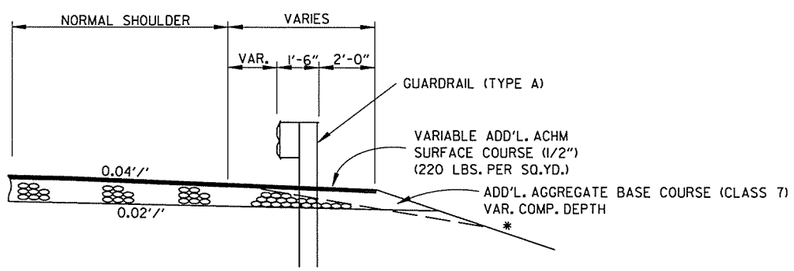

WIDENING FOR GUARDRAIL AT
PROPOSED SHOULDER EDGE

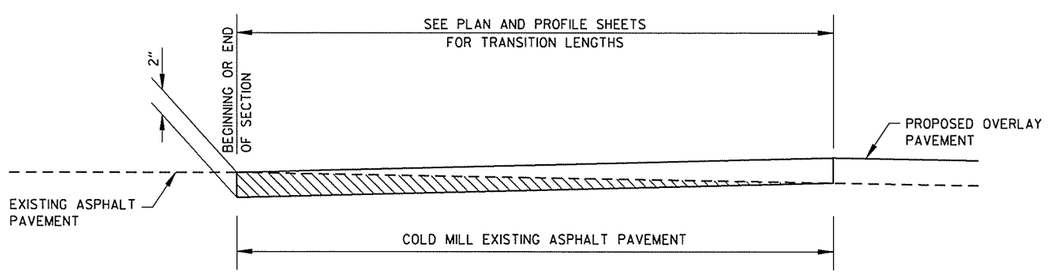

DETAIL FOR TRANSITIONS

STATE OF ARKANSAS
LICENSED PROFESSIONAL ENGINEER
No.13422
JOHN F. CANTABERY
3-20-16

AEWerclak 3/20/2016 11:51:35 AM
WORKSPACE: AHTD
L:\20it\10017707 - I-540 Widening & Interchange Improvement\Drawings\r-BB0414_SD_02.dgn
REVISED DATE:

DATE REVISED	DATE FILMED	DATE REVISED	DATE FILMED	FED.RD. DIST.NO.	STATE	FED.AID PROJ.NO.	SHEET NO.	TOTAL SHEETS
				6	ARK.			
				JOB NO.		BB0414	52	886

(2) SPECIAL DETAILS

3-20-16

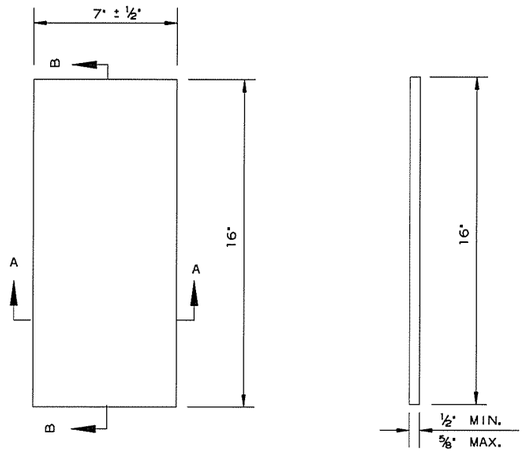

PLAN

SECTION B-B

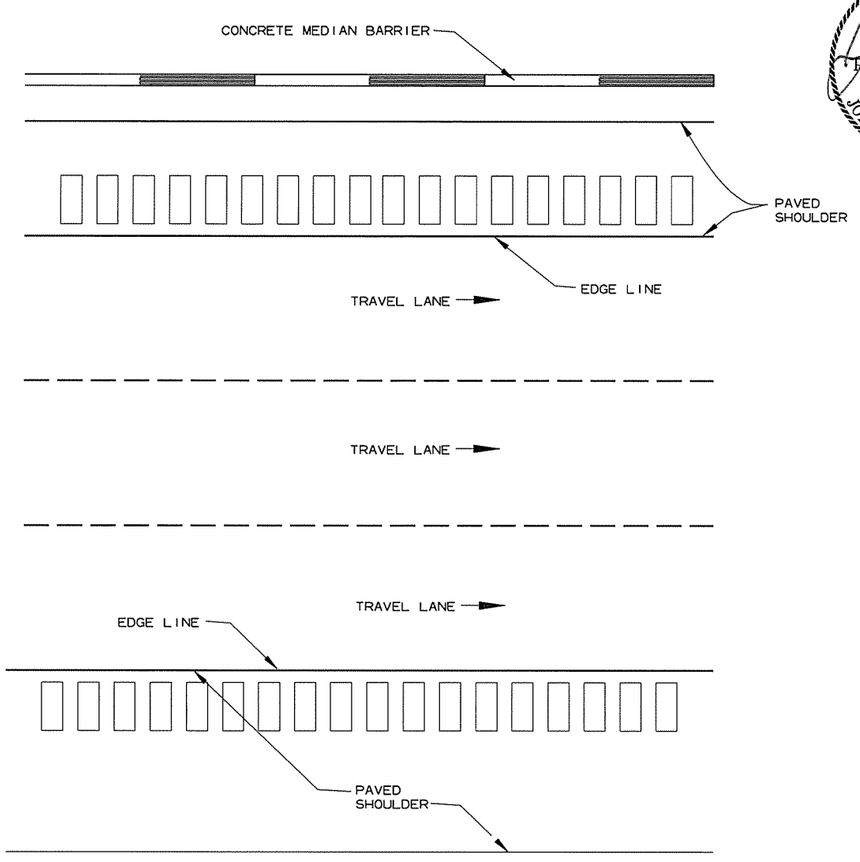

PLAN VIEW

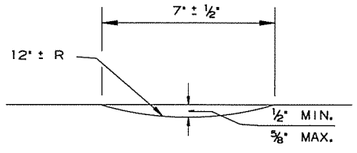

SECTION A-A

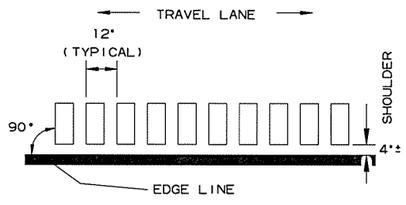

LOCATION PLAN OF RUMBLE STRIPS

LEFT SHOULDER

DETAILS OF RUMBLE STRIPS

NOTES:

1. ALIGNMENT OF RUMBLE STRIPS SHALL GENERALLY BE STRAIGHT AND OFFSET APPROXIMATELY 4" FROM THE OUTER EDGE OF THE EDGE LINE. THIS OFFSET MAY BE ADJUSTED TO ACCOMMODATE VARIATIONS IN THE EDGE LINE AS WELL AS TO AVOID EXISTING LONGITUDINAL JOINTS.
2. THE ½" DEPTH SHALL GENERALLY APPLY FOR THE ENTIRE 16" LENGTH. SOME VARIATION TO SUIT SHOULDER SLOPE BREAKS MAY BE NECESSARY.
3. RUMBLE STRIPS SHALL NOT BE INSTALLED ON BRIDGE DECKS, APPROACH SLABS, OR ACROSS TRANSVERSE JOINTS OF CONCRETE SHOULDERS.

AEWierciak 3/20/2016 11:51:35 AM
WORKSPACE: AHTD
L:\20IN\I0I7I07 - I-540 Widening & Interchange Improvement\Drawings\rBB0414_SD_02.dgn
REVISED DATE:

DATE REVISED	DATE FILMED	DATE REVISED	DATE FILMED	FED.RD. DIST.NO.	STATE	FED.AID PROJ.NO.	SHEET NO.	TOTAL SHEETS
				6	ARK.			
				JOB NO.		BB0414	53	886
				(2)	SPECIAL DETAILS			

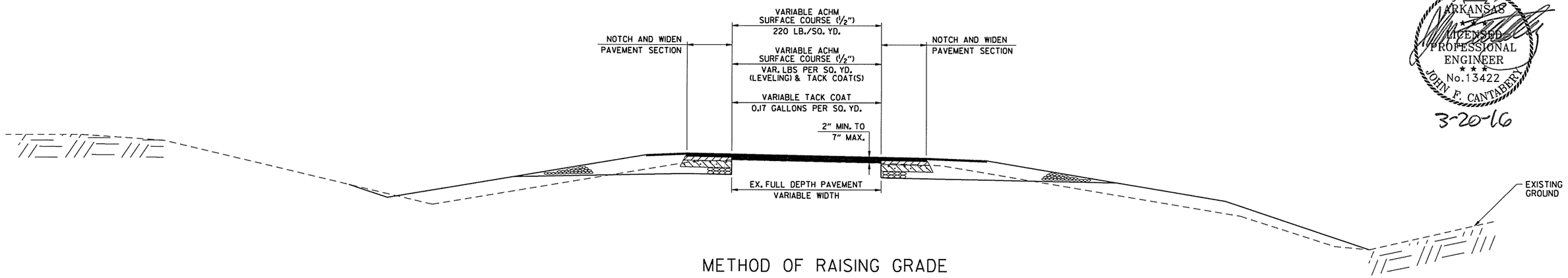

METHOD OF RAISING GRADE

2" MIN. TO 7" MAX.
TOP OF PR. PAVEMENT TO TOP OF EX. PAVEMENT

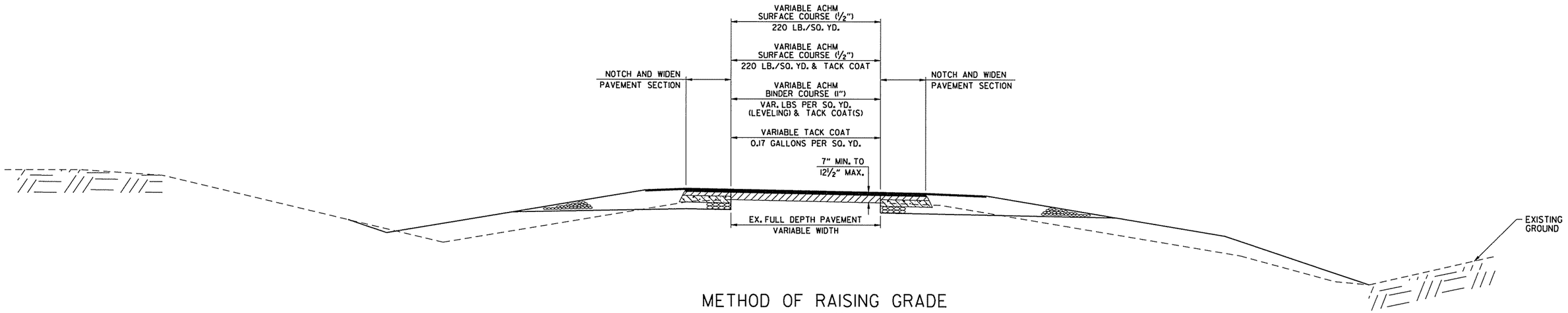

METHOD OF RAISING GRADE

7" MIN. TO 12 1/2" MAX.
TOP OF PR. PAVEMENT TO TOP OF EX. PAVEMENT

NOTES:

1. THIS DETAIL TO BE USED ONLY WHERE DIRECTED BY THE ENGINEER.
2. QUANTITIES FOR METHOD OF GRADE RAISE USING ASPHALT WERE CALCULATED ON THIS PROJECT AT LOCATIONS WHERE THE DISTANCE BETWEEN THE EXISTING ASPHALT ROADWAY AND THE PROPOSED SUBGRADE WAS ONE FOOT OR LESS.
3. IN LOCATIONS WHERE THE DISTANCE BETWEEN THE PROPOSED SUBGRADE AND THE EXISTING ASPHALT ROADWAY IS MORE THAN ONE FOOT, SCARIFICATION OF THE EXISTING ASPHALT ROADWAY WILL BE REQUIRED AS STATED IN SECTION 210, SUBSECTION 210.09, OF THE STANDARD SPECIFICATIONS.

STATE OF ARKANSAS
LICENSED PROFESSIONAL ENGINEER
No.13422
JOHN F. CANTABERY
3-20-16

SPECIAL DETAILS

AEWierdak 3/20/2016 11:51:35 AM
WORKSPACE: AHTD
L:\201\1101707 - I-540 Widening & Interchange Improvement\Drawings\rBB0414_SD_02.dgn
REVISED DATE:

DATE REVISED	DATE FILMED	DATE REVISED	DATE FILMED	FED.RD. DIST.NO.	STATE	FED.AID PROJ.NO.	SHEET NO.	TOTAL SHEETS
				6	ARK.			
				JOB NO.		BB0414	54	886

(2) SPECIAL DETAILS

STATE OF ARKANSAS
LICENSED PROFESSIONAL ENGINEER
No.13422
JOHN F. CANTABERY
3-20-16

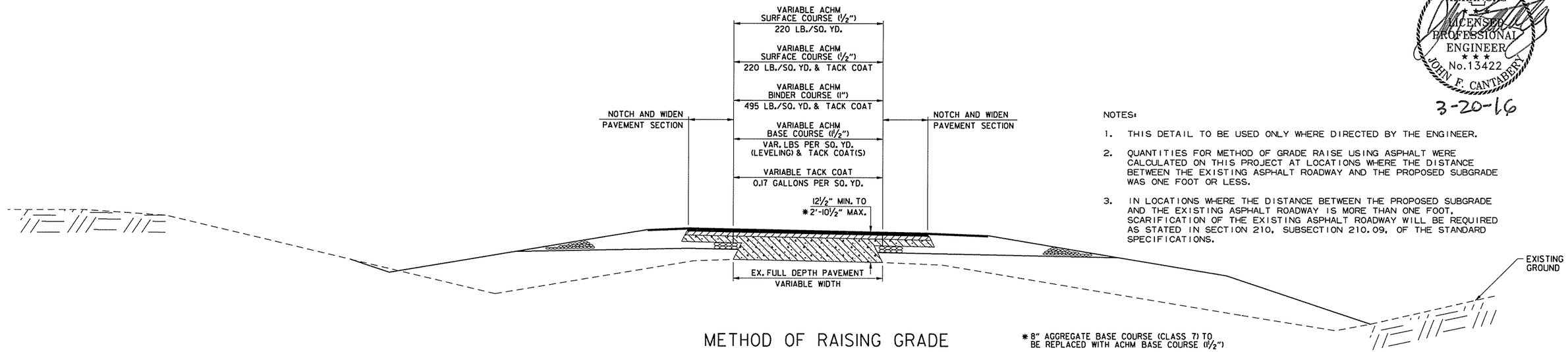

METHOD OF RAISING GRADE

12½" MIN. TO 2'-10½" MAX.
TOP OF PR. PAVEMENT TO TOP OF EX. PAVEMENT

NOTES:

1. THIS DETAIL TO BE USED ONLY WHERE DIRECTED BY THE ENGINEER.
2. QUANTITIES FOR METHOD OF GRADE RAISE USING ASPHALT WERE CALCULATED ON THIS PROJECT AT LOCATIONS WHERE THE DISTANCE BETWEEN THE EXISTING ASPHALT ROADWAY AND THE PROPOSED SUBGRADE WAS ONE FOOT OR LESS.
3. IN LOCATIONS WHERE THE DISTANCE BETWEEN THE PROPOSED SUBGRADE AND THE EXISTING ASPHALT ROADWAY IS MORE THAN ONE FOOT, SCARIFICATION OF THE EXISTING ASPHALT ROADWAY WILL BE REQUIRED AS STATED IN SECTION 210, SUBSECTION 210.09, OF THE STANDARD SPECIFICATIONS.

* 8" AGGREGATE BASE COURSE (CLASS 7) TO BE REPLACED WITH ACHM BASE COURSE (1½")

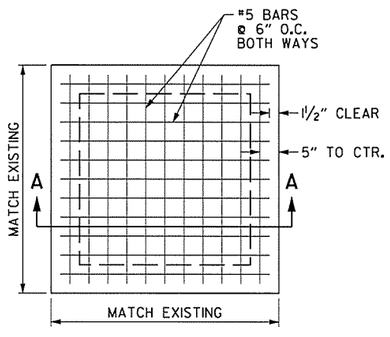

TOP VIEW

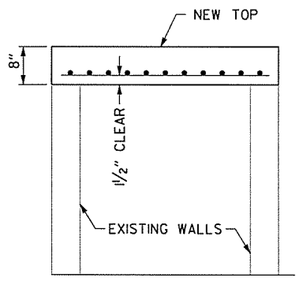

SECTION A-A

REMOVE EXISTING DROP INLET TOP. RETAIN EXISTING VERTICAL REINFORCEMENT

WHERE DROP INLET IS TO REMAIN UNDER PROPOSED WALL FOOTING, REMOVE TOP SECTION OF WALLS SO THE NEW TOP OF SLAB ELEVATION IS 2' BELOW THE BOTTOM OF WALL FOOTING WHERE POSSIBLE. BACKFILL WITH CLASS 7 BASE COURSE.

DETAILS OF MODIFIED DROP INLET

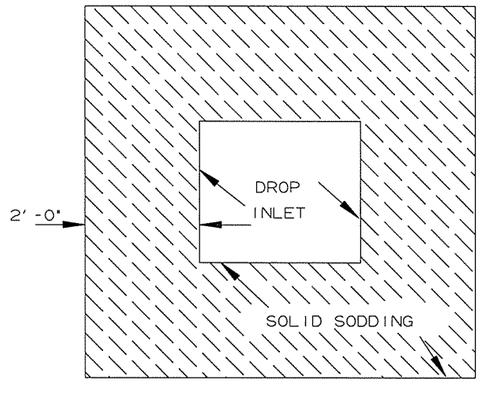

DETAIL FOR SOLID SODDING AROUND DROP INLETS

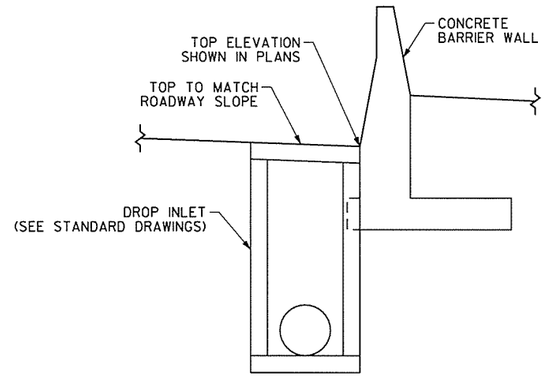

DETAILS OF DROP INLETS AT BARRIER WALLS

AEWierdak 3/20/2016 11:51:36 AM
WORKSPACE: AHTD
L:\2016\1601707 - I-540 Widening & Interchange Improvement\Drawings\r-BB0414_SD_02.dgn
REVISED DATE:

DATE REVISED	DATE FILMED	DATE REVISED	DATE FILMED	FED.RD. DIST.NO.	STATE	FED.AID PROJ.NO.	SHEET NO.	TOTAL SHEETS
				6	ARK.			
				JOB NO.		BB0414	55	886
				(2)	SPECIAL DETAILS			

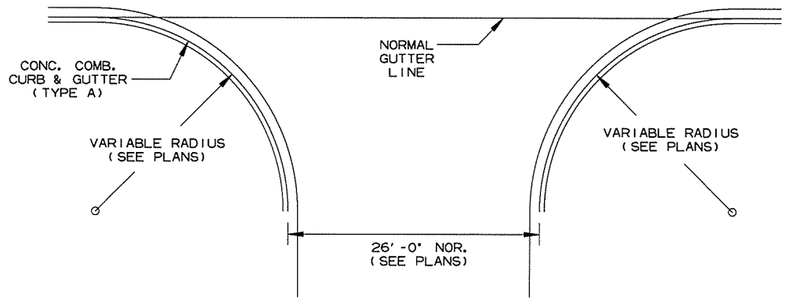

NOTE:
PAVEMENT STRUCTURE FOR STATE HIGHWAYS, CITY STREETS, & COUNTY ROADS TO BE SAME AS MAIN LANES.

DETAIL OF TURNOUTS, ASPHALT STREETS, COUNTY ROADS & STATE HIGHWAYS CURB & GUTTER SECTION

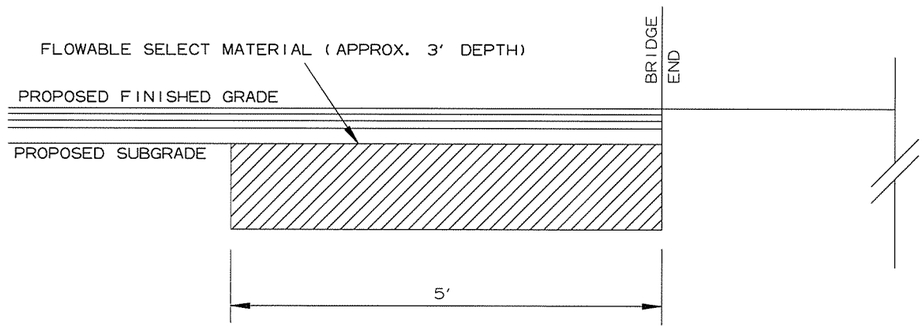

NOTE: EXCAVATION FOR PLACING FLOWABLE SELECT MATERIAL WILL NOT BE PAID FOR DIRECTLY BUT PAYMENT SHALL BE CONSIDERED TO BE INCLUDED IN THE VARIOUS BID ITEMS.

FLOWABLE SELECT MATERIAL AT BRIDGE ENDS

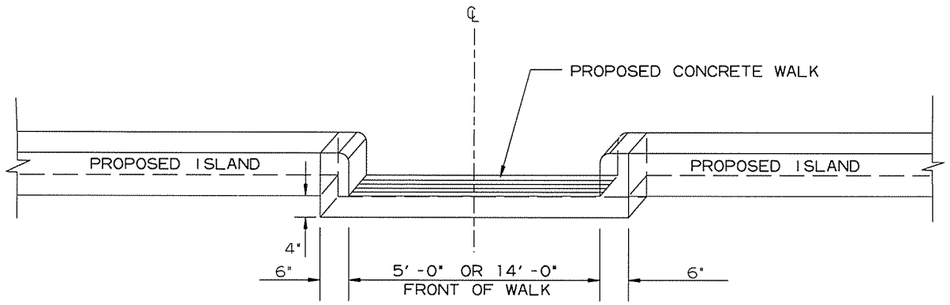

FACE SHALL MEET REQUIREMENTS OF TYPE B CURB

NOTE: CONCRETE WALK THROUGH ISLAND SHALL BE POURED MONOLITHICALLY. ALL MATERIALS REQUIRED TO CONSTRUCT CONCRETE WALK THRU ISLAND SHALL BE INCLUDED IN THE PRICE BID FOR CONCRETE ISLAND.

CONCRETE WALK THROUGH ISLAND

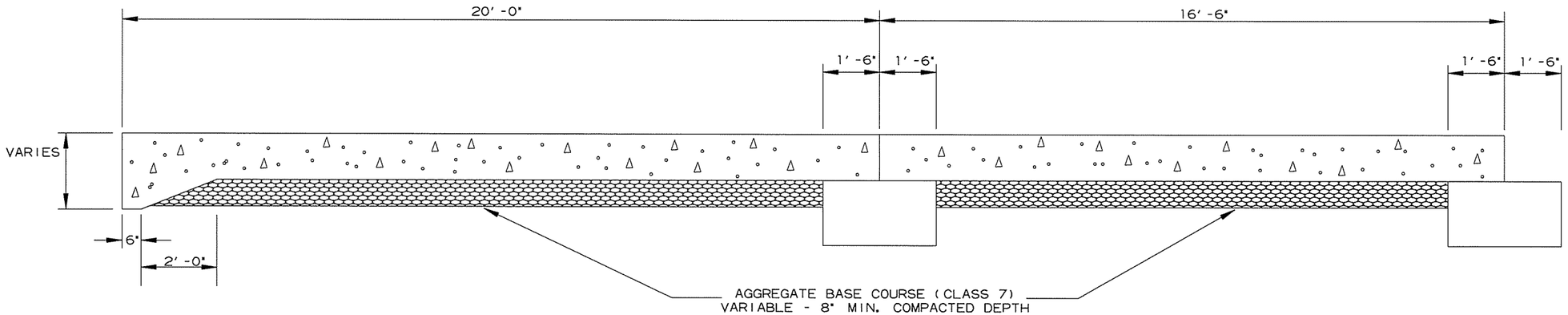

SECTION OF APPROACH SLAB

STATE OF ARKANSAS
LICENSED PROFESSIONAL ENGINEER
No.13422
JOHN F. CANTABERRY
3-20-16

AEWerclak 3/20/2016 11:51:36 AM
WORKSPACE: AHTD
L:\2016\160707 - I-540 Widening & Interchange Improvement\Drawings\rBB0414_SD_02.dgn
REVISED DATE:

DATE REVISED	DATE FILMED	DATE REVISED	DATE FILMED	FED.RD. DIST.NO.	STATE	FED.AID PROJ.NO.	SHEET NO.	TOTAL SHEETS
				6	ARK.			
				JOB NO.		BB0414	56	886
				(2)		SPECIAL DETAILS		

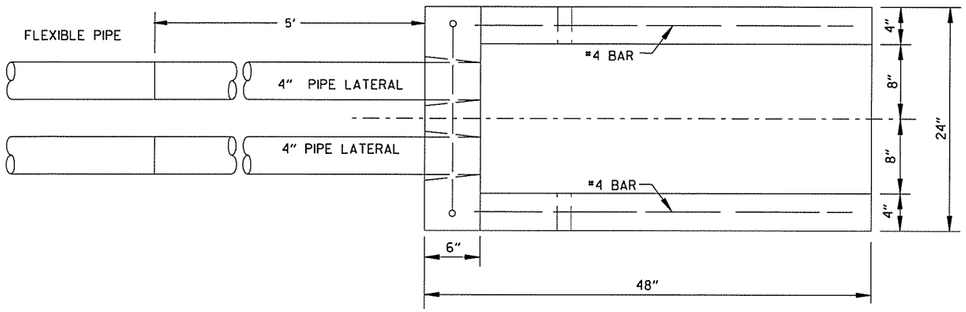

PLAN VIEW

4" NON-PERFORATED SCHEDULE 40 PVC PIPE LATERALS WITH OUTLET PROTECTORS SHALL BE INSTALLED AS SHOWN HEREON OR AS ON STD. DWG. PU-1. LATERALS WILL BE MEASURED AND PAID FOR AS "4" PIPE UNDERDRAINS." UNDERDRAIN OUTLET PROTECTORS WILL BE MEASURED AND PAID FOR BY THE UNIT IN ACCORDANCE WITH SECTION 611 OF THE STANDARD SPECIFICATIONS.

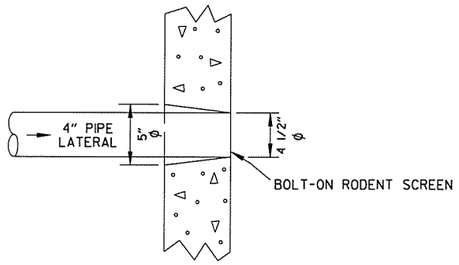

DETAIL OF HOLE FOR 4" PIPE

NOTES:

1. 4" PIPE UNDERDRAIN LATERALS SHALL BE INSTALLED WHERE DIRECTED BY THE ENGINEER. EXISTING OUTLET PROTECTORS SHOULD BE REMOVED AND REPLACED.
2. ANY PIPE UNDERDRAIN OR LATERAL TO REMAIN IN PLACE THAT IS DAMAGED BY THE CONTRACTOR SHALL BE REPAIRED AS DIRECTED BY THE ENGINEER AT THE CONTRACTOR'S EXPENSE.

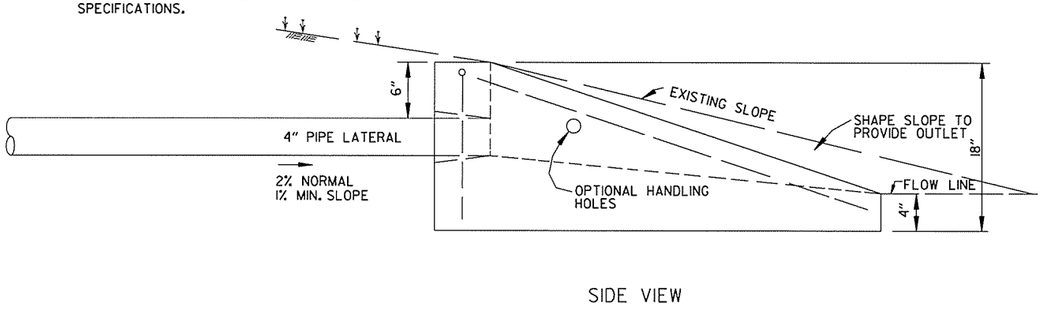

SIDE VIEW

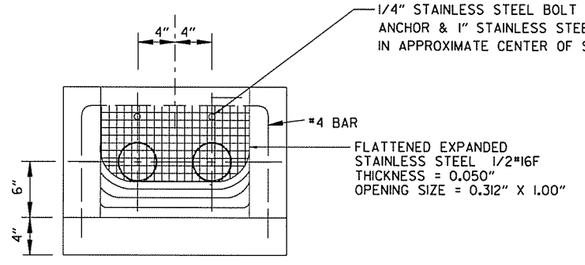

FRONT VIEW

UNDERDRAIN OUTLET PROTECTORS

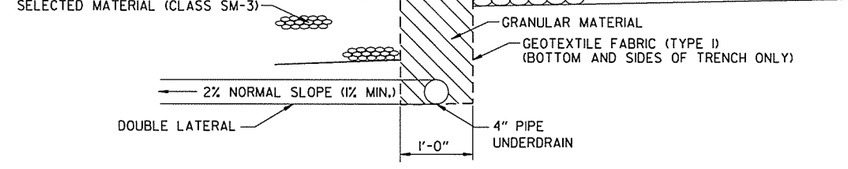

TYPICAL SECTION OF PIPE UNDERDRAINS

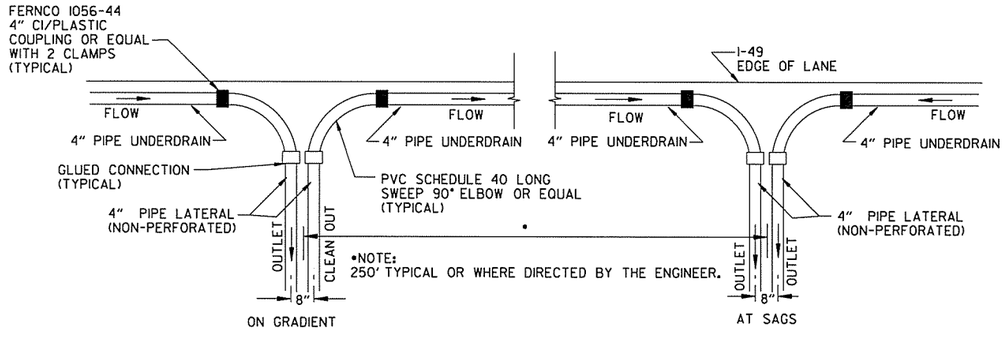

NOTE:
PVC PIPE FOR LATERALS SHALL MEET THE REQUIREMENTS OF ASTM D 1785 (LATEST REVISION) FOR SCHEDULE 40 PIPE.

PLAN DETAIL OF PIPE UNDERDRAIN LATERAL

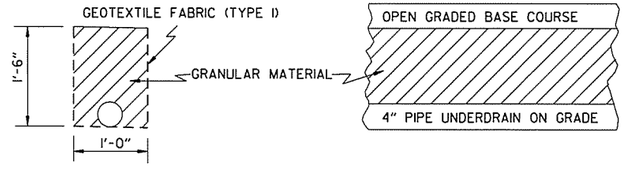

NOTE: GEOTEXTILE FABRIC SHALL MEET THE REQUIREMENTS OF SECTION 625 FOR TYPE I. GEOTEXTILE FABRIC SHALL BE PLACED ON BOTTOM AND SIDES OF TRENCH ONLY.

DETAILS OF PIPE UNDERDRAINS

STATE OF ARKANSAS
LICENSED PROFESSIONAL ENGINEER
No. 13422
JOHN F. CANTABERY
3-20-16

AEWarelak 3/20/2016 11:51:36 AM
WORKSPACE: AHTD
L:\2011\11077\07 - I-540 Widening & Interchange Improvement\Drawings\rBB0414_SD_02.dgn
REVISED DATE:

DATE REVISED	DATE FILMED	DATE REVISED	DATE FILMED	FED.RD. DIST.NO.	STATE	FED.AID PROJ.NO.	SHEET NO.	TOTAL SHEETS
				6	ARK.			
				JOB NO.		BB0414	57	886
				(2)		SPECIAL DETAILS		

NOTES:

1. FOOTING NOT SHOWN FOR CLARITY.
2. TRANSITION SHALL NOT BE PAID FOR SEPARATELY BUT SHALL BE INCLUDED IN THE WALL TYPE SPECIFIED.

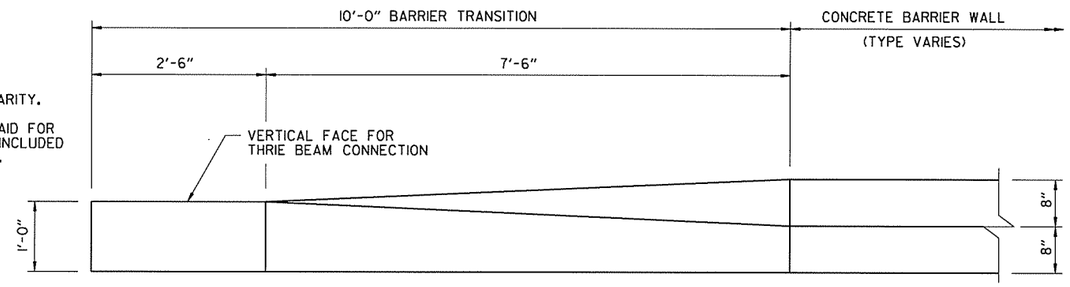

CONCRETE BARRIER WALL GUARDRAIL TRANSITION

STATE OF ARKANSAS
LICENSED PROFESSIONAL ENGINEER
No.13422
JOHN F. CANTABERY
3-20-16

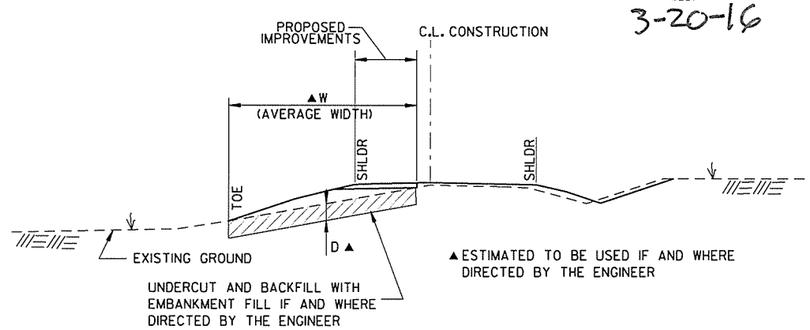

DETAIL OF UNDERCUT

I-49 STA. 323+00 TO STA. 324+00	W = 236'	D = 1.5'
I-49 STA. 347+00 TO STA. 348+00	W = 190'	D = 2.5'
HWY. 112 STA. 6+77 TO STA. 7+77	W = 49'	D = 1'
HWY. 112 STA. 16+88 TO STA. 21+91	W = 122'	D = 1'
HWY. 112 STA. 30+07 TO STA. 31+07	W = 56'	D = 1'
C-D RD. STA. 293+00 TO STA. 294+75	W = 48'	D = 1'
HWY. 112 TO NB I-49 RAMP STA. 309+00 TO STA. 316+50	W = 61'	D = 2'
HWY. 112 TO NB I-49 RAMP STA. 347+50 TO STA. 349+00	W = 12'	D = 2.5'
HWY. 112 TO NB I-49 RAMP STA. 352+50 TO STA. 354+00	W = 11'	D = 1'
NB I-49 TO HWY. 71B RAMP STA. 313+00 TO STA. 320+00	W = 96'	D = 2'
HWY. 112 TO HWY. 71B RAMP STA. 309+00 TO STA. 319+00	W = 123'	D = 2'
SB I-49 TO HWY. 71B RAMP STA. 337+00 TO STA. 340+00	W = 129'	D = 1'
SB I-49 TO HWY. 71B RAMP STA. 352+50 TO STA. 354+00	W = 186'	D = 1'

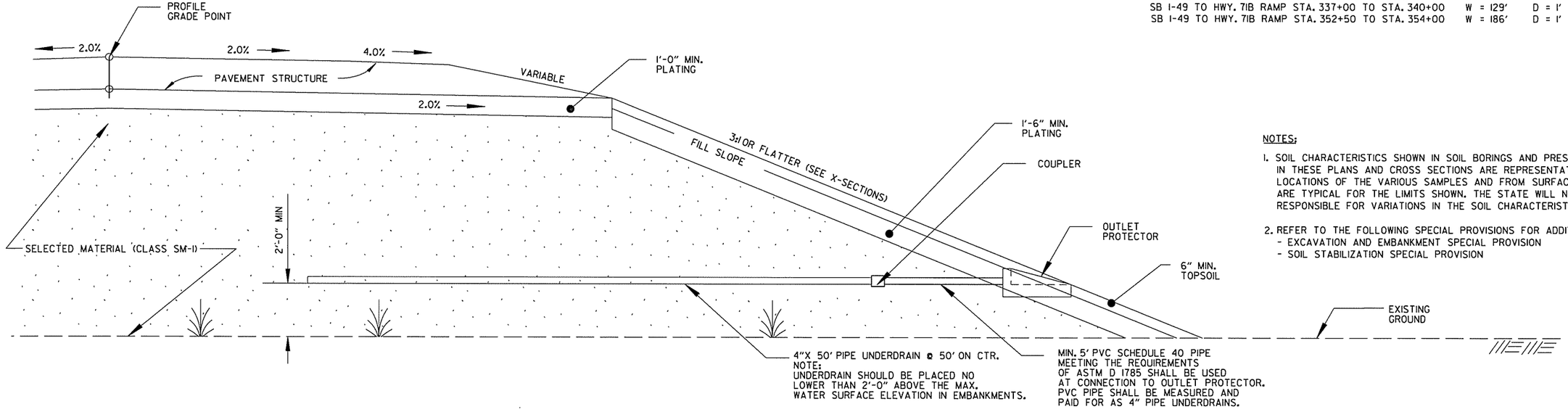

NOTES:

1. SOIL CHARACTERISTICS SHOWN IN SOIL BORINGS AND PRESENTED IN THESE PLANS AND CROSS SECTIONS ARE REPRESENTATIVE AT THE LOCATIONS OF THE VARIOUS SAMPLES AND FROM SURFACE INDICATIONS ARE TYPICAL FOR THE LIMITS SHOWN. THE STATE WILL NOT BE RESPONSIBLE FOR VARIATIONS IN THE SOIL CHARACTERISTICS.
2. REFER TO THE FOLLOWING SPECIAL PROVISIONS FOR ADDITIONAL INFORMATION
   - EXCAVATION AND EMBANKMENT SPECIAL PROVISION
   - SOIL STABILIZATION SPECIAL PROVISION

HALF-SECTION OF BRIDGE END EMBANKMENTS
(SEE SPECIAL PROVISION - EXCAVATION AND EMBANKMENT)

NOTES:
1. ALL EMBANKMENTS CONSTRUCTED OUT OF GRANULAR MATERIAL SHALL BE PLATED AS SHOWN.
2. THIS DETAIL SHALL BE USED FOR ALL EMBANKMENTS CONSTRUCTED OUT OF GRANULAR MATERIAL, HOWEVER, AT LOCATIONS OTHER THAN THOSE SHOWN ABOVE OR ON THE PLANS AND CONSTRUCTED WITH GRANULAR MATERIAL, INTERNAL DRAINAGE SHALL BE PROVIDED AS SHOWN AT NO COST TO THE DEPARTMENT AS DIRECTED BY THE ENGINEER.

SPECIAL DETAILS

AEWierdak 3/20/2016 11:51:36 AM
WORKSPACE: AHTD
L:\201\101707 - I-540 Widening & Interchange Improvement\Drawings\rBB0414_SD_02.dgn
REVISED DATE:

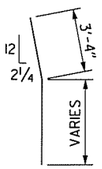

#5 TI BAR

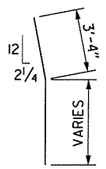

#6 T2 BAR

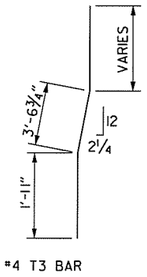

#4 T3 BAR

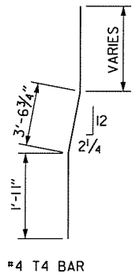

#4 T4 BAR

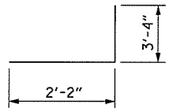

#5 LI BAR

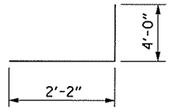

#6 L3 BAR

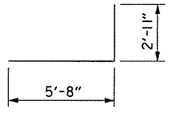

#4 L2 BAR

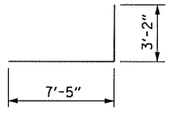

#4 L4 BAR

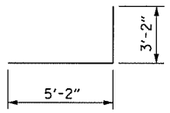

#4 L5 BAR

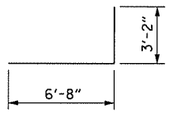

#4 L6 BAR

GENERAL NOTES FOR CONCRETE BARRIER WALL

1. ALL BARRIER WALLS SHALL BE CONSTRUCTED IN ACCORDANCE WITH SECTION 631 OF THE STANDARD SPECIFICATIONS, 2014 EDITION.
2. CONTRACTION JOINTS REQUIRED @ 30'-0" MAXIMUM SPACING FOR BARRIER TYPE MEDIAN C & SP-2.
3. ALL CONTRACTION JOINTS TO BE FORMED IN FRESH CONCRETE ON TOP AND IN SIDES OF BARRIER WALL.
4. ALL EXPOSED EDGES OF CONCRETE BARRIER WALL SHALL HAVE A 3/4" CHAMFER.
5. THE DESIGN OF BARRIER WALL (MEDIAN TYPE C) IS BASED ON A MINIMUM FOUNDATION BEARING CAPACITY OF ONE TON PER SQUARE FOOT. UNSTABLE FOUNDATION MATERIAL SHALL BE REMOVED AND REPLACED TO PROVIDE A FIRM FOUNDATION AS DIRECTED BY THE ENGINEER.
6. SPACING BETWEEN EXPANSION JOINTS SHALL NOT EXCEED 120 FT. EXPANSION JOINTS SHALL BE FORMED USING 1" PREFORMED JOINT FILLER. CONTINUOUS REINFORCEMENT SHALL BE CUT 2" CLEAR OF EXPANSION JOINTS.

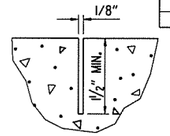

CONTRACTION JOINT DETAIL

DATE REVISED	DATE FILMED	DATE REVISED	DATE FILMED	FED.RD. DIST.NO.	STATE	FED.AID PROJ.NO.	SHEET NO.	TOTAL SHEETS
				6	ARK.			
				JOB NO.		BB0414	58	886
				(2)	SPECIAL DETAILS			

STATE OF ARKANSAS
LICENSED PROFESSIONAL ENGINEER
No. 16458
JOEL E. SKINNER
3-20-16

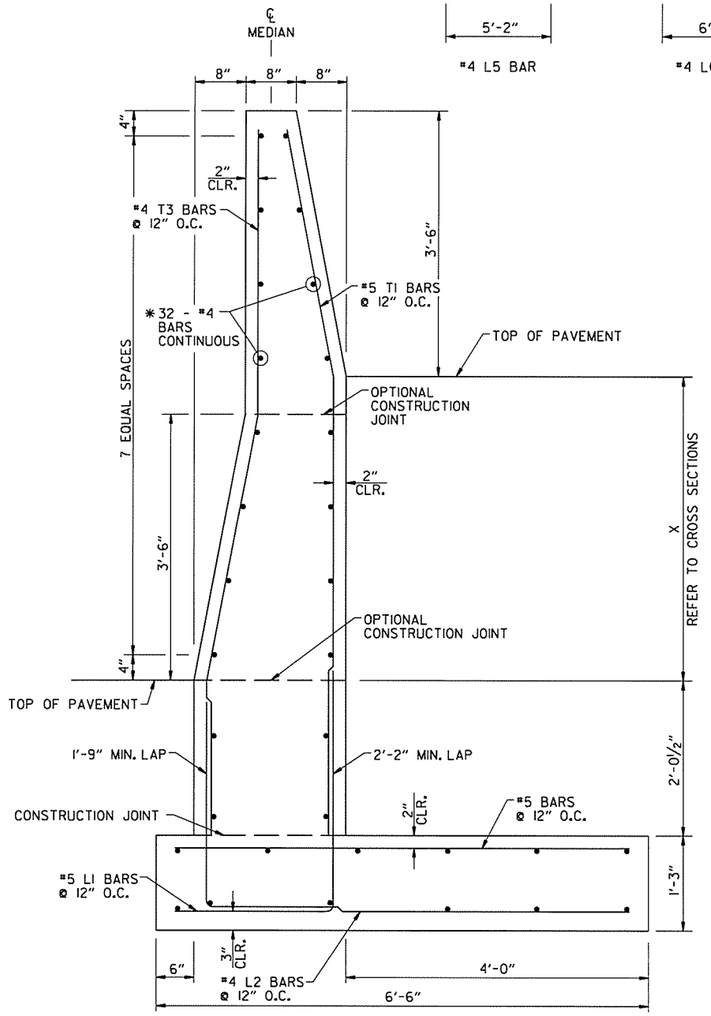

CONCRETE BARRIER WALL
(MEDIAN TYPE C)
X = 0'-0" TO 4'-0" MAX.

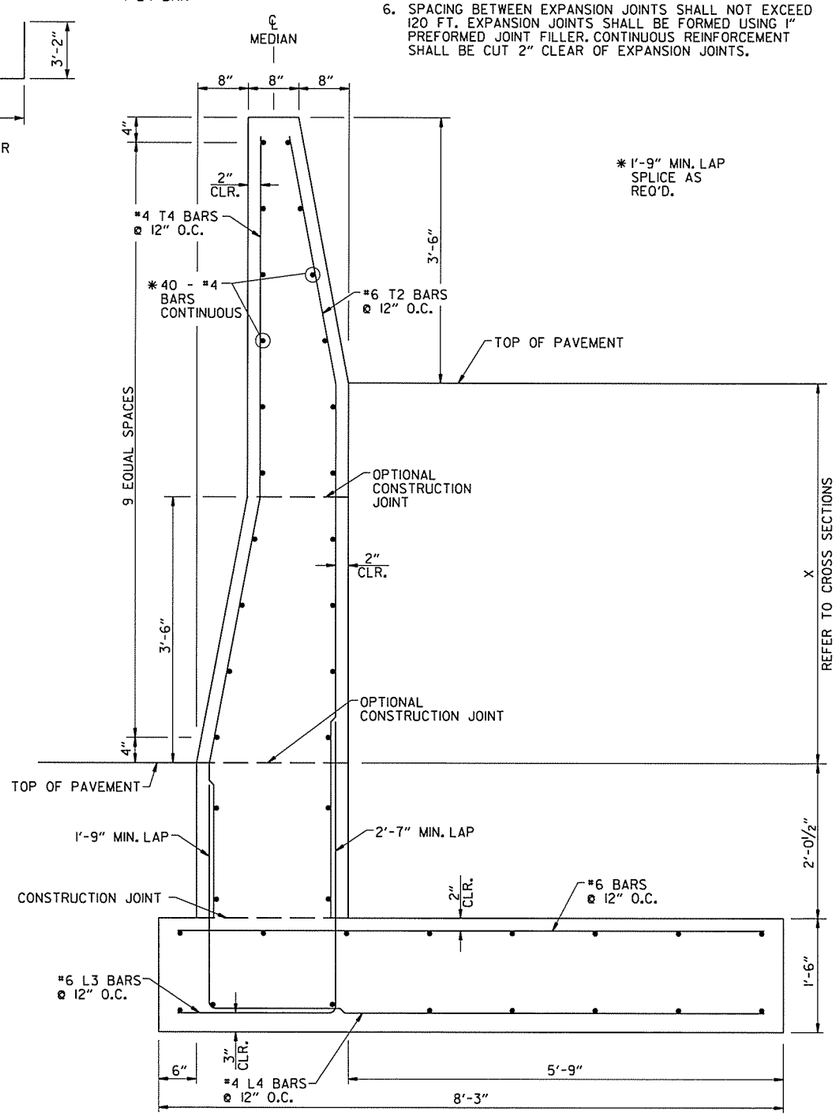

*1'-9" MIN. LAP SPLICE AS REQ'D.

CONCRETE BARRIER WALL
(MEDIAN TYPE C)
X = 4'-0" TO 6'-0" MAX.

NOTE:
MAINTAIN 3" CLEARANCE ON ALL FOOTING REINFORCEMENT EXCEPT AS NOTED AND 2" CLEARANCE ON ALL OTHER REINFORCEMENT.

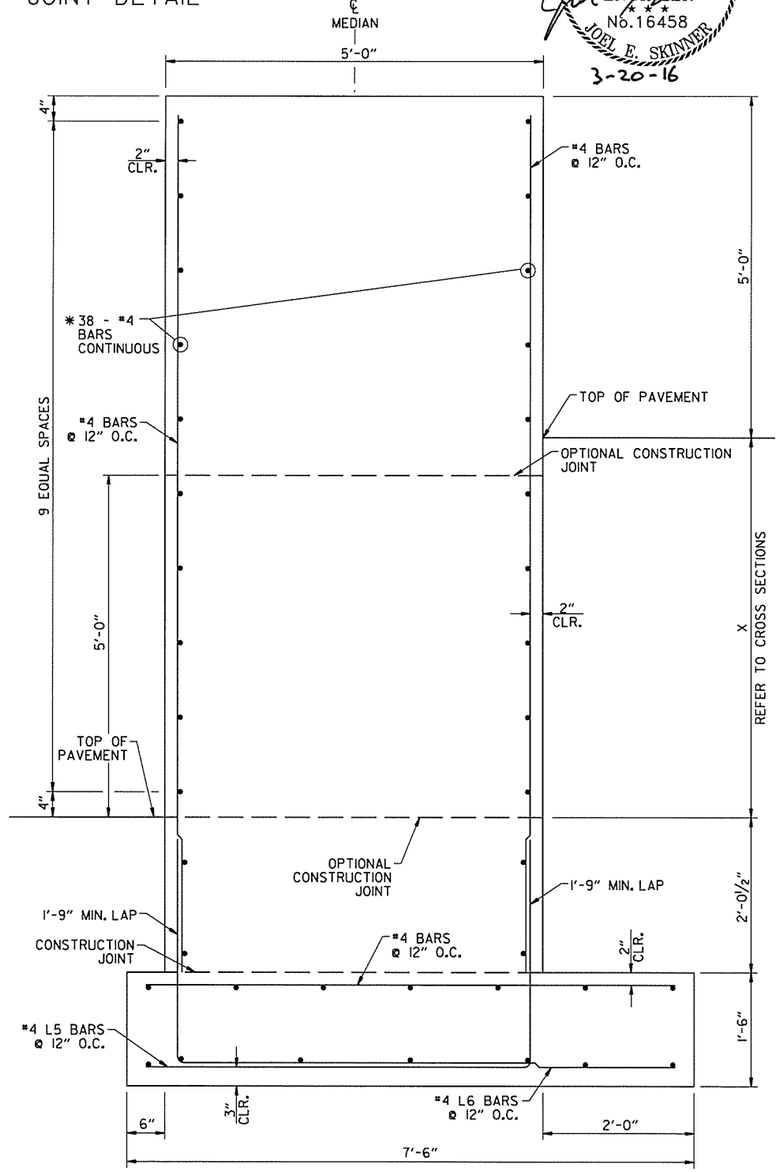

CONCRETE BARRIER WALL
(MEDIAN TYPE SP-2)
X = 0'-0" TO 6'-0" MAX.

SPECIAL DETAILS

AEWierciak 3/20/2016 11:51:41 AM
WORKSPACE: AHTD
L:\20\1\01707 - I-540 Widening & Interchange Improvement\Drawings\rBB0414_SD_03.dgn
REVISED DATE:

DATE REVISED	DATE FILMED	DATE REVISED	DATE FILMED	FED.RD. DIST.NO.	STATE	FED.AID PROJ.NO.	SHEET NO.	TOTAL SHEETS
				6	ARK.			
				JOB NO.		BB0414	59	886
				(2)	SPECIAL DETAILS			

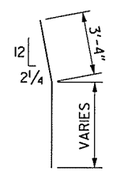

#6 TI BAR

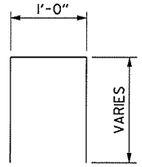

#6 T2 BAR

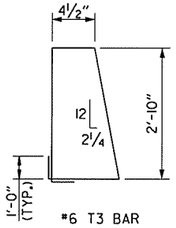

#6 T3 BAR

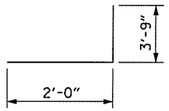

#6 LI BAR

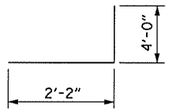

#6 L3 BAR

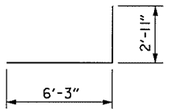

#4 L2 BAR

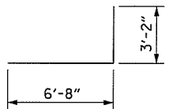

#4 L4 BAR

GENERAL NOTES FOR CONCRETE BARRIER WALL

1. ALL BARRIER WALLS SHALL BE CONSTRUCTED IN ACCORDANCE WITH SECTION 631 OF THE STANDARD SPECIFICATIONS, 2014 EDITION.
2. CONTRACTION JOINTS REQUIRED @ 30'-0" MAXIMUM SPACING FOR BARRIER WALL (SIDE TYPE E) & (MEDIAN TYPE SP-I).
3. ALL CONTRACTION JOINTS TO BE FORMED IN FRESH CONCRETE ON TOP AND IN SIDES OF BARRIER WALL.
4. ALL EXPOSED EDGES OF CONCRETE BARRIER WALL SHALL HAVE A 3/4" CHAMFER.
5. THE DESIGN OF BARRIER WALL (SIDE TYPE E) IS BASED ON A MINIMUM FOUNDATION BEARING CAPACITY OF ONE TON PER SQUARE FOOT. UNSTABLE FOUNDATION MATERIAL SHALL BE REMOVED AND REPLACED TO PROVIDE A FIRM FOUNDATION AS DIRECTED BY THE ENGINEER.
6. SPACING BETWEEN EXPANSION JOINTS SHALL NOT EXCEED 120 FT. EXPANSION JOINTS SHALL BE FORMED USING 1" PREFORMED JOINT FILLER. CONTINUOUS REINFORCEMENT SHALL BE CUT 2" CLEAR OF EXPANSION JOINTS.

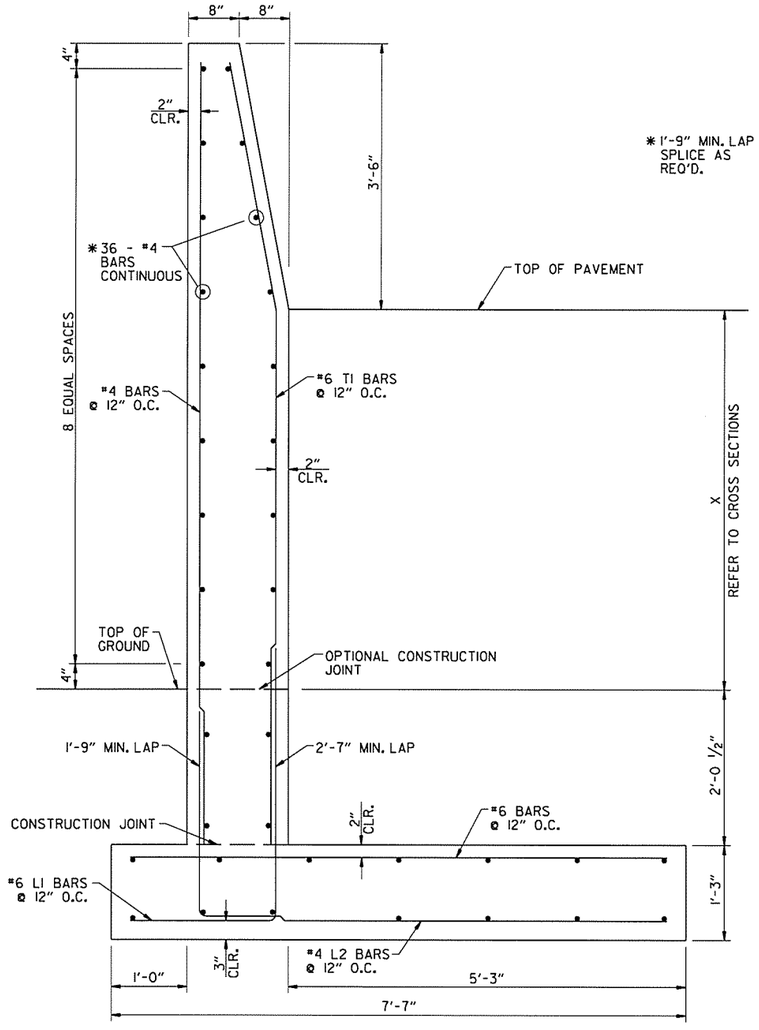

*1'-9" MIN. LAP SPLICE AS REQ'D.

NO DRAIN OPENING

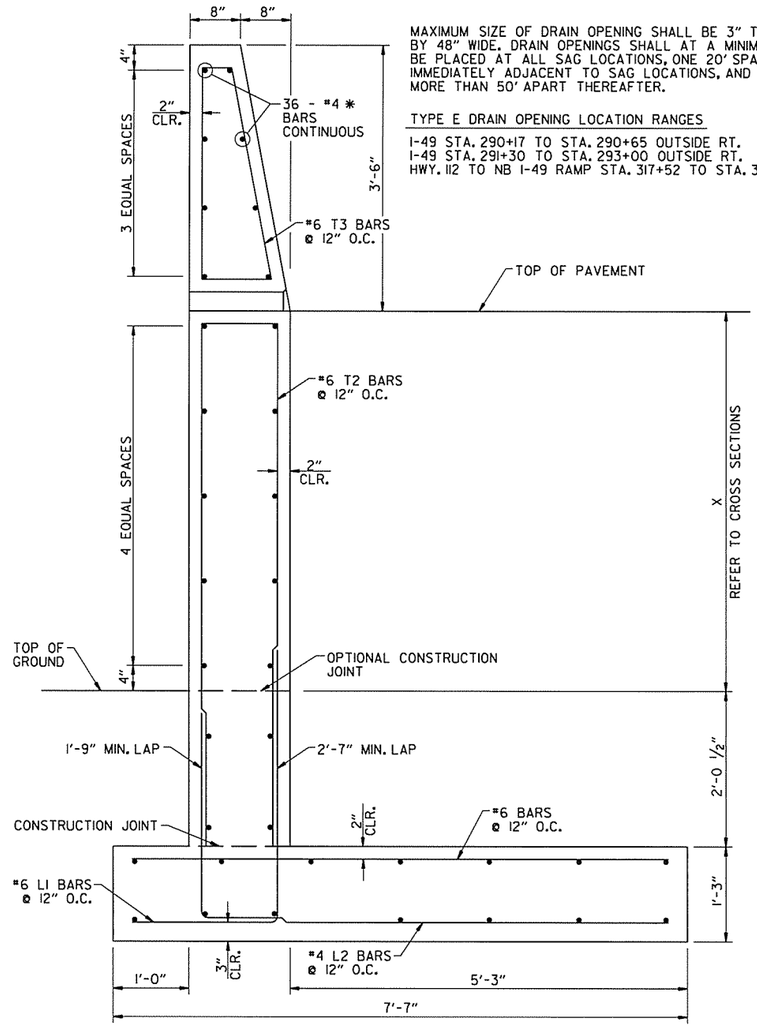

MAXIMUM SIZE OF DRAIN OPENING SHALL BE 3" TALL BY 48" WIDE. DRAIN OPENINGS SHALL AT A MINIMUM BE PLACED AT ALL SAG LOCATIONS, ONE 20' SPACING IMMEDIATELY ADJACENT TO SAG LOCATIONS, AND NO MORE THAN 50' APART THEREAFTER.

TYPE E DRAIN OPENING LOCATION RANGES

I-49 STA. 290+17 TO STA. 290+65 OUTSIDE RT.
I-49 STA. 291+30 TO STA. 293+00 OUTSIDE RT.
HWY. 112 TO NB I-49 RAMP STA. 317+52 TO STA. 318+37 LT.

DRAIN OPENING

CONCRETE BARRIER WALL
(SIDE TYPE E)
X = 0'-0" TO 5'-0" MAX.

NOTE:
MAINTAIN 3" CLEARANCE ON ALL FOOTING REINFORCEMENT EXCEPT AS NOTED AND 2" CLEARANCE ON ALL OTHER REINFORCEMENT.

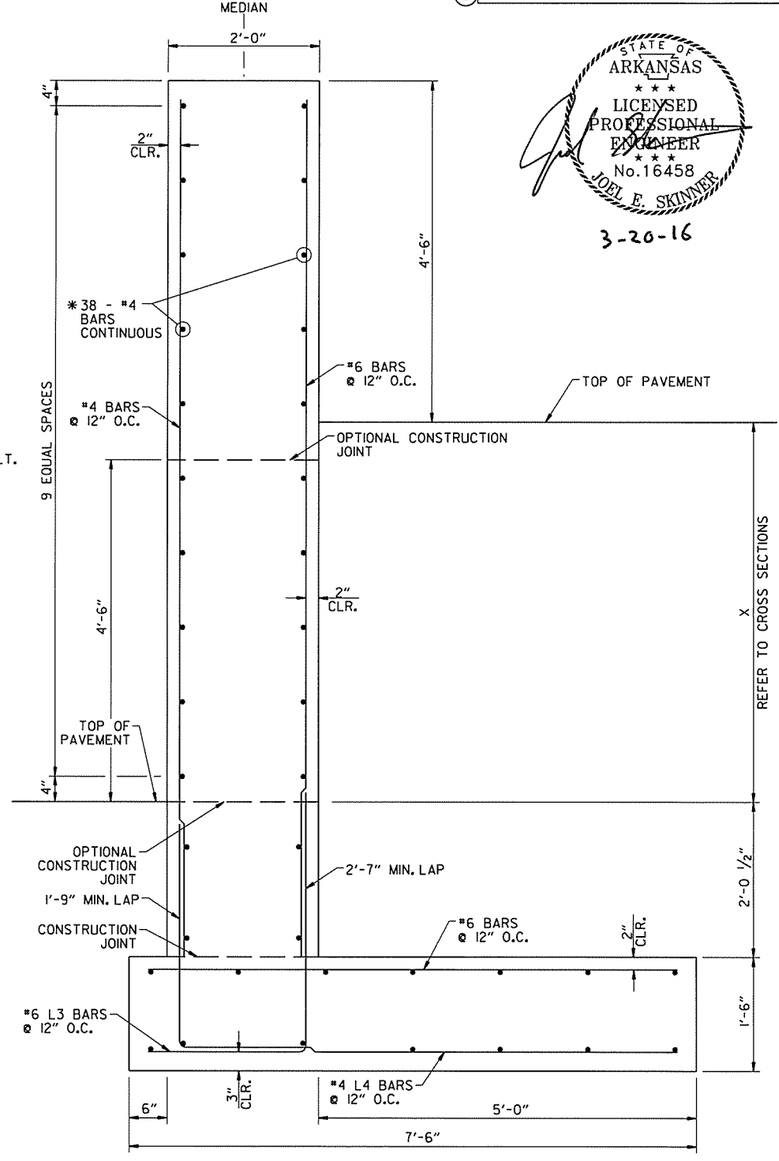

CONCRETE BARRIER WALL
(MEDIAN TYPE SP-I)
X = 0'-0" TO 6'-0" MAX.

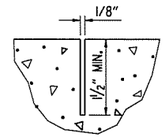

CONTRACTION JOINT DETAIL

STATE OF ARKANSAS
LICENSED PROFESSIONAL ENGINEER
No.16458
JOEL E. SKINNER
3-20-16

SPECIAL DETAILS

AEWierciak 3/20/2016 11:51:41 AM
WORKSPACE: AHTD
L:\201\101707 - I-540 Widening & Interchange Improvement\Drawings\r-BB0414_SD_04.dgn
REVISED DATE:

DATE REVISED	DATE FILMED	DATE REVISED	DATE FILMED	FED.RD. DIST.NO.	STATE	FED.AID PROJ.NO.	SHEET NO.	TOTAL SHEETS
				6	ARK.			
				JOB NO.		BB0414	60	886
				(2)	SPECIAL DETAILS			

NOTE:
MAINTAIN 3" CLEARANCE ON ALL FOOTING REINFORCEMENT EXCEPT AS NOTED AND 2" CLEARANCE ON ALL OTHER REINFORCEMENT.

MAXIMUM SIZE OF DRAIN OPENING SHALL BE 3" TALL BY 48" WIDE. DRAIN OPENINGS SHALL AT A MINIMUM BE PLACED AT ALL SAG LOCATIONS, ONE 20' SPACING IMMEDIATELY ADJACENT TO SAG LOCATIONS, AND NO MORE THAN 50' APART THEREAFTER.

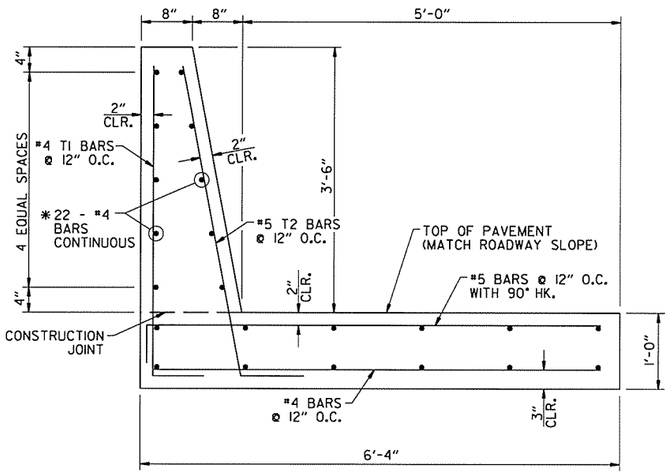

NO DRAIN OPENING

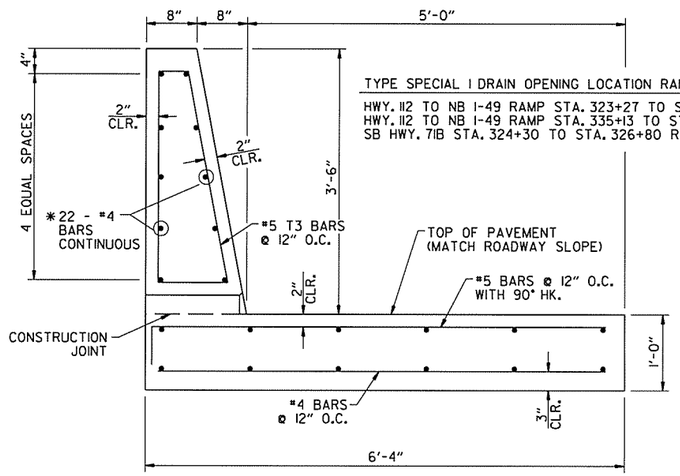

TYPE SPECIAL I DRAIN OPENING LOCATION RANGES

HWY. 112 TO NB I-49 RAMP STA. 323+27 TO STA. 323+88 LT.
HWY. 112 TO NB I-49 RAMP STA. 335+13 TO STA. 339+45 LT.
SB HWY. 71B STA. 324+30 TO STA. 326+80 RT.

CONCRETE BARRIER WALL (PARAPET TYPE SPECIAL I)

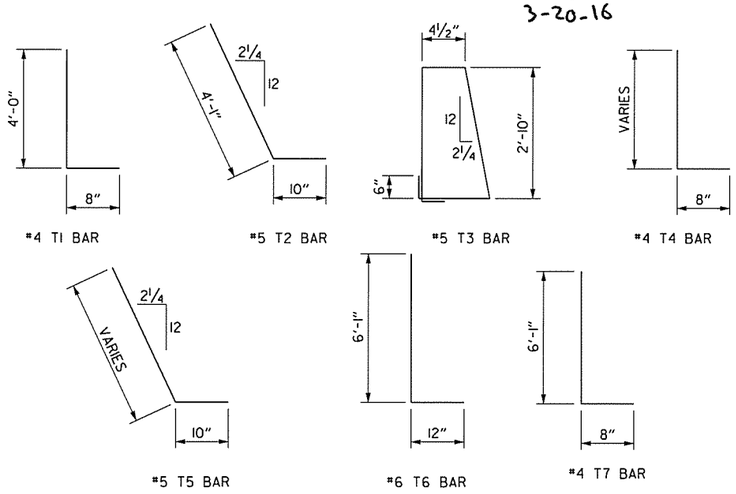

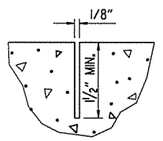

CONTRACTION JOINT DETAIL

* 1'-9" MIN. LAP SPLICE AS REQ'D.

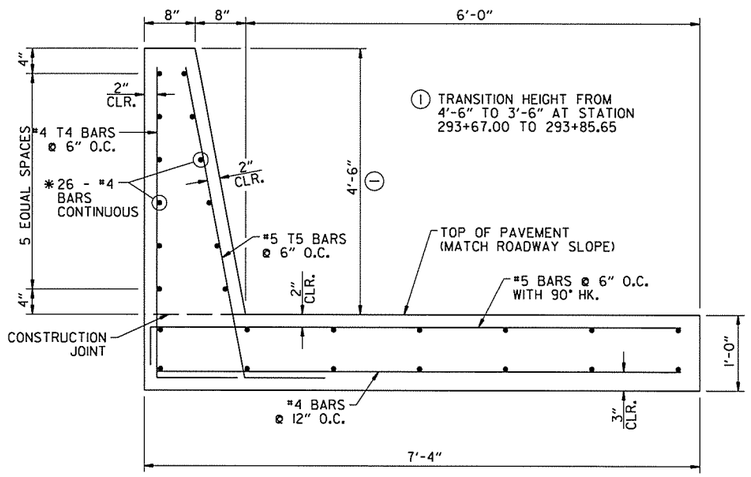

CONCRETE BARRIER WALL (PARAPET TYPE SPECIAL 2)

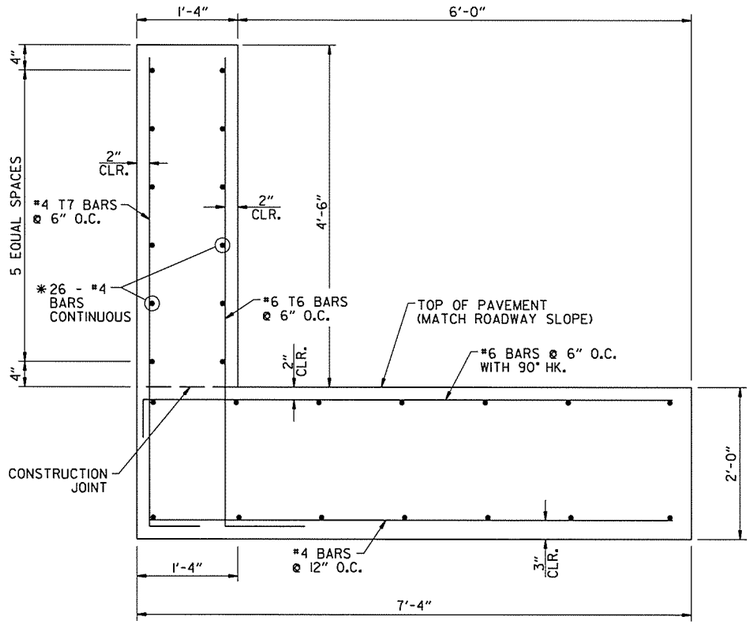

CONCRETE BARRIER WALL (PARAPET TYPE SPECIAL 3)

GENERAL NOTES FOR CONCRETE BARRIER WALL

1. ALL BARRIER WALLS SHALL BE CONSTRUCTED IN ACCORDANCE WITH SECTION 631 OF THE STANDARD SPECIFICATIONS, 2014 EDITION.
2. CONTRACTION JOINTS REQUIRED @ 30'-0" MAXIMUM SPACING FOR BARRIER WALL (PARAPET TYPE SPECIAL 1, 2 AND 3).
3. ALL CONTRACTION JOINTS TO BE FORMED IN FRESH CONCRETE ON TOP AND IN SIDES OF BARRIER WALL.
4. ALL EXPOSED EDGES OF CONCRETE BARRIER WALL SHALL HAVE A 3/4" CHAMFER.
5. THE DESIGN OF BARRIER WALL (PARAPET TYPE SPECIAL 1 AND 2) IS BASED ON A MINIMUM FOUNDATION BEARING CAPACITY OF ONE TON PER SQUARE FOOT. UNSTABLE FOUNDATION MATERIAL SHALL BE REMOVED AND REPLACED TO PROVIDE A FIRM FOUNDATION AS DIRECTED BY THE ENGINEER.
6. SPACING BETWEEN EXPANSION JOINTS SHALL NOT EXCEED 120 FT. EXPANSION JOINTS SHALL BE FORMED USING 1" PREFORMED JOINT FILLER. CONTINUOUS REINFORCEMENT SHALL BE CUT 2" CLEAR OF EXPANSION JOINTS.

STATE OF ARKANSAS
LICENSED PROFESSIONAL ENGINEER
No.16458
JOEL E. SKINNER
3-20-16

AEWierclak 3/20/2016 11:51:42 AM
WORKSPACE: AHTD
L:\20IN\I0I70T - I-540 Widening & Interchange Improvement\Drawings\rBB0414_SD_05.dgn
REVISED DATE:

DATE REVISED	DATE FILMED	DATE REVISED	DATE FILMED	FED.RD. DIST.NO.	STATE	FED.AID PROJ.NO.	SHEET NO.	TOTAL SHEETS
				6	ARK.			
				JOB NO.		BB0414	61	886
				(2)	SPECIAL DETAILS			

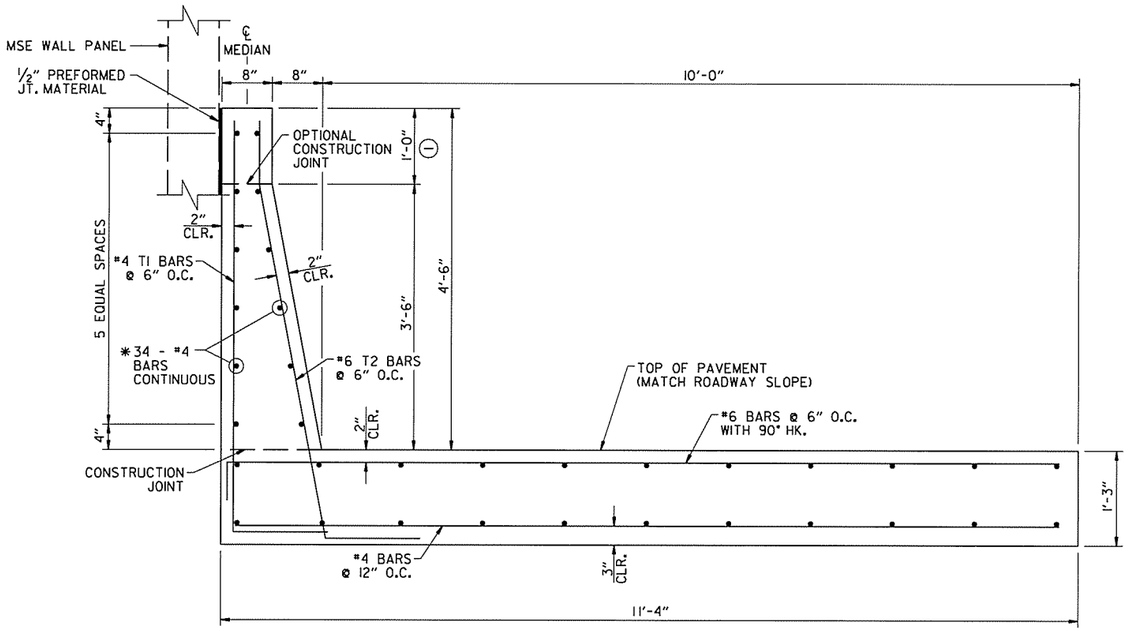

CONCRETE BARRIER WALL
(PARAPET TYPE SPECIAL 4)

* 1'-9" MIN. LAP SPLICE AS REQ'D.

① TRANSITION TOP 1'-0" EXTENSION AS REQUIRED WHERE EXTENSION CONFLICTS WITH MSE WALL COPING.

② TRIM BARS AS REQUIRED

NOTE:
MAINTAIN 3" CLEARANCE ON ALL FOOTING REINFORCEMENT EXCEPT AS NOTED AND 2" CLEARANCE ON ALL OTHER REINFORCEMENT.

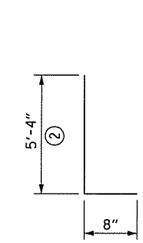

#4 TI BAR

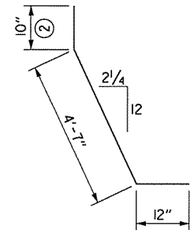

#6 T2 BAR

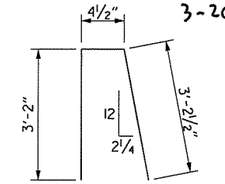

#5 T4 BAR

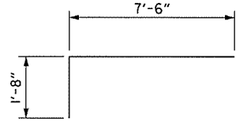

#5 LI BAR

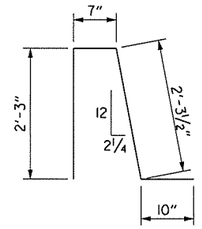

#5 T3 BAR

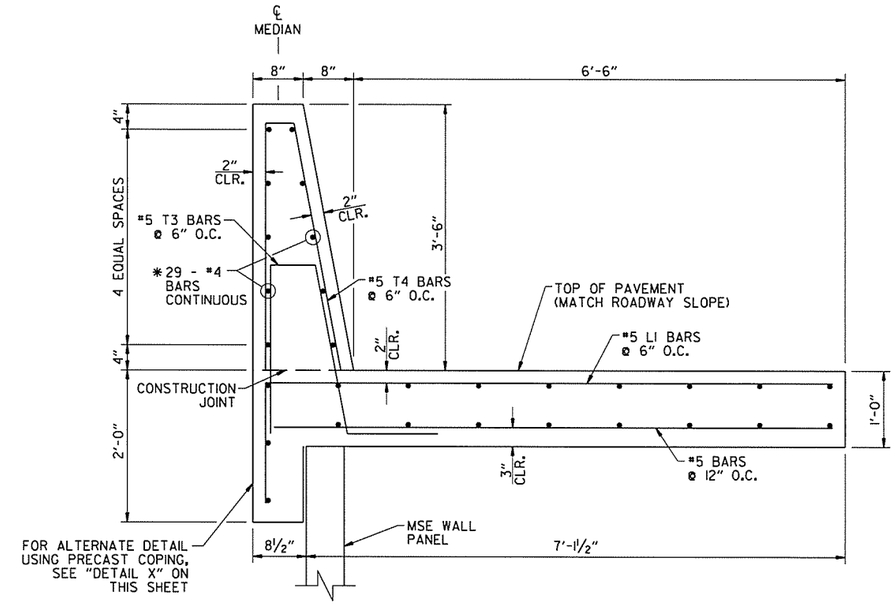

CONCRETE BARRIER WALL
(PARAPET TYPE SPECIAL 5)

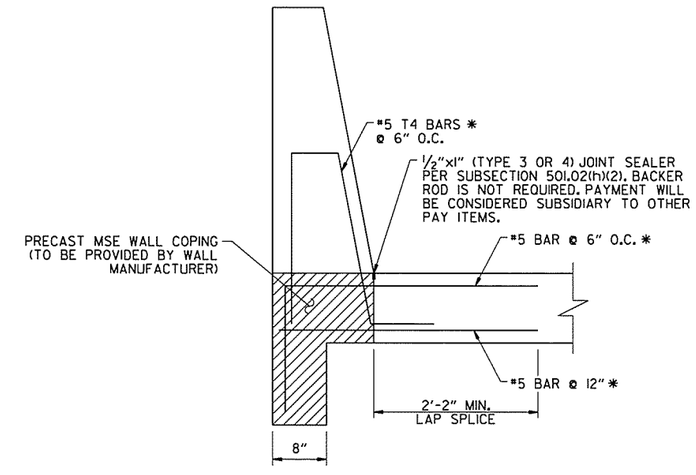

DETAIL X

* IF PRECAST OPTION IS SELECTED, THE MSE WALL MANUFACTURER SHALL PROVIDE REINFORCING PROJECTING FROM PRECAST COPING AS SHOWN

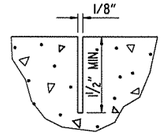

CONTRACTION JOINT DETAIL

GENERAL NOTES FOR CONCRETE BARRIER WALL

1. ALL BARRIER WALLS SHALL BE CONSTRUCTED IN ACCORDANCE WITH SECTION 631 OF THE STANDARD SPECIFICATIONS, 2014 EDITION.
2. CONTRACTION JOINTS REQUIRED @ 30'-0" MAXIMUM SPACING FOR BARRIER WALL (PARAPET TYPE SPECIAL 4 AND 5).
3. ALL CONTRACTION JOINTS TO BE FORMED IN FRESH CONCRETE ON TOP AND IN SIDES OF BARRIER WALL.
4. ALL EXPOSED EDGES OF CONCRETE BARRIER WALL SHALL HAVE A 3/4" CHAMFER.
5. THE DESIGN OF BARRIER WALL (PARAPET TYPE SPECIAL 4 AND 5) IS BASED ON A MINIMUM FOUNDATION BEARING CAPACITY OF ONE TON PER SQUARE FOOT. UNSTABLE FOUNDATION MATERIAL SHALL BE REMOVED AND REPLACED TO PROVIDE A FIRM FOUNDATION AS DIRECTED BY THE ENGINEER.
6. SPACING BETWEEN EXPANSION JOINTS SHALL NOT EXCEED 120 FT. EXPANSION JOINTS SHALL BE FORMED USING 1" PREFORMED JOINT FILLER. CONTINUOUS REINFORCEMENT SHALL BE CUT 2" CLEAR OF EXPANSION JOINTS.

STATE OF ARKANSAS
LICENSED PROFESSIONAL ENGINEER
No.16458
JOEL E. SKINNER
3-20-16

AEWierciak 3/20/2016 11:51:42 AM
WORKSPACE: AHTD
L:\20I\I0I770T - I-540 Widening & Interchange Improvement\Drawings\rBB04I4_SD_06.dgn
REVISED DATE:

DATE REVISED	DATE FILMED	DATE REVISED	DATE FILMED	FED.RD. DIST.NO.	STATE	FED.AID PROJ.NO.	SHEET NO.	TOTAL SHEETS
				6	ARK.			
				JOB NO.		BB0414	62	886
				(2)	SPECIAL DETAILS			

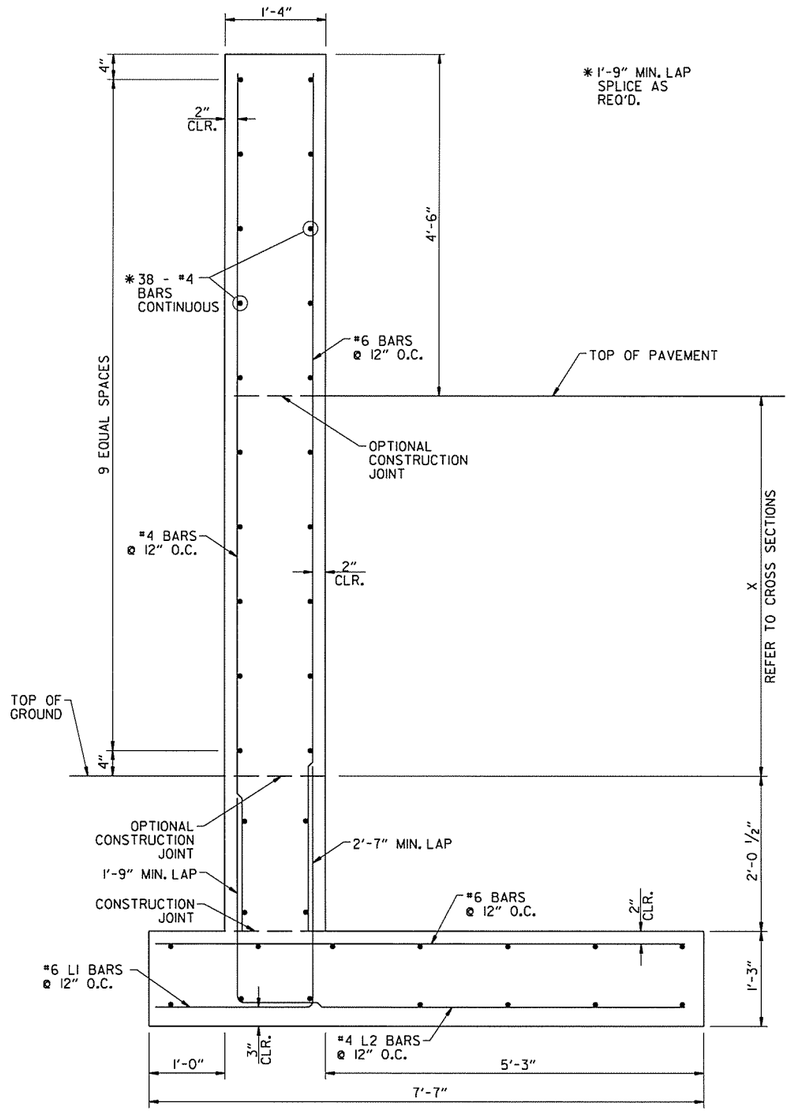

CONCRETE BARRIER WALL
(SIDE TYPE SPECIAL)
X = 0'-0" TO 5'-0" MAX.

NOTE:
MAINTAIN 3" CLEARANCE ON ALL FOOTING REINFORCEMENT EXCEPT AS NOTED AND 2" CLEARANCE ON ALL OTHER REINFORCEMENT.

STATE OF ARKANSAS
LICENSED PROFESSIONAL ENGINEER
No.16458
JOEL E. SKINNER
3-20-16

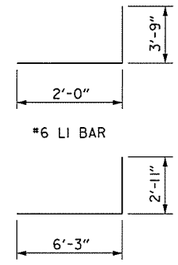

GENERAL NOTES FOR CONCRETE BARRIER WALL

1. ALL BARRIER WALLS SHALL BE CONSTRUCTED IN ACCORDANCE WITH SECTION 631 OF THE STANDARD SPECIFICATIONS, 2014 EDITION.
2. CONTRACTION JOINTS REQUIRED @ 30'-0" MAXIMUM SPACING FOR BARRIER WALL (SIDE TYPE SPECIAL).
3. ALL CONTRACTION JOINTS TO BE FORMED IN FRESH CONCRETE ON TOP AND IN SIDES OF BARRIER WALL.
4. ALL EXPOSED EDGES OF CONCRETE BARRIER WALL SHALL HAVE A 3/4" CHAMFER.
5. THE DESIGN OF BARRIER WALL (SIDE TYPE SPECIAL) IS BASED ON A MINIMUM FOUNDATION BEARING CAPACITY OF ONE TON PER SQUARE FOOT. UNSTABLE FOUNDATION MATERIAL SHALL BE REMOVED AND REPLACED TO PROVIDE A FIRM FOUNDATION AS DIRECTED BY THE ENGINEER.
6. SPACING BETWEEN EXPANSION JOINTS SHALL NOT EXCEED 120 FT. EXPANSION JOINTS SHALL BE FORMED USING 1" PREFORMED JOINT FILLER. CONTINUOUS REINFORCEMENT SHALL BE CUT 2" CLEAR OF EXPANSION JOINTS.

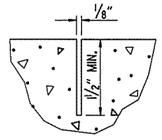

CONTRACTION JOINT DETAIL

AEWerclok 3/20/2016 1:58:54 PM
WORKSPACE: AHTD
L:\2016\160170T07 - I-540 Widening & Interchange Improvement\Drawings\rBB0414_SD_18.dgn
REVISED DATE:

DATE REVISED	DATE FILMED	DATE REVISED	DATE FILMED	FED.RD. DIST.NO.	STATE	FED.AID PROJ.NO.	SHEET NO.	TOTAL SHEETS
				6	ARK.			
				JOB NO.		BB0414	63	886
				(2)	SPECIAL DETAILS			

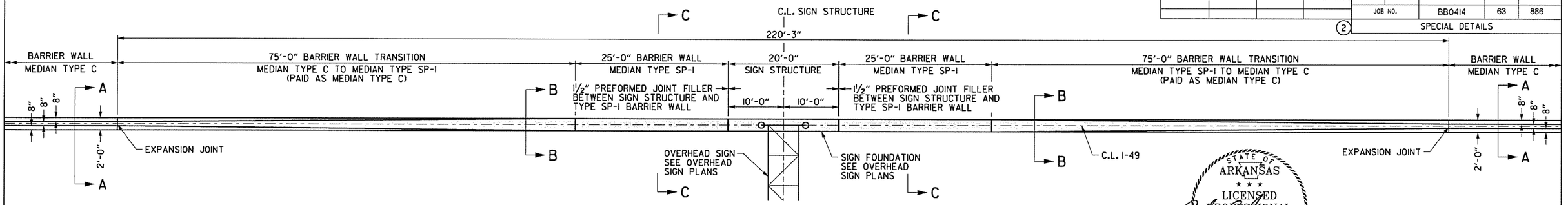

TYPICAL MEDIAN BARRIER WALL TRANSITION AT OVERHEAD SIGNS - PLAN VIEW

STATE OF ARKANSAS
LICENSED PROFESSIONAL ENGINEER
No. 16458
JOEL E. SKINNER
3-20-16

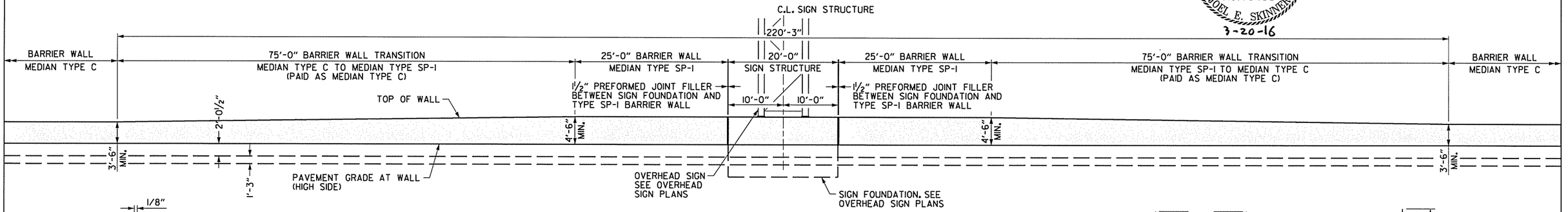

TYPICAL MEDIAN BARRIER WALL TRANSITION AT OVERHEAD SIGNS - PROFILE VIEW

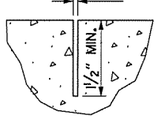

CONTRACTION JOINT DETAIL

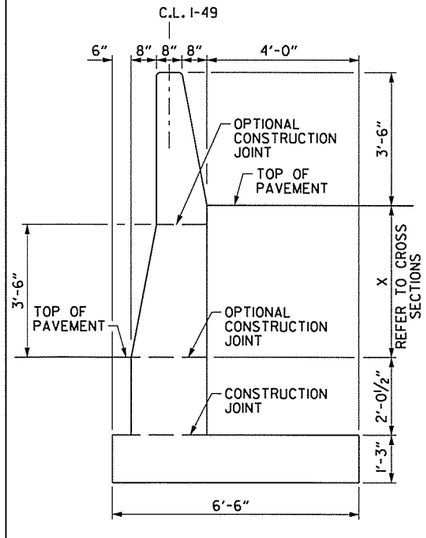

SECTION A-A

REFER TO SPECIAL DETAIL
CONCRETE BARRIER WALL
(MEDIAN TYPE C) X = 0'-0" TO 4'-0"
FOR REINFORCEMENT DETAILS

* 1'-9" MIN. LAP SPLICE AS REQ'D.

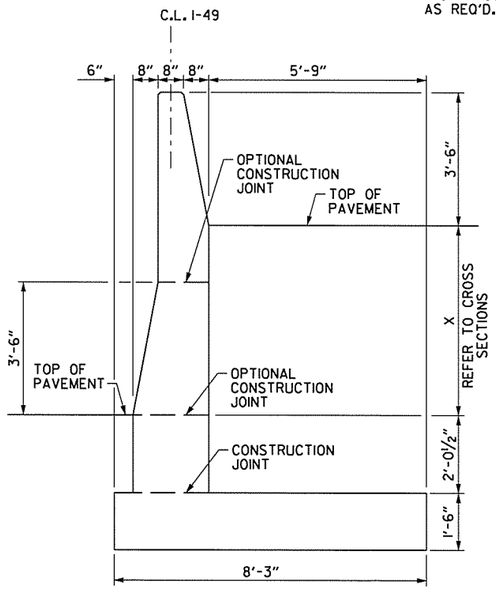

SECTION A-A

REFER TO SPECIAL DETAIL
CONCRETE BARRIER WALL
(MEDIAN TYPE C) X = 0'-0" TO 6'-0"
FOR REINFORCEMENT DETAILS

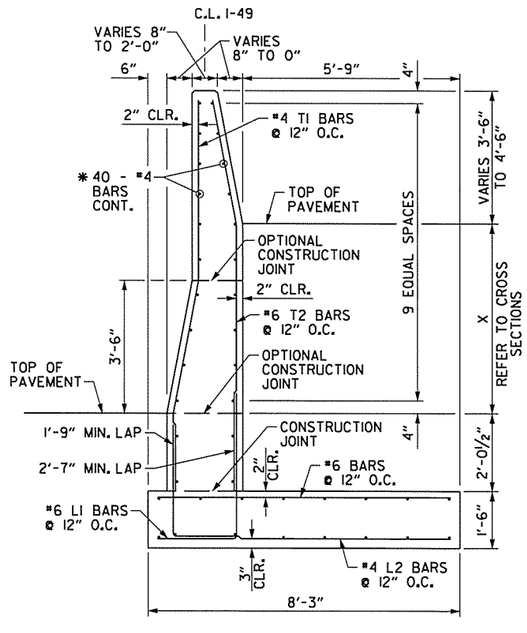

SECTION B-B

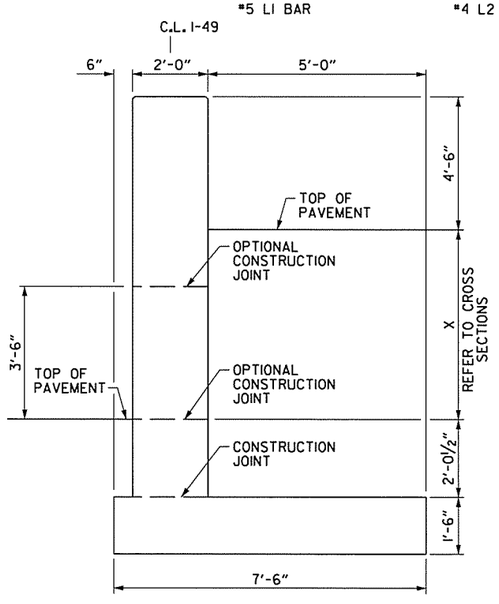

SECTION C-C

REFER TO SPECIAL DETAIL
CONCRETE BARRIER WALL
(MEDIAN TYPE SP-I)
FOR REINFORCEMENT DETAILS

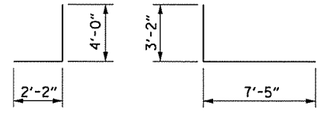

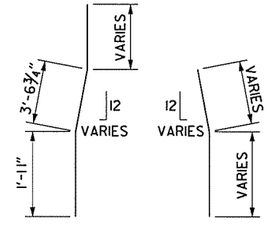

GENERAL NOTES FOR CONCRETE BARRIER WALL

1. ALL BARRIER WALLS SHALL BE CONSTRUCTED IN ACCORDANCE WITH SECTION 631 OF THE STANDARD SPECIFICATIONS, 2014 EDITION.
2. CONTRACTION JOINTS REQUIRED @ 30'-0" MAXIMUM SPACING.
3. ALL CONTRACTION JOINTS TO BE FORMED IN FRESH CONCRETE ON TOP AND IN SIDES OF BARRIER WALL.
4. ALL EXPOSED EDGES OF CONCRETE BARRIER WALL SHALL HAVE A 3/4" CHAMFER.
5. THE DESIGN OF BARRIER WALL (MEDIAN TYPE C & MEDIAN TYPE SP-I) IS BASED ON A MINIMUM FOUNDATION BEARING CAPACITY OF ONE TON PER SQUARE FOOT. UNSTABLE FOUNDATION MATERIAL SHALL BE REMOVED AND REPLACED TO PROVIDE A FIRM FOUNDATION AS DIRECTED BY THE ENGINEER.
6. MAINTAIN 3" CLEARANCE ON ALL FOOTING REINFORCEMENT EXCEPT AS NOTED AND 2" CLEARANCE ON ALL OTHER REINFORCEMENT.
7. EXPANSION JOINTS SHALL BE FORMED USING 1" PREFORMED JOINT FILLER. CONTINUOUS REINFORCEMENT SHALL BE CUT 2" CLEAR OF EXPANSION JOINTS.
8. TRANSITION SECTION SHALL BE PAID FOR AS MEDIAN TYPE C.

SPECIAL DETAILS

AEWterlock 3/20/2016 11:51:42 AM
WORKSPACE: AHTD
L:\208\1017107 - I-540 Widening & Interchange Improvement\Drawings\rBB0414_SD_07.dgn
REVISED DATE:

DATE REVISED	DATE FILMED	DATE REVISED	DATE FILMED	FED.RD. DIST.NO.	STATE	FED.AID PROJ.NO.	SHEET NO.	TOTAL SHEETS
				6	ARK.			
				JOB NO.		BB0414	64	886

(2) SPECIAL DETAILS

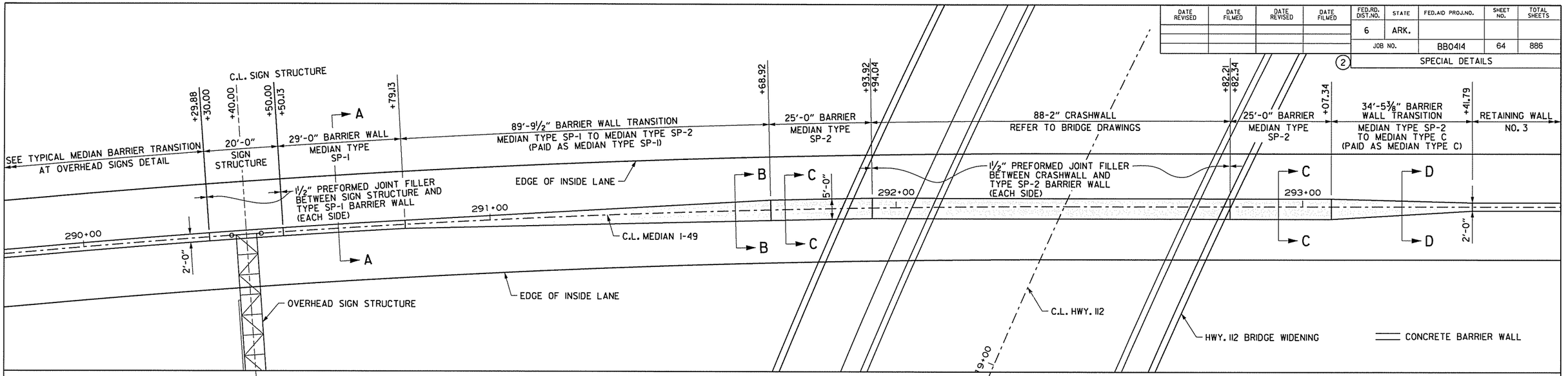

I-49 MEDIAN BARRIER WALL TRANSITION AT HWY. 112 BRIDGE

GENERAL NOTES FOR CONCRETE BARRIER WALL

1. ALL BARRIER WALLS SHALL BE CONSTRUCTED IN ACCORDANCE WITH SECTION 631 OF THE STANDARD SPECIFICATIONS, 2014 EDITION.
2. CONTRACTION JOINTS REQUIRED @ 30'-0" MAXIMUM SPACING.
3. ALL CONTRACTION JOINTS TO BE FORMED IN FRESH CONCRETE ON TOP AND IN SIDES OF BARRIER WALL.
4. ALL EXPOSED EDGES OF CONCRETE BARRIER WALL SHALL HAVE A 3/4" CHAMFER.
5. TRANSITION FROM MEDIAN TYPE SP-1 TO MEDIAN TYPE SP-2 SHALL BE PAID FOR AS MEDIAN TYPE SP-1. TRANSITION FROM MEDIAN TYPE SP-2 TO MEDIAN TYPE C SHALL BE PAID FOR AS MEDIAN TYPE C.
6. THE DESIGN OF BARRIER WALL (MEDIAN TYPE C) IS BASED ON A MINIMUM FOUNDATION BEARING CAPACITY OF ONE TON PER SQUARE FOOT. UNSTABLE FOUNDATION MATERIAL SHALL BE REMOVED AND REPLACED TO PROVIDE A FIRM FOUNDATION AS DIRECTED BY THE ENGINEER.
7. SPACING BETWEEN EXPANSION JOINTS SHALL NOT EXCEED 120 FT. EXPANSION JOINTS SHALL BE FORMED USING 1" PREFORMED JOINT FILLER. CONTINUOUS REINFORCEMENT SHALL BE CUT 2" CLEAR OF EXPANSION JOINTS.
8. MAINTAIN 3" CLEARANCE ON ALL FOOTING REINFORCEMENT EXCEPT AS NOTED AND 2" CLEARANCE ON ALL OTHER REINFORCEMENT.

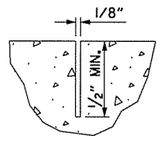

CONTRACTION JOINT DETAIL

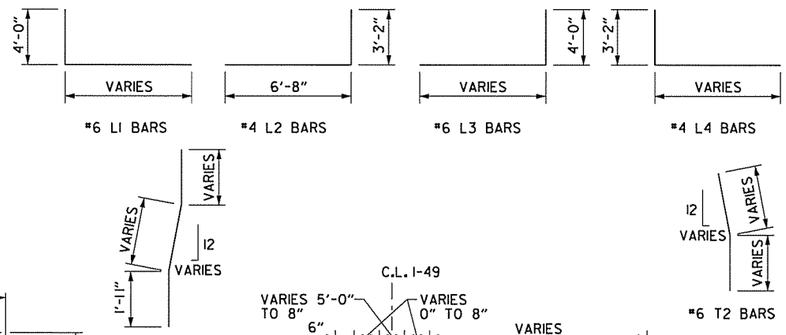

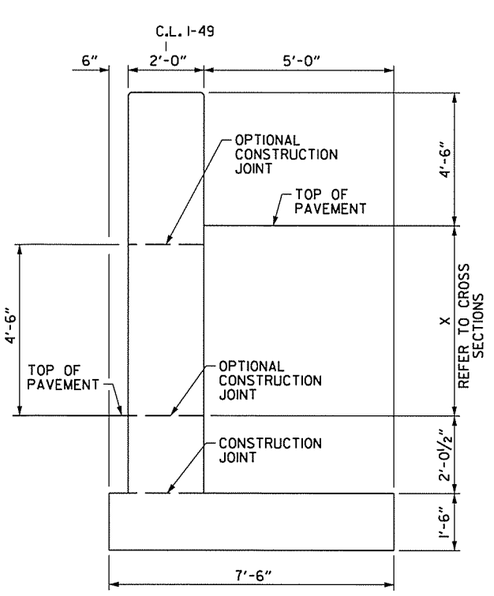

REFER TO SPECIAL DETAIL CONCRETE BARRIER WALL (MEDIAN TYPE SP-1) FOR REINFORCEMENT DETAILS

SECTION A-A

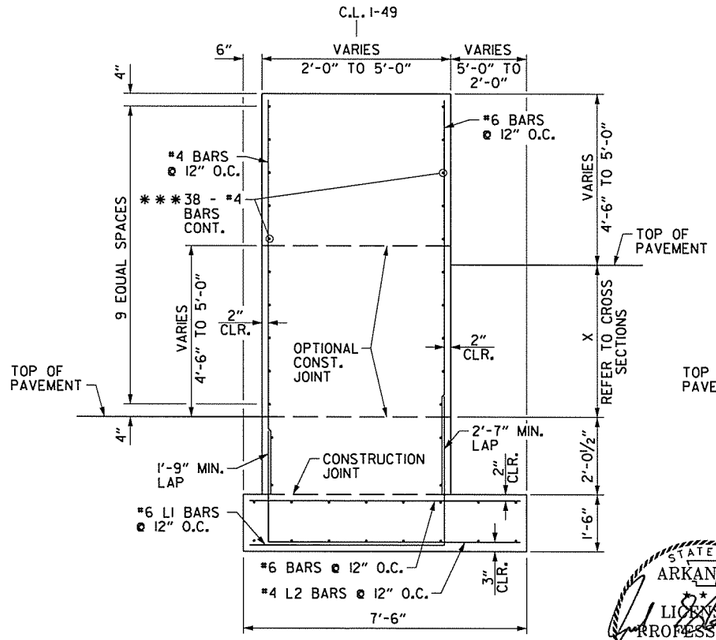

SECTION B-B

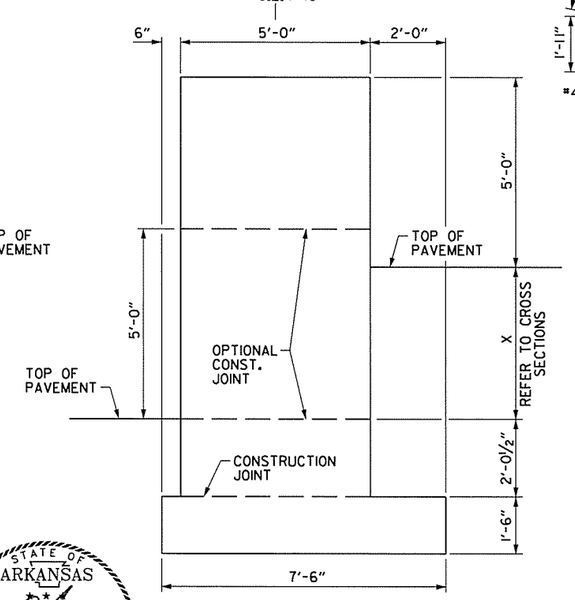

REFER TO SPECIAL DETAIL CONCRETE BARRIER WALL (MEDIAN TYPE SP-2) FOR REINFORCEMENT DETAILS

SECTION C-C

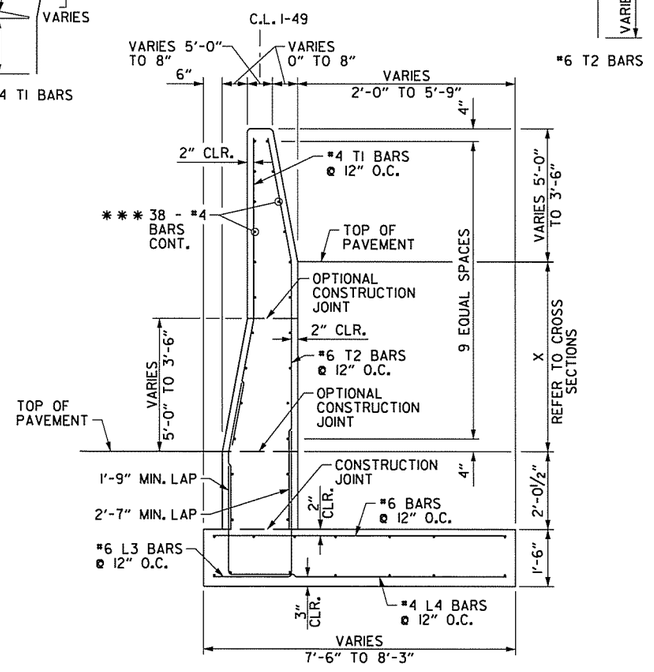

*** 1'-9" MIN. LAP SPLICE AS REQ'D.

SECTION D-D

SPECIAL DETAILS

STATE OF ARKANSAS LICENSED PROFESSIONAL ENGINEER No.16458 JOEL E. SKINNER 3-20-16

AEWercklok 3/20/2016 11:51:43 AM
WORKSPACE: AHTD
L:\20IN\10I7707 - I-540 Widening & Interchange Improvement\Drawings\rBB0414_SD_09.dgn
REVISED DATE:

DATE REVISED	DATE FILMED	DATE REVISED	DATE FILMED	FED.RD. DIST.NO.	STATE	FED.AID PROJ.NO.	SHEET NO.	TOTAL SHEETS
				6	ARK.			
				JOB NO.		BB0414	65	886
				(2)	SPECIAL DETAILS			

NOTE:
ALL STATIONING REFERENCED TO C-D. RD. ALIGNMENT

* 15'-0" SIGN STRUCTURE
** BARRIER WALL SIDE TYPE SPECIAL (x2)

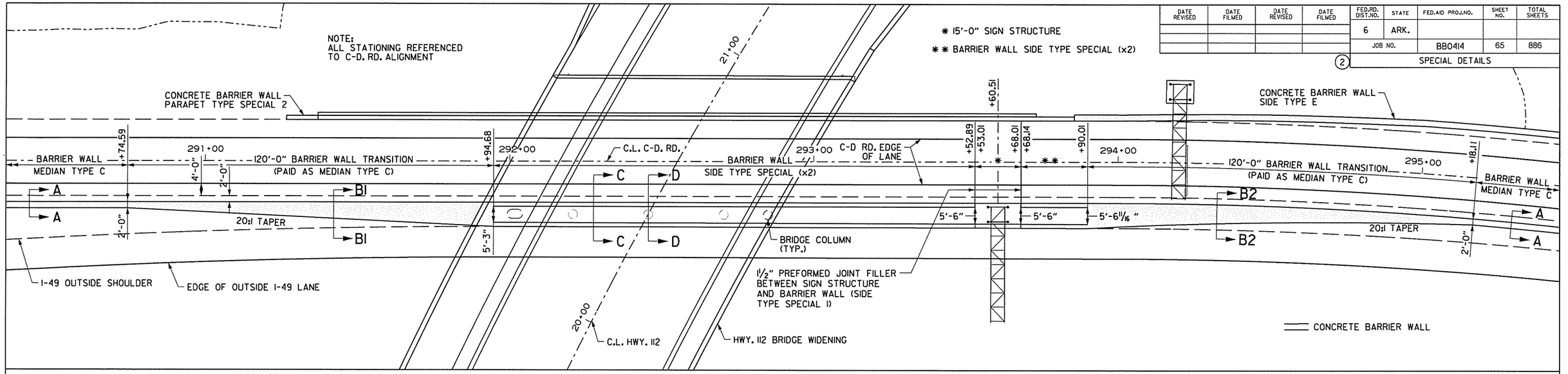

I-49 & C-D RD. MEDIAN BARRIER WALL TRANSITION AT HWY. 112 BRIDGE

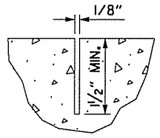

CONTRACTION JOINT DETAIL

① 12" MINIMUM EMBEDMENT BELOW CONSTRUCTION JOINT

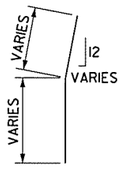

*6 T1 BAR

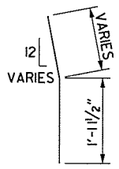

*4 T2 BAR

* 1'-9" MIN. LAP SPLICE AS REQ'D.

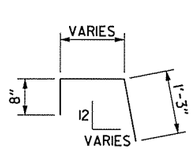

*4 T3 BAR

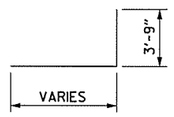

*6 L1 BAR

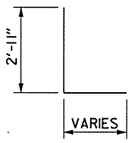

*4 L2 BAR

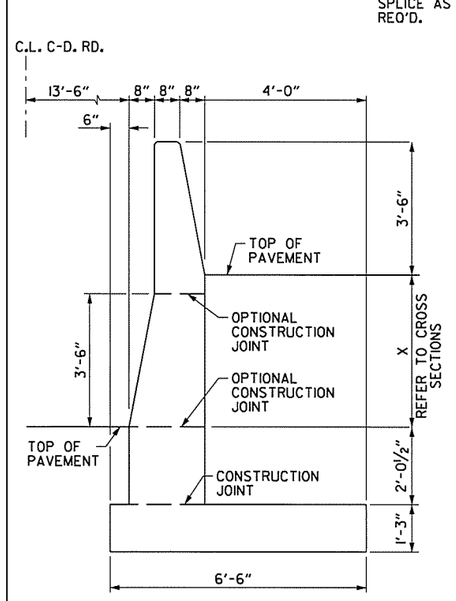

SECTION A-A

CONCRETE BARRIER WALL
(MEDIAN TYPE C)
X = 0'-0" TO 4'-0" MAX.

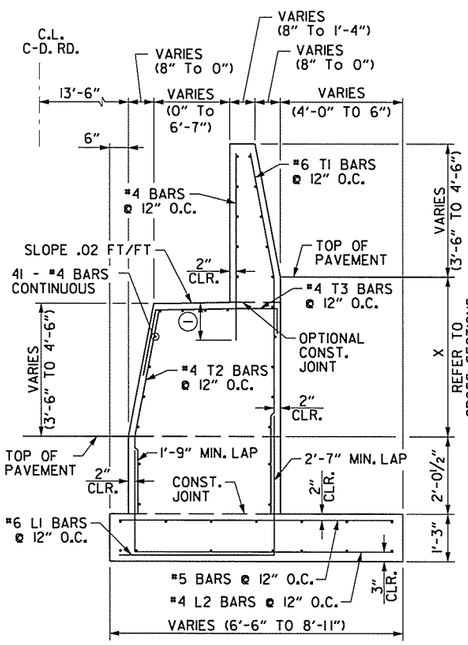

SECTION B1-B1

NOTE:
SECTION B2-B2 IS SIMILAR TO SECTION B1-B1. MODIFY SECTION B1-B1 AS REQUIRED TO ACCOMMODATE ADDITIONAL WIDTH AT STA. 293+90.01.

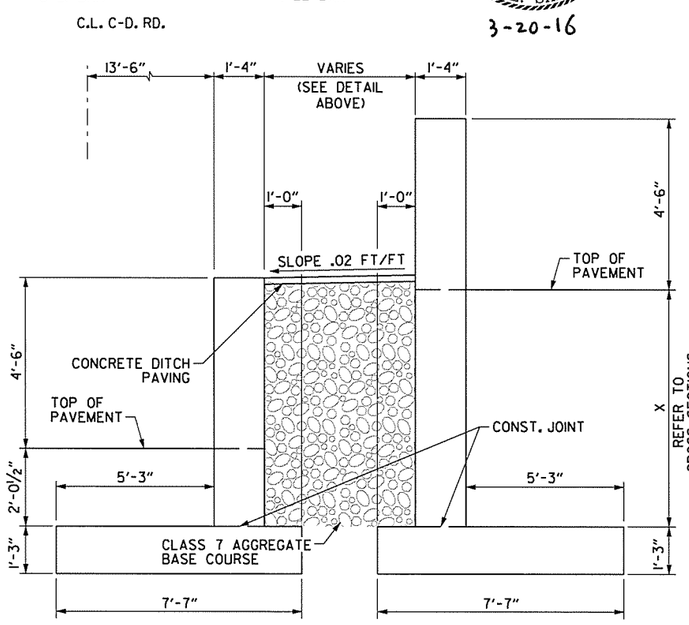

SECTION C-C

REFER TO SPECIAL DETAIL
CONCRETE BARRIER WALL
(SIDE TYPE SPECIAL)
FOR REINFORCEMENT DETAILS

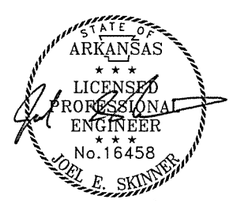

3-20-16

GENERAL NOTES FOR CONCRETE BARRIER WALL

1. ALL BARRIER WALLS SHALL BE CONSTRUCTED IN ACCORDANCE WITH SECTION 631 OF THE STANDARD SPECIFICATIONS, 2014 EDITION.
2. CONTRACTION JOINTS REQUIRED @ 30'-0" MAXIMUM SPACING.
3. ALL CONTRACTION JOINTS TO BE FORMED IN FRESH CONCRETE ON TOP AND IN SIDES OF BARRIER WALL.
4. ALL EXPOSED EDGES OF CONCRETE BARRIER WALL SHALL HAVE A 3/4" CHAMFER.
5. THE DESIGN OF BARRIER WALL IS BASED ON A MINIMUM FOUNDATION BEARING CAPACITY OF ONE TON PER SQUARE FOOT. UNSTABLE FOUNDATION MATERIAL SHALL BE REMOVED AND REPLACED TO PROVIDE A FIRM FOUNDATION AS DIRECTED BY THE ENGINEER.
6. SPACING BETWEEN EXPANSION JOINTS SHALL NOT EXCEED 120 FT. EXPANSION JOINTS SHALL BE FORMED USING 1" PREFORMED JOINT FILLER. CONTINUOUS REINFORCEMENT SHALL BE CUT 2" CLEAR OF EXPANSION JOINTS.
7. MAINTAIN 3" CLEARANCE ON ALL FOOTING REINFORCEMENT EXCEPT AS NOTED AND 2" CLEARANCE ON ALL OTHER REINFORCEMENT.

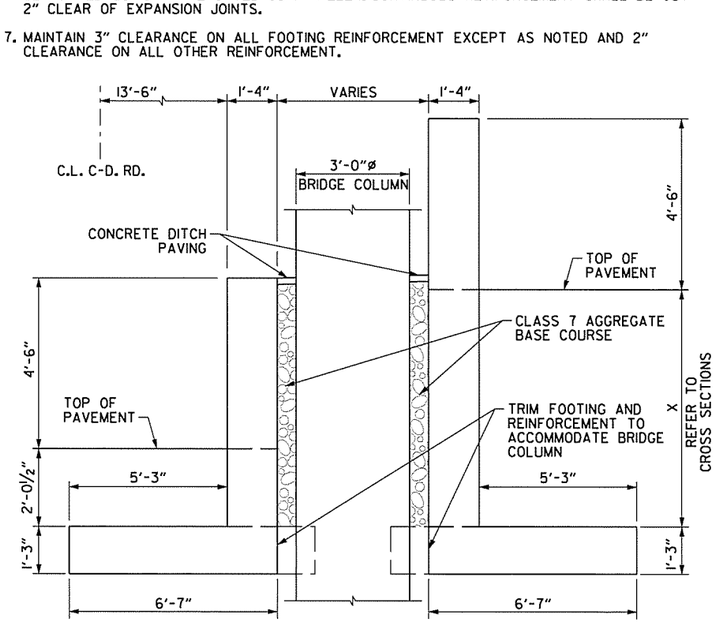

SECTION D-D

REFER TO SPECIAL DETAIL
CONCRETE BARRIER WALL
(SIDE TYPE SPECIAL)
FOR REINFORCEMENT DETAILS

SPECIAL DETAILS

AEWercl ck 3/20/2016 11:51:43 AM
WORKSPACE: AHTD
L:\20IN\0I7\07 - I-540 Widening & Interchange Improvement\Drawings\rBB04I4_SD_I0.dgn
REVISED DATE:

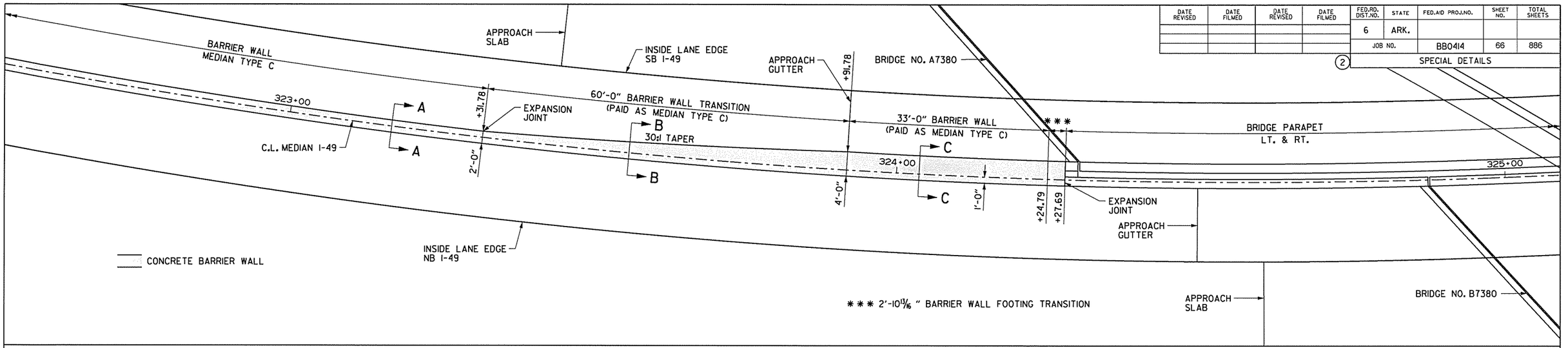

DATE REVISED	DATE FILMED	DATE REVISED	DATE FILMED	FED.RD. DIST.NO.	STATE	FED.AID PROJ.NO.	SHEET NO.	TOTAL SHEETS
				6	ARK.			
				JOB NO.		BB0414	66	886

(2) SPECIAL DETAILS

I-49 MEDIAN BARRIER WALL TRANSITION AT BRIDGE NOS. A7380 & B7380 (SOUTH END)

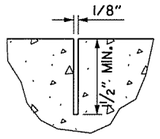

CONTRACTION JOINT DETAIL

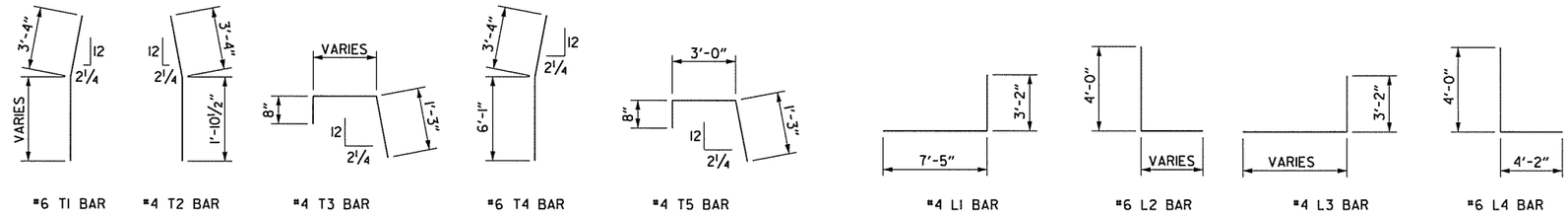

* 1'-9" MIN. LAP SPLICE AS REQ'D.

** TRIM FOOTING WIDTH AS NEEDED WHERE CONFLICT WITH BRIDGE END BENT OCCURS

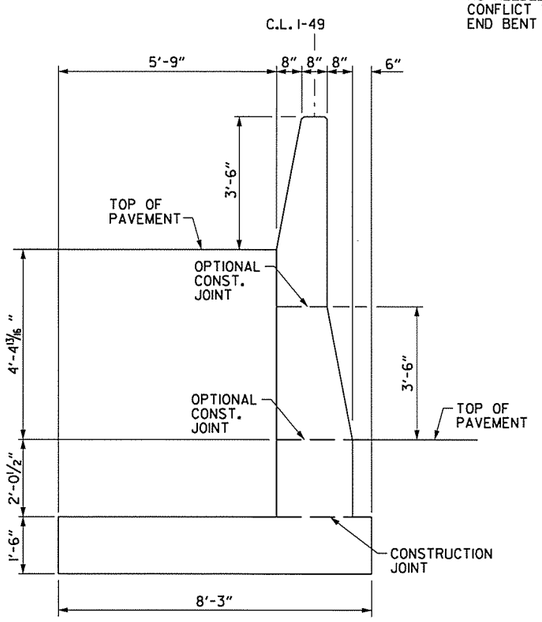

SECTION A-A

REFER TO SPECIAL DETAIL CONCRETE BARRIER WALL (MEDIAN TYPE C) FOR REINFORCEMENT DETAILS

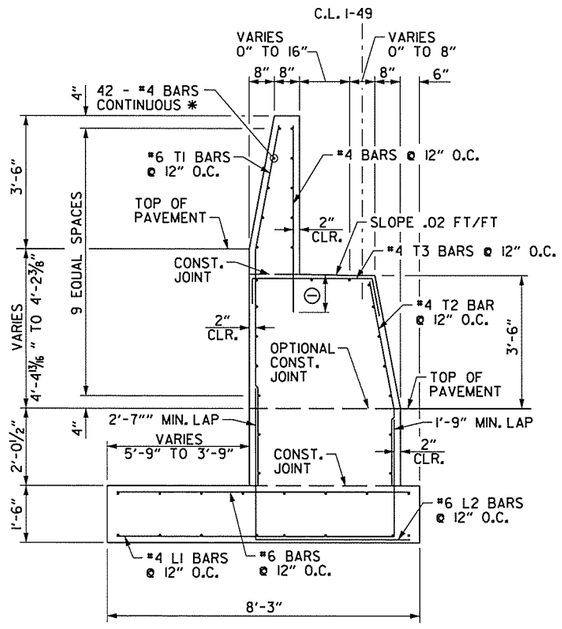

SECTION B-B

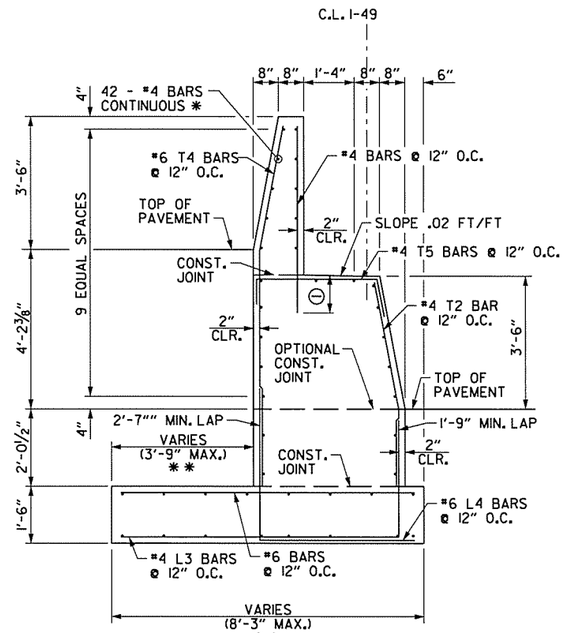

SECTION C-C

(1) 12" MINIMUM EMBEDMENT BELOW CONST. JOINT

GENERAL NOTES FOR CONCRETE BARRIER WALL

1. ALL BARRIER WALLS SHALL BE CONSTRUCTED IN ACCORDANCE WITH SECTION 631 OF THE STANDARD SPECIFICATIONS, 2014 EDITION.
2. CONTRACTION JOINTS REQUIRED @ 30'-0" MAXIMUM SPACING.
3. ALL CONTRACTION JOINTS TO BE FORMED IN FRESH CONCRETE ON TOP AND IN SIDES OF BARRIER WALL.
4. ALL EXPOSED EDGES OF CONCRETE BARRIER WALL SHALL HAVE A 3/4" CHAMFER.
5. THE DESIGN OF BARRIER WALL IS BASED ON A MINIMUM FOUNDATION BEARING CAPACITY OF ONE TON PER SQUARE FOOT. UNSTABLE FOUNDATION MATERIAL SHALL BE REMOVED AND REPLACED TO PROVIDE A FIRM FOUNDATION AS DIRECTED BY THE ENGINEER.
6. MAINTAIN 3" CLEARANCE ON ALL FOOTING REINFORCEMENT EXCEPT AS NOTED AND 2" CLEARANCE ON ALL OTHER REINFORCEMENT.
7. EXPANSION JOINTS SHALL BE FORMED USING 1" PREFORMED JOINT FILLER. CONTINUOUS REINFORCEMENT SHALL BE CUT 2" CLEAR OF EXPANSION JOINTS.
8. TRANSITION SECTION AND MODIFIED BARRIER WALL SHALL BE PAID FOR AS MEDIAN TYPE C.

AEWtierclok 3/20/2016 11:51:43 AM
WORKSPACE: AHTD
L:\20IN\101707 - I-540 Widening & Interchange Improvement\Drawings\rBB0414_SD_IL.dgn
REVISED DATE:

DATE REVISED	DATE FILMED	DATE REVISED	DATE FILMED	FED.RD. DIST.NO.	STATE	FED.AID PROJ.NO.	SHEET NO.	TOTAL SHEETS
				6	ARK.			
				JOB NO.		BB0414	67	886
				(2)	SPECIAL DETAILS			

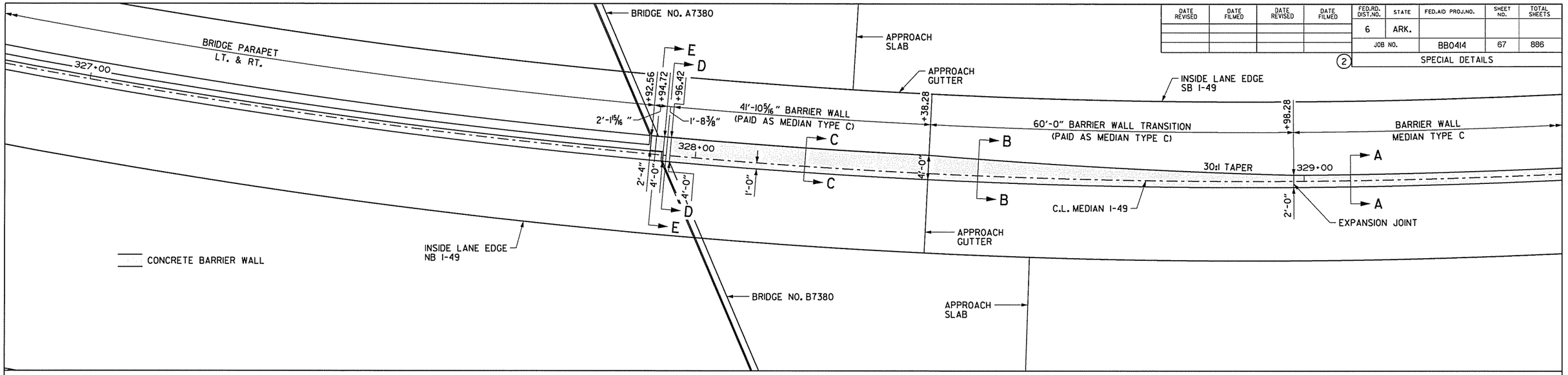

I-49 MEDIAN BARRIER WALL TRANSITION AT BRIDGE NOS. A7380 & B7380 (NORTH END)

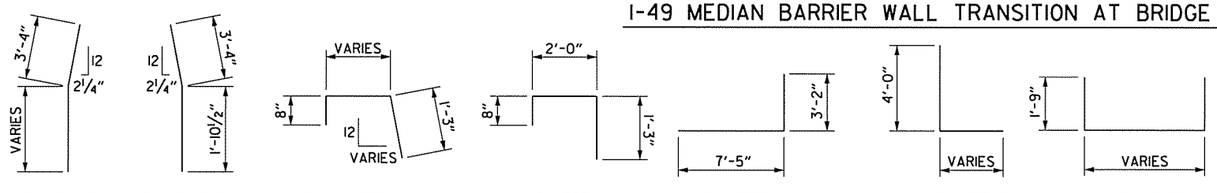

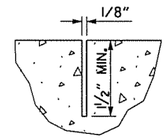

CONTRACTION JOINT DETAIL

GENERAL NOTES FOR CONCRETE BARRIER WALL

1. ALL BARRIER WALLS SHALL BE CONSTRUCTED IN ACCORDANCE WITH SECTION 631 OF THE STANDARD SPECIFICATIONS, 2014 EDITION.
2. CONTRACTION JOINTS REQUIRED @ 30'-0" MAXIMUM SPACING.
3. ALL CONTRACTION JOINTS TO BE FORMED IN FRESH CONCRETE ON TOP AND IN SIDES OF BARRIER WALL.
4. ALL EXPOSED EDGES OF CONCRETE BARRIER WALL SHALL HAVE A 3/4" CHAMFER.
5. THE DESIGN OF BARRIER WALL IS BASED ON A MINIMUM FOUNDATION BEARING CAPACITY OF ONE TON PER SQUARE FOOT. UNSTABLE FOUNDATION MATERIAL SHALL BE REMOVED AND REPLACED TO PROVIDE A FIRM FOUNDATION AS DIRECTED BY THE ENGINEER.
6. MAINTAIN 3" CLEARANCE ON ALL FOOTING REINFORCEMENT EXCEPT AS NOTED AND 2" CLEARANCE ON ALL OTHER REINFORCEMENT.
7. TRANSITION SECTION AND MODIFIED BARRIER WALL SHALL BE PAID FOR AS MEDIAN TYPE C.

STATE OF ARKANSAS ★★★ LICENSED PROFESSIONAL ENGINEER ★★★ No.16458 JOEL E. SKINNER

3-20-16

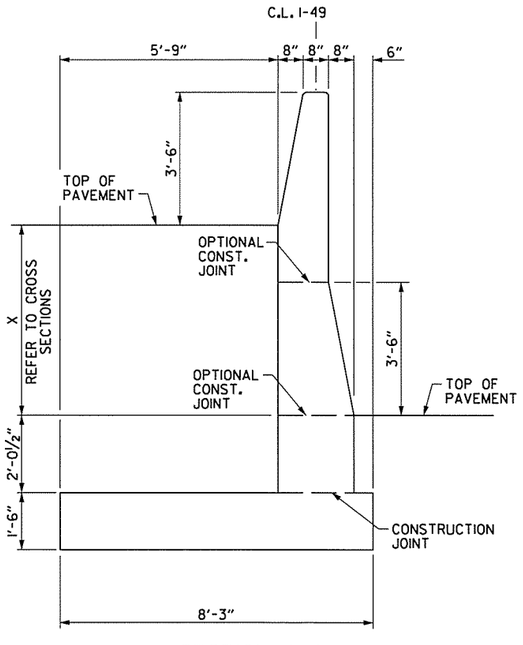

SECTION A-A

REFER TO SPECIAL DETAIL CONCRETE BARRIER WALL (MEDIAN TYPE C) FOR REINFORCEMENT DETAILS

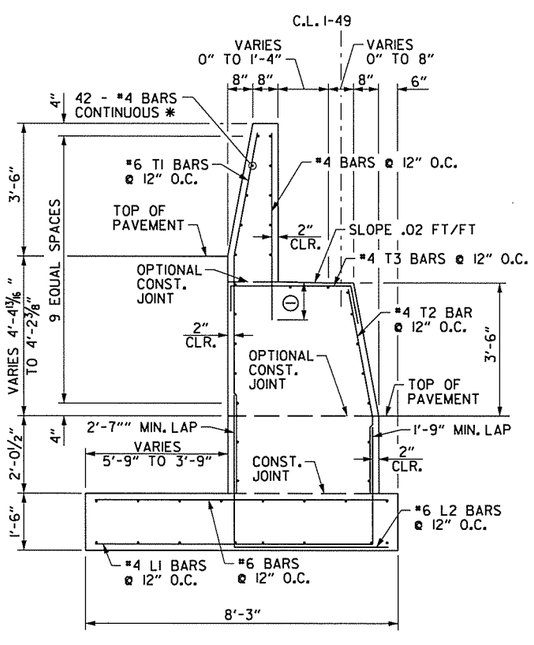

SECTION B-B

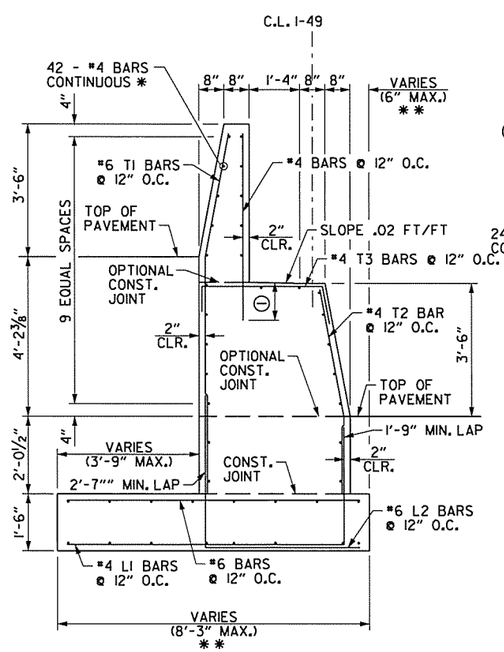

SECTION C-C

* 1'-9" MIN. LAP SPLICE AS REQ'D.

** TRIM FOOTING TO MISS END BENT BACKWALL

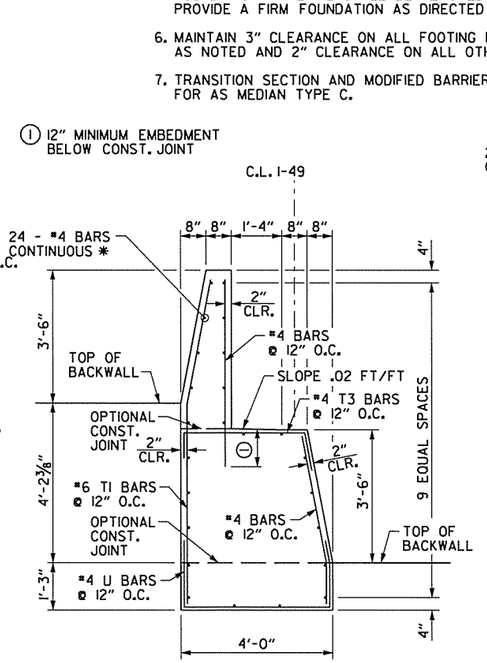

SECTION D-D

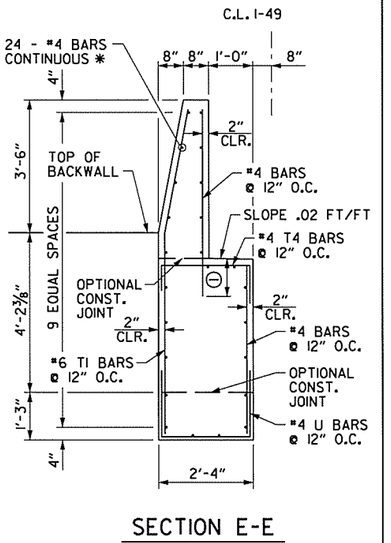

SECTION E-E

AEWerclok 3/20/2016 11:51:43 AM
WORKSPACE: AHTD
L:\20\10117.07 - I-540 Widening & Interchange Improvement\Drawings\rBB0414_SD_12.dgn
REVISED DATE:

DATE REVISED	DATE FILMED	DATE REVISED	DATE FILMED	FED.RD. DIST.NO.	STATE	FED.AID PROJ.NO.	SHEET NO.	TOTAL SHEETS
				6	ARK.			
				JOB NO.		BB0414	68	886
				(2)	SPECIAL DETAILS			

NOTE:
ALL STATIONING REFERENCED TO HWY. 112 TO NB I-49 RAMP ALIGNMENT.

CONCRETE BARRIER WALL

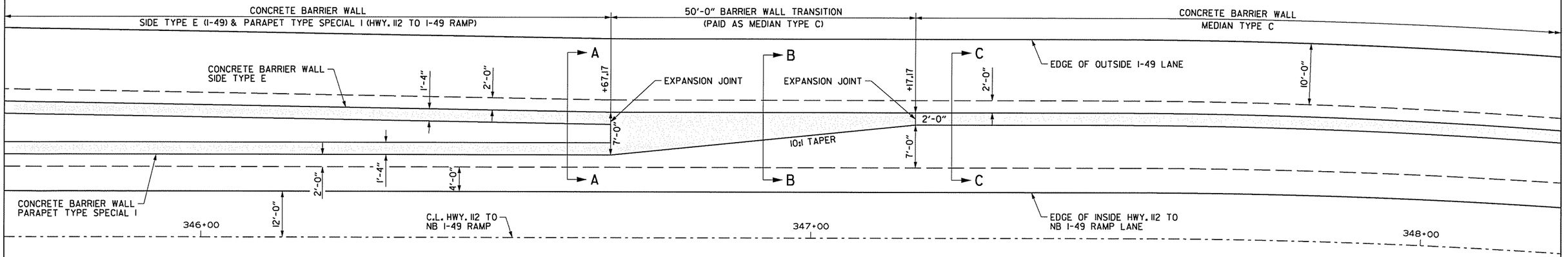

I-49 AND HWY. 112 TO NB I-49 RAMP
SIDE TYPE E & PARAPET TYPE SPECIAL I TO MEDIAN BARRIER TYPE C TRANSITION

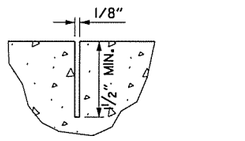

CONTRACTION JOINT DETAIL

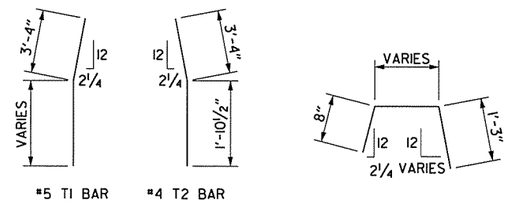

① 12" MINIMUM EMBEDMENT BELOW CONST. JOINT

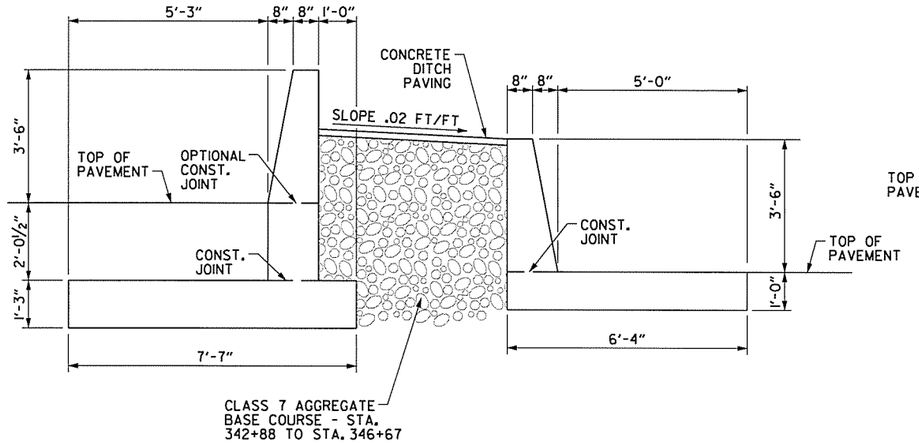

SECTION A-A

REFER TO SPECIAL DETAILS
CONCRETE BARRIER WALL
(SIDE TYPE E & PARAPET TYPE SPECIAL I)
FOR REINFORCEMENT DETAILS

* VARIES, SEE ROADWAY SECTIONS

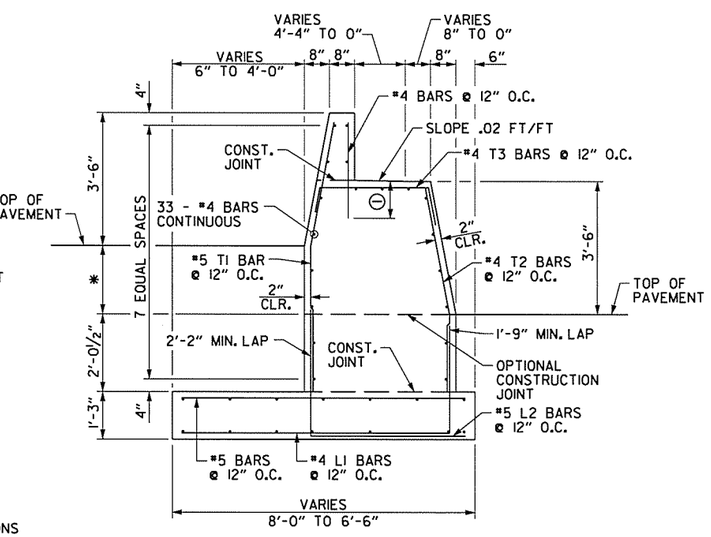

SECTION B-B

GENERAL NOTES FOR CONCRETE BARRIER WALL

1. ALL BARRIER WALLS SHALL BE CONSTRUCTED IN ACCORDANCE WITH SECTION 631 OF THE STANDARD SPECIFICATIONS, 2014 EDITION.
2. ALL EXPOSED EDGES OF CONCRETE BARRIER WALL SHALL HAVE A 3/4" CHAMFER.
3. THE DESIGN OF BARRIER WALL IS BASED ON A MINIMUM FOUNDATION BEARING CAPACITY OF ONE TON PER SQUARE FOOT. UNSTABLE FOUNDATION MATERIAL SHALL BE REMOVED AND REPLACED TO PROVIDE A FIRM FOUNDATION AS DIRECTED BY THE ENGINEER.
4. MAINTAIN 3" CLEARANCE ON ALL FOOTING REINFORCEMENT EXCEPT AS NOTED AND 2" CLEARANCE ON ALL OTHER REINFORCEMENT.
5. EXPANSION JOINS SHALL BE FORMED USING 1" PREFORMED JOINT FILLER. CONTINUOUS REINFORCEMENT SHALL BE CUT 2" CLEAR OF EXPANSION JOINTS.
6. TRANSITION SECTION SHALL BE PAID FOR AS MEDIAN TYPE C.
7. CONTRACTION JOINTS REQUIRED @ 30'-0" MAXIMUM SPACING.
8. ALL CONTRACTION JOINTS TO BE FORMED IN FRESH CONCRETE ON TOP AND IN SIDES OF BARRIER WALL.

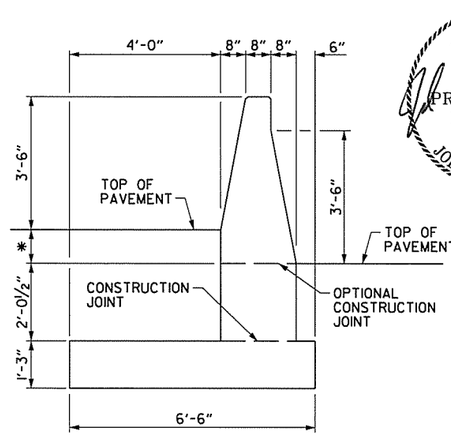

SECTION C-C

REFER TO SPECIAL DETAIL
CONCRETE BARRIER WALL
(MEDIAN TYPE C)
FOR REINFORCEMENT DETAILS

SPECIAL DETAILS

AEWier-clok 3/20/2016 11:54:44 AM
WORKSPACE: AHTD
L:\201\101707 - I-540 Widening & Interchange Improvement\Drawings\rBB0414_SD13.dgn
REVISED DATE:

DATE REVISED	DATE FILMED	DATE REVISED	DATE FILMED	FED.RD. DIST.NO.	STATE	FED.AID PROJ.NO.	SHEET NO.	TOTAL SHEETS
				6	ARK.			
				JOB NO.		BB0414	69	886

(2) SPECIAL DETAILS

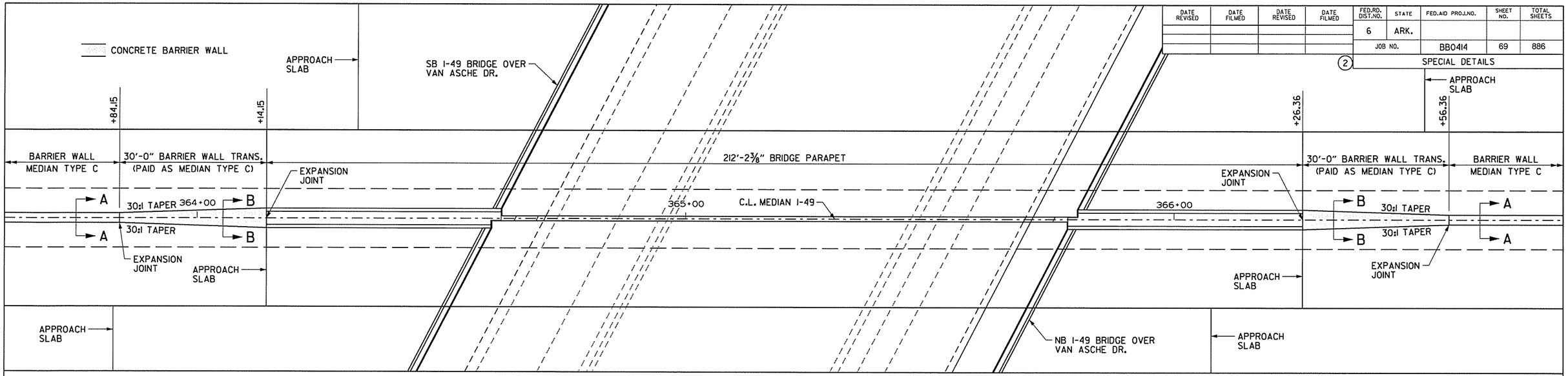

I-49 MEDIAN BARRIER WALL TRANSITION AT VAN ASCHE DR. BRIDGE

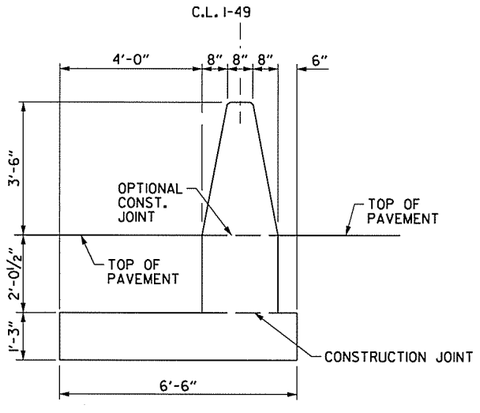

SECTION A-A

REFER TO SPECIAL DETAIL CONCRETE BARRIER WALL (MEDIAN TYPE C) FOR REINFORCEMENT DETAILS

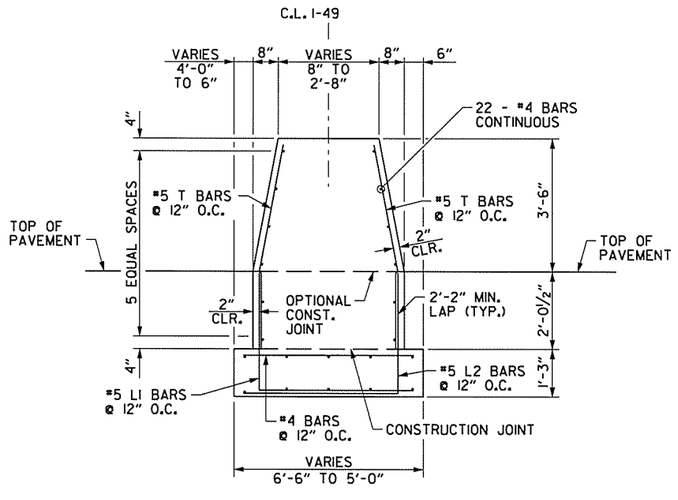

SECTION B-B

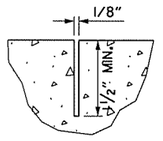

CONTRACTION JOINT DETAIL

GENERAL NOTES FOR CONCRETE BARRIER WALL

1. ALL BARRIER WALLS SHALL BE CONSTRUCTED IN ACCORDANCE WITH SECTION 631 OF THE STANDARD SPECIFICATIONS, 2014 EDITION.
2. ALL EXPOSED EDGES OF CONCRETE BARRIER WALL SHALL HAVE A ¾" CHAMFER.
3. THE DESIGN OF BARRIER WALL (MEDIAN TYPE C) IS BASED ON A MINIMUM FOUNDATION BEARING CAPACITY OF ONE TON PER SQUARE FOOT. UNSTABLE FOUNDATION MATERIAL SHALL BE REMOVED AND REPLACED TO PROVIDE A FIRM FOUNDATION AS DIRECTED BY THE ENGINEER.
4. MAINTAIN 3" CLEARANCE ON ALL FOOTING REINFORCEMENT EXCEPT AS NOTED AND 2" CLEARANCE ON ALL OTHER REINFORCEMENT.
5. EXPANSION JOINTS SHALL BE FORMED USING 1" PREFORMED JOINT FILLER. CONTINUOUS REINFORCEMENT SHALL BE CUT 2" CLEAR OF EXPANSION JOINTS.
6. TRANSITION SECTION SHALL BE PAID FOR AS MEDIAN TYPE C.

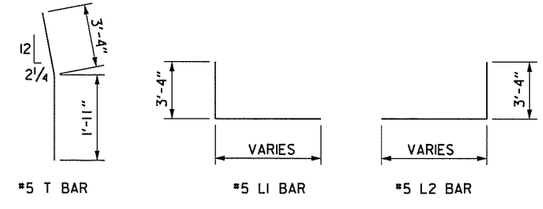

STATE OF ARKANSAS
LICENSED PROFESSIONAL ENGINEER
No.16458
JOEL E. SKINNER
3-20-16

AEWierzbicki 3/20/2016 11:51:44 AM
WORKSPACE: AHTD
L:\2016\16017107 - I-540 Widening & Interchange Improvement\Drawings\r-BB0414_SD_14.dgn
REVISED DATE:

DATE REVISED	DATE FILMED	DATE REVISED	DATE FILMED	FED.RD. DIST.NO.	STATE	FED.AID PROJ.NO.	SHEET NO.	TOTAL SHEETS
				6	ARK.			
				JOB NO.		BB0414	70	886
				(2)		SPECIAL DETAILS		

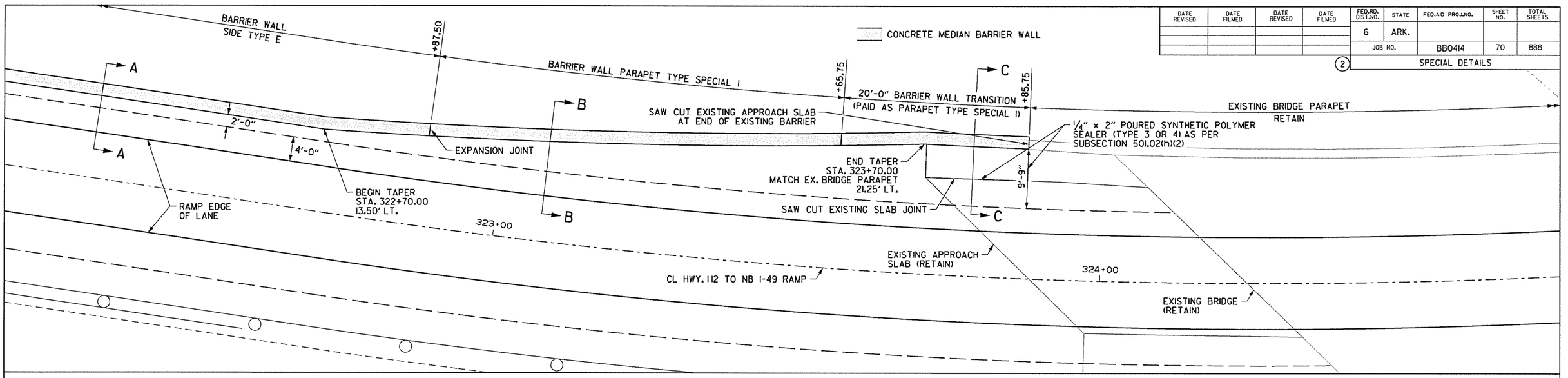

HWY. 112 TO NB I-49 RAMP SIDE TYPE BARRIER WALL TRANSITION TO EXISTING BRIDGE

DRAIN OPENINGS SHALL, AT A MINIMUM, BE PLACED AT THE SAG LOCATION, ONE 20' SPACING IMMEDIATELY ADJACENT TO THE SAG LOCATION, AND NO MORE THAN 50' APART THEREAFTER.

STATE OF ARKANSAS
LICENSED PROFESSIONAL ENGINEER
No.16458
JOEL E. SKINNER
3-20-16

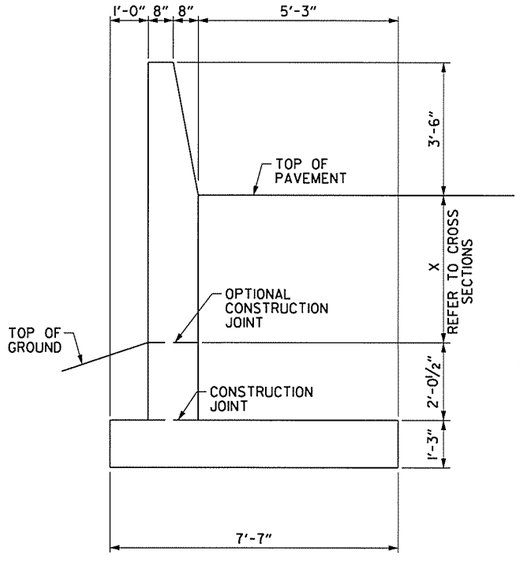

SECTION A-A

REFER TO SPECIAL DETAIL CONCRETE BARRIER WALL (SIDE TYPE E) FOR REINFORCEMENT DETAILS

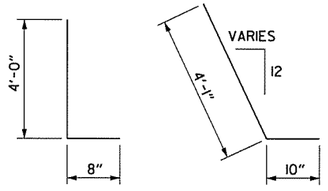

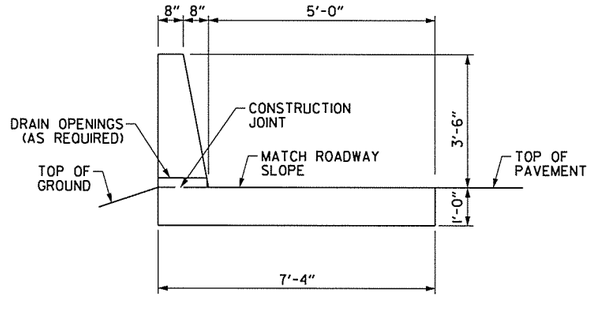

SECTION B-B

REFER TO SPECIAL DETAIL CONCRETE BARRIER WALL (PARAPET TYPE SPECIAL I) FOR REINFORCEMENT DETAILS

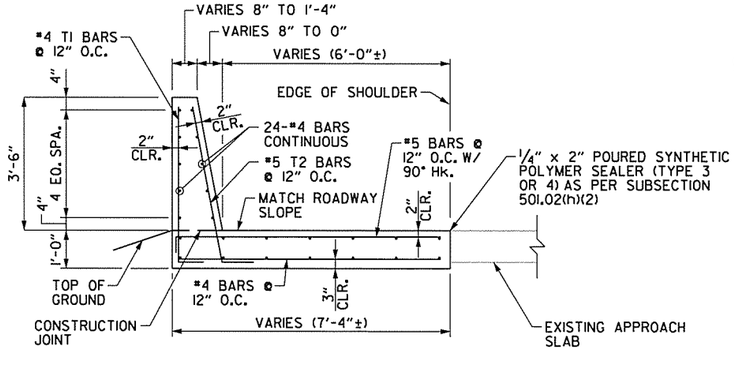

SECTION C-C

REFER TO SPECIAL DETAIL CONCRETE BARRIER WALL (PARAPET TYPE SPECIAL I) FOR REINFORCEMENT DETAILS

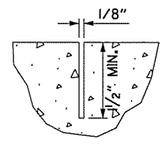

CONTRACTION JOINT DETAIL

GENERAL NOTES FOR CONCRETE BARRIER WALL

1. ALL BARRIER WALLS SHALL BE CONSTRUCTED IN ACCORDANCE WITH SECTION 631 OF THE STANDARD SPECIFICATIONS, 2014 EDITION.
2. CONTRACTION JOINTS REQUIRED @ 30'-0" MAXIMUM SPACING
3. ALL CONTRACTION JOINTS TO BE FORMED IN FRESH CONCRETE ON TOP AND IN SIDES OF BARRIER WALL.
4. ALL EXPOSED EDGES OF CONCRETE BARRIER WALL SHALL HAVE A 3/4" CHAMFER.
5. THE DESIGN OF BARRIER WALL IS BASED ON A MINIMUM FOUNDATION BEARING CAPACITY OF ONE TON PER SQUARE FOOT. UNSTABLE FOUNDATION MATERIAL SHALL BE REMOVED AND REPLACED TO PROVIDE A FIRM FOUNDATION AS DIRECTED BY THE ENGINEER.
6. EXPANSION JOINTS SHALL BE FORMED USING 1" PREFORMED JOINT FILLER. CONTINUOUS REINFORCEMENT SHALL BE CUT 2" CLEAR OF EXPANSION JOINTS.
7. MAINTAIN 3" CLEARANCE ON ALL FOOTING REINFORCEMENT EXCEPT AS NOTED AND 2" CLEARANCE ON ALL OTHER REINFORCEMENT.

AEWerclok 3/20/2016 11:51:44 AM
WORKSPACE: AHTD
L:\20II\10I7707 - I-540 Widening & Interchange Improvement\Drawings\BB0414_SD_I6.dgn
REVISED DATE:

DATE REVISED	DATE FILMED	DATE REVISED	DATE FILMED	FED.RD. DIST.NO.	STATE	FED.AID PROJ.NO.	SHEET NO.	TOTAL SHEETS
				6	ARK.			
				JOB NO.		BB0414	71	886

SPECIAL DETAILS

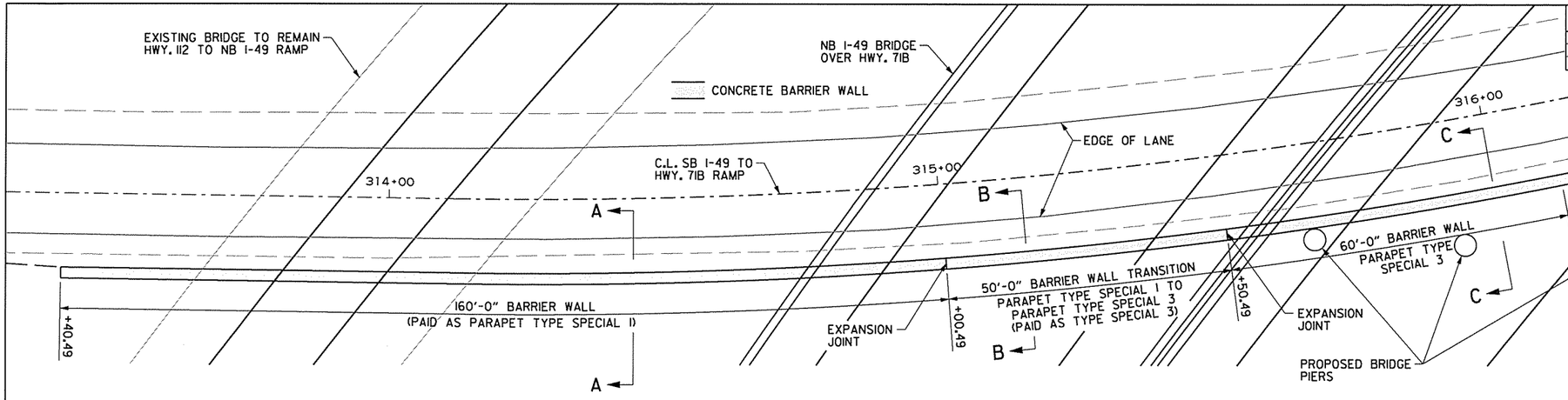

BRIDGE PIER PROTECTION - SB I-49 TO HWY. 71B AT I-49 BRIDGE

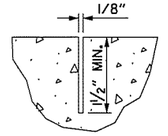

CONTRACTION JOINT DETAIL

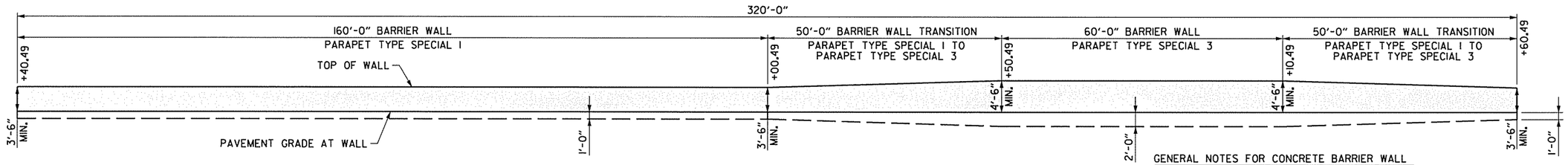

BRIDGE PIER PROTECTION - BARRIER WALL PROFILE VIEW

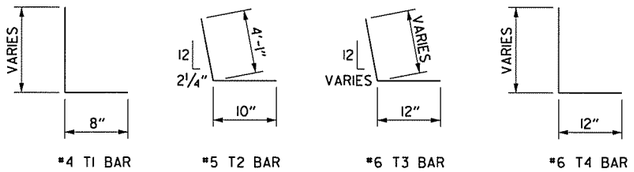

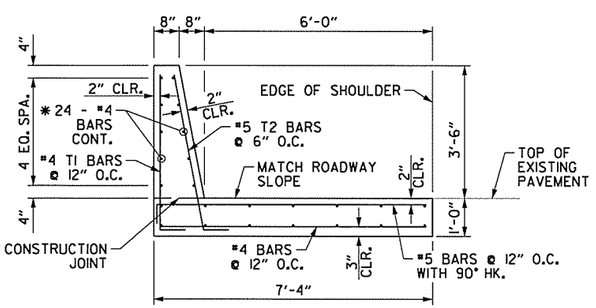

SECTION A-A

* 1'-9" MIN. LAP SPLICE AS REQ'D.

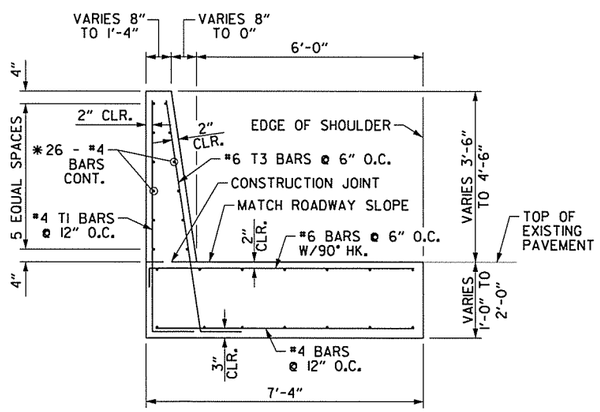

SECTION B-B

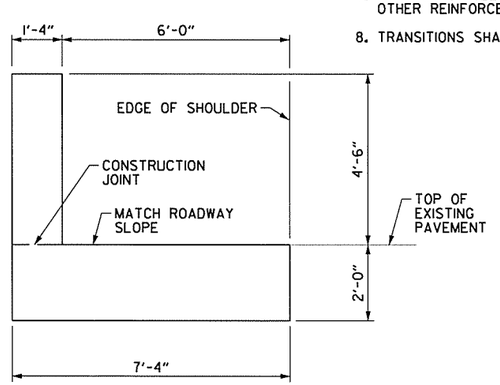

REFER TO SPECIAL DETAIL CONCRETE BARRIER WALL (PARAPET TYPE SPECIAL 3) FOR REINFORCEMENT DETAILS

SECTION C-C

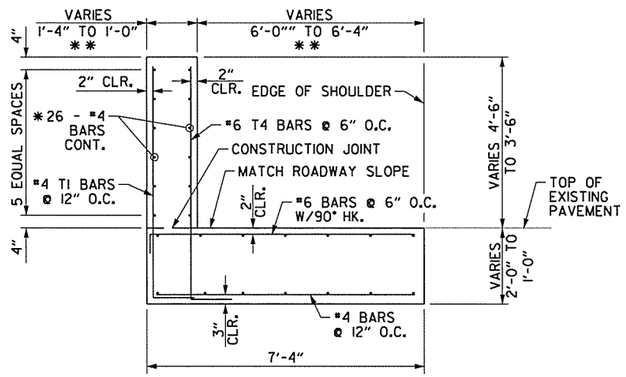

** END HORIZONTAL TRANSITION AT STA. 316+55.49

SECTION D-D

SEE DWG. NO. GR-10 FOR GUARDRAIL CONNECTION

GENERAL NOTES FOR CONCRETE BARRIER WALL

1. ALL BARRIER WALLS SHALL BE CONSTRUCTED IN ACCORDANCE WITH SECTION 631 OF THE STANDARD SPECIFICATIONS, 2014 EDITION.
2. CONTRACTION JOINTS REQUIRED @ 30'-0" MAXIMUM SPACING FOR BARRIER WALL.
3. ALL CONTRACTION JOINTS TO BE FORMED IN FRESH CONCRETE ON TOP AND IN SIDES OF BARRIER WALL.
4. ALL EXPOSED EDGES OF CONCRETE BARRIER WALL SHALL HAVE A 3/4" CHAMFER.
5. THE DESIGN OF BARRIER WALL IS BASED ON A MINIMUM FOUNDATION BEARING CAPACITY OF ONE TON PER SQUARE FOOT. UNSTABLE FOUNDATION MATERIAL SHALL BE REMOVED AND REPLACED TO PROVIDE A FIRM FOUNDATION AS DIRECTED BY THE ENGINEER.
6. SPACING BETWEEN EXPANSION JOINTS SHALL NOT EXCEED 120 FT. EXPANSION JOINTS SHALL BE FORMED USING 1" PREFORMED JOINT FILLER. CONTINUOUS REINFORCEMENT SHALL BE CUT 2" CLEAR OF EXPANSION JOINTS.
7. MAINTAIN 3" CLEARANCE ON ALL FOOTING REINFORCEMENT EXCEPT AS NOTED AND 2" CLEARANCE ON ALL OTHER REINFORCEMENT.
8. TRANSITIONS SHALL BE PAID FOR AS PARAPET TYPE SPECIAL 3.

STATE OF ARKANSAS
LICENSED PROFESSIONAL ENGINEER
No. 16458
JOEL E. SKINNER
3-20-16

SPECIAL DETAILS

AEWerclok 3/20/2016 11:51:45 AM
WORKSPACE: AHTD
L:\2016\160707 - I-540 Widening & Interchange Improvement\Drawings\rBB0414_SD_16.dgn
REVISED DATE:

DATE REVISED	DATE FILMED	DATE REVISED	DATE FILMED	FED.RO. DIST.NO.	STATE	FED.AID PROJ.NO.	SHEET NO.	TOTAL SHEETS
8-02-16				6	ARK.			
				JOB NO.		BB0414	72	886
				(2)	SPECIAL DETAILS			

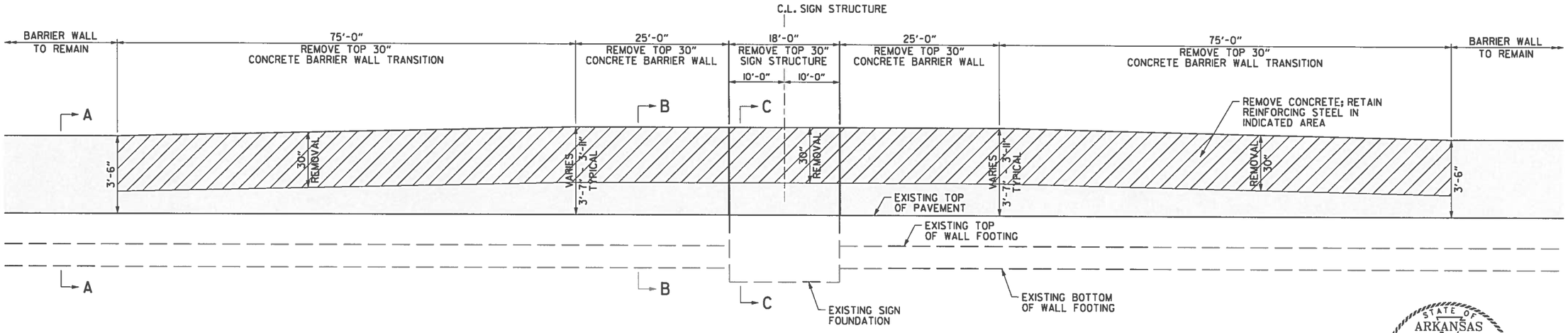

MEDIAN BARRIER WALL AND SIGN STRUCTURE MODIFICATION - REMOVAL

GENERAL NOTES FOR CONCRETE BARRIER WALL

1. ALL BARRIER WALLS SHALL BE CONSTRUCTED IN ACCORDANCE WITH SECTION 631 OF THE STANDARD SPECIFICATIONS, 2014 EDITION.
2. CONTRACTION JOINTS SPACING SHALL MATCH EXISTING (30'-0" MAX.)
3. ALL CONTRACTION JOINTS TO BE FORMED IN FRESH CONCRETE ON TOP AND IN SIDES OF BARRIER WALL.
4. ALL EXPOSED EDGES OF CONCRETE BARRIER WALL SHALL HAVE A 3/4" CHAMFER.
5. MAINTAIN 2" CLEARANCE ON ALL REINFORCEMENT.
6. EXPANSION JOINTS SHALL BE FORMED USING 1" PREFORMED JOINT FILLER. CONTINUOUS REINFORCEMENT SHALL BE CUT 2" CLEAR OF EXPANSION JOINTS.
7. TRANSITION SECTION SHALL BE PAID FOR AS MODIFICATION OF EXISTING BARRIER WALL.
8. SEE SPECIAL PROVISION "MODIFICATION OF EXISTING BARRIER WALL" FOR ADDITIONAL CONSTRUCTION DETAILS.

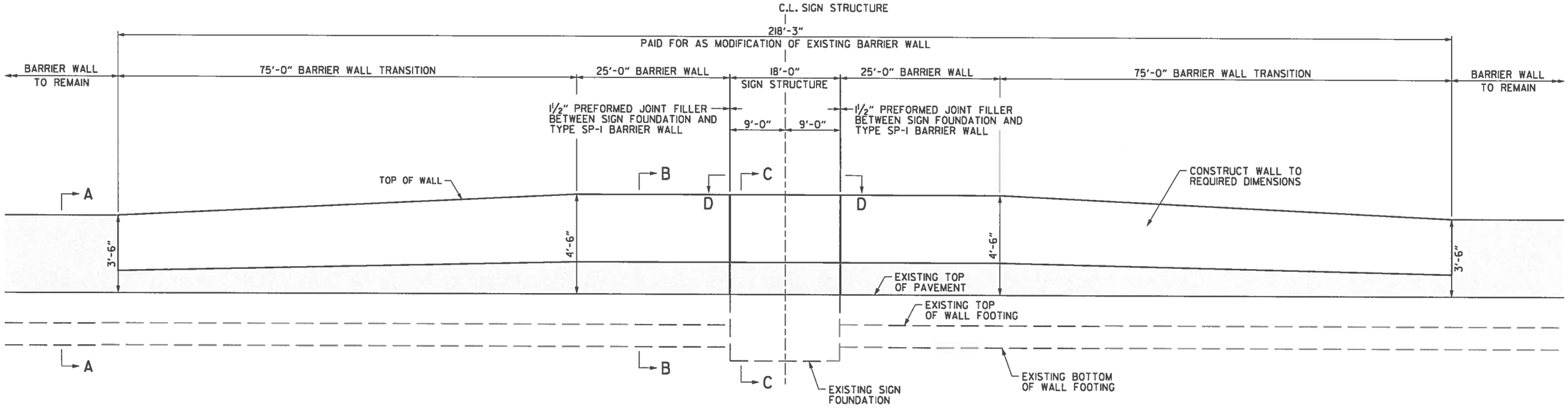

MEDIAN BARRIER WALL AND SIGN STRUCTURE MODIFICATION - REPLACEMENT

STATE OF ARKANSAS
LICENSED PROFESSIONAL ENGINEER
No.13653
ADAM E. WIERCIAK
8/2/16

AEWiarciak 8/2/2016 11:22:13 AM
WORKSPACE: AHTD
L:\ZDRAWDOT07 - I-540 Widening & Interchange Improvement\Drawings\rBB0414_SD_17.dgn
REVISED DATE:

DATE REVISED	DATE FILMED	DATE REVISED	DATE FILMED	FED.RD. DIST.NO.	STATE	FED.AID PROJ.NO.	SHEET NO.	TOTAL SHEETS
				6	ARK.			
				JOB NO.		BB0414	73	886
				(2)	SPECIAL DETAILS			

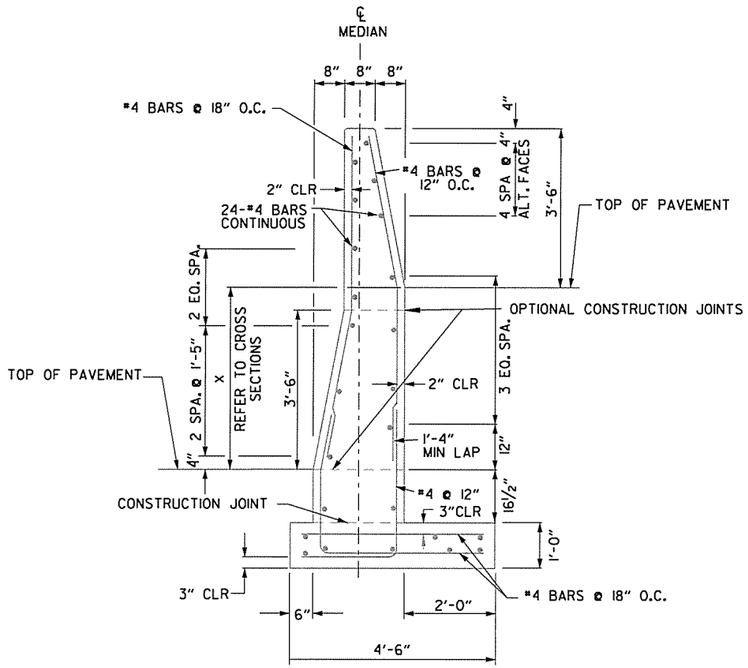

CONCRETE BARRIER WALL
(SECTION A-A)

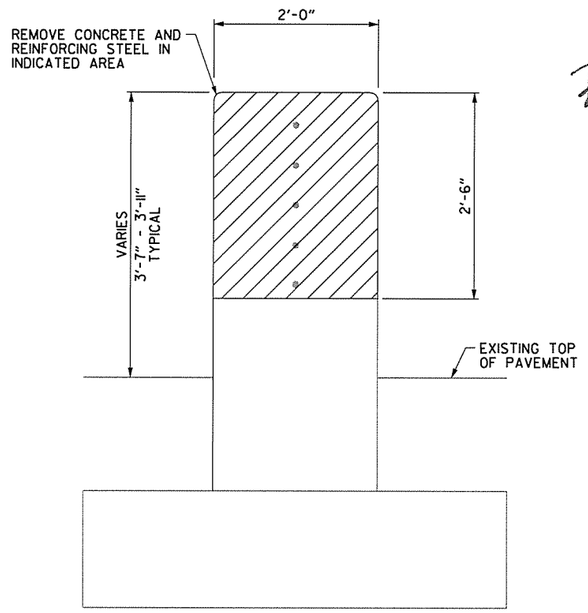

CONCRETE BARRIER WALL - REMOVAL
(SECTION B-B)

STATE OF ARKANSAS
LICENSED PROFESSIONAL ENGINEER
No.15902
PRESTON C. CAMPBELL
3-20-16

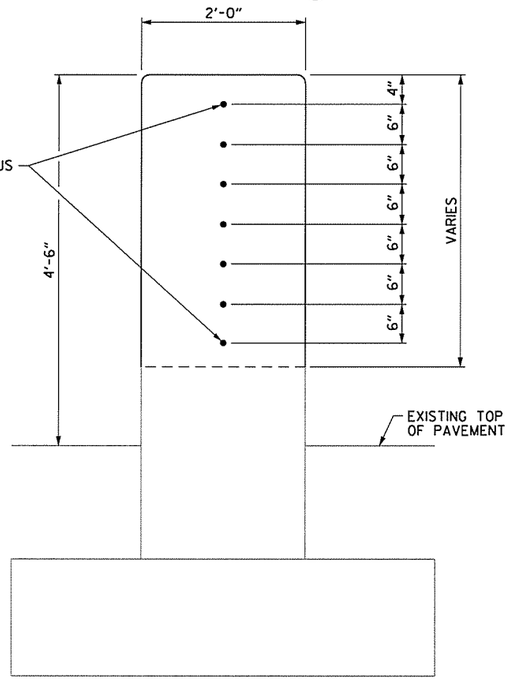

CONCRETE BARRIER WALL - REPLACEMENT
(SECTION B-B)

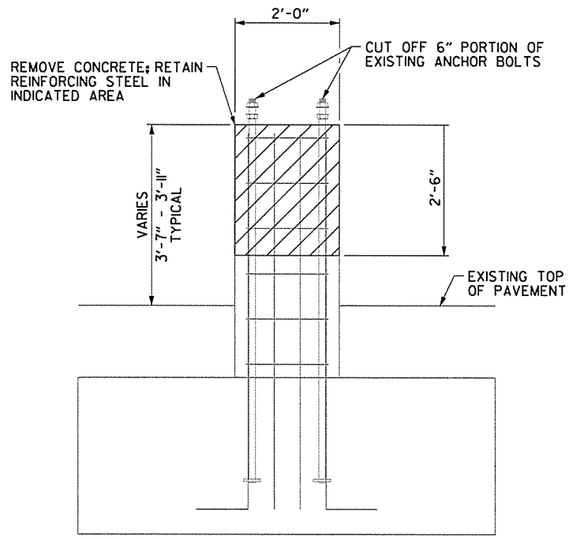

SIGN STRUCTURE FOUNDATION - REMOVAL
(SECTION C-C)

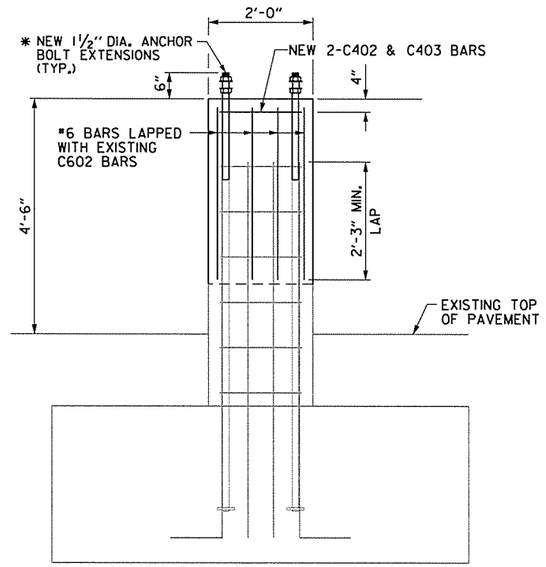

SIGN STRUCTURE FOUNDATION - REPLACEMENT
(SECTION C-C)

* NEW ANCHOR BOLT EXTENSIONS SHALL BE WELDED TO EXISTING ANCHOR BOLTS WITH A FULL PENETRATION BUTT WELD PERFORMED BY A CERIFIED WELDER TO PROVIDE 6" OF PROTRUSION FROM THE TOP OF THE MODIFIED MEDIAN BARRIER FOUNDATION.

MEDIAN FOUNDATION GENERAL NOTES:

FOUNDATION MATERIALS AND STRENGTHS:

CLASS S CONCRETE	F'C = 3,500 PSI
REINFORCING STEEL (GRADE 60, AASHTO M 31 OR M 322, TYPE A)	FY = 60,000 PSI

NEW ANCHOR BOLT EXTENSIONS SHALL COMPLY WITH AASHTO M 314, GRADE 55 INCLUDING SUPPLEMENTARY REQUIREMENT S1, AND GALVANIZED ACCORDING TO SUBSECTION 807.07. DAMAGED GALVANIZED COATINGS TO THE ANCHOR BOLTS SHALL BE REPAIRED AS SPECIFIED IN SUBSECTION 807.88 OF THE STANDARD SPECIFICATIONS.

SEE SPECIAL PROVISION "MODIFICATION OF EXISTING BARRIER WALL" FOR ADDITIONAL CONSTRUCTION DETAILS.

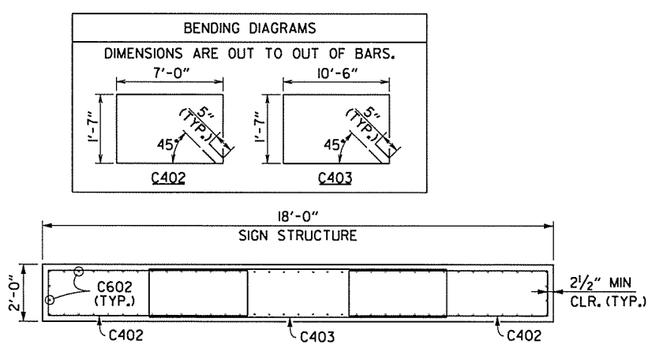

SECTION D-D

MEDIAN BARRIER WALL AND SIGN STRUCTURE MODIFICATION - SECTIONS

SPECIAL DETAILS

AEWlarclak 3/20/2016 11:51:45 AM
WORKSPACE: AHTD
L:\2011\101707 - I-540 Widening & Interchange Improvement\Drawings\rBB0414_SD_17.dgn
REVISED DATE:

DATE REVISED	DATE FILMED	DATE REVISED	DATE FILMED	FED.RD. DIST.NO.	STATE	FED.AID PROJ.NO.	SHEET NO.	TOTAL SHEETS
				6	ARK.			
				JOB NO.		BB0414	74	886
				(1)	SPECIAL DETAILS			

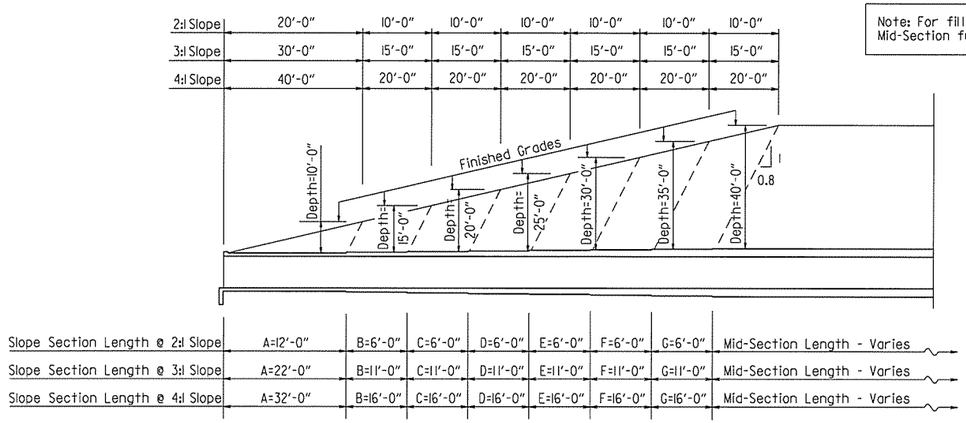

Note: For fill depths 10' and under, use Mid-Section full length of box culvert.

Slope Section Length @ 2:1 Slope	A=12'-0"	B=6'-0"	C=6'-0"	D=6'-0"	E=6'-0"	F=6'-0"	G=6'-0"	Mid-Section Length - Varies
Slope Section Length @ 3:1 Slope	A=22'-0"	B=11'-0"	C=11'-0"	D=11'-0"	E=11'-0"	F=11'-0"	G=11'-0"	Mid-Section Length - Varies
Slope Section Length @ 4:1 Slope	A=32'-0"	B=16'-0"	C=16'-0"	D=16'-0"	E=16'-0"	F=16'-0"	G=16'-0"	Mid-Section Length - Varies

LONGITUDINAL SECTION LENGTH SCHEDULE FOR VARYING FILL DEPTHS OVER 10'

Lengths for Non-Skewed Boxes

*LL = Skewed End Section Length - See "Skewed End Section Details"
Length LL varies with skew angle, overall box width and fill depth and may eliminate the need for some slope section lengths as shown.

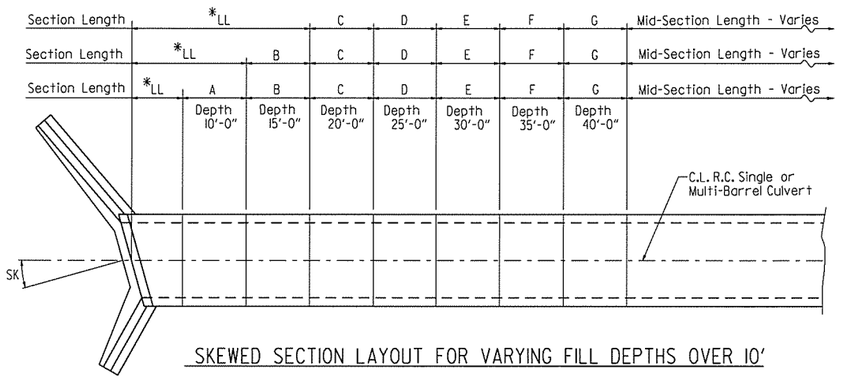

SKEWED SECTION LAYOUT FOR VARYING FILL DEPTHS OVER 10'

STATE OF ARKANSAS
LICENSED PROFESSIONAL ENGINEER
No.13653
ADAM E. WIERCIAK
3/20/16

GENERAL NOTES:

CONSTRUCTION SPECIFICATIONS: Arkansas State Highway and Transportation Department Standard Specifications for Highway Construction (2014 edition) with applicable Supplemental Specifications and Special Provisions. Section and Subsection refer to the Standard Construction Specifications unless otherwise noted in the Plans.

DESIGN SPECIFICATIONS: AASHTO LRFD Bridge Design Specifications, Fifth Edition (2010) with 2010 interim revisions.

LIVE LOADING: HL-93

All concrete shall be Class S with a minimum 28-day compressive strength of 3,500 psi and shall be poured in the dry. All exposed corners to have ¾" chamfers.

Reinforcing Steel shall be Grade 60 (yield strength = 60,000 psi) conforming to AASHTO M31 or M322, Type A, with mill test reports.

Reinforcing Steel Tolerances: The tolerances for reinforcing steel shall meet those listed in 'Manual of Standard Practice' published by Concrete Reinforcing Steel Institute (CRSI) except that the tolerance for truss bars such as Figure 3 on page 7-4 of the CRSI Manual shall be minus zero to plus 1/2 inch.

Excavation and backfilling shall be in accordance with the requirements of Section 801.

Membrane Waterproofing shall conform to the requirements of Section 815. Membrane Waterproofing shall be Type C and as directed by the Engineer applied to all construction joints in the top slab and the sidewalls of R.C. Box culverts and to the construction joint between wingwalls and R.C. Box culvert walls.

Weep Holes in box culvert walls shall have a maximum horizontal spacing of 10'-0" and shall be spaced to clear all reinforcing steel. The drain opening shall be 4" diameter and shall be placed 12" above the top of the bottom slab.

Weep Holes in wingwalls shall have a maximum horizontal spacing of 10'-0" and shall be spaced to clear all reinforcing steel. There shall be a minimum of two (2) weep holes in each wingwall. The drain opening shall be 4" diameter and shall be placed 12" above the top of the wingwall footing.

The barrel components of the culvert may be constructed using continuous pours. For longer culvert construction, the Contractor may use multiple pours with transverse construction joints spaced a minimum of 50 feet apart unless superseded by stage construction or site constraints as approved by the Engineer. Construction joints between footings and walls shall be made only where shown in the Plans. Joints shall be normal to the centerline of barrel and shall be keyed. Longitudinal reinforcing shall be continuous through joints unless shown otherwise. All longitudinal construction joints shall be submitted to the Engineer for approval.

Membrane Waterproofing, Weep Holes, Geotextile Filter Fabric, and Drainage Fill Material will not be paid for directly but shall be considered subsidiary to Class S Concrete.

When the top slab of the box culvert serves as finished roadway surface, curing and finishing shall be in accordance with subsections 802.17 and 802.20 for bridge roadway surface and a tine finish shall be applied in accordance with subsection 802.19 for Class 5 Tined Bridge Roadway Surface Finish. Curing and finishing shall not be paid for directly, but shall be considered incidental to the item "Class S Concrete-Roadway". Class 1 Protective Surface Treatment shall be applied to the roadway surface and this work shall be paid for under the unit price bid for "Class 1 Protective Surface Treatment".

When precast reinforced concrete box culverts are substituted for cast in place box culverts, they shall be manufactured according to ASTM C 1577 and meet the requirements of Section 607. When the top slab of the box culvert serves as the finished roadway surface, a precast reinforced concrete box culvert substitution is not allowed.

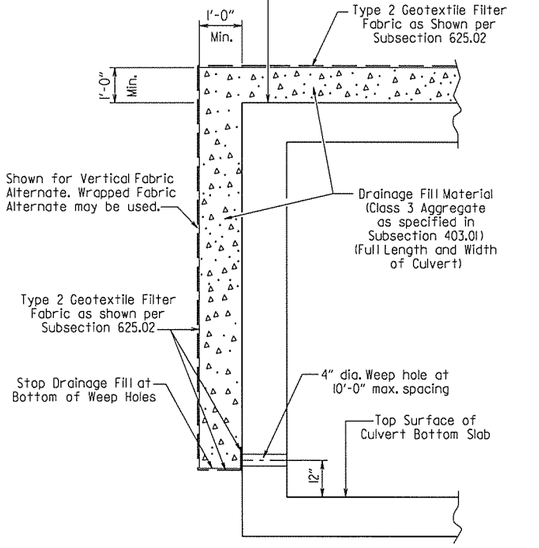

CULVERT DRAINAGE DETAIL FOR ROCK FILL

This detail shall be used when rock fill is specified for embankment construction.

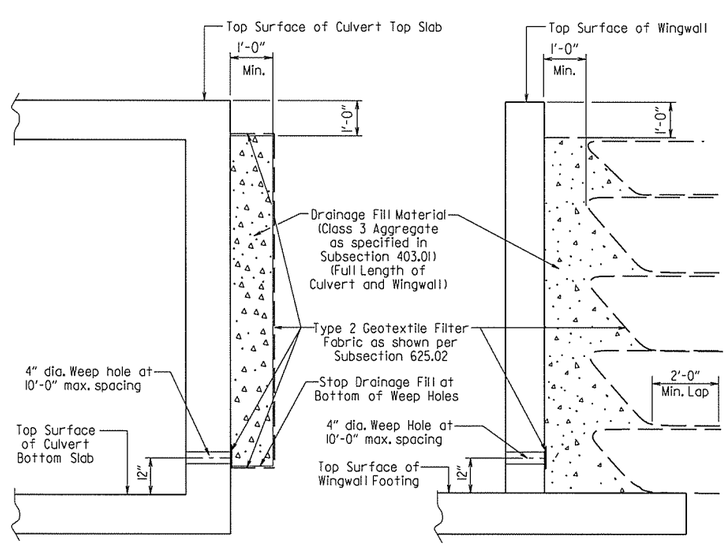

VERTICAL FABRIC ALTERNATE
(Shown for Culvert, Similar for Wingwall)

WRAPPED FABRIC ALTERNATE
(Shown for Wingwall, Similar for Culvert)

For Details of Excavation and Pay Limits, see Standard Drawing RCB-2.

WINGWALL & CULVERT DRAINAGE DETAIL

SHEET 1 OF 4

GENERAL DETAILS OF R.C. BOX CULVERT

GENERAL NOTES &
LONGITUDINAL SECTION LENGTH SCHEDULE

SPECIAL DETAILS

LRFD

AEWierciak 3/20/2016 11:51:50 AM
WORKSPACE: AHTD
L:\201\101707 - I-540 Widening & Interchange Improvement\Drawings\BB0414_culvert.dgn
REVISED DATE:

DATE REVISED	DATE FILMED	DATE REVISED	DATE FILMED	FED.RD. DIST.NO.	STATE	FED.AID PROJ.NO.	SHEET NO.	TOTAL SHEETS
				6	ARK.			
				JOB NO.		BB0414	75	886
				(1)	SPECIAL DETAILS			

Note: When top slab of culvert serves as finished roadway surface, see General Notes on Sheet 1 of 4.

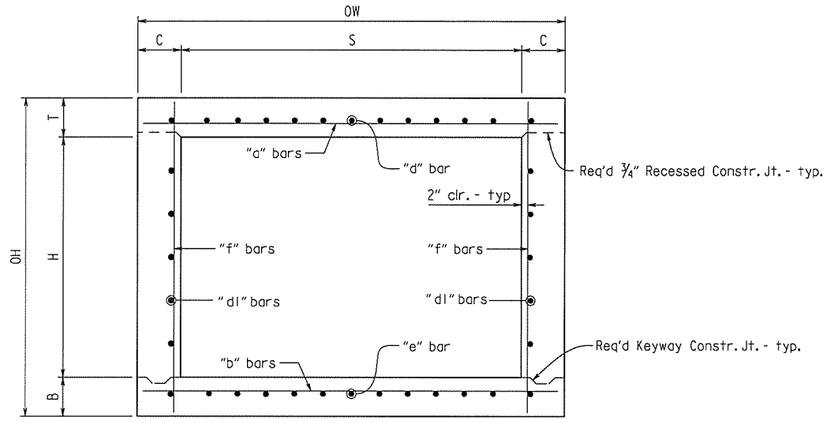

TYPICAL SECTION M-M

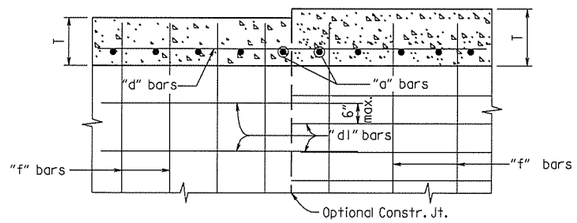

Longitudinal Bar Spacing at individual sections shall be maintained, which may result in noncontact bar laps.

LONGITUDINAL LAP DETAIL AT CHANGE IN SECTIONS

TOP SLAB SHOWN, BOTTOM SLAB SIMILAR

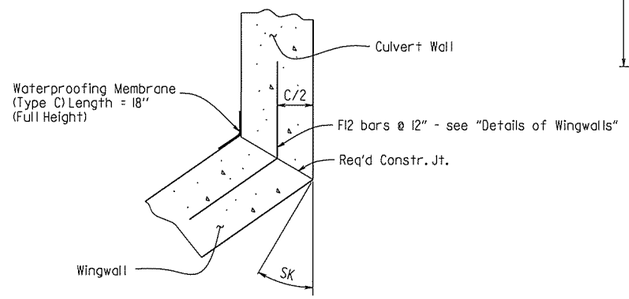

WINGWALL ATTACHMENT

See "Details of Wingwalls" for additional information and wingwall details.

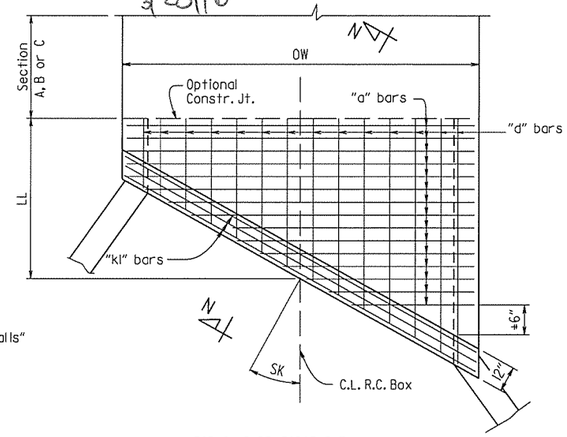

TOP SLAB REINFORCEMENT

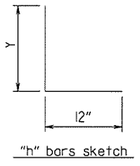

"h" bars sketch

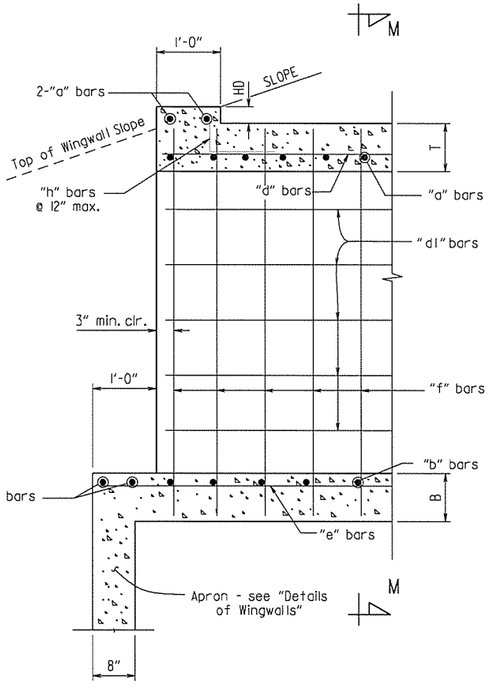

PART LONGITUDINAL SECTION

(Non-Skewed Ends)

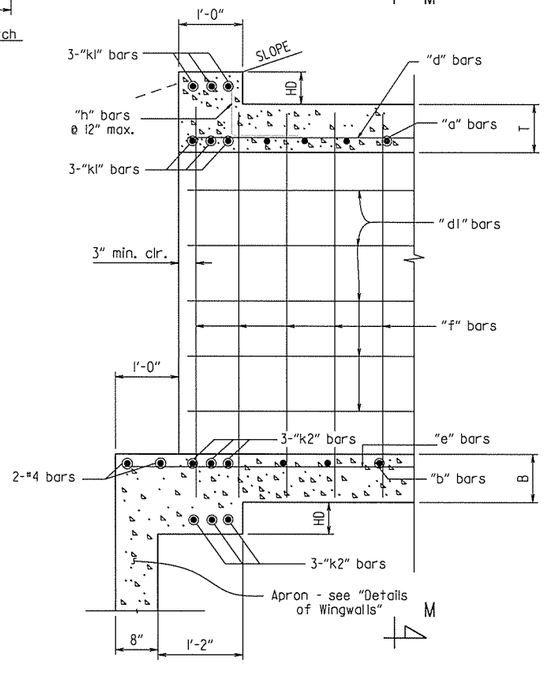

PART LONGITUDINAL SECTION N-N

(Skewed Ends)

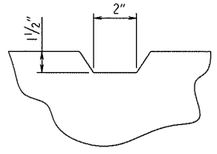

TYPICAL KEYWAY DETAIL

(All Construction Joints)

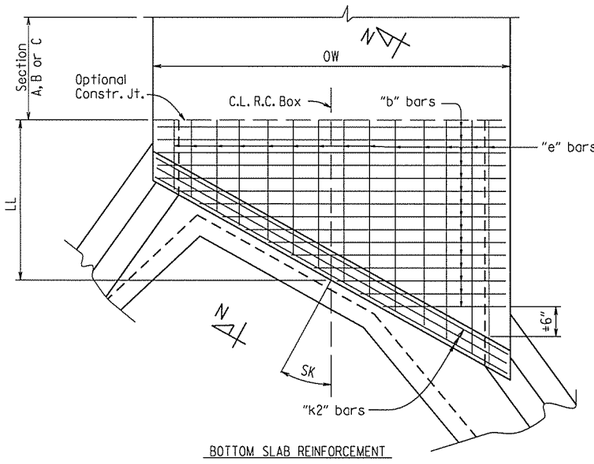

BOTTOM SLAB REINFORCEMENT

SKEWED END SECTION DETAILS

SHEET 2 OF 4
GENERAL DETAILS OF R.C. BOX CULVERT

DETAILS OF SINGLE BARREL
R.C. BOX CULVERT

SPECIAL DETAILS

STATE OF ARKANSAS
LICENSED PROFESSIONAL ENGINEER
No.13653
ADAM E. WIERCIAK
3/25/16

AEWierciak 3/20/2016 11:51:53 AM
WORKSPACE: AHTD
L:\20\N\0\7\07 - I-540 Widening & interchange improvement\Drawings\bBB0414_culvert1.dgn
REVISED DATE:

DATE REVISED	DATE FILMED	DATE REVISED	DATE FILMED	FED.RD. DIST.NO.	STATE	FED.AID PROJ.NO.	SHEET NO.	TOTAL SHEETS
				6	ARK.			
				JOB NO.		BB0414	76	886

(1) SPECIAL DETAILS

*2" clr. for fill depth (D) greater than 2 ft.
2½" clr. for fill depth (D) equal to or less than 2 ft.

Note: When top slab of culvert serves as finished roadway surface, see General Notes on Sheet 1 of 4.

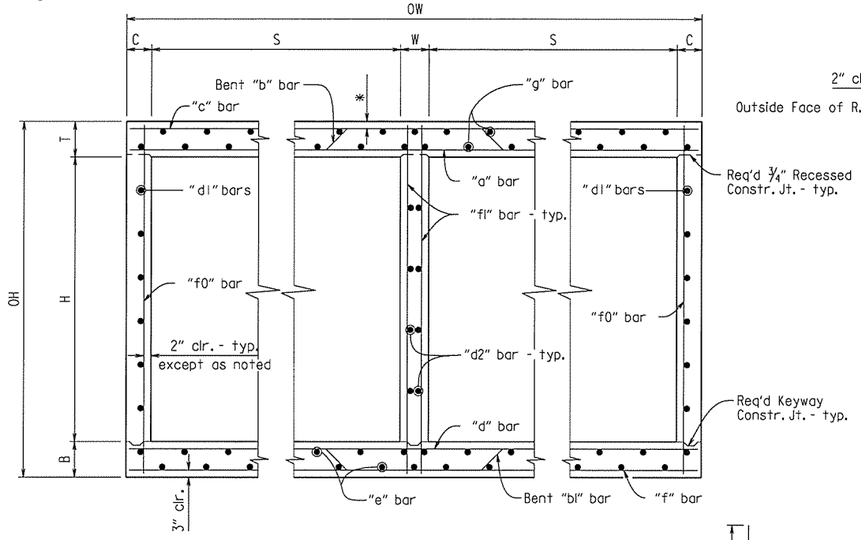

TYPICAL SECTION M-M

Top Slab
Straight "c" bars shall alternate with Bent "b" bars in top.
Straight "a" bars shall alternate with Bent "b" bars in bottom.

Bottom Slab
Straight "d" bars shall alternate with Bent "bl" bars in top.
Straight "f" bars shall alternate with Bent "bl" bars in bottom.

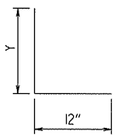

"h" bars sketch

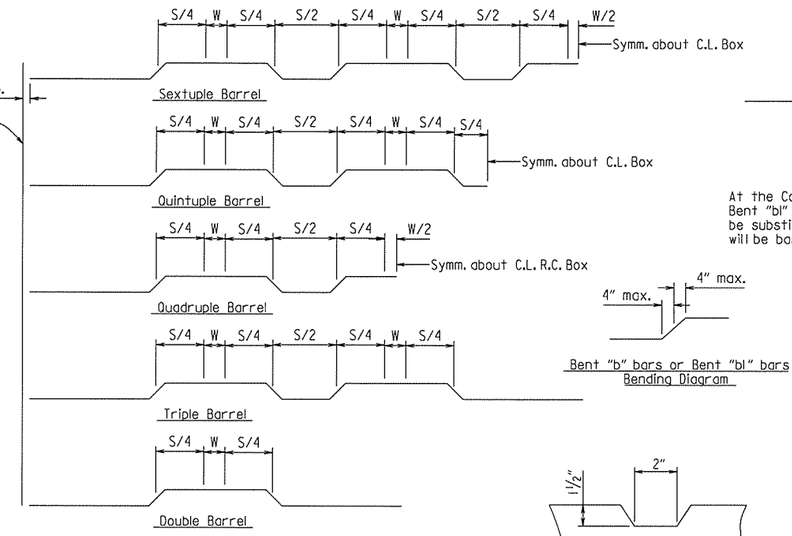

Bent "b" bars or Bent "bl" bars sketch

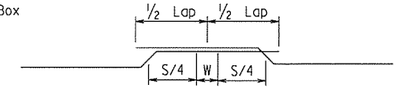

Lap Detail
For Bent "b" bars and Bent "bl" bars

At the Contractor's option in lieu of providing Bent "b" or Bent "bl" bars, one bar top and bottom of equivalent size may be substituted for each bent bar. Payment for the reinforcing will be based on the weight of the "b" or "bl" bar.

Bent "b" bars or Bent "bl" bars Bending Diagram

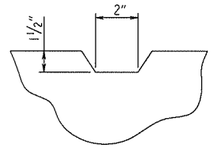

TYPICAL KEYWAY DETAIL

(All Construction Joints)

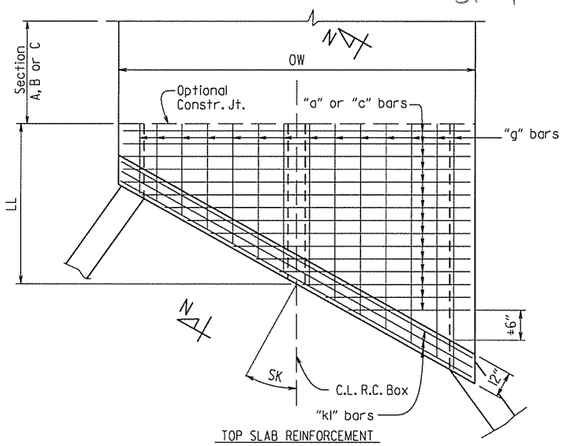

TOP SLAB REINFORCEMENT
Straight "c" bars in top.
Straight "a" bars in bottom.

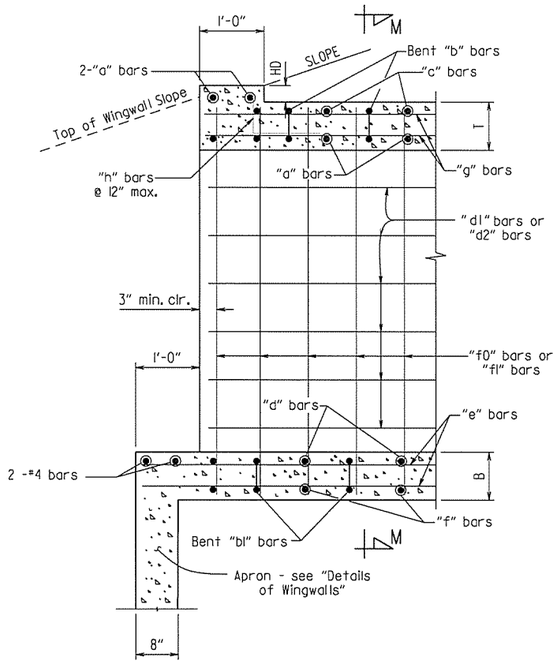

PART LONGITUDINAL SECTION

(Non-Skewed Ends)

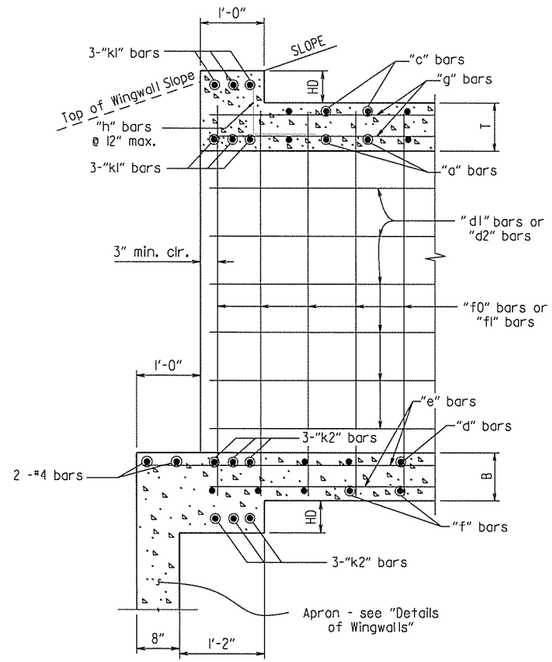

PART LONGITUDINAL SECTION N-N

(Skewed Ends)

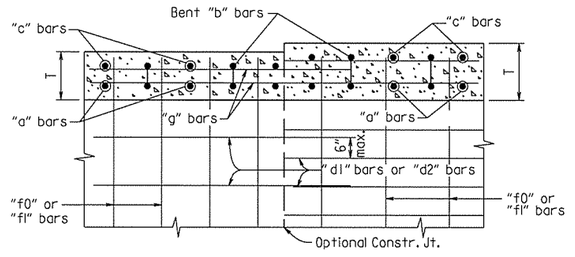

Longitudinal Bar Spacing at individual sections shall be maintained, which may result in noncontact bar laps.

LONGITUDINAL LAP DETAIL AT CHANGE IN SECTIONS

TOP SLAB SHOWN, BOTTOM SLAB SIMILAR

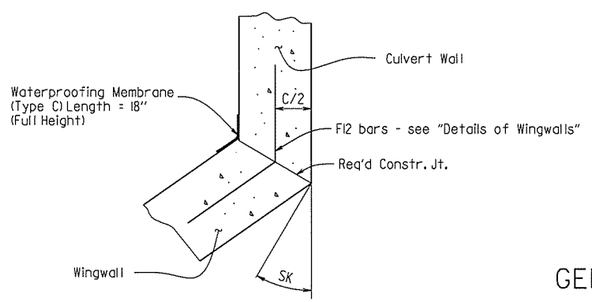

WINGWALL ATTACHMENT

See "Details of Wingwalls" for additional information and wingwall details.

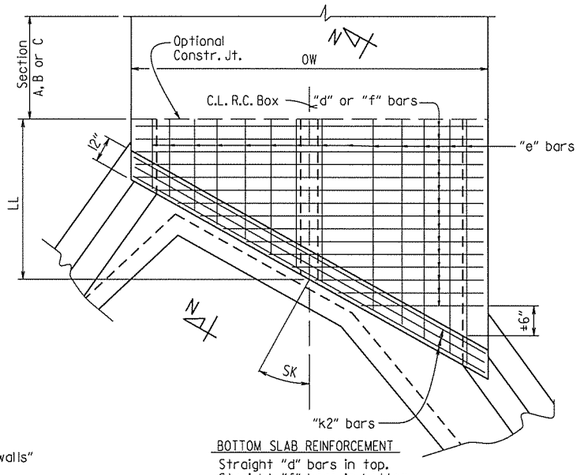

BOTTOM SLAB REINFORCEMENT
Straight "d" bars in top.
Straight "f" bars in bottom.

SKEWED END SECTION DETAILS

SHEET 3 OF 4
GENERAL DETAILS OF R.C. BOX CULVERT

DETAILS OF MULTI-BARREL
R.C. BOX CULVERT

SPECIAL DETAILS

STATE OF ARKANSAS
LICENSED PROFESSIONAL ENGINEER
No. 13653
ADAM E. WIERCIAK
3/23/16

AEWierciak 3/20/2016 11:51:53 AM
WORKSPACE: AHTD
L:\ROW\NDIT\07 - I-540 Widening & Interchange Improvement\Drawings\bBB0414_culvert.dgn
REVISED DATE:

DATE REVISED	DATE FILMED	DATE REVISED	DATE FILMED	FED.RD. DIST.NO.	STATE	FED.AID PROJ.NO.	SHEET NO.	TOTAL SHEETS
				6	ARK.			
				JOB NO.		BB0414	77	886

1 SPECIAL DETAILS

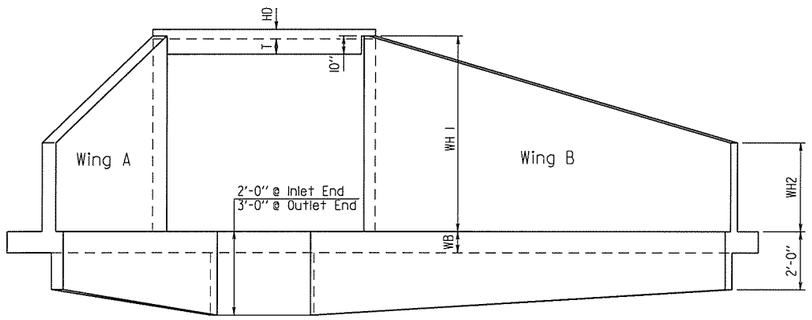

END ELEVATION

Flared Wingwalls Shown

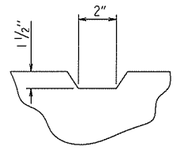

TYPICAL KEYWAY DETAIL

All Construction Joints

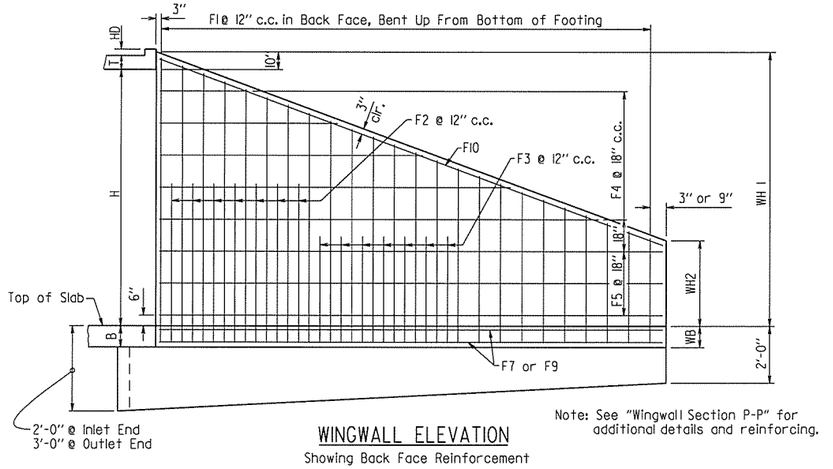

WINGWALL ELEVATION

Showing Back Face Reinforcement

Note: See "Wingwall Section P-P" for additional details and reinforcing.

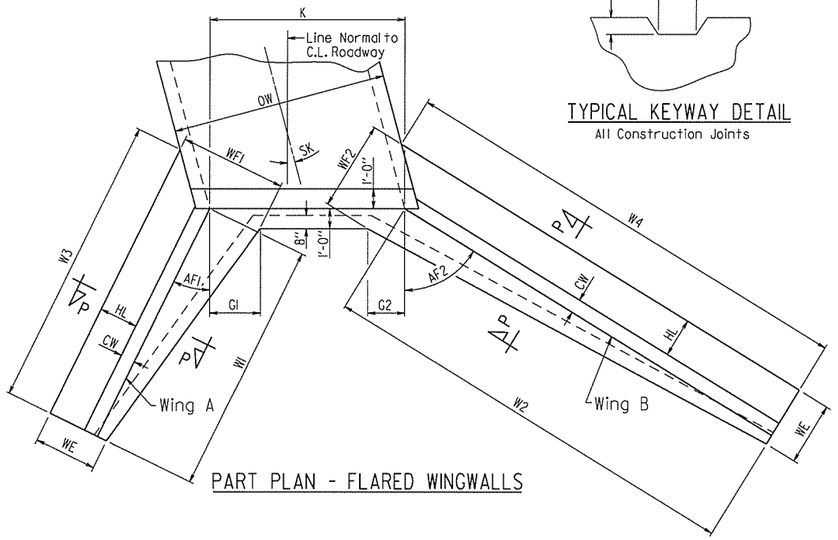

PART PLAN - FLARED WINGWALLS

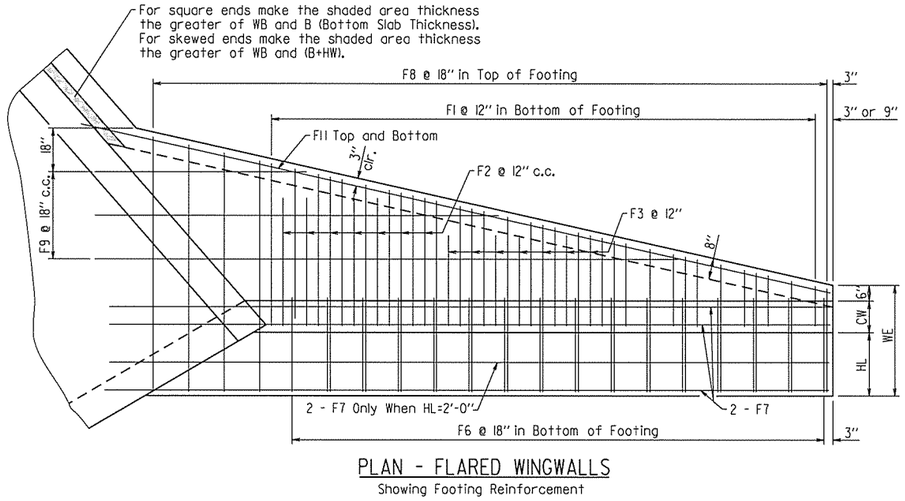

PLAN - FLARED WINGWALLS

Showing Footing Reinforcement

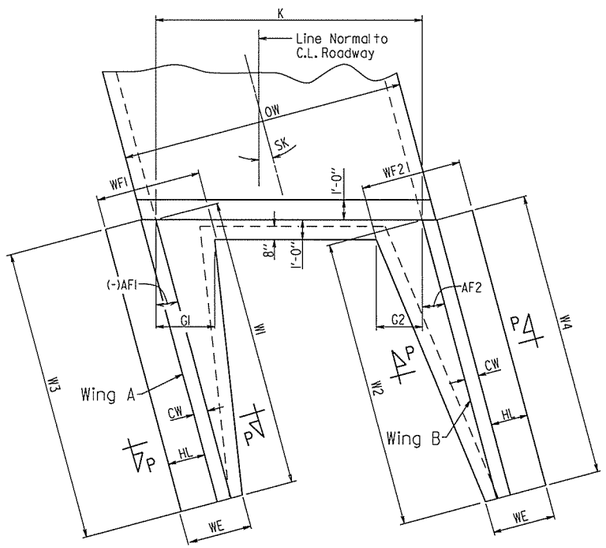

PART PLAN - PARALLEL WINGWALLS

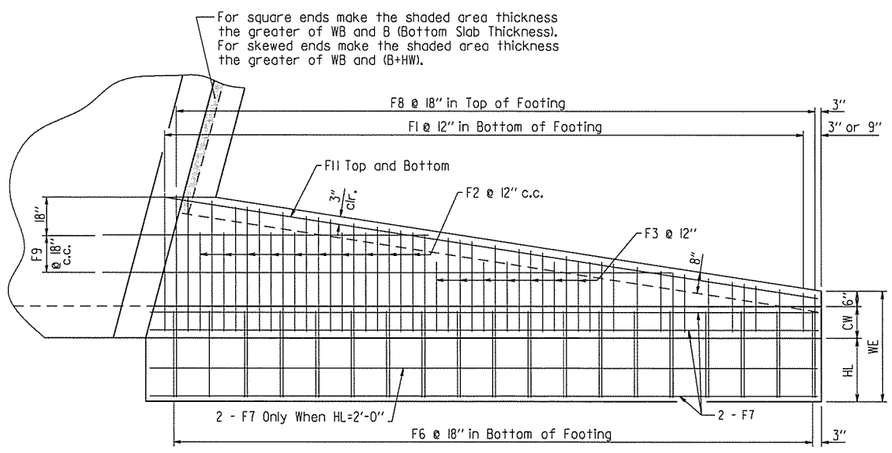

PLAN - PARALLEL WINGWALLS

Showing Footing Reinforcement

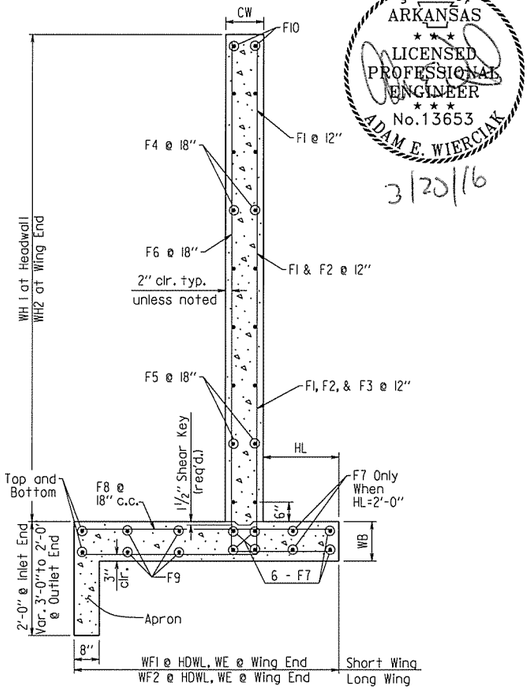

WINGWALL SECTION P-P

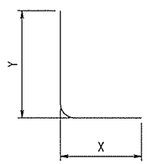

F1, F2, F3, & F6 BARS

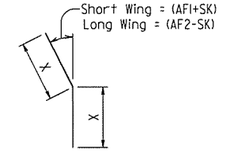

*F12 BAR

*F12 is a straight bar for parallel wingwalls

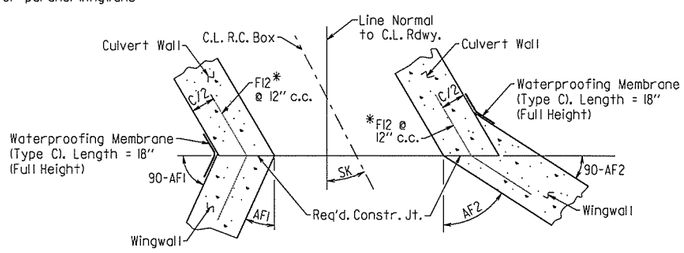

CONSTRUCTION JOINTS

Flared Wingwalls Shown

SHEET 4 OF 4

GENERAL DETAILS OF R.C. BOX CULVERT

DETAILS OF WINGWALLS

SPECIAL DETAILS

STATE OF ARKANSAS
LICENSED PROFESSIONAL ENGINEER
No.13653
ADAM E. WIERCIAK
3/20/16

AEWierciak 3/20/2016 11:51:53 AM
WORKSPACE: AHTD
L:\20RN\10\T07 - I-540 Widening & Interchange Improvement\Drawings\bBB0414_culvert.dgn
REVISED DATE:

DATE REVISED	DATE FILMED	DATE REVISED	DATE FILMED	FED.RD. DIST.NO.	STATE	FED.AID PROJ.NO.	SHEET NO.	TOTAL SHEETS
				6	ARK.			
				JOB NO.		BB0414	78	886

① SPECIAL DETAILS

STATE OF ARKANSAS
LICENSED PROFESSIONAL ENGINEER
No.13653
ADAM E. WIERCIAK
3/22/16

TABULAR DATA BY: AEW DATE: 1/4/2016
CHECKED BY: ABH DATE: 3/4/2016

INLET WINGWALL TABLE

OVER ALL WIDTH	CLEAR HEIGHT	FOOTING THK.	WING WALL THK.	BOX SKEW (DEG.)	SLOPE	HDWL LENGTH	HEEL	WALL HEIGHT AT HDWL	WALL HEIGHT AT WING END	WINGWALL ANGLE (DEGREE) WING A	WINGWALL ANGLE (DEGREE) WING B	FOOTING WIDTH AT WALL END	WIDTH OF WING FOOTINGS AT HDWL WING A	WIDTH OF WING FOOTINGS AT HDWL WING B	FOOTING DIMENSION PARALLEL WITH HDWL WING A	FOOTING DIMENSION PARALLEL WITH HDWL WING B	LENGTH OF WINGWALLS WING A	LENGTH OF WINGWALLS WING B	LENGTH OF FOOTING HEEL WING A	LENGTH OF FOOTING HEEL WING B
OW	H	WB	CW	SK	SL	K	HL	WH1	WH2	AF1	AF2	WE	WF1	WF2	G1	G2	W1	W2	W3	W4
7'-0"	3'-0"	0'-9"	0'-8"	15	3:1	6'-2 1/2"	1'-0"	3'-10"	1'-0"	15	45	2'-2"	2'-2"	2'-2"	0'-3"	0'--3 -1/2"	8'-6"	12'-0"	10'-4 5/8"	13'-10 5/8"

CLASS "S" CONCRETE (Includes apron) INLET	REINFORCING STEEL (Includes apron and laps if required) INLET
CU.YD	LBS.
3.44	344

WING	F1 BAR SIZE	F1 MAX. SPACING	F1 NO. REQ'D	F1 LENGTHS VARY	F2 BAR SIZE	F2 SPACING	F2 NO. REQ'D	F2 LENGTHS	F3 BAR SIZE	F3 SPACING	F3 NO. REQ'D	F3 LENGTHS	F4 BAR SIZE	F4 SPACING	F4 NO. REQ'D	F4 LENGTHS VARY	F5 BAR SIZE	F5 SPACING	F5 NO. REQ'D	F5 LENGTHS	F6 BAR SIZE	F6 SPACING	F6 NO. REQ'D	F6 LENGTHS VARY
WING A	4	12	9	L Min 2'-0", Max 4'-8" X Min 0'-9", Max 0'-9" Y Min 1'-4", Max 4'-0"	-	-	-	L - X - Y -	-	-	-	L - X - Y -	4	18	2	Min 4'-10" Max 4'-10"	4	18	2	8'-2"	4	18	6	L Min 2'-9", Max 5'-3" X Min 1'-4", Max 1'-4" Y Min 1'-6", Max 4'-0"
WING B	4	12	12	L Min 2'-1", Max 4'-8" X Min 0'-9", Max 0'-9" Y Min 1'-5", Max 4'-0"	-	-	-	L - X - Y -	-	-	-	L - X - Y -	4	18	2	Min 6'-11" Max 6'-11"	4	18	2	11'-8"	4	18	8	L Min 2'-10", Max 5'-3" X Min 1'-4", Max 1'-4" Y Min 1'-7", Max 4'-0"

WING	F7 BAR SIZE	F7 NO. REQ'D	F7 LENGTHS	F8 BAR SIZE	F8 SPACING	F8 NO. REQ'D	F8 LENGTHS VARY	F9 BAR SIZE	F9 SPACING	F9 NO. REQ'D	F9 LENGTHS	F10 BAR SIZE	F10 NO. REQ'D	F10 LENGTHS	F11 BAR SIZE	F11 NO. REQ'D	F11 LENGTHS	F12 BAR SIZE	F12 SPACING	F12 NO. REQ'D	F12 LENGTHS	REINF. STEEL QTY. PER WING (LBS)
WING A	4	6	11'-3"	4	18	6	Min 1'-8" Max 1'-8"	-	-	-	Min - Max -	4	2	8'-6"	4	2	9'-6"	6	12	3	L 3'-4" X 1'-8"	149
WING B	4	6	14'-9"	4	18	8	Min 1'-8" Max 1'-8"	-	-	-	Min - Max -	4	2	11'-10"	4	2	13'-4"	6	12	3	L 3'-4" X 1'-8"	195

This drawing to be used in conjunction with
SHEET 1 OF 4, "GENERAL DETAILS OF R.C. BOX CULVERT", 'GENERAL NOTES & LONGITUDINAL SECTION LENGTH SCHEDULE',
SHEET 2 OF 4, "GENERAL DETAILS OF R.C. BOX CULVERT", 'DETAILS OF SINGLE-BARREL R.C. BOX CULVERT',
SHEET 4 OF 4, "GENERAL DETAILS OF R.C. BOX CULVERT", 'DETAILS OF WINGWALLS', and
STANDARD DRAWING RCB-2.

For additional information and outlet sections, see Sheet 2 of 2.

INLET SKEWED END SECTION

SKEW (DEGREE)	SLOPE	DESIGN FILL DEPTH (FT.)	CLEAR SPAN (FT.)	CLEAR HEIGHT (FT.)	SECTION LENGTH	TOP SLAB THICKNESS	BOTTOM SLAB THK.	SIDE WALL THICKNESS	HEADWALL DEPTH	OVER ALL WIDTH	OVER ALL HEIGHT
SK	SL	D	S	H	LL	T	B	C	HD	OW	OH
15	3:1	5	6	3	2'-11"	8	9	6	3	7'-0"	4'-5"

Steel	Mark	SIZE	SPACING	LENGTHS / LENGTH	NO. REQ'D
TOP SLAB REINFORCING STEEL	"a"	5	6	Max 6'-8", Min 5'-11"	1
				6'-8"	4
BOTTOM SLAB REINFORCING STEEL	"b"	5	8.5	Max 6'-8", Min 5'-11"	1
				6'-8"	3
SIDE WALL REINFORCING STEEL	"f"	4	9	4'-1"	9
TOP SLAB DISTRIBUTION REINFORCING STEEL	"d"	4	12	Max 3'-9", Min 1'-10"	7
BOTTOM SLAB DISTRIBUTION REINFORCING STEEL	"e"	4	12	Max 3'-9", Min 1'-10"	7
SIDE WALL DISTRIBUTION REINFORCING STEEL	"d1"	4	12	LONG 3'-9"	3
				SHORT 1'-10"	3

HEADWALL REINFORCING STEEL "k1", "k2" & "h" BAR	SIZE	NO. REQ'D	LENGTH
"k1"	4	6	6'-11"
"k2"	4	6	6'-11"
"h"	4	9	1'-7" Y 0'-7"

CLASS "S" CONCRETE (Includes HDWL) CU. YDS.	① REINFORCING STEEL (GR. 60) (Includes HDWL) LBS.
1.55	189

① Any Bar Lap Required for the Skewed End Section shall be considered subsidiary to the item "Reinforcing Steel - Roadway (Gr. 60)."

INLET SLOPE SECTION(S)

R.C. BOX SECTION	DESIGN FILL DEPTH (FT.) D	CLEAR SPAN (FT.) S	CLEAR HEIGHT (FT.) H	TOP SLAB THICKNESS T	BOTTOM SLAB THK. B	SIDE WALL THICKNESS C	OVER ALL WIDTH OW	OVER ALL HEIGHT OH	SECTION LENGTH (FT.) SL	TOP SLAB REINFORCING STEEL "a" LENGTH = OW - 4" SIZE	SPACING	NO. REQ'D	LENGTH	BOTTOM SLAB REINFORCING STEEL "b" LENGTH = OW - 4" SIZE	SPACING	NO. REQ'D	LENGTH	SIDE WALL REINFORCING STEEL "f" LENGTH = OH - 4" SIZE	SPACING	NO. REQ'D	LENGTH	TOP SLAB DISTRIBUTION REINF. STEEL "d" LENGTH = SL SIZE	SPACING	NO. REQ'D	BOTTOM SLAB DISTRIBUTION REINF. STEEL "e" LENGTH = SL SIZE	SPACING	NO. REQ'D	SIDE WALL DISTRIBUTION REINF.STEEL "d1" LENGTH = SL SIZE	SPACING	NO. REQ'D

HDWL DEPTH HD	ADDITIONAL REINF. FOR HDWL LBS	"h" HDWL BARS SIZE	Y	LENGTH	NO. REQ'D

CLASS "S" CONCRETE CU. YDS.	REINFORCING STEEL (GR. 50) LBS.
TOTAL	
0.00	0

MID-SECTION

R.C. BOX SECTION	DESIGN FILL DEPTH (FT.) D	CLEAR SPAN (FT.) S	CLEAR HEIGHT (FT.) H	TOP SLAB THK. T	BOTTOM SLAB THK. B	SIDE WALL THK C	OVER ALL WIDTH OW	OVER ALL HEIGHT OH	SECTION LENGTH (FT.) SL	TOP SLAB REINFORCING STEEL "a" LENGTH = OW - 4" SIZE	SPACING	NO. REQ'D	LENGTH	BOTTOM SLAB REINFORCING STEEL "b" LENGTH = OW - 4" SIZE	SPACING	NO. REQ'D	LENGTH	SIDE WALL REINFORCING STEEL "f" LENGTH = OH - 4" SIZE	SPACING	NO. REQ'D	LENGTH	TOP SLAB DISTRIBUTION REINF. STEEL "d" LENGTH = SL SIZE	SPACING	NO. REQ'D	BOTTOM SLAB DISTRIBUTION REINF. STEEL "e" LENGTH = SL SIZE	SPACING	NO. REQ'D	SIDE WALL DISTRIBUTION REINF. STEEL "d1" LENGTH = SL SIZE	SPACING	NO. REQ'D	CLASS "S" CONCRETE CU. YDS.	REINFORCING STEEL (Gr. 60) LBS.
A	2	6	3	10.5	10.5	6	7'-0"	4'-9"	833.08	5	8	1249	6'-8"	4	6	1666	6'-8"	4	9	2220	4'-5"	4	10	9	4	10	9	4	12	6	470.54	36105

Min. Bar Lap Length	
#4	1'-9"
#5	2'-2"
#6	2'-7"
#7	3'-6"
#8	4'-7"

Bar Pin Dia. Table	
#4	3"
#5	3 3/4"
#6	4 1/2"
#7	5 1/4"
#8	6"

Design Fill Depth	Range of Actual Fill Depth
2	0.0 ft - 2.0 ft
5	>2.0 ft - 5.0 ft
10	>5.0 ft - 10.0 ft
15	>10.0 ft - 15.0 ft
20	>15.0 ft - 20.0 ft
25	>20.0 ft - 25.0 ft
30	>25.0 ft - 30.0 ft
35	>30.0 ft - 35.0 ft
40	>35.0 ft - 40.0 ft

MID-SECTION BAR LAP TABLE

# of Long. Laps Req'd.	SL = Section Length
0	< 40.0 ft
1	>40.0 ft - 78.0 ft
2	>78.0 ft - 116.0 ft
3	>116.0 ft - 154.0 ft
4	>154.0 ft - 192.0 ft
5	>192.0 ft - 230.0 ft
6	>230.0 ft - 268.0 ft
7	>268.0 ft - 306.0 ft
8	>306.0 ft -344.0 ft
21	>800.0 ft-838.0 ft

Data shown for Mid-Section, Slope Section(s), and Skewed End Section is based on the design fill depth shown in the table, see PLAN AND PROFILE SHEETS for actual fill depth.

SHEET 1 OF 2
DETAILS OF R.C. BOX CULVERT
SINGLE BARREL BOX CULVERT
HWY. 112 STA. 26+90 RT.
SPECIAL DETAILS

LRFD

AEWierciak 3/20/2016 11:51:54 AM
WORKSPACE: AHTD
L:\2011\1017707 - I-540 Widening & Interchange Improvement\Drawings\bBB0414_culvert1.dgn
REVISED DATE:

DATE REVISED	DATE FILMED	DATE REVISED	DATE FILMED	FED.RD. DIST.NO.	STATE	FED.AID PROJ.NO.	SHEET NO.	TOTAL SHEETS
				6	ARK.			
				JOB NO.		BB0414	79	886

(1) SPECIAL DETAILS

STATE OF ARKANSAS
LICENSED PROFESSIONAL ENGINEER
No.13653
ADAM E. WIERCIAK
3/20/16

TABULAR DATA BY: AEW DATE: 1/4/2016
CHECKED BY: ABH DATE: 3/4/2016

OUTLET WINGWALL TABLE

OVER ALL WIDTH	CLEAR HEIGHT	FOOTING THK.	WING WALL THK.	BOX SKEW (DEG.)	SLOPE	HDWL LENGTH	HEEL	WALL HEIGHT AT HDWL	WALL HEIGHT AT WING END	WINGWALL ANGLE (DEGREE) WING A	WINGWALL ANGLE (DEGREE) WING B	FOOTING WIDTH AT WALL END	WIDTH OF WING FOOTINGS AT HDWL WING A	WIDTH OF WING FOOTINGS AT HDWL WING B	FOOTING DIMENSION PARALLEL WITH HDWL WING A	FOOTING DIMENSION PARALLEL WITH HDWL WING B	LENGTH OF WINGWALLS WING A	LENGTH OF WINGWALLS WING B	LENGTH OF FOOTING HEEL WING A	LENGTH OF FOOTING HEEL WING B	CLASS "S" CONCRETE (Includes apron)	REINFORCING STEEL (Includes apron and laps if required)
OW	H	WB	CW	SK	SL	K	HL	WH1	WH2	AF1	AF2	WE	WF1	WF2	G1	G2	W1	W2	W3	W4	OUTLET	OUTLET
7'-0"	3'-0"	0'-9"	0'-8"	0	3:1	6'-0"	1'-0"	3'-10"	1'-0"	30	30	2'-2"	2'-2"	2'-2"	0'-0"	0'-0"	9'-6"	9'-6"	11'-4 5/8"	11'-4 5/8"	CU.YD	LBS.
																					3.56	324

WING	F1 BAR SIZE	F1 MAX. SPACING	F1 NO. REQ'D	F1 LENGTHS VARY	F1 LENGTHS	F2 BAR SIZE	F2 SPACING	F2 NO. REQ'D	F2 LENGTHS	F3 BAR SIZE	F3 SPACING	F3 NO. REQ'D	F3 LENGTHS	F4 BAR SIZE	F4 SPACING	F4 NO. REQ'D	F4 LENGTHS VARY	F5 BAR SIZE	F5 SPACING	F5 NO. REQ'D	F5 LENGTHS
WING A	4	12	10	L Min	2'-0"				L -				L -	4	18	2	Min	4	18	2	9'-2"
				L Max	4'-8"												5'-5"				
				X Min	0'-9"				X -				X -				Max				
				X Max	0'-9"												5'-5"				
				Y Min	1'-4"				Y -				Y -								
				Y Max	4'-0"																
WING B	4	12	10	L Min	2'-0"				L -				L -	4	18	2	Min	4	18	2	9'-2"
				L Max	4'-8"												5'-5"				
				X Min	0'-9"				X -				X -				Max				
				X Max	0'-9"												5'-5"				
				Y Min	1'-4"				Y -				Y -								
				Y Max	4'-0"																

WING	F6 BAR SIZE	F6 SPACING	F6 NO. REQ'D	F6 LENGTHS VARY	F6 LENGTHS	F7 BAR SIZE	F7 NO. REQ'D	F7 LENGTHS	F8 BAR SIZE	F8 SPACING	F8 NO. REQ'D	F8 LENGTHS VARY	F9 BAR SIZE	F9 SPACING	F9 NO. REQ'D	F9 LENGTHS	F10 BAR SIZE	F10 NO. REQ'D	F10 LENGTHS	F11 BAR SIZE	F11 NO. REQ'D	F11 LENGTHS	F12 BAR SIZE	F12 SPACING	F12 NO. REQ'D	F12 LENGTHS	REINF. STEEL QTY. PER WING (LBS)
WING A	4	18	7	L Min	2'-7"	4	6	12'-3"	4	18	6	Min	-	-	-	Min	4	2	9'-5"	4	2	10'-7"	6	12	3	L 3'-4"	162
				L Max	5'-3"							1'-8"				-											
				X Min	1'-4"							Max				Max										X 1'-8"	
				X Max	1'-4"							1'-8"				-											
				Y Min	1'-4"																						
				Y Max	4'-0"																						
WING B	4	18	7	L Min	2'-7"	4	6	12'-3"	4	18	6	Min	-	-	-	Min	4	2	9'-5"	4	2	10'-7"	6	12	3	L 3'-4"	162
				L Max	5'-3"							1'-8"				-											
				X Min	1'-4"							Max				Max										X 1'-8"	
				X Max	1'-4"							1'-8"				-											
				Y Min	1'-4"																						
				Y Max	4'-0"																						

OUTLET SKEWED END SECTION

SKEW (DEGREE)	SLOPE	DESIGN FILL DEPTH (FT.)	CLEAR SPAN (FT.)	CLEAR HEIGHT (FT.)	SECTION LENGTH	TOP SLAB THICKNESS	BOTTOM SLAB THK.	SIDE WALL THICKNESS	HEADWALL DEPTH	OVER ALL WIDTH	OVER ALL HEIGHT	TOP SLAB REINFORCING STEEL "a" SIZE	"a" SPACING	"a" LENGTHS VARY	"a" NO. REQ'D	BOTTOM SLAB REINFORCING STEEL "b" SIZE	"b" SPACING	"b" LENGTHS VARY	"b" NO. REQ'D	SIDE WALL REINFORCING STEEL "f" SIZE	"f" SPACING	"f" NO. REQ'D	"f" LENGTH	TOP SLAB DISTRIBUTION REINFORCING STEEL "d" SIZE	"d" SPACING	"d" NO. REQ'D	"d" LENGTHS VARY	BOTTOM SLAB DISTRIBUTION REINFORCING STEEL "e" SIZE	"e" SPACING	"e" NO. REQ'D	"e" LENGTHS VARY	SIDE WALL DISTRIBUTION REINFORCING STEEL "d1" SIZE	"d1" SPACING	"d1" NO. REQ'D	"d1" LENGTH	HDWL "k1", "k2" & "h" BAR	HDWL SIZE	HDWL NO. REQ'D	HDWL LENGTH	CLASS "S" CONCRETE (Includes HDWL)	(1) REINFORCING STEEL (GR. 60) (Includes HDWL)
SK	SL	D	S	H	LL	T	B	C	HD	OW	OH																														CU. YDS.	LBS.
														Max				Max									Max				Max			LONG	"k1"					
																																				"k2"					
														Min				Min									Min				Min			SHORT						
																																				"h"				Y	

OUTLET SLOPE SECTION(S)

R.C. BOX SECTION D	DESIGN FILL DEPTH (FT.) S	CLEAR SPAN (FT.) H	CLEAR HEIGHT (FT.) T	TOP SLAB THICKNESS B	BOTTOM SLAB THK. C	SIDE WALL THICKNESS OW	OVER ALL WIDTH OH	OVER ALL HEIGHT SL	SECTION LENGTH (FT.)	TOP SLAB REINFORCING STEEL "a" LENGTH = OW - 4" SIZE	SPACING	NO. REQ'D	LENGTH	BOTTOM SLAB REINFORCING STEEL "b" LENGTH = OW - 4" SIZE	SPACING	NO. REQ'D	LENGTH	SIDE WALL REINFORCING STEEL "f" LENGTH = OH - 4" SIZE	SPACING	NO. REQ'D	LENGTH	TOP SLAB DISTRIBUTION REINF. STEEL "d" LENGTH = SL SIZE	SPACING	NO. REQ'D	BOTTOM SLAB DISTRIBUTION REINF. STEEL "e" LENGTH = SL SIZE	SPACING	NO. REQ'D	SIDE WALL DISTRIBUTION REINF.STEEL "d1" LENGTH = SL SIZE	SPACING	NO. REQ'D

HDWL DEPTH HD	ADDITIONAL REINF. FOR HDWL LBS	"h" HDWL BARS SIZE	Y	LENGTH	NO. REQ'D

CLASS "S" CONCRETE CU. YDS.	REINFORCING STEEL (GR. 60) LBS.
TOTAL	

(1) Any Bar Lap Required for the Skewed End Section shall be considered subsidiary to the item "Reinforcing Steel - Roadway (Gr. 60)."

Min. Bar Lap Length	
#4	1'-9"
#5	2'-2"
#6	2'-7"
#7	3'-6"
#8	4'-7"

Bar Pin Dia. Table	
#4	3"
#5	3 3/4"
#6	4 1/2"
#7	5 1/4"
#8	6"

The required number of bars and lengths shown are for estimating purpose only. The actual number and length required shall be determined in field.

Unless otherwise noted, all dimensions are in inches.

SHEET 2 OF 2
DETAILS OF R.C. BOX CULVERT

SINGLE BARREL BOX CULVERT
HWY. 112 STA. 26+90 RT.

SPECIAL DETAILS

LRFD

AEWierciak 3/20/2016 2:10:35 PM
WORKSPACE: AHTD
L:\20IN\10I7707 - I-540 Widening & Interchange Improvement\Drawings\bBB04I4_culvert1.dgn
REVISED DATE:

DATE REVISED	DATE FILMED	DATE REVISED	DATE FILMED	FED.RD. DIST.NO.	STATE	FED.AID PROJ.NO.	SHEET NO.	TOTAL SHEETS
				6	ARK.			
				JOB NO.		BB0414	80	886

(1) SPECIAL DETAILS

INLET WINGWALL TABLE

OVER ALL WIDTH	CLEAR HEIGHT	FOOTING THK.	WING WALL THK.	BOX SKEW (DEG.)	SLOPE	HDWL LENGTH	HEEL	WALL HEIGHT AT HDWL	WALL HEIGHT AT WING END	WINGWALL ANGLE (DEGREE) WING A	WINGWALL ANGLE (DEGREE) WING B	FOOTING WIDTH AT WALL END	WIDTH OF WING FOOTINGS AT HDWL WING A	WIDTH OF WING FOOTINGS AT HDWL WING B	FOOTING DIMENSION PARALLEL WITH HDWL WING A	FOOTING DIMENSION PARALLEL WITH HDWL WING B	LENGTH OF WINGWALLS WING A	LENGTH OF WINGWALLS WING B	LENGTH OF FOOTING HEEL WING A	LENGTH OF FOOTING HEEL WING B	CLASS "S" CONCRETE (Includes apron)	REINFORCING STEEL (Includes apron and laps if required)
OW	H	WB	CW	SK	SL	K	HL	WH1	WH2	AF1	AF2	WE	WF1	WF2	G1	G2	W1	W2	W3	W4	INLET	INLET
15'-8"	5'-0"	0'-9"	0'-8"	10	3:1	14'-10 3/4"	1'-0"	5'-10"	1'-8"	20	40	2'-2"	2'-11 1/2"	3'-0 7/8"	1'-0 1/8"	1'-0"	13'-0"	16'-0"	14'-10 5/8"	17'-10 5/8"	CU.YD	LBS.
																					6.48	588

WING	F1 BAR SIZE	F1 MAX. SPACING	F1 NO. REQ'D	F1 LENGTHS VARY			F2 BAR SIZE	F2 SPACING	F2 NO. REQ'D	F2 LENGTHS	F3 BAR SIZE	F3 SPACING	F3 NO. REQ'D	F3 LENGTHS	F4 BAR SIZE	F4 SPACING	F4 NO. REQ'D	F4 LENGTHS VARY	F5 BAR SIZE	F5 SPACING	F5 NO. REQ'D	F5 LENGTHS	F6 BAR SIZE	F6 SPACING	F6 NO. REQ'D	F6 LENGTHS VARY			F7 BAR SIZE	F7 NO. REQ'D	F7 LENGTHS	F8 BAR SIZE	F8 SPACING	F8 NO. REQ'D	F8 LENGTHS VARY	F9 BAR SIZE	F9 SPACING	F9 NO. REQ'D	F9 LENGTHS	F10 BAR SIZE	F10 NO. REQ'D	F10 LENGTHS	F11 BAR SIZE	F11 NO. REQ'D	F11 LENGTHS	F12 BAR SIZE	F12 SPACING	F12 NO. REQ'D	F12 LENGTHS		REINF. STEEL QTY. PER WING (LBS)
WING A	4	12	13	L	Min	2'-10"	-	-	-	-	-	-	-	-	4	18	6	Min	4	18	2	12'-8"	4	18	9	L	Min	3'-5"	4	6	15'-9"	4	18	9	Min	-	-	-	-	4	2	13'-2"	4	2	14'-4"	6	12	5	L	3'-4"	268
					Max	7'-6"												1'-11"								Max	7'-3"							1'-8"				Max										
				X	Min	0'-9"												Max								X	Min	1'-4"							Max				-								X	1'-8"	
					Max	1'-7"												11'-3"									Max	1'-4"							2'-5"													
				Y	Min	2'-2"																				Y	Min	2'-2"																				
					Max	6'-0"																					Max	6'-0"																				
WING B	4	12	16	L	Min	2'-9"	-	-	-	-	-	-	-	-	4	18	6	Min	4	18	2	15'-8"	4	18	11	L	Min	3'-4"	4	6	18'-9"	4	18	11	Min	-	-	-	-	4	2	16'-1"	4	2	18'-1"	6	12	5	L	3'-4"	320
					Max	7'-7"												2'-5"									Max	7'-3"							1'-8"				Max										
				X	Min	0'-9"												Max								X	Min	1'-4"							Max				-								X	1'-8"	
					Max	1'-8"												2'-6"									Max	1'-4"							2'-6"													
				Y	Min	2'-1"																				Y	Min	2'-1"																				
					Max	6'-0"																					Max	6'-0"																				

MID-SECTION BAR LAP TABLE

# of Long. Laps Req'd.	SL = Section Length
0	< 40.0 ft
1	>40.0 ft - 78.0 ft
2	>78.0 ft - 116.0 ft
3	>116.0 ft - 154.0 ft
4	>154.0 ft - 192.0 ft
5	>192.0 ft - 230.0 ft
6	>230.0 ft - 268.0 ft
7	>268.0 ft - 306.0 ft
8	>306.0 ft -344.0 ft

Min. Bar Lap Length	
#4	1'-9"
#5	2'-2"
#6	2'-7"
#7	3'-6"
#8	4'-7"

Bar Pin Dia. Table	
#4	3"
#5	3 3/4"
#6	4 1/2"
#7	5 1/4"
#8	6"

STATE OF ARKANSAS
LICENSED PROFESSIONAL ENGINEER
No.13653
ADAM E. WIERCIAK
3/20/16

TABULAR DATA BY: AEW DATE: 1/4/2016
CHECKED BY: ABH DATE: 3/4/2016

This drawing to be used in conjunction with
SHEET 1 OF 4, "GENERAL DETAILS OF R.C. BOX CULVERT", 'GENERAL NOTES & LONGITUDINAL SECTION LENGTH SCHEDULE',
SHEET 3 OF 4, "GENERAL DETAILS OF R.C. BOX CULVERT", 'DETAILS OF MULTI-BARREL R.C. BOX CULVERT',
SHEET 4 OF 4, "GENERAL DETAILS OF R.C. BOX CULVERT", 'DETAILS OF WINGWALLS', and
STANDARD DRAWING RCB-2.
For additional information and outlet sections, see Sheet 2 of 2.

(1) Any Bar Lap Required for the Skewed End Section shall be considered subsidiary to the item "Reinforcing Steel - Roadway (Gr. 60)."

INLET SKEWED END SECTION

SKEW (DEGREE)	SLOPE	DESIGN FILL DEPTH (FT.)	CLEAR SPAN (FT.)	CLEAR HEIGHT (FT.)	SECTION LENGTH	TOP SLAB THK.	HDWL DEPTH	BOTTOM SLAB THK.	SIDE WALL THK.	INTERIOR WALL THK.	OVER ALL WIDTH	OVER ALL HEIGHT
SK	SL	D	S	H	LL	T	HD	B	C	W	OW	OH
10	3:1	10	7	5	3'-5"	8	3	9	6	8	15'-8"	6'-5"

TOP SLAB REINFORCING STEEL "a" SIZE	"a" SPACING	"a" LENGTHS VARY	"a" NO. REQ'D	"c" SIZE	"c" SPACING	"c" LENGTHS VARY	"c" NO. REQ'D
4	7.5	Max 15'-4" / Min 8'-9"	2	4	5	Max 15'-4" / Min 8'-9"	3
		15'-4"	4			15'-4"	5

BOTTOM SLAB REINFORCING STEEL "d" SIZE	"d" SPACING	"d" LENGTHS VARY	"d" NO. REQ'D	"f" SIZE	"f" SPACING	"f" LENGTHS VARY	"f" NO. REQ'D
4	4.5	Max 15'-4" / Min 8'-9"	4	4	8.5	Max 15'-4" / Min 8'-9"	2
		15'-4"	6			15'-4"	3

SIDE WALL REINFORCING STEEL "f0" SIZE	"f0" SPACING	"f0" NO. REQ'D	"f0" LENGTH
4	6	14	6'-1"

INTERIOR WALL REINFORCING STEEL "f1" SIZE	"f1" SPACING	"f1" NO. REQ'D	"f1" LENGTH
4	12	8	6'-1"

TOP SLAB DISTRIBUTION REINFORCING STEEL "g" SIZE	"g" SPACING	"g" NO. REQ'D	"g" LENGTHS VARY
4	12	31	Max 4'-7" / Min 1'-10"

BOTTOM SLAB DISTRIBUTION REINFORCING STEEL "e" SIZE	"e" SPACING	"e" NO. REQ'D	"e" LENGTHS VARY
4	12	31	Max 4'-7" / Min 1'-10"

SIDE WALL DISTRIBUTION REINFORCING STEEL "d1" SIZE	"d1" SPACING	"d1" NO. REQ'D	"d1" LENGTH
4	12	5	LONG 4'-6"
		5	SHORT 1'-11"

INTERIOR WALL DISTRIBUTION REINFORCING STEEL "d2" SIZE	"d2" SPACING	"d2" NO. REQ'D	"d2" LENGTH
4	12	10	3'-3"

CLASS "S" CONCRETE (Includes HDWL) CU. YDS.	(1) REINFORCING STEEL (GR 60) (Includes HDWL) LBS.
4.14	680

"k1" HDWL BARS SIZE	"k1" HDWL BARS LENGTH	"k1" HDWL BARS NO. REQ'D	"k2" HDWL BARS SIZE	"k2" HDWL BARS LENGTH	"k2" HDWL BARS NO. REQ'D
4	15'-5"	6	4	15'-5"	6

"h" HDWL BARS SIZE	"h" HDWL BARS LENGTH	"h" HDWL BARS Y	"h" HDWL BARS NO. REQ'D
4	1'-7"	0'-7"	17

INLET SLOPE SECTION(S)

R.C. BOX SECTION	DESIGN FILL DEPTH (FT.)	CLEAR SPAN (FT.)	CLEAR HEIGHT (FT.)	TOP SLAB THK.	BOTTOM SLAB THK.	SIDE WALL THK.	INTERIOR WALL THK.	OVER ALL WIDTH	OVER ALL HEIGHT	SECTION LENGTH (FT.)
D	S	H	T	B	C	W	OW	OH	SL	

TOP SLAB REINFORCING STEEL — LENGTH = OW - 4" + BENDS

"a" SIZE	"a" L	Bent "b" SIZE	Bent "b" L	"c" SIZE	"c" L	SPACING	NO. REQ'D

BOTTOM SLAB REINFORCING STEEL — LENGTH = OW - 4" + BENDS

"d" SIZE	"d" L	Bent "b1" SIZE	Bent "b1" L	"f" SIZE	"f" L	SPACING	NO. REQ'D

SIDE WALL REINFORCING STEEL "f0" LENGTH = OH - 4" SIZE	SPACING	NO. REQ'D	LENGTH

INTERIOR WALL REINFORCING STEEL "f1" LENGTH = OH - 4" SIZE	SPACING	NO. REQ'D	LENGTH

TOP SLAB DISTRIBUTION REINF. STEEL "g" LENGTH = SL SIZE	SPACING	NO. REQ'D

BOTTOM SLAB DISTRIBUTION REINF. STEEL "e" LENGTH = SL SIZE	SPACING	NO. REQ'D

SIDE WALL DISTRIBUTION REINF. STEEL "d1" LENGTH = SL SIZE	SPACING	NO. REQ'D

INTERIOR WALL DISTRIBUTION REINF. STEEL "d2" LENGTH = SL SIZE	SPACING	NO. REQ'D

HDWL DEPTH	ADDITIONAL REINF. FOR HDWL LBS.	"h" HDWL BARS SIZE	"h" HDWL BARS Y	"h" HDWL BARS LENGTH	"h" HDWL BARS NO. REQ'D
HD					

CLASS "S" CONCRETE CU. YDS.	REINFORCING STEEL (GR. 60) LBS.
TOTAL	

Design Fill Depth	Range of Actual Fill Depth
2	0.0 ft - 2.0 ft
5	>2.0 ft - 5.0 ft
10	>5.0 ft - 10.0 ft
15	>10.0 ft - 15.0 ft
20	>15.0 ft - 20.0 ft
25	>20.0 ft - 25.0 ft
30	>25.0 ft - 30.0 ft
35	>30.0 ft - 35.0 ft
40	>35.0 ft - 40.0 ft

Data shown for Mid-Section, Slope Section(s), and Skewed End Section is based on the design fill depth shown in the table, see PLAN AND PROFILE SHEETS for actual fill depth.

MID-SECTION

R.C. BOX SECTION	DESIGN FILL DEPTH (FT.)	CLEAR SPAN (FT.)	CLEAR HEIGHT (FT.)	TOP SLAB THK.	BOTTOM SLAB THK.	SIDE WALL THK.	INTERIOR WALL THK.	OVER ALL WIDTH	OVER ALL HEIGHT	SECTION LENGTH (FT.)
D	S	H	T	B	C	W	OW	OH	SL	
A	10	7	5	8.0	9	6.0	8	15'-8"	6'-5"	73.17

TOP SLAB REINFORCING STEEL — LENGTH = OW - 4" + BENDS

"a" SIZE	"a" L	Bent "b" SIZE	Bent "b" L	"c" SIZE	"c" L	SPACING	NO. REQ'D
4	15'-4"	6	15'-6"	5	15'-4"	13	67

BOTTOM SLAB REINFORCING STEEL — LENGTH = OW - 4" + BENDS

"d" SIZE	"d" L	Bent "b1" SIZE	Bent "b1" L	"f" SIZE	"f" L	SPACING	NO. REQ'D
4	15'-4"	5	15'-6"	5	15'-4"	9	97

SIDE WALL REINFORCING STEEL "f0" LENGTH = OH - 4" SIZE	SPACING	NO. REQ'D	LENGTH
5	7	250	6'-1"

INTERIOR WALL REINFORCING STEEL "f1" LENGTH = OH - 4" SIZE	SPACING	NO. REQ'D	LENGTH
4	12	146	6'-1"

TOP SLAB DISTRIBUTION REINF. STEEL "g" LENGTH = SL SIZE	SPACING	NO. REQ'D
4	12	31

BOTTOM SLAB DISTRIBUTION REINF. STEEL "e" LENGTH = SL SIZE	SPACING	NO. REQ'D
4	12	31

SIDE WALL DISTRIBUTION STEEL "d1" LENGTH = SL SIZE	SPACING	NO. REQ'D
4	12	10

INTERIOR WALL DISTRIBUTION STEEL "d2" LENGTH = SL SIZE	SPACING	NO. REQ'D
4	12	10

CLASS "S" CONCRETE CU. YDS.	REINFORCING STEEL (GR. 60) LBS.
82.73	13771

SHEET 1 OF 2
DETAILS OF R.C. BOX CULVERT
DOUBLE BARREL BOX CULVERT
HWY. 112 TO NB I-49 RAMP STA. 299+52

SPECIAL DETAILS

LRFD

AEWierciak 3/20/2016 11:52:07 AM
WORKSPACE: AHTD
L:\2016\100707 - I-540 Widening & Interchange Improvement\Drawings\BB0414_culver12.dgn
REVISED DATE:

DATE REVISED	DATE FILMED	DATE REVISED	DATE FILMED	FED.RD. DIST.NO.	STATE	FED.AID PROJ.NO.	SHEET NO.	TOTAL SHEETS
				6	ARK.			
				JOB NO.		BB0414	81	886

(1) SPECIAL DETAILS

TABULAR DATA BY: AEW DATE: 1/4/2016
CHECKED BY: ABH DATE: 3/4/2016

OUTLET WINGWALL TABLE

OVER ALL WIDTH	CLEAR HEIGHT	FOOTING THK.	WING WALL THK.	BOX SKEW (DEG.)	SLOPE	HDWL LENGTH	HEEL	WALL HEIGHT AT HDWL	WALL HEIGHT AT WING END	WINGWALL ANGLE (DEGREE) WING A	WINGWALL ANGLE (DEGREE) WING B	FOOTING WIDTH AT WALL END	WIDTH OF WING FOOTINGS AT HDWL WING A	WIDTH OF WING FOOTINGS AT HDWL WING B	FOOTING DIMENSION PARALLEL WITH HDWL WING A	FOOTING DIMENSION PARALLEL WITH HDWL WING B	LENGTH OF WINGWALLS WING A	LENGTH OF WINGWALLS WING B	LENGTH OF FOOTING HEEL WING A	LENGTH OF FOOTING HEEL WING B
OW	H	WB	CW	SK	SL	K	HL	WH1	WH2	AF1	AF2	WE	WF1	WF2	G1	G2	W1	W2	W3	W4
15'-8"	5'-0"	0'-9"	0'-8"	10	4:1	14'-10 3/4"	1'-0"	5'-10"	1'-8"	20	40	2'-2"	2'-10 5/8"	2'-11 7/8"	0'-11 1/4"	0'-10 3/4"	17'-6"	21'-6"	19'-4 5/8"	23'-4 5/8"

CLASS "S" CONCRETE (Includes apron) OUTLET	REINFORCING STEEL (Includes apron and laps if required) OUTLET
CU.YD	LBS.
9.19	757

WING	F1 BAR SIZE	F1 MAX. SPACING	F1 NO. REQ'D	F1 LENGTHS VARY	F2 BAR SIZE	F2 SPACING	F2 NO. REQ'D	F2 LENGTHS	F3 BAR SIZE	F3 SPACING	F3 NO. REQ'D	F3 LENGTHS	F4 BAR SIZE	F4 SPACING	F4 NO. REQ'D	F4 LENGTHS VARY	F5 BAR SIZE	F5 SPACING	F5 NO. REQ'D	F5 LENGTHS
WING A	4	12	18	L: Min 2'-8", Max 7'-5" X: Min 0'-9", Max 1'-6" Y: Min 2'-0", Max 6'-0"	-	-	-	L - X - Y -	-	-	-	L - X - Y -	4	18	6	Min 2'-8" Max 15'-3"	4	18	2	17'-2"
WING B	4	12	22	L: Min 2'-8", Max 7'-6" X: Min 0'-9", Max 1'-7" Y: Min 2'-0", Max 6'-0"	-	-	-	L - X - Y -	-	-	-	L - X - Y -	4	18	6	Min 3'-3" Max 18'-9"	4	18	2	21'-2"

WING	F6 BAR SIZE	F6 SPACING	F6 NO. REQ'D	F6 LENGTHS VARY	F7 BAR SIZE	F7 NO. REQ'D	F7 LENGTHS	F8 BAR SIZE	F8 SPACING	F8 NO. REQ'D	F8 LENGTHS VARY	F9 BAR SIZE	F9 SPACING	F9 NO. REQ'D	F9 LENGTHS	F10 BAR SIZE	F10 NO. REQ'D	F10 LENGTHS	F11 BAR SIZE	F11 NO. REQ'D	F11 LENGTHS	F12 BAR SIZE	F12 SPACING	F12 NO. REQ'D	F12 LENGTHS	REINF. STEEL QTY. PER WING (LBS)
WING A	4	18	12	L: Min 3'-4", Max 7'-3" X: Min 1'-4", Max 1'-4" Y: Min 2'-1", Max 6'-0"	4	6	20'-3"	4	18	12	Min 1'-8" Max 2'-5"	-	-	-	Min - Max -	4	2	17'-6"	4	2	18'-10"	6	12	5	L 3'-4" X 1'-8"	344
WING B	4	18	15	L: Min 3'-3", Max 7'-3" X: Min 1'-4", Max 1'-4" Y: Min 2'-0", Max 6'-0"	4	6	24'-3"	4	18	15	Min 1'-8" Max 2'-6"	-	-	-	Min - Max -	4	2	21'-5"	4	2	23'-6"	6	12	5	L 3'-4" X 1'-8"	413

Min. Bar Lap Length	
#4	1'-9"
#5	2'-2"
#6	2'-7"
#7	3'-6"
#8	4'-7"

Bar Pin Dia. Table	
#4	3"
#5	3 3/4"
#6	4 1/2"
#7	5 1/4"
#8	6"

(1) Any Bar Lap Required for the Skewed End Section shall be considered subsidiary to the item "Reinforcing Steel - Roadway (Gr. 60)."

OUTLET SKEWED END SECTION

SKEW (DEGREE)	SLOPE	DESIGN FILL DEPTH (FT.)	CLEAR SPAN (FT.)	CLEAR HEIGHT (FT.)	SECTION LENGTH	TOP SLAB THK.	HDWL DEPTH	BOTTOM SLAB THK.	SIDE WALL THK.	INTERIOR WALL THK.	OVER ALL WIDTH	OVER ALL HEIGHT
SK	SL	D	S	H	LL	T	HD	B	C	W	OW	OH
10	4:1	10	7	5	3'-5"	8	3	9	6	8	15'-8"	6'-5"

TOP SLAB REINFORCING STEEL "a" SIZE	"a" SPACING	"a" LENGTHS VARY	"a" NO. REQ'D	"c" SIZE	"c" SPACING	"c" LENGTHS VARY	"c" NO. REQ'D	BOTTOM SLAB REINFORCING STEEL "d" SIZE	"d" SPACING	"d" LENGTHS VARY	"d" NO. REQ'D	"f" SIZE	"f" SPACING	"f" LENGTHS VARY	"f" NO. REQ'D
4	7.5	Max 15'-4" Min 8'-9"	2	4	5	Max 15'-4" Min 8'-9"	3	4	4.5	Max 15'-4" Min 8'-9"	4	4	8.5	Max 15'-4" Min 8'-9"	2
		15'-4"	4			15'-4"	5			15'-4"	6			15'-4"	3

SIDE WALL REINFORCING STEEL "f0" SIZE	"f0" SPACING	"f0" NO. REQ'D	"f0" LENGTH	INTERIOR WALL REINFORCING STEEL "f1" SIZE	"f1" SPACING	"f1" NO. REQ'D	"f1" LENGTH	TOP SLAB DISTRIBUTION REINFORCING STEEL "g" SIZE	"g" SPACING	"g" NO. REQ'D	"g" LENGTHS VARY
4	6	14	6'-1"	4	12	8	6'-1"	4	12	31	Max 4'-7" Min 1'-10"

BOTTOM SLAB DISTRIBUTION REINFORCING STEEL "e" SIZE	"e" SPACING	"e" NO. REQ'D	"e" LENGTHS VARY	SIDE WALL DISTRIBUTION REINFORCING STEEL "d1" SIZE	"d1" SPACING	"d1" NO. REQ'D	"d1" LENGTH	INTERIOR WALL DISTRIBUTION REINFORCING STEEL "d2" SIZE	"d2" SPACING	"d2" NO. REQ'D	"d2" LENGTH
4	12	31	Max 4'-7" Min 1'-10"	4	12	5	LONG 4'-6"	4	12	10	3'-3"
						5	SHORT 1'-11"				

CLASS "S" CONCRETE (Includes HDWL)	(1) REINFORCING STEEL (GR 60) (Includes HDWL)
CU. YDS.	LBS.
4.14	680

"k1" HDWL BARS SIZE	"k1" LENGTH	"k1" NO. REQ'D	"k2" HDWL BARS SIZE	"k2" LENGTH	"k2" NO. REQ'D	"h" HDWL BARS SIZE	"h" LENGTH	"h" Y	"h" NO. REQ'D
4	15'-5"	6	4	15'-5"	6	4	1'-7"	0'-7"	17

OUTLET SLOPE SECTION(S)

R.C. BOX SECTION	DESIGN FILL DEPTH (FT.)	CLEAR SPAN (FT.)	CLEAR HEIGHT (FT.)	TOP SLAB THK.	BOTTOM SLAB THK.	SIDE WALL THK.	INTERIOR WALL THK.	OVER ALL WIDTH	OVER ALL HEIGHT	SECTION LENGTH (FT.)
	D	S	H	T	B	C	W	OW	OH	SL

TOP SLAB REINFORCING STEEL LENGTH = OW - 4" + BENDS "a" SIZE	"a" L	Bent "b" SIZE	Bent "b" L	"c" SIZE	"c" L	SPACING	NO. REQ'D	BOTTOM SLAB REINFORCING STEEL LENGTH = OW - 4" + BENDS "d" SIZE	"d" L	Bent "b1" SIZE	Bent "b1" L	"f" SIZE	"f" L	SPACING	NO. REQ'D

SIDE WALL REINFORCING STEEL "f0" LENGTH = OH - 4" SIZE	SPACING	NO. REQ'D	LENGTH	INTERIOR WALL REINFORCING STEEL "f1" LENGTH = OH - 4" SIZE	SPACING	NO. REQ'D	LENGTH	TOP SLAB DISTRIBUTION REINF. STEEL "g" LENGTH = SL SIZE	SPACING	NO. REQ'D	BOTTOM SLAB DISTRIBUTION REINF. STEEL "e" LENGTH = SL SIZE	SPACING	NO. REQ'D	SIDE WALL DISTRIBUTION REINF. STEEL "d1" LENGTH = SL SIZE	SPACING	NO. REQ'D	INTERIOR WALL DISTRIBUTION REINF. STEEL "d2" LENGTH = SL SIZE	SPACING	NO. REQ'D

HDWL DEPTH	ADDITIONAL REINF. FOR HDWL	"h" HDWL BARS SIZE	Y	LENGTH	NO. REQ'D
HD	LBS.				

CLASS "S" CONCRETE	REINFORCING STEEL (GR. 60)
CU. YDS.	LBS.
TOTAL	

The required number of bars and lengths shown are for estimating purpose only. The actual number and length required shall be determined in field.

Unless otherwise noted, all dimensions are in inches.

SHEET 2 OF 2

DETAILS OF R.C. BOX CULVERT

DOUBLE BARREL BOX CULVERT
HWY. 112 TO NB I-49 RAMP STA. 299+52

SPECIAL DETAILS

LRFD

AEWierciak 3/20/2016 11:52:15 AM
WORKSPACE: AHTD
L:\2011\1101707 - I-540 Widening & Interchange Improvement\Drawings\bBB0414_culvert2.dgn
REVISED DATE:

DATE REVISED	DATE FILMED	DATE REVISED	DATE FILMED	FED.RD. DIST.NO.	STATE	FED.AID PROJ.NO.	SHEET NO.	TOTAL SHEETS
				6	ARK.			
				JOB NO.		BB0414	82	886
				(2)	SPECIAL DETAILS			

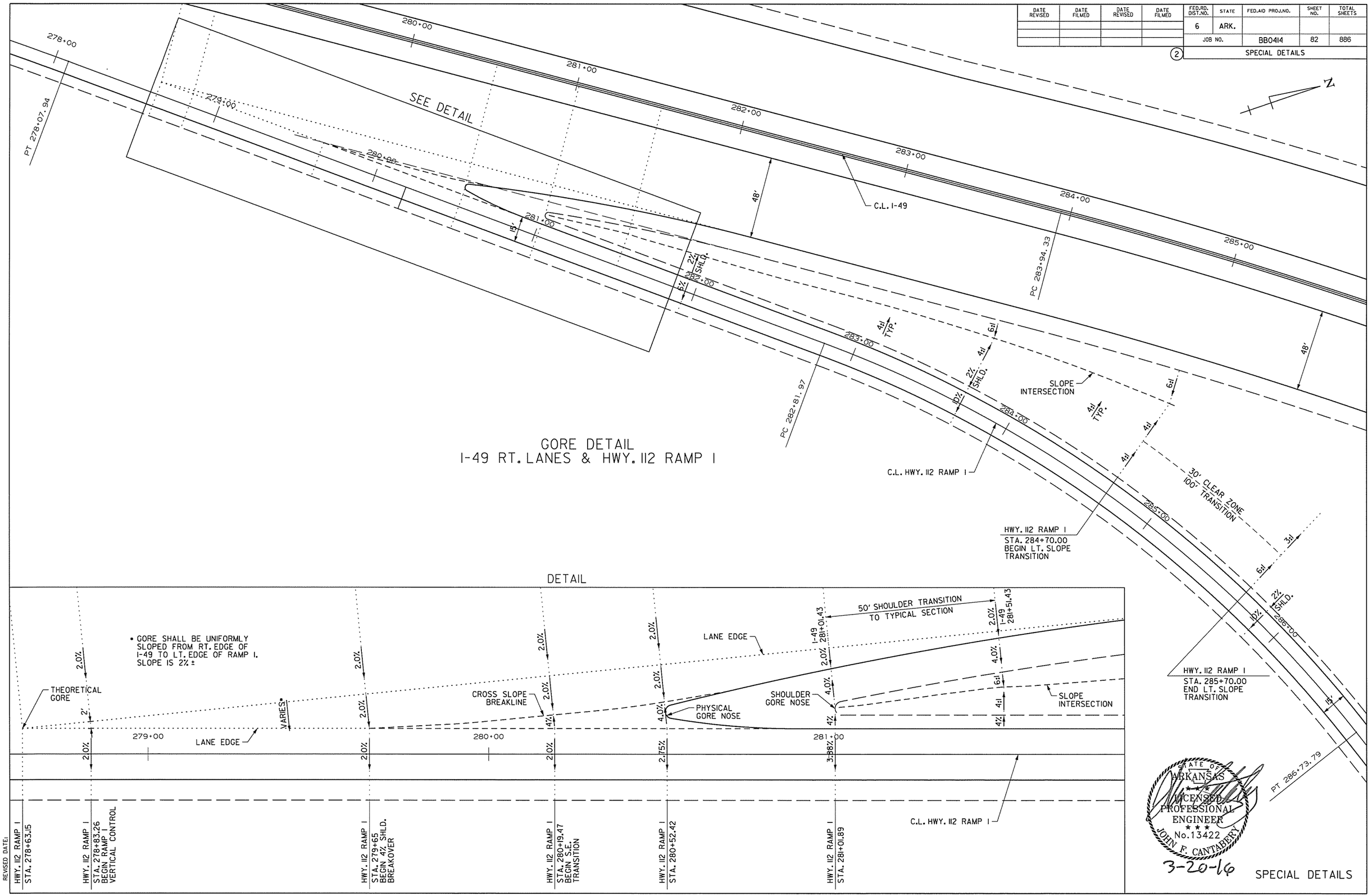

GORE DETAIL
I-49 RT. LANES & HWY. 112 RAMP 1

DETAIL

STATE OF ARKANSAS
LICENSED PROFESSIONAL ENGINEER
No. 13422
JOHN F. CANTABERY
3-20-16

SPECIAL DETAILS

AEWierciok 3/20/2016 11:52:26 AM
WORKSPACE: AHTD
L:\20\W\01\707 - I-540 Widening & Interchange Improvement\Drawings\rBB0414_SD_Hwy 112 Ramp 1.dgn
REVISED DATE:

DATE REVISED	DATE FILMED	DATE REVISED	DATE FILMED	FED.RD. DIST.NO.	STATE	FED.AID PROJ.NO.	SHEET NO.	TOTAL SHEETS
				6	ARK.			
				JOB NO.		BB0414	83	886
				(2)	SPECIAL DETAILS			

STATE OF ARKANSAS
LICENSED PROFESSIONAL ENGINEER
No. 13422
JOHN F. CANTABERY
3-20-16

N

350' SUPERELEVATION TRANSITION

PT 298+93.52

HWY. 71B STA. 299+33.27 MAX. SUPERELEVATION

HWY. 71B STA. 301+59.38 END SHOULDER LOCK AND ROTATE WITH LANES

HWY. 71B STA. 302+83.27 END SUPERELEVATION TRANSITION

299+00 300+00 301+00 302+00 C.L. COLLECTOR-DISTRIBUTOR RD. 303+00

PI 299+22.77

2.0% 2.0% 2.0% 1.50% 2.0%

300+00 301+00 302+00 C.L. HWY. 71B 303+00

9.3% 5.84% 1.50% 2.0% 24'

THEORETICAL GORE

CROSS SLOPE BREAKLINE

LANE EDGE

PHYSICAL GORE NOSE

60'

9.3% 9.3%

VARIES•

4.85%

100' SHOULDER S.E. TRANS. TO 9.3%▲

302+66.04

7.30%

8.71%

▲ 100' SHOULDER TRANSITION FROM 4.85% TO 9.30% IS INTERCEPTED AT STA. 302+52.96 AT 8.71%. SHOULDER AND LANES ROTATE TOGETHER AFTER THIS POINT.

• SHOULDER IN GORE SHALL BE UNIFORMLY SLOPED FROM RT. EDGE OF HWY. 71B TO LT. EDGE OF I-49.

9.3% 9.3% 8.71% 8.71%

299+00 300+00 301+00 C.L. I-49 302+00 303+00

36'

I-49 LT. LANES STA. 299+33.27

I-49 LT. LANES STA. 300+36.55 NOSE 52.86' LT.

I-49 LT. LANES STA. 301+66.04 SHOULDER NOSE

I-49 LT. LANES STA. 302+21.16 END MAX. SUPERELEVATION

I-49 LT. LANES STA. 302+52.69 SHOULDER AND LANE SUPERELEVATION LOCK

SPECIAL DETAILS

GORE DETAIL
I-49 LT. LANES & HWY. 71B

AEWarelick 3/20/2016 11:52:26 AM
WORKSPACE: AHTD
L:\20IN\101707 - I-540 Widening & Interchange Improvement\Drawings\rBB0414_SD_Hwy 71 to SB I49.dgn
REVISED DATE:

DATE REVISED	DATE FILMED	DATE REVISED	DATE FILMED	FED.RD. DIST.NO.	STATE	FED.AID PROJ.NO.	SHEET NO.	TOTAL SHEETS
				6	ARK.			
				JOB NO.		BB0414	84	886
				(2)	SPECIAL DETAILS			

STATE OF ARKANSAS
LICENSED PROFESSIONAL ENGINEER
No.13422
JOHN F. CANTABERRY
3-20-16

N

300' SUPERELEVATION TRANSITION

SB I-49 TO HWY. 112 LANES
STA. 349+74.48

SB I-49 TO HWY. 112 LANES
STA. 352+74.48
NOSE 7.50' RT.

I-49 LT. LANES
STA. 353+75.16
MAX. SUPERELEVATION

I-49 LT. LANES
STA. 354+82.39
THEORETICAL GORE
5% MAX. BREAKOVER

OUTSIDE 2 LANES DO NOT ROTATE
INSIDE 3 LANES ROTATE TOGETHER

ALL 5 LANES ROTATE TOGETHER

NORMAL CROWN

I-49 LT. LANES
STA. 356+82.36
END SUPERELEVATION
LOCK OF OUTSIDE LANES

I-49 LT. LANES
STA. 358+55.16
END SUPERELEVATION TRANSITION

C.L. SB I-49 TO HWY. 112 RAMP

2.00%

350+00

24'

2.32%

LANE EDGE

355+00

PI 356+80.47

PC 354+95.03

PHYSICAL GORE NOSE

THEORETICAL GORE

CROSS SLOPE BREAKLINE

C.L. SB I-49 TO HWY. 112 EXIT

PRC 358+65.87

C.L. I-49

200' SHOULDER S.E. TRANSITION TO 10.00%
AT STA. 349+72.97
PI 351+12.16

SHLD.

10.00%

36'

7.32%

PI 351+73.11

PT 354+95.16

PT 355+56.11

C.L. HWY. 112 TO NB I-49 RAMP

I-49 LT. LANES
STA. 351+72.97
END SHOULDER TRANSITION AT 2.32% SUPERELEVATION

I-49 LT. LANES
STA. 352+86.42
NOSE 72.72' LT.

GORE DETAIL
I-49 LT. LANES & SB I-49 TO HWY. 112 RAMP

SPECIAL DETAILS

AEWerclok 3/20/2016 11:52:26 AM
WORKSPACE: AHTD
L:\20II\II0I7707 - I-540 Widening & Interchange Improvement\Drawings\r-BB0414_SD_SBI49 to Hwy 71.dgn
REVISED DATE:

DATE REVISED	DATE FILMED	DATE REVISED	DATE FILMED	FED.RD. DIST.NO.	STATE	FED.AID PROJ.NO.	SHEET NO.	TOTAL SHEETS
				6	ARK.			
				JOB NO.		BB0414	85	886

(2) TEMPORARY EROSION CONTROL DETAILS

15+00 20+00 25+00 240+00 245+00 250+00

STA. 239+77.13
BEGIN JOB BB0414
L.M. 65.03

E-11 +77 E-11 +98

E-5 E-6 E-11 +25 E-11 +09

C.L. I-49 MEDIAN

I-49 LANES

SILT FENCE	E-11	LIN. FT.
STA. 239+77 TO 239+98	RT.	21
STA. 249+25 TO 252+09	RT.	284

I-49 LANES

SAND BAG DITCH CHECKS	E-5	INSTALLATION
STA. 248+48	RT.	1
ROCK DITCH CHECKS	E-6	INSTALLATION
STA. 248+78	RT.	1

LEGEND

E-5 = SAND BAG DITCH CHECKS
E-6 = ROCK DITCH CHECKS
E-7 = DROP INLET SILT FENCE
E-11 = SILT FENCE

EROSION CONTROL MEASURES TO BE PLACED DURING APPROPRIATE STAGES. THESE DEVICES SHALL BE LEFT IN PLACE AS LONG AS REQUIRED TO CONTROL EROSION.

REVISIONS

DATE	REVISION

PI 36+82.86

30+00 35+00 40+00 255+00 260+00 265+00 270+00

C.L. I-49 MEDIAN

I-49 LANES

SAND BAG DITCH CHECKS	E-5	INSTALLATION
STA. 264+31	RT.	1
ROCK DITCH CHECKS	E-6	INSTALLATION
STA. 264+77	RT.	1

STATE OF ARKANSAS
LICENSED PROFESSIONAL ENGINEER
No. 13422
JOHN F. CANTABERRY
3-20-16

TEMPORARY EROSION CONTROL DETAILS CLEARING AND GRUBBING STAGE

AEWierciak 3/20/2016 11:52:27 AM
WORKSPACE: AHTD
L:\2011\11017107 - I-540 Widening & Interchange Improvement\Drawings\r-BB0414_EC_MNL_01_CG.dgn
REVISED DATE:

DATE REVISED	DATE FILMED	DATE REVISED	DATE FILMED	FED.RD. DIST.NO.	STATE	FED.AID PROJ.NO.	SHEET NO.	TOTAL SHEETS
				6	ARK.			
				JOB NO.		BB0414	86	886

2 TEMPORARY EROSION CONTROL DETAILS

HWY. 112 RAMP 4

SILT FENCE	E-11	LIN. FT.
STA. 282+74 TO 285+50	LT.	273
STA. 282+97 TO 285+50	RT.	265

SAND BAG DITCH CHECKS	E-5	INSTALLATION
STA. 284+14	RT.	1

ROCK DITCH CHECKS	E-6	INSTALLATION
STA. 283+76	RT.	1

STATE OF ARKANSAS LICENSED PROFESSIONAL ENGINEER No. 13422 JOHN F. CANTABERY 3-20-16

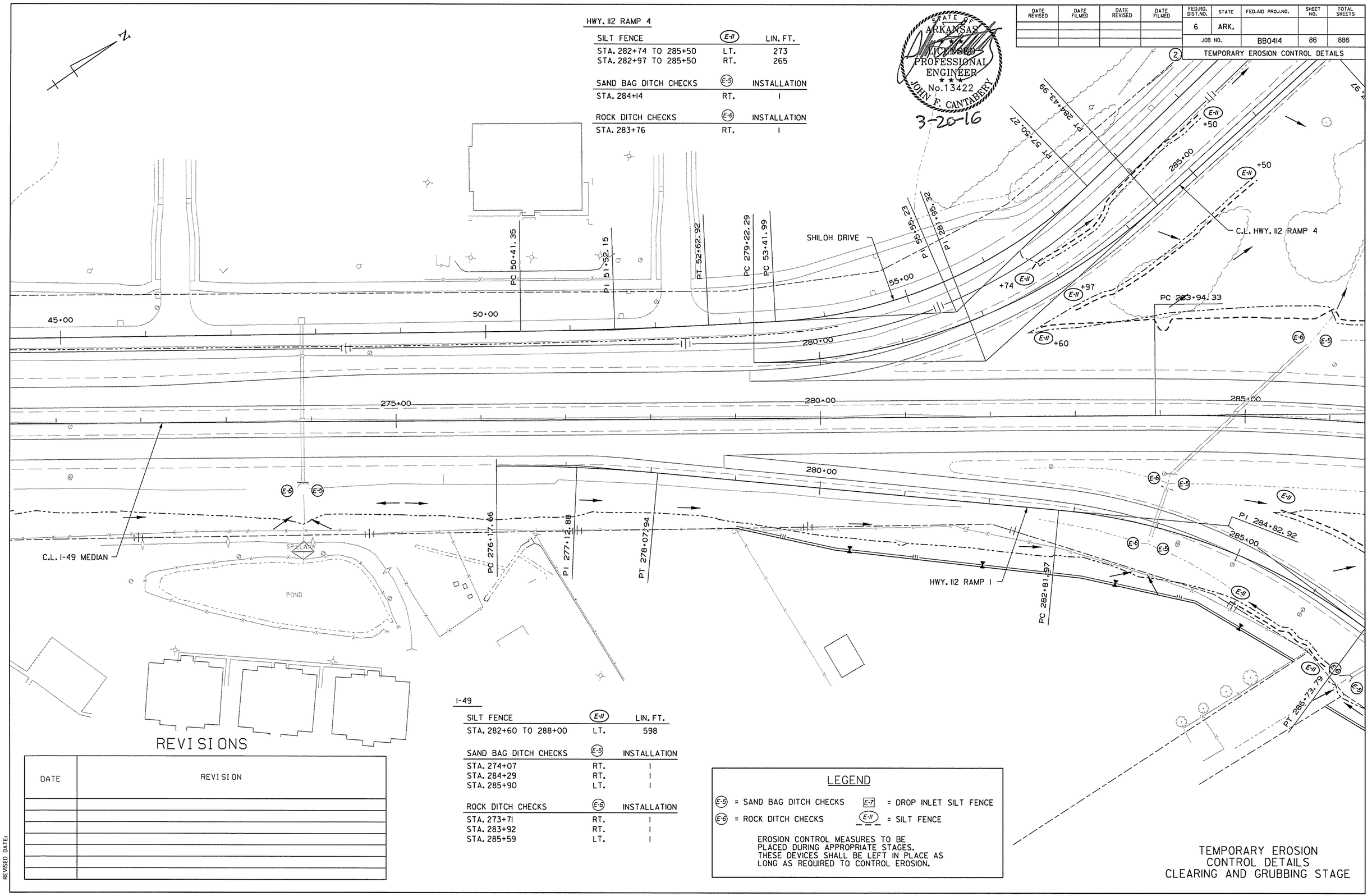

I-49

SILT FENCE	E-11	LIN. FT.
STA. 282+60 TO 288+00	LT.	598

SAND BAG DITCH CHECKS	E-5	INSTALLATION
STA. 274+07	RT.	1
STA. 284+29	RT.	1
STA. 285+90	LT.	1

ROCK DITCH CHECKS	E-6	INSTALLATION
STA. 273+71	RT.	1
STA. 283+92	RT.	1
STA. 285+59	LT.	1

LEGEND

E-5 = SAND BAG DITCH CHECKS
E-6 = ROCK DITCH CHECKS
E-7 = DROP INLET SILT FENCE
E-11 = SILT FENCE

EROSION CONTROL MEASURES TO BE PLACED DURING APPROPRIATE STAGES. THESE DEVICES SHALL BE LEFT IN PLACE AS LONG AS REQUIRED TO CONTROL EROSION.

REVISIONS

DATE	REVISION

TEMPORARY EROSION CONTROL DETAILS CLEARING AND GRUBBING STAGE

AEWin-clok 3/20/2016 11:52:27 AM
WORKSPACE: AHTD
L:\2011\101707 - I-540 Widening & Interchange Improvement\Drawings\r-BB0414_EC_MNL_02_CG.dgn
REVISED DATE:

REVISIONS

DATE	REVISION

DATE REVISED	DATE FILMED	DATE REVISED	DATE FILMED	FED.RD. DIST.NO.	STATE	FED.AID PROJ.NO.	SHEET NO.	TOTAL SHEETS
				6	ARK.			
				JOB NO.		BB0414	87	886
				(2)	TEMPORARY EROSION CONTROL DETAILS			

LEGEND

(E-5) = SAND BAG DITCH CHECKS
(E-6) = ROCK DITCH CHECKS
(E-7) = DROP INLET SILT FENCE
(E-11) = SILT FENCE

EROSION CONTROL MEASURES TO BE PLACED DURING APPROPRIATE STAGES. THESE DEVICES SHALL BE LEFT IN PLACE AS LONG AS REQUIRED TO CONTROL EROSION.

C-D ROAD

SILT FENCE	(E-11)	LIN. FT.
STA. 277+73 TO 280+81	LT.	289
STA. 285+60 TO 290+36	LT.	405
STA. 285+61 TO 286+81	RT.	156
STA. 295+05 TO 304+25	LT.	985

I-49

SAND BAG DITCH CHECKS	(E-5)	INSTALLATION
STA. 290+98	RT.	
ROCK DITCH CHECKS	(E-6)	INSTALLATION
STA. 290+54	RT.	I

HWY. 112 TO NB I-49

SILT FENCE	(E-11)	LIN. FT.
STA. 288+44 TO 292+66	LT.	401
STA. 289+67 TO 292+51	RT.	288

HWY. 112 RAMP I

SILT FENCE	(E-11)	LIN. FT.
STA. 285+15 TO 286+64	RT.	141
STA. 285+25 TO 287+33	LT.	226
STA. 287+63 TO 289+72	LT.	212
STA. 287+75 TO 290+29	RT.	256

HWY. 112 RAMP I

SAND BAG DITCH CHECKS	(E-5)	INSTALLATION
STA. 287+08	RT.	I
STA. 287+63	LT.	I
ROCK DITCH CHECKS	(E-6)	INSTALLATION
STA. 286+74	RT.	I
STA. 287+31	LT.	I

STATE OF ARKANSAS
LICENSED PROFESSIONAL ENGINEER
No. 13422
JOHN F. CANTABERRY
3-20-16

TEMPORARY EROSION CONTROL DETAILS CLEARING AND GRUBBING STAGE

AEWerclok 3/20/2016 11:52:27 AM
WORKSPACE: AHTD
L:\X20\10\7707 - I-540 Widening & Interchange Improvement\Drawings\rBB0414_EC_MNL_03.CG.dgn
REVISED DATE:

DATE REVISED	DATE FILMED	DATE REVISED	DATE FILMED	FED.RO. DIST.NO.	STATE	FED.AID PROJ.NO.	SHEET NO.	TOTAL SHEETS
				6	ARK.			
				JOB NO.		BB0414	88	886

2 TEMPORARY EROSION CONTROL DETAILS

HWY. 112

SILT FENCE	(E-11)	LIN. FT.
STA. 7+68 TO 8+12	LT.	82
STA. 9+22 TO 9+62	LT.	40
STA. 10+69 TO 10+93	LT.	24
STA. 11+29 TO 11+81	LT.	53
STA. 12+61 TO 14+24	LT.	175
STA. 15+87 TO 17+24	LT.	150
STA. 7+77 TO 9+70	RT.	202
STA. 9+91 TO 10+56	RT.	65
STA. 10+80 TO 12+28	RT.	161
STA. 12+67 TO 14+42	RT.	197
STA. 15+90 TO 18+80	RT.	278

STATE OF ARKANSAS
LICENSED PROFESSIONAL ENGINEER
No.13422
JOHN F. CANTABERY
3-20-16

N

C.L. HWY. 112 RAMP 1

C.L. HWY. 112

C.L. HWY. 112 TO NB I-49 RAMP

C.L. I-49 MEDIAN

PI 6+40.18

PT 8+92.74

PC 12+57.20

PI 17+47.75

PC 288+12.93

PT 292+42.59

PT 290+47.74

PC 294+40.16

PI 289+34.16

PC 291+68.58

290+00

295+00

5+00

10+00

20+00

+68 +12 +22 +62 +69 +93 +29 +61 +81 +24 +87 +24 +35 +90 +80 +03 +67 +42 +28 +70 +91 +56 +80 +77

LEGEND

(E-5) = SAND BAG DITCH CHECKS
(E-6) = ROCK DITCH CHECKS
[E-7] = DROP INLET SILT FENCE
(E-11) = SILT FENCE

EROSION CONTROL MEASURES TO BE PLACED DURING APPROPRIATE STAGES. THESE DEVICES SHALL BE LEFT IN PLACE AS LONG AS REQUIRED TO CONTROL EROSION.

REVISIONS

DATE	REVISION

TEMPORARY EROSION CONTROL DETAILS CLEARING AND GRUBBING STAGE

AEWierciok 3/20/2016 11:52:28 AM
WORKSPACE: AHTD
L:\20\N1017707 - I-540 Widening & Interchange Improvement\Drawings\rBB0414_EC_HWY112_01_CG.dgn
REVISED DATE:

DATE REVISED	DATE FILMED	DATE REVISED	DATE FILMED	FED.RD. DIST.NO.	STATE	FED.AID PROJ.NO.	SHEET NO.	TOTAL SHEETS
				6	ARK.			
				JOB NO.		BB0414	89	886

(2) TEMPORARY EROSION CONTROL DETAILS

REVISIONS

DATE	REVISION

STATE OF ARKANSAS
LICENSED PROFESSIONAL ENGINEER
No.13422
JOHN F. CANTABERY
3-20-16

HWY. 112

SILT FENCE	E-11	LIN. FT.
STA. 20+35 TO 21+86	LT.	172
STA. 21+02 TO 22+17	RT.	155
STA. 26+88 TO 30+73	RT.	437

HWY. 112 RAMP 4

SILT FENCE	E-11	LIN. FT.
STA. 296+50 TO 297+06	LT.	124

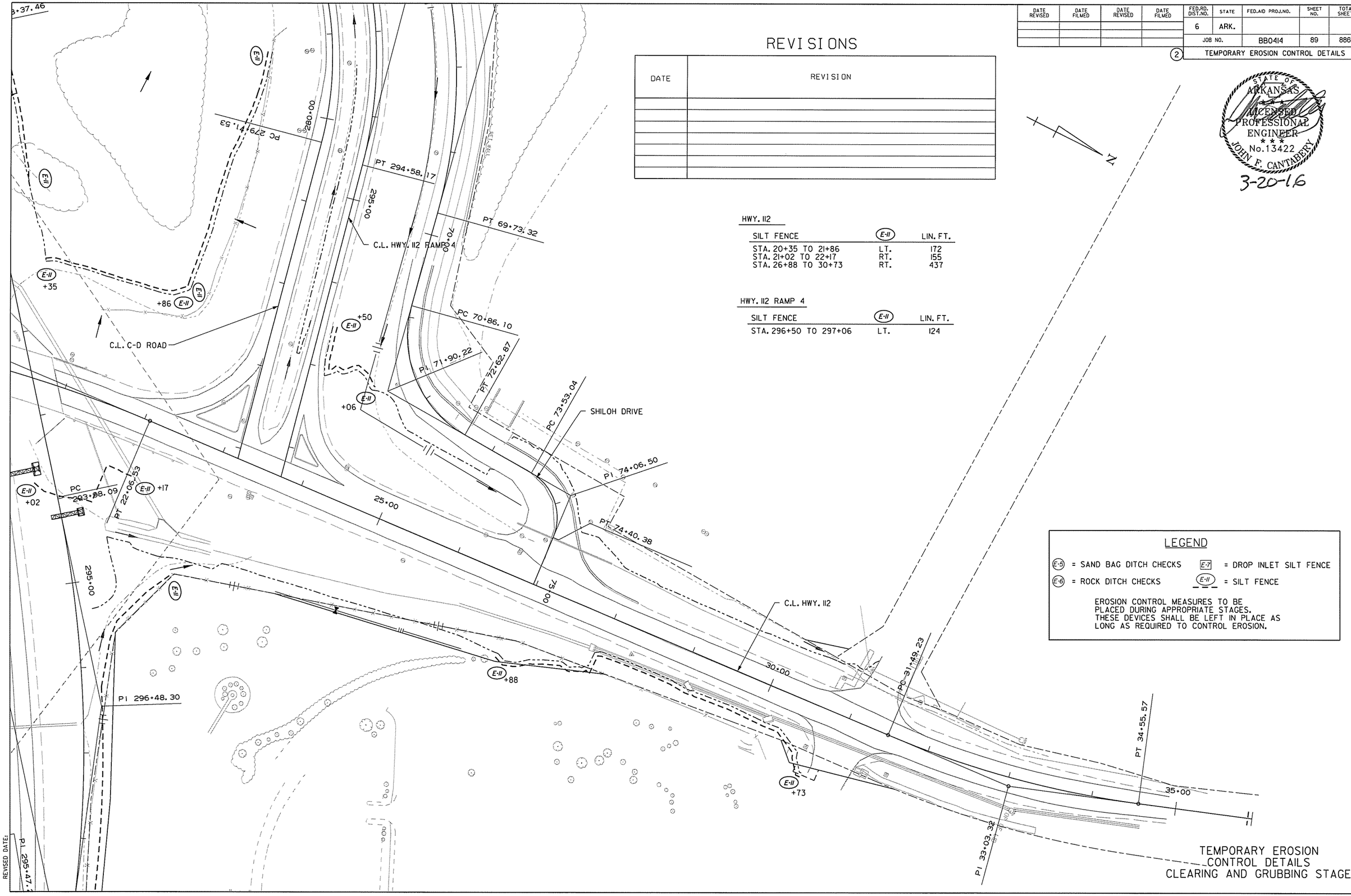

LEGEND

E-5 = SAND BAG DITCH CHECKS
E-7 = DROP INLET SILT FENCE
E-6 = ROCK DITCH CHECKS
E-11 = SILT FENCE

EROSION CONTROL MEASURES TO BE PLACED DURING APPROPRIATE STAGES. THESE DEVICES SHALL BE LEFT IN PLACE AS LONG AS REQUIRED TO CONTROL EROSION.

TEMPORARY EROSION CONTROL DETAILS
CLEARING AND GRUBBING STAGE

AEWerclok 3/20/2016 11:52:28 AM
WORKSPACE: AHTD
L:\201\101707 - I-540 Widening & Interchange Improvement\Drawings\r-BB0414_EC_HWY112_02_CG.dgn
REVISED DATE:

DATE REVISED	DATE FILMED	DATE REVISED	DATE FILMED	FED.RD. DIST.NO.	STATE	FED.AID PROJ.NO.	SHEET NO.	TOTAL SHEETS
				6	ARK.			
					JOB NO.	BB0414	90	886

(2) TEMPORARY EROSION CONTROL DETAILS

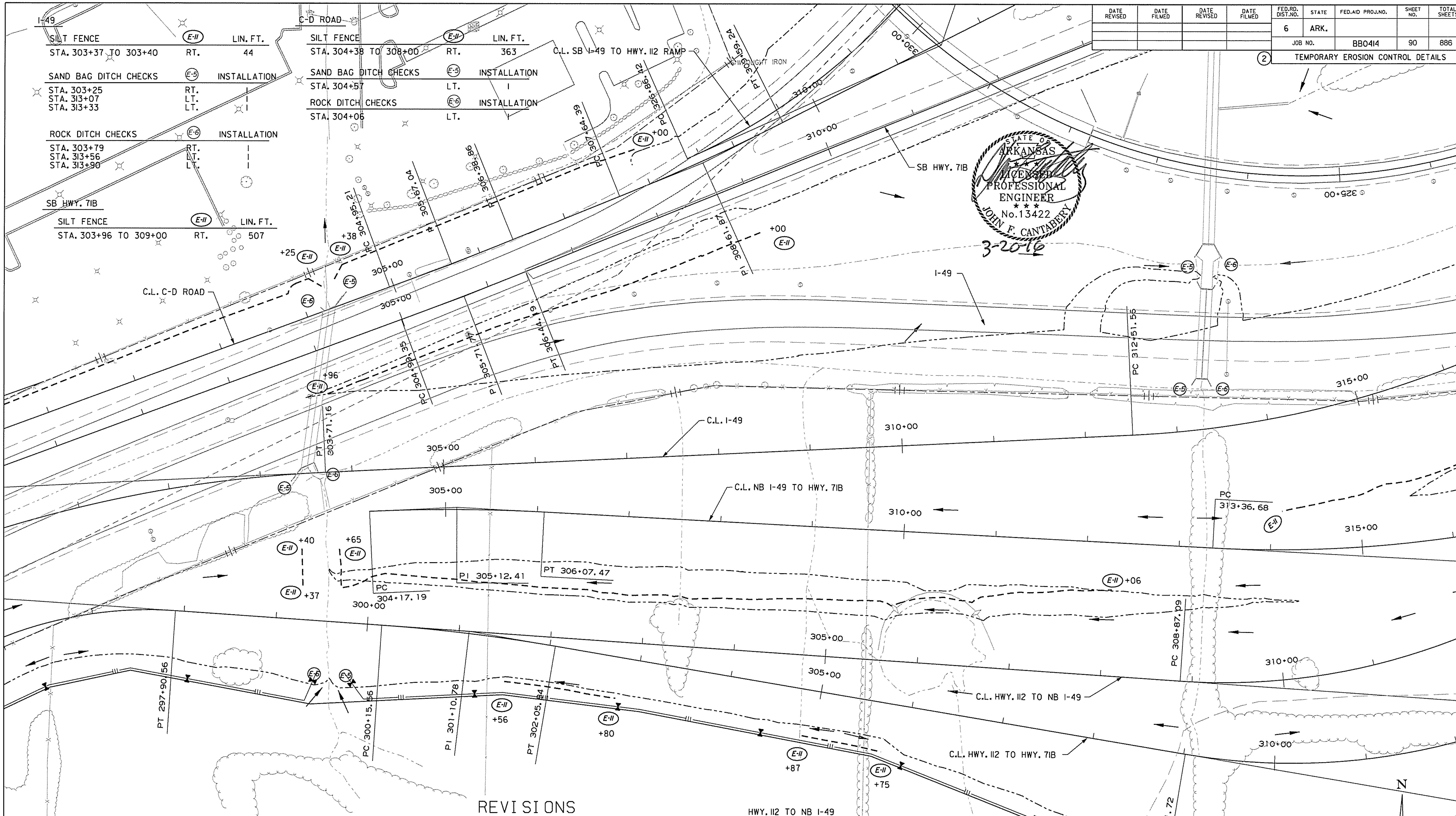

I-49

SILT FENCE (E-11)		LIN. FT.
STA. 303+37 TO 303+40	RT.	44

SAND BAG DITCH CHECKS (E-5)		INSTALLATION
STA. 303+25	RT.	1
STA. 313+07	LT.	1
STA. 313+33	LT.	1

ROCK DITCH CHECKS (E-6)		INSTALLATION
STA. 303+79	RT.	1
STA. 313+56	LT.	1
STA. 313+90	LT.	1

SB HWY. 71B

SILT FENCE (E-11)		LIN. FT.
STA. 303+96 TO 309+00	RT.	507

C-D ROAD

SILT FENCE (E-11)		LIN. FT.
STA. 304+38 TO 308+00	RT.	363

SAND BAG DITCH CHECKS (E-5)		INSTALLATION
STA. 304+57	LT.	1

ROCK DITCH CHECKS (E-6)		INSTALLATION
STA. 304+06	LT.	1

HWY. 112 TO NB I-49

SILT FENCE (E-11)		LIN. FT.
STA. 299+65 TO 308+06	LT.	892

SAND BAG DITCH CHECKS (E-5)		INSTALLATION
STA. 299+80	RT.	1

ROCK DITCH CHECKS (E-6)		INSTALLATION
STA. 299+46	RT.	1

HWY. 112 TO HWY. 71B

SILT FENCE (E-11)		LIN. FT.
STA. 301+56 TO 302+80	RT.	123
STA. 304+87 TO 305+75	RT.	88

LEGEND

(E-5) = SAND BAG DITCH CHECKS
(E-6) = ROCK DITCH CHECKS
(E-7) = DROP INLET SILT FENCE
(E-11) = SILT FENCE

EROSION CONTROL MEASURES TO BE PLACED DURING APPROPRIATE STAGES. THESE DEVICES SHALL BE LEFT IN PLACE AS LONG AS REQUIRED TO CONTROL EROSION.

REVISIONS

DATE	REVISION

TEMPORARY EROSION CONTROL DETAILS CLEARING AND GRUBBING STAGE

AEWlercick 3/20/2016 11:52:28 AM
WORKSPACE: AHTD
L:\20\140707 - I-540 Widening & Interchange Improvement\Drawings\rBB0414_EC_MNL_04_CG.dgn
REVISED DATE:

DATE REVISED	DATE FILMED	DATE REVISED	DATE FILMED	FED.RD. DIST.NO.	STATE	FED.AID PROJ.NO.	SHEET NO.	TOTAL SHEETS
				6	ARK.			
				JOB NO.		BB0414	91	886

2 TEMPORARY EROSION CONTROL DETAILS

PC 312+51.56
PI 312+33.17
PC 313+36.68
PI 313+00.40
PT 315+32.73
PT 315+20.22
PC 316+12.22
PI 315+91.90
PT 317+67.43
PI 322+46
PC 322+71.77
PI 323+41.74
PT 328+75.95

SB I-49 TO HWY. 71B
HWY. 71B TO SB I-49
HWY. 112 TO HWY. 71B
NB I-49 TO HWY. 71B
I-49

STATE OF ARKANSAS
LICENSED PROFESSIONAL ENGINEER
No. 13422
JOHN F. CANTABERY
3-20-16

REVISIONS

DATE	REVISION

HWY. 112 TO HWY. 71B

SILT FENCE	E-II	LIN. FT.
STA. 315+75 TO 319+21	RT.	349

HWY. 112 TO NB I-49

SILT FENCE	E-II	LIN. FT.
STA. 318+95 TO 321+59	RT.	290

NB I-49 TO HWY. 71B

SILT FENCE	E-II	LIN. FT.
STA. 318+88 TO 321+74	LT.	280
STA. 325+65 TO 329+22	RT.	375
STA. 325+78 TO 329+22	LT.	334

I-49

SILT FENCE	E-II	LIN. FT.
STA. 313+97 TO 318+44	RT.	493
STA. 317+19 TO 321+25	LT.	382

LEGEND

E-5 = SAND BAG DITCH CHECKS
E-6 = ROCK DITCH CHECKS
E-7 = DROP INLET SILT FENCE
E-II = SILT FENCE

EROSION CONTROL MEASURES TO BE PLACED DURING APPROPRIATE STAGES. THESE DEVICES SHALL BE LEFT IN PLACE AS LONG AS REQUIRED TO CONTROL EROSION.

TEMPORARY EROSION CONTROL DETAILS
CLEARING AND GRUBBING STAGE

AEWierciak 3/20/2016 11:52:28 AM
WORKSPACE: AHTD
L:\20IN\10I7707 - I-540 Widening & Interchange Improvement\Drawings\rBB0414_EC_MNL_05_CG.dgn
REVISED DATE:

DATE REVISED	DATE FILMED	DATE REVISED	DATE FILMED	FED.RD. DIST.NO.	STATE	FED.AID PROJ.NO.	SHEET NO.	TOTAL SHEETS
				6	ARK.			
				JOB NO.		BB0414	92	886

(2) TEMPORARY EROSION CONTROL DETAILS

STATE OF ARKANSAS
LICENSED PROFESSIONAL ENGINEER
No. 13422
JOHN F. CANTABERY
3-20-16

REVISIONS

DATE	REVISION

I-49

SILT FENCE	(E-11)	LIN. FT.
STA. 327+75 TO 347+27	LT.	1809
STA. 328+21 TO 338+13	RT.	1145

C-D ROAD

SILT FENCE	(E-11)	LIN. FT.
STA. 321+46 TO 323+42	LT.	194

HWY. 71B TO NB I-49

SAND BAG DITCH CHECKS	(E-5)	INSTALLATION
STA. 333+01	LT.	1

ROCK DITCH CHECKS	(E-6)	INSTALLATION
STA. 333+28	LT.	1

+46 (E-11) PI 321+51.46

PI 322+46.68

+42 (E-11) PI 323+41.74

PI 315+91.96

(E-11) +75

325+00

+21 (E-11)

330+00

335+00

330+00

I-49

335+00

PC 330+91.05

(E-5) (E-6)

335+00

PI 333+85.15

+13 (E-11)

PT 342+30.82

340+00

340+00

PT 341+49.46

PT 341+29.08

PI 340+38.58

PC 339+27.26

PT 336+65.60

HWY. 71B TO NB I-49

LEGEND

(E-5) = SAND BAG DITCH CHECKS
(E-7) = DROP INLET SILT FENCE
(E-6) = ROCK DITCH CHECKS
(E-11) = SILT FENCE

EROSION CONTROL MEASURES TO BE PLACED DURING APPROPRIATE STAGES. THESE DEVICES SHALL BE LEFT IN PLACE AS LONG AS REQUIRED TO CONTROL EROSION.

TEMPORARY EROSION CONTROL DETAILS CLEARING AND GRUBBING STAGE

AEWierciak 3/20/2016 11:52:29 AM
WORKSPACE: AHTD
L:\20IN\10I7707 - I-540 Widening & Interchange Improvement\Drawings\rBB0414_EC_MNL_06_CG.dgn
REVISED DATE:

DATE REVISED	DATE FILMED	DATE REVISED	DATE FILMED	FED.RD. DIST.NO.	STATE	FED.AID PROJ.NO.	SHEET NO.	TOTAL SHEETS
				6	ARK.			
				JOB NO.		BB0414	93	886

(2) TEMPORARY EROSION CONTROL DETAILS

I-49

SILT FENCE	(E-11)	LIN. FT.
STA. 349+24 TO 349+56	LT.	36
STA. 353+00 TO 356+87	LT.	415
STA. 357+49 TO 365+13	LT.	773
STA. 343+68 TO 363+85	RT.	1921

SAND BAG DITCH CHECKS	(E-5)	INSTALLATION
STA. 357+03	LT.	1

ROCK DITCH CHECKS	(E-6)	INSTALLATION
STA. 357+29	LT.	1

SB I-49 TO HWY. 112

SILT FENCE	(E-11)	LIN. FT.
STA. 345+00 TO 349+22	RT.	441
STA. 348+75 TO 352+74	LT.	383

SAND BAG DITCH CHECKS	(E-5)	INSTALLATION
STA. 348+42	RT.	1

ROCK DITCH CHECKS	(E-6)	INSTALLATION
STA. 348+68	RT.	1

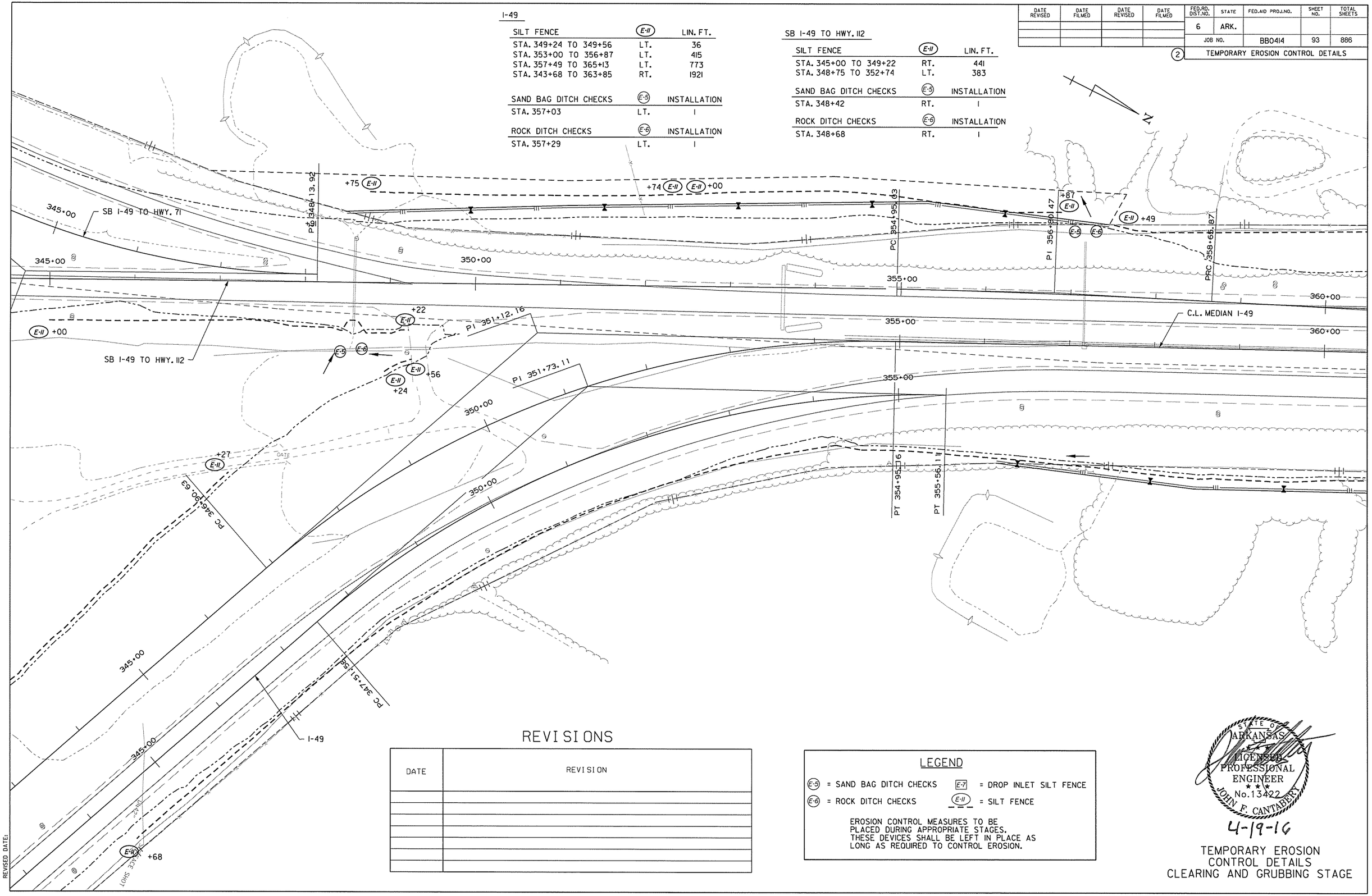

REVISIONS

DATE	REVISION

LEGEND

E-5 = SAND BAG DITCH CHECKS
E-7 = DROP INLET SILT FENCE
E-6 = ROCK DITCH CHECKS
E-11 = SILT FENCE

EROSION CONTROL MEASURES TO BE PLACED DURING APPROPRIATE STAGES. THESE DEVICES SHALL BE LEFT IN PLACE AS LONG AS REQUIRED TO CONTROL EROSION.

STATE OF ARKANSAS
LICENSED PROFESSIONAL ENGINEER
No. 13422
JOHN F. CANTABERY
4-19-16

TEMPORARY EROSION CONTROL DETAILS
CLEARING AND GRUBBING STAGE

AEWtercick 4/18/2016 11:12:03 AM
WORKSPACE: AHTD
L:\20\110\1707 - I-540 Widening & Interchange Improvement\Drawings\r-BB0414_EC_MNL_07_CG.dgn
REVISED DATE:

DATE REVISED	DATE FILMED	DATE REVISED	DATE FILMED	FED.RD. DIST.NO.	STATE	FED.AID PROJ.NO.	SHEET NO.	TOTAL SHEETS
				6	ARK.			
				JOB NO.		BB0414	94	886

(2) TEMPORARY EROSION CONTROL DETAILS

PT 362+36.47
PI 360+51.31
365+00
370+00
375+00
PC 372+51.58
C.L. MEDIAN I-49
+65 E-II
E-II +13
+32 E-II E-II +59
E-II +91
+00 E-II
+85 E-II
E-II +86
PI 381+84.61
380+00
385+00
390+00
PT 391+01.40
C.L. MEDIAN I-49

N

REVISIONS

DATE	REVISION

I-49

SILT FENCE	E-II	LIN. FT.
STA. 366+65 TO 370+32	LT.	427
STA. 370+59 TO 380+86	LT.	1054
STA. 367+91 TO 370+00	RT.	214

LEGEND

E-5 = SAND BAG DITCH CHECKS
E-6 = ROCK DITCH CHECKS
E-7 = DROP INLET SILT FENCE
E-II = SILT FENCE

EROSION CONTROL MEASURES TO BE PLACED DURING APPROPRIATE STAGES. THESE DEVICES SHALL BE LEFT IN PLACE AS LONG AS REQUIRED TO CONTROL EROSION.

STATE OF ARKANSAS
LICENSED PROFESSIONAL ENGINEER
No.13422
JOHN F. CANTABERY
4-19-16

TEMPORARY EROSION CONTROL DETAILS
CLEARING AND GRUBBING STAGE

AEWerclok 4/18/2016 11:12:03 AM
WORKSPACE: AHTD
L:\20IN\101707 - I-540 Widening & Interchange Improvement\Drawings\rBB0414_EC_MNL_08.CG.dgn
REVISED DATE:

DATE REVISED	DATE FILMED	DATE REVISED	DATE FILMED	FED.RD. DIST.NO.	STATE	FED.AID PROJ.NO.	SHEET NO.	TOTAL SHEETS
				6	ARK.			
				JOB NO.		BB0414	95	886
				(2)	TEMPORARY EROSION CONTROL DETAILS			

STATE OF ARKANSAS
LICENSED PROFESSIONAL ENGINEER
No. 13422
JOHN F. CANTABERY
3-20-16

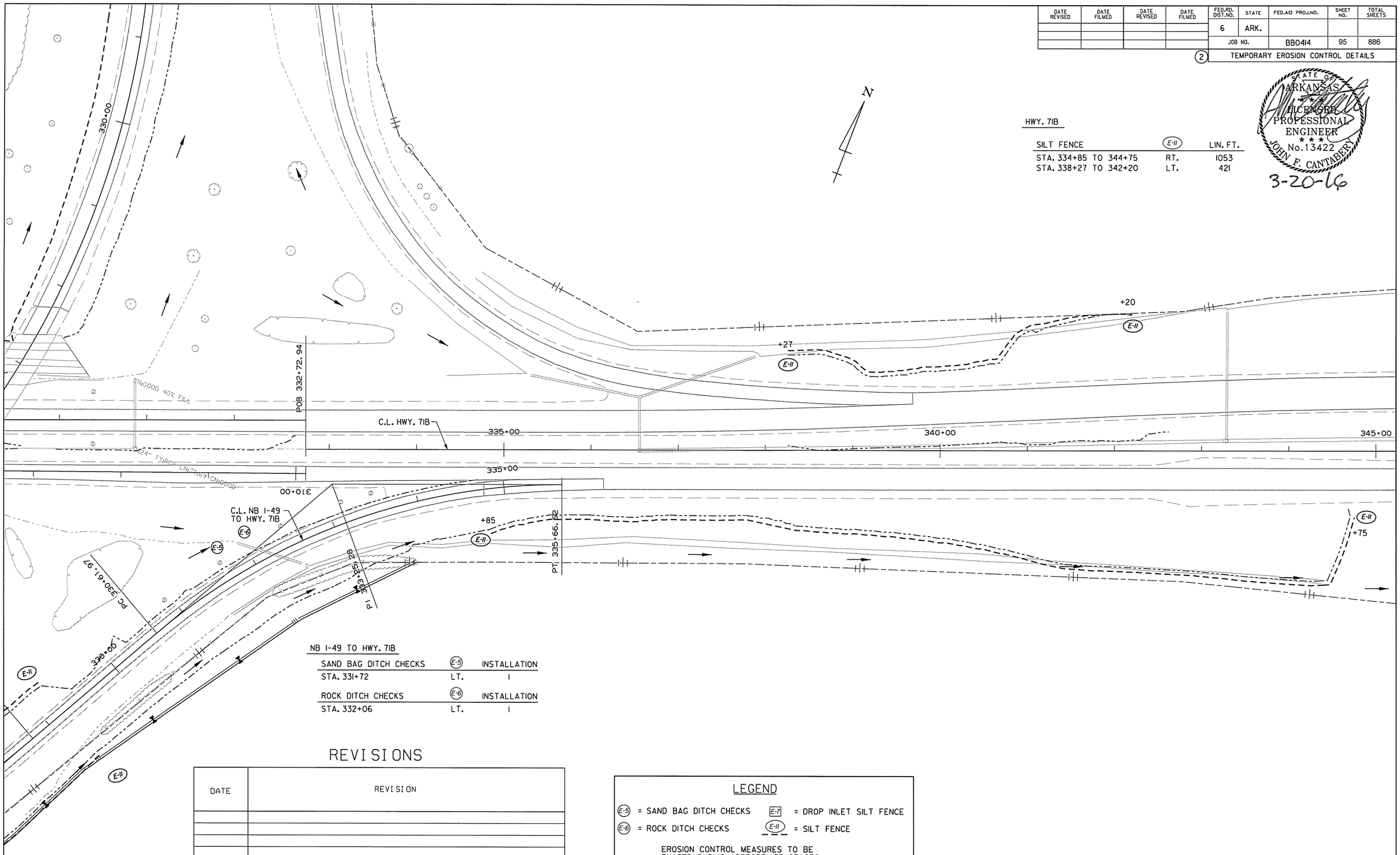

HWY. 71B

SILT FENCE	(E-11)	LIN. FT.
STA. 334+85 TO 344+75	RT.	1053
STA. 338+27 TO 342+20	LT.	421

NB I-49 TO HWY. 71B

SAND BAG DITCH CHECKS	(E-5)	INSTALLATION
STA. 331+72	LT.	1

ROCK DITCH CHECKS	(E-6)	INSTALLATION
STA. 332+06	LT.	1

REVISIONS

DATE	REVISION

LEGEND

(E-5) = SAND BAG DITCH CHECKS
(E-6) = ROCK DITCH CHECKS
[E-7] = DROP INLET SILT FENCE
(E-11) = SILT FENCE

EROSION CONTROL MEASURES TO BE PLACED DURING APPROPRIATE STAGES. THESE DEVICES SHALL BE LEFT IN PLACE AS LONG AS REQUIRED TO CONTROL EROSION.

TEMPORARY EROSION CONTROL DETAILS
CLEARING AND GRUBBING STAGE

AEWierciak 3/20/2016 11:52:29 AM
WORKSPACE: AHTD
L:\201\101707 - I-540 Widening & Interchange Improvement\Drawings\r-BB0414_EC_HWY71B_CG.dgn
REVISED DATE:

DATE REVISED	DATE FILMED	DATE REVISED	DATE FILMED	FED.RD. DIST.NO.	STATE	FED.AID PROJ.NO.	SHEET NO.	TOTAL SHEETS
				6	ARK.			
				JOB NO.		BB0414	96	886
				(2)	TEMPORARY EROSION CONTROL DETAILS			

STATE OF ARKANSAS
LICENSED PROFESSIONAL ENGINEER
No.13422
JOHN F. CANTABERY
3-20-16

SB I-49 TO HWY. 112

SILT FENCE	(E-11)	LIN. FT.
STA. 331+10 TO 332+31	RT.	137
STA. 334+32 TO 335+00	LT.	65

SAND BAG DITCH CHECKS	(E-5)	INSTALLATION
STA. 334+00	LT.	1
STA. 334+05	RT.	1

ROCK DITCH CHECKS	(E-6)	INSTALLATION
STA. 334+41	LT.	1
STA. 334+42	RT.	1

SB I-49 TO HWY. 71B

SAND BAG DITCH CHECKS	(E-5)	INSTALLATION
STA. 335+11	RT.	1

ROCK DITCH CHECKS	(E-6)	INSTALLATION
STA. 335+51	RT.	1

SB HWY. 71B

SAND BAG DITCH CHECKS	(E-5)	INSTALLATION
STA. 314+54	LT.	1

ROCK DITCH CHECKS	(E-6)	INSTALLATION
STA. 315+20	LT.	1

C-D ROAD

SILT FENCE	(E-11)	LIN. FT.
STA. 312+85 TO 314+90	LT.	205

REVISIONS

DATE	REVISION

LEGEND

(E-5) = SAND BAG DITCH CHECKS
(E-6) = ROCK DITCH CHECKS
(E-7) = DROP INLET SILT FENCE
(E-11) = SILT FENCE

EROSION CONTROL MEASURES TO BE PLACED DURING APPROPRIATE STAGES. THESE DEVICES SHALL BE LEFT IN PLACE AS LONG AS REQUIRED TO CONTROL EROSION.

TEMPORARY EROSION CONTROL DETAILS
CLEARING AND GRUBBING STAGE

AEWtercIok 3/20/2016 11:52:30 AM
WORKSPACE: AHTD
L:\20\1\01707 - I-540 Widening & Interchange Improvement\Drawings\r-BB0414_EC_SB49RAMP_01_CG.dgn
REVISED DATE:

DATE REVISED	DATE FILMED	DATE REVISED	DATE FILMED	FED.RD. DIST.NO.	STATE	FED.AID PROJ.NO.	SHEET NO.	TOTAL SHEETS
				6	ARK.			
				JOB NO.		BB0414	97	886

(2) TEMPORARY EROSION CONTROL DETAILS

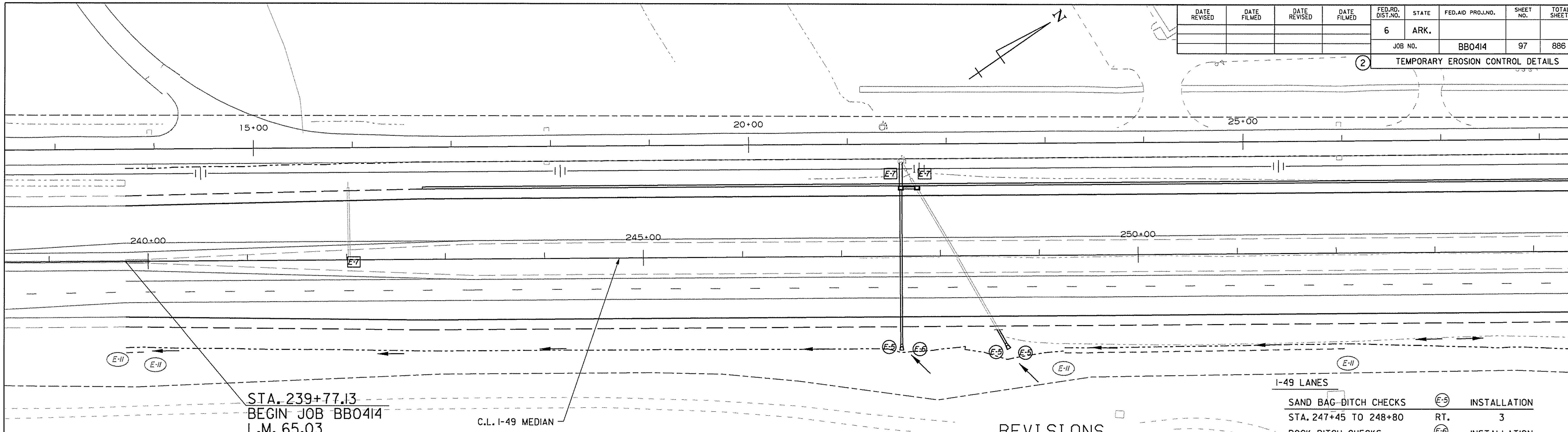

I-49 LANES

SILT FENCE	(E-11)	LIN. FT.
STA. 239+77 TO 239+98	RT.	RETAIN
STA. 249+25 TO 252+09	RT.	RETAIN

LEGEND

(E-5) = SAND BAG DITCH CHECKS
[E-7] = DROP INLET SILT FENCE
(E-6) = ROCK DITCH CHECKS
(E-11) = SILT FENCE

EROSION CONTROL MEASURES TO BE PLACED DURING APPROPRIATE STAGES. THESE DEVICES SHALL BE LEFT IN PLACE AS LONG AS REQUIRED TO CONTROL EROSION.

REVISIONS

DATE	REVISION

I-49 LANES

SAND BAG DITCH CHECKS	(E-5)	INSTALLATION
STA. 247+45 TO 248+80	RT.	3

ROCK DITCH CHECKS	(E-6)	INSTALLATION
STA. 247+45 TO 248+80	RT.	1

DROP INLET SILT FENCE	[E-7]	LIN. FT.
STA. 242+03	CT.	20
STA. 247+60	LT.	20
STA. 247+77	LT.	20

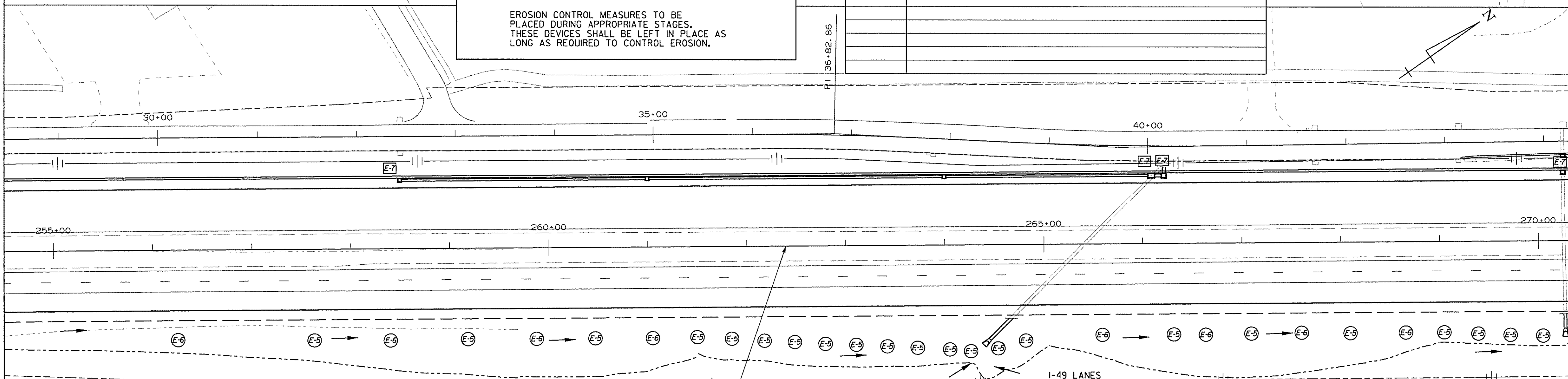

I-49 LANES

SAND BAG DITCH CHECKS	(E-5)	INSTALLATION
STA. 256+22 TO 270+44	RT.	23

ROCK DITCH CHECKS	(E-6)	INSTALLATION
STA. 256+22 TO 270+44	RT.	8

DROP INLET SILT FENCE	[E-7]	LIN. FT.
STA. 258+50	LT.	20
STA. 266+10	LT.	20
STA. 266+22	LT.	20
STA. 270+25	LT.	20

STATE OF ARKANSAS
LICENSED PROFESSIONAL ENGINEER
★ ★ ★
No. 13422
JOHN F. CANTABERY
3-20-16

TEMPORARY EROSION
CONTROL DETAILS
STAGE I

AEWierciak 3/20/2016 11:52:30 AM
WORKSPACE: AHTD
L:\2011\1017707 - I-540 Widening & Interchange Improvement\Drawings\rBB0414_EC_MNL_01_STG1.dgn
REVISED DATE:

DATE REVISED	DATE FILMED	DATE REVISED	DATE FILMED	FED.RD. DIST.NO.	STATE	FED.AID PROJ.NO.	SHEET NO.	TOTAL SHEETS
				6	ARK.			
				JOB NO.		BB0414	98	886

(2) TEMPORARY EROSION CONTROL DETAILS

STATE OF ARKANSAS
LICENSED PROFESSIONAL ENGINEER
JOHN F. CANTABERY
No. 13422
3-20-16

LEGEND

(E-5) = SAND BAG DITCH CHECKS
(E-6) = ROCK DITCH CHECKS
[E-7] = DROP INLET SILT FENCE
(E-11) = SILT FENCE

EROSION CONTROL MEASURES TO BE PLACED DURING APPROPRIATE STAGES. THESE DEVICES SHALL BE LEFT IN PLACE AS LONG AS REQUIRED TO CONTROL EROSION.

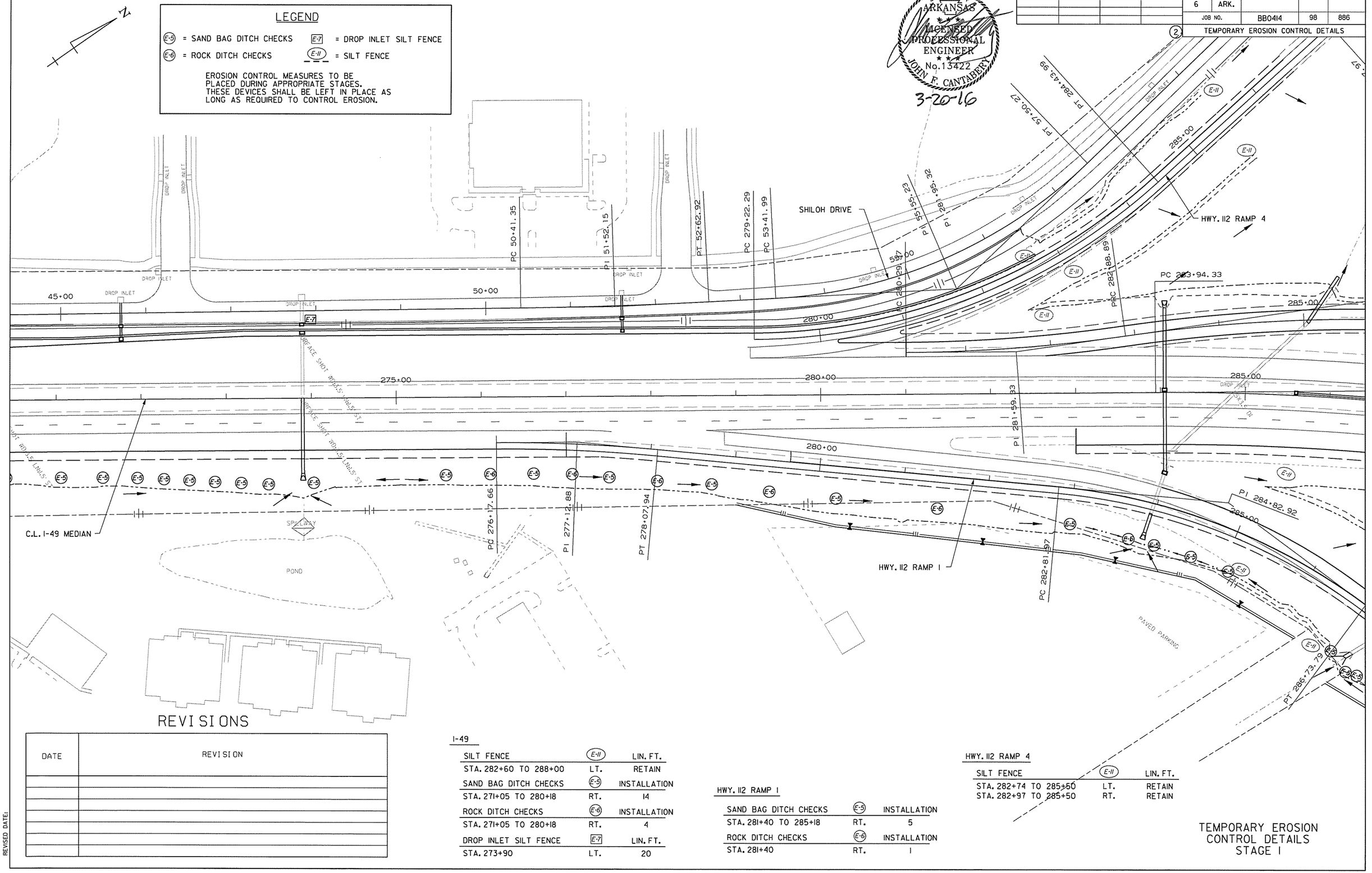

REVISIONS

DATE	REVISION

I-49

SILT FENCE	(E-11)	LIN. FT.
STA. 282+60 TO 288+00	LT.	RETAIN
SAND BAG DITCH CHECKS	(E-5)	INSTALLATION
STA. 271+05 TO 280+18	RT.	14
ROCK DITCH CHECKS	(E-6)	INSTALLATION
STA. 271+05 TO 280+18	RT.	4
DROP INLET SILT FENCE	[E-7]	LIN. FT.
STA. 273+90	LT.	20

HWY. 112 RAMP 1

SAND BAG DITCH CHECKS	(E-5)	INSTALLATION
STA. 281+40 TO 285+18	RT.	5
ROCK DITCH CHECKS	(E-6)	INSTALLATION
STA. 281+40	RT.	1

HWY. 112 RAMP 4

SILT FENCE	(E-11)	LIN. FT.
STA. 282+74 TO 285+50	LT.	RETAIN
STA. 282+97 TO 285+50	RT.	RETAIN

TEMPORARY EROSION CONTROL DETAILS STAGE 1

AEWierciak 3/20/2016 11:52:30 AM
WORKSPACE: AHTD
L:\2016\160707 - I-540 Widening & Interchange Improvement\Drawings\rBB0414_EC_MNL_02_STG1.dgn
REVISED DATE:

REVISIONS

DATE	REVISION

DATE REVISED	DATE FILMED	DATE REVISED	DATE FILMED	FED.RD. DIST.NO.	STATE	FED.AID PROJ.NO.	SHEET NO.	TOTAL SHEETS
				6	ARK.			
				JOB NO.		BB0414	99	886

TEMPORARY EROSION CONTROL DETAILS

I-49

SAND BAG DITCH CHECKS	E-5	INSTALLATION
STA. 296+75	RT.	1

ROCK DITCH CHECKS	E-6	INSTALLATION
STA. 297+13	RT.	1

C-D ROAD

SILT FENCE	E-11	LIN. FT.
STA. 277+73 TO 280+81	LT.	RETAIN
STA. 285+60 TO 290+36	LT.	RETAIN
STA. 285+61 TO 286+81	RT.	RETAIN
STA. 295+05 TO 304+25	LT.	RETAIN

DROP INLET SILT FENCE	E-7	LIN. FT.
STA. 291+58	LT.	20
STA. 294+52	RT.	20
STA. 296+66	RT.	20

LEGEND

E-5 = SAND BAG DITCH CHECKS
E-6 = ROCK DITCH CHECKS
E-7 = DROP INLET SILT FENCE
E-11 = SILT FENCE

EROSION CONTROL MEASURES TO BE PLACED DURING APPROPRIATE STAGES. THESE DEVICES SHALL BE LEFT IN PLACE AS LONG AS REQUIRED TO CONTROL EROSION.

PC 287+17.97
PI 287+06.31
IPT 288+83.21
PT 291+10.81
C-D ROAD
290+00
PI 288+21.59
285+00
290+00
20+00
PAVED PARKING
DROP INLET
SURFACE SHOT WD=3.5'
RT 22+06.53
C.L. I-49 MEDIAN
PI 295+47.22
295+00
PI 284+82.92
285+00
PI 17+47.75
PT 292+42.59
SEE HWY. 112 EROSION CONTROL SHEETS FOR HWY. 112 DEVICES
HWY. 112
PC 288+12.93
PT 290+47.74
290+00
PC 291+66.56
PT 297+90.56
HWY. 112 TO NB I-49
PI 289+34.18
5+00
PT 286+73.79
HWY. 112 RAMP I

HWY. 112 RAMP I

SILT FENCE	E-11	LIN. FT.
STA. 285+15 TO 286+64	RT.	RETAIN
STA. 285+25 TO 287+33	LT.	RETAIN
STA. 287+63 TO 289+72	LT.	RETAIN
STA. 287+75 TO 290+29	RT.	RETAIN

SAND BAG DITCH CHECKS	E-5	INSTALLATION
STA. 286+70 TO 287+63	RT.	5

HWY. 112 TO NB I-49

SILT FENCE	E-11	LIN. FT.
STA. 288+44 TO 292+66	LT.	RETAIN
STA. 289+67 TO 292+51	RT.	RETAIN

SAND BAG DITCH CHECKS	E-5	INSTALLATION
STA. 293+30 TO 295+63	RT.	4

ROCK DITCH CHECKS	E-6	INSTALLATION
STA. 293+30 TO 295+63	RT.	2

STATE OF ARKANSAS
LICENSED PROFESSIONAL ENGINEER
No. 13422
JOHN F. CANTABERY
3-20-16

TEMPORARY EROSION CONTROL DETAILS STAGE 1

AEWierclok 3/20/2016 11:52:30 AM
WORKSPACE: AHTD
L:\201\101707 - I-540 Widening & Interchange Improvement\Drawings\rBB0414_EC_MNL_03_STGI.dgn
REVISED DATE:

HWY. 112

SILT FENCE	E-11	LIN. FT.
STA. 7+68 TO 8+12	LT.	RETAIN
STA. 9+22 TO 9+62	LT.	RETAIN
STA. 10+69 TO 10+93	LT.	RETAIN
STA. 11+29 TO 11+81	LT.	RETAIN
STA. 12+61 TO 14+24	LT.	RETAIN
STA. 15+87 TO 17+24	LT.	RETAIN
STA. 7+77 TO 9+70	RT.	RETAIN
STA. 9+91 TO 10+56	RT.	RETAIN
STA. 10+80 TO 12+28	RT.	RETAIN
STA. 12+67 TO 14+42	RT.	RETAIN
STA. 15+90 TO 18+80	RT.	RETAIN

DROP INLET SILT FENCE	E-7	LIN. FT.
STA. 8+20	LT.	20
STA. 9+75	LT.	20

STATE OF ARKANSAS
LICENSED PROFESSIONAL ENGINEER
No. 13422
JOHN F. CANTABERY
3-2016

DATE REVISED	DATE FILMED	DATE REVISED	DATE FILMED	FED.RD. DIST.NO.	STATE	FED.AID PROJ.NO.	SHEET NO.	TOTAL SHEETS
				6	ARK.			
				JOB NO.		BB0414	100	886

2 TEMPORARY EROSION CONTROL DETAILS

N

HWY. 112 RAMP 1

HWY. 112

PAVED PARKING

PI 17+47.75

290+00

5+00

PT 288+83.21

PT 291+

PC 288+12.93

PT 292+42.59

PI 8+92.74

E-7 10+00

PC 12+57.90

PI 6+40.48

PI 289+34.18

PT 290+47.74

C.L. I-49 MEDIAN

HWY. 112 TO NB I-49 RAMP

PC 291+68.54

TEMPORARY EROSION CONTROL DETAILS STAGE I

LEGEND

E-5 = SAND BAG DITCH CHECKS
E-6 = ROCK DITCH CHECKS
E-7 = DROP INLET SILT FENCE
E-11 = SILT FENCE

EROSION CONTROL MEASURES TO BE PLACED DURING APPROPRIATE STAGES. THESE DEVICES SHALL BE LEFT IN PLACE AS LONG AS REQUIRED TO CONTROL EROSION.

REVISIONS

DATE	REVISION

AEWierciok 3/20/2016 11:52:31 AM
WORKSPACE: AHTD
L:\20II\II0I7I07 - I-540 Widening & Interchange Improvement\Drawings\rBB0414_EC_HWYII2_0I_STGI.dgn
REVISED DATE:

DATE REVISED	DATE FILMED	DATE REVISED	DATE FILMED	FED.RD. DIST.NO.	STATE	FED.AID PROJ.NO.	SHEET NO.	TOTAL SHEETS
				6	ARK.			
				JOB NO.		BB0414	101	886
				(2)	TEMPORARY EROSION CONTROL DETAILS			

REVISIONS

DATE	REVISION

STATE OF ARKANSAS
LICENSED PROFESSIONAL ENGINEER
No.13422
JOHN F. CANTABERY
3-20-16

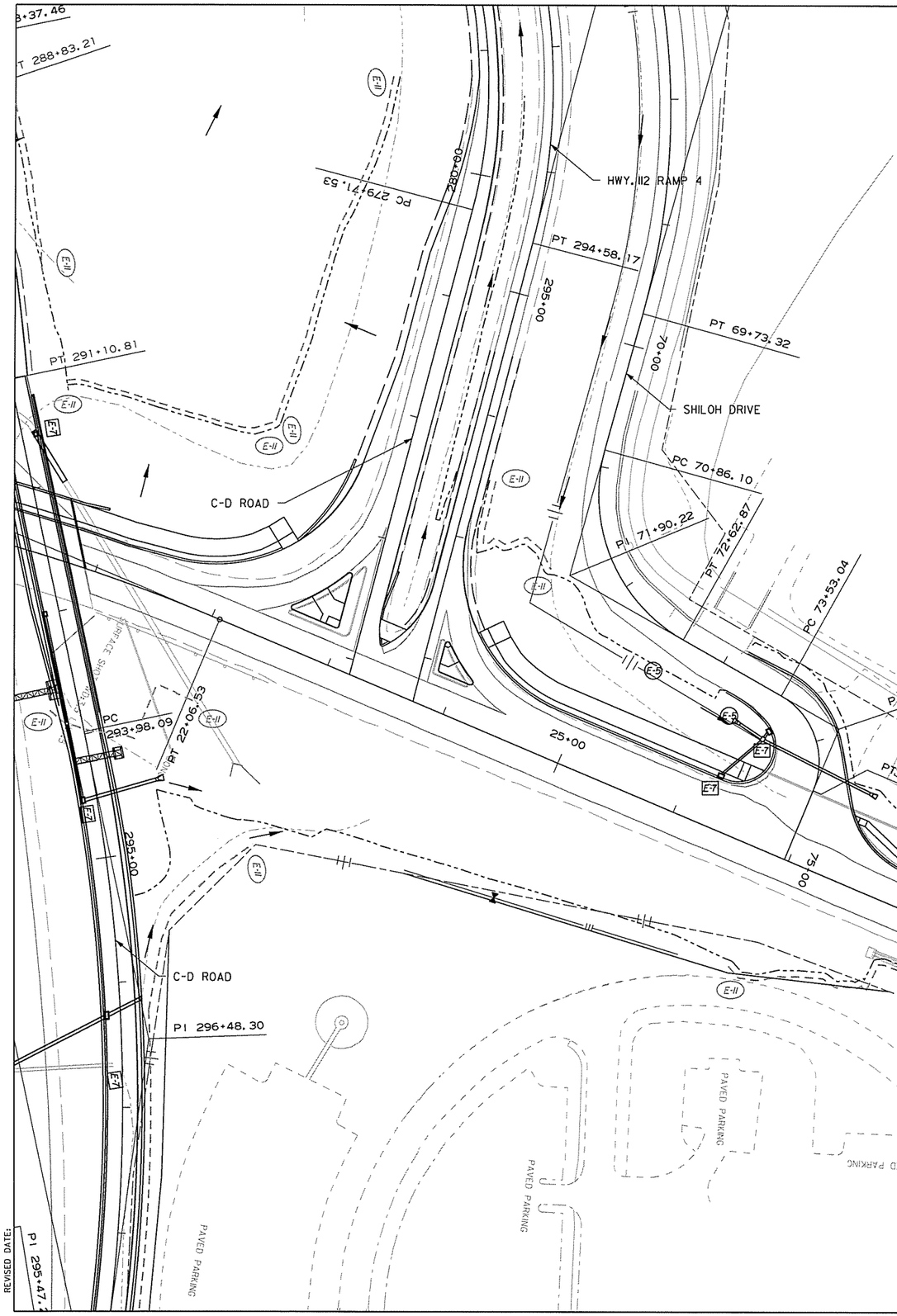

LEGEND

E-5 = SAND BAG DITCH CHECKS
E-6 = ROCK DITCH CHECKS
E-7 = DROP INLET SILT FENCE
E-11 = SILT FENCE

EROSION CONTROL MEASURES TO BE PLACED DURING APPROPRIATE STAGES. THESE DEVICES SHALL BE LEFT IN PLACE AS LONG AS REQUIRED TO CONTROL EROSION.

HWY. 112

SILT FENCE	E-11	LIN. FT.
STA. 20+35 TO 21+86	LT.	RETAIN
STA. 21+02 TO 22+17	RT.	RETAIN
STA. 26+88 TO 30+73	RT.	RETAIN

SAND BAG DITCH CHECKS	E-5	INSTALLATION
STA. 25+42 TO 30+55	LT.	3

DROP INLET SILT FENCE	E-7	LIN. FT.
STA. 26+24	LT.	20
STA. 30+77	LT.	20

HWY. 112 RAMP 4

SILT FENCE	E-11	LIN. FT.
STA. 296+50 TO 297+06	LT.	RETAIN

TEMPORARY EROSION CONTROL DETAILS STAGE 1

AEWierciak 3/20/2016 11:52:36 AM
WORKSPACE: AHTD
L:\20I\NI0I707 - I-540 Widening & Interchange Improvement\Drawings\rBB0414_EC_HWY112_02_STG1.dgn
REVISED DATE:

REVISIONS

DATE	REVISION

DATE REVISED	DATE FILMED	DATE REVISED	DATE FILMED

FED.RD. DIST.NO.	STATE	FED.AID PROJ.NO.	SHEET NO.	TOTAL SHEETS
6	ARK.			
JOB NO.		BB0414	102	886

(2) TEMPORARY EROSION CONTROL DETAILS

C-D ROAD

SILT FENCE	(E-11)	LIN. FT.
STA. 304+38 TO 308+00	RT.	RETAIN
SAND BAG DITCH CHECKS	**(E-5)**	**INSTALLATION**
STA. 304+57	LT.	RETAIN
STA. 308+10	LT.	1
ROCK DITCH CHECKS	**(E-6)**	**INSTALLATION**
STA. 304+06	LT.	RETAIN

I-49

SILT FENCE	(E-11)	LIN. FT.
STA. 303+37 TO 303+40	RT.	RETAIN
DROP INLET SILT FENCE	**(E-7)**	**LIN. FT.**
STA. 310+00	MEDIAN	20
STA. 310+50	MEDIAN	20
STA. 311+00	MEDIAN	20
STA. 311+50	MEDIAN	20
STA. 313+17	MEDIAN	20

I-49

SAND BAG DITCH CHECKS	(E-5)	INSTALLATION
STA. 313+10	LT.	1
STA. 315+17	RT.	1
ROCK DITCH CHECKS	**(E-6)**	**INSTALLATION**
STA. 313+46	LT.	1

HWY. 112 TO HWY. 71B

SILT FENCE	(E-11)	LIN. FT.
STA. 301+56 TO 302+80	RT.	RETAIN
STA. 304+87 TO 305+75	RT.	RETAIN
DROP INLET SILT FENCE	**(E-7)**	**LIN. FT.**
STA. 305+00	LT.	20
STA. 306+00	LT.	20
STA. 311+05	LT.	20
SAND BAG DITCH CHECKS	**(E-5)**	**INSTALLATION**
STA. 300+16 TO 310+84	RT.	13
ROCK DITCH CHECKS	**(E-6)**	**INSTALLATION**
STA. 300+16 TO 310+84	RT.	1

HWY. 112 TO NB I-49

SILT FENCE	(E-11)	LIN. FT.
STA. 299+65 TO 308+06	LT.	RETAIN
SAND BAG DITCH CHECKS	**(E-5)**	**INSTALLATION**
STA. 298+57 TO 299+83	LT.	2
STA. 298+57 TO 299+83	RT.	3

NB I-49 TO HWY. 71B

DROP INLET SILT FENCE	(E-7)	LIN. FT.
STA. 309+75	LT.	20
STA. 312+88	LT.	20
STA. 314+00	LT.	20
STA. 315+03	RT.	20
SAND BAG DITCH CHECKS	**(E-5)**	**INSTALLATION**
STA. 313+17	LT.	1
ROCK DITCH CHECKS	**(E-6)**	**INSTALLATION**
STA. 308+67	RT.	1
STA. 314+13	LT.	1

SB HWY. 71B

SILT FENCE	(E-11)	LIN. FT.
STA. 303+96 TO 309+00	RT.	RETAIN

LEGEND

(E-5) = SAND BAG DITCH CHECKS (E-7) = DROP INLET SILT FENCE

(E-6) = ROCK DITCH CHECKS (E-11) = SILT FENCE

EROSION CONTROL MEASURES TO BE PLACED DURING APPROPRIATE STAGES. THESE DEVICES SHALL BE LEFT IN PLACE AS LONG AS REQUIRED TO CONTROL EROSION.

I-49

SAND BAG DITCH CHECKS	(E-5)	INSTALLATION
STA. 303+25	RT.	RETAIN
STA. 313+33	LT.	RETAIN
ROCK DITCH CHECKS	**(E-6)**	**INSTALLATION**
STA. 303+79	RT.	RETAIN
STA. 313+90	LT.	RETAIN

STATE OF ARKANSAS
LICENSED PROFESSIONAL ENGINEER
No. 13422
JOHN F. CANTABERY
3-20-16

TEMPORARY EROSION CONTROL DETAILS STAGE 1

N

AEWierdak 3/20/2016 11:52:36 AM
WORKSPACE: AHTD
L:\20\1\0\0177\07 - I-540 Widening & Interchange Improvement\Drawings\rBB0414_EC_MNL_04_ST01.dgn
REVISED DATE:

DATE REVISED	DATE FILMED	DATE REVISED	DATE FILMED	FED.RD. DIST.NO.	STATE	FED.AID PROJ.NO.	SHEET NO.	TOTAL SHEETS
				6	ARK.			
				JOB NO.		BB0414	103	886

2 TEMPORARY EROSION CONTROL DETAILS

HWY. 112 TO HWY. 71B

SILT FENCE	E-11	LIN. FT.
STA. 315+75 TO 319+21	RT.	RETAIN
SAND BAG DITCH CHECKS	E-5	INSTALLATION
STA. 312+32 TO 320+93	RT.	2
ROCK DITCH CHECKS	E-6	INSTALLATION
STA. 312+32 TO 320+93	RT.	1

HWY. 112 TO NB I-49

SILT FENCE	E-11	LIN. FT.
STA. 318+95 TO 321+59	RT.	RETAIN

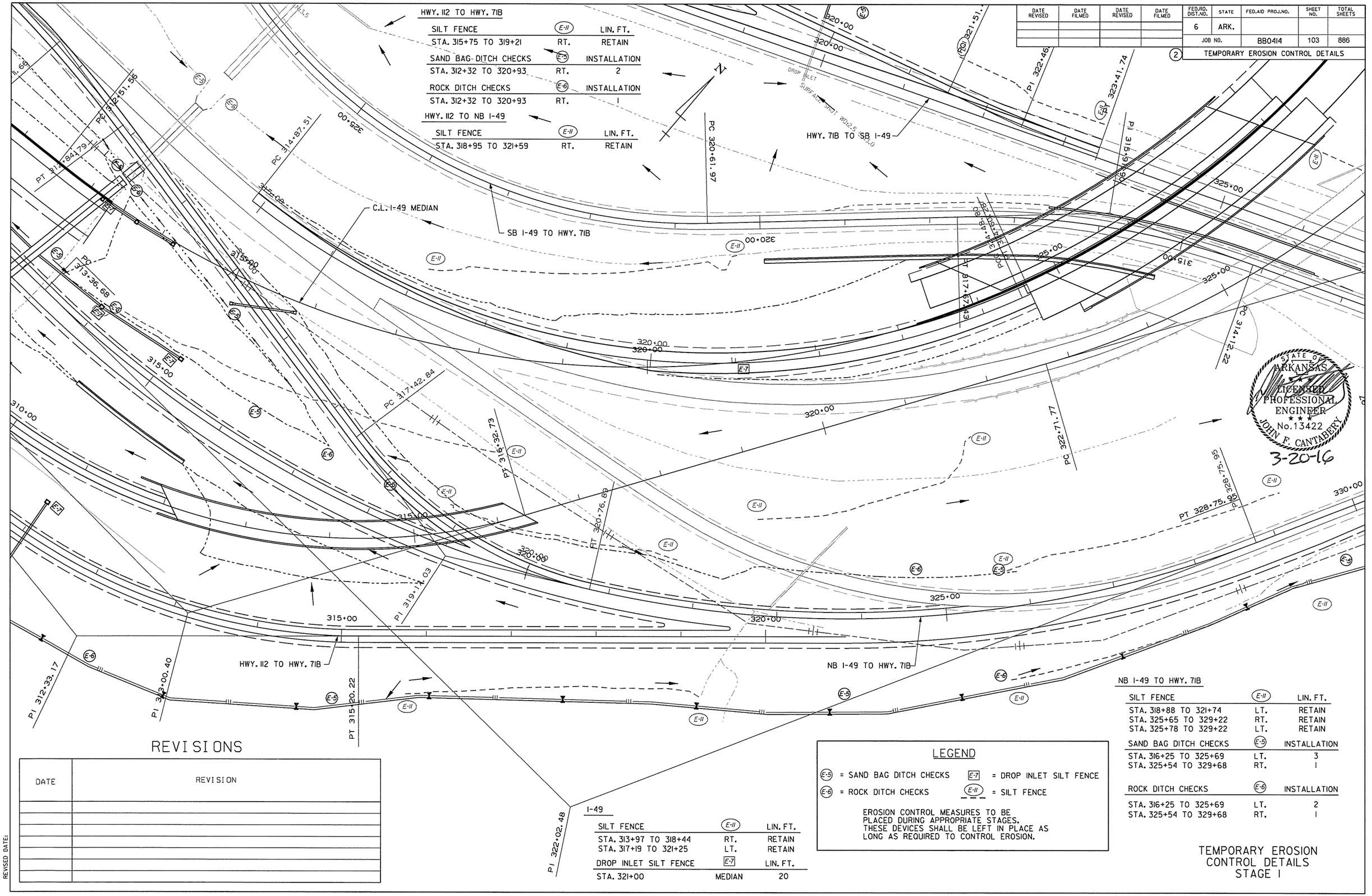

NB I-49 TO HWY. 71B

SILT FENCE	E-11	LIN. FT.
STA. 318+88 TO 321+74	LT.	RETAIN
STA. 325+65 TO 329+22	RT.	RETAIN
STA. 325+78 TO 329+22	LT.	RETAIN
SAND BAG DITCH CHECKS	E-5	INSTALLATION
STA. 316+25 TO 325+69	LT.	3
STA. 325+54 TO 329+68	RT.	1
ROCK DITCH CHECKS	E-6	INSTALLATION
STA. 316+25 TO 325+69	LT.	2
STA. 325+54 TO 329+68	RT.	1

I-49

SILT FENCE	E-11	LIN. FT.
STA. 313+97 TO 318+44	RT.	RETAIN
STA. 317+19 TO 321+25	LT.	RETAIN
DROP INLET SILT FENCE	E-7	LIN. FT.
STA. 321+00	MEDIAN	20

LEGEND

E-5 = SAND BAG DITCH CHECKS
E-6 = ROCK DITCH CHECKS
E-7 = DROP INLET SILT FENCE
E-11 = SILT FENCE

EROSION CONTROL MEASURES TO BE PLACED DURING APPROPRIATE STAGES. THESE DEVICES SHALL BE LEFT IN PLACE AS LONG AS REQUIRED TO CONTROL EROSION.

REVISIONS

DATE	REVISION

STATE OF ARKANSAS
LICENSED PROFESSIONAL ENGINEER
No.13422
JOHN F. CANTABERY
3-20-16

TEMPORARY EROSION CONTROL DETAILS STAGE 1

AEWierdak 3/20/2016 11:52:36 AM
WORKSPACE: AHTD
L:\20IV\I0I7I07 - I-540 Widening & Interchange Improvement\Drawings\rBB0414_EC_MNL_05_STGI.dgn
REVISED DATE:

DATE REVISED	DATE FILMED	DATE REVISED	DATE FILMED	FED.RD. DIST.NO.	STATE	FED.AID PROJ.NO.	SHEET NO.	TOTAL SHEETS
				6	ARK.			
				JOB NO.		BB0414	104	886
				(2)	TEMPORARY EROSION CONTROL DETAILS			

REVISIONS

DATE	REVISION

I-49

SILT FENCE	(E-11)	LIN. FT.
STA. 327+75 TO 347+27	LT.	RETAIN
STA. 328+21 TO 338+13	RT.	RETAIN

DROP INLET SILT FENCE	[E-7]	LIN. FT.
STA. 331+00	MEDIAN	20
STA. 341+10	MEDIAN	20
STA. 341+17	MEDIAN	20
STA. 341+64	MEDIAN	20
STA. 342+74	MEDIAN	20
STA. 343+21	MEDIAN	20

C-D ROAD

SILT FENCE	(E-11)	LIN. FT.
STA. 321+46 TO 323+42	LT.	RETAIN

HWY. 71B TO NB I-49

SAND BAG DITCH CHECKS	(E-5)	INSTALLATION
STA. 333+01	LT.	RETAIN

ROCK DITCH CHECKS	(E-6)	INSTALLATION
STA. 333+28	LT.	RETAIN

STATE OF ARKANSAS
LICENSED PROFESSIONAL ENGINEER
No. 13422
JOHN F. CANTABERY
3-20-16

POT 321+51.46
PI 322+46.68
PT 323+41.74
PI 315+91.96
325+00
330+00
I-49
E-7
335+00
330+00
HWY. 112 TO NB I-49
335+00
PC 330+91.05
335+00
PI 333+85.15
E-6
E-6
PT 336+65.60
HWY. 71B TO NB I-49
PT 342+30.82
E-7
E-7
E-7
E-6
97
341
PT
340+00
340+00
340+00
340+00
PC 339+17.62
PI 340+38.58
PI 340+33.26
PT 341+29.08
PT 341+49.46
PC 339+27.26
E-11

LEGEND

(E-5) = SAND BAG DITCH CHECKS
[E-7] = DROP INLET SILT FENCE
(E-6) = ROCK DITCH CHECKS
(E-11) = SILT FENCE

EROSION CONTROL MEASURES TO BE PLACED DURING APPROPRIATE STAGES. THESE DEVICES SHALL BE LEFT IN PLACE AS LONG AS REQUIRED TO CONTROL EROSION.

TEMPORARY EROSION CONTROL DETAILS STAGE I

AEWierciok 3/20/2016 11:52:37 AM
WORKSPACE: AHTD
L:\2014\10077107 - I-540 Widening & Interchange Improvement\Drawings\r-BB0414_EC_MNL_06.STGI.dgn
REVISED DATE:

REVISIONS

DATE	REVISION

DATE REVISED	DATE FILMED	DATE REVISED	DATE FILMED	FED.RD. DIST.NO.	STATE	FED.AID PROJ.NO.	SHEET NO.	TOTAL SHEETS
				6	ARK.			
				JOB NO.		BB0414	105	886
				(2)	TEMPORARY EROSION CONTROL DETAILS			

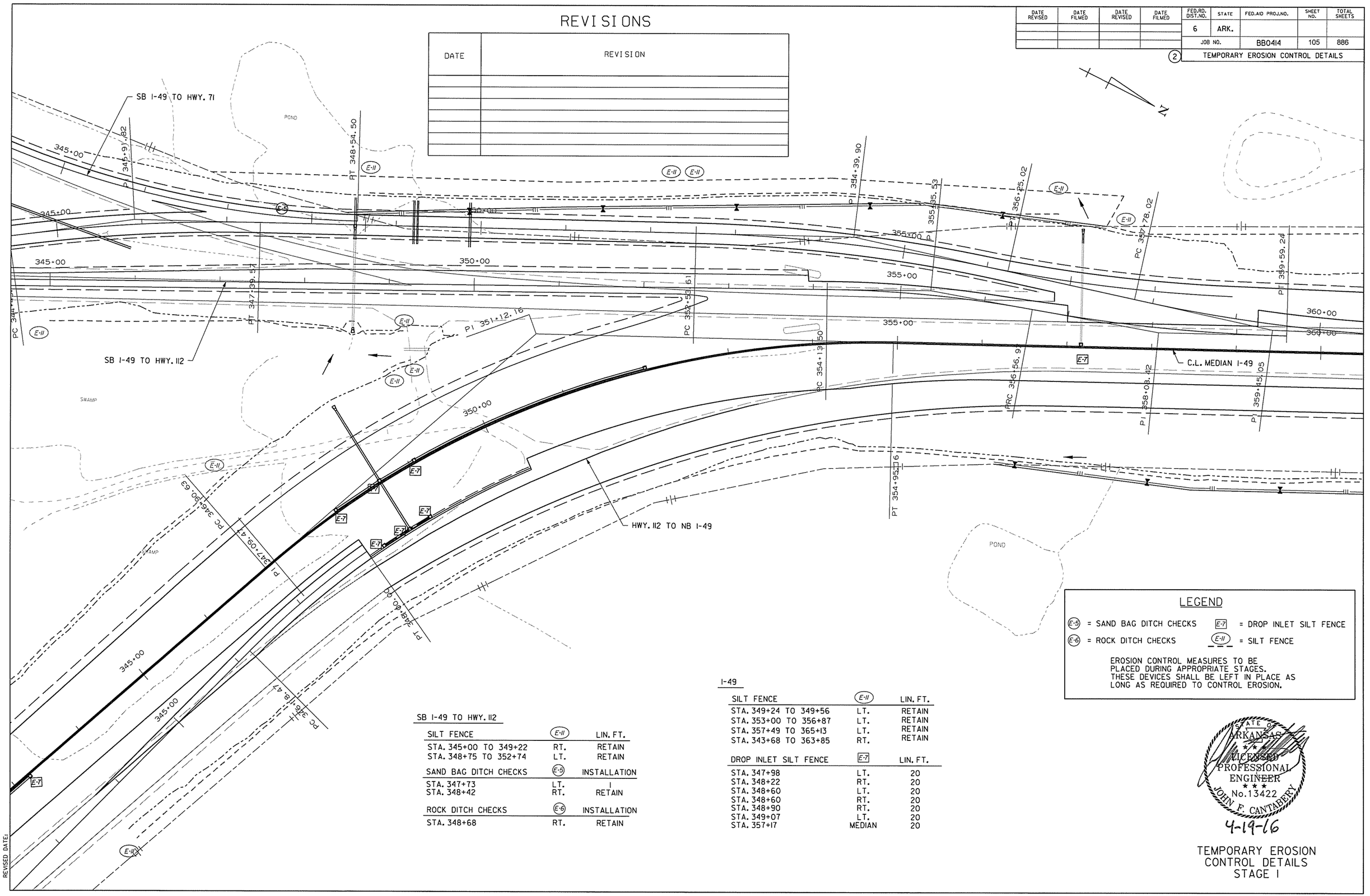

SB I-49 TO HWY. 112

SILT FENCE	(E-11)	LIN. FT.
STA. 345+00 TO 349+22	RT.	RETAIN
STA. 348+75 TO 352+74	LT.	RETAIN
SAND BAG DITCH CHECKS	**(E-5)**	**INSTALLATION**
STA. 347+73	LT.	I
STA. 348+42	RT.	RETAIN
ROCK DITCH CHECKS	**(E-6)**	**INSTALLATION**
STA. 348+68	RT.	RETAIN

I-49

SILT FENCE	(E-11)	LIN. FT.
STA. 349+24 TO 349+56	LT.	RETAIN
STA. 353+00 TO 356+87	LT.	RETAIN
STA. 357+49 TO 365+13	LT.	RETAIN
STA. 343+68 TO 363+85	RT.	RETAIN
DROP INLET SILT FENCE	**(E-7)**	**LIN. FT.**
STA. 347+98	LT.	20
STA. 348+22	RT.	20
STA. 348+60	LT.	20
STA. 348+60	RT.	20
STA. 348+90	RT.	20
STA. 349+07	LT.	20
STA. 357+17	MEDIAN	20

LEGEND

(E-5) = SAND BAG DITCH CHECKS
(E-6) = ROCK DITCH CHECKS
(E-7) = DROP INLET SILT FENCE
(E-11) = SILT FENCE

EROSION CONTROL MEASURES TO BE PLACED DURING APPROPRIATE STAGES. THESE DEVICES SHALL BE LEFT IN PLACE AS LONG AS REQUIRED TO CONTROL EROSION.

STATE OF ARKANSAS
LICENSED PROFESSIONAL ENGINEER
JOHN F. CANTABERY
No. 13422
4-19-16

TEMPORARY EROSION CONTROL DETAILS STAGE I

AEWierclok 4/14/2016 2:3k:22 PM
WORKSPACE: AHTD
L:\ZOIN\I0I7I07 - I-540 Widening & Interchange Improvement\Drawings\rBB0414_EC_MNL_07_STGI.dgn
REVISED DATE:

REVISIONS

DATE	REVISION

DATE REVISED	DATE FILMED	DATE REVISED	DATE FILMED	FED.RD. DIST.NO.	STATE	FED.AID PROJ.NO.	SHEET NO.	TOTAL SHEETS
				6	ARK.			
				JOB NO.		BB0414	106	886

(2) TEMPORARY EROSION CONTROL DETAILS

STATE OF ARKANSAS
LICENSED PROFESSIONAL ENGINEER
No.13422
JOHN F. CANTABERY
4-19-16

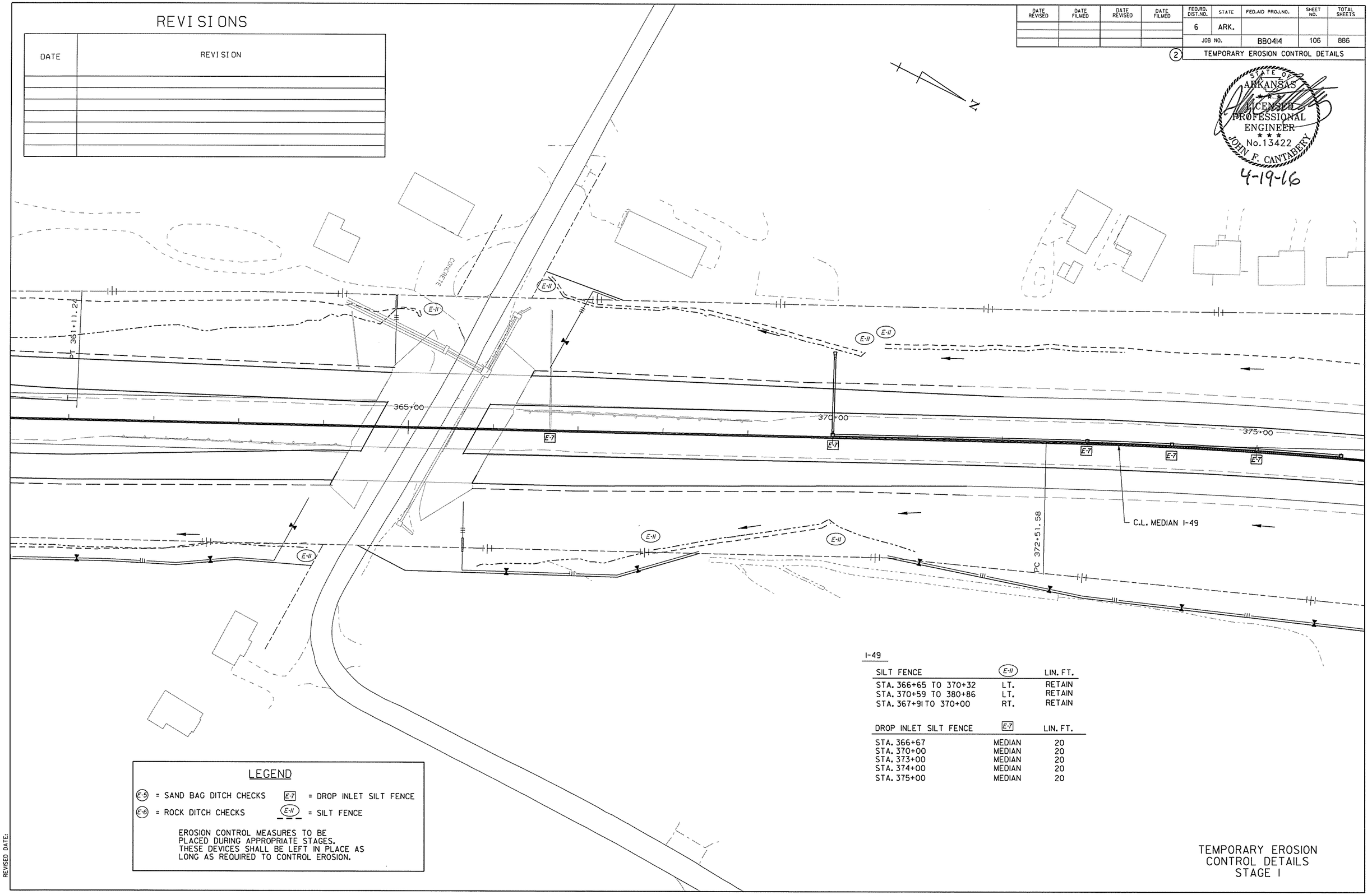

I-49

SILT FENCE	E-11	LIN. FT.
STA. 366+65 TO 370+32	LT.	RETAIN
STA. 370+59 TO 380+86	LT.	RETAIN
STA. 367+91 TO 370+00	RT.	RETAIN

DROP INLET SILT FENCE	E-7	LIN. FT.
STA. 366+67	MEDIAN	20
STA. 370+00	MEDIAN	20
STA. 373+00	MEDIAN	20
STA. 374+00	MEDIAN	20
STA. 375+00	MEDIAN	20

LEGEND

E-5 = SAND BAG DITCH CHECKS
E-6 = ROCK DITCH CHECKS
E-7 = DROP INLET SILT FENCE
E-11 = SILT FENCE

EROSION CONTROL MEASURES TO BE PLACED DURING APPROPRIATE STAGES. THESE DEVICES SHALL BE LEFT IN PLACE AS LONG AS REQUIRED TO CONTROL EROSION.

TEMPORARY EROSION CONTROL DETAILS STAGE I

AEWierciak 4/14/2016 3:25:41PM
WORKSPACE: AHTD
L:\20IN\0I7\07 - I-540 Widening & Interchange Improvement\Drawings\rBB0414_EC_MNL_08_STGI.dgn
REVISED DATE:

DATE REVISED	DATE FILMED	DATE REVISED	DATE FILMED	FED.RD. DIST.NO.	STATE	FED.AID PROJ.NO.	SHEET NO.	TOTAL SHEETS
				6	ARK.			
				JOB NO.		BB0414	107	886
				(2)	TEMPORARY EROSION CONTROL DETAILS			

STATE OF ARKANSAS
LICENSED PROFESSIONAL ENGINEER
No. 13422
JOHN F. CANTABERY
3-20-16

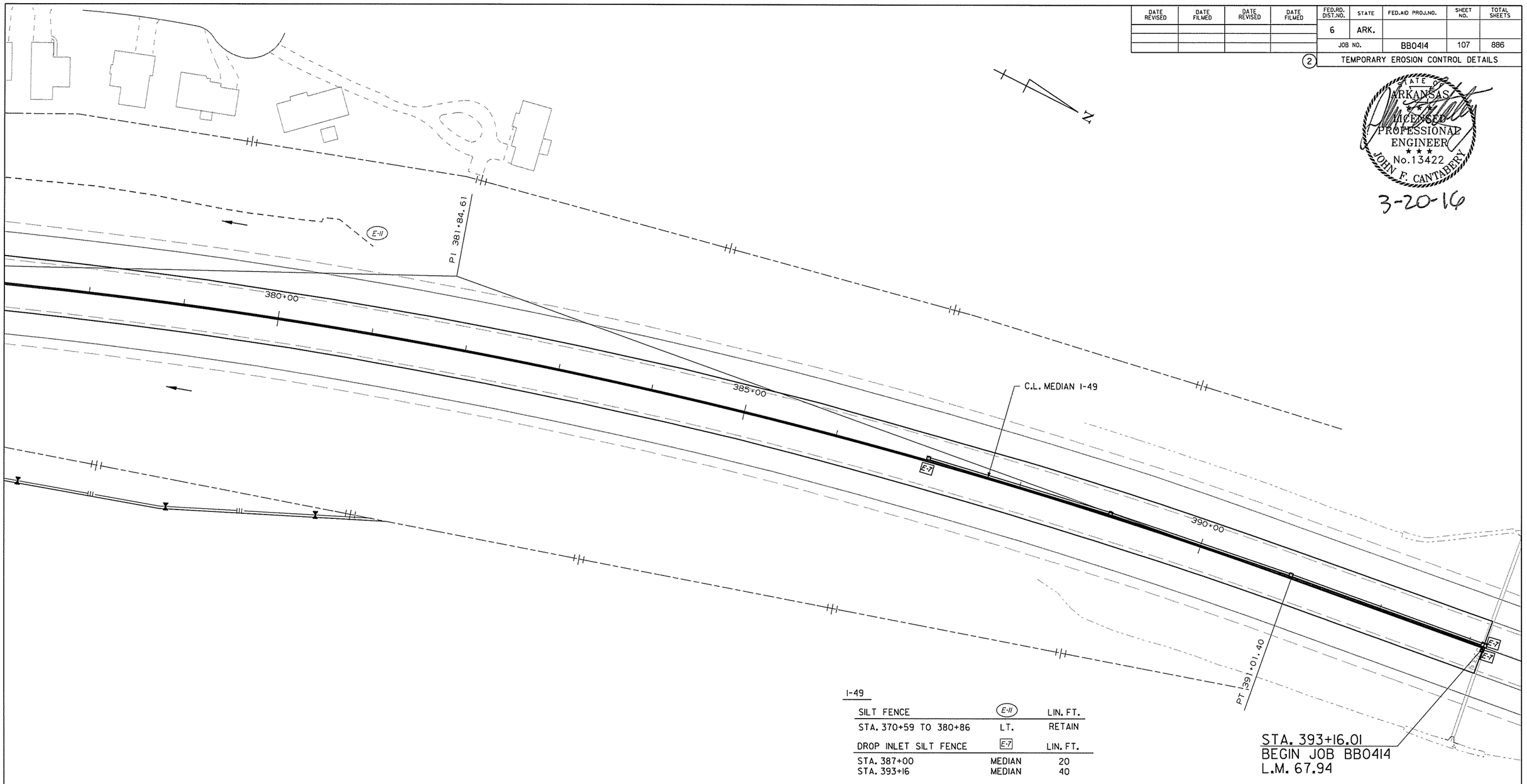

I-49

SILT FENCE	(E-11)	LIN. FT.
STA. 370+59 TO 380+86	LT.	RETAIN
DROP INLET SILT FENCE	**E-7**	**LIN. FT.**
STA. 387+00	MEDIAN	20
STA. 393+16	MEDIAN	40

REVISIONS

DATE	REVISION

LEGEND

(E-5) = SAND BAG DITCH CHECKS
(E-6) = ROCK DITCH CHECKS
E-7 = DROP INLET SILT FENCE
(E-11) = SILT FENCE

EROSION CONTROL MEASURES TO BE PLACED DURING APPROPRIATE STAGES. THESE DEVICES SHALL BE LEFT IN PLACE AS LONG AS REQUIRED TO CONTROL EROSION.

TEMPORARY EROSION CONTROL DETAILS STAGE 1

AEWierciok 3/20/2016 11:52:37 AM
WORKSPACE: AHTD
L:\20IN\10I7707 - I-540 Widening & Interchange Improvement\Drawings\rBB0414_EC_MNL_09_ST01.dgn
REVISED DATE:

DATE REVISED	DATE FILMED	DATE REVISED	DATE FILMED	FED.RD. DIST.NO.	STATE	FED.AID PROJ.NO.	SHEET NO.	TOTAL SHEETS
				6	ARK.			
				JOB NO.		BB0414	108	886
				(2)	TEMPORARY EROSION CONTROL DETAILS			

STATE OF ARKANSAS
LICENSED PROFESSIONAL ENGINEER
No.13422
JOHN F. CANTABERY
3-20-16

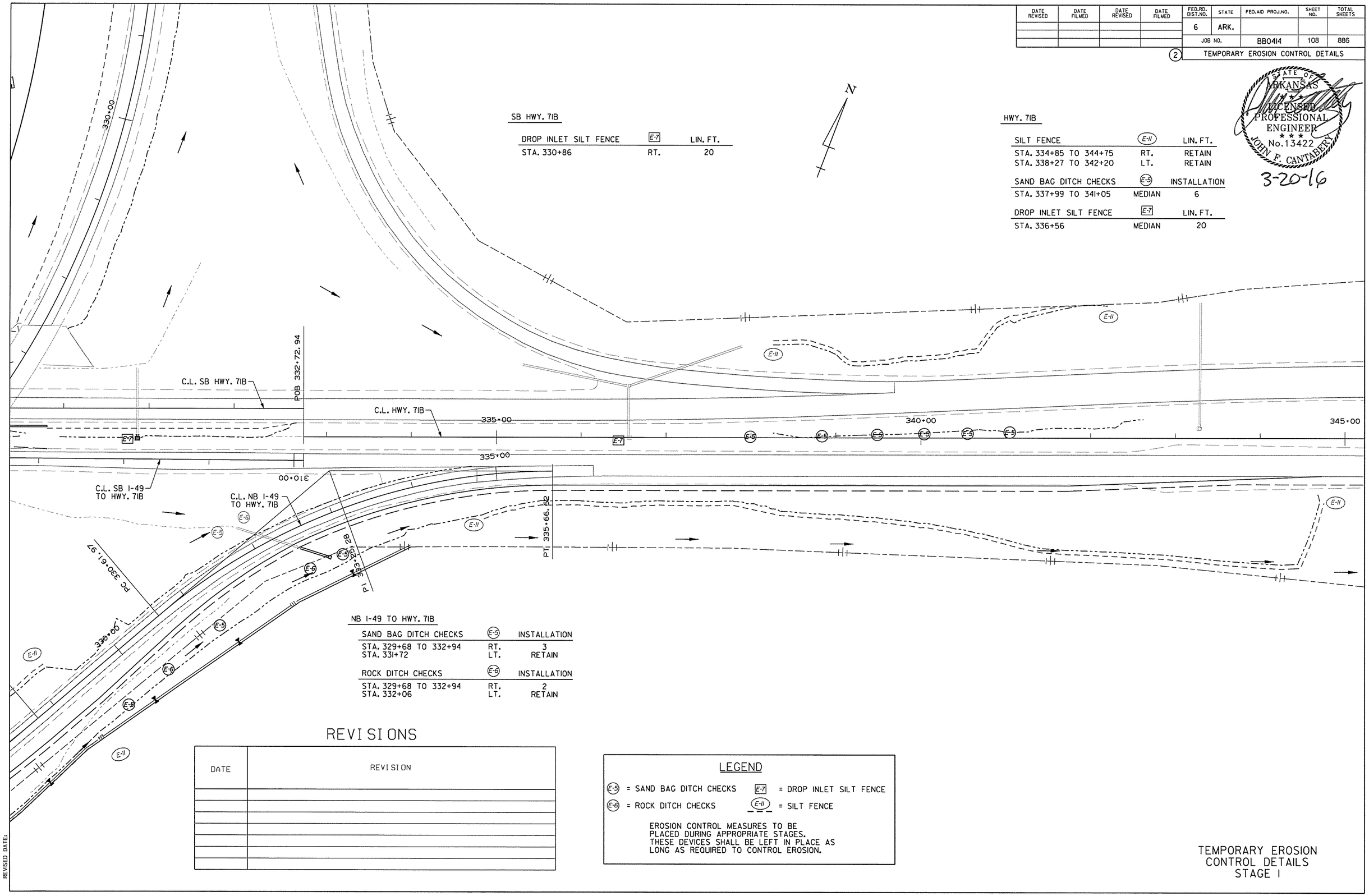

SB HWY. 71B

DROP INLET SILT FENCE	E-7	LIN. FT.
STA. 330+86	RT.	20

HWY. 71B

SILT FENCE	E-11	LIN. FT.
STA. 334+85 TO 344+75	RT.	RETAIN
STA. 338+27 TO 342+20	LT.	RETAIN
SAND BAG DITCH CHECKS	E-5	INSTALLATION
STA. 337+99 TO 341+05	MEDIAN	6
DROP INLET SILT FENCE	E-7	LIN. FT.
STA. 336+56	MEDIAN	20

NB I-49 TO HWY. 71B

SAND BAG DITCH CHECKS	E-5	INSTALLATION
STA. 329+68 TO 332+94	RT.	3
STA. 331+72	LT.	RETAIN
ROCK DITCH CHECKS	E-6	INSTALLATION
STA. 329+68 TO 332+94	RT.	2
STA. 332+06	LT.	RETAIN

REVISIONS

DATE	REVISION

LEGEND

E-5 = SAND BAG DITCH CHECKS
E-6 = ROCK DITCH CHECKS
E-7 = DROP INLET SILT FENCE
E-11 = SILT FENCE

EROSION CONTROL MEASURES TO BE PLACED DURING APPROPRIATE STAGES. THESE DEVICES SHALL BE LEFT IN PLACE AS LONG AS REQUIRED TO CONTROL EROSION.

TEMPORARY EROSION CONTROL DETAILS STAGE I

AEWarelok 3/20/2016 11:52:37 AM
WORKSPACE: AHTD
L:\2011\I071707 - I-540 Widening & Interchange Improvement\Drawings\rBB0414_EC_HWY71B_STG1.dgn
REVISED DATE:

DATE REVISED	DATE FILMED	DATE REVISED	DATE FILMED	FED.RD. DIST.NO.	STATE	FED.AID PROJ.NO.	SHEET NO.	TOTAL SHEETS
				6	ARK.			
				JOB NO.		BB0414	109	886

(2) TEMPORARY EROSION CONTROL DETAILS

STATE OF ARKANSAS
LICENSED PROFESSIONAL ENGINEER
No.13422
JOHN F. CANTABERY
3-20-16

C-D ROAD

SILT FENCE	(E-11)	LIN. FT.
STA. 312+85 TO 314+90	LT.	RETAIN
SAND BAG DITCH CHECKS	(E-5)	INSTALLATION
STA. 315+32 TO 320+22	LT.	2
ROCK DITCH CHECKS	(E-6)	INSTALLATION
STA. 315+32 TO 320+22	LT.	1

HWY. 71B TO SB I-49

DROP INLET SILT FENCE	E-7	LIN. FT.
STA. 314+07	LT.	20
STA. 315+07	LT.	20
STA. 316+15	LT.	20
STA. 317+22	LT.	20

SB I-49 TO HWY. 71B

SAND BAG DITCH CHECKS	(E-5)	INSTALLATION
STA. 335+11	RT.	RETAIN
ROCK DITCH CHECKS	(E-6)	INSTALLATION
STA. 335+51	RT.	RETAIN

SB I-49 TO HWY. 112

SILT FENCE	(E-11)	LIN. FT.
STA. 331+10 TO 332+31	RT.	RETAIN
STA. 334+32 TO 335+00	LT.	RETAIN
SAND BAG DITCH CHECKS	(E-5)	INSTALLATION
STA. 334+00	LT.	RETAIN
STA. 334+05	RT.	RETAIN
ROCK DITCH CHECKS	(E-6)	INSTALLATION
STA. 334+41	LT.	RETAIN
STA. 334+42	RT.	RETAIN

REVISIONS

DATE	REVISION

LEGEND

(E-5) = SAND BAG DITCH CHECKS
(E-6) = ROCK DITCH CHECKS
E-7 = DROP INLET SILT FENCE
(E-11) = SILT FENCE

EROSION CONTROL MEASURES TO BE PLACED DURING APPROPRIATE STAGES. THESE DEVICES SHALL BE LEFT IN PLACE AS LONG AS REQUIRED TO CONTROL EROSION.

TEMPORARY EROSION CONTROL DETAILS STAGE I

AEWarelok 3/20/2016 11:52:38 AM
WORKSPACE: AHTD
L:\2011\107707 - I-540 Widening & Interchange Improvement\Drawings\r-BB0414_EC_SB49RAMP_01_STG1.dgn
REVISED DATE:

DATE REVISED	DATE FILMED	DATE REVISED	DATE FILMED	FED.RD. DIST.NO.	STATE	FED.AID PROJ.NO.	SHEET NO.	TOTAL SHEETS
				6	ARK.			
				JOB NO.		BB0414	110	886

(2) TEMPORARY EROSION CONTROL DETAILS

15+00 20+00 25+00 240+00 245+00 250+00

STA. 239+77.13
BEGIN JOB BB0414
L.M. 65.03

C.L. I-49 MEDIAN

I-49 LANES

SILT FENCE	(E-11)	LIN. FT.
STA. 239+77 TO 239+98	RT.	RETAIN
STA. 249+25 TO 252+09	RT.	RETAIN

LEGEND

(E-5) = SAND BAG DITCH CHECKS
(E-6) = ROCK DITCH CHECKS
[E-7] = DROP INLET SILT FENCE
(E-11) = SILT FENCE

EROSION CONTROL MEASURES TO BE PLACED DURING APPROPRIATE STAGES. THESE DEVICES SHALL BE LEFT IN PLACE AS LONG AS REQUIRED TO CONTROL EROSION.

REVISIONS

DATE	REVISION

I-49 LANES

SAND BAG DITCH CHECKS	(E-5)	INSTALLATION
STA. 247+45 TO 248+80	RT.	RETAIN
ROCK DITCH CHECKS	(E-6)	INSTALLATION
STA. 247+45 TO 248+80	RT.	RETAIN
DROP INLET SILT FENCE	[E-7]	LIN. FT.
STA. 242+03	CT.	RETAIN
STA. 247+60	LT.	RETAIN
STA. 247+77	LT.	RETAIN

P.I. 36+82.86

30+00 35+00 40+00 255+00 260+00 265+00 270+00

C.L. I-49 MEDIAN

STATE OF ARKANSAS
LICENSED PROFESSIONAL ENGINEER
No. 13422
JOHN F. CANTABERY
3-20-16

I-49 LANES

SAND BAG DITCH CHECKS	(E-5)	INSTALLATION
STA. 256+22 TO 270+44	RT.	RETAIN
ROCK DITCH CHECKS	(E-6)	INSTALLATION
STA. 256+22 TO 270+44	RT.	RETAIN
DROP INLET SILT FENCE	[E-7]	LIN. FT.
STA. 258+50	LT.	RETAIN
STA. 266+10	LT.	RETAIN
STA. 266+22	LT.	RETAIN
STA. 270+25	LT.	RETAIN

TEMPORARY EROSION CONTROL DETAILS STAGE 2

AEWierciak 3/20/2016 11:52:38 AM
WORKSPACE: AHTD
L:\20IN\10\07\07 - I-540 Widening & Interchange Improvement\Drawings\rBB0414_EC_MNL_01_ST02.dgn
REVISED DATE:

DATE REVISED	DATE FILMED	DATE REVISED	DATE FILMED	FED.RD. DIST.NO.	STATE	FED.AID PROJ.NO.	SHEET NO.	TOTAL SHEETS
				6	ARK.			
				JOB NO.		BB0414	111	886

2 TEMPORARY EROSION CONTROL DETAILS

STATE OF ARKANSAS
LICENSED PROFESSIONAL ENGINEER
No.13422
JOHN F. CANTABERY
3-20-16

LEGEND

(E-5) = SAND BAG DITCH CHECKS E-7 = DROP INLET SILT FENCE

(E-6) = ROCK DITCH CHECKS (E-11) = SILT FENCE

EROSION CONTROL MEASURES TO BE PLACED DURING APPROPRIATE STAGES. THESE DEVICES SHALL BE LEFT IN PLACE AS LONG AS REQUIRED TO CONTROL EROSION.

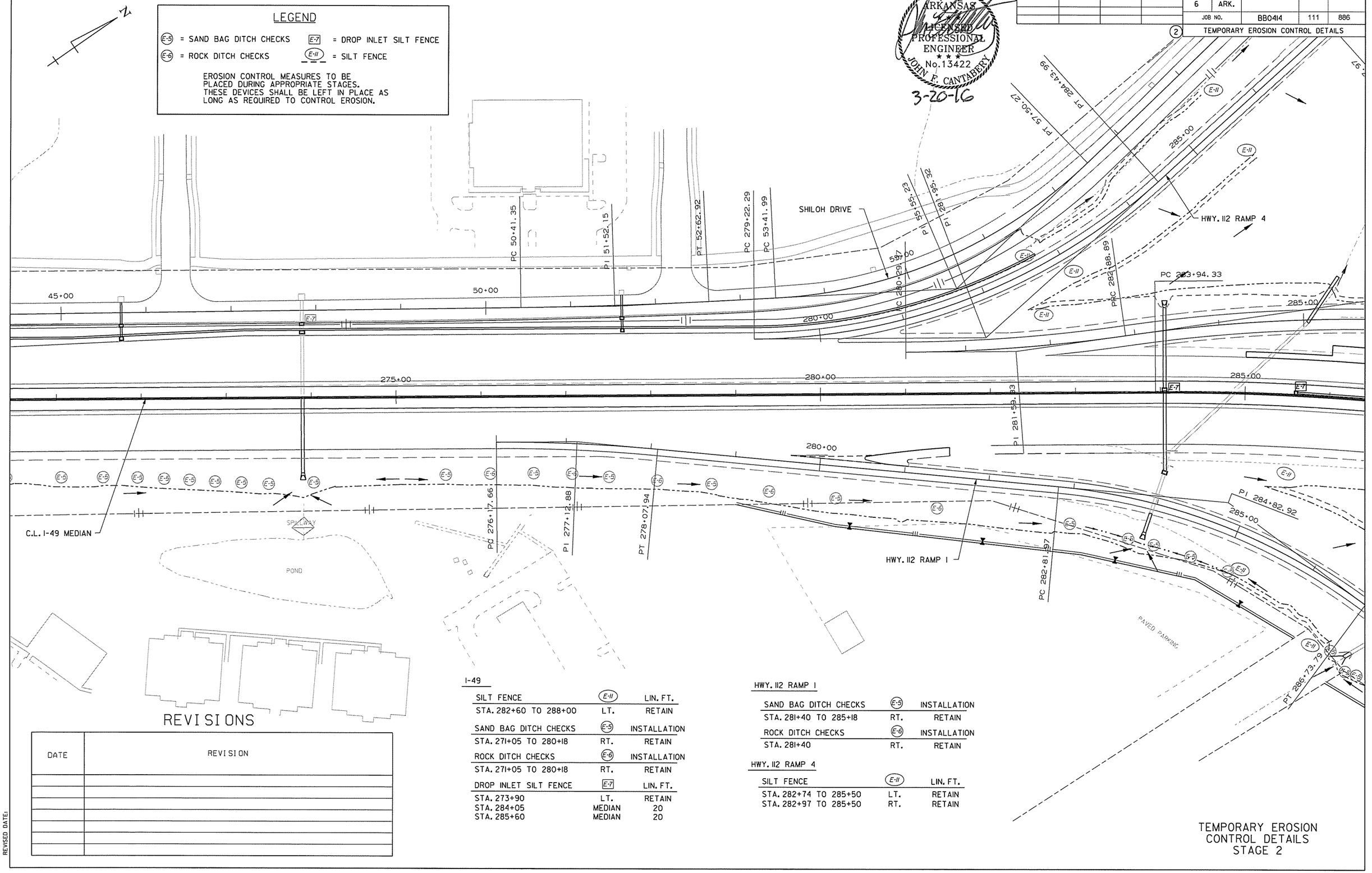

I-49

SILT FENCE	(E-11)	LIN. FT.
STA. 282+60 TO 288+00	LT.	RETAIN
SAND BAG DITCH CHECKS	(E-5)	INSTALLATION
STA. 271+05 TO 280+18	RT.	RETAIN
ROCK DITCH CHECKS	(E-6)	INSTALLATION
STA. 271+05 TO 280+18	RT.	RETAIN
DROP INLET SILT FENCE	E-7	LIN. FT.
STA. 273+90	LT.	RETAIN
STA. 284+05	MEDIAN	20
STA. 285+60	MEDIAN	20

HWY. 112 RAMP 1

SAND BAG DITCH CHECKS	(E-5)	INSTALLATION
STA. 281+40 TO 285+18	RT.	RETAIN
ROCK DITCH CHECKS	(E-6)	INSTALLATION
STA. 281+40	RT.	RETAIN

HWY. 112 RAMP 4

SILT FENCE	(E-11)	LIN. FT.
STA. 282+74 TO 285+50	LT.	RETAIN
STA. 282+97 TO 285+50	RT.	RETAIN

REVISIONS

DATE	REVISION

TEMPORARY EROSION CONTROL DETAILS STAGE 2

AEWierciak 3/20/2016 11:52:38 AM
WORKSPACE: AHTD
L:\2016\160707 - I-540 Widening & Interchange Improvement\Drawings\rBB0414_EC_MNL_02_ST02.dgn
REVISED DATE:

REVISIONS

DATE	REVISION

DATE REVISED	DATE FILMED	DATE REVISED	DATE FILMED	FED.RD. DIST.NO.	STATE	FED.AID PROJ.NO.	SHEET NO.	TOTAL SHEETS
				6	ARK.			
				JOB NO.		BB0414	112	886

TEMPORARY EROSION CONTROL DETAILS

C-D ROAD

SILT FENCE	E-11	LIN. FT.
STA. 277+73 TO 280+81	LT.	RETAIN
STA. 285+60 TO 290+36	LT.	RETAIN
STA. 285+61 TO 286+81	RT.	RETAIN
STA. 295+05 TO 304+25	LT.	RETAIN
DROP INLET SILT FENCE	**E-7**	**LIN. FT.**
STA. 291+58	LT.	RETAIN
STA. 294+52	RT.	RETAIN
STA. 296+66	RT.	RETAIN

I-49 LANES

SAND BAG DITCH CHECKS	E-5	INSTALLATION
STA. 295+12 TO 297+27	RT.	4
DROP INLET SILT FENCE	**E-7**	**LIN. FT.**
STA. 286+80	MEDIAN	20
STA. 287+98	MEDIAN	20
STA. 294+44	MEDIAN	20
STA. 295+27	MEDIAN	20
STA. 296+08	MEDIAN	20
STA. 296+89	MEDIAN	20

LEGEND

E-5 = SAND BAG DITCH CHECKS
E-7 = DROP INLET SILT FENCE
E-6 = ROCK DITCH CHECKS
E-11 = SILT FENCE

EROSION CONTROL MEASURES TO BE PLACED DURING APPROPRIATE STAGES. THESE DEVICES SHALL BE LEFT IN PLACE AS LONG AS REQUIRED TO CONTROL EROSION.

HWY. 112 RAMP I

SILT FENCE	E-11	LIN. FT.
STA. 285+15 TO 286+64	RT.	RETAIN
STA. 285+25 TO 287+33	LT.	RETAIN
STA. 287+63 TO 289+72	LT.	RETAIN
STA. 287+75 TO 290+29	RT.	RETAIN
SAND BAG DITCH CHECKS	**E-5**	**INSTALLATION**
STA. 286+70 TO 287+63	RT.	RETAIN

HWY. 112 TO NB I-49

SILT FENCE	E-11	LIN. FT.
STA. 288+44 TO 292+66	LT.	RETAIN
STA. 289+67 TO 292+51	RT.	RETAIN
SAND BAG DITCH CHECKS	**E-5**	**INSTALLATION**
STA. 293+30 TO 295+63	RT.	RETAIN
STA. 288+77 TO 289+40	RT.	2
ROCK DITCH CHECKS	**E-6**	**INSTALLATION**
STA. 293+30 TO 295+63	RT.	RETAIN

SEE HWY. 112 EROSION CONTROL SHEETS FOR HWY. 112 DEVICES

STATE OF ARKANSAS
LICENSED PROFESSIONAL ENGINEER
No. 13422
JOHN F. CANTABERY
3-20-16

TEMPORARY EROSION CONTROL DETAILS STAGE 2

AEWerclok 3/20/2016 11:52:39 AM
WORKSPACE: AHTD
L:\2011\11707 - I-540 Widening & Interchange Improvement\Drawings\rBB0414_EC_MNL_03.STG2.dgn
REVISED DATE:

DATE REVISED	DATE FILMED	DATE REVISED	DATE FILMED	FED.RD. DIST.NO.	STATE	FED.AID PROJ.NO.	SHEET NO.	TOTAL SHEETS
				6	ARK.			
				JOB NO.		BB0414	113	886

2 TEMPORARY EROSION CONTROL DETAILS

HWY. 112

SILT FENCE	E-11	LIN. FT.
STA. 7+68 TO 8+12	LT.	RETAIN
STA. 9+22 TO 9+62	LT.	RETAIN
STA. 10+69 TO 10+93	LT.	RETAIN
STA. 11+29 TO 11+81	LT.	RETAIN
STA. 12+61 TO 14+24	LT.	RETAIN
STA. 15+87 TO 17+24	LT.	RETAIN
STA. 7+77 TO 9+70	RT.	RETAIN
STA. 9+91 TO 10+56	RT.	RETAIN
STA. 10+80 TO 12+28	RT.	RETAIN
STA. 12+67 TO 14+42	RT.	RETAIN
STA. 15+90 TO 18+80	RT.	RETAIN

DROP INLET SILT FENCE	E-7	LIN. FT.
STA. 8+20	LT.	RETAIN
STA. 9+75	LT.	RETAIN
STA. 11+76	RT.	20
STA. 13+23	RT.	20
STA. 14+22	RT.	20
STA. 15+50	RT.	20

STATE OF ARKANSAS
LICENSED PROFESSIONAL ENGINEER
No. 13422
JOHN F. CANTABERY
3-20-16

N

HWY. 112 RAMP 1

HWY. 112

PAVED PARKING

PT 8+82.74

E-7 10+00

5+00

290+00

PI 17+47.75

PT 291

20+00

PC 288+12.93

PT 292+42.59

PC 287+57.26

PAVED PARKING

PI 6+40.48

PT 290+47.74

290+00

C.L. I-49 MEDIAN

HWY. 112 TO NB I-49 RAMP

PC 291+68.58

PAVED PARKING

5+00

LEGEND

E-5 = SAND BAG DITCH CHECKS E-7 = DROP INLET SILT FENCE

E-6 = ROCK DITCH CHECKS E-11 = SILT FENCE

EROSION CONTROL MEASURES TO BE PLACED DURING APPROPRIATE STAGES. THESE DEVICES SHALL BE LEFT IN PLACE AS LONG AS REQUIRED TO CONTROL EROSION.

REVISIONS

DATE	REVISION

TEMPORARY EROSION CONTROL DETAILS STAGE 2

AEWierciok 3/20/2016 11:52:39 AM
WORKSPACE: AHTD
L:\20IN\10\7107 - I-540 Widening & Interchange Improvement\Drawings\r-BB0414_EC_HWY112_01_ST02.dgn
REVISED DATE:

DATE REVISED	DATE FILMED	DATE REVISED	DATE FILMED	FED.RD. DIST.NO.	STATE	FED.AID PROJ.NO.	SHEET NO.	TOTAL SHEETS
				6	ARK.			
				JOB NO.		BB0414	114	886
				(2)	TEMPORARY EROSION CONTROL DETAILS			

REVISIONS

DATE	REVISION

STATE OF ARKANSAS
LICENSED
PROFESSIONAL
ENGINEER
No.13422
JOHN F. CANTABERY
3-20-16

HWY. 112

SILT FENCE	(E-11)	LIN. FT.
STA. 20+35 TO 21+86	LT.	RETAIN
STA. 21+02 TO 22+17	RT.	RETAIN
STA. 26+88 TO 30+73	RT.	RETAIN

SAND BAG DITCH CHECKS	(E-5)	INSTALLATION
STA. 25+42 TO 30+55	LT.	RETAIN
STA. 23+28 TO 26+72	RT.	2

ROCK DITCH CHECKS	(E-5)	INSTALLATION
STA. 23+28 TO 26+72	RT.	2

DROP INLET SILT FENCE	[E-7]	LIN. FT.
STA. 26+24	LT.	RETAIN
STA. 30+77	LT.	RETAIN
STA. 22+60	RT.	20
STA. 27+00	RT.	20
STA. 27+63	RT.	20
STA. 29+11	RT.	20
STA. 29+49	RT.	20
STA. 30+00	RT.	20
STA. 30+10	RT.	20
STA. 30+52	RT.	20

HWY. 112 RAMP 4

SILT FENCE	(E-11)	LIN. FT.
STA. 296+74 TO 297+12	LT.	RETAIN

LEGEND

(E-5) = SAND BAG DITCH CHECKS [E-7] = DROP INLET SILT FENCE
(E-6) = ROCK DITCH CHECKS (E-11) = SILT FENCE

EROSION CONTROL MEASURES TO BE PLACED DURING APPROPRIATE STAGES. THESE DEVICES SHALL BE LEFT IN PLACE AS LONG AS REQUIRED TO CONTROL EROSION.

HWY. 112 RAMP 4
PC 279+71.53
280+00
PT 291+10.81
PT 294+58.17
295+00
70+00
PT 69+73.32
PC 70+86.10
PT 71+90.22
PT 72+62.87
PC 73+53.04
SHILOH DRIVE
C-D ROAD
PC 293+98.09
RT 22+06.53
25+00
PI 74+06.50
PT 74+40.38
75+00
295+00
HWY. 112
C-D ROAD
PI 296+48.30
30+00
PC 31+49.23
PT 34+55.57
35+00
PI 33+03.32
PAVED PARKING
PAVED PARKING
PAVED PARKING
PAVED PARKING

TEMPORARY EROSION CONTROL DETAILS STAGE 2

AEWierolak 3/20/2016 11:52:39 AM
WORKSPACE: AHTD
L:\201\W0177OT - I-540 Widening & Interchange Improvement\Drawings\BB0414_EC_HWY112_02_ST02.dgn
REVISED DATE:

REVISIONS

DATE	REVISION

DATE REVISED	DATE FILMED	DATE REVISED	DATE FILMED	FED.RD. DIST.NO.	STATE	FED.AID PROJ.NO.	SHEET NO.	TOTAL SHEETS
				6	ARK.			
				JOB NO.		BB0414	115	886

(2) TEMPORARY EROSION CONTROL DETAILS

I-49

SAND BAG DITCH CHECKS	(E-5)	INSTALLATION
STA. 313+33	LT.	RETAIN

ROCK DITCH CHECKS	(E-6)	INSTALLATION
STA. 313+90	LT.	RETAIN

SB I-49 TO HWY. 112 RAMP

C-D ROAD

SILT FENCE	(E-11)	LIN. FT.
STA. 304+38 TO 308+00	RT.	RETAIN

SAND BAG DITCH CHECKS	(E-5)	INSTALLATION
STA. 308+10	LT.	RETAIN

C-D ROAD

PAVED PARKING

PAVED PARKING

PC 304+95.21

306+38.80

305+67.04

C.L. SB HWY. 71B

310+00

I-49

SILT FENCE	(E-11)	LIN. FT.
STA. 303+37 TO 303+40	RT.	RETAIN

DROP INLET SILT FENCE	(E-7)	LIN. FT.
STA. 303+52	MEDIAN	20
STA. 310+00	MEDIAN	RETAIN
STA. 310+50	MEDIAN	RETAIN
STA. 311+00	MEDIAN	RETAIN
STA. 311+50	MEDIAN	RETAIN
STA. 313+17 310+00	MEDIAN	RETAIN

N

PC 313+88.24

PCC 314+87.51

315+00

STATE OF ARKANSAS
LICENSED PROFESSIONAL ENGINEER
No. 13422
JOHN F. CANTABERY
3-20-16

PC 312+51.56

PT 314+84.79

PC 308+01.72

PI 311+61.66

PC 310+38.00

PI 309+04.79

PT 309+84.79

PC 308+13.00

PI 308+58.92

315+00

310+00

305+00

305+00

C.L. I-49 MEDIAN

NB I-49 TO HWY. 71B RAMP

PC 313+36.68

315+00

PC 304+17.19

PI 305+12.41

PT 306+07.47

300+00

HWY. 112 TO NB I-49 RAMP

305+00

POND

305+00

PC 308+87.99

310+00

310+00

PT 297+90.56

PC 300+15.56

PI 301+10.78

PT 302+05.84

HWY. 112 TO HWY. 71B RAMP

PC 309+01.72

HWY. 112 TO HWY. 71B

SILT FENCE	(E-11)	LIN. FT.
STA. 301+56 TO 302+80	RT.	RETAIN
STA. 304+87 TO 305+75	RT.	RETAIN
SAND BAG DITCH CHECKS	(E-5)	INSTALLATION
STA. 300+16 TO 310+84	RT.	RETAIN
ROCK DITCH CHECKS	(E-6)	INSTALLATION
STA. 300+16 TO 310+84	RT.	RETAIN
DROP INLET SILT FENCE	(E-7)	LIN. FT.
STA. 305+00	LT.	RETAIN
STA. 306+00	LT.	RETAIN
STA. 311+05	LT.	RETAIN

NB I-49 TO HWY. 71B

DROP INLET SILT FENCE	(E-7)	LIN. FT.
STA. 309+75	LT.	RETAIN
STA. 314+00	LT.	RETAIN
STA. 315+03	LT.	RETAIN
STA. 312+88	RT.	RETAIN
SAND BAG DITCH CHECKS	(E-5)	INSTALLATION
STA. 313+17	LT.	RETAIN
ROCK DITCH CHECKS	(E-6)	INSTALLATION
STA. 308+67	RT.	RETAIN
STA. 314+13	LT.	RETAIN

SB HWY. 71B

SILT FENCE	(E-11)	LIN. FT.
STA. 303+96 TO 309+00	RT.	RETAIN

LEGEND

(E-5) = SAND BAG DITCH CHECKS
(E-6) = ROCK DITCH CHECKS
(E-7) = DROP INLET SILT FENCE
(E-11) = SILT FENCE

EROSION CONTROL MEASURES TO BE PLACED DURING APPROPRIATE STAGES. THESE DEVICES SHALL BE LEFT IN PLACE AS LONG AS REQUIRED TO CONTROL EROSION.

HWY. 112 TO NB I-49

SILT FENCE	(E-11)	LIN. FT.
STA. 299+65 TO 308+06	LT.	RETAIN
SAND BAG DITCH CHECKS	(E-5)	INSTALLATION
STA. 298+57 TO 299+83	LT.	RETAIN
STA. 298+57 TO 299+83	RT.	RETAIN

TEMPORARY EROSION CONTROL DETAILS STAGE 2

AEWierdick 3/20/2016 11:52:39 AM
WORKSPACE: AHTD
L:\2016\160707 - I-540 Widening & Interchange Improvement\Drawings\rBB0414_EC_MNL_04_ST02.dgn
REVISED DATE:

DATE REVISED	DATE FILMED	DATE REVISED	DATE FILMED	FED.RD. DIST.NO.	STATE	FED.AID PROJ.NO.	SHEET NO.	TOTAL SHEETS
				6	ARK.			
				JOB NO.		BB0414	116	886

(2) TEMPORARY EROSION CONTROL DETAILS

HWY. 112 TO HWY. 71B

SILT FENCE	(E-11)	LIN. FT.
STA. 315+75 TO 319+21	RT.	RETAIN
SAND-BAG DITCH CHECKS	(E-5)	INSTALLATION
STA. 312+32 TO 320+93	RT.	RETAIN
ROCK DITCH CHECKS	(E-6)	INSTALLATION
STA. 312+32 TO 320+93	RT.	RETAIN

HWY. 112 TO NB I-49

SILT FENCE	(E-11)	LIN. FT.
STA. 318+95 TO 321+59	RT.	RETAIN

NB I-49 TO HWY. 71B

SILT FENCE	(E-11)	LIN. FT.
STA. 318+88 TO 321+74	LT.	RETAIN
STA. 325+65 TO 329+22	RT.	RETAIN
STA. 325+78 TO 329+22	LT.	RETAIN
SAND BAG DITCH CHECKS	(E-5)	INSTALLATION
STA. 316+25 TO 325+69	LT.	RETAIN
STA. 325+54 TO 329+68	RT.	RETAIN
ROCK DITCH CHECKS	(E-6)	INSTALLATION
STA. 316+25 TO 325+69	LT.	RETAIN
STA. 325+54 TO 329+68	RT.	RETAIN

I-49

SILT FENCE	(E-11)	LIN. FT.
STA. 313+97 TO 318+44	RT.	RETAIN
STA. 317+19 TO 321+25	LT.	RETAIN
DROP INLET SILT FENCE	[E-7]	LIN. FT.
STA. 321+00	MEDIAN	RETAIN
STA. 313+67	MEDIAN	20
STA. 314+17	MEDIAN	20
STA. 317+50	MEDIAN	20

LEGEND

(E-5) = SAND BAG DITCH CHECKS [E-7] = DROP INLET SILT FENCE

(E-6) = ROCK DITCH CHECKS (E-11) = SILT FENCE

EROSION CONTROL MEASURES TO BE PLACED DURING APPROPRIATE STAGES. THESE DEVICES SHALL BE LEFT IN PLACE AS LONG AS REQUIRED TO CONTROL EROSION.

REVISIONS

DATE	REVISION

STATE OF ARKANSAS
LICENSED PROFESSIONAL ENGINEER
No. 13422
JOHN F. CANTABERY
3-20-16

TEMPORARY EROSION CONTROL DETAILS STAGE 2

AEWierciak 3/20/2016 11:52:40 AM
WORKSPACE: AHTD
L:\20IN\10I7707 - I-540 Widening & Interchange Improvement\Drawings\rBB0414_EC_MNL_05_ST02.dgn
REVISED DATE:

DATE REVISED	DATE FILMED	DATE REVISED	DATE FILMED	FED.RD. DIST.NO.	STATE	FED.AID PROJ.NO.	SHEET NO.	TOTAL SHEETS
				6	ARK.			
				JOB NO.		BB0414	117	886
				(2)	TEMPORARY EROSION CONTROL DETAILS			

REVISIONS

DATE	REVISION

I-49

SILT FENCE	(E-11)	LIN. FT.
STA. 327+75 TO 347+27	LT.	RETAIN
STA. 328+21 TO 338+13	RT.	RETAIN

DROP INLET SILT FENCE	(E-7)	LIN. FT.
STA. 331+00	MEDIAN	RETAIN
STA. 341+10	MEDIAN	RETAIN
STA. 341+17	MEDIAN	RETAIN
STA. 341+64	MEDIAN	RETAIN
STA. 342+74	MEDIAN	RETAIN
STA. 343+21	MEDIAN	RETAIN

C-D ROAD

SILT FENCE	(E-11)	LIN. FT.
STA. 321+46 TO 323+42	LT.	RETAIN

HWY. 112 TO NB I-49

DROP INLET SILT FENCE	(E-7)	LIN. FT.
STA. 336+33	LT.	20
STA. 338+50	LT.	20
STA. 339+38	LT.	20
STA. 340+15	LT.	20
STA. 340+76	LT.	20
STA. 341+58	LT.	20
STA. 341+65	LT.	20

HWY. 71B TO NB I-49

SAND BAG DITCH CHECKS	(E-5)	INSTALLATION
STA. 333+01	LT.	RETAIN

ROCK DITCH CHECKS	(E-6)	INSTALLATION
STA. 333+28	LT.	RETAIN

STATE OF ARKANSAS
LICENSED PROFESSIONAL ENGINEER
No. 13422
JOHN F. CANTABERY
3-20-16

PI 321+51.46
PI 322+46.68
PT 323+41.74
PI 315+91.96
325+00
330+00
335+00
340+00
I-49
HWY. 112 TO NB I-49
PC 330+91.05
PI 333+85.15
PI 336+65.60
HWY. 71B TO NB I-49
PC 339+27.26
PI 340+38.58
PT 341+29.08
PT 341+49.46
PT 342+30.82
E-7
E-11

LEGEND

(E-5) = SAND BAG DITCH CHECKS
(E-6) = ROCK DITCH CHECKS
[E-7] = DROP INLET SILT FENCE
(E-11) = SILT FENCE

EROSION CONTROL MEASURES TO BE PLACED DURING APPROPRIATE STAGES. THESE DEVICES SHALL BE LEFT IN PLACE AS LONG AS REQUIRED TO CONTROL EROSION.

TEMPORARY EROSION CONTROL DETAILS STAGE 2

AEWlarclark 3/20/2016 11:52:40 AM
WORKSPACE: AHTD
L:\20IN\10I7707 - I-540 Widening & Interchange Improvement\Drawings\r-BB0414_EC_MNL_06_ST02.dgn
REVISED DATE:

REVISIONS

DATE	REVISION

DATE REVISED	DATE FILMED	DATE REVISED	DATE FILMED	FED.RD. DIST.NO.	STATE	FED.AID PROJ.NO.	SHEET NO.	TOTAL SHEETS
				6	ARK.			
				JOB NO.		BB0414	118	886
				(2)	TEMPORARY EROSION CONTROL DETAILS			

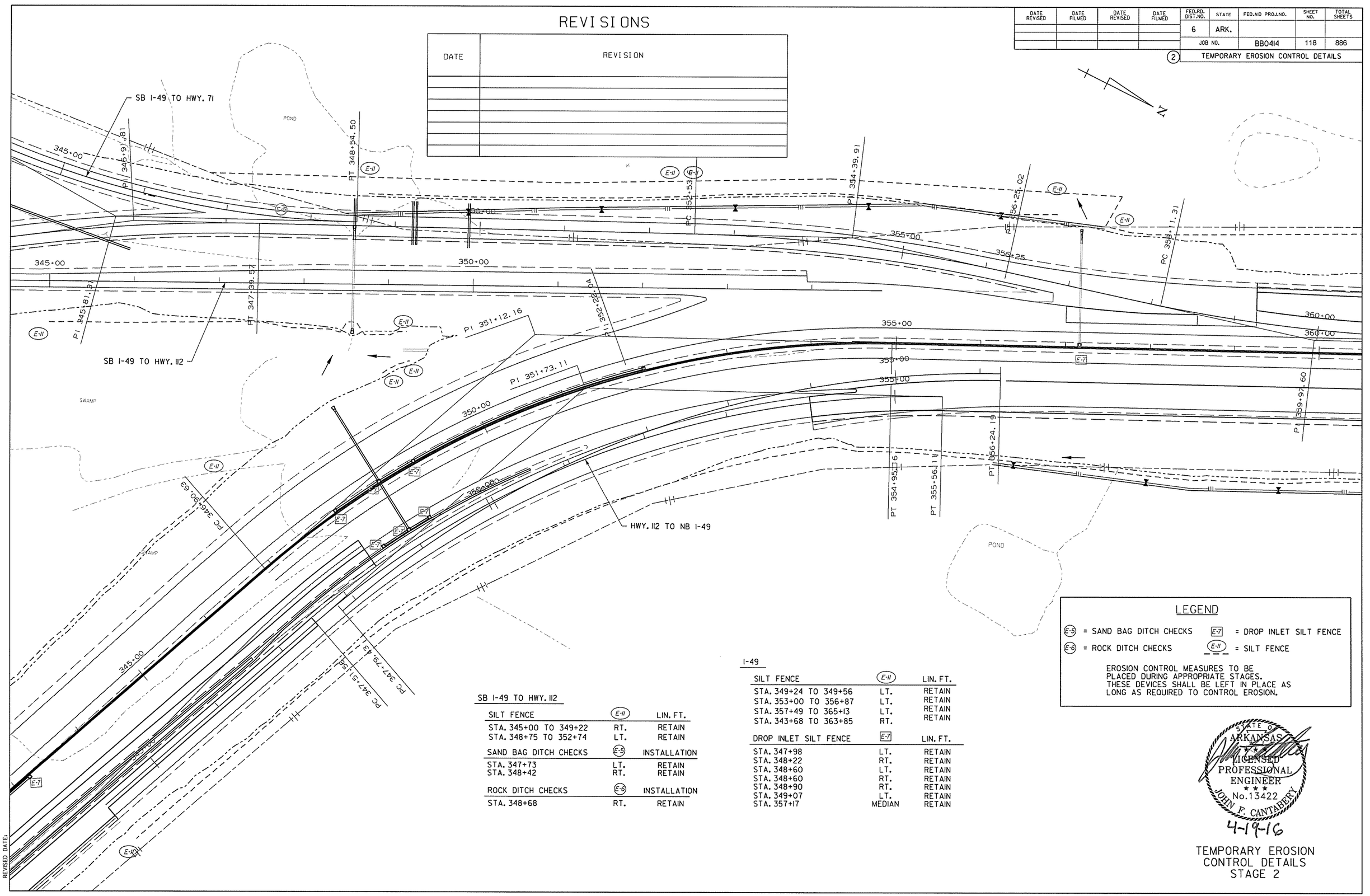

SB I-49 TO HWY. 112

SILT FENCE	(E-II)	LIN. FT.
STA. 345+00 TO 349+22	RT.	RETAIN
STA. 348+75 TO 352+74	LT.	RETAIN
SAND BAG DITCH CHECKS	**(E-5)**	**INSTALLATION**
STA. 347+73	LT.	RETAIN
STA. 348+42	RT.	RETAIN
ROCK DITCH CHECKS	**(E-6)**	**INSTALLATION**
STA. 348+68	RT.	RETAIN

I-49

SILT FENCE	(E-II)	LIN. FT.
STA. 349+24 TO 349+56	LT.	RETAIN
STA. 353+00 TO 356+87	LT.	RETAIN
STA. 357+49 TO 365+13	LT.	RETAIN
STA. 343+68 TO 363+85	RT.	RETAIN
DROP INLET SILT FENCE	**(E-7)**	**LIN. FT.**
STA. 347+98	LT.	RETAIN
STA. 348+22	RT.	RETAIN
STA. 348+60	LT.	RETAIN
STA. 348+60	RT.	RETAIN
STA. 348+90	RT.	RETAIN
STA. 349+07	LT.	RETAIN
STA. 357+17	MEDIAN	RETAIN

LEGEND

(E-5) = SAND BAG DITCH CHECKS
(E-6) = ROCK DITCH CHECKS
(E-7) = DROP INLET SILT FENCE
(E-II) = SILT FENCE

EROSION CONTROL MEASURES TO BE PLACED DURING APPROPRIATE STAGES. THESE DEVICES SHALL BE LEFT IN PLACE AS LONG AS REQUIRED TO CONTROL EROSION.

STATE OF ARKANSAS
LICENSED PROFESSIONAL ENGINEER
No. 13422
JOHN F. CANTABERY
4-19-16

TEMPORARY EROSION CONTROL DETAILS STAGE 2

AEWier-clak 4/14/2016 2:31:26 PM
WORKSPACE: AHTD
L:\20IN\101707 - I-540 Widening & Interchange Improvement\Drawings\rBB0414_EC_NWL_07_ST02.dgn
REVISED DATE:

REVISIONS

DATE	REVISION

DATE REVISED	DATE FILMED	DATE REVISED	DATE FILMED	FED.RD. DIST.NO.	STATE	FED.AID PROJ.NO.	SHEET NO.	TOTAL SHEETS
				6	ARK.			
				JOB NO.		BB0414	119	886
				(2)	TEMPORARY EROSION CONTROL DETAILS			

STATE OF ARKANSAS
LICENSED PROFESSIONAL ENGINEER
No.13422
JOHN F. CANTABERY
4-19-16

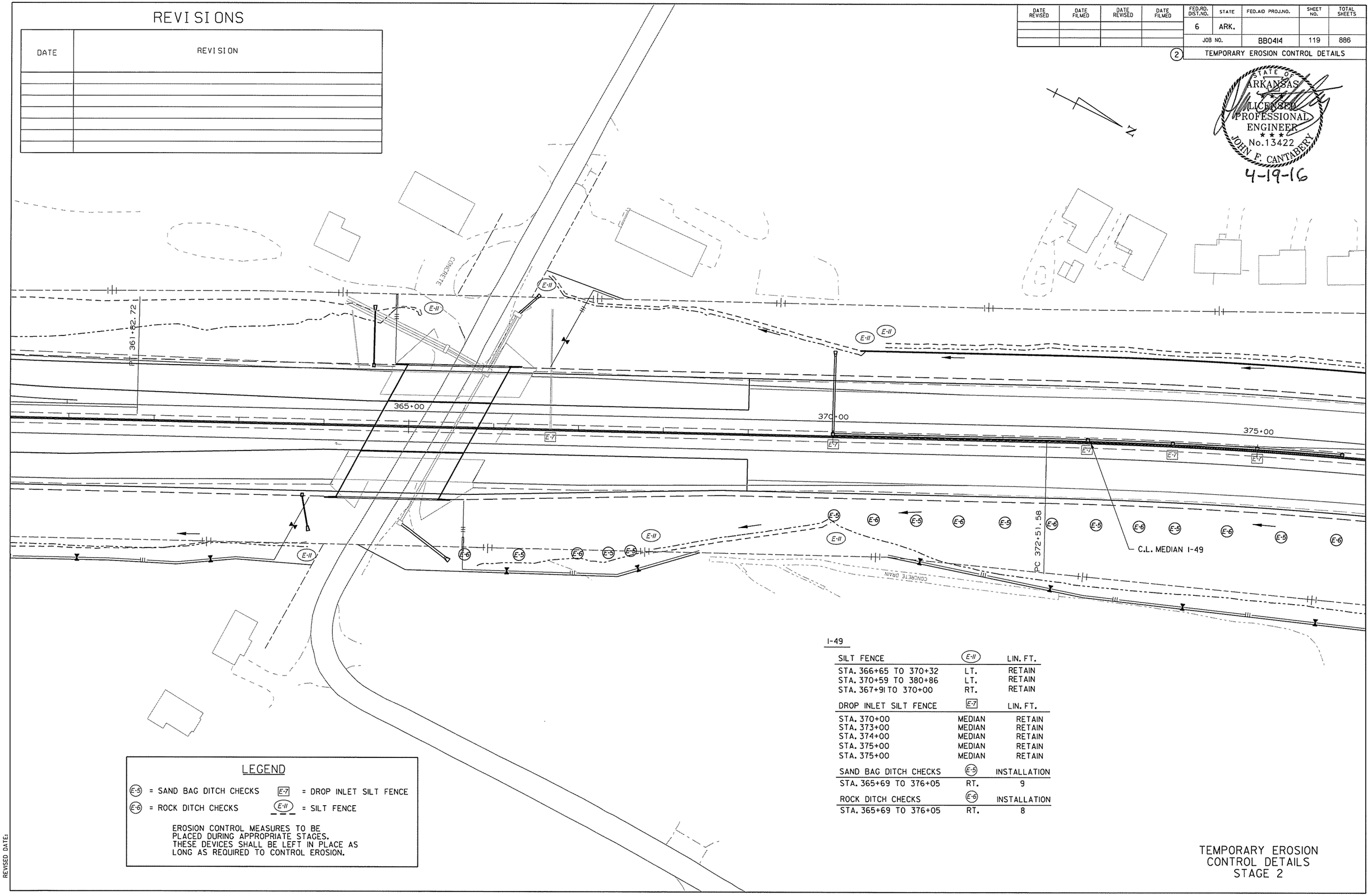

I-49

SILT FENCE	(E-11)	LIN. FT.
STA. 366+65 TO 370+32	LT.	RETAIN
STA. 370+59 TO 380+86	LT.	RETAIN
STA. 367+91 TO 370+00	RT.	RETAIN
DROP INLET SILT FENCE	[E-7]	LIN. FT.
STA. 370+00	MEDIAN	RETAIN
STA. 373+00	MEDIAN	RETAIN
STA. 374+00	MEDIAN	RETAIN
STA. 375+00	MEDIAN	RETAIN
STA. 375+00	MEDIAN	RETAIN
SAND BAG DITCH CHECKS	(E-5)	INSTALLATION
STA. 365+69 TO 376+05	RT.	9
ROCK DITCH CHECKS	(E-6)	INSTALLATION
STA. 365+69 TO 376+05	RT.	8

LEGEND

(E-5) = SAND BAG DITCH CHECKS
[E-7] = DROP INLET SILT FENCE
(E-6) = ROCK DITCH CHECKS
(E-11) = SILT FENCE

EROSION CONTROL MEASURES TO BE PLACED DURING APPROPRIATE STAGES. THESE DEVICES SHALL BE LEFT IN PLACE AS LONG AS REQUIRED TO CONTROL EROSION.

TEMPORARY EROSION CONTROL DETAILS STAGE 2

AEWierciak 4/14/2016 3:37:08 PM
WORKSPACE: AHTD
L:\20\NI01707 - I-540 Widening & Interchange Improvement\Drawings\r-BB0414_EC_MNL_08_STG2.dgn
REVISED DATE:

DATE REVISED	DATE FILMED	DATE REVISED	DATE FILMED	FED.RD. DIST.NO.	STATE	FED.AID PROJ.NO.	SHEET NO.	TOTAL SHEETS
				6	ARK.			
				JOB NO.		BB0414	120	886
				(2)	TEMPORARY EROSION CONTROL DETAILS			

STATE OF ARKANSAS
LICENSED PROFESSIONAL ENGINEER
No.13422
JOHN F. CANTABERY
3-20-16

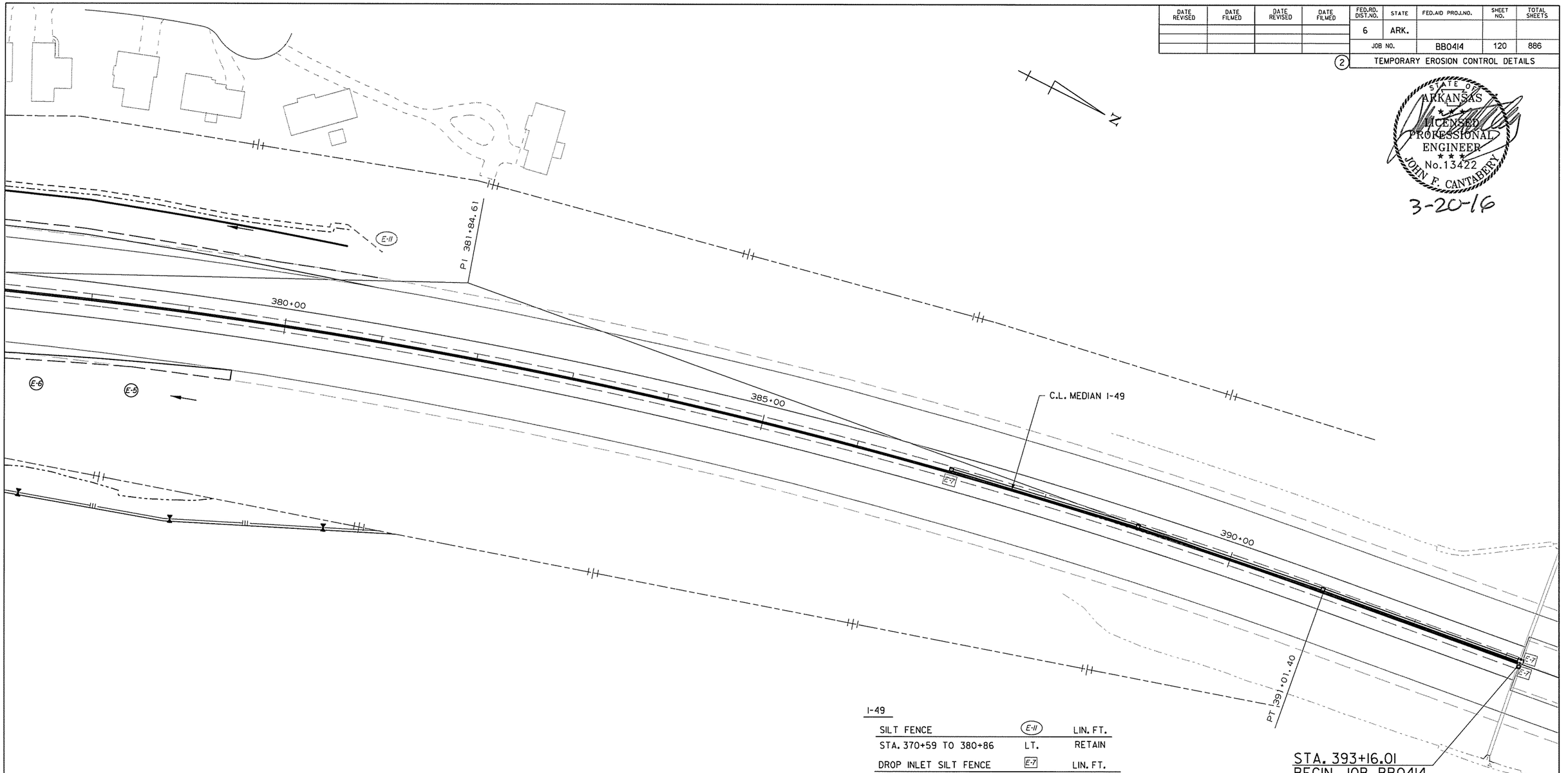

I-49

SILT FENCE	(E-11)	LIN. FT.
STA. 370+59 TO 380+86	LT.	RETAIN
DROP INLET SILT FENCE	[E-7]	LIN. FT.
STA. 387+00	MEDIAN	RETAIN
STA. 393+16	MEDIAN	RETAIN
SAND BAG DITCH CHECKS	(E-5)	INSTALLATION
STA. 378+50	RT.	1
ROCK DITCH CHECKS	(E-6)	INSTALLATION
STA. 377+50	RT.	1

REVISIONS

DATE	REVISION

LEGEND

(E-5) = SAND BAG DITCH CHECKS
[E-7] = DROP INLET SILT FENCE
(E-6) = ROCK DITCH CHECKS
(E-11) = SILT FENCE

EROSION CONTROL MEASURES TO BE PLACED DURING APPROPRIATE STAGES. THESE DEVICES SHALL BE LEFT IN PLACE AS LONG AS REQUIRED TO CONTROL EROSION.

TEMPORARY EROSION CONTROL DETAILS STAGE 2

AEWierciak 3/20/2016 11:52:41 AM
WORKSPACE: AHTD
L:\20IN\100707 - I-540 Widening & Interchange Improvement\Drawings\rBB0414_EC_MNL_09_ST02.dgn
REVISED DATE:

DATE REVISED	DATE FILMED	DATE REVISED	DATE FILMED	FED.RD. DIST.NO.	STATE	FED.AID PROJ.NO.	SHEET NO.	TOTAL SHEETS
				6	ARK.			
				JOB NO.		BB0414	121	886
				(2)	TEMPORARY EROSION CONTROL DETAILS			

STATE OF ARKANSAS
LICENSED PROFESSIONAL ENGINEER
No.13422
JOHN F. CANTABERY
3-20-16

SB HWY. 71B

PI 329+89.78

330+00

330+00

335+00

SB I-49 TO HWY. 71B

PT 336+71.34

SB I-49 TO HWY. 112

PT 332+57.43

PC 313+41.74

PC 333+71.44

PI 314+30.15

315+00

315+00

PT 315+18.06

335+00

340+00

PCI 341+55.99

PC 342+96.84

C-D ROAD

PC 339+17.19

PT 342+05.53

PT 342+13.43

340+00

345+00

345+00

PI 338+16.96

PI 340+63.47

PI 344+98.62

320+00

320+00

N

C-D ROAD

SILT FENCE	E-11	LIN. FT.
STA. 312+85 TO 314+90	LT.	RETAIN
SAND BAG DITCH CHECKS	E-5	INSTALLATION
STA. 315+32 TO 320+22	LT.	RETAIN
ROCK DITCH CHECKS	E-6	INSTALLATION
STA. 315+32 TO 320+22	LT.	RETAIN

HWY. 71B TO SB I-49

DROP INLET SILT FENCE	E-7	LIN. FT.
STA. 314+07	RT.	RETAIN
STA. 315+07	RT.	RETAIN
STA. 316+15	RT.	RETAIN
STA. 317+22	RT.	RETAIN

SB I-49 TO HWY. 71B

SAND BAG DITCH CHECKS	E-5	INSTALLATION
STA. 335+11	RT.	RETAIN
ROCK DITCH CHECKS	E-6	INSTALLATION
STA. 335+51	RT.	RETAIN

SB I-49 TO HWY. 112

SILT FENCE	E-11	LIN. FT.
STA. 331+10 TO 332+31	RT.	RETAIN
STA. 334+32 TO 335+00	LT.	RETAIN
SAND BAG DITCH CHECKS	E-5	INSTALLATION
STA. 334+00	LT.	RETAIN
STA. 334+05	RT.	RETAIN
ROCK DITCH CHECKS	E-6	INSTALLATION
STA. 334+41	LT.	RETAIN
STA. 334+42	RT.	RETAIN

REVISIONS

DATE	REVISION

LEGEND

E-5 = SAND BAG DITCH CHECKS
E-7 = DROP INLET SILT FENCE
E-6 = ROCK DITCH CHECKS
E-11 = SILT FENCE

EROSION CONTROL MEASURES TO BE PLACED DURING APPROPRIATE STAGES. THESE DEVICES SHALL BE LEFT IN PLACE AS LONG AS REQUIRED TO CONTROL EROSION.

TEMPORARY EROSION CONTROL DETAILS STAGE 2

AEWierdick 3/20/2016 11:52:41 AM
WORKSPACE: AHTD
L:\201\101707 - I-540 Widening & Interchange Improvement\Drawings\r-BB0414_EC_SB49RAMP_01_ST02.dgn
REVISED DATE:

DATE REVISED	DATE FILMED	DATE REVISED	DATE FILMED	FED.RD. DIST.NO.	STATE	FED.AID PROJ.NO.	SHEET NO.	TOTAL SHEETS
				6	ARK.			
				JOB NO.		BB0414	122	886

TEMPORARY EROSION CONTROL DETAILS

C-D ROAD

SILT FENCE	E-11	LIN. FT.
STA. 277+73 TO 280+81	LT.	RETAIN
STA. 285+60 TO 290+36	LT.	RETAIN
STA. 285+61 TO 286+81	RT.	RETAIN
STA. 295+05 TO 304+25	LT.	RETAIN

DROP INLET SILT FENCE	E-7	LIN. FT.
STA. 291+58	LT.	RETAIN
STA. 294+52	RT.	RETAIN
STA. 296+66	RT.	RETAIN

SAND BAG DITCH CHECKS	E-5	INSTALLATION
STA. 289+85	LT.	1

I-49 LANES

SAND BAG DITCH CHECKS	E-5	INSTALLATION
STA. 285+85	LT.	1
STA. 295+12 TO 297+27	RT.	RETAIN

SILT FENCE	E-11	LIN. FT.
STA. 285+15 TO 286+64	RT.	RETAIN
STA. 285+25 TO 287+33	LT.	RETAIN

DROP INLET SILT FENCE	E-7	LIN. FT.
STA. 286+80	MEDIAN	RETAIN
STA. 287+98	MEDIAN	RETAIN
STA. 294+44	MEDIAN	RETAIN
STA. 295+27	MEDIAN	RETAIN
STA. 296+08	MEDIAN	RETAIN
STA. 296+89	MEDIAN	RETAIN

LEGEND

E-5 = SAND BAG DITCH CHECKS
E-7 = DROP INLET SILT FENCE
E-6 = ROCK DITCH CHECKS
E-11 = SILT FENCE

EROSION CONTROL MEASURES TO BE PLACED DURING APPROPRIATE STAGES. THESE DEVICES SHALL BE LEFT IN PLACE AS LONG AS REQUIRED TO CONTROL EROSION.

HWY. 112 RAMP I

SILT FENCE	E-11	LIN. FT.
STA. 285+15 TO 286+64	RT.	RETAIN
STA. 285+25 TO 287+33	LT.	RETAIN
STA. 287+63 TO 289+72	LT.	RETAIN
STA. 287+75 TO 290+29	RT.	RETAIN

SAND BAG DITCH CHECKS	E-5	INSTALLATION
STA. 286+70 TO 287+63	RT.	RETAIN

HWY. 112 TO NB I-49

SAND BAG DITCH CHECKS	E-5	INSTALLATION
STA. 293+30 TO 295+63	RT.	RETAIN
STA. 288+77 TO 289+40	RT.	RETAIN

ROCK DITCH CHECKS	E-6	INSTALLATION
STA. 293+30 TO 295+63	RT.	RETAIN

SILT FENCE		LIN. FT.
STA. 288+44 TO 292+66	LT.	RETAIN
STA. 289+67 TO 292+51	RT.	RETAIN

SEE HWY. 112 EROSION CONTROL SHEETS FOR HWY. 112 DEVICES

REVISIONS

DATE	REVISION

STATE OF ARKANSAS
LICENSED PROFESSIONAL ENGINEER
No. 13422
JOHN F. CANTABERY
3-20-16

TEMPORARY EROSION CONTROL DETAILS STAGE 3

AEWercklok 3/20/2016 11:52:42 AM
WORKSPACE: AHTD
L:\2011\1101707 - I-540 Widening & Interchange Improvement\Drawings\rBB0414_EC_MNL_03_STG3.dgn
REVISED DATE:

DATE REVISED	DATE FILMED	DATE REVISED	DATE FILMED	FED.RD. DIST.NO.	STATE	FED.AID PROJ.NO.	SHEET NO.	TOTAL SHEETS
				6	ARK.			
				JOB NO.		BB0414	123	886

(2) TEMPORARY EROSION CONTROL DETAILS

STATE OF ARKANSAS
LICENSED PROFESSIONAL ENGINEER
No.13422
JOHN F. CANTABERY
3-20-16

SB I-49 TO HWY. 71B

SAND BAG DITCH CHECKS (E-5)		INSTALLATION
STA. 335+11	RT.	RETAIN
ROCK DITCH CHECKS (E-6)		INSTALLATION
STA. 335+51	RT.	RETAIN

SB I-49 TO HWY. 112

SILT FENCE (E-11)		LIN. FT.
STA. 331+10 TO 332+31	RT.	RETAIN
STA. 334+32 TO 335+00	LT.	RETAIN
SAND BAG DITCH CHECKS (E-5)		INSTALLATION
STA. 334+00	LT.	RETAIN
STA. 334+05	RT.	RETAIN
ROCK DITCH CHECKS (E-6)		INSTALLATION
STA. 330+85	LT.	I
STA. 334+41	LT.	RETAIN
STA. 334+42	RT.	RETAIN

SB I-49 TO HWY. 71B

SILT FENCE (E-11)		LIN. FT.
STA. 335+75 TO 338+91	RT.	302
STA. 339+31 TO 343+92	RT.	474

C-D ROAD

SILT FENCE (E-11)		LIN. FT.
STA. 312+85 TO 314+90	LT.	RETAIN
SAND BAG DITCH CHECKS (E-5)		INSTALLATION
STA. 315+32 TO 320+22	LT.	RETAIN
ROCK DITCH CHECKS (E-6)		INSTALLATION
STA. 315+32 TO 320+22	LT.	RETAIN

HWY. 71B TO SB I-49

DROP INLET SILT FENCE (E-7)		LIN. FT.
STA. 314+07	RT.	RETAIN
STA. 315+07	RT.	RETAIN
STA. 316+15	RT.	RETAIN
STA. 317+22	RT.	RETAIN

SB I-49 TO HWY. 112

SILT FENCE (E-11)		LIN. FT.
STA. 330+89 TO 335+00	RT.	RETAIN
STA. 334+32 TO 335+00	LT.	RETAIN

REVISIONS

DATE	REVISION

LEGEND

(E-5) = SAND BAG DITCH CHECKS
(E-6) = ROCK DITCH CHECKS
(E-7) = DROP INLET SILT FENCE
(E-11) = SILT FENCE

EROSION CONTROL MEASURES TO BE PLACED DURING APPROPRIATE STAGES. THESE DEVICES SHALL BE LEFT IN PLACE AS LONG AS REQUIRED TO CONTROL EROSION.

TEMPORARY EROSION CONTROL DETAILS STAGE 3

AEWierdick 3/20/2016 11:52:42 AM
WORKSPACE: AHTD
L:\2016\160707 - I-540 Widening & Interchange Improvement\Drawings\rBB0414_EC_SB49RAMP_01_ST03.dgn
REVISED DATE:

DATE REVISED	DATE FILMED	DATE REVISED	DATE FILMED	FED.RD. DIST.NO.	STATE	FED.AID PROJ.NO.	SHEET NO.	TOTAL SHEETS
				6	ARK.			
				JOB NO.		BB0414	124	886

(2) MAINTENANCE OF TRAFFIC

STATE OF ARKANSAS
LICENSED PROFESSIONAL ENGINEER
No.13653
ADAM E. WIERCIAK
3/20/16

PORTABLE CHANGEABLE MESSAGE SIGNS TO BE USED IF AND WHERE DIRECTED BY THE ENGINEER

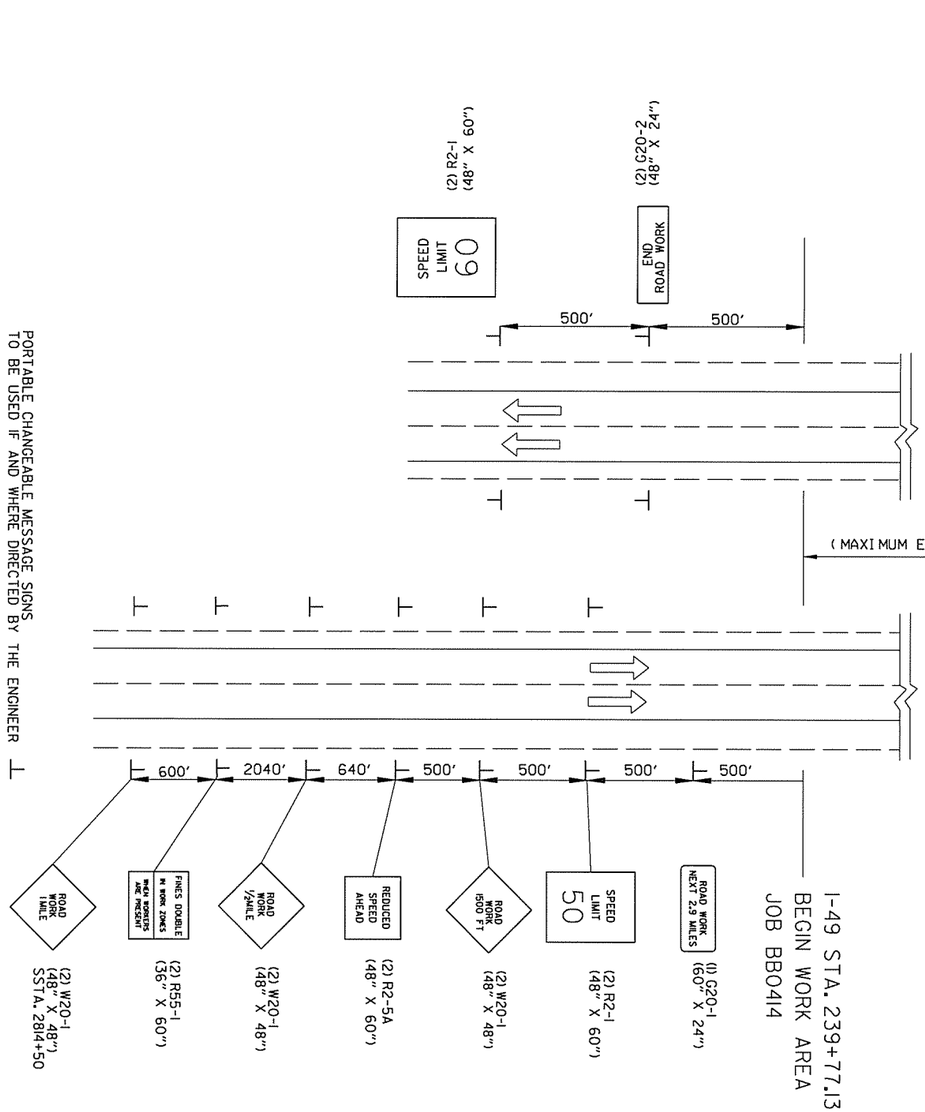

(MAXIMUM EXTENT OF LANE CLOSURE TAPERS)

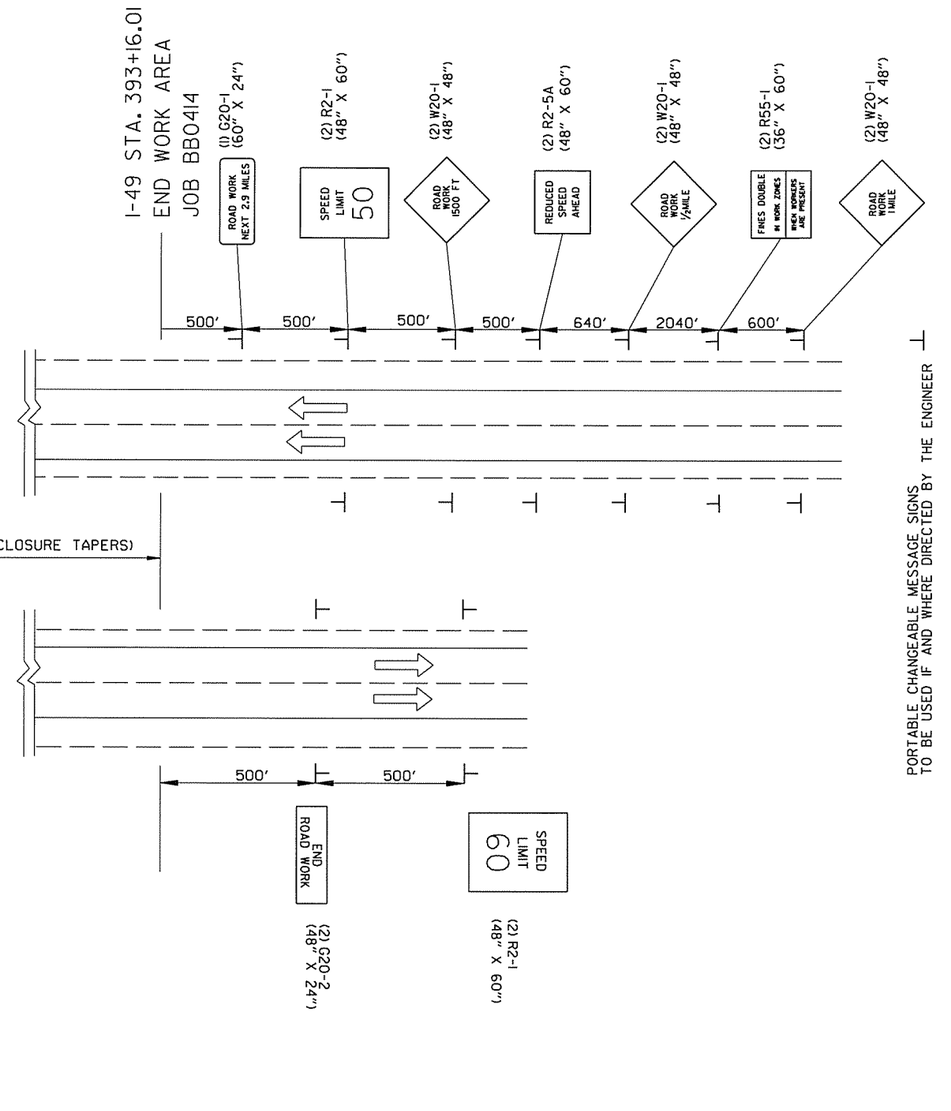

PORTABLE CHANGEABLE MESSAGE SIGNS TO BE USED IF AND WHERE DIRECTED BY THE ENGINEER

NOTE :
W20-1 (VARIOUS DISTANCE) ADVANCE SIGNS TO BE REPLACED AS NEEDED BY EQUIVALENT W20-5 SIGNS AS WORKING AREA SHIFTS.

NOTE :
ADVANCE WARNING SIGNS SHOWN (EXCLUDING G20-1) SHALL ALSO BE INSTALLED ALONG HWY. 71B.

ADVANCE SIGNS AT BEGINNING AND END OF JOB ALL STAGES

MAINTENANCE OF TRAFFIC
ADVANCE SIGNS AT JOB ENDS

AEWierciak 3/20/2016 11:52:42 AM
WORKSPACE: AHTD
L:\2016\16077\07 - I-540 Widening & Interchange Improvement\Drawings\r-BB0414_MOT_SD_01.dgn
REVISED DATE:

DATE REVISED	DATE FILMED	DATE REVISED	DATE FILMED	FED.RD. DIST.NO.	STATE	FED.AID PROJ.NO.	SHEET NO.	TOTAL SHEETS
				6	ARK.			
				JOB NO.		BB0414	125	886
				(2)	MAINTENANCE OF TRAFFIC			

STATE OF ARKANSAS
LICENSED PROFESSIONAL ENGINEER
No.13653
ADAM E. WIERCIAK
3/28/16

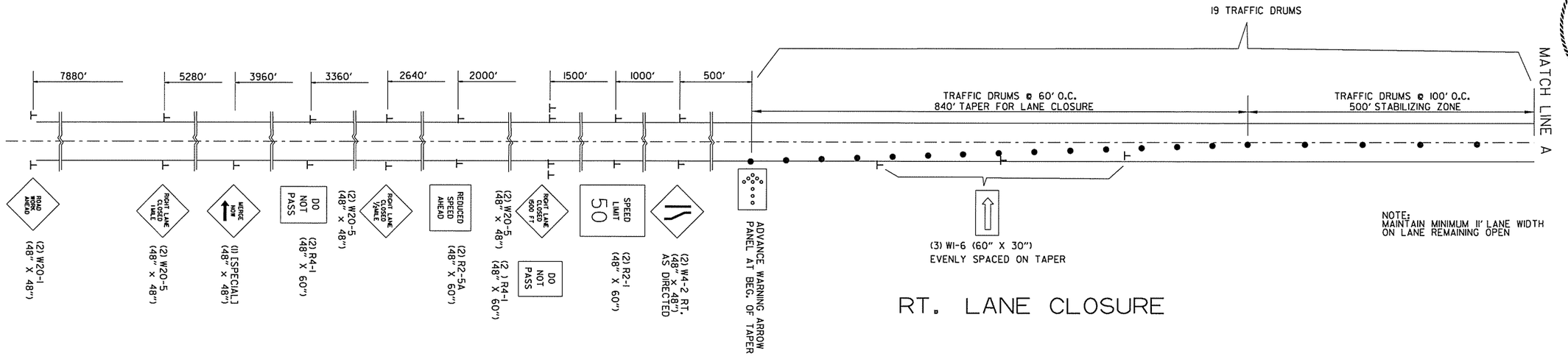

RT. LANE CLOSURE

PORTABLE CHANGEABLE MESSAGE SIGN TO BE USED IF AND WHERE DIRECTED BY THE ENGINEER

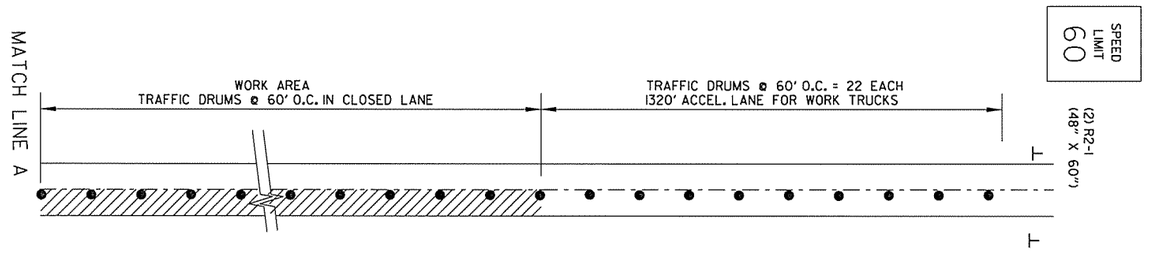

DIVERSION FOR RT. LANE WORK ZONE

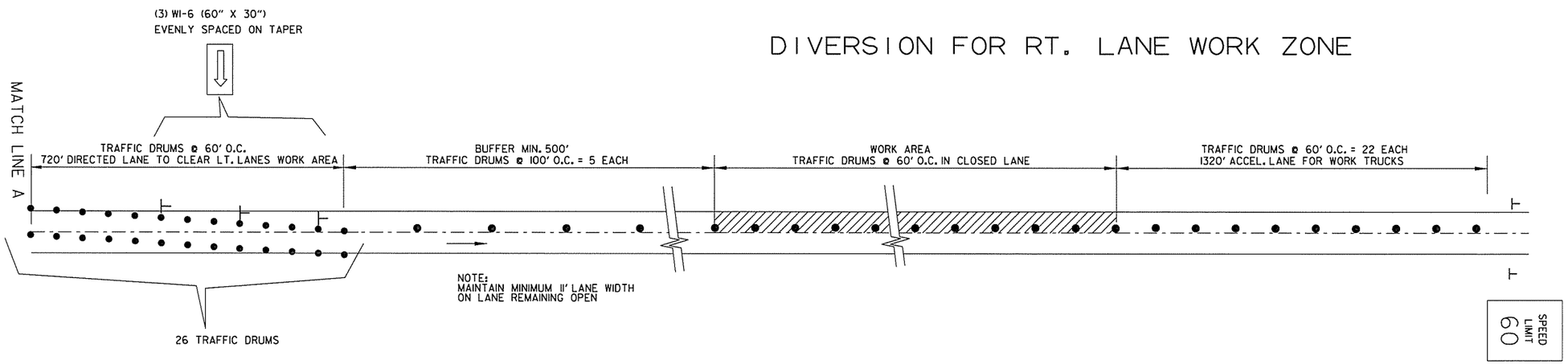

DIVERSION FOR LT. LANE WORK ZONE

NOTE;
LANE CLOSURES WILL BE PERMITTED IN BOTH NORTHBOUND AND SOUTHBOUND DIRECTIONS. QUANTITIES HAVE BEEN INCLUDED FOR ONE LANE CLOSURE IN EACH DIRECTION FOR THE WORK ZONE. REFER TO SP - MAINTENANCE OF TRAFFIC FOR LANE CLOSURE LIMITATIONS AND RESTRICTIONS.

MAINTENANCE OF TRAFFIC
LANE CLOSURE

AEWiercIak 3/20/2016 11:52:42 AM
WORKSPACE: AHTD
L:\20II\II0I7707 - I-540 Widening & Interchange Improvement\Drawings\rBB04I4_MOT_SD_0I.dgn
REVISED DATE:

DATE REVISED	DATE FILMED	DATE REVISED	DATE FILMED	FED.RD. DIST.NO.	STATE	FED.AID PROJ.NO.	SHEET NO.	TOTAL SHEETS
				6	ARK.			
				JOB NO.		BB0414	126	886
				(2)	MAINTENANCE OF TRAFFIC			

■ FOR TWO-WAY TRAFFIC (HWY. 112), PLACE (3) OM-3L ON THE DEPARTURE TURNBACK.

REFER ALSO TO STANDARD DRAWING TC-5 FOR DETAILS OF PLACEMENT OF P.C.C.B. TURNBACKS

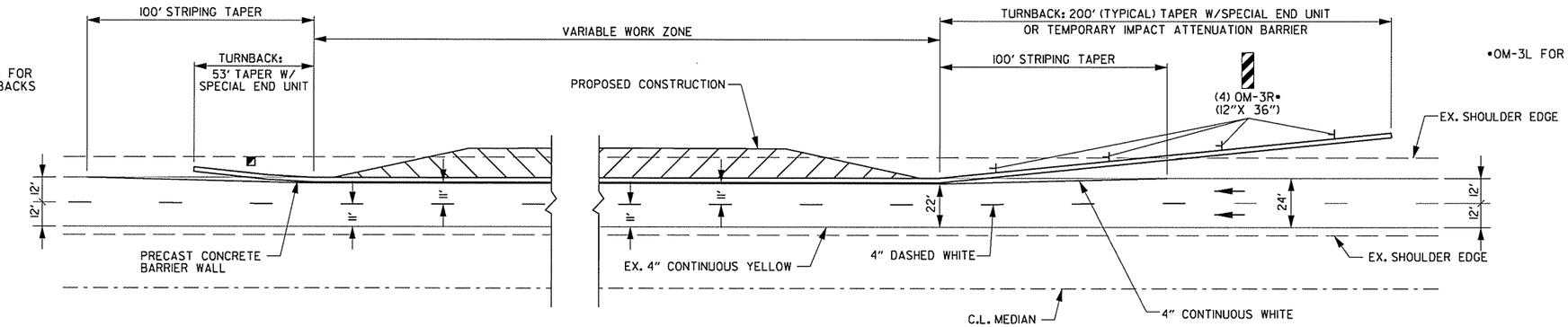

•OM-3L FOR INSIDE LANE CLOSURES

STATE OF ARKANSAS
LICENSED PROFESSIONAL ENGINEER
No. 13653
ADAM E. WIERCIAK
3/20/16

LANE SHIFT WITH BARRIER WALL - MULTIPLE LANES

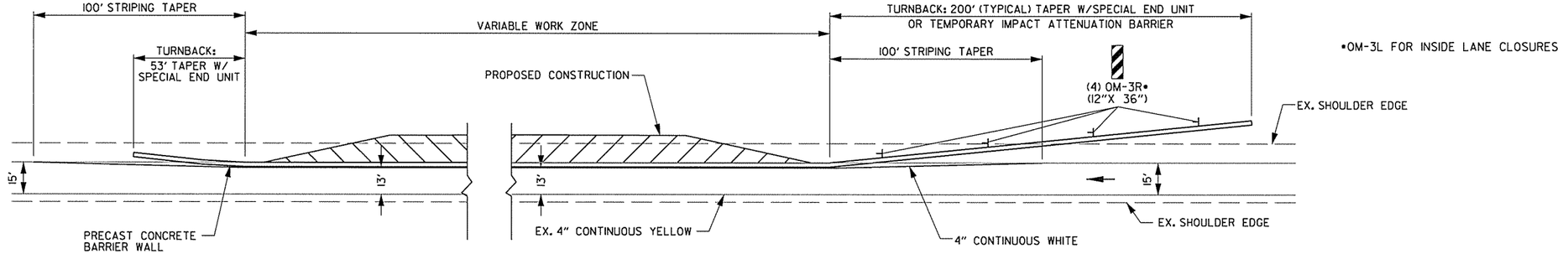

•OM-3L FOR INSIDE LANE CLOSURES

LANE SHIFT WITH BARRIER WALL - SINGLE LANE

NOTE: SEE MAINTENANCE OF TRAFFIC PLANS AND ADVANCE WARNING SIGN DETAILS FOR ADDITIONAL SIGNS IN WORK ZONE

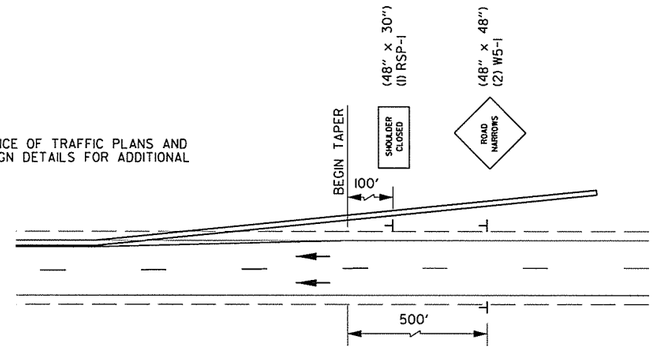

ADVANCE WARNING SIGNS FOR LANE SHIFT

MAINTENANCE OF TRAFFIC
LANE SHIFTS

AEWierciak 3/20/2016 2:23:01 PM
WORKSPACE: AHTD
L:\20R\10I7707 - I-540 Widening & Interchange Improvement\Drawings\rBB0414_MOT_SD_01.dgn
REVISED DATE:

DATE REVISED	DATE FILMED	DATE REVISED	DATE FILMED	FED.RD. DIST.NO.	STATE	FED.AID PROJ.NO.	SHEET NO.	TOTAL SHEETS
				6	ARK.			
				JOB NO.		BB0414	127	886
				(2)	MAINTENANCE OF TRAFFIC			

STATE OF ARKANSAS
LICENSED PROFESSIONAL ENGINEER
No.13653
ADAM E. WIERCIAK
3/20/16

NOTE :
QUANTITIES FOR P.C.C.B. PLACEMENT WERE CALCULATED ON THE FOLLOWING BASIS:

STAGE 1: P.C.C.B. PLACED AT SITE 1 OF 3
STAGE 1A: P.C.C.B. RELOCATED TO SITE 2 OF 3
STAGE 2: P.C.C.B. RELOCATED TO SITE 3 OF 3

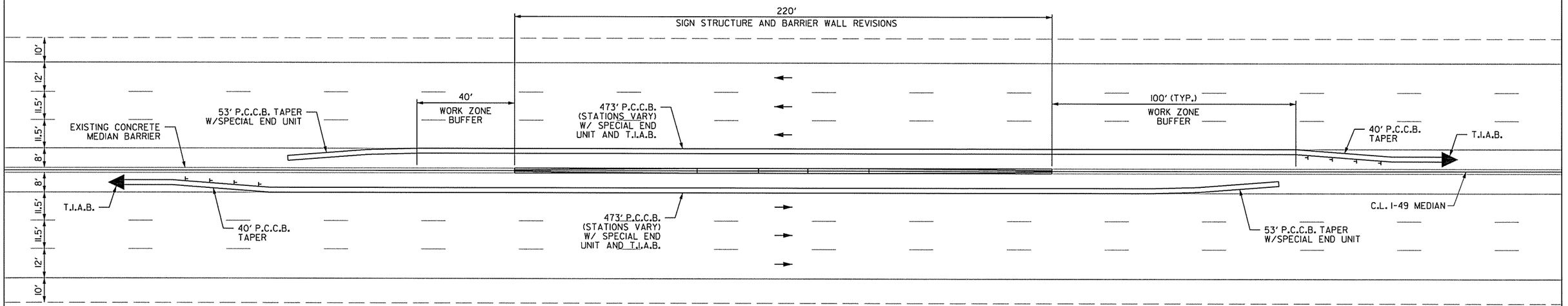

JOB 040605 STATIONING OF SIGN STRUCTURES TO BE MODIFIED:

STA. 191+00
STA. 208+50
STA. 238+00

MAINTENANCE OF TRAFFIC AND WORK ZONE PROTECTION FOR JOB 040605 SIGN STRUCTURE AND BARRIER WALL MODIFICATIONS

MAINTENANCE OF TRAFFIC
SIGN STRUCTURE MODIFICATIONS

AEWierciak 3/20/2016 11:52:43 AM
WORKSPACE: AHTD
L:\201\100707 - I-540 Widening & Interchange Improvement\Drawings\rBB0414_MOT_SD_03.dgn
REVISED DATE:

DATE REVISED	DATE FILMED	DATE REVISED	DATE FILMED	FED.RD. DIST.NO.	STATE	FED.AID PROJ.NO.	SHEET NO.	TOTAL SHEETS
				6	ARK.			
				JOB NO.		BB0414	128	886
				(2)	MAINTENANCE OF TRAFFIC			

STATE OF ARKANSAS
LICENSED PROFESSIONAL ENGINEER
No.13653
ADAM E. WIERCIAK

3/23/16

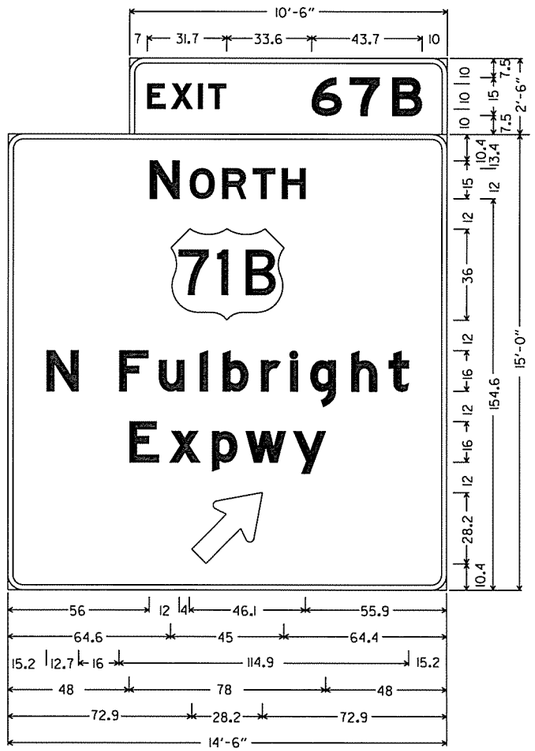

6.0" Radius, 2.0" Border, Black on Orange;
[EXIT] E Mod; [67B] E Mod;
6.0" Radius, 2.0" Border, White on Green;
[NORTH] E Mod;
MI-4;
[N Fulbright] E Mod;
[Expwy] E Mod;
Standard Arrow Custom 35.8" X 21.6" 45°;

6.0" Radius, 2.0" Border, Black on Orange;
[EXIT] E Mod; [67A] E Mod;
6.0" Radius, 2.0" Border, White on Green;
MI-6;
[Garland Ave] E Mod;
Standard Arrow Custom 35.8" X 21.6" 45°;

AEWierciak 3/21/2016 10:22:49 AM
WORKSPACE: AHTD
L:\2016\16177OT - I-540 Widening & Interchange Improvement\Drawings\rBB0414_MOT_SD_02.dgn
REVISED DATE:

MAINTENANCE OF TRAFFIC
SPECIAL SIGNS

DATE REVISED	DATE FILMED	DATE REVISED	DATE FILMED	FED.RD. DIST.NO.	STATE	FED.AID PROJ.NO.	SHEET NO.	TOTAL SHEETS
				6	ARK.			
				JOB NO.		BB0414	129	886
				(2)	MAINTENANCE OF TRAFFIC - STAGE I			

STATE OF ARKANSAS
LICENSED PROFESSIONAL ENGINEER
No.13653
ADAM E. WIERCIAK
3/20/16

ADDITIONAL STAGE I ADVANCE WARNING SIGNS

INSTALLATION STA.

ROAD NARROWS (2) W5-1 (48" X 48")

I-49 RT. STA. 234+77
I-49 LT. STA. 285+13
I-49 LT. STA. 377+00
HWY. 112 RAMP 4 STA. 292+50
HWY 112 TO NB I-49 STA. 289+00
SB HWY. 71B STA. 320+56
SB I-49 TO HWY. 112 327+72 (EX. SB I-49)
I-49 RT. STAGE I WIDENING 342+47

INSTALLATION STA.

END ROAD WORK (1) G20-2 (48" X 24")

HWY. 112 STA. 9+00
HWY. 112 STA. 26+00
SHILOH DR. STA. 10+00

SHOULDER CLOSED (1) RSP-1 (48" X 30")

I-49 RT. STA. 237+77
I-49 LT. STA. 373+00
HWY. 112 RAMP 4 STA. 288+50
HWY 112 TO NB I-49 STA. 289+00
SB HWY. 71B STA. 303+08 (EX. SB I-49)
SB HWY. 71B STA. 316+56
SB I-49 TO HWY. 112 350+00 (EX. SB I-49)
I-49 RT. STAGE I WIDENING 346+47

ROAD WORK 500 FT (1) W20-1 (48" X 48")

HWY. 112 STA. 9+00
HWY. 112 STA. 26+00
SHILOH DR. STA. 10+00

ROAD WORK 1000 FT (1) W20-1 (48" X 48")

HWY. 112 STA. 4+00
HWY. 112 STA. 32+00
SHILOH DR. STA. 5+00

ROAD WORK 1500 FT (1) W20-1 (48" X 48")

HWY. 112 500' BEFORE STA. 4+00
HWY. 112 STA. 36+00
SHILOH DR. STA. 0+00

STAGE I M.O.T. QUANTITIES

SIGNS = 1478 SQ. FT.
TRAFFIC DRUMS = 59 EACH
FURNISH AND INSTALL PRECAST CONCRETE BARRIER = 21615 LIN FT.
TEMPORARY IMPACT ATTENUATION BARRIER = 11 EACH
REMOVAL OF PERMANENT PAVEMENT MARKINGS = 4511 LIN. FT.
REMOVABLE CONSTRUCTION PAVEMENT MARKINGS = 450 LIN. FT.
CONSTRUCTION PAVEMENT MARKINGS = 23976 LIN. FT.

AEWierciak 3/20/2016 11:52:43 AM
WORKSPACE: AHTD
L:\20IN\10I7I07 - I-540 Widening & Interchange Improvement\Drawings\r-BB0414_MOT_SD_STI_01.dgn
REVISED DATE:

MAINTENANCE OF TRAFFIC DETAILS
I-49 - STAGE I

DATE REVISED	DATE FILMED	DATE REVISED	DATE FILMED

FED.RD. DIST.NO.	STATE	FED.AID PROJ.NO.	SHEET NO.	TOTAL SHEETS
6	ARK.			
JOB NO.		BB0414	130	886

(2) MAINTENANCE OF TRAFFIC - STAGE 1

STATE OF ARKANSAS
LICENSED PROFESSIONAL ENGINEER
No.13653
ADAM E. WIERCIAK
3/20/16

STAGE 1 CONSTRUCTION SEQUENCE NOTES:

1) WHILE MAINTAINING TWO LANES OF TRAFFIC EACH DIRECTION ALONG I-49, CONSTRUCT ADDITIONAL OUTSIDE LANES FOR BOTH NB & SB I-49 FROM THE BEGINNING OF PROJECT UP TO HWY. 112 (GARLAND AVENUE).

2) THE FINAL 2" OF SURFACE COURSE SHALL BE OMITTED FROM THIS STAGE.

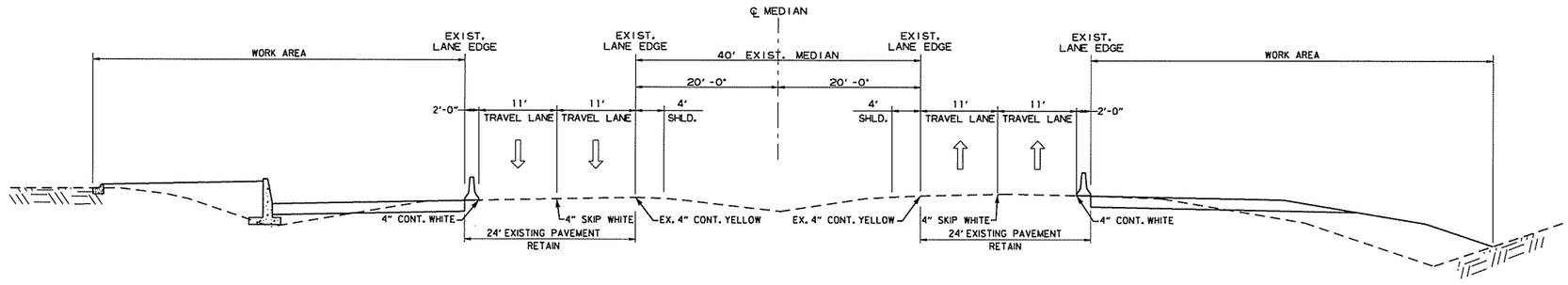

I-49
STAGE 1 TYPICAL SECTION

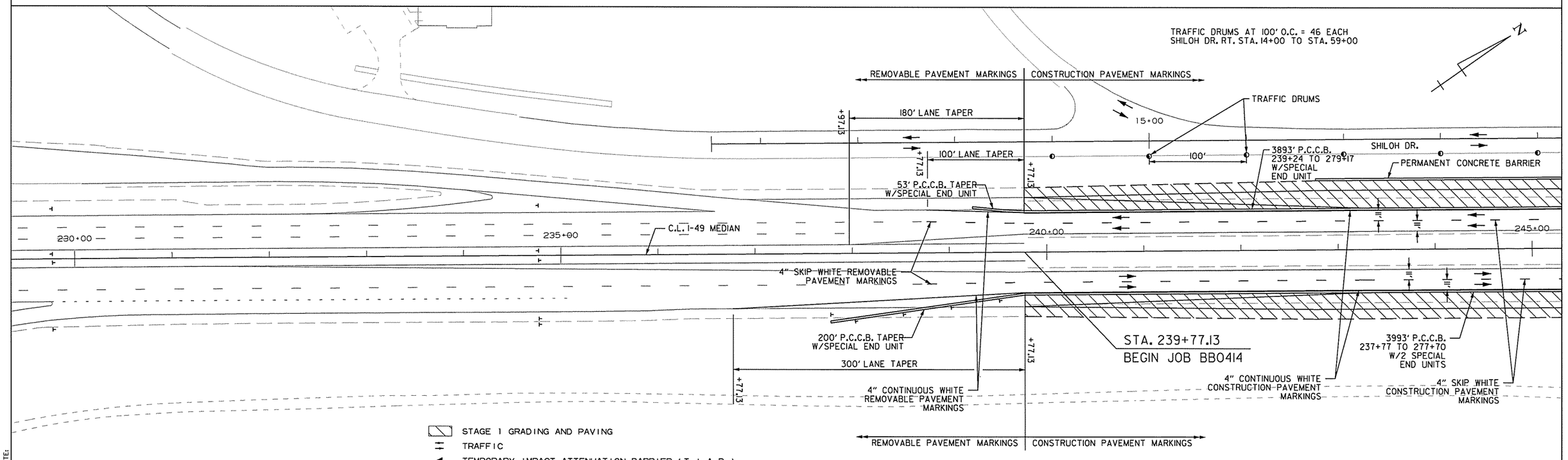

MAINTENANCE OF TRAFFIC DETAILS
I-49 - STAGE 1

AEWierciak 3/20/2016 11:52:43 AM
WORKSPACE: AHTD
L:\20II\II0I707 - I-540 Widening & Interchange Improvement\Drawings\rBB0414_MOT_SD_ST1_02.dgn
REVISED DATE:

DATE REVISED	DATE FILMED	DATE REVISED	DATE FILMED	FED.RD. DIST.NO.	STATE	FED.AID PROJ.NO.	SHEET NO.	TOTAL SHEETS
				6	ARK.			
				JOB NO.		BB0414	131	886

(2) MAINTENANCE OF TRAFFIC - STAGE 1

STATE OF ARKANSAS
LICENSED PROFESSIONAL ENGINEER
No.13653
ADAM E. WIERCIAK

STAGE 1 CONSTRUCTION SEQUENCE NOTES:

1) WHILE MAINTAINING TWO LANES OF TRAFFIC EACH DIRECTION ALONG I-49, CONSTRUCT ADDITIONAL OUTSIDE LANES FOR BOTH NB & SB I-49 FROM THE BEGINNING OF PROJECT UP TO HWY. 112 (GARLAND AVENUE).
2) THE FINAL 2" OF SURFACE COURSE SHALL BE OMITTED FROM THIS STAGE.
3) CONSTRUCT CURB AND GUTTER ON SHILOH DR.

TRAFFIC DRUMS AT 100' O.C. = 46 EACH
SHILOH DR. RT. STA. 14+00 TO STA. 59+00

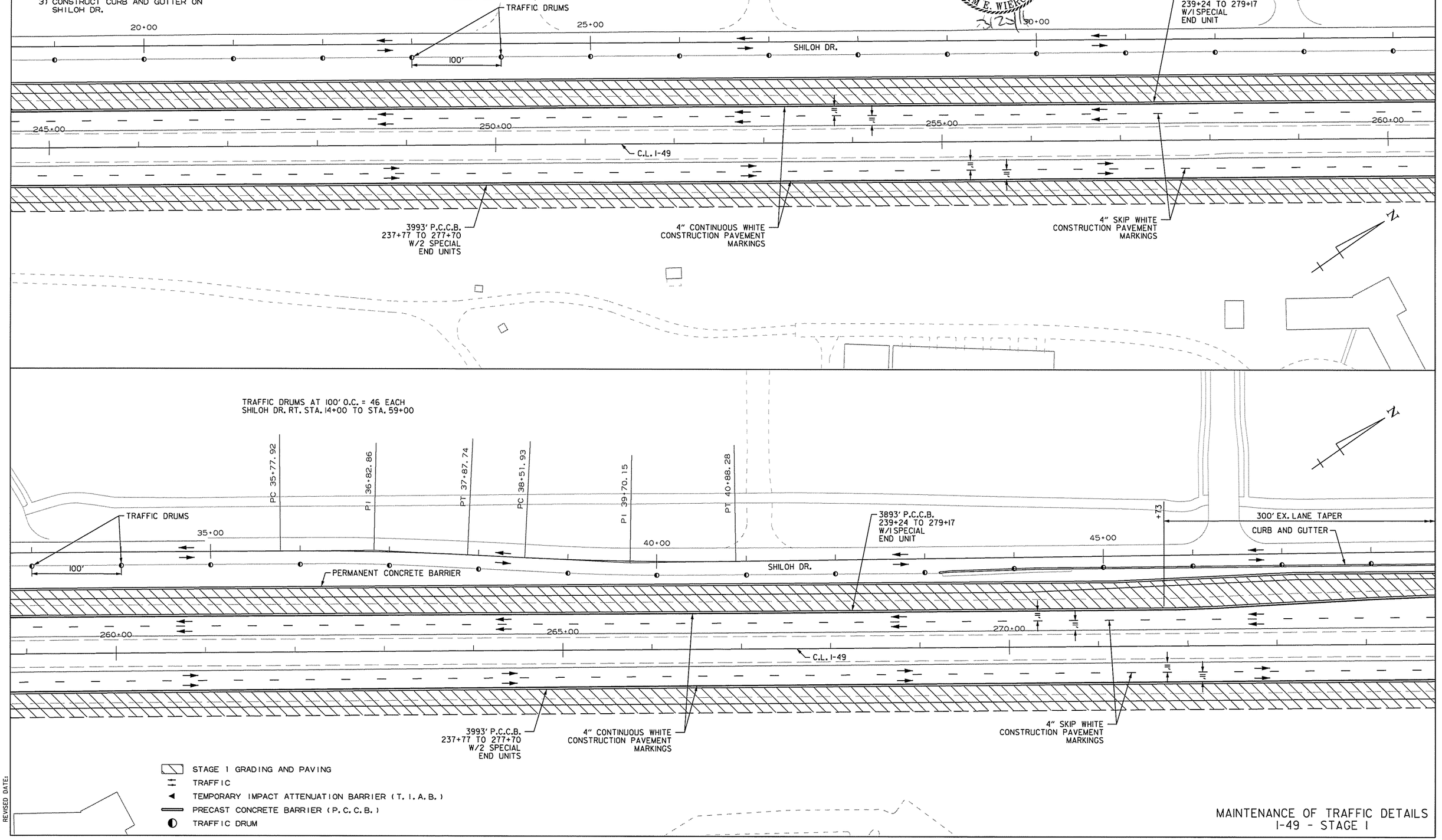

STAGE 1 GRADING AND PAVING
TRAFFIC
TEMPORARY IMPACT ATTENUATION BARRIER (T.I.A.B.)
PRECAST CONCRETE BARRIER (P.C.C.B.)
TRAFFIC DRUM

MAINTENANCE OF TRAFFIC DETAILS
I-49 - STAGE 1

AEWiercIak 3/20/2016 11:52:44 AM
WORKSPACE: AHTD
L:\20IN\I0I7I07 - I-540 Widening & Interchange Improvement\Drawings\rBB0414_MOT_S0_ST1_03.dgn
REVISED DATE:

DATE REVISED	DATE FILMED	DATE REVISED	DATE FILMED	FED.RD. DIST.NO.	STATE	FED.AID PROJ.NO.	SHEET NO.	TOTAL SHEETS
				6	ARK.			
				JOB NO.		BB0414	132	886
				(2)	MAINTENANCE OF TRAFFIC - STAGE I			

TRAFFIC DRUMS AT 100' O.C. = 46 EACH
SHILOH DR. RT. STA. 14+00 TO STA. 59+00

TRAFFIC DRUMS AT 50' O.C. = 7 EACH
HWY. 112 RAMP 4 RT. STA. 283+51 TO STA. 286+50

TRAFFIC DRUMS AT 18' O.C. = 2 EACH
HWY. 112 RAMP 4 RT. STA. 286+70 TO STA. 286+88

STATE OF ARKANSAS
LICENSED PROFESSIONAL ENGINEER
No. 13653
ADAM E. WIERCIAK
3/20/16

SHILOH DR.
C.L. HWY. 112 RAMP 4
PERMANENT CONCRETE BARRIER
300' EX. LANE TAPER
450' EX. ACCELERATION LANE
100' LANE TAPER
3893' P.C.C.B. 239+24 TO 279+17 W/1 SPECIAL END UNIT
2 - 11' INSIDE LANES 12' AUXILIARY LANE
2 - 11' LANES
3993' P.C.C.B. 237+77 TO 277+70 W/2 SPECIAL END UNITS
53' P.C.C.B. TAPER W/SPECIAL END UNIT
4" SKIP WHITE CONSTRUCTION PAVEMENT MARKINGS
4" CONTINUOUS WHITE CONSTRUCTION PAVEMENT MARKINGS
C.L. I-49
T.I.A.B.
160' P.C.C.B. TAPER
1213' P.C.C.B. 280+76 TO 292+96 W/1 SPECIAL END UNIT AND T.I.A.B.
C.L. HWY. 112 RAMP 1
53' P.C.C.B. TAPER W/SPECIAL END UNIT
HWY. 112
PERMANENT CONCRETE BARRIER
1493' P.C.C.B. 289+50 TO 303+60 W/2 SPECIAL END UNITS
100' P.C.C.B. TAPER
C.L. COLLECTOR-DISTRIBUTOR RD.
RETAIN 1' MIN. SHOULDER
200' P.C.C.B. TAPER W/SPECIAL END UNIT
2 - 11' INSIDE LANES 12' OUTSIDE LANE
1833' P.C.C.B. SB HWY. 71B 298+44 TO 315+56 W/2 SPECIAL END UNITS
4" CONTINUOUS YELLOW CONSTRUCTION PAVEMENT MARKINGS
RAMP GORE

I-49 STA. 296+89 STAGE I CONSTRUCT TEMPORARY TYPE RM DROP INLET 80' LT. (4' X 4' X H=8'0") WITH 30" X 37' R.C. PIPE CULVERT CONNECT TO DROP INLET C-D RD. STA. 296+26

STAGE 1 CONSTRUCTION SEQUENCE NOTES:

1) WHILE MAINTAINING TWO LANES OF TRAFFIC EACH DIRECTION ALONG I-49, CONSTRUCT ADDITIONAL OUTSIDE LANES FOR BOTH NB & SB I-49 FROM THE BEGINNING OF PROJECT UP TO HWY. 112 (GARLAND AVENUE) RAMPS.
2) CONSTRUCT CURB AND GUTTER ON SHILOH DR.
3) CONSTRUCT ADDITIONAL OUTSIDE LANES FOR NB I-49 FROM 286+00 TO 292+42.59.
4) CONSTRUCT SB WIDENING FROM 298+99 TO HWY. 71B RAMP. WIDEN 4' FROM 298+99 TO 300+40; TRANSITION TO 17' AT RAMP GORE.
5) THE FINAL 2" OF SURFACE COURSE SHALL BE OMITTED FROM THIS STAGE.

STAGE 1 GRADING AND PAVING
TRAFFIC
TEMPORARY IMPACT ATTENUATION BARRIER (T.I.A.B.)
PRECAST CONCRETE BARRIER (P.C.C.B.)
TRAFFIC DRUM

MAINTENANCE OF TRAFFIC DETAILS I-49 - STAGE I

AEWiercIak 3/20/2016 11:52:44 AM
WORKSPACE: AHTD - I-540 Widening & Interchange Improvement\Drawings\BB0414_MOT_SD_STL_04.dgn
L:\20I\I0I707
REVISED DATE:

DATE REVISED	DATE FILMED	DATE REVISED	DATE FILMED	FED.RD. DIST.NO.	STATE	FED.AID PROJ.NO.	SHEET NO.	TOTAL SHEETS
				6	ARK.			
				JOB NO.		BB0414	133	886

(2) MAINTENANCE OF TRAFFIC - STAGE 1

STATE OF ARKANSAS
LICENSED PROFESSIONAL ENGINEER
No.13653
ADAM E. WIERCIAK
3/24/16

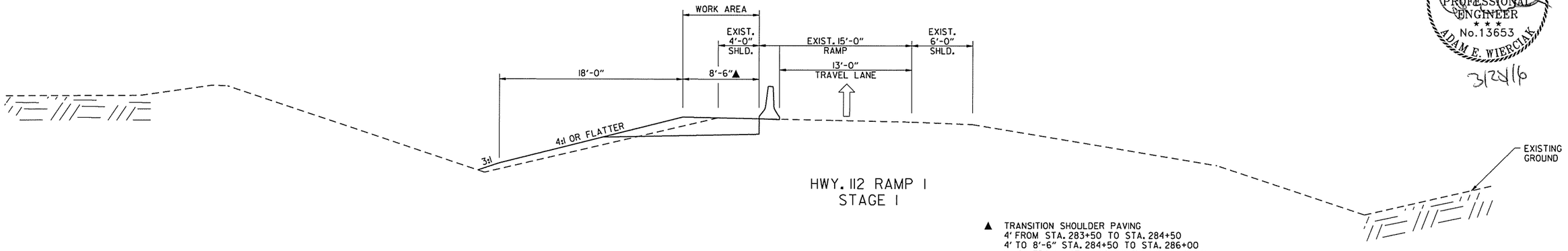

HWY. 112 RAMP 1
STAGE 1

▲ TRANSITION SHOULDER PAVING
4' FROM STA. 283+50 TO STA. 284+50
4' TO 8'-6" STA. 284+50 TO STA. 286+00
8'-6" FROM STA. 286+00 TO STA. 287+00
8'-6" TO 4' AT STA. 287+00 TO STA. 288+10
4' FROM STA. 288+10 TO STA. 288+55

STAGE 1 CONSTRUCTION SEQUENCE NOTES:

1) CONSTRUCT WIDENED SHOULDER FOR HWY. 112 RAMP 1.

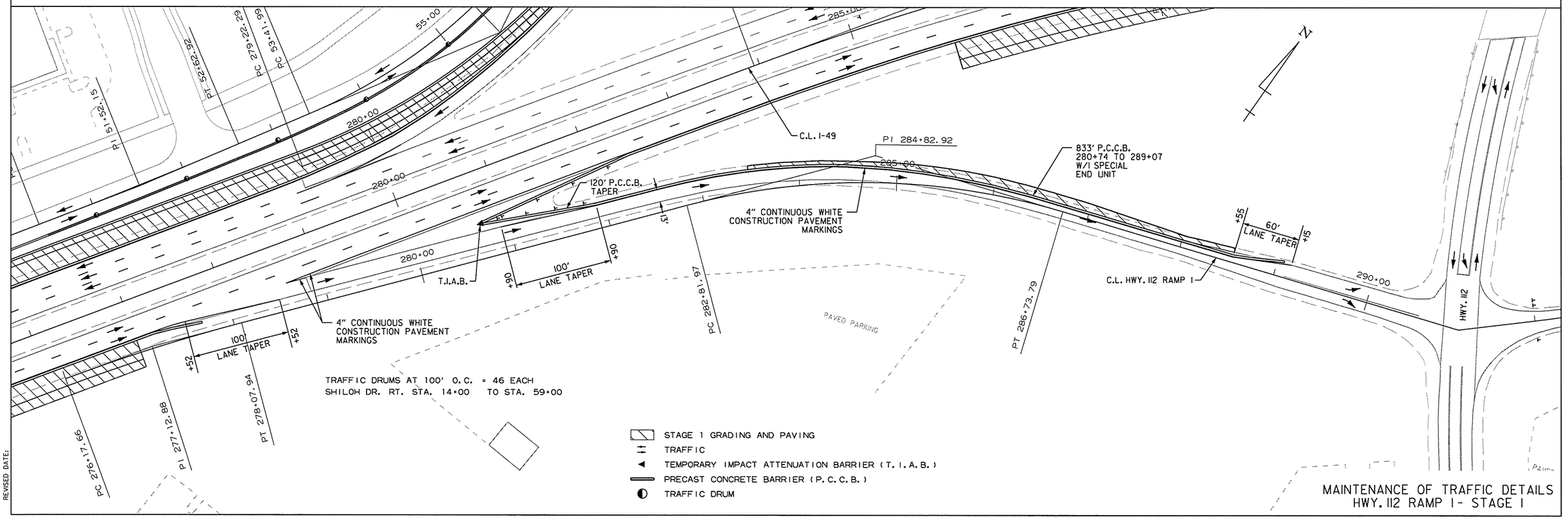

MAINTENANCE OF TRAFFIC DETAILS
HWY. 112 RAMP 1 - STAGE 1

AEWierciak 3/20/2016 11:52:44 AM
WORKSPACE: AHTD
L:\20\N\10\7707 - I-540 Widening & Interchange Improvement\Drawings\rBB0414_MOT_SD_ST1_05.dgn
REVISED DATE:

DATE REVISED	DATE FILMED	DATE REVISED	DATE FILMED	FED.RD. DIST.NO.	STATE	FED.AID PROJ.NO.	SHEET NO.	TOTAL SHEETS
				6	ARK.			
				JOB NO.		BB0414	134	886

(2) MAINTENANCE OF TRAFFIC - STAGE 1

TRAFFIC DRUMS @ 100' O.C. = 46 EACH
SHILOH DR. RT. STA. 14+00 TO STA. 59+00

TRAFFIC DRUMS @ 50' O.C. = 7 EACH
HWY. 112 RAMP 4 RT. STA. 283+51 TO STA. 286+50

TRAFFIC DRUMS @ 18' O.C. = 2 EACH
HWY. 112 RAMP 4 RT. STA. 286+70 TO STA. 286+88

STAGE 1 CONSTRUCTION SEQUENCE NOTES:

1) CONSTRUCT PORTION OF HWY. 112 RAMP 4 OUTSIDE OF EXISTING RAMP EDGE.
2) THE FINAL 2" OF SURFACE COURSE SHALL BE OMITTED FROM THIS STAGE.

STATE OF ARKANSAS
LICENSED PROFESSIONAL ENGINEER
No.13653
ADAM E. WIERCIAK
3/20/16

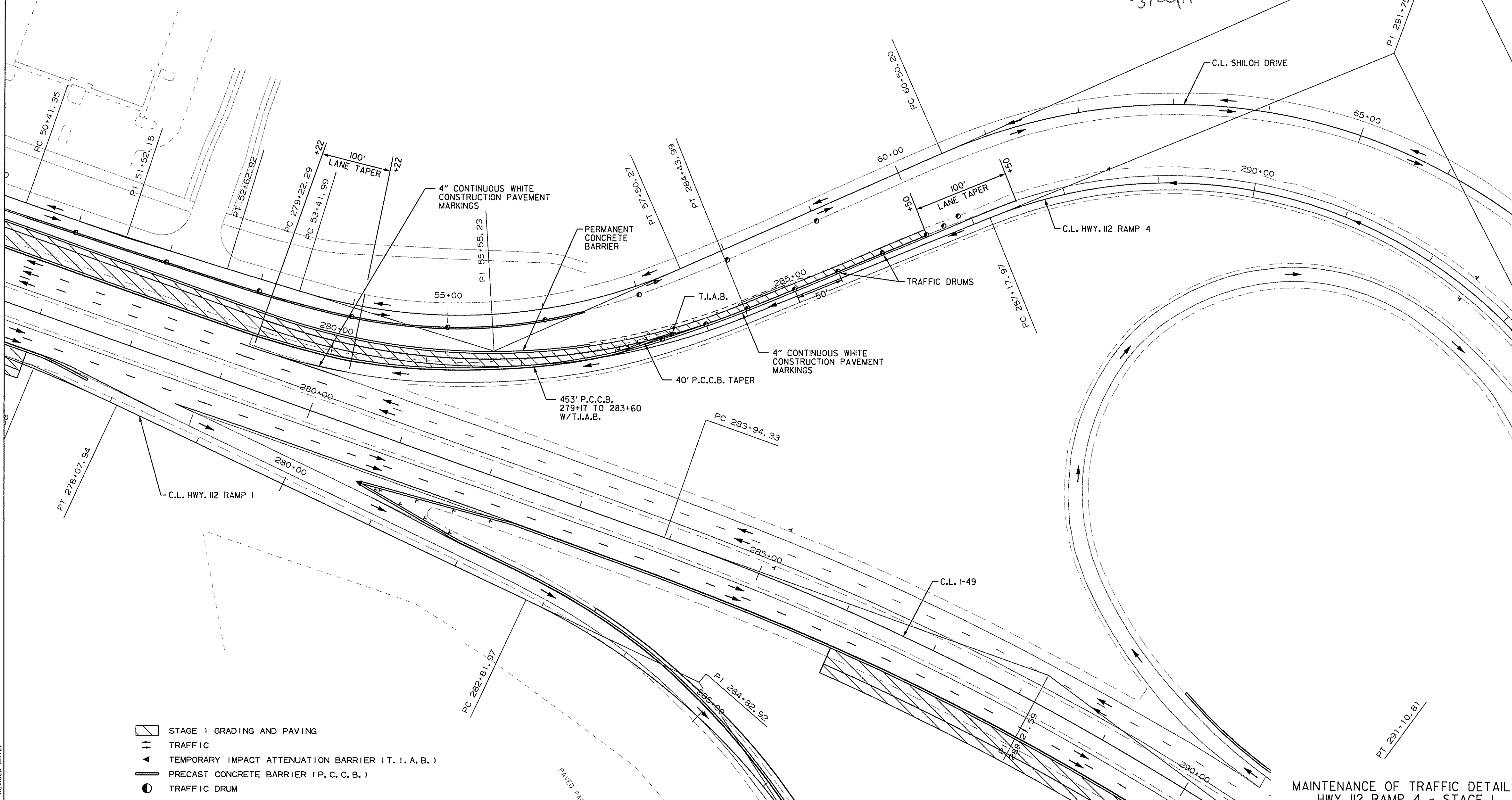

STAGE 1 GRADING AND PAVING
TRAFFIC
TEMPORARY IMPACT ATTENUATION BARRIER (T.I.A.B.)
PRECAST CONCRETE BARRIER (P.C.C.B.)
TRAFFIC DRUM

MAINTENANCE OF TRAFFIC DETAILS
HWY. 112 RAMP 4 - STAGE 1

AEWierciak 3/20/2016 11:52:44 AM
WORKSPACE: AHTD
L:\20N\107701 - I-540 Widening & Interchange Improvement\Drawings\rBB0414_MOT_SD_STI_06.dgn
REVISED DATE:

DATE REVISED	DATE FILMED	DATE REVISED	DATE FILMED	FED.RD. DIST.NO.	STATE	FED.AID PROJ.NO.	SHEET NO.	TOTAL SHEETS
				6	ARK.			
				JOB NO.		BB0414	135	886

(2) MAINTENANCE OF TRAFFIC - STAGE 1

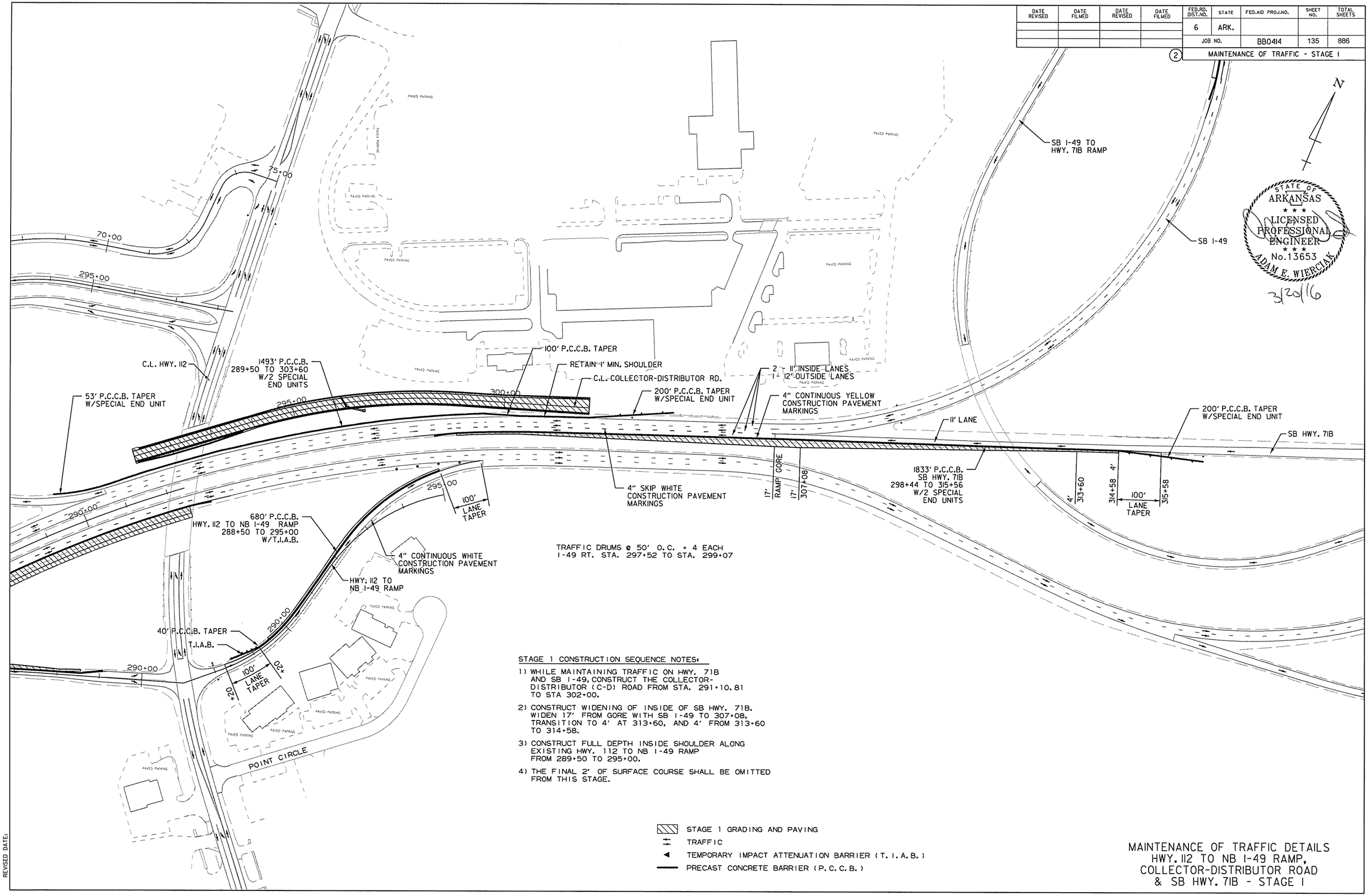

TRAFFIC DRUMS @ 50' O.C. = 4 EACH
I-49 RT. STA. 297+52 TO STA. 299+07

STAGE 1 CONSTRUCTION SEQUENCE NOTES:

1) WHILE MAINTAINING TRAFFIC ON HWY. 71B AND SB I-49, CONSTRUCT THE COLLECTOR-DISTRIBUTOR (C-D) ROAD FROM STA. 291+10.81 TO STA 302+00.
2) CONSTRUCT WIDENING OF INSIDE OF SB HWY. 71B. WIDEN 17' FROM GORE WITH SB I-49 TO 307+08, TRANSITION TO 4' AT 313+60, AND 4' FROM 313+60 TO 314+58.
3) CONSTRUCT FULL DEPTH INSIDE SHOULDER ALONG EXISTING HWY. 112 TO NB I-49 RAMP FROM 289+50 TO 295+00.
4) THE FINAL 2' OF SURFACE COURSE SHALL BE OMITTED FROM THIS STAGE.

STATE OF ARKANSAS
LICENSED PROFESSIONAL ENGINEER
No.13653
ADAM E. WIERCIAK
3/20/16

STAGE 1 GRADING AND PAVING
TRAFFIC
TEMPORARY IMPACT ATTENUATION BARRIER (T.I.A.B.)
PRECAST CONCRETE BARRIER (P.C.C.B.)

MAINTENANCE OF TRAFFIC DETAILS HWY. 112 TO NB I-49 RAMP, COLLECTOR-DISTRIBUTOR ROAD & SB HWY. 71B - STAGE 1

AEWiercIak 3/20/2016 11:52:45 AM
WORKSPACE: AHTD
L:\2011\110177 - I-540 Widening & Interchange Improvement\Drawings\rBB0414_MOT_SD_ST1_07.dgn
REVISED DATE:

DATE REVISED	DATE FILMED	DATE REVISED	DATE FILMED	FED.RD. DIST.NO.	STATE	FED.AID PROJ.NO.	SHEET NO.	TOTAL SHEETS
				6	ARK.			
				JOB NO.		BB0414	136	886

(2) MAINTENANCE OF TRAFFIC - STAGE 1

EXISTING HWY. 71B EXIT RAMP

53' P.C.C.B. TAPER W/SPECIAL END UNIT

673' P.C.C.B. 342+62 TO 349+65 W/I SPECIAL END UNIT AND T.I.A.B.

253' P.C.C.B. 345+14 TO 347+76 W/I SPECIAL END UNIT AND T.I.A.B.

100' LANE TAPERS:
342+52 TO 343+52 LT.
344+82 TO 345+82 RT.
346+79 TO 347+79 RT.
348+22 TO 349+22 LT.

PI 345+91.82

PT 348+54.50

C.L. STAGE 1 NB I-49 WIDENING STA. 356+85.24 =
C.L. I-49 STA. 356+85.24, 58.00' RT.

PI 354+

TEMP. SB I-49 DETOUR

PC 339+17.19

100' LANE TAPER

+29

4" SKIP WHITE CONSTRUCTION PAVEMENT MARKINGS

PT 342+05.53

340+00

345+00

350+00

80' P.C.C.B. TAPER

160' P.C.C.B. TAPER

120' P.C.C.B. TAPER

T.I.A.B.

T.I.A.B.

53' P.C.C.B. TAPER W/SPECIAL END UNIT

4" CONTINUOUS WHITE CONSTRUCTION PAVEMENT MARKINGS

FULL DEPTH PAVEMENT

873' P.C.C.B. 338+74 TO 347+49 W/I SPECIAL END UNIT AND T.I.A.B.

PI 340+63.47

PC 344+43.47

PI 345+81.31

+70

100' LANE TAPER

+70

PT 347+39.37

PC 352+53.61

PI 351+84.60

STAGE 1 CONSTRUCTION SEQUENCE NOTES:

1) WHILE MAINTAINING TRAFFIC ON SB I-49 AND THE HWY. 71 EXIT RAMP, CONSTRUCT THE TEMP. I-49 SB DETOUR WITH CONNECTIONS TO BOTH THE HWY. 71 EXIT RAMP AND SB I-49. STAGE CONSTRUCTION TO MAINTAIN 13' RAMP WIDTH AT DETOUR/RAMP CROSSING.

2) CONSTRUCT TEMPORARY SHOULDER WIDENING ON NB AND SB I-49 AS SHOWN.

4" SKIP WHITE CONSTRUCTION PAVEMENT MARKINGS

NB I-49

4" CONTINUOUS WHITE CONSTRUCTION PAVEMENT MARKINGS

350+00

2533' P.C.C.B. 347+20 TO 372+64 W/I SPECIAL END UNIT AND T.I.A.B.

12'

6'

STATE OF ARKANSAS
LICENSED PROFESSIONAL ENGINEER
No. 13653
ADAM E. WIERCIAK
3/24/16

C.L. STAGE 1 NB I-49 WIDENING
PI = 351+84.60
Δ = 42°02'43" RT.
D = 4°00'00"
T = 550.49
L = 1051.13
PC= 346+34.11
PT= 356+85.24
e = MATCH EXISTING

100' LANE TAPER

+48

C.L. STAGE 1 NB I-49 WIDENING

100' P.C.C.B. TAPER

T.I.A.B.

C.L. STAGE 1 NB I-49 WIDENING STA. 346+34.11 =
C.L. I-49 STA. 345+67.64, 82.92' RT.

PI 354+23.20

TEMP. SB I-49 DETOUR

355+00

PT 358+91.99

+25 75' LT. WIDENING OFFSET

1953' P.C.C.B. 354+30 TO 373+85 W/I SPECIAL END UNIT AND T.I.A.B.

12'

6'

+75 10' WIDENING

+00 10' WIDENING

100' LANE TAPER

+81

+81

PRC 355+91.90

+84

PI 357+42.26

360+00

365+00

4" CONTINUOUS WHITE CONSTRUCTION PAVEMENT MARKINGS

C.L. I-49

C.L. STAGE 1 NB I-49 WIDENING

12'

9'

9'

4" SKIP WHITE CONSTRUCTION PAVEMENT MARKINGS

+00 16' WIDENING

2533' P.C.C.B. 347+20 TO 372+64 W/I SPECIAL END UNIT AND T.I.A.B.

+00 10' WIDENING

VAN ASCHE DR.

+00 10' WIDENING

+00 6' WIDENING

PT 356+85.24

C.L. STAGE 1 NB I-49 WIDENING STA. 356+85.24 =
C.L. I-49 STA. 356+85.24, 58.00' RT.

STAGE 1 GRADING AND PAVING
TRAFFIC
TEMPORARY IMPACT ATTENUATION BARRIER (T.I.A.B.)
PRECAST CONCRETE BARRIER (P.C.C.B.)

MAINTENANCE OF TRAFFIC DETAILS
I-49 & TEMP. SB I-49 DETOUR - STAGE 1

AEWiercIak 3/20/2016 11:52:45 AM
WORKSPACE: AHTD
L:\2011\110170T - I-540 Widening & Interchange Improvement\Drawings\r-BB0414_M0T_S0_ST1_08.dgn
REVISED DATE:

DATE REVISED	DATE FILMED	DATE REVISED	DATE FILMED	FED.RD. DIST.NO.	STATE	FED.AID PROJ.NO.	SHEET NO.	TOTAL SHEETS
				6	ARK.			
				JOB NO.		BB0414	137	886
				(2)	MAINTENANCE OF TRAFFIC - STAGE 1			

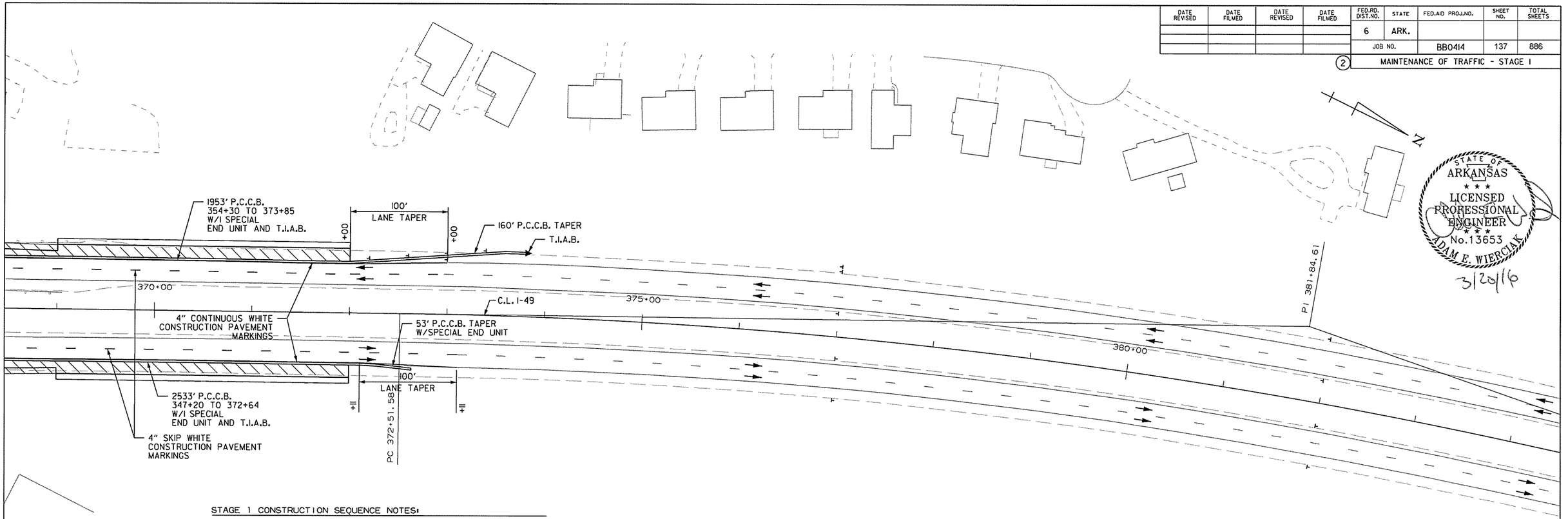

STATE OF ARKANSAS
LICENSED PROFESSIONAL ENGINEER
No.13653
ADAM E. WIERCIAK
3/20/16

STAGE 1 CONSTRUCTION SEQUENCE NOTES:

1) CONSTRUCT SHOULDER WIDENING AS SHOWN ON NB AND SB I-49.

2) CONSTRUCT SB I-49 WIDENING TO FINAL CONDITION BETWEEN STA. 369+00 AND STA. 372+00. THE FINAL 2" OF SURFACE COURSE SHALL BE OMITTED FROM THIS STAGE.

STAGE 1 GRADING AND PAVING

TRAFFIC

TEMPORARY IMPACT ATTENUATION BARRIER (T.I.A.B.)

PRECAST CONCRETE BARRIER (P.C.C.B.)

MAINTENANCE OF TRAFFIC DETAILS
I-49 - STAGE 1

AEWierciak 3/20/2016 11:52:45 AM
WORKSPACE: AHTD
L:\20IN\I0I7107 - I-540 Widening & Interchange Improvement\Drawings\r-BB0414_MOT_SD_STL09.dgn
REVISED DATE:

DATE REVISED	DATE FILMED	DATE REVISED	DATE FILMED	FED.RD. DIST.NO.	STATE	FED.AID PROJ.NO.	SHEET NO.	TOTAL SHEETS
				6	ARK.			
				JOB NO.		BB0414	138	886
				(2)	MAINTENANCE OF TRAFFIC - STAGE IA			

ADDITIONAL STAGE IA ADVANCE WARNING SIGNS

STATE OF ARKANSAS
LICENSED PROFESSIONAL ENGINEER
No.13653
ADAM E. WIERCIAK
3/20/16

INSTALLATION STA.

ROAD NARROWS (2) W5-1 (48" X 48")

(2) WI-4aL (48" X 48") HWY. 112 TO HWY. 71B STA. 287+30

INSTALLATION STA.

(2) WI-4aL (48" X 48") SB HWY. 71B STA. 319+30

(2) WI-4bL (48" X 48") I-49 RT. STA. 356+00
SB I-49 DETOUR STA. 352+40

(2) WI-4bR (48" X 48") I-49 LT. STA. 363+94
I-49 LT. STA. 377+00

ROAD NARROWS (2) W5-1 (48" X 48")
I-49 RT. STA. 234+77
I-49 LT. STA. 289+00
I-49 RT. STA. 304+07
I-49 RT. STA. 340+00
SB I-49 TO HWY. 71B STA. 325+57
SB I-49 DETOUR STA. 340+50

INSTALLATION STA.

END ROAD WORK (1) G20-2 (48" X 24")
HWY. 112 STA. 2+00
HWY. 112 STA. 36+00
SHILOH DR. STA. 10+00

(1) OM-3L (12"X 36")
I-49 RT. STA. 342+85 TO 343+65 (x4)

SHOULDER CLOSED (1) RSP-1 (48" X 30")
I-49 RT. STA. 237+77
I-49 LT. STA. 287+00
I-49 RT. STA. 289+92
I-49 LT. STA. 294+74
I-49 RT. STA. 308+07
I-49 RT. STA. 313+17
I-49 RT. STA. 337+50
I-49 RT. STA. 362+00
I-49 LT. STA. 371+00
I-49 LT. STA. 395+25
HWY. 112 TO NB I-49 RT.
HWY. 71B STA. 334+36 LT.
SB HWY. 71B STA. 303+08 (EX. SB I-49)
SB HWY. 71B STA. 311+00 RT.
SB HWY. 71B STA. 326+90 LT.
NB I-49 TO HWY. 71B STA. 321+00
SB I-49 TO HWY. 112 STA. 336+50 RT. (EX. SB I-49)
SB I-49 TO HWY. 71B STA. 321+57 (x2)

ROAD WORK 500 FT (1) W20-1 (48" X 48")
HWY. 112 STA. 2+00
HWY. 112 STA. 36+00
SHILOH DR. STA. 10+00

ROAD WORK 1000 FT (1) W20-1 (48" X 48")
HWY. 112 500' BEFORE STA. 2+00
HWY. 112 500' AFTER STA. 36+00
SHILOH DR. STA. 5+00

ROAD WORK 1500 FT (1) W20-1 (48" X 48")
HWY. 112 1000' BEFORE STA. 2+00
HWY. 112 1000' AFTER STA. 36+00
SHILOH DR. STA. 0+00

STAGE IA M.O.T. QUANTITIES

SIGNS = 2101 SQ. FT.
TRAFFIC DRUMS = 189 EACH
FURNISH AND INSTALL PRECAST CONCRETE BARRIER = 14377 LIN. FT.
RELOCATE PRECAST CONCRETE BARRIER = 15062 LIN. FT.
TEMPORARY IMPACT ATTENUATION BARRIER (RELOCATION) = 9 EACH
REMOVAL OF PERMANENT PAVEMENT MARKINGS = 19992 LIN. FT.
REMOVABLE CONSTRUCTION PAVEMENT MARKINGS = 1604 LIN. FT.
CONSTRUCTION PAVEMENT MARKINGS = 55986 LIN. FT.
REMOVAL OF CONSTRUCTION PAVEMENT MARKINGS = 13757 LIN. FT.

AEWierciak 3/20/2016 11:52:45 AM
WORKSPACE: AHTD
L:\ZON\101707 - I-540 Widening & Interchange Improvement\Drawings\rBB0414_MOT_SD_STIA_01.dgn
REVISED DATE:

MAINTENANCE OF TRAFFIC DETAILS
I-49 - STAGE IA

DATE REVISED	DATE FILMED	DATE REVISED	DATE FILMED	FED.RD. DIST.NO.	STATE	FED.AID PROJ.NO.	SHEET NO.	TOTAL SHEETS
				6	ARK.			
				JOB NO.		BB0414	139	886
				(2)	MAINTENANCE OF TRAFFIC - STAGE IA			

STATE OF ARKANSAS
LICENSED PROFESSIONAL ENGINEER
No.13653
ADAM E. WIERCIAK
3/20/16

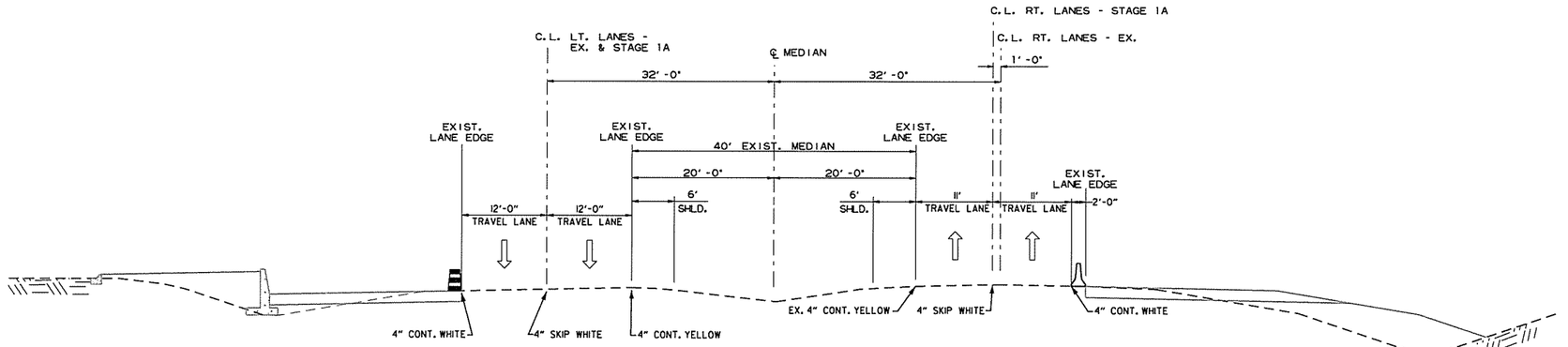

I-49
STAGE IA TYPICAL SECTION

STAGE 1A CONSTRUCTION SEQUENCE NOTES:

1) REMOVE SB I-49 BARRIER WALL AND PROVIDE 2 - 12' TRAVEL LANES.

TRAFFIC DRUMS @ 100' O.C. = 19 EACH
I-49 STA. 241+00 TO 259+00

REMOVABLE PAVEMENT MARKINGS | CONSTRUCTION PAVEMENT MARKINGS

TRAFFIC DRUMS

15+00

SHILOH DR.

4" CONTINUOUS WHITE REMOVABLE PAVEMENT MARKINGS

4" SKIP WHITE REMOVABLE PAVEMENT MARKINGS

100'

12'

12'

230+00

235+00

C.L. I-49

240+00

245+00

11'

11'

200' P.C.C.B. TAPER W/SPECIAL END UNIT

4" CONTINUOUS WHITE CONSTRUCTION PAVEMENT MARKINGS

3960' P.C.C.B. 237+77 TO 277+37 W/1 SPECIAL END UNIT

4" SKIP WHITE CONSTRUCTION PAVEMENT MARKINGS

STA. 239+77.13
BEGIN JOB BB0414

TRAFFIC
TEMPORARY IMPACT ATTENUATION BARRIER (T.I.A.B.)
PRECAST CONCRETE BARRIER (P.C.C.B.)
TRAFFIC DRUM

MAINTENANCE OF TRAFFIC DETAILS
I-49 - STAGE IA

AEWierciak 3/20/2016 11:52:46 AM
WORKSPACE: AHTD
L:\20IN\10I7707 - I-540 Widening & Interchange Improvement\Drawings\r-BB0414_MOT_SD_STIA_03.dgn
REVISED DATE:

DATE REVISED	DATE FILMED	DATE REVISED	DATE FILMED	FED.RD. DIST.NO.	STATE	FED.AID PROJ.NO.	SHEET NO.	TOTAL SHEETS
				6	ARK.			
				JOB NO.		BB0414	140	886

(2) MAINTENANCE OF TRAFFIC - STAGE IA

STATE OF ARKANSAS
LICENSED PROFESSIONAL ENGINEER
No.13653
ADAM E. WIERCIAK
3/20/16

TRAFFIC DRUMS @ 100' O.C. = 19 EACH
I-49 LT. STA. 241+00 TO STA. 259+00
TRAFFIC DRUMS @ 50' O.C. = 6 EACH
I-49 LT. STA. 259+50 TO STA. 262+00

TRAFFIC DRUMS
20+00
25+00
SHILOH DR.
4" CONTINUOUS WHITE CONSTRUCTION PAVEMENT MARKINGS
PERMANENT CONCRETE BARRIER
300' LANE TAPER
50'
100'
12'
245+00
250+00
255+00
260+00
C.L. I-49
4" SKIP WHITE CONSTRUCTION PAVEMENT MARKINGS
3960' P.C.C.B.
237+77 TO 277+37
W/I SPECIAL
END UNIT

STAGE 1A CONSTRUCTION SEQUENCE NOTES:

1) REMOVE SB I-49 BARRIER WALL AND PROVIDE 2 - 12' TRAVEL LANES.

TRAFFIC DRUMS @ 50' O.C. = 6 EACH
I-49 LT. STA. 259+50 TO STA. 262+00
TRAFFIC DRUMS @ 100' O.C. = 8 EACH
I-49 LT. STA. 263+00 TO STA. 270+00
TRAFFIC DRUMS @ 50' O.C. = 18 EACH
I-49 LT. STA. 270+50 TO STA. 279+00
TRAFFIC DRUMS @ 50' O.C. = 16 EACH
I-49 LT. STA. 271+00 TO STA. 278+50
TRAFFIC DRUMS @ 50' O.C. = 17 EACH
I-49 LT. STA. 271+00 TO STA. 279+00

PC 35+77.92
PI 36+82.86
PT 37+87.74
PC 38+51.93
PI 39+70.15
PT 40+88.28
4" CONTINUOUS WHITE CONSTRUCTION PAVEMENT MARKINGS
TRAFFIC DRUMS
35+00
40+00
45+00
SHILOH DR.
1000' RAMP TAPER
300' LANE TAPER
PERMANENT CONCRETE BARRIER
50'
100'
12'
260+00
265+00
270+00
C.L. I-49
4" SKIP WHITE CONSTRUCTION PAVEMENT MARKINGS
3960' P.C.C.B.
237+77 TO 277+37
W/I SPECIAL
END UNIT

TRAFFIC
TEMPORARY IMPACT ATTENUATION BARRIER (T.I.A.B.)
PRECAST CONCRETE BARRIER (P.C.C.B.)
TRAFFIC DRUM

MAINTENANCE OF TRAFFIC DETAILS
I-49 - STAGE IA

AEWierciak 3/20/2016 11:52:46 AM
WORKSPACE: AHTD
L:\20\1\101707 - I-540 Widening & Interchange Improvement\Drawings\rBB0414_MOT_SD_STIA_04.dgn
REVISED DATE:

DATE REVISED	DATE FILMED	DATE REVISED	DATE FILMED	FED.RD. DIST.NO.	STATE	FED.AID PROJ.NO.	SHEET NO.	TOTAL SHEETS
				6	ARK.			
				JOB NO.		BB0414	141	886
				(2)	MAINTENANCE OF TRAFFIC - STAGE IA			

TRAFFIC DRUMS @ 50' O.C. = 18 EACH
I-49 LT. STA. 270+50 TO STA. 279+00

TRAFFIC DRUMS @ 50' O.C. = 16 EACH
I-49 LT. STA. 271+00 TO STA. 278+50

TRAFFIC DRUMS @ 50' O.C. = 17 EACH
I-49 LT. STA. 271+00 TO STA. 279+00

TRAFFIC DRUMS @ 50' O.C. = 12 EACH
I-49 RT. STA. 303+92 TO STA. 308+28

TRAFFIC DRUMS @ 50' O.C. = 15 EACH
HWY. 112 RAMP 4 LT. STA. 279+51 TO STA. 286+50

TRAFFIC DRUMS @ 50' O.C. = 8 EACH
COLLECTOR DISTRIBUTOR RD. LT. STA. 276+65 TO STA. 280+14

TRAFFIC DRUMS @ 50' O.C. = 3 EACH
HWY. 112 RAMP 1 RT. STA. 287+57 TO STA. 288+50

TRAFFIC DRUMS @ 50' O.C. = 2 EACH
HWY. 112 RAMP 1 RT. STA. 289+98 TO STA. 290+51

TRAFFIC DRUMS @ 50' O.C. = 15 EACH
HWY. 112 LT. STA. 7+38 TO STA. 14+40

TRAFFIC DRUMS @ 50' O.C. = 5 EACH
HWY. 112 LT. STA. 15+39 TO STA. 17+36

TRAFFIC DRUMS = 4 EACH
HWY. 112 LT. STA. 21+32 TO STA. 22+28

TRAFFIC DRUMS @ 50' O.C. = 6 EACH
HWY. 112 LT. STA. 23+94 TO STA. 26+31

TRAFFIC DRUMS @ 50' O.C. = 9 EACH
HWY. 112 LT. STA. 27+81 TO STA. 31+08

STATE OF ARKANSAS
LICENSED PROFESSIONAL ENGINEER
No.13653
ADAM E. WIERCIAK
3/20/16

N

1113' P.C.C.B. 278+45 TO 289+48 W/I SPECIAL END UNIT AND T.I.A.B.

C.L. SHILOH DRIVE

PERMANENT CONCRETE BARRIER

3 - 12' LANES

1000' RAMP TAPER

100' LANE TAPER

2 - 11' LANES

TRAFFIC DRUMS

3960' P.C.C.B. 237+77 TO 277+37 W/I SPECIAL END UNIT

53' P.C.C.B. TAPER W/SPECIAL END UNIT

C.L. HWY. 112 RAMP 4

PC 280+29.37

PRC 282+88.89

160' P.C.C.B. TAPER

C.L. TEMP. C-D. RD. TO SB I-49 DETOUR

PI 287+06.31

PC 283+46.28

53' P.C.C.B. TAPER W/SPECIAL END UNIT

293' P.C.C.B. 291+00 TO 293+92 W/I SPECIAL END UNIT AND T.I.A.B.

PT 288+83.21

PT 291+10.81

C.L. HWY. 112

T.I.A.B.

281+59.33

C.L. I-49

2 - 11' LANES

1033' P.C.C.B. 280+76 TO 292+96 W/I SPECIAL END UNIT AND T.I.A.B.

40' P.C.C.B. TAPER

253' P.C.C.B. 290+68 TO 293+22 W/I SPECIAL END UNIT AND T.I.A.B.

PERMANENT CONCRETE BARRIER

C.L. HWY. 112 RAMP 1

4" SKIP WHITE CONSTRUCTION PAVEMENT MARKINGS

4" CONTINUOUS WHITE CONSTRUCTION PAVEMENT MARKINGS

1400' P.C.C.B. 290+29 TO 303+60 W/I SPECIAL END UNIT

100' P.C.C.B. TAPER

2 - 12' LANES

200' P.C.C.B. TAPER

13' LANE

C.L. HWY. 112 TO NB I-49 RAMP

STAGE 1A OVERLAY UNDER TRAFFIC
STAGE 1A GRADING AND PAVING
TRAFFIC
TEMPORARY IMPACT ATTENUATION BARRIER (T.I.A.B.)
PRECAST CONCRETE BARRIER (P.C.C.B.)
TRAFFIC DRUM

STAGE 1A CONSTRUCTION SEQUENCE NOTES:

1) CONSTRUCT TEMP. C-D RD. TO SB I-49 DETOUR.

2) SEE OTHER STAGE 1A SHEETS FOR DETAILS ON HWY. 112 AND RAMPS.

MAINTENANCE OF TRAFFIC DETAILS
I-49 - STAGE IA

AEWiarciak 3/20/2016 11:52:46 AM
WORKSPACE: AHTD
L:\20IN\I0I707 - I-540 Widening & Interchange Improvement\Drawings\rBB0414_MOT_SD_STIA_05.dgn
REVISED DATE:

DATE REVISED	DATE FILMED	DATE REVISED	DATE FILMED	FED.RD. DIST.NO.	STATE	FED.AID PROJ.NO.	SHEET NO.	TOTAL SHEETS
				6	ARK.			
				JOB NO.		BB0414	142	886
				(2)	MAINTENANCE OF TRAFFIC - STAGE IA			

140' P.C.C.B. TAPER
T.I.A.B.
100' LANE TAPER
4" CONTINUOUS WHITE CONSTRUCTION PAVEMENT MARKINGS
513' P.C.C.B. 308+85 TO 313+95 W/1 SPECIAL END UNIT AND T.I.A.B.
200' LANE TAPER
200' P.C.C.B. TAPER W/SPECIAL END UNIT
2" MILL AND INLAY AT EXISTING RUMBLE STRIPS
+30
TRAFFIC DRUMS @ 50' O.C. = 12 EACH I-49 RT. STA. 303+92 TO STA. 308+28
305+00
C.L. I-49
I-49 +00.00 81.26' RT.
R2000'
PI 305+12.41
PT 306+07.47
I-49 +02.67 82.11' RT.
PC 308+13.00
PI 308+58.92
PT 309+04.79
4" SKIP WHITE CONSTRUCTION PAVEMENT MARKINGS
310+00
PC 310+38.00
PI 311+61.66
PT 312+84.79
EX. NB I-49
PC 312+51.50
PC 314+87.51
315+00
113' P.C.C.B. 312+25 TO 323+50 W/2 SPECIAL END UNITS
4" SKIP WHITE CONSTRUCTION PAVEMENT MARKINGS
320+00
4" CONTINUOUS YELLOW CONSTRUCTION PAVEMENT MARKINGS
EX. NB I-49 TO HWY. 71B RAMP
C.L. TEMP. EX. NB I-49 TO PR. I-49 RAMP
53' P.C.C.B. TAPER W/SPECIAL END UNIT
140' P.C.C.B. TAPER
C.L. HWY. 112 TO NB I-49 RAMP
C.L. NB I-49 TO HWY. 71B RAMP
PT 302+05.84
C.L. HWY. 112 TO HWY. 71B RAMP
PC 313+36.68
C.L. TEMP NB I-49 TO HWY. 71B RAMP
PC 317+42.84
PI 316+32.73
PT 320+76.89
N

PC 321+51.46
C.L. COLLECTOR-DISTRIBUTOR ROAD
HWY. 71B
PI 322+46.68
PT 323+41.74
320+00
4" CONTINUOUS YELLOW CONSTRUCTION PAVEMENT MARKINGS
TEMP. EX. NB I-49 TO PR. I-49 RAMP
113' P.C.C.B. 312+25 TO 323+50 W/2 SPECIAL END UNITS
4" SKIP WHITE CONSTRUCTION PAVEMENT MARKINGS
53' P.C.C.B. TAPER W/SPECIAL END UNIT
+00
100' LANE TAPER
+00
PC 324+18.88
PT 324+68.88
325+00
330+00
335+00
C.L. I-49
4%
Z

STAGE 1A CONSTRUCTION SEQUENCE NOTES:

1) CONSTRUCT REALIGNED NB I-49 FROM STA. 305+00 TO 313+30
2) CONSTRUCT REALIGNED I-49 FROM HWY. 71B GRADE SEPARATION TO STA. 356+22 AS SHOWN.
3) ON NB I-49 NORTH OF HWY. 71B BRIDGE, CONSTRUCT TO 41' RT. WITH 2:1 TEMPORARY SLOPE TO EXISTING GROUND BEYOND 41' RT.
4) ON EX. NB I-49, FROM STA. 305+30 TO TEMP. NB I-49 TO HWY. 71B RAMP, MILL 2" OF ROADWAY SURFACE AT RUMBLE STRIPS AND INLAY 2" OF SURFACE COURSE. DO NOT REPLACE RUMBLE STRIPS.

STAGE 1A GRADING AND PAVING
TRAFFIC
TEMPORARY IMPACT ATTENUATION BARRIER (T.I.A.B.)
PRECAST CONCRETE BARRIER (P.C.C.B.)
TRAFFIC DRUM

STATE OF ARKANSAS
LICENSED PROFESSIONAL ENGINEER
No.13653
ADAM E. WIERCIAK
3/25/16

MAINTENANCE OF TRAFFIC DETAILS
I-49 - STAGE IA

AEWierciak 3/20/2016 11:52:47 AM
WORKSPACE: AHTD
L:\20\1\101770T - I-540 Widening & Interchange Improvement\Drawings\rBB0414_MOT_SD_STIA_06.dgn
REVISED DATE:

DATE REVISED	DATE FILMED	DATE REVISED	DATE FILMED	FED.RD. DIST.NO.	STATE	FED.AID PROJ.NO.	SHEET NO.	TOTAL SHEETS
				6	ARK.			
				JOB NO.		BB0414	143	886
				(2)	MAINTENANCE OF TRAFFIC - STAGE IA			

STAGE 1A CONSTRUCTION SEQUENCE NOTES:

1) SWITCH I-49 TRAFFIC ONTO WIDENED SHOULDERS AND TEMPORARY SB I-49 DETOUR.

2) CONSTRUCT REALIGNED I-49 FROM HWY. 71 GRADE SEPARATION TO STA. 356+22 AS SHOWN. CONSTRUCT NB I-49 TO 41' RT. TO 348+00 WITH 2:1 TEMPORARY SLOPE BEYOND. MAINTAIN DRAINAGE INTO DOUBLE 36" PIPES NEAR 341+00 RT.

3) CONSTRUCT MEDIAN WIDENING FROM STA. 356+22 TO END OF PROJECT.

335+00
340+00
345+00
350+00
C.L. I-49
PERMANENT CONCRETE BARRIER
PT 342+30.82
PC 349+90.63
PI 347+09.41
PI 351+12.16
54'
4'
PC 339+17.62
PT 341+47.97
80' P.C.C.B. TAPER
160' P.C.C.B. TAPER W/SPECIAL END UNIT
100' LANE TAPER
+21
TEMP. HWY. 71B TO NB I-49
600' ACCELERATION LANE
5593' P.C.C.B. 337+60 TO 393+69 W/2 SPECIAL END UNITS
4" CONTINUOUS YELLOW CONSTRUCTION PAVEMENT MARKINGS
PC 346+18.47
4" SKIP WHITE CONSTRUCTION PAVEMENT MARKINGS
300' LANE TAPER
PT 348+00.00
12'
4" CONTINUOUS WHITE CONSTRUCTION PAVEMENT MARKINGS
+30
STATE OF ARKANSAS LICENSED PROFESSIONAL ENGINEER No.13653 ADAM E. WIERCIAK 3/23/16
N

C.L. TEMP SB I-49 DETOUR
PI 354+19.39
PI 355+19.39
PRC 355+91.90
PI 357+42.26
PC 354+14.35
PT 354+95.16
PC 354+14.35
PRC 356+24.05
PT 356+24.05
PT 358+81.30
PT 358+91.99
+94
C.L. TEMP. SB I-49 DETOUR STA. 358+91.99 = C.L. I-49 STA. 358+94.04, 63.62' LT.
581' LANE TAPER
40' P.C.C.B. TAPER
4" SKIP WHITE CONSTRUCTION PAVEMENT MARKINGS
C.L. TEMP. SB I-49 DETOUR STAGE 2
4" CONTINUOUS YELLOW CONSTRUCTION PAVEMENT MARKINGS
3573' P.C.C.B. 337+60 TO 393+69 W/I SPECIAL END UNIT AND T.I.A.B.
C.L. STAGE 3 TEMP SB I-49 TO HWY. 112
9.5'
54'
28'
22'
4" SKIP WHITE CONSTRUCTION PAVEMENT MARKINGS
5593' P.C.C.B. 337+60 TO 393+69 W/2 SPECIAL END UNITS
4" CONTINUOUS WHITE CONSTRUCTION PAVEMENT MARKINGS
180' P.C.C.B. TAPER W/SPECIAL END UNIT
220' P.C.C.B. 361+96 TO 364+12 W/I SPECIAL END UNIT
300' LANE TAPER
VAN ASCHE DR.
CONCRETE

C.L. STAGE 3 TEMP SB I-49 TO HWY. 112
PI = 355+19.39
Δ = 8°23'17" RT.
D = 4°00'00"
T = 105.04
L = 209.70
PC= 354+14.35
PT= 356+24.05
e = MATCH EX.
Ls = MATCH EX.

C.L. STAGE 3 TEMP SB I-49 TO HWY. 112
PI = 357+52.87
Δ = 7°43'03" LT.
D = 3°00'00"
T = 128.82
L = 257.25
PC= 356+24.05
PT= 358+81.30
e = MATCH EX.
Ls = MATCH EX.

STAGE 1A OVERLAY UNDER TRAFFIC
TRAFFIC
TEMPORARY IMPACT ATTENUATION BARRIER (T.I.A.B.)
PRECAST CONCRETE BARRIER (P.C.C.B.)
TRAFFIC DRUM

MAINTENANCE OF TRAFFIC DETAILS I-49 - STAGE IA

AEWierciak 3/20/2016 11:52:47 AM
WORKSPACE: AHTD
L:\2016\16177\07 - I-540 Widening & Interchange Improvement\Drawings\r-BB0414_MOT_SD_STIA_01.dgn
REVISED DATE:

DATE REVISED	DATE FILMED	DATE REVISED	DATE FILMED	FED.RD. DIST.NO.	STATE	FED.AID PROJ.NO.	SHEET NO.	TOTAL SHEETS
				6	ARK.			
				JOB NO.		BB0414	144	886
				(2)	MAINTENANCE OF TRAFFIC - STAGE IA			

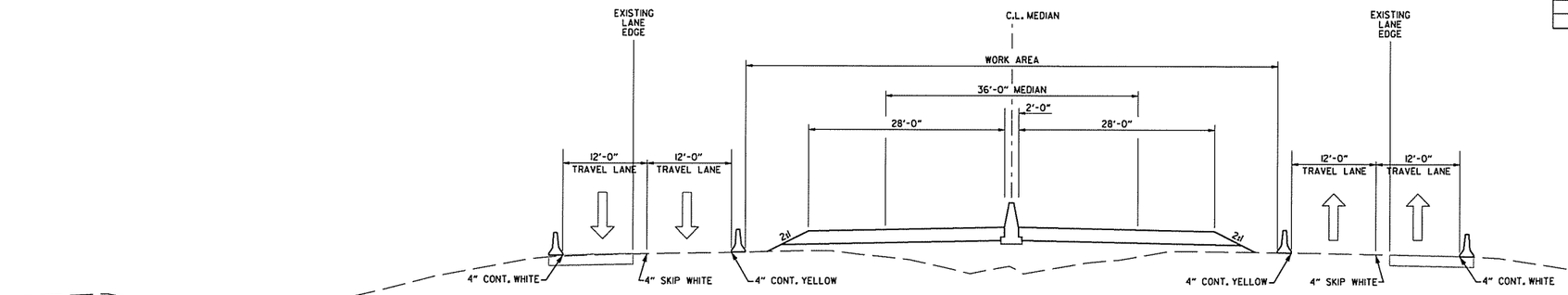

I-49
STAGE IA TYPICAL SECTION (VAN ASCHE BRIDGE APPROACHES)

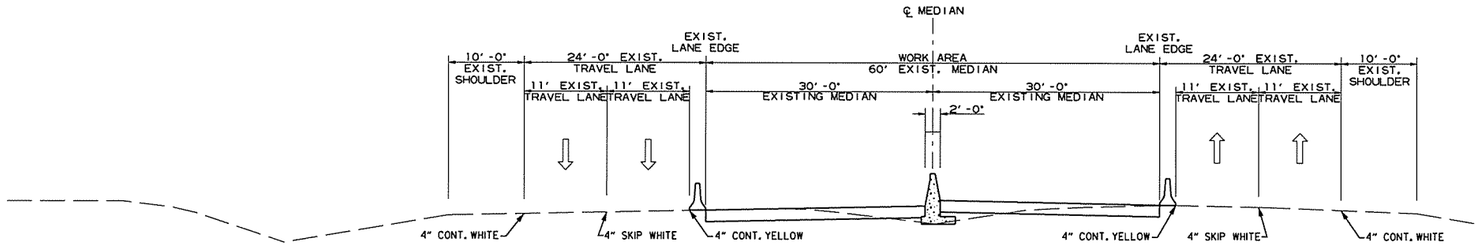

I-49
STAGE IA TYPICAL SECTION (NOTCH AND WIDEN)

STAGE IA CONSTRUCTION SEQUENCE NOTES:

1) WHILE MAINTAINING TRAFFIC ON EXISTING I-49, CONSTRUCT MEDIAN WIDENING.

STATE OF ARKANSAS
LICENSED PROFESSIONAL ENGINEER
No.13653
ADAM E. WIERCIAK
3/20/16

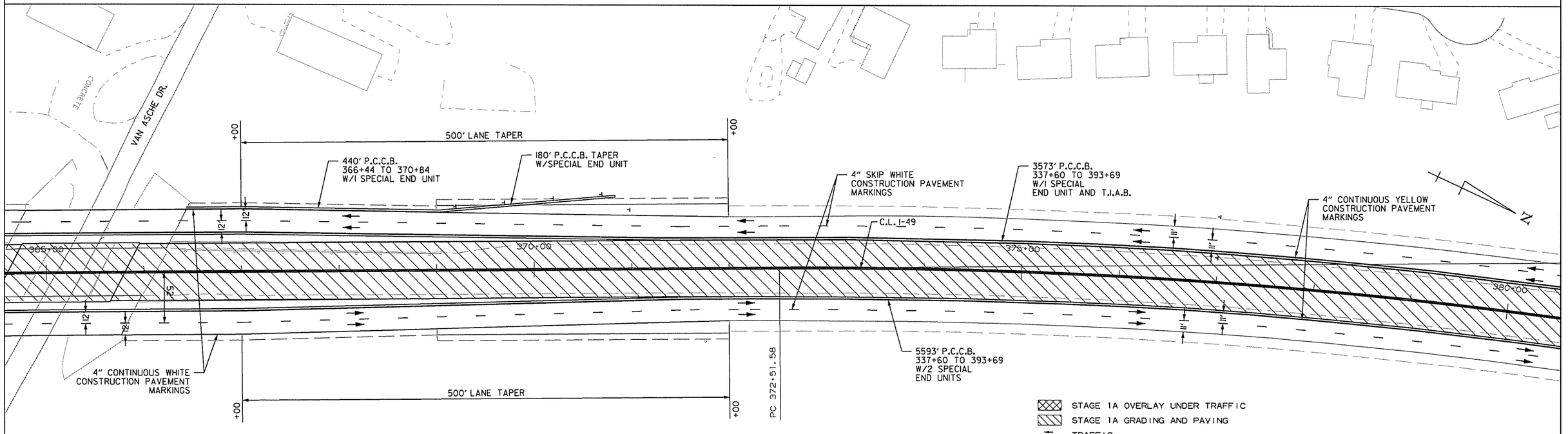

MAINTENANCE OF TRAFFIC DETAILS
I-49 - STAGE IA

AEWierciak 3/20/2016 11:52:47 AM
WORKSPACE: AHTD
L:\2011\101707 - I-540 Widening & Interchange Improvement\Drawings\rBB0414_MOT_SD_STIA_08.dgn
REVISED DATE:

DATE REVISED	DATE FILMED	DATE REVISED	DATE FILMED	FED.RD. DIST.NO.	STATE	FED.AID PROJ.NO.	SHEET NO.	TOTAL SHEETS
				6	ARK.			
				JOB NO.		BB0414	145	886
				(2)	MAINTENANCE OF TRAFFIC - STAGE IA			

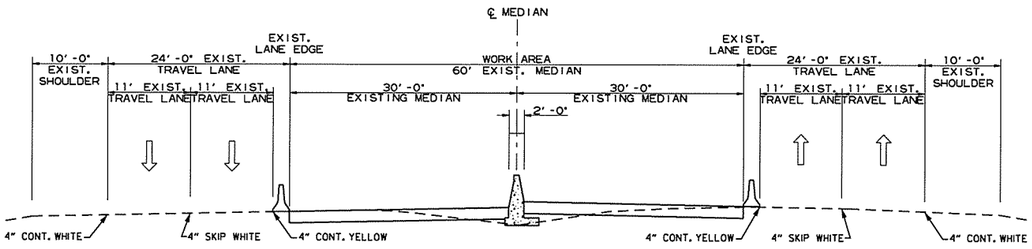

I-49
STAGE IA TYPICAL SECTION

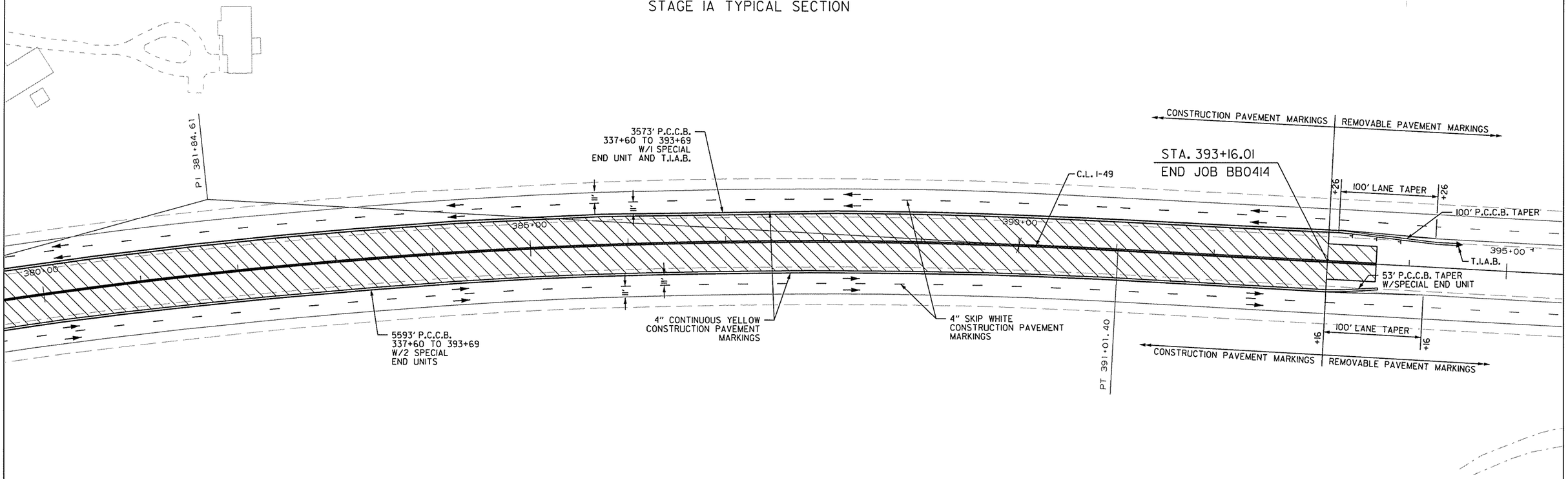

STAGE 1A CONSTRUCTION SEQUENCE NOTES:

1) WHILE MAINTAINING TRAFFIC ON EXISTING I-49, CONSTRUCT MEDIAN WIDENING.

STAGE 1A GRADING AND PAVING
TRAFFIC
TEMPORARY IMPACT ATTENUATION BARRIER (T.I.A.B.)
PRECAST CONCRETE BARRIER (P.C.C.B.)

MAINTENANCE OF TRAFFIC DETAILS
I-49 - STAGE IA

STATE OF ARKANSAS
LICENSED PROFESSIONAL ENGINEER
No.13653
ADAM E. WIERCIAK
3/21/16

AEWiercIak 3/20/2016 11:52:47 AM
WORKSPACE: AHTD
L:\20IN\I0I707 - I-540 Widening & Interchange Improvement\Drawings\r-BB0414_MOT_SD_STIA_09.dgn
REVISED DATE:

DATE REVISED	DATE FILMED	DATE REVISED	DATE FILMED	FED.RD. DIST.NO.	STATE	FED.AID PROJ.NO.	SHEET NO.	TOTAL SHEETS
				6	ARK.			
				JOB NO.		BB0414	146	886
				(2)	MAINTENANCE OF TRAFFIC - STAGE IA			

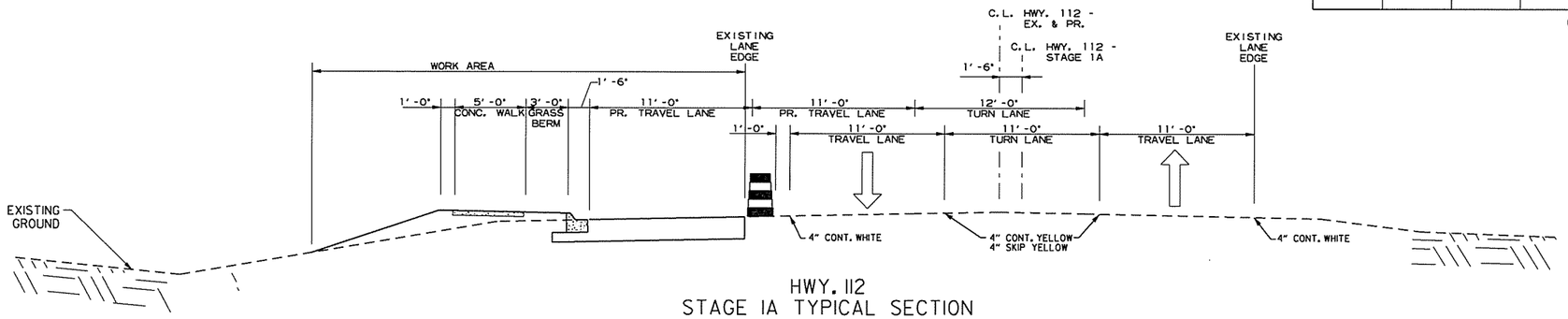

HWY. 112
STAGE IA TYPICAL SECTION

STATE OF ARKANSAS
LICENSED PROFESSIONAL ENGINEER
No.13653
ADAM E. WIERCIAK
3/23/16

STAGE 1A CONSTRUCTION SEQUENCE NOTES:

1) MAINTAIN TRAFFIC BOTH DIRECTIONS OF HWY. 112 (GARLAND AVENUE) BY SHIFTING TO THE EAST SO THAT WIDENING TO THE WEST CAN BE CONSTRUCTED.

2) OMIT PORTION OF SHARED USE PATH AS NEEDED TO ALLOW SIGNAL AT STA. 23+38 LT. TO REMAIN IN THIS STAGE.

NOTE:
CONTINUE TO MAINTAIN ACCESS TO DRIVEWAYS AT ALL TIMES.

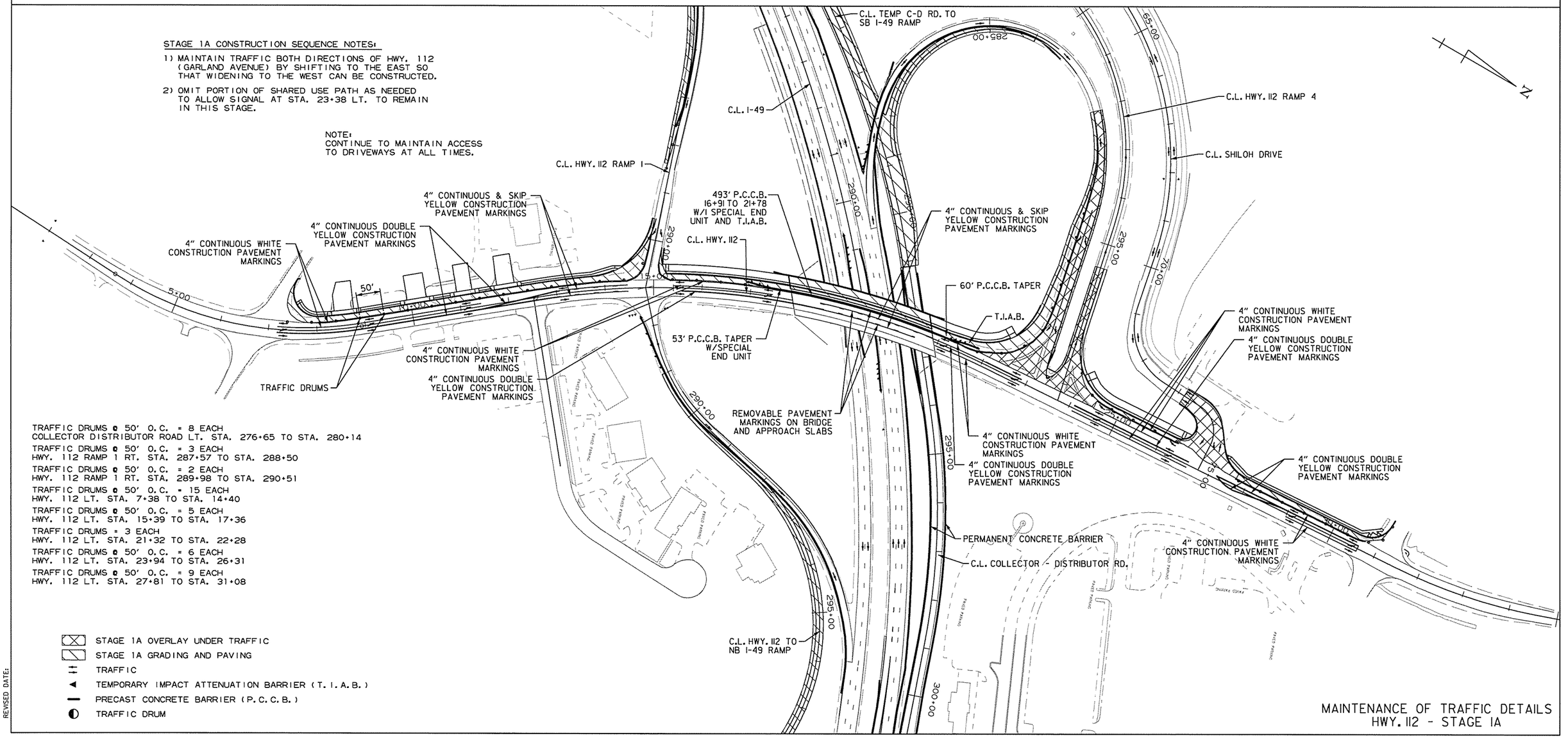

TRAFFIC DRUMS @ 50' O.C. = 8 EACH
COLLECTOR DISTRIBUTOR ROAD LT. STA. 276+65 TO STA. 280+14

TRAFFIC DRUMS @ 50' O.C. = 3 EACH
HWY. 112 RAMP 1 RT. STA. 287+57 TO STA. 288+50

TRAFFIC DRUMS @ 50' O.C. = 2 EACH
HWY. 112 RAMP 1 RT. STA. 289+98 TO STA. 290+51

TRAFFIC DRUMS @ 50' O.C. = 15 EACH
HWY. 112 LT. STA. 7+38 TO STA. 14+40

TRAFFIC DRUMS @ 50' O.C. = 5 EACH
HWY. 112 LT. STA. 15+39 TO STA. 17+36

TRAFFIC DRUMS = 3 EACH
HWY. 112 LT. STA. 21+32 TO STA. 22+28

TRAFFIC DRUMS @ 50' O.C. = 6 EACH
HWY. 112 LT. STA. 23+94 TO STA. 26+31

TRAFFIC DRUMS @ 50' O.C. = 9 EACH
HWY. 112 LT. STA. 27+81 TO STA. 31+08

- STAGE 1A OVERLAY UNDER TRAFFIC
- STAGE 1A GRADING AND PAVING
- TRAFFIC
- TEMPORARY IMPACT ATTENUATION BARRIER (T.I.A.B.)
- PRECAST CONCRETE BARRIER (P.C.C.B.)
- TRAFFIC DRUM

MAINTENANCE OF TRAFFIC DETAILS
HWY. 112 - STAGE 1A

AEWierciak 3/20/2016 11:52:48 AM
WORKSPACE: AHTD
L:\2016\160770T - I-540 Widening & Interchange Improvement\Drawings\r-BB0414_MOT_SD-STIA_10.dgn
REVISED DATE:

DATE REVISED	DATE FILMED	DATE REVISED	DATE FILMED	FED.RD. DIST.NO.	STATE	FED.AID PROJ.NO.	SHEET NO.	TOTAL SHEETS
				6	ARK.			
				JOB NO.		BB0414	147	886
				(2)	MAINTENANCE OF TRAFFIC - STAGE IA			

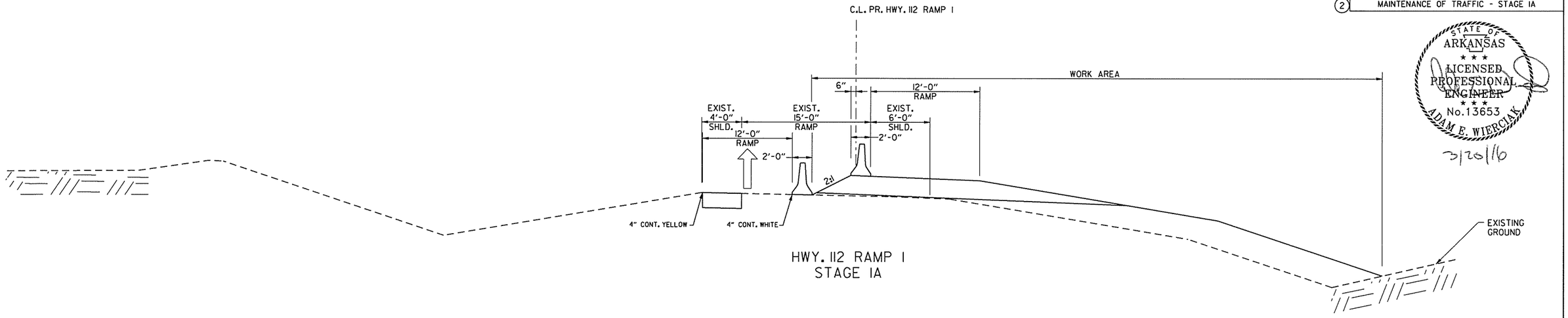

HWY. 112 RAMP 1
STAGE IA

STATE OF ARKANSAS
LICENSED PROFESSIONAL ENGINEER
No. 13653
ADAM E. WIERCIAK
3/20/16

STAGE 1A CONSTRUCTION SEQUENCE NOTES:

1) USE WIDENED SHOULDER FOR HWY. 112 RAMP 1 CONSTRUCTED IN PREVIOUS STAGE TO MAINTAIN TRAFFIC ON THE RAMP.

2) CONSTRUCT RAMP 1 AS SHOWN FROM 277+00 TO 286+00. DO NOT CONSTRUCT TOP LAYER OF SURFACE COURSE. TRANSITION FROM PROPOSED GRADE TO EXISTING BETWEEN 286+00 AND 287+00. CONSTRUCT FULL DEPTH SHOULDER PAVEMENT SECTION FROM 287+00 TO 288+40.

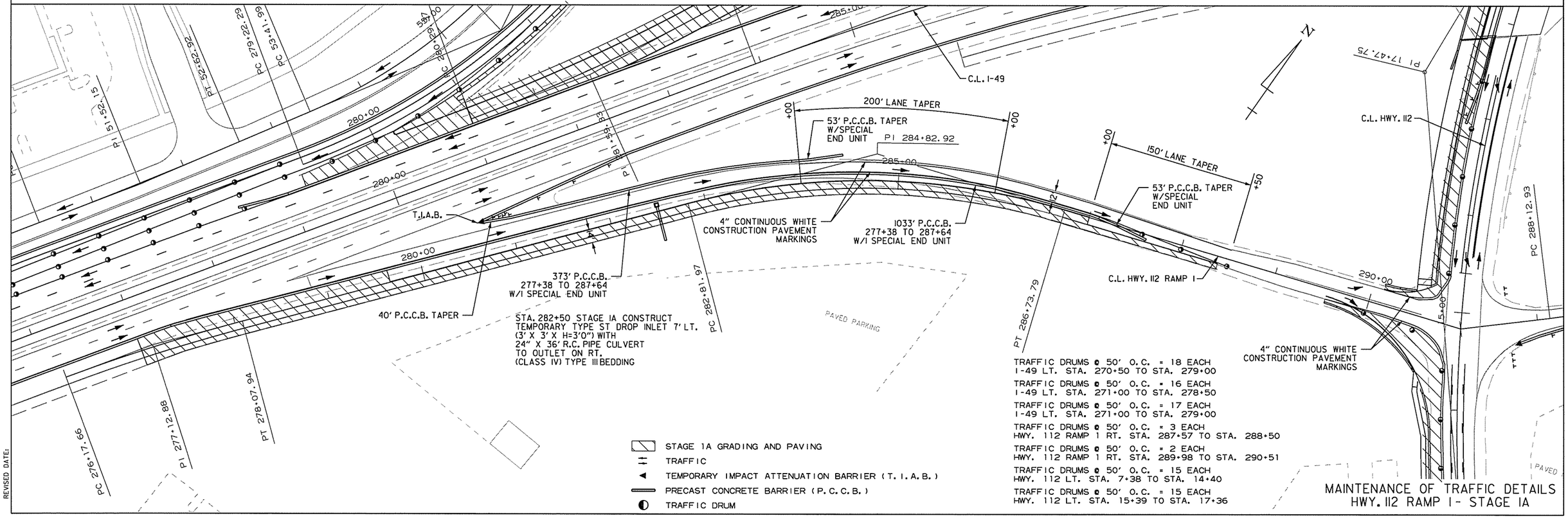

TRAFFIC DRUMS @ 50' O.C. = 18 EACH
I-49 LT. STA. 270+50 TO STA. 279+00

TRAFFIC DRUMS @ 50' O.C. = 16 EACH
I-49 LT. STA. 271+00 TO STA. 278+50

TRAFFIC DRUMS @ 50' O.C. = 17 EACH
I-49 LT. STA. 271+00 TO STA. 279+00

TRAFFIC DRUMS @ 50' O.C. = 3 EACH
HWY. 112 RAMP 1 RT. STA. 287+57 TO STA. 288+50

TRAFFIC DRUMS @ 50' O.C. = 2 EACH
HWY. 112 RAMP 1 RT. STA. 289+98 TO STA. 290+51

TRAFFIC DRUMS @ 50' O.C. = 15 EACH
HWY. 112 LT. STA. 7+38 TO STA. 14+40

TRAFFIC DRUMS @ 50' O.C. = 15 EACH
HWY. 112 LT. STA. 15+39 TO STA. 17+36

STAGE 1A GRADING AND PAVING
TRAFFIC
TEMPORARY IMPACT ATTENUATION BARRIER (T.I.A.B.)
PRECAST CONCRETE BARRIER (P.C.C.B.)
TRAFFIC DRUM

MAINTENANCE OF TRAFFIC DETAILS
HWY. 112 RAMP 1 - STAGE IA

AEWiercIak 3/20/2016 11:52:48 AM
WORKSPACE: AHTD
L:\20IN\10I7I07 - I-540 Widening & Interchange Improvement\Drawings\BB0414_MOT_SD_STIA.IId gn
REVISED DATE:

DATE REVISED	DATE FILMED	DATE REVISED	DATE FILMED	FED.RD. DIST.NO.	STATE	FED.AID PROJ.NO.	SHEET NO.	TOTAL SHEETS
				6	ARK.			
				JOB NO.		BB0414	148	886
				(2)	MAINTENANCE OF TRAFFIC - STAGE 1A			

TRAFFIC DRUMS @ 50' O.C. = 18 EACH
I-49 LT. STA. 270+50 TO STA. 279+00

TRAFFIC DRUMS @ 50' O.C. = 16 EACH
I-49 LT. STA. 271+00 TO STA. 278+50

TRAFFIC DRUMS @ 50' O.C. = 17 EACH
I-49 LT. STA. 271+00 TO STA. 279+00

TRAFFIC DRUMS @ 50' O.C. = 15 EACH
HWY. 112 RAMP 4 LT. STA. 279+51 TO STA. 286+50

STAGE 1A CONSTRUCTION SEQUENCE NOTES:

1) SWITCH RAMP 4 TRAFFIC TO NEWLY CONSTRUCTED OUTSIDE OF RAMP.
2) UNDER TRAFFIC, OVERLAY RAMP TO 2" BELOW FINAL GRADE.

STATE OF ARKANSAS
LICENSED PROFESSIONAL ENGINEER
No.13653
ADAM E. WIERCIAK
3/23/16

N

PC 50+41.35
PI 51+52.15
PT 52+62.92
PC 53+41.99
PC 279+22.29
PI 55+55.23
PI 281+95.32
PERMANENT CONCRETE BARRIER
PT 278+07.94
C.L. HWY. 112 RAMP 1
PT 282+43.69
PT 283+50.27
PC 280+29.27
C.L. I-49
PRC 282+88.89
PC 283+94.33
PI 281+59.23
PC 282+81.97
PI 284+82.92
PC 69+50.20
C.L. SHILOH DRIVE
60+00
65+00
290+00
100' LANE TAPER
50'
285+00
TRAFFIC DRUMS
C.L. HWY. 112 RAMP 4
4" CONTINUOUS WHITE CONSTRUCTION PAVEMENT MARKINGS
PC 287+17.97
PI 66+21.
PI 291+75.49
PC 283+46.28
PI 287+06.31
PI 288+41.38
PT 288+83.21
PT 291+10.81
280+00
285+00
290+00
PAVED PARKING

STAGE 1A OVERLAY UNDER TRAFFIC
STAGE 1A GRADING AND PAVING
TRAFFIC
TEMPORARY IMPACT ATTENUATION BARRIER (T.I.A.B.)
PRECAST CONCRETE BARRIER (P.C.C.B.)
TRAFFIC DRUM

MAINTENANCE OF TRAFFIC DETAILS
HWY. 112 RAMP 4 - STAGE 1A

AEWierciak 3/20/2016 11:52:48 AM
WORKSPACE: AHTD
L:\2016\16017\07 - I-540 Widening & Interchange Improvement\Drawings\r-BB0414_MOT_SD_STIA_12.dgn
REVISED DATE:

DATE REVISED	DATE FILMED	DATE REVISED	DATE FILMED	FED.RD. DIST.NO.	STATE	FED.AID PROJ.NO.	SHEET NO.	TOTAL SHEETS
				6	ARK.			
				JOB NO.		BB0414	149	886

(2) MAINTENANCE OF TRAFFIC - STAGE IA

STATE OF ARKANSAS
LICENSED PROFESSIONAL ENGINEER
No.13653
ADAM E. WIERCIAK
3/20/16

- STAGE 1A OVERLAY UNDER TRAFFIC
- STAGE 1A GRADING AND PAVING
- TRAFFIC
- TEMPORARY IMPACT ATTENUATION BARRIER (T.I.A.B.)
- PRECAST CONCRETE BARRIER (P.C.C.B.)
- TRAFFIC DRUM

TRAFFIC DRUMS @ 50' O.C. = 15 EACH
HWY. 112 RAMP 4 LT. STA. 279+51 TO STA. 286+50

TRAFFIC DRUMS @ 50' O.C. = 8 EACH
COLLECTOR DISTRIBUTOR RD. LT. STA. 276+65 TO STA. 280+14

TRAFFIC DRUMS = 4 EACH
HWY. 112 LT. STA. 21+32 TO STA. 22+28

TRAFFIC DRUMS @ 50' O.C. = 6 EACH
HWY. 112 LT. STA. 23+94 TO STA. 26+31

TRAFFIC DRUMS @ 50' O.C. = 9 EACH
HWY. 112 LT. STA. 27+81 TO STA. 31+08

STAGE 1A CONSTRUCTION SEQUENCE NOTES:

1) CONSTRUCT CONNECTIONS TO SHILOH DRIVE, HWY. 112 RAMP 4, AND THE COLLECTOR-DISTRIBUTOR ROAD.

2) WHILE MAINTAINING TRAFFIC ON EXISTING SB I-49 TO HWY. 112 RAMP, CONSTRUCT THE TEMP. C-D RD. TO SB I-49 SB RAMP WITH CONNECTIONS TO BOTH THE HWY. 112 EXIT RAMP AND SB I-49. STAGE CONSTRUCTION TO MAINTAIN 13' RAMP WIDTH AT DETOUR/RAMP CROSSING.

PI 66+29.54
PI 291+75.49
PT 69+73.32
PC 70+86.10
PT 72+62.87
PI 71+90.22
PT 74+40.38
PI 74+06.50
PC 73+53.04
75+00
25+00
70+00
65+00
290+00
C.L. SHILOH DRIVE
PT 294+58.17
295+00
C.L. HWY. 112 RAMP 4
C.L. COLLECTOR-DISTRIBUTOR ROAD
50'
C.L. HWY. 112
4" CONTINUOUS WHITE CONSTRUCTION PAVEMENT MARKINGS
100' TAPER
+80
+80
PC 283+46.28
53' P.C.C.B. TAPER W/SPECIAL END UNIT
285+00
13'
PC 287+17.97
673' P.C.C.B. 286+95 TO 289+03 W/I SPECIAL END UNIT
4" CONTINUOUS WHITE CONSTRUCTION PAVEMENT MARKINGS
PI 287+66.31
53' P.C.C.B. TAPER W/SPECIAL END UNIT
100' LANE TAPERS:
282+68 TO 283+68 LT.
286+49 TO 287+49 RT.
288+49 TO 289+49 RT.
288+94 TO 289+94 LT.
233' P.C.C.B. 286+95 TO 289+85 W/I SPECIAL END UNIT
60' P.C.C.B. TAPER
100' P.C.C.B. TAPER
PT 288+83.21
PT 291+10.81
290+00
TEMP. C-D. RD. TO SB I-49 RAMP
290+00
PAVED PARKING
PAVED PARKING
PAVED PARKING
C.L. COLLECTOR DISTRIBUTOR ROAD
PI 296+48.30
PT 298+93.52
PERMANENT CONCRETE BARRIER
PT 22+06.53
PC 293+98.08
295+00
PI 295+47.22
295+00
290+00

MAINTENANCE OF TRAFFIC DETAILS
HWY. 112 RAMP 4, COLLECTOR DISTRIBUTOR-ROAD, AND SHILOH ROAD - STAGE IA

AEWierciak 3/20/2016 11:52:49 AM
WORKSPACE: AHTD
L:\20IN\10\T07 - I-540 Widening & Interchange Improvement\Drawings\r-BB0414_MOT_SD_STIA_I3.dgn
REVISED DATE:

DATE REVISED	DATE FILMED	DATE REVISED	DATE FILMED	FED.RD. DIST.NO.	STATE	FED.AID PROJ.NO.	SHEET NO.	TOTAL SHEETS
				6	ARK.			
				JOB NO.		BB0414	150	886

2 MAINTENANCE OF TRAFFIC - STAGE IA

STATE OF ARKANSAS
LICENSED PROFESSIONAL ENGINEER
No.13653
ADAM E. WIERCIAK
3/23/16

STAGE 1A CONSTRUCTION SEQUENCE NOTES:

1) CONSTRUCT TEMP. EX. NB I-49 TO PR. I-49 RAMP WHILE MAINTAINING TRAFFIC ON EXISTING NB I-49.
2) CONSTRUCT TEMPORARY NB I-49 TO HWY. 71B RAMP.
3) CONSTRUCT HWY. 112 TO HWY. 71B RAMP.
4) CONSTRUCT COLLECTOR-DISTRIBUTOR RD. FROM SB I-49 SHOULDER WIDENING TO 323+41.74. PROVIDE TEMPORARY PAVING TRANSITION TO MATCH GRADE AT SB I-49 SHOULDER WIDENING.
5) CONSTRUCT BARRIER WALL ALONG RT. SIDE OF SB I-49 TO HWY. 71B RAMP UNDER NEW I-49 BRIDGES.
6) SHIFT SB HWY. 71B TRAFFIC TO WIDENING BUILT IN STAGE 1. CONSTRUCT IMPROVEMENTS IN AREA BETWEEN SB HWY. 71B AND C-D RD.
7) CONSTRUCT BARRIER WALL ALONG RT. SIDE OF SB HWY. 71B UNDER NEW I-49 BRIDGES.

PAVED PARKING

+96
750' TAPER
+46
+07
700' TAPER
+07
COLLECTOR-DISTRIBUTOR RD.
4" CONTINUOUS YELLOW CONSTRUCTION PAVEMENT MARKINGS
53' P.C.C.B. TAPER W/SPECIAL END UNIT
SB I-49
40' P.C.C.B. TAPER
315+00
2133' P.C.C.B. 305+91 TO 327+23 W/I SPECIAL END UNIT AND T.I.A.B.
C.L. COLLECTOR-DISTRIBUTOR RD.
320+00
11' LANE
1' SHOULDER EACH SIDE
180' P.C.C.B. TAPER W/SPECIAL END UNIT
SB HWY. 71B
53' P.C.C.B. TAPER W/SPECIAL END UNIT
4" CONTINUOUS WHITE CONSTRUCTION PAVEMENT MARKINGS
1193' P.C.C.B. 299+87 TO 311+79 W/2 SPECIAL END UNITS
305+00
305+00
310+00
EXISTING NB I-49
953' P.C.C.B. 312+06 TO 321+59 W/2 SPECIAL END UNITS
200' P.C.C.B. TAPER W/SPECIAL END UNIT
C.L. SB I-49 TO HWY. 71B RAMP
100' TAPER
55
55
13' LANE
3' SHOULDER LT.
200' P.C.C.B. TAPER W/SPECIAL END UNIT
315+00
320+00
315+00
773' P.C.C.B. 314+66 SB TO 322+35 W/2 SPECIAL END UNITS
M.S.E. WALL
TEMP. EX. NB I-49 TO PR. I-49 RAMP
4" CONTINUOUS WHITE CONSTRUCTION PAVEMENT MARKINGS
330+00
120' P.C.C.B. TAPER
330.00
793' P.C.C.B. 322+72 SB HWY. 71B TO 333+56 HWY. 71B W/I SPECIAL END UNIT AND T.I.A.B.
T.I.A.B.
60' P.C.C.B. TAPER
T.I.A.B.
+59
+59
100' TAPER
53' P.C.C.B. TAPER W/SPECIAL END UNIT
300+00
C.L. HWY. 112 TO NB I-49 RAMP
310+00
310+00
305+00
305+00
C.L. NB I-49 TO HWY. 71B RAMP
C.L. TEMP NB I-49 TO HWY. 71B RAMP
315+00
M.S.E. WALL
310+00
320+00
325+00
310+00
C.L. HWY. 112 TO NB I-49 RAMP
315+00
C.L. HWY. 112 TO HWY. 71B RAMP

N

STAGE 1A GRADING AND PAVING
TRAFFIC
TEMPORARY IMPACT ATTENUATION BARRIER (T.I.A.B.)
PRECAST CONCRETE BARRIER (P.C.C.B.)
TRAFFIC DRUM

MAINTENANCE OF TRAFFIC DETAILS
TEMP. EX. NB I-49 TO PR. I-49 RAMP,
TEMP. NB I-49 TO HWY. 71B RAMP,
COLLECTOR-DISTRIBUTOR RD.,
SB I-49 TO HWY. 71B RAMP,
HWY. 112 TO SB I-49 RAMP,
& SB HWY. 71B - STAGE IA

AEWierciak 3/20/2016 11:52:49 AM
WORKSPACE: AHTD
L:\208\110170T - I-540 Widening & Interchange Improvement\Drawings\r-BB0414_MOT_SD_STIA_14.dgn
REVISED DATE:

DATE REVISED	DATE FILMED	DATE REVISED	DATE FILMED	FED.RD. DIST.NO.	STATE	FED.AID PROJ.NO.	SHEET NO.	TOTAL SHEETS
				6	ARK.			
				JOB NO.		BB0414	151	886

MAINTENANCE OF TRAFFIC - STAGE 1A

STAGE 1A CONSTRUCTION SEQUENCE NOTES:

1) CONSTRUCT WIDENING TO THE INSIDE OF SB I-49.

STATE OF ARKANSAS
LICENSED PROFESSIONAL ENGINEER
No.13653
ADAM E. WIERCIAK
3/20/16

PAVED PARKING

PAVED PARKING

PAVED PARKING

PAVED PARKING

EXISTING I-49 SB

12'

12'

50'

100' LANE TAPER

50'

200' P.C.C.B. TAPER W/SPECIAL END UNIT

+50

4" SKIP WHITE CONSTRUCTION PAVEMENT MARKINGS

4" CONTINUOUS YELLOW CONSTRUCTION PAVEMENT MARKINGS

+25

1333' P.C.C.B. 305+90 TO 337+42 W/2 SPECIAL END UNITS

N

PC 313+41.74

PI 314+30.15

315+00

C.L. COLLECTOR-DISTRIBUTOR ROAD

+50

14'

4'

100' LANE TAPER

12'

12'

4'

53' P.C.C.B. TAPER W/SPECIAL END UNIT

305+00

305+90

C.L. I-49

PC 308+13.00

PI 308+58.92

309+04.79

310+00

STAGE 1A GRADING AND PAVING

TRAFFIC

TEMPORARY IMPACT ATTENUATION BARRIER (T.I.A.B.)

PRECAST CONCRETE BARRIER (P.C.C.B.)

TRAFFIC DRUM

MAINTENANCE OF TRAFFIC DETAILS
SB I-49 - STAGE 1A

AEWierciak 3/20/2016 11:52:49 AM
WORKSPACE: AHTD
L:\2016\160707 - I-540 Widening & Interchange Improvement\Drawings\r-BB0414_MOT_SD-ST1A_15.dgn
REVISED DATE:

DATE REVISED	DATE FILMED	DATE REVISED	DATE FILMED	FED.RD. DIST.NO.	STATE	FED.AID PROJ.NO.	SHEET NO.	TOTAL SHEETS
				6	ARK.			
				JOB NO.		BB0414	152	886

(2) MAINTENANCE OF TRAFFIC - STAGE IA

TRAFFIC DRUMS @ 50' O.C. = 2 EACH
HWY. 112 RAMP 1 RT. STA. 289+99 TO STA. 290+51

TRAFFIC DRUMS @ 50' O.C. = 15 EACH
HWY. 112 LT. STA. 7+38 TO STA. 14+40

TRAFFIC DRUMS @ 50' O.C. = 5 EACH
HWY. 112 LT. STA. 15+39 TO STA. 17+36

EXIST. HWY. 112 TO NB I-49 RAMP

53' P.C.C.B. TAPER W/SPECIAL END UNIT

100' LANE TAPER

295+00

250' LANE TAPER

C.L. PROPOSED HWY. 112 TO NB I-49 RAMP

4" CONTINUOUS WHITE CONSTRUCTION PAVEMENT MARKINGS

913' P.C.C.B. 287+80 TO 296+48 W/I SPECIAL END UNIT & T.I.A.B.

PI 17+47.75

PT 292+42.59

PT 290+47.74

PC 288+12.93

C.L. HWY. 112

290+00

100' LANE TAPER

200' LANE TAPER

100' P.C.C.B. TAPER

T.I.A.B.

PI 289+34.18

PT 297+90.56

C.L. STAGE 1A

C.L. EX. RAMP

C.L. PR. RAMP

5'-6"

12'-0" TRAVEL LANE

4' EX. SHLD.

15'-0" EX. RAMP

6' EX. SHLD.

15'-0" PR. RAMP

6'-0" SHLD.

2:1 MAX.

6:1

TEMPORARY SLOPE

HWY. 112 TO NB I-49 RAMP
STAGE IA TYPICAL SECTION

STA. 291+68.55 TO STA. 297+90.56

STATE OF ARKANSAS
LICENSED PROFESSIONAL ENGINEER
No. 13653
ADAM E. WIERCIAK
3/20/16

305+00

PC 304+17.19

PI 305+12.41

PT 306+07.47

PC 300+15.56

PI 301+10.78

PT 302+05.84

310+00

PC 310+

PI 311+61.66

PT 312

PT 311+84.79

C.L. I-49

315+00

EXISTING NB I-49

EXISTING I-49 TO HWY. 71B RAMP

PC 317+42.84

PT 316+32.29

PT 320+76.89

C.L. NB I-49 TO HWY. 71B RAMP

PC 313+36.68

C.L. TEMP NB I-49 TO HWY. 71B RAMP

END STAGE IA BRIDGE CONSTRUCTION STA. 316+32.29

320+00

PC 308+87.09

C.L. HWY. 112 TO NB I-49 RAMP

M.S.E. WALL

C.L. HWY. 112 TO HWY. 71B RAMP

PI 319+17.03

STAGE 1A OVERLAY UNDER TRAFFIC
STAGE 1A GRADING AND PAVING
TRAFFIC
TEMPORARY IMPACT ATTENUATION BARRIER (T.I.A.B.)
PRECAST CONCRETE BARRIER (P.C.C.B.)
TRAFFIC DRUM

N

STAGE 1A CONSTRUCTION SEQUENCE NOTES:

1) WHILE MAINTAINING TRAFFIC ON EXISTING HWY. 112 TO NB I-49 RAMP AND EXISTING NB I-49 TO HWY. 71B RAMP, CONSTRUCT HWY. 112 TO NB I-49 RAMP.

2) CONSTRUCT HWY. 112 TO NB I-49 BRIDGE TO SPLICE LOCATION AT STA. 316+32.29 IN STAGE 1A. REMAINDER OF BRIDGE TO BE CONSTRUCTED IN FUTURE STAGES.

MAINTENANCE OF TRAFFIC DETAILS
HWY. 112 TO NB I-49 RAMP - STAGE IA

AEWarcilok 3/20/2016 11:52:49 AM
WORKSPACE: AHTD
L:\20IN\10\707 - I-540 Widening & Interchange Improvement\Drawings\rBB0414_MOT_SD_STIA_16.dgn
REVISED DATE:

DATE REVISED	DATE FILMED	DATE REVISED	DATE FILMED

FED.RD. DIST.NO.	STATE	FED.AID PROJ.NO.	SHEET NO.	TOTAL SHEETS
6	ARK.			
JOB NO.		BB0414	153	886

(2) MAINTENANCE OF TRAFFIC - STAGE IA

STATE OF ARKANSAS
LICENSED PROFESSIONAL ENGINEER
No.13653
ADAM E. WIERCIAK
3/20/16

N

C.L. COLLECTOR - DISTRIBUTOR

C.L. I-49

C.L. NB I-49 TO HWY. 71B RAMP

C.L. HWY. 112 TO NB I-49 RAMP

C.L. HWY. 112 TO HWY. 71B RAMP

PC 313+36.68

PC 304+17.19

PT 297+90.56

PC 300+15.56

PI 301+10.78

PT 302+05.84

PI 305+12.41

PT 306+07.47

PC 308+13.00

PI 308+58.92

PT 309+04.79

PC 310+38.00

PI 311+61.66

PT 312+84.79

PC 308+87.09

PT 328+75.95

STAGE 1A GRADING AND PAVING
TRAFFIC
TEMPORARY IMPACT ATTENUATION BARRIER (T.I.A.B.)
PRECAST CONCRETE BARRIER (P.C.C.B.)

TEMP. EX. NB I-49 TO PR. I-49 RAMP

C.L. TEMP NB I-49 TO HWY. 71B RAMP

M.S.E. WALL

PT 316+22.73

PC 317+42.84

PT 320+76.89

PI 319+17.03

100' LANE TAPER

+09

+09

4" CONTINUOUS WHITE CONSTRUCTION PAVEMENT MARKINGS

2433' P.C.C.B.
NB I-49 TO HWY. 71B STA. 320+83
TO HWY. 71B STA. 345+25
W/2 SPECIAL END UNITS

200' P.C.C.B. TAPER W/SPECIAL END UNIT

C.L. NB I-49 TO HWY. 71B RAMP

13

STAGE 1A CONSTRUCTION SEQUENCE NOTES:

1) CONSTRUCT NB I-49 TO HWY. 71B RAMP.

MAINTENANCE OF TRAFFIC DETAILS NB I-49 TO HWY. 71B RAMP- STAGE IA

AEWierciak 3/20/2016 11:52:50 AM
WORKSPACE: AHTD - I-540 Widening & Interchange Improvement\Drawings\r-BB0414_MOT_SD_STIA_17.dgn
L:\20IV\I0I7I07
REVISED DATE:

DATE REVISED	DATE FILMED	DATE REVISED	DATE FILMED	FED.RD. DIST.NO.	STATE	FED.AID PROJ.NO.	SHEET NO.	TOTAL SHEETS
				6	ARK.			
				JOB NO.		BB0414	154	886
				(2)	MAINTENANCE OF TRAFFIC - STAGE IA			

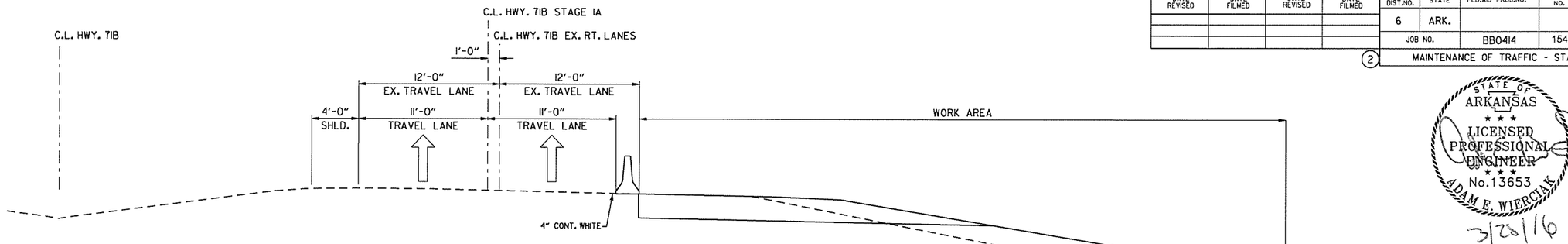

HWY. 71B
STAGE IA TYPICAL SECTION

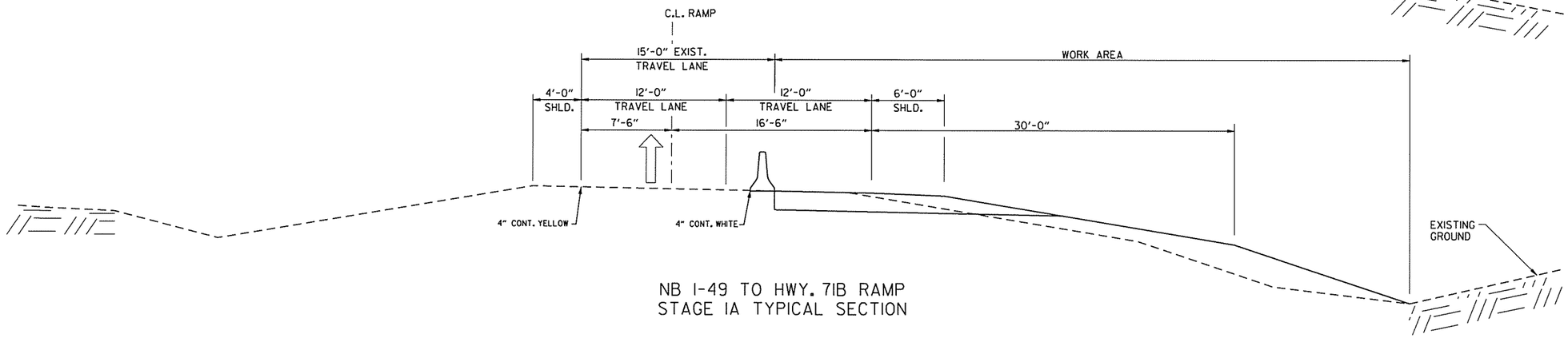

NB I-49 TO HWY. 71B RAMP
STAGE IA TYPICAL SECTION

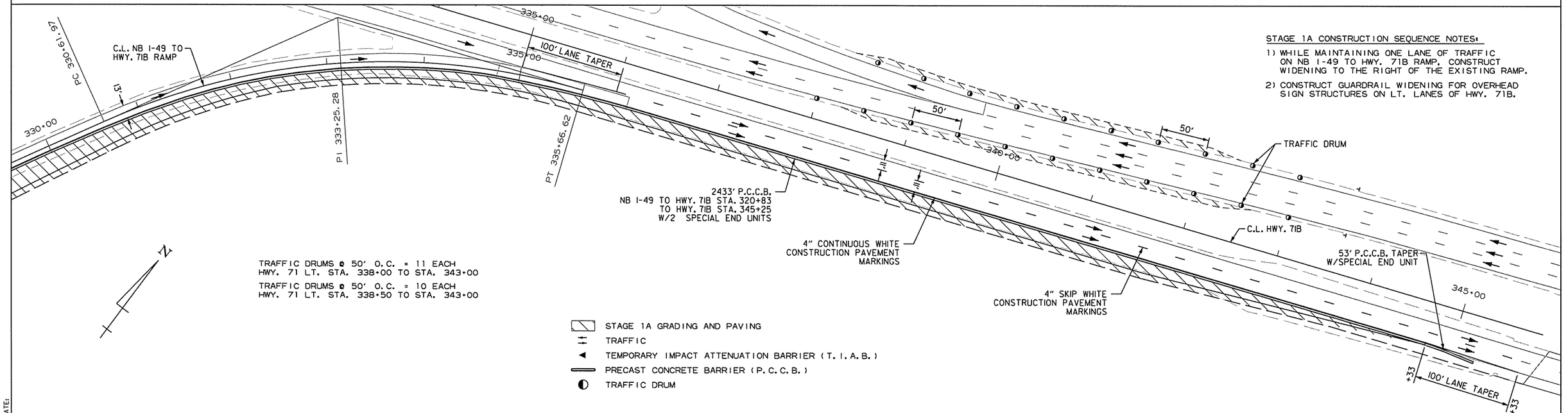

STAGE 1A CONSTRUCTION SEQUENCE NOTES:

1) WHILE MAINTAINING ONE LANE OF TRAFFIC ON NB I-49 TO HWY. 71B RAMP, CONSTRUCT WIDENING TO THE RIGHT OF THE EXISTING RAMP.
2) CONSTRUCT GUARDRAIL WIDENING FOR OVERHEAD SIGN STRUCTURES ON LT. LANES OF HWY. 71B.

MAINTENANCE OF TRAFFIC DETAILS
NB I-49 TO HWY. 71B RAMP &
HWY. 71B - STAGE IA

STATE OF ARKANSAS
LICENSED PROFESSIONAL ENGINEER
No.13653
ADAM E. WIERCIAK
3/20/16

AEWierciak 3/20/2016 11:52:50 AM
WORKSPACE: AHTD
L:\20IN\10I7707 - I-540 Widening & Interchange Improvement\Drawings\rBB0414_MOT_SD_STIA_IB.dgn
REVISED DATE:

DATE REVISED	DATE FILMED	DATE REVISED	DATE FILMED	FED.RD. DIST.NO.	STATE	FED.AID PROJ.NO.	SHEET NO.	TOTAL SHEETS
				6	ARK.			
				JOB NO.		BB0414	155	886
				(2)	MAINTENANCE OF TRAFFIC - STAGE IA			

STATE OF ARKANSAS
LICENSED PROFESSIONAL ENGINEER
No.13653
ADAM E. WIERCIAK
3/20/16

STAGE 1A CONSTRUCTION SEQUENCE NOTES:

1) WITH SB I-49 TRAFFIC SHIFTED TO THE TEMPORARY SB I-49 DETOUR, CONSTRUCT SB I-49 TO HWY. 112 RAMP FROM 343+00 TO GORE. TEMPORARY FILL SLOPE FROM LT. SHOULDER BETWEEN TEMP. SB I-49 DETOUR SHALL BE 2:1.

EXIT 67B NORTH 71B N Fulbright Expwy

SEE "MAINTENANCE OF TRAFFIC - SPECIAL SIGNS" SHEET FOR DETAILS

EXIST. SB I-49 TO HWY. 71B RAMP

4" CONTINUOUS WHITE CONSTRUCTION PAVEMENT MARKINGS

2433' P.C.C.B. 342+28 TO 358+83 W/I SPECIAL END UNIT

C.L. TEMP. SB I-49 DETOUR

4" CONTINUOUS YELLOW CONSTRUCTION PAVEMENT MARKINGS

4" SKIP WHITE CONSTRUCTION PAVEMENT MARKINGS

4" CONTINUOUS WHITE CONSTRUCTION PAVEMENT MARKINGS

C.L. COLLECTOR DISTRIBUTOR ROAD

C.L. SB I-49 TO HWY. 112 RAMP

53' P.C.C.B. TAPER W/SPECIAL END UNIT

TRAFFIC DRUMS @ 50' O.C. = 6 EACH
HWY. 71 LT. STA. 339+92 TO STA. 342+42

C.L. I-49

315+00 320+00 325+00 330+00 335+00 340+00 345+00 350+00 355+00 360+00

STAGE 1A GRADING AND PAVING
TRAFFIC
TEMPORARY IMPACT ATTENUATION BARRIER (T.I.A.B.)
PRECAST CONCRETE BARRIER (P.C.C.B.)
TRAFFIC DRUM

MAINTENANCE OF TRAFFIC DETAILS
SB I-49 TO HWY. 112 RAMP- STAGE IA

AEWiercIak 3/20/2016 11:52:50 AM
WORKSPACE: AHTD
L:\20II\II0I707 - I-540 Widening & Interchange Improvement\Drawings\r-BB0414_MOT_SD_STIA_I9.dgn
REVISED DATE:

DATE REVISED	DATE FILMED	DATE REVISED	DATE FILMED	FED.RD. DIST.NO.	STATE	FED.AID PROJ.NO.	SHEET NO.	TOTAL SHEETS
				6	ARK.			
				JOB NO.		BB0414	156	886
				(2)	MAINTENANCE OF TRAFFIC - STAGE IB			

STATE OF ARKANSAS
LICENSED PROFESSIONAL ENGINEER
No.13653
ADAM E. WIERCIAK
3/24/16

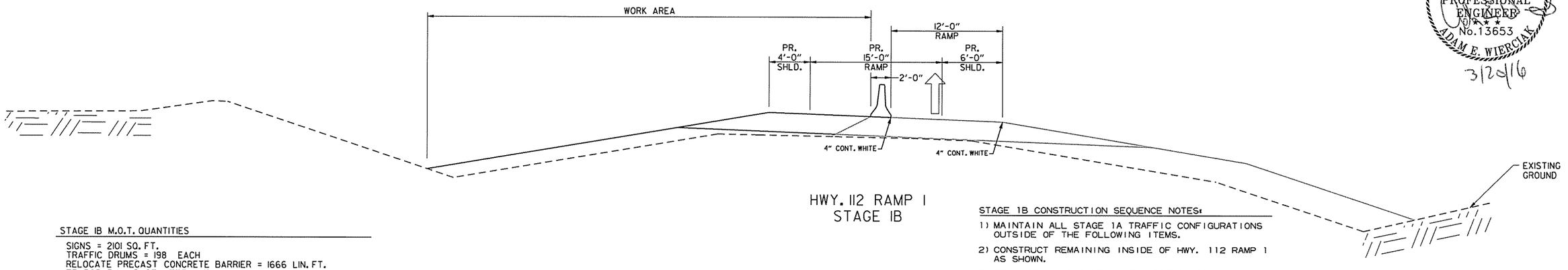

HWY. 112 RAMP 1
STAGE IB

STAGE IB M.O.T. QUANTITIES

SIGNS = 2101 SQ. FT.
TRAFFIC DRUMS = 198 EACH
RELOCATE PRECAST CONCRETE BARRIER = 1666 LIN. FT.
TEMPORARY IMPACT ATTENUATION BARRIER (RELOCATION) = 1 EACH
CONSTRUCTION PAVEMENT MARKINGS = 2894 LIN. FT.
REMOVAL OF CONSTRUCTION PAVEMENT MARKINGS = 271 LIN. FT.

STAGE 1B CONSTRUCTION SEQUENCE NOTES:

1) MAINTAIN ALL STAGE 1A TRAFFIC CONFIGURATIONS OUTSIDE OF THE FOLLOWING ITEMS.
2) CONSTRUCT REMAINING INSIDE OF HWY. 112 RAMP 1 AS SHOWN.
3) FROM HWY. 112 RAMP 1 STA. 287+00 TO HWY. 112, BRING GRADE TO WITHIN 2' OF FINAL GRADE UNDER TRAFFIC.
4) WIDEN I-49 TO 71' RT. OF C.L. TO I-49 STA. 286+00. GRADES THROUGH GORE AREA SHALL BE 2% (NOT FINAL GRADE) FOR THROUGH TRAFFIC IN STAGE 2. TRANSITION TO MEET 4% SHOULDER AT 281+51.43.
5) CONSTRUCT HWY. 112 INTERSECTION ISLANDS.

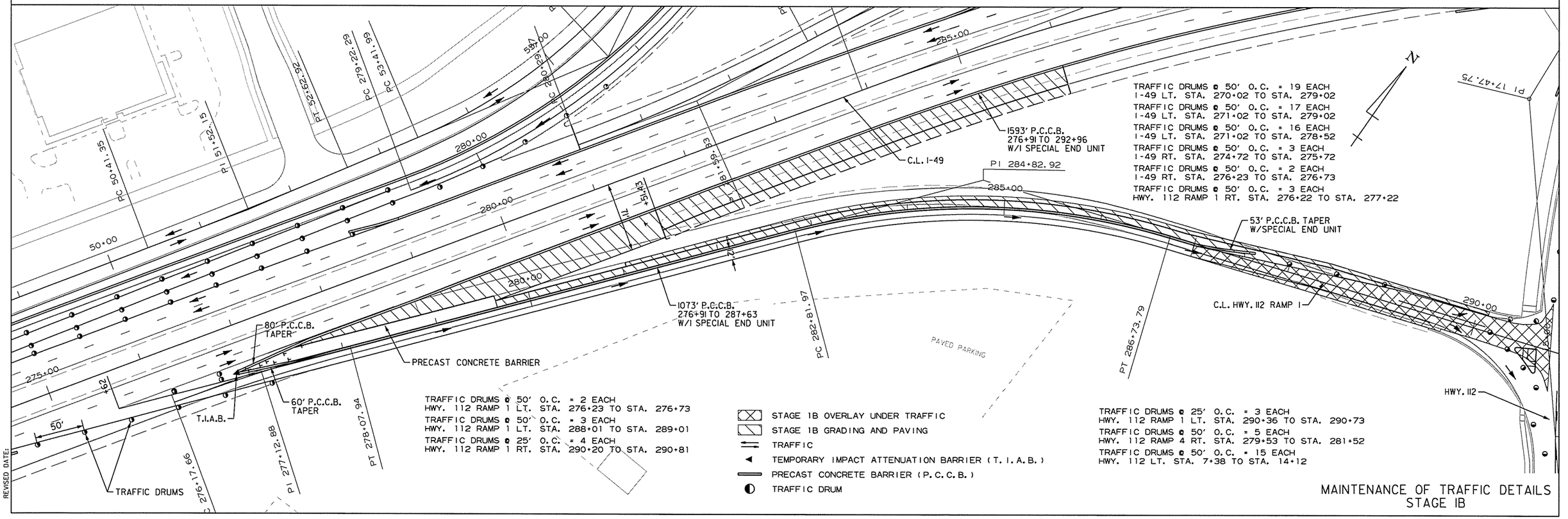

MAINTENANCE OF TRAFFIC DETAILS
STAGE IB

AEWiercIak 3/20/2016 11:52:50 AM
WORKSPACE: AHTD
L:\2011\11017107 - I-540 Widening & Interchange Improvement\Drawings\r-BB0414_MOT_SD_ST1B_01.dgn
REVISED DATE:

DATE REVISED	DATE FILMED	DATE REVISED	DATE FILMED	FED.RD. DIST.NO.	STATE	FED.AID PROJ.NO.	SHEET NO.	TOTAL SHEETS
				6	ARK.			
				JOB NO.		BB0414	157	886
				(2)	MAINTENANCE OF TRAFFIC - STAGE 2			

ADDITIONAL STAGE 2 ADVANCE WARNING SIGNS

INSTALLATION STA.

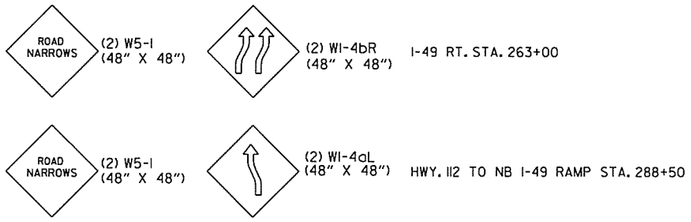

INSTALLATION STA.

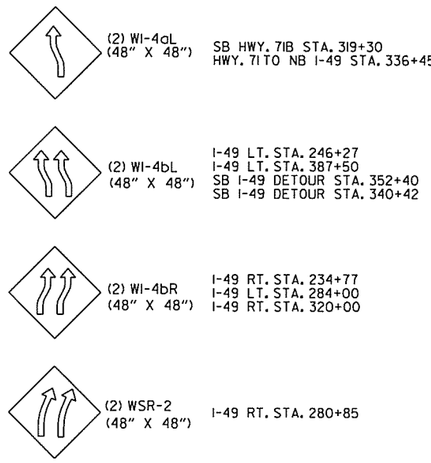

INSTALLATION STA.

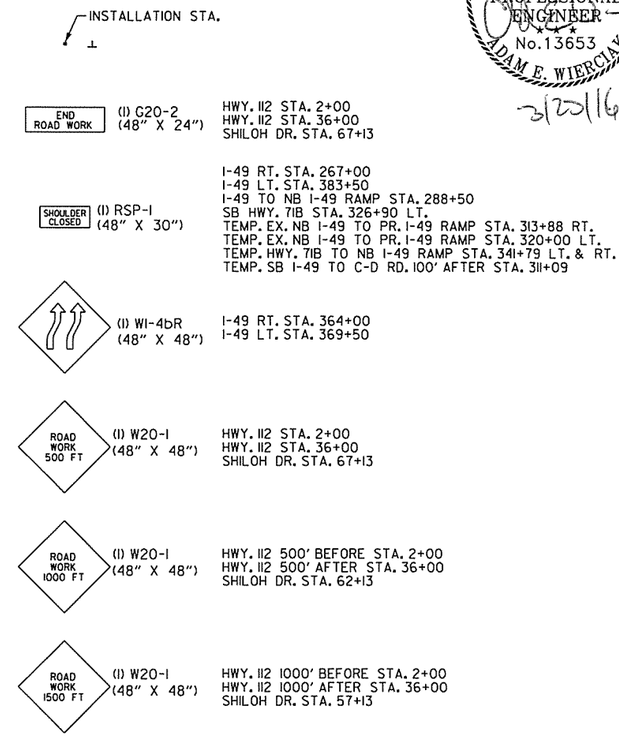

STATE OF ARKANSAS
LICENSED PROFESSIONAL ENGINEER
No. 13653
ADAM E. WIERCIAK
3/20/16

STAGE 2 M.O.T. QUANTITIES

SIGNS = 2345 SQ. FT.
TRAFFIC DRUMS = 407 EACH
RELOCATE PRECAST CONCRETE BARRIER = 26504 LIN. FT.
TEMPORARY IMPACT ATTENUATION BARRIER = 1 EACH
TEMPORARY IMPACT ATTENUATION BARRIER (RELOCATION) = 9 EACH
REMOVAL OF PERMANENT PAVEMENT MARKINGS = 11505 LIN. FT.
REMOVABLE CONSTRUCTION PAVEMENT MARKINGS = 3993 LIN. FT.
CONSTRUCTION PAVEMENT MARKINGS = 70019 LIN. FT.
REMOVAL OF CONSTRUCTION PAVEMENT MARKINGS = 34165 LIN. FT.

AEWierciak 3/20/2016 11:52:51 AM
WORKSPACE: AHTD
L:\208\110\1707 - I-540 Widening & Interchange Improvement\Drawings\r-BB0414_MOT_SD_ST2_01.dgn
REVISED DATE:

MAINTENANCE OF TRAFFIC DETAILS
I-49 - STAGE 2

DATE REVISED	DATE FILMED	DATE REVISED	DATE FILMED	FED.RD. DIST.NO.	STATE	FED.AID PROJ.NO.	SHEET NO.	TOTAL SHEETS
				6	ARK.			
				JOB NO.		BB0414	158	886
				(2)	MAINTENANCE OF TRAFFIC - STAGE 2			

STATE OF ARKANSAS
LICENSED PROFESSIONAL ENGINEER
No.13653
ADAM E. WIERCIAK
3/20/16

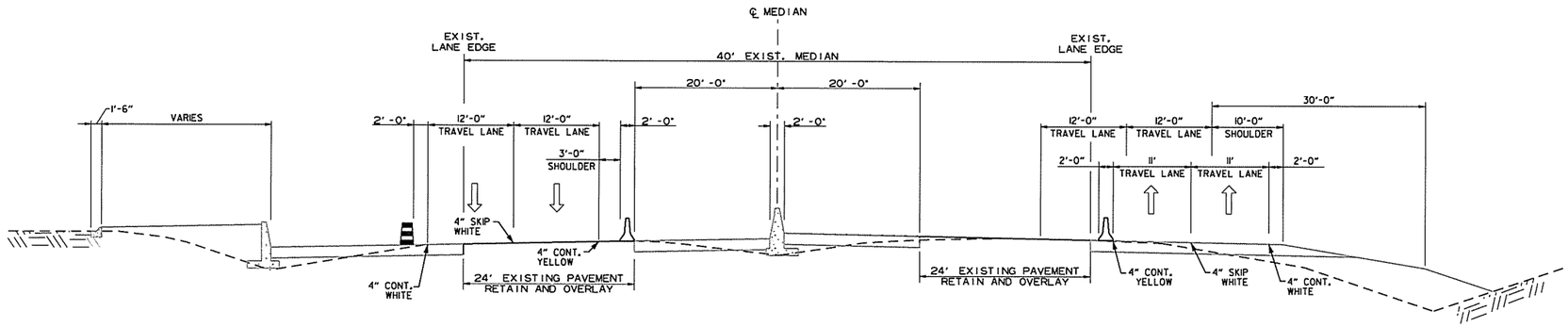

I-49
STAGE 2 TYPICAL SECTION

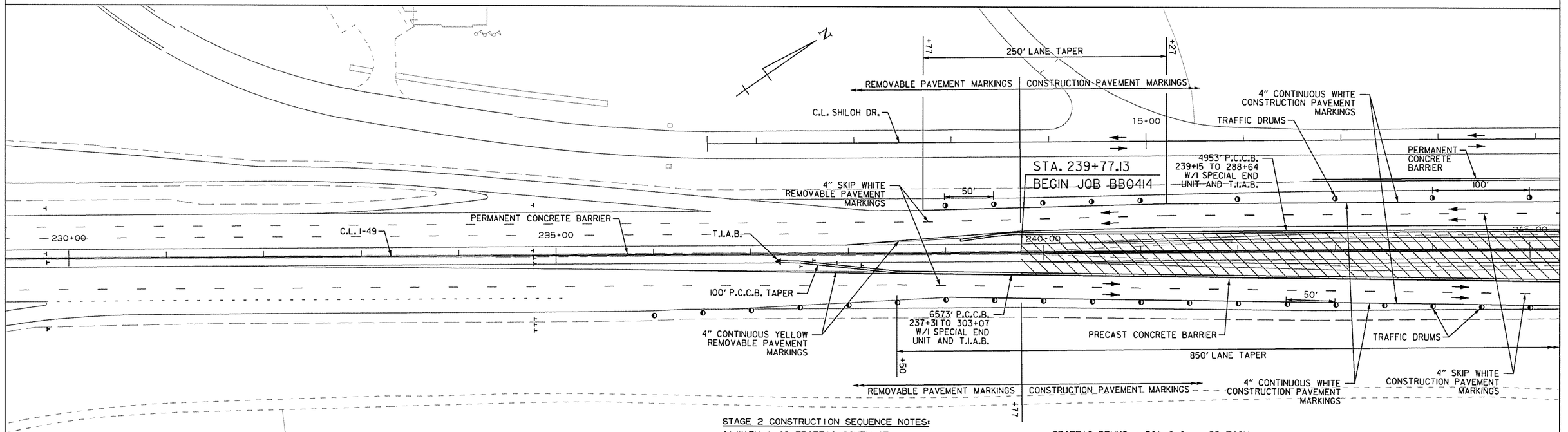

STAGE 2 CONSTRUCTION SEQUENCE NOTES:

1) WITH I-49 TRAFFIC SOUTH OF HWY. 112 SHIFTED TO OUTSIDE LANES OF SB I-49 AND OUTSIDE LANE AND SHOULDER OF NB I-49, CONSTRUCT MEDIAN WIDENING.

TRAFFIC DRUMS @ 50' O.C. = 23 EACH
I-49 RT. STA. 236+00 TO STA. 247+00
TRAFFIC DRUMS @ 50' O.C. = 5 EACH
I-49 LT. STA. 239+00 TO STA. 241+00
TRAFFIC DRUMS @ 100' O.C. = 22 EACH
I-49 LT. STA. 242+00 TO STA. 263+00

MAINTENANCE OF TRAFFIC DETAILS
I-49 - STAGE 2

AEWierciak 3/20/2016 11:52:51 AM
WORKSPACE: AHTD
L:\2011\011707 - I-540 Widening & Interchange Improvement\Drawings\r-BB0414_MOT_SD_ST2_03.dgn
REVISED DATE:

DATE REVISED	DATE FILMED	DATE REVISED	DATE FILMED	FED.RD. DIST.NO.	STATE	FED.AID PROJ.NO.	SHEET NO.	TOTAL SHEETS
				6	ARK.			
				JOB NO.		BB0414	159	886

(2) MAINTENANCE OF TRAFFIC - STAGE 2

STATE OF ARKANSAS
LICENSED PROFESSIONAL ENGINEER
ADAM F. WIERCIAK
No.13653
5/2/16

TRAFFIC DRUMS @ 50' O.C. = 23 EACH
I-49 RT. STA. 236+00 TO STA. 247+00
TRAFFIC DRUMS @ 100' O.C. = 22 EACH
I-49 LT. STA. 242+00 TO STA. 263+00

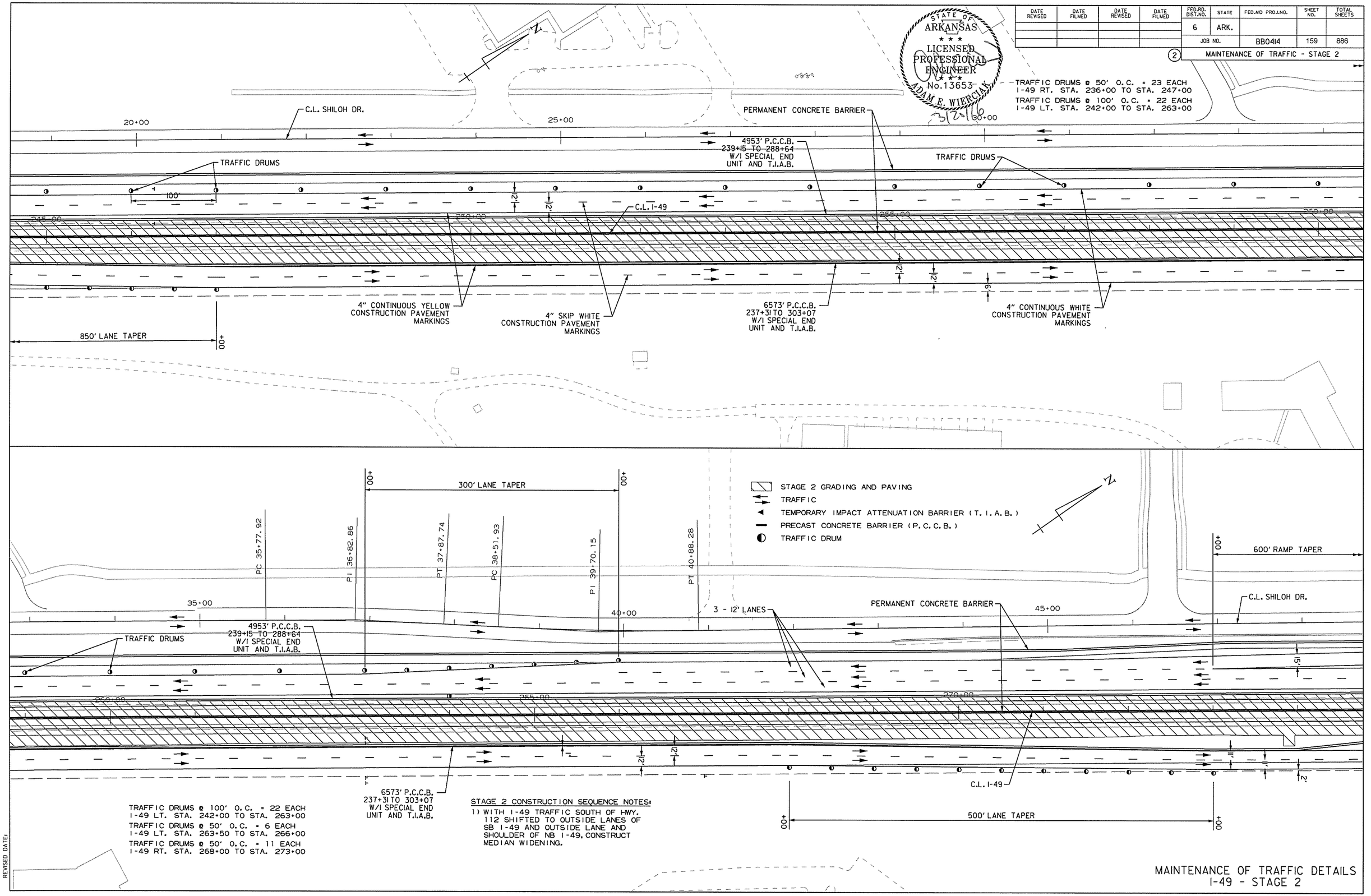

TRAFFIC DRUMS @ 100' O.C. = 22 EACH
I-49 LT. STA. 242+00 TO STA. 263+00
TRAFFIC DRUMS @ 50' O.C. = 6 EACH
I-49 LT. STA. 263+50 TO STA. 266+00
TRAFFIC DRUMS @ 50' O.C. = 11 EACH
I-49 RT. STA. 268+00 TO STA. 273+00

STAGE 2 CONSTRUCTION SEQUENCE NOTES:

1) WITH I-49 TRAFFIC SOUTH OF HWY. 112 SHIFTED TO OUTSIDE LANES OF SB I-49 AND OUTSIDE LANE AND SHOULDER OF NB I-49, CONSTRUCT MEDIAN WIDENING.

MAINTENANCE OF TRAFFIC DETAILS
I-49 - STAGE 2

AEWierciak 3/20/2016 11:52:51 AM
WORKSPACE: AHTD
L:\2011\11017107 - I-540 Widening & Interchange Improvement\Drawings\rBB0414_MOT_SD_ST2_04.dgn
REVISED DATE:

DATE REVISED	DATE FILMED	DATE REVISED	DATE FILMED	FED.RD. DIST.NO.	STATE	FED.AID PROJ.NO.	SHEET NO.	TOTAL SHEETS
				6	ARK.			
				JOB NO.		BB0414	160	886
				MAINTENANCE OF TRAFFIC - STAGE 2				

TRAFFIC DRUMS @ 100' O.C. = 9 EACH
I-49 RT. STA. 275+00 TO STA. 283+00

TRAFFIC DRUMS @ 50' O.C. = 23 EACH
I-49 LT. STA. 275+27 TO STA. 286+15

TRAFFIC DRUMS @ 50' O.C. = 7 EACH
I-49 LT. STA. 277+27 TO STA. 280+23

TRAFFIC DRUMS @ 50' O.C. = 8 EACH
I-49 RT. STA. 285+12 TO STA. 288+68

TRAFFIC DRUMS @ 50' O.C. = 16 EACH
I-49 RT. STA. 285+13 TO STA. 292+25

TRAFFIC DRUMS @ 20' O.C. = 3 EACH
HWY. 112 RT. STA. 6+79 TO STA. 7+01

TRAFFIC DRUMS @ 50' O.C. = 10 EACH
HWY. 112 RT. STA. 7+50 TO STA. 11+97

TRAFFIC DRUMS = 2 EACH
HWY. 112 RT. STA. 12+38 TO STA. 12+65

TRAFFIC DRUMS @ 50' O.C. = 4 EACH
HWY. 112 RT. STA. 12+97 TO STA. 14+47

TRAFFIC DRUMS @ 50' O.C. = 5 EACH
HWY. 112 RT. STA. 15+50 TO STA. 17+52

TRAFFIC DRUMS @ 25' O.C. = 3 EACH
HWY. 112 RT. STA. 30+82 TO STA. 30+92

TRAFFIC DRUMS @ 50' O.C. = 7 EACH
HWY. 112 TO NB I-49 RT. STA. 287+90 TO STA. 291+48

TRAFFIC DRUMS @ 50' O.C. = 2 EACH
HWY. 112 TO NB I-49 LT. STA. 287+75 TO STA. 288+23

STATE OF ARKANSAS
LICENSED PROFESSIONAL ENGINEER
No.13653
ADAM E. WIERCIAK
7/25/16

4953' P.C.C.B.
239+15 TO 288+64
W/1 SPECIAL END UNIT AND T.I.A.B.

600' RAMP TAPER

300' LANE TAPER

TRAFFIC DRUMS

2 - 11' LANES

PERMANENT CONCRETE BARRIER

100' P.C.C.B. TAPER

C.L. I-49

40' P.C.C.B. TAPER

T.I.A.B.

373' P.C.C.B.
279+76 TO 283+49
W/1 SPECIAL END UNIT AND T.I.A.B.

4" CONTINUOUS YELLOW CONSTRUCTION PAVEMENT MARKINGS

C.L. HWY. 112 RAMP 4

4" SKIP WHITE CONSTRUCTION PAVEMENT MARKINGS

53' P.C.C.B. TAPER W/SPECIAL END UNIT

2 - 11' LANES

100' P.C.C.B. TAPER

200' P.C.C.B. TAPER

C.L. STAGE 2 NB I-49 SHIFT

TRAFFIC DRUMS

6573' P.C.C.B.
237+31 TO 303+07
W/1 SPECIAL END UNIT AND T.I.A.B.

53' P.C.C.B. TAPER W/SPECIAL END UNIT

C.L. HWY. 112 RAMP 1

353' P.C.C.B.
286+01 TO 289+48
W/1 SPECIAL END UNIT AND T.I.A.B.

40' P.C.C.B. TAPER W/T.I.A.B.

P.I. 289+18.05

T.I.A.B.

C.L. TEMP C-D RD. TO SB I-49 DETOUR

C.L. HWY. 112

PERMANENT CONCRETE BARRIER

C.L. COLLECTOR-DISTRIBUTOR ROAD

2 - 11' LANES

2093' P.C.C.B.
I-49 STA. 291+00 TO SB HWY. 71B STA. 311+87
W/2 SPECIAL END UNITS

2220' P.C.C.B.
I-49 STA. 290+29 TO SB I-49 TO HWY. 71B STA. 330+61
W/1 SPECIAL END UNIT

150' LANE TAPER

4" CONTINUOUS YELLOW CONSTRUCTION PAVEMENT MARKINGS

3 - 12' LANES

C.L. COLLECTOR-DISTRIBUTOR ROAD

4" SKIP WHITE CONSTRUCTION PAVEMENT MARKINGS

100' LANE TAPER

3 - 12' LANES

4" CONTINUOUS WHITE CONSTRUCTION PAVEMENT MARKINGS

53' P.C.C.B. TAPER W/SPECIAL END UNIT

100' LANE TAPER

C.L. HWY. 112 TO NB I-49 RAMP

C.L. SHILOH DRIVE

C.L. STAGE 2 NB I-49 SHIFT

PI = 289+18.05
Δ = 17°57'49" RT.
D = 2°45'00"
T = 329.31
L = 653.22
PC= 285+88.74
PT= 292+41.96
e = MATCH EX.
Ls = MATCH EX.

STAGE 2 CONSTRUCTION SEQUENCE NOTES:

1) CONSTRUCT INSIDE MEDIAN WIDENING TO STA. 288+00.

2) TRANSITION NB I-49 FROM OUTSIDE LANE AND SHOULDER BACK TO EXISTING LANES ALONG STAGE 2 NB I-49 SHIFT ALIGNMENT.

3) CONSTRUCT SHOULDER WIDENING ON INSIDE OF NB I-49 FROM 289+50 TO 302+57.

4) SEE OTHER STAGE 2 SHEETS FOR DETAILS ON HWY. 112 AND RAMPS.

STAGE 2 OVERLAY UNDER TRAFFIC
STAGE 2 GRADING AND PAVING
TRAFFIC
TEMPORARY IMPACT ATTENUATION BARRIER (T.I.A.B.)
PRECAST CONCRETE BARRIER (P.C.C.B.)
TRAFFIC DRUM

AEWierciak 3/20/2016 11:52:51 AM
WORKSPACE: AHTD
L:\20IN\10I7707 - I-540 Widening & Interchange Improvement\Drawings\rBB0414_MOT_SD_ST2_05.dgn
REVISED DATE:

MAINTENANCE OF TRAFFIC DETAILS
I-49 - STAGE 2

DATE REVISED	DATE FILMED	DATE REVISED	DATE FILMED	FED.RD. DIST.NO.	STATE	FED.AID PROJ.NO.	SHEET NO.	TOTAL SHEETS
				6	ARK.			
				JOB NO.		BB0414	161	886

(2) MAINTENANCE OF TRAFFIC - STAGE 2

TRAFFIC DRUMS @ 50' O.C. = 6 EACH
I-49 LT. STA. 314+48 TO STA. 317+07

3 - 12' LANES

EXISTING NB I-49

4" CONTINUOUS WHITE CONSTRUCTION PAVEMENT MARKINGS

4" SKIP WHITE CONSTRUCTION PAVEMENT MARKINGS

C.L. I-49

EXISTING NB I-49

PC 308+13.00
PI 308+58.92
PT 309+04.79
PC 310+38.00
PI 311+61.66
PC 312+51.56
PT 313+84.79
PC 313+88.24
PCC 314+87.51

993' P.C.C.B.
315+65 TO 325+51
W/2 SPECIAL END UNITS

4" CONTINUOUS YELLOW CONSTRUCTION PAVEMENT MARKINGS

4" CONTINUOUS WHITE CONSTRUCTION PAVEMENT MARKINGS

TRAFFIC DRUMS

C.L. EX. NB I-49 TO PR. I-49 RAMP

50'

180' P.C.C.B. TAPER W/ SPECIAL END UNIT

PI 305+12.41
PT 306+07.47

C.L. HWY. 112 TO NB I-49 RAMP

PT 302+05.84

C.L. HWY. 112 TO HWY. 71B RAMP

N Fulbright Expwy
NORTH
71B
EXIT 67B

SEE "MAINTENANCE OF TRAFFIC - SPECIAL SIGNS" SHEET FOR DETAILS

C.L. NB I-49 TO HWY. 71B RAMP

PC 313+36.68

C.L. TEMP NB I-49 TO HWY. 71B RAMP

PC 317+42.84
PI 316+32.73
PT 320+76.68

25'

305:00 310:00 315:00 320:00

N

C.L. COLLECTOR-DISTRIBUTOR ROAD

PC 321+51.46

C.L. HWY. 71B

PI 322+46.68

PT 323+41.74

993' P.C.C.B.
315+65 TO 325+51
W/2 SPECIAL END UNITS

M.S.E. WALL

C.L. EX. NB I-49 TO PR. I-49 RAMP

T.I.A.B.

60' P.C.C.B.
322+63 TO 323+22
W/I T.I.A.B.

40' P.C.C.B. TAPER

PCC 324+48.80
PT 324+60.28

REMOVABLE PAVEMENT MARKINGS ON BRIDGE AND APPROACH SLABS

53' P.C.C.B. TAPER W/ SPECIAL END UNIT

120' P.C.C.B. TAPER W/ T.I.A.B.

C.L. HWY. 112 TO NB I-49 RAMP

PERMANENT CONCRETE BARRIER

TRAFFIC DRUMS

50'

T.I.A.B.

500' LANE TAPER

4" SKIP WHITE CONSTRUCTION PAVEMENT MARKINGS

4" CONTINUOUS YELLOW CONSTRUCTION PAVEMENT MARKINGS

4" CONTINUOUS WHITE CONSTRUCTION PAVEMENT MARKINGS

C.L. I-49

12'
12'

2193' P.C.C.B.
327+21 TO 348+66
W/I SPECIAL END UNIT AND T.I.A.B.

320:00 325:00 330:00 335:00

STAGE 2 CONSTRUCTION SEQUENCE NOTES:

1) SHIFT EXISTING NB I-49 TRAFFIC TO EX. NB I-49 TO PR. I-49 RAMP, THEN TO INSIDE LANES.

2) SHIFT EXISTING NB I-49 TO HWY. 71B TRAFFIC TO TEMP. NB I-49 TO HWY. 71B RAMP

TRAFFIC DRUMS @ 50' O.C. = 7 EACH
I-49 RT. STA. 325+70 TO STA. 328+60

TRAFFIC DRUMS @ 50' O.C. = 8 EACH
I-49 LT. STA. 326+17 TO STA. 329+52

STATE OF ARKANSAS
LICENSED PROFESSIONAL ENGINEER
No.13653
ADAM E. WIERCIAK
3/20/16

- STAGE 2 OVERLAY UNDER TRAFFIC
- STAGE 2 GRADING AND PAVING
- TRAFFIC
- TEMPORARY IMPACT ATTENUATION BARRIER (T.I.A.B.)
- PRECAST CONCRETE BARRIER (P.C.C.B.)
- TRAFFIC DRUM

MAINTENANCE OF TRAFFIC DETAILS
I-49 - STAGE 2

AEWiercIak 3/20/2016 11:52:52 AM
WORKSPACE: AHTD
L:\2011\11017\07 - I-540 Widening & Interchange Improvement\Drawings\r-BB0414_MOT_S0_ST2_06.dgn
REVISED DATE:

DATE REVISED	DATE FILMED	DATE REVISED	DATE FILMED	FED.RD. DIST.NO.	STATE	FED.AID PROJ.NO.	SHEET NO.	TOTAL SHEETS
				6	ARK.			
				JOB NO.		BB0414	162	886

(2) MAINTENANCE OF TRAFFIC - STAGE 2

STATE OF ARKANSAS
LICENSED PROFESSIONAL ENGINEER
No.13653
ADAM E. WIERCIAK
3/23/16

TRAFFIC DRUMS @ 50' O.C. = 13 EACH
HWY. 112 TO NB I-49 STA. 337+37 TO STA. 343+35
TRAFFIC DRUMS @ 50' O.C. = 4 EACH
HWY. 112 TO NB I-49 STA. RT. 341+86 TO STA. 343+36
TRAFFIC DRUMS = 7 EACH
I-49 STA. RT. 348+58 TO STA. 349+66

4" CONTINUOUS YELLOW CONSTRUCTION PAVEMENT MARKINGS
4" SKIP WHITE CONSTRUCTION PAVEMENT MARKINGS
4" CONTINUOUS WHITE CONSTRUCTION PAVEMENT MARKINGS
2193' P.C.C.B. 327+21 TO 348+66 W/1 SPECIAL END UNIT AND T.I.A.B.
C.L. HWY. 112 TO NB I-49 RAMP
TEMP. HWY. 71B TO NB I-49 DETOUR
C.L. I-49
PERMANENT CONCRETE BARRIER
53' P.C.C.B. TAPER W/SPECIAL END UNIT
PC 339+07.62
PT 341+47.97
PT 342+30.82
PC 346+17.73
PC 346+90.63
PC 347+09.47
PC 347+51.58
PT 348+00.74
PC 349+15.84
PI 350+09.37
PI 351+12.16

C.L. TEMP. SB I-49 DETOUR
C.L. TEMP. SB I-49 DETOUR STAGE 2 STA. 356+25.02 = C.L. TEMP. SB I-49 DETOUR STA. 356+25.02
C.L. TEMP. SB I-49 DETOUR STAGE 2
PI 354+39.90
PT 356+25.02
PC 357+78.02
N 14°18'51.7" W
1613' P.C.C.B. 342+28 TO 358+39 W/2 SPECIAL END UNITS
160' P.C.C.B. TAPER
500' LANE TAPER
PI 351+73.11
2013' P.C.C.B. 349+55 TO 369+65 W/1 SPECIAL END UNIT AND T.I.A.B.
C.L. HWY. 112 TO NB I-49 RAMP
60' P.C.C.B. TAPER
T.I.A.B.
PT 351+01.16
PT 354+95.16
PT 355+56.11
PC 349+15.84

TEMP. SB I-49 DETOUR STAGE 2
PI = 354+39.90
Δ = 11°08'32" RT.
D = 3°00'00"
T = 186.29
L = 371.41
PC= 352+53.61
PT= 356+25.02
e = MATCH EX.
Ls = MATCH EX.

TEMP. SB I-49 DETOUR STAGE 2
PI = 359+45.05
Δ = 9°59'47" LT.
D = 3°00'00"
T = 167.03
L = 333.22
PC= 357+78.02
PT= 361+11.24
e = MATCH EX.
Ls = MATCH EX.

53' P.C.C.B. TAPER W/SPECIAL END UNIT
4" CONTINUOUS WHITE CONSTRUCTION PAVEMENT MARKINGS
C.L. TEMP. SB I-49 DETOUR STAGE 2 STA. 361+11.24 = C.L. I-49 STA. 361+09.26, 21.81' RT.
PT 361+11.24
339' LANE TAPER
1213' P.C.C.B. 358+73 TO 370+83 W/2 SPECIAL END UNITS
C.L. I-49
300' LANE TAPER
PC 359+45.05
4" SKIP WHITE CONSTRUCTION PAVEMENT MARKINGS
4" CONTINUOUS YELLOW CONSTRUCTION PAVEMENT MARKINGS
REMOVABLE PAVEMENT MARKINGS ON BRIDGE AND APPROACH SLABS

STAGE 2 CONSTRUCTION SEQUENCE NOTES:

1) SHIFT I-49 TRAFFIC TO INSIDE LANES AND SHOULDERS AS SHOWN. ADJUST CONNECTION TO MAINTAIN ACCESS TO TEMP. SB I-49 DETOUR.

2) FROM 352+96 TO 354+45, PARAPET TYPE SPECIAL V WALL FOOTING IN RT. INSIDE SHOULDER IS AT FINAL GRADE. TRANSITION FROM EDGE OF BARRIER WALL FOOTINGTO STAGE 2 PAVEMENT GRADE IN 12'. PROVIDE 100' TRANSITION AT BEGIN AND END OF THIS SEGEMENT. MILL AND REPLACE TRANSITION WEDGES WITH FINAL SURFACE IN SUBSEQUENT STAGES.

3) CONSTRUCT OUTSIDE WIDENING.

TRAFFIC DRUMS = 7 EACH
I-49 STA. RT. 348+58 TO STA. 349+66
TRAFFIC DRUMS @ 50' O.C. = 9 EACH
I-49 STA. LT. 357+37 TO STA. 361+60

STAGE 2 OVERLAY UNDER TRAFFIC
STAGE 2 GRADING AND PAVING
TRAFFIC
TEMPORARY IMPACT ATTENUATION BARRIER (T.I.A.B.)
PRECAST CONCRETE BARRIER (P.C.C.B.)
TRAFFIC DRUM

MAINTENANCE OF TRAFFIC DETAILS
I-49 - STAGE 2

AEWiercIak 3/20/2016 11:52:52 AM
WORKSPACE: AHTD
L:\20IN\I0I707 - I-540 Widening & Interchange Improvement\Drawings\rBB0414_MOT_SD_ST2_01.dgn
REVISED DATE:

DATE REVISED	DATE FILMED	DATE REVISED	DATE FILMED	FED.RD. DIST.NO.	STATE	FED.AID PROJ.NO.	SHEET NO.	TOTAL SHEETS
				6	ARK.			
				JOB NO.		BB0414	163	886
				(2)	MAINTENANCE OF TRAFFIC - STAGE 2			

STATE OF ARKANSAS
LICENSED PROFESSIONAL ENGINEER
No. 13653
ADAM E. WIERCIAK
3/20/16

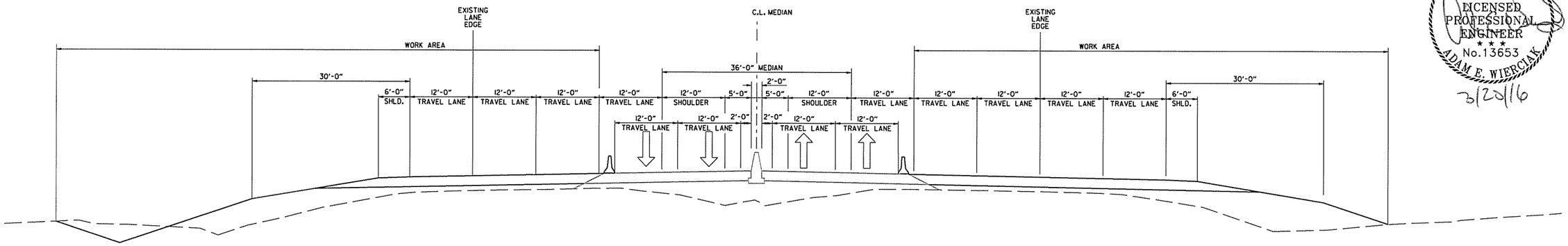

I-49
STAGE 2 TYPICAL SECTION

STAGE 2 CONSTRUCTION SEQUENCE NOTES:
1) CONSTRUCT OUTSIDE WIDENING.

TRAFFIC DRUMS @ 50' O.C = 27 EACH
I-49 LT. STA. 369+11 TO STA. 382+24
TRAFFIC DRUMS @ 50' O.C = 25 EACH
I-49 LT. STA. 370+11 TO STA. 382+25
TRAFFIC DRUMS @ 50' O.C = 25 EACH
I-49 RT. STA. 370+11 TO STA. 382+20
TRAFFIC DRUMS @ 50' O.C = 26 EACH
I-49 RT. STA. 369+54 TO STA. 382+20

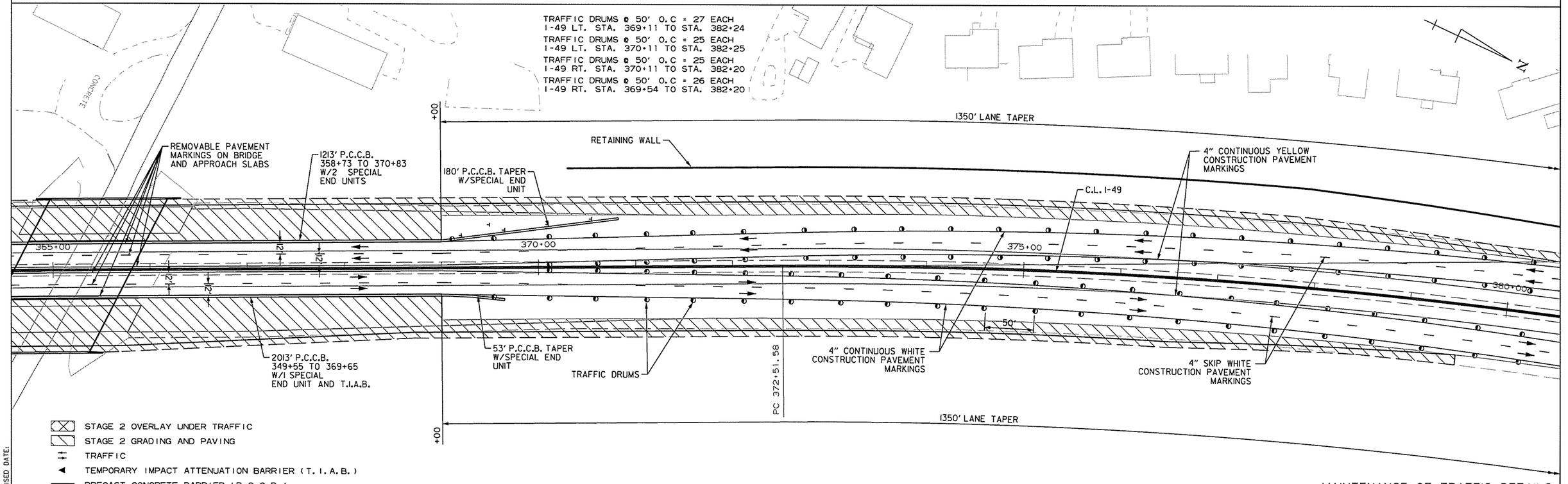

MAINTENANCE OF TRAFFIC DETAILS
I-49 - STAGE 2

AEWierciak 3/20/2016 11:52:52 AM
WORKSPACE: AHTD
L:\ROW\100710T - I-540 Widening & Interchange Improvement\Drawings\rBB0414_MOT_SD_ST2_08.dgn
REVISED DATE:

DATE REVISED	DATE FILMED	DATE REVISED	DATE FILMED	FED.RD. DIST.NO.	STATE	FED.AID PROJ.NO.	SHEET NO.	TOTAL SHEETS
				6	ARK.			
				JOB NO.		BB0414	164	886
				(2)	MAINTENANCE OF TRAFFIC - STAGE 2			

TRAFFIC DRUMS @ 50' O.C = 27 EACH
I-49 LT. STA. 369+11 TO STA. 382+24

TRAFFIC DRUMS @ 50' O.C = 25 EACH
I-49 LT. STA. 370+11 TO STA. 382+25

TRAFFIC DRUMS @ 50' O.C = 25 EACH
I-49 RT. STA. 370+11 TO STA. 382+20

TRAFFIC DRUMS @ 50' O.C = 26 EACH
I-49 RT. STA. 369+54 TO STA. 382+20

TRAFFIC DRUMS @ 100' O.C = 10 EACH
I-49 RT. STA. 383+21 TO STA. 392+29

TRAFFIC DRUMS @ 100' O.C = 11 EACH
I-49 LT. STA. 383+24 TO STA. 393+16

N

STATE OF ARKANSAS
LICENSED PROFESSIONAL ENGINEER
No.13653
ADAM E. WIERCIAK
3/20/16

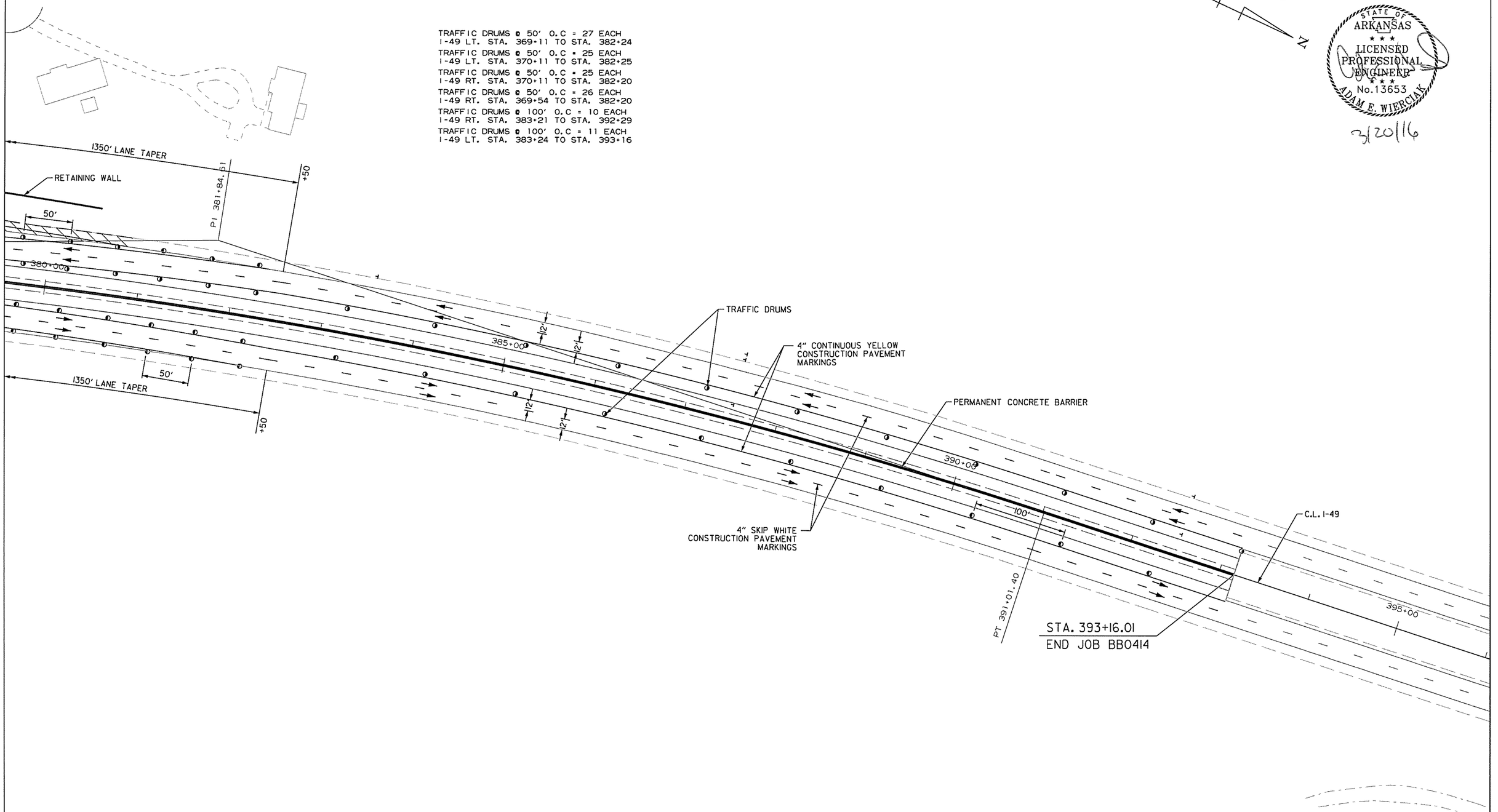

STAGE 2 OVERLAY UNDER TRAFFIC
STAGE 2 GRADING AND PAVING
TRAFFIC
TEMPORARY IMPACT ATTENUATION BARRIER (T.I.A.B.)
PRECAST CONCRETE BARRIER (P.C.C.B.)
TRAFFIC DRUM

MAINTENANCE OF TRAFFIC DETAILS
I-49 - STAGE 2

AEWierciak 3/20/2016 11:52:53 AM
WORKSPACE: AHTD
L:\2011\101707 - I-540 Widening & Interchange Improvement\Drawings\r-BB0414_MOT_SD_ST2_09.dgn
REVISED DATE:

DATE REVISED	DATE FILMED	DATE REVISED	DATE FILMED	FED.RD. DIST.NO.	STATE	FED.AID PROJ.NO.	SHEET NO.	TOTAL SHEETS
				6	ARK.			
				JOB NO.		BB0414	165	886

(2) MAINTENANCE OF TRAFFIC - STAGE 2

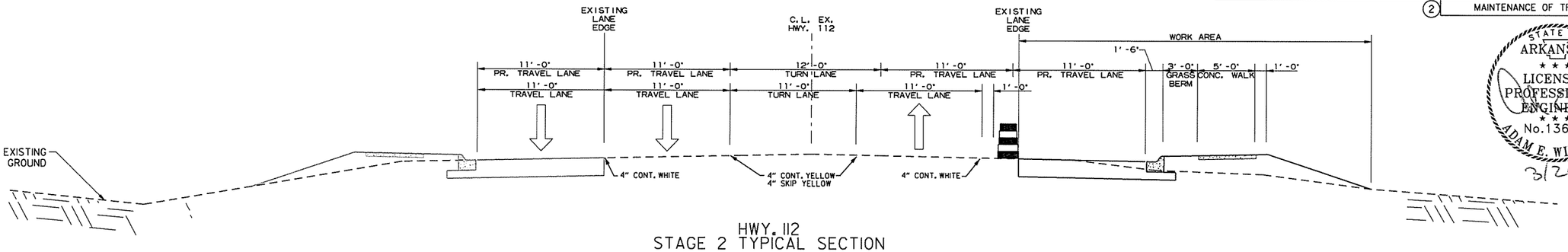

HWY. 112
STAGE 2 TYPICAL SECTION

STATE OF ARKANSAS
LICENSED PROFESSIONAL ENGINEER
No. 13653
ADAM E. WIERCIAK
3/20/16

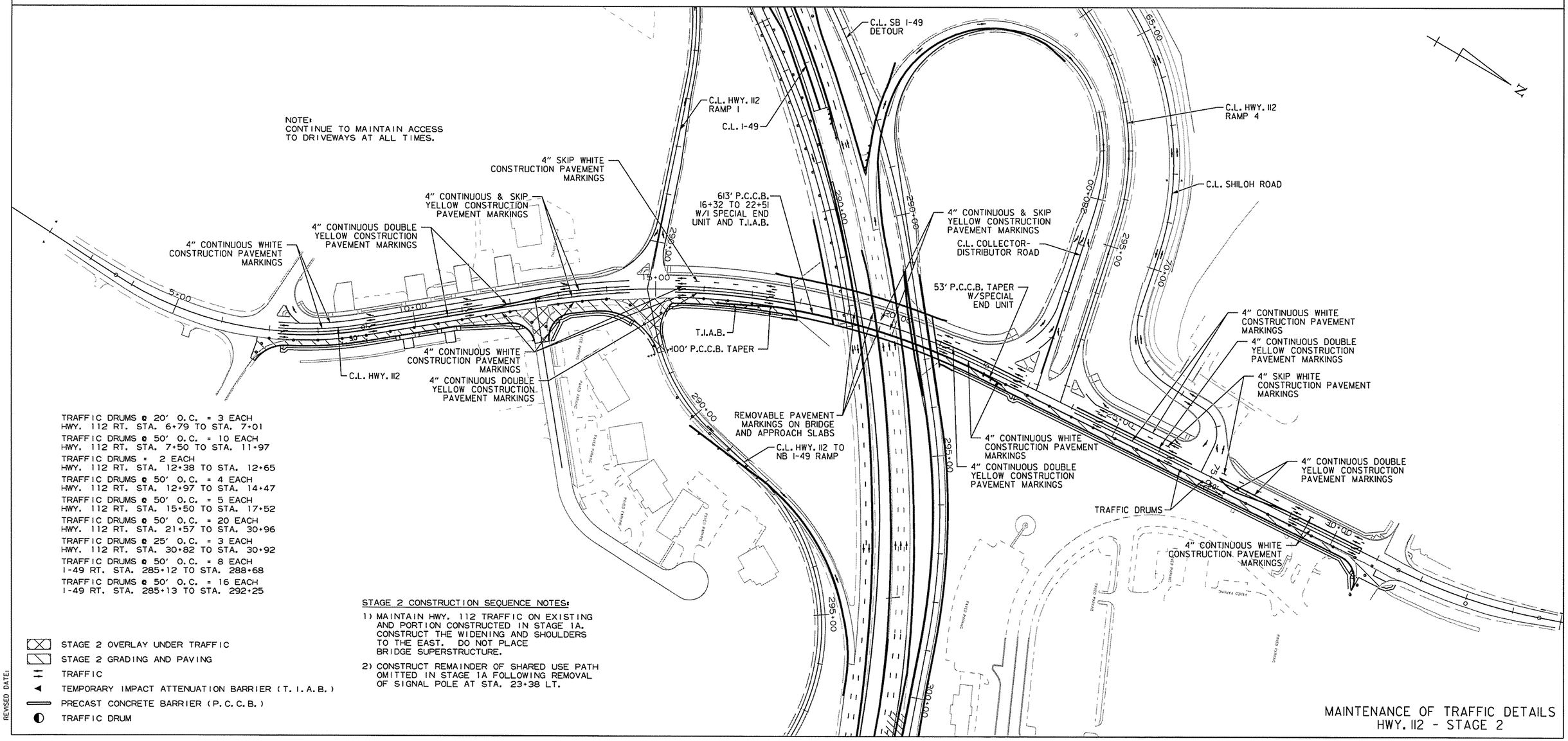

NOTE:
CONTINUE TO MAINTAIN ACCESS TO DRIVEWAYS AT ALL TIMES.

TRAFFIC DRUMS @ 20' O.C. = 3 EACH
HWY. 112 RT. STA. 6+79 TO STA. 7+01
TRAFFIC DRUMS @ 50' O.C. = 10 EACH
HWY. 112 RT. STA. 7+50 TO STA. 11+97
TRAFFIC DRUMS = 2 EACH
HWY. 112 RT. STA. 12+38 TO STA. 12+65
TRAFFIC DRUMS @ 50' O.C. = 4 EACH
HWY. 112 RT. STA. 12+97 TO STA. 14+47
TRAFFIC DRUMS @ 50' O.C. = 5 EACH
HWY. 112 RT. STA. 15+50 TO STA. 17+52
TRAFFIC DRUMS @ 50' O.C. = 20 EACH
HWY. 112 RT. STA. 21+57 TO STA. 30+96
TRAFFIC DRUMS @ 25' O.C. = 3 EACH
HWY. 112 RT. STA. 30+82 TO STA. 30+92
TRAFFIC DRUMS @ 50' O.C. = 8 EACH
I-49 RT. STA. 285+12 TO STA. 288+68
TRAFFIC DRUMS @ 50' O.C. = 16 EACH
I-49 RT. STA. 285+13 TO STA. 292+25

STAGE 2 CONSTRUCTION SEQUENCE NOTES:

1) MAINTAIN HWY. 112 TRAFFIC ON EXISTING AND PORTION CONSTRUCTED IN STAGE 1A. CONSTRUCT THE WIDENING AND SHOULDERS TO THE EAST. DO NOT PLACE BRIDGE SUPERSTRUCTURE.

2) CONSTRUCT REMAINDER OF SHARED USE PATH OMITTED IN STAGE 1A FOLLOWING REMOVAL OF SIGNAL POLE AT STA. 23+38 LT.

- STAGE 2 OVERLAY UNDER TRAFFIC
- STAGE 2 GRADING AND PAVING
- TRAFFIC
- TEMPORARY IMPACT ATTENUATION BARRIER (T.I.A.B.)
- PRECAST CONCRETE BARRIER (P.C.C.B.)
- TRAFFIC DRUM

MAINTENANCE OF TRAFFIC DETAILS
HWY. 112 - STAGE 2

AEWierciak 3/20/2016 11:52:53 AM
WORKSPACE: AHTD
L:\20\1101707 - I-540 Widening & Interchange Improvement\Drawings\rBB0414_MOT_SD_ST2_10.dgn
REVISED DATE:

DATE REVISED	DATE FILMED	DATE REVISED	DATE FILMED	FED.RD. DIST.NO.	STATE	FED.AID PROJ.NO.	SHEET NO.	TOTAL SHEETS
				6	ARK.			
				JOB NO.		BB0414	166	886
				(2)	MAINTENANCE OF TRAFFIC - STAGE 2			

STATE OF ARKANSAS
LICENSED PROFESSIONAL ENGINEER
No.13653
ADAM E. WIERCIAK
3/23/16

TRAFFIC DRUMS @ 50' O.C. = 7 EACH
I-49 RT. STA. 325+70 TO STA. 328+60
TRAFFIC DRUMS @ 50' O.C. = 8 EACH
I-49 LT. STA. 326+17 TO STA. 329+52

C.L. COLLECTOR-DISTRIBUTOR ROAD
PC 321+51.46
EX. SB I-49 HWY. 71B
C.L. HWY. 71B
C.L. TEMP. NB I-49 DETOUR
PI 322+46.68
M.S.E. WALL
PERMANENT CONCRETE BARRIER
PT 323+41.74
PT 316+32.73
PC 324+48.80
PT 324+60.28
C.L. I-49
330+00
325+00
320+00
PT 320+76.61
C.L. HWY. 112 TO NB I-49 RAMP
PERMANENT CONCRETE BARRIER
TEMP. NB I-49 TO HWY. 71B RAMP
C.L. HWY. 71B
2+71.77
326+00

STAGE 2 GRADING AND PAVING
TRAFFIC
TEMPORARY IMPACT ATTENUATION BARRIER (T.I.A.B.)
PRECAST CONCRETE BARRIER (P.C.C.B.)
TRAFFIC DRUM

335+00
C.L. I-49
340+00
345+00
PROP. SB I-49 LANES
PT 342+30.82
PC 347+60.47
53' P.C.C.B. TAPER W/SPECIAL END UNIT
C.L. HWY. 112 TO NB I-49 RAMP
PERMANENT CONCRETE BARRIER
PC 339+17.62
PT 341+47.97
T.I.A.B.
4" CONTINUOUS WHITE CONSTRUCTION PAVEMENT MARKINGS
TRAFFIC DRUMS
50'
5'
+25
60' P.C.C.B. TAPER
520' P.C.C.B. 342+82 TO 348+00 W/T.I.A.B.
573' P.C.C.B. 342+79 TO 348+53 W/I SPECIAL END UNIT AND T.I.A.B.
PC 346+17.73
PC 347+51.58
PT 348+00.74
C.L. STAGE 2 HWY 71B TO NB I-49 RAMP
C.L. HWY. 71B TO NB I-49 RAMP
PI 340+33.26

TRAFFIC DRUMS @ 50' O.C. = 13 EACH
HWY. 112 TO NB I-49 STA. 337+37 TO STA. 343+35
TRAFFIC DRUMS @ 50' O.C. = 4 EACH
HWY. 112 TO NB I-49 RT. STA. 341+86 TO STA. 343+36

STAGE 2 CONSTRUCTION SEQUENCE NOTES:

1) COMPLETE HWY. 112 TO NB I-49 RAMP BRIDGE FROM 316+32.73 TO END. CONSTRUCT ROADWAY TO EXISTING BRIDGE OVER HWY. 71B.

2) WITH HWY. 71B RAMP TRAFFIC USING DETOUR TO ACCESS I-49, PRIORITIZE RAMP PAVING AS SHOWN FROM STA. 344+25 TO STA. 354+00.

MAINTENANCE OF TRAFFIC DETAILS HWY. 112 TO NB I-49 RAMP - STAGE 2

AEWiercIak 3/20/2016 11:52:53 AM
WORKSPACE: AHTD
L:\20IN\I40I707 - I-540 Widening & Interchange Improvement\Drawings\r-BB0414_MOT_SD_ST2_II.dgn
REVISED DATE:

DATE REVISED	DATE FILMED	DATE REVISED	DATE FILMED	FED.RD. DIST.NO.	STATE	FED.AID PROJ.NO.	SHEET NO.	TOTAL SHEETS
				6	ARK.			
				JOB NO.		BB0414	167	886
				(2)	MAINTENANCE OF TRAFFIC - STAGE 2			

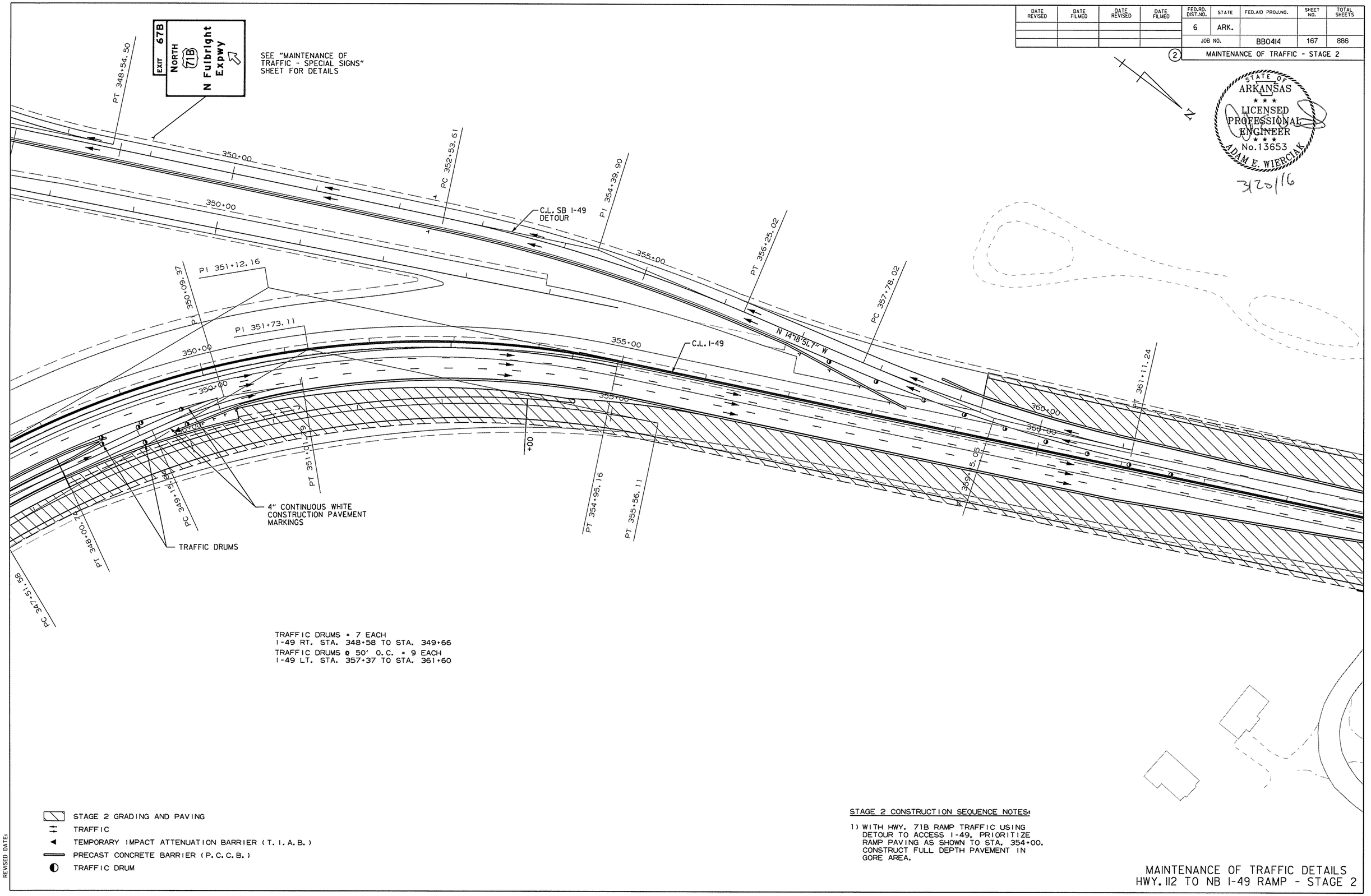

STATE OF ARKANSAS
LICENSED PROFESSIONAL ENGINEER
No. 13653
ADAM E. WIERCIAK
3/20/16

STAGE 2 CONSTRUCTION SEQUENCE NOTES:

1) WITH HWY. 71B RAMP TRAFFIC USING DETOUR TO ACCESS I-49, PRIORITIZE RAMP PAVING AS SHOWN TO STA. 354+00. CONSTRUCT FULL DEPTH PAVEMENT IN GORE AREA.

MAINTENANCE OF TRAFFIC DETAILS HWY. 112 TO NB I-49 RAMP - STAGE 2

AEWierciak 3/20/2016 11:52:53 AM
WORKSPACE: AHTD
L:\20IN\10I707 - I-540 Widening & Interchange Improvement\Drawings\r-BB0414_MOT_SD_ST2_12.dgn
REVISED DATE:

DATE REVISED	DATE FILMED	DATE REVISED	DATE FILMED	FED.RD. DIST.NO.	STATE	FED.AID PROJ.NO.	SHEET NO.	TOTAL SHEETS
				6	ARK.			
				JOB NO.		BB0414	168	886
				(2)	MAINTENANCE OF TRAFFIC - STAGE 2			

STATE OF ARKANSAS
LICENSED PROFESSIONAL ENGINEER
No. 13653
ADAM E. WIERCIAK
3/20/16

N

EX. SB I-49

PAVED PARKING

POB 306+38.86
PC 307+64.39
PI 307+86.05
PCC 308+07.70
PT 311+08.92
PC 313+41.74
PI 314+30.15

305+00
310+00
315+00
320+00

C.L. COLLECTOR-DISTRICT RD.

700' LANE TAPER

+90

TRAFFIC DRUMS

C.L. HWY. 71B SB

100' LANE TAPER

PC 314+95.11
PI 315+67.04
PT 316+38.85

2093' P.C.C.B.
I-49 STA. 291+00 TO
SB HWY. 71B STA. 311+87
W/2 SPECIAL END UNITS

PI 309+60.72

180' P.C.C.B. TAPER
W/1 SPECIAL
END UNIT

1053' P.C.C.B.
316+71 TO 327+23
W/1 SPECIAL
END UNIT AND T.I.A.B.

100'
13'
12'

TRAFFIC DRUMS @ 100' O.C. = 10 EACH
SB HWY. 71B LT. STA. 308+00 TO STA. 317+00

TRAFFIC DRUMS @ 50' O.C. = 7 EACH
I-49 RT. STA. 325+70 TO STA. 328+60
TRAFFIC DRUMS @ 50' O.C. = 8 EACH
I-49 LT. STA. 326+17 TO STA. 329+52
TRAFFIC DRUMS @ 100' O.C. = 10 EACH
HWY. 71 RT. STA. 336+48 TO STA. 345+53
TRAFFIC DRUMS @ 100' O.C. = 17 EACH
NB I-49 TO HWY. 71B STA. 319+47 TO STA. 335+47

STAGE 2 CONSTRUCTION SEQUENCE NOTES:

1) MAINTAIN TRAFFIC PATTERN FROM STAGE 1A.

STAGE 2 OVERLAY UNDER TRAFFIC
STAGE 2 GRADING AND PAVING
TRAFFIC
TEMPORARY IMPACT ATTENUATION BARRIER (T.I.A.B.)
PRECAST CONCRETE BARRIER (P.C.C.B.)
TRAFFIC DRUM

700' LANE TAPER

PC 321+51.46
PI 322+46.68
PT 323+41.74

320+00
325+00
330+00
335+00

120' P.C.C.B. TAPER
T.I.A.B.

1053' P.C.C.B.
316+71 TO 327+23
W/1 SPECIAL
END UNIT AND T.I.A.B.

PC 324+48.80
PI 324+90.28

PC 330+61.97
PI 333+25.28
PT 335+66.62

MAINTENANCE OF TRAFFIC DETAILS
HWY. 71B - STAGE 2

AEWiercIak 3/20/2016 11:52:54 AM
WORKSPACE: AHTD
L:\20IN\10I7707 - I-540 Widening & Interchange Improvement\Drawings\r-BB0414_MOT_SD_ST2_I3.dgn
REVISED DATE:

DATE REVISED	DATE FILMED	DATE REVISED	DATE FILMED	FED.RD. DIST.NO.	STATE	FED.AID PROJ.NO.	SHEET NO.	TOTAL SHEETS
				6	ARK.			
				JOB NO.		BB0414	169	886
				(2)	MAINTENANCE OF TRAFFIC - STAGE 2			

STATE OF ARKANSAS
LICENSED PROFESSIONAL ENGINEER
No. 13653
ADAM E. WIERCIAK
3/20/16

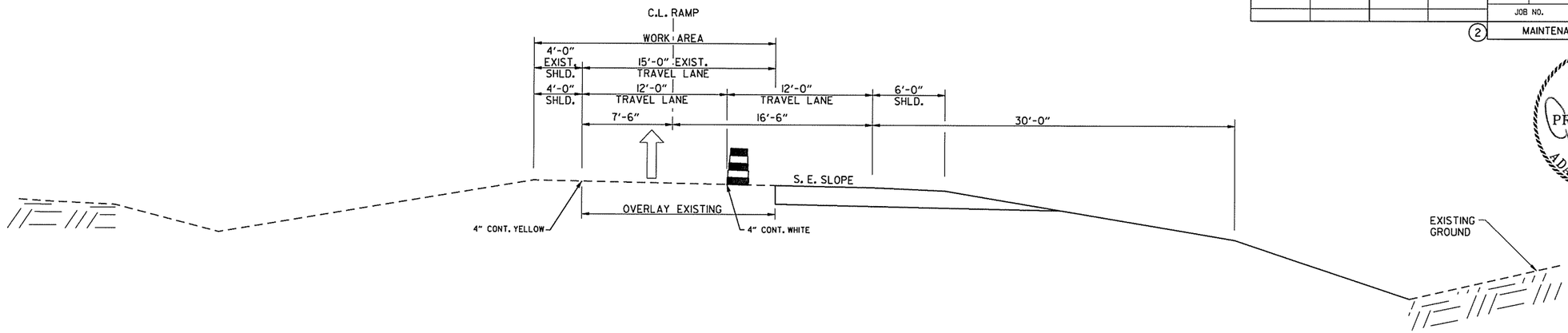

NB I-49 TO HWY. 71B RAMP
STAGE 2 TYPICAL SECTION

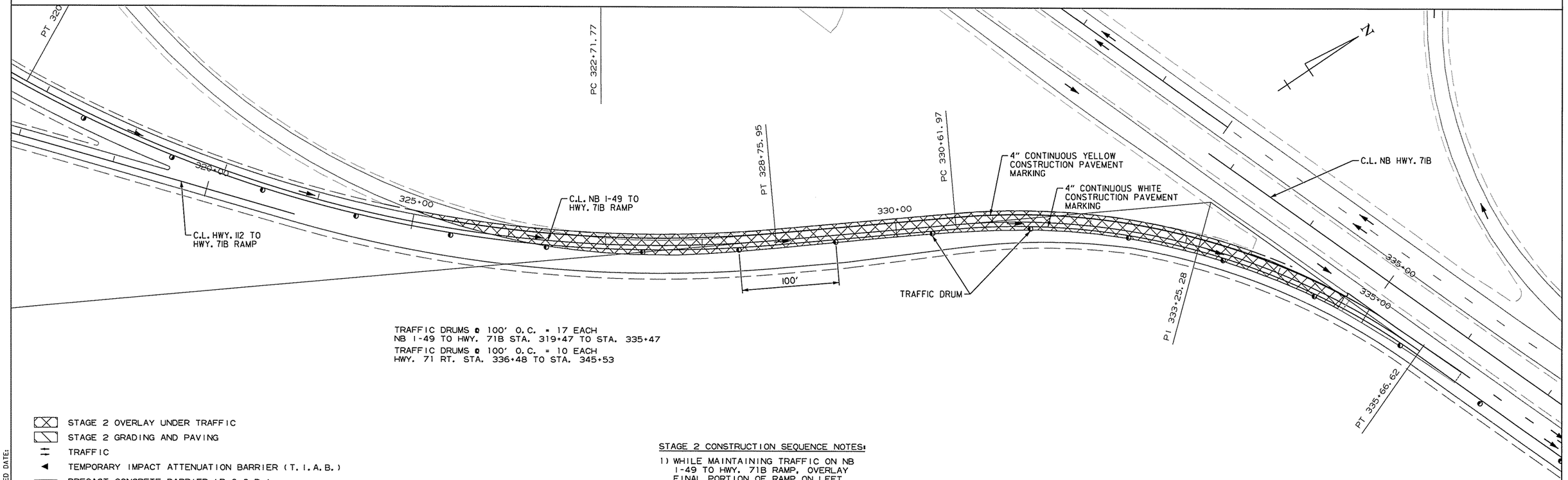

TRAFFIC DRUMS @ 100' O.C. = 17 EACH
NB I-49 TO HWY. 71B STA. 319+47 TO STA. 335+47
TRAFFIC DRUMS @ 100' O.C. = 10 EACH
HWY. 71 RT. STA. 336+48 TO STA. 345+53

- STAGE 2 OVERLAY UNDER TRAFFIC
- STAGE 2 GRADING AND PAVING
- TRAFFIC
- TEMPORARY IMPACT ATTENUATION BARRIER (T.I.A.B.)
- PRECAST CONCRETE BARRIER (P.C.C.B.)
- TRAFFIC DRUM

STAGE 2 CONSTRUCTION SEQUENCE NOTES:

1) WHILE MAINTAINING TRAFFIC ON NB I-49 TO HWY. 71B RAMP, OVERLAY FINAL PORTION OF RAMP ON LEFT SIDE UNDER TRAFFIC.

MAINTENANCE OF TRAFFIC DETAILS
NB I-49 TO HWY. 71B RAMP- STAGE 2

AEWierciak 3/20/2016 11:52:54 AM
WORKSPACE: AHTD
L:\20IN\101707 - I-540 Widening & Interchange Improvement\Drawings\r-BB0414_MOT_SD_ST2_14.dgn
REVISED DATE:

DATE REVISED	DATE FILMED	DATE REVISED	DATE FILMED	FED.RD. DIST.NO.	STATE	FED.AID PROJ.NO.	SHEET NO.	TOTAL SHEETS
				6	ARK.			
				JOB NO.		BB0414	170	886

(2) MAINTENANCE OF TRAFFIC - STAGE 2A

TRAFFIC DRUMS @ 50' O.C. = 11 EACH
I-49 RT. STA. 325+21 TO STA. 330+05
TRAFFIC DRUMS @ 50' O.C. = 9 EACH
I-49 LT. STA. 325+68 TO STA. 329+52
TRAFFIC DRUMS @ 100' O.C. = 12 EACH
HWY. 112 TO NB I-49 STA. 336+71 TO STA. 347+59

STAGE 2A M.O.T. QUANTITIES

SIGNS = 2289 SQ. FT.
TRAFFIC DRUMS = 455 EACH
RELOCATE PRECAST CONCRETE BARRIER = 333 LIN. FT.
TEMPORARY IMPACT ATTENUATION BARRIER (RELOCATION) = 1 EACH
CONSTRUCTION PAVEMENT MARKINGS = 3864 LIN. FT.
REMOVAL OF CONSTRUCTION PAVEMENT MARKINGS = 547 LIN. FT.

STATE OF ARKANSAS
LICENSED PROFESSIONAL ENGINEER
No. 13653
ADAM E. WIERCIAK
3/28/16

PI 322+46.68
PC 324+48.80
PT 324+60.78
PT 323+41.74
325+00
325+00
330+00
335+00
C.L. I-49
PC 339+27.26
340+00
PI 336+65.60
335+00
C.L. HWY. 112 TO NB I-49
330+00
335+00
75.95
1.97
9+27.26
340+38.58
PT 341+29.08
PT 341+49.46

STAGE 2A OVERLAY UNDER TRAFFIC
STAGE 2A GRADING AND PAVING
TRAFFIC
TEMPORARY IMPACT ATTENUATION BARRIER (T.I.A.B.)
PRECAST CONCRETE BARRIER (P.C.C.B.)
TRAFFIC DRUM

SHOULDER CLOSED (1) RSP-1 (48" X 30") HWY. 71B TO NB I-49 STA. 334+00

PT 342+30.82
PC 346+90.63
PI 351+12.16
PI 352+22.04
PC 352+53.
PI 351+73.11
350+00
C.L. I-49
345+00
340+00
350+00
50'
C.L. STAGE 2A HWY. 71B TO NB I-49 RAMP
4" CONTINUOUS WHITE CONSTRUCTION PAVEMENT MARKING
T.I.A.B.
80' P.C.C.B. TAPER
TRAFFIC DRUMS
PC 347+51.58
PC 347+79.43
340+00
345+00
4" CONTINUOUS YELLOW CONSTRUCTION PAVEMENT MARKING
4" CONTINUOUS WHITE CONSTRUCTION PAVEMENT MARKING
1673' P.C.C.B. 352+82 TO 369+55 W/1 SPECIAL END UNIT AND T.I.A.B.
54+95.16

STAGE 2A CONSTRUCTION SEQUENCE NOTES:

1) MAINTAIN ALL STAGE 2 TRAFFIC CONFIGURATIONS OUTSIDE OF THE FOLLOWING ITEMS.
2) MOVE TRAFFIC TO PRIORITIZED SECTION COMPLETED IN STAGE 2.
3) CONSTRUCT HWY. 112 TO NB I-49 RAMP FROM BRIDGE OVER HWY. 71B TO I-49 STA. 348+00.
4) CONSTRUCT REMAINDER OF OUTSIDE OF I-49 FROM BRIDGE OVER HWY. 71B TO 348+00.
5) CONSTRUCT HWY. 71B TO NB I-49 RAMP AND HWY. 112 TO NB I-49 RAMP TO STA. 344+00 UNDER TRAFFIC.

C.L. STAGE 2A HWY. 71B TO NB I-49 RAMP

PI = 352+22.04
Δ = 42°14'17" RT.
D = 5°00'00"
T = 442.61
L = 844.76
PC= 347+79.43
PT= 356+24.19
e = MATCH EX.
Ls = MATCH EX.

TRAFFIC DRUMS @ 50' O.C. = 15 EACH
I-49 RT. STA. 348+60 TO STA. 355+38
TRAFFIC DRUMS @ 50' O.C. = 9 EACH
I-49 RT. STA. 351+20 TO STA. 354+87
TRAFFIC DRUMS @ 50' O.C. = 6 EACH
HWY. 112 TO NB I-49 STA. 348+10 TO STA. 350+93
TRAFFIC DRUMS @ 100' O.C. = 12 EACH
HWY. 112 TO NB I-49 STA. 336+71 TO STA. 347+59
TRAFFIC DRUMS @ 50' O.C. = 10 EACH
HWY. 112 TO NB I-49 STA. 348+12 TO STA. 352+95

MAINTENANCE OF TRAFFIC DETAILS HWY. 112 TO NB I-49 RAMP - STAGE 2A

AEWiercIak 3/20/2016 11:52:54 AM
WORKSPACE: AHTD
L:\20IN\10\7707 - I-540 Widening & Interchange Improvement\Drawings\rBB0414_MOT_SD_ST2A_01.dgn
REVISED DATE:

DATE REVISED	DATE FILMED	DATE REVISED	DATE FILMED	FED.RD. DIST.NO.	STATE	FED.AID PROJ.NO.	SHEET NO.	TOTAL SHEETS
				6	ARK.			
				JOB NO.		BB0414	171	886

(2) MAINTENANCE OF TRAFFIC - STAGE 2A

STATE OF ARKANSAS
LICENSED PROFESSIONAL ENGINEER
No. 13653
ADAM E. WIERCIAK
3/20/16

N

P.I. 354+39.91
355+00
P.T. 356+25.02
356+25
P.C. 358+11.31
360+00
P.I. 361+82.72
365+00
355+00
4" CONTINUOUS YELLOW CONSTRUCTION PAVEMENT MARKING
4" CONTINUOUS WHITE CONSTRUCTION PAVEMENT MARKING
50'
355+00
355+00
P.I. 359+97.60
1673' P.C.C.B. 352+82 TO 369+55 W/I SPECIAL END UNIT AND T.I.A.B.
TRAFFIC DRUMS
P.T. 354+95.16
P.T. 355+56.11
P.T. 356+24.19
C.L. STAGE 2A HWY. 71B TO NB I-49 RAMP STA. 356+24.19 = C.L. I-49 STA. 356+24.19, 33.00' RT.

TRAFFIC DRUMS @ 50' O.C. = 15 EACH
I-49 RT. STA. 348+60 TO STA. 355+38
TRAFFIC DRUMS @ 50' O.C. = 9 EACH
I-49 RT. STA. 351+20 TO STA. 354+87
TRAFFIC DRUMS @ 50' O.C. = 7 EACH
I-49 LT. STA. 358+57 TO STA. 361+60

C.L. STAGE 2A HWY. 71B TO NB I-49 RAMP
PI = 352+22.04
Δ = 42°14'17" RT.
D = 5°00'00"
T = 442.61
L = 844.76
PC= 347+79.43
PT= 356+24.19
e = MATCH EX.
Ls = MATCH EX.

STAGE 2A GRADING AND PAVING
TRAFFIC
TEMPORARY IMPACT ATTENUATION BARRIER (T.I.A.B.)
PRECAST CONCRETE BARRIER (P.C.C.B.)
TRAFFIC DRUM

STAGE 2A CONSTRUCTION SEQUENCE NOTES:

1) MAINTAIN ALL STAGE 2 TRAFFIC CONFIGURATIONS OUTSIDE OF THE FOLLOWING ITEMS.
2) MOVE TRAFFIC TO PRIORITIZED SECTION COMPLETED IN STAGE 2.
3) CONTINUE CONSTRUCTION ON NB I-49 AS SHOWN IN STAGE 2.

CONCRETE

MAINTENANCE OF TRAFFIC DETAILS HWY. 112 TO NB I-49 RAMP - STAGE 2A

AEWierciak 3/20/2016 11:52:54 AM
WORKSPACE: AHTD
L:\20IN\I00170T - I-540 Widening & Interchange Improvement\Drawings\rBB0414_MOT_SD_ST2A_02.dgn
REVISED DATE:

ADDITIONAL STAGE 2B ADVANCE WARNING SIGNS

DATE REVISED	DATE FILMED	DATE REVISED	DATE FILMED	FED.RD. DIST.NO.	STATE	FED.AID PROJ.NO.	SHEET NO.	TOTAL SHEETS
				6	ARK.			
				JOB NO.		BB0414	172	886
				(2)	MAINTENANCE OF TRAFFIC - STAGE 2B			

STATE OF ARKANSAS
LICENSED PROFESSIONAL ENGINEER
No.13653
ADAM E. WIERCIAK
3/20/16

INSTALLATION STA.

SHOULDER CLOSED (1) RSP-1 (48" X 30")

(2) WI-4bL (48" X 48") I-49 RT. STA. 284+60

ROAD NARROWS (2) W5-1 (48" X 48")

(2) WI-4aR (48" X 48") C-D RD. STA. 316+92
HWY. 112 TO NB I-49 STA. 288+50

INSTALLATION STA.

(2) WI-4aL (48" X 48") SB HWY. 71B STA. 319+30

(2) WI-4bL (48" X 48") I-49 RT. STA. 234+77
C-D RD. STA. 296+10
SB I-49 DETOUR STA. 352+40

(2) WI-4bR (48" X 48") I-49 RT. STA. 275+00
I-49 LT. STA. 363+81
I-49 LT. STA. 374+75
TEMP. EX. NB I-49 TO PR. I-49 RAMP STA. 320+00 LT.

(2) W4-2 RT. (48" X 48") C-D RD. STA. 308+87

RIGHT LANE CLOSED 1500 FT (2) W20-5R (48" X 48") SB I-49 TO HWY. 112 STA. 335+05 (EX. SB I-49)

RIGHT LANE CLOSED 1/2 MILE (2) W20-5R (48" X 48") SB I-49 DETOUR STA. 344+75

RIGHT LANE CLOSED 1MILE (2) W20-5R (48" X 48") I-49 STA. 374+75 LT.

INSTALLATION STA.

END ROAD WORK (1) G20-2 (48" X 24") HWY. 112 STA. 2+00
HWY. 112 STA. 36+00
SHILOH DR. STA. 67+13

(1) OM-3R (12"X 36") C-D RD. STA. 300+00 TO 302+75 (12)

SHOULDER CLOSED (1) RSP-1 (48" X 30") I-49 LT. STA. 359+85
HWY. 112 TO NB I-49 STA. 291+00 LT.
C-D RD. 312+40 RT.
SB HWY. 71B STA. 310+00 LT.
SB HWY. 71B STA. 311+08 RT.
TEMP. EX. NB I-49 TO PR. I-49 RAMP STA. 313+88 RT.
TEMP. EX. NB I-49 TO PR. I-49 RAMP STA. 320+00 LT.
TEMP. SB I-49 TO C-D RD. STA. 309+00 RT.

(1) W4-1L (48" X 48") SB I-49 TO HWY. 112 STA. 330+60 LT. (EX. SB I-49)

RIGHT LANE EXIT ONLY AHEAD (1) W9-7 (132" X 72") SB HWY. 71B STA. 329+08

RAMP / 25 M.P.H. (1) WI3-3 (48" X 60") TEMP. C-D RD. TO SB I-49 RAMP STA. 291+00

ROAD WORK 500 FT (1) W20-1 (48" X 48") HWY. 112 STA. 2+00
HWY. 112 STA. 28+00
SHILOH DR. STA. 67+13

ROAD WORK 1000 FT (1) W20-1 (48" X 48") HWY. 112 500' BEFORE STA. 2+00
HWY. 112 STA. 33+00
SHILOH DR. STA. 62+13

ROAD WORK 1500 FT (1) W20-1 (48" X 48") HWY. 112 1000' BEFORE STA. 2+00
HWY. 112 200' AFTER STA. 36+00
SHILOH DR. STA. 57+13

STAGE 2B M.O.T. QUANTITIES

SIGNS = 2554 SQ. FT.
TRAFFIC DRUMS = 403 EACH
RELOCATE PRECAST CONCRETE BARRIER = 8717 LIN. FT.
TEMPORARY IMPACT ATTENUATION BARRIER (RELOCATION) =4 EACH
REMOVAL OF PERMANENT PAVEMENT MARKINGS = 7098 LIN. FT.
REMOVABLE CONSTRUCTION PAVEMENT MARKINGS = 4587 LIN. FT.
CONSTRUCTION PAVEMENT MARKINGS = 72426 LIN. FT.
REMOVAL OF CONSTRUCTION PAVEMENT MARKINGS = 31600 LIN. FT.

AEWierciak 3/20/2016 11:52:55 AM
WORKSPACE: AHTD
L:\201\110\707 - I-540 Widening & Interchange Improvement\Drawings\r-BB0414_MOT_SD_ST2B_01.dgn
REVISED DATE:

MAINTENANCE OF TRAFFIC DETAILS
I-49 - STAGE 2B

DATE REVISED	DATE FILMED	DATE REVISED	DATE FILMED	FED.RD. DIST.NO.	STATE	FED.AID PROJ.NO.	SHEET NO.	TOTAL SHEETS
				6	ARK.			
				JOB NO.		BB0414	173	886
				(2)	MAINTENANCE OF TRAFFIC - STAGE 2B			

STATE OF ARKANSAS
LICENSED PROFESSIONAL ENGINEER
No.13653
ADAM E. WIERCIAK

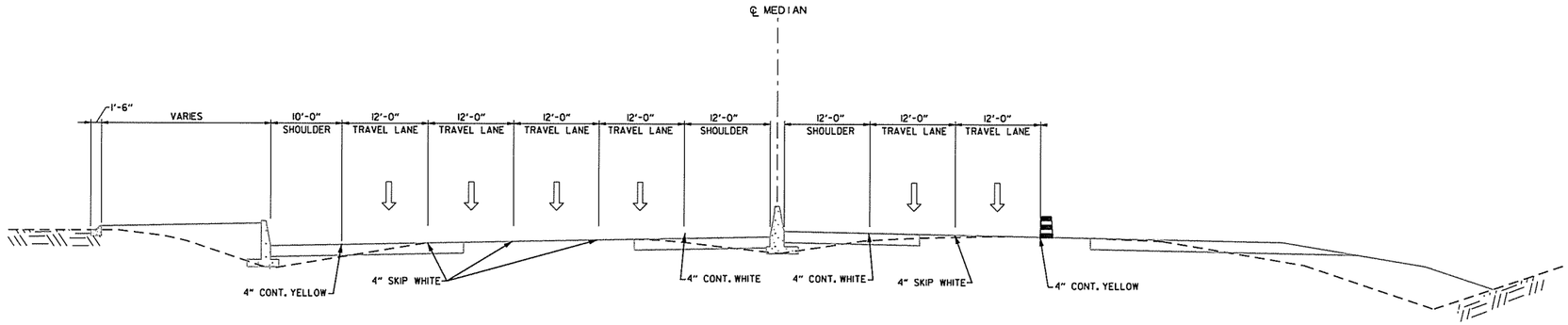

I-49
STAGE 2B TYPICAL SECTION

STAGE 2B CONSTRUCTION SEQUENCE NOTES:

1) WITH STAGE 2 CONSTRUCTION COMPLETE, OPEN 4 SB LANES TO TRAFFIC WHILE SHIFTING NB LANES TO TWO INSIDE LANES.

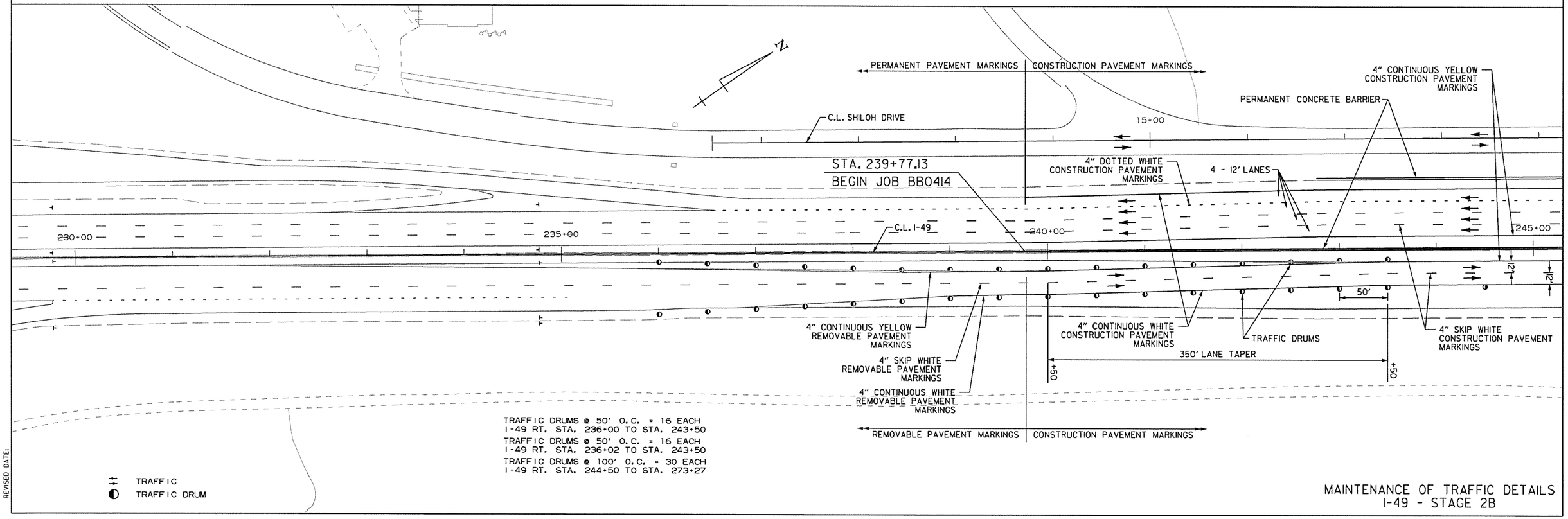

MAINTENANCE OF TRAFFIC DETAILS
I-49 - STAGE 2B

AEWierciak 3/20/2016 11:52:55 AM
WORKSPACE: AHTD
L:\ZONING\07107 - I-540 Widening & Interchange Improvement\Drawings\r-BB0414_MOT_SD_ST2B_02.dgn
REVISED DATE:

DATE REVISED	DATE FILMED	DATE REVISED	DATE FILMED	FED.RD. DIST.NO.	STATE	FED.AID PROJ.NO.	SHEET NO.	TOTAL SHEETS
				6	ARK.			
				JOB NO.		BB0414	174	886

(2) MAINTENANCE OF TRAFFIC - STAGE 2B

STATE OF ARKANSAS
LICENSED PROFESSIONAL ENGINEER
No.13653
ADAM E. WIERCIAK
3/20/16

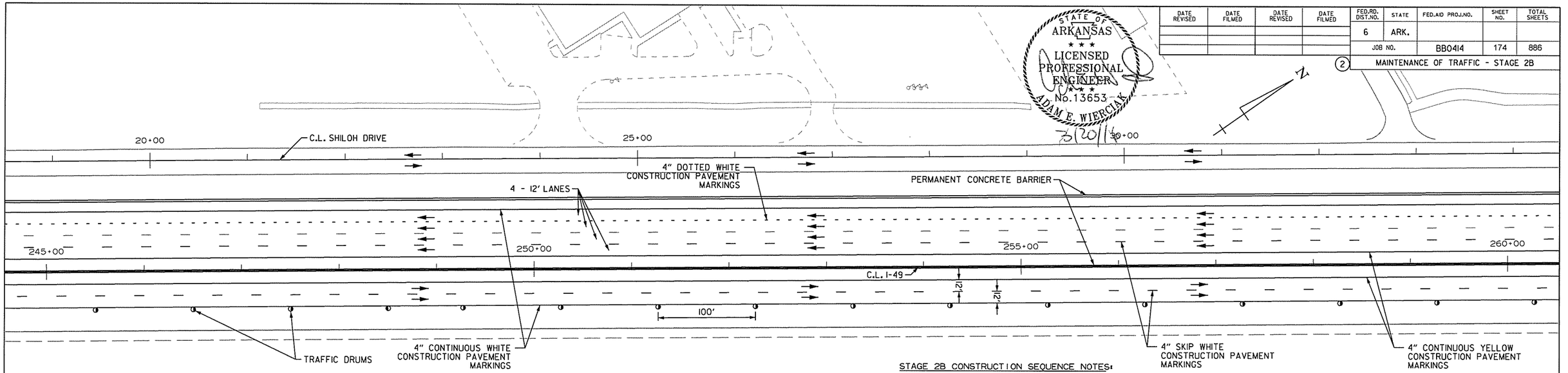

TRAFFIC DRUMS @ 100' O.C. = 30 EACH
I-49 RT. STA. 244+50 TO STA. 273+27

STAGE 2B CONSTRUCTION SEQUENCE NOTES:

1) WITH STAGE 2 CONSTRUCTION COMPLETE, OPEN 4 SB LANES TO TRAFFIC WHILE SHIFTING NB LANES TO TWO INSIDE LANES.

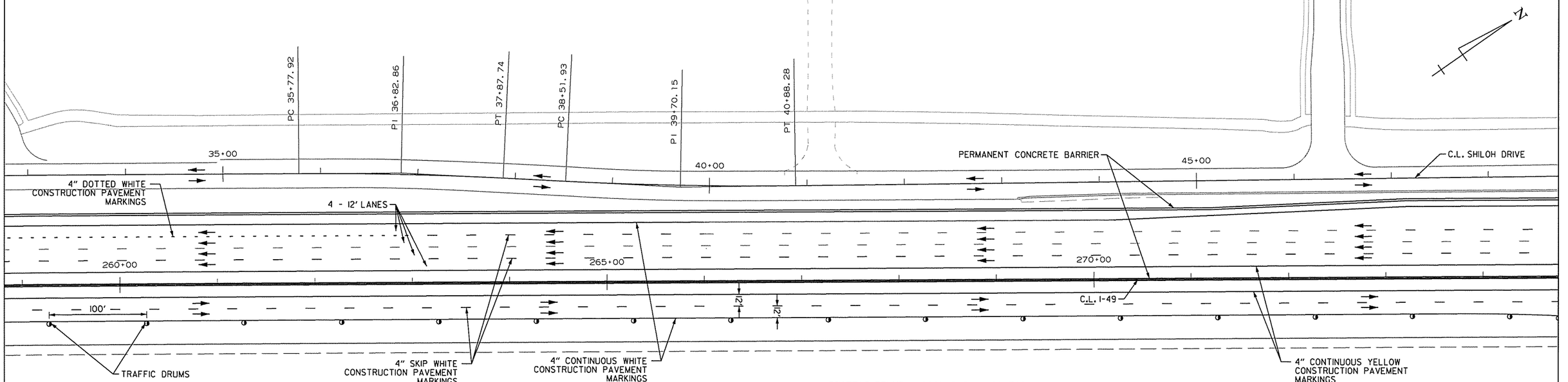

TRAFFIC DRUMS @ 100' O.C. = 30 EACH
I-49 RT. STA. 244+50 TO STA. 273+27
TRAFFIC DRUMS @ 50' O.C. = 8 EACH
I-49 RT. STA. 274+27 TO STA. 277+76

TRAFFIC

TRAFFIC DRUM

MAINTENANCE OF TRAFFIC DETAILS I-49 - STAGE 2B

AEWierciak 3/20/2016 11:52:55 AM
WORKSPACE: AHTD
L:\2011\1101707 - I-540 Widening & Interchange Improvement\Drawings\rBB0414_MOT_SD_ST2B_03.dgn
REVISED DATE:

DATE REVISED	DATE FILMED	DATE REVISED	DATE FILMED

FED.RD. DIST.NO.	STATE	FED.AID PROJ.NO.	SHEET NO.	TOTAL SHEETS
6	ARK.			
JOB NO.		BB0414	175	886

(2) MAINTENANCE OF TRAFFIC - STAGE 2B

TRAFFIC DRUMS @ 100' O.C. = 7 EACH
I-49 RT. STA. 283+77 TO STA. 289+88

TRAFFIC DRUMS @ 50' O.C. = 4 EACH
HWY. 112 RAMP 1 LT. STA. 277+29 TO STA. 278+78

C.L. HWY. 112 RAMP 4

4" CONTINUOUS YELLOW CONSTRUCTION PAVEMENT MARKINGS

TRAFFIC DRUMS @ 50' O.C. = 5 EACH
C-D RD. STA. 285+89 TO STA. 287+98

4" SKIP WHITE CONSTRUCTION PAVEMENT MARKINGS

PC 50+41.35

PI 51+52.15

PT 52+62.92

PC 279+22.29

PC 53+41.99

PI 55+55.23

PI 281+56.32

300' LANE TAPER

C.L. SHILOH DRIVE

PC 280+29.97

PERMANENT CONCRETE BARRIER

50+00

5 - 12' LANES

280+00

275+00

PRC 282+88.89

00+

PC 283+94.33

C.L. TEMP. C-D RD. TO SB I-49 DETOUR

4" CONTINUOUS WHITE CONSTRUCTION PAVEMENT MARKINGS

285+00

853' P.C.C.B.
282+52 TO 291+11
W/I SPECIAL END UNIT

+89.44
7.50' RT.

287+06

C.L. TEMP. C-D RD. TO HWY. 112 RAMP

PT 288+83.21

2 - 12' LANES

+00
49' LT.

+00 61' LT.

+00
37' LT.

PI 287+21.59

+00
70.72' LT.

+00
37' LT.

+00
42' LT.

290+00

50'

100'

50'

2 - 12' LANES

T.I.A.B.

280+00

PI 281+93.33

53' P.C.C.B. TAPER
W/SPECIAL END UNIT

100'

2773' P.C.C.B.
I-49 STA. 283+49 TO
SB HWY. 71B STA. 311+01
W/2 SPECIAL
END UNITS

T.I.A.B.

40' P.C.C.B. TAPER

TRAFFIC DRUMS

TRAFFIC DRUMS

4" SKIP WHITE CONSTRUCTION PAVEMENT MARKINGS

PC 276+17.66

PI 277+12.88

PT 278+07.94

80' P.C.C.B. TAPER

120' P.C.C.B. TAPER

393' P.C.C.B.
278+62 TO 282+54
W/I SPECIAL END
UNIT & T.I.A.B.

393' P.C.C.B.
278+60 TO 282+53
W/I SPECIAL
END UNIT

4" CONTINUOUS YELLOW CONSTRUCTION PAVEMENT MARKINGS

53' P.C.C.B. TAPER
W/SPECIAL END UNIT

300' LANE TAPER

00+

TRAFFIC DRUMS @ 50' O.C. = 6 EACH
I-49 RT. STA. 280+28 TO STA. 282+78

TRAFFIC DRUMS @ 50' O.C. = 6 EACH
I-49 LT. STA. 281+26 TO STA. 283+76

PC 282+81.97

C.L. HWY. 112 RAMP 1

TRAFFIC DRUMS @ 50' O.C. = 6 EACH
I-49 LT. STA. 281+27 TO STA. 283+76

TRAFFIC DRUMS @ 50' O.C. = 5 EACH
I-49 LT. STA. 282+27 TO STA. 284+25

TRAFFIC DRUMS @ 100' O.C. = 7 EACH
I-49 RT. STA. 283+77 TO STA. 289+88

PI 284+82.92

285+00

PI 17+47.75

TRAFFIC DRUMS @ 50' O.C. = 8 EACH
I-49 RT. STA. 274+27 TO STA. 277+76

TRAFFIC DRUMS @ 100' O.C. = 4 EACH
I-49 RT. STA. 276+71 TO STA. 279+55

TRAFFIC DRUMS @ 50' O.C. = 6 EACH
I-49 RT. STA. 280+27 TO STA. 282+77

STAGE 2B CONSTRUCTION SEQUENCE NOTES:

1) WITH STAGE 2 CONSTRUCTION COMPLETE, OPEN 4 SB LANES TO TRAFFIC WHILE SHIFTING NB LANES TO TWO INSIDE LANES.

2) OVERLAY REMAINING GAP IN TEMP. C-D RD. TO SB I-49 DETOUR AT EXIST. HWY. 112 RAMP 3. SHIFT SB I-49 ONTO C-D RD AND RETURN TO I-49 ON TEMP. C-D RD. TO I-49 DETOUR.

3) CONSTRUCT PORTIONS OF SB I-49 AND SB HWY. 71B AS SHOWN. GRADE INSIDE OF CONSTRUCTED LANES TO TEMPORARY INLET AT 295+11.

CONSTRUCTION PAVEMENT MARKINGS

REMOVABLE PAVEMENT MARKINGS

PT 291+10.8

PT 290+22.60

PC 293+86.74

4" CONTINUOUS YELLOW REMOVABLE PAVEMENT MARKINGS

295+00

PI 295+47.22

4" CONTINUOUS WHITE REMOVABLE PAVEMENT MARKINGS

PAVED PARKING

C.L. COLLECTOR-DISTRIBUTOR ROAD

2 - 12' LANES

PT 298+93.52

PAVED PARKING

TRAFFIC DRUMS @ 50' O.C. = 6 EACH
HWY. 112 RT. STA. 15+25 TO STA. 17+52

TRAFFIC DRUMS @ 50' O.C. = 8
I-49 STA. 300+66 TO STA. 304+09

00+

300' LANE TAPER

PERMANENT CONCRETE BARRIER

4" SKIP WHITE REMOVABLE PAVEMENT MARKINGS

300+00

+00

4) WHILE MAINTAINING TWO LANES OF TRAFFIC ALONG NB I-49, CONSTRUCT TEMPORARY WIDENING ALONG THOSE LANES IMMEDIATELY EAST OF THE HWY. 112 GRADE SEPARATION TO ENABLE FUTURE CONTINUOUS TRAFFIC FROM NB EXISTING TO PROPOSED NB I-49 AND NB I-49 TO HWY. 71B RAMP.

5) CONSTRUCT HWY. 112 RAMP 1 GORE TO FINAL CONDITION.

6) CONSTRUCT OVERLAY TRANSITION ON EXIST. HWY. 112 RAMP 3 FROM LT. EDGE OF PAVEMENT ON TEMP. C-D RD. TO SB I-49 DETOUR TO TEMP. C-D RD. TO HWY. 112 STA. 286+89.44.

+00
49' LT.

GRADE TO DRAIN

+33.26
49' LT.

+31.48
73' LT.

+00
42' LT.

GRADE TO DRAIN

PC 294+00.00

296+00

HWY. 71B RAMP TRAFFIC

2 - 12' LANES

3 - 12' LANES

PC 304+95.21

PI 305+67.04

306+00

+36.41
52.85' LT.

4" CONTINUOUS WHITE CONSTRUCTION PAVEMENT MARKINGS

295+00

53' P.C.C.B. TAPER
W/SPECIAL END UNIT

300' LANE TAPER

PC 304+99.38

PI 305+71.77

PT 306+44.19

+42.59
73' RT.

+00
73' RT.

120' P.C.C.B. TAPER

T.I.A.B.

4" CONTINUOUS YELLOW CONSTRUCTION PAVEMENT MARKINGS

PT 292+42.59

PC 294+40.16

2773' P.C.C.B.
I-49 STA. 283+49 TO
SB HWY. 71B STA. 311+01
W/2 SPECIAL
END UNITS

1413' P.C.C.B.
288+90 TO 303+04
W/I SPECIAL END
UNIT AND T.I.A.B.

973' P.C.C.B.
290+58 TO 300+50
W/I SPECIAL END
UNIT AND T.I.A.B.

I-49 STA. 295+11 STAGE 2B CONSTRUCT TEMPORARY TYPE RM DROP INLET 38' LT. (4' X 3' X H=7'3") ON PROPOSED R.C. PIPE

PI 17+47.75

C.L. HWY. 112

PT 290+47.74

PI 289+68.55

+00
89' RT.

+02.34
89' RT.

305+00

305+00

PC 304+17.19

+96.87
81.40' RT.

R2000'

300+00

PT 297+90.56

STAGE 2B GRADING AND PAVING

TRAFFIC

TEMPORARY IMPACT ATTENUATION BARRIER (T.I.A.B.)

PRECAST CONCRETE BARRIER (P.C.C.B.)

TRAFFIC DRUM

STATE OF ARKANSAS
LICENSED PROFESSIONAL ENGINEER
No. 13653
ADAM E. WIERCIAK
3/20/16

MAINTENANCE OF TRAFFIC DETAILS I-49 - STAGE 2B

AEWierciak 3/20/2016 11:52:55 AM
WORKSPACE: AHTD
L:\20IN\01\TOT - I-540 Widening & Interchange Improvement\Drawings\r-BB0414_MOT_S0_ST2B_04.dgn
REVISED DATE:

DATE REVISED	DATE FILMED	DATE REVISED	DATE FILMED	FED.RD. DIST.NO.	STATE	FED.AID PROJ.NO.	SHEET NO.	TOTAL SHEETS
				6	ARK.			
				JOB NO.		BB0414	176	886

(2) MAINTENANCE OF TRAFFIC - STAGE 2B

N

TRAFFIC DRUMS @ 50' O.C. = 6 EACH
I-49N LT. STA. 314+48 TO STA. 317+07

PC 304+99.3
PI 305+71.77
PT 306+44.19
PI 308
305+00
305+00
C.L. I-49
PC 308+13.00
PI 308+58.92
PT 309+04.79
310+00
PC 310+38.00
PI 311+61.66
2 - 12' LANES
PC 312+51.56
PC 313+88.24
PCC 314+87.51
PT 314+84.79
SB I-49 TO HWY. 71B RAMP
993' P.C.C.B.
315+65 TO 325+51
W/2 SPECIAL
END UNITS
TRAFFIC DRUMS
C.L. TEMP. EX. NB I-49 TO PR. I-49 RAMP
315+00
320+00
320+00
PI 305+12.41
PT 306+07.47
C.L. HWY. 112 TO NB I-49 RAMP
310+00
N Fulbright Expwy
NORTH
71B
EXIT
67B
SEE "MAINTENANCE OF TRAFFIC - SPECIAL SIGNS" SHEET FOR DETAILS
C.L. NB I-49 TO HWY. 71B RAMP
180' P.C.C.B. TAPER W/ SPECIAL END UNIT
PC 313+36.68
315+00
PC 317+42.84
PT 316+32.73
PT 320+76.87
PT 302+05.84
C.L. HWY. 112 TO HWY. 71B RAMP
305+00
305+00
C.L. TEMP NB I-49 TO HWY. 71B RAMP
315+00
320+00
320+00

C.L. COLLECTOR-DISTRIBUTOR ROAD
PC 321+51.46
M.S.E. WALL
PI 322+46.68
PT 323+41.74
320+00
320+00
993' P.C.C.B.
315+65 TO 325+51
W/2 SPECIAL
END UNITS
C.L. TEMP. EX. NB I-49 TO PR. I-49 RAMP
T.I.A.B.
60' P.C.C.B.
322+63 TO 323+22
W/I T.I.A.B.
40' P.C.C.B. TAPER
PCC 324+48.80
PT 324+60.28
320+00
C.L. HWY. 112 TO NB I-49 RAMP
325+00
TRAFFIC DRUMS
330+00
C.L. I-49
2 - 12' LANES
4" CONTINUOUS WHITE CONSTRUCTION PAVEMENT MARKINGS
4" CONTINUOUS WHITE CONSTRUCTION PAVEMENT MARKINGS
4" CONTINUOUS YELLOW CONSTRUCTION PAVEMENT MARKINGS
50'
4" SKIP WHITE CONSTRUCTION PAVEMENT MARKINGS
C.L. HWY. 112 TO NB I-49 RAMP
C.L. HWY. 71B
325+00
330+00
4" CONTINUOUS YELLOW CONSTRUCTION PAVEMENT MARKINGS
22+71.77
325+00
335+00
335+00
600' LANE TAPER
100'

STATE OF ARKANSAS
LICENSED PROFESSIONAL ENGINEER
No. 13653
ADAM E. WIERCIAK
3/20/16

STAGE 2B CONSTRUCTION SEQUENCE NOTES:

1) SHIFT NB I-49 TRAFFIC TO OUTSIDE LANES AFTER TEMP. EX. NB I-49 TO PR. I-49 RAMP.

2) SHIFT HWY. 112 TO NB I-49 RAMP TRAFFIC TO COMPLETED RAMP.

TRAFFIC DRUMS @ 50' O.C. = 23 EACH
I-49 RT. STA. 325+21 TO STA. 335+89

TRAFFIC DRUMS @ 50' O.C. = 22 EACH
I-49 RT. STA. 325+68 TO STA. 335+89

TRAFFIC DRUMS @ 50' O.C. = 6 EACH
SB HWY. 71B LT. STA. 319+43 TO STA. 321+90

STAGE 2B GRADING AND PAVING
TRAFFIC
TEMPORARY IMPACT ATTENUATION BARRIER (T.I.A.B.)
PRECAST CONCRETE BARRIER (P.C.C.B.)
TRAFFIC DRUM

AEWiercIak 3/20/2016 11:52:56 AM
WORKSPACE: AHTD
L:\20IN\I0I707 - I-540 Widening & Interchange Improvement\Drawings\r-BB04I4_MOT_SD_ST2B_05.dgn
REVISED DATE:

MAINTENANCE OF TRAFFIC DETAILS HWY. 112 TO NB I-49 AND I-49 - STAGE 2B

DATE REVISED	DATE FILMED	DATE REVISED	DATE FILMED	FED.RD. DIST.NO.	STATE	FED.AID PROJ.NO.	SHEET NO.	TOTAL SHEETS
				6	ARK.			
				JOB NO.		BB0414	177	886
				(2)	MAINTENANCE OF TRAFFIC - STAGE 2B			

TRAFFIC DRUMS @ 50' O.C. = 23 EACH
I-49 RT. STA. 325+21 TO STA. 335+89
TRAFFIC DRUMS @ 50' O.C. = 22 EACH
I-49 RT. STA. 325+68 TO STA. 335+89
TRAFFIC DRUMS @ 100' O.C. = 55 EACH
I-49 RT. STA. 336+81 TO STA. 392+29

STAGE 2B CONSTRUCTION SEQUENCE NOTES:

1) SHIFT NB I-49 TRAFFIC TO OUTSIDE LANES. KEEP INSIDE LANE CLOSED.
2) CONSTRUCT PORTION OF I-49 FROM 357+00 TO 358+55.16 AS SHOWN.
3) SHIFT HWY. 112 TO NB I-49 RAMP TRAFFIC TO COMPLETED RAMP.

N

PC 346+90.63
PT 342+30.82
C.L. I-49
TRAFFIC DRUMS
2 - 12' LANES
100'
C.L. HWY. 112 TO NB I-49 RAMP
C.L. HWY. 71 TO NB I-49 RAMP
PERMANENT CONCRETE BARRIER
4" CONTINUOUS WHITE CONSTRUCTION PAVEMENT MARKINGS
4" SKIP WHITE CONSTRUCTION PAVEMENT MARKINGS
4" CONTINUOUS YELLOW CONSTRUCTION PAVEMENT MARKINGS
PC 347+51.58
PI 351+12
335+00
340+00
345+00
350+00

STATE OF ARKANSAS
LICENSED PROFESSIONAL ENGINEER
No.13653
ADAM E. WIERCIAK
3/20/16

PC 352+53
PI 354+
PI 355+19.39
PRC 356+25.02
C.L. SB I-49 DETOUR
1813' P.C.C.B. 342+28 TO 360+44 W/2 SPECIAL END UNITS
4" CONTINUOUS YELLOW CONSTRUCTION PAVEMENT MARKINGS
160' P.C.C.B. TAPER W/SPECIAL END UNIT
1081' LANE TAPER
4" SKIP WHITE CONSTRUCTION PAVEMENT MARKINGS
4" CONTINUOUS WHITE CONSTRUCTION PAVEMENT MARKINGS
REMOVABLE PAVEMENT MARKINGS ON BRIDGE AND APPROACH SLABS
2 - 12' LANES
50'
PT 358+81.30
+94
9.5'
42'
PI 351+12.16
PI 351+73.11
PC 354+14.35
PRC 356+24.10
PI 357+52.87
C.L. I-49
4 - 12' LANES
4" DOTTED WHITE CONSTRUCTION PAVEMENT MARKINGS
PT 354+95.16
PT 355+56.11
C.L. HWY. 112 TO NB I-49 RAMP
4" CONTINUOUS WHITE CONSTRUCTION PAVEMENT MARKINGS
4" CONTINUOUS YELLOW CONSTRUCTION PAVEMENT MARKINGS
4" SKIP WHITE CONSTRUCTION PAVEMENT MARKINGS
PERMANENT PAVEMENT MARKINGS ON BRIDGE AND APPROACH SLABS
CONCRETE
350+00
355+00
360+00
365+00

TRAFFIC DRUMS @ 100' O.C. = 55 EACH
I-49 RT. STA. 336+81 TO STA. 392+29
TRAFFIC DRUMS @ 50' O.C. = 24 EACH
I-49 LT. STA. 358+63 TO STA. 370+12
TRAFFIC DRUMS @ 50' O.C. = 23 EACH
I-49 LT. STA. 359+12 TO STA. 370+12

STAGE 2B GRADING AND PAVING
TRAFFIC
TEMPORARY IMPACT ATTENUATION BARRIER (T.I.A.B.)
PRECAST CONCRETE BARRIER (P.C.C.B.)
TRAFFIC DRUM

MAINTENANCE OF TRAFFIC DETAILS HWY. 112 TO NB I-49 AND I-49 - STAGE 2B

AEWierciak 3/20/2016 11:52:56 AM
WORKSPACE: AHTD
L:\20N\10\7107 - I-540 Widening & Interchange Improvement\Drawings\r-BB0414_MOT_SD_ST2B_06.dgn
REVISED DATE:

DATE REVISED	DATE FILMED	DATE REVISED	DATE FILMED	FED.RD. DIST.NO.	STATE	FED.AID PROJ.NO.	SHEET NO.	TOTAL SHEETS
				6	ARK.			
				JOB NO.		BB0414	178	886
				(2)	MAINTENANCE OF TRAFFIC - STAGE 2B			

STATE OF ARKANSAS
LICENSED PROFESSIONAL ENGINEER
No.13653
ADAM E. WIERCIAK
3/21/16

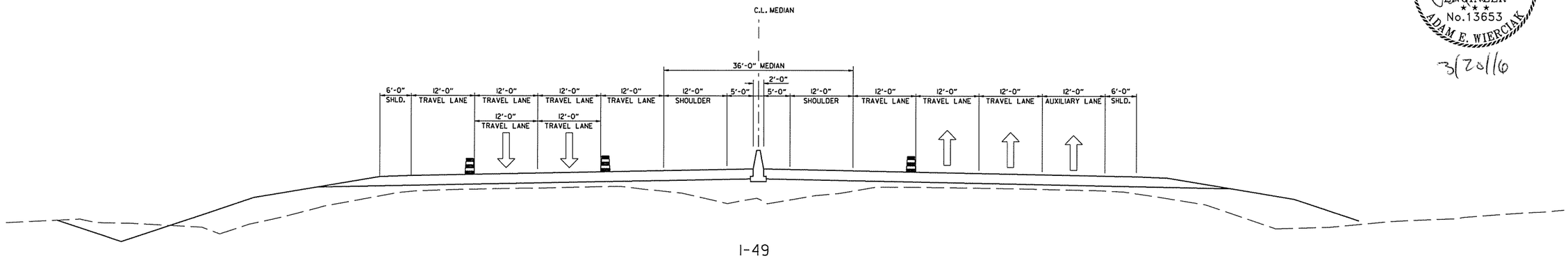

I-49
STAGE 2B TYPICAL SECTION

STAGE 2B CONSTRUCTION SEQUENCE NOTES:
1) TRANSITION SB TRAFFIC C.L. TO MATCH SB I-49 DETOUR.
2) ALL LANES OF NB I-49 TO BE OPEN EXCEPT INSIDE LANE.

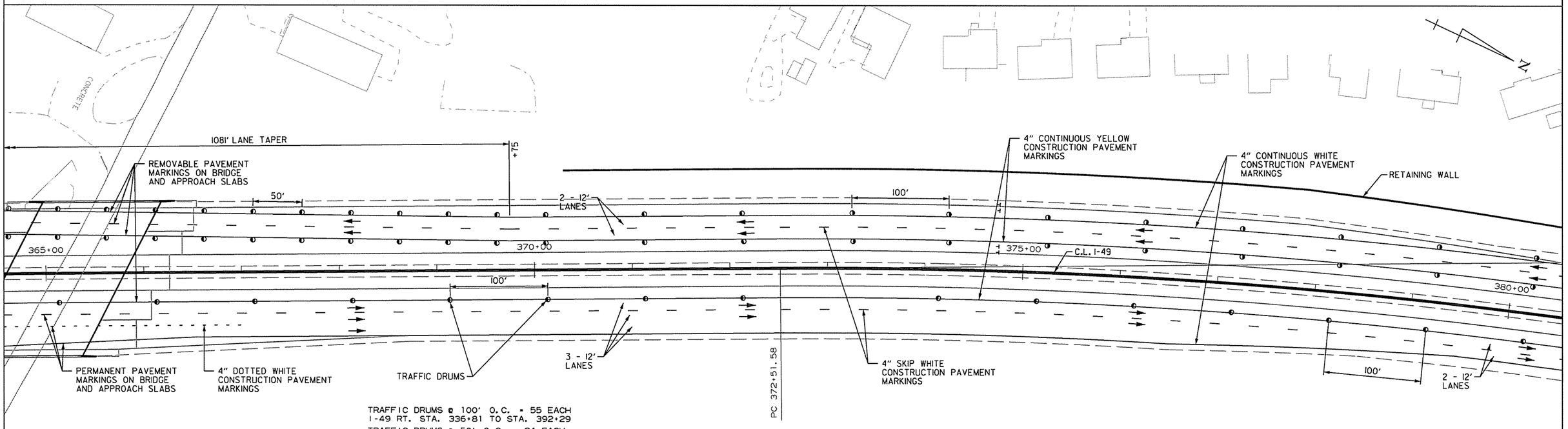

TRAFFIC DRUMS @ 100' O.C. = 55 EACH
I-49 RT. STA. 336+81 TO STA. 392+29
TRAFFIC DRUMS @ 50' O.C. = 24 EACH
I-49 LT. STA. 358+63 TO STA. 370+12
TRAFFIC DRUMS @ 50' O.C. = 23 EACH
I-49 LT. STA. 359+12 TO STA. 370+12
TRAFFIC DRUMS @ 100' O.C. = 23 EACH
I-49 LT. STA. 371+13 TO STA. 393+16
TRAFFIC DRUMS @ 100' O.C. = 12 EACH
I-49 LT. STA. 371+13 TO STA. 382+24

TRAFFIC
TRAFFIC DRUM

MAINTENANCE OF TRAFFIC DETAILS
I-49 - STAGE 2B

AEWerciak 3/20/2016 11:52:56 AM
WORKSPACE: AHTD
L:\2011\110707 - I-540 Widening & Interchange Improvement\Drawings\rBB0414_MOT_SD_ST2B_01.dgn
REVISED DATE:

DATE REVISED	DATE FILMED	DATE REVISED	DATE FILMED	FED.RD. DIST.NO.	STATE	FED.AID PROJ.NO.	SHEET NO.	TOTAL SHEETS
				6	ARK.			
				JOB NO.		BB0414	179	886
				(2)	MAINTENANCE OF TRAFFIC - STAGE 2B			

STATE OF ARKANSAS
LICENSED PROFESSIONAL ENGINEER
No.13653
ADAM E. WIERCIAK
3/20/16

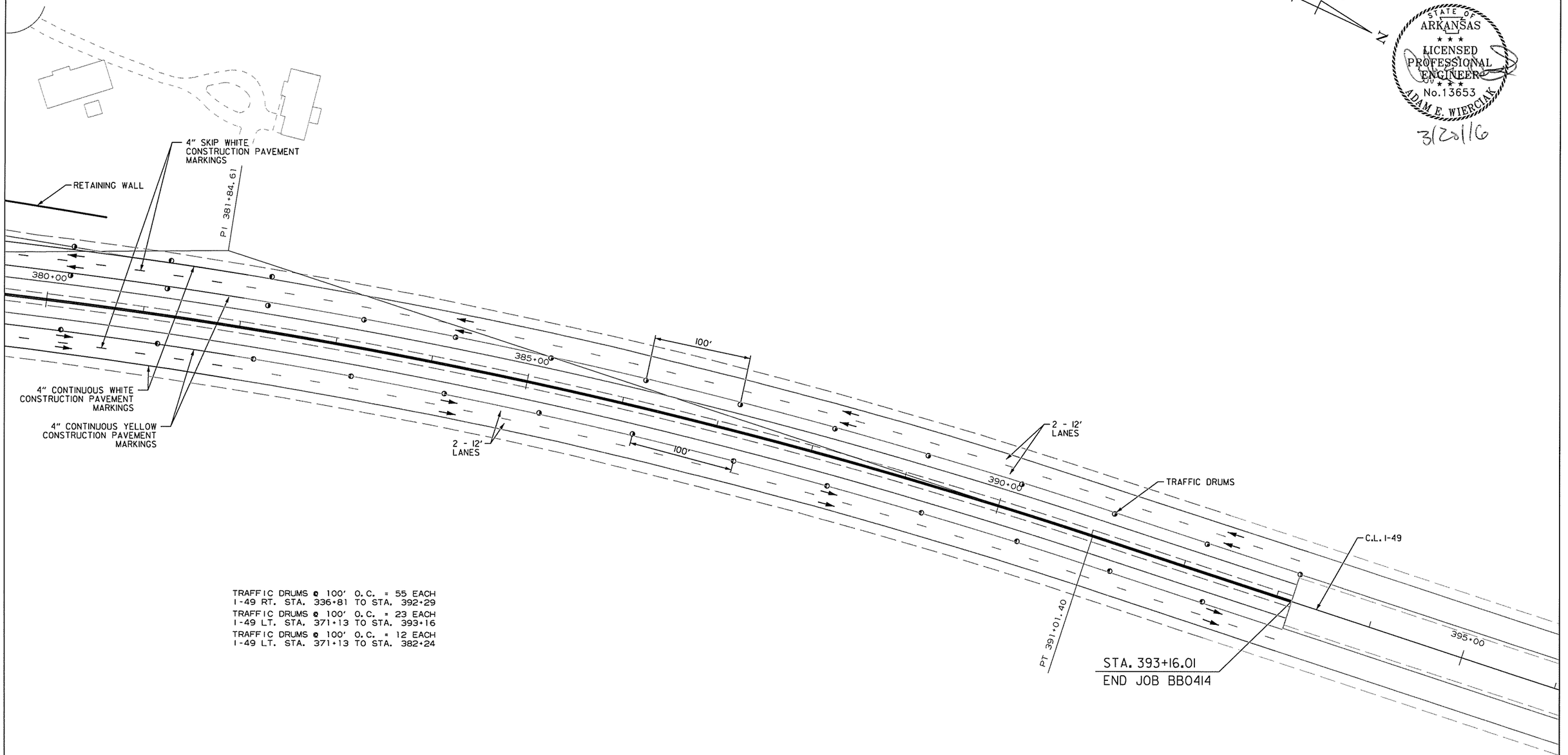

TRAFFIC DRUMS @ 100' O.C. = 55 EACH
I-49 RT. STA. 336+81 TO STA. 392+29
TRAFFIC DRUMS @ 100' O.C. = 23 EACH
I-49 LT. STA. 371+13 TO STA. 393+16
TRAFFIC DRUMS @ 100' O.C. = 12 EACH
I-49 LT. STA. 371+13 TO STA. 382+24

STAGE 2B CONSTRUCTION SEQUENCE NOTES:

1) I-49 TRAFFIC TO REMAIN ON OUTSIDE LANES. INSIDE LANE TO REMAIN CLOSED EACH WAY.

TRAFFIC

TRAFFIC DRUM

MAINTENANCE OF TRAFFIC DETAILS
I-49 - STAGE 2B

AEWierciak 3/20/2016 11:52:56 AM
WORKSPACE: AHTD
L:\2011\W017107 - I-540 Widening & Interchange Improvement\Drawings\r-BB0414_MOT_SD_ST2B_08.dgn
REVISED DATE:

DATE REVISED	DATE FILMED	DATE REVISED	DATE FILMED	FED.RD. DIST.NO.	STATE	FED.AID PROJ.NO.	SHEET NO.	TOTAL SHEETS
				6	ARK.			
				JOB NO.		BB0414	180	886

(2) MAINTENANCE OF TRAFFIC - STAGE 2B

PT 288+
PT 291+
PC 293+98.
PI
PT 298+93.52
PI
PAVED PARKING
PAVED PARKING
290+00
295+00
300+00
305+00
PI 295+47.22
PT 292+42.59
PC 294+40.16
PI 17+47.75
853' P.C.C.B.
289+99 TO 298+48
W/2 SPECIAL
END UNITS
4" CONTINUOUS WHITE
CONSTRUCTION PAVEMENT
MARKINGS
4" CONTINUOUS YELLOW
CONSTRUCTION PAVEMENT
MARKINGS
PT 290+47.74
200' P.C.C.B. TAPER
W/SPECIAL END UNIT
PC 291+68.55
C.L. HWY. 112
PC 288+12.93
290+00
5+00
PAVED PARKING
PAVED PARKING
PAVED PARKING
PAVED PARKING
PAVED PARKING
PAVED PARKING
PI 289+34.18
300' LANE TAPER
PC 12+52.20
+16'
100' LANE TAPER
+16'
PT 297+90.56
53' P.C.C.B. TAPER
W/SPECIAL END UNIT
PC 304+99
305+00
PC 304+17.19
300+00
C.L. PROPOSED HWY. 112
TO NB I-49 RAMP
PI 305+12.41
PT 3
PC 300+15.56
PI 301+10.78
PT 302+05.84

TRAFFIC DRUMS @ 100' O.C. = 7 EACH
I-49 RT. STA. 283+77 TO STA. 289+88
TRAFFIC DRUMS @ 100' O.C. = 7 EACH
I-49 RT. STA. 283+77 TO STA. 289+88
TRAFFIC DRUMS @ 50' O.C. = 8 EACH
I-49 STA. 300+66 TO STA. 304+09
TRAFFIC DRUMS @ 50' O.C. = 9 EACH
HWY. 112 RT. STA. 7+50 TO STA. 11+47
TRAFFIC DRUMS @ 25' O.C. = 3 EACH
HWY. 112 RT. STA. 11+97 TO STA. 12+28
TRAFFIC DRUMS @ 25' O.C. = 11 EACH
HWY. 112 RT. STA. 12+75 TO STA. 14+49
TRAFFIC DRUMS @ 50' O.C. = 6 EACH
HWY. 112 RT. STA. 15+25 TO STA. 17+52

STAGE 2B CONSTRUCTION SEQUENCE NOTES:

1) CONSTRUCT OVERLAY UNDER TRAFFIC AS SHOWN. SHIFT TRAFFIC TO NEW RAMP ALIGNMENT.

STAGE 2B OVERLAY UNDER TRAFFIC
STAGE 1A GRADING AND PAVING
TRAFFIC
TEMPORARY IMPACT ATTENUATION BARRIER (T.I.A.B.)
PRECAST CONCRETE BARRIER (P.C.C.B.)
TRAFFIC DRUM

STATE OF ARKANSAS
LICENSED PROFESSIONAL ENGINEER
No.13653
ADAM E. WIERCIAK
3/23/16

MAINTENANCE OF TRAFFIC DETAILS
HWY. 112 TO NB I-49 RAMP - STAGE 2B

AEWierciak 3/20/2016 11:52:57 AM
WORKSPACE: AHTD
L:\I20\110170\7 - I-540 Widening & Interchange Improvement\Drawings\rBB0414_MOT_SD_ST2B_09.dgn
REVISED DATE:

DATE REVISED	DATE FILMED	DATE REVISED	DATE FILMED	FED.RD. DIST.NO.	STATE	FED.AID PROJ.NO.	SHEET NO.	TOTAL SHEETS
				6	ARK.			
				JOB NO.		BB0414	181	886

(2) MAINTENANCE OF TRAFFIC - STAGE 2B

REMOVABLE PAVEMENT MARKINGS | CONSTRUCTION PAVEMENT MARKINGS

PAVED PARKING

150' LANE TAPER

4" SKIP WHITE REMOVABLE PAVEMENT MARKINGS

PERMANENT CONCRETE BARRIER

4" CONTINUOUS YELLOW REMOVABLE PAVEMENT MARKINGS

4" CONTINUOUS WHITE REMOVABLE PAVEMENT MARKINGS

PT 298+93.52

PC 304+95.21

PI 305+67.04

PT 306+38.86

PC 307+64.39

PCC 308+07.70

3 - 11'-4" LANES

TEMP. SB I-49 TO C-D ROAD DETOUR

553' P.C.C.B. 306+47 TO 311+99 W/I SPECIAL END UNIT AND T.I.A.B.

180' P.C.C.B. 308+00 TO 309+86 W/I SPECIAL END UNIT

4" CONTINUOUS WHITE CONSTRUCTION PAVEMENT MARKINGS

PT 311+08.26

PC 313+41.74

PI 314+30.15

100' LANE TAPER

T.I.A.B.

40' P.C.C.B. TAPER

4" CONTINUOUS YELLOW CONSTRUCTION PAVEMENT MARKINGS

53' P.C.C.B. TAPER W/SPECIAL END UNIT

13' LANE

PC 304+99.36

PI 305+71.77

PT 306+44.19

53' P.C.C.B. TAPER W/SPECIAL END UNIT

PI 308+61.87

PI 309+53.66

250' LANE TAPER

200' P.C.C.B. TAPER W/SPECIAL END UNIT

180' P.C.C.B. TAPER W/SPECIAL END UNIT

1193' P.C.C.B. 299+96 TO 311+87 W/2 SPECIAL END UNITS

4" CONTINUOUS WHITE CONSTRUCTION PAVEMENT MARKINGS

2773' P.C.C.B. I-49 STA. 283+49 TO SB HWY. 71B STA. 311+01 W/2 SPECIAL END UNITS

STATE OF ARKANSAS
LICENSED PROFESSIONAL ENGINEER
No. 13653
ADAM E. WIERCIAK
3/20/16

TRAFFIC DRUMS @ 50' O.C. = 8 EACH
I-49 STA. 300+66 TO STA. 304+09

TRAFFIC DRUMS @ 100' O.C. = 8 EACH
SB HWY. 71B STA. 310+00 TO STA. 317+00

PT 297+90.56

PC 304+17.19

PI 305+12.41

PT 306+07

PC 308+13.00

PI 308+58.92

PT 309+04.79

PC 310+38.00

PC 312+51.56

PC 313+88.24

PCC 314+87.51

PI 314+30.15

PT 315+18.06

4" CONTINUOUS WHITE CONSTRUCTION PAVEMENT MARKINGS

4" CONTINUOUS YELLOW CONSTRUCTION PAVEMENT MARKINGS

PC 321+51.46

PI 322+46.68

PT 323+41.74

4" CONTINUOUS WHITE CONSTRUCTION PAVEMENT MARKINGS

4" SKIP WHITE CONSTRUCTION PAVEMENT MARKINGS

STAGE 2B CONSTRUCTION SEQUENCE NOTES:

1) SHIFT SB I-49 TRAFFIC ONTO C-D ROAD VIA TEMP. SB I-49 TO C-D RD. DETOUR.

2) OPEN C-D ROAD EXIT FOR HWY. 71B TRAFFIC CONNECTING TO HWY. 112.

3) CONSTRUCT HWY. 71B FROM PROPOSED I-49 GORE TO 309+00 FROM 1' LT. OF CENTERLINE TO OUTSIDE EDGE.

TRAFFIC DRUMS @ 100' O.C. = 8 EACH
SB HWY. 71B STA. 310+00 TO STA. 317+00

TRAFFIC DRUMS @ 50' O.C. = 23 EACH
I-49 RT. STA. 325+21 TO STA. 335+89

TRAFFIC DRUMS @ 50' O.C. = 22 EACH
I-49 RT. STA. 325+68 TO STA. 335+89

TRAFFIC DRUMS @ 50' O.C. = 6 EACH
SB HWY. 71B LT. STA. 319+43 TO STA. 321+90

STAGE 2B OVERLAY UNDER TRAFFIC

STAGE 1A GRADING AND PAVING

TRAFFIC

TEMPORARY IMPACT ATTENUATION BARRIER (T.I.A.B.)

PRECAST CONCRETE BARRIER (P.C.C.B.)

TRAFFIC DRUM

MAINTENANCE OF TRAFFIC DETAILS
C-D RD., I-49, & SB HWY. 71B - STAGE 2B

AEWiercIak 3/20/2016 11:52:57 AM
WORKSPACE: AHTD
L:\20IN\I0I70T - I-540 Widening & Interchange Improvement\Drawings\r-BB0414_MOT_SD-ST2B_I0.dgn
REVISED DATE:

DATE REVISED	DATE FILMED	DATE REVISED	DATE FILMED	FED.RD. DIST.NO.	STATE	FED.AID PROJ.NO.	SHEET NO.	TOTAL SHEETS
				6	ARK.			
				JOB NO.		BB0414	182	886

(2) MAINTENANCE OF TRAFFIC - STAGE IA

STATE OF ARKANSAS
LICENSED PROFESSIONAL ENGINEER
No.13653
ADAM E. WIERCIAK
3/20/16

STAGE 2B CONSTRUCTION SEQUENCE NOTES:

1) SHIFT SB I-49 BACK TO ORIGINAL ALIGNMENT LEADING TRAFFIC INTO TEMP. SB I-49 TO C-D RD. DETOUR.
2) SHIFT HWY. 112 TO NB I-49 TRAFFIC TO NEW RAMP ALIGNMENT.
3) SHIFT HWY. 112 TO HWY. 71B TRAFFIC TO NEW RAMP ALIGNMENT.

PAVED PARKING

SB I-49

4" SKIP WHITE CONSTRUCTION PAVEMENT MARKINGS

4" CONTINUOUS YELLOW CONSTRUCTION PAVEMENT MARKINGS

TEMP. SB I-49 TO C-D RD. DETOUR

C.L. COLLECTOR-DISTRIBUTOR RD.

SB HWY. 71B

4" CONTINUOUS WHITE CONSTRUCTION PAVEMENT MARKINGS

4" CONTINUOUS YELLOW CONSTRUCTION PAVEMENT MARKINGS

EXISTING NB I-49

TEMP. EX. NB I-49 TO PR. I-49 RAMP

M.S.E. WALL

4" CONTINUOUS WHITE CONSTRUCTION PAVEMENT MARKINGS

4" CONTINUOUS YELLOW CONSTRUCTION PAVEMENT MARKINGS

4" SKIP WHITE CONSTRUCTION PAVEMENT MARKINGS

C.L. NB I-49 TO HWY. 71B RAMP

C.L. TEMP NB I-49 TO HWY. 71B RAMP

M.S.E. WALL

4" CONTINUOUS WHITE CONSTRUCTION PAVEMENT MARKINGS

4" CONTINUOUS YELLOW CONSTRUCTION PAVEMENT MARKINGS

C.L. HWY. 112 TO NB I-49 RAMP

C.L. HWY. 112 TO HWY. 71B RAMP

PERMANENT PAVEMENT MARKINGS ON BRIDGE AND APPROACH SLABS

N

STAGE 2B OVERLAY UNDER TRAFFIC
STAGE 2B GRADING AND PAVING
TRAFFIC
TEMPORARY IMPACT ATTENUATION BARRIER (T.I.A.B.)
PRECAST CONCRETE BARRIER (P.C.C.B.)
TRAFFIC DRUM

TRAFFIC DRUMS @ 50' O.C. = 8 EACH
I-49 STA. 300+66 TO STA. 304+09

TRAFFIC DRUMS @ 50' O.C. = 23 EACH
I-49 RT. STA. 325+21 TO STA. 335+89

TRAFFIC DRUMS @ 50' O.C. = 22 EACH
I-49 RT. STA. 325+67 TO STA. 335+89

TRAFFIC DRUMS @ 100' O.C. = 6 EACH
NB I-49 TO HWY. 71B RT. STA. 319+47 TO STA. 324+42

TRAFFIC DRUMS @ 50' O.C. = 8 EACH
NB I-49 TO HWY. 71B RT. STA. 322+50 TO STA. 325+90

TRAFFIC DRUMS @ 50' O.C. = 8 EACH
NB I-49 TO HWY. 71B RT. STA. 322+51 TO STA. 325+90

TRAFFIC DRUMS @ 100' O.C. = 7 EACH
NB I-49 TO HWY. 71B RT. STA. 326+40 TO STA. 332+41

TRAFFIC DRUMS @ 50' O.C. = 6 EACH
SB HWY. 71B LT. STA. 319+43 TO STA. 321+90

MAINTENANCE OF TRAFFIC DETAILS SB I-49, HWY. 112 TO NB I-49, & HWY. 112 TO HWY. 71B - STAGE 2B

AEWierciak 3/20/2016 11:52:57 AM
WORKSPACE: AHTD
L:\2011\1101707 - I-540 Widening & Interchange Improvement\Drawings\rBB0414_MOT_SD_ST2B.ildgn
REVISED DATE:

DATE REVISED	DATE FILMED	DATE REVISED	DATE FILMED	FED.RD. DIST.NO.	STATE	FED.AID PROJ.NO.	SHEET NO.	TOTAL SHEETS
				6	ARK.			
				JOB NO.		BB0414	183	886

(2) MAINTENANCE OF TRAFFIC - STAGE 2B

TRAFFIC DRUMS @ 50' O.C. = 6 EACH
I-49 LT. STA. 281+26 TO STA. 283+76

TRAFFIC DRUMS @ 50' O.C. = 6 EACH
I-49 LT. STA. 281+27 TO STA. 283+76

TRAFFIC DRUMS @ 50' O.C. = 5 EACH
I-49 LT. STA. 282+27 TO STA. 284+25

TRAFFIC DRUMS @ 100' O.C. = 7 EACH
I-49 RT. STA. 283+77 TO STA. 289+88

TRAFFIC DRUMS @ 100' O.C. = 7 EACH
I-49 RT. STA. 283+77 TO STA. 289+88

TRAFFIC DRUMS @ 50' O.C. = 8 EACH
I-49 STA. 300+66 TO STA. 304+09

TRAFFIC DRUMS @ 50' O.C. = 5 EACH
COLLECTOR DISTRIBUTOR RD. STA. 285+89 TO STA. 287+98

TRAFFIC DRUMS @ 20' O.C. = 3 EACH
HWY. 112 RT. STA. 6+79 TO STA. 7+07

TRAFFIC DRUMS @ 50' O.C. = 9 EACH
HWY. 112 RT. STA. 7+50 TO STA. 11+47

TRAFFIC DRUMS @ 25' O.C. = 3 EACH
HWY. 112 RT. STA. 11+97 TO STA. 12+28

TRAFFIC DRUMS @ 25' O.C. = 11 EACH
HWY. 112 RT. STA. 12+75 TO STA. 14+49

TRAFFIC DRUMS @ 50' O.C. = 6 EACH
HWY. 112 RT. STA. 15+25 TO STA. 17+52

STATE OF ARKANSAS
LICENSED PROFESSIONAL ENGINEER
No.13653
ADAM E. WIERCIAK
3/20/16

C.L. SB I-49 DETOUR

C.L. HWY. 112 RAMP 1

C.L. I-49

SEE "MAINTENANCE OF TRAFFIC - SPECIAL SIGNS" SHEET FOR DETAILS

EXIT 67A
112
Garland Ave

C.L. HWY. 112 RAMP 4

C.L. SHILOH ROAD

613' P.C.C.B. 16+32 TO 22+51 W/1 SPECIAL END UNIT AND T.I.A.B.

C.L. COLLECTOR-DISTRIBUTOR ROAD

53' P.C.C.B. TAPER W/SPECIAL END UNIT

T.I.A.B.

100' P.C.C.B. TAPER

TRAFFIC DRUMS

C.L. HWY. 112

4" CONTINUOUS WHITE CONSTRUCTION PAVEMENT MARKINGS

4" CONTINUOUS WHITE CONSTRUCTION PAVEMENT MARKINGS

4" SKIP WHITE CONSTRUCTION PAVEMENT MARKINGS

4" CONTINUOUS WHITE CONSTRUCTION PAVEMENT MARKINGS

TRUCKERS DR.

STAGE 2B CONSTRUCTION SEQUENCE NOTES:

1) OPEN RT. TURN LANE TO HWY. 112 TO NB I-49 RAMP.

2) OPEN RT. LANE FROM STA. 25+00 TO TRUCKERS DRIVE.

- STAGE 2B OVERLAY UNDER TRAFFIC
- STAGE 2B GRADING AND PAVING
- TRAFFIC
- TEMPORARY IMPACT ATTENUATION BARRIER (T.I.A.B.)
- PRECAST CONCRETE BARRIER (P.C.C.B.)
- TRAFFIC DRUM

MAINTENANCE OF TRAFFIC DETAILS
HWY. 112 - STAGE 2B

AEWierciak 3/20/2016 11:52:57 AM
WORKSPACE: AHTD
L:\20\N\0171707 - I-540 Widening & Interchange Improvement\Drawings\r-BB0414_MOT_SD_ST2B.i2.dgn
REVISED DATE:

ADDITIONAL STAGE 2C ADVANCE WARNING SIGNS

DATE REVISED	DATE FILMED	DATE REVISED	DATE FILMED	FED.RD. DIST.NO.	STATE	FED.AID PROJ.NO.	SHEET NO.	TOTAL SHEETS
				6	ARK.			
				JOB NO.		BB0414	184	886
				(2)	MAINTENANCE OF TRAFFIC - STAGE 2C			

STATE OF ARKANSAS
LICENSED PROFESSIONAL ENGINEER
No.13653
ADAM E. WIERCIAK
3/23/16

INSTALLATION STA.

SHOULDER CLOSED (1) RSP-1 (48" X 30")
(2) WI-4bL (48" X 48") I-49 RT. STA. 284+60

ROAD NARROWS (2) W5-1 (48" X 48")
(2) WI-4aR (48" X 48") HWY. 112 TO NB I-49 STA. 288+50

INSTALLATION STA.

(2) WI-4aL (48" X 48") SB HWY. 71B STA. 301+25

(2) WI-4aR (48" X 48") SB HWY. 71B STA. 320+00

(2) WI-4bL (48" X 48") I-49 RT. STA. 234+77
C-D RD. STA. 296+10
SB I-49 DETOUR STA. 352+40

(2) WI-4bR (48" X 48") I-49 RT. STA. 275+00
I-49 LT. STA. 363+81
I-49 LT. STA. 374+75
TEMP. EX. NB I-49 TO PR. I-49 RAMP STA. 320+00 LT.

(2) W4-2 RT. (48" X 48") C-D RD. STA. 308+87

ROAD WORK AHEAD (2) W20-1 (48" X 48") HWY. 112 RAMP 4 STA. 285+00

RIGHT LANE CLOSED 1500 FT (2) W20-5R (48" X 48") SB I-49 TO HWY. 112 STA. 335+05 (EX. SB I-49)

RIGHT LANE CLOSED 1/2 MILE (2) W20-5R (48" X 48") SB I-49 DETOUR STA. 344+75

RIGHT LANE CLOSED 1 MILE (2) W20-5R (48" X 48") I-49 STA. 374+75 LT.

INSTALLATION STA.

END ROAD WORK (1) G20-2 (48" X 24") HWY. 112 STA. 2+00
HWY. 112 STA. 36+00
SHILOH DR. STA. 67+13

(1) OM-3R (12"X 36") C-D RD. STA. 300+00 TO 302+75 (12)

ROAD CLOSED (1) RII-2 (48" X 30")
(24') BARR. TYP. III LT. I-49 STA. 309+00 (2)
TEMP. NB I-49 TO HWY. 71 RAMP STA. 313+00

SHOULDER CLOSED (1) RSP-1 (48" X 30") I-49 LT. STA. 359+85
HWY. 112 TO NB I-49 STA. 291+00 LT.
SB HWY. 71B STA. 310+00 RT.
TEMP. EX. NB I-49 TO PR. I-49 RAMP STA. 313+88 RT.
TEMP. EX. NB I-49 TO PR. I-49 RAMP STA. 320+00 LT.
TEMP. SB I-49 TO C-D RD. STA. 309+00 RT.

(1) W4-1L (48" X 48") SB I-49 TO HWY. 112 STA. 330+60 LT. (EX. SB I-49)

RIGHT LANE EXIT ONLY AHEAD (1) W9-7 (132" X 72") SB HWY. 71B STA. 329+08

RAMP 25 M.P.H. (1) WI3-3 (48" X 60") TEMP. C-D RD. TO SB I-49 RAMP STA. 291+00

ROAD WORK 500 FT (1) W20-1 (48" X 48") HWY. 112 STA. 2+00
HWY. 112 STA. 28+00
SHILOH DR. STA. 67+13

ROAD WORK 1000 FT (1) W20-1 (48" X 48") HWY. 112 500' BEFORE STA. 2+00
HWY. 112 STA. 33+00
SHILOH DR. STA. 62+13

ROAD WORK 1500 FT (1) W20-1 (48" X 48") HWY. 112 1000' BEFORE STA. 2+00
HWY. 112 200' AFTER STA. 36+00
SHILOH DR. STA. 57+13

STAGE 2C M.O.T. QUANTITIES

SIGNS = 2520 SQ. FT.
TRAFFIC DRUMS = 465 EACH
RELOCATE PRECAST CONCRETE BARRIER = 6572 LIN. FT.
TEMPORARY IMPACT ATTENUATION BARRIER (RELOCATION) = 2 EACH
REMOVABLE CONSTRUCTION PAVEMENT MARKINGS = 376 LIN. FT.
CONSTRUCTION PAVEMENT MARKINGS = 21333 LIN. FT.
REMOVAL OF CONSTRUCTION PAVEMENT MARKINGS = 5492 LIN. FT.

AEWierciak 3/20/2016 11:52:58 AM
WORKSPACE: AHTD
L:\20II\II0I707 - I-540 Widening & Interchange Improvement\Drawings\rBB0414_MOT_SD_ST2C_01.dgn
REVISED DATE:

MAINTENANCE OF TRAFFIC DETAILS
I-49 - STAGE 2C

DATE REVISED	DATE FILMED	DATE REVISED	DATE FILMED	FED.RD. DIST.NO.	STATE	FED.AID PROJ.NO.	SHEET NO.	TOTAL SHEETS
				6	ARK.			
				JOB NO.		BB0414	185	886
				2	MAINTENANCE OF TRAFFIC - STAGE 2C			

TRAFFIC DRUMS @ 50' O.C. = 8 EACH
I-49 RT. STA. 274+27 TO STA. 277+76

TRAFFIC DRUMS @ 25' O.C. = 7 EACH
I-49 RT. STA. 276+71 TO STA. 278+77

TRAFFIC DRUMS @ 100' O.C. = 12 EACH
I-49 LT. STA. 276+05 TO STA. 287+02

TRAFFIC DRUMS @ 50' O.C. = 4 EACH
I-49 LT. STA. 282+77 TO STA. 284+25

TRAFFIC DRUMS @ 50' O.C. = 6 EACH
I-49 RT. STA. 280+28 TO STA. 282+78

TRAFFIC DRUMS @ 50' O.C. = 8 EACH
I-49 RT. STA. 279+55 TO STA. 283+78

TRAFFIC DRUMS @ 100' O.C. = 6 EACH
I-49 RT. STA. 283+77 TO STA. 288+86

TRAFFIC DRUMS @ 100' O.C. = 5 EACH
I-49 RT. STA. 283+78 TO STA. 287+83

TRAFFIC DRUMS @ 50' O.C. = 10 EACH
I-49 RT. STA. 288+50 TO STA. 293+09

TRAFFIC DRUMS @ 25' O.C. = 10 EACH
I-49 RT. STA. 289+88 TO STA. 293+08

TRAFFIC DRUMS @ 100' O.C. = 26 EACH
I-49 RT. STA. 293+57 TO STA. 319+19

EXIT 67A
112
Garland Ave

SEE "MAINTENANCE OF TRAFFIC - SPECIAL SIGNS" SHEET FOR DETAILS

C.L. SHILOH ROAD

53' P.C.C.B. TAPER W/SPECIAL END UNIT

C.L. HWY. 112 RAMP 4

PERMANENT CONCRETE BARRIER

853' P.C.C.B. 282+52 TO 291+11 W/I SPECIAL END UNIT

C.L. TEMP C-D RD. TO SB I-49 RAMP

53' P.C.C.B. TAPER W/SPECIAL END UNIT

913' P.C.C.B. 283+47 TO 292+43 W/I SPECIAL END UNIT AND T.I.A.B.

613' P.C.C.B. 16+32 TO 22+51 W/I SPECIAL END UNIT AND T.I.A.B.

C.L. HWY. 112

12' LANE 4' SHLD.

T.I.A.B.

2373' P.C.C.B. 287+36 TO 310+79 W/I SPECIAL END UNIT

C.L. I-49

100' LANE TAPER

3 - 12' LANES

C.L. HWY. 112 RAMP 1

TRAFFIC DRUMS

600' LANE TAPER

50'

T.I.A.B.

40' P.C.C.B. TAPER

PERMANENT CONCRETE BARRIER

833' P.C.C.B. 292+00 TO 300+50 W/I SPECIAL END UNIT AND T.I.A.B.

150' LANE TAPER

12' LANE 7' SHLD.

1333' P.C.C.B. I-49 292+00 TO 305+71 W/I SPECIAL END UNIT

4" CONTINUOUS WHITE CONSTRUCTION PAVEMENT MARKINGS

4" CONTINUOUS YELLOW CONSTRUCTION PAVEMENT MARKINGS

60' P.C.C.B. TAPER

EXIT 67B
NORTH
71B
N Fulbright Expwy

SEE "MAINTENANCE OF TRAFFIC - SPECIAL SIGNS" SHEET FOR DETAILS

4" CONTINUOUS YELLOW CONSTRUCTION PAVEMENT MARKINGS

100' P.C.C.B. TAPER

12' LANE

T.I.A.B.

1413' P.C.C.B. 288+90 TO 303+04 W/I SPECIAL END UNIT AND T.I.A.B.

53' P.C.C.B. TAPER W/SPECIAL END UNIT

C.L. COLLECTOR DISTRIBUTOR

TEMP. WIDENING

853' P.C.C.B. 289+58 TO 298+48 W/2 SPECIAL END UNITS

C.L. HWY. 112 TO NB I-49 RAMP

200' P.C.C.B. TAPER W/SPECIAL END UNIT

1333' P.C.C.B. I-49 292+43 TO 307+68 W/I SPECIAL END UNIT

4" CONTINUOUS WHITE CONSTRUCTION PAVEMENT MARKINGS

53' P.C.C.B. TAPER W/SPECIAL END UNIT

TRAFFIC DRUMS

4" CONTINUOUS WHITE CONSTRUCTION PAVEMENT MARKINGS

C.L. NB I-49 TO HWY. 71B

STATE OF ARKANSAS
LICENSED PROFESSIONAL ENGINEER
No.13653
ADAM E. WIERCIAK
3/20/16

STAGE 2C CONSTRUCTION SEQUENCE NOTES:

1) MAINTAIN STAGE 2B TRAFFIC CONTROL UNLESS MODIFIED IN STAGE 2C.

2) WHILE MAINTAINING TWO LANES OF NB I-49 TRAFFIC ON STAGE 2B ALIGNMENT, SHIFT HWY. 71B TRAFFIC TO TEMPORARY WIDENING CONSTRUCTED IN STAGE 2B AND PROPOSED NB I-49 TO HWY. 71B RAMP.

3) SHIFT SB HWY. 71B TO SB I-49 TRAFFIC TO NEW RAMP.

4) CONSTRUCT REMAINDER OF HWY. 112 BRIDGE.

TRAFFIC DRUMS @ 50' O.C. = 5 EACH
COLLECTOR DISTRIBUTOR RD. STA. 285+89 TO STA. 287+98

TRAFFIC DRUMS @ 50' O.C. = 3 EACH
HWY. 112 TO NB I-49 LT. STA. 291+69 TO STA. 292+67

TRAFFIC DRUMS @ 20' O.C. = 3 EACH
HWY. 112 RT. STA. 6+79 TO STA. 7+07

TRAFFIC DRUMS @ 50' O.C. = 9 EACH
HWY. 112 RT. STA. 7+50 TO STA. 11+47

TRAFFIC DRUMS @ 25' O.C. = 3 EACH
HWY. 112 RT. STA. 11+97 TO STA. 12+28

TRAFFIC DRUMS @ 25' O.C. = 7 EACH
HWY. 112 RT. STA. 12+75 TO STA. 14+16

TRAFFIC DRUMS @ 25' O.C. = 4 EACH
HWY. 112 RT. STA. 13+94 TO STA. 14+49

TRAFFIC DRUMS @ 50' O.C. = 6 EACH
HWY. 112 RT. STA. 15+25 TO STA. 17+52

STAGE 2C GRADING AND PAVING
TRAFFIC
TEMPORARY IMPACT ATTENUATION BARRIER (T.I.A.B.)
PRECAST CONCRETE BARRIER (P.C.C.B.)
TRAFFIC DRUM

MAINTENANCE OF TRAFFIC DETAILS
I-49 - STAGE 2C

AEWierciak 3/20/2016 11:52:58 AM
WORKSPACE: AHTD
L:\ROW\0707 - I-540 Widening & Interchange Improvement\Drawings\BB0414_MOT_SD_ST2C_02.dgn
REVISED DATE:

DATE REVISED	DATE FILMED	DATE REVISED	DATE FILMED	FED.RD. DIST.NO.	STATE	FED.AID PROJ.NO.	SHEET NO.	TOTAL SHEETS
				6	ARK.			
				JOB NO.		BB0414	186	886

MAINTENANCE OF TRAFFIC - STAGE 2C

STATE OF ARKANSAS
LICENSED PROFESSIONAL ENGINEER
No.13653
ADAM E. WIERCIAK
3/20/16

TRAFFIC DRUMS @ 100' O.C. = 10 EACH
I-49 RT. STA. 293+57 TO STA. 303+31

TRAFFIC DRUMS @ 100' O.C. = 12 EACH
I-49 STA. 301+96 TO STA. 312+94

TRAFFIC DRUMS @ 50' O.C. = 7 EACH
I-49 LT. STA. 314+04 TO STA. 317+07

TRAFFIC DRUMS @ 50' O.C. = 23 EACH
I-49 RT. STA. 325+21 TO STA. 335+89

TRAFFIC DRUMS @ 50' O.C. = 22 EACH
I-49 RT. STA. 325+69 TO STA. 335+89

TRAFFIC DRUMS @ 100' O.C. = 17 EACH
NB I-49 TO HWY. 71B RT. STA. 304+33 TO STA. 320+46

TRAFFIC DRUMS @ 50' O.C. = 6 EACH
NB I-49 TO HWY. 71B RT. STA. 321+46 TO STA. 323+98

TRAFFIC DRUMS @ 50' O.C. = 9 EACH
COLLECTOR DISTRIBUTOR RD. LT. STA. 309+52 TO STA. 313+52

TRAFFIC DRUMS @ 50' O.C. = 5 EACH
COLLECTOR DISTRIBUTOR RD. RT. STA. 319+43 TO STA. 321+43

TRAFFIC DRUMS @ 50' O.C. = 16 EACH
SB HWY. 71B LT. STA. 307+50 TO STA. 315+00

TRAFFIC DRUMS @ 50' O.C. = 15 EACH
SB HWY. 71B RT. STA. 308+00 TO STA. 315+00

REMOVABLE PAVEMENT MARKINGS

CONSTRUCTION PAVEMENT MARKINGS

4" SKIP WHITE CONSTRUCTION PAVEMENT MARKINGS

3 - 12' LANES

400' LANE TAPER

4" CONTINUOUS WHITE CONSTRUCTION PAVEMENT MARKINGS

C.L. COLLECTOR-DISTRIBUTOR RD.

TRAFFIC DRUMS

12' LANE

750' LANE TAPER

PERMANENT CONCRETE BARRIER

180' P.C.C.B. 308+00 TO 309+86 W/I SPECIAL END UNIT

180' P.C.C.B. TAPER W/SPECIAL END UNIT

4" CONTINUOUS YELLOW CONSTRUCTION PAVEMENT MARKINGS

C.L. HWY. 71B

PERMANENT CONCRETE BARRIER

EX. SB I-49 TO HWY. 71B RAMP

C.L. HWY. 112 TO NB I-49 RAMP

C.L. I-49

C.L. TEMP EX. NB I-49 TO PR. I-49 RAMP

M.S.E. WALL

PROPOSED NB I-49

4" CONTINUOUS WHITE CONSTRUCTION PAVEMENT MARKINGS

C.L. NB I-49 TO HWY. 71B RAMP

C.L. HWY. 112 TO HWY. 71B RAMP

M.S.E. WALL

4" CONTINUOUS YELLOW CONSTRUCTION PAVEMENT MARKINGS

C.L. NB I-49 TO HWY. 71B RAMP

GRADE TO FINAL CONDITION

4" DOTTED WHITE CONSTRUCTION PAVEMENT MARKINGS

4" SKIP WHITE CONSTRUCTION PAVEMENT MARKINGS

180' LANE TAPER

STAGE 2C CONSTRUCTION SEQUENCE NOTES:

1) WITH NEW TRAFFIC PATTERN FOR NB I-49 TO HWY. 71B TRAFFIC, REMOVE TEMPORARY NB I-49 TO HWY. 71B RAMP AND CONSTRUCT NB I-49 LANES FROM STA. 313+30 TO 317+00.

2) GRADE AND PAVE NB I-49 TO HWY. 71B RAMP TO FINAL CONDITIONS AT REMOVED TEMPORARY RAMP GORE LOCATION.

3) SHIFT SB HWY. 71B TO SB I-49 TRAFFIC TO NEW RAMP.

STAGE 2C GRADING AND PAVING
TRAFFIC
TEMPORARY IMPACT ATTENUATION BARRIER (T.I.A.B.)
PRECAST CONCRETE BARRIER (P.C.C.B.)
TRAFFIC DRUM

AEWierciak 3/20/2016 11:52:58 AM
WORKSPACE: AHTD
L:\20IN\I0I707 - I-540 Widening & Interchange Improvement\Drawings\rBB0414_MOT_SD_ST2C_03.dgn
REVISED DATE:

MAINTENANCE OF TRAFFIC DETAILS
I-49 - STAGE 2C

DATE REVISED	DATE FILMED	DATE REVISED	DATE FILMED	FED.RD. DIST.NO.	STATE	FED.AID PROJ.NO.	SHEET NO.	TOTAL SHEETS
				6	ARK.			
				JOB NO.		BB0414	187	886
				(2)	MAINTENANCE OF TRAFFIC - STAGE 2D			

ADDITIONAL STAGE 2D ADVANCE WARNING SIGNS

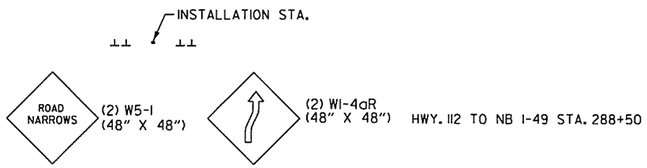

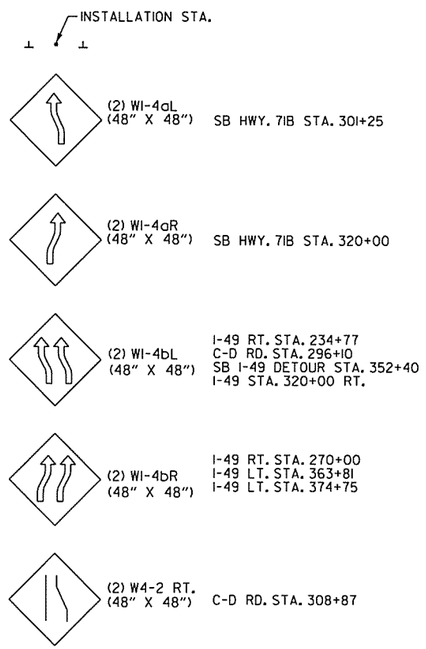

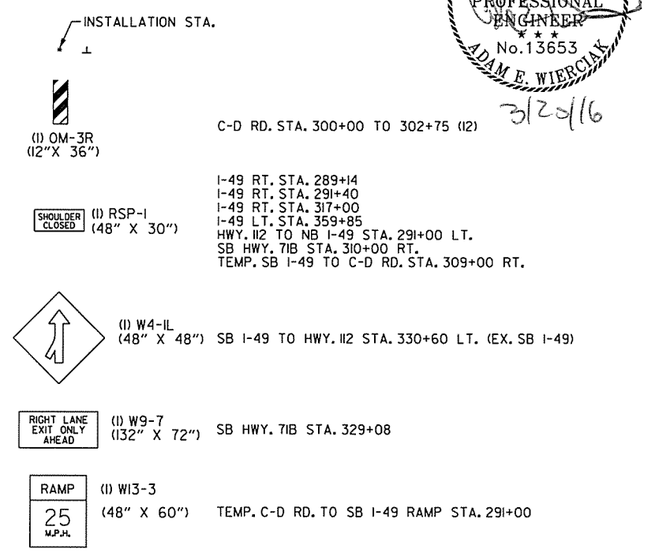

STATE OF ARKANSAS
LICENSED PROFESSIONAL ENGINEER
No.13653
ADAM E. WIERCIAK
3/23/16

STAGE 2D M.O.T. QUANTITIES

SIGNS = 2331 SQ. FT.
TRAFFIC DRUMS = 427 EACH
RELOCATE PRECAST CONCRETE BARRIER = 2186 LIN. FT.
TEMPORARY IMPACT ATTENUATION BARRIER (RELOCATION) = 2 EACH
REMOVABLE CONSTRUCTION PAVEMENT MARKINGS = 984 LIN. FT.
CONSTRUCTION PAVEMENT MARKINGS = 13292 LIN. FT.
REMOVAL OF CONSTRUCTION PAVEMENT MARKINGS = 7195 LIN. FT.

AEWierciak 3/20/2016 11:52:59 AM
WORKSPACE: AHTD
L:\20IN\I001707 - I-540 Widening & Interchange Improvement\Drawings\rBB0414_MOT_SD_ST2D_01.dgn
REVISED DATE:

MAINTENANCE OF TRAFFIC DETAILS
I-49 - STAGE 2D

DATE REVISED	DATE FILMED	DATE REVISED	DATE FILMED	FED.RD. DIST.NO.	STATE	FED.AID PROJ.NO.	SHEET NO.	TOTAL SHEETS
				6	ARK.			
				JOB NO.		BB0414	188	886
				2	MAINTENANCE OF TRAFFIC - STAGE 2D			

TRAFFIC DRUMS @ 50' O.C. = 2 EACH
HWY. 112 TO NB I-49 LT. STA. 291+69 TO STA. 292+18

TRAFFIC DRUMS @ 50' O.C. = 8 EACH
I-49 RT. STA. 274+27 TO STA. 277+76

TRAFFIC DRUMS @ 50' O.C. = 5 EACH
I-49 RT. STA. 276+96 TO STA. 278+77

TRAFFIC DRUMS @ 35' O.C. = 19 EACH
I-49 RT. STA. 277+31 TO STA. 283+46

TRAFFIC DRUMS @ 50' O.C. = 13 EACH
I-49 RT. STA. 283+95 TO STA. 290+05

TRAFFIC DRUMS @ 35' O.C. = 26 EACH
I-49 RT. STA. 274+92 TO STA. 283+47

TRAFFIC DRUMS = 1 EACH
I-49 LT. STA. 274+05

TRAFFIC DRUMS @ 50' O.C. = 22 EACH
I-49 LT. STA. 277+05 TO STA. 287+51

TRAFFIC DRUMS @ 50' O.C. = 16 EACH
I-49 RT. STA. 283+95 TO STA. 291+57

TRAFFIC DRUMS @ 50' O.C. = 5 EACH
I-49 LT. STA. 282+27 TO STA. 284+25

TRAFFIC DRUMS @ 100' O.C. = 10 EACH
I-49 RT. STA. 306+33 TO STA. 315+27

EXIT 67A
112
Garland Ave

SEE "MAINTENANCE OF TRAFFIC - SPECIAL SIGNS" SHEET FOR DETAILS

C.L. SHILOH DRIVE

53' P.C.C.B. TAPER W/SPECIAL END UNIT

TRAFFIC DRUMS

PERMANENT CONCRETE BARRIER

C.L. HWY. 112 RAMP 4

853' P.C.C.B. 282+52 TO 291+11 W/1 SPECIAL END UNIT

C.L. TEMP C-D RD. TO SB I-49 RAMP

53' P.C.C.B. TAPER W/SPECIAL END UNIT

913' P.C.C.B. 283+47 TO 292+43 W/1 SPECIAL END UNIT AND T.I.A.B.

12' LANE 4' SHLD.

40' P.C.C.B. TAPER

T.I.A.B.

C.L. HWY. 112

853' P.C.C.B. 282+52 TO 291+11 W/1 SPECIAL END UNIT

C.L. I-49

2 - 12' LANES

TRAFFIC DRUMS

180' P.C.C.B. TAPER W/SPECIAL END UNIT

C.L. HWY. 112 RAMP 1

2 - 12' LANES

PERMANENT CONCRETE BARRIER

4" CONTINUOUS WHITE CONSTRUCTION PAVEMENT MARKINGS

4" CONTINUOUS YELLOW CONSTRUCTION PAVEMENT MARKINGS

4" SKIP WHITE CONSTRUCTION PAVEMENT MARKINGS

TEMPORARY WIDENING

1473' P.C.C.B. I-49 290+60 TO 305+71 W/1 SPECIAL END UNIT

1700' LANE TAPER

C.L. COLLECTOR-DISTRIBUTOR ROAD

853' P.C.C.B. 289+58 TO 298+48 W/2 SPECIAL END UNITS

200' P.C.C.B. TAPER W/SPECIAL END UNIT

1473' P.C.C.B. I-49 292+43 TO 307+68 W/1 SPECIAL END UNIT

53' P.C.C.B. TAPER W/SPECIAL END UNIT

C.L. I-49

53' P.C.C.B. TAPER W/SPECIAL END UNIT

STATE OF ARKANSAS
LICENSED PROFESSIONAL ENGINEER
No.13653
ADAM E. WIERCIAK
3/25/16

STAGE 2D CONSTRUCTION SEQUENCE NOTES:

1) MAINTAIN STAGE 2C TRAFFIC CONTROL UNLESS MODIFIED IN STAGE 2D.

2) WHILE MAINTAINING 2 LANES OF TRAFFIC ON WIDENED NB I-49 CONSTRUCTED IN STAGE 2A, CONSTRUCT REMAINING PORTIONS OF NB AND SB I-49 BETWEEN STA. 288+00 AND 305+00.

3) OPEN ALL LANES OF TRAFFIC ON HWY. 112.

STAGE 2C GRADING AND PAVING
TRAFFIC
TEMPORARY IMPACT ATTENUATION BARRIER (T.I.A.B.)
PRECAST CONCRETE BARRIER (P.C.C.B.)
TRAFFIC DRUM

MAINTENANCE OF TRAFFIC DETAILS I-49 - STAGE 2D

AEWiarciak 3/20/2016 11:52:59 AM
WORKSPACE: AHTD
L:\20\110\1707 - I-540 Widening & Interchange Improvement\Drawings\r-BB0414_MOT_SD_ST2D_02.dgn
REVISED DATE:

DATE REVISED	DATE FILMED	DATE REVISED	DATE FILMED	FED.RD. DIST.NO.	STATE	FED.AID PROJ.NO.	SHEET NO.	TOTAL SHEETS
				6	ARK.			
				JOB NO.		BB0414	189	886
				(2)	MAINTENANCE OF TRAFFIC - STAGE 2D			

TRAFFIC DRUMS @ 50' O.C = 5 EACH
SB I-49 TO HWY. 112 STA. 340+03 TO STA. 342+01

TRAFFIC DRUMS @ 100' O.C = 14 EACH
NB I-49 TO HWY. 71B RT. STA. 308+08 TO STA. 320+46

TRAFFIC DRUMS @ 50' O.C = 6 EACH
NB I-49 TO HWY. 71B LT. STA. 321+46 TO STA. 323+98

TRAFFIC DRUMS = 1 EACH
NB I-49 TO HWY. 71B RT. STA. 332+41

TRAFFIC DRUMS @ 50' O.C = 9 EACH
COLLECTOR DISTRIBUTOR RD. LT. STA. 309+52 TO STA. 313+52

TRAFFIC DRUMS @ 100' O.C = 3 EACH
COLLECTOR DISTRIBUTOR RD. RT. STA. 319+43 TO STA. 321+43

TRAFFIC DRUMS @ 50' O.C = 16 EACH
SB HWY. 71B LT. STA. 307+50 TO STA. 315+00

TRAFFIC DRUMS @ 50' O.C = 12 EACH
SB HWY. 71B RT. STA. 309+50 TO STA. 315+00

TRAFFIC DRUMS @ 100' O.C = 6 EACH
SB HWY. 71B LT. STA. 316+00 TO STA. 321+00

TRAFFIC DRUMS @ 100' O.C = 8 EACH
SB HWY. 71B RT. STA. 317+00 TO STA. 324+00

TRAFFIC DRUMS @ 100' O.C = 10 EACH
I-49 RT. STA. 306+33 TO STA. 315+27

TRAFFIC DRUMS @ 50' O.C = 7 EACH
I-49 RT. STA. 325+47 TO STA. 328+92

TRAFFIC DRUMS @ 50' O.C = 8 EACH
I-49 RT. STA. 325+49 TO STA. 328+93

TRAFFIC DRUMS @ 100' O.C = 62 EACH
I-49 RT. STA. 330+05 TO STA. 392+29

N

4" CONTINUOUS YELLOW CONSTRUCTION PAVEMENT MARKINGS

NB I-49

4" SKIP WHITE CONSTRUCTION PAVEMENT MARKINGS

4" CONTINUOUS WHITE CONSTRUCTION PAVEMENT MARKINGS

REMOVABLE PAVEMENT MARKINGS ON BRIDGE AND APPROACH SLABS

C.L. NB HWY. 71B TO NB I-49 RAMP

C.L. SB I-49 TO HWY. 71B RAMP

SB I-49

180' P.C.C.B. 308+00 TO 309+86 W/1 SPECIAL END UNIT

PERMANENT CONCRETE BARRIER

TRAFFIC DRUMS

C.L. COLLECTOR-DISTRIBUTOR RD.

C.L. HWY. 71B

TRAFFIC DRUMS

180' P.C.C.B. TAPER W/SPECIAL END UNIT

53' P.C.C.B. TAPER W/SPECIAL END UNIT

400' LANE TAPER

1053' P.C.C.B. 315+24 TO 325+46 W/2 SPECIAL END UNITS

M.S.E. WALL

933' P.C.C.B. 308+09 TO 317+16 W/T.I.A.B.

C.L. I-49

180' P.C.C.B. TAPER W/SPECIAL END UNIT

PERMANENT CONCRETE BARRIER

40' P.C.C.B. TAPER

53' P.C.C.B. TAPER W/SPECIAL END UNIT

C.L. HWY. 112 TO NB I-49 RAMP

T.I.A.B.

C.L. NB I-49 TO HWY. 71B RAMP

C.L. HWY. 112 TO HWY. 71B RAMP

M.S.E. WALL

EXIT 67B
NORTH
71B
N Fulbright Expwy

SEE "MAINTENANCE OF TRAFFIC - SPECIAL SIGNS" SHEET FOR DETAILS

STATE OF ARKANSAS
LICENSED PROFESSIONAL ENGINEER
No.13653
ADAM E. WIERCIAK
3/20/16

STAGE 2C GRADING AND PAVING
TRAFFIC
TEMPORARY IMPACT ATTENUATION BARRIER (T.I.A.B.)
PRECAST CONCRETE BARRIER (P.C.C.B.)
TRAFFIC DRUM

STAGE 2D CONSTRUCTION SEQUENCE NOTES:

1) SHIFT NB I-49 TRAFFIC TO PROPOSED NB I-49, CONSTRUCT SB I-49 LANES BETWEEN STA. 305+00 AND SB I-49 GRADE SEPARATION BRIDGE OVER HWY. 71B.

2) CONSTRUCT PORTION OF NB I-49 FROM STA. 317+00 TO NB I-49 GRADE SEPARATION BRIDGE OVER HWY. 71B WHERE TEMP NB I-49 DETOUR WAS LOCATED.

MAINTENANCE OF TRAFFIC DETAILS
I-49 - STAGE 2D

AEWierciak 3/20/2016 11:52:59 AM
WORKSPACE: AHTD
L:\2011\101707 - I-540 Widening & Interchange Improvement\Drawings\rBB04M_MOT_SD_ST2D_03.dgn
REVISED DATE:

DATE REVISED	DATE FILMED	DATE REVISED	DATE FILMED	FED.RD. DIST.NO.	STATE	FED.AID PROJ.NO.	SHEET NO.	TOTAL SHEETS
				6	ARK.			
				JOB NO.		BB0414	190	886
				(2)	MAINTENANCE OF TRAFFIC - STAGE 3			

ADDITIONAL STAGE 3 ADVANCE WARNING SIGNS

INSTALLATION STA.

ROAD NARROWS (2) W5-1 (48" X 48")	(2) WI-4aR (48" X 48")	HWY. II2 TO NB I-49 STA. 288+50 SB I-49 TO HWY. II2 STA. 337+00
ROAD NARROWS (2) W5-1 (48" X 48")	(2) WI-4aL (48" X 48")	HWY. II2 TO NB I-49 STA. 288+50

INSTALLATION STA.

(2) WI-4aL (48" X 48")	SB HWY. 7IB STA. 304+00
(2) WI-4bL (48" X 48")	I-49 RT. STA. 234+77 I-49 LT. STA. 387+50
(2) WI-4bR (48" X 48")	I-49 RT. STA. 30I+00 I-49 LT. STA. 36I+00
(2) W4-2 RT. (48" X 48")	C-D RD. STA. 308+87
RAMP 25 M.P.H. (I) WI3-3 (48" X 60")	C-D RD. STA. 293+75
ROAD WORK AHEAD (I) W20-1 (48" X 48")	HWY. II2 RAMP 4 STA. 285+00

INSTALLATION STA.

END ROAD WORK (I) G20-2 (48" X 24")	HWY. II2 STA. 2+00 HWY. II2 STA. 36+00 SHILOH DR. STA. 67+13
ROAD CLOSED (I) RII-2 (48" X 30") (24') BARR. TYP. III LT.	TEMP. C-D RD. TO SB I-49 RAMP STA. 287+50
SHOULDER CLOSED (I) RSP-1 (48" X 30")	I-49 LT. STA. 29I+28 C-D RD. STA. 29I+I2 HWY. II2 TO NB I-49 STA. 29I+00 LT. SB I-49 TO HWY. II2 STA. 333+00 RT. TEMP. SB I-49 TO C-D RD. STA. 309+00 RT. TEMP. SB I-49 TO HWY. II2 RAMP 357+00 LT. SB I-49 DETOUR STA. 350+06
(3) WI-8R (I8" X 24")	C-D RD. STA. 287+40 TO 288+30
(I) W4-IL (48" X 48")	SB I-49 TO HWY. II2 STA. 330+60 LT. (EX. SB I-49)
RIGHT LANE EXIT ONLY AHEAD (I) W9-7 (I32" X 72")	SB HWY. 7IB STA. 329+08

STATE OF ARKANSAS
LICENSED PROFESSIONAL ENGINEER
No. 13653
ADAM E. WIERCIAK
3/20/16

STAGE 3 M.O.T. QUANTITIES

SIGNS = 2150 SQ. FT.
TRAFFIC DRUMS = 519 EACH
RELOCATE PRECAST CONCRETE BARRIER = 5778 LIN. FT.
TEMPORARY IMPACT ATTENUATION BARRIER (RELOCATION) = 2 EACH
REMOVABLE CONSTRUCTION PAVEMENT MARKINGS = 2604 LIN. FT.
CONSTRUCTION PAVEMENT MARKINGS = 55002 LIN. FT.
REMOVAL OF CONSTRUCTION PAVEMENT MARKINGS = I4566 LIN. FT.

AEWier-clak 3/20/2016 11:52:59 AM
WORKSPACE: AHTD
L:\ROW\101707 - I-540 Widening & Interchange Improvement\Drawings\r-BB0414_MOT_SD_ST3_01.dgn
REVISED DATE:

MAINTENANCE OF TRAFFIC DETAILS
I-49 - STAGE 3

DATE REVISED	DATE FILMED	DATE REVISED	DATE FILMED	FED.RD. DIST.NO.	STATE	FED.AID PROJ.NO.	SHEET NO.	TOTAL SHEETS
				6	ARK.			
				JOB NO.		BB0414	191	886

(2) MAINTENANCE OF TRAFFIC - STAGE 3

STATE OF ARKANSAS
LICENSED PROFESSIONAL ENGINEER
No.13653
ADAM E. WIERCIAK
3/20/16

TRAFFIC DRUMS @ 50' O.C. = 13 EACH
I-49 LT. STA. 273+03 TO STA. 279+01

TRAFFIC DRUMS @ 50' O.C. = 9 EACH
I-49 LT. STA. 276+02 TO STA. 280+02

TRAFFIC DRUMS @ 50' O.C. = 6 EACH
I-49 LT. STA. 277+02 TO STA. 279+66

TRAFFIC DRUMS = 1 EACH
I-49 LT. STA. 280+66

TRAFFIC DRUMS @ 50' O.C. = 8 EACH
I-49 RT. STA. 274+29 TO STA. 277+78

TRAFFIC DRUMS @ 100' O.C. = 26 EACH
I-49 RT. STA. 276+73 TO STA. 302+06

TRAFFIC DRUMS @ 50' O.C. = 8 EACH
I-49 RT. STA. 277+30 TO STA. 280+72

TRAFFIC DRUMS @ 100' O.C. = 3 EACH
I-49 LT. STA. 290+58 TO STA. 292+54

TRAFFIC DRUMS @ 45' O.C. = 14 EACH
I-49 LT. STA. 293+25 TO STA. 298+87

TRAFFIC DRUMS @ 50' O.C. = 8 EACH
I-49 LT. STA. 297+02 TO STA. 300+36

TRAFFIC DRUMS @ 100' O.C. = 56 EACH
I-49 LT. STA. 297+43 TO STA. 352+15

STAGE 3 C-D RD. PAVEMENT MARKINGS STA. 283+85 TO STA. 307+00

283+85 TO 284+61 LT. - CONTINUOUS 4" REMOVABLE WHITE
284+61 TO 291+11 LT. - CONTINUOUS 4" CONSTRUCTION WHITE
286+81 TO 289+20 RT. - CONTINUOUS 4" CONSTRUCTION YELLOW
291+11 TO 294+86 LT. - CONTINUOUS 4" REMOVABLE WHITE
291+11 TO 293+98 LT. - CONTINUOUS 4" REMOVABLE YELLOW
293+98 TO 307+00 RT. - CONTINUOUS 4" PERMANENT YELLOW
294+86 TO 305+81 RT. - CONTINUOUS 4" PERMANENT WHITE
304+87 TO 307+00 - DOTTED 8" PERMANENT WHITE
305+81 TO 307+00 LT. - CONTINUOUS 4" REMOVABLE WHITE

600' RAMP TAPER
300' LANE TAPER
53' P.C.C.B. TAPER W/SPECIAL END UNIT
C.L. HWY. 112 RAMP 4
PERMANENT CONCRETE BARRIER
1173' P.C.C.B. 280+47 TO 292+05 W/I SPECIAL END UNIT AND T.I.A.B.
PROP. SB I-49
733' P.C.C.B. 284+01 TO 291+32 W/I SPECIAL END UNIT AND T.I.A.B.
70' LANE TAPER
C.L. C-D RD.
53' P.C.C.B. TAPER W/SPECIAL END UNIT
12' LANE 2' SHLD.
313' P.C.C.B. 287+95 TO 291+11 W/I SPECIAL END UNIT
100' P.C.C.B. TAPER
T.I.A.B.
375' C-D TAPER
C.L. SHILOH DRIVE
C.L. HWY. 112
600' RAMP TAPER
PERMANENT CONCRETE BARRIER
PROP. SB I-49
12' LANES 1' SHLD.
C.L. HWY. 112 RAMP 1
180' P.C.C.B. TAPER W/SPECIAL END UNIT
TRAFFIC DRUMS
12' LANES
C.L. I-49
C.L. COLLECTOR-DISTRIBUTOR RD.
C.L. HWY. 112 TO NB I-49 RAMP
PROP. SB I-49
853' P.C.C.B. 289+58 TO 298+48 W/2 SPECIAL END UNITS
200' P.C.C.B. TAPER W/SPECIAL END UNIT
4" CONTINUOUS YELLOW CONSTRUCTION PAVEMENT MARKINGS
53' P.C.C.B. TAPER W/SPECIAL END UNIT
4" CONTINUOUS WHITE CONSTRUCTION PAVEMENT MARKINGS
4" CONTINUOUS YELLOW CONSTRUCTION PAVEMENT MARKINGS
4" CONTINUOUS WHITE CONSTRUCTION PAVEMENT MARKINGS
4" SKIP WHITE CONSTRUCTION PAVEMENT MARKINGS
4" DOTTED WHITE CONSTRUCTION PAVEMENT MARKINGS

TRAFFIC DRUMS @ 50' O.C. = 3 EACH
I-49 RT. STA. 302+99 TO STA. 304+01

TRAFFIC DRUMS @ 50' O.C. = 13 EACH
I-49 RT. STA. 306+01 TO STA. 312+01

TRAFFIC DRUMS @ 50' O.C. = 13 EACH
I-49 RT. STA. 306+02 TO STA. 312+02

TRAFFIC DRUMS @ 50' O.C. = 3 EACH
SB HWY. 71B LT. STA. 299+36 TO STA. 300+40

TRAFFIC DRUMS @ 100' O.C. = 16 EACH
SB HWY. 71B LT. STA. 301+40 TO STA. 316+40

TRAFFIC DRUMS @ 25' O.C. = 5 EACH
COLLECTOR DISTRIBUTOR RD. RT. STA. 287+30 TO STA. 288+19

TRAFFIC DRUMS @ 50' O.C. = 8 EACH
COLLECTOR DISTRIBUTOR RD. LT. STA. 291+00 TO STA. 294+50

TRAFFIC DRUMS @ 50' O.C. = 22 EACH
NB I-49 TO HWY. 71B RT. STA. 304+51 TO STA. 314+99

TRAFFIC DRUMS @ 50' O.C. = 4 EACH
NB I-49 TO HWY. 71B LT. STA. 306+51 TO STA. 308+01

STAGE 3 CONSTRUCTION SEQUENCE NOTES:

1) MAINTAIN STAGE 2D TRAFFIC CONTROL UNLESS MODIFIED IN STAGE 3.
2) SHIFT SB I-49 TRAFFIC FROM COLLECTOR-DISTRIBUTOR ROAD AND TEMP. SB I-49 DETOUR TO PROPOSED SB I-49.
3) SHIFT 2 LANES OF TRAFFIC TO THE INSIDE LANES OF NB AND SB I-49 AND CONSTRUCT REMAINING PORTIONS OF NB AND SB I-49 BETWEEN STA. 281+00 AND 305+00.
4) SHIFT C-D RD. TRAFFIC TO THE INSIDE OF RAMP WEST OF THE HWY. 112 BRIDGE. CONSTRUCT OUTSIDE OF RAMP.
5) WHILE MAINTAINING TRAFFIC ON HWY. 112 TO NB I-49 RAMP, CONSTRUCT REMAINING PORTION OF HWY. 112 TO NB I-49 RAMP SHOULDER NOT CONSTRUCTED IN STAGE 1A.

STAGE 3 OVERLAY UNDER TRAFFIC
STAGE 3 GRADING AND PAVING
TRAFFIC
TEMPORARY IMPACT ATTENUATION BARRIER (T.I.A.B.)
PRECAST CONCRETE BARRIER (P.C.C.B.)
TRAFFIC DRUM

MAINTENANCE OF TRAFFIC DETAILS
I-49 - STAGE 3

AEWierciak 3/20/2016 11:53:00 AM
WORKSPACE: AHTD
L:\20II\II0I7707 - I-540 Widening & Interchange Improvement\Drawings\rBB04I4_MOT_SD_ST3_02.dgn
REVISED DATE:

DATE REVISED	DATE FILMED	DATE REVISED	DATE FILMED

FED.RD. DIST.NO.	STATE	FED.AID PROJ.NO.	SHEET NO.	TOTAL SHEETS
6	ARK.			
JOB NO.		BB0414	192	886

(2) MAINTENANCE OF TRAFFIC - STAGE 3

N

STATE OF ARKANSAS
LICENSED PROFESSIONAL ENGINEER
No.13653
ADAM E. WIERCIAK
3/23/16

STAGE 3 C-D RD. PAVEMENT MARKINGS STA. 283+85 TO STA. 307+00

283+85 TO 284+61 LT. - CONTINUOUS 4" REMOVABLE WHITE
284+61 TO 291+11 LT. - CONTINUOUS 4" CONSTRUCTION WHITE
286+81 TO 289+20 RT. - CONTINUOUS 4" CONSTRUCTION YELLOW
291+11 TO 294+86 LT. - CONTINUOUS 4" REMOVABLE WHITE
291+11 TO 293+98 LT. - CONTINUOUS 4" REMOVABLE YELLOW
293+98 TO 307+00 RT. - CONTINUOUS 4" PERMANENT YELLOW
294+86 TO 305+81 RT. - CONTINUOUS 4" PERMANENT WHITE
304+87 TO 307+00 - DOTTED 8" PERMANENT WHITE
305+81 TO 307+00 LT. - CONTINUOUS 4" REMOVABLE WHITE

TRAFFIC DRUMS @ 50' O.C. = 6 EACH
COLLECTOR DISTRIBUTOR RD. LT. STA. 305+80 TO STA. 308+70

TRAFFIC DRUMS @ 50' O.C. = 3 EACH
I-49 RT. STA. 302+99 TO STA. 304+01

TRAFFIC DRUMS @ 50' O.C. = 13 EACH
I-49 RT. STA. 306+01 TO STA. 312+01

TRAFFIC DRUMS @ 50' O.C. = 13 EACH
I-49 RT. STA. 306+02 TO STA. 312+02

TRAFFIC DRUMS @ 100' O.C. = 77 EACH
I-49 RT. STA. 312+83 TO STA. 392+30

TRAFFIC DRUMS @ 50' O.C. = 4 EACH
I-49 LT. STA. 352+14 TO STA. 353+55

TRAFFIC DRUMS @ 50' O.C. = 5 EACH
I-49 LT. STA. 352+60 TO STA. 355+05

TRAFFIC DRUMS @ 50' O.C. = 3 EACH
I-49 LT. STA. 355+07 TO STA. 356+05

TRAFFIC DRUMS @ 50' O.C. = 3 EACH
I-49 LT. STA. 356+63 TO STA. 357+63

TRAFFIC DRUMS @ 50' O.C. = 3 EACH
SB I-49 TO HWY. 112 RT. STA. 327+21 TO STA. 328+25

TRAFFIC DRUMS @ 90' O.C. = 3 EACH
SB I-49 TO HWY. 112 RT. STA. 332+55 TO STA. 333+44

TRAFFIC DRUMS @ 100' O.C. = 16 EACH
SB HWY. 71B LT. STA. 301+40 TO STA. 316+40

TRAFFIC DRUMS @ 100' O.C. = 4 EACH
SB HWY. 71B LT. STA. 318+02 TO STA. 321+02

TRAFFIC DRUMS @ 50' O.C. = 22 EACH
NB I-49 TO HWY. 71B RT. STA. 304+51 TO STA. 314+99

TRAFFIC DRUMS @ 50' O.C. = 4 EACH
NB I-49 TO HWY. 71B LT. STA. 306+51 TO STA. 308+01

4" CONTINUOUS YELLOW CONSTRUCTION PAVEMENT MARKINGS

4" SKIP WHITE CONSTRUCTION PAVEMENT MARKINGS

4" CONTINUOUS WHITE CONSTRUCTION PAVEMENT MARKINGS

TRAFFIC DRUMS

LT. BRIDGE AND APPROACH SLABS:
PERMANENT 4" YELLOW INSIDE SHOULDER
PERMANENT 4" SKIP WHITE
REMOVABLE 4" WHITE OUTSIDE SHOULDER

RT. BRIDGE AND APPROACH SLABS:
REMOVABLE 4" YELLOW INSIDE SHOULDER
PERMANENT 4" SKIP WHITE
PERMANENT 4" WHITE OUTSIDE SHOULDER

4" CONTINUOUS YELLOW REMOVABLE PAVEMENT MARKINGS

C.L. SB I-49 TO HWY. 71B RAMP

C.L. SB I-49 TO HWY. 112 RAMP

C.L. NB HWY. 71B TO NB I-49 RAMP

593' P.C.C.B. 327+71 TO 333+66 W/I SPECIAL END UNIT AND T.I.A.B.

180' P.C.C.B. TAPER W/SPECIAL END UNIT

53' P.C.C.B. TAPER W/SPECIAL END UNIT

PERMANENT CONCRETE BARRIER

C.L. COLLECTOR-DISTRIBUTOR RD.

C.L. HWY. 71B

180' P.C.C.B. 308+00 TO 309+86 W/I SPECIAL END UNIT

4" CONTINUOUS YELLOW CONSTRUCTION PAVEMENT MARKINGS

4" CONTINUOUS WHITE CONSTRUCTION PAVEMENT MARKINGS

600' LANE TAPER

M.S.E. WALL

C.L. I-49

C.L. HWY. 112 TO HWY. 71B RAMP

C.L. HWY. 112 TO NB I-49 RAMP

EXIT 67B
NORTH
71B
N Fulbright Expwy

SEE "MAINTENANCE OF TRAFFIC - SPECIAL SIGNS" SHEET FOR DETAILS

STAGE 3 OVERLAY UNDER TRAFFIC
STAGE 3 GRADING AND PAVING
TRAFFIC
PRECAST CONCRETE BARRIER (P.C.C.B.)
TRAFFIC DRUM

STAGE 3 CONSTRUCTION SEQUENCE NOTES:

1) SHIFT SB I-49 TRAFFIC FROM EXISTING SB I-49 AND COLLECTOR-DISTRIBUTOR ROAD TO PROPOSED SB I-49.
2) SHIFT NB I-49 TRAFFIC FROM INSIDE LANES TO OUTSIDE LANES FROM 306+00 TO 312+00.
3) WITH SB I-49 TRAFFIC SHIFTED TO PROPOSED SB I-49, CONSTRUCT FINAL SEGMENT OF SB I-49 TO HWY. 112. CONSTRUCT FULL DEPTH SECTION FROM BEGIN RAMP TO 330+10.

MAINTENANCE OF TRAFFIC DETAILS
I-49 AND SB I-49 TO HWY. 112 RAMP- STAGE 3

AEWierciak 3/20/2016 11:53:00 AM
WORKSPACE: AHTD
L:\20IN\I0I70T - I-540 Widening & Interchange Improvement\Drawings\r-BB0414_MOT_S0_ST3_03.dgn
REVISED DATE:

DATE REVISED	DATE FILMED	DATE REVISED	DATE FILMED	FED.RD. DIST.NO.	STATE	FED.AID PROJ.NO.	SHEET NO.	TOTAL SHEETS
				6	ARK.			
				JOB NO.		BB0414	193	886

(2) MAINTENANCE OF TRAFFIC - STAGE 3

STAGE 3 CONSTRUCTION SEQUENCE NOTES:

1) SHIFT SB I-49 TRAFFIC FROM TEMP. DETOUR TO PROP. SB I-49 LANES.
2) SHIFT SB I-49 TO HWY. 112 RAMP TRAFFIC FROM DETOUR TO PROPOSED RAMP.
3) MAINTAIN SB I-49 TO HWY. 71B RAMP TRAFFIC ON TEMP. SB I-49 DETOUR.

TRAFFIC DRUMS @ 100' O.C. = 56 EACH
I-49 LT. STA. 297+43 TO STA. 352+15

TRAFFIC DRUMS @ 100' O.C. = 77 EACH
I-49 RT. STA. 312+83 TO STA. 392+30

N

PI 351+12

PC 346+90.63

4" CONTINUOUS YELLOW CONSTRUCTION PAVEMENT MARKINGS

4" SKIP WHITE CONSTRUCTION PAVEMENT MARKINGS

4" CONTINUOUS WHITE CONSTRUCTION PAVEMENT MARKINGS

C.L. I-49

PT 342+30.82

PROP. SB I-49

TRAFFIC DRUMS

100'

335+00

340+00

345+00

350+00

PC 347+51.58

C.L. HWY. 112 TO NB I-49 RAMP

PERMANENT CONCRETE BARRIER

C.L. HWY. 71 TO NB I-49 RAMP

STATE OF ARKANSAS
LICENSED PROFESSIONAL ENGINEER
No.13653
ADAM E. WIERCIAK
3/20/16

2133' P.C.C.B.
335+43 TO 357+07
W/I SPECIAL END UNIT AND T.I.A.B.

C.L. TEMP SB I-49 DETOUR/ SB I-49 TO HWY. 71B RAMP

PC 352+53

PI 354+

355+19.39

4" CONTINUOUS YELLOW CONSTRUCTION PAVEMENT MARKINGS

PRC 356+25.02

EXIT 67A
112
Garland Ave

SEE "MAINTENANCE OF TRAFFIC - SPECIAL SIGNS" SHEET FOR DETAILS

C.L. STAGE 3 TEMP SB I-49 TO HWY. 112
PI = 355+79.63
Δ = 9°38'18" RT.
D = 4°00'00"
T = 120.76
L = 240.96
PC= 354+58.87
PT= 356+99.82
e = MATCH EX.
Ls = MATCH EX.

C.L. STAGE 3 TEMP SB I-49 TO HWY. 112
PI = 358+12.15
Δ = 8°58'04" LT.
D = 4°00'00"
T = 112.33
L = 224.20
PC= 356+99.82
PT= 359+24.02
e = MATCH EX.
Ls = MATCH EX.

C.L. SB I-49 TO HWY. 112 RAMP

50'

40' P.C.C.B. TAPER

100' P.C.C.B. TAPER
T.I.A.B.

PT 358+81.30
+81

4" CONTINUOUS WHITE CONSTRUCTION PAVEMENT MARKINGS

769' RAMP TAPER

1773' P.C.C.B.
339+33 TO 357+06
W/I SPECIAL END UNIT

200' LANE TAPER

PI 351+12.16

PROP SB I-49

PI 351+73.11

PC 354+14.35

PRC 356+24.06

PI 357+52.87

C.L. I-49

100'

360+00

365+00

4" SKIP WHITE CONSTRUCTION PAVEMENT MARKINGS

4" CONTINUOUS YELLOW CONSTRUCTION PAVEMENT MARKINGS

4" CONTINUOUS WHITE CONSTRUCTION PAVEMENT MARKINGS

C.L. HWY. 112 TO NB I-49 RAMP

PERMANENT CONCRETE BARRIER

PT 354+95.16

PT 355+56.11

C.L. STAGE 3 TEMP. SB I-49 TO HWY. 112 STA. 354+14.35 =
C.L. SB I-49 TO HWY. 112 RAMP STA. 354+16.42

C.L. STAGE 3 TEMP. SB I-49 TO HWY. 112 STA. 358+81.30 =
C.L. I-49 STA. 358+81.30, 30.50' LT.

REMOVABLE PAVEMENT MARKINGS ON BRIDGE AND APPROACH SLABS

TRAFFIC DRUMS @ 100' O.C. = 56 EACH
I-49 LT. STA. 297+43 TO STA. 352+15
TRAFFIC DRUMS @ 100' O.C. = 77 EACH
I-49 RT. STA. 312+83 TO STA. 392+30
TRAFFIC DRUMS @ 50' O.C. = 4 EACH
I-49 LT. STA. 352+14 TO STA. 353+55
TRAFFIC DRUMS @ 50' O.C. = 5 EACH
I-49 LT. STA. 352+60 TO STA. 355+05
TRAFFIC DRUMS @ 50' O.C. = 3 EACH
I-49 LT. STA. 355+07 TO STA. 356+05
TRAFFIC DRUMS @ 50' O.C. = 3 EACH
I-49 LT. STA. 356+63 TO STA. 357+63

TRAFFIC DRUMS @ 100' O.C. = 6 EACH
I-49 LT. STA. 358+13 TO STA. 363+14
TRAFFIC DRUMS @ 50' O.C. = 15 EACH
I-49 LT. STA. 358+64 TO STA. 365+64
TRAFFIC DRUMS @ 50' O.C. = 24 EACH
I-49 LT. STA. 358+65 TO STA. 370+14
TRAFFIC DRUMS @ 100' O.C. = 7 EACH
SB I-49 TO HWY. 112 LT. STA. 345+38 TO STA. 351+38
TRAFFIC DRUMS @ 50' O.C. = 3 EACH
SB I-49 TO HWY. 112 LT. STA. 352+47 TO STA. 353+47
TRAFFIC DRUMS @ 50' O.C. = 5 EACH
SB I-49 TO HWY. 112 RT. STA. 352+47 TO STA. 354+58

TRAFFIC
TEMPORARY IMPACT ATTENUATION BARRIER (T.I.A.B.)
PRECAST CONCRETE BARRIER (P.C.C.B.)
TRAFFIC DRUM

MAINTENANCE OF TRAFFIC DETAILS
I-49 - STAGE 3

AEWierciak 3/20/2016 11:53:00 AM
WORKSPACE: AHTD
L:\2016\101707 - I-540 Widening & Interchange Improvement\Drawings\r-BB0414_MOT_SD_ST3_04.dgn
REVISED DATE:

DATE REVISED	DATE FILMED	DATE REVISED	DATE FILMED	FED.RD. DIST.NO.	STATE	FED.AID PROJ.NO.	SHEET NO.	TOTAL SHEETS
				6	ARK.			
				JOB NO.		BB0414	194	886

(2) MAINTENANCE OF TRAFFIC - STAGE 3

STATE OF ARKANSAS
LICENSED PROFESSIONAL ENGINEER
No. 13653
ADAM E. WIERCIAK
3/20/16

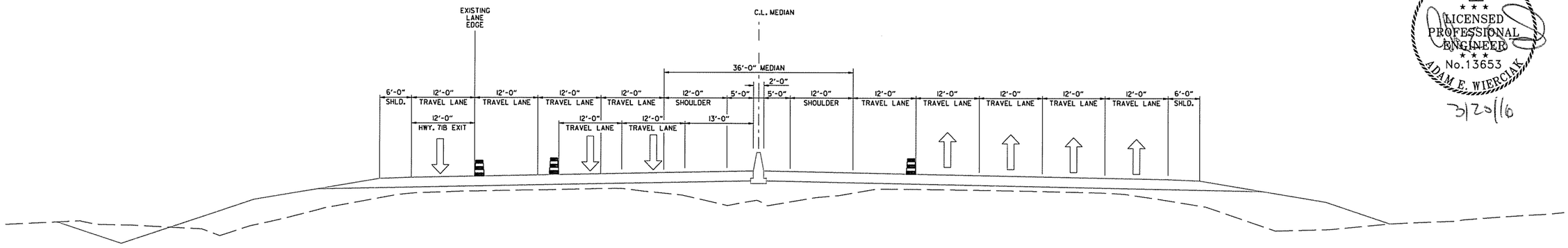

I-49
STAGE 3 TYPICAL SECTION

STAGE 3 CONSTRUCTION SEQUENCE NOTES:

1) ADJUST SB I-49 TRAFFIC PATTERN AS SHOWN.

2) PLACE GORE FOR EXITING HWY. 71B TRAFFIC AT STA. 366+50.

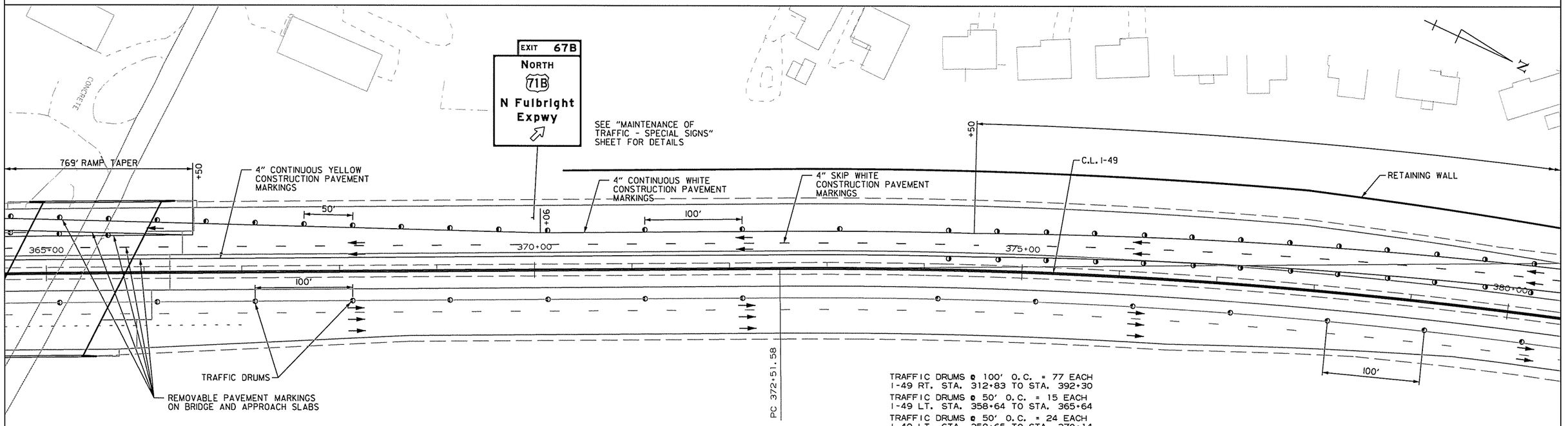

TRAFFIC DRUMS @ 100' O.C. = 77 EACH
I-49 RT. STA. 312+83 TO STA. 392+30

TRAFFIC DRUMS @ 50' O.C. = 15 EACH
I-49 LT. STA. 358+64 TO STA. 365+64

TRAFFIC DRUMS @ 50' O.C. = 24 EACH
I-49 LT. STA. 358+65 TO STA. 370+14

TRAFFIC DRUMS @ 100' O.C. = 3 EACH
I-49 LT. STA. 371+14 TO STA. 373+14

TRAFFIC DRUMS @ 50' O.C. = 17 EACH
I-49 LT. STA. 374+25 TO STA. 382+25

TRAFFIC DRUMS @ 50' O.C. = 17 EACH
I-49 LT. STA. 374+25 TO STA. 382+26

MAINTENANCE OF TRAFFIC DETAILS
I-49 - STAGE 3

AEWierciak 3/20/2016 11:53:01 AM
WORKSPACE: AHTD
L:\201\101707 - I-540 Widening & Interchange Improvement\Drawings\r-BB0414_MOT_SD_ST3_05.dgn
REVISED DATE:

DATE REVISED	DATE FILMED	DATE REVISED	DATE FILMED	FED.RD. DIST.NO.	STATE	FED.AID PROJ.NO.	SHEET NO.	TOTAL SHEETS
				6	ARK.			
				JOB NO.		BB0414	195	886
				(2)	MAINTENANCE OF TRAFFIC - STAGE 3			

STATE OF ARKANSAS
LICENSED PROFESSIONAL ENGINEER
No.13653
ADAM E. WIERCIAK
3/20/16

TRAFFIC DRUMS @ 100' O.C. = 77 EACH
I-49 RT. STA. 312+83 TO STA. 392+30
TRAFFIC DRUMS @ 50' O.C. = 17 EACH
I-49 LT. STA. 374+25 TO STA. 382+25
TRAFFIC DRUMS @ 50' O.C. = 17 EACH
I-49 LT. STA. 374+25 TO STA. 382+26
TRAFFIC DRUMS @ 100' O.C. = 11 EACH
I-49 LT. STA. 383+25 TO STA. 393+17

MAINTENANCE OF TRAFFIC DETAILS
I-49 - STAGE 3

AEWierciak 3/20/2016 11:53:01 AM
WORKSPACE: AHTD
L:\2016\160170T - I-540 Widening & Interchange Improvement\Drawings\r-BB0414_MOT_SD_ST3_06.dgn
REVISED DATE:

DATE REVISED	DATE FILMED	DATE REVISED	DATE FILMED	FED.RD. DIST.NO.	STATE	FED.AID PROJ.NO.	SHEET NO.	TOTAL SHEETS
				6	ARK.			
				JOB NO.		BB0414	196	886
				(2)	MAINTENANCE OF TRAFFIC - STAGE 3			

N

STATE OF ARKANSAS
LICENSED PROFESSIONAL ENGINEER
No.13653
ADAM E. WIERCIAK
3/20/16

TRAFFIC DRUMS @ 100' O.C. = 56 EACH
I-49 LT. STA. 297+43 TO STA. 352+15
TRAFFIC DRUMS @ 100' O.C. = 77 EACH
I-49 RT. STA. 312+83 TO STA. 392+30
TRAFFIC DRUMS @ 100' O.C. = 7 EACH
SB I-49 TO HWY. 112 LT. STA. 345+38 TO STA. 351+38

PAVED PARKING

335+00
53' P.C.C.B. TAPER W/SPECIAL END UNIT
PT 336+71.34
4" CONTINUOUS YELLOW CONSTRUCTION PAVEMENT MARKINGS
340+00
PC 341+55.99
PC 342+96.84
EXISTING SB I-49 TO HWY. 71B RAMP
2133' P.C.C.B. 335+43 TO 357+07 W/I SPECIAL END UNIT AND T.I.A.B.
345+00
4" CONTINUOUS YELLOW CONSTRUCTION PAVEMENT MARKINGS
PT 348+54.50
PT 348+13.92
C.L. TEMP SB I-49 DETOUR/ SB I-49 TO HWY. 71B RAMP
350+00
50'
350+00
PI 351+12.16
TRAFFIC DRUMS
345+00
100'
C.L. SB I-49 TO HWY. 71B RAMP
345+00
1773' P.C.C.B. 339+33 TO 357+06 W/I SPECIAL END UNIT
PI 344+98.62
PT 342+13.43
PC 333+71.44
53' P.C.C.B. TAPER W/SPECIAL END UNIT
335+00
340+00
4" CONTINUOUS WHITE CONSTRUCTION PAVEMENT MARKINGS
4" CONTINUOUS YELLOW CONSTRUCTION PAVEMENT MARKINGS
C.L. SB I-49 TO HWY. 112 RAMP
PI 338+16.96
PC 346+90.63
C.L. I-49
345+00

STAGE 3 OVERLAY UNDER TRAFFIC
TRAFFIC
PRECAST CONCRETE BARRIER (P.C.C.B.)
TRAFFIC DRUM

STAGE 3 CONSTRUCTION SEQUENCE NOTES:

1) WHILE MAINTAINING SB I-49 TO HWY. 71B TRAFFIC ON TEMP. SB I-49 DETOUR, CONSTRUCT SB I-49 TO HWY. 71B RAMP.
2) REMOVE PORTION OF TEMP. SB I-49 DETOUR BETWEEN EXIT TO HWY. 71B AND CONNECTION TO SB I-49 TO HWY. 112 RAMP. GRADE SB I-49 TO HWY. 112 RAMP SLOPES TO FINAL CONDITION IN AREA OF DETOUR REMOVAL.
3) GRADE SB I-49 TO HWY. 112 RAMP TO FINAL CONDITION.

MAINTENANCE OF TRAFFIC DETAILS
SB I-49 TO HWY. 112 AND
SB I-49 TO HWY. 71B RAMP - STAGE 3

AEWier-clark 3/20/2016 11:53:01 AM
WORKSPACE: AHTD
L:\20II\II0I7707 - I-540 Widening & Interchange Improvement\Drawings\rBB04I4_MOT_SD_ST3_07.dgn
REVISED DATE:

DATE REVISED	DATE FILMED	DATE REVISED	DATE FILMED	FED.RD. DIST.NO.	STATE	FED.AID PROJ.NO.	SHEET NO.	TOTAL SHEETS
				6	ARK.			
				JOB NO.		BB0414	197	886
				(2)	MAINTENANCE OF TRAFFIC - STAGE 3A			

ADDITIONAL STAGE 3A ADVANCE WARNING SIGNS

INSTALLATION STA.

ROAD NARROWS (2) W5-1 (48" X 48")

(2) W1-4aR (48" X 48") SB I-49 TO HWY. 112 STA. 336+00

INSTALLATION STA.

(2) W1-4aL (48" X 48") SB HWY. 71B STA. 304+00

(2) W1-4bL (48" X 48") I-49 RT. STA. 234+77, I-49 LT. STA. 387+50

(2) W1-4bR (48" X 48") I-49 RT. STA. 301+00, I-49 LT. STA. 361+00

(2) W4-2 RT. (48" X 48") C-D RD. STA. 308+87

RAMP 25 M.P.H. (2) W13-3 (48" X 60") C-D RD. STA. 293+75

ROAD WORK AHEAD (2) W20-1 (48" X 48") HWY. 112 RAMP 4 STA. 285+00

INSTALLATION STA.

ROAD CLOSED (1) R11-2 (48" X 30")

(24') BARR. TYP. III LT. TEMP. C-D RD. TO SB I-49 RAMP STA. 287+50

SHOULDER CLOSED (1) RSP-1 (48" X 30") I-49 LT. STA. 291+28, I-49 LT. STA. 359+92, C-D RD. STA. 291+12, SB I-49 TO HWY. 112 STA. 331+65 LT.

(3) W1-8R (18" X 24") C-D RD. STA. 287+40 TO 288+30

(1) W4-1L (48" X 48") SB I-49 TO HWY. 112 STA. 330+60 LT. (EX. SB I-49)

RIGHT LANE EXIT ONLY AHEAD (1) W9-7 (132" X 72") SB HWY. 71B STA. 329+08

STATE OF ARKANSAS
LICENSED PROFESSIONAL ENGINEER
No. 13653
ADAM E. WIERCIAK
3/26/16

STAGE 3A M.O.T. QUANTITIES

SIGNS = 2862 SQ. FT.
TRAFFIC DRUMS = 658 EACH
RELOCATE PRECAST CONCRETE BARRIER = 1559 LIN. FT.
TEMPORARY IMPACT ATTENUATION BARRIER (RELOCATION) = 1 EACH
REMOVAL OF PERMANENT PAVEMENT MARKINGS = 190 LIN. FT.
REMOVABLE CONSTRUCTION PAVEMENT MARKINGS = 478 LIN. FT.
CONSTRUCTION PAVEMENT MARKINGS = 7467 LIN. FT.
REMOVAL OF CONSTRUCTION PAVEMENT MARKINGS = 4302 LIN. FT.

STAGE 3A M.O.T. NOTE

MAINTENANCE OF TRAFFIC QUANTITIES FOR STAGE 3A INCLUDE LANE CLOSURE AS SHOWN ON "MAINTENANCE OF TRAFFIC - LANE CLOSURE" SHEET TO PLACE FINAL SURFACE LIFT. QUANTITIES ARE PROVIDED FOR LANE CLOSURE EACH WAY ON I-49 MAIN LANES THROUGH PROJECT LIMITS.

AEWierciak 3/20/2016 11:53:01 AM
WORKSPACE: AHTD
L:\2011\101707 - I-540 Widening & Interchange Improvement\Drawings\rBB0414_MOT_SD_ST3A.01.dgn
REVISED DATE:

MAINTENANCE OF TRAFFIC DETAILS
I-49 & C-D RD. - STAGE 3A

DATE REVISED	DATE FILMED	DATE REVISED	DATE FILMED	FED.RD. DIST.NO.	STATE	FED.AID PROJ.NO.	SHEET NO.	TOTAL SHEETS
				6	ARK.			
				JOB NO.		BB0414	198	886
				(2)	MAINTENANCE OF TRAFFIC - STAGE 3A			

STATE OF ARKANSAS
LICENSED PROFESSIONAL ENGINEER
No.13653
ADAM E. WIERCIAK
3/23/16

STAGE 3A C-D RD. PAVEMENT MARKINGS STA. 283+85 TO STA. 307+00

285+00 TO 291+11 LT. - CONTINUOUS 4" CONSTRUCTION WHITE
285+00 TO 291+11 RT. - CONTINUOUS 4" CONSTRUCTION YELLOW
291+11 TO 293+50 LT. - CONTINUOUS 4" REMOVABLE WHITE
291+11 TO 293+50 RT. - CONTINUOUS 4" REMOVABLE YELLOW
293+50 TO 294+86 LT. - CONTINUOUS 4" PERMANENT WHITE
293+50 TO 293+98 RT. - CONTINUOUS 4" PERMANENT YELLOW

TRAFFIC DRUMS @ 100' O.C. = 30 EACH
I-49 RT. STA. 244+79 TO STA. 273+79
TRAFFIC DRUMS @ 50' O.C. = 3 EACH
I-49 LT. STA. 274+74 TO STA. 275+74
TRAFFIC DRUMS @ 100' O.C. = 6 EACH
I-49 LT. STA. 270+02 TO STA. 275+02
TRAFFIC DRUMS @ 50' O.C. = 7 EACH
I-49 LT. STA. 276+02 TO STA. 279+02
TRAFFIC DRUMS @ 50' O.C. = 9 EACH
I-49 LT. STA. 276+02 TO STA. 280+02
TRAFFIC DRUMS @ 50' O.C. = 6 EACH
I-49 LT. STA. 276+52 TO STA. 279+02
TRAFFIC DRUMS @ 100' O.C. = 5 EACH
I-49 LT. STA. 279+66 TO STA. 283+66
TRAFFIC DRUMS @ 100' O.C. = 26 EACH
I-49 RT. STA. 276+75 TO STA. 302+05
TRAFFIC DRUMS @ 50' O.C. = 3 EACH
I-49 RT. STA. 279+66 TO STA. 283+66
TRAFFIC DRUMS @ 100' O.C. = 6 EACH
I-49 LT. STA. 291+56 TO STA. 296+47

TRAFFIC DRUMS @ 50' O.C. = 5 EACH
I-49 LT. STA. 297+02 TO STA. 298+87
TRAFFIC DRUMS @ 50' O.C. = 5 EACH
I-49 LT. STA. 297+02 TO STA. 298+87
TRAFFIC DRUMS @ 100' O.C. = 59 EACH
I-49 LT. STA. 299+35 TO STA. 355+05
TRAFFIC DRUMS @ 50' O.C. = 14 EACH
I-49 RT. STA. 305+33 TO STA. 312+01
TRAFFIC DRUMS @ 50' O.C. = 13 EACH
I-49 RT. STA. 306+07 TO STA. 312+02
TRAFFIC DRUMS @ 50' O.C. = 4 EACH
HWY. 112 RAMP 1 RT. STA. 276+24 TO STA. 277+74
TRAFFIC DRUMS @ 50' O.C. = 8 EACH
HWY. 112 RAMP 1 LT. STA. 277+23 TO STA. 280+73
TRAFFIC DRUMS @ 50' O.C. = 4 EACH
NB I-49 TO HWY. 71B RT. STA. 304+32 TO STA. 305+82
TRAFFIC DRUMS @ 50' O.C. = 9 EACH
NB I-49 TO HWY. 71B LT. STA. 305+33 TO STA. 309+37
TRAFFIC DRUMS @ 50' O.C. = 3 EACH
SB HWY. 71B RT. STA. 299+36 TO STA. 300+40
TRAFFIC DRUMS @ 50' O.C. = 3 EACH
SB HWY. 71B RT. STA. 299+36 TO STA. 300+40
TRAFFIC DRUMS @ 100' O.C. = 10 EACH
SB HWY. 71B LT. STA. 301+40 TO STA. 310+40

STAGE 3A OVERLAY UNDER TRAFFIC
STAGE 3A GRADING AND PAVING
TRAFFIC
TEMPORARY IMPACT ATTENUATION BARRIER (T.I.A.B.)
PRECAST CONCRETE BARRIER (P.C.C.B.)
TRAFFIC DRUM

STAGE 3A CONSTRUCTION SEQUENCE NOTES:

1) MAINTAIN STAGE 3 TRAFFIC CONTROL UNLESS MODIFIED IN STAGE 3A.
2) REMOVE TEMP C-D RD. TO SB I-49 RAMP AND CONSTRUCT OUTSIDE LANES OF SB I-49 FROM 281+01 TO 291+50.
3) SHIFT C-D RD. TRAFFIC TO THE INSIDE AND CONSTRUCT OUTSIDE OF C-D RD WEST OF HWY. 112 BRIDGE.
4) PLACE FINAL LIFT OF SURFACE COURSE UNDER TRAFFIC ON ALL MAIN LANES AND RAMPS.

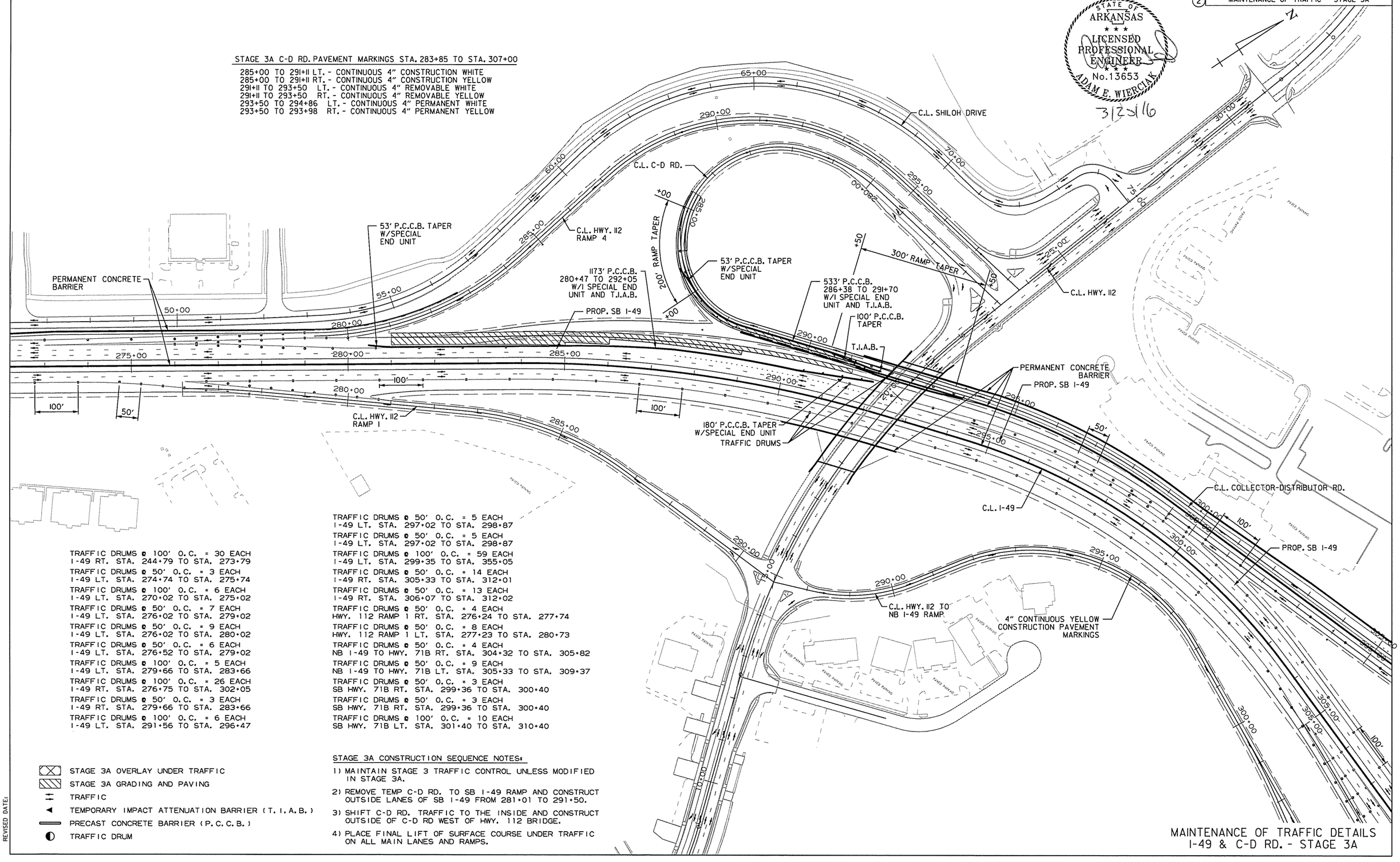

MAINTENANCE OF TRAFFIC DETAILS
I-49 & C-D RD. - STAGE 3A

AEWiercIak 3/20/2016 11:53:02 AM
WORKSPACE: AHTD
L:\20II\II07707 - I-540 Widening & Interchange Improvement\Drawings\rBB04I4_MOT_SD_ST3A_02.dgn
REVISED DATE:

DATE REVISED	DATE FILMED	DATE REVISED	DATE FILMED	FED.RD. DIST.NO.	STATE	FED.AID PROJ.NO.	SHEET NO.	TOTAL SHEETS
				6	ARK.			
				JOB NO.		BB0414	199	886
				(2)	MAINTENANCE OF TRAFFIC - STAGE 3A			

N

STATE OF ARKANSAS
LICENSED PROFESSIONAL ENGINEER
No.13653
ADAM E. WIERCIAK
3/25/16

TRAFFIC DRUMS = 13 EACH
SB I-49 TO HWY. 71B LT. STA. 336+00 TO STA. 348+00

TRAFFIC DRUMS = 1 EACH
SB I-49 TO HWY. 112 RAMP LT. STA. 327+02

TRAFFIC DRUMS @ 100' O.C. = 4 EACH
SB I-49 TO HWY. 112 RAMP LT. STA. 331+02 TO STA. 333+73

TRAFFIC DRUMS @ 100' O.C. = 10 EACH
SB HWY. 71B LT. STA. 301+40 TO STA. 310+40

TRAFFIC DRUMS @ 50' O.C. = 13 EACH
SB HWY. 71B LT. STA. 311+40 TO STA. 317+40

TRAFFIC DRUMS @ 100' O.C. = 59 EACH
I-49 LT. STA. 299+35 TO STA. 355+05

TRAFFIC DRUMS @ 50' O.C. = 14 EACH
I-49 RT. STA. 305+33 TO STA. 312+01

TRAFFIC DRUMS @ 50' O.C. = 13 EACH
I-49 RT. STA. 306+02 TO STA. 312+02

STAGE 3A GRADING AND PAVING
STAGE 3A OVERLAY UNDER TRAFFIC
TRAFFIC
PRECAST CONCRETE BARRIER (P.C.C.B.)
TRAFFIC DRUM

4" CONTINUOUS WHITE PERMANENT PAVEMENT MARKINGS TO STA. 307+00

PT 306+38.86

4" CONTINUOUS WHITE CONSTRUCTION PAVEMENT MARKINGS

PC 307+64.39

PAVED PARKING

+12

175' LANE TAPER

PC 326+86.42

53' P.C.C.B. TAPER W/SPECIAL END UNIT

PT 309+59.24

+26

1173' P.C.C.B. 280+47 TO 292+05 W/I SPECIAL END UNIT AND T.I.A.B.

310+00

315+00

320+00

325+00

330+00

335+00

PI 329+89.18

+68

175' LANE TAPER

12' RAMP

200' P.C.C.B. TAPER W/SPECIAL END UNIT

+43

PT 332+57.43

PC 313+41.74

4" CONTINUOUS YELLOW CONSTRUCTION PAVEMENT MARKINGS

4" CONTINUOUS WHITE CONSTRUCTION PAVEMENT MARKINGS

15' RAMP

PC 333+71.44

PI 314+30.15

PT 315+18.06

C.L. SB I-49 TO HWY. 71B

C.L. SB I-49 TO HWY. 112

100'

PT 336+71.34

REMOVE RAMP AND GRADE TO FINAL CONDTION

TRAFFIC DRUMS

4" CONTINUOUS WHITE CONSTRUCTION PAVEMENT MARKINGS

4" CONTINUOUS YELLOW CONSTRUCTION PAVEMENT MARKINGS

340+00

PC 341+55.99

PC 343+49.89

345+00

PT 342+13.43

STAGE 3A CONSTRUCTION SEQUENCE NOTES:

1) SHIFT SB I-49 TO HWY. 112 RAMP TRAFFIC TO INSIDE PORTION CONSTRUCTED IN STAGE 3.

2) CONSTRUCT FULL DEPTH SECTION ON LT. OF SB I-49 TO HWY. 112 RAMP FROM GORE TO 330+10.

3) OVERLAY REMAINDER OF RAMP AND CONNECTION TO C-D ROAD TO FINAL CONDITIONS UNDER TRAFFIC.

4) REMOVE SECTION OF EXISTING SB I-49 TO HWY. 71B RAMP NOT INCLUDED IN THE PROPOSED ALIGNMENT AND GRADE AREA TO FINAL CONDITION.

5) PLACE FINAL LIFT OF SURFACE COURSE UNDER TRAFFIC ON ALL MAIN LANES AND RAMPS.

MAINTENANCE OF TRAFFIC DETAILS SB I-49 TO HWY. 71B RAMP, SB I-49 TO HWY. 112 RAMP, & C-D RD. - STAGE 3A

AEWierciak 3/20/2016 11:53:02 AM
WORKSPACE: AHTD
L:\20\N\01\7707 - I-540 Widening & Interchange Improvement\Drawings\rBB0414_MOT_SD_ST3A_03.dgn
REVISED DATE:

DATE REVISED	DATE FILMED	DATE REVISED	DATE FILMED	FED.RD. DIST.NO.	STATE	FED.AID PROJ.NO.	SHEET NO.	TOTAL SHEETS
				6	ARK.			
				JOB NO.		BB0414	200	886
				(2)	MAINTENANCE OF TRAFFIC - STAGE 3A			

STATE OF ARKANSAS
LICENSED PROFESSIONAL ENGINEER
No. 13653
ADAM E. WIERCIAK
3/24/16

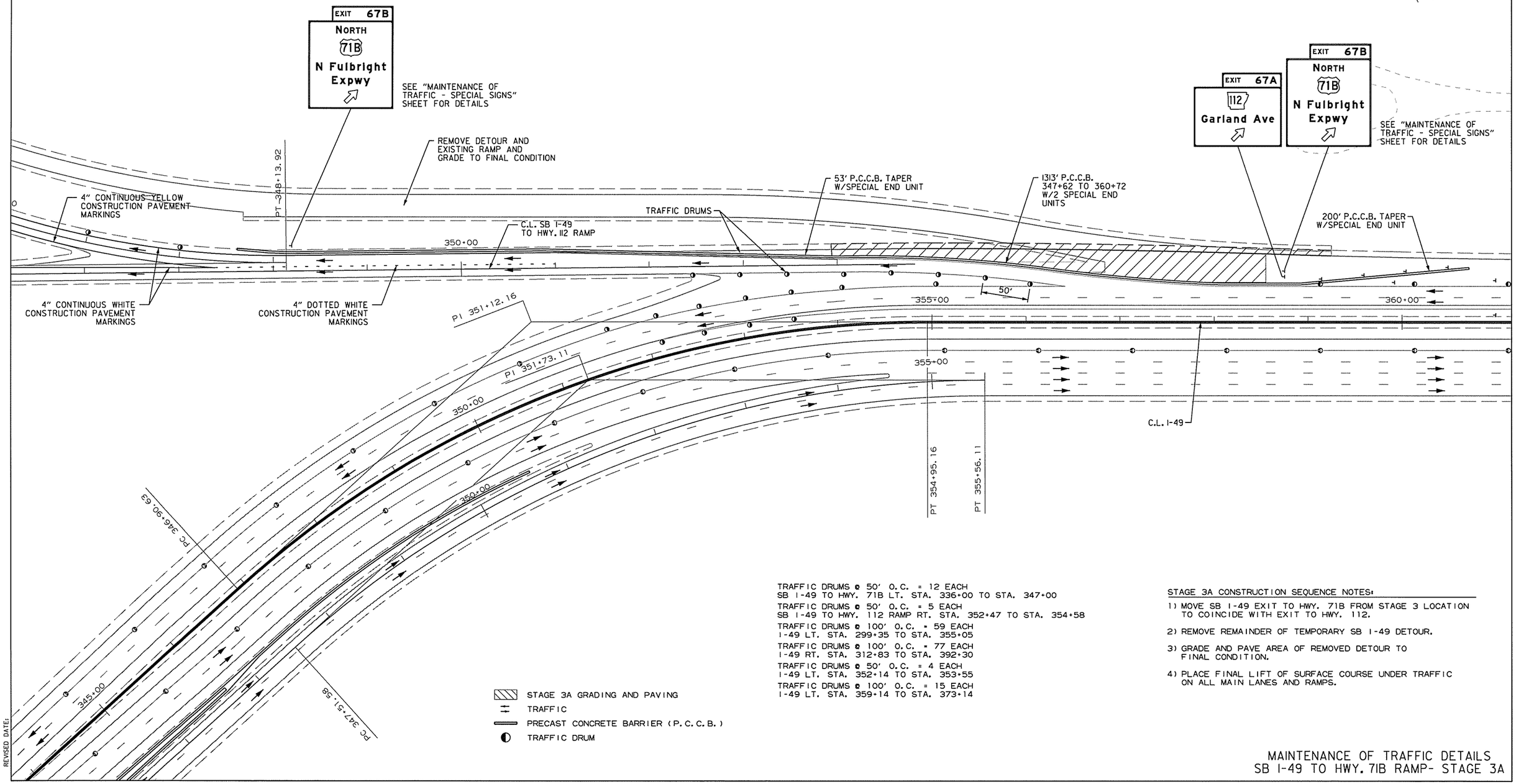

TRAFFIC DRUMS @ 50' O.C. = 12 EACH
SB I-49 TO HWY. 71B LT. STA. 336+00 TO STA. 347+00

TRAFFIC DRUMS @ 50' O.C. = 5 EACH
SB I-49 TO HWY. 112 RAMP RT. STA. 352+47 TO STA. 354+58

TRAFFIC DRUMS @ 100' O.C. = 59 EACH
I-49 LT. STA. 299+35 TO STA. 355+05

TRAFFIC DRUMS @ 100' O.C. = 77 EACH
I-49 RT. STA. 312+83 TO STA. 392+30

TRAFFIC DRUMS @ 50' O.C. = 4 EACH
I-49 LT. STA. 352+14 TO STA. 353+55

TRAFFIC DRUMS @ 100' O.C. = 15 EACH
I-49 LT. STA. 359+14 TO STA. 373+14

STAGE 3A CONSTRUCTION SEQUENCE NOTES:

1) MOVE SB I-49 EXIT TO HWY. 71B FROM STAGE 3 LOCATION TO COINCIDE WITH EXIT TO HWY. 112.
2) REMOVE REMAINDER OF TEMPORARY SB I-49 DETOUR.
3) GRADE AND PAVE AREA OF REMOVED DETOUR TO FINAL CONDITION.
4) PLACE FINAL LIFT OF SURFACE COURSE UNDER TRAFFIC ON ALL MAIN LANES AND RAMPS.

MAINTENANCE OF TRAFFIC DETAILS
SB I-49 TO HWY. 71B RAMP- STAGE 3A

AEWierciak 3/20/2016 11:53:02 AM
WORKSPACE: AHTD
L:\201\101707 - I-540 Widening & Interchange Improvement\Drawings\rBB0414_MOT_SD_ST3A_04.dgn
REVISED DATE:

DATE REVISED	DATE FILMED	DATE REVISED	DATE FILMED	FED.RD. DIST.NO.	STATE	FED.AID PROJ.NO.	SHEET NO.	TOTAL SHEETS
				6	ARK.			
				JOB NO.		BB0414	201	886

(2) PERMANENT PAVEMENT MARKING DETAILS

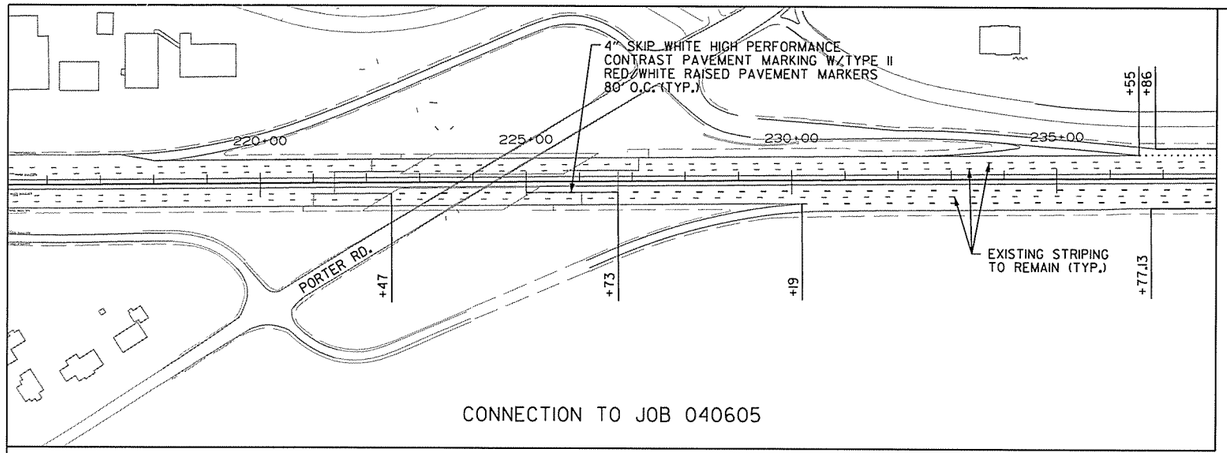

CONNECTION TO JOB 040605

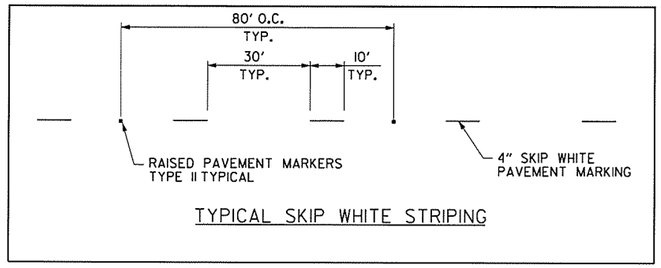

TYPICAL SKIP WHITE STRIPING

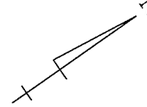

3-20-16

PERMANENT PAVEMENT MARKING QUANTITIES

RAISED PAVEMENT MARKERS TYPE II (WHITE/RED)	3302 EACH
RAISED PAVEMENT MARKERS TYPE II (YELLOW)	113 EACH
REFLECTORIZED PAINT PAVEMENT MARKING WHITE (10")	482 LIN. FT.
THERMOPLASTIC PAVEMENT MARKING (ARROWS)	21 EACH
THERMOPLASTIC PAVEMENT MARKING (WORDS)	19 EACH
THERMOPLASTIC PAVEMENT MARKING WHITE (4")	3552 LIN. FT.
THERMOPLASTIC PAVEMENT MARKING WHITE (6")	40 LIN. FT.
THERMOPLASTIC PAVEMENT MARKING WHITE (8")	1081 LIN. FT.
THERMOPLASTIC PAVEMENT MARKING WHITE (12")	2233 LIN. FT.
THERMOPLASTIC PAVEMENT MARKING YELLOW (4")	8239 LIN FT.
THERMOPLASTIC PAVEMENT MARKING YELLOW (12")	85 LIN. FT.
HIGH PERFORMANCE PAVEMENT MARKING WHITE (4")	52041 LIN. FT.
HIGH PERFORMANCE PAVEMENT MARKING (SKIP LINE) WHITE (4")	18499 LIN. FT.
HIGH PERFORMANCE PAVEMENT MARKING WHITE (8")	6679 LIN. FT.
HIGH PERFORMANCE PAVEMENT MARKING (SKIP LINE) WHITE (8")	3992 LIN. FT.
HIGH PERFORMANCE PAVEMENT MARKING YELLOW (4")	52066 LIN. FT.
HIGH PERFORMANCE CONTRAST PAVEMENT MARKING WHITE (4")	3435 LIN. FT.
HIGH PERFORMANCE CONTRAST PAVEMENT MARKING WHITE (8")	267 LIN. FT.
HIGH PERFORMANCE CONTRAST PAVEMENT MARKING YELLOW (4")	3256 LIN. FT.

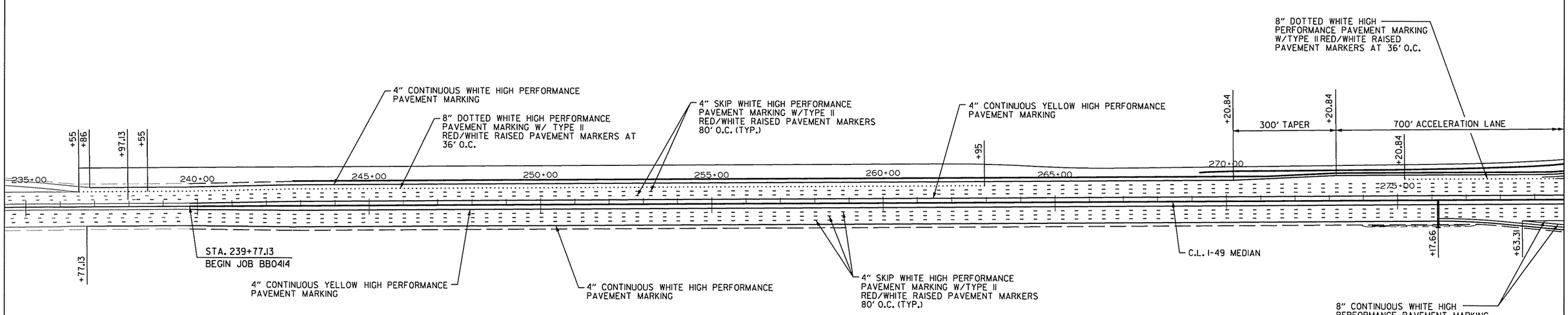

NOTE:

NO PERMANENT PAVEMENT MARKINGS SHALL BE PLACED UNTIL A MINIMUM OF 3 DAYS AFTER ALL MAIN LANE PAVING HAS BEEN COMPLETED. IN ADDITION, NO PERMANENT PAVEMENT MARKINGS SHALL BE PLACED DURING THE TIME PERIOD FROM DECEMBER 21 TO MARCH 15, INCLUSIVE.

PERMANENT PAVEMENT MARKING DETAILS

AEWerclok 3/20/2016 5:43:46 PM
WORKSPACE: AHTD
L:\20IN\101707 - I-540 Widening & Interchange Improvement\Drawings\rBB0414_PM_01.dgn
REVISED DATE:

DATE REVISED	DATE FILMED	DATE REVISED	DATE FILMED	FED.RD. DIST.NO.	STATE	FED.AID PROJ.NO.	SHEET NO.	TOTAL SHEETS
				6	ARK.			
				JOB NO.		BB0414	202	886
				(2)	PERMANENT PAVEMENT MARKING DETAILS			

STATE OF ARKANSAS
LICENSED PROFESSIONAL ENGINEER
No. 13422
JOHN F. CANTABERY
3-20-16

700' ACCEL. LANE

8" CONTINUOUS WHITE HIGH PERFORMANCE PAVEMENT MARKING W/TYPE II RED/WHITE RAISED PAVEMENT MARKERS SPACED AT 10' O.C.

8" CONTINUOUS WHITE HIGH PERFORMANCE PAVEMENT MARKING W/TYPE II RED/WHITE RAISED PAVEMENT MARKERS SPACED AT 10' O.C.

4" CONTINUOUS YELLOW HIGH PERFORMANCE PAVEMENT MARKING

4" CONTINUOUS WHITE HIGH PERFORMANCE PAVEMENT MARKING

4" CONTINUOUS YELLOW HIGH PERFORMANCE PAVEMENT MARKING

4" CONTINUOUS WHITE HIGH PERFORMANCE PAVEMENT MARKING

SEE SEPARATE HWY. 112 PAVEMENT MARKING SHEETS

C.L. I-49 MEDIAN

C.L. HWY. 112 RAMP 1

120' TAPER

C.L. SHILOH DR.

C.L. HWY. 112 RAMP 4

4" CONTINUOUS YELLOW HIGH PERFORMANCE PAVEMENT MARKING

4" CONTINUOUS WHITE HIGH PERFORMANCE PAVEMENT MARKING

8" DOTTED WHITE HIGH PERFORMANCE PAVEMENT MARKING W/TYPE II RED/WHITE RAISED PAVEMENT MARKERS AT 36' O.C.

STA. 298+80 LANE-REDUCTION ARROW THERMOPLASTIC

4" CONTINUOUS YELLOW HIGH PERFORMANCE PAVEMENT MARKING

C.L. HWY. 112 TO NB I-49 RAMP

4" CONTINUOUS YELLOW HIGH PERFORMANCE PAVEMENT MARKING

4" CONTINUOUS WHITE HIGH PERFORMANCE PAVEMENT MARKING

1000' AUX. LANE

STA. 298+80 LANE-REDUCTION ARROW THERMOPLASTIC

4" SKIP WHITE HIGH PERFORMANCE PAVEMENT MARKING W/TYPE II RED/WHITE RAISED PAVEMENT MARKERS 80' O.C. (TYP.)

8" CONTINUOUS WHITE HIGH PERFORMANCE PAVEMENT MARKING W/TYPE II RED/WHITE RAISED PAVEMENT MARKERS SPACED AT 10' O.C.

C.L. COLLECTOR DISTRIBUTOR RD.

8" CONTINUOUS WHITE HIGH PERFORMANCE PAVEMENT MARKING W/TYPE II RED/WHITE RAISED PAVEMENT MARKERS SPACED AT 10' O.C.

4" CONTINUOUS YELLOW HIGH PERFORMANCE PAVEMENT MARKING

4" CONTINUOUS WHITE HIGH PERFORMANCE PAVEMENT MARKING

4" CONTINUOUS YELLOW HIGH PERFORMANCE PAVEMENT MARKING

4" CONTINUOUS YELLOW HIGH PERFORMANCE PAVEMENT MARKING

8" DOTTED WHITE HIGH PERFORMANCE PAVEMENT MARKING W/TYPE II RED/WHITE RAISED PAVEMENT MARKERS AT 36' O.C.

NOTE:

NO PERMANENT PAVEMENT MARKINGS SHALL BE PLACED UNTIL A MINIMUM OF 3 DAYS AFTER ALL MAIN LANE PAVING HAS BEEN COMPLETED. IN ADDITION, NO PERMANENT PAVEMENT MARKINGS SHALL BE PLACED DURING THE TIME PERIOD FROM DECEMBER 21 TO MARCH 15, INCLUSIVE.

PERMANENT PAVEMENT MARKING DETAILS

AEWierciak 3/20/2016 11:53:08 AM
WORKSPACE: AHTD
L:\201\101707 - I-540 Widening & Interchange Improvement\Drawings\rBB0414_PM_02.dgn
REVISED DATE:

DATE REVISED	DATE FILMED	DATE REVISED	DATE FILMED

FED.RD. DIST.NO.	STATE	FED.AID PROJ.NO.	SHEET NO.	TOTAL SHEETS
6	ARK.			
JOB NO.		BB0414	203	886

(2) PERMANENT PAVEMENT MARKING DETAILS

STATE OF ARKANSAS
LICENSED PROFESSIONAL ENGINEER
No.13422
JOHN F. CANTABERY
3-2016

4" SKIP WHITE HIGH PERFORMANCE PAVEMENT MARKING W/TYPE II RED/WHITE RAISED PAVEMENT MARKERS 80' O.C. (TYP.)

8" CONTINUOUS WHITE HIGH PERFORMANCE PAVEMENT MARKING W/TYPE II RED/WHITE RAISED PAVEMENT MARKERS SPACED AT 10' O.C.

C.L. SB I-49 TO HWY. 71B RAMP

C.L. SB I-49 TO HWY. 112 RAMP

4" CONTINUOUS YELLOW HIGH PERFORMANCE PAVEMENT MARKING

4" CONTINUOUS WHITE HIGH PERFORMANCE PAVEMENT MARKING

C.L. I-49

C.L. HWY. 112 TO NB I-49

4" CONTINUOUS YELLOW HIGH PERFORMANCE PAVEMENT MARKING

4" CONTINUOUS WHITE HIGH PERFORMANCE PAVEMENT MARKING

4" SKIP WHITE HIGH PERFORMANCE PAVEMENT MARKING W/TYPE II RED/WHITE RAISED PAVEMENT MARKERS 80' O.C. (TYP.)

SEE INSET TO RIGHT FOR LANE DIMENSIONS

4" CONTINUOUS YELLOW HIGH PERFORMANCE PAVEMENT MARKING

4" CONTINUOUS WHITE HIGH PERFORMANCE PAVEMENT MARKING

C.L. HWY. 71 TO NB I-49

C.L. HWY. 112 TO NB I-49

C.L. HWY. 71 TO NB I-49

8" CONTINUOUS WHITE HIGH PERFORMANCE PAVEMENT MARKING W/TYPE II RED/WHITE RAISED PAVEMENT MARKERS SPACED AT 10' O.C.

8" DOTTED WHITE HIGH PERFORMANCE PAVEMENT MARKING W/TYPE II RED/WHITE RAISED PAVEMENT MARKERS AT 36' O.C.

4" CONTINUOUS YELLOW HIGH PERFORMANCE PAVEMENT MARKING

4" CONTINUOUS WHITE HIGH PERFORMANCE PAVEMENT MARKING

8" CONTINUOUS WHITE HIGH PERFORMANCE PAVEMENT MARKING W/TYPE II RED/WHITE RAISED PAVEMENT MARKERS SPACED AT 10' O.C.

C.L. C.D ROAD

4" SKIP WHITE HIGH PERFORMANCE CONTRAST PAVEMENT MARKING W/TYPE II RED/WHITE RAISED PAVEMENT MARKERS ON BRIDGE

C.L. SB HWY. 71B

4" CONTINUOUS WHITE HIGH PERFORMANCE PAVEMENT MARKING

4" CONTINUOUS YELLOW HIGH PERFORMANCE PAVEMENT MARKING

4" SKIP WHITE HIGH PERFORMANCE PAVEMENT MARKING W/TYPE II RED/WHITE RAISED PAVEMENT MARKERS 80' O.C. (TYP.)

4" CONTINUOUS YELLOW HIGH PERFORMANCE CONTRAST PAVEMENT MARKING

4" CONTINUOUS WHITE HIGH PERFORMANCE CONTRAST PAVEMENT MARKING

EXISTING STRIPING TO REMAIN (TYP.)

SEE DETAIL 1 NEXT SHEET

SEE DETAIL 2 NEXT SHEET

C.L. NB I-49 TO HWY. 71B RAMP

300' TAPER

700' ACCELERATION LANE

8" CONTINUOUS WHITE HIGH PERFORMANCE PAVEMENT MARKING W/TYPE II RED/WHITE RAISED PAVEMENT MARKERS SPACED AT 10' O.C.

8" DOTTED WHITE HIGH PERFORMANCE PAVEMENT MARKING W/TYPE II RED/WHITE RAISED PAVEMENT MARKERS AT 36' O.C.

4" CONTINUOUS WHITE HIGH PERFORMANCE PAVEMENT MARKING

4" CONTINUOUS YELLOW HIGH PERFORMANCE PAVEMENT MARKING

4" CONTINUOUS YELLOW HIGH PERFORMANCE CONTRAST PAVEMENT MARKING

4" CONTINUOUS WHITE HIGH PERFORMANCE CONTRAST PAVEMENT MARKING

C.L. HWY. 112 TO HWY. 71B RAMP

NOTES:

NO PERMANENT PAVEMENT MARKINGS SHALL BE PLACED UNTIL A MINIMUM OF 3 DAYS AFTER ALL MAIN LANE PAVING HAS BEEN COMPLETED. IN ADDITION, NO PERMANENT PAVEMENT MARKINGS SHALL BE PLACED DURING THE TIME PERIOD FROM DECEMBER 21 TO MARCH 15, INCLUSIVE.

NB I-49 TO HWY. 71B RAMP SHALL BE STRIPED AS A SINGLE 15' RAMP.

PERMANENT PAVEMENT MARKING DETAILS

AEWierdick 3/20/2016 5:43:47 PM
WORKSPACE: AHTD
L:\20II\II0II707 - I-540 Widening & Interchange Improvement\Drawings\rBB04I4_PM_03.dgn
REVISED DATE:

DATE REVISED	DATE FILMED	DATE REVISED	DATE FILMED	FED.RD. DIST.NO.	STATE	FED.AID PROJ.NO.	SHEET NO.	TOTAL SHEETS
				6	ARK.			
				JOB NO.		BB0414	204	886
				(2)	PERMANENT PAVEMENT MARKING DETAILS			

STATE OF ARKANSAS
LICENSED PROFESSIONAL ENGINEER
No. 13422
JOHN F. CANTABERRY
3-20-16

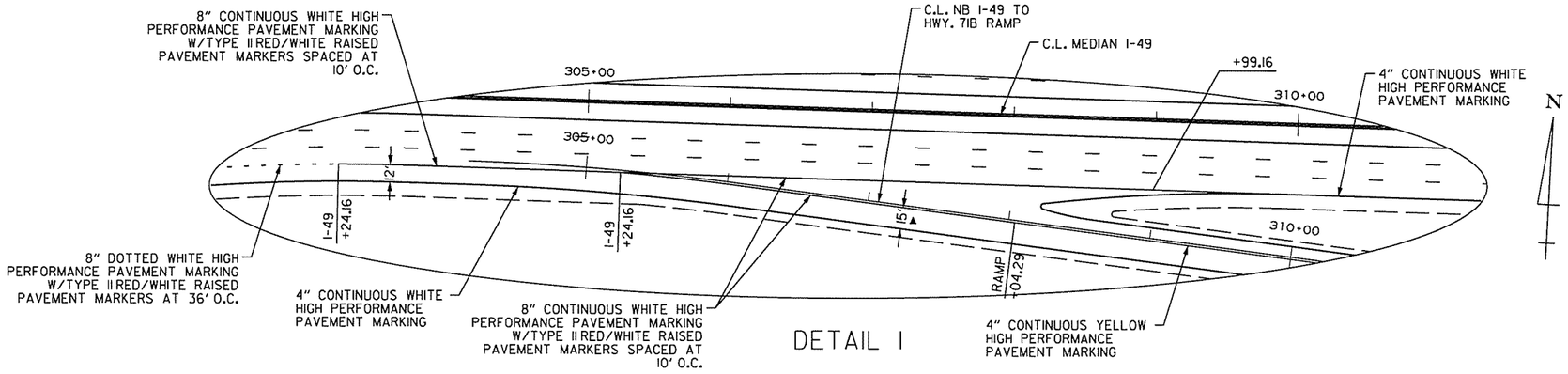

DETAIL 1

NOTES:

NO PERMANENT PAVEMENT MARKINGS SHALL BE PLACED UNTIL A MINIMUM OF 3 DAYS AFTER ALL MAIN LANE PAVING HAS BEEN COMPLETED. IN ADDITION, NO PERMANENT PAVEMENT MARKINGS SHALL BE PLACED DURING THE TIME PERIOD FROM DECEMBER 21 TO MARCH 15, INCLUSIVE.

▲ NB I-49 TO HWY. 71B RAMP SHALL BE STRIPED AS A SINGLE 15' RAMP.

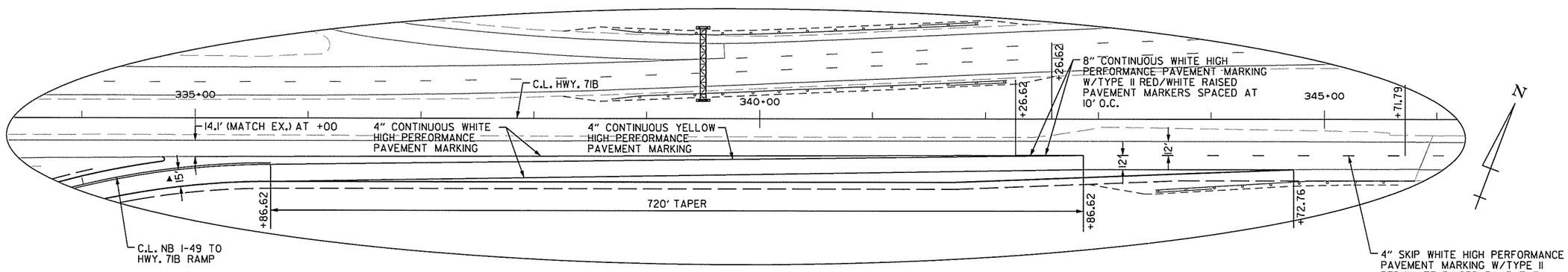

DETAIL 2

PERMANENT PAVEMENT MARKING DETAILS

AEWtierlak 3/20/2016 11:53:10 AM
WORKSPACE: AHTD
L:\20IN\10I7707 - I-540 Widening & Interchange Improvement\Drawings\r-BB0414_PM_04.dgn
REVISED DATE:

DATE REVISED	DATE FILMED	DATE REVISED	DATE FILMED	FED.RD. DIST.NO.	STATE	FED.AID PROJ.NO.	SHEET NO.	TOTAL SHEETS
				6	ARK.			
				JOB NO.		BB0414	205	886

(2) PERMANENT PAVEMENT MARKING DETAILS

N

STATE OF ARKANSAS
LICENSED PROFESSIONAL ENGINEER
No.13422
JOHN F. CANTABERY
4-19-16

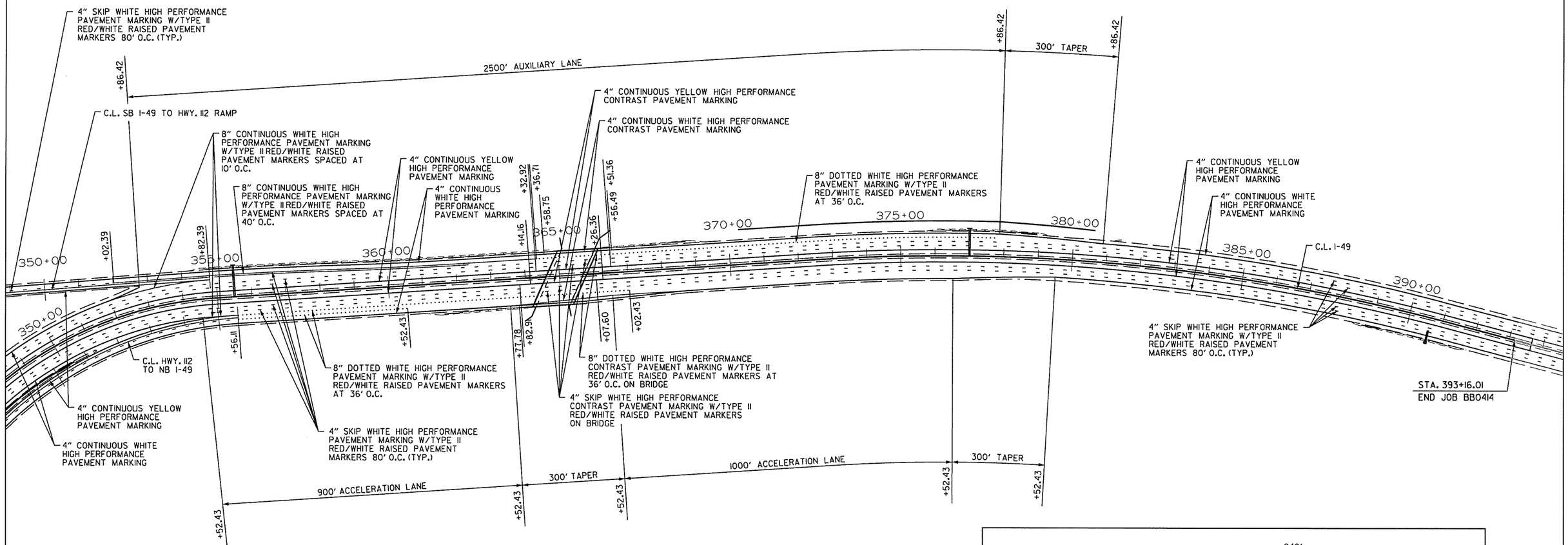

NOTE:

NO PERMANENT PAVEMENT MARKINGS SHALL BE PLACED UNTIL A MINIMUM OF 3 DAYS AFTER ALL MAIN LANE PAVING HAS BEEN COMPLETED. IN ADDITION, NO PERMANENT PAVEMENT MARKINGS SHALL BE PLACED DURING THE TIME PERIOD FROM DECEMBER 21 TO MARCH 15, INCLUSIVE.

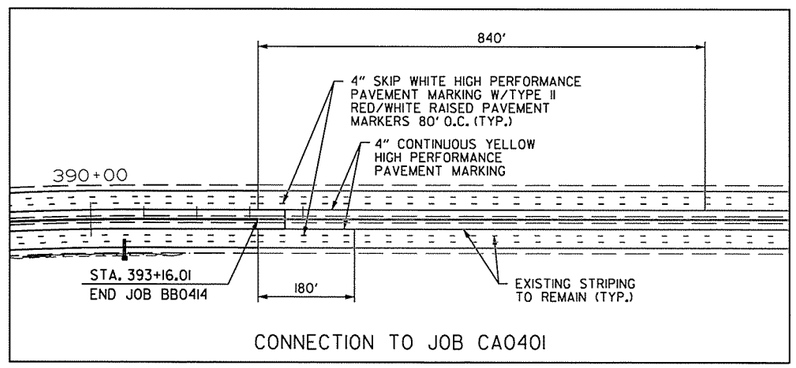

CONNECTION TO JOB CA0401

PERMANENT PAVEMENT MARKING DETAILS

AEWierdak 4/14/2016 2:32:00 PM
WORKSPACE: AHTD
L:\201\101707 - I-540 Widening & Interchange Improvement\Drawings\rBB0414_PM_05.dgn
REVISED DATE:

DATE REVISED	DATE FILMED	DATE REVISED	DATE FILMED	FED.RD. DIST.NO.	STATE	FED.AID PROJ.NO.	SHEET NO.	TOTAL SHEETS
				6	ARK.			
				JOB NO.		BB0414	206	886
				(2)	PERMANENT PAVEMENT MARKING DETAILS			

STATE OF ARKANSAS
LICENSED PROFESSIONAL ENGINEER
No.13422
JOHN F. CANTABERY
3-20-16

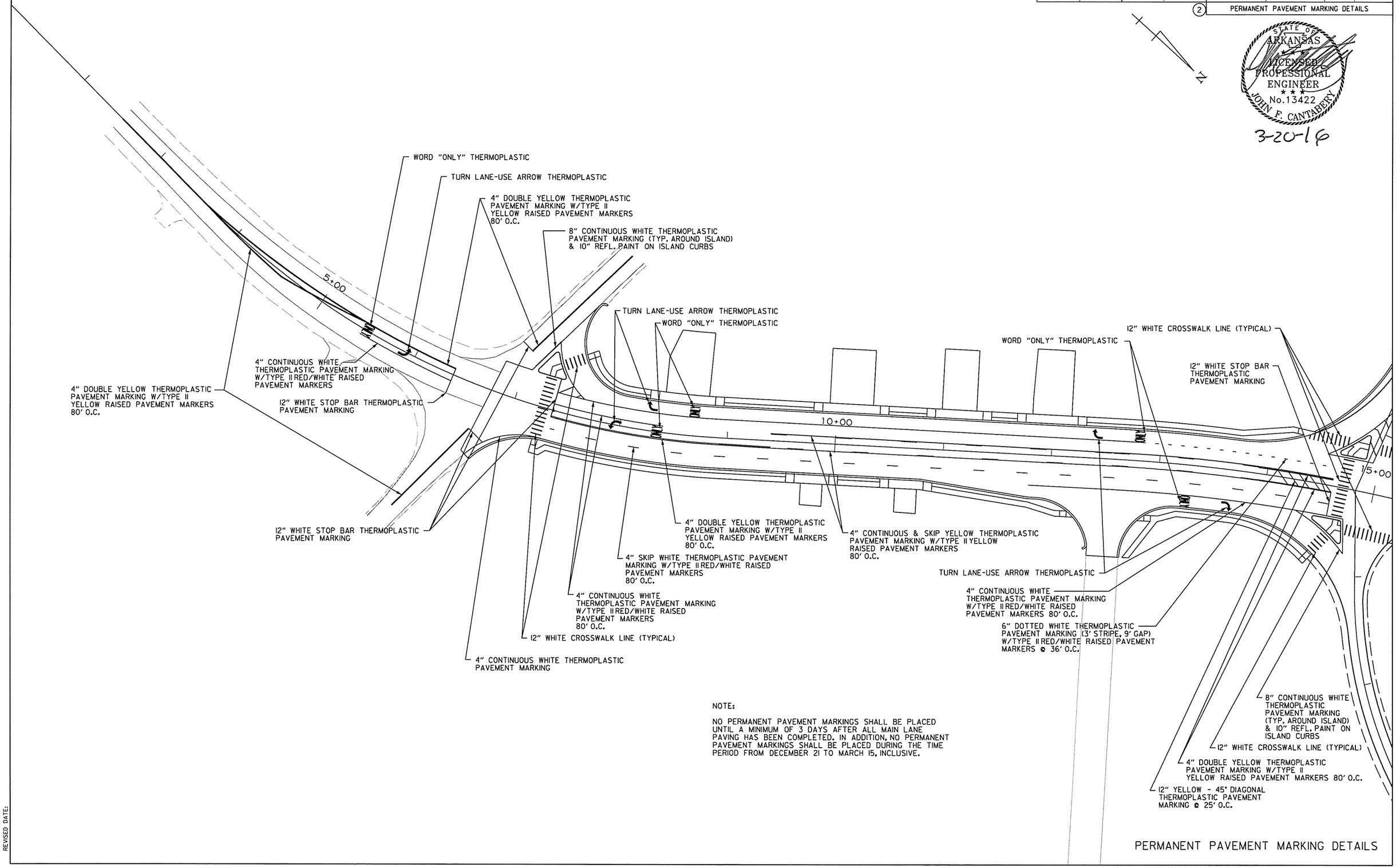

NOTE:

NO PERMANENT PAVEMENT MARKINGS SHALL BE PLACED UNTIL A MINIMUM OF 3 DAYS AFTER ALL MAIN LANE PAVING HAS BEEN COMPLETED. IN addition, NO PERMANENT PAVEMENT MARKINGS SHALL BE PLACED DURING THE TIME PERIOD FROM DECEMBER 21 TO MARCH 15, INCLUSIVE.

PERMANENT PAVEMENT MARKING DETAILS

AEWtercick 3/20/2016 11:53:10 AM
WORKSPACE: AHTD
L:\201\101707 - I-540 Widening & Interchange Improvement\Drawings\r-BB0414_PM_HWY 112_01.dgn
REVISED DATE:

DATE REVISED	DATE FILMED	DATE REVISED	DATE FILMED	FED.RD. DIST.NO.	STATE	FED.AID PROJ.NO.	SHEET NO.	TOTAL SHEETS
				6	ARK.			
				JOB NO.		BB0414	207	886

(2) PERMANENT PAVEMENT MARKING DETAILS

STATE OF ARKANSAS
LICENSED PROFESSIONAL ENGINEER
No. 13422
JOHN F. CANTABERY
3-20-16

NOTE:

NO PERMANENT PAVEMENT MARKINGS SHALL BE PLACED UNTIL A MINIMUM OF 3 DAYS AFTER ALL MAIN LANE PAVING HAS BEEN COMPLETED. IN ADDITION, NO PERMANENT PAVEMENT MARKINGS SHALL BE PLACED DURING THE TIME PERIOD FROM DECEMBER 21 TO MARCH 15, INCLUSIVE.

C.L. HWY. 112 RAMP 1

4" CONTINUOUS WHITE THERMOPLASTIC PAVEMENT MARKING W/TYPE II RED/WHITE RAISED PAVEMENT MARKERS 80' O.C.

WORD "ONLY" THERMOPLASTIC

TURN LANE-USE ARROW THERMOPLASTIC

12" WHITE CROSSWALK LINE (TYPICAL)

290+00

8" CONTINUOUS WHITE THERMOPLASTIC PAVEMENT MARKING (TYP. AROUND ISLAND) & 10" REFL. PAINT ON ISLAND CURBS

12" WHITE STOP BAR THERMOPLASTIC PAVEMENT MARKING

5+00

4" DOUBLE YELLOW THERMOPLASTIC PAVEMENT MARKING W/TYPE II YELLOW RAISED PAVEMENT MARKERS 80' O.C.

C.L. HWY. 112

4" SKIP WHITE THERMOPLASTIC PAVEMENT MARKING W/TYPE II RED/WHITE RAISED PAVEMENT MARKERS 80' O.C.

4" CONTINUOUS & SKIP YELLOW THERMOPLASTIC PAVEMENT MARKING W/TYPE II YELLOW RAISED PAVEMENT MARKERS 80' O.C.

4" CONTINUOUS & SKIP YELLOW HIGH PERFORMANCE CONTRAST PAVEMENT MARKING W/TYPE II YELLOW RAISED PAVEMENT MARKERS 80' O.C. ON BRIDGE AND APPROACH SLABS

C.L. HWY. 112 TO NB I-49 RAMP

290+00

4" SKIP WHITE HIGH PERFORMANCE CONTRAST PAVEMENT MARKING W/TYPE II RED/WHITE RAISED PAVEMENT MARKERS 80' O.C. ON BRIDGE AND APPROACH SLABS

C.L. I-49 MEDIAN

290+00

290+00

20+00

WORD "ONLY" THERMOPLASTIC

295+00

295+00

4" CONTINUOUS WHITE THERMOPLASTIC PAVEMENT MARKING W/TYPE II RED/WHITE RAISED PAVEMENT MARKERS 80' O.C.

4" SKIP WHITE THERMOPLASTIC PAVEMENT MARKING W/TYPE II RED/WHITE RAISED PAVEMENT MARKERS 80' O.C.

12" WHITE CROSSWALK LINE (TYPICAL)

12" WHITE STOP BAR THERMOPLASTIC PAVEMENT MARKING

4" DOUBLE YELLOW THERMOPLASTIC PAVEMENT MARKING W/TYPE II YELLOW RAISED PAVEMENT MARKERS 80' O.C.

TURN LANE-USE ARROW THERMOPLASTIC

4" SKIP WHITE THERMOPLASTIC PAVEMENT MARKING W/TYPE II RED/WHITE RAISED PAVEMENT MARKERS 80' O.C.

4" DOTTED WHITE THERMOPLASTIC PAVEMENT MARKING (2' STRIPE, 6' GAP)

12" WHITE CROSSWALK LINE (TYPICAL)

12" WHITE STOP BAR THERMOPLASTIC PAVEMENT MARKING

TURN LANE-USE ARROW THERMOPLASTIC

230+00

C.L. C-D ROAD

C.L. HWY. 112 RAMP 4

4" CONTINUOUS WHITE THERMOPLASTIC PAVEMENT MARKING W/TYPE II RED/WHITE RAISED PAVEMENT MARKERS 80' O.C.

4" CONTINUOUS YELLOW HIGH PERFORMANCE PAVEMENT MARKING

4" CONTINUOUS WHITE HIGH PERFORMANCE PAVEMENT MARKING

235+00

WORD "ONLY" THERMOPLASTIC

TURN LANE-USE ARROW THERMOPLASTIC

8" CONTINUOUS WHITE THERMOPLASTIC PAVEMENT MARKING (TYP. AROUND ISLAND) & 10" REFL. PAINT ON ISLAND CURBS

12" WHITE STOP BAR THERMOPLASTIC PAVEMENT MARKING

12" WHITE CROSSWALK LINE (TYPICAL)

8" CONTINUOUS WHITE THERMOPLASTIC PAVEMENT MARKING (TYP. AROUND ISLAND) & 10" REFL. PAINT ON ISLAND CURBS

4" CONTINUOUS WHITE THERMOPLASTIC PAVEMENT MARKING W/TYPE II RED/WHITE RAISED PAVEMENT MARKERS 80' O.C.

C.L. SHILOH DR.

25+00

PERMANENT PAVEMENT MARKING DETAILS

AEWerclok 3/20/2016 11:53:11 AM
WORKSPACE: AHTD
L:\2016\16017\07 - I-540 Widening & Interchange Improvement\Drawings\rBB0414_PM_HWY 112_02.dgn
REVISED DATE:

DATE REVISED	DATE FILMED	DATE REVISED	DATE FILMED	FED.RD. DIST.NO.	STATE	FED.AID PROJ.NO.	SHEET NO.	TOTAL SHEETS
				6	ARK.			
				JOB NO.		BB0414	208	886
				(2)	PERMANENT PAVEMENT MARKING DETAILS			

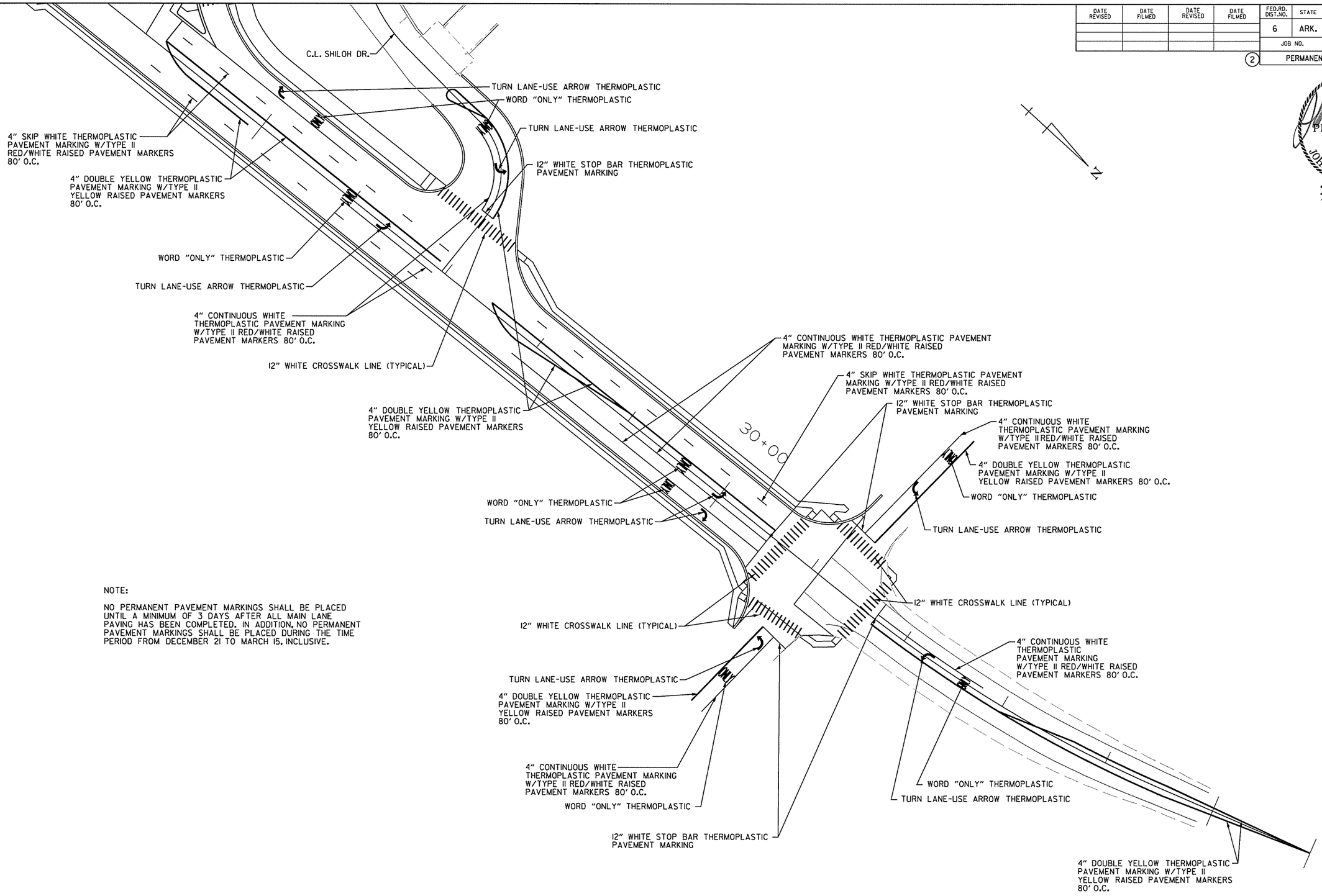

NOTE:

NO PERMANENT PAVEMENT MARKINGS SHALL BE PLACED UNTIL A MINIMUM OF 3 DAYS AFTER ALL MAIN LANE PAVING HAS BEEN COMPLETED. IN ADDITION, NO PERMANENT PAVEMENT MARKINGS SHALL BE PLACED DURING THE TIME PERIOD FROM DECEMBER 21 TO MARCH 15, INCLUSIVE.

PERMANENT PAVEMENT MARKING DETAILS

AEWorclok 3/20/2016 11:53:11 AM
WORKSPACE: AHTD
L:\ZON\101707 - I-540 Widening & Interchange Improvement\Drawings\r-BB0414_PM_HWY 12_03.dgn
REVISED DATE:

DATE REVISED	DATE FILMED	DATE REVISED	DATE FILMED	FED.RD. DIST.NO.	STATE	FED.AID PROJ.NO.	SHEET NO.	TOTAL SHEETS
				6	ARK.			
				JOB NO.		BB0414	209	886

(2) SIGN PLACEMENT SHEET

STATE OF ARKANSAS
REGISTERED PROFESSIONAL ENGINEER
No. 8141
NICCI D. TINER
3-20-16

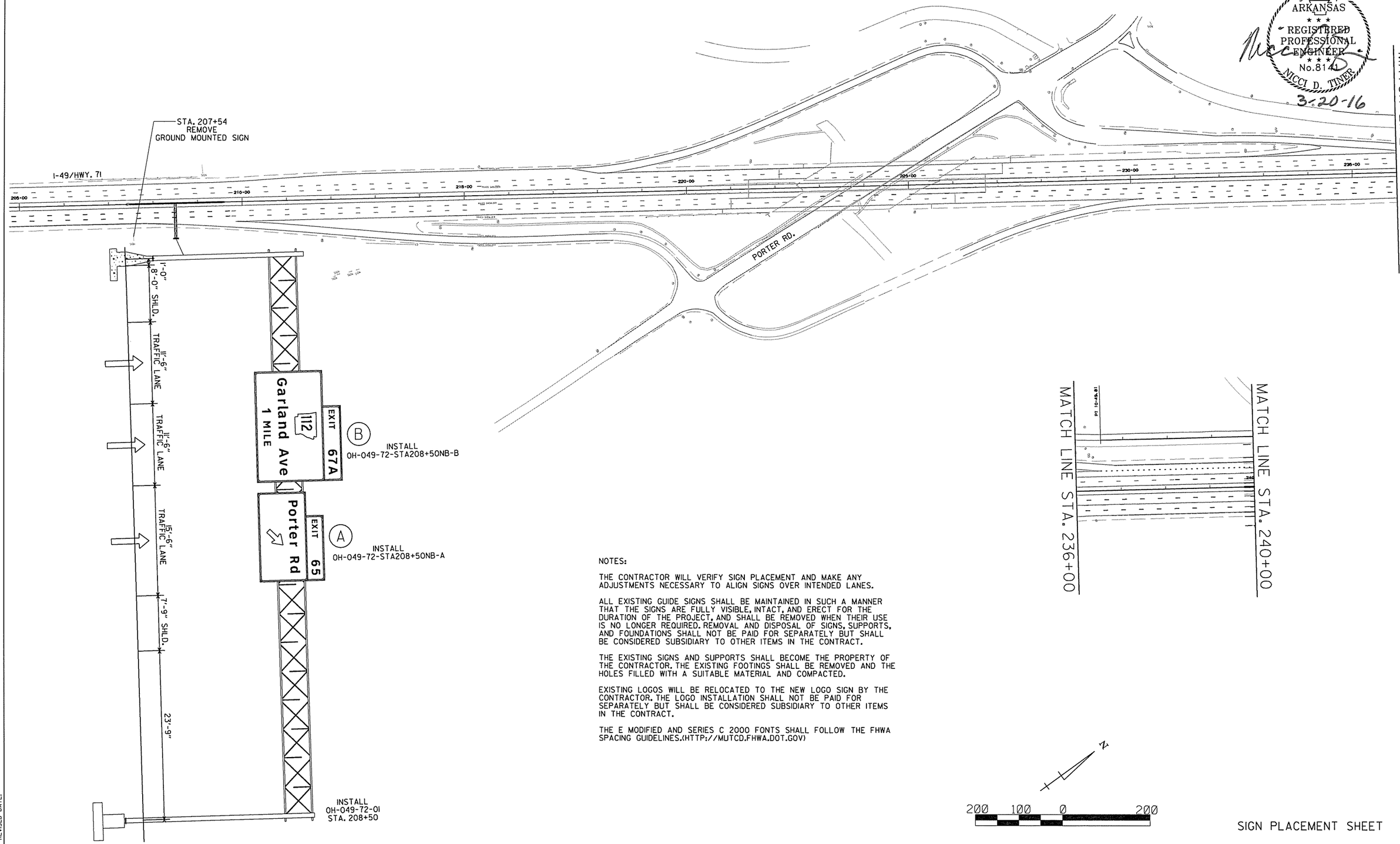

NOTES:

THE CONTRACTOR WILL VERIFY SIGN PLACEMENT AND MAKE ANY ADJUSTMENTS NECESSARY TO ALIGN SIGNS OVER INTENDED LANES.

ALL EXISTING GUIDE SIGNS SHALL BE MAINTAINED IN SUCH A MANNER THAT THE SIGNS ARE FULLY VISIBLE, INTACT, AND ERECT FOR THE DURATION OF THE PROJECT, AND SHALL BE REMOVED WHEN THEIR USE IS NO LONGER REQUIRED. REMOVAL AND DISPOSAL OF SIGNS, SUPPORTS, AND FOUNDATIONS SHALL NOT BE PAID FOR SEPARATELY BUT SHALL BE CONSIDERED SUBSIDIARY TO OTHER ITEMS IN THE CONTRACT.

THE EXISTING SIGNS AND SUPPORTS SHALL BECOME THE PROPERTY OF THE CONTRACTOR. THE EXISTING FOOTINGS SHALL BE REMOVED AND THE HOLES FILLED WITH A SUITABLE MATERIAL AND COMPACTED.

EXISTING LOGOS WILL BE RELOCATED TO THE NEW LOGO SIGN BY THE CONTRACTOR. THE LOGO INSTALLATION SHALL NOT BE PAID FOR SEPARATELY BUT SHALL BE CONSIDERED SUBSIDIARY TO OTHER ITEMS IN THE CONTRACT.

THE E MODIFIED AND SERIES C 2000 FONTS SHALL FOLLOW THE FHWA SPACING GUIDELINES.(HTTP://MUTCD.FHWA.DOT.GOV)

N

200 100 0 200

SIGN PLACEMENT SHEET

AEWierclok 3/20/2016 11:53:12 AM
WORKSPACE: AHTD
L:\201\1\01707 - I-540 Widening & Interchange Improvement\Drawings\rBB0414_SP_MNL_01.dgn
REVISED DATE:

DATE REVISED	DATE FILMED	DATE REVISED	DATE FILMED

FED.RD. DIST.NO.	STATE	FED.AID PROJ.NO.	SHEET NO.	TOTAL SHEETS
6	ARK.			
JOB NO.		BB0414	210	886

(2) SIGN PLACEMENT SHEET

STATE OF ARKANSAS
REGISTERED PROFESSIONAL ENGINEER
No.8141
NICCI D. TINER
3-20-16

MATCH LINE STA. 240+00

MATCH LINE STA. 270+00

STA. 240+01
EXISTING GROUND MOUNTED SIGN TO REMAIN
NOTE: TO BE REMOVED AND REPLACED WITH OH SIGN BY AHTD

REPLACE
GM-049-72-STA241+01SB

Trooper Harry F Locke Sr Memorial Mile

I-49/HWY. 71

REPLACE
SS-049-72-STA241+02NB

STA. 252+57
REMOVE
FOOD AND LODGING
LOGO SIGN

INSTALL
LFL-049-72-STA244+37NB

LODGING-EXIT 67A
MOTEL 6
DAYS INN

FOOD-EXIT 67A
SUBWAY
Stone Mill Road

INSTALL
LG-049-72-STA254+13NB

GAS-EXIT 67A
SAM'S CLUB

STA. 260+21
REMOVE
GAS LOGO SIGN

STA. 263+04
REMOVE
GROUND MOUNTED SIGN

Washington Regional Medical Center EXIT 67B

REPLACE
GM-049-72-STA261+74NB

SS-049-72-STA263+49NB
REMOVE W3-5

STA. 265+02
REMOVE
GROUND MOUNTED SIGN

Fayetteville Business District EXIT 67B

REPLACE
GM-049-72-STA268+32NB

REPLACE
SS-049-72-STA269+75SB

SS-049-72-STA269+75NB
REMOVE R2-1

N

200 100 0 200

SIGN PLACEMENT SHEET

AEWierciak 3/20/2016 11:53:12 AM
WORKSPACE: AHTD
L:\20IN\00\707 - I-540 Widening & Interchange Improvement\Drawings\rBB0414_SP_MNL_02.dgn
REVISED DATE:

DATE REVISED	DATE FILMED	DATE REVISED	DATE FILMED	FED.RD. DIST.NO.	STATE	FED.AID PROJ.NO.	SHEET NO.	TOTAL SHEETS
				6	ARK.			
				JOB NO.		BB0414	211	886

(2) SIGN PLACEMENT SHEET

STATE OF ARKANSAS
REGISTERED PROFESSIONAL ENGINEER
No. 8144
NICCI D. TINER
3-20-16

MATCH LINE STA. 270+00

MATCH LINE STA. 285+00

MATCH LINE STA. 290+00

I-49/HWY. 71

SHILOH DR.

RAMP 4 (FROM GARLAND AVE./HWY. 112)

RAMP 1 (TO GARLAND AVE./HWY. 112)

REPLACE SS-049-72-STA274+71SB

REPLACE SS-049-72-STA286+00SB

TO BE INSTALLED BY OTHERS

TO BE INSTALLED BY OTHERS

REPLACE SS-049-72-STA271+15NB(R)
INSTALL SS-049-72-STA271+15NB(L)

STA. 275+56
REMOVE GROUND MOUNTED SIGN

STA. 278+84
REMOVE WI3-2

STA. 279+72
REMOVE EI-5P

STA. 288+01
REMOVE R5-1A

REPLACE SS-049-72-STA289+06SB(L)
REPLACE SS-049-72-STA289+06SB(R)

STA. 289+06
REMOVE M3-1, MI-5, M5-IL, M3-3, MI-5, M5-IR

INSTALL EX-RAMPI-72-STA281+97NB

REPLACE GM-049-72-STA282+97NB

INSTALL SS-RAMPI-72-STA281+27NB

REPLACE SS-RAMPI-72-STA284+28NB(L)
REPLACE SS-RAMPI-72-STA284+28NB(R)

REPLACE SS-RAMPI-72-STA288+01NB

REPLACE LFL-RAMPI-72-STA285+99NB

REPLACE LG-RAMPI-72-STA287+00NB

INSTALL OH-049-72-STA276+18NB-B

INSTALL OH-049-72-STA276+18NB-A

INSTALL OH-049-72-02 STA. 276+18

13'-0"
12' TRAFFIC LANE
12' TRAFFIC LANE
12' TRAFFIC LANE
12' TRAFFIC LANE
10' SHOULDER
8'-0"

N Fulbright Expwy ½ MILE
71B
EXIT 67B

Garland Ave
112
EXIT 67A

LODGING
FOOD
GAS

200 100 0 200

SIGN PLACEMENT SHEET

AEWierciak 3/20/2016 11:53:12 AM
WORKSPACE: AHTD
L:\20IN\10I770T - I-540 Widening & Interchange Improvement\Drawings\rBB0414_SP_MNL_03.dgn
REVISED DATE:

DATE REVISED	DATE FILMED	DATE REVISED	DATE FILMED	FED.RD. DIST.NO.	STATE	FED.AID PROJ.NO.	SHEET NO.	TOTAL SHEETS
				6	ARK.			
				JOB NO.		BB0414	212	886
				(2)	SIGN PLACEMENT SHEET			

STATE OF ARKANSAS
REGISTERED PROFESSIONAL ENGINEER
No.8141
NICCI D. TINER
3-20-16

REPLACE
LFL-CD-72-STA281+13SB

REPLACE
SS-CD-72-STA279+73SB

REPLACE
LG-CD-72-STA279+73SB

INSTALL
CL-049-72-05
STA. 294+20

INSTALL
CL-CD-72-STA294+20SB

INSTALL
CL-049-72-04
STA. 294+00

INSTALL
CL-049-72-STA294+00SB

REPLACE
SS-CD-72-STA277+55NB(L)

REPLACE
SS-CD-72-STA277+55NB(R)

REPLACE
SS-RAMP4-72-STA296+92SB

REPLACE
SS-CD-72-STA285+00SB

REPLACE
SS-CD-72-STA288+75SB

REMOVE 14 @ VARYING SPACING
INSTALL 12 @ 80' SPACING
SS-CD-72-STA279+15SB
THROUGH
SS-CD-72-STA287+95SB

INSTALL
EX-CD-72-STA290+61SB

INSTALL
OH-049-72-STA290+40NB

INSTALL
OH-049-72-03
STA. 290+40

STA. 291+03
REMOVE
W13-2

STA. 291+69
REMOVE
BRIDGE MOUNTED SIGN

STA. 273+00
REMOVE
BRIDGE MOUNTED SIGN

MATCH LINE
STA. 285+00

MATCH LINE
STA. 290+00

MATCH LINE
STA. 297+00

MATCH LINE
STA. 300+00

SHILOH DR.

RAMP 4 (FROM GARLAND AVE./HWY. 112)

COLLECTOR DISTRIBUTOR RD.

RAMP TO HWY. 112

I-49/HWY. 71

NORTH NORTH
Joplin Mo
49 (BUSINESS)
71

N Fulbright Expwy
NORTH 71B
EXIT 67B
EXIT ONLY

EXIT 67A
112
Garland Ave
EXIT XX MPH

EXIT 65
Porter Rd
1 MILE

13'-0"
12' TRAFFIC LANE
12' TRAFFIC LANE
12' TRAFFIC LANE
12' TRAFFIC LANE
10' SHOULDER
8'-0"

15' TRAFFIC LANE
4' SHLD.
6' SHLD.
9'-9"
10' SHOULDER
6'
24' MERGING TRAFFIC LANE
12' TRAFFIC LANE
12' TRAFFIC LANE
12' TRAFFIC LANE
12' SHOULDER

200 100 0 200

SIGN PLACEMENT SHEET

AEWlarclok 3/20/2016 11:53:13 AM
WORKSPACE: AHTD
L:\X20\1101707 - I-540 Widening & Interchange Improvement\Drawings\r-BB0414_SP_MNL_04.dgn
REVISED DATE:

DATE REVISED	DATE FILMED	DATE REVISED	DATE FILMED	FED.RD. DIST.NO.	STATE	FED.AID PROJ.NO.	SHEET NO.	TOTAL SHEETS
				6	ARK.			
				JOB NO.		BB0414	213	886
				(2)	SIGN PLACEMENT SHEET			

STATE OF ARKANSAS
REGISTERED PROFESSIONAL ENGINEER
No.8141
NICCI D. TINER
3-20-16

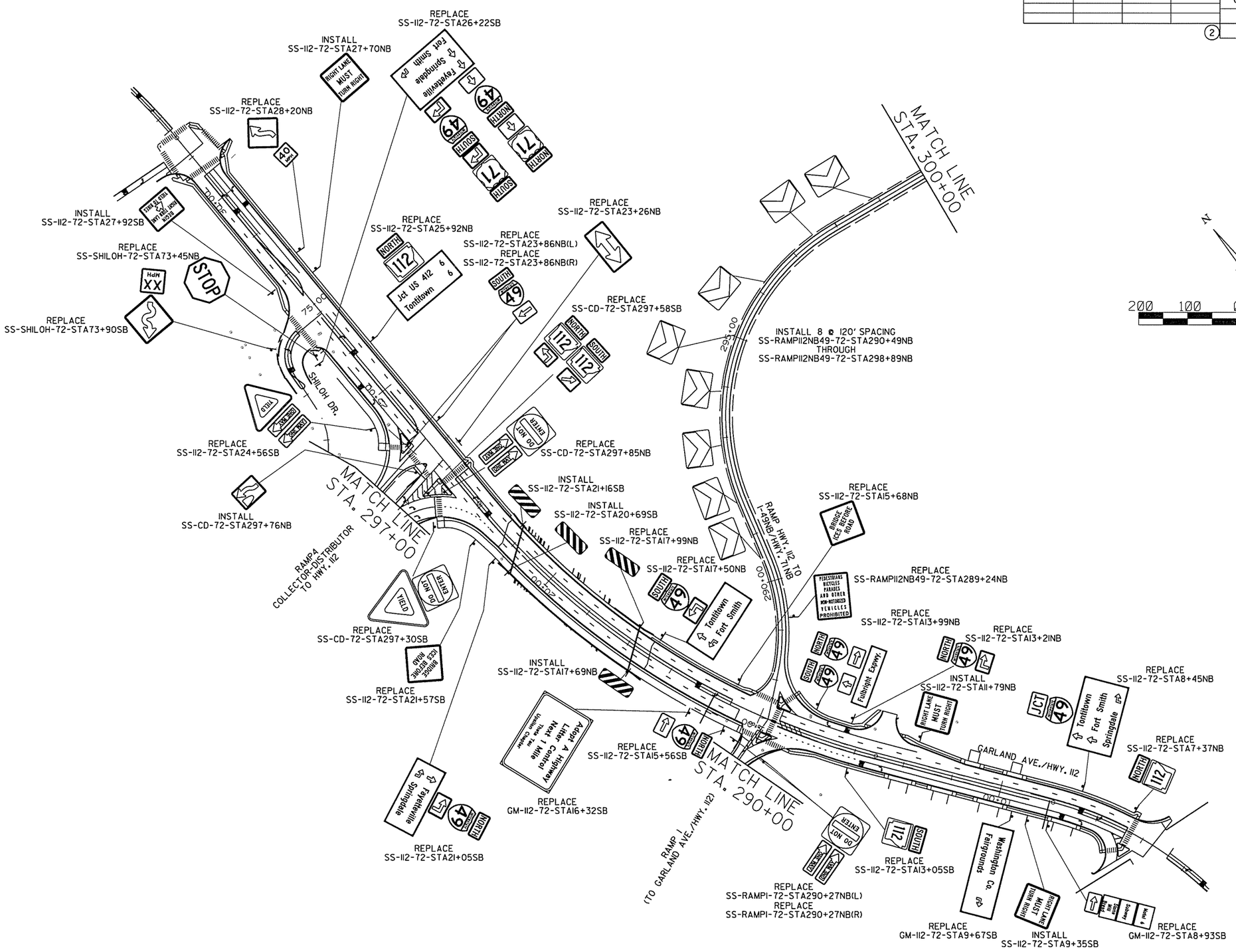

SIGN PLACEMENT SHEET

AEWierclok 3/20/2016 11:53:13 AM
WORKSPACE: AHTD
L:\2011\011707 - I-540 Widening & Interchange Improvement\Drawings\r-BB0414_SP_MNL_05.dgn
REVISED DATE:

DATE REVISED	DATE FILMED	DATE REVISED	DATE FILMED	FED.RD. DIST.NO.	STATE	FED.AID PROJ.NO.	SHEET NO.	TOTAL SHEETS
				6	ARK.			
				JOB NO.		BB0414	214	886

SIGN PLACEMENT SHEET

STATE OF ARKANSAS
REGISTERED PROFESSIONAL ENGINEER
No. 8141
NICCI D. TINER
3-20-16

MATCH LINE STA. 340+00

REPLACE
SS-RAMP49SB7I-72-STA339+76SB(L)
SS-RAMP49SB7I-72-STA339+76SB(R)

REPLACE
SS-RAMP49SB7I-72-STA337+13SB

INSTALL
LFL-RAMP49SBII2-72-STA336+33SB

REMOVE GROUND MOUNTED SIGN

REMOVE 15 @ 80' SPACING
INSTALL 16 @ 120' SPACING
SS-RAMP49SB7I-72-STA337+73SB
THROUGH
SS-RAMP49SB7I-72-STA319+73SB

INSTALL
LG-RAMP49SBII2-72-STA332+39SB

INSTALL
SS-RAMP49SB7I-72-STA33I+50SB(L)

REMOVE GROUND MOUNTED SIGN

INSTALL
SS-RAMP49SB7I-72-STA33I+50SB(R)

REMOVE 6 @ VARIABLE SPACING
INSTALL 10 @ 120' SPACING
SS-RAMP49SBII2-72-STA329+04SB
THROUGH
SS-RAMP49SBII2-72-STA339+84SB

REMOVE GROUND MOUNTED SIGN

REMOVE W4-3

INSTALL
BM-07I-72-01
BM-07I-72-02
STA. 326+39

INSTALL
BM-07I-72-STA326+39SB-A

INSTALL
BM-07I-72-STA326+39SB-B

INSTALL
EX-07I-72-STA3I7+62SB

INSTALL
SS-07I-72-STA302+36SB(L)
INSTALL
SS-07I-72-STA302+36SB(R)

REMOVE SPECIAL SIGN AND OH STRUCTURE

REMOVE R2-I

REMOVE WI-8L

INSTALL
SS-07I-72-STA3I0+76SB(L)
INSTALL
SS-07I-72-STA3I0+76SB(R)

REMOVE SPECIAL SIGN AND OH STRUCTURE

INSTALL 16 @ 160' SPACING
SS-049-72-STA3I0+90SB
THROUGH
SS-049-72-STA334+90SB

REMOVE W8-13

REMOVE E5-I

INSTALL
SS-049-72-STA324+93NB

REMOVE GROUND MOUNTED SIGN

INSTALL
SS-07I-72-STA3I6+62SB(L)
INSTALL
SS-07I-72-STA3I6+62SB(R)

REMOVE W8-13

INSTALL
SS-049-72-STA3I9+87NB
INSTALL
SS-RAMPII2NB49-72-STA3I9+20NB

REMOVE WI-4, WI3-IP

INSTALL 16 @ 160' SPACING
SS-049-72-STA3I0+90NB
THROUGH
SS-049-72-STA334+90NB

INSTALL
SS-049-72-STA325+42NB

INSTALL
SS-049-72-STA327+60SB

INSTALL
SS-049-72-STA327+94SB

INSTALL
SS-049-72-STA332+60SB

INSTALL
SS-RAMPII2NB49-72-STA324+44NB

INSTALL
SS-RAMPII2NB49-72-STA324+00NB

INSTALL 8 @ 120' SPACING
SS-RAMP49NB7I-72-STA3I2+90NB
THROUGH
SS-RAMP49NB7I-72-STA32I+30NB

INSTALL 8 @ 120' SPACING
SS-RAMPII2NB49-72-STA308+I8NB
THROUGH
SS-RAMPII2NB49-72-STA3I6+58NB

INSTALL
SS-RAMPII2NB49-72-STA3I2+I8NB

INSTALL
SS-RAMPII2NB49-72-STA3II+96NB

INSTALL 7 @ 120' SPACING
SS-RAMPII2T07I-72-STA307+95NB
THROUGH
SS-RAMPII2T07I-72-STA3I5+I5NB

INSTALL
EX-049-72-STA309+69NB

REPLACE
SS-RAMP49NB7I-72-STA309+I2NB

INSTALL
SS-RAMPII2T07I-72-STA304+48NB

INSTALL
SS-RAMPII2T07I-72-STA302+77NB

REPLACE
SS-RAMPII2NB49-72-STA306+90NB

INSTALL
SS-049-72-STA303+94NB
REMOVE R2-I

INSTALL
SS-049-72-STA30I+72SB
REMOVE GROUND MOUNTED SIGN

INSTALL
SS-049-72-STA303+85SB
REMOVE R2-I

INSTALL
GM-07I-72-STA329+00SB

REMOVE W4-2R
REMOVE W9-I

REMOVE 2 @ 80' SPACING
INSTALL 2 @ 120' SPACING
SS-RAMP49NB7I-72-STA33I+I7NB
THROUGH
SS-RAMP49NB7I-72-STA332+37NB

REPLACE
SS-RAMP49NB7I-72-STA332+43NB

REMOVE 6 @ 80' SPACING
INSTALL 7 @ 120' SPACING
SS-RAMP49NB7I-72-STA322+77NB
THROUGH
SS-RAMP49NB7I-72-STA329+97NB

INSTALL
GM-RAMP49SB7I-72-STA3I2+00SB

INSTALL
INSTALL 11 @ 120' SPACING
SS-RAMPII2NB49-72-STA322+20NB
THROUGH
SS-RAMPII2NB49-72-STA334+20NB

MATCH LINE STA. 335+00

MATCH LINE STA. 333+00

MATCH LINE STA. 300+00

MATCH LINE STA. 300+00

N

200 100 0 200

I-49/HWY. 71

COLLECTOR DISTRIBUTOR RD.

HWY. 71 TO I-49SB

RAMP I-49SB TO HWY. 112

RAMP I-49NB TO HWY. 71

RAMP HWY. 112 TO I-49NB/HWY. 71NB

RAMP HWY. 112 TO I-49NB

RAMP HWY. 112 TO HWY. 71

I-49NB

HWY. 71

10' SHLD.
12' TRAFFIC LANE
12' TRAFFIC LANE
4' SHLD

Fulbright Expwy

LODGING-EXIT 67A
HOTEL 6
DAYS INN
FOOD-EXIT 67A
SUBWAY
STONE MILL GRILL

GAS-EXIT 67A
JANET CLUB

EXIT 67A
112
Garland Ave
SOUTH SOUTH
71
49
Fort Smith

EXIT 67B

University of Arkansas EXIT 67A

Washington Regional Medical Center NEXT EXIT

BRIDGE ICES BEFORE ROAD

RIGHT LANE ENDS
½ MILE

LANE ENDS MERGE LEFT

AEWierdak 3/20/2016 11:53:14 AM
WORKSPACE: AHTD
L:\20IN\10I7\07 - I-540 Widening & Interchange Improvement\Drawings\BB0414_SP_MNL_06.dgn
REVISED DATE:

SIGN PLACEMENT SHEET

DATE REVISED	DATE FILMED	DATE REVISED	DATE FILMED	FED.RD. DIST.NO.	STATE	FED.AID PROJ.NO.	SHEET NO.	TOTAL SHEETS
				6	ARK.			
				JOB NO.		BB0414	215	886
				(2)	SIGN PLACEMENT SHEET			

STATE OF ARKANSAS
REGISTERED PROFESSIONAL ENGINEER
No. 8141
NICCI D. TINER
4-19-16

MATCH LINE STA. 340+00

MATCH LINE STA. 365+00

MATCH LINE STA. 335+00

I-49/HWY. 71

RAMP I-49SB TO HWY. 112

RAMP I-49SB TO HWY. 71

HWY. 112 TO I-49NB

HWY. 71 TO I-49NB

INSTALL EX-RAMP49SB71-72-STA345+36SB

INSTALL 5 @ 120' SPACING SS-RAMP49SB71-72-STA345+40SB THROUGH SS-RAMP49SB71-72-STA340+60SB

REMOVE E5-1

INSTALL SS-RAMP49SB71-72-STA347+94SB

REMOVE W13-2

REMOVE EXISTING OH STRUCTURE AND SIGNS

INSTALL EX-RAMP49SBII2-72-STA351+93SB

INSTALL SS-RAMP49SB71-72-STA351+97SB

REMOVE R2-1, R2-2

REPLACE GM-049-72-STA359+40SB

REPLACE SS-049-72-STA358+79SB

REMOVE GROUND MOUNTED SIGN

REMOVE GROUND MOUNTED SIGN

INSTALL SS-049-72-STA364+09NB

INSTALL SS-049-72-STA355+50SB

INSTALL 2 @ 120' SPACING SS-RAMP49SBII2-72-STA341+04SB THROUGH SS-RAMP49SBII2-72-STA342+24SB

REPLACE SS-RAMP49SBII2-72-STA344+81SB(L)

REPLACE SS-RAMP49SBII2-72-STA344+81SB(R)

REPLACE SS-RAMPII2NB49-72-STA345+44NB(L)

REMOVE W8-13

INSTALL SS-049-72-STA342+94NB(L)

INSTALL SS-049-72-STA342+94NB(R)

REPLACE SS-RAMPII2NB49-72-STA345+44NB(R)

INSTALL 5 @ 160' SPACING SS-049-72-STA336+50SB THROUGH SS-049-72-STA342+90SB

REPLACE SS-RAMPII2NB49-72-STA343+41NB(L)

REPLACE SS-RAMPII2NB49-72-STA343+41NB(R)

INSTALL 6 @ 160' SPACING SS-049-72-STA335+40NB THROUGH SS-049-72-STA343+40NB

TO BE INSTALLED BY OTHERS

TO BE INSTALLED BY OTHERS

INSTALL 3 @ 120' SPACING SS-RAMPII2NB49-72-STA335+40NB THROUGH SS-RAMPII2NB49-72-STA337+80NB

INSTALL LL-049-72-STA360+69NB

INSTALL SS-049-72-STA358+97NB

INSTALL OH-049-72-STA355+50SB-A

INSTALL OH-049-72-STA355+50SB-B

INSTALL OH-049-72-06 STA. 355+50

8'-0" GRDRL WIDENING

5'-6"

6' SHLD.

12' TRAFFIC LANE

24' DECISION LANE

12' TRAFFIC LANE

12' TRAFFIC LANE

12' SHOULDER

6'-0"

200 100 0 200

N

SIGN PLACEMENT SHEET

AEWlerclak 4/14/2016 2:32:06 PM
WORKSPACE: AHTD
L:\20IN\10I7707 - I-540 Widening & Interchange Improvement\Drawings\rBB0414_SP_MNL_07.dgn
REVISED DATE:

DATE REVISED	DATE FILMED	DATE REVISED	DATE FILMED	FED.RD. DIST.NO.	STATE	FED.AID PROJ.NO.	SHEET NO.	TOTAL SHEETS
				6	ARK.			
				JOB NO.		BB0414	216	886
				(2)	SIGN PLACEMENT SHEET			

STATE OF ARKANSAS
REGISTERED PROFESSIONAL ENGINEER
No.8141
MICCI D. TINER
3-20-16

N

200 100 0 200

INSTALL GM-049-72-STA375+25SB

INSTALL GM-049-72-STA373+00SB

INSTALL SS-049-72-STA371+50SB

SS-049-72-STA369+55SB
REMOVE W3-5

INSTALL SS-049-72-STA366+44SB

MATCH LINE STA. 365+00

I-49

REMOVE GROUND MOUNTED SIGN

INSTALL LF-049-72-STA372+59NB

INSTALL OH-049-72-STA377+00 SB-A

INSTALL OH-049-72-STA377+00SB-B

INSTALL OH-049-72-07 STA. 377+00

REPLACE GM-049-72-STA378+19NB

INSTALL SS-049-72-STA383+19NB

REMOVE GROUND MOUNTED SIGN

MATCH LINE STA. 395+00

INSTALL OH-049-72-STA458+09SB-A

INSTALL OH-049-72-STA458+09SB-B

INSTALL OH-049-72-09 STA. 458+09

REMOVE GROUND MOUNTED SIGN

I-49 SB TO JOHNSON MILL BLVD

JOHNSON MILL BLVD TO I-49 NB

INSTALL CL-049-72-STA390+63NB

INSTALL CL-049-72-08 STA. 390+63

SIGN PLACEMENT SHEET

AEWierciak 3/20/2016 11:53:15 AM
WORKSPACE: AHTD
L:\2014\10077107 - I-540 Widening & Interchange Improvement\Drawings\rBB0414_SP_MNL_08.dgn
REVISED DATE:

DATE REVISED	DATE FILMED	DATE REVISED	DATE FILMED	FED.RD. DIST.NO.	STATE	FED.AID PROJ.NO.	SHEET NO.	TOTAL SHEETS
				6	ARK.			
				JOB NO.		BB0414	217	886

(2) SIGN PLACEMENT SHEET

STATE OF ARKANSAS
REGISTERED PROFESSIONAL ENGINEER
No.8141
NICCI D. TINER
3-20-16

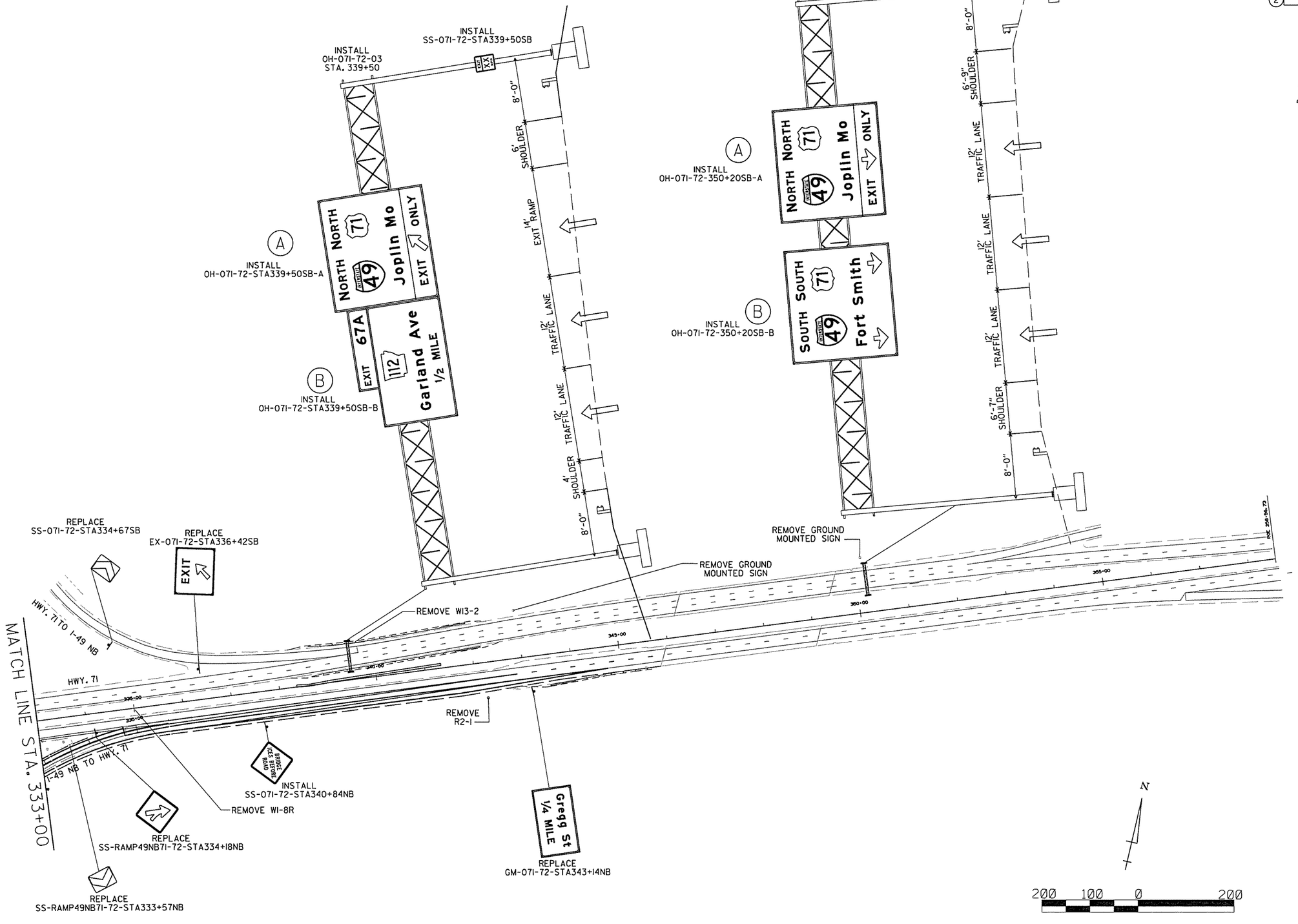

SIGN PLACEMENT SHEET

AEWarelak 3/20/2016 11:53:15 AM
WORKSPACE: AHTD
L:\20IN\10I7107 - I-540 Widening & Interchange Improvement\Drawings\r-BB0414_SP_MNL_09.dgn
REVISED DATE:

DATE REVISED	DATE FILMED	DATE REVISED	DATE FILMED	FED.RD. DIST.NO.	STATE	FED.AID PROJ.NO.	SHEET NO.	TOTAL SHEETS
				6	ARK.			
				JOB NO.		BB0414	218	886

(2) SIGN PLACEMENT SHEET

STATE OF ARKANSAS
REGISTERED PROFESSIONAL ENGINEER
No. 8141
NICCI D. TINER

3-20-16

SOUTH
M3-3 (24"x12")

112
MI-5 (30"X24")

SS-II2-72-STAI3+05SB

NORTH
M3-1 (24"x12")

112
MI-5 (30"X24")

SS-II2-72-STA7+37NB

NORTH
M3-1 (24"x12")

INTERSTATE
49
MI-1 (24"X24")

M5-IR (21"XI5")

SS-II2-72-STAI3+2INB

SOUTH
M3-3 (24"x12")

INTERSTATE
49
MI-1 (24"X24")

M6-IL (21"XI5")

SS-II2-72-STA23+86NB(L)
SS-II2-72-STA23+86NB(R)

NORTH
M3-1 (24"x12")

112
MI-5 (30"X24")

M5-IL (21"XI5")

SOUTH
M3-3 (24"x12")

112
MI-5 (30"X24")

M5-IR (21"XI5")

SS-RAMPI-72-STA288+0INB

SOUTH
M3-3 (24"x12")

INTERSTATE
49
MI-1 (24"X24")

M6-3 (21"XI5")

NORTH
M3-1 (24"x12")

INTERSTATE
49
MI-1 (24"X24")

M6-IR (21"XI5")

Fulbright Expwy.

6 6 6 6 6 6 1'-6"

4.8 28.1 6 22.3 4.8

5'-6"

D3-1
2.25" Radius, 0.75" Border, White on Green;
[Fulbright Expwy.] Highway C 2K;
SS-II2-72-STAI3+99NB

NORTH
M3-1 (24"x12")

INTERSTATE
49
MI-1 (24"X24")

M6-IL (21"XI5")

SS-II2-72-STAI5+56SB

SOUTH
M3-3 (36"XI8")

INTERSTATE
49
MI-1 (36"X36")

SS-049-72-STA274+7ISB

NORTH
M3-1 (36"xI8")

INTERSTATE
49
MI-1 (36"X36")

SS-RAMPII2NB49-72-STA345+44NB(R)
SS-RAMPII2NB49-72-STA345+44NB(L)

NORTH
M3-1 (24"x12")

INTERSTATE
49
MI-1 (24"X24")

M6-2L (21"XI5")

NORTH
M3-1 (24"x12")

71B
MI-4 (30"X24")

M6-2R (21"XI5")

SS-RAMPII2T07I-72-STA302+77NB

NORTH
M3-1 (24"x12")

112
MI-5 (30"X24")

M5-IL (21"XI5")

SOUTH
M3-3 (24"x12")

112
MI-5 (30"X24")

M6-2R (21"XI5")

SS-CD-72-STA297+58SB

AEWerclok 3/20/2016 1:10:21 PM
WORKSPACE: AHTD
L:\2011\110717OT - I-540 Widening & Interchange Improvement\Drawings\r-BB0414_SP_MNL_10-26.dgn
REVISED DATE:

DATE REVISED	DATE FILMED	DATE REVISED	DATE FILMED	FED.RD. DIST.NO.	STATE	FED.AID PROJ.NO.	SHEET NO.	TOTAL SHEETS
				6	ARK.			
				JOB NO.		BB0414	219	886

(2) SIGN PLACEMENT SHEET

STATE OF ARKANSAS
REGISTERED PROFESSIONAL ENGINEER
No.8141
NICCI D. TINER
3-20-16

NORTH
M3-1 (24"x12")

112
MI-5 (30"X24")

LEFT LANE
M5-4L (24"XI8")

Tontitown
Cave Springs

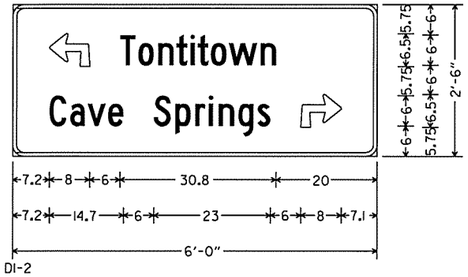

DI-2
2.25" Radius, 0.75" Border, White on Green;
90 Deg Advanced Turn Arrow 8.0" X 6.5";
[Tontitown] Highway C 2K;
[Cave Springs] Highway C 2K;
90 Deg Advanced Turn Arrow 8.0" X 6.5";
SS-CD-72-STA279+73SB

NORTH
M3-1 (24"x12")

INTERSTATE
49
MI-1 (24"X24")

M5-IL (2I"XI5")

Fayetteville
Springdale

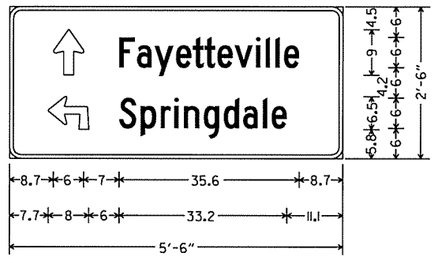

DI-2
2.25" Radius, 0.75" Border, White on Green;
Standard Arrow Custom 9.0" X 6.0" 90°;
[Fayetteville] Highway C 2K;
90 Deg Advanced Turn Arrow 8.0" X 6.5";
[Springdale] Highway C 2K;
SS-II2-72-STA2I+05SB

NORTH
M3-1 (24"x12")

71
MI-4 (24"x24")

M6-3 (2I"XI5")

NORTH
M3-1 (24"x12")

INTERSTATE
49
MI-1 (24"X24")

M6-3 (2I"XI5")

Fayetteville
Springdale
Fort Smith

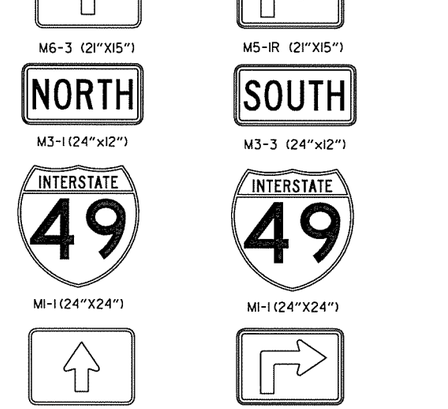

DI-3
2.25" Radius, 0.75" Border, White on Green;
Standard Arrow Custom 9.0" X 6.0" 90°;
[Tontitown] Highway C 2K;
Standard Arrow Custom 9.0" X 6.0" 90°;
[Springdale] Highway C 2K;
[Fort Smith] Highway C 2K;
90 Deg Advanced Turn Arrow 8.0" X 6.5";
SS-II2-72-STA26+22SB

SOUTH
M3-3 (24"x12")

71
MI-4 (24"x24")

M5-IR (2I"XI5")

SOUTH
M3-3 (24"x12")

INTERSTATE
49
MI-1 (24"X24")

M5-IR (2I"XI5")

Fulbright Expwy.

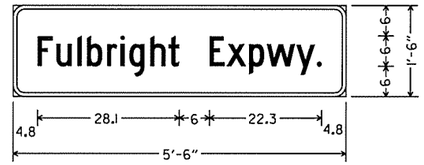

D3-1
2.25" Radius, 0.75" Border, White on Green;
[Fulbright Expwy.] Highway C 2K;
SS-RAMPII2T07I-72-STA304+48NB

SOUTH
M3-3 (24"x12")

INTERSTATE
49
MI-1 (24"X24")

M5-IL (2I"XI5")

Tontitown
Fort Smith

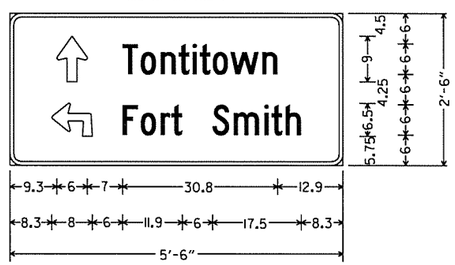

DI-2
2.25" Radius, 0.75" Border, White on Green;
Standard Arrow Custom 9.0" X 6.0" 90°;
[Tontitown] Highway C 2K;
90 Deg Advanced Turn Arrow 8.0" X 6.5";
[Forth Smith] Highway C 2K;
SS-II2-72-STAI7+50NB

NORTH
M3-1 (24"x12")

112
MI-5 (30"X24")

Jct US 412 6
Tontitown 6

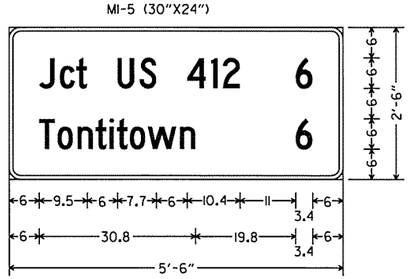

D2-2
2.25" Radius, 0.75" Border, White on Green;
[Jct US 412] Highway C 2K;
[6] Highway C 2K;
[Tontitown] Highway C 2K;
[6] Highway C 2K;
SS-II2-72-STA25+92NB

JCT
M2-1 (2I"XI5")

INTERSTATE
49
MI-1 (24"X24")

Tontitown
Fort Smith
Springdale

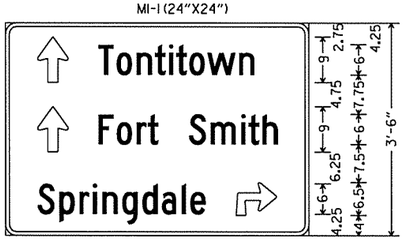

DI-3
2.25" Radius, 0.75" Border, White on Green;
Standard Arrow Custom 9.0" X 6.0" 90°;
[Tontitown] Highway C 2K;
Standard Arrow Custom 9.0" X 6.0" 90°;
[Fort Smith] Highway C 2K;
[Springdale] Highway C 2K;
90 Deg Advanced Turn Arrow 8.0" X 6.5";
SS-II2-72-STA8+45NB

AEWerclok 3/20/2016 10:21 PM
WORKSPACE: AHTD
L:\ZON\I007107 - I-540 Widening & Interchange Improvement\Drawings\rBB0414_SP_MNL_10-26.dgn
REVISED DATE:

SIGN PLACEMENT SHEET

DATE REVISED	DATE FILMED	DATE REVISED	DATE FILMED	FED.RD. DIST.NO.	STATE	FED.AID PROJ.NO.	SHEET NO.	TOTAL SHEETS
				6	ARK.			
				JOB NO.		BB0414	220	886
				(2)	SIGN PLACEMENT SHEET			

W1-4L (36"X36")

W13-1P (24"X24")
SS-112-72-STA28+20NB

W1-5 (36"X36")

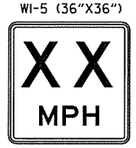

W13-1P (24"X24")
SS-SHILOH-72-STA73+90SB

W8-13 (36"X36")
SS-112-72-STA15+68NB
SS-112-72-STA21+57SB

W8-13 (48"X48")
SS-049-72-STA319+87NB
SS-RAMP112NB49-72-STA306+90NB
SS-RAMP112NB49-72-STA319+20NB
SS-049-72-STA332+60SB
SS-RAMP49SB71-72-STA337+13SB
SS-071-72-STA340+84NB
SS-049-72-STA358+97NB
SS-049-72-STA371+50SB

R6-1L (36"X12")

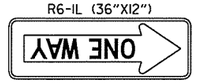

R6-1R (36"X12")

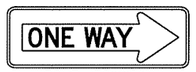

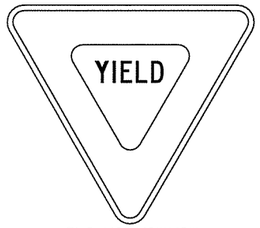

R1-2 (48"X48"X48")
SS-112-72-STA24+56SB

W9-1R (48"X48")

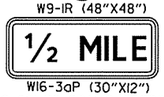

W16-3aP (30"X12")
SS-071-72-STA316+62SB(L)
SS-071-72-STA316+62SB(R)

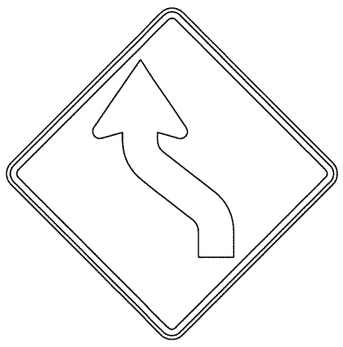

W1-4L (48"X48")

W13-1P (24"X24")
SS-RAMP49SB71-72-STA339+76SB(L)
SS-RAMP49SB71-72-STA339+76SB(R)

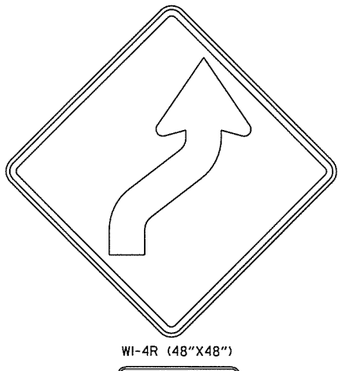

W1-4R (48"X48")

W13-1P (24"X24")
SS-049-72-STA271+15NB(L)
SS-049-72-STA271+15NB(R)
SS-RAMP49SBII2-72-STA344+81SB(R)
SS-RAMP49SBII2-72-STA344+81SB(L)

R5-1 (36"X36")

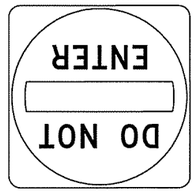

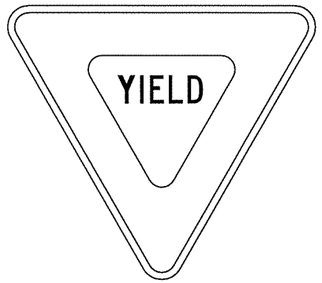

R1-2 (60"X60"X60")
SS-CD-72-STA297+30SB

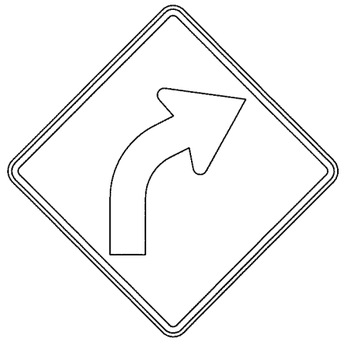

W1-2R (48"X48")
SS-RAMP112NB49-72-STA343+41NB(L)
SS-RAMP112NB49-72-STA343+41NB(R)
SS-049-72-STA342+94NB(L)
SS-049-72-STA342+94NB(R)

W9-2TL (48"X48")
SS-071-72-STA310+76SB(L)
SS-071-72-STA310+76SB(R)

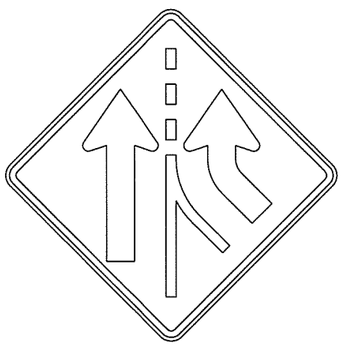

W4-3R (48"X48")
SS-049-72-STA286+00SB

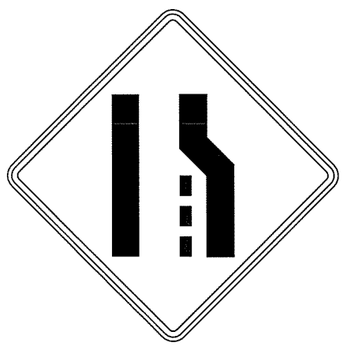

W4-2R (48"X48")
SS-071-72-STA302+36SB(L)
SS-071-72-STA302+36SB(R)

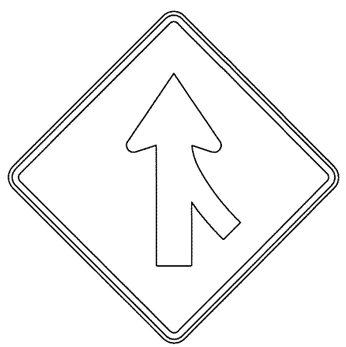

W4-1R (48"X48")
SS-RAMP49NB71-72-STA334+18NB

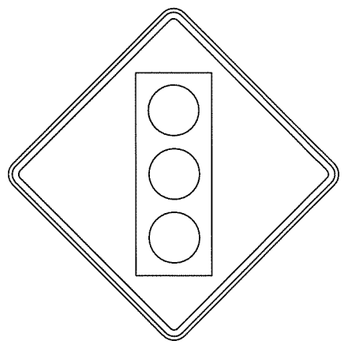

W3-3 (48"X48")
SS-RAMP1-72-STA284+28NB(L)
SS-RAMP1-72-STA284+28NB(R)
SS-CD-72-STA285+00SB

STATE OF ARKANSAS
REGISTERED PROFESSIONAL ENGINEER
No.8141
MICCI D. TINER
3-20-16

AEWarelick 3/20/2016 10:21 PM
WORKSPACE: AHTD
L:\201\101707 - I-540 Widening & Interchange Improvement\Drawings\rBB0414_SP_MNL_10-26.dgn
REVISED DATE:

DATE REVISED	DATE FILMED	DATE REVISED	DATE FILMED	FED.RD. DIST.NO.	STATE	FED.AID PROJ.NO.	SHEET NO.	TOTAL SHEETS
				6	ARK.			
				JOB NO.		BB0414	221	886
				(2)	SIGN PLACEMENT SHEET			

R2-1(48"X60")
SS-049-72-STA383+19NB

R2-1(48"X60")
SS-049-72-STA241+02NB
SS-049-72-STA269+75SB
SS-049-72-STA358+79SB

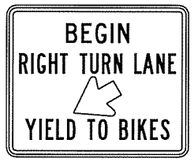

R4-4 (36"X30")
SS-112-72-STA27+92SB

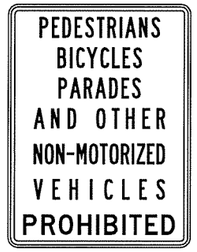

R5-10A (36"X48")
SS-RAMP4-72-STA296+92SB
SS-RAMPII2NB49-72-STA289+24NB

R3-7R (36"X36")
SS-112-72-STAII+79NB
SS-112-72-STA27+70NB
SS-112-72-STA9+35SB

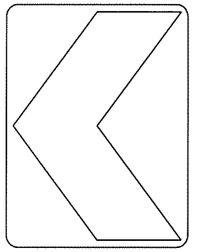

WI-8L (36"X48")
SS-RAMPII2T07I-72-STA307+95NB
SS-RAMPII2T07I-72-STA309+15NB
SS-RAMPII2T07I-72-STA310+35NB
SS-RAMPII2T07I-72-STA311+55NB
SS-RAMPII2T07I-72-STA312+75NB
SS-RAMPII2T07I-72-STA313+95NB
SS-RAMPII2T07I-72-STA315+15NB
SS-RAMPII2NB49-72-STA308+18NB
SS-RAMPII2NB49-72-STA309+38NB
SS-RAMPII2NB49-72-STA310+58NB
SS-RAMPII2NB49-72-STA311+78NB
SS-RAMPII2NB49-72-STA312+98NB
SS-RAMPII2NB49-72-STA314+18NB
SS-RAMPII2NB49-72-STA315+38NB
SS-RAMPII2NB49-72-STA316+58NB
SS-RAMP49NB7I-72-STA312+90NB
SS-RAMP49NB7I-72-STA314+10NB
SS-RAMP49NB7I-72-STA315+30NB
SS-RAMP49NB7I-72-STA316+50NB
SS-RAMP49NB7I-72-STA317+70NB
SS-RAMP49NB7I-72-STA318+90NB
SS-RAMP49NB7I-72-STA320+10NB
SS-RAMP49NB7I-72-STA321+30NB
SS-RAMP49NB7I-72-STA322+77NB
SS-RAMP49NB7I-72-STA323+97NB
SS-RAMP49NB7I-72-STA325+17NB
SS-RAMP49NB7I-72-STA326+37NB
SS-RAMP49NB7I-72-STA327+57NB
SS-RAMP49NB7I-72-STA328+77NB
SS-RAMP49NB7I-72-STA329+97NB
SS-049-72-STA310+90NB
SS-049-72-STA312+50NB
SS-049-72-STA314+10NB
SS-049-72-STA315+70NB
SS-049-72-STA317+30NB
SS-049-72-STA318+90NB
SS-049-72-STA320+50NB
SS-049-72-STA322+10NB
SS-049-72-STA323+70NB
SS-049-72-STA325+30NB
SS-049-72-STA326+90NB
SS-049-72-STA328+50NB
SS-049-72-STA330+10NB
SS-049-72-STA331+70NB
SS-049-72-STA333+30NB
SS-049-72-STA334+90NB
SS-RAMPII2NB49-72-STA322+20NB
SS-RAMPII2NB49-72-STA323+40NB
SS-RAMPII2NB49-72-STA324+60NB
SS-RAMPII2NB49-72-STA325+80NB
SS-RAMPII2NB49-72-STA327+00NB
SS-RAMPII2NB49-72-STA328+20NB
SS-RAMPII2NB49-72-STA329+40NB
SS-RAMPII2NB49-72-STA330+60NB
SS-RAMPII2NB49-72-STA331+80NB
SS-RAMPII2NB49-72-STA333+00NB
SS-RAMPII2NB49-72-STA334+20NB
SS-RAMP49SB7I-72-STA319+73SB
SS-RAMP49SB7I-72-STA320+93SB
SS-RAMP49SB7I-72-STA322+13SB
SS-RAMP49SB7I-72-STA323+33SB
SS-RAMP49SB7I-72-STA324+53SB
SS-RAMP49SB7I-72-STA325+73SB
SS-RAMP49SB7I-72-STA326+93SB
SS-RAMP49SB7I-72-STA328+13SB
SS-RAMP49SB7I-72-STA329+33SB
SS-RAMP49SB7I-72-STA330+53SB
SS-RAMP49SB7I-72-STA331+73SB
SS-RAMP49SB7I-72-STA332+93SB
SS-RAMP49SB7I-72-STA334+13SB
SS-RAMP49SB7I-72-STA335+33SB
SS-RAMP49SB7I-72-STA336+53SB
SS-RAMP49SB7I-72-STA337+73SB
SS-RAMPII2NB49-72-STA335+40NB
SS-RAMPII2NB49-72-STA336+60NB
SS-RAMPII2NB49-72-STA337+80NB
SS-049-72-STA335+40NB
SS-049-72-STA337+00NB
SS-049-72-STA338+60NB
SS-049-72-STA340+20NB
SS-049-72-STA341+80NB
SS-049-72-STA343+40NB

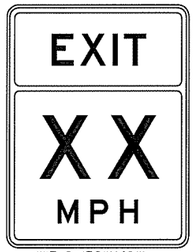

WI3-2 (36"X48")
SS-RAMPI-72-STA281+27NB
SS-RAMP49NB7I-72-STA309+12NB
SS-RAMP49SB7I-72-STA347+94SB
SS-RAMP49SB7I-72-STA351+97SB

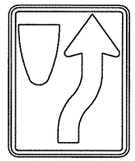

R4-7 (24"X30")
SS-CD-72-STA297+76NB

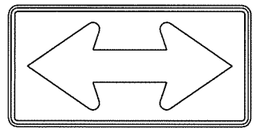

WI-7 (48"X24")
SS-112-72-STA23+26NB

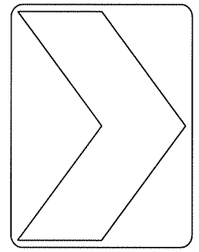

WI-8R (36"X48")
SS-CD-72-STA279+15SB
SS-CD-72-STA279+95SB
SS-CD-72-STA280+75SB
SS-CD-72-STA281+55SB
SS-CD-72-STA282+35SB
SS-CD-72-STA283+15SB
SS-CD-72-STA283+95SB
SS-CD-72-STA284+75SB
SS-CD-72-STA285+55SB
SS-CD-72-STA286+35SB
SS-CD-72-STA287+15SB
SS-CD-72-STA287+95SB
SS-RAMPII2NB49-72-STA290+49NB
SS-RAMPII2NB49-72-STA291+69NB
SS-RAMPII2NB49-72-STA292+89NB
SS-RAMPII2NB49-72-STA294+09NB
SS-RAMPII2NB49-72-STA295+29NB
SS-RAMPII2NB49-72-STA296+49NB
SS-RAMPII2NB49-72-STA297+69NB
SS-RAMPII2NB49-72-STA298+89NB
SS-RAMP49NB7I-72-STA331+17NB
SS-RAMP49NB7I-72-STA332+37NB
SS-RAMP49NB7I-72-STA333+57NB
SS-049-72-STA310+90SB
SS-049-72-STA312+50SB
SS-049-72-STA314+10SB
SS-049-72-STA315+70SB
SS-049-72-STA317+30SB
SS-049-72-STA318+90SB
SS-049-72-STA320+50SB
SS-049-72-STA322+10SB
SS-049-72-STA323+70SB
SS-049-72-STA325+30SB
SS-049-72-STA326+90SB
SS-049-72-STA328+50SB
SS-049-72-STA330+10SB
SS-049-72-STA331+70SB
SS-049-72-STA333+30SB
SS-049-72-STA334+90SB
SS-RAMP49SBII2-72-STA329+04SB
SS-RAMP49SBII2-72-STA330+24SB
SS-RAMP49SBII2-72-STA331+44SB
SS-RAMP49SBII2-72-STA332+64SB
SS-RAMP49SBII2-72-STA333+84SB
SS-RAMP49SBII2-72-STA335+04SB
SS-RAMP49SBII2-72-STA336+24SB
SS-RAMP49SBII2-72-STA337+44SB
SS-RAMP49SBII2-72-STA338+64SB
SS-RAMP49SBII2-72-STA339+84SB
SS-049-72-STA336+50SB
SS-049-72-STA338+10SB
SS-049-72-STA339+70SB
SS-049-72-STA341+30SB
SS-049-72-STA342+90SB
SS-RAMP49SBII2-72-STA341+04SB
SS-RAMP49SBII2-72-STA342+24SB
SS-RAMP49SB7I-72-STA340+60SB
SS-RAMP49SB7I-72-STA341+80SB
SS-RAMP49SB7I-72-STA343+00SB
SS-RAMP49SB7I-72-STA344+20SB
SS-RAMP49SB7I-72-STA345+40SB
SS-071-72-STA334+67SB

RI-1 (36"X36")
SS-SHILOH-72-STA73+45NB

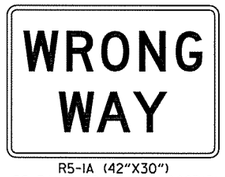

R5-1A (42"X30")
SS-RAMPI-72-STA289+06SB(R)
SS-RAMPI-72-STA289+06SB(L)
SS-CD-72-STA277+55NB(R)
SS-CD-72-STA277+55NB(L)

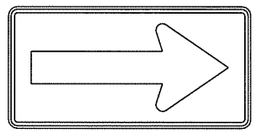

WI-6R (48"X24")
SS-CD-72-STA288+75SB
SS-RAMP49NB7I-72-STA332+43NB

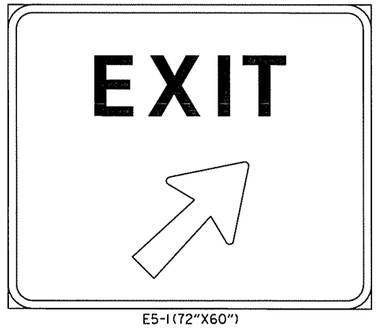

E5-1(72"X60")
EX-071-72-STA336+42SB

R5-1(36"X36")

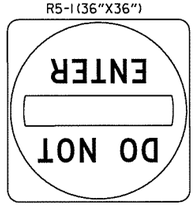

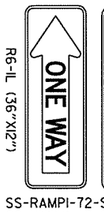

R6-1L (36"X12")

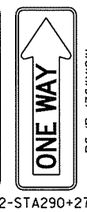

R6-1R (36"X12")

SS-RAMPI-72-STA290+27NB(L)
SS-RAMPI-72-STA290+27NB(R)
SS-CD-72-STA297+85NB

OM-3L (12"X36")
SS-112-72-STAI7+69NB
SS-112-72-STA21+16SB
SS-RAMPII2NB49-72-STA31I+96NB
SS-RAMPII2NB49-72-STA324+00NB
SS-049-72-STA324+93NB
SS-049-72-STA327+94SB
SS-RAMP49SB7I-72-STA331+50SB(L)

OM-3R (12"X36")
SS-112-72-STAI7+99NB
SS-112-72-STA20+69SB
SS-RAMPII2NB49-72-STA312+18NB
SS-RAMPII2NB49-72-STA324+44NB
SS-049-72-STA325+42NB
SS-049-72-STA327+60SB
SS-RAMP49SB7I-72-STA331+50SB(R)
SS-049-72-STA364+09NB
SS-049-72-STA366+44SB

3-20-16

SIGN PLACEMENT SHEET

AEWerclok 3/20/2016 10:21 PM
WORKSPACE: AHTD
L:\ROW\107107 - I-540 Widening & Interchange Improvement\Drawings\rBB0414_SP_MNL_10-26.dgn
REVISED DATE:

DATE REVISED	DATE FILMED	DATE REVISED	DATE FILMED	FED.RD. DIST.NO.	STATE	FED.AID PROJ.NO.	SHEET NO.	TOTAL SHEETS
				6	ARK.			
				JOB NO.		BB0414	222	886
				(2)	SIGN PLACEMENT SHEET			

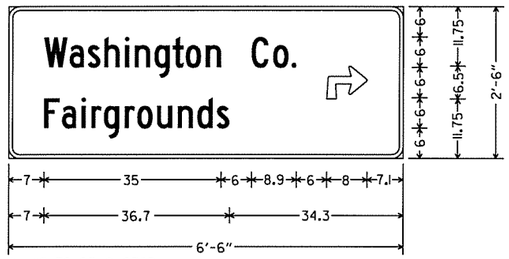

GM-112-72-STA9+67SB
2.25" Radius, 0.75" Border, White on Green;
[Washington Co.] Highway C 2K;
[Fairgrounds] Highway C 2K;
90 Deg Advanced Turn Arrow 8.0" X 6.5";

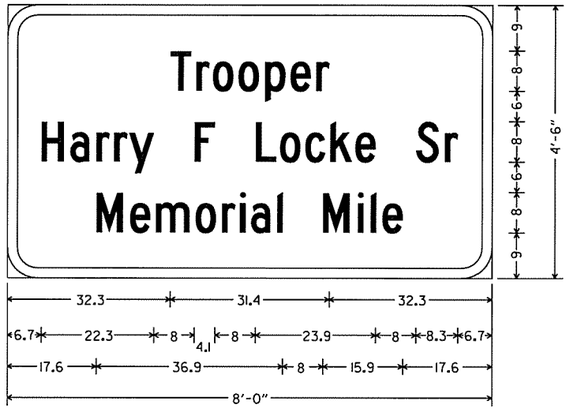

GM-049-72-STA241+01SB
6.0" Radius, 2.0" Border, White on Blue;
[Trooper] Highway C 2K;
[Harry F Locke Sr] Highway C 2K;
[Memorial Mile] Highway C 2K;

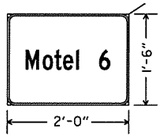

1.5" Radius, 0.4" Border, White on Blue;

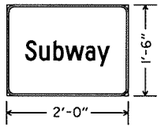

1.5" Radius, 0.4" Border, White on Blue;

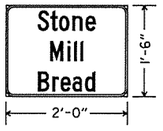

1.5" Radius, 0.4" Border, White on Blue;

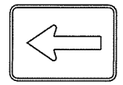

M6-1L (21"X15")
GM-112-72-STA8+93SB

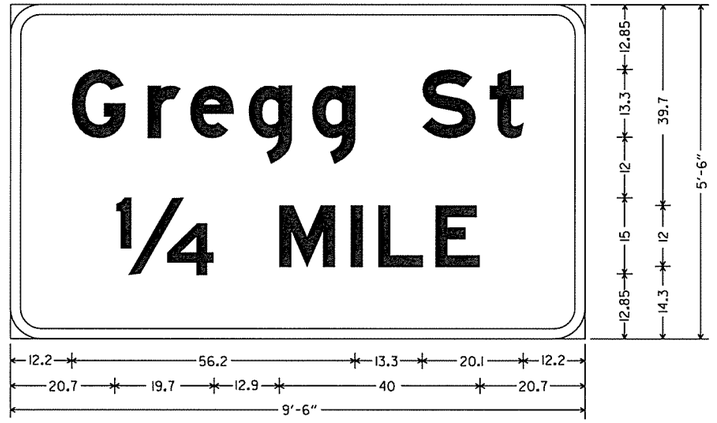

GM-071-72-STA343+14NB
6.0" Radius, 2.0" Border, White on Green;
[Gregg St] E Mod;
[1/4] E Mod;
[MILE] E Mod;

GM-049-72-STA359+40SB
GM-049-72-STA282+97NB
6.0" Radius, 2.0" Border, White on Blue;
[Adopt A Highway] Highway E;
[Litter Control] Highway E;
[Next 1 Mile] Highway E;
[Wal-Mart Mall] Highway E;
[Ave #0359] Highway E;

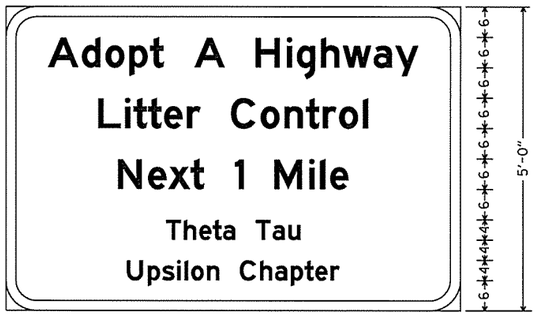

GM-112-72-STA16+32SB
6.0" Radius, 2.0" Border, White on Blue;
[Adopt A Highway] Highway E;
[Litter Control] Highway E;
[Next 1 Mile] Highway E;
[Theta Tau] Highway E;
[Upsilon Chapter] Highway E;

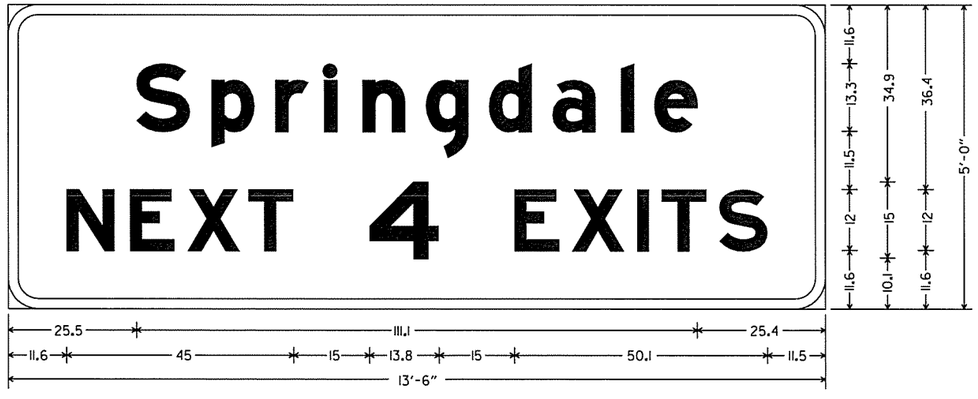

GM-049-72-STA378+19NB
6.0" Radius, 2.0" Border, White on Green;
[Springdale] E Mod;
[NEXT] E Mod; [4] E Mod;
[EXITS] E Mod;

STATE OF ARKANSAS
REGISTERED PROFESSIONAL ENGINEER
No.8141
NICCI D. TINER
3-20-16

AEWierciak 3/20/2016 10:21PM
WORKSPACE: AHTD
L:\20IN\I0I707 - I-540 Widening & Interchange Improvement\Drawings\rBB0414_SP_MNL_I0-26.dgn
REVISED DATE:

DATE REVISED	DATE FILMED	DATE REVISED	DATE FILMED	FED.RD. DIST.NO.	STATE	FED.AID PROJ.NO.	SHEET NO.	TOTAL SHEETS
				6	ARK.			
				JOB NO.		BB0414	223	886
				(2)	SIGN PLACEMENT SHEET			

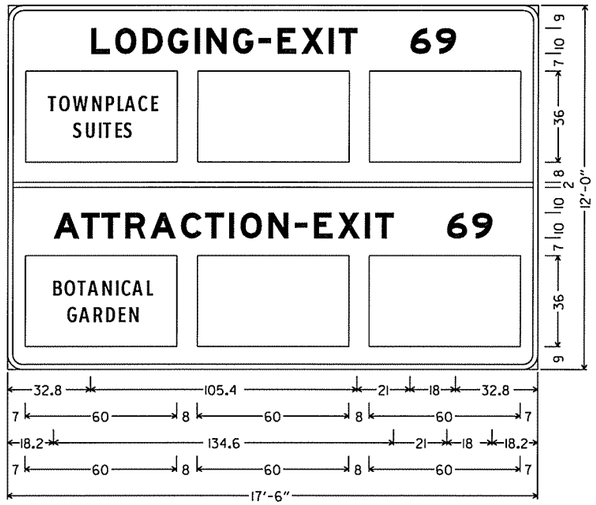

LL-049-72-STA360+69NB
6.0" Radius, 2.0" Border, White on Blue;
[LODGING-EXIT 69] E Mod;
[ATTRACTION-EXIT 69] E Mod;

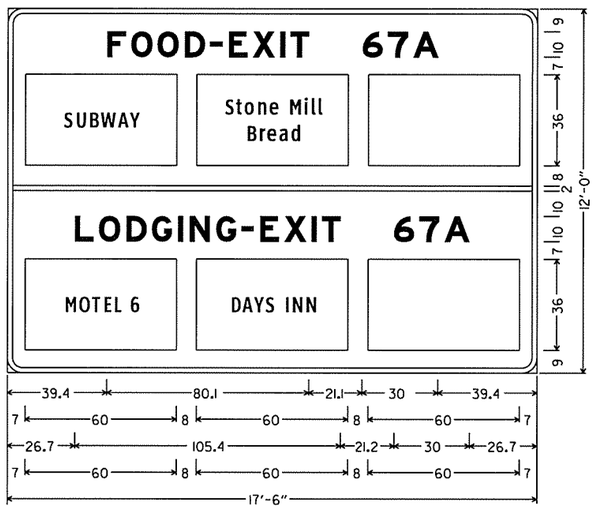

LFL-049-72-STA244+37NB
LFL-RAMP49SBII2-72-STA336+33SB
6.0" Radius, 2.0" Border, White on Blue;
[FOOD-EXIT 67A] E Mod;
[LODGING-EXIT 67A] E Mod;

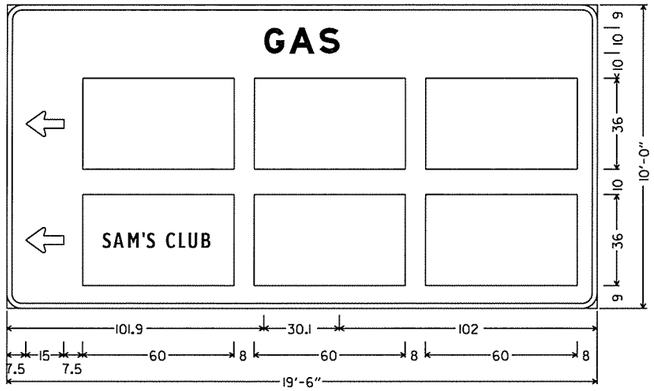

LG-RAMPI-72-STA287+00NB
6.0" Radius, 2.0" Border, White on Blue;
[GAS] E Mod;

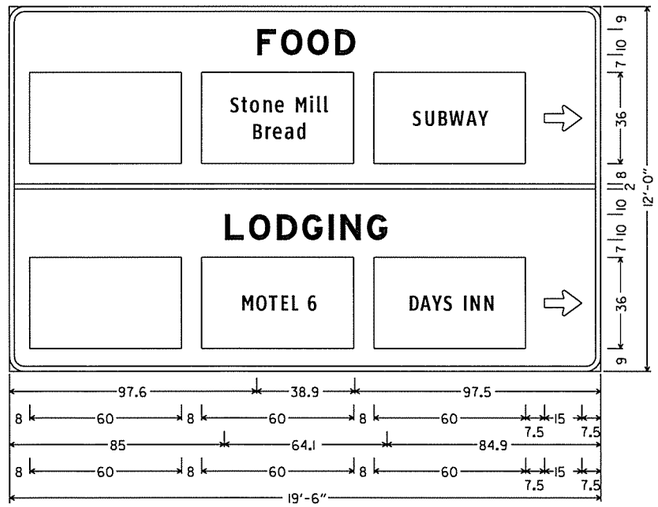

LFL-RAMPI-72-STA285+99NB
6.0" Radius, 2.0" Border, White on Blue;
[FOOD] E Mod;
[LODGING] E Mod;

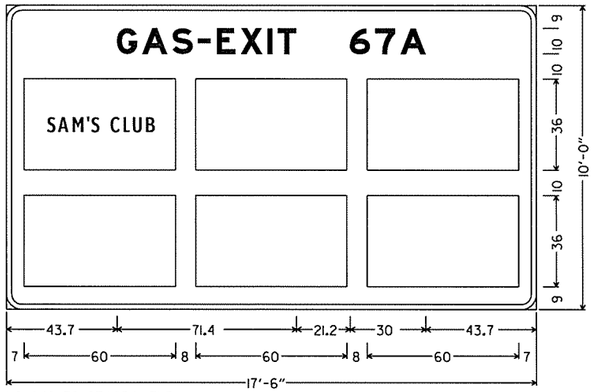

LG-049-72-STA254+13NB
LG-RAMP49SBII2-72-STA332+39SB
6.0" Radius, 2.0" Border, White on Blue;
[GAS-EXIT 67A] E Mod;

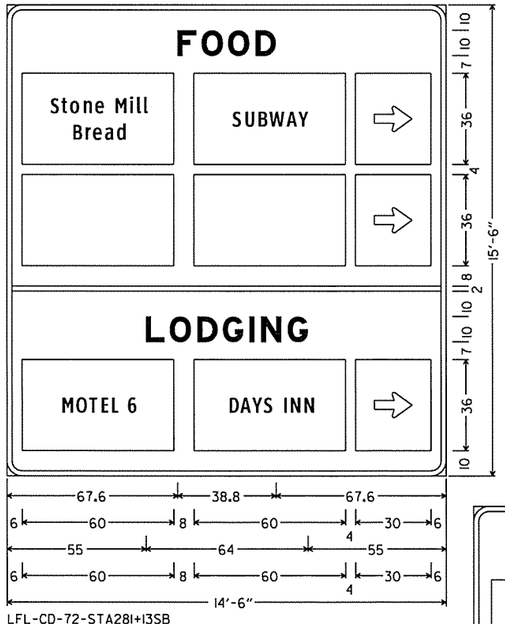

LFL-CD-72-STA281+13SB
6.0" Radius, 2.0" Border, White on Blue;
[FOOD] E Mod;
[LODGING] E Mod;

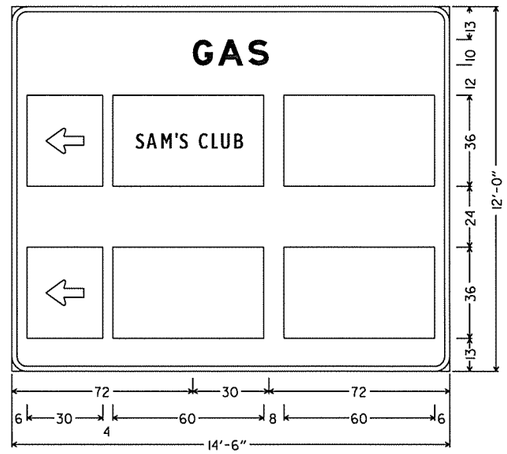

LG-CD-72-STA279+73SB
6.0" Radius, 2.0" Border, White on Blue;
[GAS] E Mod;

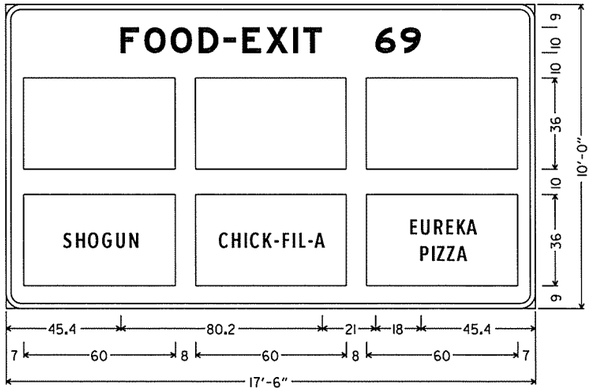

LF-049-72-STA372+59NB
6.0" Radius, 2.0" Border, White on Blue;
[FOOD-EXIT 69] E Mod;

STATE OF ARKANSAS
REGISTERED PROFESSIONAL ENGINEER
No.8141
NICCI D. TIVER
3-20-16

AEWierciak 3/20/2016 11:02:21PM
WORKSPACE: AHTD
L:\20IN\10\7107 - I-540 Widening & Interchange Improvement\Drawings\r-BB0414_SP_MNL_10-26.dgn
REVISED DATE:

SIGN PLACEMENT SHEET

DATE REVISED	DATE FILMED	DATE REVISED	DATE FILMED	FED.RD. DIST.NO.	STATE	FED.AID PROJ.NO.	SHEET NO.	TOTAL SHEETS
				6	ARK.			
				JOB NO.		BB0414	224	886
				(2)	SIGN PLACEMENT SHEET			

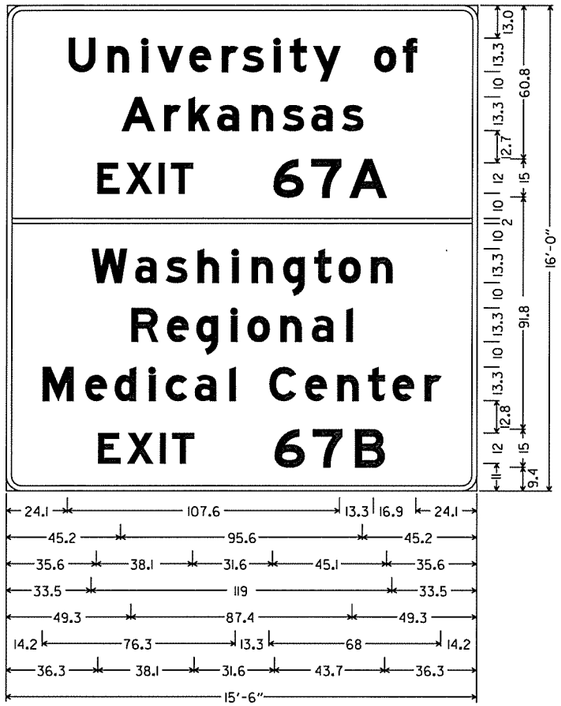

GM-049-72-STA375+25SB
6.0" Radius, 2.0" Border, White on Green;
[University of] E Mod;
[Arkansas] E Mod; [EXIT] E Mod;
[67A] E Mod;
[Washington] E Mod;
[Regional] E Mod;
[Medical Ctr] E Mod;
[EXIT] E Mod; [67B] E Mod;

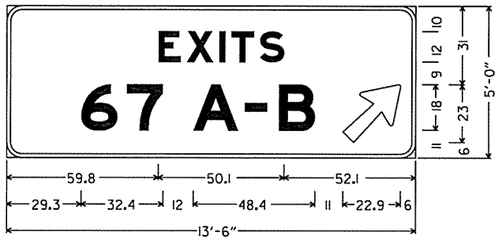

EX-RAMP49SB112-72-STA351+93SB
6.0" Radius, 1.5" Border, White on Green;
[EXITS] E Mod;
[253] E Mod; [A-B] E Mod;
Arrow Custom - 29.28" 45°;

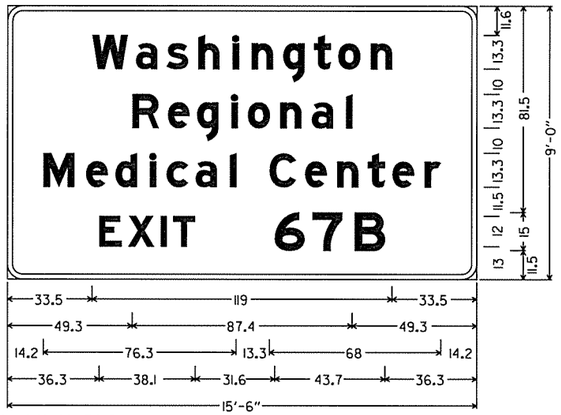

GM-049-261-74NB;
6.0" Radius, 2.0" Border, White on Green;
[Washington] E Mod;
[Regional] E Mod;
[Medical Ctr] E Mod;
[EXIT] E Mod; [67B] E Mod;

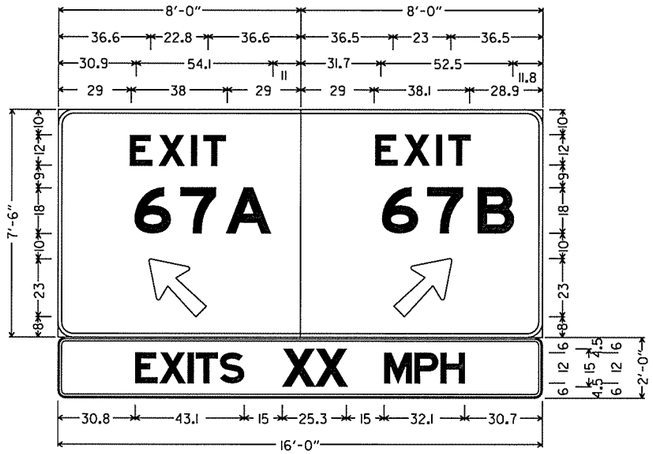

EX-RAMP49SB171-72-STA345+36SB
6.0" Radius, 1.5" Border, White on Green;
[EXIT] E Mod; [253A] E Mod; Arrow Custom - 29.0" 135°;
6.0" Radius, 1.5" Border, White on Green;
[EXIT] E Mod; [253B] E Mod; Arrow Custom - 29.0" 45°;
E13-2(2)_162x24;
3.0" Radius, 0.9" Border, 0.6" Indent, Black on Yellow;
[EXITS 20 MPH] E Mod;

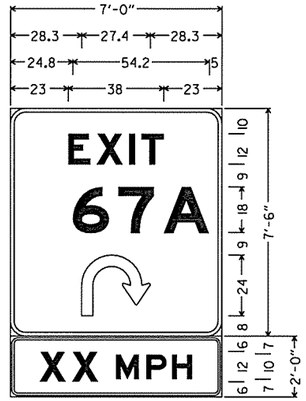

EX-CD-72-STA290+61SB
6.0" Radius, 1.5" Border, White on Green;
[EXIT] E Mod;
[67A] E Mod;
Turn Arrow Custom;
3.0" Radius, 0.9" Border, 0.6" Indent, Black on Yellow;
[XX] E Mod; [MPH] E Mod;

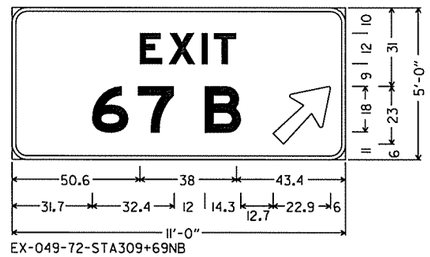

EX-049-72-STA309+69NB
6.0" Radius, 1.5" Border, White on Green;
[EXIT] E Mod;
[67] E Mod; [B] E Mod;
Arrow Custom - 29.28" 45°;

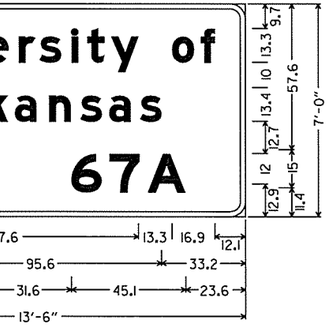

GM-071-STA329+00SB
6.0" Radius, 2.0" Border, White on Green;
[University of] E Mod;
[Arkansas] E Mod; [EXIT] E Mod;
[67A] E Mod;

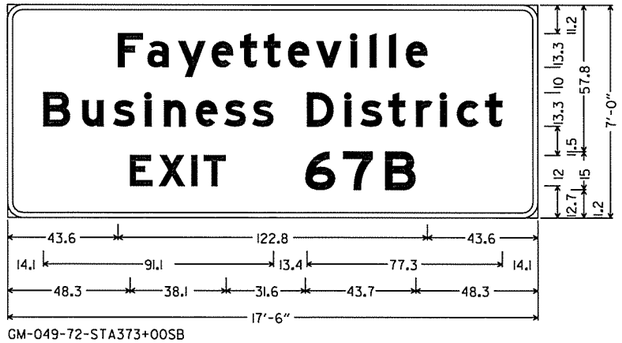

GM-049-72-STA373+00SB
GM-049-72-STA268+32NB
6.0" Radius, 2.0" Border, White on Green;
[Fayetteville] E Mod;
[Business Dist] E Mod;
[EXIT] E Mod; [67B] E Mod;

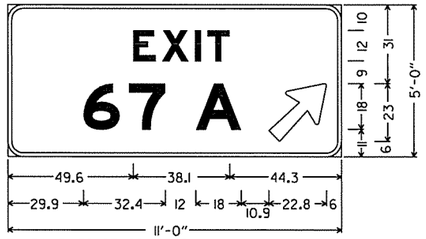

EX-RAMP1-72-STA281+97NB
EX-071-72-STA317+62SB
6.0" Radius, 1.5" Border, White on Green;
[EXIT] E Mod; [A] E Mod;
[67] E Mod;
Arrow Custom - 29.28" 45°;

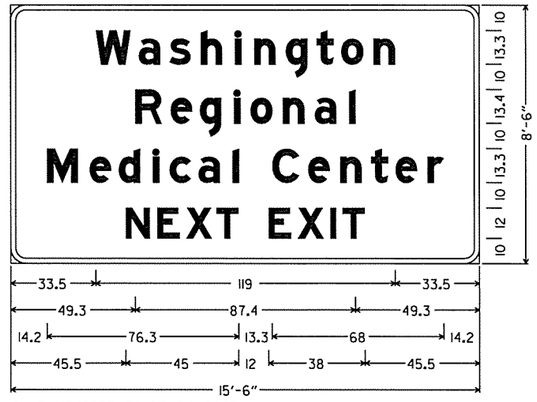

GM-RAMP49SB71-72-STA312+00SB
6.0" Radius, 2.0" Border, White on Green;
[Washington] E Mod;
[Regional] E Mod;
[Medical Center] E Mod;
[NEXT EXIT] E Mod;

SIGN PLACEMENT SHEET

STATE OF ARKANSAS
REGISTERED PROFESSIONAL ENGINEER
No. 8141
NICCI D. TINER
3-20-16

AEWerclok 3/20/2016 10:22 PM
WORKSPACE: AHTD
L:\20IN\107107 - I-540 Widening & Interchange Improvement\Drawings\r-BB0414_SP_MNL_10-26.dgn
REVISED DATE:

DATE REVISED	DATE FILMED	DATE REVISED	DATE FILMED	FED.RD. DIST.NO.	STATE	FED.AID PROJ.NO.	SHEET NO.	TOTAL SHEETS
				6	ARK.			
				JOB NO.		BB0414	225	886
				(2)	SIGN PLACEMENT SHEET			

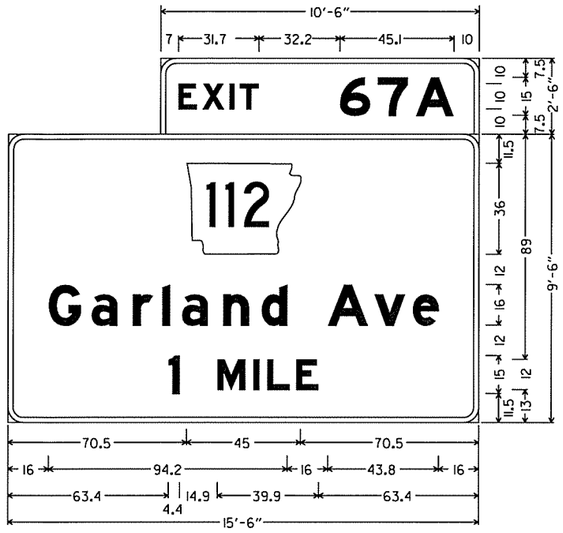

OH-049-72-STA208+50NB-B
6.0" Radius, 2.0" Border, White on Green;
[EXIT] E Mod; [67A] E Mod;
6.0" Radius, 2.0" Border, White on Green;
MI-6; [Garland Ave] E Mod;
[1] E Mod; [MILE] E Mod;

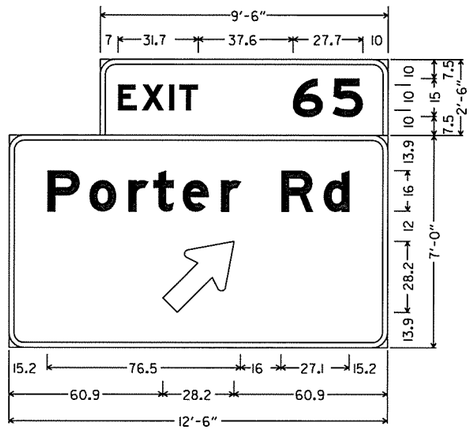

OH-049-72-STA208+50NB-A
6.0" Radius, 2.0" Border, White on Green;
[EXIT] E Mod; [65] E Mod;
6.0" Radius, 2.0" Border, White on Green;
[Porter Rd] E Mod;
Standard Arrow Custom 35.8" X 21.6" 45°;

NOTES:

THE CONTRACTOR WILL VERIFY SIGN PLACEMENT AND MAKE ANY ADJUSTMENTS NECESSARY TO ALIGN SIGNS OVER INTENDED LANES.

SINCE THE CONTRACTOR WILL BE REQUIRED TO INSTALL OVERHEAD SIGNS ON STRUCTURES WHICH ARE LOCATED OVER THE ROADWAYS WHICH ARE CURRENTLY OPEN TO TRAFFIC, IT WILL BE THE RESPONSIBILITY OF THE CONTRACTOR TO PROVIDE LANE CLOSURES AS A PART OF TRAFFIC CONTROL. PAYMENT FOR PROVIDING LANE CLOSURES WILL BE PAID SUBSIDIARY TO THE PAY ITEM "MAINTENANCE OF TRAFFIC". ALL MAINTENANCE OF TRAFFIC WORK MUST CONFORM WITH THE MUTCD.

STATE OF ARKANSAS
REGISTERED PROFESSIONAL ENGINEER
No.8141
NICCI D. TINER
3-20-16

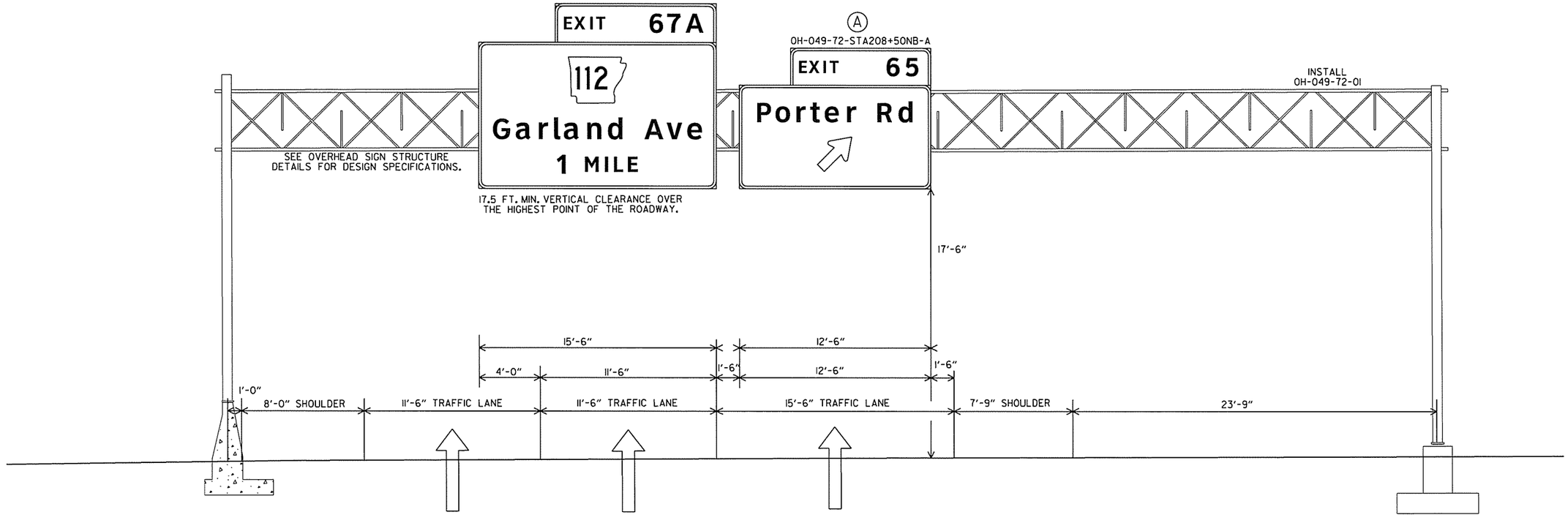

SIGN PLACEMENT SHEET

AEWierciak 3/20/2016 1:0:22 PM
WORKSPACE: AHTD
L:\2011\101707 - I-540 Widening & Interchange Improvement\Drawings\r-BB0414_SP_MNL_10-26.dgn
REVISED DATE:

DATE REVISED	DATE FILMED	DATE REVISED	DATE FILMED	FED.RD. DIST.NO.	STATE	FED.AID PROJ.NO.	SHEET NO.	TOTAL SHEETS
				6	ARK.			
				JOB NO.		BB0414	226	886
				(2)	SIGN PLACEMENT SHEET			

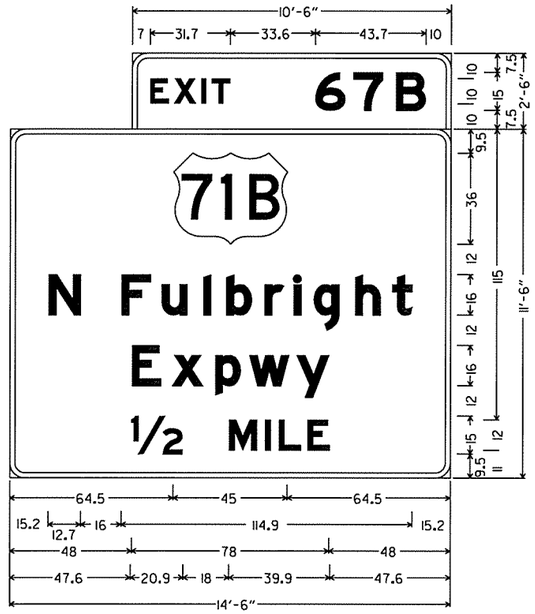

OH-049-72-STA276+I8NB-B
6.0" Radius, 2.0" Border, White on Green;
[EXIT] E Mod; [67B] E Mod;
6.0" Radius, 2.0" Border, White on Green;
MI-4;
[N Fulbright] E Mod;
[Expwy] E Mod;
[1/2] E Mod;
[MILE] E Mod;

OH-049-72-STA276+I8NB-A
6.0" Radius, 2.0" Border, White on Green;
[EXIT] E Mod; [67A] E Mod;
6.0" Radius, 2.0" Border, White on Green;
MI-6;
[Garland Ave] E Mod;
Standard Arrow Custom 35.8" X 21.6" 45°;

NOTES:

THE CONTRACTOR WILL VERIFY SIGN PLACEMENT AND MAKE ANY ADJUSTMENTS NECESSARY TO ALIGN SIGNS OVER INTENDED LANES.

SINCE THE CONTRACTOR WILL BE REQUIRED TO INSTALL OVERHEAD SIGNS ON STRUCTURES WHICH ARE LOCATED OVER THE ROADWAYS WHICH ARE CURRENTLY OPEN TO TRAFFIC, IT WILL BE THE RESPONSIBILITY OF THE CONTRACTOR TO PROVIDE LANE CLOSURES AS A PART OF TRAFFIC CONTROL. PAYMENT FOR PROVIDING LANE CLOSURES WILL BE PAID SUBSIDIARY TO THE PAY ITEM "MAINTENANCE OF TRAFFIC". ALL MAINTENANCE OF TRAFFIC WORK MUST CONFORM WITH THE MUTCD.

STATE OF ARKANSAS
REGISTERED PROFESSIONAL ENGINEER
No.8141
NICCI D. TINER
3-20-16

(B)
OH-049-72-STA276+I8NB-B

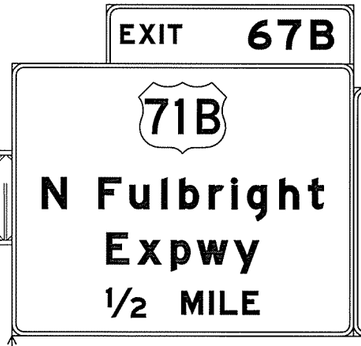

(A)
OH-049-72-STA276+I8NB-A

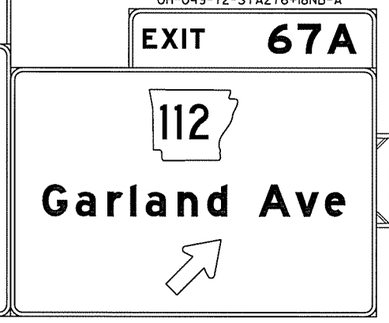

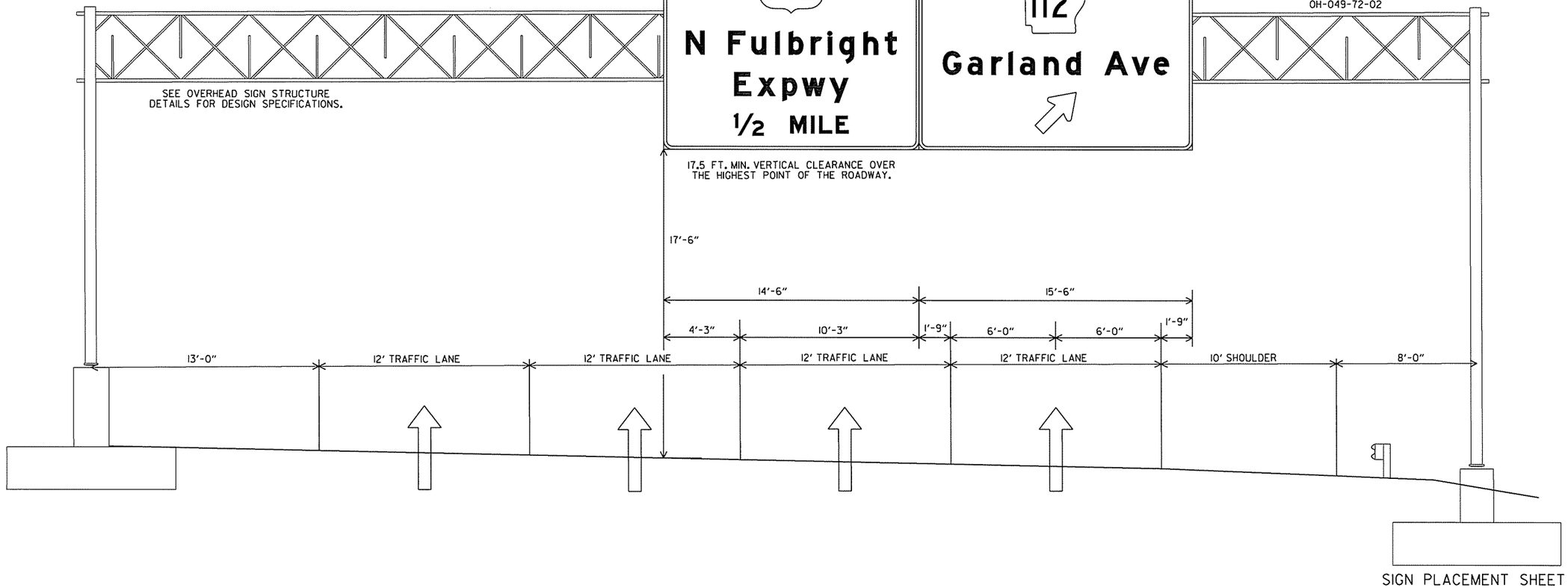

SIGN PLACEMENT SHEET

AEWerclak 3/20/2016 10:22 PM
WORKSPACE: AHTD
L:\201\101707 - I-540 Widening & Interchange Improvement\Drawings\rBB0414_SP_MNL_10-26.dgn
REVISED DATE:

DATE REVISED	DATE FILMED	DATE REVISED	DATE FILMED	FED.RD. DIST.NO.	STATE	FED.AID PROJ.NO.	SHEET NO.	TOTAL SHEETS
				6	ARK.			
				JOB NO.		BB0414	227	886
				(2)	SIGN PLACEMENT SHEET			

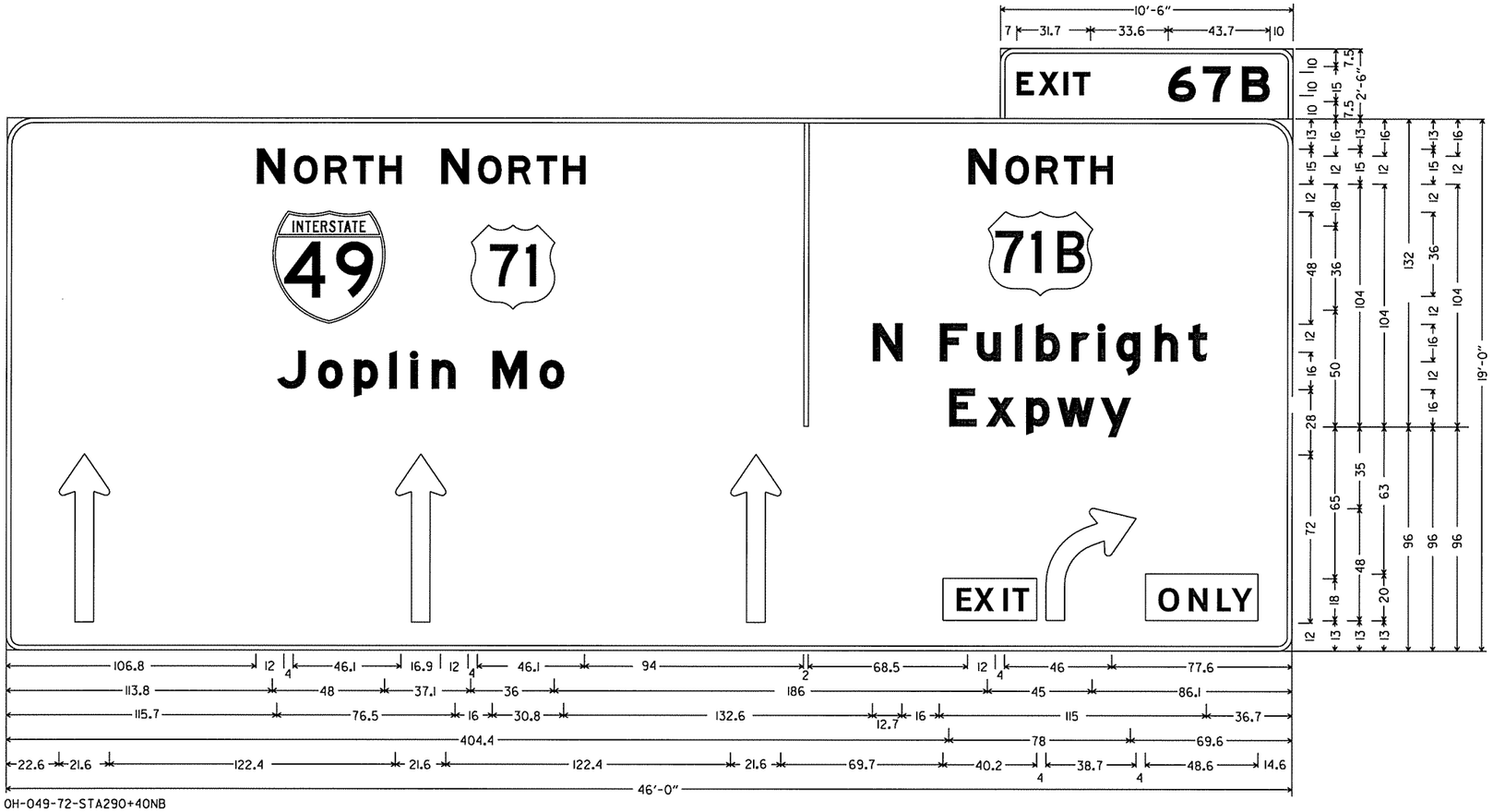

OH-049-72-STA290+40NB
6.0" Radius, 2.0" Border, White on Green;
[EXIT] E Mod; [67B] E Mod;
12.0" Radius, 2.0" Border, White on Green;
[NORTH] E Mod; [NORTH] E Mod; MI-1; MI-4; [Joplin Mo] E Mod; [NORTH] E Mod; MI-4; [N Fulbright] E Mod; [Expwy] E Mod;
6.0" Radius, 2.0" Border, White on Green;
Standard Arrow Custom 72.0" X 21.6" 90°; Standard Arrow Custom 72.0" X 21.6" 90°; Standard Arrow Custom 72.0" X 21.6" 90°; Rectangle Yellow; turn arrow1; Rectangle Yellow;

STATE OF ARKANSAS
REGISTERED PROFESSIONAL ENGINEER
No. 8144
NICCI D. TINER
3-20-16

NOTES:

THE CONTRACTOR WILL VERIFY SIGN PLACEMENT AND MAKE ANY ADJUSTMENTS NECESSARY TO ALIGN SIGNS OVER INTENDED LANES.

SINCE THE CONTRACTOR WILL BE REQUIRED TO INSTALL OVERHEAD SIGNS ON STRUCTURES WHICH ARE LOCATED OVER THE ROADWAYS WHICH ARE CURRENTLY OPEN TO TRAFFIC, IT WILL BE THE RESPONSIBILITY OF THE CONTRACTOR TO PROVIDE LANE CLOSURES AS A PART OF TRAFFIC CONTROL. PAYMENT FOR PROVIDING LANE CLOSURES WILL BE PAID SUBSIDIARY TO THE PAY ITEM "MAINTENANCE OF TRAFFIC". ALL MAINTENANCE OF TRAFFIC WORK MUST CONFORM WITH THE MUTCD.

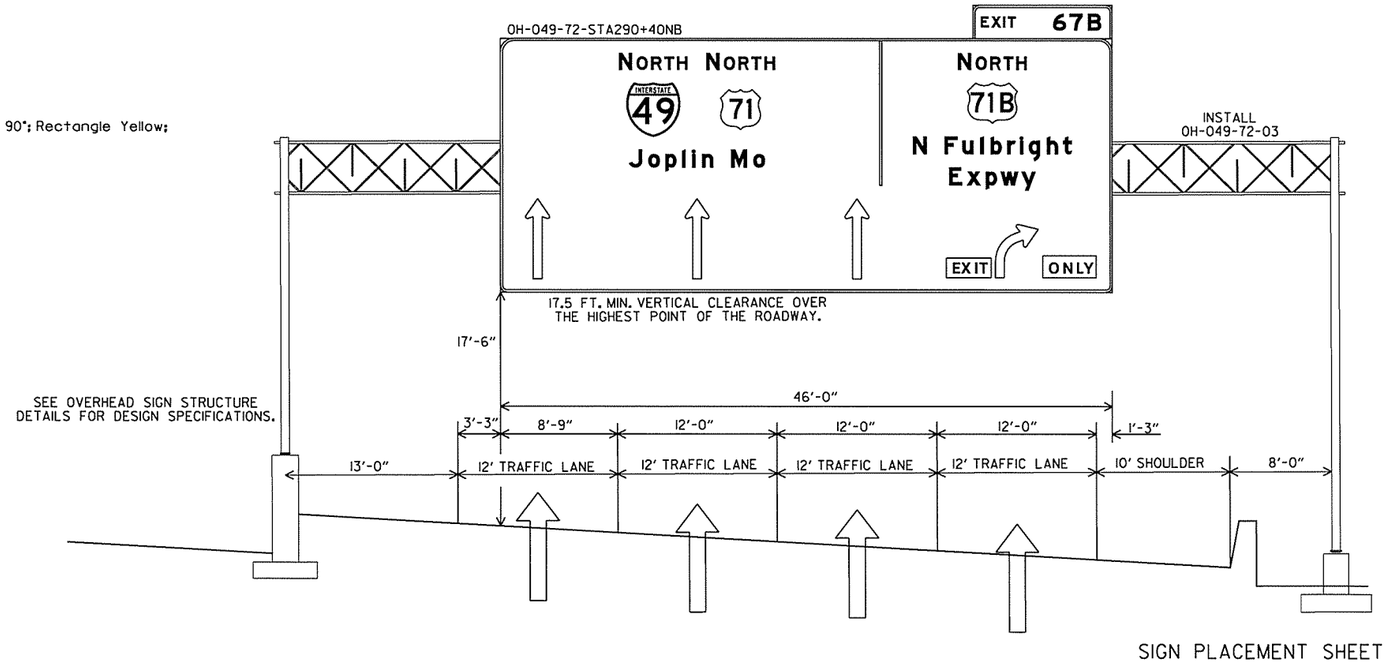

SIGN PLACEMENT SHEET

AEWerclok 3/20/2016 10:22 PM
WORKSPACE: AHTD
L:\2011\011707 - I-540 Widening & Interchange Improvement\Drawings\r-BB0414_SP_MNL_10-26.dgn
REVISED DATE:

DATE REVISED	DATE FILMED	DATE REVISED	DATE FILMED	FED.RD. DIST.NO.	STATE	FED.AID PROJ.NO.	SHEET NO.	TOTAL SHEETS
				6	ARK.			
				JOB NO.		BB0414	228	886

(2) SIGN PLACEMENT SHEET

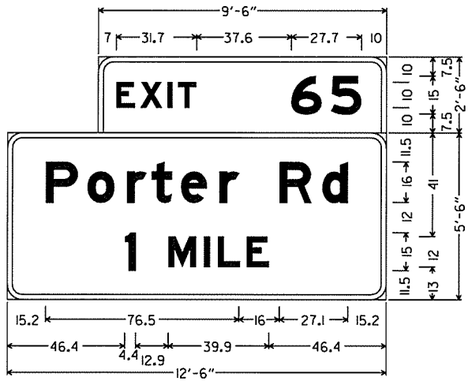

CL-049-72-STA294+00SB
6.0" Radius, 2.0" Border, White on Green;
[EXIT] E Mod; [65] E Mod;
6.0" Radius, 2.0" Border, White on Green;
[Porter Rd] E Mod;
[1] E Mod; [MILE] E Mod;

STATE OF ARKANSAS
REGISTERED PROFESSIONAL ENGINEER
No.8141
NICCI D. TINER

3-20-16

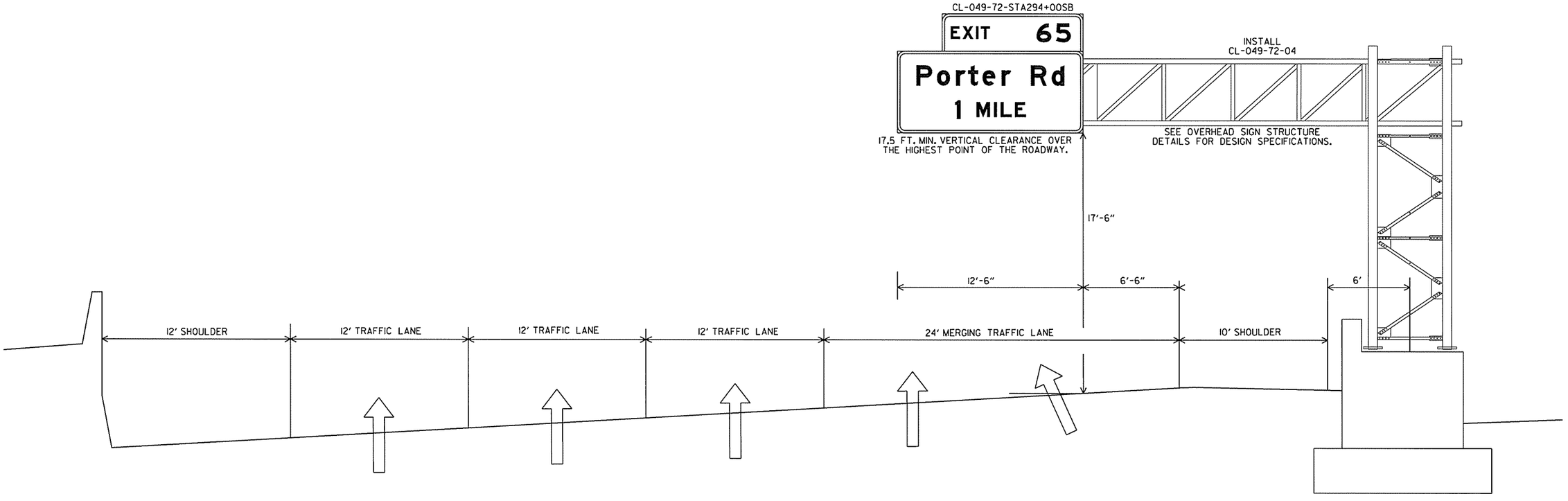

SIGN PLACEMENT SHEET

AEWierclok 3/20/2016 10:22 PM
WORKSPACE: AHTD
L:\201\101707 - I-540 Widening & Interchange Improvement\Drawings\rBB04f4_SP_MNL_10-26.dgn
REVISED DATE:

DATE REVISED	DATE FILMED	DATE REVISED	DATE FILMED	FED.RD. DIST.NO.	STATE	FED.AID PROJ.NO.	SHEET NO.	TOTAL SHEETS
				6	ARK.			
				JOB NO.		BB0414	229	886
				(2)	SIGN PLACEMENT SHEET			

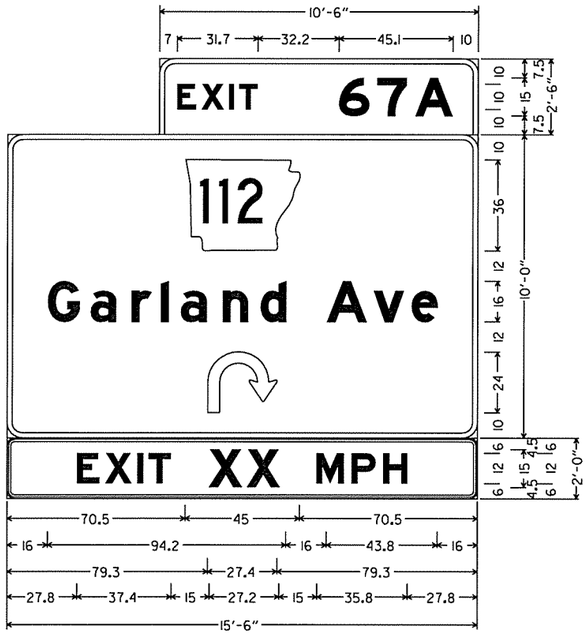

CL-CD-72-STA294+20SB
6.0" Radius, 2.0" Border, White on Green;
[EXIT] E Mod; [67A] E Mod;
6.0" Radius, 2.0" Border, White on Green;
MI-6; [Garland Ave] E Mod; Turn Arrow Custom;
3.0" Radius, 0.9" Border, 0.6" Indent, Black on Yellow;
[EXIT 20 MPH] E Mod;

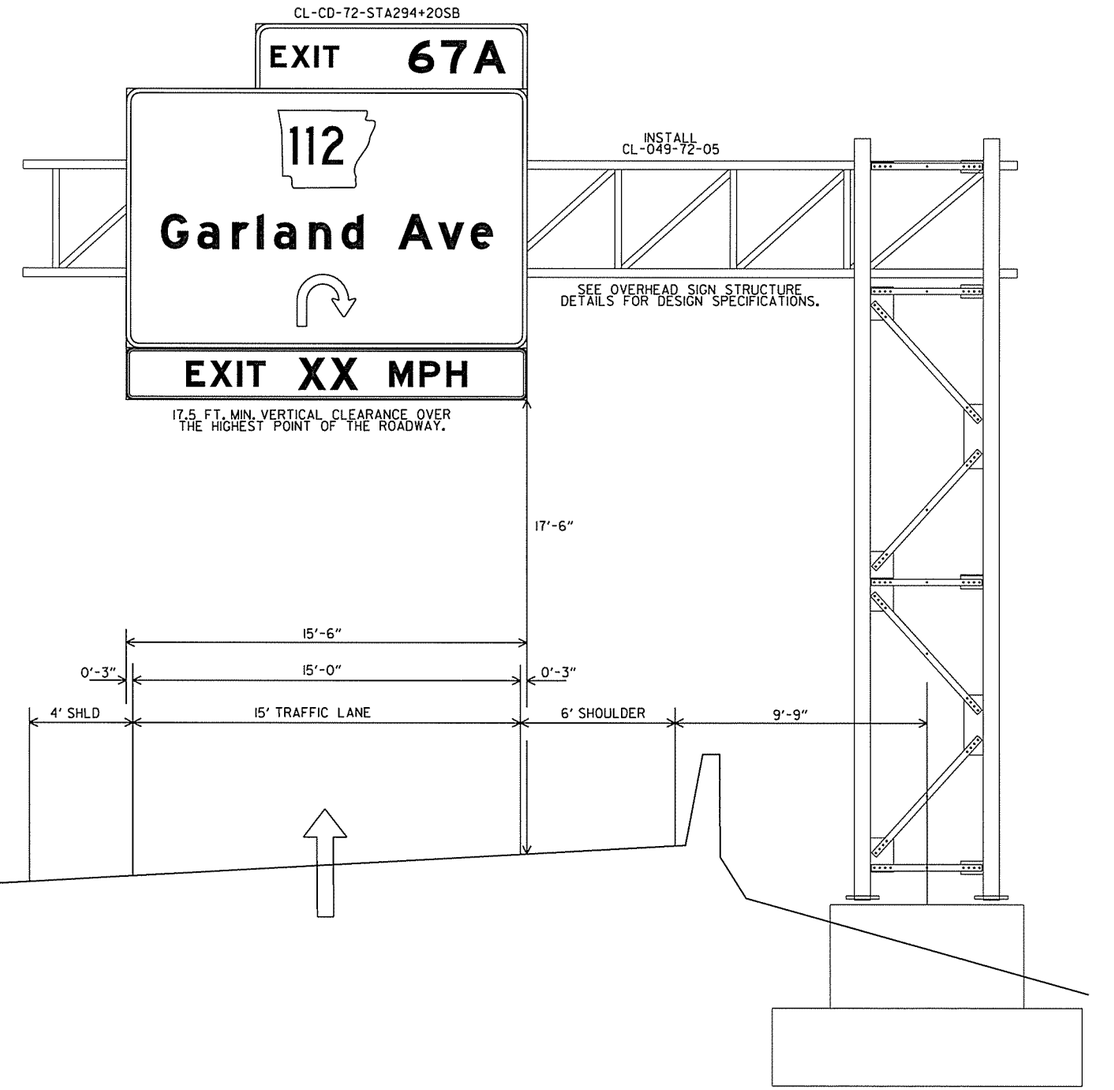

STATE OF ARKANSAS
REGISTERED PROFESSIONAL ENGINEER
No. 8141
NICCI D. TINER
3-20-16

SIGN PLACEMENT SHEET

AEWierciak 3/20/2016 10:22 PM
WORKSPACE: AHTD
L:\20II\I0I7707 - I-540 Widening & Interchange Improvement\Drawings\rBB0414_SP_MNL_I0-26.dgn
REVISED DATE:

DATE REVISED	DATE FILMED	DATE REVISED	DATE FILMED	FED.RD. DIST.NO.	STATE	FED.AID PROJ.NO.	SHEET NO.	TOTAL SHEETS
				6	ARK.			
				JOB NO.		BB0414	230	886
				(2)	SIGN PLACEMENT SHEET			

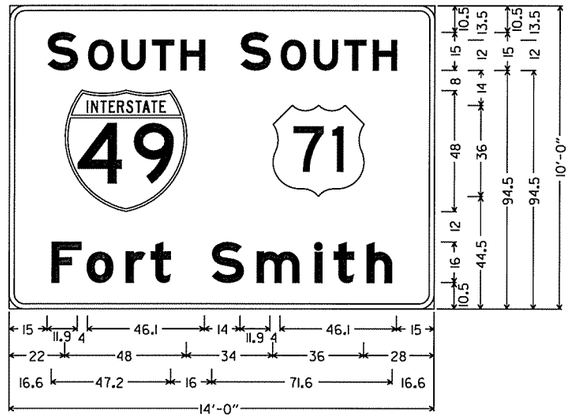

BM-071-72-STA326+39SB-B
6.0" Radius, 2.0" Border, White on Green;
[SOUTH] E Mod; [SOUTH] E Mod;
MI-1; MI-4;
[Fort Smith] E Mod;

BM-071-72-STA326+39SB-A
6.0" Radius, 2.0" Border, White on Green;
[EXIT] E Mod; [67A] E Mod;
6.0" Radius, 2.0" Border, White on Green;
MI-6;
[Garland Ave] E Mod;
Standard Arrow Custom 35.8" X 21.6" 45°;

NOTES:

THE CONTRACTOR WILL VERIFY SIGN PLACEMENT AND MAKE ANY ADJUSTMENTS NECESSARY TO ALIGN SIGNS OVER INTENDED LANES.

SINCE THE CONTRACTOR WILL BE REQUIRED TO INSTALL OVERHEAD SIGNS ON STRUCTURES WHICH ARE LOCATED OVER THE ROADWAYS WHICH ARE CURRENTLY OPEN TO TRAFFIC, IT WILL BE THE RESPONSIBILITY OF THE CONTRACTOR TO PROVIDE LANE CLOSURES AS A PART OF TRAFFIC CONTROL. PAYMENT FOR PROVIDING LANE CLOSURES WILL BE PAID SUBSIDIARY TO THE PAY ITEM "MAINTENANCE OF TRAFFIC". ALL MAINTENANCE OF TRAFFIC WORK MUST CONFORM WITH THE MUTCD.

STATE OF ARKANSAS
REGISTERED PROFESSIONAL ENGINEER
No. 8141
NICCI D. TINER

3-20-16

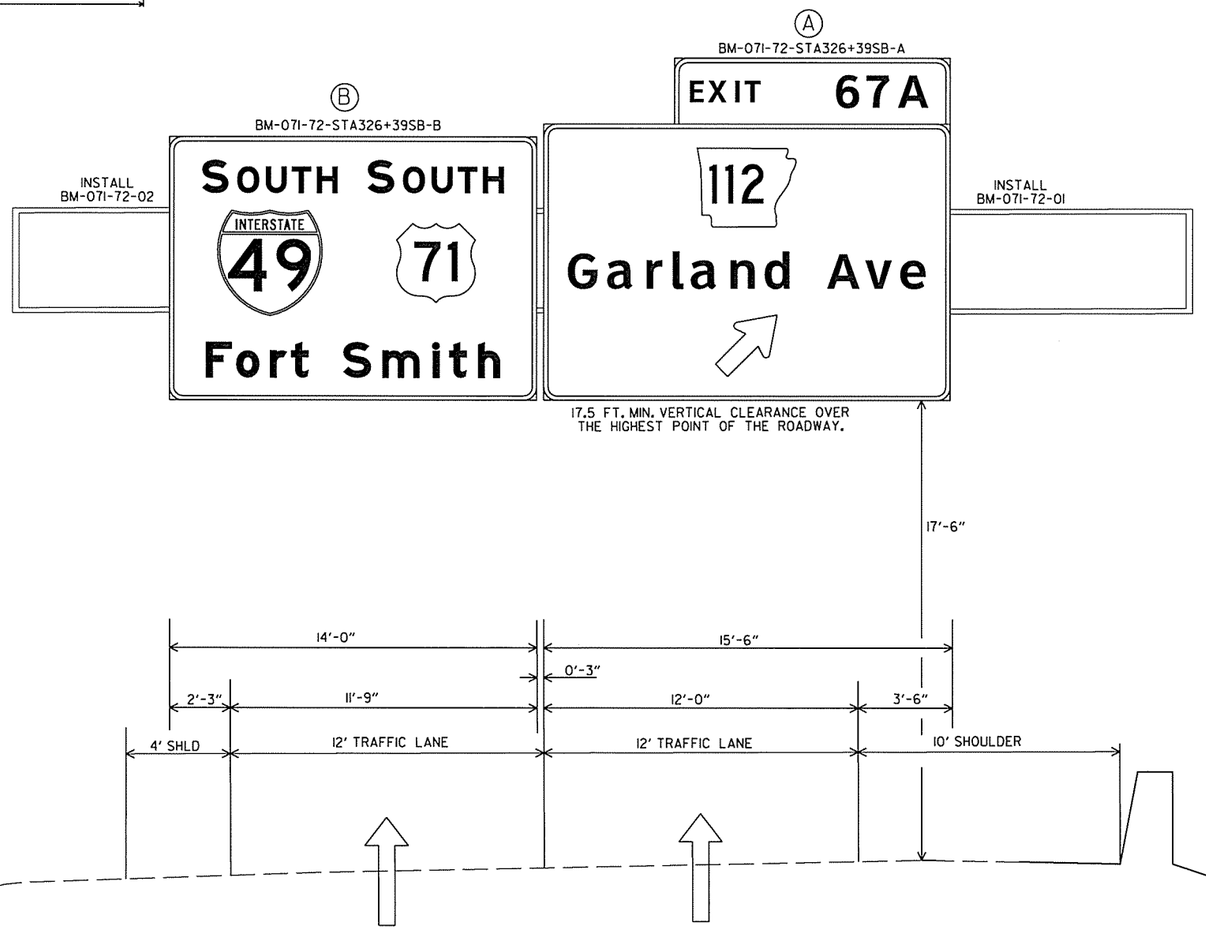

AEWierdak 3/20/2016 10:22 PM
WORKSPACE: AHTD
L:\2011\011707 - I-540 Widening & Interchange Improvement\Drawings\rBB0414_SP_MNL_10-26.dgn
REVISED DATE:

DATE REVISED	DATE FILMED	DATE REVISED	DATE FILMED	FED.RD. DIST.NO.	STATE	FED.AID PROJ.NO.	SHEET NO.	TOTAL SHEETS
				6	ARK.			
				JOB NO.		BB0414	231	886
				(2)	SIGN PLACEMENT SHEET			

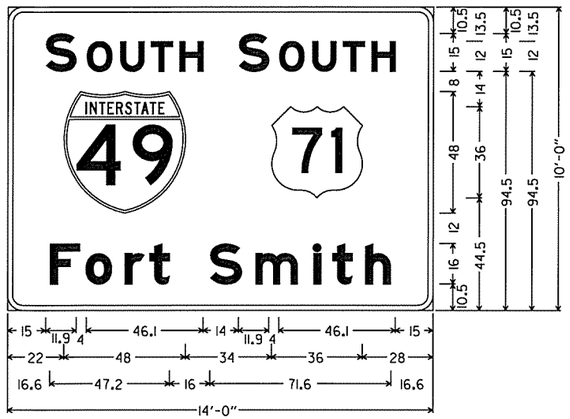

OH-049-72-STA355+50SB-B
6.0" Radius, 2.0" Border, White on Green;
[SOUTH] E Mod; [SOUTH] E Mod;
MI-1; MI-4;
[Fort Smith] E Mod;

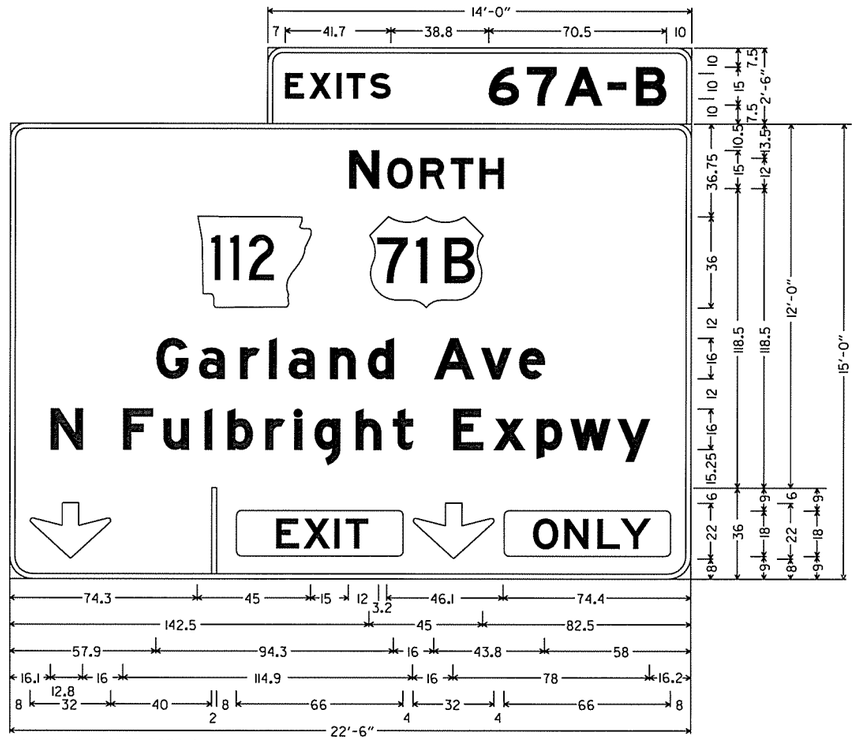

OH-049-72-STA355+50SB-A
6.0" Radius, 2.0" Border, White on Green;
[EXITS] E Mod; [67A-B] E Mod;
6.0" Radius, 2.0" Border, White on Green;
[N] E Mod; [ORTH] E Mod;
MI-5; MI-4;
[Garland Ave] E Mod;
[N Fulbright Expwy] E Mod;
6.0" Radius, 2.0" Border, Black on Yellow;
Down Arrow 22.0" 270°; [EXIT ONLY] E Mod; Down Arrow 22.0" 270°;

NOTES:

THE CONTRACTOR WILL VERIFY SIGN PLACEMENT AND MAKE ANY ADJUSTMENTS NECESSARY TO ALIGN SIGNS OVER INTENDED LANES.

SINCE THE CONTRACTOR WILL BE REQUIRED TO INSTALL OVERHEAD SIGNS ON STRUCTURES WHICH ARE LOCATED OVER THE ROADWAYS WHICH ARE CURRENTLY OPEN TO TRAFFIC, IT WILL BE THE RESPONSIBILITY OF THE CONTRACTOR TO PROVIDE LANE CLOSURES AS A PART OF TRAFFIC CONTROL. PAYMENT FOR PROVIDING LANE CLOSURES WILL BE PAID SUBSIDIARY TO THE PAY ITEM "MAINTENANCE OF TRAFFIC". ALL MAINTENANCE OF TRAFFIC WORK MUST CONFORM WITH THE MUTCD.

STATE OF ARKANSAS
REGISTERED PROFESSIONAL ENGINEER
No. 8141
NICCI D. TINER
3-20-16

(A)
OH-049-72-STA355+50SB-A

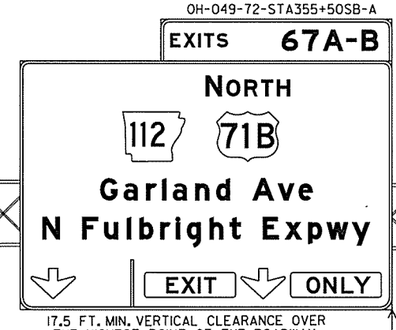

(B)
OH-049-72-STA355+50SB-B

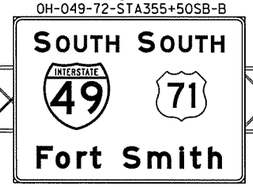

SEE OVERHEAD SIGN STRUCTURE DETAILS FOR DESIGN SPECIFICATIONS.

INSTALL OH-049-72-06

17.5 FT. MIN. VERTICAL CLEARANCE OVER THE HIGHEST POINT OF THE ROADWAY.

SS-049-72-STA355+50SB

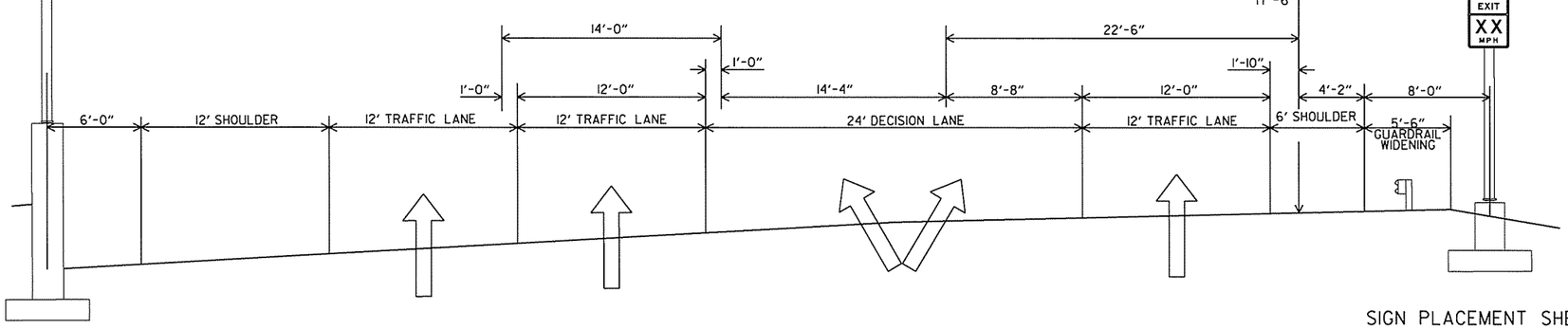

SIGN PLACEMENT SHEET

AEWarelak 3/20/2016 11:28:43 PM
WORKSPACE: AHTD
L:\20\1\01\7707 - I-540 Widening & Interchange Improvement\Drawings\rBB0414_SP_MNL_10-26.dgn
REVISED DATE:

DATE REVISED	DATE FILMED	DATE REVISED	DATE FILMED	FED.RD. DIST.NO.	STATE	FED.AID PROJ.NO.	SHEET NO.	TOTAL SHEETS
				6	ARK.			
				JOB NO.		BB0414	232	886
				(2)	SIGN PLACEMENT SHEET			

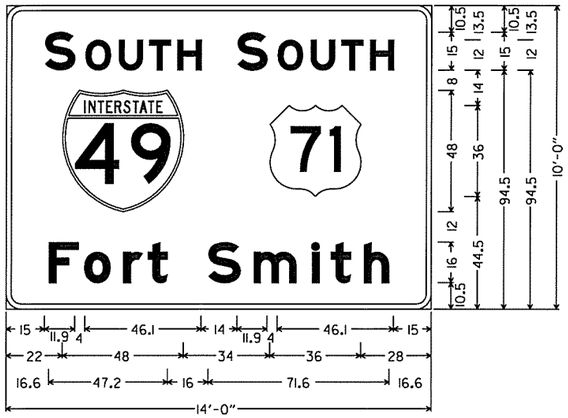

OH-049-72-STA377+00SB-B
6.0" Radius, 2.0" Border, White on Green;
[SOUTH] E Mod; [SOUTH] E Mod;
MI-1; MI-4;
[Fort Smith] E Mod;

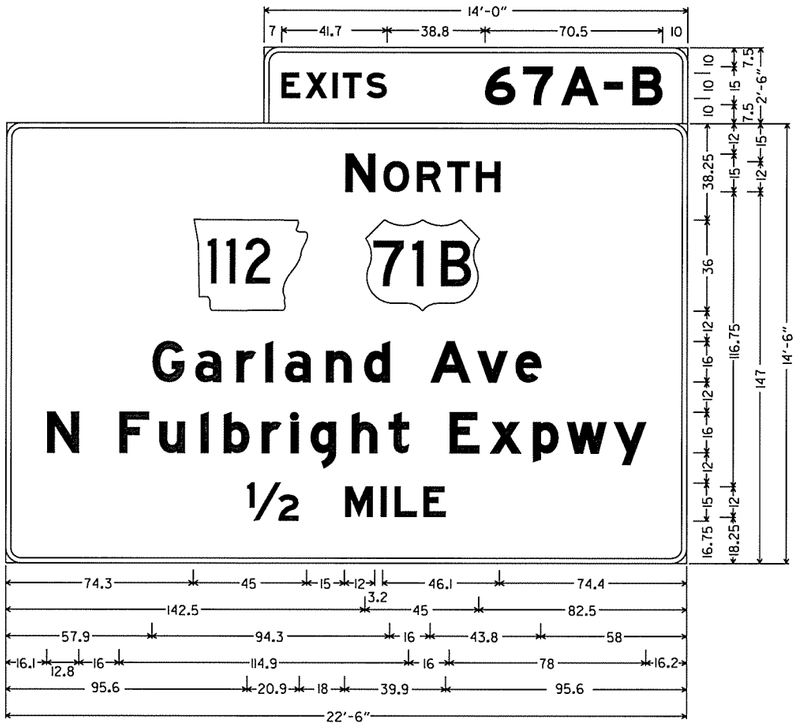

OH-049-72-STA377+00SB-A
6.0" Radius, 2.0" Border, White on Green;
[EXITS] E Mod; [67A-B] E Mod;
6.0" Radius, 2.0" Border, White on Green;
[N] E Mod; [ORTH] E Mod;
MI-6; MI-4;
[Garland Ave] E Mod;
[N Fulbright Expwy] E Mod;
[1/2] E Mod; [MILE] E Mod;

NOTES:

THE CONTRACTOR WILL VERIFY SIGN PLACEMENT AND MAKE ANY ADJUSTMENTS NECESSARY TO ALIGN SIGNS OVER INTENDED LANES.

SINCE THE CONTRACTOR WILL BE REQUIRED TO INSTALL OVERHEAD SIGNS ON STRUCTURES WHICH ARE LOCATED OVER THE ROADWAYS WHICH ARE CURRENTLY OPEN TO TRAFFIC, IT WILL BE THE RESPONSIBILITY OF THE CONTRACTOR TO PROVIDE LANE CLOSURES AS A PART OF TRAFFIC CONTROL. PAYMENT FOR PROVIDING LANE CLOSURES WILL BE PAID SUBSIDIARY TO THE PAY ITEM "MAINTENANCE OF TRAFFIC". ALL MAINTENANCE OF TRAFFIC WORK MUST CONFORM WITH THE MUTCD.

STATE OF ARKANSAS
REGISTERED PROFESSIONAL ENGINEER
No.8140
NICCI D. TINER
3-20-16

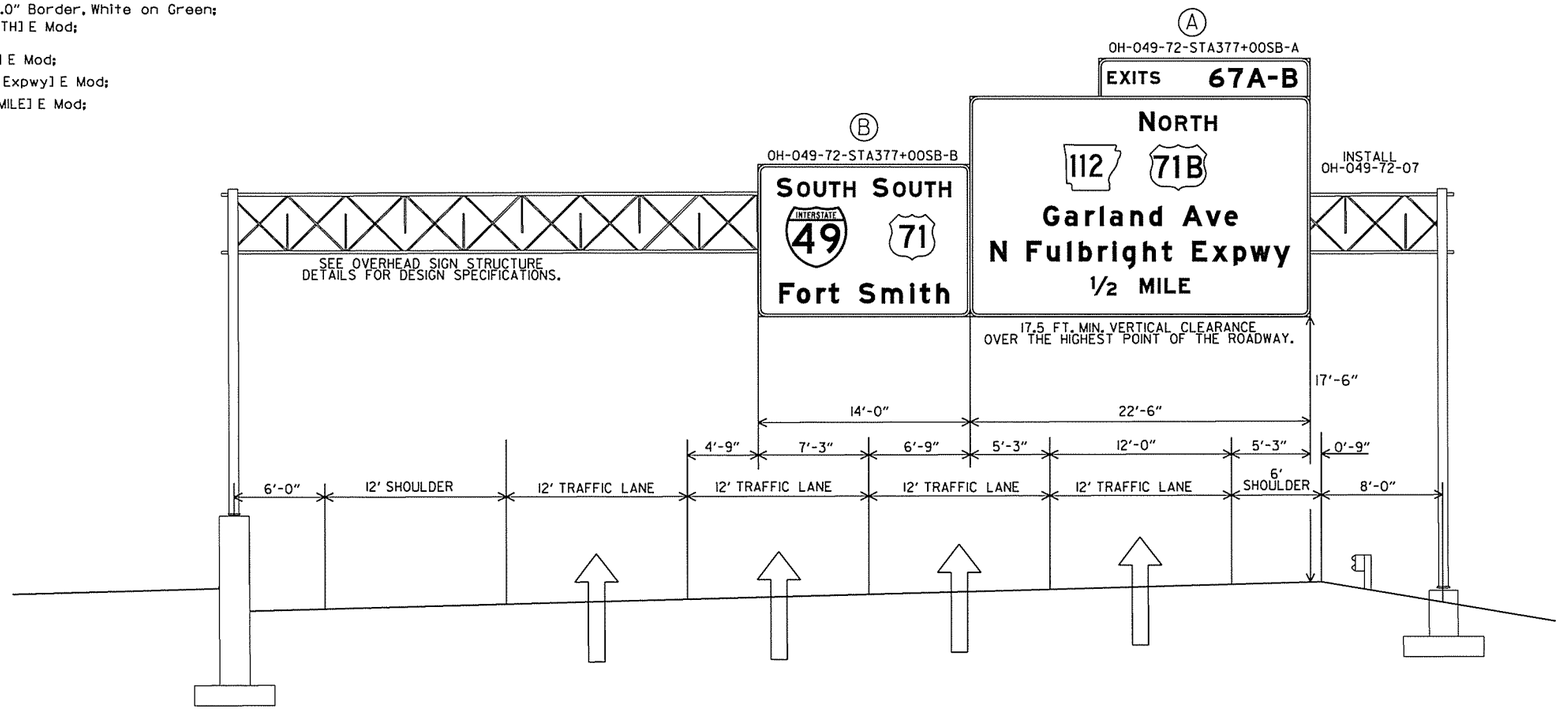

SIGN PLACEMENT SHEET

AEWierciak 3/20/2016 10:23 PM
WORKSPACE: AHTD
L:\20IN\I0I707 - I-540 Widening & Interchange Improvement\Drawings\r-BB0414_SP_MNL_I0-26.dgn
REVISED DATE:

DATE REVISED	DATE FILMED	DATE REVISED	DATE FILMED	FED.RD. DIST.NO.	STATE	FED.AID PROJ.NO.	SHEET NO.	TOTAL SHEETS
				6	ARK.			
				JOB NO.		BB0414	233	886
				(2)	SIGN PLACEMENT SHEET			

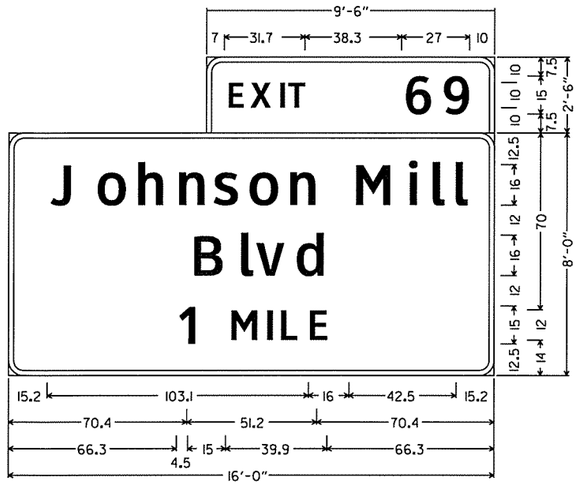

CL-049-72-STA390+63NB
6.0" Radius, 2.0" Border, White on Green;
[EXIT] E Mod; [69] E Mod;
6.0" Radius, 2.0" Border, White on Green;
[Johnson Mill] E Mod;
[Blvd] E Mod;
[1] E Mod; [MILE] E Mod;

NOTES:

THE CONTRACTOR WILL VERIFY SIGN PLACEMENT AND MAKE ANY ADJUSTMENTS NECESSARY TO ALIGN SIGNS OVER INTENDED LANES.

SINCE THE CONTRACTOR WILL BE REQUIRED TO INSTALL OVERHEAD SIGNS ON STRUCTURES WHICH ARE LOCATED OVER THE ROADWAYS WHICH ARE CURRENTLY OPEN TO TRAFFIC, IT WILL BE THE RESPONSIBILITY OF THE CONTRACTOR TO PROVIDE LANE CLOSURES AS A PART OF TRAFFIC CONTROL. PAYMENT FOR PROVIDING LANE CLOSURES WILL BE PAID SUBSIDIARY TO THE PAY ITEM "MAINTENANCE OF TRAFFIC". ALL MAINTENANCE OF TRAFFIC WORK MUST CONFORM WITH THE MUTCD.

STATE OF ARKANSAS
REGISTERED PROFESSIONAL ENGINEER
No. 8141
NICCI D. TINER
3-20-16

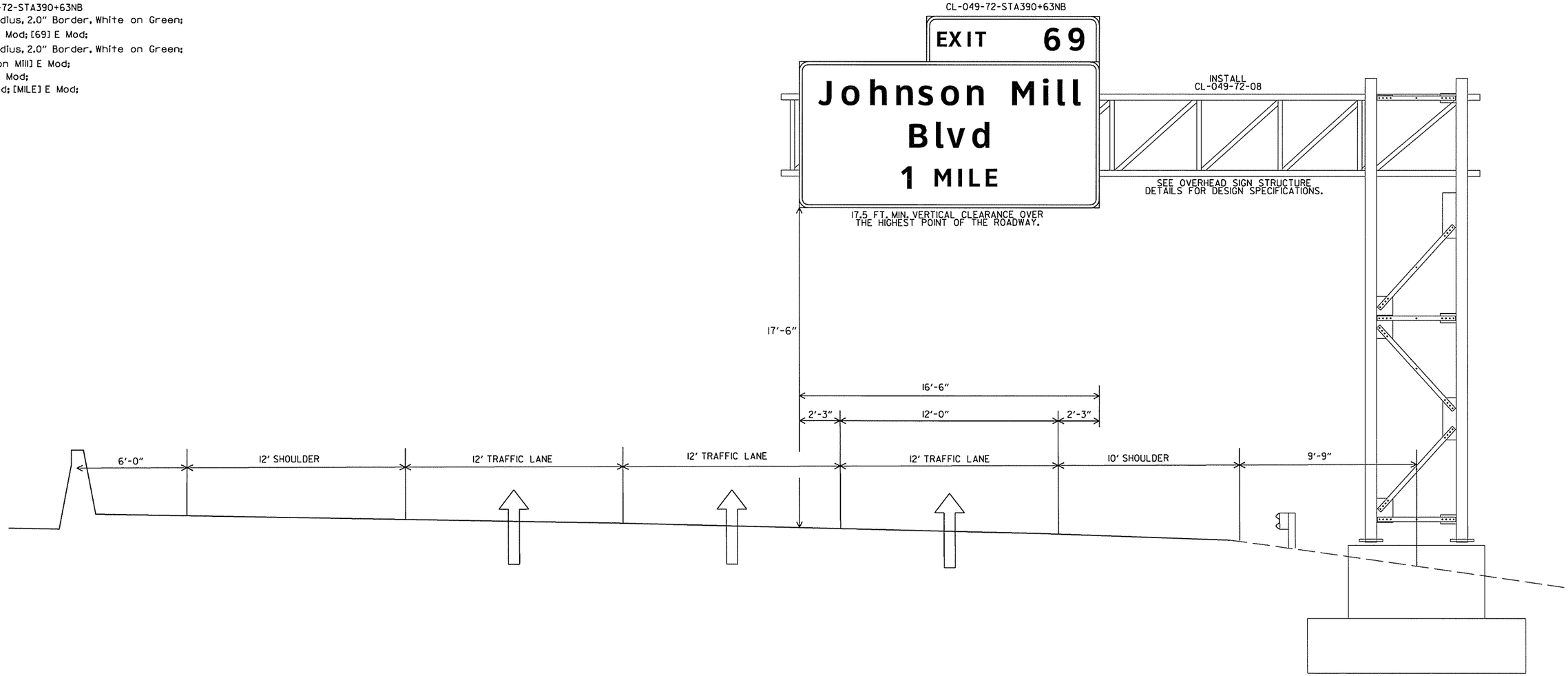

SIGN PLACEMENT SHEET

AEWerclok 3/20/2016 11:0:23 PM
WORKSPACE: AHTD
L:\2011\1107707 - I-540 Widening & Interchange Improvement\Drawings\rBB0414_SP_MNL_10-26.dgn
REVISED DATE:

DATE REVISED	DATE FILMED	DATE REVISED	DATE FILMED	FED.RD. DIST.NO.	STATE	FED.AID PROJ.NO.	SHEET NO.	TOTAL SHEETS
				6	ARK.			
				JOB NO.		BB0414	234	886

(2) SIGN PLACEMENT SHEET

STATE OF ARKANSAS
REGISTERED PROFESSIONAL ENGINEER
No. 8141
NICCI D. TINER
3-20-16

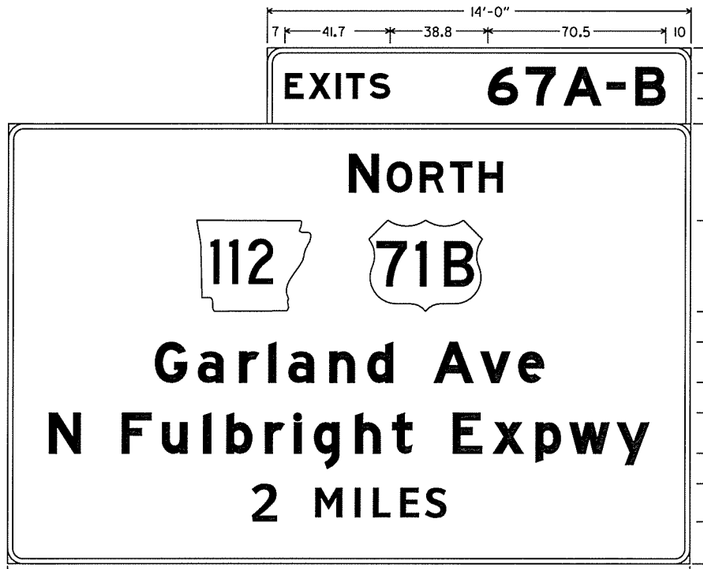

OH-049-72-STA458+09SB-B
6.0" Radius, 2.0" Border, White on Green;
[EXITS] E Mod; [69A-B] E Mod;
6.0" Radius, 2.0" Border, White on Green;
[N] E Mod; [ORTH] E Mod;
MI-6; MI-4
[Garland Ave] E Mod;
[N Fulbright Expwy] E Mod;
[I] E Mod; [MILE] E Mod;

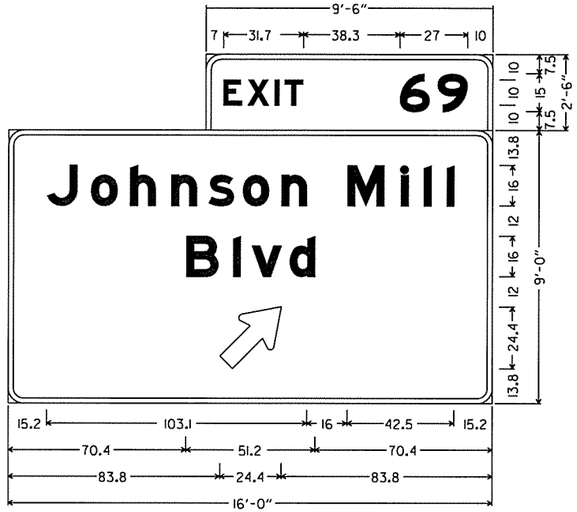

OH-049-72-STA458+09SB-A
6.0" Radius, 2.0" Border, White on Green;
[EXIT] E Mod; [69] E Mod;
6.0" Radius, 2.0" Border, White on Green;
[Johnson Mill] E Mod;
[Blvd] E Mod;
Standard Arrow Custom 35.8" X 21.6" 45°;

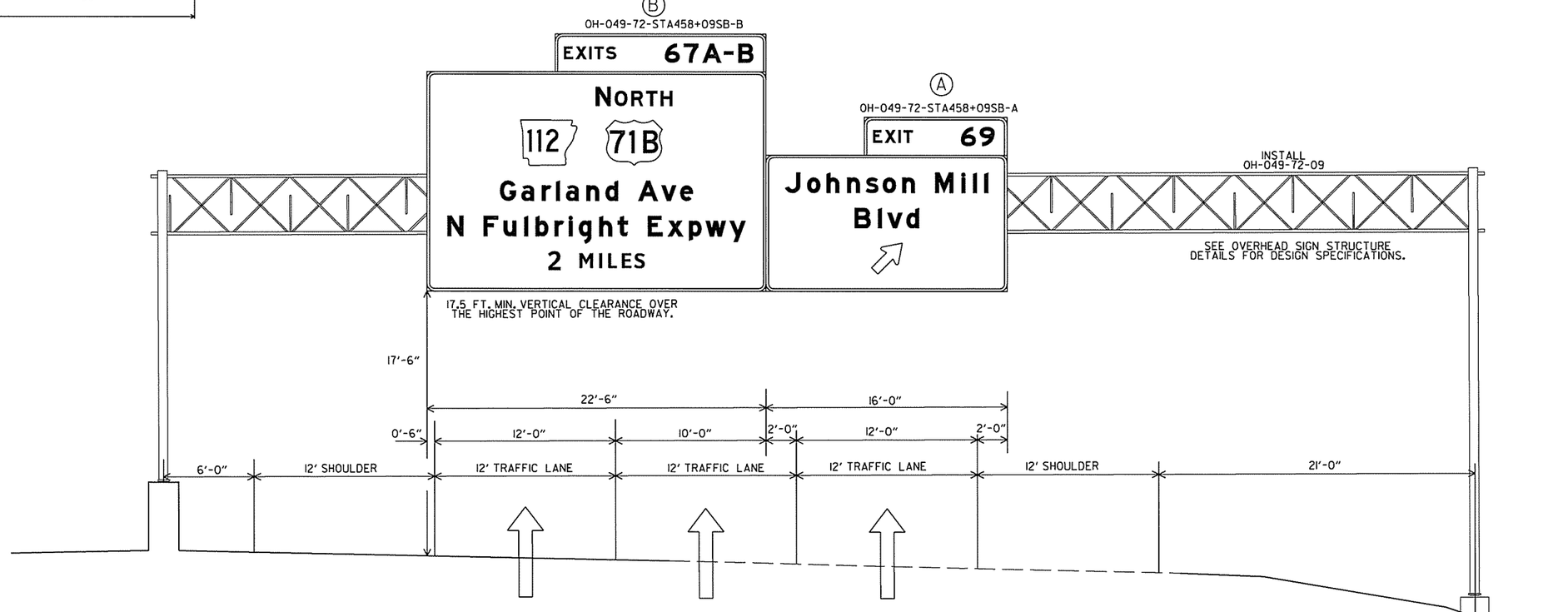

SIGN PLACEMENT SHEET

AEWierclak 3/20/2016 1:0:23 PM
WORKSPACE: AHTD
L:\201\101707 - I-540 Widening & Interchange Improvement\Drawings\rBB0414_SP_MNL_10-26.dgn
REVISED DATE:

DATE REVISED	DATE FILMED	DATE REVISED	DATE FILMED	FED.RD. DIST.NO.	STATE	FED.AID PROJ.NO.	SHEET NO.	TOTAL SHEETS
				6	ARK.			
				JOB NO.		BB0414	235	886
				(2)	SIGN PLACEMENT SHEET			

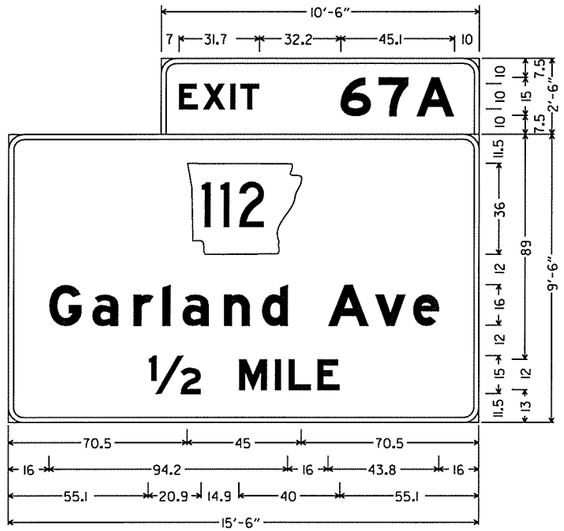

OH-071-72-STA339+50SB-B
6.0" Radius, 2.0" Border, White on Green;
[EXIT] E Mod; [67A] E Mod;
6.0" Radius, 2.0" Border, White on Green;
MI-6;
[Garland Ave] E Mod;
[1/2] E Mod; [MILE] E Mod;

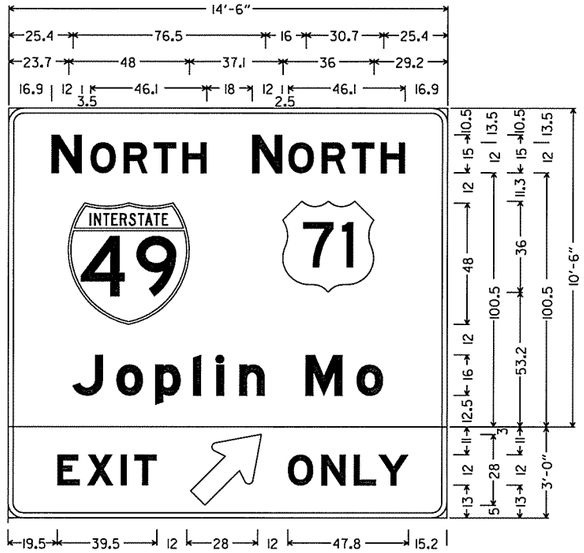

OH-071-72-STA339+50SB-A
6.0" Radius, 2.0" Border, White on Green;
[N] E Mod; [ORTH] E Mod;
MI-1; MI-4;
[Joplin Mo] E Mod; Standard Arrow Custom 31.1" X 18.8" 45°; [ONLY] E Mod;
6.0" Radius, 2.0" Border, Black on Yellow;
[EXIT] E Mod;

NOTES:

THE CONTRACTOR WILL VERIFY SIGN PLACEMENT AND MAKE ANY ADJUSTMENTS NECESSARY TO ALIGN SIGNS OVER INTENDED LANES.

SINCE THE CONTRACTOR WILL BE REQUIRED TO INSTALL OVERHEAD SIGNS ON STRUCTURES WHICH ARE LOCATED OVER THE ROADWAYS WHICH ARE CURRENTLY OPEN TO TRAFFIC, IT WILL BE THE RESPONSIBILITY OF THE CONTRACTOR TO PROVIDE LANE CLOSURES AS A PART OF TRAFFIC CONTROL. PAYMENT FOR PROVIDING LANE CLOSURES WILL BE PAID SUBSIDIARY TO THE PAY ITEM "MAINTENANCE OF TRAFFIC". ALL MAINTENANCE OF TRAFFIC WORK MUST CONFORM WITH THE MUTCD.

STATE OF ARKANSAS
REGISTERED PROFESSIONAL ENGINEER
No. 81413
NICCI D. TINER

3-20-16

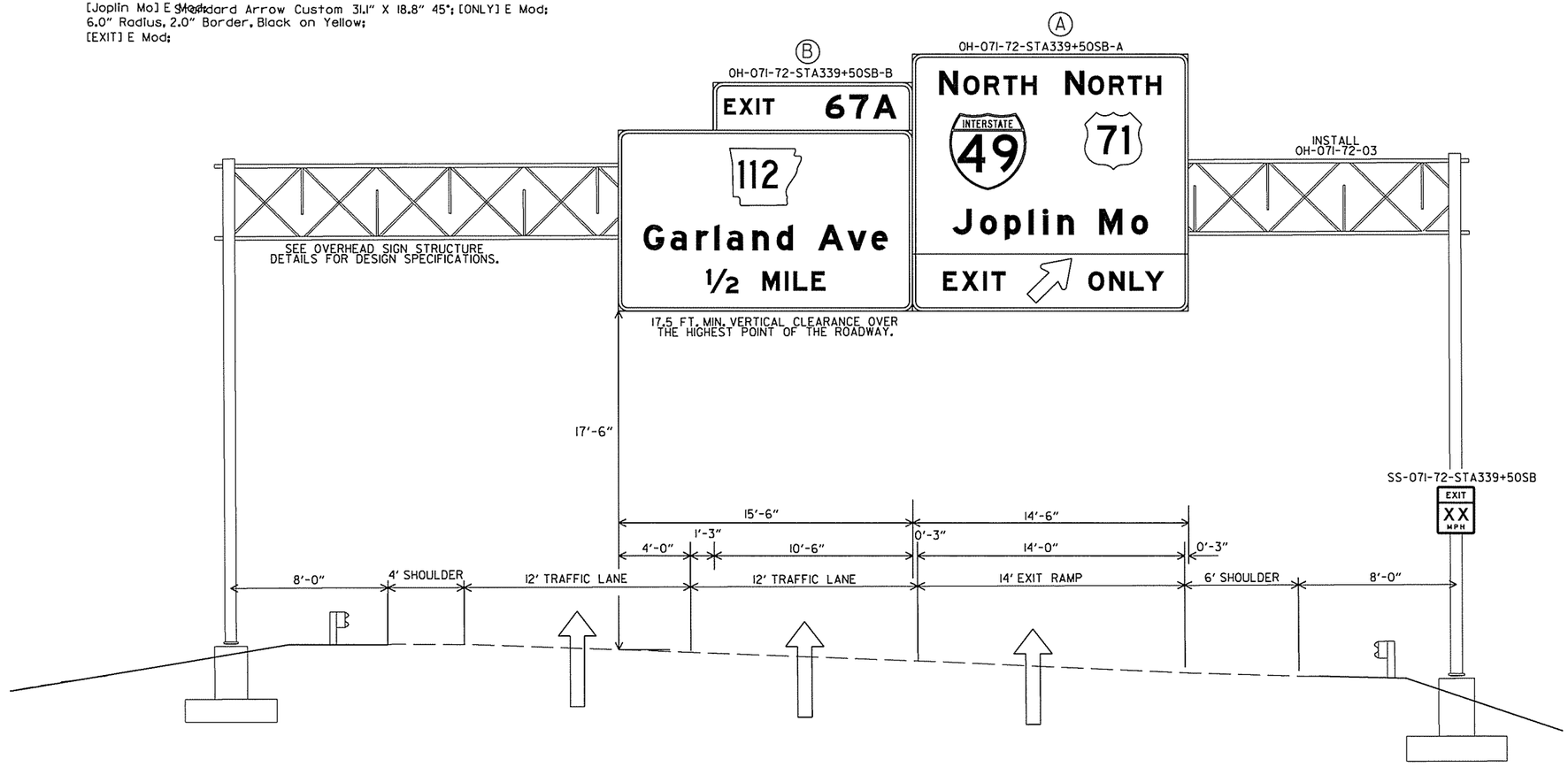

SIGN PLACEMENT SHEET

AEWterclark 3/20/2016 11:02:23 PM
WORKSPACE: AHTD
L:\20IN\10\7107 - I-540 Widening & Interchange Improvement\Drawings\rBB0414_SP_MNL_10-26.dgn
REVISED DATE:

DATE REVISED	DATE FILMED	DATE REVISED	DATE FILMED	FED.RD. DIST.NO.	STATE	FED.AID PROJ.NO.	SHEET NO.	TOTAL SHEETS
				6	ARK.			
				JOB NO.		BB0414	236	886
				(2)	SIGN PLACEMENT SHEET			

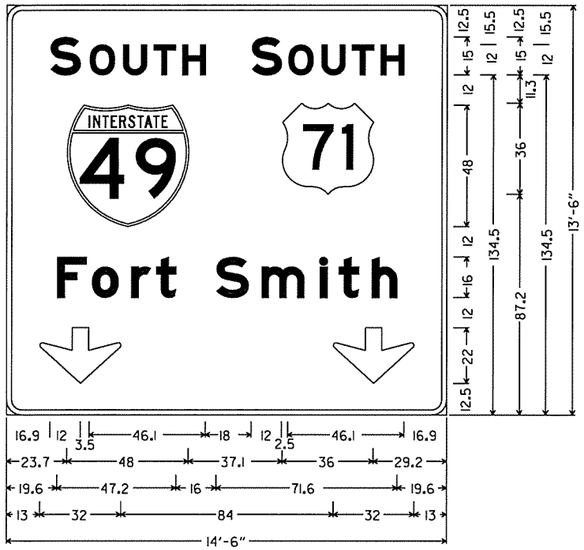

OH-071-72-350+20SB-B
6.0" Radius, 2.0" Border, White on Green;
[S] E Mod; [OUTH] E Mod; [S] E Mod; [OUTH] E Mod;
MI-1; MI-4;
[Fort Smith] E Mod;
Down Arrow 22.0" 270°; Down Arrow 22.0" 270°;

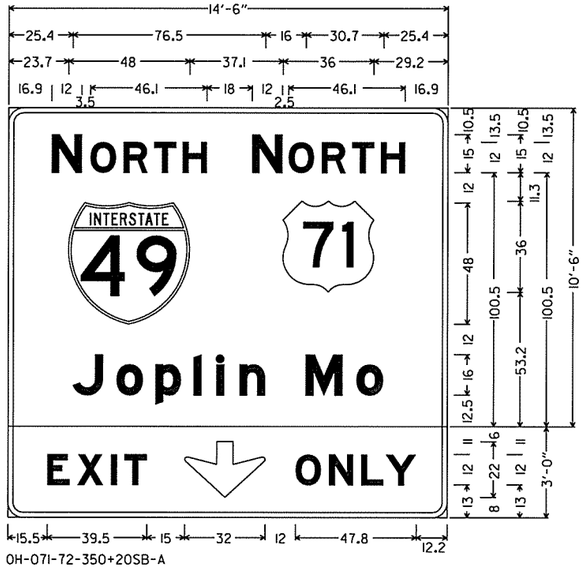

OH-071-72-350+20SB-A
[N] E Mod; [ORTH] E Mod; [N] E Mod; [ORTH] E Mod;
MI-1; MI-4;
[Joplin Mo] E Mod;
6.0" Radius, 2.0" Border, Black on Yellow;
[EXIT] E Mod; Down Arrow 22.0" 270°;
[ONLY] E Mod;

NOTES:

THE CONTRACTOR WILL VERIFY SIGN PLACEMENT AND MAKE ANY ADJUSTMENTS NECESSARY TO ALIGN SIGNS OVER INTENDED LANES.

SINCE THE CONTRACTOR WILL BE REQUIRED TO INSTALL OVERHEAD SIGNS ON STRUCTURES WHICH ARE LOCATED OVER THE ROADWAYS WHICH ARE CURRENTLY OPEN TO TRAFFIC, IT WILL BE THE RESPONSIBILITY OF THE CONTRACTOR TO PROVIDE LANE CLOSURES AS A PART OF TRAFFIC CONTROL. PAYMENT FOR PROVIDING LANE CLOSURES WILL BE PAID SUBSIDIARY TO THE PAY ITEM "MAINTENANCE OF TRAFFIC". ALL MAINTENANCE OF TRAFFIC WORK MUST CONFORM WITH THE MUTCD.

STATE OF ARKANSAS
REGISTERED PROFESSIONAL ENGINEER
No. 8141
NICCI D. TINER
3-20-16

(B)
OH-071-72-350+20SB-B

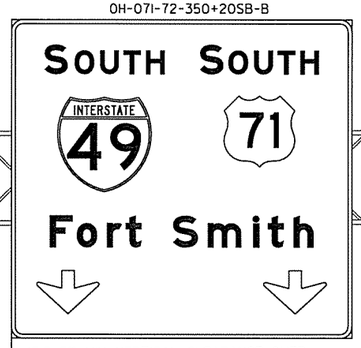

(A)
OH-071-72-350+20SB-A

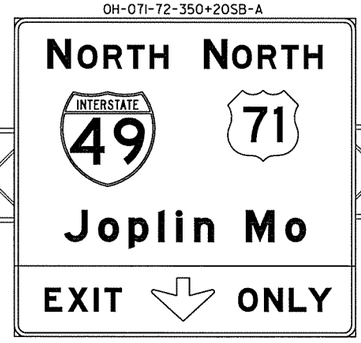

INSTALL OH-071-72-04

SEE OVERHEAD SIGN STRUCTURE DETAILS FOR DESIGN SPECIFICATIONS.

17.5 FT. MIN. VERTICAL CLEARANCE OVER THE HIGHEST POINT OF THE ROADWAY.

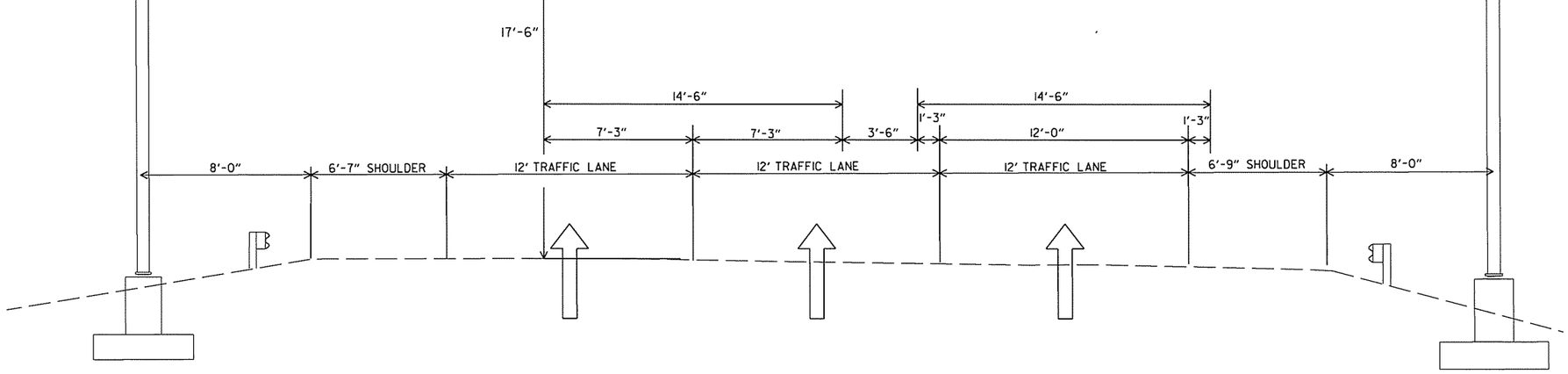

SIGN PLACEMENT SHEET

AEWierzbicki 3/20/2016 10:23 PM
WORKSPACE: AHTD
L:\2011\101707 - I-540 Widening & Interchange Improvement\Drawings\rBB0414_SP_MNL_10-26.dgn
REVISED DATE:

DATE REVISED	DATE FILMED	DATE REVISED	DATE FILMED	FED.RD. DIST.NO.	STATE	FED.AID PROJ.NO.	SHEET NO.	TOTAL SHEETS
				6	ARK.			
				JOB NO.		BB0414	237	886
				(2)	SIGNING QUANTITIES			

STANDARD SIGN QUANTITIES
OMNI-DIRECTIONAL BREAKAWAY SIGN SUPPORTS (BOX 1 of 3)

SIGN NO./ LOCATION	STANDARD ROADSIDE SIGNS TO BE MOUNTED	OMNI-DIRECTIONAL BREAKAWAY SIGN SUPPORTS				
		G-1	G-2	G2-1	G2-2	G2-3
		EACH	EACH	EACH	EACH	EACH
SS-049-72-STA241+02NB	R2-1		1			
SS-049-72-STA269+75SB	R2-1		1			
SS-049-72-STA271+15NB(L)	W1-4R, W13-1P				1	
SS-049-72-STA271+15NB(R)	W1-4R, W13-1P				1	
SS-049-72-STA274+71SB	M3-3, M1-1	1				
SS-049-72-STA286+00SB	W4-3R			1		
SS-RAMP1-72-STA281+27NB	W13-2	1				
SS-RAMP1-72-STA284+28NB (L)	W3-3			1		
SS-RAMP1-72-STA284+28NB (R)	W3-3			1		
SS-RAMP1-72-STA288+01NB	M3-1, M3-3, M1-5, M1-5, M5-1L, M5-1R			1		
SS-RAMP1-72-STA289+06SB (L)	R5-1A		1			
SS-RAMP1-72-STA289+06SB (R)	R5-1A		1			
SS-CD-72-STA277+55NB (L)	R5-1A		1			
SS-CD-72-STA277+55NB (R)	R5-1A		1			
SS-CD-72-STA279+15SB	W1-8R	1				
SS-CD-72-STA279+95SB	W1-8R	1				
SS-CD-72-STA280+75SB	W1-8R	1				
SS-CD-72-STA281+55SB	W1-8R	1				
SS-CD-72-STA282+35SB	W1-8R	1				
SS-CD-72-STA283+15SB	W1-8R	1				
SS-CD-72-STA283+95SB	W1-8R	1				
SS-CD-72-STA284+75SB	W1-8R	1				
SS-CD-72-STA285+00SB	W3-3			1		
SS-CD-72-STA285+55SB	W1-8R	1				
SS-CD-72-STA286+35SB	W1-8R	1				
SS-CD-72-STA287+15SB	W1-8R	1				
SS-CD-72-STA287+95SB	W1-8R	1				
SS-CD-72-STA288+75SB	W1-6R		1			
SS-RAMP4-72-STA296+92SB	R5-10A	1				
SS-RAMP1-72-STA290+27NB (L)	R5-1, R6-1L, R6-1R					1
SS-RAMP1-72-STA290+27NB (R)	R5-1, R6-1L, R6-1R					1
SS-RAMP112NB49-72-STA289+24NB	R5-10A	1				
SS-RAMP112NB49-72-STA290+49NB	W1-8R	1				
SS-RAMP112NB49-72-STA291+69NB	W1-8R	1				
SS-RAMP112NB49-72-STA292+89NB	W1-8R	1				
SS-RAMP112NB49-72-STA294+09NB	W1-8R	1				
SS-RAMP112NB49-72-STA295+29NB	W1-8R	1				
SS-RAMP112NB49-72-STA296+49NB	W1-8R	1				
SS-RAMP112NB49-72-STA297+69NB	W1-8R	1				
SS-RAMP112NB49-72-STA298+89NB	W1-8R	1				
SS-CD-72-STA297+30SB	R5-1, R1-2					1
SS-CD-72-STA297+58SB	M3-1, M3-3, M1-5, M1-5, M5-1L, M6-2R			1		
SS-CD-72-STA297+76NB	R4-7	1				
SS-CD-72-STA297+85NB	R5-1, R6-1L, R6-1R					1
SS-049-72-STA310+90SB	W1-8R	1				
SS-049-72-STA310+90NB	W1-8L	1				
SS-049-72-STA312+50SB	W1-8R	1				
SS-049-72-STA312+50NB	W1-8L	1				
SS-049-72-STA314+10SB	W1-8R	1				
SS-049-72-STA314+10NB	W1-8L	1				
SS-049-72-STA315+70SB	W1-8R	1				
SS-049-72-STA315+70NB	W1-8L	1				
SS-049-72-STA317+30SB	W1-8R	1				
SS-049-72-STA317+30NB	W1-8L	1				
SS-049-72-STA318+90SB	W1-8R	1				
SS-049-72-STA318+90NB	W1-8L	1				
SS-049-72-STA319+87NB	W8-13			1		
SS-049-72-STA320+50SB	W1-8R	1				
SS-049-72-STA320+50NB	W1-8L	1				
SS-049-72-STA322+10SB	W1-8R	1				
SS-049-72-STA322+10NB	W1-8L	1				
SS-049-72-STA323+70SB	W1-8R	1				
SS-049-72-STA323+70NB	W1-8L	1				
SS-049-72-STA325+30SB	W1-8R	1				
SS-049-72-STA325+30NB	W1-8L	1				
SUBTOTALS SS-049-72-STA241+02NB TO SS-049-72-STA325+30NB:		45	7	7	2	4

STANDARD SIGN QUANTITIES
OMNI-DIRECTIONAL BREAKAWAY SIGN SUPPORTS (BOX 2 of 3)

SIGN NO./ LOCATION	STANDARD ROADSIDE SIGNS TO BE MOUNTED	OMNI-DIRECTIONAL BREAKAWAY SIGN SUPPORTS				
		G-1	G-2	G2-1	G2-2	G2-3
		EACH	EACH	EACH	EACH	EACH
SS-049-72-STA326+90SB	W1-8R	1				
SS-049-72-STA326+90NB	W1-8L	1				
SS-049-72-STA328+50SB	W1-8R	1				
SS-049-72-STA328+50NB	W1-8L	1				
SS-049-72-STA330+10SB	W1-8R	1				
SS-049-72-STA330+10NB	W1-8L	1				
SS-049-72-STA331+70SB	W1-8R	1				
SS-049-72-STA331+70NB	W1-8L	1				
SS-049-72-STA332+60SB	W8-13			1		
SS-049-72-STA333+30SB	W1-8R	1				
SS-049-72-STA333+30NB	W1-8L	1				
SS-049-72-STA334+90SB	W1-8R	1				
SS-049-72-STA334+90NB	W1-8L	1				
SS-RAMP49NB71-72-STA309-12NB	W13-2	1				
SS-RAMP49NB71-72-STA312+90NB	W1-8L	1				
SS-RAMP49NB71-72-STA314+10NB	W1-8L	1				
SS-RAMP49NB71-72-STA315+30NB	W1-8L	1				
SS-RAMP49NB71-72-STA316+50NB	W1-8L	1				
SS-RAMP49NB71-72-STA317+70NB	W1-8L	1				
SS-RAMP49NB71-72-STA318+90NB	W1-8L	1				
SS-RAMP49NB71-72-STA320+10NB	W1-8L	1				
SS-RAMP49NB71-72-STA321+30NB	W1-8L	1				
SS-RAMP49NB71-72-STA322+77NB	W1-8L	1				
SS-RAMP49NB71-72-STA323+97NB	W1-8L	1				
SS-RAMP49NB71-72-STA325+17NB	W1-8L	1				
SS-RAMP49NB71-72-STA326+37NB	W1-8L	1				
SS-RAMP49NB71-72-STA327+57NB	W1-8L	1				
SS-RAMP49NB71-72-STA328+77NB	W1-8L	1				
SS-RAMP49NB71-72-STA329+97NB	W1-8L	1				
SS-RAMP49NB71-72-STA331+17NB	W1-8R	1				
SS-RAMP49NB71-72-STA332+37NB	W1-8R	1				
SS-RAMP49NB71-72-STA332+43NB	W1-6R		1			
SS-RAMP112TO71-72-STA302+77NB	M3-1, M3-1, M1-1, M1-4, M6-2L, M6-2R			1		
SS-RAMP112TO71-72-STA304+48NB	D3-1		1			
SS-RAMP112TO71-72-STA307+95NB	W1-8L	1				
SS-RAMP112TO71-72-STA309+15NB	W1-8L	1				
SS-RAMP112TO71-72-STA310+35NB	W1-8L	1				
SS-RAMP112TO71-72-STA311+55NB	W1-8L	1				
SS-RAMP112TO71-72-STA312+75NB	W1-8L	1				
SS-RAMP112TO71-72-STA313+95NB	W1-8L	1				
SS-RAMP112TO71-72-STA315+15NB	W1-8L	1				
SS-RAMP112NB49-72-STA306+90NB	W8-13			1		
SS-RAMP112NB49-72-STA308+18NB	W1-8L	1				
SS-RAMP112NB49-72-STA309+38NB	W1-8L	1				
SS-RAMP112NB49-72-STA310+58NB	W1-8L	1				
SS-RAMP112NB49-72-STA311+78NB	W1-8L	1				
SS-RAMP112NB49-72-STA312+98NB	W1-8L	1				
SS-RAMP112NB49-72-STA314+18NB	W1-8L	1				
SS-RAMP112NB49-72-STA315+38NB	W1-8L	1				
SS-RAMP112NB49-72-STA316+58NB	W1-8L	1				
SS-RAMP112NB49-72-STA319+20NB	W8-13			1		
SS-RAMP112NB49-72-STA322+20NB	W1-8L	1				
SS-RAMP112NB49-72-STA323+40NB	W1-8L	1				
SS-RAMP112NB49-72-STA324+60NB	W1-8L	1				
SS-RAMP112NB49-72-STA325+80NB	W1-8L	1				
SS-RAMP112NB49-72-STA327+00NB	W1-8L	1				
SS-RAMP112NB49-72-STA328+20NB	W1-8L	1				
SS-RAMP112NB49-72-STA329+40NB	W1-8L	1				
SS-RAMP112NB49-72-STA330+60NB	W1-8L	1				
SS-RAMP112NB49-72-STA331+80NB	W1-8L	1				
SS-RAMP112NB49-72-STA333+00NB	W1-8L	1				
SS-RAMP112NB49-72-STA334+20NB	W1-8L	1				
SS-RAMP49SB112-72-STA329+04SB	W1-8R	1				
SS-RAMP49SB112-72-STA330+24SB	W1-8R	1				
SS-RAMP49SB112-72-STA331+44SB	W1-8R	1				
SS-RAMP49SB112-72-STA332+64SB	W1-8R	1				
SS-RAMP49SB112-72-STA333+84SB	W1-8R	1				
SS-RAMP49SB112-72-STA335+04SB	W1-8R	1				
SS-RAMP49SB112-72-STA336+24SB	W1-8R	1				
SS-RAMP49SB112-72-STA337+44SB	W1-8R	1				
SS-RAMP49SB112-72-STA338+64SB	W1-8R	1				
SUBTOTALS SS-049-72-STA326+90SB TO SS-RAMP49SB112-72-STA338+64SB		65	2	4	0	0

STATE OF ARKANSAS
REGISTERED PROFESSIONAL ENGINEER
No. 8147
NICCI D. TINER

3-20-16

SIGNING QUANTITIES

AEWerclok 3/20/2016 11:53:23 AM
WORKSPACE: AHTD
L:\2011\11017\07 - I-540 Widening & Interchange Improvement\Drawings\r-BB0414_SP_MNL_27.dgn
REVISED DATE:

DATE REVISED	DATE FILMED	DATE REVISED	DATE FILMED	FED.RD. DIST.NO.	STATE	FED.AID PROJ.NO.	SHEET NO.	TOTAL SHEETS
				6	ARK.			
				JOB NO.		BB0414	238	886
				(2)	SIGNING QUANTITIES			

STANDARD SIGN QUANTITIES
OMNI-DIRECTIONAL BREAKAWAY SIGN SUPPORTS (BOX 3 of 3)

SIGN NO./ LOCATION	STANDARD ROADSIDE SIGNS TO BE MOUNTED	OMNI-DIRECTIONAL BREAKAWAY SIGN SUPPORTS				
		G-1	G-2	G2-1	G2-2	G2-3
		EACH	EACH	EACH	EACH	EACH
SS-RAMP49SB112-72-STA339+84SB	W1-8R	1				
SS-071-72-STA302+36SB(L)	W4-2R			1		
SS-071-72-STA302+36SB(R)	W4-2R			1		
SS-071-72-STA310+76SB(L)	W9-2TL			1		
SS-071-72-STA310+76SB(R)	W9-2TL			1		
SS-071-72-STA316+62SB(L)	W9-1R, W16-3aP				1	
SS-071-72-STA316+62SB(R)	W9-1R, W16-3aP				1	
SS-RAMP49SB71-72-STA339+76SB (L)	W1-4L, W13-1P				1	
SS-RAMP49SB71-72-STA339+76SB (R)	W1-4L, W13-1P				1	
SS-RAMP49SB71-72-STA337+13SB	W8-13			1		
SS-RAMP49SB71-72-STA319+73SB	W1-8L	1				
SS-RAMP49SB71-72-STA320+93SB	W1-8L	1				
SS-RAMP49SB71-72-STA322+13SB	W1-8L	1				
SS-RAMP49SB71-72-STA323+33SB	W1-8L	1				
SS-RAMP49SB71-72-STA324+53SB	W1-8L	1				
SS-RAMP49SB71-72-STA325+73SB	W1-8L	1				
SS-RAMP49SB71-72-STA326+93SB	W1-8L	1				
SS-RAMP49SB71-72-STA328+13SB	W1-8L	1				
SS-RAMP49SB71-72-STA329+33SB	W1-8L	1				
SS-RAMP49SB71-72-STA330+53SB	W1-8L	1				
SS-RAMP49SB71-72-STA331+73SB	W1-8L	1				
SS-RAMP49SB71-72-STA332+93SB	W1-8L	1				
SS-RAMP49SB71-72-STA334+13SB	W1-8L	1				
SS-RAMP49SB71-72-STA335+33SB	W1-8L	1				
SS-RAMP49SB71-72-STA336+53SB	W1-8L	1				
SS-RAMP49SB71-72-STA337+73SB	W1-8L	1				
SS-RAMP112NB49-72-STA335+40NB	W1-8L	1				
SS-RAMP112NB49-72-STA336+60NB	W1-8L	1				
SS-RAMP112NB49-72-STA337+80NB	W1-8L	1				
SS-RAMP112NB49-72-STA343+41NB (L)	W1-2R			1		
SS-RAMP112NB49-72-STA343+41NB (R)	W1-2R			1		
SS-RAMP112NB49-72-STA345+44NB (L)	M3-1, M1-1	1				
SS-RAMP112NB49-72-STA345+44NB (R)	M3-1, M1-1	1				
SS-049-72-STA358+97NB	W8-13			1		
SS-049-72-STA335+40NB	W1-8L	1				
SS-049-72-STA337+00NB	W1-8L	1				
SS-049-72-STA338+60NB	W1-8L	1				
SS-049-72-STA340+20NB	W1-8L	1				
SS-049-72-STA341+80NB	W1-8L	1				
SS-049-72-STA343+40NB	W1-8L	1				
SS-049-72-STA336+50SB	W1-8R	1				
SS-049-72-STA338+10SB	W1-8R	1				
SS-049-72-STA339+70SB	W1-8R	1				
SS-049-72-STA341+30SB	W1-8R	1				
SS-049-72-STA342+90SB	W1-8R	1				
SS-049-72-STA342+94NB (L)	W1-2R			1		
SS-049-72-STA342+94NB (R)	W1-2R			1		
SS-049-72-STA358+79SB	R2-1		1			
SS-RAMP49SB71-72-STA347+94SB	W13-2	1				
SS-RAMP49SB71-72-STA351+97SB	W13-2	1				
SS-RAMP49SB71-72-STA340+60SB	W1-8R	1				
SS-RAMP49SB71-72-STA341+80SB	W1-8R	1				
SS-RAMP49SB71-72-STA343+00SB	W1-8R	1				
SS-RAMP49SB71-72-STA344+20SB	W1-8R	1				
SS-RAMP49SB71-72-STA345+40SB	W1-8R	1				
SS-RAMP49SB112-72-STA344+81SB (L)	W1-4R, W13-1P				1	
SS-RAMP49SB112-72-STA344+81SB (R)	W1-4R, W13-1P				1	
SS-RAMP49SB112-72-STA341+04SB	W1-8R	1				
SS-RAMP49SB112-72-STA342+24SB	W1-8R	1				
SS-049-72-STA371+50SB	W8-13			1		
SS-049-72-STA383+19NB	R2-1		1			
SS-RAMP49NB71-72-STA333+57NB	W1-8R	1				
SS-RAMP49NB71-72-STA334+18NB	W4-1R			1		
SS-071-72-STA340+84NB	W8-13			1		
SS-071-72-STA334+67SB	W1-8R	1				
SUBTOTALS SS-RAMP49SB112-72-STA339+84SB THROUGH SS-071-72-STA334+67SB:		44	2	13	6	0
TOTALS:		154	11	24	8	4

STATE OF ARKANSAS
REGISTERED PROFESSIONAL ENGINEER
No.8141
NICCI D. TINER

3-20-16

STANDARD SIGN QUANTITIES
U-CHANNEL POSTS

SIGN NO./ LOCATION	STANDARD ROADSIDE SIGNS TO BE MOUNTED	U-CHANNEL POST ASSEMBLIES				
		U-1	U-2	U-2(A)	U-2(B)	U-2(7)
		EACH	EACH	EACH	EACH	EACH
SS-112-72-STA7+37NB	M3-1, M1-5	1				
SS-112-72-STA9+35SB	R3-7R	1				
SS-112-STA11+79NB	R3-7R	1				
SS-112-72-STA13+05SB	M3-3, M1-5	1				
SS-112-72-STA13+21NB	M3-1, M1-1, M5-1R	1				
SS-112-72-STA13+99NB	M3-3, M3-1, M1-1, M1-1, M6-3, M6-1R, D3-1					1
SS-112-72-STA15+56SB	M3-1, M1-1, M6-1L	1				
SS-112-72-STA15+68NB	W8-13		1			
SS-112-72-STA17+69NB	OM-3L	1				
SS-112-72-STA17+99NB	OM-3R	1				
SS-112-72-STA20+69SB	OM-3R	1				
SS-112-72-STA21+16SB	OM-3L	1				
SS-112-72-STA21+57SB	W8-13		1			
SS-112-72-STA23+26NB	W1-7		1			
SS-112-72-STA23+86NB (L)	M3-3, M1-1, M6-1L	1				
SS-112-72-STA23+86NB (R)	M3-3, M1-1, M6-1L	1				
SS-112-72-STA24+56SB	R6-1L, R6-1R, R1-2				1	
SS-112-72-STA27+70NB	R3-7R	1				
SS-112-72-STA27+92NB	R4-4	1				
SS-112-72-STA28+20NB	W1-4L, W13-1P			1		
SS-SHILOH-72-STA73+45NB	R1-1	1				
SS-SHILOH-72-STA73+90SB	W1-5, W13-1P			1		
SS-049-72-STA324+93NB	OM-3L	1				
SS-049-72-STA325+42NB	OM-3R	1				
SS-049-72-STA327+60SB	OM-3R	1				
SS-049-72-STA327+94SB	OM-3L	1				
SS-RAMP112NB49-72-STA311+96NB	OM-3L	1				
SS-RAMP112NB49-72-STA312+18NB	OM-3R	1				
SS-RAMP112NB49-72-STA324+00NB	OM-3L	1				
SS-RAMP112NB49-72-STA324+44NB	OM-3R	1				
SS-RAMP49SB71-72-STA331+50SB (L)	OM-3L	1				
SS-RAMP49SB71-72-STA331+50SB (R)	OM-3R	1				
SS-049-72-STA364+09NB	OM-3R	1				
SS-049-72-STA366+44SB	OM-3R	1				
TOTALS:		27	3	2	1	1

AEWerclok 3/20/2016 11:53:31 AM
WORKSPACE: AHTD
L:\20II\I0I7707 - I-540 Widening & Interchange Improvement\Drawings\rBB04I4_SP_MNL_28.dgn
REVISED DATE:

DATE REVISED	DATE FILMED	DATE REVISED	DATE FILMED	FED.RD. DIST.NO.	STATE	FED.AID PROJ.NO.	SHEET NO.	TOTAL SHEETS
				6	ARK.			
				JOB NO.		BB0414	239	886
				(2)	SIGNING QUANTITIES			

STATE OF ARKANSAS
REGISTERED PROFESSIONAL ENGINEER
No.8141
NICCI D. TINER

4-22-16

STANDARD ROADSIDE SIGNS
SHEET ALUMINUM 0.100" THICKNESS
(5 SQ. FT. OR LESS)

STANDARD ROADSIDE SIGNS SHEET ALUMINUM 0.100" THICKNESS (5 SF OR LESS)					
SIGN NO.	SIZE OF SIGN	UNIT AREA (SQ. FT.)	QUANTITY REQUIRED	TOTAL SIGN AREA (SQ. FT.)	LEGEND/BACKGROUND
M1-1	24" x 24"	4.00	12	48.00	WHITE/BLUE
M1-4	24" x 24"	4.00	2	8.00	BLACK/WHITE
M1-4	30" x 24"	5.00	1	5.00	BLACK/WHITE
M1-5	30" x 24"	5.00	9	45.00	BLACK/WHITE
M2-1	21" x 15"	2.19	1	2.19	WHITE/BLUE
M3-1	24" x 12"	2.00	7	14.00	BLACK/WHITE
M3-1	24" x 12"	2.00	6	12.00	WHITE/BLUE
M3-1	36" x 18"	4.50	2	9.00	WHITE/BLUE
M3-3	24" x 12"	2.00	5	10.00	BLACK/WHITE
M3-3	24" x 12"	2.00	5	10.00	WHITE/BLUE
M3-3	36" x 18"	4.50	1	4.50	WHITE/BLUE
M5-1L	21" x 15"	2.19	2	4.38	BLACK/WHITE
M5-1L	21" x 15"	2.19	2	4.38	WHITE/BLUE
M5-1R	21" x 15"	2.19	2	4.38	BLACK/WHITE
M5-1R	21" x 15"	2.19	2	4.38	WHITE/BLUE
M5-4L	24" x 18"	3.00	1	3.00	BLACK/WHITE
M5-4R	24" x 18"	3.00	1	3.00	BLACK/WHITE
M6-1L	21" x 15"	2.19	4	8.75	WHITE/BLUE
M6-1R	21" x 15"	2.19	1	2.19	WHITE/BLUE
M6-2L	21" x 15"	2.19	1	2.19	WHITE/BLUE
M6-2R	21" x 15"	2.19	2	4.38	BLACK/WHITE
M6-3	21" x 15"	2.19	1	2.19	BLACK/WHITE
M6-3	21" x 15"	2.19	2	4.38	WHITE/BLUE
OM-3L	12" x 36"	3.00	7	21.00	BLACK/YELLOW
OM-3R	12" x 36"	3.00	9	27.00	BLACK/YELLOW
R4-7	24" x 30"	5.00	1	5.00	BLACK/WHITE
R6-1L	36" x 12"	3.00	4	12.00	BLACK/WHITE
R6-1R	36" x 12"	3.00	4	12.00	BLACK/WHITE
W13-1P	24" x 24"	4.00	8	32.00	BLACK/YELLOW
W16-3aP	30" x 12"	2.50	2	5.00	BLACK/YELLOW
TOTAL 0.100" THICKNESS:				329.29[1]	

[1] THESE QUANTITIES INCLUDE ALL STANDARD SIGNS FOR ALL MOUNTING STRUCTURE TYPES.

STANDARD ROADSIDE SIGNS
SHEET ALUMINUM 0.125" THICKNESS
(GREATER THAN 5 SQ. FT.)

STANDARD ROADSIDE SIGNS SHEET ALUMINUM 0.125" THICKNESS (GREATER THAN 5 SF)					
SIGN NO.	SIZE OF SIGN	UNIT AREA (SQ. FT.)	QUANTITY REQUIRED	TOTAL SIGN AREA (SQ. FT.)	LEGEND/BACKGROUND
D3-1	66" x 18"	8.25	2	16.50	WHITE/GREEN
E5-1	72" x 60"	30.00	1	30.00	WHITE/GREEN
M1-1	36" x 36"	9.00	3	27.00	WHITE/BLUE
R1-1	36" x 36"	9.00	1	9.00	WHITE/RED
R1-2	48" x 48" x 48"	6.93	1	6.93	RED/WHITE
R1-2	60" x 60" x 60"	10.83	1	10.83	RED/WHITE
R2-1	48" x 60"	20.00	4	80.00	BLACK/WHITE
R3-7R	36" x 36"	9.00	3	27.00	BLACK/WHITE
R4-4	36" x 30"	7.50	1	7.50	BLACK/WHITE
R5-1	36" x 36"	9.00	4	36.00	RED/WHITE
R5-1A	42" x 30"	8.75	4	35.00	WHITE/RED
R5-10A	36" x 48"	12.00	2	24.00	BLACK/WHITE
W1-2R	48" x 48"	16.00	4	64.00	BLACK/YELLOW
W1-4L	48" x 48"	9.00	1	9.00	BLACK/YELLOW
W1-4L	48" x 48"	16.00	2	32.00	BLACK/YELLOW
W1-4R	48" x 48"	16.00	4	64.00	BLACK/YELLOW
W1-5	36" x 36"	9.00	1	9.00	BLACK/YELLOW
W1-6R	48" x 24"	8.00	2	16.00	BLACK/YELLOW
W1-7	48" x 24"	8.00	1	8.00	BLACK/YELLOW
W1-8L	36" x 48"	12.00	82	984.00	BLACK/YELLOW
W1-8R	36" x 48"	12.00	62	744.00	BLACK/YELLOW
W3-3	48" x 48"	16.00	3	48.00	BLACK/YELLOW
W4-1R	48" x 48"	16.00	1	16.00	BLACK/YELLOW
W4-2R	48" x 48"	16.00	2	32.00	BLACK/YELLOW
W4-3R	48" x 48"	16.00	1	16.00	BLACK/YELLOW
W8-13	36" x 36"	9.00	2	18.00	BLACK/YELLOW
W8-13	48" x 48"	16.00	8	128.00	BLACK/YELLOW
W9-1R	48" x 48"	16.00	2	32.00	BLACK/YELLOW
W9-2TL	48" x 48"	16.00	2	32.00	BLACK/YELLOW
W13-2	36" x 48"	12.00	6	72.00	BLACK/YELLOW
TOTAL 0.125" THICKNESS:				2633.76[1]	

[1] THESE QUANTITIES INCLUDE ALL STANDARD SIGNS FOR ALL MOUNTING STRUCTURE TYPES.

AEWierdak 4/22/2016 11:29:35 AM
WORKSPACE: AHTD
L:\20INV\07T07 - I-540 Widening & Interchange Improvement\Drawings\rBB0414_SP_MNL_29.dgn
REVISED DATE:

MAIN LANES SIGNING QUANTITIES
ROADSIDE MOUNTED I-BEAM SIGN SUPPORTS

DATE REVISED	DATE FILMED	DATE REVISED	DATE FILMED	FED.RD. DIST.NO.	STATE	FED.AID PROJ.NO.	SHEET NO.	TOTAL SHEETS
				6	ARK.			
				JOB NO.		BB0414	240	886

(2) SIGNING QUANTITIES

STATE OF ARKANSAS ★ ★ ★ REGISTERED PROFESSIONAL ENGINEER ★ ★ ★ No.8141 NICCI D. TINER

4-22-16

SIGN NO./ LOCATION	STRUCTURE TYPE: G-1	G-2	G-3	G2-4	G2-5	SIGN: STANDARD SIGN SQ. FT.	GUIDE SIGN LENGTH FT.	GUIDE SIGN HEIGHT FT.	GUIDE SIGN SQ. FT.	BREAKAWAY SIGN SUPPORT: STEEL SECT. A-572 BEAM	LBS	SIGN POST LENGTH H-1 (LIN FT)	H-2	H-3	STUB POST H-1 (LIN FT)	H-2	H-3	FOOTINGS DIA. (LIN FT)	DEPTH	EMBED.	SIGN POST AND STUB POUND	EXIT NUMBER PANEL: LEGEND	TYPE A SQ. FT.	B	C
GM-049-72-STA241+01SB		1				0.00	8.00	4.50	36.00	W8	18	13.82	14.62		3.66	3.66		1.5	5	3.33	643.81				
LFL-049-72-STA244+37NB		1				0.00	17.50	12.00	210.00	W8	21	21.65	22.6		7.00	7.00		3	10	6.67	1223.12				
LG-049-72-STA254+13NB		1				0.00	17.50	10.00	175.00	W8	18	19.64	19.6		6.66	6.66		3	9.5	6.33	946.21				
GM-049-72-STA261+74NB		1				0.00	15.50	9.00	139.50	W8	18	18.58	20.05		6.33	6.33		3	9	6.00	923.23				
GM-049-72-STA268+32NB		1				0.00	17.50	7.00	122.50	W8	18	16.65	16.61		6.00	6.00		3	8.5	5.67	814.57				
EX-RAMP1-72-STA281+97NB		1				0.00	11.00	5.00	55.00	W8	18	13.64	14.84		4.33	4.33		2	6	4.00	668.53				
GM-049-72-STA282+97NB		1				0.00	7.50	5.00	37.50	W6	9	12.94	11.82		3.66	3.66		1.5	5	3.33	288.78				
LFL-RAMP1-72-STA285+99NB			1			0.00	19.50	12.00	234.00	W10	22	21.25	22.22	23.2	6.66	6.66	6.66	3	9.5	6.33	1906.54				
LG-RAMP1-72-STA287+00NB		1				0.00	19.50	10.00	195.00	W8	21	19.34	21.29		7.00	7.00		3	10	6.67	1147.10				
EX-049-72-STA290+61SB		1				0.00	7.00	9.50	66.50	W8	18	18.52	19.15		5.00	5.00		2.5	7	4.67	857.95				
LFL-CD-72-STA281+13SB		1				0.00	14.50	15.50	224.75	W10	22	24.4	24.14		7.00	7.00		3	10	6.67	1375.75				
LG-CD-72-STA279+73SB		1				0.00	14.50	12.00	174.00	W8	18	21	20.71		6.66	6.66		3	9.5	6.33	990.67				
SS-CD-72-STA279+73SB					1	20.00	6.00	2.50	15.00	W6	9	11.61	12.21		3.66	3.66		1.5	5	3.33	280.32				
SS-112-72-STA8+45NB				1		6.19	5.00	3.50	17.50	W6	9	10	11		3.33	3.33		1.5	4.5	3.00	248.94				
GM-112-72-STA8+93SB	1					2.19	2.00	4.50	9.00	W6	9	12.51			3.00			1.5	4	2.67	139.56				
GM-112-72-STA9+67SB		1				0.00	6.50	2.50	16.25	W6	9	8.94	10.24		3.00	3.00		1.5	4	2.67	226.56				
GM-112-72-STA16+32SB		1				0.00	7.50	5.00	37.50	W6	9	11.29	12.79		3.66	3.66		1.5	5	3.33	282.66				
SS-112-72-STA17+50NB				1		8.19	5.50	2.50	13.75	W6	9	9.04	10.14		3.00	3.00		1.5	4	2.67	226.56				
SS-112-72-STA21+05SB				1		8.19	5.50	2.50	13.75	W6	9	8.66	9.76		3.00	3.00		1.5	4	2.67	219.72				
SS-112-72-STA25+92NB				1		7.00	5.50	2.50	13.75	W6	9	9.04	10.14		3.00	3.00		1.5	4	2.67	226.56				
SS-112-72-STA26+22SB					1	32.75	5.50	3.50	19.25	W6	9	9.66	10.76		3.66	3.66		1.5	5	3.33	249.72				
EX-049-72-STA309+69NB		1				0.00	11.00	5.00	55.00	W6	9	13.43	13.81		4.33	4.33		2	6	4.00	323.10				
GM-RAMP49SB71-72-STA312+00SB		1				0.00	15.50	8.50	131.75	W8	18	17.04	17.46		6.00	6.00		3	8.5	5.67	836.89				
GM-071-72-STA329+00SB		1				0.00	13.50	7.00	94.50	W8	18	16.14	17.65		5.66	5.66		3	8	5.33	812.11				
EX-071-72-STA317+62SB		1				0.00	11.00	5.00	55.00	W6	9	12.82	13.21		4.33	4.33		2	6	4.00	312.21				
LG-RAMP49SB112-72-STA332+39SB		1				0.00	17.50	10.00	175.00	W8	21	19.75	21.38		6.66	6.66		3	9.5	6.33	1143.60				
LFL-RAMP49SB112-72-STA336+33SB		1				0.00	17.50	12.00	210.00	W10	22	21.95	23.32		7.00	7.00		3	10	6.67	1303.81				
LL-049-72-STA360+69NB		1				0.00	17.50	12.00	210.00	W10	22	21.49	23.24		7.00	7.00		3	10	6.67	1291.93				
GM-049-72-STA359+40SB		1				0.00	7.50	5.00	37.50	W8	18	14.16	14.91		3.66	3.66		1.5	5	3.33	655.15				
EX-RAMP49SB112-72-STA351+93SB		1				0.00	13.50	5.00	67.50	W6	9	13.66	13.16		4.33	4.33		2	6	4.00	319.32				
EX-RAMP49SB71-72-STA345+36SB		1				0.00	16.00	7.50	120.00	W8	18	18.13	17.74		6.00	6.00		3	8.5	5.67	861.55				
LF-049-72-STA372+59NB		1				0.00	17.50	10.00	175.00	W8	18	19.31	14.64		6.33	6.33		3	9	6.00	838.99				
GM-049-72-STA373+00SB		1				0.00	17.50	7.00	122.50	W8	18	16.12	17.87		6.00	6.00		3	8.5	5.67	827.71				
GM-049-72-STA375+25SB			1			0.00	15.50	16.00	248.00	W10	22	25.03	25.8	26.58	6.33	6.33	6.33	3	9	6.00	2120.82				
GM-049-72-STA378+19NB		1				0.00	13.50	5.00	67.50	W6	15	14.36	14.42		4.66	4.66		2.5	6.5	4.33	571.61				
GM-071-72-STA343+14NB		1				0.00	9.50	5.50	52.25	W8	18	14.1	15.05		4.33	4.33		2	6	4.00	680.59				
EX-071-72-STA336+42SB		1				0.00	6.00	5.00	30.00	W6	9	12.36	12.54		3.33	3.33		1.5	4.5	3.00	284.04				
TOTALS:	**1**	**28**	**2**	**4**	**2**	**84.51**[1]			**3677.00**												**27070.29**		**0.00**	**0.00**	**0.00**

[1] THE 84.50 SQ. FT. OF STANDARD SIGNS ON GROUND MOUNTED I-BEAM SIGN SUPPORTS SHOWN IN TABLE ABOVE ARE ALSO INCLUDED IN TABLES FOR STANDARD ROADSIDE SIGNS (SHEET ALUMINUM 0.100" AND 0.125" THICKNESS).

MAIN LANES SIGNING QUANTITIES, OVERHEAD MOUNTED

SIGN NO./ LOCATION	STRUCTURE TYPE: OH	BM	CL	SIGN: STANDARD SIGN SQ. FT.	GUIDE SIGN LENGTH (LIN. FT.)	GUIDE SIGN HEIGHT (LIN. FT.)	SQ. FT.	EXIT NUMBER PANEL: LEGEND	TYPE A (SQ. FT.)	B	C	GUARDRAIL: TYPE A LIN. FT.	TERM. ANCHOR TYPE 1 EACH	GUARDRAIL TERM. TYPE 2 EACH	AGG. BASE CR (CL. 7) TON	ACHM SURF. CR. 220 TON
OH-049-72-01	1															
OH-049-72-STA208+50NB-A					12.50	7.00	87.50	65	23.75							
OH-049-72-STA208+50NB-B					15.50	9.50	147.25	67A		26.25						
OH-049-72-02	1											SEE ROADWAY PLANS FOR GUARDRAIL DETAILS				
OH-049-72-STA276+18NB-A					15.50	10.50	162.75	67A		26.25						
OH-049-72-STA276+18NB-B					14.50	11.50	166.75	67B		26.25						
OH-049-72-03	1															
OH-049-72-STA290+40NB					46.00	19.00	874.00	67B		26.25						
CL-049-72-04			1													
CL-049-72-STA294+00SB					12.50	5.50	68.75	65	23.75							
CL-049-72-05			1													
CL-CD-72-STA294+20SB					15.50	12.00	186.00	67A		26.25						
BM-071-72-01		1														
BM-071-72-STA326+39SB-A					15.50	10.50	162.75	67A		26.25						
BM-071-72-02		1														
BM-071-72-STA326+39SB-B					14.00	10.00	140.00									
OH-049-72-06	1											SEE ROADWAY PLANS FOR GUARDRAIL DETAILS				
OH-049-72-STA355+50SB-A				12.00	22.50	15.00	337.50	67A-B			35.00					
OH-049-72-STA355+50SB-B					14.00	10.00	140.00									
OH-049-72-07	1											SEE ROADWAY PLANS FOR GUARDRAIL DETAILS				
OH-049-72-STA377+00SB-A					22.50	14.50	326.25	67A-B			35.00					
OH-049-72-STA377+00SB-B					14.00	10.00	140.00									
CL-049-72-08			1									SEE ROADWAY PLANS FOR GUARDRAIL DETAILS				
OH-049-72-STA390+63NB					16.00	8.00	128.00	69	23.75							
OH-049-72-09	1															
OH-049-72-STA458+09SB-A					16.00	9.00	144.00	69	23.75							
OH-049-72-STA458+09SB-B					22.50	14.50	326.25	67A-B			35.00					
OH-071-72-03	1											SEE ROADWAY PLANS FOR GUARDRAIL DETAILS				
OH-071-72-STA339+50SB-A				12.00	14.50	13.50	195.75									
OH-071-72-STA339+50SB-B					15.50	9.50	147.25	67A		26.25						
OH-071-72-04	1											SEE ROADWAY PLANS FOR GUARDRAIL DETAILS				
OH-071-72-STA350+20SB-A					14.50	13.50	195.75									
OH-071-72-STA350+20SB-B					14.50	13.50	195.75									
TOTALS:	8	2	3	24.00[2]			4272.25		95.00	183.75	105.00					

[2] THE 24.00 SQ. FT. OF STANDARD SIGNS ON OH STRUCTURES SHOWN IN TABLE ABOVE ARE ALSO INCLUDED IN TABLE FOR STANDARD ROADSIDE SIGNS (SHEET ALUMINUM 0.125" THICKNESS).

SIGNING SUMMARY OF QUANTITIES

ITEM NUMBER	ITEM	TOTAL	UNIT
SP	OMNI-DIRECTIONAL BREAKAWAY SIGN SUPPORTS (TYPE G-1)	154	EACH
SP	OMNI-DIRECTIONAL BREAKAWAY SIGN SUPPORTS (TYPE G-2)	11	EACH
SP	OMNI-DIRECTIONAL BREAKAWAY SIGN SUPPORTS (TYPE G2-1)	24	EACH
SP	OMNI-DIRECTIONAL BREAKAWAY SIGN SUPPORTS (TYPE G2-2)	8	EACH
SP	OMNI-DIRECTIONAL BREAKAWAY SIGN SUPPORTS (TYPE G2-3)	4	EACH
SP	STEEL OVERHEAD SIGN STRUCTURE (OH-049-72-01)	1	EACH
SP	STEEL OVERHEAD SIGN STRUCTURE (OH-049-72-02)	1	EACH
SP	STEEL OVERHEAD SIGN STRUCTURE (OH-049-72-03)	1	EACH
SP	STEEL OVERHEAD SIGN STRUCTURE (OH-049-72-06)	1	EACH
SP	STEEL OVERHEAD SIGN STRUCTURE (OH-049-72-07)	1	EACH
SP	STEEL OVERHEAD SIGN STRUCTURE (OH-049-72-09)	1	EACH
SP	STEEL OVERHEAD SIGN STRUCTURE (OH-071-72-03)	1	EACH
SP	STEEL OVERHEAD SIGN STRUCTURE (OH-071-72-04)	1	EACH
SP	STEEL CANTILEVER SIGN STRUCTURE (CL-049-72-04)	1	EACH
SP	STEEL CANTILEVER SIGN STRUCTURE (CL-049-72-05)	1	EACH
SP	STEEL CANTILEVER SIGN STRUCTURE (CL-049-72-08)	1	EACH
SP	STEEL BRIDGE MOUNTED SIGN STRUCTURE (BM-071-72-01)	1	EACH
SP	STEEL BRIDGE MOUNTED SIGN STRUCTURE (BM-071-72-02)	1	EACH
SP & 725	GUIDE SIGN-ROADSIDE MOUNTED (DEMOUNTABLE LEGEND)	3677	SQ. FT.
SP & 725	GUIDE SIGN-OVERHEAD MOUNTED (DEMOUNTABLE LEGEND)	4272	SQ. FT.
SP & 726	STANDARD SIGN	2963	SQ. FT.
SP & 727	EXIT NUMBER PANEL (TYPE A)	95	SQ. FT.
SP & 727	EXIT NUMBER PANEL (TYPE B)	184	SQ. FT.
SP & 727	EXIT NUMBER PANEL (TYPE C)	105	SQ. FT.
SP & 729	CHANNEL POST SIGN SUPPORT (TYPE U-1)	27	EACH
SP & 729	CHANNEL POST SIGN SUPPORT (TYPE U-2)	3	EACH
SP & 729	CHANNEL POST SIGN SUPPORT (TYPE U-2(A))	2	EACH
SP & 729	CHANNEL POST SIGN SUPPORT (TYPE U-2(B))	1	EACH
SP & 729	CHANNEL POST SIGN SUPPORT (TYPE U-2(7))	1	EACH
730	BREAKAWAY SIGN SUPPORT (TYPE G-1)	140	POUND
730	BREAKAWAY SIGN SUPPORT (TYPE G-2)	21452	POUND
730	BREAKAWAY SIGN SUPPORT (TYPE G-3)	4027	POUND
730	BREAKAWAY SIGN SUPPORT (TYPE G2-4)	922	POUND
730	BREAKAWAY SIGN SUPPORT (TYPE G2-5)	530	POUND

SIGNING QUANTITIES

AEWierciak 4/22/2016 11:29:40 AM
WORKSPACE: AHTD
L:\2011\11017707 - I-540 Widening & Interchange Improvement\Drawings\rBB0414_SP_MNL_30.dgn
REVISED DATE:

DATE REVISED	DATE FILMED	DATE REVISED	DATE FILMED	FED.RD. DIST.NO.	STATE	FED.AID PROJ.NO.	SHEET NO.	TOTAL SHEETS
				6	ARK.			
				JOB NO.		BB0414	241	886

(2) SOIL BORING LOGS

SOIL BORING LOG

BORING NO.	APPROX. STATION	SAMPLE	WATER	ATTERBERG LIMITS			PERCENT PASSING #200	UNIFIED CLASS.	AASHTO CLASS.
				LIQUID LIMIT	PLASTIC LIMIT	PLASTICITY			
S1	Hwy. 112 Sta. 17+59, 30' Rt	6.5-7.5	24	36	17	19	57	CL	A-6
S1	Hwy. 112 Sta. 17+59, 30' Rt	19-20	22	45	18	27	44	SC	A-7-6
S2	Hwy. 112 Sta. 18+55, 46' LT	4.5-5.5	21	34	16	18	93	CL	A-6
S4	Hwy. 112 Sta. 20+15, 50' LT	6.5-7.5	26	45	18	27	63	CL	A-7-6
S4	Hwy. 112 Sta. 20+15, 50' LT	13.5-14	---	57	19	38	24	SC	A-2-7
S5	Hwy. 112 Sta. 21+40, 37' RT	4-5	23	41	17	24	45	SC	A-7-6
S5	Hwy. 112 Sta. 21+40, 37' RT	34-35	24	46	15	31	93	CL	A-7-6
S5	Hwy. 112 Sta. 21+40, 37' RT	44-45	20	40	16	24	74	CL	A-6
S6	Hwy. 112 Sta. 21+10, 40' LT	13.5-14.5	25	49	18	31	45	SC	A-7-6
S6	Hwy. 112 Sta. 21+10, 40' LT	24-25	21	46	18	28	31	GC	A-2-7
S6	Hwy. 112 Sta. 21+10, 40' LT	39-40	34	50	15	35	77	CL/CH	A-7-6
W7	Hwy. 112 Sta. 20+25, 120' LT	2-3	18	37	16	21	43	SC	A-6
W7	Hwy. 112 Sta. 20+25, 120' LT	6.5-7.5	24	38	15	23	93	CL	A-6
W7	Hwy. 112 Sta. 20+25, 120' LT	14-15	24	48	15	33	93	CL	A-7-6
W8	Hwy. 112 Sta. 21+59, 110' RT	4.5-5.5	18	26	17	9	93	CL	A-4
W8	Hwy. 112 Sta. 21+59, 110' RT	9-10	25	38	15	23	93	CL	A-6
W8	Hwy. 112 Sta. 21+59, 110' RT	19-20	27	43	15	28	89	CL	A-7-6
S9	I-49 Sta. 323+75, 55' LT	14-15	24	57	17	40	88	CH	A-7-6
S10	I-49 Sta. 325+75, 45' LT	7-7.5	25	44	15	29	91	CL	A-7-6
S11	I-49 Sta. 327+55, 50' LT	4.5-5.5	16	51	15	36	93	CH	A-7-6
S11	I-49 Sta. 327+55, 50' LT	19-20	---	39	26	13	---	SHALE	SHALE
S13	I-49 Sta. 326+70, 45' RT	9-10	19	40	13	27	86	CL	A-6
S14	I-49 Sta. 328+15, 50' RT	0.5-1.5	10	32	17	15	65	CL	A-6
S14	I-49 Sta. 328+15, 50' RT	6.5-7.5	26	43	15	28	93	CL	A-7-6
S14	I-49 Sta. 328+15, 50' RT	18.5-19.5	---	40	25	15	---	SHALE	SHALE
W15	I-49 Sta. 323+00, 90' LT	4.5-5.5	18	35	15	20	90	CL	A-6
W16	I-49 Sta. 324+30, 45' LT	0.5-1.5	10	35	23	12	87	CL	A-6
W16	I-49 Sta. 324+30, 45' LT	6.5-7.5	22	33	14	19	81	CL	A-6
W17	I-49 Sta. 325+25, 8' RT	0.5-1.5	8	31	21	10	88	CL	A-6
W17	I-49 Sta. 325+25, 8' RT	6.5-7.5	21	34	14	20	90	CL	A-6
W18	I-49 Sta. 325+90, 55' RT	0.5-1.5	15	28	24	4	80	ML	A-4
W18	I-49 Sta. 325+90, 55' RT	6.5-7.5	24	36	13	23	92	CL	A-6
RP19	Ramp Sta. 312+00, CL	2.5-3.5	18	39	16	23	72	CL	A-6
RP20	Ramp Sta. 313+60, CL	2.5-3.5	15	36	16	20	83	CL	A-6
RP20	Ramp Sta. 313+60, CL	8.5-9.5	---	63	21	42	87	CH	A-7-6
RP21	Ramp Sta. 315+90, CL	2.5-3.5	14	38	16	22	79	CL	A-6
RP21	Ramp Sta. 315+90, CL	6.5-7.5	38	49	16	33	72	CL	A-7-6
RP22	Ramp Sta. 317+55, CL	4.5-5.5	16	38	17	21	43	SC	A-6
RP22	Ramp Sta. 317+55, CL	19-20	21	41	15	26	86	CL	A-7-6
W24	Wall No. 4 Sta. 0+00, CL	2.5-3.5	13	35	17	18	87	CL	A-6
W25	Wall No. 4 Sta. 0+80, CL	0.5-1.5	23	25	20	5	77	ML	A-4
W25	Wall No. 4 Sta. 0+80, CL	6.5-7.5	34	68	22	46	66	CH	A-7-6
W26	Wall No. 4 Sta. 1+60, CL	4.5-5.5	19	39	16	23	81	CL	A-6
W26	Wall No. 4 Sta. 1+60, CL	8.5-9	26	41	18	23	55	CL	A-7-6

SOIL BORING LOG

BORING NO.	APPROX. STATION	SAMPLE	WATER	ATTERBERG LIMITS			PERCENT PASSING #200	UNIFIED CLASS.	AASHTO CLASS.
				LIQUID LIMIT	PLASTIC LIMIT	PLASTICITY			
S27	I-49 Sta. 364+47, CL	0.5-1.5	18	40	30	10	59	ML	A-4
S27	I-49 Sta. 364+47, CL	14-15	36	42	19	23	28	SC	A-7-6
S27	I-49 Sta. 364+47, CL	24-25	23	37	17	20	85	CL	A-6
S28	I-49 Sta. 366+30, CL	9-10	31	57	24	33	53	CH	A-7-6
S28	I-49 Sta. 366+30, CL	24-25	24	33	18	15	73	CL	A-6
W29	I-49 Sta. 365+30, 112' LT	4.5-5.5	29	29	17	12	85	CL	A-6
W29	I-49 Sta. 365+30, 112' LT	9-10	19	53	18	35	55	CH	A-7-6
W31	I-49 Sta. 363+90, 100' RT	2.5-3.5	19	33	16	17	42	SC	A-6
W32	I-49 Sta. 365+05, 116' RT	0.5-1.5	7	32	28	4	11	GM	A-2-4
W32	I-49 Sta. 365+05, 116' RT	6.5-7.5	21	35	17	18	85	CL	A-6
W33	C-D Sta. 306+24, 16' LT	6.5-7.5	28	54	16	38	97	CH	A-7-6
W34	C-D Sta. 304+83, 2' RT	2.5-3.5	20	30	19	11	91	CL	A-6
W34	C-D Sta. 304+83, 2' RT	19-20	22	56	17	39	88	CH	A-7-6
W35	C-D Sta. 303+42, 7' RT	5-6	24	43	17	26	26	SC	A-2-7
W36	C-D Sta. 302+02, 11' RT	9-10	20	27	16	11	82	CL	A-6
W36	C-D Sta. 302+02, 11' RT	24-25	19	50	15	35	89	CL/CH	A-7-6
W37	C-D Sta. 300+63, 17' RT	4.5-5.5	24	47	17	30	47	SC	A-7-6
W37	C-D Sta. 300+63, 17' RT	19-20	22	41	15	26	87	CL	A-7-6
W38	C-D Sta. 299+24, 22' RT	14-15	20	30	15	15	87	CL	A-6
W39	C-D Sta. 297+86, 40' RT	24-25	20	46	14	32	89	CL	A-7-6
W40	C-D Sta. 296+50, 49' RT	4.5-5.5	15	47	17	30	38	SC	A-7-6
W41	C-D Sta. 295+14, 44' RT	4.5-5.5	17	41	15	26	41	SC	A-7-6
W41	C-D Sta. 295+14, 44' RT	24-25	21	48	14	34	92	CL	A-7-6
W50	I-49 Sta. 354+45, CL	4-5	24	47	19	28	50	CL	A-7-6
W50	I-49 Sta. 354+45, CL	9-10	18	30	17	13	82	CL	A-6
W51	I-49 Sta. 353+29, CL	4.5-5.5	27	---	---	---	29	GC	A-2-7
W51	I-49 Sta. 353+29, CL	6.5-7.5	31	46	23	23	89	CL	A-7-6
W52	I-49 Sta. 351+72, CL	2.5-3.5	25	---	---	---	33	SC	A-2-7
W53	I-49 Sta. 350+35, CL	2.5-3.5	22	37	19	18	58	CL	A-6
W54	I-49 Sta. 349+04, CL	4.5-5.5	31	39	22	17	82	CL	A-6
W55	I-49 Sta. 347+85, CL	2.5-3.5	28	54	22	32	76	CH	A-7-6
W55	I-49 Sta. 347+85, CL	6.5-7.5	26	49	22	27	94	CL	A-7-6

TP-1	I-49 Sta. 378+25, 120' LT	1.5-2.5	17	46	25	21	---	CL	A-7-6
TP-2	I-49 Sta. 376+29, 117' LT	0.5-1	22	29	24	5	51	ML	A-4
TP-3	I-49 Sta. 374+36, 119' LT	3-4.5	38	68	24	44	---	CH	A-7-6
TP-4	I-49 Sta. 372+38, 113' LT	0-1.5	21	31	23	8	40	SC	A-4
TP-4	I-49 Sta. 372+38, 113' LT	3-4	9	Non-Plastic			---	Chert	Chert
TP-5	I-49 Sta. 370+58, 104' LT	0.5-1.5	18	Non-Plastic			39	SM	A-4

SOIL CHARACTERISTICS TABULATED ABOVE ARE REPRESENTATIVE AT THE LOCATION OF THE SAMPLE, AND FROM SURFACE INDICATIONS ARE TYPICAL FOR THE LIMIT SHOWN. THESE DATA ARE SHOWN FOR INFORMATION ONLY. THE STATE WILL NOT BE RESPONSIBLE FOR VARIATIONS IN THE SOIL CHARACTERISTICS AND/OR EXTENT OF SAME DIFFERING FROM THE ABOVE TABULATIONS.

STATE OF ARKANSAS
LICENSED PROFESSIONAL ENGINEER
No. 13422
JOHN F. CANTABERY
3-20-16

SOIL BORING LOGS

AEWierclak 3/20/2016 - 11:53:50 AM
WORKSPACE: AHTD
L:\20IN\001707 - I-540 Widening & Interchange Improvement\Drawings\r-BB0414_SBL_01.dgn
REVISED DATE:

DATE REVISED	DATE FILMED	DATE REVISED	DATE FILMED	FED.RD. DIST.NO.	STATE	FED.AID PROJ.NO.	SHEET NO.	TOTAL SHEETS
				6	ARK.			
				JOB NO.		BB0414	242	886

(2) QUANTITIES

CONSTRUCTION PAVEMENT MARKINGS AND PERMANENT PAVEMENT MARKINGS

DESCRIPTION	ENTIRE JOB	REMOVAL OF PERMANENT PAVEMENT MARKINGS	REMOVABLE CONSTRUCTION PAVEMENT MARKINGS	CONSTRUCTION PAVEMENT MARKINGS	REMOVAL OF CONSTRUCTION PAVEMENT MARKINGS	RAISED PAVEMENT MARKERS TYPE II		REFLECTORIZED PAINT PAVEMENT MARKING 10"	THERMOPLASTIC PAVEMENT MARKING								HIGH PERFORMANCE PAVEMENT MARKING					HIGH PERFORMANCE CONTRAST PAVEMENT MARKING		
									ARROWS	WORDS	4"		6"	8"	12"		4"			8"		4"		8"
						WHITE/RED	YELLOW	WHITE			WHITE	YELLOW	WHITE	WHITE	WHITE	YELLOW	WHITE	SKIP WHITE	YELLOW	WHITE	SKIP WHITE	WHITE	YELLOW	WHITE
	LIN. FT. - EACH	LIN. FT.	LIN. FT.	LIN. FT.	LIN. FT.	EACH	EACH	LIN. FT.	EACH	EACH	LIN. FT.														
REMOVAL OF PERMANENT PAVEMENT MARKINGS	43296	43296																							
REMOVABLE CONSTRUCTION PAVEMENT MARKINGS	15076		15076																						
CONSTRUCTION PAVEMENT MARKINGS	326259			326259																					
REMOVAL OF CONSTRUCTION PAVEMENT MARKINGS	111895				111895																				
RAISED PAVEMENT MARKERS TYPE II (WHITE/RED)	3302					3302																			
RAISED PAVEMENT MARKERS TYPE II (YELLOW)	113						113																		
REFLECTORIZED PAINT PAVEMENT MARKING WHITE (10")	482							482																	
THERMOPLASTIC PAVEMENT MARKING (ARROWS)	21								21																
THERMOPLASTIC PAVEMENT MARKING (WORDS)	19									19															
THERMOPLASTIC PAVEMENT MARKING WHITE (4")	3552										3552														
THERMOPLASTIC PAVEMENT MARKING WHITE (6")	40												40												
THERMOPLASTIC PAVEMENT MARKING WHITE (8")	1081													1081											
THERMOPLASTIC PAVEMENT MARKING WHITE (12")	2233														2233										
THERMOPLASTIC PAVEMENT MARKING YELLOW (4")	8239											8239													
THERMOPLASTIC PAVEMENT MARKING YELLOW (12")	85															85									
HIGH PERFORMANCE PAVEMENT MARKING WHITE (4")	52041																52041								
HIGH PERFORMANCE PAVEMENT MARKING (SKIP LINE) WHITE (4")	18499																	18499							
HIGH PERFORMANCE PAVEMENT MARKING WHITE (8")	6679																			6679					
HIGH PERFORMANCE PAVEMENT MARKING (SKIP LINE) WHITE (8")	3992																				3992				
HIGH PERFORMANCE PAVEMENT MARKING YELLOW (4")	52066																		52066						
HIGH PERFORMANCE CONTRAST PAVEMENT MARKING WHITE (4")	3435																					3435			
HIGH PERFORMANCE CONTRAST PAVEMENT MARKING WHITE (8")	267																								267
HIGH PERFORMANCE CONTRAST PAVEMENT MARKING YELLOW (4")	3256																						3256		
TOTALS:		**43296**	**15076**	**326259**	**111895**	**3302**	**113**	**482**	**21**	**19**	**3552**	**8239**	**40**	**1081**	**2233**	**85**	**52041**	**18499**	**52066**	**6679**	**3992**	**3435**	**3256**	**267**

NOTE: THIS IS A HIGH TRAFFIC VOLUME ROAD AS DEFINED IN SECTION 604.03, STANDARD SPECIFICATIONS FOR HIGHWAY CONSTRUCTION, 2014 EDITION.

NOTE: NO PERMANENT PAVEMENT MARKINGS SHALL BE PLACED UNTIL A MINIMUM OF 3 DAYS AFTER ALL MAIN LANE PAVING HAS BEEN COMPLETED. IN ADDITION, NO PERMANENT PAVEMENT MARKINGS SHALL BE PLACED DURING THE TIME PERIOD FROM DECEMBER 21 TO MARCH 15, INCLUSIVE.

ADVANCE WARNING SIGNS AND DEVICES

	SIGN NUMBER	DESCRIPTION	SIGN SIZE	STAGE 1	STAGE 1A	STAGE 1B	STAGE 2	STAGE 2A	STAGE 2B	STAGE 2C	STAGE 2D	STAGE 3	STAGE 3A	MAX. NUMBER REQ'D.	TOTAL REQUIRED	ADVANCE WARNING ARROW PANEL	PORTABLE CHANGEABLE MESSAGE SIGN	BARRICADES TYPE III	TRAFFIC DRUMS	VERTICAL PANELS	TEMP. IMP. ATT. BAR.	TEMP. IMP. ATT. BAR. (RELOC.)	TEMP. IMP. ATT. BAR. (REPAIR)	FURNISH. AND INSTALL. PRECAST CONC. BAR.	RELOCATING PRECAST CONC. BARRIER	MOBILE SPEED NOTIFICATION SYSTEM
			IN.	LIN. FT. - EACH											SQ. FT.	DAY	WEEK	L.F.	EACH	EACH	EACH	EACH	EACH	L.F.	L.F.	EACH
	G20-1	ROAD WORK NEXT 2.9 MILES	60" X 24"	2	2	2	2	2	2	2	2	2	2	2	20.00											
	G20-2	END ROAD WORK	48" X 24"	9	9	9	9	9	9	6	6	6	6	9	72.00											
	OM-3L	OBJECT MARKER	12" X 36"	20	59	59	51	47	19	27	20	8	4	59	177.00											
	OM-3R	OBJECT MARKER	12" X 36"	36	44	44	36	32	44	32	24	16	12	44	132.00											
	RSP-1	SHOULDER CLOSED	48" X 30"	8	19	19	11	11	10	8	7	7	4	19	190.00											
	R2-1	SPEED LIMIT 50 MPH	48" X 60"	6	6	6	6	6	6	6	6	6	6	6	120.00											
	R2-1	SPEED LIMIT 60 MPH	48" X 60"	6	6	6	6	6	6	6	6	6	10	10	200.00											
	R2-5A	REDUCED SPEED AHEAD	48" X 60"	6	6	6	6	6	6	6	6	6	6	6	120.00											
	R4-1	DO NOT PASS	48" X 60"										4	4	80.00											
	R11-2	ROAD CLOSED	48" X 30"							3		1	1	3	30.00											
	R55-1	FINES DOUBLE IN WORK ZONES	36" X 60"	6	6	6	6	6	6	6	6	6	6	6	90.00											
	SPECIAL	MERGE NOW	48" X 48"										2	2	32.00											
	SPECIAL	RUMBLE STRIPS AHEAD	48" X 48"										4	4	64.00											
	SPECIAL	HWY. 112 EXIT SIGN	186" X 126"						1	1	1	1	1	1	162.75											
	SPECIAL	HWY. 71B EXIT SIGN	174" X 180"		1	1	2	2	2	2	2	2	3	3	652.50											
	SPECIAL	EXIT 67A SIGN	126" x 30"						1	1	1	1	1	1	26.25											
	SPECIAL	EXIT 67B SIGN	126" x 30"		1	1	2	2	2	2	2	2	3	3	78.75											
	W1-4aL	ONE LANE SHIFT LEFT	48" X 48"		2	2	6	6	2	2	2	4	2	6	96.00											
	W1-4aR	ONE LANE SHIFT RIGHT	48" X 48"						4	4	4	4	2	4	64.00											
	WI-4bL	TWO LANES SHIFT LEFT	48" X 48"		4	4	8	6	6	6	8	4	4	8	128.00											
	WI-4bR	TWO LANES SHIFT RIGHT	48" X 48"		4	4	8	8	8	8	8	4	4	8	128.00											
	W1-6	DIRECTIONAL ARROW	60" X 30"										6	6	75.00											
	W1-8R	CHEVERON RIGHT	18" X 24"									3	3	3	9.00											
	W4-1L	MERGE FROM LEFT	48" X 48"						1	1	1	1	1	1	16.00											
	W4-2	LANE ENDS (SYMBOL)	48" X 48"						2	2	2		4	4	64.00											
	W5-1	ROAD NARROWS	48" X 48"	16	14	14	8	8	4	2	2	6	2	16	256.00											
	W9-7	RIGHT LANE EXIT ONLY AHEAD	132" X 72"						1	1	1	1	1	1	66.00											
	W13-3	RAMP SPEED LIMIT 25 MPH	48" X 60"						1	1	1	2	2	2	40.00											
	W20-1	ROAD WORK AHEAD	48" X 48"								2	2	6	6	96.00											
	W20-1	ROAD WORK 500 FT.	48" X 48"	3	3	3	3	3	3	3				3	48.00											
	W20-1	ROAD WORK 1000 FT.	48" X 48"	3	3	3	3	3	3	3				3	48.00											
	W20-1	ROAD WORK 1500 FT.	48" X 48"	9	9	9	9	9	9	9	6	6	6	9	144.00											
	W20-1	ROAD WORK 1/2 MILE	48" X 48"	6	6	6	6	6	6	6	6	6	6	6	96.00											
	W20-1	ROAD WORK 1 MILE	48" X 48"	6	6	6	6	6	6	6	6	6	6	6	96.00											
	W20-5	RIGHT LANE CLOSED 1500 FT.	48" X 48"						2	2	2		4	4	64.00											
	W20-5	RIGHT LANE CLOSED 1/2 MILE	48" X 48"						2	2	2		4	4	64.00											
	W20-5	RIGHT LANE CLOSED 1 MILE	48" X 48"						2	2	2		4	4	64.00											
	WSR-2	TWO LANES CURVE RIGHT	48" X 48"				2	2						2	32.00											
		TYPE III BARRICADE (24')								72		24		72				72								
		TRAFFIC DRUMS		59	189	198	407	455	403	465	427	519	658	658					658							
*		VERTICAL PANELS												106						106							
		TEMPORARY IMPACT ATTENUATION BARRIER		11			1							11							11						
		TEMPORARY IMPACT ATTENUATION BARRIER (RELOCATION)			9	1	9	1	4	2	2	2	1	31								31					
*		TEMPORARY IMPACT ATTENUATION BARRIER (REPAIR)		11	9	1	10	1	4	2	2	2	1	43									43				
		FURNISHING AND INSTALLING PRECAST CONCRETE BARRIER		21615	14377									35992										35992			
		RELOCATING PRECAST CONCRETE BARRIER			15062	1666	26504	333	8717	6572	2186	5778	2139	68957											68957		
		MOBILE SPEED NOTIFICATION SYSTEM		2	2	2	2	2	2	2	2	2	2	2												2
		ADVANCE WARNING ARROW PANEL											2	2		900										
*		PORTABLE CHANGEABLE MESSAGE SIGN		2	2	2	2	2	2	2	2	2	4	4			700									
	TOTALS:														**3941.25**	**900**	**700**	**72**	**658**	**106**	**11**	**31**	**43**	**35992**	**68957**	**2**

NOTE: THIS IS A HIGH VOLUME ROAD AS DEFINED IN SECTION 604.03 OF THE STANDARD SPECIFICATIONS FOR HIGHWAY CONSTRUCTION, EDITION OF 2014.

* QUANTITY ESTIMATED. TO BE USED IF AND WHERE DIRECTED BY THE ENGINEER. SEE SECTION 104.03 OF THE STANDARD SPECIFICATIONS.

STATE OF ARKANSAS LICENSED PROFESSIONAL ENGINEER No.13422 JOHN F. CANTABERY

3-20-16

AEWierciak 3/20/2016 3:57:17 PM
WORKSPACE: AHTD
L:\20IN\I0I70T - I-540 Widening & Interchange Improvement\Drawings\rBB0414_QTY_ALL.dgn
REVISED DATE:

DATE REVISED	DATE FILMED	DATE REVISED	DATE FILMED	FED.RD. DIST.NO.	STATE	FED.AID PROJ.NO.	SHEET NO.	TOTAL SHEETS
				6	ARK.			
				JOB NO.		BB0414	243	886
				(2)		QUANTITIES		

TEMPORARY EROSION CONTROL ITEMS (BOX 1 OF 2)

STATION	STATION	SAND BAG DITCH CHECKS (E-5)	ROCK DITCH CHECKS (E-6)	DROP INLET SILT FENCE (E-7)	SILT FENCE (E-11)	SEDIMENT BASIN (E-14)	TRIANGULAR SILT DIKE	OBLITERATION OF SEDIMENT BASIN	SEDIMENT REMOVAL AND DISPOSAL	TEMPORARY SEEDING	MULCH COVER	WATER
		BAG	CU. YD.	L.F.	L.F.	CU. YD.	L.F.	CU. YD.	CU. YD.	ACRE	ACRE	M.G.
CLEARING AND GRUBBING												
I-49 MAIN LANES												
239+77	264+77	44	6		305				15			
273+71	288+00	66	9		598				28			
290+54	290+98	22	3						2			
303+25	313+90	66	9		44				8			
313+97	321+25				875				32			
327+75	347+27				2954				109			
343+68	365+13	22	3		3145				118			
366+65	380+86				1695				63			
HWY. 112 RAMP 4												
282+74	285+50	22	3		538				22			
296+50	297+06				124				5			
HWY. 112 RAMP 1												
285+15	290+29	44	6		835				35			
HWY. 112												
7+68	18+80				1427				53			
20+35	30+73				764				28			
C-D ROAD												
277+73	304+25				1835				68			
304+06	308+00	22	3		363				15			
312+85	314+90				205				8			
321+46	323+42				194				7			
SB HWY. 71B												
303+96	309+00				507				19			
314+54	315+20	22	3						2			
HWY. 112 TO NB I-49												
288+44	292+66				689				26			
299+46	308+06	22	3		892				35			
318+95	321+59				290				11			
HWY. 112 TO 71B												
301+56	305+75				211				8			
315+75	319+21				349				13			
NB I-49 TO HWY. 71B												
318+88	329+22				989				37			
331+72	332+06	22	3						2			
HWY. 71B												
334+85	344+75				1474				55			
HWY. 71B TO NB I-49												
333+01		22	3						2			
SB I-49 TO HWY. 112												
331+10	332+31	44	6		137				9			
345+00	352+74	22	3		824				33			
SB I-49 TO HWY. 71B												
335+11	335+51	22	3						2			
STAGE 1												
I-49 MAIN LANES										8.57	8.57	174.8
242+03	248+80	66	3	60					6			
256+22	270+44	506	24	80					34			
271+05	280+18	308	12	20					19			
296+75	297+13	22	3						2			
310+00	315+17	44	3	100					7			
321+00				20					1			
331+00	343+21			120					4			
347+98	357+17			140					5			
366+67	375+00			100					4			
387+00	393+16			60					2			
HWY. 112 RAMP 1										2.41	2.41	49.2
281+40	285+18	110	3						6			
286+70	287+63		15						5			
HWY. 112 RAMP 4										0.63	0.63	12.9
SUBTOTALS (BOX 1):		**1540**	**129**	**700**	**22263**				**965**	**11.61**	**11.61**	**236.9**

TEMPORARY EROSION CONTROL ITEMS (BOX 2 OF 2)

STATION	STATION	SAND BAG DITCH CHECKS (E-5)	ROCK DITCH CHECKS (E-6)	DROP INLET SILT FENCE (E-7)	SILT FENCE (E-11)	SEDIMENT BASIN (E-14)	TRIANGULAR SILT DIKE	OBLITERATION OF SEDIMENT BASIN	SEDIMENT REMOVAL AND DISPOSAL	TEMPORARY SEEDING	MULCH COVER	WATER
		BAG	CU. YD.	L.F.	L.F.	CU. YD.	L.F.	CU. YD.	CU. YD.	ACRE	ACRE	M.G.
STAGE 1 (CONTINUED)												
C-D ROAD										2.16	2.16	44.1
291+58	296+66			60					2			
308+10		22							1			
315+32	320+22	44	3						3			
HWY. 112 TO NB I-49										3.46	3.46	70.6
293+30	295+63	88	6						6			
298+57	299+83	110							5			
HWY. 112										1.94	1.94	39.6
8+20	9+75			40					1			
25+42	30+77	66		40					4			
NB I-49 TO HWY. 71B										3.12	3.12	63.6
308+67	315+03	22	6	80					6			
316+25	329+68	88	9						7			
329+68	332+94	66	6						5			
HWY. 71B										1.43	1.43	29.2
336+56				20					1			
337+99	341+05	132							6			
HWY. 112 TO HWY. 71B										2.92	2.92	59.6
300+16	311+05	286	3	60					16			
312+32	320+93	44	3						3			
SB I-49 TO HWY. 112										0.65	0.65	13.3
347+73		22							1			
SB I-49 TO HWY. 71B										0.17	0.17	3.5
SB HWY. 71B										0.30	0.30	6.1
314+07	317+22			80					3			
STAGE 2												
I-49 MAIN LANES										10.46	10.46	213.4
284+05	285+60			40					1			
286+80	297+27	88		120					8			
303+52				20					1			
313+67	317+50			60					2			
365+69	376+05	198	24						17			
377+50	378+50	22	3						2			
HWY. 112 TO NB I-49										3.38	3.38	69.0
288+77	289+40	44							2			
336+33	341+65			140					5			
HWY. 112										1.82	1.82	37.1
13+23	15+50			80					3			
23+28	30+52	44	6	160					10			
SB HWY. 71B										0.68	0.68	13.9
330+86				20					1			
NB I-49 TO HWY. 71B										0.47	0.47	9.6
HWY. 71B TO NB I-49										0.19	0.19	3.9
STAGE 3												
I-49 MAIN LANES										2.14	2.14	43.7
285+85		22							1			
C-D ROAD										0.74	0.74	15.1
289+85		22							1			
SB I-49 TO HWY. 112										3.07	3.07	62.6
330+85			3						1			
SB I-49 TO HWY. 71B										2.45	2.45	50.0
335+75	343+92				776				29			
HWY. 112 TO NB I-49										0.54	0.54	11.0
* ENTIRE PROJECT					300	100	200	100	100	13.71	13.71	279.7
SUBTOTALS (BOX 2):		**1430**	**72**	**1020**	**1076**	**100**	**200**	**100**	**254**	**55.80**	**55.80**	**1138.6**
TOTALS (ALL BOXES):		**2970**	**201**	**1720**	**23339**	**100**	**200**	**100**	**1219**	**67.41**	**67.41**	**1375.5**

CLEARING AND GRUBBING

STATION	STATION	LOCATION	CLEARING	GRUBBING
			STA.	
239+77.13	393+16.01	I-49	153	153
6+77.03	12+77.27	HWY. 112	6	6
26+47.34	31+07.40	HWY. 112	5	5
TOTALS:			**164**	**164**

STATE OF ARKANSAS
LICENSED PROFESSIONAL ENGINEER
No. 13422
JOHN F. CANTABERY
4-19-16

* QUANTITIES ESTIMATED. TO BE USED IF AND WHERE DIRECTED BY THE ENGINEER.
SEE SECTION 104.03 OF THE STANDARD SPECIFICATIONS.
BASIS OF ESTIMATE:
SAND BAG DITCH CHECKS = 22 BAGS / LOCATION
ROCK DITCH CHECKS = 3 CU. YD. / LOCATION
WATER = 20.4 M.G. PER ACRE TEMPORARY SEEDING

TEMPORARY EROSION CONTROL DEVICES SHOWN ABOVE AND ON THE PLANS SHALL BE INSTALLED IN SUCH A SEQUENCE AS TO DETER EROSION AND SEDIMENTATION OF U.S. WATERWAYS AS EXPLAINED BY THE NATIONAL POLLUTANT DISCHARGE ELIMINATION SYSTEM PERMIT.

AEWierciak 4/8/2016 2:44:22 PM
WORKSPACE: AHTD
L:\20IN\MD7707 - I-540 Widening & Interchange Improvement\Drawings\rBB0414_QTY_ALL.dgn
REVISED DATE:

REMOVAL AND DISPOSAL OF ITEMS

STATION	STATION	LOCATION	APPROACH GUTTERS	APPROACH SLABS	CURB	CONCRETE DITCH PAVING	CONCRETE PAVEMENT	DROP INLETS	FENCE	GATES	WALLS	GUARDRAIL	BOLLARDS	PIPE CULVERTS	SIGNS	OVERHEAD SIGN STRUCTURES	SIGN FOUNDATIONS	MAILBOXES	PLANTERS	WIRE ROPE SAFETY FENCE	CRASH CUSHIONS
			EACH	EACH	L.F.	SQ. YD.	SQ. YD.	EACH	L.F.	EACH	L.F.	L.F.	EACH	EACH	EACH	EACH	EACH	EACH	EACH	L.F.	EACH
15+91.17	17+95.14	HWY. 112 RT.										204									
16+28.80	17+74.90	HWY. 112 LT.										146									
20+78.20	21+39.63	HWY. 112 LT.										61									
21+10.89	22+62.08	HWY. 112 RT.										151									
321+17.54	323+99.03	HWY. 112 TO NB I-49 RT.										281									
321+65.54	324+40.30	HWY. 112 TO NB I-49 LT.										275									
303+81.41	305+10.86	SB HWY. 71B LT.										129									
314+35.73	315+81.42	SB HWY. 71B LT.										146									
361+31.03	364+00.34	I-49 RT.										269									
361+51.47	364+21.55	I-49 RT.										270									
366+34.61	369+05.23	I-49 LT.										271									
366+46.92	369+26.38	I-49 LT.										279									
278+99.54	285+72.27	I-49 RT.							722												
287+27.53	290+62.21	HWY. 112 RAMP 1 RT.							356												
13+09.00	14+29.00	HWY. 112 RT.							163												
14+23.00	14+35.00	HWY. 112 LT.							15												
21+09.54	22+07.90	HWY. 112 LT.							117												
277+45.41	281+12.22	COLLECTOR DISTRIBUTOR RD. LT.							352												
288+27.45	291+86.53	HWY. 112 TO NB I-49 RT.							389												
295+94.02	328+27.21	I-49 RT.							3895												
300+13.71	300+38.36	I-49 RT.							68	2											
305+35.17 RT.	305+53.94 LT	I-49							270												
309+41.43 RT.	309+69.26 LT.	I-49							397												
355+75.64	363+55.92	I-49 RT.							781												
370+76.33	381+62.52	I-49 RT.							1087												
361+10.00		I-49 LT.							75	2											
366+55.00	367+50.00	I-49 LT.							149												
349+62.60	364+90.66	I-49 LT.							1653												
357+87.25	358+74.18	I-49 LT.							129												
352+34.42	352+35.84	I-49 LT.							17												
295+91.28	300+95.14	I-49 LT.							552												
24+20.00	28+15.00	HWY. 112 RT.							401												
10+96.00		HWY. 112 RT.																1			
10+99.00		HWY. 112 RT.																1			
11+00.00		HWY. 112 LT.											3								
11+02.00		HWY. 112 RT.																1			
12+82.00		HWY. 112 RT.									12				1		1				
29+50.00	30+40.00	HWY. 112 RT.																	2		
30+48.25		HWY. 112 RT.													1		1				
73+11.02	74+52.75	SHILOH DR. LT.			180																
27+44.31	28+18.70	HWY. 112 LT.			79																
297+82.17	298+14.59	HWY. 112 RAMP 4 LT.			103																
276+15.95	276+74.07	COLLECTOR DISTRIBUTOR RD. LT.			182																
8+26.34	8+36.15	HWY. 112 LT.			31																
8+83.83	8+84.35	HWY. 112 LT.			37																
9+81.24	9+85.96	HWY. 112 LT.			41																
10+40.71	10+49.76	HWY. 112 LT.			44																
11+54.72	11+81.40	HWY. 112 LT.			54																
12+17.53	12+36.82	HWY. 112 LT.			48																
12+12.96	12+36.43	HWY. 112 RT.			54																
12+67.02	12+88.48	HWY. 112 RT.			52																
239+77.13	291+76.00	I-49				2311														5199	
293+01.00	307+89.00	I-49				661														1488	
354+35.09	362+42.06	I-49				359														807	
368+18.96	393+16.01	I-49				1110														2497	
242+03.00		I-49 LT.						1													
247+77.00		I-49 LT.												1							
266+22.00		I-49 LT.												1							
284+88.00		I-49 LT.						1													
287+98.00		I-49 LT.						1													
296+89.00		I-49 LT.												1							
341+11.00		I-49 RT.												1							
341+17.00		I-49 RT.												1							
357+17.00		I-49 LT.						1													
364+41.00		I-49 LT.						1													
366+67.00		I-49 LT.						1													
34+97.00		I-49 LT.												1							
302+88.00		SB HWY. 71B RT.						1													
327+86.00		SB HWY. 71B RT.						1													
9+80.00		HWY. 112 RT.												1							
10+67.00		HWY. 112 RT.												1							
12+52.00		HWY. 112 RT.												1							
21+36.00		HWY. 112 RT.						1						1							
27+89.00		HWY. 112 RT.												1							
29+11.00		HWY. 112 RT.						1						1							
30+13.00		HWY. 112 RT.						1						1							
33+13.00		HWY. 112 RT.						1						1							
349+33.00		SB I-49 TO HWY. 112 RT.												1							
263+00.00		I-49 LT.													1		2				
275+56.00		I-49 RT.													1		2				
281+14.00		I-49 RT.													1		1				
282+70.00		I-49 RT.													1		2				
291+95.00		I-49 RT.													1		2				
293+00.00		I-49 LT.													1		2				
301+72.00		I-49 RT.													1		2				
304+77.29		I-49 LT.													1	1	1				
313+69.31		I-49 LT.													2	1	2				
353+66.26		I-49 LT.													2	1	2				
362+78.00		I-49 RT.													1		2				
367+11.60		I-49 LT.													1		1				
370+22.00		I-49 RT.													1		2				
378+00.00		I-49 RT.													1		2				
332+40.00		SB I-49 TO HWY. 112 LT.													1		2				
336+33.00		SB I-49 TO HWY. 112 LT.													1		2				
342+03.00		SB I-49 TO HWY. 112 LT.													1		2				
339+58.00		HWY. 71B LT.													1		2				
323+70.00	323+88.00	HWY. 112 TO NB I-49 LT.	1																		
364+43.00		I-49	4	2																	
365+96.00		I-49	4	2																	
17+54.00	17+83.00	HWY. 112 RT.	1																		
17+43.00	17+63.00	HWY. 112 LT.	1																		
21+21.00	21+39.00	HWY. 112 RT.	1																		
20+85.00	21+06.00	HWY. 112 LT.	1																		
323+70.00	323+88.00	HWY. 112 TO NB I-49 LT.	1																		
12+11.00	12+89.49	HWY. 112 RT.					260														
239+77.00		I-49 MEDIAN																			1
393+16.00		I-49 MEDIAN																			1
TOTALS:			14	4	905	4441	260	12	11588	4	12	2482	3	15	22	3	35	3	2	9991	2

DATE REVISED	DATE FILMED	DATE REVISED	DATE FILMED	FED.RD. DIST.NO.	STATE	FED.AID PROJ.NO.	SHEET NO.	TOTAL SHEETS
				6	ARK.			
				JOB NO.		BB0414	244	886
				(2)	QUANTITIES			

STATE OF ARKANSAS
LICENSED PROFESSIONAL ENGINEER
No. 13422
JOHN F. CANTABERY
4-19-16

SELECTED PIPE BEDDING

LOCATION	SELECTED BEDDING
	CU. YD.
ENTIRE PROJECT *	100

* QUANTITY ESTIMATED. TO BE USED IF AND WHERE DIRECTED BY THE ENGINEER. SEE SECTION 104.03 OF THE STANDARD SPECIFICATIONS.

GEOTEXTILE FABRIC

STATION	STATION	LOCATION	GEOTEXTILE FABRIC
			(TYPE 5)
			SQ. YD.
327+77.50	352+00.00	I-49	49941
353+00.00	358+91.99	SB I-49 DETOUR	2390
TOTAL:			52331

SOIL STABILIZATION

LOCATION	TON
ENTIRE PROJECT *	100

*QUANTITY ESTIMATED. TO BE USED IF AND WHERE DIRECTED BY THE ENGINEER. SEE SECTION 104.03 OF THE STANDARD SPECIFICATIONS.

FLOWABLE SELECT MATERIAL

STATION	LOCATION	FLOWABLE SELECT MATERIAL
		CU. YD.
273+90	I-49 RT.	28
284+05	I-49 LT. AND RT.	75
370+00	I-49	19
45+71	SHILOH DR.	15
51+63	SHILOH DR.	15
74+50	SHILOH DR.	57
TOTAL:		209

TOPSOIL FURNISHED AND PLACED

LOCATION	TOPSOIL FURNISHED AND PLACED
	CU. YD.
ENTIRE PROJECT *	20000

* QUANTITY ESTIMATED. TO BE USED IF AND WHERE DIRECTED BY THE ENGINEER. SEE SECTION 104.03 OF THE STANDARD SPECIFICATIONS.

QUANTITIES

AEWierdak 4/8/2016 2:44:32 PM
WORKSPACE: AHTD
L:\20IN\I0I707 - I-540 Widening & Interchange Improvement\Drawings\rBB0414_QTY_ALL.dgn
REVISED DATE:

DATE REVISED	DATE FILMED	DATE REVISED	DATE FILMED	FED.RD. DIST.NO.	STATE	FED.AID PROJ.NO.	SHEET NO.	TOTAL SHEETS
8-01-16				6	ARK.			
				JOB NO.		BB0414	245	8[illegible]

(2) QUANTITIES

STATE OF ARKANSAS
LICENSED PROFESSIONAL ENGINEER
No. 13422
JOHN F. CANTABERY
8-1-16

CONCRETE BARRIER WALL

STATION	STATION	LOCATION	MEDIAN TYPE C	MEDIAN TYPE SP-1	MEDIAN TYPE SP-2	SIDE TYPE E	SIDE TYPE SPECIAL	PARAPET TYPE SPECIAL 1	PARAPET TYPE SPECIAL 2	PARAPET TYPE SPECIAL 3	PARAPET TYPE SPECIAL 4	PARAPET TYPE SPECIAL 5	AGGREGATE BASE COURSE (CLASS 7)
			L.F.	L.F.	L.F.	L.F.	L.F.	L.F.	L.F.	L.F.	L.F.	L.F.	TON
239+77.13	275+82.88	I-49 MEDIAN	3606										
242+77.13	279+22.29	I-49 LT.				3645							
275+82.88	276+07.88	I-49 MEDIAN		25									
276+28.13	276+53.13	I-49 MEDIAN		25									
276+53.13	290+04.88	I-49 MEDIAN	1352										
290+04.88	290+29.88	I-49 MEDIAN		25									
290+17.00	293+00.00	I-49 RT.				283							
290+50.13	291+68.92	I-49 MEDIAN		119									
291+68.92	291+93.92	I-49 MEDIAN			25								
292+82.34	293+07.34	I-49 MEDIAN			25								
293+07.34	293+41.79	I-49 MEDIAN	34										
293+41.79	302+74.94	I-49 MEDIAN LT.									933		
293+41.79	302+74.94	I-49 MEDIAN RT.										933	
302+74.94	324+27.69	I-49 MEDIAN	2153										
319+35.00	325+15.72	I-49 RT.				581							
327+92.56	347+57.47	I-49 MEDIAN	1965										
339+00.00	346+10.00	I-49 RT.				710							
346+10.00	350+30.00	I-49 RT.	420										
347+57.47	354+45.11	I-49 MEDIAN LT.									688		
347+57.47	354+45.11	I-49 MEDIAN RT.										688	
354+45.11	355+14.88	I-49 MEDIAN	70										
355+14.88	355+39.88	I-49 MEDIAN		25									
355+60.13	355+85.13	I-49 MEDIAN		25									
355+85.13	364+14.15	I-49 MEDIAN	829										
366+26.36	376+64.88	I-49 MEDIAN	1039										
376+64.88	376+89.88	I-49 MEDIAN		25									
377+10.13	377+35.13	I-49 MEDIAN		25									
377+35.13	393+66.01	I-49 MEDIAN	1631										
279+22.29	282+74.25	HWY. 112 RAMP 4				352							
288+37.46	291+94.68	COLLECTOR DISTRIBUTOR RD. RT.	357										
291+26.60	293+85.65	COLLECTOR DISTRIBUTOR RD. LT.							259				
291+94.59	293+52.89	COLLECTOR DISTRIBUTOR RD. RT.					317						
293+68.14	293+90.01	COLLECTOR DISTRIBUTOR RD. RT.					44						
293+85.65	295+14.26	COLLECTOR DISTRIBUTOR RD. LT.				129							
293+90.01	311+70.00	COLLECTOR DISTRIBUTOR RD. RT.	1780										
295+14.26	306+24.50	COLLECTOR DISTRIBUTOR RD. LT.										1110	
306+24.50	308+00.00	COLLECTOR DISTRIBUTOR RD. LT.				176							
317+51.91	322+87.50	HWY. 112 TO NB I-49 RAMP LT.				536							
322+87.50	323+85.75	HWY. 112 TO NB I-49 RAMP LT.						98					
335+13.00	346+67.17	HWY. 112 TO NB I-49 RAMP LT.						1154					
324+30.00	326+80.00	SB HWY. 71B RT.						250					
313+40.49	315+00.49	SB I-49 TO HWY. 71B RT.						160					
315+00.49	316+60.49	SB I-49 TO HWY. 71B RT.								160			
342+30.00	346+10.00	I-49 RT. (BETWEEN WALLS)											827
291+94.68	293+52.89	C-D RD RT. (BETWEEN WALLS)											361
293+68.14	293+90.01	C-D RD RT. (BETWEEN WALLS)											50
TOTALS:			**15236**	**294**	**50**	**6412**	**361**	**1662**	**259**	**160**	**1621**	**2731**	**1238**

PERMANENT EROSION CONTROL

LOCATION	LIME	SEEDING	MULCH COVER	SECOND SEEDING APPLICATION	WATER
	TON	ACRE			M.G.
I-49 MAIN LANES	42.34	21.17	21.17	21.17	2159.3
HWY. 112 RAMP 1	4.82	2.41	2.41	2.41	245.8
HWY. 112 RAMP 4	1.26	0.63	0.63	0.63	64.3
HWY. 112	7.52	3.76	3.76	3.76	383.5
COLLECTOR-DISTRIBUTOR RD.	5.80	2.90	2.90	2.90	295.8
HWY. 112 TO NB I-49 RAMP	14.76	7.38	7.38	7.38	752.8
SB HWY. 71B	1.96	0.98	0.98	0.98	100.0
HWY. 71B	2.86	1.43	1.43	1.43	145.9
NB I-49 TO HWY. 71B RAMP	7.18	3.59	3.59	3.59	366.2
HWY. 112 TO HWY. 71B RAMP	5.84	2.92	2.92	2.92	297.8
HWY. 71B TO NB I-49 RAMP	0.38	0.19	0.19	0.19	19.4
SB I-49 TO HWY. 112 RAMP	7.44	3.72	3.72	3.72	379.4
SB I-49 TO HWY. 71B RAMP	5.24	2.62	2.62	2.62	267.2
TOTALS:	**107.40**	**53.70**	**53.70**	**53.70**	**5477.4**

BASIS OF ESTIMATE:
LIME = 2 TONS PER ACRE SEEDING
WATER = 102.0 M.G. PER ACRE SEEDING

CONCRETE DITCH PAVING

STATION	STATION	LOCATION	LENGTH	CONCRETE DITCH PAVING (TYPE B)		SOLID SODDING	WATER
			FEET	"W"	SQ. YD.	SQ. YD.	M.G.
248+25	249+25	I-49 RT.	100	6	67	44.4	0.6
261+50	265+05	I-49 RT.	355	6	237	157.8	2.0
269+00	270+50	I-49 RT.	150	6	100	66.7	0.8
271+75	274+28	I-49 RT.	253	6	169	112.4	1.4
312+00	313+00	I-49 LT.	100	6	67	44.4	0.6
313+64	313+72	I-49 LT.	78	6	52	34.7	0.4
318+25	319+35	I-49 RT.	124	6	83	55.1	0.7
363+78	365+14	I-49 RT. TO LT.	315	4	140	22.4	0.3
365+26	366+70	I-49 RT. TO LT.	323	4	144	33.8	0.4
366+51	367+00	I-49 LT.	49	6	33	21.8	0.3
367+25	367+90	I-49 RT.	65	6	43	28.9	0.4
370+28	380+62	I-49 LT.	1059	4	471	236.7	3.0
283+93	285+15	HWY. 112 RAMP 1 RT.	122	6	81	54.2	0.7
286+65	286+77	HWY. 112 RAMP 1 RT.	17	6	11	7.6	0.1
286+95	287+75	HWY. 112 RAMP 1 RT.	80	6	53	35.6	0.4
30+52		HWY. 112 LT.	4	4	2	7.9	0.1
291+28	293+89	C-D RD. LT.	262	4	116	26.0	0.3
291+95	293+53	C-D RD. RT.	158	5.38	94	0.0	0.0
293+68	293+90	C-D RD. RT.	22	5.54	14	0.0	0.0
288+42	288+90	HWY. 112 TO NB I-49	48	6	32	21.3	0.3
294+00	294+37	HWY. 112 TO NB I-49	37	6	25	16.4	0.2
299+73	301+53	HWY. 112 TO NB I-49	180	6	120	80.0	1.0
319+50	323+98	HWY. 112 TO NB I-49	448	VAR.	696	0.0	0.0
341+25	346+67	HWY. 112 TO NB I-49	542	VAR.	468	0.0	0.0
338+36	341+34	HWY. 71B	298	4	132	132.4	1.7
314+28	315+88	NB I-49 TO HWY. 71B	177	4	79	42.2	0.5
305+75	306+00	HWY. 112 TO HWY. 71B	25	6	17	11.1	0.1
307+00	310+16	HWY. 112 TO HWY. 71B	316	6	211	140.4	1.8
308+74	310+25	HWY. 112 TO HWY. 71B	151	6	101	67.1	0.8
315+28	319+98	SB I-49 TO HWY. 71B	472	4	210	42.2	0.5
*ENTIRE PROJECT					300	200.0	2.5
TOTALS:					**4368**	**1743.5**	**21.9**

BASIS OF ESTIMATE:
WATER = 12.6 GALS. PER SQ. YD. SOLID SODDING

*QUANTITY ESTIMATED. TO BE USED IF AND WHERE DIRECTED BY THE ENGINEER. SEE SECTION 104.03 OF THE STANDARD SPECIFICATIONS.

BENCH MARK CAPS

STATION	LOCATION	BENCH MARKS
		EACH
17+72	SE CORNER OF HWY. 112	1
18+00	SW CORNER OF HWY. 112	1
20+64	NW CORNER OF HWY. 112	1
21+12	NE CORNER OF HWY. 112	1
311+90	SW CORNER OF HWY. 112 TO NB I-49	1
312+22	SE CORNER OF HWY. 112 TO NB I-49	1
317+27	NW CORNER OF HWY. 112 TO NB I-49	1
317+57	NE CORNER OF HWY. 112 TO NB I-49	1
323+70	SW CORNER OF I-49	1
325+35	SE CORNER OF I-49	1
327+58	NW CORNER OF I-49	1
328+24	NE CORNER OF I-49	1
364+18	SE CORNER OF I-49	1
364+99	SW CORNER OF I-49	1
365+34	NE CORNER OF I-49	1
366+17	NW CORNER OF I-49	1
291+27	BOX CULVERT RT. OF I-49	1
303+52	BOX CULVERT RT. OF I-49	1
287+17	BOX CULVERT RT. OF HWY. 112 RAMP 1	1
26+90	BOX CULVERT RT. OF HWY. 112	1
304+26	BOX CULVERT LT. OF COLLECOTR DISTRIBUTOR ROAD	1
314+88	BOX CULVERT LT. OF COLLECTOR DISTRIBUTOR ROAD	1
299+52	BOX CULVERT LT. & RT. OF HWY. 112 TO NB I-49 RAMP	2
22+80	BOX CULVERT RT. OF HWY. 112	1
TOTAL:		**25**

NOTE: SHOWN FOR INFORMATION ONLY. BENCH MARKS SHALL BE FURNISHED AND PLACED BY STATE FORCES.

COLD MILLING ASPHALT PAVEMENT

STATION	STATION	LOCATION	AVG. WIDTH	COLD MILLING ASPHALT PAVEMENT
			FEET	SQ. YD.
239+77.13	242+77.13	I-49 RT. LANES TRANSITION	34	1133.33
239+77.13	242+77.13	I-49 LT. LANES TRANSITION	34	1133.33
305+30.00	310+51.00	I-49 RT. LANES FOR M.O.T.	6	347.33
379+52.43	393+16.01	I-49 RT. LANES	34	5151.30
380+86.42	393+16.01	I-49 LT. LANES	34	4645.12
285+50.00	286+50.00	HWY. 112 RAMP 4	25	277.78
295+50.00	296+50.00	HWY. 112 RAMP 4	25	277.78
6+77.03	7+77.03	HWY. 112	60	666.67
16+51.79	17+51.79	HWY. 112	36	400.00
21+27.27	22+27.27	HWY. 112	36	400.00
30+07.40	31+07.40	HWY. 112	44	488.89
280+79.57	281+79.57	COLLECTOR-DISTRIBUTOR RD.	25	277.78
284+61.04	285+61.04	COLLECTOR-DISTRIBUTOR RD.	25	277.78
290+00.00	291+10.81	COLLECTOR-DISTRIBUTOR RD.	25	307.81
307+00.00	308+00.00	COLLECTOR-DISTRIBUTOR RD.	38	422.22
322+87.50	323+87.50	HWY. 112 TO NB I-49	31	344.44
327+73.85	328+73.85	HWY. 112 TO NB I-49	25	277.78
73+13.04	73+53.04	SHILOH DR.	35	155.56
323+41.74	324+41.74	SB HWY. 71B	38	422.22
335+00.00	336+00.00	HWY. 71B TO NB I-49	25	277.78
333+73.46	334+73.46	NB I-49 TO HWY. 71B	19	211.11
334+50.00	335+50.00	SB I-49 TO HWY. 71B	25	277.78
TOTAL:				**18173.79**

AVG. DEPTH = 1½"

JFCantabery 7/29/2016 4:15:51 PM
WORKSPACE: AHTD
L:\2011\11017707 - I-540 Widening & Interchange Improvement\Drawings\rBB0414_QTY_ALL.dgn
REVISED DATE:

QUANTITIE

DATE REVISED	DATE FILMED	DATE REVISED	DATE FILMED	FED.RD. DIST.NO.	STATE	FED.AID PROJ.NO.	SHEET NO.	TOTAL SHEETS
				6	ARK.			
				JOB NO.		BB0414	246	886

(2) QUANTITIES

GUARDRAIL

STATION	STATION	LOCATION	GUARDRAIL TYPE "A"	TERMINAL ANCHOR POSTS (TYPE 1)	GUARDRAIL TERMINAL (TYPE 2)	THRIE BEAM GUARDRAIL TERMINAL
			L.F.	EACH	EACH	EACH
274+24.00	276+99.00	I-49 RT. LANES - RT.	225	1	1	
287+98.85	290+17.60	I-49 RT. LANES - RT.	150		1	1
317+16.85	319+35.60	I-49 RT. LANES - RT.	150		1	1
320+03.46	323+47.21	I-49 LT. LANES - LT.	325	1		1
327+75.35	329+94.10	I-49 LT. LANES - LT.	150		1	1
336+81.85	339+00.60	I-49 RT. LANES - RT.	150		1	1
354+65.53	364+84.28	I-49 LT. LANES - LT.	1000	1		1
361+59.26	364+03.01	I-49 RT. LANES - RT.	175		1	1
366+31.26	368+75.01	I-49 LT. LANES - LT.	175		1	1
376+19.00	378+94.00	I-49 LT. LANES - LT.	225	1	1	
388+69.00	391+44.00	I-49 RT. LANES - RT.	225	1	1	
282+73.65	284+92.40	HWY. 112 RAMP 4 LT.	150		1	1
307+99.40	310+18.15	COLLECTOR DISTIBUTOR RD. LT.	150		1	1
310+96.13	312+96.13	COLLECTOR DISTIBUTOR RD. LT.	150	1	1	
311+69.40	313+88.15	COLLECTOR DISTIBUTOR RD. RT.	150		1	1
308+95.93	311+64.68	HWY. 112 TO NB I-49 RAMP LT.	200		1	1
309+53.06	311+96.81	HWY. 112 TO NB I-49 RAMP RT.	175		1	1
322+11.60	324+30.35	HWY. 112 TO NB I-49 RAMP RT.	150		1	1
332+94.85	335+13.60	HWY. 112 TO NB I-49 RAMP LT.	150		1	1
326+79.40	329+23.15	SB HWY. 71B RT.	175		1	1
338+69.00	341+94.00	HWY. 71B LT.	275	1	1	
338+69.00	342+19.00	HWY. 71B LT.	300	1	1	
343+50.85	345+69.60	HWY. 71B RT.	150		1	1
329+16.43	331+41.43	SB I-49 TO HWY. 112 RAMP RT.	175	1	1	
316+60.49	318+79.24	SB I-49 TO HWY. 71B RAMP RT.	150		1	1
TOTALS:			5450	9	23	18

CONCRETE COMBINATION CURB AND GUTTER

STATION	STATION	LOCATION	SIDE	TYPE A (1'6")
				L.F.
6+77.84	12+32.72	HWY. 112	RT.	610
7+64.06	13+94.93	HWY. 112	LT.	706
12+65.82	14+53.74	HWY. 112	RT.	217
15+27.47	17+96.58	HWY. 112	RT.	268
15+25.52	17+77.37	HWY. 112	LT.	257
20+76.20	21+27.67	HWY. 112	LT.	53
21+09.05	30+80.53	HWY. 112	RT.	1001
24+30.06	26+42.89	HWY. 112	LT.	215
27+40.47	31+08.61	HWY. 112	LT.	408
289+56.03	290+67.89	HWY. 112 RAMP 1	RT.	123
290+11.66	290+44.75	HWY. 112 RAMP 1	LT.	33
290+57.46	290+61.94	HWY. 112 RAMP 1	LT.	6
290+75.42	290+91.83	HWY. 112 RAMP 1	RT.	32
276+16.24	276+22.42	COLLECTOR DISTRIBUTOR RD.	RT.	7
276+37.00	276+77.01	COLLECTOR DISTRIBUTOR RD.	RT.	40
276+41.66	276+70.80	COLLECTOR DISTRIBUTOR RD.	LT.	117
276+80.39	277+54.83	COLLECTOR DISTRIBUTOR RD.	LT.	80
297+70.33	297+93.77	HWY. 112 RAMP 4	LT.	35
297+95.16	297+99.95	HWY. 112 RAMP 4	RT.	8
43+15.90	56+42.00	SHILOH DRIVE	RT.	1333
73+13.04	74+52.90	SHILOH DRIVE	LT.	176
73+13.04	74+56.76	SHILOH DRIVE	RT.	105
TOTAL:				5830

EARTHWORK

LOCATION	UNCLASSIFIED EXCAVATION			COMPACTED EMBANKMENT			ROCK FILL
	UNDERCUT	TYPICAL	TOTAL	ADDITIONAL	TYPICAL	* TOTAL	
	CU. YDS.						
I-49 - STAGE 1		25673	25673		7545	7545	
I-49 - STAGE 1A	1735	6531	8266	1735	154115	155850	75057
I-49 - STAGE 1B		1719	1719		49	49	
I-49 - STAGE 2	655	31575	32230	655	18423	19078	
I-49 - STAGE 2A	352	428	780	352	27455	27807	2779
I-49 - STAGE 2B		4630	4630		1999	1999	
I-49 - STAGE 2C		201	201		6697	6697	
I-49 - STAGE 2D	328	14243	14571	328	32820	33148	
I-49 - STAGE 3		688	688		34	34	
I-49 - STAGE 3A		1352	1352		1686	1686	22
HWY. 112 RAMP 1 - STAGE 1		321	321		951	951	
HWY. 112 RAMP 1 - STAGE 1A		1873	1873		1982	1982	
HWY. 112 RAMP 1 - STAGE 1B		364	364		3400	3400	
HWY. 112 RAMP 4 - STAGE 1		611	611		347	347	
HWY. 112 RAMP 4 - STAGE 1A		137	137		167	167	
HWY. 112 - STAGE 1A	1626	1115	2741	1626	8496	10122	
HWY. 112 - STAGE 2	1029	1625	2654	1029	4202	5231	
SHILOH DR. - STAGE 1A		20	20		100	100	
C-D RD. - STAGE 1	308	2703	3011	308	2792	3100	
C-D RD. - STAGE 1A		55	55		11899	11899	
C-D RD. - STAGE 2		597	597		912	912	
C-D RD. - STAGE 2B		178	178				
C-D RD. - STAGE 3		571	571		59	59	
C-D RD. - STAGE 3A		704	704		175	175	
HWY. 112 TO NB I-49 - STAGE 1		1202	1202		42	42	
HWY. 112 TO NB I-49 - STAGE 1A	3382	904	4286	3382	47501	50883	
HWY. 112 TO NB I-49 - STAGE 2	116	1411	1527	116	18315	18431	
HWY. 112 TO NB I-49 - STAGE 2A	112	1613	1725	112	82	194	
HWY. 112 TO NB I-49 - STAGE 2B		26	26		1878	1878	
HWY. 112 TO NB I-49 - STAGE 3		655	655		1490	1490	
SB HWY. 71B - STAGE 1		947	947		111	111	
SB HWY. 71B - STAGE 1A		612	612		696	696	
SB HWY. 71B - STAGE 2B		534	534		773	773	
SB HWY. 71B - STAGE 2D		52	52		1151	1151	
HWY. 71B - STAGE 1A		1742	1742		3038	3038	
NB I-49 TO HWY. 71B - STAGE 1A	4998	3151	8149	4998	15698	20696	
NB I-49 TO HWY. 71B - STAGE 2		1233	1233		169	169	
NB I-49 TO HWY. 71B - STAGE 2C		88	88				
HWY. 112 TO HWY. 71B - STAGE 1A	9141	1673	10814	9141	39241	48382	
HWY. 71B TO NB I-49 - STAGE 2A					271	271	
SB I-49 TO HWY. 112 - STAGE 1A	240	972	1212	240	8388	8628	
SB I-49 TO HWY. 112 - STAGE 3		2400	2400		565	565	
SB I-49 TO HWY. 112 - STAGE 3A	240	770	1010	240	1976	2216	
SB I-49 TO HWY. 71B - STAGE 1		217	217		117	117	
SB I-49 TO HWY. 71B - STAGE 3	1430	5759	7189	1430	11320	12750	
TEMP. SB I-49 DETOUR - STAGE 1		817	817		11376	11376	2387
TEMP. SB I-49 DETOUR - STAGE 3		1983	1983				
TEMP. SB I-49 DETOUR - STAGE 3A		6102	6102				
TEMP. SB I-49 TO HWY. 71B - STAGE 1		215	215		96	96	
TEMP. SB I-49 TO HWY. 71B - STAGE 3A		162	162				
TEMP. C-D RD. TO I-49 - STAGE 1A		772	772		7443	7443	
TEMP. C-D RD. TO I-49 - STAGE 2C		12	12				
TEMP. C-D RD. TO I-49 - STAGE 3		4258	4258		163	163	
TEMP. C-D RD. TO HWY. 112 - STAGE 1A		376	376		302	302	
TEMP. C-D RD. TO HWY. 112 - STAGE 3		169	169				
TEMP. NB I-49 TO HWY. 71B - STAGE 1A		1039	1039		1152	1152	
TEMP. NB I-49 TO HWY. 71B - STAGE 2C		1753	1753		649	649	
TEMP. EX. I-49 TO PR. I-49 - STAGE 1A		708	708		13424	13424	
TEMP. HWY. 71 TO NB I-49 - STAGE 1A		223	223		224	224	
TEMP. SB I-49 TO CD RD.		737	737		9	9	
RETAINING WALL 1		166	166				
RETAINING WALL 2	3489	1323	4812	597		597	
RETAINING WALL 3		1523	1523				
RETAINING WALL 4		252	252				
RETAINING WALL 5	2831	1152	3983	88	1152	1240	
RETAINING WALL 6	1093	865	1958	140		140	
RETAINING WALL 7	274	4833	5107	166	2439	2605	
RETAINING WALL 8	1094	4746	5840	179	2815	2994	
RETAINING WALL 9		5891	5891		794	794	
SB I-49 TO HWY. 112 DRIVEWAY					1500	1500	
VAN ASCHE BRIDGES - ADDITIONAL EXC.		460	460			0	
ADDITIONAL UNDERCUT	2000		2000	2000		2000	
TOTALS:	36473	164412	200885	28862	482665	511527	80245

* INCLUDES 28862 CU. YDS. OF MATERIAL USED FOR BACKFILL OF UNDERCUT TO BE USED IF AND WHERE DIRECTED BY THE ENGINEER

RUMBLE STRIPS IN ASPHALT SHOULDERS

STATION	STATION	LOCATION	RUMBLE STRIPS IN ASPHALT SHOULDERS
			L.F.
239+77.13	323+91.78	I-49 RT. OF LT. MAIN LANES	8415
239+77.13	279+22.29	I-49 LT. OF LT. MAIN LANES	3945
239+77.13	276+17.66	I-49 RT. OF RT. MAIN LANES	3641
239+77.13	324+56.68	I-49 LT. OF RT. MAIN LANES	8480
280+51.64	304+17.19	I-49 RT. OF RT. MAIN LANES	2366
280+20.84	299+33.27	I-49 LT. OF LT. MAIN LANES	1912
300+36.55	323+29.67	I-49 LT. OF LT. MAIN LANES	2293
308+21.16	325+05.93	I-49 RT. OF RT. MAIN LANES	1685
327+98.95	352+86.42	I-49 LT. OF LT. MAIN LANES	2487
328+38.28	364+14.16	I-49 LT. OF RT. MAIN LANES	3576
328+38.28	364+14.16	I-49 RT. OF LT. MAIN LANES	3576
328+59.84	354+52.43	I-49 RT. OF RT. MAIN LANES	2593
354+82.39	364+61.05	I-49 LT. OF LT. MAIN LANES	979
355+56.11	363+79.78	I-49 RT. OF RT. MAIN LANES	824
365+73.79	393+16.01	I-49 RT. OF RT. MAIN LANES	2742
366+26.36	393+16.01	I-49 LT. OF RT. MAIN LANES	2690
366+26.56	393+16.01	I-49 RT. OF LT. MAIN LANES	2689
366+54.49	393+16.01	I-49 LT. OF LT. MAIN LANES	2662
276+17.66	280+52.42	HWY. 112 RAMP 1	435
279+22.29	280+20.12	HWY. 112 RAMP 4 LT.	98
354+55.26	355+56.11	HWY. 112 TO NB I-49	101
304+17.19	308+21.79	NB I-49 TO HWY. 71B	405
299+33.27	300+40.27	SB HWY. 71B	107
352+74.48	354+82.39	SB I-49 TO HWY. 112 RAMP	208
TOTAL:			58909

4" PIPE UNDERDRAINS

LOCATION	4" PIPE UNDERDRAINS	UNDERDRAIN OUTLET PROTECTORS
	LIN. FT.	EACH
I-49	26429	113
COLLECTOR DISTRIBUTOR ROAD	1676	7
SB HWY. 71B	860	4
*IF & WHERE DIRECTED BY THE ENGINEER	2000	8
TOTALS:	30965	132

* QUANTITIES ESTIMATED. TO BE USED IF AND WHERE DIRECTED BY THE ENGINEER. SEE SECTION 104.03 OF THE STANDARD SPECIFICATIONS.

PIPE UNDERDRAINS SHALL BE CONNECTED TO DROP INLETS AND GROUTED IN PLACE WHERE DIRECTED BY THE ENGINEER. PAYMENT FOR CONNECTING TO DROP INLETS SHALL BE CONSIDERED INCLUDED IN THE PRICE BID FOR 4" PIPE UNDERDRAINS.

CONCRETE ISLAND

STATION	LOCATION	SIDE	CURB FACE TYPE	AREA
				SQ. YD.
7+25	HWY. 112	LT.	C	38.48
14+60	HWY. 112	RT.	C	37.52
14+75	HWY. 112	LT.	C	35.68
22+75	HWY. 112	LT.	C	107.07
24+00	HWY. 112	LT.	C	46.45
TOTAL:				265.20

STATE OF ARKANSAS
LICENSED PROFESSIONAL ENGINEER
No.13422
JOHN F. CANTABERY
4-22-16

PAVEMENT REPAIR OVER CULVERTS

STATION	STATION	LOCATION	ASPHALT	CONCRETE
			TON	CU. YD.
273+90		I-49 RT.	34	15.4
284+05		I-49 LT. AND RT.	68	30.8
370+00		I-49	28	12.5
31+07	31+51	HWY. 112 RT.	38	
45+71		SHILOH DR.	14	6.4
51+63		SHILOH DR.	14	6.4
74+50		SHILOH DR.	38	18.6
TOTALS:			234	90.1

BASIS OF ESTIMATE (ASPAHLT):
1.5' OUTSIDE TRENCH EXCAVATION
11.5" ESTIMATED PAVEMENT DEPTH - SHILOH DR. AND HWY. 112
22.5" ESTIMATED PAVEMENT DEPTH - I-49

ASPHALT CONCRETE PATCHING FOR MAINTENANCE OF TRAFFIC

LOCATION	ASPHALT CONCRETE	TACK COAT
	TON	GAL.
ENTIRE PROJECT *	145	290

*QUANTITIES ESTIMATED. TO BE USED IF AND WHERE DIRECTED BY THE ENGINEER. SEE SECTION 104.03 OF THE STANDARD SPECIFICATIONS

BASIS OF ESTIMATE:
ASPHALT CONCRETE= 50 TONS PER MILE
TACK COAT = 100 GAL. PER MILE

ACHM PATCHING OF EXISTING ROADWAY

LOCATION	TON
ENTIRE PROJECT *	200
TOTAL:	200

*QUANTITIES ESTIMATED. TO BE USED IF AND WHERE DIRECTED BY THE ENGINEER. SEE SECTION 104.03 OF THE STANDARD SPECIFICATIONS.

AEWierciak 4/22/2016 10:21:20 AM
WORKSPACE: AHTD
L:\ZON\101707 - I-540 Widening & Interchange Improvement\Drawings\r-BB0414_QTY_ALL.dgn
REVISED DATE:

DATE REVISED	DATE FILMED	DATE REVISED	DATE FILMED	FED.RD. DIST.NO.	STATE	FED.AID PROJ.NO.	SHEET NO.	TOTAL SHEETS
				6	ARK.			
				JOB NO.		BB0414	247	886

(2) QUANTITIES

STRUCTURES (R.C. PIPE CULVERT)

STATION	LOCATION	DESCRIPTION	REINFORCED CONCRETE PIPE CULVERTS								FLARED END SECTIONS FOR R.C. PIPE CULVERTS					DROP INLETS						4' DROP INLET EXTENSION	8' DROP INLET EXTENSION	JUNCTION BOXES		SOLID SODDING	WATER	STANDARD DRAWINGS
			CL. III 18 IN.	CL. III 24 IN.	CL. IV 24 IN.	CL. V 24 IN.	CL. III 30 IN.	CL. III 36 IN.	CL. III 42 IN.	CL. IV 42 IN.	18 IN.	24 IN.	30 IN.	36 IN.	42 IN.	MODIFYING DROP INLETS	(TYPE MO)	(TYPE RM)	(TYPE SPECIAL)	(TYPE ST)	(TYPE TM)			(TYPE E)	(TYPE ST)			
			LIN. FEET								EACH					EACH						EACH	EACH	EACH		SQ. YD.	M.G.	
247+60	I-49	CONSTRUCT DROP INLET WITH R.C. PIPE OUTLET WITH F.E.S. RT. & CONNECT TO EXISTING DROP INLET LT.				156		24				1								1						8	0.1	FES -1, FES - 2, FPC - 9S, PCC -1
248+16	I-49	MODIFY DROP INLET IN MEDIAN & EXTEND R.C. PIPE OUTLET WITH F.E.S. RT.		20								1				1										8	0.1	FES -1, FES - 2, PCC -1
258+50	I-49	CONSTRUCT DROP INLET WITH R.C. PIPE CULVERT TO DROP INLET		247																1								FES -1, FES - 2, FPC - 9S, PCC -1
261+00	I-49	CONSTRUCT DROP INLET WITH R.C. PIPE CULVERT TO DROP INLET		297																1								FPC - 9S, PCC -1
264+00	I-49	CONSTRUCT DROP INLET WITH R.C. PIPE CULVERT TO DROP INLET		205																1								FPC - 9S, PCC -1
265+42	I-49	MODIFY DROP INLET IN MEDIAN & EXTEND R.C. PIPE OUTLET WITH F.E.S. RT.						42						1		1										17	0.2	FES -1, FES - 2, PCC -1
266+10	I-49	CONSTRUCT DROP INLET WITH R.C. PIPE CULVERT TO DROP INLET																		1								FPC-9S
266+22	I-49	CONSTRUCT DROP INLET WITH R.C. PIPE CULVERT TO DROP INLET						7												1								FPC - 9S, PCC - 1
270+26	I-49	CONSTRUCT DROP INLET LT.,MODIFY DROP INLET IN MEDIAN & EXTEND R.C. PIPE OUTLET WITH F.E.S. RT.						19						1		1				1						17	0.2	FES -1, FES - 2, FPC - 9S, PCC -1
271+77	I-49	CONSTRUCT DROP INLET WITH R.C. PIPE CULVERT TO DROP INLET		12																1								FPC - 9S, PCC - 1
273+90	I-49	CONSTRUCT DROP INLET LT. & EXTEND R.C. PIPE OUTLET WITH F.E.S. RT.								96					1					1						23	0.3	FES -1, FES - 2, FPC - 9S, PCC -1
277+67	I-49	CONSTRUCT DROP INLET WITH R.C. PIPE CULVERT TO DROP INLET		12																1								FPC - 9S, PCC - 1
284+05	I-49	CONSTRUCT DROP INLET WITH R.C. PIPE OUTLET WITH F.E.S. LT & WITH R.C. PIPE CULVERT TO JUNCTION BOX RT.								192					1					1						23	0.3	FES -1, FES - 2, FPC - 9S, PCC -1
285+60	I-49	CONSTRUCT DROP INLET WITH R.C. PIPE CULVERT TO DROP INLET		117																1								FPC - 9S, PCC - 1
286+80	I-49	CONSTRUCT DROP INLET WITH R.C. PIPE CULVERT TO DROP INLET		115																1								FPC - 9S, PCC - 1
287+98	I-49	CONSTRUCT DROP INLET IN MEDIAN & EXTEND R.C. PIPE OUTLET WITH F.E.S. LT.	26								1									1						5	0.1	FES -1, FES - 2, FPC - 9S, PCC -1
292+70	I-49	CONSTRUCT DROP INLET WITH R.C. PIPE CULVERT TO BOX CULVERT		99																1								FPC - 9S, PCC - 1
294+44	I-49	CONSTRUCT DROP INLET WITH R.C. PIPE CULVERT TO DROP INLET		80																1								FPC - 9S, PCC - 1
295+27	I-49	CONSTRUCT DROP INLET WITH R.C. PIPE OUTLET WITH F.E.S. RT. AND WITH R.C. PIPE CULVERT TO DROP INLET LT.					187						1							1						13	0.2	FES -1, FES - 2, FPC - 9S, PCC -1
296+08	I-49	CONSTRUCT DROP INLET WITH R.C. PIPE CULVERT TO DROP INLET		78																1								FPC - 9S, PCC - 1
299+00	I-49	CONSTRUCT DROP INLET WITH R.C. PIPE CULVERT TO DROP INLET		208																1								FPC - 9S, PCC - 1
296+89	I-49	CONSTRUCT DROP INLET, MODIFY DROP INLET & EXTEND R.C. PIPE OUTLET WITH F.E.S. RT.					10						1			1				1						13	0.2	FES -1, FES - 2, FPC - 9S, PCC -1
298+89	I-49	CONSTRUCT R.C. PIPE CULVERT TO DROP INLET LT.					96																					PCC -1
310+50	I-49	CONSTRUCT DROP INLET WITH R.C. PIPE CULVERT TO DROP INLET		47																1								FPC - 9S, PCC - 1
311+00	I-49	CONSTRUCT DROP INLET WITH R.C. PIPE CULVERT TO DROP INLET		47																1								FPC - 9S, PCC - 1
311+50	I-49	CONSTRUCT DROP INLET WITH R.C. PIPE CULVERT TO DROP INLET		47																1								FPC - 9S, PCC - 1
310+00	I-49	CONSTRUCT DROP INLET WITH R.C. PIPE CULVERT OUTLET ON LT.		90																1								FPC - 9S, PCC - 1
314+17	I-49	CONSTRUCT DROP INLET WITH R.C. PIPE CULVERT TO DROP INLET		47																1								FPC - 9S, PCC - 1
313+67	I-49	CONSTRUCT DROP INLET WITH R.C. PIPE CULVERT TO DROP INLET		47																1								FPC - 9S, PCC - 1
317+50	I-49	CONSTRUCT DROP INLET WITH R.C. PIPE CULVERT OUTLET WITH F.E.S. LT.		84								1								1						8	0.1	FES -1, FES - 2, FPC - 9S, PCC -1
321+00	I-49	CONSTRUCT DROP INLET WITH R.C. PIPE CULVERT OUTLET WITH F.E.S. LT.		107								1								1						8	0.1	FES -1, FES - 2, FPC - 9S, PCC -1
331+00	I-49	CONSTRUCT DROP INLET WITH R.C. PIPE CULVERT OUTLET WITH F.E.S. LT.		141								1								1						8	0.1	FES -1, FES - 2, FPC - 9S, PCC -1
335+00	I-49	CONSTRUCT DROP INLET WITH R.C. PIPE CULVERT OUTLET WITH F.E.S. LT.		115								1								1						8	0.1	FES -1, FES - 2, FPC - 9S, PCC -1
338+00	I-49	CONSTRUCT DROP INLET WITH R.C. PIPE CULVERT OUTLET WITH F.E.S. LT.		94								1								1						8	0.1	FES -1, FES - 2, FPC - 9S, PCC -1
341+10	I-49	CONSTRUCT DROP INLET WITH R.C. PIPE CULVERT LT. & RT. WITH F.E.S. LT.						158						1						1						17	0.2	FES -1, FES - 2, FPC - 9S, PCC -1
341+17	I-49	CONSTRUCT DROP INLET WITH R.C. PIPE CULVERT LT. & RT. WITH F.E.S. LT.						158						1						1						17	0.2	FES -1, FES - 2, FPC - 9S, PCC -1
341+64	I-49	CONSTRUCT DROP INLET WITH R.C. PIPE OUTLET TO DROP INLET		43																1								FPC - 9S, PCC - 1
342+42	I-49	CONSTRUCT DROP INLET WITH R.C. PIPE OUTLET TO DROP INLET		75																1								FPC - 9S, PCC - 1
343+21	I-49	CONSTRUCT DROP INLET WITH R.C. PIPE OUTLET TO DROP INLET		76																1								FPC - 9S, PCC - 1
347+98	I-49	CONSTRUCT DROP INLET WITH R.C. PIPE OUTLET TO DROP INLET		60																1								FPC - 9S, PCC - 1
348+22	I-49	CONSTRUCT DROP INLET WITH R.C. PIPE OUTLET TO DROP INLET		33																1								FPC - 9S, PCC - 1
348+90	I-49	CONSTRUCT DROP INLET WITH R.C. PIPE OUTLET TO DROP INLET		25																1								FPC - 9S, PCC - 1
349+07	I-49	CONSTRUCT DROP INLET WITH R.C. PIPE OUTLET TO DROP INLET		60																1								FPC - 9S, PCC - 1
348+60	I-49	CONSTRUCT DROP INLETS WITH R.C. PIPE OUTLET WITH F.E.S. LT.		160								1								2						8	0.1	FES -1, FES - 2, FPC - 9S, PCC -1
352+00	I-49	CONSTRUCT DROP INLET WITH R.C. PIPE CULVERT OUTLET TO DROP INLET		291																1								FPC - 9S, PCC - 1
357+17	I-49	CONSTRUCT DROP INLET & EXTEND R.C. PIPE OUTLET WITH F.E.S. LT.	16								1									1						5	0.1	FES -1, FES - 2, FPC - 9S, PCC -1
364+11	I-49	EXTEND R.C. PIPE CULVERT WITH F.E.S. LT.						23						1												17	0.2	FES - 1, FES - 2, PCC - 1
364+27	I-49	EXTEND R.C. PIPE CULVERT WITH F.E.S. LT.						25						1												17	0.2	FES - 1, FES - 2, PCC - 1
365+47	I-49	CONSTRUCT R.C. PIPE CULVERT WITH F.E.S. RT.					64						1													13	0.2	FES - 1, FES - 2, PCC - 1
366+51	I-49	CONSTRUCT R.C. PIPE CULVERT WITH F.E.S. RT.		26								1														8	0.1	FES - 1, FES - 2, PCC - 1
370+00	I-49	CONSTRUCT JUNCTION BOX WITH R.C. PIPE OUTLET WITH F.E.S. LT.				90						1													1	8	0.1	FES -1, FES - 2, FPC - 9S, PCC -1
373+00	I-49	CONSTRUCT DROP INLET WITH R.C. PIPE OUTLET TO DROP INLET		297																1								FPC - 9S, PCC - 1
374+00	I-49	CONSTRUCT DROP INLET WITH R.C. PIPE OUTLET TO DROP INLET		97																1								FPC - 9S, PCC - 1
375+00	I-49	CONSTRUCT DROP INLET WITH R.C. PIPE OUTLET TO DROP INLET		97																1								FPC - 9S, PCC - 1
376+00	I-49	CONSTRUCT DROP INLET WITH R.C. PIPE OUTLET TO DROP INLET		97																1								FPC - 9S, PCC - 1
387+00	I-49	CONSTRUCT DROP INLET WITH R.C. PIPE OUTLET TO DROP INLET		197																1								FPC - 9S, PCC - 1
389+00	I-49	CONSTRUCT DROP INLET WITH R.C. PIPE OUTLET TO DROP INLET		197																1								FPC - 9S, PCC - 1
391+00	I-49	CONSTRUCT DROP INLET WITH R.C. PIPE OUTLET TO DROP INLET		212																1								FPC - 9S, PCC - 1
393+16	I-49	CONSTRUCT DROP INLET																		1								FPC - 9S
393+16	I-49	CONSTRUCT DROP INLET WITH R.C. PIPE OUTLET TO DROP INLET		3																1								FPC - 9S, PCC - 1
283+96	HWY. 112 RAMP 1	CONSTRUCT JUNCTION BOX & EXTEND R.C. PIPE OUTLET WITH F.E.S. RT.							28						1										1	23	0.3	FES -1, FES - 2, FPC - 9S, PCC -1
11+76	HWY. 112	CONSTRUCT DROP INLET WITH R.C. PIPE CULVERT TO DROP INLET			141												1						1					FPC - 9M, PCC - 1
13+23	HWY. 112	CONSTRUCT DROP INLET WITH R.C. PIPE CULVERT TO DROP INLET		56													1						1					FPC - 9M, PCC - 1
13+85	HWY. 112	CONSTRUCT DROP INLET WITH R.C. PIPE CULVERT WITH F.E.S. RT.		46								1					1									8	0.1	FES -1, FES - 2, FPC - 9M, PCC - 1
15+50	HWY. 112	CONSTRUCT DROP INLET WITH R.C. PIPE CULVERT WITH F.E.S. RT.	13								1						1									5	0.1	FES -1, FES - 2, FPC - 9M, PCC - 1
22+60	HWY. 112	CONSTRUCT DROP INLET WITH R.C. PIPE CULVERT TO BOX CULVERT	64														1					1						FPC - 9M, PCC - 1
26+24	HWY. 112	CONSTRUCT DROP INLET WITH R.C. PIPE CULVERT TO JUNCTION BOX	42														1											FPC - 9M, PCC - 1
27+00	HWY. 112	CONSTRUCT DROP INLET WITH R.C. PIPE CULVERT TO BOX CULVERT	34														1					1						FPC - 9M, PCC - 1
27+63	HWY. 112	CONSTRUCT DROP INLET																		1						4	0.1	FPC - 9D
30+52	HWY. 112	CONSTRUCT DROP INLET																	1									SPECIAL DETAIL
29+11	HWY. 112	CONSTRUCT DROP INLET																		1						4	0.1	FPC - 9D
29+49	HWY. 112	CONSTRUCT DROP INLET WITH R.C. PIPE CULVERT TO BOX CULVERT	7														1					1						FPC - 9M, PCC - 1
30+00	HWY. 112	CONSTRUCT DROP INLET WITH R.C. PIPE CULVERT TO BOX CULVERT	7														1				2							FPC - 9M, PCC - 1
30+10	HWY. 112	CONSTRUCT DROP INLET																		1						4	0.1	FPC - 9D
30+52	HWY. 112	CONSTRUCT DROP INLET WITH R.C. PIPE CULVERT TO BOX CULVERT	3														1											FPC - 9M, PCC - 1
44+19	SHILOH DR.	CONSTRUCT DROP INLET															1											FPC - 9M
45+71	SHILOH DR.	CONSTRUCT DROP INLET WITH R.C. PIPE CULVERT TO EXISTING INLET		26													1											FPC - 9M, PCC - 1
47+83	SHILOH DR.	CONSTRUCT DROP INLET															1											FPC - 9M
51+63	SHILOH DR.	CONSTRUCT DROP INLET WITH R.C. PIPE CULVERT TO EXISTING INLET		26													1											FPC - 9M, PCC - 1
73+64	SHILOH DR.	CONSTRUCT DROP INLET WITH R.C. PIPE CULVERT TO JUNCTION BOX	6														1											FPC - 9M, PCC - 1
73+64	SHILOH DR.	CONSTRUCT JUNCTION BOX WITH R.C. PIPE CULVERT & F.E.S. LT. & RT.		116								2												1		16	0.2	FES - 1, FES - 2, FPC - 9, PCC - 1
291+58	COLLECTOR DISTRIBUTOR RD.	CONSTRUCT DROP INLET																		1								FPC - 9D
293+00	COLLECTOR DISTRIBUTOR RD.	CONSTRUCT DROP INLET WITH R.C. PIPE OUTLET TO DROP INLET		149																1								FPC - 9S, PCC - 1
294+52	COLLECTOR DISTRIBUTOR RD.	CONSTRUCT DROP INLET WITH R.C. PIPE OUTLET WITH F.E.S. LT.					59						1							1						13	0.2	FES - 1, FES - 2, FPC - 9S, PCC - 1
296+26	COLLECTOR DISTRIBUTOR RD.	CONSTRUCT DROP INLET WITH R.C. PIPE OUTLET					30													1								FPC - 9S, PCC - 1
307+00	COLLECTOR DISTRIBUTOR RD.	CONSTRUCT DROP INLET WITH R.C. PIPE OUTLET	2																	1								FPC - 9S, PCC - 1
293+71	HWY. 112 TO NB I-49 RAMP	CONSTRUCT JUNCTION BOX WITH R.C. PIPE OUTLET LT. & RT. WITH F.E.S. LT. & RT.						117						2											1	34	0.4	FES - 1, FES - 2, FPC - 9S, PCC - 1
336+33	HWY. 112 TO NB I-49 RAMP	CONSTRUCT DROP INLET WITH R.C. PIPE OUTLET TO DROP INLET		208														1								6	0.1	FPC - 9D, PCC - 1
338+50	HWY. 112 TO NB I-49 RAMP	CONSTRUCT DROP INLET WITH R.C. PIPE OUTLET TO DROP INLET		82														1								6	0.1	FPC - 9D, PCC - 1
341+58	HWY. 112 TO NB I-49 RAMP	CONSTRUCT DROP INLET																		1								FPC - 9S
341+66	HWY. 112 TO NB I-49 RAMP	CONSTRUCT DROP INLET																		1								FPC - 9S
304+09	SB. HWY. 71B	CONSTRUCT DROP INLET																			1							FPC - 9D
314+07	SB. HWY. 71B	CONSTRUCT DROP INLET WITH R.C. PIPE OUTLET TO BOX CULVERT		56														1								6	0.1	FPC - 9D, PCC - 1
315+07	SB. HWY. 71B	CONSTRUCT DROP INLET WITH R.C. PIPE OUTLET TO BOX CULVERT		27														1								6	0.1	FPC - 9D, PCC - 1
316+15	SB. HWY. 71B	CONSTRUCT DROP INLET WITH R.C. PIPE OUTLET TO DROP INLET		105														1								6	0.1	FPC - 9D, PCC - 1
317+22	SB. HWY. 71B	CONSTRUCT DROP INLET WITH R.C. PIPE OUTLET TO DROP INLET		104														1								6	0.1	FPC - 9D, PCC - 1
319+85	SB. HWY. 71B	EXTEND R.C. PIPE CULVERT WITH F.E.S. LT.		22								1														8	0.1	FES -1, FES - 2, PCC -1
327+86	SB. HWY. 71B	CONSTRUCT DROP INLET & EXTEND R.C. PIPE CULVERT		3														1										FPC - 9D, PCC - 1
309+75	NB I-49 TO HWY. 71B RAMP	CONSTRUCT DROP INLET WITH R.C. PIPE OUTLET TO DROP INLET		69														1								6	0.1	FPC - 9D, PCC - 1
311+50	NB I-49 TO HWY. 71B RAMP	CONSTRUCT DROP INLET WITH R.C. PIPE OUTLET TO BOX CULVERT		138														1								6	0.1	FPC - 9D, PCC - 1
312+92	NB I-49 TO HWY. 71B RAMP	CONSTRUCT DROP INLET																		1						6	0.1	FPC - 9D
332+24	NB I-49 TO HWY. 71B RAMP	EXTEND R.C. PIPE CULVERT WITH F.E.S. RT.		36								1														8	0.1	FES -1, FES - 2, PCC -1
305+00	HWY. 112 TO HWY. 71B RAMP	CONSTRUCT DROP INLET WITH R.C. PIPE OUTLET TO DROP INLET	97															1								6	0.1	FPC - 9D, PCC - 1
306+00	HWY. 112 TO HWY. 71B RAMP	CONSTRUCT DROP INLET WITH R.C. PIPE OUTLET WITH F.E.S. RT.		58								1						1								14	0.2	FES - 1, FES - 2, FPC - 9D, PCC - 1
311+05	HWY. 112 TO HWY. 71B RAMP	CONSTRUCT DROP INLET WITH R.C. PIPE OUTLET WITH F.E.S. RT.		114								1						1								14	0.2	FES - 1, FES - 2, FPC - 9D, PCC - 1
348+58	SB I-49 TO HWY. 112 RAMP	EXTEND R.C. PIPE CULVERT WITH F.E.S. LT.		15								1														8	0.1	FES - 1, FES - 2, PCC - 1
315+56	SB I-49 TO HWY. 71B RAMP	CONSTRUCT DROP INLET WITH R.C. PIPE OUTLET		43														1										FPC - 9D, PCC - 1
339+05	SB I-49 TO HWY. 71B RAMP	EXTEND R.C. PIPE CULVERT WITH F.E.S. RT.		30								1														8	0.1	FES -1, FES - 2, PCC -1
TOTALS:			317	5931	141	246	446	573	28	288	3	19	4	8	3	4	15	13	1	59	6	4	3	1	3	508	7.0	

BASIS OF ESTIMATE:
WATER = 12.6 GALS. PER SQ. YD. SOLID SODDING

NOTES:
FOR R.C. PIPE CULVERT INSTALLATIONS, USE TYPE 3 BEDDING UNLESS OTHERWISE SI
FOR C.M. PIPE CULVERT INSTALLATIONS, USE TYPE 2 BEDDING UNLESS OTHERWISE SPECIFIED.

STATE OF ARKANSAS
LICENSED PROFESSIONAL ENGINEER
No.13422
JOHN F. CANTABERY
4-19-16

QUANTITIES

AEWierciok 4/8/2016 2:44:57 PM
WORKSPACE; AHTD
L:\20IN\I0I7IOT - I-540 Widening & Interchange Improvement\Drawings\rBB0414_QTY_ALL.dgn
REVISED DATE;

DATE REVISED	DATE FILMED	DATE REVISED	DATE FILMED	FED.RD. DIST.NO.	STATE	FED.AID PROJ.NO.	SHEET NO.	TOTAL SHEETS
				6	ARK.			
				JOB NO.		BB0414	248	886

(2) QUANTITIES

STRUCTURES (R.C. ARCH PIPE, ZCCSP, TEMPORARY & M.O.T. PIPE CULVERTS)

STATION	LOCATION	DESCRIPTION	REINFORCED CONCRETE PIPE CULVERTS					REINFORCED CONCRETE ARCH PIPE CULVERTS				ZINC COATED (GALVANIZED) CORRUGATED STEEL PIPE CULVERTS	TEMPORARY CULVERT		FLARED END SECTIONS FOR R.C. PIPE CULVERTS		FLARED END SECTIONS FOR R.C. ARCH PIPE CULVERTS		CONCRETE SPILLWAY	DROP INLETS				JUNCTION BOXES	SOLID SODDING	WATER	STANDARD DRAWINGS
			CL. III 18 IN.	CL. III 24 IN.	CL. IV 24 IN.	CL. III 30 IN.	CL. III 42 IN.	CL. III 22 X 14 IN.	CL. IV 22 X 14 IN.	CL. III 29 X 18 IN.	CL. III 36 X 23 IN.	16 GAUGE 12 IN.	18 IN.	24 IN.	30 IN.	42 IN.	22 X 14 IN.	29 X 18 IN.	TYPE A	(TYPE MO)	(TYPE N2)	(TYPE RM)	(TYPE ST)	(TYPE E)			
			LIN. FEET					LIN. FEET				LIN. FEET	LIN. FEET		EACH		EACH		EACH	EACH				EACH	SQ. YD.	M.G.	
247+77	I-49	CONSTRUCT DROP INLET WITH R.C. ARCH PIPE CULVERT LT.								12													1				
363+76	I-49	CONSTRUCT DROP INLET WITH Z.C.C.S.P. CULVERT WITH CONCRETE SPILLWAY RT.										36							1		1						FPC - 9S, PCC - 1
364+57	I-49	CONSTRUCT DROP INLET WITH Z.C.C.S.P. CULVERT WITH CONCRETE SPILLWAY LT.										63							1		1						FPC - 9N, PCM - 1
8+20	HWY. 112	CONSTRUCT DROP INLET WITH R.C. ARCH PIPE OUTLET WITH F.E.S. LT.						12									1			1				5	0.1	FPC - 9N, PCM - 1
9+75	HWY. 112	CONSTRUCT DROP INLET WITH R.C. ARCH PIPE TO DROP INLET						148												1						FES -1, FES - 2, FPC - 9M, PCC -1
10+58	HWY. 112	CONSTRUCT DROP INLET WITH R.C. ARCH PIPE TO DROP INLET							79											1						FPC - 9M, PCC - 1
30+77	HWY. 112	CONSTRUCT JUNCTION BOX WITH R.C. ARCH PIPE CULVERT WITH F.E.S. LT.								13										1						FPC - 9M, PCC - 1
282+50	HWY. 112 RAMP 1	CONSTRUCT TEMPORARY TYPE ST DROP INLET STAGE 2B WITH OUTLET ON LT.			36													1					1	8	0.1	FES -1, FES - 2, FPC - 9, PCC - 1
339+38	HWY. 112 TO NB I-49 RAMP	CONSTRUCT DROP INLET WITH R.C. ARCH PIPE TO DROP INLET									73												1			FPC - 9S, PCC - 1
340+15	HWY. 112 TO NB I-49 RAMP	CONSTRUCT DROP INLET WITH R.C. ARCH PIPE TO DROP INLET									58										1			6	0.1	FPC - 9D, PCC - 1
340+77	HWY. 112 TO NB I-49 RAMP	CONSTRUCT DROP INLET WITH R.C. ARCH PIPE TO DROP INLET									76											1				FPC - 9S, PCC - 1
314+00	NB I-49 TO HWY. 71B RAMP	CONSTRUCT DROP INLET WITH R.C. ARCH PIPE OUTLET TO BOX CULVERT									94											1				FPC - 9S, PCC - 1
295+11	I-49	CONSTRUCT TEMPORARY DROP INLET STAGE 2B																			1			6	0.1	FPC - 9D, PCC - 1
296+89	I-49	CONSTRUCT TEMPORARY DROP INLET WITH R.C. PIPE CULVER TO DROP INLET STAGE 1				37															1					FPC - 9D
315+14	NB I-49 TO HWY. 71B RAMP	CONSTRUCT DROP INLET WITH R.C. ARCH PIPE OUTLET TO DROP INLET									108										1					FPC - 9D, PCC - 1
342+12	TEMP. SB I-49 DETOUR	EXTEND R.C. PIPE CULVERT WITH F.E.S. LT.				13									1						1			6	0.1	FPC - 9D, PCC - 1
345+24	TEMP. SB I-49 DETOUR	CONSTRUCT TEMPORARY CULVERT												148										13	0.2	FES -1, FES - 2, PCC -1
349+23	TEMP. SB I-49 DETOUR	CONSTRUCT DOUBLE TEMPORARY CULVERT											98													PCC - 1
348+52	TEMP. SB I-49 DETOUR	EXTEND R.C. PIPE WITH TEMPORARY CULVERT												53												PCC - 1
349+87	TEMP. SB I-49 DETOUR	CONSTRUCT TEMPORARY CULVERT												54												PCC - 1
357+05	TEMP. SB I-49 DETOUR	EXTEND R.C. PIPE CULVERT	18																							PCC - 1
283+40	TEMP. C-D RD. TO SB I-49 DETOUR	CONSTRUCT R.C. PIPE CULVERT EXTENSION WITH F.E.S. LT.					8									1								23	0.3	FES -1, FES - 2, PCC -1
285+08	TEMP. C-D RD. TO SB I-49 DETOUR	EXTEND R.C. PIPE CULVERT WITH F.E.S. LT.					68									1								23	0.3	FES -1, FES - 2, PCC -1
287+01	TEMP. C-D RD. TO SB I-49 DETOUR	EXTEND R.C. PIPE CULVERT	77																					0	0.0	FES -1, FES - 2, PCC -1
287+14	TEMP. C-D RD. TO SB I-49 DETOUR	CONSTRUCT R.C. PIPE CULVERT		83																						PCC - 1
315+53	TEMP. NB I-49 TO HWY. 71B RAMP	CONSTRUCT TEMPORARY CULVERT												79												PCC - 1
TOTALS:			95	83	36	50	76	160	79	25	409	99	98	334	1	2	1	1	2	3	2	5	4	1	90	1.3	

BASIS OF ESTIMATE:
WATER = 12.6 GALS. PER SQ. YD. SOLID SODDING

NOTES:
FOR R.C. PIPE CULVERT INSTALLATIONS, USE TYPE 3 BEDDING UNLESS OTHERWISE SPECIFIED.
FOR C.M. PIPE CULVERT INSTALLATIONS, USE TYPE 2 BEDDING UNLESS OTHERWISE SPECIFIED.

STRUCTURES (R.C. BOX CULVERT)

STATION	LOCATION	DESCRIPTION	DROP INLETS		R.C. BOX CULVERT							STANDARD DRAWINGS
			MODIFYING DROP INLETS	(TYPE TM)	DIMENSIONS			CLASS S CONCRETE - ROADWAY	REINFORCING STEEL - ROADWAY (GR. 60)	UNCL. EX. FOR STRUCTURES - ROADWAY	SOLID SODDING	WATER	
					LENGTH	SPAN	HEIGHT						
			EACH	EACH	FEET			CU. YD.	LB.	CU. YD.	SQ. YD.	M.G.	
291+27	I-49	MODIFY DROP INLET & RETAIN AND EXTEND 4' X 4' R.C. BOX CULVERT LT. & RT.	1		148	4	4	64.61	7168.28	28.24	17	0.2	RCB - 1, RCB - 2, RCB - 3, R - 100X - X1, R - 130X - 0, W - X45, W - X453 - 1
303+52	I-49	CONSTRUCT DROP INLET & EXTEND DBL. 6' X 3' R.C. BOX CULVERT		1	101	6	3	86.65	15249.72	38.74	7	0.1	RCB - 1, RCB - 2, RCB - 3, R - 200X - 0, W - X003 - 1
313+17	I-49	CONSTRUCT DROP INLET & EXTEND 6' X 3' DOUBLE R.C. BOX CULVERT		1	476	6	3	412.35	56862.20	205.30	8	0.1	RCB - 1, RCB - 2, RCB - 3, R - 200X - X4, W - X003 - 1
287+17	HWY. 112 RAMP 1	EXTEND 4' X 3' R.C. BOX CULVERT			56	4	3	26.60	2606.17	11.15	12	0.2	RCB - 1, RCB - 2, RCB - 3, R - 100X - X1, R - 130X - 1, W - X30, W - X303 - 1
26+90	HWY. 112	CONSTRUCT 6' X 3' R.C. BOX CULVERT			836	6	3	479.09	36962.00	177.61	12	0.2	SPECIAL DETAILS
304+26	COLLECTOR DISTRIBUTOR RD.	EXTEND DOUBLE 6' X 3' R.C. BOX CULVERT		1	27	6	3	22.08	4009.50	6.25			RCB - 1, RCB - 2, RCB - 3, R - 200X - 0
314+88	COLLECTOR DISTRIBUTOR RD.	EXTEND DOUBLE 6' X 6' R.C. BOX CULVERT			97	6	6	121.14	17276.28	41.39	12	0.2	RCB - 1, RCB - 2, RCB - 3, R - 215X - 0, W - X15, W - X153 - 1
299+52	HWY. 112 TO NB I-49 RAMP	CONSTRUCT DOUBLE 7' X 5' R.C. BOX CULVERT			80	7	5	106.68	16476.00	41.28	20	0.3	SPECIAL DETAILS
TOTALS:			1	3				1319.20	156610.15	549.96	88	1.3	

BASIS OF ESTIMATE:
WATER = 12.6 GALS. PER SQ. YD. SOLID SODDING

WHEELCHAIR RAMPS

STATION	LOCATION	WHEELCHAIR RAMPS (TYPE 3) S.Y.
07+28.00	HWY. 112 RT.	3.15
07+63.00	HWY. 112 LT.	3.43
12+15.00	HWY. 112 RT.	5.48
12+92.00	HWY. 112 RT.	5.64
14+23.00	HWY. 112 LT.	7.35
14+48.00	HWY. 112 RT.	3.33
15+24.00	HWY. 112 LT.	16.53
15+31.00	HWY. 112 RT.	5.45
22+25.00	HWY. 112 LT.	12.50
22+83.00	HWY. 112 RT.	3.33
23+34.00	HWY. 112 LT.	26.37
24+15.00	HWY. 112 LT.	10.22
26+44.00	HWY. 112 LT.	20.09
27+42.00	HWY. 112 LT.	4.61
30+64.00	HWY. 112 RT.	4.49
30+70.00	HWY. 112 RT.	3.93
30+72.00	HWY. 112 LT.	3.43
30+88.00	HWY. 112 LT.	4.42
31+33.00	HWY. 112 RT.	4.95
31+55.00	HWY. 112 RT.	3.43
TOTAL:		152.13

AUTOMATED WORK ZONE INFORMATION SYSTEM

LOCATION	* AWIS MOBILIZATION	* AWIS OPERATION	* DEVICE RELOCATION	FURNISH AND INSTALL * CLOSED CIRCUIT TELEVISION SYSTEM	* PUBLIC NOTIFICATION SYSTEM	* VARIABLE MESSAGE SIGN	* VEHICLE DETECTION SYSTEM
	LUMP SUM	MONTH	EACH	EACH			
ENTIRE PROJECT	1.00	39	17	2	2	7	24
TOTALS:	1.00	39	17	2	2	7	24

* QUANTITIES ARE ESTIMATED. REFER TO SECTION 104.03 OF THE STANDARD SPECIFICATIONS.

REFER TO "AUTOMATED WORK ZONE INFORMATION SYSTEM" SPECIAL PROVISION.

THE DEVICES NEEDED FOR THE AWIS SYSTEM ARE ESTIMATED BASED ON THE FOLLOWING CRITERIA:
VDS - 16 EACH AT A ½ MILE SPACING ON I-49 NB AND SB, BEGINNING 4 MILES IN ADVANCE OF THE WORK ZONE, AND 8 WITHIN THE WORK ZONE AT A 1 MILE SPACING.
VMS - INSTALL IN ADVANCE OF THE FOLLOWING EXITS:
I-49 NORTHBOUND – RAZORBACK RD. (EXIT 60), MARTIN LUTHER KING JR BLVD. (EXIT 62), GARLAND AVE. (EXIT 66)
I-49 SOUTHBOUND – FULBRIGHT EXPWY. (EXIT 67), JOHNSON MILL BLVD. (EXIT 69), DON TYSON PKWY. (EXIT 70), AND SUNSET AVE. (EXIT 72)
PNS - I-49 AT RAZORBACK RD. AND SUNSET AVE.
CCTV - I-49 AT PORTER RD. AND JOHNSON MILL BLVD.

THE CONTRACTOR SHALL COORDINATE THE INSTALLATION OF THE AWIS SYSTEM COMPONENTS WITH THE CONTRACTOR FOR JOB CA0401. NORTHBOUND ON I-49, THERE ARE SEVERAL COMPONENTS OF THE AWIS SYSTEM FOR JOB CA0401 DEPLOYED WITHIN THE WORK ZONE FOR BB0414 THAT WILL HAVE TO BE RELOCATED TO THE NORTH OUT OF THE CA0401 WORK ZONE. IN ADDITION, SOUTHBOUND ON I-49, SOME OF THE DEVICES SHOWN ABOVE WILL BE PLACED WITHIN THE CA0401 WORK ZONE.

CONCRETE WALKS

STATION	STATION	LOCATION	LENGTH (LIN. FT.)	CONCRETE WALKS (SQ. YD.)
7+25.52	9+56.00	HWY. 112 - RT.	230.48	135.32
10+04.00	10+43.00	HWY. 112 - RT.	87.49	21.07
10+91.00	12+10.39	HWY. 112 - RT.	251.92	66.97
12+70.53	14+45.09	HWY. 112 - RT.	174.56	109.61
15+35.59	17+99.27	HWY. 112 - RT.	263.68	148.30
21+09.97	30+79.03	HWY. 112 - RT.	969.06	557.84
31+39.17	31+56.56	HWY. 112 - RT.	17.39	10.79
7+64.01	8+24.37	HWY. 112 - LT.	60.36	38.28
8+95.50	9+79.00	HWY. 112 - LT.	83.50	46.33
10+48.00	10+83.00	HWY. 112 - LT.	35.00	19.44
11+43.00	11+67.00	HWY. 112 - LT.	24.00	13.33
12+31.00	14+22.40	HWY. 112 - LT.	191.40	108.86
15+30.28	17+75.40	HWY. 112 - LT.	245.12	387.94
20+65.12	22+24.97	HWY. 112 - LT.	159.85	279.34
24+16.77	26+36.89	HWY. 112 - LT.	220.12	364.88
27+46.07	30+93.47	HWY. 112 - LT.	347.40	203.95
31+49.49	31+63.21	HWY. 112 - LT.	13.72	7.27
TOTAL:				2519.52

STATE OF ARKANSAS
LICENSED PROFESSIONAL ENGINEER
No. 13422
JOHN F. CANTABERY
4-22-16

QUANTITIES

AEWierdak 4/22/2016 10:21:32 AM
WORKSPACE: AHTD - I-540 Widening & Interchange Improvement\Drawings\rBB0414_QTY_ALL.dgn
L:\ZONINGTOT - I-540 Widening & Interchange Improvement\Drawings\rBB0414_QTY_ALL.dgn
REVISED DATE:

DATE REVISED	DATE FILMED	DATE REVISED	DATE FILMED	FED.RD. DIST.NO.	STATE	FED.AID PROJ.NO.	SHEET NO.	TOTAL SHEETS
				6	ARK.			
				JOB NO.		BB0414	249	886
				(2)	QUANTITIES			

APPROACH SLABS

STATION	STATION	LOCATION	CONCRETE TYPE S(AE) - ROADWAY															REINFORCING STEEL - ROADWAY (GR. 60)
			TYPE SPECIAL 1	TYPE SPECIAL 2	TYPE SPECIAL 3	TYPE SPECIAL 4	TYPE SPECIAL 5	TYPE SPECIAL 6	TYPE SPECIAL 7	TYPE SPECIAL 8	TYPE SPECIAL 9	TYPE SPECIAL 10	TYPE SPECIAL 11	TYPE SPECIAL 12	TYPE SPECIAL 13	TYPE SPECIAL 14	TYPE SPECIAL 15	
			CU. YD.															LB.
323+43.41	323+81.59	I-49 OVER HWY. 71B - BEG. BR. A							115.50									13012
324+60.28	324+96.32	I-49 OVER HWY. 71B - BEG. BR. B								105.62								12178
327+67.52	328+25.16	I-49 OVER HWY. 71B - END BR. A									94.72							10690
328+02.21	328+55.30	I-49 OVER HWY. 71B - END BR. B										93.67						10493
363+82.91	364+19.41	I-49 OVER VAN ASCHE DR. - BEGIN BR. B													180.81			20212
364+14.16	364+50.66	I-49 OVER VAN ASCHE DR. - BEGIN BR. A & B - MEDIAN											115.08					12029
364+32.92	364+69.42	I-49 OVER VAN ASCHE DR. - BEGIN BR. A												137.93				15103
365+39.85	366+07.60	I-49 OVER VAN ASCHE DR. - END BR. B															179.50	20312
365+71.11	366+26.36	I-49 OVER VAN ASCHE DR. - END BR. A & B - MEDIAN											115.08					12029
365+89.86	366+51.36	I-49 OVER VAN ASCHE DR. - END BR. A														137.93		15117
17+43.00	17+77.37	HWY. 112 OVER I-49 - BEG. BR. - LT.	14.01															1022
17+57.63	17+93.04	HWY. 112 OVER I-49 - BEG. BR. - RT.		14.01														1023
20+76.20	21+10.57	HWY. 112 OVER I-49 - END BR. - LT.			14.47													1049
21+02.98	21+38.39	HWY. 112 OVER I-49 - END BR. - RT.				14.52												1052
311+64.20	312+00.38	HWY. 112 TO NB I-49 - BEG. BR.					38.65											4335
317+40.33	317+91.83	HWY. 112 TO NB I-49 - END BR.						38.29										4274
TOTALS:			14.01	14.01	14.47	14.52	38.65	38.29	115.50	105.62	94.72	93.67	230.16	137.93	180.81	137.93	179.50	153930

APPROACH GUTTERS

STATION	STATION	LOCATION	CONCRETE TYPE S(AE) - ROADWAY													REINFORCING STEEL - ROADWAY (GR. 60)
			TYPE SPECIAL 1	TYPE SPECIAL 2	TYPE SPECIAL 3	TYPE SPECIAL 4	TYPE SPECIAL 5	TYPE SPECIAL 6	TYPE SPECIAL 7	TYPE SPECIAL 8	TYPE SPECIAL 9	TYPE SPECIAL 10	TYPE SPECIAL 11A	TYPE SPECIAL 11B	TYPE SPECIAL 12	TYPE SPECIAL 13	
			CU. YD.														LB.
323+29.67	323+68.33	I-49 OVER HWY. 71B - BEG. BR. A - LT.					23.64										1390
323+91.78	324+18.71	I-49 OVER HWY. 71B - BEG. BR. A - RT.									14.12						828
324+49.46	324+85.92	I-49 OVER HWY. 71B - BEG. BR. B - LT.										29.54					3200
324+98.85	325+25.74	I-49 OVER HWY. 71B - BEG. BR. B - RT.						14.70									858
327+60.25	327+98.95	I-49 OVER HWY. 71B - END BR. A - LT.							18.79								1091
327+88.22	328+38.28	I-49 OVER HWY. 71B - END BR. A - RT.											21.02				1194
327+95.85	328+38.28	I-49 OVER HWY. 71B - END BR. B - LT.												28.30			3016
328+20.39	328+59.84	I-49 OVER HWY. 71B - END BR. B - RT.								18.37							1056
363+77.78	364+16.28	I-49 OVER VAN ASCHE DR. - BEGIN BR. B - RT.													12.19		685
364+59.05	364+94.42	I-49 OVER VAN ASCHE DR. - BEGIN BR. A - LT.														11.25	633
365+36.72	365+75.79	I-49 OVER VAN ASCHE DR. - END BR. B - RT.														11.25	633
366+14.86	366+56.49	I-49 OVER VAN ASCHE DR. - END BR. A - LT.													12.19		685
311+50.75	311+88.30	HWY. 112 TO NB I-49 - BEG. BR. - LT.	23.98														1404
311+84.13	312+16.17	HWY. 112 TO NB I-49 - BEG. BR. - RT.		6.96													383
317+28.33	317+64.83	HWY. 112 TO NB I-49 - END BR. - LT.			16.12												954
317+55.33	317+95.83	HWY. 112 TO NB I-49 - END BR. - RT.				7.69											431
TOTALS:			23.98	6.96	16.12	7.69	23.64	14.70	18.79	18.37	14.12	29.54	21.02	28.30	24.38	22.50	18441

RETAINING WALL

STATION	STATION	LOCATION	MSE RETAINING WALL	SOIL NAIL WALL	TEMPORARY RETAINING WALL	AGGREGATE BASE COURSE (CLASS 7)	SELECT GRANULAR BACKFILL	TEXTURED COATING FINISH	SHORING
			SQ. FT.			TON	CU. YD.	SQ. YD.	LUMP SUM
291+37.01	293+73.01	RETAINING WALL NO. 1 - C-D RD.	1200	2797			245	329	
295+14.26	306+24.50	RETAINING WALL NO. 2 - C-D RD.	13084			6152	4275	871	
293+41.79	302+74.94	RETAINING WALL NO. 3 - I-49	8207				2927		
314+30.00	315+86.00	RETAINING WALL NO. 4 - NB I-49 TO HWY. 71B	1826				519	185	
319+95.75	315+29.59	RETAINING WALL NO. 5 - SB I-49 TO HWY. 71B	6859			5761	2824	745	
347+57.47	354+45.11	RETAINING WALL NO. 6 - I-49	9369			2079	4452		
363+91.98	365+08.54	RETAINING WALL NO. 7 - I-49 RT. TO LT.	4687		2155	617	3836	496	
365+25.95	366+56.40	RETAINING WALL NO. 8 - I-49 LT. TO RT.	4840		2200	2426	3986	525	
370+30.00	380+50.00	RETAINING WALL NO. 9 - I-49	15331				5344	1579	1.00
TOTALS:			65403	2797	4355	17035	28408	4730	1.00

MAILBOXES

STATION	LOCATION	MAILBOXES	MAILBOX SUPPORTS (SINGLE)
		EACH	EACH
10+96	HWY. 112 RT.	1	1
10+99	HWY. 112 RT.	1	1
11+02	HWY. 112 RT.	1	1
TOTALS:		3	3

MODIFICATION OF EXISTING BARRIER WALL

STATION	STATION	LOCATION	MODIFICATION OF EXISTING BARRIER WALL
			L.F.
189+90.88	192+09.13	I-49 MEDIAN (JOB 040605)	218
207+40.88	209+59.13	I-49 MEDIAN (JOB 040605)	218
236+90.88	239+09.13	I-49 MEDIAN (JOB 040605)	218
TOTAL:			654

STATE OF ARKANSAS
LICENSED PROFESSIONAL ENGINEER
No.13422
JOHN F. CANTABERY
4-22-16

FENCING

STATION	STATION	LOCATION	WIRE FENCE (TYPE A)	16' GATE
			L.F.	EACH
278+99.54	285+72.27	I-49 RT.	684	
286+17.29	289+75.40	I-49 RT.	402	
291+70.29	328+27.21	I-49 RT.	4372	
356+17.18	363+84.43	I-49 RT.	814	
349+65.00	357+43.37	I-49 LT.	898	
364+82.86	364+82.86	I-49 LT.	82	1
366+65.28	367+50.00	I-49 LT.	134	
365+66.86	368+46.16	I-49 RT.	365	1
370+67.18	381+50.00	I-49 RT.	1043	
12+77.27	13+55.00	HWY. 112 LT.	82	
12+77.27	13+95.00	HWY. 112 RT.	114	
24+20.00	26+47.34	HWY. 112 RT.	229	
TOTALS:			9219	2

DELINEATORS

STATION	STATION	LOCATION	WHITE TYPE-1 DELINEATORS	YELLOW TYPE-1 DELINEATORS
			EACH	EACH
281+01.88	282+81.97	HWY. 112 RAMP 1	2	
282+81.97	286+73.79	HWY. 112 RAMP 1	7	5
286+73.79	289+56.03	HWY. 112 RAMP 1	3	
280+92.58	284+43.99	HWY. 112 RAMP 4		5
284+61.04	288+37.46	C-D RD.		13
313+41.74	315+18.06	C-D RD.	3	2
315+18.06	318+57.52	C-D RD.	3	
288+12.93	290+47.74	HWY. 112 TO NB I-49 RAMP	4	
290+47.74	291+68.55	HWY. 112 TO NB I-49 RAMP	1	
291+68.55	297+90.56	HWY. 112 TO NB I-49 RAMP	10	8
297+90.56	308+87.09	HWY. 112 TO NB I-49 RAMP	11	
317+82.91	322+71.77	HWY. 112 TO NB I-49 RAMP	8	
327+73.85	341+29.08	HWY. 112 TO NB I-49 RAMP	23	
341+29.08	347+51.58	HWY. 112 TO NB I-49 RAMP	6	
347+51.58	351+33.13	HWY. 112 TO NB I-49 RAMP	6	
308+71.25	313+36.68	NB I-49 TO HWY. 71B RAMP	5	
313+36.68	328+75.95	NB I-49 TO HWY. 71B RAMP	26	
328+75.95	330+61.97	NB I-49 TO HWY. 71B RAMP	2	
330+61.97	333+67.32	NB I-49 TO HWY. 71B RAMP	5	4
304+58.74	309+01.72	HWY. 112 TO HWY. 71B RAMP	4	
309+01.72	315+02.22	HWY. 112 TO HWY. 71B RAMP	10	
315+02.22	318+80.58	HWY. 112 TO HWY. 71B RAMP	4	
336+00.00	336+65.60	HWY. 71B TO NB I-49	1	1
336+65.60	337+84.70	HWY. 71B TO NB I-49	1	
328+75.63	332+57.43	SB I-49 TO HWY. 112 RAMP	6	5
332+57.43	333+71.44	SB I-49 TO HWY. 112 RAMP	1	
333+71.44	342+13.43	SB I-49 TO HWY. 112 RAMP	14	11
342+13.43	352+45.05	SB I-49 TO HWY. 112 RAMP	10	
334+50.00	336+71.34	SB I-49 TO HWY. 71B RAMP	4	3
336+71.34	341+55.99	SB I-49 TO HWY. 71B RAMP	5	
341+55.99	345+87.75	SB I-49 TO HWY. 71B RAMP	7	
TOTALS:			192	57

AEWierdak 4/22/2016 10:21:44 AM
WORKSPACE: AHTD
L:\20\W0171OT - I-540 Widening & Interchange Improvement\Drawings\BB0414_QTY_ALL.dgn
REVISED DATE:

DATE REVISED	DATE FILMED	DATE REVISED	DATE FILMED	FED.RD. DIST.NO.	STATE	FED.AID PROJ.NO.	SHEET NO.	TOTAL SHEETS
				6	ARK.			
				JOB NO.		BB04I4	250	886
				(2)		QUANTITIES		

STATE OF ARKANSAS
LICENSED PROFESSIONAL ENGINEER
No.13422
JOHN F. CANTABERY
4-22-16

DRIVEWAYS

LOCATION	**MODIFIED CURB			DRIVEWAY WIDTH	6" PORTLAND CEMENT CONCRETE DRIVEWAY	AGGREGATE BASE COURSE (CLASS 7)	ACHM SURFACE COURSE (1/2") (220 LBS. PER S.Y.) (PG 64-22)	
	TYPE A (1'6")		LENGTH					
	STATION	STATION	LIN. FT.	FEET	SQ. YD.	TONS	SQ. YD.	TON
HWY. 112 - 8+60 LT.	8+24.52	8+95.36	68	40	417.91			
HWY. 112 - 9+80 RT.	9+56.00	10+04.00	48	20	87.23			
HWY. 112 - 10+13.50 LT.	9+79.00	10+48.00	69	40	422.30			
HWY. 112 10+67 RT.	10+43.00	10+91.00	48	20	91.87			
HWY. 112 - 11+13 LT.	10+83.00	11+43.00	60	32	287.92			
HWY. 112 - 11+99 LT.	11+67.00	12+31.00	64	36	56.89	157.49	385.69	42.43
SB I-49 TO HWY. 112 MAINTENANCE DRIVE	AS DIRECTED		360	VAR.		338.92	830.00	91.30
*ENTIRE PROJECT - TEMPORARY DRIVES						20.00		
TOTALS:					**1364.12**	**516.41**	**1215.69**	**133.73**

BASIS OF ESTIMATE:
ACHM SURFACE COURSE (1/2") : 5.2% ASPHALT BINDER (PG 64-22), 94.8% MINERAL AGGREGATE, N_{MAX}=115

*QUANTITY ESTIMATED. TO BE USED IF AND WHERE DIRECTED BY THE ENGINEER. SEE SECTION 104.03 OF THE STANDARD SPECIFICATIONS.

**FOR INFORMATION ONLY

THE CONTRACTOR, WITH THE APPROVAL OF THE ENGINEER, WILL BE ALLOWED TO SUBSTITUTE A HIGHER PERFORMANCE GRADE ASPHALT SURFACE COURSE FOR DRIVEWAYS AND MINOR SIDE STREET CONSTRUCTION AT NO ADDITIONAL COST TO THE DEPARTMENT.

CONCRETE BASE

	STATION	STATION	LOCATION	LENGTH	PORTLAND CEMENT CONCRETE BASE			
					AVG. WID.	6½" U.T.	AVG. WID.	6" U.T.
				FEET	FEET	SQ YD.	FEET	SQ YD.
	73+53.04	74+72.00	SHILOH DR.	118.96	3.3	43.62	10.7	141.43
*	ENTIRE	PROJECT	IF AND WHERE DIRECTED BY THE ENGINEER			10.00		10.00
	TOTALS:					**53.62**		**151.43**

* QUANTITY ESTIMATED. TO BE USED IF AND WHERE DIRECTED BY THE ENGINEER. SEE SECTION 104.03 OF THE STANDARD SPECIFICATIONS.

BASE & SURFACING (BOX 1 OF 6)

STATION	STATION	LOCATION	LENGTH	ACHM SURFACE COURSE (1/2") (PG 76-22)				ACHM BINDER COURSE (1") (PG 76-22)				ACHM BASE COURSE (1 1/2") (PG 76-22)				AGGREGATE BASE COURSE (CLASS 7)		TACK COAT				
			FEET	AVG. WIDTH FEET	SQUARE YARDS	LBS. PER SQ. YD.	TON	AVG. WIDTH FEET	SQUARE YARDS	LBS. PER SQ. YD.	TON	AVG. WIDTH FEET	SQUARE YARDS	LBS. PER SQ. YD.	TON	TONS PER STATION	TON	TOTAL WIDTH FEET	SQUARE YARDS	0.05 G/SY GAL.	AVG. WIDTH FEET	SQUARE YARDS	0.17 G/SY GAL.
I-49 LEFT MAIN LANES																							
239+77.13	242+77.13	NOTCH AND WIDEN ON LT. AND RT. & TAPER	300.00	93.25	3108.33	220	341.92	26.04	868.00	495	214.83	26.54	884.67	880	389.25	482.75	1448.25	128.87	4295.67	214.78	24.00	800.00	136.00
242+77.13	270+20.84	NOTCH AND WIDEN ON LT. AND RT.	2743.71	96.25	29342.45	220	3227.67	26.54	8090.90	495	2002.50	27.04	8243.32	880	3627.06	426.50	11701.92	130.87	39896.59	1994.83	24.00	7316.56	1243.82
270+20.84	273+20.84	NOTCH AND WIDEN ON LT. AND RT. & TAPER	300.00	105.25	3508.33	220	385.92	31.54	1051.33	495	260.20	32.04	1068.00	880	469.92	437.75	1313.25	150.87	5029.00	251.45	24.00	800.00	136.00
273+20.84	279+22.29	NOTCH AND WIDEN ON LT. AND RT.	601.45	114.25	7635.07	220	839.86	36.54	2441.89	495	604.37	37.04	2475.30	880	1089.13	449.00	2700.51	170.87	11418.86	570.94	24.00	1603.87	272.66
279+22.29	280+96.08	NOTCH AND WIDEN ON LT. AND RT. THROUGH RAMP 4 GORE AREA	173.79	VAR.	2169.58	220	238.65	VAR.	740.21	495	183.20	VAR.	745.07	880	327.83	VAR.	620.24	VAR.	3428.65	171.43	24.00	463.44	78.78
280+96.08	281+69.33	NOTCH AND WIDEN ON LT. AND RT.	73.25	96.25	783.37	220	86.17	26.54	216.01	495	53.46	27.04	220.08	880	96.84	514.50	376.87	130.87	1065.14	53.26	24.00	195.33	33.21
281+69.33	283+16.55	NOTCH AND WIDEN ON LT. AND RT. - SUPERELEVATION TRANSITION	147.22	96.25	1574.44	220	173.19	26.54	434.14	495	107.45	27.04	442.31	880	194.62	511.75	753.40	130.87	2140.74	107.04	24.00	392.59	66.74
283+16.55	284+69.33	NOTCH AND WIDEN ON LT. AND RT. & TAPER - SUPERELEVATION TRANSITION	152.78	98.78	1676.85	220	184.45	27.81	472.09	495	116.84	28.31	480.58	880	211.46	527.25	805.53	135.93	2307.49	115.37	24.00	407.41	69.26
284+69.33	288+00.00	NOTCH AND WIDEN ON LT. AND RT. & TAPER - SUPERELEVATION	330.67	106.84	3925.42	220	431.80	31.83	1169.47	495	289.44	32.33	1187.84	880	522.65	559.00	1848.45	152.04	5586.12	279.31	24.00	881.79	149.90
288+00.00	288+89.69	FULL DEPTH & TAPER	89.69	138.86	1383.82	220	152.22	59.85	596.44	495	147.62	60.35	601.42	880	264.62	700.25	628.05	240.11	2392.83	119.64			
288+89.69	290+36.55	FULL DEPTH & TAPER	146.86	142.80	2330.18	220	256.32	61.82	1008.77	495	249.67	62.32	1016.92	880	447.44	735.50	1080.16	247.99	4046.65	202.33			
290+36.55	291+11.34	FULL DEPTH	74.79	144.25	1198.72	220	131.86	62.54	519.71	495	128.63	63.04	523.86	880	230.50	748.75	559.99	250.87	2084.73	104.24			
291+11.34	292+68.89	FULL DEPTH - SUPERELEVATION TRANSITION	157.55	144.25	2525.18	220	277.77	62.54	1094.80	495	270.96	63.04	1103.55	880	485.56	670.75	1056.77	250.87	4391.62	219.58			
292+68.89	293+41.79	FULL DEPTH - SUPERELEVATION TRANSITION	72.90	144.51	1170.53	220	128.76	62.54	506.57	495	125.38	63.04	510.62	880	224.67	615.25	448.52	250.87	2032.05	101.60			
293+41.79	295+90.16	FULL DEPTH - SUPERELEVATION TRANSITION	248.37	137.01	3781.02	220	415.91	62.54	1725.90	495	427.16	63.04	1739.69	880	765.46	595.75	1479.66	250.87	6923.18	346.16			
295+90.16	299+33.27	FULL DEPTH - SUPERELEVATION	343.11	137.05	5224.80	220	574.73	62.54	2384.23	495	590.10	63.04	2403.29	880	1057.45	601.25	2062.95	250.87	9564.00	478.20			
299+33.27	301+76.96	FULL DEPTH THROUGH SB HWY. 71B RAMP GORE AREA	243.69	VAR.	3071.97	220	337.92	VAR.	1297.59	495	321.15	VAR.	1310.93	880	576.81	VAR.	1270.49	VAR.	5209.26	260.46			
301+76.96	302+21.16	FULL DEPTH - SUPERELEVATION	44.20	96.25	472.69	220	52.00	38.54	189.27	495	46.84	39.04	191.73	880	84.36	526.25	232.60	154.87	760.58	38.03			
302+21.16	302+74.94	FULL DEPTH - SUPERELEVATION TRANSITION	53.78	96.25	575.15	220	63.27	38.54	230.30	495	57.00	39.04	233.29	880	102.65	618.25	332.49	154.87	925.43	46.27			
302+74.94	308+21.16	FULL DEPTH - SUPERELEVATION TRANSITION	546.22	96.25	5841.52	220	642.57	38.54	2339.04	495	578.91	39.04	2369.38	880	1042.53	608.00	3321.02	154.87	9399.23	469.96			
308+21.16	308+91.56	FULL DEPTH	70.40	96.25	752.89	220	82.82	38.54	301.47	495	74.61	39.04	305.38	880	134.37	576.75	406.03	154.87	1211.43	60.57			
308+91.56	313+71.56	FULL DEPTH - SUPERELEVATION TRANSITION	480.00	96.25	5133.33	220	564.67	38.54	2055.47	495	508.73	39.04	2082.13	880	916.14	660.00	3168.00	154.87	8259.73	412.99			
313+71.56	323+43.41	FULL DEPTH - SUPERELEVATION	971.85	96.25	10393.40	220	1143.27	38.54	4161.68	495	1030.02	39.04	4215.67	880	1854.89	711.00	6909.85	154.87	16723.38	836.17			
		BRIDGE																					
328+25.14	340+60.73	FULL DEPTH - SUPERELEVATION	1235.59	96.25	13213.95	220	1453.53	38.54	5291.07	495	1309.54	39.04	5359.71	880	2358.27	711.00	8785.04	154.87	21261.76	1063.09			
340+60.73	343+10.00	FULL DEPTH - SUPERELEVATION TRANSITION	249.27	96.25	2665.80	220	293.24	38.54	1067.43	495	264.19	39.04	1081.28	880	475.76	662.38	1651.11	154.87	4289.38	214.47			
343+10.00	344+60.73	FULL DEPTH - TAPER & SUPERELEVATION TRANSITION	150.73	97.51	1633.08	220	179.64	38.54	645.46	495	159.75	39.04	653.83	880	287.69	640.00	964.67	154.87	2593.73	129.69			
344+60.73	346+10.00	FULL DEPTH - TAPER & SUPERELEVATION TRANSITION	149.27	100.01	1658.72	220	182.46	38.54	639.21	495	158.20	39.04	647.50	880	284.90	725.75	1083.33	154.87	2568.60	128.43			
346+10.00	347+57.47	FULL DEPTH - SUPERELEVATION TRANSITION	147.47	101.25	1659.04	220	182.49	38.54	631.50	495	156.30	39.04	639.69	880	281.46	799.00	1178.29	154.87	2537.63	126.88			
347+57.47	348+60.73	FULL DEPTH - SUPERELEVATION TRANSITION	103.26	91.25	1046.94	220	115.16	38.54	442.18	495	109.44	39.04	447.92	880	197.08	783.38	808.92	154.87	1776.88	88.84			
348+60.73	351+72.97	FULL DEPTH - SUPERELEVATION	312.24	91.25	3165.77	220	348.23	38.54	1337.08	495	330.93	39.04	1354.43	880	595.95	809.75	2528.36	154.87	5372.96	268.65			
351+72.97	354+82.39	FULL DEPTH - SUPERELEVATION THROUGH SB I-49 TO HWY. 112 GORE AREA	309.42	VAR.	4913.66	220	540.50	VAR.	2177.90	495	539.03	VAR.	2195.69	880	966.10	VAR.	2729.05	VAR.	8732.88	436.64			
354+82.39	355+00.00	FULL DEPTH - SUPERELEVATION TRANSITION - 2 LANE EXIT	17.61	147.25	288.12	220	31.69	64.54	126.28	495	31.25	65.04	127.26	880	55.99	755.75	133.09	258.87	506.52	25.33			
355+00.00	358+55.16	NOTCH AND WIDEN ON LT. AND RT. - SUPERELEVATION TRANSITION - 2-LANE EXIT	355.16	119.66	4722.13	220	519.43	38.87	1533.70	495	379.59	39.36	1553.43	880	683.51	VAR.	2118.69	180.16	7109.51	355.48	24.00	947.09	161.01
358+55.16	362+36.71	NOTCH AND WIDEN ON LT. AND RT. - 2-LANE EXIT	381.55	125.69	5328.72	220	586.16	47.23	2002.44	495	495.60	47.51	2014.28	880	886.28	VAR.	1629.01	213.32	9043.58	452.18	24.00	1017.47	172.97
362+36.71	363+00.00	NOTCH AND WIDEN ON LT. AND RT.	63.29	114.13	802.59	220	88.28	43.27	304.28	495	75.31	43.54	306.18	880	134.72	375.50	237.65	197.48	1388.72	69.44	24.00	168.77	28.69
363+00.00	364+00.00	FULL DEPTH	100.00	138.13	1534.78	220	168.83	67.27	747.44	495	184.99	67.54	750.44	880	330.19	500.00	500.00	269.48	2994.22	149.71			
364+00.00	364+44.85	FULL DEPTH	44.85	136.13	678.38	220	74.62	65.27	325.26	495	80.50	65.54	326.61	880	143.71	519.00	232.77	261.48	1303.04	65.15			
		BRIDGE																					
366+39.42	369+36.58	NOTCH AND WIDEN ON LT. AND RT.	297.16	112.13	3702.28	220	407.25	41.27	1362.64	495	337.25	41.52	1370.90	880	603.20	394.50	1172.30	189.44	6254.89	312.74	24.00	792.43	134.71
369+36.58	371+00.00	NOTCH AND WIDEN ON LT. AND RT. - SUPERELEVATION TRANSITION	163.42	112.13	2036.03	220	223.96	41.27	749.37	495	185.47	41.52	753.91	880	331.72	408.00	666.75	189.44	3439.81	171.99	24.00	435.79	74.08
371+00.00	373+56.58	NOTCH AND WIDEN ON LT. AND RT. - SUPERELEVATION TRANSITION	256.58	107.25	3057.58	220	336.33	36.54	1041.71	495	257.82	37.04	1055.97	880	464.63	481.50	1235.43	170.87	4871.31	243.57	24.00	684.21	116.32
373+56.58	376+50.00	NOTCH AND WIDEN ON LT. AND RT. - SUPERELEVATION	293.42	107.25	3496.59	220	384.62	36.54	1191.29	495	294.84	37.04	1207.59	880	531.34	494.00	1449.49	170.87	5570.74	278.54	24.00	782.45	133.02
376+50.00	377+86.42	NOTCH AND WIDEN ON LT. AND RT. - SUPERELEVATION	136.42	95.25	1443.78	220	158.82	24.54	371.97	495	92.06	25.04	379.55	880	167.00	606.75	827.73	122.87	1862.44	93.12	24.00	363.79	61.84
377+86.42	380+86.42	NOTCH AND WIDEN ON RT. - SUPERELEVATION & TAPER	300.00	85.19	2839.67	220	312.36	18.41	613.67	495	151.88	18.78	626.00	880	275.44	458.50	1375.50	98.15	3271.67	163.58	24.00	800.00	136.00
380+86.42	393+16.01	NOTCH AND WIDEN ON RT. - SUPERELEVATION	1229.59	75.13	10264.34	220	1129.08	12.27	1676.34	495	414.89	12.52	1710.50	880	752.62	310.25	3814.80	49.44	6754.55	337.73	34.00	4645.12	789.67
393+16.01	393+66.01	NOTCH AND WIDEN INSIDE SHOULDER	50.00	10.00	55.56	220	6.11									145.75	72.88						
SUBTOTALS (BOX 1 OF 6):					**167786.55**		**18456.51**		**58173.50**		**14397.90**		**58917.70**		**25923.77**		**79719.86**		**252597.18**	**12629.86**		**23498.11**	**3994.68**

BASIS OF ESTIMATE:
ACHM SURFACE COURSE (1/2") : 5.5% ASPHALT BINDER (PG 76-22), 94.5% MINERAL AGGREGATE, N_{MAX}=205 FOR PG 76-22
ACHM BINDER COURSE (1") : 4.7% ASPHALT BINDER (PG 76-22), 95.3% MINERAL AGGREGATE, N_{MAX}=205 FOR PG 76-22
ACHM BASE COURSE (1 1/2") : 4.3% ASPHALT BINDER (PG 76-22), 95.7% MINERAL AGGREGATE, N_{MAX}=205 FOR PG 76-22

AEWierciak 4/22/2016 10:2I:54 AM
WORKSPACE: AHTD
L:\20II\I0I7707 - I-540 Widening & Interchange Improvement\Drawings\r-BB04I4_QTY_ALL.dgn
REVISED DATE:

DATE REVISED	DATE FILMED	DATE REVISED	DATE FILMED	FED.RD. DIST.NO.	STATE	FED.AID PROJ.NO.	SHEET NO.	TOTAL SHEETS
				6	ARK.			
				JOB NO.		BB0414	251	886
				(2)		QUANTITIES		

STATE OF ARKANSAS LICENSED PROFESSIONAL ENGINEER No.13422 JOHN F. CANTABERRY 4-22-16

BASE & SURFACING (BOX 2 OF 6)

STATION	STATION	LOCATION	LENGTH	ACHM SURFACE COURSE (1/2") (PG 76-22)				ACHM BINDER COURSE (1") (PG 76-22)				ACHM BASE COURSE (1 1/2") (PG 76-22)				AGGREGATE BASE COURSE (CLASS 7)		TACK COAT				
			FEET	AVG. WIDTH FEET	SQUARE YARDS	LBS. PER SQ. YD.	TON	AVG. WIDTH FEET	SQUARE YARDS	LBS. PER SQ. YD.	TON	AVG. WIDTH FEET	SQUARE YARDS	LBS. PER SQ. YD.	TON	TONS PER STATION	TON	TOTAL WIDTH FEET	SQUARE YARDS	0.05 G/SY GAL.	AVG. WIDTH FEET	SQUARE YARDS	0.17 G/SY GAL.
I-49 RIGHT MAIN LANES																							
239+77.13	242+77.13	NOTCH AND WIDEN ON LT. AND RT. & TAPER	300.00	93.25	3108.33	220	341.92	26.04	868.00	495	214.83	26.54	884.67	880	389.25	482.75	1448.25	128.87	4295.67	214.78	24.00	800.00	136.00
242+77.13	268+00.00	NOTCH AND WIDEN ON LT. AND RT.	2522.87	96.25	26980.69	220	2967.88	26.54	7439.66	495	1841.32	27.04	7579.82	880	3335.12	514.50	12980.17	130.87	36685.33	1834.27	24.00	6727.65	1143.70
268+00.00	276+17.66	NOTCH AND WIDEN ON LT. AND RT. W/ FULL DEPTH SHLD. RT.	817.66	104.25	9471.23	220	1041.84	34.54	3138.00	495	776.66	35.04	3183.42	880	1400.70	439.25	3591.57	162.87	14796.92	739.85	24.00	2180.43	370.67
276+17.66	282+21.49	NOTCH AND WIDEN ON LT. AND RT. THROUGH RAMP 1 GORE W/ FULL DEPTH SHLD. RT.	603.83	VAR.	7918.26	220	871.01	VAR.	2685.43	495	664.64	VAR.	2718.99	880	1196.36	VAR.	3237.97	VAR.	12397.66	619.88	24.00	1610.21	273.74
282+21.49	284+69.33	NOTCH AND WIDEN ON LT. AND RT. - SUPERELEVATION TRANSITION	247.84	104.25	2870.81	220	315.79	34.54	951.15	495	235.41	35.04	964.92	880	424.56	467.75	1159.27	162.87	4485.08	224.25	24.00	660.91	112.35
284+69.33	290+17.00	NOTCH AND WIDEN ON LT. AND RT. - SUPERELEVATION	547.67	104.25	6343.84	220	697.82	34.54	2101.84	495	520.21	35.04	2132.26	880	938.19	496.00	2716.44	162.87	9911.00	495.55	24.00	1460.45	248.28
290+17.00	292+42.59	NOTCH AND WIDEN ON LT. AND RT. - SUPERELEVATION	225.59	104.13	2610.08	220	287.11	34.27	859.00	495	212.60	34.52	865.26	880	380.71	351.25	792.38	162.87	4082.43	204.12	24.00	601.57	102.27
292+42.59	293+00.00	NOTCH AND WIDEN ON LT. AND RT. - SUPERELEVATION	57.41	95.50	609.18	220	67.01	25.50	162.66	495	40.26	25.50	162.66	880	71.57	VAR.	167.06	126.00	803.74	40.19	24.00	153.09	26.03
293+00.00	293+41.79	NOTCH AND WIDEN ON LT. AND RT. - SUPERELEVATION	41.79	94.47	438.66	220	48.25	24.62	114.32	495	28.29	24.87	115.48	880	50.81	VAR.	170.50	122.83	570.34	28.52	24.00	111.44	18.94
293+41.79	295+90.16	NOTCH AND WIDEN ON LT. AND RT. - SUPERELEVATION	248.37	84.17	2322.81	220	255.51	20.94	577.87	495	143.02	21.42	591.12	880	260.09	VAR.	1067.61	101.95	2813.48	140.67	24.00	662.32	112.59
295+90.16	300+00.00	NOTCH AND WIDEN ON LT. AND RT. - SUPERELEVATION	409.84	84.96	3868.89	220	425.58	21.71	988.63	495	244.69	22.14	1008.21	880	443.61	VAR.	1824.28	106.21	4836.57	241.83	25.26	1150.28	195.55
300+00.00	302+21.16	FULL DEPTH - SUPERELEVATION	221.16	121.75	2991.80	220	329.10	58.54	1438.52	495	356.03	59.04	1450.81	880	638.36	647.00	1430.91	234.87	5771.54	288.58			
302+21.16	302+74.94	FULL DEPTH - SUPERELEVATION TRANSITION	53.78	121.75	727.52	220	80.03	58.54	349.81	495	86.58	59.04	352.80	880	155.23	640.75	344.60	234.87	1403.48	70.17			
302+74.94	304+17.19	FULL DEPTH - SUPERELEVATION TRANSITION	142.25	128.25	2027.06	220	222.98	58.54	925.26	495	229.00	59.04	933.16	880	410.59	659.25	937.78	234.87	3712.25	185.61			
304+17.19	309+91.01	FULL DEPTH THROUGH NB I-49 TO HWY. 71B RAMP GORE AREA	573.82	VAR.	8481.37	220	932.95	VAR.	3886.57	495	961.93	VAR.	3917.21	880	1723.57	VAR.	3843.24	VAR.	15506.68	775.33			
309+91.01	313+71.56	FULL DEPTH - SUPERELEVATION TRANSITION	380.55	104.25	4408.04	220	484.88	46.54	1967.87	495	487.05	47.04	1989.01	880	875.16	540.00	2054.97	186.87	7901.49	395.07			
313+71.56	319+35.00	FULL DEPTH - SUPERELEVATION	563.44	104.25	6526.51	220	717.92	46.54	2913.61	495	721.12	47.04	2944.91	880	1295.76	588.50	3315.84	186.87	11698.89	584.94			
319+35.00	324+60.28	FULL DEPTH - SUPERELEVATION	525.28	108.25	6317.95	220	694.97	48.54	2833.01	495	701.17	49.04	2862.19	880	1259.36	424.00	2227.19	194.87	11373.48	568.67			
		BRIDGE																					
328+55.30	330+00.00	FULL DEPTH - SUPERELEVATION	144.70	100.25	1611.80	220	177.30	42.54	683.95	495	169.28	43.04	691.99	880	304.48	775.50	1122.15	170.87	2747.21	137.36			
330+00.00	339+00.00	FULL DEPTH - SUPERELEVATION	900.00	96.25	9625.00	220	1058.75	38.54	3854.00	495	953.87	39.04	3904.00	880	1717.76	813.00	7317.00	154.87	15487.00	774.35			
339+00.00	340+63.73	FULL DEPTH - SUPERELEVATION	163.73	98.25	1787.39	220	196.61	38.54	701.13	495	173.53	39.04	710.22	880	312.50	517.75	847.71	154.87	2817.43	140.87			
340+63.73	343+10.00	FULL DEPTH - SUPERELEVATION TRANSITION	246.27	98.25	2688.45	220	295.73	38.54	1054.58	495	261.01	39.04	1068.26	880	470.03	517.75	1275.06	154.87	4237.76	211.89			
343+10.00	344+60.73	FULL DEPTH - TAPER & SUPERELEVATION TRANSITION	150.73	100.76	1687.51	220	185.63	39.80	666.56	495	164.97	40.30	674.94	880	296.97	524.25	790.20	159.91	2678.14	133.91			
344+60.73	346+10.00	FULL DEPTH - TAPER & SUPERELEVATION TRANSITION	149.27	106.02	1758.40	220	193.42	42.30	701.57	495	173.64	42.80	709.86	880	312.34	537.13	801.77	169.91	2818.05	140.90			
346+10.00	347+57.47	FULL DEPTH - SUPERELEVATION TRANSITION	147.47	108.25	1773.74	220	195.11	43.54	713.43	495	176.57	44.04	721.62	880	317.51	543.75	801.87	174.87	2865.34	143.27			
347+57.47	348+00.00	FULL DEPTH - SUPERELEVATION TRANSITION	42.53	101.75	480.83	220	52.89	43.54	205.75	495	50.92	44.04	208.11	880	91.57	501.75	213.39	174.87	826.36	41.32			
348+00.00	348+60.73	FULL DEPTH - SUPERELEVATION TRANSITION	60.73	111.63	753.25	220	82.86	53.27	359.45	495	88.96	53.52	361.14	880	158.90	407.75	247.63	213.44	1440.25	72.01			
348+60.73	350+00.00	FULL DEPTH - SUPERELEVATION	139.27	111.63	1727.41	220	190.02	53.27	824.32	495	204.02	53.52	828.19	880	384.40	407.75	567.87	213.44	3302.87	165.14			
350+00.00	350+30.00	FULL DEPTH - SUPERELEVATION	30.00	118.63	395.43	220	43.50	60.27	200.90	495	49.72	60.52	201.73	880	88.76	407.75	122.33	241.44	804.80	40.24			
350+30.00	355+56.11	NOTCH AND WIDEN THROUGH HWY. 112 TO NB I-49 GORE AREA	526.11	VAR.	6387.80	220	702.66	VAR.	2945.44	495	729.00	VAR.	2945.44	880	1295.99	VAR.	1574.26	VAR.	12082.81	604.14	5.15	301.05	51.18
355+56.11	358+55.16	NOTCH AND WIDEN ON LT. AND RT. - SUPERELEVATION TRANSITION	299.05	136.13	4523.30	220	497.56	53.27	1770.04	495	438.08	53.54	1779.02	880	782.77	493.75	2572.90	237.48	7890.93	394.55	24.00	797.47	135.57
358+55.16	363+00.00	NOTCH AND WIDEN ON LT. AND RT.	444.84	136.13	6728.45	220	740.13	53.27	2632.96	495	651.66	53.54	2646.30	880	1164.37	456.75	2978.19	237.48	11737.84	586.89	24.00	1186.24	201.66
363+00.00	363+98.53	FULL DEPTH	98.53	160.13	1753.07	220	192.84	77.27	845.93	495	209.37	77.54	848.89	880	373.51	581.25	2015.45	309.48	3388.12	169.41			
		BRIDGE																					
365+91.98	368+70.03	NOTCH AND WIDEN ON LT. AND RT.	278.05	123.25	3807.74	220	418.85	46.83	1446.79	495	358.08	47.09	1454.82	880	640.12	438.88	1220.31	211.70	6540.35	327.02	24.00	741.47	126.05
368+70.03	369+36.58	NOTCH AND WIDEN ON LT. AND RT.	66.55	112.13	829.14	220	91.21	41.27	305.17	495	75.53	41.52	307.02	880	135.09	394.50	262.54	189.44	1400.80	70.04	24.00	177.47	30.17
369+36.58	371+00.00	NOTCH AND WIDEN ON LT. AND RT. - SUPERELEVATION TRANSITION	163.42	112.13	2036.03	220	223.96	41.27	749.37	495	185.47	41.52	753.91	880	331.72	394.50	644.69	189.44	3439.81	171.99	24.00	435.79	74.08
371+00.00	373+56.58	NOTCH AND WIDEN ON LT. AND RT. - SUPERELEVATION TRANSITION	256.58	107.25	3057.58	220	336.33	36.54	1041.71	495	257.82	37.04	1055.97	880	464.63	463.75	1189.89	170.87	4871.31	243.57	24.00	684.21	116.32
373+56.58	376+50.00	NOTCH AND WIDEN ON LT. AND RT. - SUPERELEVATION	293.42	107.25	3496.59	220	384.62	36.54	1191.29	495	294.84	37.04	1207.59	880	531.34	485.50	1424.55	170.87	5570.74	278.54	24.00	782.45	133.02
376+50.00	376+52.43	NOTCH AND WIDEN ON LT. AND RT. - SUPERELEVATION	2.43	95.25	25.72	220	2.83	24.54	6.63	495	1.64	25.04	6.76	880	2.97	598.25	14.54	122.87	33.17	1.66	24.00	6.48	1.10
376+52.43	379+52.43	NOTCH AND WIDEN ON LT. AND RT. - SUPERELEVATION & TAPER	300.00	85.19	2839.67	220	312.36	18.41	613.67	495	151.88	18.78	626.00	880	275.44	454.25	1362.75	98.15	3271.67	163.58	24.00	800.00	136.00
379+52.43	393+16.01	NOTCH AND WIDEN ON LT.	1363.58	75.13	11382.86	220	1252.11	12.27	1859.01	495	460.10	12.52	1896.89	880	834.63	310.25	4230.51	49.44	7490.60	374.53	34.00	5151.30	875.72
393+16.01	393+66.01	NOTCH AND WIDEN INSIDE SHOULDER	50.00	10.00	55.56	220	6.11									145.75	72.88						
HWY. 112 RAMP 1																							
280+52.42	281+03.87	FULL DEPTH - GORE AREA	51.45	VAR.	276.45	220	30.41	VAR.	127.63	495	31.59	VAR.	130.51	880	57.42	VAR.	161.03	VAR.	514.47	25.72			
281+03.87	283+69.47	FULL DEPTH - SUPERELEVATION TRANSITION W/ FULL DEPTH SHOULDER ON RT.	265.60	46.25	1364.89	220	150.14	21.54	635.67	495	157.33	22.04	650.42	880	286.18	424.13	1126.49	86.87	2563.63	128.18			
283+69.47	285+00.00	FULL DEPTH - SUPERELEVATION W/ FULL DEPTH SHOULDER ON RT.	130.53	46.25	670.78	220	73.79	21.54	312.40	495	77.32	22.04	319.65	880	140.65	493.25	643.84	86.87	1259.90	63.00			
285+00.00	285+86.29	NOTCH AND WIDEN - SUPERELEVATION W/ FULL DEPTH SHOULDER ON RT.	86.29	36.13	346.41	220	38.11	11.27	108.05	495	26.74	11.53	110.55	880	48.64	366.38	316.15	49.46	474.21	23.71	10.00	95.88	16.30
285+86.29	286+90.00	NOTCH AND WIDEN - SUPERELEVATION TRANSITION W/ FULL DEPTH SHOULDER ON RT.	103.71	31.80	366.44	220	40.31	6.90	79.51	495	19.68	7.08	81.59	880	35.90	304.23	315.52	36.12	416.22	20.81	14.26	164.32	27.93
286+90.00	288+40.00	NOTCH AND WIDEN - SUPERELEVATION TRANSITION - TAPER W/ FULL DEPTH SHLDR. RT.	150.00	40.04	667.33	220	73.41	10.83	180.50	495	44.67	11.86	197.67	880	86.97	361.84	542.76	53.98	899.67	44.98	15.02	250.33	42.56
288+40.00	289+36.29	NOTCH AND WIDEN - SUPERELEVATION TRANSITION	96.29	37.87	405.17	220	44.57	4.02	43.01	495	10.64	4.28	45.79	880	20.15	242.45	233.46	36.70	392.65	19.63	20.25	216.65	36.83
289+36.29	289+56.03	NOTCH AND WIDEN	19.74	35.50	77.86	220	8.56	1.65	3.62	495	0.90	1.91	4.19	880	1.84	126.66	25.00	29.59	64.90	3.25	22.62	49.61	8.43
289+56.03	290+70.21	NOTCH AND WIDEN - HWY. 112 INTERSECTION	114.18	73.41	931.33	220	102.45	20.53	260.46	495	64.46	20.95	265.79	880	116.95	250.42	285.93	108.69	1378.91	68.95	25.97	329.47	56.01
HWY. 112 RAMP 4																							
280+20.12	280+94.53	FULL DEPTH - GORE AREA	74.41	VAR.	401.22	220	44.13	VAR.	200.68	495	49.67	VAR.	200.75	880	88.33	VAR.	120.46	VAR.	844.96	42.25	5.10	42.17	7.17
280+94.53	281+51.37	NOTCH AND WIDEN ON RT. - SUPERELEVATION TRANSITION	56.84	41.34	261.09	220	28.72	16.34	103.20	495	25.54	16.34	103.20	880	45.41	VAR.	48.16	73.98	467.22	23.36	8.62	54.44	9.25
281+51.37	282+30.98	NOTCH AND WIDEN ON RT. - SUPERELEVATION	79.61	38.83	343.47	220	37.78	13.83	122.33	495	30.28	13.83	122.33	880	53.83	VAR.	57.08	66.46	587.88	29.39	11.14	98.54	16.75
282+30.98	282+74.25	NOTCH AND WIDEN ON RT. - SUPERELEVATION TRANSITION	43.27	37.05	178.13	220	19.59	12.05	57.93	495	14.34	12.05	57.93	880	25.49	VAR.	27.04	61.11	293.80	14.69	12.91	62.07	10.55
282+74.25	285+50.00	NOTCH AND WIDEN ON RT. - SUPERELEVATION TRANSITION	275.75	32.38	992.09	220	109.13	7.52	230.40	495	57.02	7.77	238.06	880	104.75	VAR.	409.79	48.17	1475.88	73.79	17.73	543.23	92.35
285+50.00	286+50.00	100' OVERLAY TRANSITION	100.00	25.00	277.78	220	30.56														25.00	277.78	47.22
		NO CONSTRUCTION																					
295+50.00	296+89.84	OVERLAY	139.84	25.00	388.44	220	42.73														25.00	388.44	66.03
296+89.84	298+07.99	NOTCH AND WIDEN - HWY. 112 INTERSECTION	118.15	63.33	831.38	220	91.45	9.11	119.59	495	29.60	12.51	164.23	880	72.26	VAR.	94.08	69.06	906.60	45.33	43.38	569.48	96.81
HWY. 112																							
6+77.03	8+04.32	NOTCH AND WIDEN - DRAKE ST. INTERSECTION	127.29	97.12	1373.60	220	151.10	21.41	302.81	495	74.95	26.35	372.68	550	102.49			118.47	1675.56	83.78	54.30	767.98	130.56
8+04.32	10+80.00	NOTCH AND WIDEN	275.68	76.00	2327.96	220	256.08	20.00	612.62	495	151.62	25.00	765.78	550	210.59			96.00	2940.59	147.03	36.00	1102.72	187.46
10+80.00	11+80.00	NOTCH AND WIDEN - TAPER	100.00	87.00	966.67	220	106.33	25.50	283.33	495	70.12	30.50	338.89	550	93.19			112.50	1250.00	62.50	36.00	400.00	68.00
11+80.00	11+87.56	NOTCH AND WIDEN	7.56	98.00	82.32	220	9.06	31.00	26.04	495	6.44	36.00	30.24	550	8.32			129.00	108.36	5.42	36.00	30.24	5.14
11+87.56	13+18.92	NOTCH AND WIDEN - POINT CIRCLE INTERSECTION	131.36	134.20	1958.72	220	215.46	48.08	701.75	495	173.68	53.32	778.24	550	214.02			180.48	2634.21	131.71	36.00	525.44	89.32
13+18.92	13+73.22	NOTCH AND WIDEN	54.30	98.00	591.27	220	65.04	31.00	187.03	495	46.29	36.00	217.20	550	59.73			129.00	778.30	38.92	36.00	217.20	36.92
13+73.22	15+34.43	NOTCH AND WIDEN - HWY. 112 RAMP 1 AND HWY. 112 TO NB I-49 RAMP INTERSECTION	161.21	66.71	1194.92	220	131.44	10.71	191.84	495	47.48	10.78	193.09	550	53.10			73.18	1310.82	65.54	45.98	823.60	140.01
15+34.43	17+51.79	NOTCH AND WIDEN	217.36	76.00	1835.48	220	201.90	20.00	483.02	495	119.55	25.00	603.78	550	166.04			96.00	2318.51	115.93	36.00	869.44	147.80
		BRIDGE																					
21+27.27	24+83.82	NOTCH AND WIDEN - C-D. RD AND HWY. 112 RAMP 4 INTERSECTION	356.55	68.24	2703.44	220	297.38	12.26	485.70	495	120.21	14.68	581.57	550	159.93			77.92	3086.93	154.35	43.72	1732.04	294.45
24+83.82	26+27.51	NOTCH AND WIDEN	143.69	86.00	1373.04	220	151.03	19.00	303.35	495	75.08	24.00	383.17	550	105.37			105.00	1676.38	83.82	48.00	766.35	130.28
26+27.51	26+96.59	NOTCH AND WIDEN - SHILOH DR. INTERSECTION	69.08	78.16	599.92	220	65.99	11.16	85.66	495	21.20	13.66	104.85	550	28.83			86.82	666.39	33.32	55.84	428.60	72.86
26+96.59	27+90.47	NOTCH AND WIDEN - SHILOH DR. INTERSECTION	93.88	66.46	693.25	220	76.26	10.46	109.11	495	27.00	12.96	135.19	550	37.18			74.41	776.18	38.81	45.53	474.93	80.74
27+90.47	30+30.61	NOTCH AND WIDEN	240.14	76.00	2027.85	220	223.06	20.00	533.64	495	132.08	25.00	667.06	550	183.44			96.00	2561.49	128.07	36.00	960.56	163.30
30+30.61	31+07.40	NOTCH AND WIDEN -TRUCKERS DR. INTERSECTION	76.79	92.70	790.94	220	87.00	14.96	127.64	495	31.59	20.56	175.42	550	48.24			108.35	924.47	46.22	62.87	536.42	91.19
SUBTOTALS (BOX 2 OF 6):					196535.39		21618.91		66593.38		16481.84		68305.39		29172.04		81387.26		296038.48	14801.92		39960.21	6793.21

BASIS OF ESTIMATE:
ACHM SURFACE COURSE (1/2") : 5.5% ASPHALT BINDER (PG 76-22), 94.5% MINERAL AGGREGATE, N_{MAX}=205 FOR PG 76-22
ACHM BINDER COURSE (1") : 4.7% ASPHALT BINDER (PG 76-22), 95.3% MINERAL AGGREGATE, N_{MAX}=205 FOR PG 76-22
ACHM BASE COURSE (1 1/2") : 4.3% ASPHALT BINDER (PG 76-22), 95.7% MINERAL AGGREGATE, N_{MAX}=205 FOR PG 76-22

AEWerclok 4/22/2016 10:22:05 AM
WORKSPACE: AHTD
L:\20IN\10I7T07 - I-540 Widening & Interchange Improvement\Drawings\rBB04I4_0TY_ALL.dgn
REVISED DATE:

DATE REVISED	DATE FILMED	DATE REVISED	DATE FILMED	FED.RD. DIST.NO.	STATE	FED.AID PROJ.NO.	SHEET NO.	TOTAL SHEETS
				6	ARK.			
				JOB NO.		BB0414	252	886

(2) QUANTITIES

STATE OF ARKANSAS LICENSED PROFESSIONAL ENGINEER No.13422 JOHN F. CANTABERY 4-22-16

BASE & SURFACING (BOX 3 OF 6)

STATION	STATION	LOCATION	LENGTH	ACHM SURFACE COURSE (1/2") (PG 76-22)				ACHM BINDER COURSE (1") (PG 76-22)				ACHM BASE COURSE (1 1/2") (PG 76-22)				AGGREGATE BASE COURSE (CLASS 7)		TACK COAT				
				AVG. WIDTH	SQUARE YARDS	LBS. PER SQ. YD.	TON	AVG. WIDTH	SQUARE YARDS	LBS. PER SQ. YD.	TON	AVG. WIDTH	SQUARE YARDS	LBS. PER SQ. YD.	TON	TONS PER STATION	TON	TOTAL WIDTH	SQUARE YARDS	0.05 G/SY	AVG. WIDTH	SQUARE YARDS	0.17 G/SY
			FEET	FEET				FEET				FEET						FEET		GAL.	FEET		GAL.
SHILOH DR.																							
73+13.04	74+72.00	NOTCH AND WIDEN - HWY. 112 INTERSECTION	158.96	53.83	950.76	220	104.58	2.51	44.33	495	10.97	5.45	96.26	550	26.47			7.97	140.77	7.04	49.06	866.51	147.31
COLLECTOR-DISTRIBUTOR RD.																							
276+16.05	277+60.27	NOTCH AND WIDEN - HWY. 112 INTERSECTION	144.22	111.19	1781.76	220	195.99	34.36	550.60	495	136.27	38.07	610.05	880	268.42	VAR.	317.80	186.48	2988.24	149.41	41.70	668.22	113.60
277+60.27	278+40.27	NOTCH AND WIDEN - TAPER	80.00	66.13	587.82	220	64.66	16.27	144.82	495	35.79	16.54	147.02	880	64.69	278.88	223.10	93.48	830.93	41.55	28.00	248.89	42.31
278+40.27	279+29.57	NOTCH AND WIDEN	89.30	58.13	576.78	220	63.45	12.27	121.75	495	30.13	12.54	124.42	880	54.74	265.00	236.65	77.48	768.77	38.44	28.00	277.82	47.23
279+29.57	280+79.57	NOTCH AND WIDEN - TAPER	150.00	41.56	692.67	220	76.19	6.14	102.33	495	25.33	6.27	104.50	880	45.98	233.88	350.82	51.24	854.00	42.70	26.50	441.67	75.08
280+79.57	281+79.57	100' OVERLAY TRANSITION	100.00	25.00	277.78	220	30.56														25.00	277.78	47.22
		NO CONSTRUCTION																					
284+61.04	285+61.04	100' OVERLAY TRANSITION	100.00	25.00	277.78	220	30.56														25.00	277.78	47.22
285+61.04	285+79.50	OVERLAY	18.46	25.00	51.28	220	5.64														25.00	51.28	8.72
285+79.50	287+62.46	NOTCH AND WIDEN ON LT. - SUPERELEVATION	182.96	35.54	722.49	220	79.47	10.68	217.11	495	53.73	10.93	222.19	880	97.76	VAR.	456.58	57.53	1169.52	58.48	14.45	293.75	49.94
287+62.46	287+72.94	NOTCH AND WIDEN ON LT. - SUPERELEVATION TRANSITION	10.48	44.84	52.21	220	5.74	19.97	23.25	495	5.75	20.22	23.55	880	10.36	VAR.	30.90	85.41	99.46	4.97	5.16	6.01	1.02
287+72.94	288+37.46	FULL DEPTH - SUPERELEVATION TRANSITION	64.52	46.25	331.56	220	36.47	21.54	154.42	495	38.22	22.04	158.00	880	69.52	496.00	320.02	86.87	622.76	31.14			
288+37.46	290+62.46	FULL DEPTH - SUPERELEVATION TRANSITION	225.00	48.25	1206.25	220	132.69	21.54	538.50	495	133.28	22.04	551.00	880	242.44	314.00	706.50	86.87	2171.75	108.59			
290+62.46	291+26.60	FULL DEPTH	64.14	48.25	343.86	220	37.82	21.54	153.51	495	37.99	22.04	157.07	880	69.11	307.50	197.23	86.87	619.09	30.95			
291+26.60	293+85.65	FULL DEPTH	259.05	42.00	1208.90	220	132.98	21.00	604.45	495	149.60	21.00	604.45	880	265.96	168.50	436.50	84.00	2417.80	120.89			
293+85.65	294+00.00	FULL DEPTH	14.35	54.00	86.10	220	9.47	27.00	43.05	495	10.65	27.00	43.05	880	18.94	140.00	20.09	108.00	172.20	8.61			
294+00.00	295+00.00	FULL DEPTH - SHLD. TAPER	100.00	56.00	622.22	220	68.44	28.00	311.11	495	77.00	28.00	311.11	880	136.89	145.25	145.25	112.00	1244.44	62.22			
295+00.00	295+14.26	FULL DEPTH	14.26	58.00	91.90	220	10.11	29.00	45.95	495	11.37	29.00	45.95	880	20.22	150.25	21.43	116.00	183.80	9.19			
295+14.26	299+87.16	FULL DEPTH	472.90	45.00	2364.50	220	260.10	22.50	1182.25	495	292.61	22.50	1182.25	880	520.19	169.50	801.57	90.00	4729.00	236.45			
299+87.16	302+87.16	FULL DEPTH - TAPER	300.00	54.00	1800.00	220	198.00	27.00	900.00	495	222.75	27.00	900.00	880	396.00	192.75	578.25	108.00	3600.00	180.00			
302+87.16	306+24.50	FULL DEPTH	337.34	63.00	2361.38	220	259.75	31.50	1180.69	495	292.22	31.50	1180.69	880	519.50	216.00	728.65	126.00	4722.76	236.14			
306+24.50	307+00.00	FULL DEPTH	75.50	76.00	637.56	220	70.13	38.00	318.78	495	78.90	38.00	318.78	880	140.26	197.04	148.77	152.00	1275.11	63.76			
307+00.00	308+48.38	OVERLAY OVER DETOUR	148.38	36.00	593.52	220	65.29											36.00	593.52	29.68	5.71	94.14	16.00
308+48.38	310+41.65	FULL DEPTH THROUGH SB I-49 TO HWY. 112 RAMP GORE AREA	193.27	VAR.	979.80	220	107.78	VAR.	141.14	495	34.93	6.57	141.14	880	65.86	VAR.	65.87	VAR.	1030.98	51.55	21.72	466.42	79.29
310+41.65	311+70.00	FULL DEPTH - SUPERELEVATION TRANSITION	128.35	48.13	686.39	220	75.50	20.98	299.20	495	74.05	21.02	299.77	880	131.90	263.75	338.52	84.15	1200.07	60.00			
311+70.00	314+09.24	FULL DEPTH - SUPERELEVATION TRANSITION	239.24	40.25	1069.93	220	117.69	15.54	413.09	495	102.24	16.04	426.38	880	187.61	705.63	1688.15	62.87	1671.22	83.56			
314+09.24	314+50.56	FULL DEPTH - SUPERELEVATION	41.32	40.25	184.79	220	20.33	15.54	71.35	495	17.66	16.04	73.64	880	32.40	911.50	376.63	62.87	288.64	14.43			
314+50.56	317+20.56	FULL DEPTH - SUPERELEVATION TRANSITION	270.00	40.25	1207.50	220	132.83	15.54	466.20	495	115.38	16.04	481.20	880	211.73	697.13	1882.25	62.87	1886.10	94.31			
317+20.56	318+55.53	FULL DEPTH	134.97	40.25	603.62	220	66.40	15.54	233.05	495	57.68	16.04	240.55	880	105.84	421.25	568.56	62.87	942.84	47.14			
318+55.53	319+06.98	FULL DEPTH - GORE AREA	51.45	VAR.	244.89	220	26.94	VAR.	95.27	495	23.58	VAR.	97.29	880	42.81	VAR.	171.14	VAR.	382.57	19.13			
HWY. 112 TO NB I-49 RAMP																							
287+49.19	288+52.72	NOTCH AND WIDEN - HWY. 112 INTERSECTION	103.53	85.85	987.56	220	108.63	26.01	299.20	495	74.05	28.57	328.65	880	144.61	VAR.	371.86	131.83	1516.48	75.82	27.82	320.02	54.40
288+52.72	291+68.55	OVERLAY	315.83	25.00	877.31	220	96.50											25.00	877.31	43.87	25.00	877.31	149.14
291+68.55	292+98.32	NOTCH AND WIDEN ON RT. - SUPERELEVATION TRANSITION	129.77	36.32	523.69	220	57.61	11.46	165.24	495	40.90	11.71	168.85	880	74.29	VAR.	177.43	59.94	864.27	43.21	13.74	198.12	33.68
292+98.32	294+20.00	FULL DEPTH - SUPERELEVATION TRANSITION	121.68	46.25	625.30	220	68.78	21.54	291.22	495	72.08	22.04	297.98	880	131.11	494.13	601.26	86.87	1174.48	58.72			
294+20.00	296+00.00	FULL DEPTH - SUPERELEVATION	180.00	46.25	925.00	220	101.75	21.54	430.80	495	106.62	22.04	440.80	880	193.95	533.25	959.85	86.87	1737.40	86.87			
296+00.00	297+15.56	FULL DEPTH - SUPERELEVATION	115.56	40.25	516.81	220	56.85	15.54	199.53	495	49.38	16.04	205.95	880	90.62	589.50	681.23	62.87	807.25	40.36			
297+15.56	300+15.56	FULL DEPTH - SUPERELEVATION TRANSITION	300.00	40.25	1341.67	220	147.58	15.54	518.00	495	128.21	16.04	534.67	880	235.25	503.75	1511.25	62.87	2095.67	104.78			
300+15.56	305+51.36	FULL DEPTH THROUGH HWY. 112 TO HWY. 71B GORE AREA	535.80	VAR.	3644.59	220	400.90	VAR.	1551.67	495	384.04	VAR.	1581.45	880	695.84	VAR.	2545.46	VAR.	6317.68	315.88			
305+51.36	306+24.59	FULL DEPTH	73.23	40.25	327.50	220	36.03	15.54	126.44	495	31.29	16.04	130.51	880	57.42	418.00	306.10	62.87	511.55	25.58			
306+24.59	309+74.59	FULL DEPTH - SUPERELEVATION TRANSITION	350.00	40.25	1565.28	220	172.18	15.54	604.33	495	149.57	16.04	623.78	880	274.46	566.50	1982.75	62.87	2444.94	122.25			
309+74.59	311+64.20	FULL DEPTH - SUPERELEVATION	189.61	40.25	847.98	220	93.28	15.54	327.39	495	81.03	16.04	337.93	880	148.69	715.00	1355.71	62.87	1324.53	66.23			
		BRIDGE																					
317+76.83	318+36.91	FULL DEPTH - SUPERELEVATION TRANSITION WITH SHOULDER TAPER	60.08	44.37	296.19	220	32.58	15.54	103.74	495	25.68	16.04	107.08	880	47.12	412.00	247.53	62.87	419.69	20.98			
318+36.91	318+95.23	FULL DEPTH - SUPERELEVATION TRANSITION	58.32	42.25	273.78	220	30.12	15.54	100.70	495	24.92	16.04	103.94	880	45.73	363.50	211.99	62.87	407.40	20.37			
318+95.23	319+67.50	FULL DEPTH	72.27	42.25	339.27	220	37.32	15.54	124.79	495	30.89	16.04	128.80	880	56.67	347.25	250.96	62.87	504.85	25.24			
319+67.50	322+70.00	FULL DEPTH - SUPERELEVATION TRANSITION	302.50	42.25	1420.07	220	156.21	15.54	522.32	495	129.27	16.04	539.12	880	237.21	403.13	1219.47	62.87	2113.13	105.66			
322+70.00	322+87.50	FULL DEPTH - SUPERELEVATION TRANSITION WITH SHOULDER TAPER	17.50	42.93	83.48	220	9.18	15.54	30.22	495	7.48	16.04	31.19	880	13.72	455.88	79.78	62.87	122.25	6.11			
322+87.50	323+70.00	OVERLAY TRANSITION WITH SHOULDER TAPER	82.50	31.56	289.30	220	31.82														31.56	289.30	49.18
323+70.00	323+88.32	OVERLAY TRANSITION	18.32	34.75	70.74	220	7.78														34.75	70.74	12.03
		BRIDGE																					
327+73.85	328+73.85	OVERLAY TRANSITION	100.00	25.00	277.78	220	30.56														25.00	277.78	47.22
328+73.85	335+13.00	OVERLAY	639.15	25.00	1775.42	220	195.30														25.00	1775.42	301.82
335+13.00	337+86.31	OVERLAY	273.31	22.00	668.09	220	73.49														22.00	668.09	113.58
337+86.31	341+49.46	OVERLAY THROUGH HWY. 71B TO NB I-49 GORE	363.15	38.11	1537.74	220	169.15														38.11	1537.74	261.42
341+49.46	343+99.46	OVERLAY WITH TAPER	250.00	32.50	902.78	220	99.31														32.50	902.78	153.47
343+99.46	344+25.00	OVERLAY	25.54	31.00	87.97	220	9.68														31.00	87.97	14.95
344+25.00	346+67.17	OVERLAY	242.17	31.00	834.14	220	91.76														31.00	834.14	141.80
346+67.17	347+17.17	OVERLAY WITH SHOULDER TAPER	50.00	38.50	213.89	220	23.53														30.00	166.67	28.33
347+17.17	348+29.91	OVERLAY	112.74	40.73	510.21	220	56.12														30.00	375.80	63.89
348+29.91	350+61.25	NOTCH AND WIDEN ON LT.	231.34	43.03	1106.06	220	121.67	4.63	119.01	495	29.45	4.88	125.44	880	55.19	VAR.	346.34	44.34	1139.74	56.99	25.46	654.44	111.25
350+61.25	354+55.26	NOTCH AND WIDEN ON LT. - GORE AREA	394.01	VAR.	1897.30	220	208.70	VAR.	359.18	495	88.90	VAR.	359.93	880	158.37	VAR.	1629.86	VAR.	2323.27	116.16	20.29	888.27	151.01
SB HWY. 71B																							
300+40.27	301+76.86	FULL DEPTH - GORE AREA	136.59	VAR.	1005.09	220	110.56	VAR.	418.51	495	103.58	VAR.	426.11	880	187.49	VAR.	462.63	VAR.	1684.80	84.24			
301+76.86	302+83.27	FULL DEPTH - SUPERELEVATION TRANSITION	106.41	67.25	795.12	220	87.46	27.54	325.61	495	80.59	28.04	331.53	880	145.87	397.13	422.59	110.87	1310.85	65.54			
302+83.27	302+89.35	FULL DEPTH	6.08	67.25	45.43	220	5.00	27.54	18.60	495	4.60	28.04	18.94	880	8.33	424.00	25.78	110.87	74.90	3.75			
302+89.35	305+00.00	FULL DEPTH - SUPERELEVATION TRANSITION	210.65	67.25	1574.02	220	173.14	27.54	644.59	495	159.54	28.04	656.29	880	288.77	453.88	956.10	110.87	2594.97	129.75			
305+00.00	305+69.35	NOTCH AND WIDEN ON LT. AND RT. - SUPERELEVATION TRANSITION	69.35	40.00	308.22	220	33.90									416.00	288.50				24.00	184.93	31.44
305+69.35	305+74.19	NOTCH AND WIDEN ON LT. AND RT. - SUPERELEVATION	4.84	40.00	21.51	220	2.37									348.25	16.86				24.00	12.91	2.19
305+74.19	307+69.71	NOTCH AND WIDEN ON LT. AND RT. - SUPERELEVATION TRANSITION	195.52	40.00	868.98	220	95.59									225.13	440.17				24.00	521.39	88.64
307+69.71	308+54.19	NOTCH AND WIDEN ON LT. AND RT. - SUPERELEVATION TRANSITION	84.48	40.78	382.79	220	42.11									113.50	95.88				24.00	225.28	38.30
308+54.19	309+00.00	NOTCH AND WIDEN ON LT. AND RT.	45.81	42.62	216.94	220	23.86									140.63	64.42				24.00	122.16	20.77
309+00.00	309+81.41	OVERLAY	81.41	46.64	421.88	220	46.41									148.88	121.20				38.00	343.73	58.43
309+81.41	317+37.90	OVERLAY	756.49	38.00	3194.07	220	351.35														38.00	3194.07	542.99
317+37.90	323+41.74	OVERLAY WITH NOTCH AND WIDEN ON LT. AT C-D ROAD GORE AREA	603.84	57.29	3843.78	220	422.82	11.15	748.09	495	185.15	11.41	765.53	880	336.83	VAR.	1530.30	72.97	4895.80	244.79	28.00	1878.61	319.36
323+41.74	324+41.74	100' OVERLAY TRANSITION	100.00	38.00	422.22	220	46.44														38.00	422.22	71.78
SUBTOTALS (BOX 3 OF 6):					**60462.95**		**6650.94**		**16385.18**		**4055.30**		**16784.78**		**7373.14**		**29762.50**		**73869.55**	**3693.48**		**20800.16**	**3536.01**

BASIS OF ESTIMATE:
ACHM SURFACE COURSE (1/2") : 5.5% ASPHALT BINDER (PG 76-22), 94.5% MINERAL AGGREGATE, N_{MAX}=205 FOR PG 76-22
ACHM BINDER COURSE (1") : 4.7% ASPHALT BINDER (PG 76-22), 95.3% MINERAL AGGREGATE, N_{MAX}=205 FOR PG 76-22
ACHM BASE COURSE (1 1/2") : 4.3% ASPHALT BINDER (PG 76-22), 95.7% MINERAL AGGREGATE, N_{MAX}=205 FOR PG 76-22

AEWferciak 4/22/2016 10:22:12 AM
WORKSPACE: AHTD
L:\2016\16017OT - I-540 Widening & Interchange Improvement\Drawings\r-BB0414_QTY_ALL.dgn
REVISED DATE:

STATE OF ARKANSAS LICENSED PROFESSIONAL ENGINEER No.13422 JOHN F. CANTABERY 4-22-16

BASE & SURFACING (BOX 4 OF 6)

STATION	STATION	LOCATION	LENGTH	ACHM SURFACE COURSE (1/2") (PG 76-22)				ACHM BINDER COURSE (1") (PG 76-22)				ACHM BASE COURSE (1 1/2") (PG 76-22)				AGGREGATE BASE COURSE (CLASS 7)		TACK COAT					
			FEET	AVG. WIDTH FEET	SQUARE YARDS	LBS. PER SQ. YD.	TON	AVG. WIDTH FEET	SQUARE YARDS	LBS. PER SQ. YD.	TON	AVG. WIDTH FEET	SQUARE YARDS	LBS. PER SQ. YD.	TON	TONS PER STATION	TON	TOTAL WIDTH FEET	SQUARE YARDS	0.05 G/SY GAL.	AVG. WIDTH FEET	SQUARE YARDS	0.17 G/SY GAL.
HWY. 71B																							
334+72.76	341+72.76	NOTCH AND WIDEN ON RT.	700.00	30.13	2343.44	220	257.78	12.27	954.33	495	236.20	12.52	973.78	880	428.46	244.25	1709.75	49.44	3845.33	192.27			
341+72.76	344+72.76	NOTCH AND WIDEN ON RT.	300.00	18.06	602.00	220	66.22	6.14	204.67	495	50.66	6.26	208.67	880	91.81	213.25	639.75	24.72	824.00	41.20			
NB I-49 TO HWY. 71B RAMP																							
308+21.79	308+73.24	FULL DEPTH - GORE AREA	51.45	VAR.	375.14	220	41.27	VAR.	171.34	495	42.41	VAR.	172.85	880	76.05	VAR.	210.97	VAR.	687.49	34.37			
308+73.24	311+11.68	FULL DEPTH	238.44	58.25	1543.24	220	169.76	24.54	650.15	495	160.91	25.04	663.39	880	291.89	464.75	1108.15	98.87	2619.40	130.97			
311+11.68	314+11.68	FULL DEPTH - SUPERELEVATION TRANSITION	300.00	58.25	1941.67	220	213.58	24.54	818.00	495	202.46	25.04	834.67	880	367.25	552.75	1658.25	98.87	3295.67	164.78			
314+11.68	319+00.00	FULL DEPTH - SUPERELEVATION	488.32	58.25	3160.52	220	347.66	24.54	1331.49	495	329.54	25.04	1358.61	880	597.79	640.50	3127.69	98.87	5364.47	268.22			
319+00.00	321+00.00	FULL DEPTH - SUPERELEVATION W/ FULL DEPTH SHLD. LT.	200.00	62.25	1383.33	220	152.17	28.54	634.22	495	156.97	29.04	645.33	880	283.95	602.75	1205.50	114.87	2552.67	127.63			
321+00.00	321+68.72	FULL DEPTH - SUPERELEVATION	68.72	58.25	444.77	220	48.92	24.54	187.38	495	46.38	25.04	191.19	880	84.12	640.50	440.15	98.87	754.93	37.75			
321+68.72	323+81.11	FULL DEPTH - SUPERELEVATION THROUGH HWY. 112 TO HWY. 71B GORE AREA	212.39	VAR.	1798.42	220	197.83	VAR.	797.03	495	197.26	VAR.	808.88	880	355.91	VAR.	1265.72	VAR.	3756.97	187.85			
323+81.11	325+25.52	FULL DEPTH - SUPERELEVATION	144.41	82.25	1319.75	220	145.17	36.54	586.30	495	145.11	37.04	594.33	880	261.51	640.50	924.95	146.87	2356.61	117.83			
325+25.52	327+00.00	NOTCH AND WIDEN ON RT.	174.48	72.56	1406.70	220	154.74	26.71	517.82	495	128.16	26.98	523.05	880	230.14	VAR.	1151.39	121.05	2346.76	117.34	13.82	267.92	45.55
327+00.00	328+75.95	NOTCH AND WIDEN ON RT.	175.95	67.13	1312.39	220	144.36	21.27	415.83	495	102.92	21.54	421.11	880	185.29	350.25	616.26	104.48	2042.58	102.13	19.00	371.45	63.15
328+75.95	329+46.58	NOTCH AND WIDEN ON RT.	70.63	67.13	526.82	220	57.95	21.27	166.92	495	41.31	21.54	169.04	880	74.38	320.50	226.37	104.48	819.94	41.00	19.00	149.11	25.35
329+46.58	330+61.97	NOTCH AND WIDEN ON RT. - TAPER	115.39	62.51	801.45	220	88.16	18.96	243.09	495	60.16	19.23	246.55	880	108.48	302.88	349.49	95.24	1221.08	61.05	19.00	243.60	41.41
330+61.97	332+46.58	NOTCH AND WIDEN ON RT. - TAPER	184.61	50.51	1036.07	220	113.97	12.96	265.84	495	65.80	13.23	271.38	880	119.41	291.25	537.68	71.24	1461.29	73.06	19.00	389.73	66.25
332+46.58	334+73.46	NOTCH AND WIDEN ON RT.	226.88	43.13	1087.26	220	119.60	9.27	233.69	495	57.84	9.54	240.49	880	105.82	258.50	586.48	56.48	1423.80	71.19	19.00	478.97	81.42
HWY. 112 TO HWY. 71B RAMP																							
304+30.21	304+67.55	FULL DEPTH - GORE AREA	37.34	VAR.	178.77	220	19.66	VAR.	70.06	495	17.34	VAR.	72.17	880	31.75	VAR.	87.03	VAR.	283.21	14.16			
304+67.55	306+39.22	FULL DEPTH	171.67	40.25	767.75	220	84.45	15.54	296.42	495	73.36	16.04	305.95	880	134.62	418.00	717.58	62.87	1199.21	59.96			
306+39.22	309+89.22	FULL DEPTH - SUPERELEVATION TRANSITION	350.00	40.25	1565.28	220	172.18	15.54	604.33	495	149.57	17.04	662.67	880	291.57	489.25	1712.38	62.87	2444.94	122.25			
309+89.22	314+32.72	FULL DEPTH - SUPERELEVATION	443.50	40.25	1983.43	220	218.18	15.54	765.78	495	189.53	18.04	888.97	880	391.15	605.75	2686.50	62.87	3098.09	154.90			
314+32.72	317+82.72	FULL DEPTH - SUPERELEVATION TRANSITION	350.00	40.25	1565.28	220	172.18	15.54	604.33	495	149.57	19.04	740.44	880	325.79	564.75	1976.63	62.87	2444.94	122.25			
317+82.72	318+78.58	FULL DEPTH - SUPERELEVATION TRANSITION	95.86	40.25	428.71	220	47.16	15.54	165.52	495	40.97	20.04	213.45	880	93.92	491.25	470.91	62.87	669.64	33.48			
318+78.58	319+57.61	FULL DEPTH - GORE AREA	79.03	VAR.	353.58	220	38.89	VAR.	136.91	495	33.89	VAR.	141.32	880	62.18	VAR.	292.33	VAR.	412.56	20.63			
HWY. 71B TO NB I-49 RAMP																							
335+00.00	336+00.00	100' OVERLAY TRANSITION	100.00	25.00	277.78	220	30.56														25.00	277.78	47.22
336+00.00	337+82.70	OVERLAY	182.70	25.00	507.50	220	55.83														25.00	507.50	86.28
SB I-49 TO HWY. 112 RAMP																							
328+24.05	328+77.58	OVERLAY - GORE AREA	53.53	VAR.	181.10	220	19.92														VAR.	105.90	18.00
328+77.58	331+69.93	FULL DEPTH/NOTCH AND WIDEN ON RT. - SUPERELEVATION TRANSITION	292.35	32.63	1059.93	220	116.59	7.77	252.40	495	62.47	8.02	260.52	880	114.63	324.25	947.94	43.07	1399.06	69.95	11.63	377.78	64.22
331+69.93	333+26.40	NOTCH AND WIDEN ON RT. - SUPERELEVATION TRANSITION	156.47	25.00	434.64	220	47.81									68.75	107.57				20.87	362.84	61.68
333+26.40	334+58.94	NOTCH AND WIDEN ON RT. - SUPERELEVATION TRANSITION	132.54	25.00	368.17	220	40.50														25.00	368.17	62.59
334+58.94	343+00.00	OVERLAY	841.06	25.00	2336.28	220	256.99														25.00	2336.28	397.17
343+00.00	344+84.39	NOTCH AND WIDEN ON LT. - SUPERELEVATION TRANSITION	184.39	28.01	573.86	220	63.12	3.15	64.54	495	15.97	3.41	69.86	880	30.74	VAR.	466.88	29.10	596.19	29.81	16.12	330.26	56.14
344+84.39	346+00.00	NOTCH AND WIDEN ON LT. THROUGH SB I-49 TO HWY. 71B GORE AREA	115.61	35.85	460.51	220	50.66	7.94	101.99	495	25.24	8.19	105.21	880	46.29	VAR.	443.03	VAR.	642.09	32.10	14.42	185.23	31.49
346+00.00	348+13.92	FULL DEPTH THROUGH SB I-49 TO HWY. 71B GORE AREA	213.92	72.55	1724.43	220	189.69	31.79	755.61	495	187.01	32.28	767.26	880	337.59	VAR.	1075.95	VAR.	3038.76	151.94			
348+13.92	349+74.48	FULL DEPTH	160.56	58.25	1039.18	220	114.31	24.54	437.79	495	108.35	25.04	446.71	880	196.55	464.75	746.20	98.87	1763.84	88.19			
349+74.48	352+43.13	FULL DEPTH - SUPERELEVATION TRANSITION	268.65	58.25	1738.76	220	191.26	24.54	732.52	495	181.30	25.04	747.44	880	328.87	494.38	1328.15	98.87	2951.27	147.56			
352+43.13	352+74.48	FULL DEPTH - SUPERELEVATION TRANSITION - GORE AREA	31.35	VAR.	217.87	220	23.97	VAR.	93.64	495	23.18	VAR.	95.43	880	41.99	VAR.	97.78	VAR.	1108.17	55.41			
SB I-49 TO HWY. 71B RAMP																							
334+50.00	335+50.00	100' OVERLAY TRANSITION	100.00	25.00	277.78	220	30.56														25.00	277.78	47.22
335+50.00	335+96.34	NOTCH AND WIDEN ON RT. - SUPERELEVATION	46.34	25.00	128.72	220	14.16														25.00	128.72	21.88
335+96.34	338+11.40	NOTCH AND WIDEN ON RT. - SUPERELEVATION TRANSITION	215.06	31.44	751.28	220	82.64	6.58	157.23	495	38.91	6.81	162.73	880	71.60	201.38	433.09	41.34	987.84	49.39	14.70	351.26	59.71
338+11.40	338+69.34	FULL DEPTH - SUPERELEVATION TRANSITION	57.94	40.25	259.12	220	28.50	15.54	100.04	495	24.76	16.04	103.26	880	45.43	445.63	258.20	62.87	404.74	20.24			
338+69.34	339+00.99	FULL DEPTH	31.65	40.25	141.55	220	15.57	15.54	54.65	495	13.53	16.04	56.41	880	24.82	418.00	132.30	62.87	221.09	11.05			
339+00.99	342+40.99	FULL DEPTH - SUPERELEVATION TRANSITION	340.00	40.25	1520.56	220	167.26	15.54	587.07	495	145.30	16.04	605.96	880	266.62	514.63	1749.74	62.87	2375.09	118.75			
342+40.99	345+02.32	FULL DEPTH - SUPERELEVATION	261.33	40.25	1168.73	220	128.56	15.54	451.23	495	111.68	16.04	465.75	880	204.93	611.25	1597.38	62.87	1825.54	91.28			
345+02.32	345+73.25	FULL DEPTH - SUPERELEVATION TRANSITION	70.93	40.25	317.21	220	34.89	15.54	122.47	495	30.31	16.04	126.41	880	55.62	567.13	402.27	62.87	495.49	24.77			
345+73.25	346+06.21	FULL DEPTH - SUPERELEVATION TRANSITION - GORE AREA	32.96	VAR.	159.80	220	17.58	VAR.	63.01	495	15.59	VAR.	64.92	880	28.56	VAR.	142.23	VAR.	254.75	12.74			
TEMP. SB I-49 DETOUR																							
339+36.65	342+88.70	NOTCH AND WIDEN ON LT. - SUPERELEVATION	352.05	18.77	734.28	220	80.77	13.05	510.40	495	126.32	13.30	520.43	880	228.99	VAR.	629.86	39.65	1550.98	77.55			
342+88.70	344+30.53	FULL DEPTH - SUPERELEVATION TRANSITION	141.83	34.00	535.80	220	58.94	24.35	383.73	495	94.97	24.92	392.71	880	172.79	137.88	195.56	74.19	1169.15	58.46			
344+30.53	345+09.47	FULL DEPTH	78.94	34.00	298.22	220	32.80	24.35	213.58	495	52.86	24.92	218.58	880	96.18	131.75	104.00	74.19	650.73	32.54			
345+09.47	348+52.50	FULL DEPTH THROUGH TEMP. SB I-49 TO HWY. 71B GORE AREA	343.03	VAR.	1645.08	220	180.96	VAR.	1128.55	495	279.32	VAR.	1143.33	880	503.07	VAR.	420.59	VAR.	3415.21	170.76			
348+52.50	356+83.23	FULL DEPTH	830.73	34.00	3138.31	220	345.21	24.35	2247.59	495	556.28	24.92	2300.20	880	1012.09	131.75	1094.49	74.19	6847.98	342.40			
356+83.23	358+53.10	NOTCH AND WIDEN ON LT.	169.87	35.69	673.54	220	74.09	29.93	564.96	495	139.83	30.19	569.82	880	250.72	VAR.	482.91	90.31	1704.55	85.23			
TEMP. SB I-49 TO HWY. 71B RAMP																							
343+65.00	346+00.00	NOTCH AND WIDEN ON LT. - SUPERELEVATION TRANSITION	235.00	10.93	285.28	220	31.38	5.16	134.72	495	33.34	5.42	141.46	880	62.24	VAR.	305.50	16.00	417.78	20.89			
TEMP. C-D RD. TO SB I-49 RAMP																							
280+29.37	281+93.00	NOTCH AND WIDEN ON LT. - SUPERELEVATION TRANSITION	163.63	25.21	458.42	220	50.43	19.44	353.44	495	87.48	19.70	358.14	880	157.58	VAR.	376.14	58.84	1069.78	53.49			
281+93.00	282+53.00	FULL DEPTH - SUPERELEVATION TRANSITION	60.00	34.00	226.67	220	24.93	24.35	162.33	495	40.18	24.92	166.13	880	73.10	129.75	77.85	74.19	494.60	24.73			
282+53.00	286+95.00	FULL DEPTH	442.00	34.00	1669.78	220	183.68	24.35	1195.86	495	295.98	24.92	1223.85	880	538.49	131.75	582.34	74.19	3643.55	182.18			
286+95.00	288+83.21	FULL DEPTH THROUGH TEMP. C-D RD. TO HWY. 112 RAMP	188.21	VAR.	904.63	220	99.51	VAR.	619.15	495	153.24	VAR.	628.34	880	276.47	VAR.	205.72	VAR.	1875.83	93.79			
288+83.21	290+00.00	FULL DEPTH	116.79	46.00	596.93	220	65.66	36.35	471.70	495	116.75	36.92	479.10	880	210.80	131.75	153.87	110.19	1429.90	71.50			
290+00.00	290+26.60	VARIABLE OVERLAY OVER PROPOSED PAVEMENT	26.60	46.00	135.96	220	14.96	14.98	44.27	495	10.96	14.98	44.27	880	19.48	131.75	35.05	44.94	132.82	6.64			
290+26.60	291+10.81	VARIABLE OVERLAY OVER PROPOSED PAVEMENT - LANE TAPER	84.21	41.09	384.47	220	42.29	9.96	93.20	495	23.07	9.96	93.22	880	41.02	131.75	110.95	29.88	279.58	13.98			
TEMP. C-D RD. TO HWY. 112 RAMP																							
284+02.90	287+97.54	NOTCH AND WIDEN ON LT. - SUPERELEVATION	394.64	20.06	879.66	220	96.76	10.33	452.84	495	112.08	10.58	463.82	880	204.08	VAR.	942.23	31.49	1380.80	69.04			
TEMP. NB I-49 TO HWY. 71B RAMP																							
310+48.91	311+00.50	NOTCH AND WIDEN ON RT. - SUPERELEVATION TRANSITION	51.59	18.53	106.20	220	11.68	12.75	73.07	495	18.08	13.01	74.55	880	32.80	VAR.	218.21	38.77	222.24	11.11			
311+00.50	312+22.29	NOTCH AND WIDEN ON RT. - SUPERELEVATION	121.79	20.71	280.30	220	30.83	14.93	202.09	495	50.02	15.19	205.59	880	90.46	VAR.	485.10	45.31	613.14	30.66			
312+22.29	312+83.27	NOTCH AND WIDEN ON RT. - SUPERELEVATION TRANSITION	60.98	20.96	142.01	220	15.62	15.18	102.85	495	25.46	15.44	104.60	880	46.02	VAR.	186.72	46.06	312.08	15.60			
312+83.27	314+72.29	FULL DEPTH - SUPERELEVATION TRANSITION	189.02	25.00	525.06	220	57.76	15.35	322.38	495	79.79	15.92	334.36	880	147.12	153.63	290.39	47.19	991.09	49.55			
314+72.29	315+17.84	FULL DEPTH	45.55	25.00	126.53	220	13.92	15.35	77.69	495	19.23	15.92	80.57	880	35.45	131.75	60.01	47.19	238.83	11.94			
315+17.84	318+17.84	FULL DEPTH - SUPERELEVATION TRANSITION	300.00	25.00	833.33	220	91.67	15.35	511.67	495	126.64	15.92	530.67	880	233.49	169.50	508.50	47.19	1573.00	78.65			
318+17.84	319+09.85	FULL DEPTH - SUPERELEVATION	92.01	25.00	255.58	220	28.11	15.35	156.93	495	38.84	15.92	162.76	880	71.61	207.25	190.69	47.19	482.44	24.12			
319+09.85	320+76.89	TEMPORARY WIDENING ON LT.	167.04	6.20	115.07	220	12.66	3.59	66.59	495	16.48	3.73	69.23	880	30.46	VAR.	155.52	11.05	205.09	10.25			
SUBTOTALS (BOX 4 OF 6):					**58521.64**		**6437.39**		**24885.23**		**6159.12**		**25731.89**		**11321.99**		**41442.82**		**94690.65**	**4734.51**		**7510.28**	**1276.73**

BASIS OF ESTIMATE:

ACHM SURFACE COURSE (1/2") : 5.5% ASPHALT BINDER (PG 76-22), 94.5% MINERAL AGGREGATE, N_{MAX}=205 FOR PG 76-22

ACHM BINDER COURSE (1") : 4.7% ASPHALT BINDER (PG 76-22), 95.3% MINERAL AGGREGATE, N_{MAX}=205 FOR PG 76-22

ACHM BASE COURSE (1 1/2") : 4.3% ASPHALT BINDER (PG 76-22), 95.7% MINERAL AGGREGATE, N_{MAX}=205 FOR PG 76-22

AEWierciak 4/22/2016 10:22:19 AM
WORKSPACE: AHTD
L:\2011\11017707 - I-540 Widening & Interchange Improvement\Drawings\rBB0414_QTY_ALL.dgn
REVISED DATE:

DATE REVISED	DATE FILMED	DATE REVISED	DATE FILMED	FED.RD. DIST.NO.	STATE	FED.AID PROJ.NO.	SHEET NO.	TOTAL SHEETS
				6	ARK.			
				JOB NO.		BB0414	254	886
				(2)	QUANTITIES			

STATE OF ARKANSAS
LICENSED PROFESSIONAL ENGINEER
No.13422
JOHN F. CANTABERY
4-22-16

BASE & SURFACING (BOX 5 OF 6)

STATION	STATION	LOCATION	LENGTH	ACHM SURFACE COURSE (1/2") (PG 76-22)				ACHM BINDER COURSE (1") (PG 76-22)				ACHM BASE COURSE (1 1/2") (PG 76-22)				AGGREGATE BASE COURSE (CLASS 7)		TACK COAT				
			FEET	AVG. WIDTH FEET	SQUARE YARDS	LBS. PER SQ. YD.	TON	AVG. WIDTH FEET	SQUARE YARDS	LBS. PER SQ. YD.	TON	AVG. WIDTH FEET	SQUARE YARDS	LBS. PER SQ. YD.	TON	TONS PER STATION	TON	TOTAL WIDTH FEET	SQUARE YARDS	0.05 G/SY GAL.	AVG. WIDTH FEET	SQUARE YARDS	0.17 G/SY GAL.
TEMP. EX. NB I-49 TO PR. I-49 RAMP																							
314+87.51	320+00.78	NOTCH AND WIDEN ON RT. - SUPERELEVATION TRANSITION	513.27	14.07	802.39	220	88.26	8.35	476.15	495	117.85	8.61	490.77	880	215.94	VAR.	1048.98	25.57	1458.26	72.91			
320+00.78	323+92.09	FULL DEPTH	391.31	34.00	1478.28	220	162.61	24.35	1058.71	495	262.03	24.92	1083.49	880	476.74	201.00	786.53	74.19	3225.70	161.29			
323+92.09	324+60.28	FULL DEPTH	68.19	29.21	221.30	220	24.34	23.75	179.97	495	44.54	24.26	183.79	880	80.87	VAR.	171.79	72.27	547.57	27.38			
TEMP. HWY. 71B TO NB I-49 RAMP																							
343+70.26	346+17.63	NOTCH AND WIDEN ON LT. - SUPERELEVATION TRANSITION	247.37	7.72	212.17	220	23.34	6.14	168.67	495	41.75	6.35	174.59	880	76.82	VAR.	482.52	18.84	517.83	25.89			
346+17.63	348+00.00	FULL DEPTH - SUPERELEVATION TRANSITION	182.37	21.00	425.53	220	46.81	15.35	311.04	495	76.98	15.92	322.59	880	141.94	88.38	292.54	47.19	956.23	47.81			
TEMP. SB I-49 TO C-D RD. RAMP																							
307+00.00	308+00.00	FULL DEPTH	100.00	72.13	221.30	220	24.34	36.27	179.97	495	44.54	36.54	183.79	880	80.87	190.50	205.43	145.48	1616.44	80.82			
308+00.00	311+08.92	NOTCH AND WIDEN ON LT. - SUPERELEVATION TRANSITION	308.92	14.06	482.72	220	53.10	8.36	286.90	495	71.01	8.61	295.67	880	130.09	VAR.	632.38	25.58	878.02	43.90			
GUARDRAIL WIDENING																							
273+81.00	277+41.65	I-49 RT. LANES - OUTSIDE	360.65	5.00	200.44	220	22.05									VAR.	263.08						
287+67.85	290+17.00	I-49 RT. LANES - OUTSIDE	249.15	3.27	90.48	220	9.95									VAR.	118.76						
316+73.85	319+35.00	I-49 RT. LANES - OUTSIDE	261.15	5.44	157.94	220	17.37									VAR.	549.72						
319+70.46	323+46.61	I-49 LT. LANES - OUTSIDE	376.15	5.03	210.25	220	23.13									VAR.	275.95						
327+75.35	330+61.10	I-49 LT. LANES - OUTSIDE	285.75	6.41	203.61	220	22.40									VAR.	267.24						
336+38.85	339+00.00	I-49 RT. LANES - OUTSIDE	261.15	5.44	157.94	220	17.37									VAR.	624.15						
354+25.60	358+55.16	I-49 LT. LANES - OUTSIDE	429.56	5.36	255.77	220	28.13									VAR.	569.17						
361+04.26	364+03.01	I-49 RT. LANES - OUTSIDE	298.75	5.01	166.32	220	18.30									VAR.	218.30						
362+36.71	364+84.28	I-49 LT. LANES - OUTSIDE	247.57	5.38	148.00	220	16.28									VAR.	194.25						
366+31.26	369+30.01	I-49 LT. LANES - OUTSIDE	298.75	5.01	166.32	220	18.30									VAR.	218.30						
375+76.00	379+37.00	I-49 LT. LANES - OUTSIDE	361.00	5.06	202.92	220	22.32									VAR.	320.39						
388+26.00	391+87.00	I-49 RT. LANES - OUTSIDE	361.00	4.95	198.63	220	21.85									VAR.	260.70						
282+74.25	285+23.40	HWY. 112 RAMP 4 LT.	249.15	3.30	91.40	220	10.05									VAR.	119.96						
308+00.00	309+87.16	COLLECTOR-DISTRIBUTOR RD. LT.	187.16	5.35	111.35	220	12.25									VAR.	146.15						
310+39.67	313+39.13	COLLECTOR-DISTRIBUTOR RD. LT.	299.46	5.05	168.16	220	18.50									VAR.	220.71						
311+70.00	314+31.15	COLLECTOR-DISTRIBUTOR RD. RT.	261.15	5.14	149.21	220	16.41									VAR.	195.84						
308+16.93	311+64.08	HWY. 112 TO NB I-49 RAMP LT.	347.15	10.13	390.71	220	42.98									-	-						
309+10.66	311+96.81	HWY. 112 TO NB I-49 RAMP RT.	286.15	3.02	96.07	220	10.57									VAR.	191.01						
321+49.10	324+30.35	HWY. 112 TO NB I-49 RAMP RT.	281.25	8.02	250.55	220	27.56									VAR.	860.63						
332+51.85	335+13.00	HWY. 112 TO NB I-49 RAMP LT.	261.15	5.09	147.81	220	16.26									-	-						
326+80.00	329+73.55	SB HWY. 71B RT.	293.55	6.41	209.15	220	23.01									VAR.	504.91						
338+26.00	342+37.00	HWY. 71B LT. LANES - OUTSIDE	411.00	5.11	233.31	220	25.66									VAR.	798.37						
338+26.00	342+62.00	HWY. 71B LT. LANES - INSIDE	436.00	5.06	244.91	220	26.94									VAR.	808.78						
342+90.36	344+72.76	HWY. 71B RT. LANES - OUTSIDE	182.40	7.44	150.87	220	16.60									VAR.	198.02						
328+24.05	328+98.04	SB I-49 TO HWY. 112 RAMP LT.	73.99	4.23	34.81	220	3.83									VAR.	45.69						
328+75.63	331+84.43	SB I-49 TO HWY. 112 RAMP RT.	308.80	5.13	175.97	220	19.36									VAR.	651.57						
316+60.49	319+22.76	SB I-49 TO HWY. 71B RAMP RT.	262.27	5.37	156.41	220	17.21									VAR.	531.10						
TEMPORARY DETOUR WIDENING																							
298+96.50	299+33.27	STAGE 1 - I-49 LT. LANES - INSIDE	36.77	4.06	16.58	220	1.82	2.22	9.08	495	2.25	2.48	10.15	990	5.02	VAR.	26.84	7.18	29.33	1.47			
348+51.45	356+85.24	STAGE 1 - STAGE 1 WIDENING NB I-49	833.79	15.61	1446.61	220	159.13	10.32	956.20	495	236.66	10.58	979.76	880	431.09	VAR.	1574.18	31.48	2916.41	145.82			
356+85.24	364+17.45	STAGE 1 - I-49 RT. LANES - OUTSIDE	732.21	20.45	1663.44	220	182.98	14.70	1195.61	495	295.91	14.95	1216.61	880	535.31	VAR.	1506.00	44.60	3628.51	181.43			
359+25.00	364+74.32	STAGE 1 - I-49 LT. LANES - OUTSIDE	549.32	22.12	1349.81	220	148.48	16.22	990.12	495	245.05	16.48	1006.14	880	442.70	VAR.	1170.99	49.18	3001.73	150.09			
365+81.52	369+00.00	STAGE 1 - I-49 RT. LANES - OUTSIDE	318.48	15.44	546.48	220	60.11	9.50	336.19	495	83.21	9.76	345.55	880	152.04	VAR.	567.89	29.02	1026.92	51.35			
366+38.58	369+00.00	STAGE 1 - I-49 LT. LANES - OUTSIDE	261.42	13.96	405.52	220	44.61	8.29	240.89	495	59.62	8.55	248.29	880	109.25	VAR.	449.87	25.39	737.49	36.87			
283+50.00	288+55.00	STAGE 1 - HWY. 112 RAMP 1 LT.	505.00	6.22	349.07	220	38.40	6.52	365.65	495	90.50	7.03	394.26	880	173.47	VAR.	603.70	20.58	1154.77	57.74			
289+50.00	295+00.00	STAGE 1 - HWY. 112 TO NB I-49 RAMP LT.	550.00	4.44	271.09	220	29.82	4.62	282.62	495	69.95	4.90	299.27	880	131.68	VAR.	643.84	14.42	881.22	44.06			
299+33.27	314+56.01	STAGE 1 - SB HWY. 71B RT.	1522.74	10.04	1697.90	220	186.77	8.21	1389.70	495	343.95	8.47	1433.72	990	709.69	VAR.	572.07	25.15	4255.21	212.76			
200+40.00	208+55.00	STAGE 1A - I-49 RT. LANES - OUTSIDE	815.00	10.00	905.56	220	99.61	10.18	921.86	495	228.16	10.44	945.40	880	415.98	VAR.	973.93	31.06	2812.66	140.63			
289+00.00	291+68.50	STAGE 1A - HWY. 112 TO NB I-49 RAMP RT.	268.50	5.89	175.77	220	19.33	6.08	181.24	495	44.86	6.34	189.16	880	83.23	VAR.	320.86	18.76	559.67	27.98			
306+44.19	308+53.32	STAGE 1A - SB HWY. 71B (EX. I-49) RT.	209.13	13.29	308.80	220	33.97	11.44	265.77	495	65.78	11.70	271.91	880	119.64	VAR.	130.18	34.84	809.57	40.48			
326+86.42	335+46.91	STAGE 1A - SB I-49 TO HWY. 112 RAMP RT.	860.49	10.95	1046.67	220	115.13	9.09	868.90	495	215.05	9.35	894.28	880	393.48	VAR.	1212.81	27.79	2657.00	132.85			
289+50.00	302+55.20	STAGE 2 - I-49 RT. LANES - INSIDE	1305.20	8.49	1230.71	220	135.38	6.60	956.85	495	236.82	6.86	994.50	880	437.58	VAR.	1608.66	20.32	2946.85	147.34			
293+00.00	307+02.67	STAGE 2B - I-49 RT. LANES - OUTSIDE	1402.67	10.47	1631.84	220	179.50	8.82	1374.57	495	340.21	9.05	1411.08	880	620.88	VAR.	483.92	26.92	4195.54	209.78			
SUBTOTALS (BOX 5 OF 6):					**21658.85**		**2382.48**		**12996.66**		**3216.68**		**13374.77**		**5964.31**		**24618.66**		**40812.93**	**2040.65**			

BASIS OF ESTIMATE:
ACHM SURFACE COURSE (1/2") : 5.5% ASPHALT BINDER (PG 76-22), 94.5% MINERAL AGGREGATE, N_{MAX}=205 FOR PG 76-22
ACHM BINDER COURSE (1") : 4.7% ASPHALT BINDER (PG 76-22), 95.3% MINERAL AGGREGATE, N_{MAX}=205 FOR PG 76-22
ACHM BASE COURSE (1 1/2") : 4.3% ASPHALT BINDER (PG 76-22), 95.7% MINERAL AGGREGATE, N_{MAX}=205 FOR PG 76-22

AEWierclok 4/22/2016 10:22:25 AM
WORKSPACE: AHTD
L:\20\NDOT\07 - I-540 Widening & Interchange Improvement\Drawings\rBB0414_QTY_ALL.dgn
REVISED DATE:

DATE REVISED	DATE FILMED	DATE REVISED	DATE FILMED	FED.RD. DIST.NO.	STATE	FED.AID PROJ.NO.	SHEET NO.	TOTAL SHEETS
				6	ARK.			
				JOB NO.		BB0414	255	886
				(2)		QUANTITIES		

STATE OF ARKANSAS
LICENSED PROFESSIONAL ENGINEER
No.13422
JOHN F. CANTABERY
4-19-16

BASE & SURFACING (BOX 6 OF 6)

STATION	STATION	LOCATION	LENGTH	ACHM SURFACE COURSE (1/2") (PG 76-22)				ACHM BINDER COURSE (1") (PG 76-22)				ACHM BASE COURSE (1 1/2") (PG 76-22)				AGGREGATE BASE COURSE (CLASS 7)		TACK COAT				
			FEET	AVG. WIDTH FEET	SQUARE YARDS	LBS. PER SQ. YD.	TON	AVG. WIDTH FEET	SQUARE YARDS	LBS. PER SQ. YD.	TON	AVG. WIDTH FEET	SQUARE YARDS	LBS. PER SQ. YD.	TON	TONS PER STATION	TON	TOTAL WIDTH FEET	SQUARE YARDS	0.05 G/SY GAL.	AVG. WIDTH FEET	SQUARE YARDS	0.17 G/SY GAL.
LEVELING COURSE																							
239+77.13	288+00.00	I-49 LT. LANES	4822.87	VAR.	VAR.	VAR.	102.57																
355+00.00	363+43.00	I-49 LT. LANES	843.00	VAR.	VAR.	VAR.	346.82	VAR.	VAR.	VAR.	753.60	VAR.	VAR.	VAR.	1091.15			VAR.	4610.67	230.53			
365+99.76	380+86.42	I-49 LT. LANES	1486.66	VAR.	VAR.	VAR.	204.97	VAR.	VAR.	VAR.	260.57	VAR.	VAR.	VAR.	924.53			VAR.	4765.71	238.29			
239+77.13	292+42.59	I-49 RT. LANES	5265.46	VAR.	VAR.	VAR.	830.21																
292+42.59	299+00.00	I-49 RT. LANES	657.41	VAR.	VAR.	VAR.	634.94	VAR.	VAR.	VAR.	389.06	VAR.	VAR.	VAR.	379.42			VAR.	2582.43	129.12			
355+00.00	363+43.00	I-49 RT. LANES	843.00	VAR.	VAR.	VAR.	414.82	VAR.	VAR.	VAR.	456.24	VAR.	VAR.	VAR.	844.48			VAR.	4477.33	223.87			
365+58.08	381+52.43	I-49 RT. LANES	1594.35	VAR.	VAR.	VAR.	219.81	VAR.	VAR.	VAR.	330.89	VAR.	VAR.	VAR.	991.50			VAR.	5275.17	263.76			
284+50.00	290+68.59	HWY. 112 RAMP 1	618.59	VAR.	VAR.	VAR.	378.34	VAR.	VAR.	VAR.	14.97	VAR.	VAR.	VAR.	8.62			VAR.	1030.98	51.55			
280+20.12	285+50.00	HWY. 112 RAMP 4	529.88	VAR.	VAR.	VAR.	91.71											VAR.	758.15	37.91			
296+50.00	298+06.90	HWY. 112 RAMP 4	156.90	VAR.	VAR.	VAR.	29.92											VAR.	435.83	21.79			
6+77.03	17+51.79	HWY. 112	1074.76	VAR.	VAR.	VAR.	7.09																
21+27.27	31+07.40	HWY. 112	980.13	VAR.	VAR.	VAR.	7.91																
73+13.04	74+72.00	SHILOH DR.	158.96	VAR.	VAR.	VAR.	90.69																
276+14.98	280+79.57	COLLECTOR-DISTRIBUTOR RD.	464.59	VAR.	VAR.	VAR.	93.69																
285+61.04	288+00.00	COLLECTOR-DISTRIBUTOR RD.	238.96	VAR.	VAR.	VAR.	25.76																
287+50.69	292+98.32	HWY. 112 TO NB I-49 RAMP	547.63	VAR.	VAR.	VAR.	233.33																
322+87.50	323+88.32	HWY. 112 TO NB I-49 RAMP	100.82	VAR.	VAR.	VAR.	1.33																
327+73.85	350+61.25	HWY. 112 TO NB I-49 RAMP	2287.40	VAR.	VAR.	VAR.	577.05											VAR.	2245.00	112.25			
305+00.00	309+00.00	SB HWY. 71B	400.00	VAR.	VAR.	VAR.	63.07	VAR.	VAR.	VAR.	42.53	VAR.	VAR.	VAR.	120.86			VAR.	1600.00	80.00			
309+00.00	323+41.74	SB HWY. 71B	1441.74	VAR.	VAR.	VAR.	137.45																
326+00.00	334+73.46	NB I-49 TO HWY. 71B	873.46	VAR.	VAR.	VAR.	13.45																
328+77.58	334+58.94	SB I-49 TO HWY. 112 RAMP	581.36	VAR.	VAR.	VAR.	131.74											VAR.	1614.89	80.74			
334+58.94	343+00.00	SB I-49 TO HWY. 112 RAMP	841.06	VAR.	VAR.	VAR.	10.49																
343+00.00	346+00.00	SB I-49 TO HWY. 112 RAMP	300.00	VAR.	VAR.	VAR.	48.62	VAR.	VAR.	VAR.	29.70	VAR.	VAR.	VAR.	59.18			VAR.	2500.00	125.00			
335+50.00	338+11.40	SB I-49 TO HWY. 71B	261.40	VAR.	VAR.	VAR.	143.96											VAR.	726.11	36.31			
RUMBLE STRIP REMOVAL																							
305+30.00	310+51.00	I-49 EXISTING RT. LANES	521.00	6.00	347.33	220	38.21														6.00	347.33	59.05
TO BE USED IF AND WHERE DIRECTED BY THE ENGINEER							500.00				500.00				500.00								
SUBTOTALS (BOX 1 OF 6):					**167786.55**		**18456.51**		**58173.50**		**14397.90**		**58917.70**		**25923.77**		**79719.86**		**252597.18**	**12629.86**		**23498.11**	**3994.68**
SUBTOTALS (BOX 2 OF 6):					**196535.39**		**21618.91**		**66593.38**		**16481.84**		**68305.39**		**29172.04**		**81387.26**		**296038.48**	**14801.92**		**39960.21**	**6793.21**
SUBTOTALS (BOX 3 OF 6):					**60462.95**		**6650.94**		**16385.18**		**4055.30**		**16784.78**		**7373.14**		**29762.50**		**73869.55**	**3693.48**		**20800.16**	**3536.01**
SUBTOTALS (BOX 4 OF 6):					**58521.64**		**6437.39**		**24885.23**		**6159.12**		**25731.89**		**11321.99**		**41442.82**		**94690.65**	**4734.51**		**7510.28**	**1276.73**
SUBTOTALS (BOX 5 OF 6):					**21658.85**		**2382.48**		**12996.66**		**3216.68**		**13374.77**		**5964.31**		**24618.66**		**40812.93**	**2040.65**			
SUBTOTALS (BOX 6 OF 6):					**347.33**		**5377.95**				**2777.56**				**4919.74**				**32622.27**	**1631.12**		**347.33**	**59.05**
TOTALS (ALL BOXES):					**505312.71**		**60924.18**		**179033.95**		**47088.40**		**183114.53**		**84674.99**		**256931.10**		**790631.06**	**39531.54**		**92116.09**	**15659.68**

BASIS OF ESTIMATE:
ACHM SURFACE COURSE (1/2") : 5.5% ASPHALT BINDER (PG 76-22), 94.5% MINERAL AGGREGATE, N_{MAX}=205 FOR PG 76-22
ACHM BINDER COURSE (1") : 4.7% ASPHALT BINDER (PG 76-22), 95.3% MINERAL AGGREGATE, N_{MAX}=205 FOR PG 76-22
ACHM BASE COURSE (1 1/2") : 4.3% ASPHALT BINDER (PG 76-22), 95.7% MINERAL AGGREGATE, N_{MAX}=205 FOR PG 76-22

AEWierciak 4/22/2016 10:22:34 AM
WORKSPACE: AHTD
L:\20IN\I10I707 - I-540 Widening & Interchange Improvement\Drawings\rBB0414_QTY_ALL.dgn
REVISED DATE:

DATE REVISED	DATE FILMED	DATE REVISED	DATE FILMED	FED. ROAD DIST. NO.	STATE	FED. AID PROJ. NO.	SHEET NO.	TOTAL SHEETS
				6	ARK.			
				JOB NO.		BB0414	256	886
				(1) 05692, 07379, A7380, B7380, A7381, B7381		QUANTITIES		58097

SCHEDULE OF BRIDGE QUANTITIES FOR JOB BB0414

BRIDGE NO.	NAME PLATE TITLE	UNIT OF STRUCTURE	ITEM NO.	205	SP & 801	801	SP & 802	SP & 802	803	804	804	805	805	805	806	806	SP & 807	SP & 807
			ITEM	REMOVAL OF EXISTING BRIDGE STRUCTURE (SITE NO. _)	UNCLASSIFIED EXCAVATION FOR STRUCTURES -BRIDGE	ROCK EXCAVATION FOR STRUCTURES -BRIDGE	CLASS S CONCRETE -BRIDGE	CLASS S(AE) CONCRETE -BRIDGE	CLASS 2 PROTECTIVE SURFACE TREATMENT	REINFORCING STEEL-BRIDGE (GRADE 60)	EPOXY COATED REINFORCING STEEL (GRADE 60)	STEEL PILING (HP12X53) (1)	STEEL PILING (HP14X73) (1)	PREBORING (2)	METAL BRIDGE RAILING (TYPE H2)	TRANSITIONAL APPROACH RAILING	STRUCTURAL STEEL IN PLATE GIRDER SPANS (M270, GR. 50W)	STRUCTURAL STEEL IN BEAM SPANS (M270, GR. 50W)
			UNIT	LUMP SUM	CUBIC YARD	CUBIC YARD	CUBIC YARD	CUBIC YARD	SQUARE YARD	POUND	POUND	LINEAR FOOT	LINEAR FOOT	LINEAR FOOT	LINEAR FOOT	EACH	POUND	POUND
05692	HIGHWAY 112 OVER INTERSTATE 49	BENT NO. 1					26.97		11.8	3,324		215			16	2		460
		BENT NO. 2			86		53.23			11,608		165		150				
		BENT NO. 3			66		245.33			32,053		195						
		BENT NO. 4			110		50.95			11,197		180						
		BENT NO. 5					28.72		12.1	3,550		176			16	2		500
		303'-0" CONT. COMP. W-BEAM UNIT						557.70	1,509.5	124,098					605			256,380
		EXISTING BRIDGE NO. 05692 (SITE NO. 1)																
		TOTALS FOR BRIDGE NO. 05692		-	262	-	405.20	557.70	1,533.4	185,830	-	931	-	150	637	4	-	257,340
07379	HWY. 112 TO NB I-49 OVER NB I-49 TO HWY. 71B	BENT NO. 1					103.28		24.6	13,632			277				999	
		BENT NO. 2			376	85	201.18			42,583								
		BENT NO. 3			447	82	205.15			43,350								
		BENT NO. 4					99.19		24.6	13,245			338				992	
		536'-0" CONT. COMP. PLATE GIRDER UNIT						670.10	2,268.9		191,030						1,121,479	
		TOTALS FOR BRIDGE NO. 07379		-	823	167	608.80	670.10	2,318.1	112,810	191,030	-	615	-	-	-	1,123,470	-
A7380	INTERSTATE 49 OVER HWY. 71B	BENT NO. 1					121.29		33.5	17,715		598					1,698	
		BENT NO. 2			222		177.59			35,538		684						
		BENT NO. 3					109.92		15.3	14,307		709					1,372	
		364'-0" CONT. COMP. PLATE GIRDER UNIT						732.40	2,634.2		203,000						1,277,780	
		TOTALS FOR BRIDGE NO. A7380		-	222	-	408.80	732.40	2,683.0	67,560	203,000	1,991	-	-	-	-	1,280,850	-
B7380	INTERSTATE 49 OVER HWY. 71B	BENT NO. 1					115.55		28.2	16,066		652					1,566	
		BENT NO. 2			232		178.85			35,564		792						
		BENT NO. 3					106.20		15.1	14,120		749					1,351	
		306'-0" CONT. COMP. PLATE GIRDER UNIT						616.00	2,214.5		169,650						844,273	
		TOTALS FOR BRIDGE NO. B7380		-	232	-	400.60	616.00	2,257.8	65,750	169,650	2,193	-	-	-	-	847,190	-
A7381	INTERSTATE 49 OVER VAN ASCHE DR.	BENT NO. 1					75.74		20.6	8,345			363	50			1,630	
		BENT NO. 2					78.16		20.6	9,065			333	140			1,630	
		118'-0" COMP. PLATE GIRDER SPAN						256.50	1,009.7		65,850						342,780	
		EXISTING BRIDGE NO. A5918 (SITE NO. 6)		1														
		TOTALS FOR BRIDGE NO. A7381		-	-	-	153.90	256.50	1,050.9	17,410	65,850	-	696	190	-	-	346,040	-
B7381	INTERSTATE 49 OVER VAN ASCHE DR.	BENT NO. 1					91.01		22.1	9,859			432	60			1,912	
		BENT NO. 2					90.39		22.1	9,411			386	168			1,912	
		118'-0" COMP. PLATE GIRDER SPAN						292.30	1,166.8		74,800						418,546	
		EXISTING BRIDGE NO. B5918 (SITE NO. 5)		1														
		TOTALS FOR BRIDGE NO. B7381		-	-	-	181.40	292.30	1,211.0	19,270	74,800	-	818	228	-	-	422,370	-
		TOTALS FOR JOB BB0414		-	1539	167	2,158.70	3,125.00	11,054.2	468,630	704,330	5,115	2,129	568	637	4	4,019,920	257,340

(1) These steel piles are required to have special driving points which will not be paid for directly but shall be considered subsidiary to the item "STEEL PILING (HP12x53)" or "STEEL PILING (HP14x73)".

(2) The quantities for preboring are for estimating and bidding purposes only. Actual quantities will be determined in the field.

STATE OF ARKANSAS
LICENSED PROFESSIONAL ENGINEER
No. 14498
4-19-16
ADAM B. HALL
BRIDGE ENGINEER

SHEET 1 OF 2
SCHEDULE OF BRIDGE QUANTITIES
PORTER RD. - HWY. 112/71B
WIDENING & INTCHNG. IMPVTS. (S)
WASHINGTON COUNTY
ROUTE SEC.
ARKANSAS STATE HIGHWAY COMMISSION
LITTLE ROCK, ARK.

DRAWN BY: CWT DATE: NOV. 2014 FILENAME: BBB0414_01.dgn
CHECKED BY: ABH DATE: JAN. 2016 SCALE: NONE
DESIGNED BY: JES DATE: NOV. 2014
BRIDGE NO. 05692, 07379, A7380, B7380, A7381, B7381 DRAWING NO. 58097

jeskinner 4/19/2016 2:48:41 PM
WORKSPACE: AHTD_Bridge
L:\ROW\NO17107 - I-540 Widening & Interchange Improvement\Drawings\I540-PROJECT-S001-01.dgn
REVISED DATE:

DATE REVISED	DATE FILMED	DATE REVISED	DATE FILMED	FED. ROAD DIST. NO.	STATE	FED. AID PROJ. NO.	SHEET NO.	TOTAL SHEETS
				6	ARK.			
				JOB NO.		BB0414	257	886
				(1) 05692, 07379, A7380, B7380, A7381, B7381		QUANTITIES		58098

SCHEDULE OF BRIDGE QUANTITIES FOR JOB BB0414

BRIDGE NO.	NAME PLATE TITLE	UNIT OF STRUCTURE	ITEM NO.	808	809	809	812	816	SP & 820	820	821	SP JOB BB0414	SP JOB BB0414	SP JOB BB0414
			ITEM	ELASTOMERIC BEARINGS	ARMORED JOINT WITH NEOPRENE STRIP SEAL	SILICONE JOINT SEALANT	BRIDGE NAME PLATE (TYPE D)	CONCRETE RIPRAP	CLEANING AND PAINTING EXISTING STRUCTURAL STEEL (1) (TYPE 11)	DISPOSAL OF HAZARDOUS WASTE (SITE NO. _)	MODIFICATION OF EXISTING BRIDGE STRUCTURE (BR. NO. _)	SHORING	TEXTURED COATING FINISH	ARCHITECTURAL FINISH
			UNIT	CUBIC INCH	LINEAR FOOT	LINEAR FOOT	EACH	CUBIC YARD	TON	LUMP SUM	LUMP SUM	LUMP SUM	SQUARE YARD	SQUARE FOOT
05692	HIGHWAY 112 OVER INTERSTATE 49	BENT NO. 1		1,152.0				109					1,330	54
		BENT NO. 2		2,304.0									237	
		BENT NO. 3		2,304.0									374	
		BENT NO. 4		2,304.0									211	
		BENT NO. 5		1,092.0				6					111	54
		303'-0" CONT. COMP. W-BEAM UNIT				192	1						471	1,361
		EXISTING BRIDGE NO. 05692 (SITE NO. 1)							208	1	1	1	1,036	
		TOTALS FOR BRIDGE NO. 05692		9,156.0	-	192	1	115	208	-	-	-	3,770	1,469
07379	HWY. 112 TO NB I-49 OVER NB I-49 TO HWY. 71B	BENT NO. 1		7,560.0				90					661	130
		BENT NO. 2		6,264.0									146	
		BENT NO. 3		6,264.0									158	
		BENT NO. 4		7,560.0				71					520	147
		536'-0" CONT. COMP. PLATE GIRDER UNIT			92		1						904	3,194
		TOTALS FOR BRIDGE NO. 07379		27,648.0	92	-	1	161	-	-	-	-	2,389	3,471
A7380	INTERSTATE 49 OVER HWY. 71B	BENT NO. 1		7,854.0				47					419	80
		BENT NO. 2		7,098.0									208	
		BENT NO. 3		7,854.0				92					659	50
		364'-0" CONT. COMP. PLATE GIRDER UNIT				155	1						611	2,170
		TOTALS FOR BRIDGE NO. A7380		22,806.0	-	155	1	139	-	-	-	-	1,897	2,300
B7380	INTERSTATE 49 OVER HWY. 71B	BENT NO. 1		5,582.5				66					522	59
		BENT NO. 2		3,959.0									207	
		BENT NO. 3		5,582.5				125					904	59
		306'-0" CONT. COMP. PLATE GIRDER UNIT				148	1						519	914
		TOTALS FOR BRIDGE NO. B7380		15,124.0	-	148	1	191	-	-	-	-	2,152	1,032
A7381	INTERSTATE 49 OVER VAN ASCHE DR.	BENT NO. 1		4,827.0				29					211	35
		BENT NO. 2		5,940.0				3					47	35
		118'-0" COMP. PLATE GIRDER SPAN				165	1						108	353
		EXISTING BRIDGE NO. A5918 (SITE NO. 6)										1		
		TOTALS FOR BRIDGE NO. A7381		10,767.0	-	165	1	32	-	-	-	-	366	423
B7381	INTERSTATE 49 OVER VAN ASCHE DR.	BENT NO. 1		5,899.0				3					49	35
		BENT NO. 2		7,260.0				4					48	35
		118'-0" COMP. PLATE GIRDER SPAN				192	1						100	353
		EXISTING BRIDGE NO. B5918 (SITE NO. 5)										1		
		TOTALS FOR BRIDGE NO. B7381		13,159.0	-	192	1	7	-	-	-	-	197	423
		TOTALS FOR JOB BB0414		98,660.0	92	852	6	645	208	-	-	-	10,771	9,118

(1) Paint shall conform to Federal Standard 595B, Color Chip No. 30070, Brown, unless noted otherwise.

STATE OF ARKANSAS ★★★ LICENSED PROFESSIONAL ENGINEER ★★★ No. 14498 4-27-16 ADAM B. HALL

BRIDGE ENGINEER

SHEET 2 OF 2
SCHEDULE OF BRIDGE QUANTITIES
PORTER RD. - HWY. 112/71B
WIDENING & INTCHNG. IMPVTS. (S)
WASHINGTON COUNTY

ROUTE SEC.

ARKANSAS STATE HIGHWAY COMMISSION
LITTLE ROCK, ARK.

DRAWN BY: CWT DATE: NOV. 2014 FILENAME: BBB0414_02.dgn
CHECKED BY: ABH DATE: JAN. 2016 SCALE: NONE
DESIGNED BY: JES DATE: NOV. 2014
BRIDGE NO. 05692, 07379, A7380, B7380, A7381, B7381 DRAWING NO. 58098

abhall 4/27/2016 3:02:49 PM
WORKSPACE: AHTD Bridge
L:\2014\140707 - I-540 Widening & Interchange Improvement\Drawings\540-PROJECT-S002-01.dgn
REVISED DATE:

SUMMARY OF QUANTITIES (BOX 1 OF 3)

ITEM NUMBER	ITEM	QUANTITY	UNIT
201	CLEARING	164	STA.
201	GRUBBING	164	STA.
202	REMOVAL AND DISPOSAL OF APPROACH SLABS	4	EACH
202	REMOVAL AND DISPOSAL OF APPROACH GUTTERS	14	EACH
202	REMOVAL AND DISPOSAL OF CONCRETE DITCH PAVING	4441	SQ. YD.
202	REMOVAL AND DISPOSAL OF CONCRETE PAVEMENT	260	SQ. YD.
202	REMOVAL AND DISPOSAL OF CURB	905	L.F.
202	REMOVAL AND DISPOSAL OF DROP INLETS	12	EACH
202	REMOVAL AND DISPOSAL OF FENCE	11588	L.F.
202	REMOVAL AND DISPOSAL OF GATES	4	EACH
202	REMOVAL AND DISPOSAL OF WALLS	12	L.F.
SP & 202	REMOVAL AND DISPOSAL OF GUARDRAIL	2482	L.F.
202	REMOVAL AND DISPOSAL OF BOLLARDS	3	EACH
202	REMOVAL AND DISPOSAL OF MAILBOXES	3	EACH
202	REMOVAL AND DISPOSAL OF PLANTERS	2	EACH
202	REMOVAL AND DISPOSAL OF PIPE CULVERTS	15	EACH
202	REMOVAL AND DISPOSAL OF SIGNS	22	EACH
202	REMOVAL AND DISPOSAL OF SIGN FOUNDATIONS	35	EACH
202	REMOVAL AND DISPOSAL OF OVERHEAD SIGN STRUCTURE	3	EACH
SP & 202	REMOVAL AND DISPOSAL OF WIRE ROPE SAFETY FENCE	9991	L.F.
202	REMOVAL AND DISPOSAL OF CRASH CUSHIONS	2	EACH
206	FLOWABLE SELECT MATERIAL	209	CU. YD.
210	UNCLASSIFIED EXCAVATION	200885	CU. YD.
SP & 210	COMPACTED EMBANKMENT	511527	CU. YD.
SP	ROCK FILL	80245	CU. YD.
SP & 210	SOIL STABILIZATION	100	TON
SS & 303	AGGREGATE BASE COURSE (CLASS 7)	275721	TON
309	PORTLAND CEMENT CONCRETE BASE (6" UNIFORM THICKNESS)	151	SQ. YD.
309	PORTLAND CEMENT CONCRETE BASE (6 1/2" UNIFORM THICKNESS)	54	SQ. YD.
SS & 401	TACK COAT	55481	GAL.
SP & 405	MINERAL AGGREGATE IN ACHM BASE COURSE (1 1/2")	81034	TON
SP & 405	ASPHALT BINDER (PG 76-22) IN ACHM BASE COURSE (1 1/2")	3641	TON
SP, SS, & 406	MINERAL AGGREGATE IN ACHM BINDER COURSE (1")	44875	TON
SP, SS, & 406	ASPHALT BINDER (PG 76-22) IN ACHM BINDER COURSE (1")	2213	TON
SP, SS, & 407	MINERAL AGGREGATE IN ACHM SURFACE COURSE (1/2")	57700	TON
SP, SS, & 407	ASPHALT BINDER (PG 64-22) IN ACHM SURFACE COURSE (1/2")	7	TON
SP, SS, & 407	ASPHALT BINDER (PG 76-22) IN ACHM SURFACE COURSE (1/2")	3351	TON
SP & 412	COLD MILLING ASPHALT PAVEMENT	18174	SQ. YD.
SP & 414	ASPHALT CONCRETE PATCHING FOR MAINTENANCE OF TRAFFIC	145	TON
SP & 415	ACHM PATCHING OF EXISTING ROADWAY	200	TON
504	APPROACH SLABS	1409.79	CU. YD.
504	APPROACH GUTTERS	270.11	CU. YD.
505	PORTLAND CEMENT CONCRETE DRIVEWAY	1364.12	SQ. YD.
601	MOBILIZATION	1.00	L.S.
SP & 602	FURNISHING FIELD OFFICE	1	EACH
SP & 603	MAINTENANCE OF TRAFFIC	1.00	L.S.
603	18" TEMPORARY CULVERT	98	L.F.
603	24" TEMPORARY CULVERT	334	L.F.
603	TRAFFIC CONTROL SUPERVISOR	1.00	L.S.
SS & 604	SIGNS	3941	SQ. FT.
SS & 604	VERTICAL PANELS	106	EACH
SS & 604	TRAFFIC DRUMS	658	EACH
SS & 604	BARRICADES	72	L.F.
604	FURNISHING AND INSTALLING PRECAST CONCRETE BARRIER	35992	L.F.
604	RELOCATING PRECAST CONCRETE BARRIER	68957	L.F.
604	REMOVABLE CONSTRUCTION PAVEMENT MARKINGS	15076	L.F.
604	REMOVAL OF PERMANENT PAVEMENT MARKINGS	43296	L.F.
604	REMOVAL OF CONSTRUCTION PAVEMENT MARKINGS	111895	L.F.
SP & 604	PORTABLE CHANGEABLE MESSAGE SIGN	700	WEEK
604	ADVANCE WARNING ARROW PANEL	900	DAY
SP	MOBILE SPEED NOTIFICATION SYSTEM	2	EACH
604	CONSTRUCTION PAVEMENT MARKINGS	326259	L.F.
605	CONCRETE DITCH PAVING (TYPE B)	4368	SQ. YD.
606	18" REINFORCED CONCRETE PIPE CULVERTS (CLASS III)	412	L.F.
606	24" REINFORCED CONCRETE PIPE CULVERTS (CLASS III)	6014	L.F.
606	24" REINFORCED CONCRETE PIPE CULVERTS (CLASS IV)	177	L.F.
SP & 606	24" REINFORCED CONCRETE PIPE CULVERTS (CLASS V)	246	L.F.
606	30" REINFORCED CONCRETE PIPE CULVERTS (CLASS III)	496	L.F.
606	36" REINFORCED CONCRETE PIPE CULVERTS (CLASS III)	573	L.F.
606	42" REINFORCED CONCRETE PIPE CULVERTS (CLASS III)	104	L.F.
606	42" REINFORCED CONCRETE PIPE CULVERTS (CLASS IV)	288	L.F.
606	18" FLARED END SECTIONS FOR REINFORCED CONCRETE PIPE CULVERTS	3	EACH
606	24" FLARED END SECTIONS FOR REINFORCED CONCRETE PIPE CULVERTS	19	EACH
606	30" FLARED END SECTIONS FOR REINFORCED CONCRETE PIPE CULVERTS	5	EACH
606	36" FLARED END SECTIONS FOR REINFORCED CONCRETE PIPE CULVERTS	8	EACH
606	42" FLARED END SECTIONS FOR REINFORCED CONCRETE PIPE CULVERTS	5	EACH
606	22" X 14" REINFORCED CONCRETE ARCH PIPE CULVERTS (CLASS III)	160	L.F.
606	22" X 14" REINFORCED CONCRETE ARCH PIPE CULVERTS (CLASS IV)	79	L.F.
606	29" X 18" REINFORCED CONCRETE ARCH PIPE CULVERTS (CLASS III)	25	L.F.
606	36" X 23" REINFORCED CONCRETE ARCH PIPE CULVERTS (CLASS III)	409	L.F.
606	22" X 14" FLARED END SECTIONS FOR REINFORCED CONCRETE ARCH PIPE CULVERTS	1	EACH
606	29" X 18" FLARED END SECTIONS FOR REINFORCED CONCRETE ARCH PIPE CULVERTS	1	EACH
606	12" ZINC COATED (GALVANIZED) CORRUGATED STEEL PIPE CULVERTS (16 GAUGE)	99	L.F.
606	SELECTED PIPE BEDDING	100	CU. YD.
609	DROP INLETS (TYPE MO)	18	EACH
609	DROP INLETS (TYPE N2)	2	EACH
609	DROP INLETS (TYPE RM)	18	EACH
609	DROP INLETS (TYPE SPECIAL)	1	EACH
609	DROP INLETS (TYPE ST)	63	EACH
609	DROP INLETS (TYPE TM)	9	EACH
609	JUNCTION BOXES (TYPE E)	2	EACH
609	JUNCTION BOXES (TYPE ST)	3	EACH
609	DROP INLET EXTENSIONS (4')	4	EACH
609	DROP INLET EXTENSIONS (8')	3	EACH
611	UNDERDRAIN OUTLET PROTECTORS	132	EACH
611	4" PIPE UNDERDRAINS	30965	L.F.
614	CONCRETE SPILLWAY (TYPE A)	2	EACH
615	PAVEMENT REPAIR OVER CULVERTS (CONCRETE)	90.1	CU. YD.
615	PAVEMENT REPAIR OVER CULVERTS (ASPHALT)	234	TON
617	GUARDRAIL (TYPE A)	5450	L.F.
617	TERMINAL ANCHOR POSTS (TYPE 1)	9	EACH
617	GUARDRAIL TERMINAL (TYPE 2)	23	EACH
617	THRIE BEAM GUARDRAIL TERMINAL	18	EACH
619	WIRE FENCE (TYPE A)	9219	L.F.

STATE OF ARKANSAS
CHRISTOPHER P. CANTABERY
No. 13422
REGISTERED PROFESSIONAL ENGINEER
4-22-16

DATE REVISED	DATE FILMED	DATE REVISED	DATE FILMED

(2)

FED.RD. DIST.NO.	STATE	FED.AID PROJ.NO.	SHEET NO.	TOTAL SHEETS
6	ARK.	BB0414	258	886

JOB NO.

SUMMARY OF QUANTITIES

SUMMARY OF QUANTITIES

SUMMARY OF QUANTITIES (BOX 2 OF 3)

	ITEM NUMBER	ITEM		QUANTITY	UNIT
*	619	16' STEEL GATES	(ALTERNATE NO. 1)	2	EACH
*	619	16' ALUMINUM GATES	(ALTERNATE NO. 2)	2	EACH
	620	LIME		107	TON
	620	SEEDING		53.70	ACRE
	SS & 620	MULCH COVER		121.11	ACRE
	620	WATER		6884.4	M.G.
	621	TEMPORARY SEEDING		67.41	ACRE
	621	SILT FENCE		23339	L.F.
	621	SAND BAG DITCH CHECKS		2970	BAG
	621	DROP INLET SILT FENCE		1720	L.F.
	621	SEDIMENT BASIN		100	CU. YD.
	621	OBLITERATION OF SEDIMENT BASIN		100	CU. YD.
	621	SEDIMENT REMOVAL AND DISPOSAL		1219	CU. YD.
	621	ROCK DITCH CHECKS		201	CU. YD.
	SP & 621	TRIANGULAR SILT DIKE		200	L.F.
	623	SECOND SEEDING APPLICATION		53.70	ACRE
	624	SOLID SODDING		2430	SQ. YD.
	SP & 625	GEOTEXTILE FABRIC (TYPE 5)		52331	SQ. YD.
	628	TOPSOIL FURNISHED AND PLACED		20000	CU. YD.
	631	CONCRETE BARRIER WALL (MEDIAN TYPE C)		15236	L.F.
	631	CONCRETE BARRIER WALL (MEDIAN TYPE SP-1)		294	L.F.
	631	CONCRETE BARRIER WALL (MEDIAN TYPE SP-2)		50	L.F.
	SP & 631	CONCRETE BARRIER WALL (SIDE TYPE E)		6412	L.F.
	SP & 631	CONCRETE BARRIER WALL (SIDE TYPE SPECIAL)		361	L.F.
	631	CONCRETE BARRIER WALL (PARAPET TYPE SPECIAL 1)		1662	L.F.
	631	CONCRETE BARRIER WALL (PARAPET TYPE SPECIAL 2)		259	L.F.
	631	CONCRETE BARRIER WALL (PARAPET TYPE SPECIAL 3)		160	L.F.
	631	CONCRETE BARRIER WALL (PARAPET TYPE SPECIAL 4)		1621	L.F.
	631	CONCRETE BARRIER WALL (PARAPET TYPE SPECIAL 5)		2731	L.F.
	SP	MODIFICATION OF EXISTING BARRIER WALL		654	L.F.
	632	CONCRETE ISLAND		265	SQ. YD.
	633	CONCRETE WALKS		2520	SQ. YD.
	634	CONCRETE COMBINATION CURB AND GUTTER (TYPE A) (1'6")		5830	L.F.
	635	ROADWAY CONSTRUCTION CONTROL		1.00	L.S.
	637	MAILBOX SUPPORTS (SINGLE)		3	EACH
	637	MAILBOXES		3	EACH
	640	MODIFYING DROP INLETS		5	EACH
	641	WHEELCHAIR RAMPS (TYPE 3)		152	SQ. YD.
	642	RUMBLE STRIPS IN ASPHALT SHOULDERS		58909	L.F.
	SP & 701	SYSTEM LOCAL CONTROLLER TS 2-TYPE 2 (8 PHASES)		4	EACH
	SP & 706	TRAFFIC SIGNAL HEAD, LED, (3 SECTION, 1 WAY)		37	EACH
	SP & 706	TRAFFIC SIGNAL HEAD, LED, (4 SECTION, 1 WAY)		8	EACH
	SP & 707	COUNTDOWN PEDESTRIAN SIGNAL HEAD, LED		22	EACH
	708	TRAFFIC SIGNAL CABLE (5C/14 A.W.G.)		5348	LIN. FT.
	708	TRAFFIC SIGNAL CABLE (7C/14 A.W.G.)		404	LIN. FT.
	708	TRAFFIC SIGNAL CABLE (12C/14 A.W.G.)		1369	LIN. FT.
	708	TRAFFIC SIGNAL CABLE (20C/14 A.W.G.)		1173	LIN. FT.
	709	GALVANIZED STEEL CONDUIT (1.25")		100	LIN. FT.
	710	NON-METALLIC CONDUIT (2")		187	LIN. FT.
	710	NON-METALLIC CONDUIT (3")		1930	LIN. FT.
	711	CONCRETE PULL BOX (TYPE 1)		1	EACH
	711	CONCRETE PULL BOX (TYPE 2)		5	EACH
	711	CONCRETE PULL BOX (TYPE 1 HD)		1	EACH
	711	CONCRETE PULL BOX (TYPE 2 HD)		24	EACH
	714	TRAFFIC SIGNAL MAST ARM AND POLE WITH FOUNDATION (28')		1	EACH
	714	TRAFFIC SIGNAL MAST ARM AND POLE WITH FOUNDATION (38')		2	EACH
	714	TRAFFIC SIGNAL MAST ARM AND POLE WITH FOUNDATION (44')		2	EACH
	714	TRAFFIC SIGNAL MAST ARM AND POLE WITH FOUNDATION (46')		2	EACH
	714	TRAFFIC SIGNAL MAST ARM AND POLE WITH FOUNDATION (48')		1	EACH
	714	TRAFFIC SIGNAL MAST ARM AND POLE WITH FOUNDATION (52')		2	EACH
	714	TRAFFIC SIGNAL MAST ARM AND POLE WITH FOUNDATION (54')		1	EACH
	714	TRAFFIC SIGNAL MAST ARM AND POLE WITH FOUNDATION (42'-32')		1	EACH
	714	TRAFFIC SIGNAL MAST ARM AND POLE WITH FOUNDATION (66'-38')		1	EACH
	715	TRAFFIC SIGNAL PEDESTAL POLE WITH FOUNDATION		14	EACH
	718	REFLECTORIZED PAINT PAVEMENT MARKING WHITE (10")		482	L.F.
	719	THERMOPLASTIC PAVEMENT MARKING WHITE (4")		3552	L.F.
	719	THERMOPLASTIC PAVEMENT MARKING WHITE (6")		40	L.F.
	719	THERMOPLASTIC PAVEMENT MARKING WHITE (8")		1081	L.F.
	719	THERMOPLASTIC PAVEMENT MARKING WHITE (12")		2233	L.F.
	719	THERMOPLASTIC PAVEMENT MARKING YELLOW (4")		8239	L.F.
	719	THERMOPLASTIC PAVEMENT MARKING YELLOW (12")		85	L.F.
	719	THERMOPLASTIC PAVEMENT MARKING (WORDS)		19	EACH
	719	THERMOPLASTIC PAVEMENT MARKING (ARROWS)		21	EACH
*	SP & 719	INVERTED PROFILE THERMOPLASTIC PAVEMENT MARKING WHITE (4")	(ALTERNATE NO. 1)	52041	L.F.
*	SP	HIGH PERFORMANCE MARKING TAPE WHITE (4")	(ALTERNATE NO. 2)	52041	L.F.
*	SP & 719	INVERTED PROFILE THERMOPLASTIC PAVEMENT MARKING (SKIP LINE) WHITE (4")	(ALTERNATE NO. 1)	18499	L.F.
*	SP	HIGH PERFORMANCE MARKING TAPE (SKIP LINE) WHITE (4")	(ALTERNATE NO. 2)	18499	L.F.
*	SP & 719	INVERTED PROFILE THERMOPLASTIC PAVEMENT MARKING WHITE (8")	(ALTERNATE NO. 1)	6679	L.F.
*	SP	HIGH PERFORMANCE MARKING TAPE WHITE (8")	(ALTERNATE NO. 2)	6679	L.F.
*	SP & 719	INVERTED PROFILE THERMOPLASTIC PAVEMENT MARKING (SKIP LINE) WHITE (8")	(ALTERNATE NO. 1)	3992	L.F.
*	SP	HIGH PERFORMANCE MARKING TAPE (SKIP LINE) WHITE (8")	(ALTERNATE NO. 2)	3992	L.F.
*	SP& 719	INVERTED PROFILE THERMOPLASTIC PAVEMENT MARKING YELLOW (4")	(ALTERNATE NO. 1)	52066	L.F.
*	SP	HIGH PERFORMANCE MARKING TAPE YELLOW (4")	(ALTERNATE NO. 2)	52066	L.F.
*	SP & 719	INVERTED PROFILE THERMOPLASTIC CONTRAST PAVEMENT MARKING WHITE (4")	(ALTERNATE NO. 1)	3435	L.F.
*	SP	HIGH PERFORMANCE CONTRAST MARKING TAPE WHITE (4")	(ALTERNATE NO. 2)	3435	L.F.
*	SP & 719	INVERTED PROFILE THERMOPLASTIC CONTRAST PAVEMENT MARKING WHITE (8")	(ALTERNATE NO. 1)	267	L.F.
*	SP	HIGH PERFORMANCE CONTRAST MARKING TAPE WHITE (8")	(ALTERNATE NO. 2)	267	L.F.
*	SP & 719	INVERTED PROFILE THERMOPLASTIC CONTRAST PAVEMENT MARKING YELLOW (4")	(ALTERNATE NO. 1)	3256	L.F.
*	SP	HIGH PERFORMANCE CONTRAST MARKING TAPE YELLOW (4")	(ALTERNATE NO. 2)	3256	L.F.
	721	RAISED PAVEMENT MARKERS (TYPE II)		3415	EACH
	SP	OMNI-DIRECTIONAL BREAKAWAY SIGN SUPPORTS (TYPE G-1)		154	EACH
	SP	OMNI-DIRECTIONAL BREAKAWAY SIGN SUPPORTS (TYPE G-2)		11	EACH
	SP	OMNI-DIRECTIONAL BREAKAWAY SIGN SUPPORTS (TYPE G2-1)		24	EACH
	SP	OMNI-DIRECTIONAL BREAKAWAY SIGN SUPPORTS (TYPE G2-2)		8	EACH
	SP	OMNI-DIRECTIONAL BREAKAWAY SIGN SUPPORTS (TYPE G2-3)		4	EACH
	SP	STEEL OVERHEAD SIGN STRUCTURE (OH-049-72-01)		1	EACH
	SP	STEEL OVERHEAD SIGN STRUCTURE (OH-049-72-02)		1	EACH
	SP	STEEL OVERHEAD SIGN STRUCTURE (OH-049-72-03)		1	EACH
	SP	STEEL OVERHEAD SIGN STRUCTURE (OH-049-72-06)		1	EACH
	SP	STEEL OVERHEAD SIGN STRUCTURE (OH-049-72-07)		1	EACH
	SP	STEEL OVERHEAD SIGN STRUCTURE (OH-049-72-09)		1	EACH
	SP	STEEL OVERHEAD SIGN STRUCTURE (OH-071-72-03)		1	EACH
	SP	STEEL OVERHEAD SIGN STRUCTURE (OH-071-72-04)		1	EACH
	SP	STEEL CANTILEVER SIGN STRUCTURE (CL-049-72-04)		1	EACH
	SP	STEEL CANTILEVER SIGN STRUCTURE (CL-049-72-05)		1	EACH
	SP	STEEL CANTILEVER SIGN STRUCTURE (CL-049-72-08)		1	EACH

* DENOTES ALTERNATE BID ITEMS

SUMMARY OF QUANTITIES

STATE OF ARKANSAS
JOHN F. CANTABERY
No. 13422
REGISTERED PROFESSIONAL ENGINEER
8-1-16

DATE REVISED	DATE FILMED	DATE REVISED	DATE FILMED	FED.RD. DIST.NO.	STATE	FED.AID PROJ.NO.	SHEET NO.	TOTAL SHTS.
8-01-16				6	ARK.	BB04I4	259	8

(2) SUMMARY OF QUANTITIES

JOB NO.

SUMMARY OF QUANTITIES (BOX 3 OF 3)

ITEM NUMBER	ITEM	QUANTITY	UNIT
SP	STEEL BRIDGE MOUNTED SIGN STRUCTURE (BM-071-72-01)	1	EACH
SP	STEEL BRIDGE MOUNTED SIGN STRUCTURE (BM-071-72-02)	1	EACH
SP & 725	GUIDE SIGN-ROADSIDE MOUNTED (DEMOUNTABLE LEGEND)	3677	SQ. FT.
SP & 725	GUIDE SIGN-OVERHEAD MOUNTED (DEMOUNTABLE LEGEND)	4272	SQ. FT.
SP & 726	STANDARD SIGN	2963	SQ. FT.
SP & 727	EXIT NUMBER PANEL (TYPE A)	95	SQ. FT.
SP & 727	EXIT NUMBER PANEL (TYPE B)	184	SQ. FT.
SP & 727	EXIT NUMBER PANEL (TYPE C)	105	SQ. FT.
728	DELINEATOR (TYPE 1)	249	EACH
SP & 729	CHANNEL POST SIGN SUPPORT (TYPE U-1)	27	EACH
SP & 729	CHANNEL POST SIGN SUPPORT (TYPE U-2)	3	EACH
SP & 729	CHANNEL POST SIGN SUPPORT (TYPE U-2(A))	2	EACH
SP & 729	CHANNEL POST SIGN SUPPORT (TYPE U-2(B))	1	EACH
SP & 729	CHANNEL POST SIGN SUPPORT (TYPE U-2(7))	1	EACH
730	BREAKAWAY SIGN SUPPORT (TYPE G-1)	140	POUND
730	BREAKAWAY SIGN SUPPORT (TYPE G-2)	21452	POUND
730	BREAKAWAY SIGN SUPPORT (TYPE G-3)	4027	POUND
730	BREAKAWAY SIGN SUPPORT (TYPE G2-4)	922	POUND
730	BREAKAWAY SIGN SUPPORT (TYPE G2-5)	530	POUND
731	TEMPORARY IMPACT ATTENUATION BARRIER	11	EACH
731	TEMPORARY IMPACT ATTENUATION BARRIER (RELOCATION)	31	EACH
731	TEMPORARY IMPACT ATTENUATION BARRIER (REPAIR)	43	EACH
SP & 733	VEHICLE DETECTOR RACK (16 CHANNEL)	3	EACH
SP & 733	VEHICLE DETECTOR RACK (20 CHANNEL)	1	EACH
733	VIDEO CABLE	4395	LIN. FT.
SP & 733	VIDEO DETECTOR (CLR)	24	EACH
733	VIDEO MONITOR (CLR)	4	EACH
SP & 733	VIDEO PROCESSOR, EDGE CARD (2 CAMERA)	15	EACH
SP & 733	VIDEO EDGE CARD EXTENDER	3	EACH
SP	ANTENNA CABLE (TYPE 6)	197	LIN. FT.
SP	ELECTRICAL CONDUCTORS-IN-CONDUIT (2C/6 A.W.G.)	100	LIN. FT.
SP	ELECTRICAL CONDUCTORS-IN-CONDUIT (1C/8 A.W.G, E.G.C.)	2425	LIN. FT.
SP	ELECTRICAL CONDUCTORS-IN-CONDUIT (1C/12 A.W.G, E.G.C.)	610	LIN. FT.
SP	ELECTRICAL CONDUCTORS FOR LUMINAIRES	2254	LIN. FT.
SP	LOCAL RADIO WITH ANTENNA	4	EACH
SP	LED LUMINAIRE ASSEMBLY	12	EACH
SP	REMOVAL OF TRAFFIC SIGNAL EQUIPMENT	1.00	L.S.
SP	SERVICE POINT ASSEMBLY (2 CIRCUITS)	4	EACH
SP	18" STREET NAME SIGN	14	EACH
801	UNCLASSIFIED EXCAVATION FOR STRUCTURES-ROADWAY	550	CU. YD.
802	CLASS S CONCRETE-ROADWAY	1319.20	CU. YD.
SP	TEMPORARY RETAINING WALL	4355	SQ. FT.
SP	SHORING (WALL NO. 9)	1.00	L.S.
SP	TEXTURED COATING FINISH	4730	SQ. YD.
804	REINFORCING STEEL-ROADWAY (GRADE 60)	328981	LB.
SP	MSE RETAINING WALL	65403	SQ. FT.
SP	SOIL NAIL WALL	2797	SQ. FT.
SP	SELECT GRANULAR BACKFILL	28408	CU. YD.
SP	AWIS MOBILIZATION	1.00	L.S.
SP	AWIS OPERATION	39	MONTH
SP	DEVICE RELOCATION	17	EACH
SP	FURNISH AND INSTALL CLOSED CIRCUIT TELEVISION SYSTEM	2	EACH
SP	FURNISH AND INSTALL PUBLIC NOTIFICATION SYSTEM	2	EACH
SP	FURNISH AND INSTALL VARIABLE MESSAGE SIGN	7	EACH
SP	FURNISH AND INSTALL VEHICLE DETECTION SYSTEM	24	EACH
	STRUCTURES OVER 20' SPAN		
205	REMOVAL OF EXISTING BRIDGE STRUCTURE (SITE NO. 5)	1.00	L.S.
205	REMOVAL OF EXISTING BRIDGE STRUCTURE (SITE NO. 6)	1.00	L.S.
636	BRIDGE CONSTRUCTION CONTROL	1.00	L.S.
801	ROCK EXCAVATION FOR STRUCTURES - BRIDGE	167	CU. YD.
SP & 801	UNCLASSIFIED EXCAVATION FOR STRUCTURES-BRIDGE	1539	CU. YD.
SP & 802	CLASS S CONCRETE-BRIDGE	2158.70	CU. YD.
SP & 802	CLASS S(AE) CONCRETE-BRIDGE	3125.00	CU. YD.
803	CLASS 2 PROTECTIVE SURFACE TREATMENT	11054.2	SQ. YD.
804	REINFORCING STEEL-BRIDGE (GRADE 60)	468630	LB.
804	EPOXY COATED REINFORCING STEEL (GRADE 60)	704330	LB.
805	STEEL PILING (HP 12X53)	5115	L.F.
805	STEEL PILING (HP 14X73)	2129	L.F.
805	PREBORING	568	L.F.
806	METAL BRIDGE RAILING (TYPE H2)	637	L.F.
806	TRANSITIONAL APPROACH RAILING	4	EACH
SP & 807	STRUCTURAL STEEL IN PLATE GIRDER SPANS (M270-GR50W)	4019920	LB.
SP & 807	STRUCTURAL STEEL IN BEAM SPANS (M270-GR50W)	257340	LB.
808	ELASTOMERIC BEARINGS	98660.0	CU. IN.
809	ARMORED JOINT WITH NEOPRENE STRIP SEAL	92	L.F.
809	SILICONE JOINT SEALANT	852	L.F.
812	BRIDGE NAME PLATE (TYPE D)	6	EACH
816	CONCRETE RIPRAP	645	CU. YD.
SP & 820	CLEANING AND PAINTING EXISTING STRUCTURAL STEEL (TYPE II)	208	TON
820	DISPOSAL OF HAZARDOUS WASTE (SITE NO. 1)	1.00	L.S.
821	MODIFICATION OF EXISTING BRIDGE STRUCTURE (BRIDGE NO. 05692)	1.00	L.S.
SP	SHORING (SITE NO. 1)	1.00	L.S.
SP	SHORING (SITE NO. 5)	1.00	L.S.
SP	SHORING (SITE NO. 6)	1.00	L.S.
SP	TEXTURED COATING FINISH	10771	SQ. YD.
SP	ARCHITECTURAL FINISH	9118	SQ. FT.

REVISIONS

DATE	REVISION	SHEET NUMBER
6-23-16	REVISED DELAY IN RIGHT OF WAY OCCUPANCY SP & PERCENT WITHIN LIMITS/PAVEMENT SMOOTHNESS SP	260
6-29-16	REVISED MAINTENANCE OF TRAFFIC SP	260
7-28-16	REVISED SITE-USE (A+C METHOD) - CALENDAR DAY CONTRACT SP	260
8-01-16	REVISED "CONCRETE BARRIER WALL (MEDIAN TYPE C)" QUANTITY; REMOVED "CONCRETE BARRIER WALL (MEDIAN TYPE SP-3)" QUANTITY; REVISED PILE SIZE SHOWN FOR BRIDGES A7380 & B7380 INT. BENTS; REVISED RETAINING WALL NO. 1 CALL-OUTS AND NOTES; REVISED MSE RETAINING WALLS SP	245, 259, 260, 466, 467, 468, 554, 564
8-02-16	REVISED GENERAL NOTE NO. 7 ON SHEET NO. 72	72, 260

STATE OF ARKANSAS JOHN P. CANTABERY No. 13422 REGISTERED PROFESSIONAL ENGINEER

8-2-16

DATE REVISED	DATE FILMED	DATE REVISED	DATE FILMED
6-23-16		8-01-16	
6-29-16		8-02-16	
7-28-16			

(2)

FED.RD. DIST.NO.	STATE	FED.AID PROJ.NO.	SHEET NO.	TOTAL SHEETS
6	ARK.			
JOB NO.				
BB0414			260	886

SUMMARY OF QUANTITIES AND REVISIONS

SUMMARY OF QUANTITIES AND REVISIONS

DATE REVISED	DATE FILMED	DATE REVISED	DATE FILMED	FED.RD. DIST.NO.	STATE	FED.AID PROJ.NO.	SHEET NO.	TOTAL SHEETS
				6	ARK.			
				JOB NO.		BB0414	261	886

(2) SURVEY CONTROL DETAILS

MIDPOINT:
LT: 36-05-05.3
LG: 094-11-48.8

SURVEY CONTROL COORDINATES

Project Name: s040605
Date: 9/29/2011
Coordinate System: ARKANSAS STATE PLANE - NORTH ZONE BASED ON GPS CONTROL, PROJECTED TO GROUND.
Units: U.S. SURVEY FOOT

Point Name	Northing	Easting	Elev	Feature	Description
1	630410.3757	664812.6446	1269.279	CTL	5/8" Rebar with 2" Aluminum Cap
2	631656.0335	664523.3552	1262.840	CTL	5/8" Rebar with 2" Aluminum Cap
3	632478.4613	664202.6173	1257.815	CTL	5/8" Rebar with 2" Aluminum Cap
4	633450.7938	663742.5099	1279.296	CTL	5/8" Rebar with 2" Aluminum Cap
5	633898.9316	664910.6994	1270.748	CTL	5/8" Rebar with 2" Aluminum Cap
6	633627.0246	664142.0462	1265.416	CTL	5/8" Rebar with 2" Aluminum Cap
7	633518.0523	663407.1715	1262.116	CTL	5/8" Rebar with 2" Aluminum Cap
8	633234.3302	662465.1187	1272.581	CTL	5/8" Rebar with 2" Aluminum Cap
9	634622.8893	663200.0585	1272.175	CTL	5/8" Rebar with 2" Aluminum Cap
10	635419.0692	662884.5908	1285.011	CTL	5/8" Rebar with 2" Aluminum Cap
11	636118.7931	662598.4150	1297.345	CTL	5/8" Rebar with 2" Aluminum Cap
12	636904.5223	662414.4759	1308.689	CTL	5/8" Rebar with 2" Aluminum Cap
13	637799.0836	662051.5256	1317.294	CTL	5/8" Rebar with 2" Aluminum Cap
14	638781.9309	661661.9346	1309.535	CTL	5/8" Rebar with 2" Aluminum Cap
15	639607.5524	661479.9249	1292.580	CTL	5/8" Rebar with 2" Aluminum Cap
16	640702.4582	661525.4144	1269.766	CTL	5/8" Rebar with 2" Aluminum Cap
17	641465.1409	661761.2031	1257.262	CTL	5/8" Rebar with 2" Aluminum Cap
18	642383.0905	662098.4537	1253.417	CTL	5/8" Rebar with 2" Aluminum Cap
19	642332.8502	663729.9868	1241.051	CTL	5/8" Rebar with 2" Aluminum Cap
20	642395.3592	662539.4315	1257.251	CTL	5/8" Rebar with 2" Aluminum Cap
21	642542.0960	661673.8951	1267.444	CTL	5/8" Rebar with 2" Aluminum Cap
22	642507.6650	660564.2388	1258.599	CTL	5/8" Rebar with 2" Aluminum Cap
23	643326.7632	662447.0173	1251.565	CTL	5/8" Rebar with 2" Aluminum Cap
24	644140.4015	662944.8592	1234.710	CTL	5/8" Rebar with 2" Aluminum Cap
25	644815.3314	663286.8506	1236.996	CTL	5/8" Rebar with 2" Aluminum Cap
26	645900.2393	664023.6765	1252.114	CTL	5/8" Rebar with 2" Aluminum Cap
27	646632.9923	664459.9824	1262.682	CTL	5/8" Rebar with 2" Aluminum Cap
28	645315.0527	664504.7902	1250.820	CTL	5/8" Rebar with 2" Aluminum Cap
29	645946.4647	664518.4409	1268.752	CTL	5/8" Rebar with 2" Aluminum Cap
30	646562.1668	664549.4368	1244.683	CTL	5/8" Rebar with 2" Aluminum Cap
31	647218.6188	664520.8881	1265.689	CTL	5/8" Rebar with 2" Aluminum Cap
32	647649.0986	664294.7090	1268.315	CTL	5/8" Rebar with 2" Aluminum Cap
33	647630.8910	663612.8375	1267.538	CTL	5/8" Rebar with 2" Aluminum Cap
34	647457.6035	664954.5613	1272.289	CTL	5/8" Rebar with 2" Aluminum Cap
35	648155.4761	665573.0038	1283.477	CTL	5/8" Rebar with 2" Aluminum Cap
36	648852.0004	666053.5650	1292.983	CTL	5/8" Rebar with 2" Aluminum Cap
37	649659.0172	666606.3684	1288.283	CTL	5/8" Rebar with 2" Aluminum Cap
38	650432.4829	667136.2451	1260.989	CTL	5/8" Rebar with 2" Aluminum Cap
39	651465.5406	667853.3224	1228.173	CTL	5/8" Rebar with 2" Aluminum Cap
40	652101.4961	668178.7263	1225.284	CTL	5/8" Rebar with 2" Aluminum Cap
41	652217.7648	667681.2493	1225.892	CTL	5/8" Rebar with 2" Aluminum Cap
42	652677.6781	668496.7121	1234.747	CTL	5/8" Rebar with 2" Aluminum Cap
43	653525.2543	668370.1193	1207.587	CTL	5/8" Rebar with 2" Aluminum Cap
44	652577.6202	669033.4803	1226.004	CTL	5/8" Rebar with 2" Aluminum Cap
45	652956.3054	669852.0035	1224.678	CTL	5/8" Rebar with 2" Aluminum Cap
46	652915.4194	670968.5436	1236.679	CTL	5/8" Rebar with 2" Aluminum Cap
47	654188.3509	671617.6696	1239.274	CTL	5/8" Rebar with 2" Aluminum Cap
48	654893.0251	671042.5445	1218.202	CTL	5/8" Rebar with 2" Aluminum Cap
49	655206.3045	670211.3995	1218.667	CTL	5/8" Rebar with 2" Aluminum Cap
50	655808.4005	669716.5119	1231.329	CTL	5/8" Rebar with 2" Aluminum Cap
51	656712.1046	669287.8527	1261.574	CTL	5/8" Rebar with 2" Aluminum Cap
52	657582.6577	668890.0581	1287.923	CTL	5/8" Rebar with 2" Aluminum Cap
53	654920.0351	670094.7751	1216.022	CTL	5/8" Rebar with 2" Aluminum Cap
54	654019.6223	670444.4565	1219.870	CTL	5/8" Rebar with 2" Aluminum Cap
55	653360.3997	670267.9991	1222.869	CTL	5/8" Rebar with 2" Aluminum Cap
56	653373.8178	670757.5769	1221.953	CTL	5/8" Rebar with 2" Aluminum Cap
57	653487.8744	671293.0818	1222.129	CTL	5/8" Rebar with 2" Aluminum Cap
58	653736.5224	672045.7542	1221.318	CTL	5/8" Rebar with 2" Aluminum Cap
59	654234.5252	673187.2239	1237.015	CTL	5/8" Rebar with 2" Aluminum Cap
60	653865.6850	669984.3272	1231.111	CTL	5/8" Rebar with 2" Aluminum Cap
61	653352.1576	670048.0728	1246.639	CTL	5/8" Rebar with 2" Aluminum Cap
62	653038.6560	670504.4569	1243.540	CTL	5/8" Rebar with 2" Aluminum Cap
100	640169.1054	661396.8193	1280.745	GPS	AHTD GPS 720034A
101	642492.8042	662000.3683	1275.915	GPS	AHTD GPS 720034
102	653467.9567	671555.8815	1248.188	GPS	AHTD GPS 720018 RESET
103	633341.4840	667878.9163	1259.231	GPS	AHTD GPS 720032
104	649060.6371	669973.0200	1294.441	GPS	AHTD GPS AGRONOMY
109	648580.8162	669118.6233	1288.978	CTL	5/8" Rebar with 2" Aluminum Cap
110	649473.8954	669106.5063	1295.190	CTL	5/8" Rebar with 2" Aluminum Cap
111	650289.7300	669192.0831	1291.328	CTL	5/8" Rebar with 2" Aluminum Cap
112	651206.5321	669131.8043	1253.748	CTL	5/8" Rebar with 2" Aluminum Cap
113	651994.9512	668593.4199	1255.043	CTL	5/8" Rebar with 2" Aluminum Cap = T-13 JOB= 040489
150	654556.2441	668296.9080	1205.880	CTL	5/8" Rebar with 2" Aluminum Cap = T-2 JOB= 4620 5
900	628878.7558	667768.5363	1241.400	BM	NGS MARK Q 310 1989
901	630043.7573	667673.8200	1238.130	BM	USGS BRASS CAP STAMPED J27 1932 ON RR
902	630402.1391	666376.6382	1236.220	BM	SQUARE CUT IN CENTER OF
903	631080.5412	664628.4634	1263.999	BM	SQUARE CUT IN NORTH END OF
904	632305.5167	664208.7706	1255.669	BM	SQUARE CUT IN NORTH END OF
905	633473.2935	663792.7270	1281.186	BM	SQUARE CUT IN SOUTHEAST CORNER
906	633921.1975	664933.4096	1271.161	BM	SQUARE CUT IN CATCH BASIN OF
907	633675.7703	663971.8881	1260.270	BM	SQUARE CUT IN EAST END OF
908	633504.7763	663320.9446	1263.288	BM	SQUARE CUT IN BASE OF SIGNAL PO
909	633249.1651	662521.6654	1271.355	BM	SQUARE CUT IN BACK OF CATCH BAS
910	634355.2251	663171.6127	1270.743	BM	SQUARE CUT IN CATCH BASIN AT
911	635730.1559	662823.4266	1288.758	BM	SQUARE CUT IN NORTH END OF DROP
912	636492.2009	662518.6182	1301.231	BM	SQUARE CUT IN NORTH END DROP IN
913	637663.4835	662121.9048	1314.590	BM	SQUARE CUT IN CENTER OF HEADWAL
914	638878.4338	661648.2244	1306.161	BM	SQUARE CUT IN SOUTH END OF DROP
915	639793.2972	661403.6930	1287.117	BM	SQUARE CUT IN NORTH END OF DROP
916	641046.6726	661547.1748	1261.592	BM	SQUARE CUT IN SOUTH END OF DROP
917	642251.6212	662040.1656	1252.445	BM	SQUARE CUT IN SOUTH END OF DROP
918	642328.1703	663510.3170	1237.978	BM	SQUARE CUT IN NORTH END OF HEAD
919	642386.4913	662630.1447	1252.072	BM	SQUARE CUT IN BASE OF SIGNAL PO
920	642429.8510	661981.2351	1276.952	BM	SQUARE CUT IN SOUTHWEST CORNER
921	642513.8388	660570.8018	1259.057	BM	SQUARE CUT IN SOUTHWEST CORNER
922	643730.0947	662693.6999	1242.558	BM	SQUARE CUT IN DROP INLET OF
923	644359.6922	663057.1469	1230.167	BM	SQUARE CUT IN NORTH HEADWALL
924	645385.4266	663686.1538	1243.408	BM	SQUARE CUT IN CENTER HEADWALL
925	646539.4485	664464.8199	1262.885	BM	SQUARE CUT SOUTHEAST CORNER OF
926	645318.5647	664525.1971	1251.412	BM	SQUARE CUT IN CENTER OF HEADWAL
927	646664.6400	664563.0374	1242.308	BM	AHTD DISK SET IN CENTER HEADWAL
928	647631.3199	664398.3182	1267.136	BM	SQUARE CUT IN CENTER OF HEADWAL
929	647645.5263	663483.3369	1263.210	BM	SQUARE CUT IN TOP OF CATCH BASI
930	647717.9656	665202.6045	1274.601	BM	SQUARE CUT IN DROP INLET IN
931	648749.5405	665911.1776	1289.200	BM	SQUARE CUT IN DROP INLET IN
932	650169.8197	666888.1341	1269.244	BM	SQUARE CUT IN DROP INLET IN
933	650870.2209	667367.0251	1244.363	BM	SQUARE CUT IN DROP INLET IN
934	651672.7665	668004.1838	1224.753	BM	SQUARE CUT IN DROP INLET NORTH
935	652160.4629	668439.7602	1223.853	BM	SQUARE CUT IN DROP INLET NORTH
936	652756.9200	669508.3771	1223.310	BM	SQUARE CUT CENTER OF STORM MANH
937	653287.5617	670520.0001	1222.933	BM	SQUARE CUT EAST END OF HEADWALL
938	653627.8408	671911.7083	1217.922	BM	SQUARE CUT IN HEADWALL SOUTH OF
939	654208.6324	673193.6049	1237.161	BM	SQUARE CUT IN NORTHWEST CORNER
940	654204.2767	673331.5908	1212.080	BM	NGS MARK K 310 1989 ST VT
941	653340.7783	670098.6661	1245.657	BM	SQUARE CUT IN NORTHEAST CORNER
942	653108.5117	670376.6307	1245.101	BM	AHTD CAP
943	653475.3610	671554.3789	1248.566	BM	SOUTHEAST CORNER OF BR=5916
944	653776.8049	671641.1146	1246.913	BM	SQUARE CUT NORTHEAST CORNER OF
945	654749.2107	671238.0484	1220.412	BM	SQ CUT
946	655456.7223	669850.5221	1219.731	BM	SQUARE CUT AT BASE OF HWY. SIGN
947	656439.6900	669472.2127	1251.720	BM	SQUARE CUT SOUTHEAST CORNER OF
948	657722.2372	668897.5404	1287.971	BM	SQUARE CUT BASE OF HWY. SIGN
949	653646.2268	670335.2791	1218.372	BM	SQUARE CUT IN CENTER OF HEADWAL
950	652711.9785	668498.6783	1233.332	BM	SET IN BASE OF SIGNAL LIGHT
951	653529.8248	668453.6313	1209.833	BM	SQUARE CUT IN BASE OF SIGNAL PO
952	654555.0208	668310.9906	1207.739	BM	PAINTED BOLT ON FIRE HYDRANT
9907	648594.7231	669163.5301	1286.916	BM	SQUARE CUT ON TOP OF RCP AT
9908	649774.2992	669117.7236	1296.773	BM	MARKED X IN FH BOLT AT HWY. 112
9909	650462.4014	669112.3499	1287.741	BM	SQUARE CUT NORTHEAST CORNER OF
9910	651318.3919	669167.5318	1256.429	BM	SQUARE CUT IN SIGNAL POLE AT GA
9911	651691.6866	668876.1869	1250.123	BM	SQUARE CUT IN HEADWALL NORTH OF
9912	652184.8140	668584.3591	1253.101	BM	AHTD CAP IN NORTHEAST CORNER OF
9915	656192.0699	673293.9522	1198.650	BM	NGS MARK A27 1932 BRASS CAP

*Note - Rebar and Cap - Standard - 5/8" Rebar with 2" Aluminum Cap stamped
*(standard markings common to all caps), or as indicated
(other markings indicated in the point description of the individual point).
USE CAF = 1.0 FOR STAKEOUT FOR THIS PROJECT
A PROJECT CAF OF 0.9999168402 HAS BEEN USED TO COMPUTE THE ABOVE GROUND COORDINATES.
THIS CAF IS INTENDED FOR USE WITHIN THE PROJECT LIMITS.
GRID DISTANCE = GROUND DISTANCE X CAF.
GRID COORDINATES ARE STORED UNDER FILE NAME s012069gi A.CTL
HORIZONTAL DATUM: NAD 83 (1997)
VERTICAL DATUM: NAVD 88 POSITIONAL ACCURACY THIRD ORDER, UNLESS SPECIFIED OTHERWISE AT A SPECIFIC POINT.

REFERENCE POINTS (1500 SERIES) ARE TO BE USED TO ESTABLISH CONTROL
IF THE PRIMARY CONTROL POINTS LISTED ABOVE HAVE BEEN DESTROYED.
REFERENCE POINTS ARE NOT TO BE USED FOR VERTICAL CONTROL

BASIS OF BEARING:
ARKANSAS STATE PLANE GRID BEARINGS - 0301-NORTH ZONE
DETERMINED FROM GPS CONTROL POINTS:
720018 RESET
AGRONOMY - 720032
720034 - 720034A
CONVERGENCE ANGLE: 01-16-50.89 LEFT AT LT:36-04-42.1 LG:094-12-03.9
GRID AZIMUTH = ASTRONOMICAL AZIMUTH - CONVERGENCE ANGLE.

STATE OF ARKANSAS LICENSED PROFESSIONAL ENGINEER No.13422 JOHN F. CANTABERY
3-2016

AEWierclak 3/20/2016 11:56:15 AM
WORKSPACE: AHTD
L:\20IN\I007107 - I-540 Widening & Interchange Improvement\Drawings\rBB0414_SC_01.dgn
REVISED DATE:

DATE REVISED	DATE FILMED	DATE REVISED	DATE FILMED	FED.RD. DIST.NO.	STATE	FED.AID PROJ.NO.	SHEET NO.	TOTAL SHEETS
				6	ARK.			
				JOB NO.		BB0414	262	886

(2) SURVEY CONTROL DETAILS

STATE OF ARKANSAS LICENSED PROFESSIONAL ENGINEER No.13422 JOHN F. CANTABERY 3-20-16

ALIGNMENT NAME: I-49

POINT	STATION	TYPE	NORTHING	EASTING
8000	204+21.92	POB	645126.8962	663420.1220
8001	283+94.33	PC	651696.2913	667937.0230
8002	288+21.59	PI	652048.3572	668179.0919
8003	292+42.59	PT	652314.4684	668513.3561
8004	294+40.16	PC	652437.5219	668667.9245
8005	299+22.77	PI	652738.1089	669045.4939
8006	303+71.16	PT	652748.9216	669527.9816
8007	312+51.56	PC	652768.6468	670408.1642
8008	364+78.03	PI	652885.7444	675633.3216
8009	342+30.82	PT	654869.4086	670797.9252
8010	346+90.63	PC	655043.9267	670372.5185
8011	351+12.16	PI	655203.9161	669982.527
8012	354+95.16	PT	655584.5228	669801.3406
8013	372+51.58	PC	657170.4143	669046.3827
8014	381+84.61	PI	658012.8568	668645.3411
8015	391+01.40	PT	658939.0138	668532.3058
8016	396+66.81	POE	659500.2579	668463.8073

ALIGNMENT NAME: SHILOH DR.

POINT	STATION	TYPE	NORTHING	EASTING
8020	10+49.81	POB	647856.2316	665159.3326
8021	35+77.92	PC	649939.2359	666591.9711
8022	36+82.86	PI	650025.6951	666651.4357
8023	37+87.74	PT	650108.7593	666715.5573
8024	38+51.93	PC	650159.5736	666754.7837
8025	39+70.15	PI	650253.1484	666827.019
8026	40+88.28	PT	650351.0109	666893.3298
8027	50+41.35	PC	651140.0114	667427.9497
8028	51+52.15	PI	651231.7365	667490.1018
8029	52+62.92	PT	651325.7959	667548.6612
8030	53+41.99	PC	651392.9169	667590.4493
8031	55+55.23	PI	651573.9416	667703.1515
8032	57+50.27	PT	651784.6021	667670.0779
8033	60+50.20	PC	652080.904	667623.5587
8034	66+29.54	PI	652653.2346	667533.7033
8035	69+73.32	PT	652766.0173	668101.9606
8036	70+86.10	PC	652787.9734	668212.5867
8037	71+90.22	PI	652808.2427	668314.7142
8038	72+62.87	PT	652912.2409	668319.738
8039	73+53.04	PC	653002.3058	668324.0888
8040	74+06.50	PI	653055.7073	668326.6685
8041	74+40.38	PT	653059.2729	668380.0133
8042	75+00.00	POE	653063.2492	668439.5023

ALIGNMENT NAME: HWY. 112 RAMP 1

POINT	STATION	TYPE	NORTHING	EASTING
8050	276+17.66	PC	651025.9899	667541.0716
8051	277+12.88	PI	651104.4508	667595.0187
8052	278+07.94	PT	651177.1567	667656.5024
8053	282+81.97	PC	651539.1161	667962.5927
8054	284+82.92	PI	651692.5546	668092.3477
8055	286+73.79	PT	651756.0996	668282.9828
8056	290+98.88	POE	651890.5240	668686.2561

ALIGNMENT NAME: HWY. 112 RAMP 4

POINT	STATION	TYPE	NORTHING	EASTING
8060	279+22.29	PC	651344.4275	667615.6042
8061	281+95.32	PI	651569.4088	667770.2940
8062	284+43.99	PT	651840.2713	667735.9571
8063	287+17.97	PC	652112.0797	667701.5003
8064	291+75.49	PI	652565.9666	667643.9617
8065	294+58.17	PT	652661.8848	668091.3136
8066	298+36.29	POE	652741.1572	668461.0311

ALIGNMENT NAME: COLLECTOR-DISTRIBUTOR RD.

POINT	STATION	TYPE	NORTHING	EASTING
8070	275+87.76	POB	652686.3534	668464.6942
8071	279+71.53	PC	652606.7208	668089.2827
8072	280+80.16	PI	652584.1802	667983.0195
8073	281+83.41	PCC	652509.9515	667903.7097
8074	284+32.57	PI	652339.6958	667721.7996
8075	285+61.04	PCC	652174.4515	667908.2738
8076	287+27.30	PI	652064.1846	668032.7074
8077	288+37.46	PT	652167.9490	668162.6130
8078	293+98.09	PC	652517.8406	668600.6518
8079	296+48.30	PI	652674.0027	668796.1555
8080	298+93.52	PT	652754.6364	669033.0237
8081	304+95.21	PC	652948.5335	669602.6128
8082	305+67.04	PI	652971.6822	669670.6142
8083	306+38.86	PT	652996.9679	669737.8503
8084	307+64.39	PC	653041.1538	669855.3434
8085	308+61.87	PI	653075.4678	669946.5866
8086	309+59.24	PT	653117.4059	670034.5865
8087	313+41.74	PC	653281.9622	670379.8798
8088	314+30.15	PI	653319.9990	670459.6934
8089	315+18.06	PT	653342.7354	670545.1339
8090	321+51.46	PC	653505.6202	671157.2330
8091	322+46.68	PI	653530.1062	671249.2484
8092	323+41.74	PT	653563.6232	671338.3720

ALIGNMENT NAME: HWY. 112 TO NB I-49

POINT	STATION	TYPE	NORTHING	EASTING
8056	287+20.67	POB	651890.5240	668686.2561
8101	288+12.93	PC	651952.0695	668754.9880
8102	289+34.18	PI	652032.9512	668845.3139
8103	290+47.74	PT	652151.1202	668872.4569
8104	291+68.55	PC	652268.8654	668899.5025
8105	295+47.22	PI	652637.9245	668984.2739
8106	297+90.56	PT	652602.5958	669361.2921
8107	308+87.09	PC	652500.2931	670453.0378
8108	313+00.40	PI	652461.7328	670864.5418
8109	316+32.73	PT	652805.0319	671094.6900
8110	322+71.77	PC	653335.8295	671450.5373
8111	335+55.32	PI	654401.9651	672165.2759
8112	341+29.08	PT	654889.1255	670977.7696
8113	347+51.58	PC	655125.3890	670401.8517
8114	351+73.11	PI	655285.3784	670011.8602
8115	355+56.11	PT	655665.9851	669830.6738

ALIGNMENT NAME: HWY. 112

POINT	STATION	TYPE	NORTHING	EASTING
8120	0+00.00	POB	650570.1170	669190.6150
8121	3+61.91	PC	650931.5169	669209.8251
8122	6+40.18	PI	651209.3987	669224.5958
8123	8+92.74	PT	651424.3564	669047.8768
8124	12+57.20	PC	651705.8874	668816.4271
8125	17+47.75	PI	652084.8222	668504.9008
8126	22+06.53	PT	652574.2811	668472.1851
8127	31+49.23	PC	653514.8823	668409.3149
8128	33+03.32	PI	653668.6246	668399.0387
8129	34+55.57	PT	653814.1916	668348.5160
8130	35+90.42	POE	653941.5878	668304.2998

ALIGNMENT NAME: SB HWY. 71B

POINT	STATION	TYPE	NORTHING	EASTING
8140	299+33.27	POB	652730.6127	669078.8193
8141	304+99.35	PC	652913.0340	669614.6974
8142	305+71.77	PI	652936.3737	669683.2597
8143	306+44.19	PT	652961.8679	669751.0504
8144	329+81.82	POE	653784.7223	671939.0727

ALIGNMENT NAME: HWY. 112 TO HWY. 71B RAMP

POINT	STATION	TYPE	NORTHING	EASTING
8150	300+15.56	PC	652581.6044	669585.3064
8151	301+10.78	PI	652572.7209	669680.1087
8152	302+05.84	PT	652554.4520	669773.5574
8153	309+01.72	PC	652420.9359	670456.5148
8154	312+33.17	PI	652357.3428	670781.8042
8155	315+20.22	PT	652570.2332	671035.8415
8156	320+93.94	POE	652938.7423	671475.5750

ALIGNMENT NAME: NB. I-49 TO HWY. 71B RAMP

POINT	STATION	TYPE	NORTHING	EASTING
8160	304+17.19	PC	652705.4642	669575.0026
8161	305+12.41	PI	652707.5975	669670.1964
8162	306+07.47	PT	652700.2519	669765.1303
8163	313+36.68	PC	652643.9963	670492.1679
8164	322+02.48	PI	652577.2030	671355.3922
8165	328+75.95	PT	653334.4126	671775.2149
8166	330+61.97	PC	653497.1010	671865.4149
8167	333+25.28	PI	653727.3832	671993.0911
8168	335+66.62	PT	653820.1244	672239.5261

ALIGNMENT NAME: SB. I-49 TO HWY. 112

POINT	STATION	TYPE	NORTHING	EASTING
8170	326+86.42	PC	653080.4392	669929.8875
8171	329+89.18	PI	653197.3170	670209.1747
8172	332+57.43	PT	653481.4836	670313.6311
8173	333+71.44	PC	653588.4842	670352.9633
8174	338+16.96	PI	654006.6500	670506.6764
8175	342+13.43	PT	654406.6487	670310.4842
8176	354+82.39	POE	655545.9413	669751.6816

ALIGNMENT NAME: HWY. 71B

POINT	STATION	TYPE	NORTHING	EASTING
8180	332+72.94	POB	653753.6556	671950.7560
8181	358+56.73	POE	654663.7061	674368.9715

ALIGNMENT NAME: HWY. 71B TO NB. I-49

POINT	STATION	TYPE	NORTHING	EASTING
8190	330+91.05	PC	654262.0999	671778.0795
8191	333+85.15	PI	654520.2083	671637.1041
8192	336+65.60	PT	654672.5305	671385.5252
8193	339+27.26	PC	654808.0506	671161.6970
8194	340+38.58	PI	654865.7089	671066.4672
8195	341+49.46	PT	654907.9613	670963.4723

ALIGNMENT NAME: SB. I-49 TO HWY. 71B RAMP

POINT	STATION	TYPE	NORTHING	EASTING
8200	309+88.64	POB	653727.7583	671960.4953
8201	314+12.22	PC	653581.6248	671562.9166
8202	315+91.90	PI	653519.6358	671394.2659
8203	317+67.43	PT	653400.5889	671259.6795
8204	320+61.97	PC	653205.4430	671039.0606
8205	340+71.44	PI	651874.0877	669533.9196
8206	336+71.34	PT	653829.2660	669997.8528
8207	341+55.99	PC	654300.8294	670109.7474
8208	344+98.62	PI	654634.1986	670188.8507
8209	348+13.92	PT	654941.8145	670037.9706

ALIGNMENT NAME: SB. I-49 TO HWY. 112 EXIT

POINT	STATION	TYPE	NORTHING	EASTING
8210	354+95.03	PC	655558.0884	669745.8116
8211	356+80.47	PI	655725.5205	669666.1061
8212	358+65.87	PRC	655895.4439	669591.8599
8213	360+51.31	PI	656065.3674	669517.6136
8214	362+36.71	PT	656232.7995	669437.9082

AEWerclok 3/20/2016 11:56:16 AM
WORKSPACE: AHTD
L:\I-540\NOT\TO7 - I-540 Widening & Interchange Improvement\Drawings\rBB0414_SC_02.dgn
REVISED DATE:

SURVEY CONTROL DETAILS

DATE REVISED	DATE FILMED	DATE REVISED	DATE FILMED	FED.RD. DIST.NO.	STATE	FED.AID PROJ.NO.	SHEET NO.	TOTAL SHEETS
				6	ARK.			
				JOB NO.		BB0414	263	886
				(2)	SURVEY CONTROL DETAILS			

STATE OF ARKANSAS
LICENSED PROFESSIONAL ENGINEER
No. 13422
JOHN F. CANTABERY
3-20-16

ALIGNMENT NAME: TEMP. C-D RD. TO SB I-49 DETOUR

POINT	STATION	TYPE	NORTHING	EASTING
8220	280+29.37	PC	651482.0357	667730.2429
8221	281+59.33	PI	651589.1242	667803.8735
8222	282+88.89	PRC	651705.1999	667862.3185
8223	287+06.31	PI	652078.0304	668050.0413
8224	291+10.81	PT	652338.5477	668376.1902

ALIGNMENT NAME: TEMP. C-D RD. TO HWY. 112 RAMP

POINT	STATION	TYPE	NORTHING	EASTING
8230	283+46.28	PC	652381.8309	667834.9820
8231	290+18.71	PI	651718.6791	667723.7054
8232	288+83.21	PT	652197.8302	668195.4755

ALIGNMENT NAME: STAGE 2 NB I-49 SHIFT

POINT	STATION	TYPE	NORTHING	EASTING
8240	285+88.74	PC	651820.6269	668092.8991
8241	289+18.05	PI	652091.9857	668279.4765
8242	292+41.96	PT	652292.5738	668540.6492

ALIGNMENT NAME: TEMP. SB I-49 TO C-D RD. RAMP

POINT	STATION	TYPE	NORTHING	EASTING
8250	306+38.86	POB	653009.2918	669733.2155
8251	307+64.39	PC	653053.4778	669850.7087
8252	307+86.05	PI	653061.1015	669870.9809
8253	308+07.70	PCC	653069.1093	669891.1044
8254	309+60.72	PI	653125.6845	670033.2788
8255	311+08.92	PT	653236.7710	670138.5124

ALIGNMENT NAME: TEMP. NB I-49 TO HWY. 71B RAMP

POINT	STATION	TYPE	NORTHING	EASTING
8260	308+13.00	PC	652897.7974	669969.3539
8261	308+58.92	PI	652898.8655	670015.2656
8262	309+04.79	PT	652895.8244	670061.0889
8263	310+38.00	PC	652887.0033	670194.0096
8264	311+61.66	PI	652878.8144	670317.4024
8265	312+84.79	PT	652850.8877	670437.8725
8266	317+42.84	PC	652747.4480	670884.0901
8267	319+17.03	PI	652708.1117	671053.7789
8268	320+76.89	PT	652787.2850	671208.9345

ALIGNMENT NAME: TEMP. EX. NB I-49 TO PR. I-49 RAMP

POINT	STATION	TYPE	NORTHING	EASTING
8280	314+87.51	PC	652880.5589	670611.6601
8281	320+22.23	PI	652896.0758	671146.1586
8282	324+48.80	PCC	653377.2819	671379.3326
8283	324+54.54	PI	653382.4477	671381.8358
8284	324+60.28	PT	653387.6391	671384.2851

ALIGNMENT NAME: TEMP. HWY. 71B TO NB I-49 RAMP

POINT	STATION	TYPE	NORTHING	EASTING
8300	339+17.62	PC	654830.8255	671124.7223
8301	340+33.26	PI	654889.7849	671025.2323
8302	341+47.97	PT	654925.4880	670915.2334
8303	346+17.73	PC	655070.5147	670468.4162
8304	347+09.47	PI	655098.8359	670381.1605
8305	348+00.74	PT	655141.9707	670300.1973
8306	349+15.84	PC	655196.0911	670198.6141
8307	350+09.37	PI	655240.0729	670116.0610
8308	351+01.79	PT	655304.3286	670048.0860

ALIGNMENT NAME: TEMP. SB I-49 DETOUR

POINT	STATION	TYPE	NORTHING	EASTING
8320	339+17.19	PC	654136.9633	670403.6296
8321	340+63.47	PI	654280.7697	670376.8433
8322	342+05.53	PT	654401.5538	670294.3269
8323	344+43.47	PC	654598.0166	670160.1089
8324	345+91.82	PI	654720.5107	670076.4244
8325	347+39.57	PT	654854.4580	670012.6593
8326	352+53.61	PC	655318.5908	669791.7105
8327	354+23.20	PI	655471.7123	669718.8176
8328	355+91.90	PRC	655635.2818	669674.0453
8329	357+42.26	PI	655780.3034	669634.3500
8330	358+91.99	PT	655917.3267	669572.4504

ALIGNMENT NAME: TEMP. SB I-49 TO HWY. 71B RAMP

POINT	STATION	TYPE	NORTHING	EASTING
8340	342+96.84	PC	654415.2299	670069.4272
8341	345+81.31	PI	654699.4415	670081.4704
8342	348+54.50	PT	654956.2896	669959.1988

ALIGNMENT NAME: STAGE 1 NB I-49 WIDENING

POINT	STATION	TYPE	NORTHING	EASTING
8350	346+34.11	PC	655073.9662	670517.7770
8351	351+84.60	PI	655284.2164	670009.0149
8352	356+85.24	PT	655781.0785	669772.0084

ALIGNMENT NAME: STAGE 2A HWY. 71B TO NB I-49 RAMP

POINT	STATION	TYPE	NORTHING	EASTING
8360	347+79.43	PC	655147.5846	670375.4125
8361	352+22.04	PI	655315.5735	669965.9214
8362	356+24.19	PT	655715.2105	669775.6756

ALIGNMENT NAME: TEMP. SB I-49 DETOUR STAGE 2

POINT	STATION	TYPE	NORTHING	EASTING
8370	352+53.61	PC	655318.5909	669791.7105
8371	354+39.90	PI	655486.7956	669711.6372
8372	356+25.02	PT	655667.3035	669665.5781
8373	357+73.02	PC	655815.5561	669627.7494
8374	359+45.05	PI	655977.4024	669586.4521
8375	361+11.24	PT	656129.6228	669517.6872

ALIGNMENT NAME: STAGE 3 TEMP. SB I-49 TO HWY. 112

POINT	STATION	TYPE	NORTHING	EASTING
8380	354+14.35	PC	655486.7005	669780.7088
8381	355+19.39	PI	655581.0056	669734.4538
8382	356+24.05	PRC	655681.0495	669702.4505
8383	357+52.87	PI	655803.7446	669663.2012
8384	358+81.30	PT	655920.0577	669607.8308

AEWerclok 3/20/2016 11:56:22 AM
WORKSPACE: AHTD
L:\2016\16T707 - I-540 Widening & Interchange Improvement\Drawings\r-BB0414_SC_02.dgn
REVISED DATE:

SURVEY CONTROL DETAILS
TEMPORARY ALIGNMENTS

DATE REVISED	DATE FILMED	DATE REVISED	DATE FILMED	FED.RD. DIST.NO.	STATE	FED.AID PROJ.NO.	SHEET NO.	TOTAL SHEETS
				6	ARK.			
				JOB NO.		BB0414	264	886
				(2)	SURVEY CONTROL DETAILS			

STATE OF ARKANSAS
LICENSED PROFESSIONAL ENGINEER
No.13422
JOHN F. CANTABERY
3-20-16

1" =400'

ALL BEARINGS ARE GRID
BASED ON GPS
ALL DISTANCES ARE GROUND

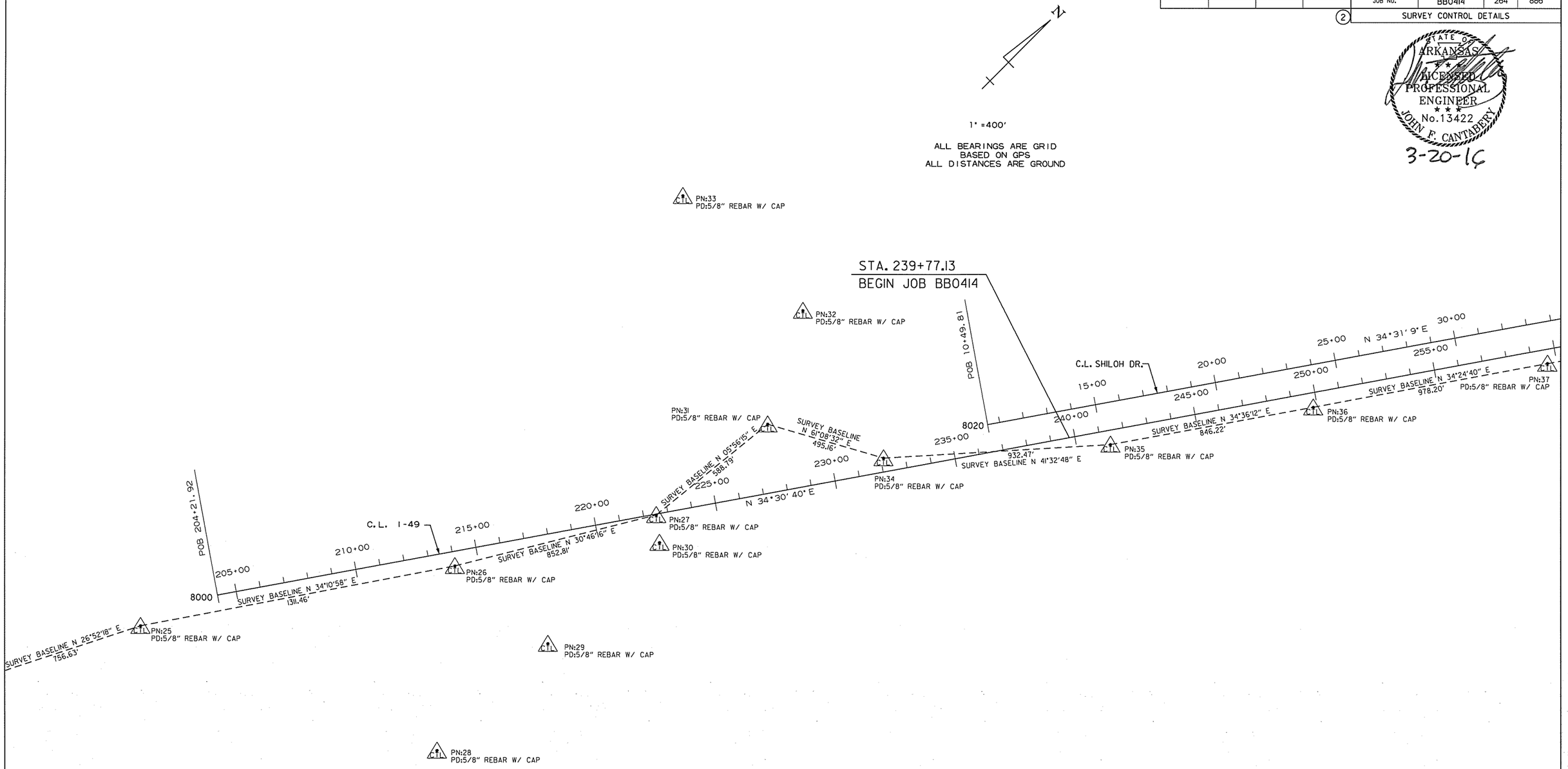

AEWarclak 3/20/2016 11:56:25 AM
WORKSPACE: AHTD
L:\2016\160707 - I-540 Widening & Interchange Improvement\Drawings\r-BB0414_SC_03.dgn
REVISED DATE:

SURVEY CONTROL DETAILS

CURVE DATA

CURVE	PC	PI	PT	Δ	D	TANGENT FEET	LENGTH FEET	e FT./FT.	Ls FEET	DESIGN SPEED
1-1	279+71.53	280+80.16	281+83.41	31°07'43"	14°41'28"	108.63	211.88	MATCH EX.	MATCH EX.	30
1-2	281+83.41	284+32.57	285+61.04	95°20'59"	25°15'00"	249.16	377.62	MATCH EX.	MATCH EX.	25
1-3	285+61.04	287+27.30	288+37.46	80°09'45"	29°00'00"	166.26	276.42	0.10	300	25
3-1	276+17.66	277+12.88	278+07.94	5°42'30"	3°00'00"	95.22	190.28	N.A.	N.A.	50
3-2	282+81.97	284+82.92	286+73.79	31°20'44"	8°00'00"	200.95	391.82	0.10	350	50
4-1	279+22.29	281+95.32	284+43.99	41°44'09"	8°00'00"	273.03	521.70	0.10	350	50
4-2	287+17.97	291+75.49	294+58.17	85°07'23"	11°30'00"	457.52	740.19	MATCH EX.	MATCH EX.	40
12-1	35+77.92	36+82.86	37+87.74	3°08'50"	1°30'00"	104.93	209.82	MATCH EX.	MATCH EX.	N.A.
12-2	38+51.93	39+70.15	40+88.28	3°32'43"	1°30'00"	118.21	236.35	MATCH EX.	MATCH EX.	N.A.
12-3	50+41.35	51+52.15	52+62.92	2°12'57"	1°00'00"	110.80	221.57	MATCH EX.	MATCH EX.	N.A.
12-4	53+41.99	55+55.23	57+50.27	40°49'41"	10°00'00"	213.24	408.28	MATCH EX.	MATCH EX.	N.A.
12-5	60+50.20	66+29.54	69+73.32	87°41'49"	9°30'00"	579.34	923.12	MATCH EX.	MATCH EX.	N.A.
13-1	283+94.33	288+21.59	292+42.59	16°57'55"	2°00'00"	427.26	848.26	0.055	525	60

DATE REVISED	DATE FILMED	DATE REVISED	DATE FILMED	FED.RD. DIST.NO.	STATE	FED.AID PROJ.NO.	SHEET NO.	TOTAL SHEETS
				6	ARK.			
				JOB NO.		BB0414	265	886

2 SURVEY CONTROL DETAILS

STATE OF ARKANSAS
LICENSED PROFESSIONAL ENGINEER
No. 13422
JOHN F. CANTABERRY
3-20-16

1" = 200'

ALL BEARINGS ARE GRID BASED ON GPS
ALL DISTANCES ARE GROUND

C.L. I-49 STA. 279+22.29, 65.50' LT. = C.L. HWY. 112 RAMP 4 STA. 279+22.29

C.L. I-49 STA. 276+17.66, 53.50' RT. = C.L. HWY. 112 RAMP 1 STA. 276+17.66

C.L. SHILOH DR.

C.L. I-49

C.L. COLLECTOR-DISTRIBUTOR RD.

C.L. HWY. 112 RAMP 4

C.L. HWY. 112 RAMP 1

PN:37 PD:5/8" REBAR W/ CAP

PN:38 PD:5/8" REBAR W/ CAP

PN:39 PD:5/8" REBAR W/ CAP

PN:41 PD:5/8" REBAR W/ CAP

SURVEY BASELINE N 34°24'40" E 978.20'

SURVEY BASELINE N 34°24'50" E 937.56'

SURVEY BASELINE N 34°45'57" E 1257.54'

SURVEY BASELINE N 27°05'52" E 714.37'

N34°31'09" E

N34°30'40" E

N37°39'59" E

N34°07'16" E

N34°30'40" E

N40°13'10" E

N08°55'21" W

N07°13'29" W

S31°54'20" W

N34°30'40" E

N71°33'54" E

PC 35+77.92 PI 36+82.86 PT 37+87.74 PC 38+51.93 PI 39+70.15 PT 40+88.28 PC 50+41.35 PI 51+52.15 PT 52+62.92 PC 53+41.99 PC 60+50.20 PI 66+29.54 PC 276+17.66 PI 277+12.88 PT 278+07.94 PC 279+22.29 PT 284+43.99 PC 282+81.97 PC 283+94.33 PI 284+82.92 PT 286+73.79 PC 287+17.97 PI 288+21.59 PI 281+95.32 PI 291+75.49

35+00 40+00 45+00 50+00 55+00 60+00 65+00 260+00 265+00 270+00 275+00 276+18 280+00 285+00 290+00

8021 8022 8023 8024 8025 8026 8027 8028 8029 8030 8031 8032 8033 8034 8050 8051 8052 8053 8054 8055 8060 8061 8062 8063 8064 8001 8002

12-1 12-2 12-3 12-4 12-5 3-1 3-2 4-1 4-2 1-1 1-2 1-3 13-1

SURVEY CONTROL DETAILS

AEWtercio 3/20/2016 11:56:25 AM
WORKSPACE: AHTD
L:\20IN\10I7I07 - I-540 Widening & Interchange Improvement\Drawings\r-BB0414_SC_04.dgn
REVISED DATE:

DATE REVISED	DATE FILMED	DATE REVISED	DATE FILMED

FED.RD. DIST.NO.	STATE	FED.AID PROJ.NO.	SHEET NO.	TOTAL SHEETS
6	ARK.			
JOB NO.		BB0414	266	886

(2) SURVEY CONTROL DETAILS

STATE OF ARKANSAS
LICENSED PROFESSIONAL ENGINEER
No.13422
JOHN F. CANTABERRY
3-20-16

N

1" = 300'

ALL BEARINGS ARE GRID BASED ON GPS
ALL DISTANCES ARE GROUND

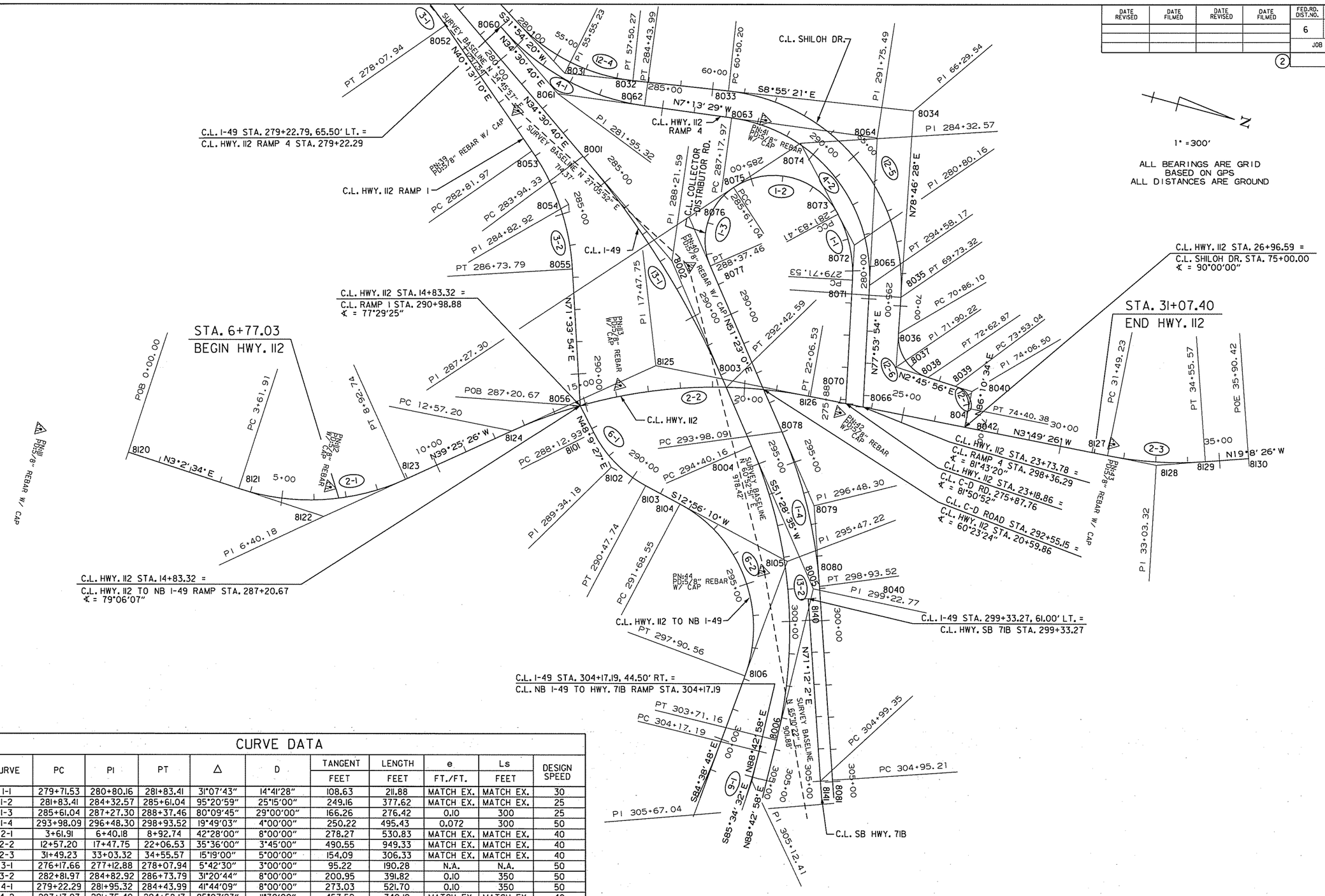

CURVE DATA

CURVE	PC	PI	PT	Δ	D	TANGENT FEET	LENGTH FEET	e FT./FT.	Ls FEET	DESIGN SPEED
1-1	279+71.53	280+80.16	281+83.41	31°07'43"	14°41'28"	108.63	211.88	MATCH EX.	MATCH EX.	30
1-2	281+83.41	284+32.57	285+61.04	95°20'59"	25°15'00"	249.16	377.62	MATCH EX.	MATCH EX.	25
1-3	285+61.04	287+27.30	288+37.46	80°09'45"	29°00'00"	166.26	276.42	0.10	300	25
1-4	293+98.09	296+48.30	298+93.52	19°49'03"	4°00'00"	250.22	495.43	0.072	300	50
2-1	3+61.91	6+40.18	8+92.74	42°28'00"	8°00'00"	278.27	530.83	MATCH EX.	MATCH EX.	40
2-2	12+57.20	17+47.75	22+06.53	35°36'00"	3°45'00"	490.55	949.33	MATCH EX.	MATCH EX.	40
2-3	31+49.23	33+03.32	34+55.57	15°19'00"	5°00'00"	154.09	306.33	MATCH EX.	MATCH EX.	40
3-1	276+17.66	277+12.88	278+07.94	5°42'30"	3°00'00"	95.22	190.28	N.A.	N.A.	50
3-2	282+81.97	284+82.92	286+73.79	31°20'44"	8°00'00"	200.95	391.82	0.10	350	50
4-1	279+22.29	281+95.32	284+43.99	41°44'09"	8°00'00"	273.03	521.70	0.10	350	50
4-2	287+17.97	291+75.49	294+58.17	85°07'23"	11°30'00"	457.52	740.19	MATCH EX.	MATCH EX.	40
6-1	288+12.93	289+34.18	290+47.74	35°13'16"	15°00'00"	121.25	234.81	MATCH EX.	MATCH EX.	30
6-2	291+68.55	295+47.22	297+90.56	82°25'02"	13°15'00"	378.67	622.02	0.10	300	40
9-1	304+17.19	305+12.41	306+07.47	5°42'30"	3°00'00"	95.22	190.28	N.A.	N.A.	50
12-4	53+41.99	55+55.23	57+50.27	40°49'41"	10°00'00"	213.24	408.28	MATCH EX.	MATCH EX.	N.A.
12-5	60+50.20	66+29.54	69+73.32	87°41'49"	9°30'00"	579.34	923.12	MATCH EX.	MATCH EX.	N.A.
12-6	70+86.10	71+90.22	72+62.87	77°56'04"	43°00'00"	104.12	176.76	MATCH EX.	MATCH EX.	N.A.
12-7	73+53.04	74+06.50	74+40.38	83°24'37"	95°30'00"	53.46	87.34	N.A.	N.A.	25
13-1	283+94.33	288+21.59	292+42.59	16°57'55"	2°00'00"	427.26	848.26	0.055	525	60
13-2	294+40.16	299+22.77	303+71.16	37°14'24"	4°00'00"	482.61	931.00	0.093	600	60

SURVEY CONTROL DETAILS

AEWierciak 3/20/2016 11:56:26 AM
WORKSPACE: AHTD
L:\201\W07707 - I-540 Widening & Interchange Improvement\Drawings\r-BB0414_SC_05.dgn
REVISED DATE:

DATE REVISED	DATE FILMED	DATE REVISED	DATE FILMED

FED.RD. DIST.NO.	STATE	FED.AID PROJ.NO.	SHEET NO.	TOTAL SHEETS
6	ARK.			
JOB NO.		BB0414	267	886

(2) SURVEY CONTROL DETAILS

C.L. SB I-49 TO HWY. 71 RAMP
PC 341+55.99
8207
340+00
345+00
N13°20'55"E
C.L. SB I-49 TO HWY. 112
C.L. C-D RD. STA. 308+48.34, 9.00' LT. =
C.L. SB I-49 TO HWY. 112 STA. 326+86.42
8170
8206
PN:60
PD:5/8" REBAR W/ CAP
PI 336+71.34
PC 333+71.44
PT 332+57.43
8173
8172
PN:61
PD:5/8" REBAR W/ CAP
SURVEY BASELINE N 87°51'14" E 220.08'
8208
PI 344+98.62
PT 342+13.43
8175
N26°7'38"W
300+00
N20°10'58"E
8174
PI 338+16.96
PN:54
PD:5/8" REBAR W/ CAP
C.L. SB HWY. 71B STA. 323+41.74, 4.50' LT. =
C.L. C-D RD. STA. 323+41.74
PI 314+30.15
PC 321+51.49
PI 322+46.68
PI 8202
PI 315+91.90
8092
8091
8090
C.L. COLLECTOR-DISTRIBUTOR RD.
N69°23'24"E
SURVEY BASELINE N 87°58'35" E 547.52'
PN:55
PD:5/8" REBAR W/ CAP
SURVEY BASELINE N 0°08'25"48" E 489.76'
SURVEY BASELINE N 87°51'14" E 220.08'
SURVEY BASELINE N 26°20'53" E 441.75'
8203
PN:56
PD:5/8" REBAR W/ CAP
C.L. SB HWY. 71B
8204
8088
8089
N75°5'54"E
N64°31'8"E
8087
8171
N57°19'25"E
8086
8085
8084
8083
8082
8081
PC 304+95.21
PT 305+67.04
PT 306+38.86
PT 306+59.24
PT 306+74.19
PC 326+98.42
8170
PI 314+30.15
PC 321+51.49
PI 322+46.68
PI 329+89.18
PC 312+51.56
PI 329+89.18
PC 313+36.68
PI 315+18.06
PC 315+41.13
PT 317+67.43
PT 316+32.73
PI 315+20.22
PC 320+61.97
PT 317+67.43
PC 308+87.09
PC 309+01.72
PI 312+23.17
PI 313+00.40
PC 322+71.77
8110
PN:57
PD:5/8" REBAR W/ CAP
C.L. I-49
8007
8109
8155
8164
PI 322+02.48
PC 320+93.94
C.L. HWY. 112 TO HWY. 71B RAMP
C.L. HWY. 112 TO NB I-49 RAMP
S85°34'32"E
8163
8162
PT 306+07.47
8161
8160
8006
N88°42'58"E
S84°38'48"E
8150
8151
8152
PT 303+71.16
PC 304+17.19
PI 305+12.41
PI 301+10.78
PT 302+05.84
PC 300+15.56
C.L. HWY. 112 TO NB I-49 RAMP STA. 300+15.56 =
C.L. HWY. 112 TO HWY. 71B STA. 300+15.56
C.L. I-49 STA. 304+17.19, 44.50' RT. =
C.L. NB I-49 TO HWY. 71B RAMP STA. 304+17.19
PI 340+71.44
8205
8154
8153
S78°56'18"E
8108
8107
PC 314+12.22
8201
PN:102
PD:AHTD GPS 720018 RESET
8166
8165
N29°0'20"E
PC 330+61.97
PT 328+75.95
PT 335+69.62
POB 309+88.64
8200
POB 332+72.94
8180
N69°22'38"E
792.68'
8144
PI 333+85.15
PC 330+91.05
8190
N28°38'34"W
8191
N67°41'41"W
PI 335+55.32
8111
PI 333+85.15
8192
N58°48'24"W
PT 336+65.60
PC 339+27.26
8193
SURVEY BASELINE N 39°13'9" W 909.58'
PN:47
PD:5/8" REBAR W/ CAP
N33°50'17"E
POE 329+81.82
PI 332+42
8161.20'
C.L. HWY. 71B STA. 332+72.95, 33.19' LT. =
C.L. SB HWY. 71B STA. 329+81.82
C.L. HWY. 71B STA. 332+72.95, 27.67' RT. =
C.L. SB I-49 TO HWY. 71B RAMP STA. 309+98.35
C.L. HWY. 71B
N69°22'38"E
8168
PN:58
PD:5/8" REBAR W/ CAP
C.L. HWY. 71B STA. 335+66.62, 39.50' RT. =
C.L. NB I-49 TO HWY. 71B RAMP STA. 335+66.62
PN:59
PD:5/8" REBAR W/ CAP
MATCH LINE HWY. 71B STA. 349+00
MATCH LINE HWY. 71B STA. 349+00
POE 355+56.73
8181
C.L. NB I-49 TO HWY. 71B RAMP

N
1" = 300'

ALL BEARINGS ARE GRID
BASED ON GPS
ALL DISTANCES ARE GROUND

STATE OF ARKANSAS
LICENSED PROFESSIONAL ENGINEER
No. 13422
JOHN F. CANTABERY
3-20-16

CURVE DATA

CURVE	PC	PI	PT	Δ	D	TANGENT	LENGTH	e	Ls	DESIGN SPEED
						FEET	FEET	FT./FT.	FEET	
1-5	304+95.21	305+67.04	306+38.86	1°48'38"	1°15'37"	71.83	143.66	0.031	280	50
1-6	307+64.39	308+61.87	309+59.24	4°52'16"	2°30'00"	97.48	194.85	0.049	240	50
1-7	313+41.74	314+30.15	315+18.06	10°34'46"	6°00'00"	88.41	176.33	0.092	270	50
1-8	321+51.46	322+46.68	323+41.74	5°42'30"	3°00'00"	95.22	190.28	N.A.	N.A.	50
5-1	300+15.56	301+10.78	302+05.84	5°42'30"	3°00'00"	95.22	190.28	N.A.	N.A.	50
5-2	309+01.72	312+33.17	315+20.22	51°01'32"	8°15'00"	331.45	618.49	0.10	350	50
6-3	308+87.09	313+00.40	316+32.73	61°30'55"	8°15'00"	413.31	745.64	0.10	350	50
6-4	322+71.77	335+55.32	341+29.08	101°31'58"	5°28'00"	1283.55	1857.30	MATCH EX.	MATCH EX.	50
7-1	330+91.05	333+85.15	336+65.60	30°09'50"	5°15'00"	294.10	574.55	MATCH EX.	MATCH EX.	50
8-1	304+99.35	305+71.77	306+44.19	1°48'38"	1°15'00"	72.43	144.84	0.037	280	60
9-1	304+17.19	305+12.41	306+07.47	5°42'30"	3°00'00"	95.22	190.28	N.A.	N.A.	50
9-2	313+36.68	322+02.48	328+75.95	65°25'09"	4°15'00"	865.80	1539.27	0.075	300	50
9-3	330+61.97	333+25.28	335+66.62	40°22'18"	8°00'00"	263.31	504.65	0.10	290	50
10-1	314+12.22	315+91.90	317+67.43	21°18'46"	6°00'00"	179.68	355.21	MATCH EX.	MATCH EX.	50
10-2	320+61.97	340+71.44	336+71.34	144°50'33"	9°00'00"	2009.47	1609.36	MATCH EX.	MATCH EX.	45
10-3	341+55.99	344+98.62	348+13.92	39°28'32"	6°00'00"	342.63	657.93	0.10	340	50
11-1	326+86.42	329+89.18	332+57.43	47°06'31"	8°15'00"	302.76	571.01	0.10	350	50
11-2	333+71.43	338+16.96	342+13.43	46°18'36"	5°30'00"	445.52	842.00	0.088	350	50
13-3	312+51.56	364+78.03	342+30.82	156°24'39"	5°15'00"	5226.47	2979.25	0.10	480	60

SURVEY CONTROL DETAILS

AEWierdak 3/20/2016 11:56:26 AM
WORKSPACE: AHTD
L:\ZOIN\NO17\07 - I-540 Widening & Interchange Improvement\Drawings\r_BB0414_SC_06.dgn
REVISED DATE:

DATE REVISED	DATE FILMED	DATE REVISED	DATE FILMED	FED.RD. DIST.NO.	STATE	FED.AID PROJ.NO.	SHEET NO.	TOTAL SHEETS
				6	ARK.			
				JOB NO.		BB0414	268	886
				(2)	SURVEY CONTROL DETAILS			

N

1" =200'

ALL BEARINGS ARE GRID
BASED ON GPS
ALL DISTANCES ARE GROUND

STATE OF ARKANSAS
LICENSED PROFESSIONAL ENGINEER
No. 13422
JOHN F. CANTABERY
3-20-16

CURVE DATA

CURVE	PC	PI	PT	Δ	D	TANGENT FEET	LENGTH FEET	e FT./FT.	Ls FEET	DESIGN SPEED
6-4	322+71.77	335+55.32	341+29.08	101°31'58"	5°28'00"	1283.55	1857.30	MATCH EX.	MATCH EX.	50
6-5	347+51.58	351+73.11	355+56.11	42°14'17"	5°15'00"	421.53	804.53	0.086	350	50
7-1	330+91.05	333+85.15	336+65.60	30°09'50"	5°15'00"	294.10	574.55	MATCH EX.	MATCH EX.	50
7-2	339+27.26	340+38.58	341+49.46	8°53'17"	4°00'00"	111.32	222.20	MATCH EX.	MATCH EX.	50
10-3	341+55.59	344+98.62	348+13.92	39°28'32"	6°00'00"	342.63	657.93	0.10	340	50
13-3	312+51.56	364+78.03	342+30.82	156°24'39"	5°15'00"	5226.47	2979.25	0.10	480	60
13-4	346+90.63	351+12.16	354+95.16	42°14'17"	5°15'00"	421.53	804.53	0.10	480	60
14-1	354+95.03	356+80.47	358+65.87	1°51'15"	0°30'00"	185.44	370.84	N.A.	N.A.	60
14-2	358+65.87	360+51.31	362+36.71	1°51'15"	0°30'00"	185.44	370.84	N.A.	N.A.	60

C.L. I-49
SURVEY BASELINE N 25°22'36" W 1000.21'
N25°27'24"W
365+00
C.L. I-49 STA. 362+36.71, 49.50' LT. =
C.L. SB I-49 TO HWY. 112 EXIT STA. 362+36.71
8214
PT 362+36.71
(14-2)
8213
PI 360+51.31
360+00
C.L. SB I-49 TO HWY. 112 EXIT
8212
PRC 358+65.87
PN:50
PD:5/8" REBAR W/ CAP
C.L. I-49 STA. 355+56.11, 61.50' RT. =
C.L. HWY. 112 TO NB I-49 RAMP STA. 355+56.11
PT 355+56.11
PT 354+95.16
(14-1)
PI 356+80.47
8211
8115
C.L. I-49 STA. 354+95.16, 61.50' LT. =
C.L. SB I-49 TO HWY. 112 EXIT STA. 354+95.03
8210
355+00
8012
SURVEY BASELINE N 39°25'06" W 779.38'
8176
PC 354+95.03
POE 354+82.39
C.L. I-49 STA. 354+82.39, 61.50' LT. =
C.L. SB I-49 TO HWY. 112 RAMP STA. 354+82.39
N25°27'24"W
(6-5)
PI 351+73.11
C.L. HWY. 112
TO NB I-49 RAMP
C.L. SB I-49 TO HWY. 112 RAMP
8114
350+00
PN:49
PD:5/8" REBAR W/ CAP
PC 347+51.58
(13-4)
8011
PI 351+12.16
350+00
8113
SURVEY BASELINE N 69°20'50" W 868.23'
C.L. HWY. 112 TO NB I-49 RAMP STA. 341+49.46, 12.00' RT. =
C.L. HWY. 71 TO NB I-49 RAMP STA. 341+49.46
PT 341+49.46
PT 341+29.08
C.L. SB I-49 TO HWY. 112 RAMP STA. 348+13.92, 9.00' RT. =
C.L. SB I-49 TO HWY. 71 RAMP STA. 348+13.92
8209
PT 348+13.92
CT
PN:53
PD:5/8" REBAR W/ CAP
N26°7'38"W
(10-3)
C.L. SB I-49 TO HWY. 71 RAMP
345+00
8208
PI 344+98.62
8010
345+00
PC 346+90.63
N67°41'41"W
8195
PN:48
PD:5/8" REBAR W/ CAP
8194
8112
PI 340+38.58
PC 339+27.26
(7-2)
8193
C.L. HWY. 71 TO NB
I-49 RAMP
PT 336+65.60
8009
340+00
PT 342+30.82
N58°48'24"W
SURVEY BASELINE N 39°13'11" W 509.58'
C.L. HWY. 112 TO
NB. I-49 RAMP
8192
(13-3)
(6-4)
(7-1)
335+00

SURVEY CONTROL DETAILS

AEWierclak 3/20/2016 11:56:26 AM
WORKSPACE: AHTD
L:\20\1\1017707 - I-540 Widening & Interchange Improvement\Drawings\rBB0414_SC_07.dgn
REVISED DATE:

DATE REVISED	DATE FILMED	DATE REVISED	DATE FILMED	FED.RD. DIST.NO.	STATE	FED.AID PROJ.NO.	SHEET NO.	TOTAL SHEETS
				6	ARK.			
				JOB NO.		BB0414	269	886

(2) SURVEY CONTROL DETAILS

N

1" =200'

ALL BEARINGS ARE GRID
BASED ON GPS
ALL DISTANCES ARE GROUND

STATE OF ARKANSAS
LICENSED PROFESSIONAL ENGINEER
No. 13422
JOHN F. CANTABERY
3-20-16

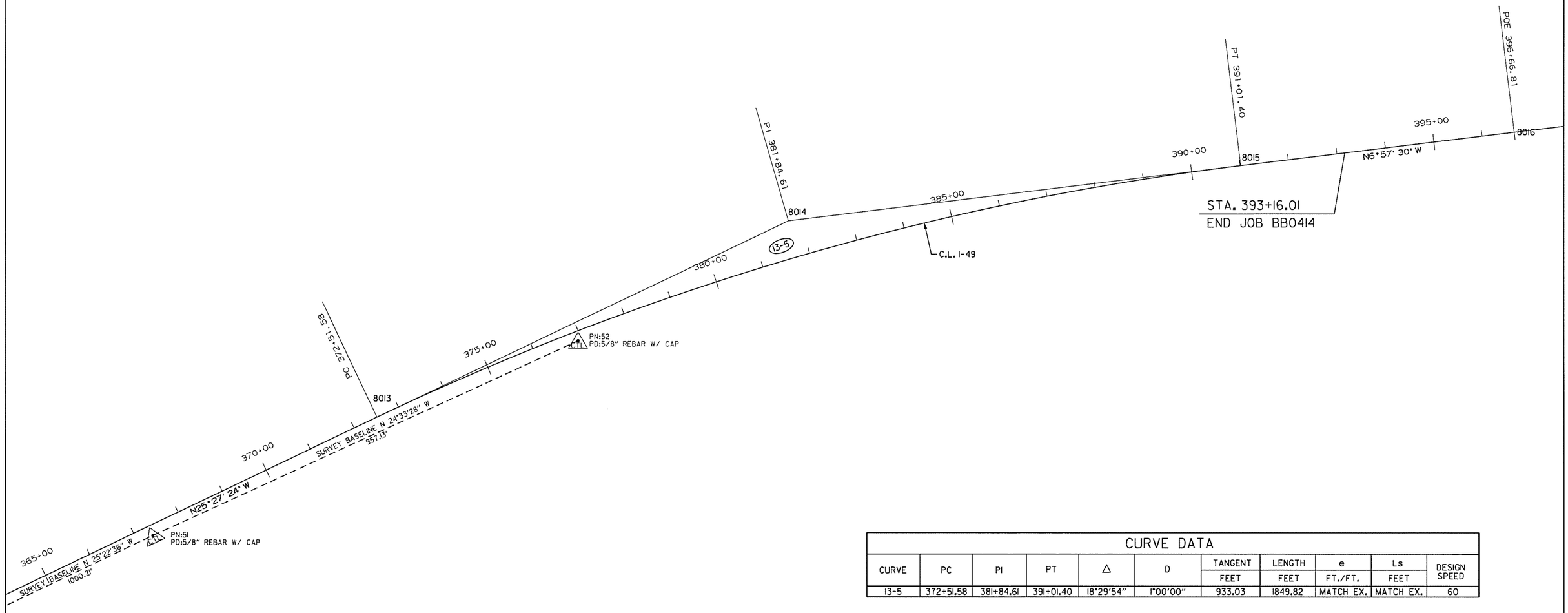

CURVE DATA

CURVE	PC	PI	PT	Δ	D	TANGENT FEET	LENGTH FEET	e FT./FT.	Ls FEET	DESIGN SPEED
13-5	372+51.58	381+84.61	391+01.40	18°29'54"	1°00'00"	933.03	1849.82	MATCH EX.	MATCH EX.	60

SURVEY CONTROL DETAILS

AEWerclok 3/20/2016 11:56:26 AM
WORKSPACE: AHTD
L:\2016\160707 - I-540 Widening & Interchange Improvement\Drawings\rBB0414_SC_08.dgn
REVISED DATE:

DATE REVISED	DATE FILMED	DATE REVISED	DATE FILMED	FED.RD. DIST.NO.	STATE	FED.AID PROJ.NO.	SHEET NO.	TOTAL SHEETS
				6	ARK.			
				JOB NO.		BB0414	270	886
				(2)	SURVEY CONTROL DETAILS			

STATE OF ARKANSAS
LICENSED PROFESSIONAL ENGINEER
No.13422
JOHN F. CANTABERY
3-20-16

N

1" = 300'

ALL BEARINGS ARE GRID
BASED ON GPS
ALL DISTANCES ARE GROUND

PN:60
PD:5/8" REBAR W/CAP

PN:61
PD:5/8" REBAR
W/CAP

PN:55
PD:5/8" REBAR
W/CAP

PN:56
PD:5/8" REBAR W/CAP

PN:102
PD:AHTD GPS
720018 RESET

PN:45
PD:5/8" REBAR
W/CAP

PN:42
PD:5/8" REBAR
W/CAP

PN:44
PD:5/8" REBAR
W/CAP

PN:41
PD:5/8" REBAR
W/CAP

PN:40
PD:5/8" REBAR
W/CAP

PN:113
PD:5/8" REBAR
W/CAP

PN:39
PD:5/8" REBAR W/CAP

PN:112
PD:5/8" REBAR
W/CAP

SURVEY BASELINE N 71°43'08" E
792.68'

SURVEY BASELINE N 87°51'14" E
220.08'

SURVEY BASELINE N 88°25'48" E
489.76'

SURVEY BASELINE N 77°58'35" E

SURVEY BASELINE N 65°10'22" E
901.88'

SURVEY BASELINE N 60°52'51" E
978.42'

SURVEY BASELINE N 27°09'52" E
714.37'

SURVEY BASELINE N 34°45'57" E
1257.54'

C.L. TEMP. SB I-49
TO C-D RD. RAMP

C.L. TEMP. C-D RD.
TO HWY. 112 RAMP

C.L. TEMP. C-D RD.
TO SB I-49 DETOUR

C.L. STAGE 2 NB I-49 SHIFT

C.L. TEMP. EX. NB I-49
TO PR. I-49 RAMP

C.L. TEMP. NB I-49 TO
HWY. 71B RAMP

T1-1 T1-2 T2-1 T3-1 T4-1 T4-2 T5-1 T5-2 T5-3 T6-1 T6-2

PC 283+46.28 PT 288+83.21 PT 291+10.81 PI 307+86.05 PT 311+08.92 PC 306+38.85 PC 307+64.39 PT 307+70.70 PC 308+07.70 PI 309+60.72 PC 308+13.00 PI 308+58.92 PT 309+04.79 PC 310+38.00 PI 311+61.66 PT 312+84.79 PC 314+87.51 PC 317+42.84 PI 319+17.03 PT 320+76.89 PI 320+22.23 PC 324+48.80 PI 324+54.54 PT 324+60.28 PC 280+29.37 PC 282+88.89 PI 281+59.33 PC 285+88.74 PT 292+41.96 PI 289+18.05

CURVE DATA										
CURVE	PC	PI	PT	Δ	D	TANGENT FEET	LENGTH FEET	e FT./FT.	Ls FEET	DESIGN SPEED
T1-1	280+29.37	281+59.33	282+88.89	7°47'08"	3°00'00"	129.96	259.52	MATCH EX.	300'	50
T1-2	282+88.89	287+06.31	291+10.81	24°39'28"	3°00'00"	417.42	821.92	N.C.	N/A	50
T2-1	283+46.28	290+18.71	288+83.21	144°58'13"	27°00'00"	672.42	536.93	MATCH EX.	300'	25
T3-1	285+88.74	289+18.05	292+41.96	17°57'49"	2°45'00"	329.31	653.22	MATCH EX.	MATCH EX.	50
T4-1	307+64.39	307+86.05	308+07.70	1°05'21"	2°30'52"	21.66	43.32	SEE PROFILE	SEE PROFILE	50
T4-2	308+07.70	309+60.72	311+08.92	24°51'03"	8°15'00"	153.02	301.22	MATCH EX.	MATCH EX.	50
T5-1	308+13.00	308+58.92	309+04.79	5°07'46"	5°35'19"	45.92	91.79	MATCH EX.	MATCH EX.	50
T5-2	310+38.00	311+61.66	312+84.79	9°15'17"	3°45'00"	123.66	246.79	0.049	250'	50
T5-3	317+42.84	319+17.03	320+76.89	40°05'09"	12°00'00"	174.19	334.05	0.070	300'	50
T6-1	314+87.51	320+22.23	324+48.80	62°29'03"	6°30'00"	534.72	961.29	0.100	N/A	50
T6-2	324+48.80	324+54.54	324+60.28	0°35'40"	5°10'44"	5.74	11.48	0.100	N/A	50

SURVEY CONTROL DETAILS
TEMPORARY ALIGNMENTS

AEWerclok 3/20/2016 11:56:26 AM
WORKSPACE: AHTD
L:\2016\160707 - I-540 Widening & Interchange Improvement\Drawings\r-BB0414_SC_09.dgn
REVISED DATE:

DATE REVISED	DATE FILMED	DATE REVISED	DATE FILMED	FED.RD. DIST.NO.	STATE	FED.AID PROJ.NO.	SHEET NO.	TOTAL SHEETS
				6	ARK.			
				JOB NO.		BB0414	271	886
				(2)	SURVEY CONTROL DETAILS			

STATE OF ARKANSAS
LICENSED PROFESSIONAL ENGINEER
No. 13422
JOHN F. CANTABERY
3-20-16

1" =200'

ALL BEARINGS ARE GRID
BASED ON GPS
ALL DISTANCES ARE GROUND

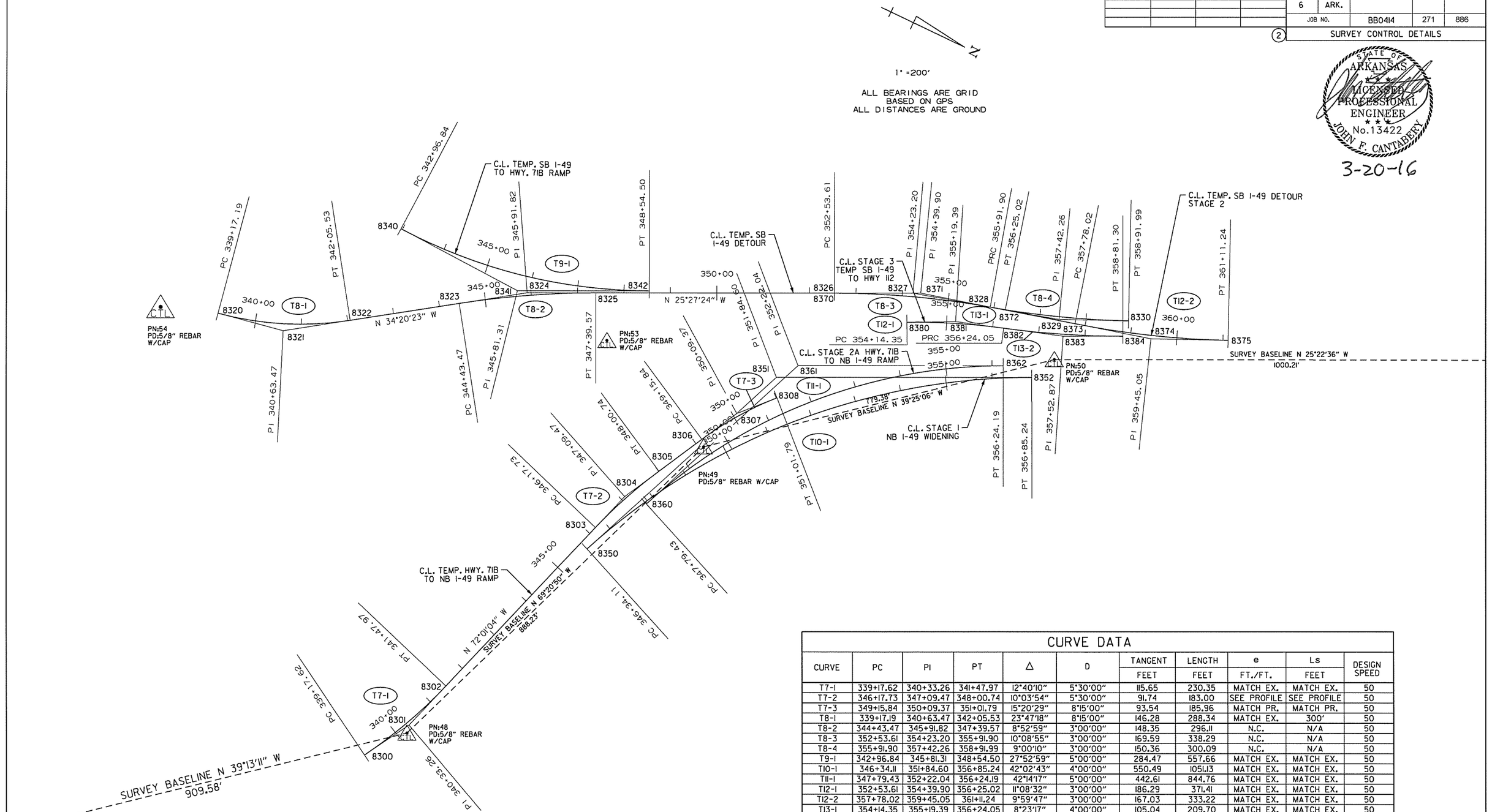

CURVE DATA

CURVE	PC	PI	PT	Δ	D	TANGENT FEET	LENGTH FEET	e FT./FT.	Ls FEET	DESIGN SPEED
T7-1	339+17.62	340+33.26	341+47.97	12°40'10"	5°30'00"	115.65	230.35	MATCH EX.	MATCH EX.	50
T7-2	346+17.73	347+09.47	348+00.74	10°03'54"	5°30'00"	91.74	183.00	SEE PROFILE	SEE PROFILE	50
T7-3	349+15.84	350+09.37	351+01.79	15°20'29"	8°15'00"	93.54	185.96	MATCH PR.	MATCH PR.	50
T8-1	339+17.19	340+63.47	342+05.53	23°47'18"	8°15'00"	146.28	288.34	MATCH EX.	300'	50
T8-2	344+43.47	345+91.82	347+39.57	8°52'59"	3°00'00"	148.35	296.11	N.C.	N/A	50
T8-3	352+53.61	354+23.20	355+91.90	10°08'55"	3°00'00"	169.59	338.29	N.C.	N/A	50
T8-4	355+91.90	357+42.26	358+91.99	9°00'10"	3°00'00"	150.36	300.09	N.C.	N/A	50
T9-1	342+96.84	345+81.31	348+54.50	27°52'59"	5°00'00"	284.47	557.66	MATCH EX.	MATCH EX.	50
T10-1	346+34.11	351+84.60	356+85.24	42°02'43"	4°00'00"	550.49	1051.13	MATCH EX.	MATCH EX.	50
T11-1	347+79.43	352+22.04	356+24.19	42°14'17"	5°00'00"	442.61	844.76	MATCH EX.	MATCH EX.	50
T12-1	352+53.61	354+39.90	356+25.02	11°08'32"	3°00'00"	186.29	371.41	MATCH EX.	MATCH EX.	50
T12-2	357+78.02	359+45.05	361+11.24	9°59'47"	3°00'00"	167.03	333.22	MATCH EX.	MATCH EX.	50
T13-1	354+14.35	355+19.39	356+24.05	8°23'17"	4°00'00"	105.04	209.70	MATCH EX.	MATCH EX.	50
T13-2	356+24.05	357+52.87	358+81.30	7°43'03"	3°00'00"	128.82	257.25	MATCH EX.	MATCH EX.	50

SURVEY CONTROL DETAILS
TEMPORARY ALIGNMENTS

AEWierclock 3/21/2016 8:14:07 AM
WORKSPACE: ANTD
L:\20II\II0I707 - I-540 Widening & Interchange Improvement\Drawings\rBB0414_SC_I0.dgn
REVISED DATE:

DATE REVISED	DATE FILMED	DATE REVISED	DATE FILMED	FED. RD. DIST. NO.	STATE	FED. AID PROJ. NO.	SHEET NO.	TOTAL SHEETS
				6	ARK.			
				JOB NO.		BB0414	272	886

(2) PLAN & PROFILE - STA. 230+00 TO 245+00

N. HENBEST DR.
EX. PORTER RD. RAMP 3
EX. PORTER RD. RAMP 2
CONCRETE DRAIN
PAVED DRAIN
CURB
SIGN
GATE
N. SHILOH DR.
C.L. SHILOH DR.
C.L. I-49 MEDIAN
CONSTRUCTION LIMITS
EXIST. R/W & C/A
N 34°31'09" E
N 34°30'40" E
PT 10+49.81
STA. 239+77.13
BEGIN JOB BB0414
BEGIN BARRIER WALL LT. SIDE TYPE E
+77.13
15+00
230+00
235+00
240+00
245+00
10' EX. SHLD.
47' EX. LANES
18'
CONCRETE BARRIER WALL (SIDE TYPE E)
CONCRETE BARRIER WALL (MEDIAN TYPE C)
48'
26'
IN-34 PDS5'8" REBAR W/ CAP
IN-2930 PDS SQUARE CUT IN DROP INLET
BEGIN BARRIER WALL STA. 239+77.13 MEDIAN TYPE C
300' TAPER

STA. 242+03 IN PLACE
DROP INLET IN MEDIAN WITH
24" X 73' R.C. PIPE OUTLET
REMOVE DROP INLET
PLUG AND ABANDON PIPE
CULVERT

I-49

NOTCH, WIDEN, AND OVERLAY LT. AND RT. LANES
300' VERTICAL TRANSITION TO MATCH EXISTING
EXISTING GROUND AT C.L. MEDIAN

REFER TO SURVEY CONTROL DETAIL SHEETS FOR HORIZONTAL AND VERTICAL CONTROL DATA

1320 1310 1300 1290 1280 1270 1260 1250 1240 1230

230+00 231+00 232+00 233+00 234+00 235+00 236+00 237+00 238+00 239+00 240+00 241+00 242+00 243+00 244+00 245+00

STATE OF ARKANSAS
LICENSED PROFESSIONAL ENGINEER
No. 13653
ADAM E. WIERCIAK
5/2/16

AEWierciak 3/20/2016 11:56:32 AM
WORKSPACE: AHTD
L:\20IN\I0I707 - I-540 Widening & Interchange Improvement\Drawings\r-BB0414_PP_MNL_0I.dgn
REVISED DATE:

DATE REVISED	DATE FILMED	DATE REVISED	DATE FILMED	FED. RD. DIST. NO.	STATE	FED. AID PROJ. NO.	SHEET NO.	TOTAL SHEETS
				6	ARK.			
				JOB NO.		BB0414	273	886

(2) PLAN & PROFILE - STA. 245+00 TO 260+00

CONCRETE DITCH PAVING (TYPE B) I-49

STA.	STA.	SIDE	"W"	SQ. YDS.
248+25	249+25	RT. = 100 LIN. FT.	6'-0"	67

N

W. MOORE LN.

C.L. SHILOH DR.

20+00 25+00 30+00

N 34°31'09" E

CONSTRUCTION LIMITS

CONCRETE BARRIER WALL (SIDE TYPE E)

EX. 10' SHLDR.

10' 48' 24' EX. LANES 26' 250+00 C.L. I-49 MEDIAN 255+00 CONCRETE BARRIER WALL (MEDIAN TYPE C) 260+00

245+00

EX. 4' SHLDR.

EX. 4' SHLDR.

N 34°30'40" E

2' 2'

26' 48' 24' EX. LANES 10'

EX. 10' SHLDR.

CONSTRUCTION LIMITS

STA. 247+60 CONSTRUCT
24" X 156' R.C. PIPE CULVERT
W/FES (JACK AND BORE)
(CLASS V) TYPE 2 BEDDING
WITH TYPE ST DROP INLET
69' LT. (3'8" X 3'6" X H=5'1")
CONNECT TO EXISTING DROP INLET
96' LT. WITH 36" X 24' R.C. PIPE
CULVERT
(CLASS III) TYPE 3 BEDDING
Q50 = 12 CFS DA = 0.8 ACRES

STA. 248+16 IN PLACE DROP INLET IN MEDIAN
MODIFY DROP INLET (SEE SPECIAL DETAIL)
IN PLACE 24" X 165' R.C. PIPE CULVERT
29° RT. FWD. SKEW
WITH HDWL. RT. REMOVE HDWL. RT. AND
EXTEND R.C. PIPE 16' RT. WITH FES RT.
CONSTRUCT TYPE ST DROP INLET 69' LT.
AT STA. 247+77 (4' X 3'-6" X H=5'3")
WITH 29" X 18" X 12' R.C. ARCH PIPE CULVERT OUTLET
CONNECT TO DROP INLET STA. 247+60
AND REMOVE 24" X 33' R.C. PIPE
CULVERT LT. OF DROP INLET
(CLASS III) TYPE 3 BEDDING
Q50 = 15 CFS DA = 10.9 ACRES
24" R.C. PIPE = 20 LIN. FT.
24" FES = 1 EA.

EXIST. R/W & C/A

STA. 258+50 CONSTRUCT
TYPE ST DROP INLET 69' LT.
(3' X 3' X H=6'3") WITH
24" X 247' R.C. PIPE CULVERT
CONNECT TO DROP INLET
AT STA. 261+00
(CLASS III) TYPE 3 BEDDING

I-49

1330 1320 1310 1300 1290 1280 1270 1260 1250 1240

NOTCH, WIDEN, AND OVERLAY
LT. AND RT. LANES

EXISTING GROUND
AT C.L. MEDIAN

RIGHT DITCH
GRADE

2.66% 2.37% 3.64% 3.46%

STA. 247+60
TOP = 1290.32 (LT.)
INV = 1285.22 (LT.)
PROP F.L. 1286.60 (RT.)
PROP F.L. 1285.02 (LT.)

+45.00 RT. 1287.01
+60.52 RT. 1286.60

STA. 247+77
TOP 1290.50 (LT.)
INV 1285.25 (LT.)

+25.00 RT. 1288.13
+67.00 RT. 1286.60

STA. 248+16
TOP 1289.19 (MEDIAN)
INV 1285.81 (MEDIAN)
E.X. F.L. 1286.42 (RT.)
PROP F.L. 1286.60 (RT.)

+25.00 RT. 1288.60

STA. 258+50
TOP = 1290.30 (LT.)
INV = 1284.05 (LT.)

REFER TO SURVEY CONTROL DETAIL SHEETS FOR
HORIZONTAL AND VERTICAL CONTROL DATA

245+00 246+00 247+00 248+00 249+00 250+00 251+00 252+00 253+00 254+00 255+00 256+00 257+00 258+00 259+00 260+00

STATE OF ARKANSAS
LICENSED PROFESSIONAL ENGINEER
No. 13653
ADAM E. WIERCIAK
3/23/16

AEWierciak 3/20/2016 11:56:33 AM
WORKSPACE: AHTD
L:\2016\16017\07 - I-540 Widening & Interchange Improvement\Drawings\r-BB0414_PP_MNL_02.dgn
REVISED DATE:

DATE REVISED	DATE FILMED	DATE REVISED	DATE FILMED	FED. RD. DIST. NO.	STATE	FED. AID PROJ. NO.	SHEET NO.	TOTAL SHEETS
				6	ARK.			
				JOB NO.		BB0414	274	886

(2) PLAN & PROFILE - STA. 260+00 TO 275+00

CONCRETE DITCH PAVING (TYPE B) I-49

STA.	STA.	SIDE	"W"	SQ. YDS.
261+50	265+05	RT. = 355 LIN. FT.	6'-0"	237
269+00	270+50	RT. = 150 LIN. FT.	6'-0"	100
271+75	274+28	RT. = 253 LIN. FT.	6'-0"	169

PC 35+77.92
PI 36+82.86
PT 37+87.74
PC 38+51.93
PI 39+70.15
PT 40+88.28
43+15.90 SHILOH DR. RT. LANE BEGIN CURB AND GUTTER
FOXGLOVE DR.
EXISTING R/W
CONSTRUCTION LIMITS
35+00
EXISTING C/A
N 34°31'09" E
N 37°39'59" E
40+00
C.L. SHILOH DR.
+20.84
300' TAPER
45+00
+20.84
700' ACCELERATION LANE
N 34°07'16" E
EX. 10' SHLDR.
10'
48'
260+00
24' EX. LANES
26'
265+00
EX. 4' SHLDR.
CONCRETE BARRIER WALL (SIDE TYPE E)
270+00
C.L. I-49 MEDIAN
275+00
N 34°30'40" E
CONCRETE BARRIER WALL (MEDIAN TYPE C)
60'
12'
6'
EX. 10' SHLDR.
CONSTRUCTION LIMITS

STA. 261+00 CONSTRUCT TYPE ST DROP INLET (3'0" X 3'0" X H=6'3") 69' LT. WITH 24" X 297' R.C. PIPE CULVERT CONNECT TO DROP INLET AT STA. 264+00 (CLASS III) TYPE 3 BEDDING

STA. 264+00 CONSTRUCT TYPE ST DROP INLET (3'0" X 3'0" X H=6'3") 69' LT. WITH 24" X 205' R.C. PIPE CULVERT CONNECT TO DROP INLET AT STA. 266+09 (CLASS III) TYPE 3 BEDDING

STA. 265+42 IN PLACE
36" X 215' R.C. PIPE CULVERT WITH HDWL. RT.
REMOVE HDWL. RT. AND EXTEND R.C. PIPE 30' RT.
REMOVE 12' PIPE LT. AND CONSTRUCT TYPE ST DROP INLET (6' X 4' X H=8'5") STA. 266+09.50 69' LT.
WITH 36" X 8' R.C. PIPE OUTLET
CONNECT TO DROP INLET AT STA. 266+22 LT.
(CLASS III) TYPE 3 BEDDING WITH FES RT.
IN PLACE DROP INLET IN MEDIAN
MODIFY DROP INLET (SEE SPECIAL DETAIL)
Q50 = 25 CFS DA = 6.2 ACRES
36" R.C. PIPE = 42 LIN. FT.
36" FES = 1EA.

STA. 266+22 CONSTRUCT TYPE ST DROP INLET (4' X 4' X H=8'3") 69' LT. WITH 36" X 7' R.C. PIPE CULVERT CONNECT TO SHILOH DR. DROP INLET AT STA. 40+17 AND REMOVE 36" X 18' R.C. PIPE CULVERT LT. OF DROP INLET (CLASS III) TYPE 3 BEDDING
EXIST. R/W & C/A

STA. 270+26 IN PLACE
36" X 184' R.C. PIPE CULVERT
WITH HDWL. RT. REMOVE HDWL. RT. AND EXTEND R.C. PIPE 15' RT.
CONSTRUCT TYPE ST DROP INLET (4' X 3' X H=11'2") 69' LT.
(CLASS III) TYPE 3 BEDDING WITH FES RT.
IN PLACE DROP INLET IN MEDIAN
MODIFY DROP INLET (SEE SPECIAL DETAIL)
Q50 = 38 CFS DA = 13.4 ACRES
36" R.C. PIPE = 19 LIN. FT.
36" FES = 1EA.

STA. 271+77 CONSTRUCT TYPE ST DROP INLET (3'0" X 3'0" X H=6'3") 71' LT. WITH 24" X 12' R.C. PIPE CULVERT CONNECT TO SHILOH DR. DROP INLET AT STA. 45+71 (CLASS III) TYPE 3 BEDDING

STA. 273+90 IN PLACE
42" X 150' R.C. PIPE CULVERT
WITH HDWL. RT. REMOVE HDWL. AND 72' PIPE RT.
EXTEND R.C. PIPE 92' RT.
CONSTRUCT TYPE ST DROP INLET (5'0" X 3'0" X H=7'11") 77' LT.
(CLASS IV) TYPE 3 BEDDING WITH FES RT.
IN PLACE DROP INLET IN MEDIAN
REMOVE
Q50 = 82 CFS DA = 26.9 ACRES
42" R.C. PIPE = 96 LIN. FT.
42" FES = 1EA.

I-49

NOTCH, WIDEN, AND OVERLAY LT. AND RT. LANES

STA. 261+00
TOP = 1284.65 (LT.)
INV = 1278.40 (LT.)
+50.00 RT. 1280.04

STA. 264+00
TOP = 1275.77 (LT.)
INV = 1269.52 (LT.)
-4.75% RIGHT DITCH GRADE
-0.66% RT.
+36.00 RT. 1266.44
+41.00 RT. 1266.44

STA. 265+42
EX. F.L. = 1265.51 (RT.)
PROP. F.L. = 1266.44 (RT.)
TOP = 1269.31 (MEDIAN)
INV. = 1263.15 (MEDIAN)
+05.00 RT. 1269.43

STA. 266+09.50
TOP = 1269.44 (LT.)
INV = 1263.21 (LT.)
INV = 1261.00 (LT.)

EXISTING GROUND AT C.L. MEDIAN

STA. 266+22
TOP = 1269.06 (LT.)
INV = 1260.81 (LT.)

+00.00 RT. 1257.55

STA. 270+26
EX. F.L. = 1251.15 (RT.)
PROP. F.L. = 1251.98 (RT.)
TOP = 1256.92 (LT.)
INV = 1245.78 (LT.)
-4.42% RT. DT.
-0.27%
+26.00 RT. 12511.99
+50.00 RT. 1253.01

STA. 271+77
TOP = 1252.36
INV = 1246.11
+75.00 RT. 1249.21
-4.33% RIGHT DITCH GRADE

STA. 273+90
EX. F.L. = 1242.02 (RT.)
PROP F.L. = 1239.91 (RT.)
TOP = 1245.80 (LT.)
INV = 1237.86 (LT.)
-0.86%
+90.00 RT. 1239.91
+25.00 RT. 1241.61

STATE OF ARKANSAS
LICENSED PROFESSIONAL ENGINEER
No. 13653
ADAM E. WIERCIAK
3/25/16

REFER TO SURVEY CONTROL DETAIL SHEETS FOR HORIZONTAL AND VERTICAL CONTROL DATA

1300 1290 1280 1270 1260 1250 1240 1230 1220 1210

260+00 261+00 262+00 263+00 264+00 265+00 266+00 267+00 268+00 269+00 270+00 271+00 272+00 273+00 274+00 275+00

AEWierciak 3/20/2016 11:56:33 AM
WORKSPACE: AHTD
L:\2011\011707 - I-540 Widening & Interchange Improvement\Drawings\r-BB0414_PP_MNL_03.dgn
REVISED DATE:

DATE REVISED	DATE FILMED	DATE REVISED	DATE FILMED	FED. RD. DIST. NO.	STATE	FED. AID PROJ. NO.	SHEET NO.	TOTAL SHEETS
				6	ARK.			
				JOB NO.		BB0414	275	886

(2) PLAN & PROFILE - STA. 275+00 TO 290+00

STA. 284+88 IN PLACE DROP INLET REMOVE AND W/42" X 222' R.C. PIPE LT. AND RT. OF DROP INLET PLUG AND ABANDON

STA. 285+60 CONSTRUCT TYPE ST DROP INLET 3' LT. (3' X 3' X H=5'2") WITH 24" X 117' R.C. PIPE OULET CONNECT TO DROP INLET AT STA. 286+80 (CLASS III) TYPE 3 BEDDING

C.L. I-49
PI = 288+21.59
Δ = 16°57'55" RT.
D = 2°00'00"
T = 427.26'
L = 848.26'
PC = 283+94.33
PT = 292+42.59
e = 0.055'/'
Ls = 525'

STA. 276+18 INSTALL OVERHEAD HIGHWAY SIGN I-49 RT. LANES SEE SIGNING PLANS

C.L. I-49 STA. 276+17.66, 53.50' RT. = C.L. HWY. 112 RAMP 1 STA. 276+17.66

STA. 277+67 CONSTRUCT TYPE ST DROP INLET (3'0" X 3'0" X H=6'3") 77' LT. WITH 24" X 12' R.C. PIPE CULVERT CONNECT TO SHILOH DR. DROP INLET AT STA. 5+60 (CLASS III) TYPE 3 BEDDING

STA. 284+05 CONSTRUCT 42" X 192' R.C. PIPE CULVERT (CLASS IV) TYPE 3 BEDDING WITH TYPE ST DROP INLET 3' LT. (4'6" X 3' X H=8'3") AND FES LT. CONNECT TO JUNCTION BOX AT RAMP 1 STA. 283+99 RT.

STA. 287+98 IN PLACE DROP INLET IN MEDIAN REMOVE AND CONSTRUCT TYPE ST DROP INLET 3' LT. (3' X 3' X H=6'0") IN PLACE 18" X 96' R.C. PIPE CULVERT WITH HDWL. LT. REMOVE HDWL. LT. AND EXTEND R.C. PIPE 22' LT. WITH FES LT. 22' RT. FWD. SKEW (CLASS III) TYPE 3 BEDDING
18" R.C. PIPE = 26 LIN. FT.
18" FES = 1EA.

STA. 286+80 CONSTRUCT TYPE ST DROP INLET 3' LT. (3' X 3' X H=5'6") WITH 24" X 115' R.C. PIPE OULET CONNECT TO DROP INLET AT STA. 288+00 (CLASS III) TYPE 3 BEDDING

C.L. HWY. 112 RAMP 4
PC 283+94.33
CONSTRUCTION LIMITS
720' TAPER
C.L. HWY. 112 RAMP 1
C.L. COLLECTOR-DISTRIBUTOR RD.
+37.46 C-D RD.
BEGIN BARRIER WALL RT. MEDIAN TYPE C
CONCRETE BARRIER WALL (MEDIAN TYPE C)
CONCRETE BARRIER WALL (SIDE TYPE E)
700' ACCELERATION LANE
EXISTING C/A
EXIST. R/W
EXIST. R/W & C/A
PROPOSED R/W & C/A
C.L. I-49 MEDIAN
C.L. I-49 STA. 276+17.66, 65.50' LT. = C.L. HWY. 112 RAMP 4 STA. 279+22.29
CHICORY DR.
PAVED PARKING
RET. WALL
PAVED DRAIN
EX. 6' SHLDR.
EX. 4' SHLDR.
EX. 10' SHLDR.
EX. LANES
N 34°07'16" E
N 31°54'20" E
N 34°30'40" E
I-49

C.L. I-49 STATIONING	GUARDRAIL (TYPE A)	GUARDRAIL TERMINAL (TYPE 2)	THRIE BEAM GUARDRAIL TERMINAL	TERMINAL ANCHOR POST (TYPE I)
STA. 274+24.00 TO STA. 276+99.00 RT.	= 225 LIN. FT.	1EACH		1EACH
STA. 287+98.85 TO STA. 290+17.60 RT.	= 150 LIN. FT.	1EACH	1EACH	

STA. 277+67
TOP = 1235.03
INV = 1228.78

EXISTING GROUND AT C.L. MEDIAN

STA. 284+05
TOP = 1226.57 (MEDIAN)
INV = 1218.31 (MEDIAN)
PROP F.L. = 1217.76 (LT.)
PROP F.L. = 1218.79 (RT.)

-2.64% LT. DT. -0.86% LEFT DITCH GRADE

+00.00 LT. 1220.53
+05.00 LT. 1217.76

STA. 285+60
TOP = 1225.66
INV = 1220.49

LT. INSIDE SHOULDER GRADE AT MEDIAN BARRIER

+00.00 MED. 1225.98
+60.00 MED. 1225.66
+20.00 MED. 1225.87
+80.00 MED. 1225.53
+40.00 MED. 1225.78
PVI +00.00.00 ELEV. 1225.43
+60.00 MED. 1225.89
PVC 289+00.00 ELEV. 1226.63
PVI 290+00.00 ELEV. 1226.83

-0.53% 0.35% -0.57% 0.42% -0.58% 0.20% 0.77%

PROFILE GRADE LEFT LANE VC=200.00' K 173.91

STA. 286+80
TOP = 1225.53
INV = 1220.03

-0.23% RIGHT DITCH GRADE

STA. 287+98
TOP = 1225.43
INV = 1219.47
EX. F.L. = 1218.96 (LT.)
PROP F.L. = 1218.43 (LT.)

+68.00 RT. 1219.62
+96.00 LT. 1216.11

NOTCH, WIDEN, AND OVERLAY LT. AND RT. LANES

STA. 288+00.00 MATCH EX. SUPERELEVATION LT.
STA. 291+11.34 MAX. SUPERELEVATION LT. (0.055'/')
STA. 292+68.89 END SUPERELEVATION LT. (0.032'/')

NOTCH, WIDEN, AND OVERLAY RT. LANES

REFER TO SURVEY CONTROL DETAIL SHEETS FOR HORIZONTAL AND VERTICAL CONTROL DATA

STATE OF ARKANSAS
LICENSED PROFESSIONAL ENGINEER
No. 13653
ADAM E. WIERCIAK
3/29/16

AEWierciak 3/20/2016 11:56:33 AM
WORKSPACE: AHTD - I-540 Widening & Interchange Improvement\Drawings\rBB0414_PP_MNL_04.dgn
L:\20110\07707
REVISED DATE:

DATE REVISED	DATE FILMED	DATE REVISED	DATE FILMED	FED. RD. DIST. NO.	STATE	FED. AID PROJ. NO.	SHEET NO.	TOTAL SHEETS
				6	ARK.			
				JOB NO.		BB0414	276	886

(2) PLAN & PROFILE - STA. 290+00 TO 305+00

STA. 291+27 IN PLACE
4' X 4' X 525' R.C. BOX CULVERT
29° LT. FWD. SKEW
WITH 3:1 WINGS (45°) LT. & RT.
MODIFY DROP INLET IN MEDIAN
(SEE SPECIAL DETAIL)
RETAIN AND EXTEND
20' LT. & 81' RT.
REMOVE AND REPLACE 47' SECTION
050 = 103 CFS DA = 47.9 ACRES

720' TAPER

C.L. COLLECTOR-DISTRIBUTOR RD.

CONSTRUCTION LIMITS

SEE CULVERT DIAGRAM FOR 47' REPLACEMENT SECTION

+39
130' LT.

+96'
115' LT.

PT 293+22.09

PC 293+98.53

STA. 294+00 INSTALL OVERHEAD HWY. SIGN I-49 LT. LANES SEE SIGNING PLANS

+91.28
147.57' BEGIN PROP. C/A

PROPOSED R/W & C/A

+70
134'

1000' AUXILIARY LANE

295+00

CONCRETE BARRIER WALL (MEDIAN TYPE C)

C.L. I-49 STA. 299+33.27, 61.00' LT. =
C.L. SB HWY. 71B STA. 299+33.27

PI 295+47.22

C.L. I-49 STA. 292+41.37 =
C.L. HWY. 112 STA. 19+42.55
Δ = 65°10'31"

DEFLECT PIPE AT JOINTS TO MAINTAIN OFFSET FROM WALL

C.L. I-49 MEDIAN

N 51°28'35" E

+41.79
BEGIN RETAINING WALL NO. 3

+00.00
END BARRIER WALL RT. SIDE TYPE E

CONCRETE BARRIER WALL (SIDE TYPE E)

+17.00
BEGIN BARRIER WALL RT. SIDE TYPE E

+84.50
71.30' RT.
15° BEND LT.

+47.37
106.77' RT.
15° BEND LT.

PI 17+47.75

+20.89
120.85' RT.

STA. 290+40 INSTALL OVERHEAD HIGHWAY SIGN I-49 RT. LANES SEE SIGNING PLANS

CONST. LIMITS

83.50'

55'

C.L. HWY. 112

PT 290+47.74

N 89°59'16" E

C.L. I-49
PI = 299+22.77
Δ = 37°14'24" RT.
D = 4°00'00"
T = 482.61'
L = 931.00'
PC = 294+40.16
PT = 303+71.16
e = 0.093'/'
Ls = 600'

PT 292+42.59

CONSTRUCTION LIMITS

STA. 295+27 CONSTRUCT PC 30" X 91' R.C. PIPE CULVERT WITH FES RT. TO TYPE ST DROP INLET 3' LT. (4' X 3' X H=6'9") WITH 30" X 96' R.C. PIPE CULVERT ON LT. CONNECT TO DROP INLET C-D ROAD STA. 294+52 (CLASS III) TYPE 3 BEDDING
050 = 32 CFS DA = 7.0 ACRES

APPROXIMATE FEMA 100 YR. FLOODPLAIN LIMITS

EXIST. R/W & C/A

+74.94
END RETAINING WALL NO. 3
BEGIN MEDIAN BARRIER C

SEE RETAINING WALL DETAILS

+00
190'

+12.30
180'

+80
207.70'

+28.20
209'

+75
252'

+94.02
301.00'

C.L. HWY. 112 TO NB I-49

STA. 296+89 IN PLACE
DROP INLET IN MEDIAN MODIFY DROP INLET AND CONSTRUCT TYPE ST DROP INLET 3' LT. (4'0" X 3'0" X H=6'8")
IN PLACE RT. 30" X 88' R.C. PIPE CULVERT WITH HDWL. RETAIN AND REMOVE HDWL. RT.
EXTEND R.C. PIPE 6' WITH FES RT.
IN PLACE LT. 30" X 94' R.C. PIPE CULVERT
REMOVE AND CONSTRUCT 30" X 96' R.C. PIPE CULVERT TO DROP INLET C-D ROAD STA. 296+22
(CLASS III) TYPE 3 BEDDING
050 = 33 CFS DA = 7.0 ACRES
30" R.C. PIPE = 10 LIN. FT.
30" FES = 1 EA.

CONSTRUCTION LIMITS

+15
185'

PT 297+90.56

PROPOSED R/W & C/A

OBLITERATE EXISTING ROADWAY

C.L. I-49 STA. 304+17.19, 44.50' RT. =
C.L. NB I-49 TO HWY. 71B RAMP STA. 304+17.19

+95.14
141.86'
END PROP. C/A

EXIST. R/W & C/A

C.L. SB HWY. 71B

CONST. LIMITS

PC 304+91.35

PI 306+77.71

PC 305+00

PI 305+12.41

PT 306+

I-49

STA. 288+00.00 MATCH EX. SUPERELEVATION LT. (0.055'/') STA. 291+11.34 MAX. SUPERELEVATION LT. (0.055'/') STA. 292+68.89 END SUPERELEVATION LT. (0.032'/')

STA. 292+70 CONSTRUCT TYPE ST DROP INLET 8' LT. (3' X 3' X H=7'9") WITH 24" X 99' R.C. PIPE CONNECT TO BOX CULVERT (CLASS III) TYPE 3 BEDDING

STA. 294+44 CONSTRUCT TYPE ST DROP INLET 3' LT. (3' X 3' X H=5'4") WITH 24" X 80' R.C. PIPE OUTLET CONNECT TO DROP INLET STA. 295+27 (CLASS III) TYPE 3 BEDDING

STA. 296+08 CONSTRUCT TYPE ST DROP INLET 3' LT. (3' X 3' X H=5'4") WITH 24" X 78' R.C. PIPE OUTLET CONNECT TO DROP INLET STA. 295+27 (CLASS III) TYPE 3 BEDDING

STA. 299+00 CONSTRUCT TYPE ST DROP INLET 3' RT. (3' X 3' X H=5'2") WITH 24" X 208' R.C. PIPE CULVERT OUTLET CONNECT TO DROP INLET AT STA. 296+89 (CLASS III) TYPE 3 BEDDING

STA. 303+52 IN PLACE DBL. 6' X 3' X 172' R.C. BOX CULVERT WITH 3:1 WINGS & RT. RETAIN AND EXTEND 10' RT. WITH 3:1 WINGS RT.
CONSTRUCT TYPE TM DROP INLET 3' LT. (2'6" X 3'0" X 4'3")
CONNECT TO R.C. BOX CULVERT
050 = 294 CFS DA = 109.3 ACRES

STA. 292+42.59 MATCH EX. SUPERELEVATION RT. (0.055'/')
STA. 292+68.89 BEGIN SUPERELEVATION LT. (0.032'/')
STA. 295+90.16 MAX. SUPERELEVATION LT. & RT. (0.093'/')
STA. 302+21.16 MAX. SUPERELEVATION (0.093'/')
STA. 308+21.16 END SUPERELEVATION

STREAM	STATION	STREAM TYPE	TOP OF CHANNEL ELEV.
CLABBER CREEK	I-49 STA. 299+46 TO STA. 299+58	PERENNIAL	1221 FT. MSL
CLABBER CREEK	I-49 STA. 303+46 TO STA. 303+58	PERENNIAL	1220 FT. MSL
CLABBER CREEK	I-49 STA. 304+20 TO STA. 304+32	PERENNIAL	1219 FT. MSL

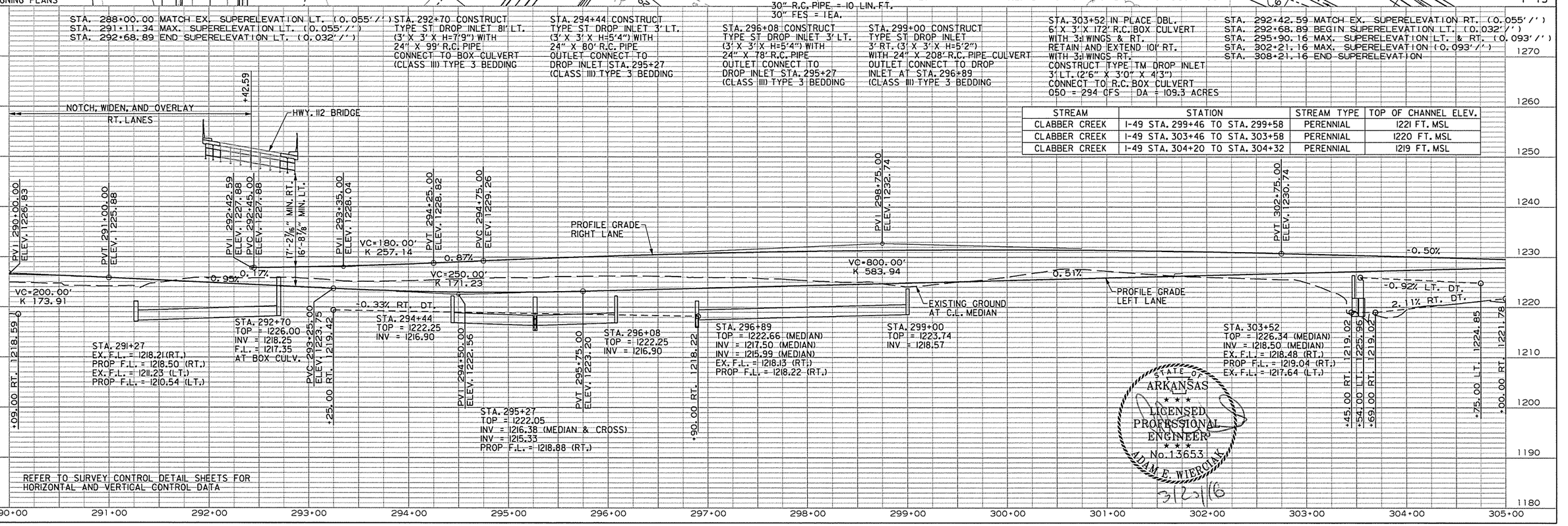

STATE OF ARKANSAS
LICENSED PROFESSIONAL ENGINEER
No. 13653
ADAM E. WIERCIAK
3/23/16

AEWiercIok 3/20/2016 11:56:34 AM
WORKSPACE: AHTD
L:\2014\101707 - I-540 Widening & Interchange Improvement\Drawings\r-BB0414_PP_MNL_05.dgn
REVISED DATE:

DATE REVISED	DATE FILMED	DATE REVISED	DATE FILMED	FED. RD. DIST. NO.	STATE	FED. AID PROJ. NO.	SHEET NO.	TOTAL SHEETS
				6	ARK.			
				JOB NO.		BB0414	277	886

(2) PLAN & PROFILE - STA. 305+00 TO 320+00

OBLITERATE EXISTING ROADWAY

APPROXIMATE FEMA 100 YR. FLOODPLAIN LIMITS

CONSTRUCTION LIMITS

STA. 310+00 CONSTRUCT TYPE ST DROP INLET 3' RT. (3' X 3' X H=5'10") WITH 24" X 90' R.C. PIPE CULVERT OUTLET ON LT. (CLASS III) TYPE 3 BEDDING WITH FES.

STA. 313+17 IN PLACE DBL. 6' X 3' X 98' R.C. BOX CULVERT 9° LT. FWD. SKEW WITH 3:1 WINGS LT. & RT. RETAIN AND EXTEND 476' RT. 16° LT. FWD. SKEW CONSTRUCT TYPE TM DROP INLET STA. 313+19 3' RT. (2'6" X 3' X 5'8") CONNECT TO R.C. BOX CULVERT Q50 = 70 CFS DA = 22.2 ACRES

STA. 314+17 CONSTRUCT TYPE ST DROP INLET 3' RT. (3' X 3' X H=5'5") WITH 24" X 47' R.C. PIPE CULVERT OUTLET CONNECT TO DROP INLET AT STA. 313+67 (CLASS III) TYPE 3 BEDDING

STA. 313+67 CONSTRUCT TYPE ST DROP INLET 3' RT. (3' X 3' X H=5'7") WITH 24" X 47' R.C. PIPE CULVERT OUTLET CONNECT TO DROP INLET AT STA. 313+17 (CLASS III) TYPE 3 BEDDING

STA. 317+50 CONSTRUCT TYPE ST DROP INLET 3' RT. (3' X 3' X H=6'2") WITH 24" X 84' R.C. PIPE CULVERT OUTLET ON LT. WITH FES. (CLASS III) TYPE 3 BEDDING

C.L. I-49
PI = 364+78.03
Δ = 156°24'39" LT.
D = 5°15'00"
T = 5226.47'
L = 2979.26'
PC = 312+51.56
PT = 342+30.82
e = 0.10'/'
Ls = 480'

SB I-49 TO HWY. 71B RAMP

C.L. NB. I-49 TO HWY. 71B RAMP

CONSTRUCTION LIMITS

CONCRETE BARRIER WALL (SIDE TYPE E)

CONCRETE BARRIER WALL (MEDIAN TYPE C)

BEGIN BARRIER WALL RT. SIDE TYPE E

C.L. I-49 MEDIAN

EXIST. R/W & C/A

CONSTRUCTION LIMITS

C.L. HWY. 112 TO NB. I-49 RAMP

POND

PROPOSED R/W & C/A

C.L. HWY. 112 TO HWY. 71 RAMP

I-49

STA. 308+91.56 BEGIN SUPERELEVATION
STA. 313+71.56 MAX. SUPERELEVATION (0.100'/')
STA. 340+60.73 MAX. SUPERELEVATION (0.100'/')
STA. 344+60.73 END SUPERELEVATION (0.000'/')

STA. 310+50 CONSTRUCT TYPE ST DROP INLET 3' RT. (3' X 3' X H=5'6") WITH 24" X 47' R.C. PIPE CULVERT OUTLET CONNECT TO DROP INLET AT STA. 310+00 (CLASS III) TYPE 3 BEDDING

STA. 311+00 CONSTRUCT TYPE ST DROP INLET 3' RT. (3' X 3' X H=5'4") WITH 24" X 47' R.C. PIPE CULVERT OUTLET CONNECT TO DROP INLET AT STA. 310+50 (CLASS III) TYPE 3 BEDDING

STA. 311+50 CONSTRUCT TYPE ST DROP INLET 3' RT. (3' X 3' X H=5'2") WITH 24" X 47' R.C. PIPE CULVERT OUTLET CONNECT TO DROP INLET AT STA. 311+00 (CLASS III) TYPE 3 BEDDING

C.L. I-49 STATIONING	GUARDRAIL (TYPE A)	GUARDRAIL TERMINAL (TYPE 2)	THRIE BEAM GUARDRAIL TERMINAL
STA. 317+16.85 TO STA. 319+35.60 RT.	= 150 LIN. FT.	1 EACH	1 EACH

CONCRETE DITCH PAVING (TYPE B) I-49

STA.	STA.	SIDE	"W"	SQ. YDS.
312+00	313+00	LT. = 100 LIN. FT.	6'-0"	67
313+64	313+72	LT. = 78 LIN. FT.	6'-0"	52
318+25	319+35	RT. = 124 LIN. FT.	6'-0"	83

STREAM	STATION	STREAM TYPE	TOP OF CHANNEL ELEV.
UNNAMED TRIB. CLABBER CREEK	I-49 STA. 314+82 TO STA. 314+94	INTERMITTENT	1220 FT. MSL

PROFILE GRADE RIGHT LANE
PROFILE GRADE LEFT LANE
EXISTING GROUND AT C.L. MEDIAN
VC=200.00' K 196.08
0.51%
0.52%
0.37% LEFT DITCH GRADE
3.84% LT. DT.
0.76% RIGHT DITCH GRADE
VC=500.00' K 200.80
12.74% RT. DT.
2.33% RT.
VC=500.00' K 201.61
3.00%
3.00%
10.31% RT.
PVC 307+75.00 ELEV. 1228.24
PVI 308+75.00 ELEV. 1227.74
PVT 309+75.00 ELEV. 1228.26
PVC 315+50.00 ELEV. 1233.27
PVI 316+50.00 ELEV. 1231.25
PVC 315+50.00 ELEV. 1231.25
PVI 318+00.00 ELEV. 1234.55
PVI 318+00.00 ELEV. 1232.55
+87.00 LT. 1220.18
+00.00 LT. 1218.28
+00.00 LT. 1222.12
+85.00 RT. 1224.67
+25.09 RT. 1227.27
+00.00 RT. 1235.00
+35.00 RT. 1239.46
+75.00 RT. 1240.39
STA. 310+00 TOP = 1228.30 INV = 1222.43 EX.F.L. = 1219.02 LT.
STA. 310+50 TOP = 1228.41 INV = 1222.91
STA. 311+00 TOP = 1228.52 INV = 1223.19
STA. 311+50 TOP = 1228.63 INV = 1223.46
STA. 313+17 EX. F.L. = 1217.55 (LT.) TOP = 1229.00 (MEDIAN) INV = 1220.50 (MEDIAN IN)
STA. 313+67 TOP = 1229.11 INV = 1223.52
STA. 314+17 TOP = 1229.35 INV = 1223.93
STA. 317+50 PROP. F.L. = 1222.79 (LT.) TOP = 1232.08 INV = 1225.88

REFER TO SURVEY CONTROL DETAIL SHEETS FOR HORIZONTAL AND VERTICAL CONTROL DATA

1270 1260 1250 1240 1230 1220 1210 1200 1190 1180

305+00 306+00 307+00 308+00 309+00 310+00 311+00 312+00 313+00 314+00 315+00 316+00 317+00 318+00 319+00 320+00

STATE OF ARKANSAS
LICENSED PROFESSIONAL ENGINEER
No. 13653
ADAM E. WIERCIAK
3/29/16

AEWiercIak 3/20/2016 11:56:34 AM
WORKSPACE: AHTD
L:\20II\II0I707 - I-540 Widening & Interchange Improvement\Drawings\r-BB0414_PP_MNL_06.dgn
REVISED DATE:

DATE REVISED	DATE FILMED	DATE REVISED	DATE FILMED	FED. RD. DIST. NO.	STATE	FED. AID PROJ. NO.	SHEET NO.	TOTAL SHEETS
				6	ARK.			
				JOB NO.		BB0414	278	886

(2) PLAN & PROFILE - STA. 320+00 TO 335+00

OBLITERATE EXISTING ROADWAY

N

C.L. I-49
PI = 364+78.03
Δ = 156°24'39" LT.
D = 5°15'00"
T = 5226.47'
L = 2979.26'
PC= 312+51.56
PT= 342+30.82
e = 0.100'/'
Ls = 480'

STA. 321+00 CONSTRUCT TYPE ST DROP INLET 3' RT. (3' X 3' X H=6'3") WITH 24" X 107' R.C. PIPE OUTLET ON LT. WITH FES LT. (CLASS III) TYPE 3 BEDDING

STA. 331+00 CONSTRUCT TYPE ST DROP INLET 3' RT. (3' X 3' X H=6'3") WITH 24" X 141' R.C. PIPE OUTLET ON LT. WITH FES LT. (CLASS III) TYPE 3 BEDDING

CONSTRUCTION LIMITS

C.L. COLLECTOR-DISTRIBUTOR RD.

+95.75
SB I-49 TO HWY. 71B RAMP
BEGIN RETAINING WALL NO. 5

C.L. SB HWY. 71B

C.L. SB I-49 TO HWY. 71B RAMP

SEE RETAINING WALL DETAILS

PC 321+51.46

PI 322+46.68

PT 323+41.74

PI 315+91.97

BEGIN BRIDGE
STA. 323+99.59

SHLDR. TAPER (SEE SPECIAL DETAIL)

CONCRETE BARRIER WALL (SIDE TYPE E)

C.L. HWY. 112 TO NB I-49 RAMP

C.L. MEDIAN I-49 STA. 325+90.38
C.L. SB I-49 TO HWY. 71B RAMP STA. 315+71.02
∢ = 41°51'45"

CONSTRUCTION LIMITS

BEGIN BRIDGE
STA. 325+10.53

322+71.77

60' WALL TRANSITION
61' RT. TO 59' RT.

C.L. I-49 STA. 326+77.37 =
C.L. SB HWY. 71B STA. 324+52.13
∢ = 55°31'45"

END BRIDGE
STA. 327+77.50

SHLDR. TAPER (SEE SPECIAL DETAIL)

C.L. I-49 MEDIAN

END BRIDGE
STA. 328+10.96

CONCRETE BARRIER WALL (MEDIAN TYPE C)

CONSTRUCTION LIMITS

CONSTRUCTION LIMITS

320+00 325+00 330+00 335+00

36' 26' 10' 12' 58' CLEAR

I-49

+29.67
SB I-49 TO HWY. 71B RAMP
END RETAINING WALL NO. 5

STA. 308+91.56 BEGIN SUPERELEVATION
STA. 313+71.56 MAX. SUPERELEVATION (0.100'/')
STA. 340+60.73 MAX. SUPERELEVATION (0.100'/')
STA. 344+60.73 END SUPERELEVATION (0.000'/')

C.L. I-49 STATIONING
STA. 320+03.46 TO STA. 323+47.21 LT.
STA. 327+75.35 TO STA. 329+94.10 LT.

	GUARDRAIL (TYPE A)	GUARDRAIL TERMINAL (TYPE 2)	THRIE BEAM GUARDRAIL TERMINAL	TERMINAL ANCHOR POST (TYPE I)
	= 325 LIN. FT.	1 EACH	1 EACH	1 EACH
	= 150 LIN. FT.	1 EACH	1 EACH	1 EACH

PVT 320+50.00 ELEV. 1242.05
3.00%
PVC 321+50.00 ELEV. 1245.05
PVT 320+50.00 ELEV. 1240.05
PVC 321+50.00 ELEV. 1243.05
3.00%

STA. 321+00
TOP = 1240.35
INV. = 1234.10
PROP F.L. = 1222.73 (LT.)

BEGIN BRIDGE STA. 323+99.59
BEGIN BRIDGE STA. 325+10.53
PVI 325+50.00 ELEV. 1260.05
PVI 326+50.00 ELEV. 1258.05
END BRIDGE STA. 327+77.50
END BRIDGE STA. 328+10.96

VC=1000.00'
K=177.62
VC=1000.00'
K=177.62

19'-11⅛" MIN. RT.
16'-8⅜" MIN. LT.
20'-0" MIN. RT.
17'-1⅜" MIN. LT.

SB HWY. 71B
SB I-49 TO HWY. 71B

PROFILE GRADE LEFT LANE
PROFILE GRADE RIGHT LANE

PVT 331+50.00 ELEV. 1246.90
-2.63%
-2.63%

STA. 331+00
TOP = 1244.94
INV. = 1238.69
PROP F.L. = 1215.81 (LT.)

EXISTING GROUND AT C.L. MEDIAN

STA. 335+00
TOP = 1234.49
INV. = 1228.24
PROP F.L. = 1214.30 (LT.)

STA. 323+99.59 TO STA. 327+77.50 LT.
CONSTRUCT 364'-0" CONT. COMP.
PLATE GIRDER UNIT (182',182')
BRIDGE NO. A7380 I-49 OVER HIGHWAY 71B
58'-0" CLEAR ROADWAY

STA. 325+10.53 TO STA. 328+10.96 RT.
CONSTRUCT 306'-0" CONT. COMP.
PLATE GIRDER UNIT (153',153')
BRIDGE NO. B7380 I-49 OVER HIGHWAY 71B
58'-0" CLEAR ROADWAY

REFER TO SURVEY CONTROL DETAIL SHEETS FOR HORIZONTAL AND VERTICAL CONTROL DATA

1280 1270 1260 1250 1240 1230 1220 1210 1200 1190

320+00 321+00 322+00 323+00 324+00 325+00 326+00 327+00 328+00 329+00 330+00 331+00 332+00 333+00 334+00 335+00

STATE OF ARKANSAS
LICENSED PROFESSIONAL ENGINEER
No. 13653
ADAM E. WIERCIAK
3/26/16

AEWiercick 3/20/2016 11:56:34 AM
WORKSPACE: AHTD
L:\20IN\I01707 - I-540 Widening & Interchange Improvement\Drawings\r-BB0414_PP_MNL_01.dgn
REVISED DATE:

DATE REVISED	DATE FILMED	DATE REVISED	DATE FILMED	FED. RD. DIST. NO.	STATE	FED. AID PROJ. NO.	SHEET NO.	TOTAL SHEETS
				6	ARK.			
				JOB NO.		BB0414	279	886

(2) PLAN & PROFILE - STA. 335+00 TO 350+00

C.L. I-49
PI = 364+78.03
Δ = 156°24'39" LT.
D = 5°15'00"
T = 5226.47'
L = 2979.26'
PC= 312+51.56
PT= 342+30.82
e = 0.100'/'
Ls = 480'

STA. 335+00 CONSTRUCT TYPE ST DROP INLET 3' RT. (3' X 3' X H=6'3") WITH 24" X 115' R.C. PIPE OUTLET ON LT. WITH FES LT. (CLASS III) TYPE 3 BEDDING

STA. 338+00 CONSTRUCT TYPE ST DROP INLET 3' RT. (3' X 3' X H=6'3") WITH 24" X 94' R.C. PIPE OUTLET ON LT. WITH FES LT. (CLASS III) TYPE 3 BEDDING

STA. 341+10 CONSTRUCT 36" X 158' R.C. PIPE CULVERT WITH TYPE ST DROP INLET 3' RT. (4'6" X 3' X H=8'6") (CLASS III) TYPE 3 BEDDING WITH FES LT. REMOVE 36" X 73' R.C. PIPE CULVERT LT. OF DROP INLET Q50 = 26 CFS DA = 10.5 ACRES

STA. 341+17 CONSTRUCT 36" X 158' R.C. PIPE CULVERT WITH TYPE ST DROP INLET 3' RT. (4'6" X 3' X H=8'5") (CLASS III) TYPE 3 BEDDING WITH FES LT. REMOVE 36" X 70' R.C. PIPE CULVERT LT. OF DROP INLET Q50 = 26 CFS DA = 10.5 ACRES

STA. 341+64 CONSTRUCT TYPE ST DROP INLET 3' RT. (3' X 3' X H=7'8") WITH 24" X 43' R.C. PIPE OUTLET CONNECT TO DROP INLET AT STA. 341+17 RT. (CLASS III) TYPE 3 BEDDING

STA. 342+42 CONSTRUCT TYPE ST DROP INLET 3' RT. (3' X 3' X H=6'9") WITH 24" X 75' R.C. PIPE OUTLET CONNECT TO DROP INLET AT STA. 341+64 RT. (CLASS III) TYPE 3 BEDDING

STA. 343+21 CONSTRUCT TYPE ST DROP INLET 3' RT. (3' X 3' X H=6'1") WITH 24" X 76' R.C. PIPE OUTLET CONNECT TO DROP INLET AT STA. 342+42 RT. (CLASS III) TYPE 3 BEDDING

STA. 349+70 IN PLACE 30" X 31' PIPE CULVERT REMOVE

+57.47 END MEDIAN BARRIER TYPE C BEGIN RETAINING WALL NO. 6

PC 346+90.63

DEFLECT PIPE AT JOINTS TO MAINTAIN OFFSET FROM WALL

SEE RETAINING WALL DETAILS

PI 351+12

PI 35

350+00

CONCRETE BARRIER WALL (MEDIAN TYPE C)

C.L. HWY. 112 TO NB I-49

CONSTRUCTION LIMITS

335+00

340+00

345+00

350+00

CONSTRUCTION LIMITS

PT 342+30.82

300' TAPER

+10.00

N 67°41'41" W

C.L. I-49 MEDIAN

CONCRETE BARRIER WALL (MEDIAN TYPE C)

CONCRETE BARRIER WALL (SIDE TYPE E)

+00.00 BEGIN BARRIER WALL SIDE TYPE E

CONCRETE BARRIER WALL (SIDE TYPE E)

50' WALL TRANSITION

+10.00 END BARRIER SIDE TYPE E

+10.00 BEGIN BARRIER MEDIAN TYPE C

PC 347+51.58

+60

EXIST. R/W & C/A

STA. 348+60 CONSTRUCT 24" X 160' R.C. PIPE OUTLET WITH TYPE ST DROP INLET 64' RT. (3' X 3' X H=5'10") AND TYPE ST DROP INLET 3' LT. (3' X 3' X H=5'2") WITH FES. LT. (CLASS III) TYPE 3 BEDDING

C.L. I-49
PI = 351+12.16
Δ = 42°14'17" RT.
D = 5°15'00"
T = 421.53'
L = 804.53'
PC= 346+90.63
PT= 354+95.16
e = 0.100'/'
Ls = 480'

STA. 347+98 CONSTRUCT TYPE ST DROP INLET 3' LT. (3' X 3' X H=5'2") WITH 24" X 60' R.C. PIPE OUTLET CONNECT TO DROP INLET AT STA. 348+60 LT. (CLASS III) TYPE 3 BEDDING

STA. 348+22 CONSTRUCT TYPE ST DROP INLET 64' RT. (3' X 3' X H=5'2") WITH 24" X 33' R.C. PIPE OUTLET CONNECT TO DROP INLET AT STA. 348+60 RT. (CLASS III) TYPE 3 BEDDING

STA. 348+90 CONSTRUCT TYPE ST DROP INLET 64' RT. (3' X 3' X H=5'2") WITH 24" X 25' R.C. PIPE OUTLET CONNECT TO DROP INLET AT STA. 348+60 RT. (CLASS III) TYPE 3 BEDDING

STA. 349+07 CONSTRUCT TYPE ST DROP INLET 3' LT. (3' X 3' X H=5'2") WITH 24" X 60' R.C. PIPE OUTLET CONNECT TO DROP INLET AT STA. 348+60 LT. (CLASS III) TYPE 3 BEDDING

I-49

STA. 308+91.56 BEGIN SUPERELEVATION
STA. 313+71.56 MAX. SUPERELEVATION (0.100'/')
STA. 340+60.73 MAX. SUPERELEVATION (0.100'/')
STA. 344+60.73 END SUPERELEVATION (0.000'/')

STA. 344+60.73 BEGIN SUPERELEVATION (0.000'/')
STA. 348+60.73 MAX. SUPERELEVATION (0.100'/')
STA. 353+75.16 MAX. SUPERELEVATION (0.100'/')
STA. 358+55.16 END SUPERELEVATION

C.L. I-49 STATIONING
STA. 336+81.85 TO STA. 339+00.60 RT.

	GUARDRAIL (TYPE A)	GUARDRAIL TERMINAL (TYPE 2)	THRIE BEAM GUARDRAIL TERMINAL
	= 150 LIN. FT.	1 EACH	1 EACH

1260 1250 1240 1230 1220 1210 1200 1190 1180 1170

-2.63% -2.63%

PROFILE GRADE LEFT LANE

PROFILE GRADE RIGHT LANE

STA. 335+00
TOP = 1234.49
INV. = 1228.24
PROP F.L. = 1214.30 (LT.)

STA. 338+00
TOP = 1226.60
INV. = 1220.35
PROP F.L. = 1213.92 (LT.)

PVC 338+50.00 ELEV. 1228.49

PVC 338+90.00 ELEV. 1225.43

2.39% RIGHT DITCH GRADE

+10.00 RT. 1216.07

VC=400.00' K 189.57

PVI 340+50.00 ELEV. 1223.23

1.69%

-57.00 RT. 1219.59

VC=500.00' K 151.06

PVI 341+40.00 ELEV. 1218.86

-20.00 RT. 1220.65

STA. 341+64
TOP = 1219.82
INV. = 1212.12

PVT 342+50.00 ELEV. 1222.19

-0.52%

STA. 342+42
TOP = 1219.62
INV. = 1212.90

PVT 343+90.00 ELEV. 1220.56

STA. 343+21
TOP = 1219.82
INV. = 1213.70

EXISTING GROUND

PROFILE GRADE RIGHT LANE

0.68%

STA. 347+98 LT.
TOP = 1218.07
INV. = 1212.90

PROFILE GRADE LEFT LANE

PVC 347+25.00 ELEV. 1219.72

STA. 348+22 RT.
TOP = 1219.16
INV. = 1213.99

STA. 348+90 RT.
TOP = 1219.16
INV. = 1213.99

VC=200.00' K 166.67

0.56%

2.32% LT.

STA. 349+07 LT.
TOP = 1218.07
INV. = 1212.90

+00.00 LT. 1211.95

PVI 348+25.00 ELEV. 1219.20

+60.00 LT. 1212.29

+25.00 LT. 1213.80

PVT 349+25.00 ELEV. 1219.88

STA. 348+60
TOP = 1218.97 (RT.)
INV. = 1213.16 (RT.)
TOP = 1217.87 (MEDIAN)
INV = 1212.70 (MEDIAN)
PROP F.L. = 1212.29 (LT.)

STA. 341+10
TOP = 1220.20 (MEDIAN)
INV = 1211.69 (MEDIAN)
TOP = 1217.14 (RT.)
INV = 1211.59 (RT.)
PROP F.L. = 1211.81 (LT.)

STA. 341+17
TOP = 1220.14 (MEDIAN)
INV = 1211.72 (MEDIAN)
TOP = 1217.15 (RT.)
INV = 1211.67 (RT.)
PROP F.L. = 1211.77 (LT.)

REFER TO SURVEY CONTROL DETAIL SHEETS FOR HORIZONTAL AND VERTICAL CONTROL DATA

STATE OF ARKANSAS ★★★ LICENSED PROFESSIONAL ENGINEER ★★★ No. 13653 ADAM E. WIERCIAK 3/25/16

335+00 336+00 337+00 338+00 339+00 340+00 341+00 342+00 343+00 344+00 345+00 346+00 347+00 348+00 349+00 350+00

AEWierciak 3/20/2016 11:56:35 AM
WORKSPACE: AHTD
L:\20II\II07707 - I-540 Widening & Interchange Improvement\Drawings\rBB0414_PP_MNL_08.dgn
REVISED DATE:

DATE REVISED	DATE FILMED	DATE REVISED	DATE FILMED	FED. RD. DIST. NO.	STATE	FED. AID PROJ. NO.	SHEET NO.	TOTAL SHEETS
				6	ARK.			
				JOB NO.		BB0414	280	886

(2) PLAN & PROFILE - STA. 350+00 TO 365+00

C.L. SB I-49 TO HWY. 112 RAMP

EXIST. R/W & C/A

CONSTRUCTION LIMITS

PROPOSED R/W & C/A

SEE RETAINING WALL DETAILS

DEFLECT PIPE AT JOINTS TO MAINTAIN OFFSET FROM WALL

C.L. HWY. 112 TO NB I-49 RAMP

END RETAINING WALL NO. 6
BEGIN MEDIAN BARRIER TYPE C

C.L. I-49 STA. 354+82.39, 61.50' LT. =
C.L. SB I-49 TO HWY. 112 RAMP STA. 354+82.39

C.L. I-49 STA. 354+95.16, 61.50' LT. =
C.L. SB I-49 TO HWY. 112 EXIT STA. 354+95.03

C.L. SB I-49 TO HWY. 112 EXIT

CONCRETE BARRIER WALL (MEDIAN TYPE C)

C.L. I-49 MEDIAN

2500' AUXILIARY LANE

C.L. I-49 STA. 362+36.71, 49.50' LT. =
C.L. SB I-49 TO HWY. 112 EXIT STA. 362+36.71

RETAINING WALL NO. 7
SEE DETAILS

BEGIN BRIDGE STA. 364+79.31

BEGIN BRIDGE STA. 364+37.64

900' ACCELERATION LANE

C.L. I-49 STA. 355+56.11, 61.50' RT. =
C.L. HWY. 112 TO NB I-49 RAMP STA. 355+56.11

VAN ASCHE DR.

300' STRIPED TAPER

STA. 364+57.43 CONSTRUCT TYPE N-2 DROP INLET LT. (2'3" X 3' X H=3'0") WITH 12" X 63' Z.C.C.S.P. CULVERT AND CONCRETE SPILLWAY (TYPE A) (CLASS III) TYPE 3 BEDDING

STA. 364+41 IN PLACE LT. DROP INLET REMOVE W/12" X 72' PIPE CULVERT PLUG AND ABANDON

STA. 364+20 IN PLACE 36" X 129' R.C. PIPE CULVERT RETAIN

STA. 364+22 IN PLACE 36" X 129' R.C. PIPE CULVERT RETAIN

STA. 363+76.17 CONSTRUCT TYPE N-2 DROP INLET RT. (2'3" X 3' X H=3'0") WITH 12" X 36' Z.C.C.S.P. CULVERT TO CONCRETE SPILLWAY (TYPE A) AT STA. 363+83 (CLASS III) TYPE 3 BEDDING

C.L. I-49

PI = 351+12.16
Δ = 42°14'17" RT.
D = 5°15'00"
T = 421.53'
L = 804.53'
PC= 346+90.63
PT= 354+95.16
e = 0.100'/'
Ls = 480'

STA. 352+00 CONSTRUCT TYPE ST DROP INLET 3' RT. (3' X 3' X H=5'2") WITH 24" X 29' R.C. PIPE CULVERT OUTLET CONNECT TO DROP INLET AT STA. 349+07 (CLASS III) TYPE 3 BEDDING

STA. 353+70 IN PLACE OVERHEAD HIGHWAY SIGN I-49 LT. LANES REMOVE

STA. 355+50 INSTALL OVERHEAD HIGHWAY SIGN I-49 LT. LANES SEE SIGNING PLANS

STA. 357+17 IN PLACE DROP INLET IN MEDIAN REMOVE AND CONSTRUCT TYPE ST DROP INLET 3' LT. (3' X 3' H=11'7") IN PLACE 18" X 122' R.C. PIPE OUTLET WITH FES LT. REMOVE FES AND EXTEND R.C. PIPE 12' LT. (CLASS III) TYPE 3 BEDDING WITH FES LT. 18" R.C. PIPE = 16 LIN. FT. 18" FES = 1EA.

STA. 344+60.73 BEGIN SUPERELEVATION (0.000'/')
STA. 348+60.73 MAX. SUPERELEVATION (0.100'/')
STA. 353+75.16 MAX. SUPERELEVATION (0.100'/')
STA. 358+55.16 END SUPERELEVATION

C.L. I-49 STATIONING	GUARDRAIL (TYPE A)	GUARDRAIL TERMINAL (TYPE-2)	THRIE BEAM GUARDRAIL TERMINAL	TERMINAL ANCHOR POST (TYPE-I)
STA. 354+65.53 TO STA. 364+84.28 LT.	= 1000 LIN. FT.			
STA. 361+59.26 TO STA. 364+03.01 RT.	= 175 LIN. FT.	1 EACH	1 EACH	1 EACH

CONCRETE DITCH PAVING (TYPE B) I-49

STA.	STA.	SIDE	"W"	SQ. YDS.
363+78	365+14	RT. TO LT. = 315 LIN. FT.	4'-0"	140

C.L. SB I-49 TO HWY. 112 EXIT

PI = 356+80.47
Δ = 1°51'15" RT.
D = 0°30'00"
T = 185.44'
L = 370.84'
PC= 354+95.03
PRC= 358+65.87
e = SEE SP. DETAIL
Ls = SEE SP. DETAIL

C.L. SB I-49 TO HWY. 112 EXIT

PI = 360+51.31
Δ = 1°51'15" LT.
D = 0°30'00"
T = 185.44'
L = 370.84'
PRC= 358+65.87
PT= 362+36.71
e = SEE SP. DETAIL
Ls = SEE SP. DETAIL

BRIDGE NO. B5918
STA. 364+21.95 - STA. 365+88.37 IN PLACE
166.42' x 40.00' CLEAR WIDTH BRIDGE CONSISTING OF A CONTINUOUS COMPOSITE UNIT WITH STEEL BEAMS AND A CONCRETE DECK SUPPORTED BY A CONCRETE SUBSTRUCTURE WITH STEEL PILING
REMOVE AS EXISTING BRIDGE STRUCTURE = 1.00 LUMP SUM

PVC 352+50.00 ELEV. 1222.09
PVI 354+25.00 ELEV. 1223.28
PVC 354+10.00 ELEV. 1227.50
PVI 356+10.00 ELEV. 1228.86
PVT 356+00.00 ELEV. 1228.53
PVT 358+10.00 RT. ELEV. 1234.64
PVI 358+75.00 RT. ELEV. 1236.78
PVC 359+25.00 ELEV. 1238.28
PVI 360+00.00 ELEV. 1240.53
PVT 360+75.00 ELEV. 1243.46
PVC 362+75.00 ELEV. 1251.29

VC=350.00' K=150.86
VC=400.00' K=173.16
VC=150.00' K=164.84
VC=350.00' K=170.73

0.68%
3.00% LT.
2.99% RT.
3.91%
1.86%
3.00% LT. & RT.

PROFILE GRADE RIGHT LANE
PROFILE GRADE LEFT LANE
PROFILE GRADE LEFT & RIGHT LANES
EXISTING GROUND AT C.L. MEDIAN

STA. 352+00
TOP = 1220.05
INV. = 1214.88

STA. 357+17
TOP = 1231.76
INV. = 1220.14
EX. F.L. = 1215.33 (LT.)
PROP F.L. = 1214.72 (LT.)

STA. 363+76.17
TOP = 1253.61
INV. = 1250.61
F.L. = 1241.47

STA. 364+57.43
TOP = 1256.36
INV. = 1253.36
F.L. = 1231.28

STA. 364+20
EX. F.L. = 1227.10 LT.

STA. 364+22
EX. F.L. = 1227.10 LT.

REFER TO SURVEY CONTROL DETAIL SHEETS FOR HORIZONTAL AND VERTICAL CONTROL DATA

STATE OF ARKANSAS
LICENSED PROFESSIONAL ENGINEER
No. 13653
ADAM E. WIERCIAK
4/18/16

I-49

AEWiercIak 4/18/2016 2:56:52 PM
WORKSPACE: AHTD
L:\20IN\00I707 - I-540 Widening & Interchange Improvement\Drawings\r-BB0414_PP_MNL_09.dgn
REVISED DATE:

DATE REVISED	DATE FILMED	DATE REVISED	DATE FILMED	FED. RD. DIST. NO.	STATE	FED. AID PROJ. NO.	SHEET NO.	TOTAL SHEETS
				6	ARK.			
				JOB NO.		BB0414	281	886

(2) PLAN & PROFILE - STA. 365+00 TO 380+00

BRIDGE NO. A5918
STA. 364+68.44 - STA. 366+34.86 IN PLACE
166.42' X 40.00' CLEAR WIDTH BRIDGE CONSISTING OF A CONTINUOUS COMPOSITE UNIT WITH STEEL BEAMS AND A CONCRETE DECK SUPPORTED BY A CONCRETE SUBSTRUCTURE WITH STEEL PILING
REMOVE AS EXISTING BRIDGE STRUCTURE @ 1.00 LUMP SUM

STA. 366+51 REMOVE
24" X 16' R.C. PIPE CULVERT AND F.E.S. LT. AND CONSTRUCT 24" X 26' R.C. PIPE CULVERT WITH F.E.S. 155' LT.
CONNECT TO EXISTING JUNCTION BOX ON VAN ASCHE DR.
(CLASS III) TYPE 3 BEDDING
QIO = 23 CFS DA = 6.6 ACRES

STA. 370+00 CONSTRUCT
TYPE ST JUNCTION BOX 3' LT.
(3' X 3' X H=6'(+)) WITH
24" X 90' R.C. PIPE OUTLET ON LT. WITH FES. LT.
(JACK AND BORE)
(CLASS V) TYPE 2 BEDDING

STA. 374+00 CONSTRUCT
TYPE ST DROP INLET 3' LT.
(3' X 3' X H=5'3") WITH
24" X 97' R.C. PIPE CULVERT
OUTLET CONNECT TO DROP INLET AT STA. 373+00 LT.
(CLASS III) TYPE 3 BEDDING

STA. 375+00 CONSTRUCT
TYPE ST DROP INLET 3' LT.
(3' X 3' X H=5'3") WITH
24" X 97' R.C. PIPE CULVERT
OUTLET CONNECT TO DROP INLET AT STA. 374+00 LT.
(CLASS III) TYPE 3 BEDDING

STA. 376+00 CONSTRUCT
TYPE ST DROP INLET 3' LT.
(3' X 3' X H=5'3") WITH
24" X 97' R.C. PIPE CULVERT
OUTLET CONNECT TO DROP INLET AT STA. 375+00 LT.
(CLASS III) TYPE 3 BEDDING

+30.00 BEGIN RETAINING WALL NO. 9

+57.94 187'

PROPOSED R/W & C/A

+50 155.26' END PROP. C/A

VAN ASCHE DR.

RETAINING WALL NO. 8 SEE DETAILS

END BRIDGE STA. 365+99.76

2500' AUXILIARY LANE

EXIST. R/W & C/A

STA. 377+00 INSTALL OVERHEAD HIGHWAY SIGN I-49 LT. LANES SEE SIGNING PLANS

+86.42

CONSTRUCTION LIMITS

EX. 10' SHLDR.

SEE RETAINING WALL DETAILS

300' TAPER

24' EX. LANES

365+00

370+00

375+00

380+00

EX. 4' SHLDR.

N 25°27'24" W

CONCRETE BARRIER WALL (MEDIAN TYPE C)

C.L. I-49 MEDIAN

300' STRIPED TAPER

300' PAVING TRANSITION

1000' ACCELERATION LANE

+70.03

+52.43

EXIST. R/W & C/A

PC 372+51.58

300' TAPER

+00 168'

END BRIDGE STA. 365+58.09

STA. 365+47 REMOVE
30" X 18' R.C PIPE CULVERT AND F.E.S. AND CONSTRUCT
30" X 64' R.C. PIPE CULVERT WITH F.E.S. 153' RT.
CONNECT TO EXISTING JUNCTION BOX ON VAN ASCHE DR.
(CLASS III) TYPE 3 BEDDING
QIO = 29 CFS DA = 9.1 ACRES

+50 170'

PROPOSED R/W & C/A

+46.16 139.71' END PROP. C/A

STA. 366+67 IN PLACE
DROP INLET IN MEDIAN
REMOVE
PLUG AND ABANDON
18" X 143' PIPE CULVERT

+67.18 139.65' BEGIN PROP. C/A

STA. 373+00 CONSTRUCT
TYPE ST DROP INLET 3' LT.
(3' X 3' X H=5'3") WITH
24" X 297' R.C. PIPE CULVERT OUTLET CONNECT TO DROP INLET AT STA. 370+00 LT.
(CLASS III) TYPE 3 BEDDING

+00 181.55'

CONSTRUCTION LIMITS

+27.93 200'

PROPOSED R/W & C/A

+03.61 215'

C.L. I-49
PI = 381+84.61
Δ = 18°29'54" RT.
D = 1°00'00"
T = 933.03'
L = 1849.82'
PC= 372+51.58
PT= 391+01.40
e = MATCH EX.
Ls = MATCH EX.

I-49

CONCRETE DITCH PAVING (TYPE B) I-49

STA.	STA.	SIDE	"W"	SQ. YDS.
365+26	366+70	RT. TO LT. = 323 LIN. FT.	4'-0"	144
366+51	367+00	LT. = 49 LIN. FT.	6'-0"	33
367+25	367+90	RT. = 65 LIN. FT.	6'-0"	43
370+28	380+62	LT. = 1059 LIN. FT.	4'-0"	471

NOTE: PROPOSED IMPROVEMENTS ON VAN ASCHE DR. BASED UPON CITY OF FAYETTEVILLE DESIGN PLANS ENGR. NO. 8126, DATED MARCH 2014. DRAINAGE STRUCTURE ELEVATIONS AND LOCATIONS IN ENGR. NO. 8126 ARE ASSUMED AS THE EXISTING CONDITION. VERIFY IN FIELD.

STA. 364+37.64 TO STA. 365+58.09 RT.
CONSTRUCT 118'-0" COMPOSITE PLATE GIRDER SPAN BRIDGE NO. B7381 I-49 OVER VAN ASCHE DR.
82'-0" CLEAR ROADWAY

STA. 364+79.31 TO STA. 365+99.76 LT.
CONSTRUCT 118'-0" COMPOSITE PLATE GIRDER SPAN BRIDGE NO. A7381 I-49 OVER VAN ASCHE DR.
70'-0" CLEAR ROADWAY

NOTCH, WIDEN, AND OVERLAY LT. AND RT. LANES

C.L. I-49 STATIONING
STA. 366+31.26 TO STA. 368+75.01 LT.
STA. 376+19.00 TO STA. 378+94.00 LT.

GUARDRAIL (TYPE A)	GUARDRAIL TERMINAL (TYPE 2)	THRIE BEAM GUARDRAIL TERMINAL	TERMINAL ANCHOR POST (TYPE I)
= 175 LIN. FT.	1 EACH	1 EACH	1 EACH
= 225 LIN. FT.	1 EACH		

EXISTING GROUND AT C.L. MEDIAN

+52.43

200' VERTICAL TRANSITION RT. LANES

PROFILE GRADE LT. & RT. LANES

VC=200.00'
K 173.91

PVT 369+00.00
ELEV. 1267.65

PVC 367+00.00
ELEV. 1262.78

PVT 366+25.00
ELEV. 1261.38

END BRIDGE STA. 365+99.76

END BRIDGE STA. 365+58.09

VC=350.00'
K 170.73

1.86%

3.01%

STA. 370+00
TOP = 1270.58
INV = 1264.46
PROP F.L. = 1262.99 (LT.)

STA. 373+00
TOP = 1278.85
INV = 1273.60

STA. 374+00
TOP = 1281.77
INV = 1276.52

STA. 375+00
TOP = 1284.42
INV = 1279.17

STA. 376+00
TOP = 1286.67
INV = 1281.42

STA. 365+47
INV = 1238.70
F.L. = 1229.90 (MATCH EX.)

16'-2⅝" MIN. RT.

19'-9⅜" MIN. LT.

2.37% RT. DT.

6.95% RT. DT.

10.73%

PVI 368+00.00
ELEV. 1264.64

PVI 366+51.76
ELEV. 1246.71

PVI 365+47.00
ELEV. 1242.84

PVI 364+50.00
ELEV. 1237.76

PVI 363+50.00
ELEV. 1232.50

STA. 366+51
INV = 1232.50
F.L. = 1229.80 (MATCH EX.)

+50.00 RT. 1238.69

+54.00 LT. 1232.50

+00.00 LT. 1237.76

+25.00 RT. 1242.84

+90.00 RT. 1246.71

REFER TO SURVEY CONTROL DETAIL SHEETS FOR HORIZONTAL AND VERTICAL CONTROL DATA

STATE OF ARKANSAS
LICENSED PROFESSIONAL ENGINEER
No. 13653
ADAM E. WIERCIAK
4/19/16

AEWierciak 4/14/2016 2:35:32 PM
WORKSPACE: AHTD
L:\2011\011707 - I-540 Widening & Interchange Improvement\Drawings\r-BB0414_PP_MNL_10.dgn
REVISED DATE:

DATE REVISED	DATE FILMED	DATE REVISED	DATE FILMED	FED. RD. DIST. NO.	STATE	FED. AID PROJ. NO.	SHEET NO.	TOTAL SHEETS
				6	ARK.			
				JOB NO.		BB0414	282	886

(2) PLAN & PROFILE - STA. 380+00 TO 395+00

STA. 387+00 CONSTRUCT TYPE ST DROP INLET 3' LT. (3' X 3' X H=5'3") WITH 24" X 197' R.C. PIPE OUTLET CONNECT TO TYPE ST DROP INLET AT STA. 389+00 (CLASS III) TYPE 3 BEDDING

STA. 389+00 CONSTRUCT TYPE ST DROP INLET 3' LT. (3' X 3' X H=5'3") WITH 24" X 197' R.C. PIPE OUTLET CONNECT TO TYPE ST DROP INLET AT STA. 391+00 (CLASS III) TYPE 3 BEDDING

STA. 391+00 CONSTRUCT TYPE ST DROP INLET 3' LT. (3' X 3' X H=5'3") WITH 24" X 212' R.C. PIPE OUTLET CONNECT TO TYPE ST DROP INLET AT STA. 393+16 (CLASS III) TYPE 3 BEDDING

EXIST. R/W & C/A

+59.80 END RETAINING WALL NO. 9

+86.42

300' TAPER

PI 381+84.61

C.L. I-49 MEDIAN

385+00

380+00

390+00

395+00

CONCRETE BARRIER WALL (MEDIAN TYPE C)

CONSTRUCTION LIMITS

PT 391+01.40

STA. 393+16.01
END JOB BB0414

EX. 10' SHLDR.

EX. 24' LANES

EX. 4' SHLDR.

N 6°57'30" W

END BARRIER WALL
STA. 393+66.01

ALUMINUM CAP I-540

EXIST. R/W & C/A

+50 190.68' END PROP. C/A

C.L. I-49
PI = 381+84.61
Δ = 18°29'54" RT.
D = 1°00'00"
T = 933.03'
L = 1849.82'
PC= 372+51.58
PT= 391+01.40
e = MATCH EX.
Ls = MATCH EX.

STA. 390+63 INSTALL OVERHEAD HIGHWAY SIGN I-49 RT. LANES SEE SIGNING PLANS

STA. 393+16 IN PLACE 42" X 223' R.C. PIPE CULVERT WITH HDWL LT. & RT. RETAIN AND CONSTRUCT TYPE ST DROP INLET 3' LT. (5' X 3' X H=15'11") Q50 = 77 CFS DA = 24.8 ACRES

STA. 393+16 CONSTRUCT TYPE ST DROP INLET 3' RT. (3' X 3' X H=5'0") WITH 24" X 3' R.C. PIPE OUTLET CONNECT TO DROP INLET AT STA. 393+16 LT. (CLASS III) TYPE 3 BEDDING

C.L. I-49 STATIONING	GUARDRAIL (TYPE A)	GUARDRAIL TERMINAL (TYPE 2)	TERMINAL ANCHOR POST (TYPE II)
STA. 388+69.00 TO STA. 391+44.00 RT.	= 225 LIN. FT.	1 EACH	1 EACH

I-49

NOTCH, WIDEN, AND OVERLAY LT. LANES

+86.42

NOTCH, WIDEN, AND OVERLAY 200' VERTICAL TRANSITION LT. LANES

+86.42

NOTCH AND WIDEN TO INSIDE MILL AND INLAY EXISTING LANES AND OUTSIDE SHOULDER LT. LANES

+16.01

NOTCH, WIDEN, AND OVERLAY 200' VERTICAL TRANSITION RT. LANES

+52.43

NOTCH AND WIDEN TO INSIDE MILL AND INLAY EXISTING LANES AND OUTSIDE SHOULDER RT. LANES

+16.01

EXISTING GROUND AT C.L. MEDIAN

STA. 387+00
TOP = 1286.99
INV = 1281.74

STA. 389+00
TOP = 1283.82
INV = 1278.57

STA. 391+00
TOP = 1280.62
INV = 1275.37

STA. 393+16.01
END JOB BB0414

STA. 393+16
EX. F.L. = 1264.08 (RT.)
EX. F.L. = 1258.76 (LT.)
TOP = 1276.93 (LT.)
INV = 1271.66 (LT. MEDIAN)
INV = 1260.98 (LT. OUT)
TOP = 1276.86 (RT.)
INV = 1271.82 (RT.)

REFER TO SURVEY CONTROL DETAIL SHEETS FOR HORIZONTAL AND VERTICAL CONTROL DATA

1320 1310 1300 1290 1280 1270 1260 1250 1240 1230

380+00 381+00 382+00 383+00 384+00 385+00 386+00 387+00 388+00 389+00 390+00 391+00 392+00 393+00 394+00 395+00

STATE OF ARKANSAS
LICENSED PROFESSIONAL ENGINEER
No. 13653
ADAM E. WIEPRICH
3/20/16

AEWierdak 3/20/2016 11:56:35 AM
WORKSPACE: AHTD
L:\20IN\I0I7707 - I-540 Widening & Interchange Improvement\Drawings\rBB0414_PP_MNL_IL.dgn
REVISED DATE:

CURVE DATA

CURVE	PC	PI	PT	Δ	D	TANGENT FEET	LENGTH FEET	e FT./FT.	Ls FEET	DESIGN SPEED
1-1	279+71.53	280+80.16	281+83.41	31°07'43"	14°41'28"	108.63	211.88	MATCH EX.	MATCH EX.	30
1-2	281+83.41	284+32.57	285+61.04	95°20'59"	25°15'00"	249.16	377.62	MATCH EX.	MATCH EX.	25
1-3	285+61.04	287+27.30	288+37.46	80°09'45"	29°00'00"	166.26	276.42	0.10	300	25
1-4	293+98.09	296+48.30	298+93.52	19°49'03"	4°00'00"	250.22	495.43	0.072	300	50
1-5	304+95.21	305+67.04	306+38.86	1°48'38"	1°15'37"	71.83	143.66	0.031	280	50
1-6	307+64.39	308+61.87	309+59.24	4°52'16"	2°30'00"	97.48	194.85	0.049	240	50
1-7	313+41.74	314+30.15	315+18.06	10°34'46"	6°00'00"	88.41	176.33	0.092	270	50
1-8	321+51.46	322+46.68	323+41.74	5°42'30"	3°00'00"	95.22	190.28	N.A.	N.A.	50
2-1	3+61.91	6+40.18	8+92.74	42°28'00"	8°00'00"	278.27	530.83	MATCH EX.	MATCH EX.	40
2-2	12+57.20	17+47.75	22+06.53	35°36'00"	3°45'00"	490.55	949.33	MATCH EX.	MATCH EX.	40
2-3	31+49.23	33+03.32	34+55.57	15°19'00"	5°00'00"	154.09	306.33	MATCH EX.	MATCH EX.	40
3-1	276+17.66	277+12.88	278+07.94	5°42'30"	3°00'00"	95.22	190.28	N.A.	N.A.	50
3-2	282+81.97	284+82.92	286+73.79	31°20'44"	8°00'00"	200.95	391.82	0.10	350	50
4-1	279+22.29	281+95.32	284+43.99	41°44'09"	8°00'00"	273.03	521.70	0.10	350	50
4-2	287+17.97	291+75.49	294+58.17	85°07'23"	11°30'00"	457.52	740.19	MATCH EX.	MATCH EX.	40
5-1	300+15.56	301+10.78	302+05.84	5°42'30"	3°00'00"	95.22	190.28	N.A.	N.A.	50
5-2	309+01.72	312+33.17	315+20.22	51°01'32"	8°15'00"	331.45	618.49	0.10	350	50
6-1	288+12.93	289+34.18	290+47.74	35°13'16"	15°00'00"	121.25	234.81	MATCH EX.	MATCH EX.	30
6-2	291+68.55	295+47.22	297+90.56	82°25'02"	13°15'00"	378.67	622.02	0.10	300	40
6-3	308+87.09	313+00.40	316+32.73	61°30'55"	8°15'00"	413.31	745.64	0.10	350	50
6-4	322+71.77	335+55.32	341+29.08	101°31'58"	5°28'00"	1283.55	1857.30	MATCH EX.	MATCH EX.	50
6-5	347+51.58	351+73.11	355+56.11	42°14'17"	5°15'00"	421.53	804.53	0.086	350	50
7-1	330+91.05	333+85.15	336+65.60	30°09'50"	5°15'00"	294.10	574.55	MATCH EX.	MATCH EX.	50
7-2	339+27.26	340+38.58	341+49.46	8°53'17"	4°00'00"	111.32	222.20	MATCH EX.	MATCH EX.	50
8-1	304+99.35	305+71.77	306+44.19	1°48'38"	1°15'00"	72.43	144.84	0.037	280	60
9-1	304+17.19	305+12.41	306+07.47	5°42'30"	3°00'00"	95.22	190.28	N.A.	N.A.	50
9-2	313+36.68	322+02.48	328+75.95	65°25'09"	4°15'00"	865.80	1539.27	0.075	300	50
9-3	330+61.97	333+25.28	335+66.62	40°22'18"	8°00'00"	263.31	504.65	0.10	290	50
10-1	314+12.22	315+91.90	317+67.43	21°18'46"	6°00'00"	179.68	355.21	MATCH EX.	MATCH EX.	50
10-2	320+61.97	340+71.44	336+71.34	144°50'33"	9°00'00"	2009.47	1609.36	MATCH EX.	MATCH EX.	45
10-3	341+55.99	344+98.62	348+13.92	39°28'32"	6°00'00"	342.63	657.93	0.10	340	50
11-1	326+86.42	329+89.18	332+57.43	47°06'31"	8°15'00"	302.76	571.01	0.10	350	50
11-2	333+71.44	338+16.96	342+13.43	46°18'36"	5°30'00"	445.52	842.00	0.088	350	50
12-7	73+53.04	74+06.50	74+40.38	83°24'37"	95°30'00"	53.46	87.34	N.A.	N.A.	25
13-1	283+94.33	288+21.59	292+42.59	16°57'55"	2°00'00"	427.26	848.26	0.055	525	60
13-2	294+40.16	299+22.77	303+71.16	37°14'24"	4°00'00"	482.61	931.00	0.093	600	60
13-3	312+51.56	364+78.03	342+30.82	156°24'39"	5°15'00"	5226.47	2979.26	0.10	480	60
13-4	346+90.63	351+12.16	354+95.16	42°14'17"	5°15'00"	421.53	804.53	0.10	480	60
13-5	372+51.58	381+84.61	391+01.40	18°29'54"	1°00'00"	933.03	1849.82	MATCH EX.	MATCH EX.	60
14-1	354+95.03	356+80.47	358+65.87	1°51'15"	0°30'00"	185.44	370.84	N.A.	N.A.	60
14-2	358+65.87	360+51.31	362+36.71	1°51'15"	0°30'00"	185.44	370.84	N.A.	N.A.	60

DATE REVISED	DATE FILMED	DATE REVISED	DATE FILMED	FED.RD. DIST.NO.	STATE	FED.AID PROJ.NO.	SHEET NO.	TOTAL SHEETS
				6	ARK.			
				JOB NO.		BB0414	283	886

2 INTERCHANGE LAYOUT SHEET

STATE OF ARKANSAS
LICENSED PROFESSIONAL ENGINEER
No. 13653
ADAM E. WIERCIAK
4/19/16

NOTE:
SEE PLAN & PROFILE SHEETS FOR LANE TAPERS

C.L. I-49 STA. 352+86.42, 72.72' LT. =
C.L. SB I-49 TO HWY. 112 RAMP STA. 352+74.48, 7.50' RT.

C.L. I-49 STA. 354+52.43, 57.90' RT. =
C.L. HWY. 112 TO NB I-49 STA. 354+55.26, 7.50' LT.

C.L. SB I-49 TO HWY. 112 RAMP STA. 346+06.22, 24.18' LT. =
C.L. SB I-49 TO HWY. 71B RAMP STA. 346+06.21, 7.50' RT.

C.L. SB I-49 TO HWY. 71B RAMP

C.L. I-49

C.L. HWY. 112 TO NB I-49 RAMP STA. 338+59.82, 11.30' RT. =
C.L. HWY. 71B TO NB I-49 RAMP STA. 338+57.01, 7.50' LT.

C.L. HWY. 71 TO NB I-49 RAMP

C.L. HWY. 112 STA. 27+09.19 =
C.L. SHILOH DRIVE STA. 75+00.00

C.L. HWY. 112 STA. 23+73.78 =
C.L. HWY. 112 RAMP 4 STA. 298+36.29

C.L. HWY. 112 STA. 23+18.86 =
C.L. C-D ROAD STA. 275+87.76

C.L. C-D ROAD STA. 309+87.16, 11.22' LT. =
C.L. SB I-49 TO HWY. 112 RAMP STA. 328+24.05, 7.50' RT.

C.L. I-49 STA. 300+36.55, 52.86' LT. =
C.L. SB HWY. 71B STA. 300+40.27, 12.00' RT.

C.L. I-49 STA. 308+21.16, 67.82' RT. =
C.L. NB I-49 TO HWY. 71B RAMP STA. 308+21.79, 7.50' LT.

C.L. C-D ROAD

C.L. SB I-49 TO HWY. 112 RAMP

C.L. SB HWY. 71B STA. 319+07.76, 30.82' LT. =
C.L. C-D ROAD STA. 319+06.98, 7.50' RT.

C.L. HWY. 71B STA. 334+72.76, 38.11' RT. =
C.L. NB I-49 TO HWY. 71B RAMP STA. 334+73.46, 7.50' LT.

C.L. SB HWY. 71B

C.L. I-49 STA. 280+20.84, 64.74' LT. =
C.L. HWY. 112 RAMP 4 STA. 280+20.12, 7.50' RT.

C.L. HWY. 112 RAMP 4

C.L. HWY. 112 RAMP 1

C.L. HWY. 112 TO NB I-49 RAMP STA. 304+29.53, 24.32' RT. =
C.L. HWY. 112 TO HWY. 71B RAMP STA. 304+30.21, 7.50' LT.

C.L. HWY. 112 TO NB I-49 RAMP

C.L. NB I-49 TO HWY. 71B RAMP STA. 322+46.58, 20.31' RT. =
C.L. HWY. 112 TO HWY. 71B RAMP STA. 319+57.61, 7.50' LT.

C.L. HWY. 112 TO HWY. 71B RAMP

C.L. HWY. 112 STA. 14+83.32 =
C.L. RAMP 1 STA. 290+98.88
C.L. HWY. 112 TO NB I-49 RAMP STA. 287+20.67

C.L. HWY. 112

C.L. I-49 STA. 280+51.64, 79.82' RT. =
C.L. HWY. 112 RAMP 1 STA. 280+52.42, 7.50' LT.

SHILOH DRIVE

INTERCHANGE LAYOUT SHEET

AEWiercIak 4/14/2016 2:35:39 PM
WORKSPACE: AHTD
L:\20IN\I00170T - I-540 Widening & Interchange Improvement\Drawings\rBB0414_MS_ILS.dgn
REVISED DATE:

DATE REVISED	DATE FILMED	DATE REVISED	DATE FILMED	FED. RD. DIST. NO.	STATE	FED. AID PROJ. NO.	SHEET NO.	TOTAL SHEETS
				6	ARK.			
				JOB NO.		BB0414	284	886

(2) PLAN & PROFILE - HWY. 112 RAMP 1

EXISTING R/W
C.L. HWY. 112 RAMP 4
CHICORY PL.
PC 276+22.29
PC 276+53.99
PT 276+52.92
PT 276+52.15
EXISTING C/A
C.L. I-49 MEDIAN
N 34°30'40" E
280+00
285+00
55+00
48'
12'
10'
DROP INLET
CURB
PARKING
RETAINING WALL
N 40°13'10" E
+51.61
19.82
NOSE
+52.70
7.50' LT.
4'
9'
60'
26'
48'
10'
PT 277+19.94
PI 277+88.88
PC 278+07.94
EXIST. R/W & C/A
C.L. HWY. 112 RAMP 1 STA. 276+17.66 =
C.L. I-49 STA. 276+17.66, 53.50' RT.
PAVED DRAIN
PAVED PARKING
+99.54
128.47'
BEGIN PROP. C/A
C.L. HWY. 112 RAMP 1
PI = 277+12.88
Δ = 5°42'30" RT.
D = 3°00'00"
T = 95.22'
L = 190.28'
PC= 276+17.66
PT= 278+07.94
NO SUPER
+16.31
155'
I-49 STA. 284+05 CONSTRUCT
42" X 192' R.C. PIPE CULVERT
(CLASS III) TYPE 3 BEDDING WITH
TYPE ST DROP INLET 3' LT.
(4'4" X 3' X H=8'3") AND FES LT.
CONNECT TO JUNCTION BOX AT
RAMP 1STA. 283+99 RT.
CONSTRUCTION LIMITS
PC 282+81.97
+05
190'
+42.82
220'
PROPOSED R/W & C/A
C.L. HWY. 112 RAMP 1
PI = 284+82.92
Δ = 31°20'44" RT.
D = 8°00'00"
T = 200.95'
L = 391.82'
PC= 282+81.97
PT= 286+73.79
e = 0.100'/'
Ls = 350'
PAVED PARKING
+72.27
285'
STA. 283+96 IN PLACE
42" X 60' R.C. PIPE CULVERT
WITH HDWL. LT. & RT.
REMOVE HDWL. LT. AND 8' PIPE AND CONSTRUCT
TYPE ST JUNCTION BOX (5' X 3' X H=7'2") 38' LT.
REMOVE HDWL. RT. AND EXTEND R.C. PIPE 24' RT.
(CLASS III) TYPE 3 BEDDING WITH FES RT.
Q50 = 58 CFS DA = 11.1 ACRES
42" R.C. PIPE = 28 LIN. FT.
42" FES = 1EA.
PT 286+73.79
+17.29
335'
+00
410'
PROPOSED R/W & C/A
STA. 287+17 IN PLACE
4' X 3' X 128' R.C. BOX CULVERT
23° LT. FWD. SKEW
WITH 3:1 WINGS LT. & RT.
RETAIN AND EXTEND 9' RT. AND
REMOVE 24' LT. AND EXTEND 47' LT.
Q50 = 88 CFS DA = 42.9 ACRES
+21.12
105'
+55
75'
CONSTRUCTION LIMITS
C.L. HWY. 112
C.L. RAMP 1 STA. 290+98.88 =
C.L. HWY. 112 STA. 14+83.32
Δ = 77°29'25"
PI 284+82.92
+90.00
4'
150' TAPER
+40.00
24'
6'
C.L. HWY. 112 RAMP 1
N 71°33'54" E
290+00
75' R.
55'
PC 288+12.93
150' R.
24'
15+00
67'
PAVED
HWY. 112 RAMP 1

STA. 280+19.47 BEGIN SUPERELEVATION
STA. 283+69.47 MAX. SUPERELEVATION (0.100'/')
STA. 285+86.29 MAX. SUPERELEVATION (0.100'/')
STA. 289+36.29 END SUPERELEVATION

SEE CROSS SECTIONS FOR LIMITS OF NOTCH, WIDEN, AND OVERLAY LOCATIONS

REFER TO SURVEY CONTROL DETAIL SHEETS FOR HORIZONTAL AND VERTICAL CONTROL DATA

CONCRETE DITCH PAVING (TYPE B) HWY. 112 RAMP 1

STA.	STA.	SIDE	"W"	SQ. YDS.
283+93	285+15	RT. = 122 LIN. FT.	6'-0"	81
286+65	286+77	RT. = 17 LIN. FT.	6'-0"	11
286+95	287+75	RT. = 80 LIN. FT.	6'-0"	53

C.L. I-49
STA. 278+83.32, 63.00' RT. "
C.L. HWY. 112 RAMP 1
STA. 278+83.26, 7.50' LT.
ELEV. 1233.35
2.18%
PVC 279+50.00
ELEV. 1231.90
VC=650.00'
K 96.44
PROFILE GRADE
EXISTING GROUND
PVI 282+75.00
ELEV. 1224.81
+00.00 RT. 1223.23
-0.99% RT. DT.
+93.00 RT. 1222.31
3.19% RT. DT.
+15.00 RT. 1226.20
STA. 283+96
TOP = 1225.96
INV = 1218.79
EX. F.L. = 1220.81 (LT.)
EX. F.L. = 1221.66 (RT.)
PROP F.L. = 1222.31 (RT.)
PVT 286+00.00
ELEV. 1239.63
4.56%
-25.56% RT. DT.
+55.00 RT. 1229.41
+77.00 RT. 1226.34
-7.85% RT. DT.
+93.00 RT. 1226.34
+75.00 RT. 1232.78
PVC 288+00.00
ELEV. 1248.75
STA. 287+17
E.X. F.L. = 1226.16 RT.
PROP F.L. = 1226.34 RT.
E.X. F.L. = 1224.93 LT.
PROP F.L. = 1224.59 LT.
PV 289+25.00
ELEV. 1254.45
VC=250.00'
K 48.36
-0.61%
C.L. HWY. 112
STA. 14+96.95, 28.00' LT. "
C.L. HWY. 112 RAMP 1
STA. 290+68.59, 7.50' LT.
ELEV. 1253.57
PVT 290+50.00
ELEV. 1253.68

STATE OF ARKANSAS
LICENSED PROFESSIONAL ENGINEER
No. 13653
ADAM E. WIERCIAK
3/2/16

1280 1270 1260 1250 1240 1230 1220 1210 1200 1190
276+00 277+00 278+00 279+00 280+00 281+00 282+00 283+00 284+00 285+00 286+00 287+00 288+00 289+00 290+00 291+00

AEWiercIok 3/20/2016 11:56:41 AM
WORKSPACE: AHTD
L:\2011\W01707 - I-540 Widening & Interchange Improvement\Drawings\r-BB0414_PP_Hwy112 Ramp 1.dgn
REVISED DATE:

DATE REVISED	DATE FILMED	DATE REVISED	DATE FILMED

FED. RD. DIST. NO.	STATE	FED. AID PROJ. NO.	SHEET NO.	TOTAL SHEETS
6	ARK.			
JOB NO.		BB0414	285	886

(2) PLAN & PROFILE - HWY. 112 RAMP 4

C.L. HWY. 112 RAMP 4
PI = 281+95.32
Δ = 41°44'09" LT.
D = 8°00'00"
T = 273.03'
L = 521.70'
PC = 279+22.29
PT = 284+43.99
e = 0.100'/'
Ls = 350'

N

PC 50+41.35
PT 51+52.15
PARKED PARKING
RET. WALL
CURB
CHICORY PL.
PT 52+62.92
PC 279+22.29
PC 53+41.99
C.L. HWY. 112 RAMP 4 STA. 279+22.29 =
C.L. I-49 STA. 279+22.29, 65.50' LT.
EXISTING R/W
NOSE +20.12 7.50' RT.
+20.84
PI 55+55.23
PI 281+95.32
+74.25 END BARRIER WALL LT. SIDE TYPE E
56+42.00 SHILOH DR. RT. LANE END CURB AND GUTTER
PT 57+50.27
PT 284+43.99
PC 60+50.27
RET WALL
CONSTRUCTION LIMITS
60+00
EXISTING C/A
C.L. SHILOH DR.
290+00
CURB
700' ACCELERATION LANE
55+00
280+00
N 34°30'40" E
NOSE +20.84 64.74' LT.
60'
26'
285+00
6'
4'
N 43°29' W
100' TRANSITION TO MATCH EXISTING
+50.00
+50.00
PC 287+17.97
STA. 290+18 IN PLACE
42" X 98' R.C. PIPE CULVERT
WITH DROP INLET RT. & LT.
RETAIN
CONCRETE HEADWALL
5/8" REBAR W/ CAP
C.L. HWY. 112 RAMP 4
CONSTRUCTION LIMITS
C.L. COLLECTOR-DISTRIBUTOR RD.
285+00
PCC 281+83.41
PC 283+94.33
PCC 285+61.04
PC 279+71.53
PT 278+07.94
C.L. HWY. 112 RAMP 1
+99.54
128.47' BEGIN PROP. C/A
EXISTING R/W & C/A
PROPOSED R/W & C/A
C.L. I-49 MEDIAN
280+00
N 34°30'40" E
285+00
HWY. 112 RAMP 4

STA. 278+01.37 BEGIN SUPERELEVATION
STA. 281+51.37 MAX. SUPERELEVATION (0.100'/')
STA. 282+30.98 MAX. SUPERELEVATION (0.100'/')
STA. 285+80.98 END SUPERELEVATION

C.L. RAMP 4 STATIONING
STA. 282+73.65 TO STA. 284+92.40 LT. = 150 LIN. FT.

GUARDRAIL (TYPE A)	GUARDRAIL TERMINAL (TYPE 2)	THRIE BEAM GUARDRAIL TERMINAL
	1 EACH	1 EACH

STATE OF ARKANSAS
LICENSED PROFESSIONAL ENGINEER
No. 13653
ADAM E. WIERCIAK
3/7/2016

C.L. I-49
STA. 280+20.84, 64.74' LT. =
C.L. HWY. 112 RAMP 4
STA. 280+20.12, 7.50' RT.
ELEV. 1230.13
PVC 280+75.00
ELEV. 1229.16
-1.77%
PROFILE GRADE
EXISTING GROUND
VC=300.00'
K 189.87
PVI 282+25.00
ELEV. 1226.50
PVT 283+75.00
ELEV. 1226.22
-0.19%
PVI 285+50.00
ELEV. 1225.88
+50.00
100' TRANSITION TO MATCH EX.
+50.00

STA. 290+18
E.X. F.L. 1210.66 RT.
E.X. F.L. 1205.14 LT.

1270 1260 1250 1240 1230 1220 1210 1200 1190 1180

279+00 280+00 281+00 282+00 283+00 284+00 285+00 286+00 287+00 288+00 289+00 290+00 291+00 292+00

REFER TO SURVEY CONTROL DETAIL SHEETS FOR HORIZONTAL AND VERTICAL CONTROL DATA

AEWerclok 3/20/2016 11:56:42 AM
WORKSPACE: AHTD
L:\20IN\10\7707 - I-540 Widening & Interchange Improvement\Drawings\rBB0414_PP_Hwy112 Ramp 4_01.dgn
REVISED DATE:

DATE REVISED	DATE FILMED	DATE REVISED	DATE FILMED	FED. RD. DIST. NO.	STATE	FED. AID PROJ. NO.	SHEET NO.	TOTAL SHEETS
				6	ARK.			
				JOB NO.		BB0414	286	886

2 PLAN & PROFILE - HWY. 112 RAMP 4

C.L. HWY. 112 RAMP 4
PI = 291+75.49
Δ = 85°07'24" RT.
D = 11°30'00"
T = 457.52'
L = 740.20'
PC = 287+17.97
PT = 294+58.17
e = MATCH EX.
Ls = MATCH EX.

PI 66+29.54
PI 291+75.49
PT 69+73.32
PC 70+86.10
PT 72+62.87
PC 71+90.22
70+00
RET. WALL
PAVED
CURB
CONSTRUCTION LIMITS
EXIST. R/W
EXIST. C/A
PT 294+58.17
295+00
+50
100' TRANSITION TO MATCH EXISTING
+50
125' R.
6'
15'
4'
4'
75' R.
24'
30'
13.5'
N 77°53'54" E
C.L. HWY. 112 RAMP 4
65+00
280+00
12'
24'
12'
8'
6'
6'
30.81'
N 78°01'26" E
PC 279+71.53
125' R.
30'
44'
290+00
PCC 281+83.41
C.L. COLLECTOR-DISTRIBUTOR RD.
CONSTRUCTION LIMITS
67
25+00
N 3°49'26" W
PT 22+06.53
60.86
295+00
239.86
PI 295+47.22

+47.34
BEGIN PROP. C/A

PAVED PARKING
N
C.L. RAMP 4 STA. 298+36.29
C.L. HWY. 112 STA. 23+73.78
Δ = 81°43'20"
+20
129.15'
END PROP. C/A
EXIST. R/W & C/A
CONSTRUCTION LIMITS
PN:950
90:SET IN BASE OF SIGNAL LIGHT
N:42
:5/8" REBAR W/
+91.28
147.57'
BEGIN PROP. C/A
PI 296+48.30
PROP. R/W & C/A
PAVED PARKING
+50
136'
PT 298+93.52
PI 299+22.77

HWY. 112 RAMP 4

1280
1270
1260
1250
1240
1230
1220
1210
1200
1190

+50.00
100' TRANSITION TO MATCH EX.
+50.00
PVI 296+50.00
ELEV. 1232.06
EXISTING GROUND
PROFILE GRADE
0.53%
C.L. HWY. 112
STA. 23+62.13, 28.00' LT.
C.L. HWY. 112 RAMP 4
STA. 298+06.90, 7.50' RT.
ELEV. 1232.88

292+00 293+00 294+00 295+00 296+00 297+00 298+00 299+00

REFER TO SURVEY CONTROL DETAIL SHEETS FOR HORIZONTAL AND VERTICAL CONTROL DATA

STATE OF ARKANSAS
LICENSED PROFESSIONAL ENGINEER
No. 13653
ADAM E. WIERCIAK
3/21/16

AEWierciak 3/20/2016 11:56:42 AM
WORKSPACE: AHTD
L:\20IN\10I7107 - I-540 Widening & Interchange Improvement\Drawings\rBB0414_PP_Hwy112 Ramp 4_02.dgn
REVISED DATE:

DATE REVISED	DATE FILMED	DATE REVISED	DATE FILMED	FED. RD. DIST. NO.	STATE	FED. AID PROJ. NO.	SHEET NO.	TOTAL SHEETS
				6	ARK.			
				JOB NO.		BB0414	287	886

PLAN & PROFILE - HWY. 112

STA. 8+20 CONSTRUCT
DROP INLET ON LT. H=4'7"
WITH 22" X 14" X 12'
R.C. ARCH PIPE OUTLET
(CLASS III) TYPE 3 BEDDING
WITH FES.
TYPE MO INLET = 4'-0" DIA.
TYPE C INLET = 4'-0" X 3'-0"

STA. 9+75 CONSTRUCT
DROP INLET ON LT. H=3'5"
WITH 22" X 14" X 148'
R.C. ARCH PIPE OUTLET
(CLASS III) TYPE 3 BEDDING
CONNECT TO DROP INLET
AT STA. 8+20 LT.
TYPE MO INLET = 4'-0" DIA.
TYPE C INLET = 4'-0" X 3'-0"

STA. 10+58 CONSTRUCT
DROP INLET ON LT. H=2'8"
WITH 22" X 14" X 79'
R.C. ARCH PIPE OUTLET
(CLASS IV) TYPE 3 BEDDING
CONNECT TO DROP INLET
AT STA. 9+75 LT.
TYPE MO INLET = 4'-0" DIA.
TYPE C INLET = 4'-0" X 3'-6"

STA. 14+23 LT. CONSTRUCT
TYPE 3 WHEELCHAIR
RAMP = 7.35 SQ. YDS

STA. 15+24 LT. CONSTRUCT
TYPE 3 WHEELCHAIR
RAMP = 16.53 SQ. YDS

C.L. HWY. 112
PI = 6+40.18
Δ = 42°28'00" LT.
D = 8°00'00"
T = 278.27'
L = 530.83'
PC= 3+61.91
PT= 8+92.74
e = MATCH EX.
Ls = MATCH EX.

STA. 8+60 CONSTRUCT
APPROACH ON LT. = 59 CU. YDS.

STA. 10+13.50 CONSTRUCT
APPROACH ON LT. = 52 CU. YDS.

STA. 11+13 CONSTRUCT
APPROACH ON LT. = 38 CU. YDS.

STA. 11+99 CONSTRUCT
APPROACH ON LT. = 56 CU. YDS.

STA. 7+63 LT. CONSTRUCT
TYPE 3 WHEELCHAIR RAMP = 3.43 SQ. YDS

STA. 6+77.03
BEGIN HWY. 112

STA. 7+28 RT. CONSTRUCT
TYPE 3 WHEELCHAIR RAMP = 3.15 SQ. YDS

STA. 9+80 IN PLACE
30" X 33' C.M. PIPE CULVERT
RT. SIDE DRAIN
REMOVE AND CONSTRUCT
APPROACH ON RT. = 8 CU. YDS.

STA. 10+67 IN PLACE
24" X 25' C.M. PIPE CULVERT
RT. SIDE DRAIN
REMOVE AND CONSTRUCT
APPROACH ON RT. = 12 CU. YDS.

STA. 11+76 CONSTRUCT
DROP INLET ON RT. H=5'2"
WITH 4' EXTENSION AND 24" X 141'
R.C. PIPE CULVERT TO
DROP INLET AT STA. 13+23 RT.
IN PLACE 24" X 84'
PIPE CULVERT REMOVE
(CLASS IV) TYPE 3 BEDDING
TYPE MO INLET = 4'-0" DIA.
TYPE C INLET = 4'-0" X 2'-6"

STA. 13+23 CONSTRUCT
DROP INLET ON RT. H=6'0"
WITH 4' EXTENSION AND 24" X 56'
R.C. PIPE CULVERT TO
DROP INLET AT STA. 13+85 RT.
(CLASS III) TYPE 3 BEDDING
TYPE MO INLET = 4'-0" DIA.
TYPE C INLET = 4'-0" X 2'-6"

STA. 12+52 IN PLACE
POINT CIR.
24" X 84' R.C. PIPE CULVERT
RT. SIDE DRAIN
REMOVE AND CONSTRUCT
APPROACH ON RT. = 74 CU. YDS.

STA. 12+15 RT. CONSTRUCT
TYPE 3 WHEELCHAIR RAMP = 5.48 SQ. YDS

STA. 12+92 RT. CONSTRUCT
TYPE 3 WHEELCHAIR RAMP = 5.64 SQ. YDS

STA. 13+85 CONSTRUCT
DROP INLET ON RT. H=6'8"
WITH 24" X 46' R.C. PIPE
CULVERT OUTLET WITH FES.
(CLASS III) TYPE 3 BEDDING
TYPE MO INLET = 4'-0" DIA.
TYPE C INLET = 4'-0" X 2'-6"

STA. 15+50 CONSTRUCT
DROP INLET ON RT. H=4'6"
WITH 18" X 13' R.C. PIPE
CULVERT OUTLET WITH FES.
(CLASS III) TYPE 3 BEDDING
TYPE MO INLET = 4'-0" DIA.
TYPE C INLET = 4'-0" X 2'-6"

100' TRANSITION TO MATCH
EX. APPROACH SLAB

STA. 14+48 RT. CONSTRUCT
TYPE 3 WHEELCHAIR RAMP = 3.33 SQ. YDS

STA. 15+31 RT. CONSTRUCT
TYPE 3 WHEELCHAIR RAMP = 5.45 SQ. YDS

C.L. HWY. 112 STA. 14+83.32 =
C.L. RAMP I STA. 290+98.88
Δ = 77°29'25"

C.L. HWY. 112 STA. 14+83.32 =
C.L. HWY. 112 TO NB I-49
RAMP STA. 287+20.67
Δ = 79°06'07"

C.L. HWY. 112
PI = 17+47.75
Δ = 35°36'00" RT.
D = 3°45'00"
T = 490.55'
L = 949.33'
PC= 12+57.20
PT= 22+06.53
e = MATCH EX.
Ls = MATCH EX.

EXISTING GROUND

STA. 8+20 LT.
TOP = 1253.44
INV = 1248.86
F.L. = 1248.78 LT.

STA. 9+75 LT.
TOP = 1252.52
INV = 1249.10

STA. 10+58 LT.
TOP = 1251.90
INV = 1249.23

STA. 11+76 RT.
TOP = 1250.81
INV = 1245.64

STA. 13+23 RT.
TOP = 1250.09
INV = 1244.09

STA. 13+85 RT.
TOP = 1250.19
INV = 1243.52
F.L. = 1242.94 RT.

STA. 15+50 RT.
TOP = 1252.70
INV = 1248.20
F.L. = 1247.96 RT.

22" X 14" X 148' @ 0.2%
22" X 14" X 79' @ 0.2%
24" X 141' @ 1.1%
24" X 56' @ 1.0%
24" X 46' @ 1.3%

REFER TO SURVEY CONTROL DETAIL SHEETS FOR
HORIZONTAL AND VERTICAL CONTROL DATA

STATE OF ARKANSAS
LICENSED PROFESSIONAL ENGINEER
No. 13653
ADAM E. WIERCIAK
8/29/16

AEWiercIak 3/20/2016 11:56:42 AM
WORKSPACE: AHTD
L:\20IN\I0I707 - I-540 Widening & Interchange Improvement\Drawings\rBB0414_PP_Hwyll2_01.dgn
REVISED DATE:

DATE REVISED	DATE FILMED	DATE REVISED	DATE FILMED	FED. RD. DIST. NO.	STATE	FED. AID PROJ. NO.	SHEET NO.	TOTAL SHEETS
				6	ARK.			
				JOB NO.		BB0414	288	886

(2) PLAN & PROFILE - HWY. 112

STA. 21+36 IN PLACE
DROP INLET RT.
REMOVE DROP INLET
12" X 118' PIPE CULVERT
REMOVE PIPE CULVERT

STA. 22+25 LT. CONSTRUCT
TYPE 3 WHEELCHAIR RAMP = 12.50 SQ. YDS

C.L. COLLECTOR-DISTRIBUTOR RD.

C.L. HWY. 112 STA. 20+59.86 =
C.L. C-D RD. STA. 292+55.15
℄ = 60°42'26"

C.L. HWY. 112 RAMP 4

I-49 STA. 291+27 IN PLACE
4' X 4' X 525' R.C. BOX CULVERT
29° LT. FWD. SKEW WITH 3:1 WINGS (45°) LT. & RT.
RETAIN AND EXTEND 20' LT. & 81' RT.
REMOVE AND REPLACE 47' SECTION
Q50 = 103 CFS DA = 47.9 ACRES

STA. 26+24 CONSTRUCT
DROP INLET ON LT. H=4'6"
W/18" X 42' R.C PIPE CULVERT
TO JUNCTION BOX AT
SHILOH DR. STA. 73+64 RT.
(CLASS III) TYPE 3 BEDDING
TYPE MO INLET = 4'-0" DIA.
TYPE C INLET = 4'-0" X 2'-6"

STA. 27+00 CONSTRUCT
DROP INLET ON RT. H=5'6"
WITH 8' EXTENSION
WITH 18" X 34' R.C. PIPE CULVERT
CONNECT TO BOX CULVERT
(CLASS III) TYPE 3 BEDDING
TYPE MO INLET = 4'-0" DIA.
TYPE C INLET = 4'-0" X 2'-6"

STA. 27+63 CONSTRUCT
TYPE TM DROP INLET
50' RT. (3' X 2'6" X 0'9")
CONNECT TO R.C. BOX CULVERT

STA. 30+52 CONSTRUCT
DROP INLET TYPE
SPECIAL 29' LT.

STA. 30+10 CONSTRUCT
TYPE TM DROP INLET
44' RT. (3' X 2'6" X 0'10")
CONNECT TO R.C. BOX CULVERT

STA. 29+11 CONSTRUCT
TYPE TM DROP INLET
44' RT. (3' X 2'6" X 0'9")
CONNECT TO R.C. BOX CULVERT

STA. 30+77 CONSTRUCT
TYPE E JUNCTION BOX 47' LT.
(3' X 3' X H=4'3") WITH
18" X 29" X 13' R.C. ARCH PIPE
CULVERT OUTLET WITH FES.
CONNECT TO EXISTING
R.C. PIPE UNDER TRUCKER DRIVE
(CLASS III) TYPE 3 BEDDING
QIO =18 CFS DA = 2.8 AC.

C.L. HWY. 112
PI = 33+03.32
Δ = 15°19'00" LT.
D = 5°00'00"
T = 154.09'
L = 306.33'
PC= 31+49.23
PT= 34+55.57
e = MATCH EX.
Ls = MATCH EX.

APPROX. FEMA 100 YR. FLOODPLAIN

C.L. I-49 MEDIAN

SHARED USE PATH

TAPER 40'

CONST. LIMITS

EXIST. C/A

C.L. SHILOH DR.

CONSTRUCTION LIMITS
EXIST. R/W

EXTEND TO EXISTING CURB AND GUTTER

TRUCKER'S DR.

W. TRANSPORT RD.

HWY. 112

BEGIN BRIDGE
STA. 17+86.80

C.L. HWY. 112 STA. 19+42.55 =
C.L. I-49 STA. 292+41.37
℄ = 65°10'31"

C.L. HWY. 112
PI = 17+47.75
Δ = 35°36'00" RT.
D = 3°45'00"
T = 490.55'
L = 949.33'
PC= 12+57.20
PT= 22+06.53
e = MATCH EX.
Ls = MATCH EX.

END BRIDGE
STA. 20+92.28

C.L. HWY. 112 STA. 23+73.78 =
C.L. RAMP 4 STA. 298+36.29
℄ = 81°43'20"

C.L. HWY. 112 STA. 23+18.86 =
C.L. C-D RD. STA. 275+87.76
℄ = 81°50'52"

C.L. HWY. 112 STA. 26+96.59 =
C.L. SHILOH DR. STA. 75+00.00
℄ = 90°00'00"

STA. 22+60 CONSTRUCT
DROP INLET ON RT. H=4'6"
WITH 8' EXTENSION
WITH 18" X 64' R.C. PIPE CULVERT
CONNECT TO BOX CULVERT
(CLASS III) TYPE 3 BEDDING
TYPE MO INLET = 4'-0" DIA.
TYPE C INLET = 4'-0" X 2'-6"

STA. 26+90 71.16' RT. TO
STA. 35+12 29.50' RT. CONSTRUCT
6' X 3' X 836' R.C. BOX CULVERT
15° INLET SKEWED END SECTION
WITH 3:1 WINGS (EACH END
Q10 = 142 CFS DA = 71.5 AC.

STA. 27+89 IN PLACE
DOUBLE 24" X 218' R.C. PIPE CULVERT
REMOVE R.C. PIPE CULVERT

STA. 29+49 CONSTRUCT
DROP INLET ON RT. H=4'6"
WITH 8' EXTENSION
WITH 18" X 7' R.C. PIPE CULVERT
CONNECT TO BOX CULVERT
(CLASS III) TYPE 3 BEDDING
TYPE MO INLET = 4'-0" DIA.
TYPE C INLET = 4'-0" X 2'-6"

STA. 30+00 CONSTRUCT
DROP INLET ON RT. H=4'6"
WITH DBL. 4' EXTENSIONS
WITH 18" X 7' R.C. PIPE CULVERT
CONNECT TO BOX CULVERT
(CLASS III) TYPE 3 BEDDING
TYPE MO INLET = 4'-0" DIA.
TYPE C INLET = 4'-0" X 2'-6"

STA. 30+52 CONSTRUCT
DROP INLET ON RT. H=4'6"
WITH 18" X 3' R.C. PIPE CULVERT
CONNECT TO BOX CULVERT
(CLASS III) TYPE 3 BEDDING
TYPE MO INLET = 4'-0" DIA.
TYPE C INLET = 4'-0" X 2'-6"

100' TRANSITION TO MATCH EX. APPROACH SLAB

STA. 17+86.80 TO STA. 20+92.28
RETAIN AND WIDEN
303'-0" CONT. COMP. W-BEAM UNIT (71',83',98',51')
BRIDGE NO. 05692 HWY. 112 OVER INTERSTATE 49
58'-0" CLEAR ROADWAY

WIDEN EXISTING BRIDGE

I-49 RT. LANES
I-49 LT. LANES
C-D RD.
17'-4⅞" MIN.
17'-0⅝" MIN.
16'-8⅝" MIN.

EXISTING GROUND

STA. 22+83 RT. CONSTRUCT
TYPE 3 WHEELCHAIR RAMP = 3.33 SQ. YDS

STA. 23+34 LT. CONSTRUCT
TYPE 3 WHEELCHAIR RAMP = 26.37 SQ. YDS

STA. 24+15 LT. CONSTRUCT
TYPE 3 WHEELCHAIR RAMP = 10.22 SQ. YDS

100' TRANSITION TO MATCH EX. APPROACH SLAB

NOTCH, WIDEN, AND OVERLAY

STA. 22+60 RT.
TOP = 1238.68
INV = 1234.18
F.L. = 1212.72 AT BOX

STA. 27+00
TOP = 1214.68
INV = 1209.18
F.L. = 1205.60 AT BOX

+36.00 LT. 1211.57
+13.00 LT. 1209.48
-1.18% LEFT DITCH GRADE
EX. F.L. = 1211.23 (LT.)
PROP F.L. = 1210.54 (LT.)
-1.35% RIGHT DITCH GRADE
5' FLAT BOTTOM

+18.50 RT. 1211.50
+00.00 RT. 1210.72
+63.00 RT. 1209.32
+98.00 RT. 1210.00
-2.23% RT.
1.95%
-0.54% LEFT DITCH GRADE
6' X 3' X 836' @ 0.34%

STA. 26+24 LT.
TOP = 1217.47
INV = 1212.97
F.L. = 1209.31 AT JUNCTION BOX

STA. 26+90 71.16' RT.
INV = 1205.13

+90.00 RT. 1205.13
+45.00 LT. 1206.89
+52.00 LT. 1205.24

STA. 29+11 RT.
TOP = 1209.01

STA. 27+63 RT.
TOP = 1209.32

STA. 29+49 RT.
TOP = 1210.03
INV = 1205.53
F.L. = 1205.24 AT BOX

STA. 30+10 RT.
TOP = 1208.57

STA. 30+00 RT.
TOP = 1209.83
INV = 1205.33
F.L. = 1205.08 AT BOX

STA. 30+52 RT.
TOP = 1209.43
INV = 1204.93
F.L. = 1204.89 AT BOX

STA. 30+77 LT.
TOP = 1209.36
INV = 1205.11
PROP F.L. = 1205.24 (LT.)

STA. 29+11 IN PLACE
DROP INLET
REMOVE DROP INLET
DOUBLE 24" X 101' R.C. PIPE CULVERT
REMOVE R.C. PIPE CULVERT

STA. 30+13 IN PLACE
DROP INLET
REMOVE DROP INLET
44" X 72" X 299' R.C. ARCH PIPE CULVERT
REMOVE R.C. ARCH PIPE CULVERT

STA. 26+44 LT. CONSTRUCT
TYPE 3 WHEELCHAIR RAMP = 20.09 SQ. YDS

STA. 27+42 LT. CONSTRUCT
TYPE 3 WHEELCHAIR RAMP = 4.61 SQ. YDS

STA. 30+64 RT. CONSTRUCT
TYPE 3 WHEELCHAIR RAMP = 4.49 SQ. YDS

STA. 30+70 RT. CONSTRUCT
TYPE 3 WHEELCHAIR RAMP = 3.93 SQ. YDS

STA. 30+72 LT. CONSTRUCT
TYPE 3 WHEELCHAIR RAMP = 3.43 SQ. YDS

STA. 30+88 LT. CONSTRUCT
TYPE 3 WHEELCHAIR RAMP = 4.42 SQ. YDS

STA. 31+33 RT. CONSTRUCT
TYPE 3 WHEELCHAIR RAMP = 4.95 SQ. YDS

STA. 31+55 RT. CONSTRUCT
TYPE 3 WHEELCHAIR RAMP = 3.43 SQ. YDS

STATE OF ARKANSAS
LICENSED PROFESSIONAL ENGINEER
No. 13653
ADAM E. WIERCIAK
3/20/16

REFER TO SURVEY CONTROL DETAIL SHEETS FOR HORIZONTAL AND VERTICAL CONTROL DATA

1270 1260 1250 1240 1230 1220 1210 1200 1190 1180

17+00 18+00 19+00 20+00 21+00 22+00 23+00 24+00 25+00 26+00 27+00 28+00 29+00 30+00 31+00 32+00

AEWierciak 3/20/2016 11:56:42 AM
WORKSPACE: AHTD
L:\201\110\1707 - I-540 Widening & Interchange Improvement\Drawings\r-BB0414_PP_Hwy112_02.dgn
REVISED DATE:

DATE REVISED	DATE FILMED	DATE REVISED	DATE FILMED	FED. RD. DIST. NO.	STATE	FED. AID PROJ. NO.	SHEET NO.	TOTAL SHEETS
				6	ARK.			
				JOB NO.		BB0414	289	886
				(2)	PLAN & PROFILE - HWY. 112			

STATE OF ARKANSAS
LICENSED PROFESSIONAL ENGINEER
No. 13653
ADAM E. WIERCIAK
3/20/16

N

C.L. HWY. 112
PI = 33+03.32
Δ = 15°19'00" LT.
D = 5°00'00"
T = 154.09'
L = 306.33'
PC= 31+49.23
PT= 34+55.57
e = MATCH EX.
Ls = MATCH EX.

APPROXIMATE FEMA 100 YR. FLOODPLAIN LIMITS

PT 34+55.57

EXIST. R/W

C.L. HWY. 112

35+00

N 19°08'26" W

+12.00
29.50' RT.

EXIST. R/W

+13.02
38.65' RT.
8°58'04" BEND LT.

+00.00
40.66' RT.
4°56'32" BEND LT.

PI 33+03.32

APPROXIMATE FEMA 100 YR. FLOODPLAIN LIMITS

HWY. 112

STA. 33+13 IN PLACE
DROP INLET
REMOVE DROP INLET
44" X 72" X 201' R.C. ARCH PIPE CULVERT
REMOVE R.C. ARCH PIPE CULVERT

6' X 3' X 836' @ 0.34%

HWY. 112 STA. 35+12, 29.50' RT.
INV = 1202.36

REFER TO SURVEY CONTROL DETAIL SHEETS FOR HORIZONTAL AND VERTICAL CONTROL DATA

1250 1240 1230 1220 1210 1200 1190 1180 1170 1160

32+00 33+00 34+00 35+00 36+00

AEWerciak 3/20/2016 11:56:43 AM
WORKSPACE: AHTD
L:\20IN\107707 - I-540 Widening & Interchange Improvement\Drawings\r-BB0414_PP_Hwy112_03.dgn
REVISED DATE:

DATE REVISED	DATE FILMED	DATE REVISED	DATE FILMED

FED. RD. DIST. NO.	STATE	FED. AID PROJ. NO.	SHEET NO.	TOTAL SHEETS
6	ARK.			
JOB NO.		BB0414	290	886

PLAN & PROFILE - SHILOH DR.

STA. 44+19 CONSTRUCT
DROP INLET 15' RT.
H=9'10" CONNECT TO PIPE
CULVERT I-49 STA. 270+26
TYPE MO INLET = 4'-0" DIA.
TYPE C INLET = 4'-0" X 2'-6"

STA. 45+71 CONSTRUCT
DROP INLET 15' RT.
H=5'2", W/24" X 26' R.C. PIPE
CULVERT OUTLET CONNECT TO
EXISTING CURB INLET LT.
(TYPE III) CLASS 3 BEDDING
TYPE MO INLET = 4'-0" DIA.
TYPE C INLET = 4'-0" X 2'-6"

STA. 47+83 CONSTRUCT
DROP INLET 15' RT.
H=7'9" CONNECT TO PIPE
CULVERT I-49 STA. 273+90
TYPE MO INLET = 4'-0" DIA.
TYPE C INLET = 4'-0" X 2'-6"

C.L. SHILOH DR.
PI = 51+52.15
Δ = 2°12'57" LT.
D = 1°00'00"
T = 110.80'
L = 221.57'
PC= 50+41.35
PT= 52+62.92
e = MATCH EX.
Ls = MATCH EX.

C.L. SHILOH DR.
PI = 55+55.23
Δ = 40°49'41" LT.
D = 10°00'00"
T = 213.24'
L = 408.28'
PC= 53+41.99
PT= 57+50.27
e = MATCH EX.
Ls = MATCH EX.

STA. 51+63 CONSTRUCT
DROP INLET 15' RT.
H=5'2", W/24" X 26' R.C. PIPE
CULVERT OUTLET CONNECT TO
EXISTING CURB INLET LT.
(TYPE III) CLASS 3 BEDDING
TYPE MO INLET = 4'-0" DIA.
TYPE C INLET = 4'-0" X 2'-6"

BEGIN SHILOH CURB & GUTTER
STA. 43+15.90

END SHILOH CURB & GUTTER
STA. 56+42.00

EXIST. R/W & C/A

C.L. I-49 MEDIAN

CONSTRUCTION LIMITS

SHILOH DR.

PAVED PARKING

POND

SPILLWAY

PAVED DRAIN

RET/WALL

SIGN

CURB

PC 50+41.35

PI 51+52.15

PT 52+62.92

PC 53+41.99

PC 276+17.66

PI 277+12.88

PT 278+07.94

PC 279+22.29

PI 55+55.23

PT 57+81.97

N 34°07'16" E

N 31°54'20" E

45+00

50+00

55+00

270+00

275+00

280+00

CONSTRUCT CURB AND GUTTER

STA. 43+15.90

STA. 56+42.00

EXISTING GROUND

STA. 44+19 RT.
TOP = 1254.98
INV. = 1245.15

STA. 45+71
TOP = 1251.06 (RT.)
INV. = 1245.86 (RT.)
F.L. = 1245.67 (LT.)

STA. 47+83 RT.
TOP = 1245.32
INV. = 1237.57

STA. 51+63
TOP = 1235.29 (RT.)
INV. = 1230.09 (RT.)
INV. = 1229.70 (LT.)

REFER TO SURVEY CONTROL DETAIL SHEETS FOR
HORIZONTAL AND VERTICAL CONTROL DATA

1300 1290 1280 1270 1260 1250 1240 1230 1220 1210

42+00 43+00 44+00 45+00 46+00 47+00 48+00 49+00 50+00 51+00 52+00 53+00 54+00 55+00 56+00 57+00

STATE OF ARKANSAS
LICENSED PROFESSIONAL ENGINEER
No. 13653
ADAM E. WIERCIAK
3/25/16

AEWierciak 3/20/2016 11:56:43 AM
WORKSPACE: AHTD
L:\20II\10I707 - I-540 Widening & Interchange Improvement\Drawings\rBB0414_PP_Shiloh_01.dgn
REVISED DATE:

DATE REVISED	DATE FILMED	DATE REVISED	DATE FILMED	FED. RD. DIST. NO.	STATE	FED. AID PROJ. NO.	SHEET NO.	TOTAL SHEETS
				6	ARK.			
				JOB NO.		BB0414	291	886

(2) PLAN & PROFILE - SHILOH DR.

STATE OF ARKANSAS
LICENSED PROFESSIONAL ENGINEER
No. 13653
ADAM E. WIERCIAK
3/20/16

N

STA. 73+64 CONSTRUCT
DROP INLET 29' RT.
WITH 18" X 6' R.C. PIPE CULVERT
TO JUNCTION BOX AT STA. 73+64, 37' RT.
(CLASS III) TYPE 3 BEDDING
TYPE MO INLET = 4'-0" DIA.
TYPE C INLET = 4'-0" X 2'-6"

STA. 73+64 CONSTRUCT
JUNCTION BOX (TYPE E) 37' RT.
(3' X 3'-6" X H=3'-8")
WITH 24" X 21' R.C. PIPE CULVERT
INLET RT. WITH FES.
AND 24" X 95' R.C. PIPE CULVERT
OUTLET LT. WITH FES.
(CLASS III) TYPE 3 BEDDING
QIO = 6 CFS DA = 1.7 AC.

STA. 74+42 IN PLACE
18" X 122' R.C. PIPE CULVERT
WITH FES. LT. & RT.
PLUG AND ABANDON

C.L. SHILOH DR.
PI = 74+06.50
Δ = 83°24'37" RT.
D = 95°30'00"
T = 53.46'
L = 87.34'
PC= 73+53.04
PT= 74+40.38
NO SUPER

CONSTRUCTION LIMITS
BEGIN SHILOH DR. STA. 73+53.04
UNDER CONSTRUCTION
40' TRANSITION TO MATCH EXISTING
EXIST. R/W
RET. WALL
PAVED
EXIST. C/A
CONSTRUCTION LIMITS
C.L. RAMP 4
SERVICE ROAD
PAVED PARKING
TRIG ELEV
C.L. SHILOH DR. STA. 75+00.00 =
C.L. HWY. 112 STA. 26+96.59
Δ = 90°00'00"
+47.34 BEGIN PROP. C/A
C.L. HWY. 112
CONSTRUCTION LIMITS
PROP. R/W & C/A
+20 129.15' END PROP. C/A
EXIST. R/W & C/A
SHILOH DR.

PI 66+29.54
PI 291+75.49
PT 69+73.32
PC 70+86.10
PT 72+62.87
PI 71+90.22
PT 294+58.17
PC 73+53.04
PI 74+06.50
PT 74+40.38
PI 74+30.00
PC 74+72.00
PT 75+00.00
PI 73+13.04
N 2°45'56" E
N 3°49'26" W
N 77°53'54" E
N 86°10'34" E
18.00' R.
30.00' R.
75.00' R.
100.00' R.
34'
56'
67'
25+00
70+00
295+00
15'
4'

+15 64.18'
+90 101'

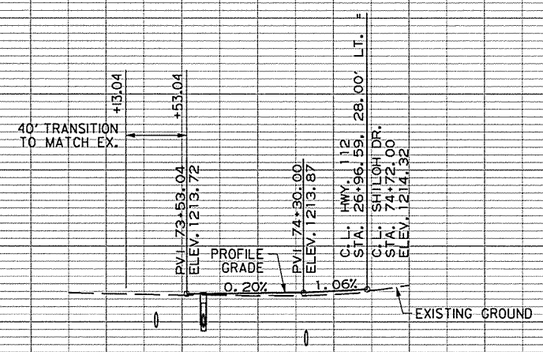

STA. 73+64, 29' RT.
TOP = 1213.85
INV. = 1209.60
F.L. = 1209.31 AT JUNCTION BOX

STA. 73+64, 37' RT.
TOP = 1212.48
INV. = 1208.81
F.L. = 1209.48 (RT.)
F.L. = 1206.89 (LT.)

REFER TO SURVEY CONTROL DETAIL SHEETS FOR HORIZONTAL AND VERTICAL CONTROL DATA

AEWierciak 3/20/2016 11:56:43 AM
WORKSPACE: AHTD
L:\20IN\I40I707 - I-540 Widening & Interchange Improvement\Drawings\rBB0414_PP_Shiloh_02.dgn
REVISED DATE:

DATE REVISED	DATE FILMED	DATE REVISED	DATE FILMED	FED. RD. DIST. NO.	STATE	FED. AID PROJ. NO.	SHEET NO.	TOTAL SHEETS
				6	ARK.			
				JOB NO.		BB0414	292	886

(2) PLAN & PROFILE - COLLECTOR-DISTRIBUTOR RD.

C.L. COLLECTOR-DISTRIBUTOR RD.
PI = 280+80.16
Δ = 31°07'43" LT.
D = 14°41'28"
T = 108.63'
L = 211.88'
PC= 279+71.53
PT= 281+83.41
e = MATCH EX.
Ls = MATCH EX.

C.L. COLLECTOR-DISTRIBUTOR RD.

CONSTRUCTION LIMITS

+29.57 150' TAPER +79.57 100' TRANS. TO EXIST.

PCC 281+83.41

PC 279+71.53

+60.27 32.00' 80' TAPER +40.27 24.00'

125' R.

68'

44'

30'

18'

12' 24' 12'

6' 6' 6'

15' 4'

4'

30.81'

N 78°01'26" E

75' R.

3.5'

N 77°53'54" E

24'

25' R.

N 3°49'26" W 253.98'

PT 22+06.53

PI 296+48.30

+91.28 147.57' BEGIN PROP. C/A

PROP. R/W & C/A

CONSTRUCTION LIMITS

+20 129.15' END PROP. C/A

C.L. C-D RD. STA. 275+87.76 =
C.L. HWY. 112 STA. 23+18.86
Δ = 81°50'52"

EXIST. R/W & C/A

PROP. R/W & C/A

25.00'

67'

295+00

PT 294+58.17

CONSTRUCTION LIMITS

EXIST. C/A

C.L. RAMP 4

CONSTRUCTION LIMITS

280+00

290+00

PI 291+75.49

PI 66+29.54

EXIST. R/W

PI 71+90.22

PC 70+86

PT 69+7

70+00

STA. 283+36 IN PLACE
42" X 105' R.C. PIPE CULVERT
WITH DROP INLET RT. & F.E.S. LT.
RETAIN

STATE OF ARKANSAS
LICENSED PROFESSIONAL ENGINEER
No. 13653
ADAM E. WIERCIAK
3/20/16

COLLECTOR-DISTRIBUTOR RD.

C.L. HWY. 112 STA. 23+22.42 28.00' LT.
C.L. C-D ROAD STA. 276+14.98, 7.50' RT.
ELEV. 1235.43

+25.00

PVI 277+25.00
ELEV. 1234.48

-0.86%

PROFILE GRADE

NOTCH, WIDEN, AND OVERLAY

+79.57 100' TRANSITION TO MATCH EX. +79.57

EXISTING GROUND

1280 1270 1260 1250 1240 1230 1220 1210 1200 1190

275+00 276+00 277+00 278+00 279+00 280+00 281+00 282+00

REFER TO SURVEY CONTROL DETAIL SHEETS FOR HORIZONTAL AND VERTICAL CONTROL DATA

AEWierciak 3/20/2016 11:56:43 AM
WORKSPACE: AHTD
L:\220\ND17\07 - I-540 Widening & Interchange Improvement\Drawings\r-BB0414_PP_CD_01.dgn
REVISED DATE:

DATE REVISED	DATE FILMED	DATE REVISED	DATE FILMED

FED. RD. DIST. NO.	STATE	FED. AID PROJ. NO.	SHEET NO.	TOTAL SHEETS
6	ARK.			
JOB NO.		BB0414	293	886

(2) PLAN & PROFILE - COLLECTOR-DISTRIBUTOR RD.

CONCRETE DITCH PAVING (TYPE B) C-D RD.

STA.	STA.	SIDE	"W"	SQ. YDS.
291+28	293+89	LT. = 262 LIN. FT.	4'-0"	116
291+95	293+53	RT. = 158 LIN. FT.	5'-3"	94
293+68	293+90	RT. = 22 LIN. FT.	5'-6"	14

N

PC 60+50.20

C.L. HWY. 112 RAMP 4

PC 287+17.97

C.L. COLLECTOR DISTRIBUTOR RD.
PI = 284+32.57
Δ = 95°20'59" LT.
D = 25°15'00"
T = 249.16'
L = 377.62'
PC= 281+83.41
PT= 285+61.04
e = MATCH EX.
Ls = MATCH EX.

CONSTRUCTION LIMITS

C.L. COLLECTOR-DISTRIBUTOR RD.
PI = 287+27.30
Δ = 80°09'45" LT.
D = 29°00'00"
T = 166.26'
L = 276.42'
PC= 285+61.04
PT= 288+37.46
e = 0.100'/'
Ls = 300'

PT 284+43.99

PT 57+50.27

PC 283+94.33

PI 281+95.32

PI 55+55.23

STA. 291+58 CONSTRUCT TYPE TM DROP INLET 11' LT. (3' X 2'6" X H=3'6") CONNECT TO BOX CULVERT

STA. 293+00 CONSTRUCT TYPE ST DROP INLET 12' RT. (3' X 3' X H=6'6") WITH 24" X 149' R.C. PIPE OUTLET CONNECT TO DROP INLET AT STA. 294+52 (CLASS III) TYPE 3 BEDDING

STA. 294+52 CONSTRUCT TYPE ST DROP INLET 11' RT. (4' X 3' X H=12'8") WITH 30" X 59' R.C. PIPE OUTLET (CLASS III) TYPE 3 BEDDING WITH FES. LT.

100' TRANSITION TO MATCH EXISTING

PCC 285+61.04

C.L. COLLECTOR-DISTRIBUTOR RD.
PI = 296+48.30
Δ = 19°49'03" RT.
D = 4°00'00"
T = 250.22'
L = 495.43'
PC= 293+98.09
PT= 298+93.52
e = 0.072'/'
Ls = 300'

CONSTRUCTION LIMITS

PT 288+37.46

C.L. COLLECTOR-DISTRIBUTOR RD.

+37.01 BEGIN RETAINING WALL NO. 1

+26.60 BEGIN BARRIER WALL (PARAPET TYPE SPECIAL 2)

SEE RETAINING WALL DETAILS

+85.65 BEGIN SIDE TYPE E

+73.01 END RETAINING WALL NO. 1

+00 TO +00 WALL TAPER 0' TO 2' SHLD. OFFSET

PT 22+06.53

PC 292+63.53

295+00

290+00

N 51°23'00" E

50' SHLD. TAPER

PI 288+21.56

+37.46 BEGIN BARRIER WALL RT.

CONCRETE DITCH PAVING BETWEEN BARRIER WALLS

C.L. C-D RD. STA. 292+55.15 =
C.L. HWY. 112 STA. 20+59.86
℄ = 60°42'26"

STA. 294+20 INSTALL OVERHEAD HIGHWAY SIGN C-D RD. LT. SEE SIGNING PLANS

C.L. I-49 MEDIAN

COLLECTOR-DISTRIBUTOR RD.

STA. 285+61.04 MATCH EXISTING (0.100'/')
STA. 287+62.46 MAX. SUPERELEVATION (0.100'/')
STA. 290+62.46 END SUPERELEVATION

STA. 291+73.09 BEGIN SUPERELEVATION
STA. 294+73.09 MAX. SUPERELEVATION (0.072'/')
STA. 298+18.52 MAX. SUPERELEVATION (0.072'/')
STA. 301+18.52 END SUPERELEVATION

+61.04

100' TRANSITION TO MATCH EX.

PVI 285+61.04
ELEV. 1227.60

PVC 285+75.00
ELEV. 1227.62

PVI 286+50.00
ELEV. 1227.72

PVT 287+25.00
ELEV. 1227.02

0.13%

VC=150.00'
K 140.19

-0.94%

PROFILE GRADE

EXISTING GROUND

PVC 290+25.00
ELEV. 1224.20

VC=200.00'
K 138.89

PVI 291+25.00
ELEV. 1223.26

PVT 292+25.00
ELEV. 1223.76

0.82% LEFT DITCH GRADE

+75.00 LT. 1217.96

+18.00 LT. 1219.13

HWY. 112 BRIDGE

17'-2½" MIN.

0.50%

STA. 291+58
TOP = 1223.17
INV. = 1214.97

STA. 293+00
TOP = 1224.02
INV. = 1217.52

STA. 294+52
TOP = 1224.50
INV = 1217.84 (MEDIAN DRAIN)
INV = 1213.50 (CROSS DRAIN)
INV. = 1211.87
PROP F.L. = 1211.45 (LT.)

REFER TO SURVEY CONTROL DETAIL SHEETS FOR HORIZONTAL AND VERTICAL CONTROL DATA

1270 1260 1250 1240 1230 1220 1210 1200 1190 1180

282+00 283+00 284+00 285+00 286+00 287+00 288+00 289+00 290+00 291+00 292+00 293+00 294+00 295+00

STATE OF ARKANSAS
LICENSED PROFESSIONAL ENGINEER
No. 13653
ADAM E. WIERCIAK
3/25/16

AEWierciak 3/20/2016 11:56:44 AM
WORKSPACE: AHTD
L:\20II\IID1707 - I-540 Widening & Interchange Improvement\Drawings\rBB0414_PP_CD_02.dgn
REVISED DATE:

DATE REVISED	DATE FILMED	DATE REVISED	DATE FILMED	FED. RD. DIST. NO.	STATE	FED. AID PROJ. NO.	SHEET NO.	TOTAL SHEETS
				6	ARK.			
				JOB NO.		BB0414	294	886

(2) PLAN & PROFILE - COLLECTOR-DISTRIBUTOR RD.

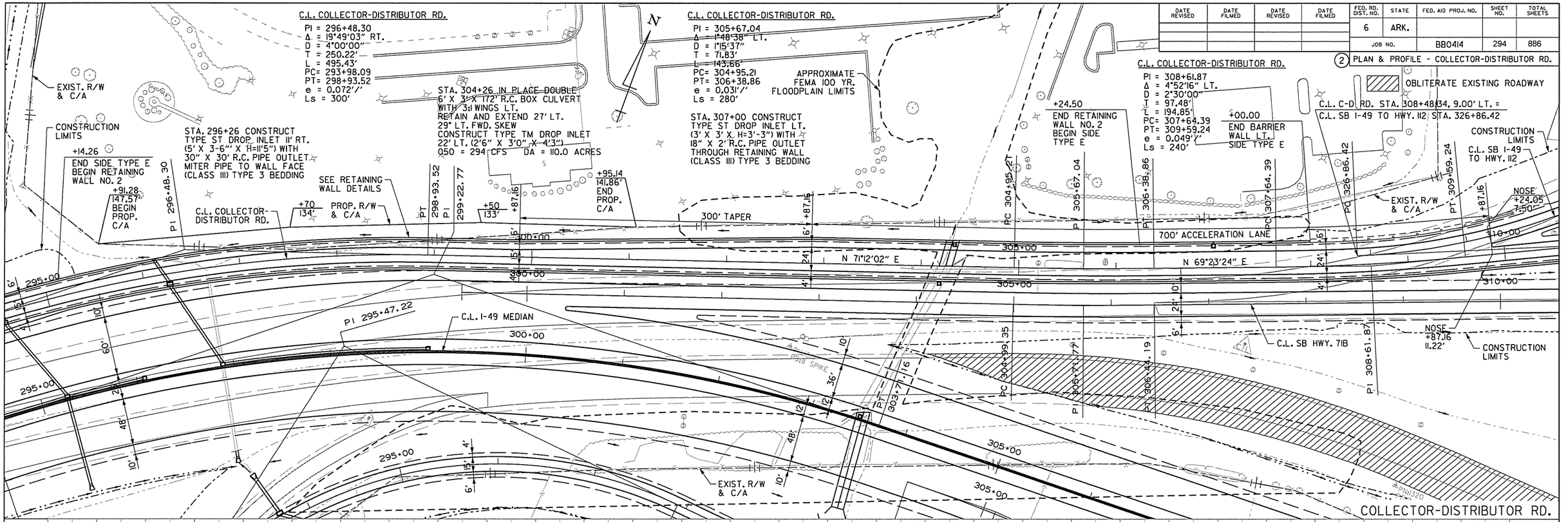

STA. 291+73.09 BEGIN SUPERELEVATION
STA. 294+73.09 MAX. SUPERELEVATION (0.072'/')
STA. 298+18.52 MAX. SUPERELEVATION (0.072'/')
STA. 301+18.52 END SUPERELEVATION

STA. 302+85.21 BEGIN SUPERELEVATION
STA. 305+65.21 MAX. SUPERELEVATION (0.031'/')
STA. 305+68.86 MAX. SUPERELEVATION (0.031'/')
STA. 306+49.28 END SUPERELEVATION (0.0278'/')

STA. 306+49.28 BEGIN SUPERELEVATION (0.0278'/')
STA. 308+24.39 MAX. SUPERELEVATION (0.049'/')
STA. 308+99.24 MAX. SUPERELEVATION (0.049'/')
STA. 311+39.24 END SUPERELEVATION

STREAM	STATION	STREAM TYPE	TOP OF CHANNEL ELEV.
CLABBER CREEK	I-49 STA. 299+46 TO STA. 299+58	PERENNIAL	1221 FT. MSL
CLABBER CREEK	I-49 STA. 303+46 TO STA. 303+58	PERENNIAL	1220 FT. MSL
CLABBER CREEK	I-49 STA. 304+20 TO STA. 304+32	PERENNIAL	1219 FT. MSL

C.L. C-D ROAD STATIONING
STA. 307+99.40 TO STA. 310+18.15 LT.

	GUARDRAIL (TYPE A)	GUARDRAIL TERMINAL (TYPE 2)	THRIE BEAM GUARDRAIL TERMINAL
=	150 LIN. FT.	1 EACH	1 EACH

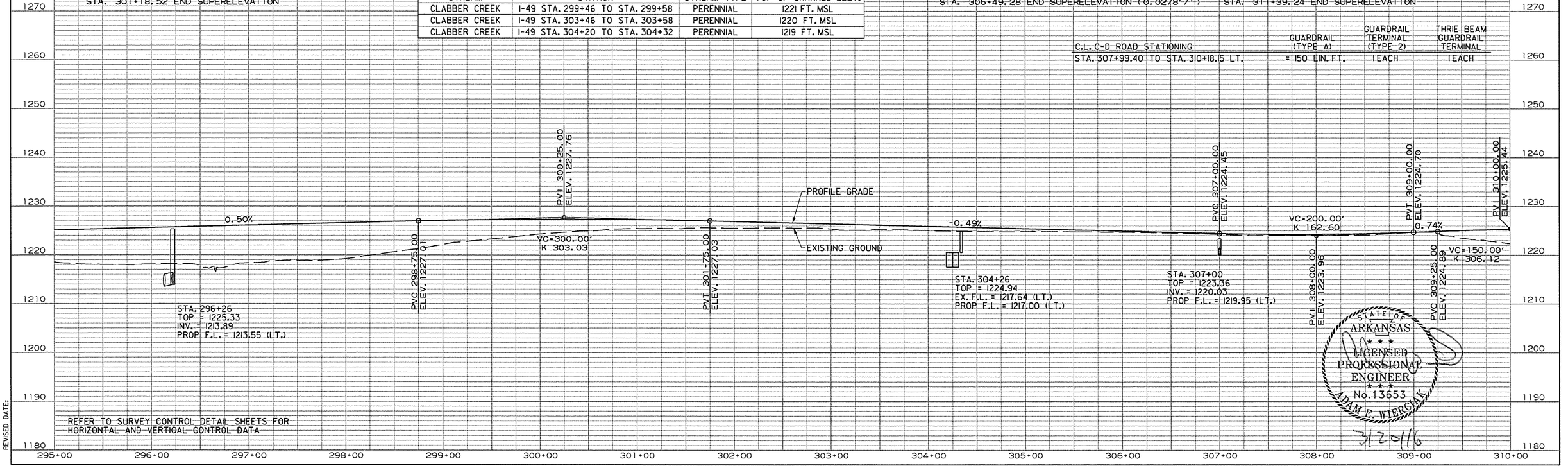

REFER TO SURVEY CONTROL DETAIL SHEETS FOR HORIZONTAL AND VERTICAL CONTROL DATA

STATE OF ARKANSAS
LICENSED PROFESSIONAL ENGINEER
No. 13653
ADAM E. WIERCIAK
3/20/16

AEWierciak 3/20/2016 11:56:44 AM
WORKSPACE: AHTD
L:\20IN\101707 - I-540 Widening & Interchange Improvement\Drawings\r-BB0414_PP_CD_03.dgn
REVISED DATE:

DATE REVISED	DATE FILMED	DATE REVISED	DATE FILMED	FED. RD. DIST. NO.	STATE	FED. AID PROJ. NO.	SHEET NO.	TOTAL SHEETS
				6	ARK.			
				JOB NO.		BB0414	295	886

(2) PLAN & PROFILE - COLLECTOR-DISTRIBUTOR RD.

C.L. COLLECTOR-DISTRIBUTOR RD.
PI = 314+30.15
Δ = 10°34'46" RT.
D = 6°00'00"
T = 88.41'
L = 176.33'
PC= 313+41.74
PT= 315+18.06
e = 0.092'/'
Ls = 270'

STA. 314+88 IN PLACE
DOUBLE 6' X 6' X 312' R.C. BOX CULVERT
18°LT. FWD. SKEW
WITH 3:1 WINGS LT.
RETAIN AND EXTEND 97' LT.
Q50 = 119 CFS DA = 40.2 ACRES

SB HWY. 71B STA. 319+85 IN PLACE
DROP INLET 32' RT. - RETAIN
24" X 78' R.C. PIPE CULVERT
WITH HDWL. LT. REMOVE HDWL.
AND EXTEND R.C. PIPE 18' LT.
TYPE 3 BEDDING WITH FES. LT.
24" R.C. PIPE = 22 LIN. FT.
24" FES = 1EA.

C.L. COLLECTOR-DISTRIBUTOR RD.
PI = 322+46.68
Δ = 5°42'30" LT.
D = 3°00'00"
T = 95.22'
L = 190.28'
PC= 321+51.46
PT= 323+41.74
NO SUPER

C.L. SB I-49 TO HWY. 112
P.I. 329+89.18
330+00
60°42'26"
PC 313+41.74
PI 314+30.15
PT 315+18.06
315+00
310+00
N 64°31'08" E
CONSTRUCTION LIMITS
C.L. COLLECTOR-DISTRIBUTOR RD.
NOSE +06.98 7.50'
320+00
N 75°05'54" E
PC 321+51.46
PI 322+46.68
PT 323+41.74
100' TRANSITION TO EXISTING
C.L. I-49 MEDIAN
PI 315+91.76
325+00
N 69°23'24" E
C.L. SB HWY. 71B
NOSE +07.76 30.82'
C.L. C-D RD. STA. 323+41.74 =
C.L. SB HWY. 71B STA. 323+41.74, 4.50' LT.

C.L. C-D RD. STA. 311+46.82 =
C.L. SB I-49 TO HWY. 71B
RAMP STA. 329+82.39
Δ = 60°42'26"

+70.00
END TYPE C
MEDIAN BARRIER
WALL RT.

C.L. SB I-49 TO HWY. 71B RAMP

SB HWY. 71B
STA. 314+07 CONSTRUCT
TYPE RM DROP INLET
(4' X 3'/X 5'10") 38' LT.
WITH 24" X 56' R.C. PIPE
OUTLET CONNECT TO BOX CULVERT
(CLASS III) TYPE 3 BEDDING

SB HWY. 71B
STA. 315+07 CONSTRUCT
TYPE RM DROP INLET
(4' X 3' X 6'0") 38' LT.
WITH 24" X 27' R.C. PIPE
OUTLET CONNECT TO BOX CULVERT
(CLASS III) TYPE 3 BEDDING

SB HWY. 71B
STA. 316+15 CONSTRUCT
TYPE RM DROP INLET
(4' X 3' X 5'0") 35' LT.
WITH 24" X 105' R.C. PIPE
OUTLET CONNECT TO DROP
INLET AT STA. 315+07
(CLASS III) TYPE 3 BEDDING

SB HWY. 71B
STA. 317+22 CONSTRUCT
TYPE RM DROP INLET
(4' X 3' X 3'11") 34' LT.
WITH 24" X 104' R.C. PIPE
OUTLET CONNECT TO DROP
INLET AT STA. 316+15
(CLASS III) TYPE 3 BEDDING

PC 320+61.97
320+00
315+00
325+00
36'
10'
17.62'
35'
12
18

COLLECTOR-DISTRIBUTOR RD.

STA. 311+39.24 BEGIN SUPERELEVATION
STA. 314+09.24 MAX. SUPERELEVATION (0.092'/')
STA. 314+50.56 MAX. SUPERELEVATION (0.092'/')
STA. 317+20.56 END SUPERELEVATION

C.L. C-D ROAD STATIONING
STA. 310+96.13 TO STA. 312+96.13 LT. = 150 LIN. FT.
STA. 311+69.40 TO STA. 313+88.15 RT. = 150 LIN. FT.

	GUARDRAIL (TYPE A)	GUARDRAIL TERMINAL (TYPE 2)	THRIE BEAM GUARDRAIL TERMINAL	TERMINAL ANCHOR POST (TYPE 1)
		1EACH	1EACH	1EACH

STATE OF ARKANSAS
LICENSED PROFESSIONAL ENGINEER
No. 13653
ADAM E. WIERCIAK
3/20/16

SB I-49 TO HWY. 71B RAMP BRIDGE
16'-0⅝" MIN.
PVI 310+00.00 ELEV. 1225.44
PVT 310+75.00 ELEV. 1225.68
PVC 313+50.00 ELEV. 1226.32
PVI 314+25.00 ELEV. 1226.50
PVT 315+00.00 ELEV. 1225.85
PVC 317+00.00 ELEV. 1224.11
PVI 317+75.00 ELEV. 1223.46
PVT 318+50.00 ELEV. 1223.50
C.L. HWY. 71 STA. 319+07.76, 30.82' LT.
C.L. C-D RD. STA. 319+06.98, 7.50' RT. ELEV. 1223.53
0.25%
-0.87%
0.05%
PROFILE GRADE
VC=150.00' K 306.12
VC=150.00' K 133.93
VC=150.00' K 163.04
EXISTING GROUND
0.36% LEFT DITCH GRADE
STA. 314+88
EX. F.L. = 1215.35 (RT.)
PROP. F.L. = 1215.06 (LT.)
+25.00 LT. 1215.24
+06.98 LT. 1216.63
C-D ROAD
EX. F.L. = 1221.31 (RT.)
EX. F.L. = 1218.08 (LT.)
PROP. F.L. = 1216.91 (LT.)

REFER TO SURVEY CONTROL DETAIL SHEETS FOR HORIZONTAL AND VERTICAL CONTROL DATA

1270 1260 1250 1240 1230 1220 1210 1200 1190 1180

310+00 311+00 312+00 313+00 314+00 315+00 316+00 317+00 318+00 319+00 320+00 321+00 322+00 323+00

AEWarclok 3/20/2016 11:56:44 AM
WORKSPACE: AHTD
L:\X20IN\10\7707 - I-540 Widening & Interchange Improvement\Drawings\r-BB0414_PP_CD_04.dgn
REVISED DATE:

DATE REVISED	DATE FILMED	DATE REVISED	DATE FILMED	FED. RD. DIST. NO.	STATE	FED. AID PROJ. NO.	SHEET NO.	TOTAL SHEETS
				6	ARK.			
				JOB NO.		BB0414	296	886

(2) PLAN & PROFILE - HWY. 112 TO NB I-49 RAMP

CONSTRUCTION LIMITS

PI 295+47.22

C.L. I-49 MEDIAN

295+00

PI 17+47.75

C.L. HWY. 112

C.L. HWY. 112 TO NB I-49 RAMP

PT 292+42.59

PC 294+40.16

PT 290+47.74

PC 288+12.93

290+00

C.L. HWY. 112 RAMP 1

N 48°09'27" E

N 17°16'10" E

PC 291+99.35

+80 207.70'

+28.20 209'

+00 190'

+12.30 180'

+15 185'

+75 252'

+94.02 301.00'

EXIST. R/W & C/A

PROP. R/W & C/A

C.L. HWY.112 TO NB I-49 RAMP
PI = 295+47.22
Δ = 82°25'02" RT.
D = 13°15'00"
T = 378.67'
L = 622.02'
PC= 291+68.55
PT= 297+90.56
e = 0.10'/'
Ls = 300'

APPROXIMATE FEMA 100 YR. FLOODPLAIN LIMITS

PT 297+90.56

+88 384.23'

+22.69 427'

+84.42 447'

+50 492'

+20 483'

+21.12 105'

+95 79.50'

+50 73.25'

C.L. HWY.112 TO NB I-49 RAMP
PI = 289+34.18
Δ = 35°13'16" LT.
D = 15°00'00"
T = 121.25'
L = 234.81'
PC= 288+12.93
PT= 290+47.74
e = MATCH EX.
Ls = MATCH EX.

PI 289+34.18

POINT CIRCLE

C.L. HWY. 112 TO NB I-49 RAMP STA. 287+20.67 =
C.L. HWY. 112 STA. 14+83.32
Δ = 79°06'07"

STA. 293+71 IN PLACE
30" X 72' R.C. PIPE CULVERT
WITH HDWL. LT. & RT.
REMOVE AND CONSTRUCT
TYPE ST JUNCTION BOX
(5'6" X 3' X H=13'2") 10' LT.
WITH 36" X 39' R.C. PIPE OUTLET LT.
AND 36" X 78' R.C. PIPE OUTLET RT.
44° RT. FORWARD SKEW (CLASS III)
TYPE 3 BEDDING WITH FES LT. & RT.
Q50 = 46 CFS DA = 9.5 ACRES

OBLITERATE EXISTING ROADWAY

C.L. HWY. 112 TO NB I-49 RAMP STA. 300+15.56 =
C.L. HWY. 112 TO HWY. 71 STA. 300+15.56

PC 300+15.56

STA. 299+52 CONSTRUCT
DOUBLE 7' X 5' X 80' R.C. BOX CULVERT
10° RT. FWD. SKEW
WITH 3:1 WINGS LT. & RT.
Q50 = 294 CFS DA = 105.1 ACRES

PI 301+10.78

+52.21 250'

PT 302+05.84

+36.41 250'

PC 304+17.19

PI 305+12.41

PT 306+07.47

C.L. I-49 TO HWY. 71 RAMP

HWY. 112 TO NB I-49 RAMP

STA. 291+08.15 BEGIN SUPERELEVATION (0.000'/')
STA. 294+08.15 MAX. SUPERELEVATION (0.100'/')
STA. 297+15.56 MAX. SUPERELEVATION (0.100'/')
STA. 300+15.56 END SUPERELEVATION

CONCRETE DITCH PAVING (TYPE B) HWY. 112 TO NB I-49

STA.	STA.	SIDE	"W"	SQ. YDS.
288+42	288+90	RT. = 48 LIN. FT.	6'-0"	32
294+00	294+37	RT. = 37 LIN. FT.	6'-0"	25
299+73	301+53	RT. = 180 LIN. FT.	6'-0"	120

STREAM	STATION	STREAM TYPE	TOP OF CHANNEL ELEV.
CLABBER CREEK	I-49 STA. 299+46 TO STA. 299+58	PERENNIAL	1221 FT. MSL
CLABBER CREEK	I-49 STA. 303+46 TO STA. 303+58	PERENNIAL	1220 FT. MSL
CLABBER CREEK	I-49 STA. 304+20 TO STA. 304+32	PERENNIAL	1219 FT. MSL

STATE OF ARKANSAS
LICENSED PROFESSIONAL ENGINEER
No. 13653
ADAM E. WIERCIAK
3/28/16

C.L. HWY. 112 STA. 14+88.81 28.00' RT. HWY. 112 TO NB I-49 RAMP STA. 287+50.69 7.50' LT.
ELEV. 1251.55

PVI 289+00.00 ELEV. 1249.88

PVC 287+62.50 ELEV. 1251.43

VC=275.00' K 85.14

-3.34% -2.41% RT. DT.

PVT 290+37.50 ELEV. 1243.90

PVI 293+75.00 ELEV. 1229.22

-4.35%

PVC 291+50.00 ELEV. 1239.01

VC=450.00' K 97.19

PVT 296+00.00 ELEV. 1229.85

PROFILE GRADE

0.28%

+42.00 RT. 1241.44

+90.00 RT. 1239.84

+67.00 RT. 1237.98

+50.00 RT. 1226.21

-2.15% RT. DT.

STA. 293+71
TOP 1231.96
INV 1218.77
PROP F.L. = 1219.45 (RT.)
PROP F.L. = 1218.30 (LT.)

+00.00 RT. 1222.98

-5.55%

1.16% RIGHT DITCH GRADE

+37.00 RT. 1219.45
+46.00 RT. 1219.45

+45.00 RT. 1221.75

EXISTING GROUND

-0.39% RIGHT DITCH GRADE

-2.27%

3.29% RIGHT DITCH GRADE

+00.00 RT. 1220.75

+51.00 RT. 1219.59
+73.00 RT. 1219.59

STA. 299+52
PROP F.L. = 1219.59 (RT.)
PROP F.L. = 1219.04 (LT.)

+53.00 RT. 1225.52

REFER TO SURVEY CONTROL DETAIL SHEETS FOR HORIZONTAL AND VERTICAL CONTROL DATA

1280 1270 1260 1250 1240 1230 1220 1210 1200 1190

287+00 288+00 289+00 290+00 291+00 292+00 293+00 294+00 295+00 296+00 297+00 298+00 299+00 300+00 301+00 302+00

AEWierciak 3/20/2016 11:56:45 AM
WORKSPACE: AHTD
L:\20II\II07I07 - I-540 Widening & Interchange Improvement\Drawings\r-BB0414_PP_Hwy112 toNB49_01.dgn
REVISED DATE:

DATE REVISED	DATE FILMED	DATE REVISED	DATE FILMED

FED. RD. DIST. NO.	STATE	FED. AID PROJ. NO.	SHEET NO.	TOTAL SHEETS
6	ARK.			
JOB NO.		BB0414	297	886

(2) PLAN & PROFILE - HWY. 112 TO NB I-49 RAMP

P.I. 305+12.41
P.T. 306+07.47
310+00
CONSTRUCTION LIMITS
S 84°38'48" E
NOSE +29.53 124.32
305+00
POND
+52.21 250'
P.T. 302+05.84
+00 275'
PROP. R/W & C/A
NOSE +30.21 7.50
N
+50 335'
I-49 STA. 313+17 IN PLACE
DBL. 6' X 3' X 98' R.C. BOX CULVERT
9° LT. FWD. SKEW
WITH 3:1 WINGS LT. & RT.
RETAIN AND EXTEND 476' RT.
6° LT. FWD. SKEW
050 = 70 CFS DA = 22.2 ACRES
OBLITERATE EXISTING ROADWAY
C.L. HWY.112 TO NB I-49 RAMP
PI = 313+00.40
Δ = 61°30'55" LT.
D = 8°15'00"
T = 413.31'
L = 745.64'
PC= 308+87.09
PT= 316+32.73
e = 0.10'/'
Ls = 350'
CONSTRUCTION LIMITS
6' 24' 4'
6' 15' 4'
C.L. HWY. 112 TO NB I-49 RAMP
PC 308+87.09
+30.00 NB I-49 TO HWY. 71B BEGIN RETAINING WALL NO. 4
+86.00 NB I-49 TO HWY. 71B END RETAINING WALL NO. 4
SEE RETAINING WALL DETAILS
310+00
PC 312+01.72
BEGIN BRIDGE STA. 312+08.76
PC 313+36.68
10' 36' 28' 36' 10'
315+00
C.L. I-49 MEDIAN
END BRIDGE STA. 317+47.83
4' 6'
C.L. HWY. 112 TO NB I-49 RAMP STA. 315+05.97 =
C.L. NB I-49 TO HWY. 71B RAMP STA. 318+66.43
Δ = 27°35'56"
CONSTRUCTION LIMITS
C.L. NB I-49 TO HWY. 71B RAMP
320+00
2 @ 12'
C.L. HWY. 112 TO HWY. 71B
PROP. R/W & C/A
+00 410'
P.I. 313+00.40
HWY. 112 TO NB I-49 RAMP

C.L. HWY. 112 TO NB I-49 RAMP STATIONING	GUARDRAIL (TYPE A)	GUARDRAIL TERMINAL (TYPE 2)	THRIE BEAM GUARDRAIL TERMINAL
STA. 308+95.93 TO STA. 311+64.68 LT.	= 200 LIN. FT.	1 EACH	1 EACH
STA. 309+53.06 TO STA. 311+96.81 RT.	= 175 LIN. FT.	1 EACH	1 EACH

STA. 306+24.59 BEGIN SUPERELEVATION
STA. 309+74.59 MAX. SUPERELEVATION (0.100'/')
STA. 315+45.23 MAX. SUPERELEVATION (0.100'/')
STA. 318+95.23 END SUPERELEVATION

STA. 312+08.76 TO STA. 317+47.82 CONSTRUCT
536'-0" CONT. COMP. PLATE GIRDER UNIT (152',232',152')
BRIDGE NO. 07379 HWY. 112 TO NB I-49 RAMP
OVER NB I-49 TO HWY. 71B RAMP
31'-0" CLEAR ROADWAY

PVC 303+50.00 ELEV. 1231.95
VC=500.00' K 122.85
PVT 308+50.00 ELEV. 1243.53
PVC 311+00.00 ELEV. 1254.40
PVI 314+75.00 ELEV. 1270.71
VC=750.00' K 87.31
PVI 306+00.00 ELEV. 1232.65
PROFILE GRADE
EXISTING GROUND
BEGIN BRIDGE STA. 312+08.76
0.28%
4.35%
-4.24%
0.46% RIGHT DITCH GRADE
+75.00 RT. 1226.31
+30.21 RT. 1227.01
17'-3" MIN.
NB I-49 TO HWY. 71B RAMP
PROP. F.L. = 1225.73 (RT.)
REFER TO SURVEY CONTROL DETAIL SHEETS FOR HORIZONTAL AND VERTICAL CONTROL DATA

1290 1280 1270 1260 1250 1240 1230 1220 1210 1200

302+00 303+00 304+00 305+00 306+00 307+00 308+00 309+00 310+00 311+00 312+00 313+00 314+00 315+00 316+00 317+00

STATE OF ARKANSAS
LICENSED PROFESSIONAL ENGINEER
No. 13653
ADAM E. WIERCIAK
3/20/16

AEWiercIak 3/20/2016 11:56:45 AM
WORKSPACE: AHTD
L:\20II\II0717O7 - I-540 Widening & Interchange Improvement\Drawings\r-BB0414_PP_Hwy112 toNB49_02.dgn
REVISED DATE:

DATE REVISED	DATE FILMED	DATE REVISED	DATE FILMED	FED. RD. DIST. NO.	STATE	FED. AID PROJ. NO.	SHEET NO.	TOTAL SHEETS
				6	ARK.			
				JOB NO.		BB0414	298	886

(2) PLAN & PROFILE - HWY. 112 TO NB I-49 RAMP

OBLITERATE EXISTING ROADWAY

C.L. SB I-49 TO HWY. 71B RAMP

C.L. SB HWY. 71B

PC

PI 322+46.68

PT 323+41.74

PI 319+82.73

PT 316+92.73

320+00

325+00

330+00

C.L. I-49 MEDIAN

END CONCRETE DITCH PAVING

+51.91 19.50' LT. BEGIN BARRIER WALL LT. SIDE TYPE E

+36.91 13.50' LT.

85' BARRIER WALL TRANSITION

END BRIDGE STA. 317+47.82

CONSTRUCTION LIMITS

STA. 319+50 LT. BEGIN CONCRETE DITCH PAVING BETWEEN BARRIER WALLS

CONCRETE BARRIER WALL (SIDE TYPE E)

N 33°50'17" E

+70 13.50' LT.

+70 21.25' LT.

+87.50, 21.25' LT. END BARRIER WALL LT. PARAPET SPECIAL

C.L. NB I-49 TO HWY. 71B RAMP

STA. 322+87.50 END SIDE TYPE E BEGIN PARAPET TYPE SPECIAL 1

100' BARRIER WALL TRANSITION

PC 322+71.77

BEGIN BRIDGE STA. 324+24.19

PC 314+12.22

C.L. HWY. 112 TO NB I-49 RAMP STA. 325+50.87

C.L. SB I-49 TO HWY. 71B RAMP STA. 314+01.01

℄ = 51°14'17"

END BRIDGE STA. 327+38.32

CONSTRUCTION LIMITS

C.L. HWY. 112 TO NB I-49 RAMP

PC 330+91.05

C.L. HWY. 112 TO NB I-49 RAMP STA. 326+23.43

C.L. SB HWY. 71B STA. 326+13.32

℄ = 54°46'33"

C.L. HWY. 112 TO NB I-49 RAMP
PI = 335+55.32
Δ = 101°31'58" LT.
D = 5°28'00"
T = 1283.55'
L = 1857.30'
PC= 322+71.77
PT= 341+29.08
e = MATCH EX.
Ls = 350'

+00 395'

320+00

HWY. 112 TO NB I-49 RAMP

STA. 306+24.59 BEGIN SUPERELEVATION
STA. 309+74.59 MAX. SUPERELEVATION (0.100'/')
STA. 315+45.23 MAX. SUPERELEVATION (0.100'/')
STA. 318+95.23 END SUPERELEVATION

STA. 319+67.50 BEGIN SUPERELEVATION
STA. 322+87.50 MATCH EXISTING (0.094'/')

SB I-49 TO HWY. 71B RAMP
STA. 315+56 CONSTRUCT TYPE RM DROP INLET (4' X 3' X 6'0") 89' LT. WITH 24" X 43' R.C. PIPE OUTLET THROUGH M.S.E. WALL (CLASS III) TYPE 3 BEDDING

C.L. HWY. 112 TO NB I-49 RAMP STATIONING	GUARDRAIL (TYPE A)	GUARDRAIL TERMINAL (TYPE 2)	THRIE BEAM GUARDRAIL TERMINAL
STA. 322+11.60 TO STA. 324+30.35 RT.	= 150 LIN. FT.	1 EACH	1 EACH

1280 1270 1260 1250 1240 1230 1220 1210 1200 1190

END BRIDGE STA. 317+47.82

PVRC 318+50.00 ELEV. 1254.81

PROFILE GRADE

VC=425.00' K 99.07

-4.24%

PVI 320+62.50 ELEV. 1245.80

+87.50

100' TRANS. TO MATCH EXISTING

PVT 322+79.00 ELEV. 1245.90

PVI 322+87.50 ELEV. 1245.91

0.05%

-1.71% LT. DT.

+87.50 LT. 1246.97 | 1240.15

+76.00 LT. 1240.15

+81.00 LT. 1240.15

BEGIN BRIDGE STA. 324+24.19

RETAIN EXISTING BRIDGE

END BRIDGE STA. 327+38.32

+73.85

100' TRANSITION TO MATCH APPROACH SLAB

OVERLAY

17'-1¼"

EXISTING GROUND

REFER TO SURVEY CONTROL DETAIL SHEETS FOR HORIZONTAL AND VERTICAL CONTROL DATA

317+00 318+00 319+00 320+00 321+00 322+00 323+00 324+00 325+00 326+00 327+00 328+00 329+00 330+00 331+00 332+00

CONCRETE DITCH PAVING (TYPE B) HWY. 112 TO NB I-49 RAMP

STA.	STA.	SIDE	"W"	SQ. YDS.
319+50	323+98	LT. = 448 LIN. FT.	VAR.	696

STATE OF ARKANSAS
LICENSED PROFESSIONAL ENGINEER
No. 13653
ADAM E. WIERCIAK
3/20/16

AEWiercick 3/20/2016 11:56:45 AM
WORKSPACE: AHTD
L:\2011\101707 - I-540 Widening & Interchange Improvement\Drawings\rBB0414_PP_Hwy112 toNB49_03.dgn
REVISED DATE:

DATE REVISED	DATE FILMED	DATE REVISED	DATE FILMED	FED. RD. DIST. NO.	STATE	FED. AID PROJ. NO.	SHEET NO.	TOTAL SHEETS
				6	ARK.			
				JOB NO.		BB0414	299	886

(2) PLAN & PROFILE - HWY. 112 TO NB I-49 RAMP

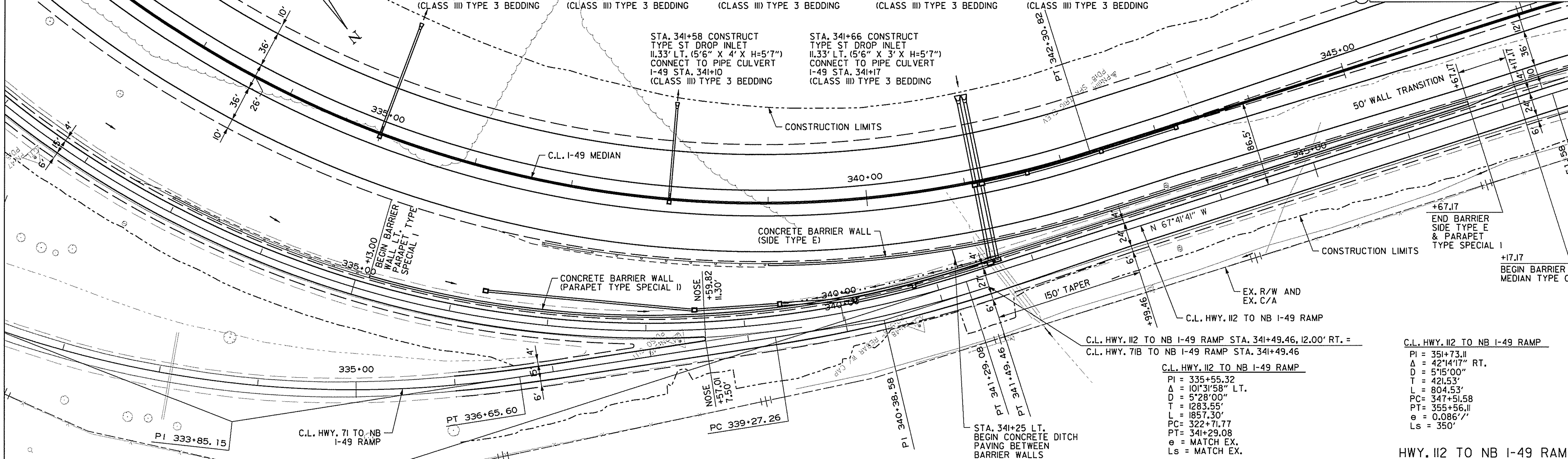

C.L. HWY. 112 TO NB I-49 RAMP
PI = 335+55.32
Δ = 101°31'58" LT.
D = 5°28'00"
T = 1283.55'
L = 1857.30'
PC= 322+71.77
PT= 341+29.08
e = MATCH EX.
Ls = MATCH EX.

C.L. HWY. 112 TO NB I-49 RAMP
PI = 351+73.11
Δ = 42°14'17" RT.
D = 5°15'00"
T = 421.53'
L = 804.53'
PC= 347+51.58
PT= 355+56.11
e = 0.086'/'
Ls = 350'

HWY. 112 TO NB I-49 RAMP

C.L. HWY. 112 TO NB I-49 RAMP STATIONING	GUARDRAIL (TYPE A)	GUARDRAIL TERMINAL (TYPE 2)	THRIE BEAM GUARDRAIL TERMINAL
STA. 332+94.85 TO STA. 335+13.60 LT.	= 150 LIN. FT.	1 EACH	1 EACH

CONCRETE DITCH PAVING (TYPE B) HWY. 112 TO NB I-49 RAMP

STA.	STA.	SIDE	"W"	SQ. YDS.
341+25	346+67	LT. = 542 LIN. FT.	VAR.	468

STA. 344+89.08 BEGIN SUPERELEVATION
STA. 348+39.08 MAX. SUPERELEVATION (0.086'/')
STA. 354+59.16 MATCH I-49 (0.086'/')

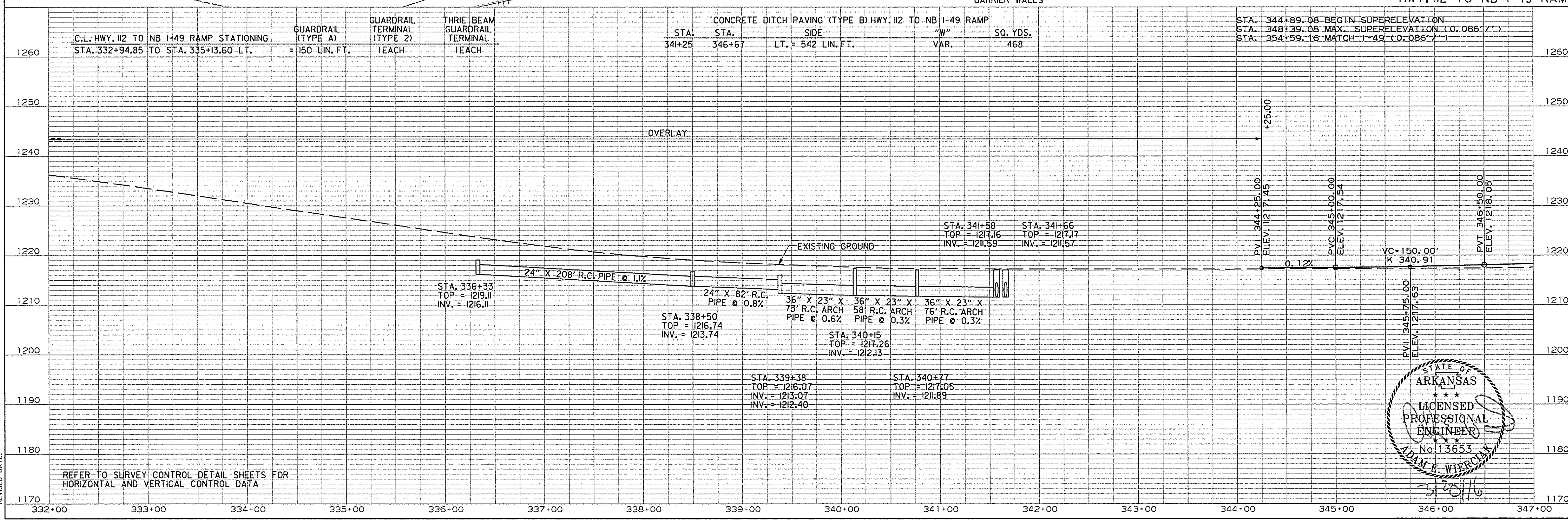

REFER TO SURVEY CONTROL DETAIL SHEETS FOR HORIZONTAL AND VERTICAL CONTROL DATA

STATE OF ARKANSAS
LICENSED PROFESSIONAL ENGINEER
No. 13653
ADAM E. WIERCIAK
3/20/16

AEWierciak 3/20/2016 11:56:46 AM
WORKSPACE: AHTD
L:\2011\1017707 - I-540 Widening & Interchange Improvement\Drawings\rBB0414_PP_Hwy112 toNB149_04.dgn
REVISED DATE:

DATE REVISED	DATE FILMED	DATE REVISED	DATE FILMED	FED. RD. DIST. NO.	STATE	FED. AID PROJ. NO.	SHEET NO.	TOTAL SHEETS
				6	ARK.			
				JOB NO.		BB0414	300	886

(2) PLAN & PROFILE - HWY. 112 TO NB I-49 RAMP

STATE OF ARKANSAS
LICENSED PROFESSIONAL ENGINEER
No.13653
ADAM E. WIERCIAK
4/14/16

CONSTRUCTION LIMITS
PI 351+12.16
PC 346+96.63
PI 351+73.11
350+00
36'
10'
12'
CONCRETE BARRIER WALL (MEDIAN TYPE C)
+61.25
END BARRIER WALL LT. MEDIAN TYPE C
C.L. I-49 MEDIAN
PAVED PARKING
24'
6'
EXIST. R/W & C/A
PC 347+51.58
C.L. HWY. 112 TO NB I-49 RAMP
CONSTRUCTION LIMITS

C.L. HWY. 112 TO NB I-49 RAMP
PI = 351+73.11
Δ = 42°14'17" RT.
D = 5°15'00"
T = 421.53'
L = 804.53'
PC= 347+51.58
PT= 355+56.11
e = 0.086'/'
Ls = 350'

C.L. HWY. 112 TO NB I-49 RAMP STA. 355+56.11 =
C.L. I-49 STA. 355+56.11, 61.50' RT.

C.L. SB I-49 TO HWY. 112 RAMP
CONSTRUCTION LIMITS
+28.95
165'
PC 354+95.03
PROP. R/W & C/A
EXIST. R/W & C/A
355+00
PI 356+80.47
+43.37
142.69'
NOSE +52.43 57.90'
NOSE +55.26 7.50'
PT 354+95.16
PT 355+56.11
+17.18
140.05'
BEGIN PROP. C/A
PROP. R/W & C/A
POND
OPEN STORAGE
PRC 358+65.87
N 25°27'24" W
360+00
C.L. SB I-49 TO HWY. 112 EXIT
PI 360+51.31
PT 362+36.71
HWY. 112 TO NB I-49 RAMP

STA. 344+89.08 BEGIN SUPERELEVATION
STA. 348+39.08 MAX. SUPERELEVATION (0.086'/')
STA. 354+59.16 MATCH I-49 (0.086'/')

PVC 352+50.00
ELEV. 1221.41
VC=200.00'
K 116.96
PVT 354+50.00
ELEV. 1224.24
C.L. I-49 STA. 354+52.43, 57.90' RT. =
C.L. HWY. 112 TO NB I-49 RAMP STA. 354+55.26, 7.50' LT.
ELEV. 1224.36
PVI 353+50.00
ELEV. 1221.97
0.56%
2.27%
PROFILE GRADE
EXISTING GROUND

REFER TO SURVEY CONTROL DETAIL SHEETS FOR HORIZONTAL AND VERTICAL CONTROL DATA

1260 1250 1240 1230 1220 1210 1200 1190 1180 1170

347+00 348+00 349+00 350+00 351+00 352+00 353+00 354+00 355+00 356+00

AEWerclak 4/14/2016 2:35:45 PM
WORKSPACE: AHTD
L:\20II\II0717O7 - I-540 Widening & Interchange Improvement\Drawings\r-BB0414_PP_Hwyll2 toNBI49_05.dgn
REVISED DATE:

DATE REVISED	DATE FILMED	DATE REVISED	DATE FILMED	FED. RD. DIST. NO.	STATE	FED. AID PROJ. NO.	SHEET NO.	TOTAL SHEETS
				6	ARK.			
				JOB NO.		BB0414	301	886

PLAN & PROFILE - SB HWY. 71B

STA. 302+88 IN PLACE
DROP INLET 39' RT.
REMOVE
W/24" X 98' R.C. PIPE
TO BOX CULVERT
PLUG AND ABANDON

STA. 304+09 IN PLACE
DBL. 6' X 3' X 171' R.C. BOX CULVERT
28° LT. FWD. SKEW
RETAIN
CONSTRUCT TYPE TM DROP INLET
STA. 304+23 20' LT. (3' X 2'6" X 7'9")
CONNECT TO R.C. BOX CULVERT
Q50 = 294 CFS DA = 109.3 ACRES

C.L. HWY. 71B
PI = 305+71.77
Δ = 1°48'38" LT.
D = 1°15'00.00"
T = 72.43'
L = 144.84'
PC= 304+99.35
PT= 306+44.19
e = 0.037'/'
Ls = 280'

OBLITERATE EXISTING ROADWAY

APPROXIMATE
FEMA 100 YR.
FLOODPLAIN LIMITS

C.L. SB HWY. 71B STA. 299+33.27 =
C.L. I-49 STA. 299+33.27, 61.00' LT.

PT 298+93.52
PI 299+22.77
+95.14
141.86'
END
PROP.
C/A
NOSE +40.27
12.00'

C.L. COLLECTOR-
DISTRIBUTOR RD.

PC 304+95.27
PI 305+67.04
PT 306+38.86
PC 307+64.39
PC 326+86.42
EX. R/W AND
EX. C/A
CONSTRUCTION
LIMITS
PT 309+69.24
C.L. SB I-49 TO
HWY. 112 RAMP
PC 329+68.89
PC 313+41.74
PI 314+30.15
+75.64
END BARRIER
WALL LT.
MEDIAN TYPE C

CONCRETE BARRIER WALL
(MEDIAN TYPE C)
NOSE +36.95
52.86'

C.L. I-49 MEDIAN

N 71°12'02" E
N 69°23'24" E

CONSTRUCTION
LIMITS
C.L. SB HWY. 71B
PI 308+61.87

STA. 309+80.41
END ADD'L SHOULDER PAVING
5' DIA. RADIUS

C.L. SB HWY. 71B STA. 311+46.82 =
C.L. SB I-49 TO HWY. 71B RAMP
STA. 329+82.39
Δ = 60°42'26"

APPROXIMATE
FEMA 100 YR.
FLOODPLAIN LIMITS

C.L. SB I-49 TO
HWY. 71B RAMP

SB HWY. 71B

STA. 299+33.27 BEGIN SUPERELEVATION (0.093'/')
STA. 302+83.27 END SUPERELEVATION
STA. 302+89.35 BEGIN SUPERELEVATION
STA. 305+69.35 MAX. SUPERELEVATION (0.037'/')
STA. 305+74.19 MAX. SUPERELEVATION (0.037'/')
STA. 308+54.19 END SUPERELEVATION

C.L. I-49
STA. 300+36.55, 52.86' LT. ∝
C.L. HWY. 71B
STA. 300+40.27, 12.00' RT.
ELEV. 1229.26

PVC 300+75.00
ELEV. 1229.66
-1.15%
PVI 303+00.00
ELEV. 1232.25
PROFILE GRADE
VC=450.00'
K 168.54
EXISTING GROUND
STA. 304+23
TOP = 1229.11
INV. = 1217.85
PVT 305+25.00
ELEV. 1228.83
PVC 306+25.00
ELEV. 1227.31
-1.52%
PVI 307+25.00
ELEV. 1225.79
VC=200.00'
K 143.88
PVT 308+25.00
ELEV. 1225.66
-0.13%
PVI 309+00.00
ELEV. 1225.56
+81.00 LT. 1223.99
+00.00
OVERLAY
-0.28% LEFT DITCH GRADE
+00.00 LT. 1222.83
SB I-49 TO HWY. 71B
RAMP BRIDGE
16'-4¾" MIN.

REFER TO SURVEY CONTROL DETAIL SHEETS FOR
HORIZONTAL AND VERTICAL CONTROL DATA

STATE OF
ARKANSAS
LICENSED
PROFESSIONAL
ENGINEER
No. 13653
ADAM E. WIERCIAK
3/22/16

AEWierciak 3/20/2016 11:56:46 AM
WORKSPACE: AHTD
L:\20IN\10\707 - I-540 Widening & Interchange Improvement\Drawings\r-BB0414_PP_SB Hwy 71B_01.dgn
REVISED DATE:

DATE REVISED	DATE FILMED	DATE REVISED	DATE FILMED	FED. RD. DIST. NO.	STATE	FED. AID PROJ. NO.	SHEET NO.	TOTAL SHEETS
				6	ARK.			
				JOB NO.		BB0414	302	886

PLAN & PROFILE - SB HWY. 71B

STA. 314+55 IN PLACE
DOUBLE 6' X 6' X 312' R.C. BOX CULVERT
WITH 3:1 WINGS RETAIN
Q50 = 119 CFS DA = 40.2 ACRES

STA. 319+85 IN PLACE
DROP INLET 32' RT. - RETAIN
24" X 78' R.C. PIPE CULVERT
WITH HDWL. LT. REMOVE HDWL.
AND EXTEND R.C. PIPE 18' LT.
TYPE 3 BEDDING WITH FES. LT.
24" R.C. PIPE = 22 LIN. FT.
24" FES = 1EA.

STA. 327+86 IN PLACE
DROP INLET 32.5' RT.
REMOVE DROP INLET
24" X 78' R.C. PIPE
CULVERT OUTLET LT.
RETAIN AND EXTEND
24" X 3' R.C. PIPE TO
TYPE RM DROP INLET
(4' X 3' X 3'2") 35.25' RT.
(CLASS III) TYPE 3 BEDDING
24" R.C. PIPE = 3 LIN. FT.

STA. 314+07 CONSTRUCT
TYPE RM DROP INLET
(4' X 3' X 5'10") 38' LT.
WITH 24" X 56' R.C. PIPE
OUTLET CONNECT TO BOX CULVERT
(CLASS III) TYPE 3 BEDDING

STA. 314+37 IN PLACE
DROP INLET 33' RT.
RETAIN

STA. 315+07 CONSTRUCT
TYPE RM DROP INLET
(4' X 3' X 6'0") 38' LT.
WITH 24" X 27' R.C. PIPE
OUTLET CONNECT TO BOX CULVERT
(CLASS III) TYPE 3 BEDDING

STA. 316+15 CONSTRUCT
TYPE RM DROP INLET
(4' X 3' X 5'0") 35' LT.
WITH 24" X 105' R.C. PIPE
OUTLET CONNECT TO DROP
INLET AT STA. 315+07
(CLASS III) TYPE 3 BEDDING

STA. 317+22 CONSTRUCT
TYPE RM DROP INLET
(4' X 3' X 3'11") 34' LT.
WITH 24" X 104' R.C. PIPE
OUTLET CONNECT TO DROP
INLET AT STA. 316+15
(CLASS III) TYPE 3 BEDDING

C.L. SB HWY. 71B STA. 323+41.74, 4.50' LT. =
C.L. C-D RD. STA. 323+41.74

C.L. SB HWY. 71B STA. 324+52.13 =
C.L. HWY. 112 TO NB I-49 STA. 326+23.43
∢ = 54°46'33"

C.L. SB HWY. 71B STA. 324+52.13 =
C.L. I-49 STA. 326+77.37
∢ = 55°31'45"

C.L. SB HWY. 71B STATIONING	GUARDRAIL (TYPE A)	GUARDRAIL TERMINAL (TYPE 2)	THRIE BEAM GUARDRAIL TERMINAL
STA. 326+79.40 TO STA. 329+23.15 RT.	= 175 LIN. FT.	1 EACH	1 EACH

REFER TO SURVEY CONTROL DETAIL SHEETS FOR
HORIZONTAL AND VERTICAL CONTROL DATA

STATE OF ARKANSAS
LICENSED PROFESSIONAL ENGINEER
No. 13653
ADAM E. WIERCIAK
3/20/16

AEWierciak 3/20/2016 11:56:46 AM
WORKSPACE: AHTD
L:\2016\16D1707 - I-540 Widening & Interchange Improvement\Drawings\r-BB0414_PP_SB Hwy 71B_02.dgn
REVISED DATE:

DATE REVISED	DATE FILMED	DATE REVISED	DATE FILMED	FED. RD. DIST. NO.	STATE	FED. AID PROJ. NO.	SHEET NO.	TOTAL SHEETS
				6	ARK.			
				JOB NO.		BB0414	303	886
				(2)	PLAN & PROFILE - HWY. 71B			

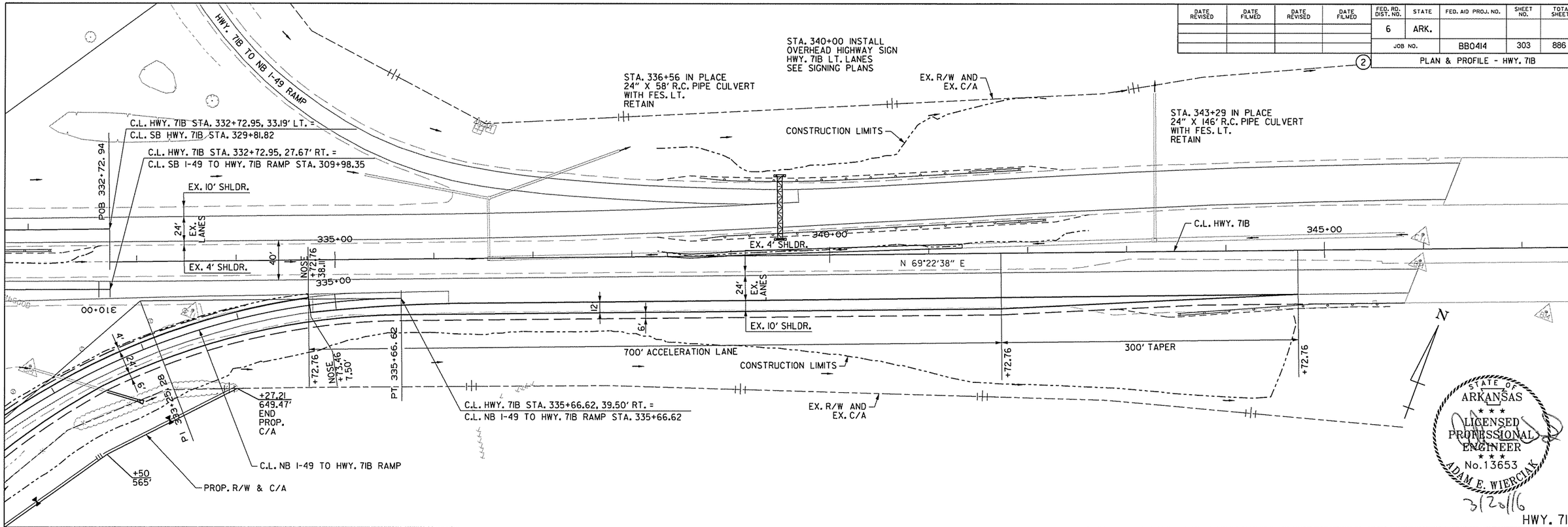

HWY. 71B

CONCRETE DITCH PAVING (TYPE B) HWY. 71B

STA.	STA.	SIDE	"W"	SQ. YDS.
338+36	341+34	MEDIAN = 298 LIN. FT.	4'-0" (MATCH EX.)	132

C.L. HWY. 71B STATIONING	GUARDRAIL (TYPE A)	GUARDRAIL TERMINAL (TYPE 2)	THRIE BEAM GUARDRAIL TERMINAL	TERMINAL ANCHOR POST (TYPE I)
STA. 338+69.00 TO STA. 341+94.00 LT.	= 275 LIN. FT.	1 EACH		1 EACH
STA. 338+69.00 TO STA. 342+19.00 LT.	= 300 LIN. FT.	1 EACH		1 EACH
STA. 343+50.85 TO STA. 345+69.60 RT.	= 150 LIN. FT.	1 EACH	1 EACH	

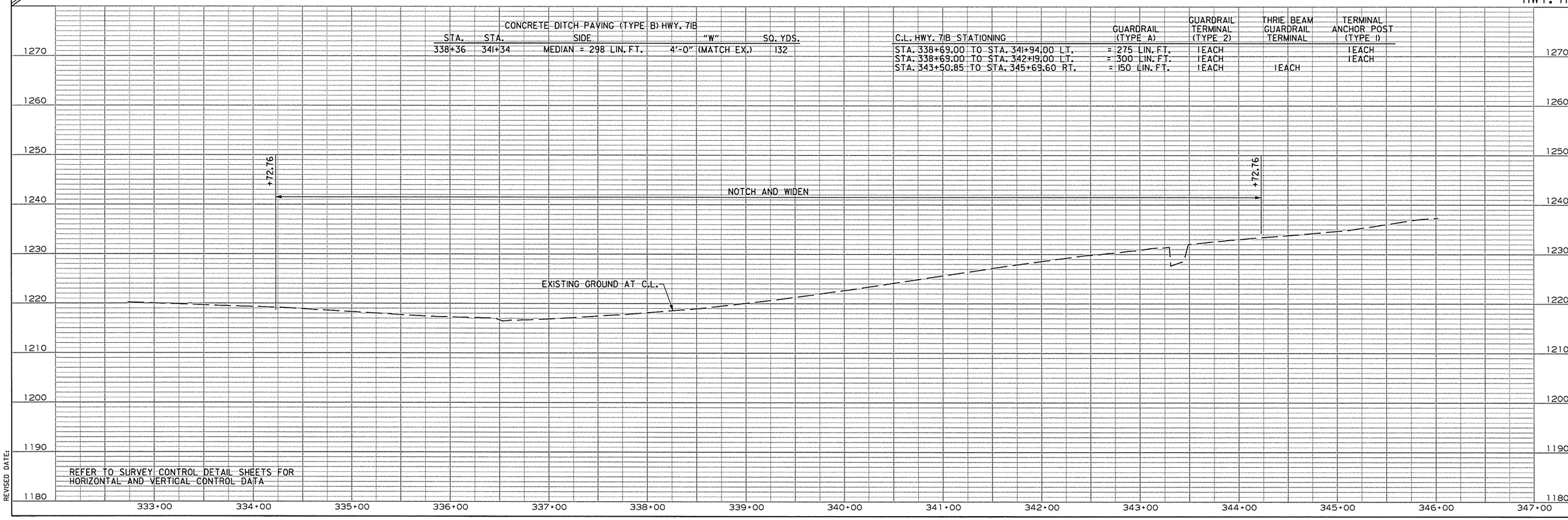

REFER TO SURVEY CONTROL DETAIL SHEETS FOR HORIZONTAL AND VERTICAL CONTROL DATA

AEWiarciak 3/20/2016 11:56:52 AM
WORKSPACE: AHTD
L:\20II\II0I707 - I-540 Widening & Interchange Improvement\Drawings\r-BB0414_PP_Hwy 71B_01.dgn
REVISED DATE:

DATE REVISED	DATE FILMED	DATE REVISED	DATE FILMED	FED. RD. DIST. NO.	STATE	FED. AID PROJ. NO.	SHEET NO.	TOTAL SHEETS
				6	ARK.			
				JOB NO.		BB0414	304	886
				(2)	PLAN & PROFILE - HWY. 71B			

STA. 350+20 INSTALL
OVERHEAD HIGHWAY SIGN
HWY. 71B LT. LANES
SEE SIGNING PLANS

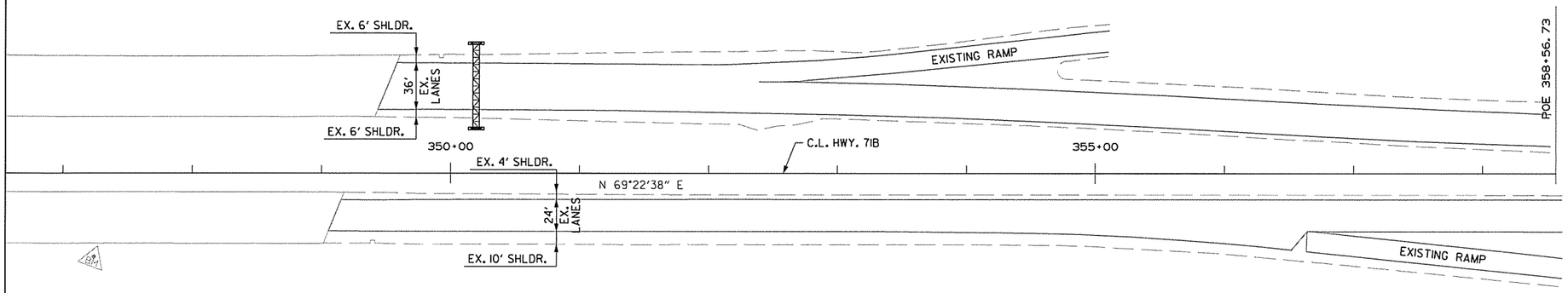

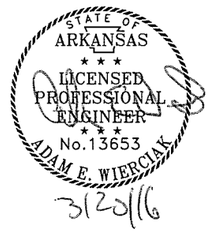

HWY. 71B

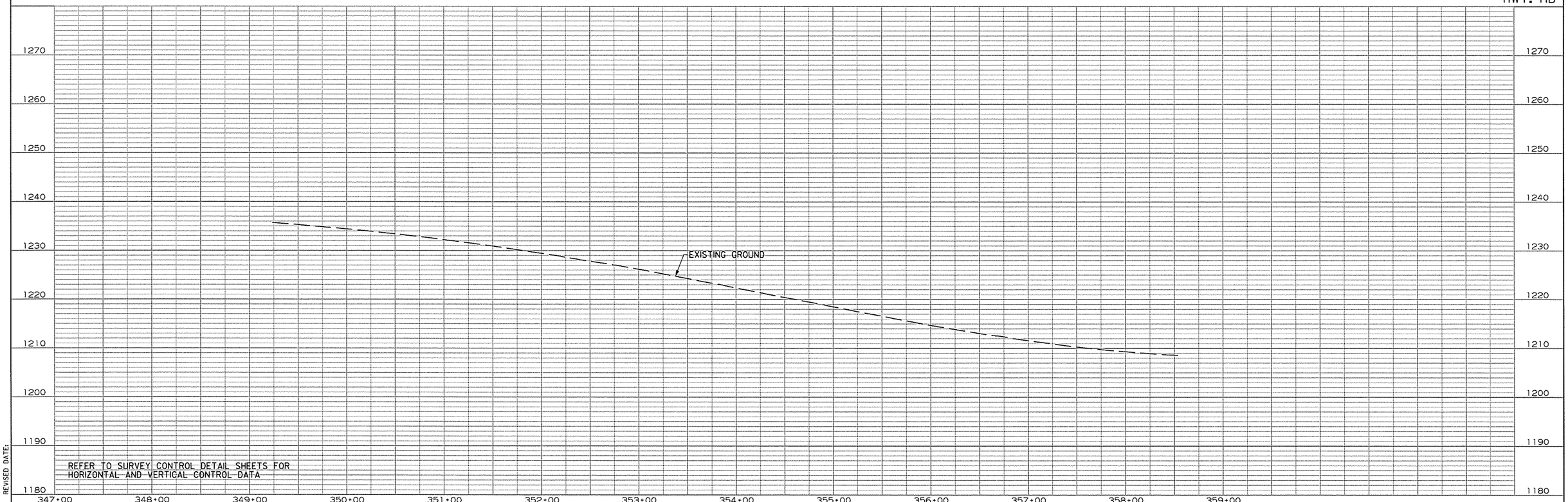

AEWierciak 3/20/2016 11:56:52 AM
WORKSPACE: AHTD
L:\20IN\10I7707 - I-540 Widening & Interchange Improvement\Drawings\rBB0414_PP_Hwy 71B_02.dgn
REVISED DATE:

DATE REVISED	DATE FILMED	DATE REVISED	DATE FILMED	FED. RD. DIST. NO.	STATE	FED. AID PROJ. NO.	SHEET NO.	TOTAL SHEETS
				6	ARK.			
				JOB NO.		BB0414	305	886

(2) PLAN & PROFILE - NB I-49 TO HWY. 71B RAMP

NB I-49 TO HWY. 71B RAMP

EXIST. R/W & C/A

+95.14 141.86' END PROP. C/A

DIRECTION ONLY

PAVED PARKING

CONNECTS TO EXIST. LOWER RC BOX

PI 303+71.16

C.L. I-49 MEDIAN

APPROXIMATE FEMA 100 YR. FLOODPLAIN LIMITS

N 88°42'58" E

S 85°34'32" E

PI 305+12.41

PT 306+07.47

PC 304+17.19

C.L. NB I-49 TO HWY. 71B RAMP STA. 304+17.19 = C.L. I-49 STA. 304+17.19, 44.50' RT.

NOSE +21.16 67.82'

NOSE +21.79 7.50' LT.

CONSTRUCTION LIMITS

C.L. NB I-49 TO HWY. 71B RAMP

SEE RETAINING WALL DETAILS

+30.00 BEGIN RETAINING WALL NO. 4

PC 313+36.68

PC 308+87.09

C.L. HWY. 112 TO NB I-49 RAMP

POND

C.L. HWY. 112 TO HWY. 71B RAMP

+00 190'

+12.30 180'

PROP. R/W & C/A

+15 185'

PT 297+90.56

STA. 309+75 CONSTRUCT TYPE RM DROP INLET 20' LT. (4' X 3' X H=3'3") WITH 24" X 69' R.C. PIPE OUTLET CONNECT TO DROP INLET I-49 STA. 310+00

+36.41 250'

PC 300+15.56

PI 301+10.78

+52.21 250'

PT 302+05.84

+00 275'

STA. 311+50 CONSTRUCT TYPE RM DROP INLET 24' LT. (4' X 3' X H=4'3") WITH 24" X 138' R.C. PIPE OUTLET CONNECT TO BOX CULVERT (CLASS III) TYPE 3 BEDDING

STA. 312+92 CONSTRUCT TYPE TM DROP INLET 48' RT. (3' X 2'6" X H=0'6") CONNECT TO BOX CULVERT

+50 335'

OBLITERATE EXISTING ROADWAY

CONCRETE DITCH PAVING (TYPE B) NB I-49 TO HWY. 71B RAMP

STA.	STA.	SIDE	"W"	SQ. YDS.
314+28	315+88	RT. = 177 LIN. FT.	4'-0"	79

REFER TO SURVEY CONTROL DETAIL SHEETS FOR HORIZONTAL AND VERTICAL CONTROL DATA

C.L. NB I-49 TO HWY. 71B RAMP
PI = 305+12.41
Δ = 5°42'30" RT.
D = 3°00'00"
T = 95.22'
L = 190.28'
PC = 304+17.19
PT = 306+07.47
NO SUPER

C.L. NB I-49 TO HWY. 71B RAMP
PI = 322+02.48
Δ = 65°25'09" LT.
D = 4°15'00"
T = 865.80'
L = 1539.27'
PC = 313+36.68
PT = 328+75.95
e = 0.075'/'
Ls = 300'

STA. 311+11.68 BEGIN SUPERELEVATION
STA. 314+11.68 MAX. SUPERELEVATION (0.075'/')
STA. 326+68.96 MAX. SUPERELEVATION (0.075'/')
STA. 329+68.96 END SUPERELEVATION

C.L. I-49 STA. 308+21.16, 67.82' RT. = C.L. NB I-49 TO HWY. 71B RAMP STA. 308+21.79, 7.50' LT. ELEV. 1226.97

PROFILE GRADE

0.46%

EXISTING GROUND

PVC 314+75.00 ELEV. 1229.97

STA. 309+75 TOP = 1226.10 INV = 1222.85 F.L. = 1222.43 LT.

STA. 311+50 TOP = 1226.24 INV = 1221.99 F.L. = 1221.18 AT BOX CULVERT

STA. 312+92 TOP = 1226.41 INV = 1222.18

STA. 314+00 TOP = 1226.05 INV = 1221.30 F.L. = 1221.18 AT BOX CULVERT

304+00 305+00 306+00 307+00 308+00 309+00 310+00 311+00 312+00 313+00 314+00 315+00

1270 1260 1250 1240 1230 1220 1210 1200 1190 1180

STATE OF ARKANSAS
LICENSED PROFESSIONAL ENGINEER
No. 13653
ADAM E. WIERCIAK
3/28/16

AEWiercIak 3/20/2016 11:56:52 AM
WORKSPACE: AHTD
L:\2011\11017107 - I-540 Widening & Interchange Improvement\Drawings\rBB0414_PP_I49 to Hwy 71B_01.dgn
REVISED DATE:

DATE REVISED	DATE FILMED	DATE REVISED	DATE FILMED	FED. RD. DIST. NO.	STATE	FED. AID PROJ. NO.	SHEET NO.	TOTAL SHEETS
				6	ARK.			
				JOB NO.		BB0414	306	886

(2) PLAN & PROFILE - NB I-49 TO HWY. 71B RAMP

CONSTRUCTION LIMITS

C.L. HWY. 112 TO NB I-49 RAMP

PC 322+71.77

CONSTRUCTION LIMITS

PT 328+75.95

C.L. NB I-49 TO HWY. 71B RAMP

N 29°00'20" E

+86.00
END RETAINING WALL NO. 4

C.L. NB I-49 TO HWY. 71B RAMP

NOSE +46.58 20.31

C.L. HWY. 112 TO HWY. 71B RAMP

NOSE +57.61 7.50

CONSTRUCTION LIMITS

700' ACCELERATION LANE

300' TAPER

+50 505'

+55 464'

+80 457'

+50 450'

+00 435'

+00 415'

+00 395'

+00 410'

+00 490'

+29.27 490'

+15.84 450'

PI 313+09.40

PT 315+20.22

PROP. R/W & C/A

STA. 322+89 IN PLACE
24" X 135' R.C. PIPE CULVERT
WITH HDWL. LT. & RT.
PLUG AND ABANDON

+46.58

PI 322+02.48

STA. 315+14 CONSTRUCT
TYPE RM DROP INLET 43' LT.
(3' X 4' X H=3'0") WITH
23 X 36" X 108' R.C. ARCH PIPE OUTLET
CONNECT TO DROP INLET
AT STA. 314+00
(CLASS III) TYPE 3 BEDDING

C.L. NB I-49 TO HWY. 71B RAMP STA. 318+66.43 =
C.L. HWY. 112 TO NB I-49 RAMP STA. 315+05.97
∢ = 27°35'56"

C.L. NB I-49 TO HWY. 71B RAMP
PI = 322+02.48
Δ = 65°25'09" LT.
D = 4°15'00"
T = 865.80'
L = 1539.27'
PC= 313+36.68
PT= 328+75.95
e = 0.075'/'
Ls = 300'

C.L. NB I-49 TO HWY. 71B RAMP STA. 323+81.11, 21.00' RT. =
C.L. HWY. 112 TO HWY. 71B RAMP STA. 320+93.94

C.L. NB I-49 TO HWY. 71B RAMP
PI = 333+25.28
Δ = 40°22'18" RT.
D = 8°00'00"
T = 263.31'
L = 504.65'
PC= 330+61.97
PT= 335+66.62
e = MATCH EX.
Ls = MATCH EX.

OBLITERATE EXISTING ROADWAY

NB I-49 TO HWY. 71B RAMP

STA. 311+11.68 BEGIN SUPERELEVATION
STA. 314+11.68 MAX. SUPERELEVATION (0.075'/')
STA. 326+44.74 MAX. SUPERELEVATION (0.075'/')
STA. 327+00.00 MATCH EXISTING SUPERELEVATION (0.0575'/')

HWY. 112 TO NB I-49 RAMP BRIDGE

17'-3" MIN.

PROFILE GRADE

EXISTING GROUND

PVI 316+25.00
ELEV. 1230.66

VC=300.00'
K 206.90

PVT 317+75.00
ELEV. 1233.52

1.91%

PVC 321+00.00
ELEV. 1239.73

+46.58 RT. 1230.70

PVI 323+25.00
ELEV. 1244.03

-3.44%

VC=450.00'
K 84.11

-0.89% RIGHT DITCH GRADE

+65.00 RT. 1227.85

PVRC 325+50.00
ELEV. 1236.29

PVI 326+25.00
ELEV. 1233.71

VC=150.00'
K 254.24

-2.85%

PVT 327+00.00
ELEV. 1231.57

+00.00

NOTCH, WIDEN, AND OVERLAY

STA. 315+14
TOP = 1224.67
INV = 1221.67

REFER TO SURVEY CONTROL DETAIL SHEETS FOR HORIZONTAL AND VERTICAL CONTROL DATA

1270 1260 1250 1240 1230 1220 1210 1200 1190 1180

315+00 316+00 317+00 318+00 319+00 320+00 321+00 322+00 323+00 324+00 325+00 326+00 327+00 328+00 329+00 330+00

STATE OF ARKANSAS
LICENSED PROFESSIONAL ENGINEER
No. 13653
ADAM E. WIERCIAK
3/2/16

AEWiercIak 3/20/2016 11:56:52 AM
WORKSPACE: AHTD
L:\20II\II07707 - I-540 Widening & Interchange Improvement\Drawings\rBB0414_PP_I49 to Hwy 71B_02.dgn
REVISED DATE:

DATE REVISED	DATE FILMED	DATE REVISED	DATE FILMED	FED. RD. DIST. NO.	STATE	FED. AID PROJ. NO.	SHEET NO.	TOTAL SHEETS
				6	ARK.			
				JOB NO.		BB0414	307	886

(2) PLAN & PROFILE - NB I-49 TO HWY. 71B RAMP

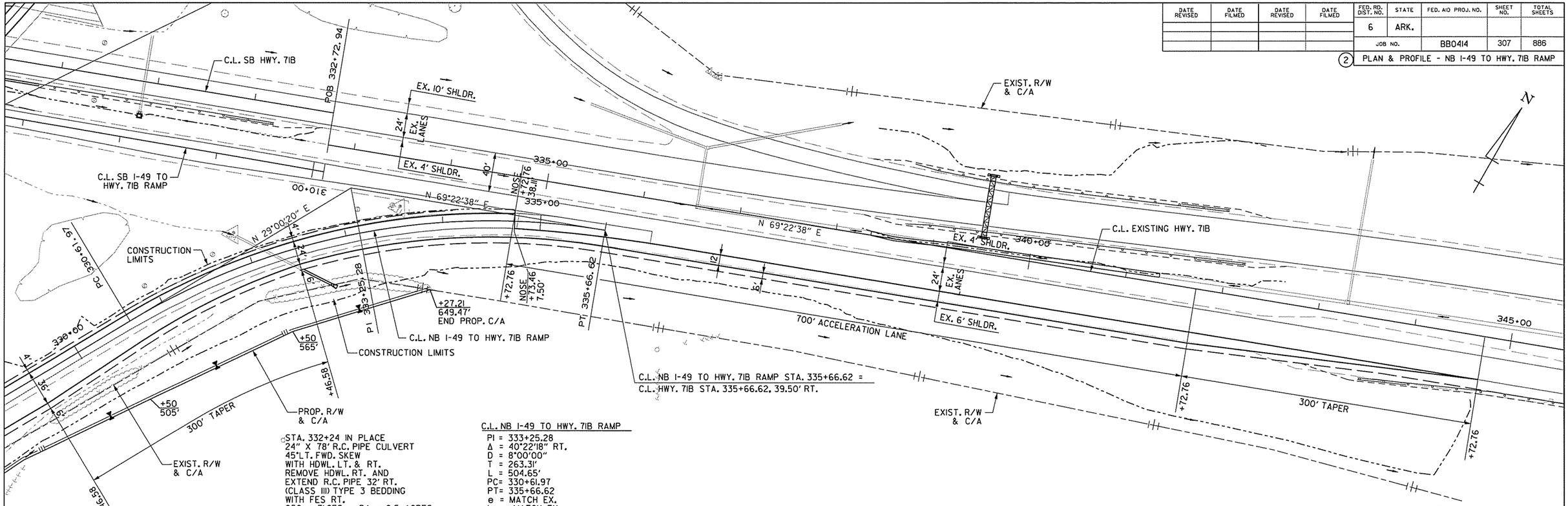

C.L. NB I-49 TO HWY. 71B RAMP
PI = 333+25.28
Δ = 40°22'18" RT.
D = 8°00'00"
T = 263.31'
L = 504.65'
PC= 330+61.97
PT= 335+66.62
e = MATCH EX.
Ls = MATCH EX.

STA. 332+24 IN PLACE
24" X 78' R.C. PIPE CULVERT
45°LT. FWD. SKEW
WITH HDWL. LT. & RT.
REMOVE HDWL. RT. AND
EXTEND R.C. PIPE 32' RT.
(CLASS III) TYPE 3 BEDDING
WITH FES RT.
Q50 = 31CFS DA = 8.5 ACRES
24" R.C. PIPE = 36 LIN. FT.
24" FES = 1EA.

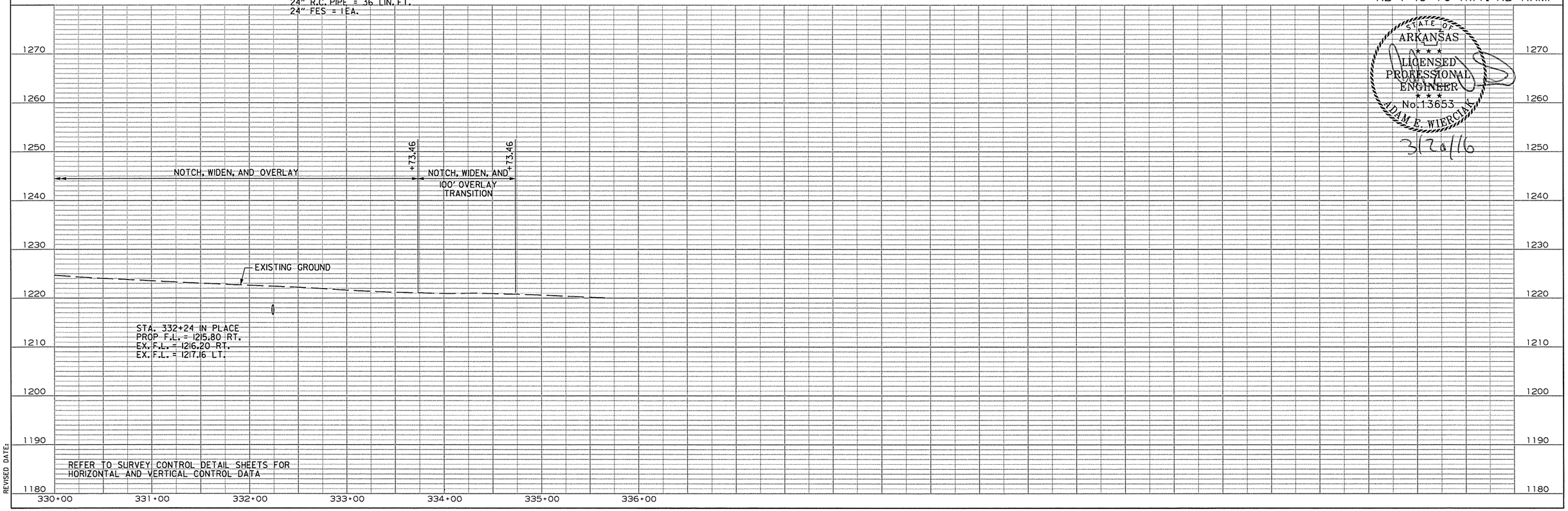

STATE OF ARKANSAS
LICENSED PROFESSIONAL ENGINEER
No. 13653
ADAM E. WIERCIAK
3/20/16

AEWierciak 3/20/2016 11:56:53 AM
WORKSPACE: AHTD
L:\20IN\10I7707 - I-540 Widening & Interchange Improvement\Drawings\rBB0414_PP_I49 to Hwy 71B.03.dgn
REVISED DATE:

DATE REVISED	DATE FILMED	DATE REVISED	DATE FILMED

FED. RD. DIST. NO.	STATE	FED. AID PROJ. NO.	SHEET NO.	TOTAL SHEETS
6	ARK.			
JOB NO.		BB0414	308	886

PLAN & PROFILE - HWY. 112 TO HWY. 71B RAMP

CONSTRUCTION LIMITS

C.L. I-49 MEDIAN

APPROXIMATE FEMA 100 YR. FLOODPLAIN LIMITS

C.L. NB I-49 TO HWY. 71B RAMP

C.L. HWY. 112 TO NB I-49 RAMP

PC 304+17.19

PI 305+12.41

PT 306+07.47

S 84°38'48" E

NOSE +29.53 24.32'

POND

S 78°56'18" E

C.L. HWY. 112 TO HWY. 71B RAMP

PC 308+87.09

PC 313+36.68

C.L. HWY. 112 TO HWY. 71B RAMP
PI = 312+33.17
Δ = 51°01'32" LT.
D = 8°15'00"
T = 331.45'
L = 618.49'
PC= 309+01.72
PT= 315+20.22
e = 0.100'/'
Ls = 350'

+29.27 490'

+00 490'

PI 312+33.17

+36.41 250'

PC 300+15.56

PI 301+10.78

+52.21 250'

PT 302+05.84

+00 275'

NOSE +30.21 7.50'

+50 335'

+25 460'

PC 309+01.72

+87.44 466.52'

+75 485'

C.L. HWY. 112 TO HWY. 71B STA. 300+15.56 =
C.L. HWY. 112 TO NB I-49 RAMP STA. 300+15.56

C.L. HWY. 112 TO HWY. 71B RAMP
PI = 301+10.78
Δ = 5°42'30" RT.
D = 3°00'00"
T = 95.22'
L = 190.28'
PC= 300+15.56
PT= 302+05.84
NO SUPER

STA. 305+00 CONSTRUCT TYPE RM
DROP INLET 16' LT. (4' X 3' X H=3'0")
WITH 18" X 97' R.C. PIPE OUTLET
CONNECT TO DROP INLET AT STA. 306+00
(CLASS III) TYPE 3 BEDDING

STA. 306+00 CONSTRUCT TYPE RM
DROP INLET 21' LT. (4' X 3' X H=4'9")
WITH 24" X 58' R.C. PIPE OUTLET
WITH FES. RT.
(CLASS III) TYPE 3 BEDDING

CONSTRUCTION LIMITS

PROP. R/W & C/A

STA. 308+51 (I-49 STA. 313+17) IN PLACE
DBL. 6' X 3' X 98' R.C. BOX CULVERT
NO SKEW AT HWY. 112 TO HWY. 71B RAMP
WITH 3:1 WINGS LT. & RT.
RETAIN AND EXTEND 476' RT.
Q50 = 70 CFS DA = 22.2 ACRES

STA. 311+05 CONSTRUCT TYPE RM
DROP INLET 44' LT. (4' X 3' X H=3'7")
WITH 24" X 114' R.C. PIPE OUTLET
WITH FES. RT.
(CLASS III) TYPE 3 BEDDING

HWY. 112 TO HWY. 71B RAMP

STA. 306+39.22 BEGIN SUPERELEVATION
STA. 309+89.22 MAX. SUPERELEVATION (0.100'/')
STA. 314+32.72 MAX. SUPERELEVATION (0.100'/')
STA. 317+82.72 END SUPERELEVATION

CONCRETE DITCH PAVING (TYPE B) HWY. 112 TO HWY. 71B

STA.	STA.	SIDE	"W"	SQ. YDS.
305+75	306+00	RT. = 25 LIN. FT.	6'-0"	17
307+00	310+16	LT. = 316 LIN. FT.	6'-0"	211
308+74	310+25	RT. = 151 LIN. FT.	6'-0"	101

C.L. HWY. 112 TO NB I-49 RAMP
STA. 304+29.53, 24.32' RT. =
C.L. HWY. 112 TO HWY. 71B RAMP
STA. 304+30.21, 7.50' LT.
ELEV. 1231.80

PVC 304+50.00
ELEV. 1231.93

STA. 305+00
TOP = 1231.56
INV = 1228.56

VC=350.00'
K 96.15

PVT 308+00.00
ELEV. 1240.61

PVC 308+25.00
ELEV. 1241.69

PVI 311+50.00
ELEV. 1255.67

PROFILE GRADE

-1.91%

4.30%

STA. 311+05
TOP = 1243.21
INV = 1239.61
PROP F.L. = 1235.62 (RT.)

VC=650.00'
K 104.67

EXISTING GROUND

0.66%

0.46% RT. DT.

-0.48% RIGHT DITCH GRADE

2.50% RIGHT DITCH GRADE

5.27% RIGHT DITCH GRADE

0.50% RIGHT DITCH GRADE

-30.21 RT. 1227.01

-85.00 RT. 1227.26

-75.00 RT. 1228.63

+00.00 RT. 1226.88

PVI 306+25.00
ELEV. 1233.09

STA. 306+00
TOP = 1232.31
INV = 1227.55
PROP F.L. = 1226.88 (RT.)

+40.00 RT. 1225.73

+62.00 RT. 1225.73

STA. 308+51
PROP F.L. = 1225.73

+00.00 RT. 1233.00

+00.00 RT. 1238.00

REFER TO SURVEY CONTROL DETAIL SHEETS FOR HORIZONTAL AND VERTICAL CONTROL DATA

1280 1270 1260 1250 1240 1230 1220 1210 1200 1190

300+00 301+00 302+00 303+00 304+00 305+00 306+00 307+00 308+00 309+00 310+00 311+00 312+00 313+00 314+00

STATE OF ARKANSAS
LICENSED PROFESSIONAL ENGINEER
No. 13653
ADAM E. WIERCIAK
3/20/16

AEWierciak 3/20/2016 11:56:53 AM
WORKSPACE: AHTD
L:\2011\011707 - I-540 Widening & Interchange Improvement\Drawings\r-BB0414_PP_Hwy112 toHwy71B.dgn
REVISED DATE:

DATE REVISED	DATE FILMED	DATE REVISED	DATE FILMED	FED. RD. DIST. NO.	STATE	FED. AID PROJ. NO.	SHEET NO.	TOTAL SHEETS
				6	ARK.			
				JOB NO.		BB0414	309	886

PLAN & PROFILE - HWY. 112 TO HWY. 71B RAMP

C.L. NB I-49 TO HWY. 71B RAMP
PI = 322+02.48
Δ = 65°25'09" LT.
D = 4°15'00"
T = 865.80'
L = 1539.27'
PC= 313+36.68
PT= 328+75.95
e = 0.075'/'
Ls = 300'

C.L. HWY. 112 TO HWY. 71B RAMP
PI = 312+33.17
Δ = 51°01'32" LT.
D = 8°15'00"
T = 331.45'
L = 618.49'
PC= 309+01.72
PT= 315+20.22
e = 0.100'/'
Ls = 350'

C.L. HWY. 112 TO HWY. 71B RAMP STA. 320+93.94 =
C.L. NB I-49 TO HWY. 71B RAMP STA. 323+81.11, 21.00' RT.

OBLITERATE EXISTING ROADWAY

STATE OF ARKANSAS
LICENSED PROFESSIONAL ENGINEER
No. 13653
ADAM E. WIERCIAK
3/20/16

HWY. 112 TO HWY. 71B RAMP

STA. 317+82.72 BEGIN SUPERELEVATION (REVERSE CROWN)
STA. 320+82.72 END SUPERELEVATION (0.075'/')

PVT 314+75.00 ELEV. 1249.46
-1.91%
PVC 316+00.00 ELEV. 1247.08
VC=200.00' K 166.67
PVT 318+00.00 ELEV. 1244.46
PROFILE GRADE
-0.71%
C.L. NB I-49 TO HWY. 71B RAMP STA. 322+46.58, 20.31' RT.
C.L. HWY. 112 TO HWY. 71B RAMP STA. 319+57.61, 7.50' LT. ELEV. 1243.34
0.50% RIGHT DITCH GRADE
+66.00 RT. 1239.83
EXISTING GROUND
PVT 317+00.00 ELEV. 1245.17
-0.91% RIGHT DITCH GRADE
-23.00 RT. 1231.01
+57.61 RT. 1230.70

1280 1270 1260 1250 1240 1230 1220 1210 1200 1190
314+00 315+00 316+00 317+00 318+00 319+00 320+00 321+00

REFER TO SURVEY CONTROL DETAIL SHEETS FOR HORIZONTAL AND VERTICAL CONTROL DATA

AEWierciak 3/20/2016 11:56:53 AM
WORKSPACE: AHTD
L:\201\W007107 - I-540 Widening & Interchange Improvement\Drawings\rBB0414_PP_Hwy112 toHwy71B_02.dgn
REVISED DATE:

DATE REVISED	DATE FILMED	DATE REVISED	DATE FILMED	FED. RD. DIST. NO.	STATE	FED. AID PROJ. NO.	SHEET NO.	TOTAL SHEETS
				6	ARK.			
				JOB NO.		BB0414	310	886

(2) PLAN & PROFILE - HWY. 71B TO NB I-49 RAMP

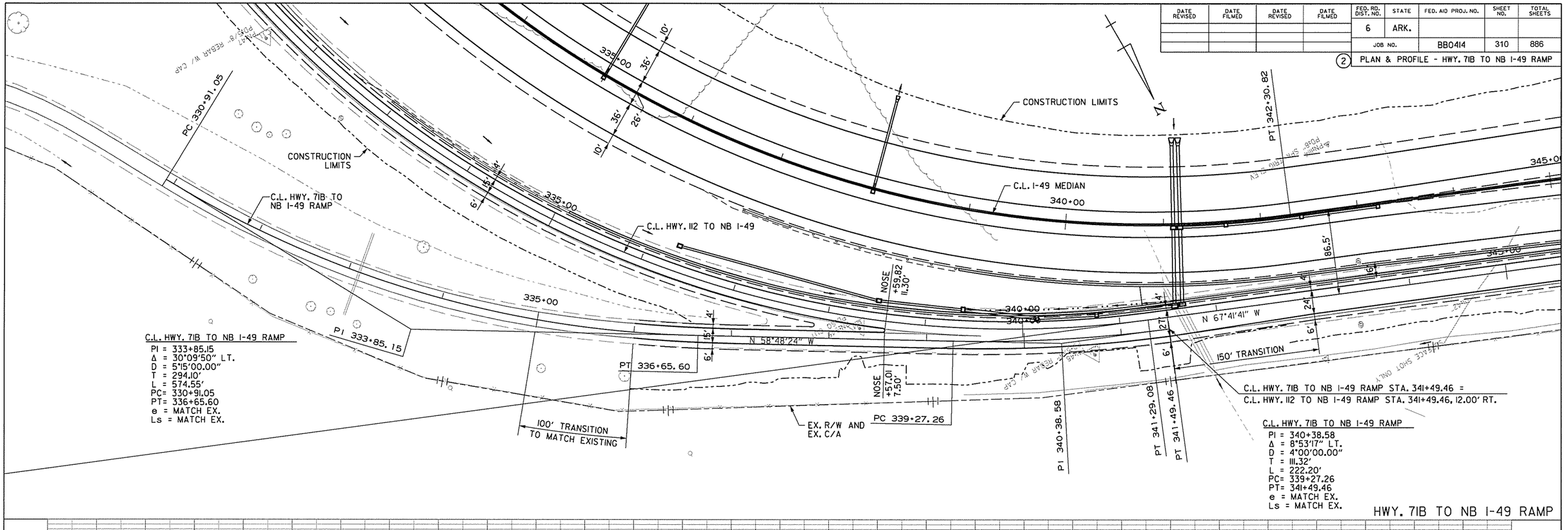

C.L. HWY. 71B TO NB I-49 RAMP
PI = 333+85.15
Δ = 30°09'50" LT.
D = 5°15'00.00"
T = 294.10'
L = 574.55'
PC= 330+91.05
PT= 336+65.60
e = MATCH EX.
Ls = MATCH EX.

C.L. HWY. 71B TO NB I-49 RAMP STA. 341+49.46 =
C.L. HWY. 112 TO NB I-49 RAMP STA. 341+49.46, 12.00' RT.

C.L. HWY. 71B TO NB I-49 RAMP
PI = 340+38.58
Δ = 8°53'17" LT.
D = 4°00'00.00"
T = 111.32'
L = 222.20'
PC= 339+27.26
PT= 341+49.46
e = MATCH EX.
Ls = MATCH EX.

HWY. 71B TO NB I-49 RAMP

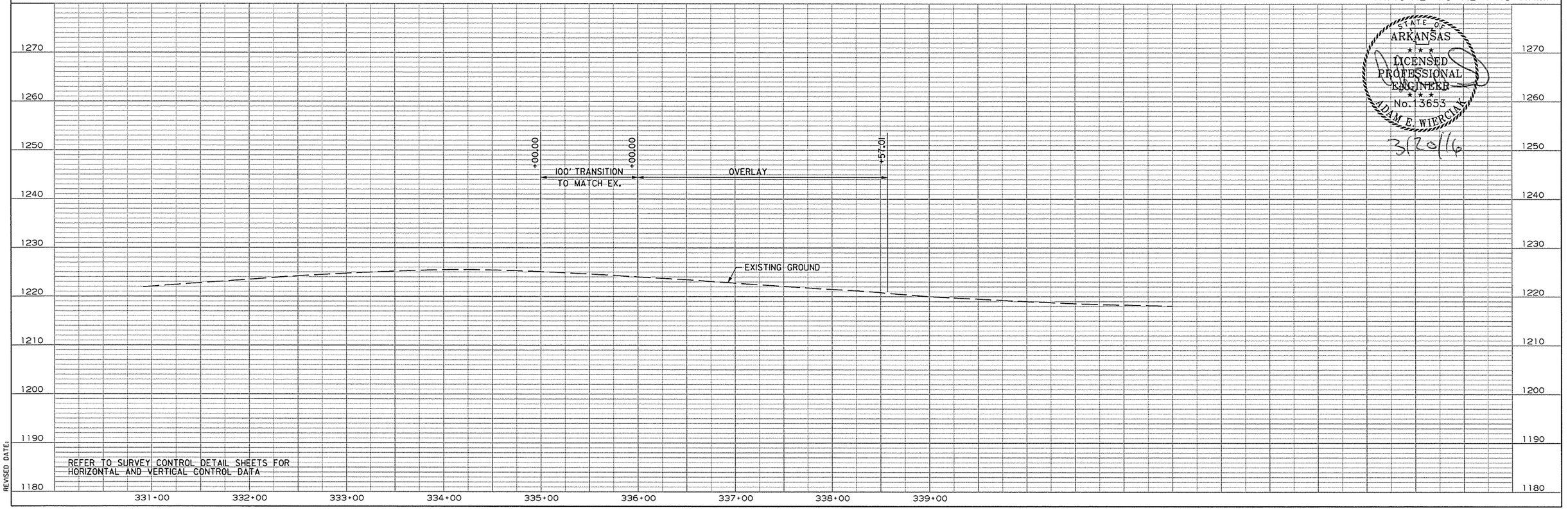

REFER TO SURVEY CONTROL DETAIL SHEETS FOR HORIZONTAL AND VERTICAL CONTROL DATA

STATE OF ARKANSAS
LICENSED PROFESSIONAL ENGINEER
No. 13653
ADAM E. WIERCIAK
3/20/16

AEWarciak 3/20/2016 11:56:53 AM
WORKSPACE: AHTD
L:\20IN\1107\07 - I-540 Widening & Interchange Improvement\Drawings\rBB0414_PP_Hwy71B to NB49.dgn
REVISED DATE:

DATE REVISED	DATE FILMED	DATE REVISED	DATE FILMED

FED. RD. DIST. NO.	STATE	FED. AID PROJ. NO.	SHEET NO.	TOTAL SHEETS
6	ARK.			
JOB NO.		BB0414	311	886

(2) PLAN & PROFILE - SB I-49 TO HWY. 112 RAMP

C.L. SB I-49 TO HWY. 112 STA. 326+86.42 =
C.L. C-D RD. STA. 308+48.34, 9.00' LT.

PC 307+16

PAVED PARKING

PC 326+86.42

APPROXIMATE FEMA 100 YR. FLOODPLAIN LIMITS

C.L. SB I-49 TO HWY. 71B RAMP

PT 336+71.34

PT 342+13.43

PI 308+61.87

N 67°11'29" E

PT 309+59.24

NOSE +24.05 7.50'

PI 329+89.18

C.L. SB I-49 TO HWY. 112 STA. 329+68.25 =
C.L. SB I-49 TO HWY. 71B STA. 330+41.20
Δ = 88°15'33"

CONSTRUCTION LIMITS

C.L. SB I-49 TO HWY. 112 RAMP
PI = 329+89.18
Δ = 47°06'31" LT.
D = 8°15'00"
T = 302.76'
L = 571.01'
PC = 326+86.42
PT = 332+57.43
e = 0.100'/'
Ls = 350'

C.L. SB I-49 TO HWY. 112 RAMP
PI = 338+16.96
Δ = 46°18'36" LT.
D = 5°30'00"
T = 445.52'
L = 842.00'
PC = 333+71.44
PT = 342+13.43
e = MATCH EX.
Ls = MATCH EX.

NOSE +87.16 11.22'

PI 315+00

PT 332+57.43

PC 333+71.44

STA. 334+21 IN PLACE
DBL. 6' X 3' X 88' R.C. BOX CULVERT
WITH 3:1 WINGS LT. & RT.
RETAIN

C.L. SB I-49 TO HWY. 112 RAMP

C.L. SB HWY. 71B

N 20°10'58" E

CONSTRUCTION LIMITS

PC 313+41.74

C.L. COLLECTOR-DISTRIBUTOR ROAD

PI 338+16.96

OBLITERATE EXISTING ROADWAY

SB I-49 TO HWY. 112 RAMP

STATE OF ARKANSAS
LICENSED PROFESSIONAL ENGINEER
No. 13653
ADAM E. WIERCIAK
3/20/16

STA. 325+26.55 BEGIN SUPERELEVATION
STA. 328+76.55 MAX. SUPERELEVATION (0.100'/')
STA. 331+69.93 MAX. SUPERELEVATION (0.100'/')
STA. 333+26.40 END SUPERELEVATION (0.064'/')

STA. 333+26.40 BEGIN SUPERELEVATION (0.064'/')
STA. 334+58.94 MATCH EX. SUPERELEVATION (0.0912'/')

C.L. SB I-49 TO HWY. 112 STATIONING	GUARDRAIL (TYPE A)	GUARDRAIL TERMINAL (TYPE 2)	TERMINAL ANCHOR POST (TYPE I)
STA. 329+16.43 TO STA. 331+41.43 RT.	= 175 LIN. FT.	1 EACH	1 EACH

C.L. C-D RD.
STA. 309+87.16, 11.22' LT.
C.L. SB I-49 TO HWY. 112 RAMP
STA. 328+24.05, 7.50' RT.
ELEV. 1224.56

SB I-49 TO HWY. 71B RAMP BRIDGE

PROFILE GRADE

PVI 331+00.00
ELEV. 1225.14

PVC 332+25.00
ELEV. 1223.19

PVT 333+75.00
ELEV. 1221.69

PVI 334+58.94
ELEV. 1221.32

+58.94

OVERLAY

0.21%

-1.56%

-0.44%

VC=150.00'
K 133.93

VC=200.00'
K 112.99

PVC 330+00.00
ELEV. 1224.93

PVT 332+00.00
ELEV. 1223.58

PVI 333+00.00
ELEV. 1222.02

EXISTING GROUND

STA. 334+21
EX. F.L. = 1214.16 RT.
EX. F.L. = 1213.71 LT.

REFER TO SURVEY CONTROL DETAIL SHEETS FOR HORIZONTAL AND VERTICAL CONTROL DATA

1270 1260 1250 1240 1230 1220 1210 1200 1190 1180

326+00 327+00 328+00 329+00 330+00 331+00 332+00 333+00 334+00 335+00 336+00 337+00 338+00 339+00 340+00 341+00

AEWiarciak 3/20/2016 11:56:54 AM
WORKSPACE: AHTD
L:\20IN\I\0I707 - I-540 Widening & Interchange Improvement\Drawings\r-BB0414_PP_SB49 to Hwy II2.0i.dgn
REVISED DATE:

DATE REVISED	DATE FILMED	DATE REVISED	DATE FILMED	FED. RD. DIST. NO.	STATE	FED. AID PROJ. NO.	SHEET NO.	TOTAL SHEETS
				6	ARK.			
				JOB NO.		BB0414	312	886

(2) PLAN & PROFILE - SB I-49 TO HWY. 112 RAMP

C.L. SB I-49 TO HWY. 112 RAMP
PI = 338+16.96
Δ = 46°18'36" LT.
D = 5°30'00"
T = 445.52'
L = 842.00'
PC= 333+71.44
PT= 342+13.43
e = MATCH EXISTING
Ls = MATCH EXISTING

EXIST. R/W & C/A

STA. 348+58 IN PLACE
24" X 104' R.C. PIPE CULVERT
WITH HDWL. LT. & RT.
REMOVE HDWL. LT. AND
EXTEND R.C. PIPE 11' LT.
(CLASS III TYPE "3 BEDDING
WITH FES. LT.
Q50 = 5 CFS DA = 0.6 ACRES
24" R.C. PIPE = 15 LIN. FT.
24" FES = 1EA.

APPROXIMATE FEMA 100 YR. FLOODPLAIN LIMITS

C.L. SB I-49 TO HWY. 112 RAMP STA. 354+82.39, 61.50' RT. =
C.L. MEDIAN I-49 STA. 354+82.39

PROP. R/W & C/A

CONSTRUCTION LIMITS

C.L. SB I-49 TO HWY. 71 RAMP

PT 342+13.43

345+00

NOSE +06.22 7.50'

PT 348+13.92

+65 298.18' BEGIN PROP. C/A

+63.04 210'

+28.95 165'

PC 354+95.03

C.L. SB I-49 TO HWY. 112 EXIT

350+00

355+00

N 26°07'38" W

C.L. SB I-49 TO HWY. 112 RAMP

NOSE +74.48 7.50'

NOSE +86.42 72.72'

PI 351+12.16

PI 344+98.62

CONSTRUCTION LIMITS

STA. 342+17 IN PLACE
30" X 86' R.C. PIPE CULVERT
WITH 3:1 FES. LT. & RT.
RETAIN

C.L. SB I-49 TO HWY. 112 RAMP STA. 348+13.92, 9.00' RT. =
C.L. SB I-49 TO HWY. 71B RAMP STA. 348+13.92

STA. 349+33 IN PLACE
18" X 31' R.C. PIPE CULVERT
SIDE DRAIN RT.
REMOVE

PI 351+73.11

CONSTRUCT DRIVEWAY ON RT. IF AND WHERE DIRECTED BY ENGINEER

OBLITERATE EXISTING ROADWAY

SWAMP

CONSTRUCTION LIMITS

C.L. I-49 MEDIAN

PAVED PARKING

EARTHWORK

PARKING

GATE

E9 '06.19"

EXIST. R/W & C/A

SB I-49 TO HWY. 112 RAMP

STA. 349+74.48 BEGIN SUPERELEVATION
STA. 352+74.48 END SUPERELEVATION (0.023'/')

OVERLAY

PVI 343+00.00
ELEV. 1218.30

PVC 343+25.00
ELEV. 1218.25

+00.00

PVT 344+75.00
ELEV. 1218.84

VC=150.00'
K 119.05

0.23%

1.03%

PROFILE GRADE

EXISTING GROUND

PVI 344+00.00
ELEV. 1218.07

-0.14% LEFT DITCH GRADE

STA. 342+17
EX. F.L. = 1211.39 (RT.)
E.X F.L. = 1210.85 (LT.)

+06.21 LT.
1209.81

+58.00 LT.
1209.47

STA. 348+58
EX. F.L. = 1210.45 (RT.)
PROP F.L. = 1210.64 (RT.)
EX. F.L. = 1209.47 (LT.)
PROP F.L. = 1209.47 (LT.)

PVI 351+50.00
ELEV. 1225.80

PVC 350+75.00
ELEV. 1225.03

VC=150.00'
K 281.64

0.50%

PVT 352+25.00
ELEV. 1226.17

C.L. I-49
STA. 352+86.42, 72.72' LT. =
C.L. SB I-49 TO HWY. 112 RAMP
STA. 352+74.48, 7.50' RT.
ELEV. 1226.42

REFER TO SURVEY CONTROL DETAIL SHEETS FOR HORIZONTAL AND VERTICAL CONTROL DATA

1260 1250 1240 1230 1220 1210 1200 1190 1180 1170

341+00 342+00 343+00 344+00 345+00 346+00 347+00 348+00 349+00 350+00 351+00 352+00 353+00 354+00 355+00

STATE OF ARKANSAS
LICENSED PROFESSIONAL ENGINEER
No. 13653
ADAM E. WIERCIAK
4/19/16

AEWiercIak 4/14/2016 2:35:54 PM
WORKSPACE: AHTD
L:\20IN\10I707 - I-540 Widening & Interchange Improvement\Drawings\rBB0414_PP_SB49 to Hwy 112_02.dgn
REVISED DATE:

DATE REVISED	DATE FILMED	DATE REVISED	DATE FILMED	FED. RD. DIST. NO.	STATE	FED. AID PROJ. NO.	SHEET NO.	TOTAL SHEETS
				6	ARK.			
				JOB NO.		BB0414	313	886

(2) PLAN & PROFILE - SB I-49 TO HWY. 71B RAMP

N

PROP. R/W & C/A

+50 505'

+50 565'

EXIST. R/W

+27.21 649.47' END PROP. C/A

PI 333+25.28

PT 335+66.62

335+00

C.L. EXISTING HWY. 71B

POB 332+72.94

PT 328+75.95

STA. 315+56 CONSTRUCT TYPE RM DROP INLET (4' X 3' X 6'0") 89' LT. WITH 24" X 43' R.C. PIPE OUTLET THROUGH M.S.E. WALL (CLASS III) TYPE 3 BEDDING

C.L. NB I-49 TO HWY. 71B RAMP

330+00

PC 330+61.97

50' SHOULDER TRANSITION

C.L. SB I-49 TO HWY. 71B RAMP STA. 309+88.64, 27.67' RT. =
C.L. HWY. 71B STA. 332+72.95

310+00

S 69°49'07" W

C.L. SB I-49 TO HWY. 71B RAMP STA. 314+01.01
C.L. HWY. 112 TO NB I-49 RAMP STA. 325+50.87
Δ = 51°14'17"

C.L. SB I-49 TO HWY. 71B RAMP STA. 315+71.02
C.L. MEDIAN I-49 STA. 325+90.38
Δ = 41°51'45"

C.L. HWY. 112 TO NB I-49 RAMP

+29.59 BEGIN RETAINING WALL NO. 5

+40.49 BEGIN BARRIER WALL RT. SEE SPECIAL DETAIL

PC 314+12.22

315+00

325+00

325+00

PC 322+71.77

PI 317+69.43

SEE RETAINING WALL DETAILS

C.L. I-49 MEDIAN

320+00

+95.75 END RETAINING WALL NO. 5

S 48°30'22" W

C.L. SB I-49 TO HWY. 71B

CONSTRUCTION LIMITS

+60.49 END BARRIER WALL RT. SEE SPECIAL DETAIL

C.L. SB HWY. 71B

320+00

320+00

PI 315+69.06

PT 323+41.74

PI 322+46.68

PC 321+51.46

PC 320+19.97

C.L. SB I-49 TO HWY. 71B RAMP
PI = 340+71.44
Δ = 144°50'33" RT.
D = 9°00'00"
T = 2009.47'
L = 1609.36'
PC = 320+61.97
PT = 336+71.34
e = MATCH EX.
Ls = MATCH EX.

SB I-49 TO HWY. 71B RAMP

CONCRETE DITCH PAVING (TYPE B) SB I-49 TO HWY. 71B RAMP

STA.	STA.	SIDE	"W"	SQ. YDS.
315+28	319+98	LT. = 472 LIN. FT.	4'-0"	210

C.L. SB I-49 TO HWY. 71B RAMP STATIONING	GUARDRAIL (TYPE A)	GUARDRAIL TERMINAL (TYPE 2)	THRIE BEAM GUARDRAIL TERMINAL
STA. 316+60.49 TO STA. 318+79.24 RT.	= 150 LIN. FT.	1EACH	1EACH

I-49 RT. LANES BRIDGE

I-49 LT. LANES BRIDGE

HWY. 112 TO NB I-49 RAMP BRIDGE

19'-11⅛" MIN.

16'-8¾" MIN.

EXISTING GROUND

STA. 315+56
TOP = 1240.15
INV. = 1234.15
F.L. = 1222.61

-0.89% RIGHT DITCH GRADE

+38.49 RT. 1220.66

+115.49 RT. 1219.09

REFER TO SURVEY CONTROL DETAIL SHEETS FOR HORIZONTAL AND VERTICAL CONTROL DATA

STATE OF ARKANSAS
LICENSED PROFESSIONAL ENGINEER
No. 13653
ADAM E. WIERCIAK
3/25/16

1270 1260 1250 1240 1230 1220 1210 1200 1190 1180

309+00 310+00 311+00 312+00 313+00 314+00 315+00 316+00 317+00 318+00 319+00 320+00 321+00 322+00

AEWiercIak 3/20/2016 11:56:54 AM
WORKSPACE: AHTD
L:\20II\II07707 - I-540 Widening & Interchange Improvement\Drawings\rBB0414_PP_SBI49 to Hwy71_0I.dgn
REVISED DATE:

DATE REVISED	DATE FILMED	DATE REVISED	DATE FILMED	FED. RD. DIST. NO.	STATE	FED. AID PROJ. NO.	SHEET NO.	TOTAL SHEETS
				6	ARK.			
				JOB NO.		BB0414	314	886

(2) PLAN & PROFILE - SB I-49 TO HWY. 71B RAMP

APPROXIMATE FEMA 100 YR. FLOODPLAIN LIMITS

OBLITERATE EXISTING ROADWAY

EXIST. R/W & C/A

CONSTRUCTION LIMITS

100' TRANSITION TO MATCH EXISTING

+50.00

335+00

6'

4'

STA. 335+32 IN PLACE DBL. 6' X 3' X 158' R.C. PIPE CULVERT WITH 3:1 WINGS LT. & RT. RETAIN

PT 336+71.34

PC 333+71.44

N 13°20'54." E

340+00

PCI 341+55.99

C.L. SB I-49 TO HWY. 71B RAMP
PI = 340+71.44
Δ = 144°50'33" RT.
D = 9°00'00"
T = 2009.47'
L = 1609.36'
PC= 320+61.97
PT= 336+71.34
e = 0.07I (MATCH EX.)
Ls = 300'

STA. 339+05 IN PLACE
24" X 119' R.C. PIPE CULVERT
WITH HDWL. LT. & RT.
REMOVE HDWL. RT. AND
EXTEND R.C. PIPE 26' RT.
(CLASS IIIB TYPE 3 BEDDING
WITH FES. RT.
5° RT. FWD. SKEW
Q50 = 24 CFS DA = 15.0 ACRES
24" R.C. PIPE = 30 LIN. FT.
24" FES = 1EA.

C.L. SB I-49 TO HWY. 71B RAMP
PI = 344+98.62
Δ = 39°28'32" LT.
D = 6°00'00"
T = 342.63'
L = 657.93'
PC= 341+55.99
PT= 348+13.92
e = 0.092'/'
Ls = 340'

C.L. SB I-49 TO HWY. 112 RAMP STA. 348+13.92, 9.00' RT. =
C.L. SB I-49 TO HWY. 71B RAMP STA. 348+13.92

+65
298.18'
BEGIN PROP. C/A

PT 348+13.92

NOSE +06.21
7.50'

345+00

6'

4'

NOSE +05.22
24.18'

CONSTRUCTION LIMITS

C.L. SB I-49 TO HWY. 71B RAMP

PT 342+13.43

PI 344+98.62

C.L. SB I-49 TO HWY. 112 RAMP

SWAMP

GATE

346+90.63

SB I-49 TO HWY. 71B RAMP

STA. 335+50.00 MATCH EXISTING (0.07I'/')
STA. 335+96.34 MAX. SUPERELEVATION (0.07I'/')
STA. 338+69.34 END SUPERELEVATION

STA. 339+00.99 BEGIN SUPERELEVATION
STA. 342+40.99 MAX. SUPERELEVATION (0.092'/')
STA. 345+02.32 MAX. SUPERELEVATION (0.092'/')
STA. 348+42.32 END SUPERELEVATION

STATE OF ARKANSAS
LICENSED PROFESSIONAL ENGINEER
No. 13653
ADAM E. WIERCIAK
3/25/16

+50.00

100' TRANSITION TO MATCH EX.

+50.00

PVI 335+50.00
ELEV. 1236.54

-2.84%

EXISTING GROUND

PROFILE GRADE

PVC 340+00.00
ELEV. 1223.76

VC=600.00'
K 141.18

PVT 346+00.00
ELEV. 1219.47
C.L. SB I-49 TO HWY. 112 RAMP
STA. 346+06.22, 24.18' LT.
C.L. SB I-49 TO HWY. 71B RAMP
STA. 346+06.21, 7.50' RT.
ELEV. 1219.56

1.41%

STA. 335+32
EX. F.L. = 1212.49 (RT.)
EX. F.L. = 1212.05 (LT.)

STA. 339+05
EX. F.L. = 1209.73 (RT.)
PROP. F.L. = 1210.13 (RT.)
EX. F.L. = 1208.44 (LT.)

PVI 343+00.00
ELEV. 1215.24

-0.13% LEFT DITCH GRADE

+01.00 LT. 1210.08

+06.80 LT. 1209.81

REFER TO SURVEY CONTROL DETAIL SHEETS FOR HORIZONTAL AND VERTICAL CONTROL DATA

1270 1260 1250 1240 1230 1220 1210 1200 1190 1180

334+00 335+00 336+00 337+00 338+00 339+00 340+00 341+00 342+00 343+00 344+00 345+00 346+00 347+00 348+00 349+00

AEWiarciak 3/20/2016 11:56:54 AM
WORKSPACE: AHTD
L:\20II\II07707 - I-540 Widening & Interchange Improvement\Drawings\rBB0414_PP_SBI49 to Hwy7I_02.dgn
REVISED DATE:

DATE REVISED	DATE FILMED	DATE REVISED	DATE FILMED	FED. RD. DIST. NO.	STATE	FED. AID PROJ. NO.	SHEET NO.	TOTAL SHEETS
				6	ARK.			
				JOB NO.		BB0414	315	886

(2) PLAN & PROFILE - TEMP. I-49 SB DETOUR

C.L. TEMP. SB I-49 DETOUR
PI = 340+63.47
Δ = 23°47'18" LT.
D = 8°15'00"
T = 146.28'
L = 288.34'
PC= 339+17.19
PT= 342+05.53
e = MATCH EXISTING
Ls = 300'

STA. 342+12 IN PLACE
30" X 86' R.C. PIPE CULVERT
WITH FES LT. REMOVE FES
AND EXTEND 13' LT. WITH R.C. PIPE CULVERT
9° LT. FWD. SKEW
Q50 = 11CFS DA = 8.7 ACRES
30" R.C. PIPE CULVERT = 17 LIN. FT.
30" FES = 1EA.

APPROXIMATE FEMA 100 YR. FLOODPLAIN LIMITS

STA. 345+24 CONSTRUCT
24" X 148' TEMPORARY CULVERT
64° RT. FWD. SKEW
Q50 = 6 CFS DA = 0.7 ACRES

C.L. TEMP. SB I-49 DETOUR
PI = 345+91.82
Δ = 8°52'59" RT.
D = 3°00'00"
T = 148.35'
L = 296.11'
PC= 344+43.47
PT= 347+39.57
e = N.C.
Ls = N/A

STA. 348+52 IN PLACE
24" X 104' R.C. PIPE CULVERT
WITH HDWL. LT. & RT.
REMOVE HDWL. LT. AND
EXTEND 49' LT. WITH
TEMPORARY CULVERT
Q50 = 5 CFS DA = 0.6 ACRES
24" R.C. PIPE = 53 LIN. FT.

STA. 349+87 CONSTRUCT
24" X 54' TEMPORARY CULVERT
Q50 = 13 CFS DA = 1.6 ACRES

STA. 349+23 CONSTRUCT
DOUBLE 18" X 53' TEMPORARY CULVERT
Q50 = 13 CFS DA = 1.6 ACRES

C.L. TEMP. SB I-49 DETOUR STA. 339+17.19 =
C.L. HWY. 112 TO NB I-49 STA. 339+27.78
3.93' RT.

C.L. TEMP. SB I-49 DETOUR

C.L. TEMP. SB I-49 TO HWY. 71B RAMP

EX. R/W AND EX. C/A

PROP. T.C.E.

CONSTRUCTION LIMITS

EX. SB I-49

PAVED PARKING

SWAMP

TEMP. SB I-49 DETOUR

STA. 341+30.53 MATCH EX. SUPERELEVATION
STA. 344+30.53 END SUPERELEVATION

NOTCH AND WIDEN

PROFILE GRADE

EXISTING GROUND

STA. 342+12
EX. F.L. = 1210.85 LT.
PROP F.L. = 1210.85 LT.

STA. 345+24
PROP F.L. = 1211.26 LT.
PROP F.L. = 1212.50 RT.

STA. 348+52
EX F.L. = 1209.47 LT.
PROP F.L. = 1209.47 LT.

STA. 349+23
PROP F.L. = 1211.95 RT.
PROP F.L. = 1209.58 LT.

STA. 349+87
PROP F.L. = 1211.16 RT.
PROP F.L. = 1209.81 LT.

REFER TO SURVEY CONTROL DETAIL SHEETS FOR HORIZONTAL AND VERTICAL CONTROL DATA

STATE OF ARKANSAS
LICENSED PROFESSIONAL ENGINEER
No. 13653
ADAM E. WIERCIAK
3/25/16

AEWiercIak 3/20/2016 11:56:55 AM
WORKSPACE: AHTD
L:\20IN\10\7107 - I-540 Widening & Interchange Improvement\Drawings\rBB0414_PP_Temp_SB49_Detour_01.dgn
REVISED DATE:

DATE REVISED	DATE FILMED	DATE REVISED	DATE FILMED	FED. RD. DIST. NO.	STATE	FED. AID PROJ. NO.	SHEET NO.	TOTAL SHEETS
				6	ARK.			
				JOB NO.		BB0414	316	886

(2) PLAN & PROFILE - TEMP. I-49 SB DETOUR

C.L. TEMP. SB I-49 DETOUR
PI = 354+23.20
Δ = 10°08'55" RT.
D = 3°00'00"
T = 169.59'
L = 338.29'
PC= 352+53.61
PT= 355+91.90
e = N.C.
Ls = N/A

STA. 357+05 IN PLACE
18" X 122' R.C. PIPE OUTLET
WITH FES LT. REMOVE FES AND
EXTEND 14' LT. WITH R.C. PIPE CULVERT
18" R.C. PIPE = 18 LIN. FT.

C.L. TEMP. SB I-49 DETOUR
PI = 357+42.26
Δ = 9°00'10" LT.
D = 3°00'00"
T = 150.36'
L = 300.09'
PC= 355+91.90
PT= 358+91.99
e = N.C.
Ls = N/A

STATE OF ARKANSAS
LICENSED PROFESSIONAL ENGINEER
No. 13653
ADAM E. WIERCIAK
4/19/16

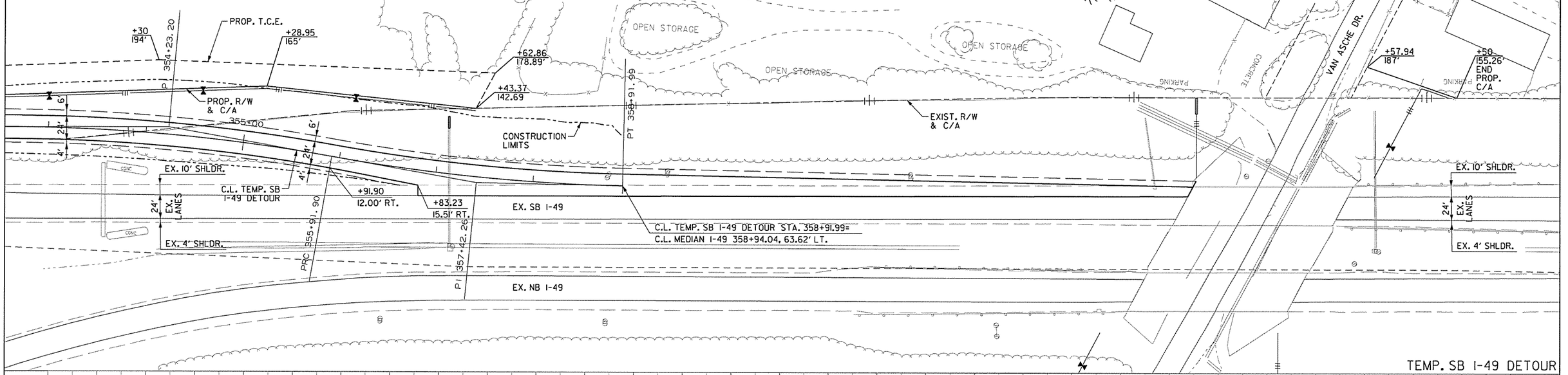

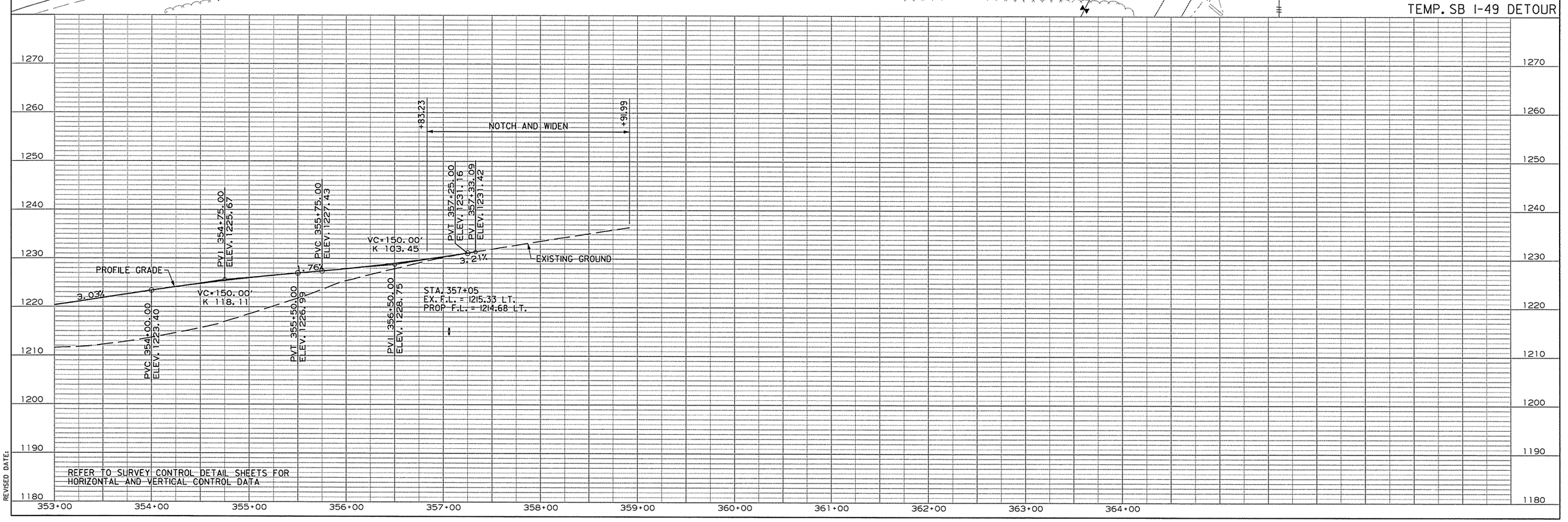

AEWiercick 4/14/2016 2:35:55 PM
WORKSPACE: AHTD
L:\20IN\I0I707 - I-540 Widening & Interchange Improvement\Drawings\rBB0414_PP_Temp_SBI49_Detour_02.dgn
REVISED DATE:

DATE REVISED	DATE FILMED	DATE REVISED	DATE FILMED	FED. RD. DIST. NO.	STATE	FED. AID PROJ. NO.	SHEET NO.	TOTAL SHEETS
				6	ARK.			
				JOB NO.		BB0414	317	886

(2) PLAN & PROFILE - TEMP. SB I-49 TO HWY. 71B RAMP

TEMP. SB I-49 TO HWY. 71B RAMP

SB I-49 TO HWY. 71B

C.L. TEMP. SB I-49 TO HWY. 71B RAMP
PI = 345+81.31
Δ = 27°52'59" LT.
D = 5°00'00"
T = 284.47'
L = 557.66'
PC= 342+96.84
PT= 348+54.50
e = MATCH EX.
Ls = MATCH EX.

PC 342+96.84
EX. R/W AND EX. C/A
APPROXIMATE FEMA 100 YR. FLOODPLAIN LIMITS
C.L. TEMP. SB I-49 TO HWY. 71B RAMP
+77 416.85'
POND
+65 298.18' BEGIN PROP. C/A
PT 348+54.50
C.L. TEMP. SB I-49 TO HWY. 71B RAMP STA. 348+54.50 = C.L. TEMP. SB I-49 DETOUR STA. 348+54.50 4.50' RT.
PROP. T.C.E.
CONSTRUCTION LIMITS
+70 238'
+63.04 210'
345+00
PC 345+91.82
6'
7.5"
N 25°27'24" W
6'
24'
4'
EX. 10' SHLDR.
EX. LANES
EX. 4' SHLDR.
PC 339+17.19
PT 342+05.53
C.L. TEMP. SB I-49 DETOUR
345+00
6'
24'
4'
N 34°20'23" W
340+00
PI 345+81.31
PC 344+43.47
PT 347+39.57
EX. SB I-49
PC 352+53.61
EX. 10' SHLDR.
24'
EX. LANES
EX. 4' SHLDR. OVERH
PI 340+63.47
SWAMP
PAVED PARKING

STA. 346+00.00 MATCH EX. SUPERELEVATION (0.026'/')
STA. 346+76.17 END SUPERELEVATION

+65.00
NOTCH AND WIDEN
+00.00
PVI 346+00.00
ELEV. 1217.30
C.L. SB I-49 DETOUR STA. 346+76.11 LT. 12.00'
C.L. TEMP. SB I-49 TO HWY. 71B STA. 346+76.17 RT. 7.50'
ELEV. 1216.77
0.69%
EXISTING GROUND
PROFILE GRADE

REFER TO SURVEY CONTROL DETAIL SHEETS FOR HORIZONTAL AND VERTICAL CONTROL DATA

1250 1240 1230 1220 1210 1200 1190 1180 1170 1160

339+00 340+00 341+00 342+00 343+00 344+00 345+00 346+00 347+00 348+00 349+00 350+00 351+00 352+00 353+00

STATE OF ARKANSAS
LICENSED PROFESSIONAL ENGINEER
No. 13653
ADAM E. WIERCIAK
3/25/16

AEWiercIak 3/20/2016 11:56:55 AM
WORKSPACE: AHTD
L:\20\NO\7707 - I-540 Widening & Interchange Improvement\Drawings\rBB0414_PP_Temp_SBI49 to Hwy 71B.dgn
REVISED DATE:

DATE REVISED	DATE FILMED	DATE REVISED	DATE FILMED	FED. RD. DIST. NO.	STATE	FED. AID PROJ. NO.	SHEET NO.	TOTAL SHEETS
				6	ARK.			
				JOB NO.		BB0414	318	886

(2) PLAN & PROFILE - TEMP. C-D RD. TO SB I-49 DETOUR

TEMP. C-D RD. TO SB I-49 DETOUR
PI = 281+59.33
Δ = 7°47'08" LT.
D = 3°00'00"
T = 129.96'
L = 259.52'
PC= 280+29.37
PT= 282+88.89
e = MATCH EX.
Ls = 300'

STA. 283+40 CONSTRUCT
42" X 8' R.C. PIPE CULVERT
EXTENSION FROM FINAL CONDITION
WITH FES LT.
6° LT. FWD. SKEW
Q50 = 58 CFS DA = 11.1 ACRES
42" R.C. PIPE = 8 LIN. FT.
42" FES = 1EA.

STA. 285+08 IN PLACE
42" X 116' R.C. PIPE CULVERT
WITH FES LT.
REMOVE FES LT. AND
EXTEND 64' LT. WITH
R.C. PIPE CULVERT
35° LT. FWD. SKEW
Q50 = 58 CFS DA = 11.1 ACRES
42" R.C. PIPE = 68 LIN. FT.
42" FES = 1EA.

STA. 287+01 IN PLACE
18" X 96' R.C. PIPE CULVERT
WITH FES LT. REMOVE FES LT.
AND EXTEND 73' LT.
WITH R.C. PIPE CULVERT
35° RT. FWD. SKEW
18" R.C. PIPE = 77 LIN. FT.

TEMP. C-D RD. TO SB I-49 DETOUR
PI = 287+06.31
Δ = 24°39'28" RT.
D = 3°00'00"
T = 417.42'
L = 821.92'
PC= 282+88.89
PT= 291+10.81
e = N.C.
Ls = N/A

STA. 287+14 CONSTRUCT
24" X 83' TEMPORARY CULVERT
30° RT. FWD. SKEW
Q50 = 3 CFS DA = 0.4 ACRES

CONSTRUCTION LIMITS
ADJUST PIPE ALIGNMENT TO MATCH DITCH
END OF PIPE FINAL CONDITION
C.L. I-49 MEDIAN
EX. SB I-49
EX. NB I-49
EXIST. HWY. 112 RAMP 3
228.45' DECELERATION LANE
100' TAPER
C.L. TEMP. C-D RD. TO SB I-49 DETOUR
HWY. 112
N. SHILOH DR.
C.L. TEMP C-D RD. TO SB I-49 DETOUR STA. 291+10.81 = C.L. C-D ROAD STA. 291+10.81
C.L. TEMP C-D RD. TO SB I-49 DETOUR STA. 280+29.37 = C.L. I-49 STA. 281+00.63, 49.00' LT.
TEMP. C-D RD. TO SB I-49 DETOUR

STA. 281+93.00 MATCH EX. SUPERELEVATION (0.004'/')
STA. 282+53.00 END SUPERELEVATION

PVI 281+93.00 ELEV. 1228.18
PVC 283+25.00 ELEV. 1227.96
PVI 284+75.00 ELEV. 1228.63
PVI 286+50.00 ELEV. 1230.51
PVT 289+50.00 ELEV. 1225.35
PVI 284+00.00 ELEV. 1227.83
PVI 285+25.00 ELEV. 1229.16
PVT 287+75.00 ELEV. 1228.35
PVI 290+25.00 ELEV. 1224.06
PVT 291+00.00 ELEV. 1223.79
PROFILE GRADE
EXISTING GROUND
VC=150.00' K 120.97
VC=250.00' K 89.61
VC=150.00' K 110.29
-0.17%
1.07%
1.72%
0.36%
-2.63% LT. DT.
-0.79% LT. DT.
1.16% LT. DT.
+25.00 LT. 1220.67
+37.00 LT. 1217.72
+47.00 LT. 1216.06
+00.00 LT. 1218.28
+10.81 LT. 1219.57
C.L. COLLECTOR-DISTRIBUTOR ROAD STA. 291+10.81, 77.50' RT.
C.L. TEMP. C-D RD. TO SB I-49 DETOUR STA. 291+10.81, 7.50' RT. ELEV. 1223.75
STA. 287+04 PROP F.L. = 1217.84 LT.
STA. 287+14 PROP F.L. = 1224.96 RT. PROP F.L. = 1220.95 LT.
STA. 283+40 PROP F.L. = 1217.70 LT.
STA. 285+08 PROP F.L. = 1216.13 LT.

REFER TO SURVEY CONTROL DETAIL SHEETS FOR HORIZONTAL AND VERTICAL CONTROL DATA

STATE OF ARKANSAS
LICENSED PROFESSIONAL ENGINEER
No. 13653
ADAM E. WIERCIAK
3/25/16

AEWiercIak 3/20/2016 11:56:56 AM
WORKSPACE: AHTD
L:\20IN\10I707 - I-540 Widening & Interchange Improvement\Drawings\rBB0414_PP_Temp_CD toSBI-49_0L.dgn
REVISED DATE:

DATE REVISED	DATE FILMED	DATE REVISED	DATE FILMED	FED. RD. DIST. NO.	STATE	FED. AID PROJ. NO.	SHEET NO.	TOTAL SHEETS
				6	ARK.			
				JOB NO.		BB0414	319	886

(2) PLAN & PROFILE - TEMP. C-D RD. TO HWY. 112 RAMP

TEMP. C-D RD. TO HWY. 112 RAMP

C.L. TEMP. C-D RD. TO HWY. 112 RAMP STA. 283+46.28 =
C.L. COLLECTOR-DISTRIBUTOR RD. STA. 283+31.41

PC 283+46.28

TEMP. C-D RD. TO HWY. 112 RAMP
PI = 290+18.71
Δ = 144°58'13" LT.
D = 27°00'00"
T = 672.42'
L = 536.93'
PC= 283+46.28
PT= 288+83.21
e = MATCH EX.
Ls = 300'

CONSTRUCTION LIMITS

C.L. TEMP. C-D RD. TO HWY. 112 RAMP STA. 288+83.21 =
C.L. TEMP C-D RD. TO SB I-49 DETOUR STA. 288+83.21
16.50' LT.

C.L. TEMP. C-D RD. TO SB I-49 RAMP

HWY. 112 RAMP 4

N. SHILOH DR.

RET WALL

CURB

PT 284+43.99

PC 287+17.97

PI 287+06.31

PT 288+83.21

PT 291+10.81

PC 293+98.09

PI 296+48.30

NOSE +97.54 7.50' RT.

NOSE +98.15 28.59' LT.

PC 290+18.71

PC 283+94.33

STA. 286+89.44 MATCH EX. SUPERELEVATION (0.100'/')
STA. 287+26.60 MAX. SUPERELEVATION (0.100'/')
STA. 290+26.60 END SUPERELEVATION

NOTCH & WIDEN +02.90 +89.44

PVI 286+89.44
ELEV. 1225.89

PROFILE GRADE

1.01%

-0.82%

PVI 288+00.00
ELEV. 1227.01

VC=100.00'
K 54.64

PVC 287+50.00
ELEV. 1226.50

C.L. TEMP. C-D RD. TO HWY. 112 RAMP
STA. 288+50.00, 7.50' RT.
ELEV. 1226.60

C.L. TEMP. C-D RD. TO SB I-49 RAMP
STA. 288+49.18, 11.99' LT.
ELEV. 1226.60

REFER TO SURVEY CONTROL DETAIL SHEETS FOR HORIZONTAL AND VERTICAL CONTROL DATA

STATE OF ARKANSAS
LICENSED PROFESSIONAL ENGINEER
No. 13653
ADAM E. WIERCIAK
3/23/16

1270 1260 1250 1240 1230 1220 1210 1200 1190 1180

283+00 284+00 285+00 286+00 287+00 288+00 289+00 290+00 291+00 292+00

AEWerclok 3/20/2016 11:56:56 AM
WORKSPACE: AHTD
L:\2011\101707 - I-540 Widening & Interchange Improvement\Drawings\r-BB0414_PP_Temp.CD to Hwy 112.dgn
REVISED DATE:

DATE REVISED	DATE FILMED	DATE REVISED	DATE FILMED

FED. RD. DIST. NO.	STATE	FED. AID PROJ. NO.	SHEET NO.	TOTAL SHEETS
6	ARK.			
JOB NO.		BB0414	320	886

2 P&P - TEMP. NB I-49 TO HWY. 71B RAMP

C.L. TEMP. NB I-49 TO HWY. 71B RAMP
PI = 308+58.92
Δ = 5°07'46" RT.
D = 5°35'19"
T = 45.92'
L = 91.79'
PC= 308+13.00
PT= 309+04.79
e = MATCH EX.
Ls = MATCH EX.

C.L. TEMP. NB I-49 TO HWY. 71B RAMP
PI = 311+61.66
Δ = 9°15'17" RT.
D = 3°45'00"
T = 123.66'
L = 246.79'
PC= 310+38.00
PT= 312+84.79
e = 0.049'/' *
Ls = 250'

* 0.049'/' UTILIZED TO AVOID GORE BREAKOVER ISSUES WITH I-49

I-49 STA. 313+36 IN PLACE
DBL. 6' X 3' X 98' R.C. BOX CULVERT
8°38'17" RT. FWD. SKEW
WITH 3:1 WINGS LT. & RT.
RETAIN AND EXTEND 23' RT.
2° LT. FWD. SKEW
PROVIDE TEMPORARY 4.2' GAP IN BOX CULVERT FOR STAGE DRAINAGE
Q50 = 70 CFS DA = 22.2 ACRES

STA. 315+53 CONSTRUCT
24" X 79' TEMPORARY CULVERT
45° LT. FWD. SKEW
Q50 = 15 CFS DA = 2.1 ACRES

C.L. TEMP. NB I-49 TO HWY. 71B RAMP
PI = 319+17.03
Δ = 40°05'09" LT.
D = 12°00'00"
T = 174.19'
L = 334.05'
PC= 317+42.84
PT= 320+76.89
e = 0.070'/' *
Ls = 300'

* 0.070'/' UTILIZED TO CORRECTLY TIE INTO SUPERELEVATION WITH NB I-49 TO HWY. 71B RAMP

APPROXIMATE FEMA 100 YR. FLOODPLAIN LIMITS

EXIST. SB I-49 TO HWY. 71B

EX. NB I-49

EX. NB I-49 TO HWY. 71B

PR. NB I-49

C.L. TEMP. EX. NB I-49 TO PR. I-49 RAMP

C.L. TEMP. NB I-49 TO HWY. 71B RAMP

C.L. TEMP. NB I-49 TO HWY. 71B RAMP STA. 320+76.89 = C.L. NB I-49 TO HWY. 71B RAMP STA. 320+76.89

C.L. I-49 STA. 308+15.75, 138.95' LT. = C.L. TEMP NB I-49 TO HWY. 71B RAMP STA. 308+13.00

CONSTRUCTION LIMITS

C.L. NB I-49 TO HWY. 71B RAMP

C.L. HWY. 112 TO HWY. 71B

PROP. R/W & C/A

TEMP. NB I-49 TO HWY. 71B RAMP

STA. 310+48.91 MATCH EX. (0.042'/')
STA. 311+00.50 MAX. SUPERELEVATION (0.049'/')
STA. 312+22.29 MAX. SUPERELEVATION (0.049'/')
STA. 314+72.29 END SUPERELEVATION

STA. 315+17.84 BEGIN SUPERELEVATION
STA. 318+17.84 MAX. SUPERELEVATION (0.070'/')
STA. 319+09.85 MAX. SUPERELEVATION (0.070'/')

TEMPORARY WIDENING

NOTCH & WIDEN

PVI 312+83.27 ELEV. 1225.71
PVC 313+25.00 ELEV. 1226.21
PVI 314+00.00 ELEV. 1227.11
PVT 314+75.00 ELEV. 1227.53
PVC 316+00.00 ELEV. 1228.23
PVT 319+00.00 ELEV. 1234.24
PVI 317+50.00 ELEV. 1229.07

C.L. NB I-49 TO HWY. 71B RAMP STA. 319+08.80, 11.50' LT.
C.L. TEMP. NB I-49 TO HWY. 71B RAMP STA. 319+09.85, 7.50' LT. ELEV. 1234.58

VC=150.00' K 234.38
VC=300.00' K 103.81

PROFILE GRADE
EXISTING GROUND

1.20%
0.56%
3.45%
2.64%
1.43% RIGHT DITCH GRADE
2.99% RT. DT.
2.82% LT. DT.

STA. 313+36
EX. F.L. 1218.95 (RT.)
PROP F.L. 1219.23 (RT.)

STA. 315+53
PROP F.L. 1222.22 (LT.)
PROP F.L. 1221.90 (RT.)

+83.00 RT. 1220.47
+30.05 RT. 1219.23
+42.71 RT. 1219.23
+30.00 RT. 1221.90
+80.00 LT. 1222.22
+00.00 LT. 1225.61
+00.00 RT. 1226.99

REFER TO SURVEY CONTROL DETAIL SHEETS FOR HORIZONTAL AND VERTICAL CONTROL DATA

STATE OF ARKANSAS
LICENSED PROFESSIONAL ENGINEER
No. 13653
ADAM E. WIERCIAK
3/25/16

AEWierciak 3/20/2016 11:56:56 AM
WORKSPACE: AHTD
L:\20IN\101707 - I-540 Widening & Interchange Improvement\Drawings\rBB0414_PP_Temp_NB49 toHwy71B_01.dgn
REVISED DATE:

DATE REVISED	DATE FILMED	DATE REVISED	DATE FILMED	FED. RD. DIST. NO.	STATE	FED. AID PROJ. NO.	SHEET NO.	TOTAL SHEETS
				6	ARK.			
				JOB NO.		BB0414	321	886

2 P&P - TEMP. EX. NB I-49 TO PR. I-49 RAMP

C.L. TEMP. EX. NB I-49 TO PR. I-49 RAMP
PI = 320+22.23
Δ = 62°29'03" LT.
D = 6°30'00"
T = 534.72'
L = 961.29'
PC= 314+87.51
PT= 324+48.80
e = 0.100'/'
Ls = N/A

C.L. TEMP. EX. NB I-49 TO PR. I-49 RAMP
PI = 324+54.54
Δ = 0°35'40" LT.
D = 5°10'44"
T = 5.74'
L = 11.48'
PC= 324+48.80
PT= 324+60.28
e = 0.100'/'
Ls = N/A

C.L. TEMP. EX. NB I-49 TO PR. I-49 RAMP STA. 314+87.51 = C.L. MEDIAN I-49 STA. 314+76.73, 86.00' LT.

C.L. TEMP. EX. NB I-49 TO PR. I-49 RAMP STA. 324+60.28 = C.L. MEDIAN I-49 STA. 324+60.28, 15.00' RT.

TEMP. EX. NB I-49 TO PR. I-49 RAMP

STA. 320+00.78 MATCH EXISTING SUPERELEVATION (0.100'/')
STA. 324+60.28 MAX. SUPERELEVATION (0.100'/')

STATE OF ARKANSAS
LICENSED PROFESSIONAL ENGINEER
No. 13653
ADAM E. WIERCIAK
3/29/16

REFER TO SURVEY CONTROL DETAIL SHEETS FOR HORIZONTAL AND VERTICAL CONTROL DATA

AEWierciak 3/20/2016 11:56:56 AM
WORKSPACE: AHTD
L:\2016\101707 - I-540 Widening & Interchange Improvement\Drawings\r-BB0414_PP_Temp_EXtoPR_NB49.dgn
REVISED DATE:

DATE REVISED	DATE FILMED	DATE REVISED	DATE FILMED	FED. RD. DIST. NO.	STATE	FED. AID PROJ. NO.	SHEET NO.	TOTAL SHEETS
				6	ARK.			
				JOB NO.		BB0414	322	886

2 PLAN & PROFILE - TEMP. HWY. 71B TO NB I-49 RAMP

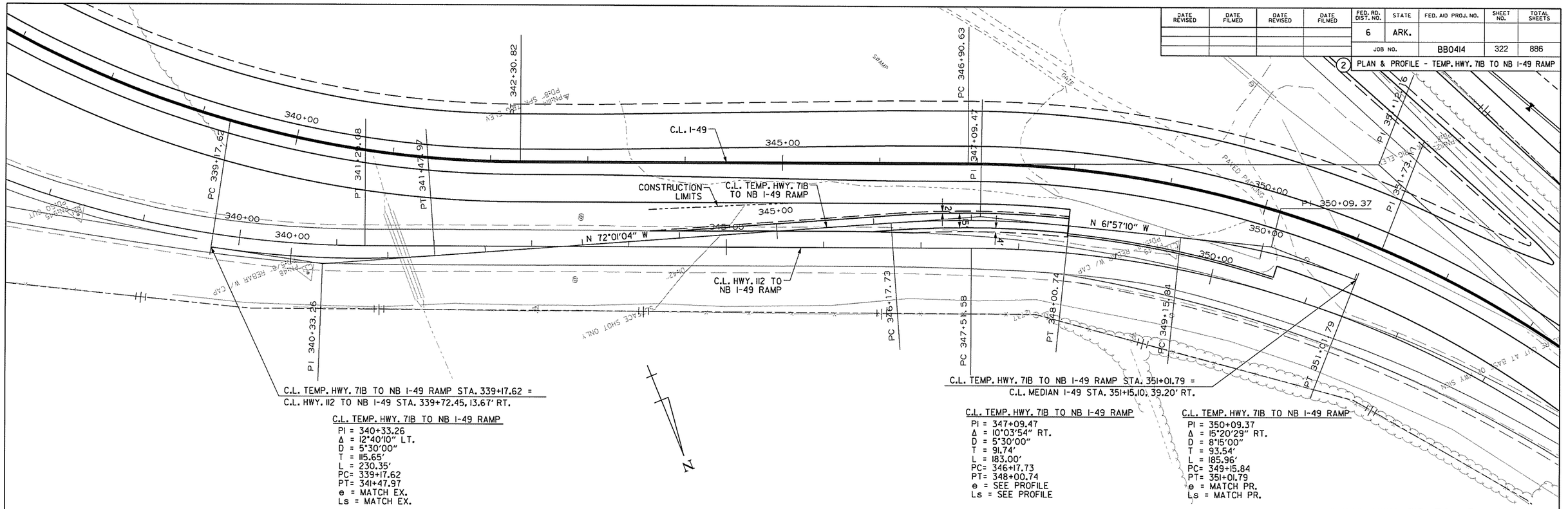

C.L. TEMP. HWY. 71B TO NB I-49 RAMP
PI = 340+33.26
Δ = 12°40'10" LT.
D = 5°30'00"
T = 115.65'
L = 230.35'
PC= 339+17.62
PT= 341+47.97
e = MATCH EX.
Ls = MATCH EX.

C.L. TEMP. HWY. 71B TO NB I-49 RAMP
PI = 347+09.47
Δ = 10°03'54" RT.
D = 5°30'00"
T = 91.74'
L = 183.00'
PC= 346+17.73
PT= 348+00.74
e = SEE PROFILE
Ls = SEE PROFILE

C.L. TEMP. HWY. 71B TO NB I-49 RAMP
PI = 350+09.37
Δ = 15°20'29" RT.
D = 8°15'00"
T = 93.54'
L = 185.96'
PC= 349+15.84
PT= 351+01.79
e = MATCH PR.
Ls = MATCH PR.

TEMP. HWY. 71B TO NB I-49 RAMP

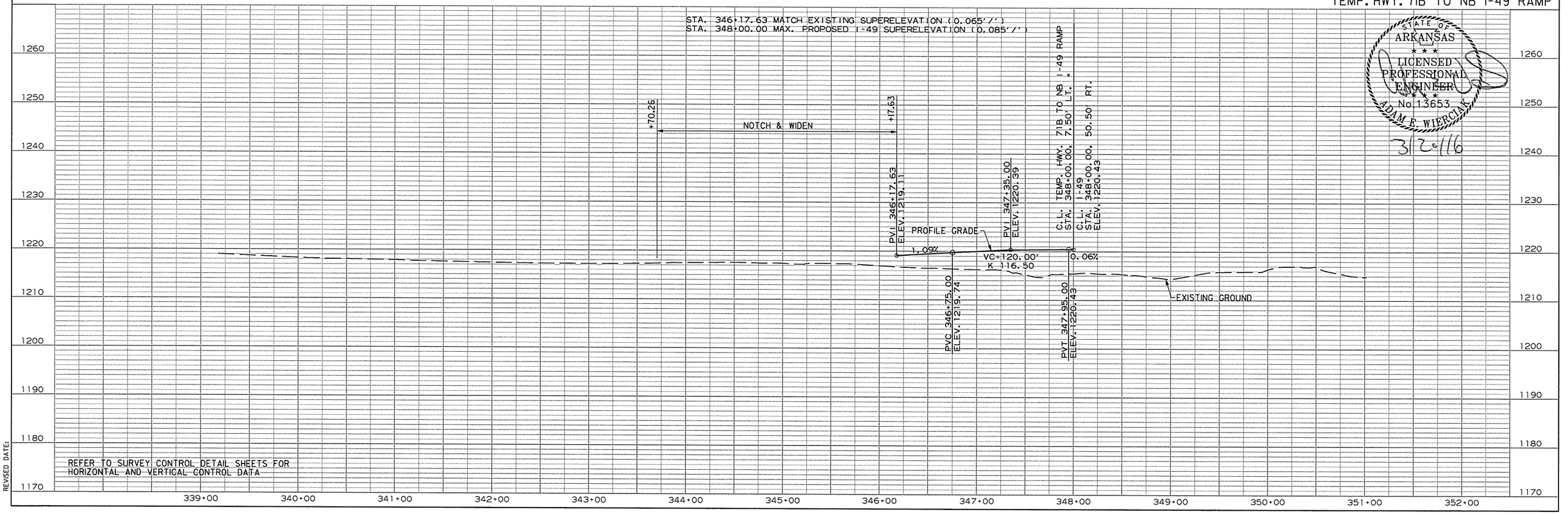

REFER TO SURVEY CONTROL DETAIL SHEETS FOR HORIZONTAL AND VERTICAL CONTROL DATA

STATE OF ARKANSAS
LICENSED PROFESSIONAL ENGINEER
No. 13653
ADAM E. WIERCIAK
3/20/16

AEWiarciak 3/20/2016 11:56:57 AM
WORKSPACE: AHTD
L:\2016\160707 - I-540 Widening & Interchange Improvement\Drawings\rBB0414_PP_Temp_Hwy71B to NB49.dgn
REVISED DATE:

DATE REVISED	DATE FILMED	DATE REVISED	DATE FILMED

FED. RD. DIST. NO.	STATE	FED. AID PROJ. NO.	SHEET NO.	TOTAL SHEETS
6	ARK.			
JOB NO.		BB0414	323	886

(2) PLAN & PROFILE - TEMP. SB I-49 TO C-D RD. RAMP

STATE OF ARKANSAS
LICENSED PROFESSIONAL ENGINEER
ADAM E. WIERCIAK
No. 13653
3/23/16

TEMP. SB I-49 TO C-D RD. RAMP
PI = 307+86.05
Δ = 1°05'21" LT.
D = 2°30'52"
T = 21.66'
L = 43.32'
PC= 307+64.39
PT= 308+07.70
e = SEE PROFILE
Ls = SEE PROFILE

TEMP. SB I-49 TO C-D RD. RAMP
PI = 309+60.72
Δ = 24°51'03" LT.
D = 8°15'00"
T = 153.02'
L = 301.22'
PC= 308+07.70
PT= 311+08.92
e = MATCH EX.
Ls = MATCH EX.

C.L. TEMP. SB I-49 TO C-D RD. RAMP STA. 306+38.86 =
C.L. C-D ROAD STA. 306+38.86, 13.17' LT.

C.L. TEMP. SB I-49 TO C-D RD. RAMP STA. 311+08.92 =
C.L. C-D ROAD STA. 311+04.41, 63.04' LT.

PAVED PARKING
APPROXIMATE FEMA 100 YR. FLOODPLAIN LIMITS
300' TAPER
+87.16
300+00
28'
381
C.L. COLLECTOR-DISTRIBUTOR RD.
305+00
POB 306+38.86
36' STAGE 2B PAVEMENT WIDTH (34' TRAFFIC, 2' P.C.C.B)
PC 304+95.21
PI 305+67.04
PT 306+38.86
PC 307+64.39
PI 307+86.05
PC 308+07.70
CONSTRUCTION LIMITS
C.L. TEMP. SB I-49 TO C-D RD. RAMP
N 69°23'24" E
+00.00
24.67 RT.
11'-4"
N 68°18'03" E
N 43°27'01" E
310+00
6'
PT 311+08.92
EX. SB I-49
EXIST. SB I-49 TO HWY. 71B
STAGE 2B STRIPING (TYP.)
PC 313+41.74
PI 314+30.15
315+00
PI 309+60.72
EX. SB HWY. 71B
PT 297+90.56
PC
305+00

STA. 307+00.00 MATCH C-D SUPERELEVATION (0.034'/')
STA. 308+00.00 MATCH EX. SUPERELEVATION (0.057'/')

C.L. COLLECTOR-DISTRIBUTOR ROAD
STA. 307+00.00, 7.50' RT.
ELEV. 1224.45
C.L. TEMP. SB I-49 TO C-D RD. RAMP
STA. 307+00.00, 20.67' RT.
PVI 307+50.00
ELEV. 1224.11
PVT 308+00.00
ELEV. 1224.02
VC=100.00'
K 200.36
-0.68%
-0.18%
PROFILE GRADE
EXISTING GROUND

REFER TO SURVEY CONTROL DETAIL SHEETS FOR HORIZONTAL AND VERTICAL CONTROL DATA

1270 1260 1250 1240 1230 1220 1210 1200 1190 1180

305+00 306+00 307+00 308+00 309+00 310+00 311+00

AEWierciak 3/20/2016 11:56:57 AM
WORKSPACE: AHTD
L:\20\NIO\7707 - I-540 Widening & Interchange Improvement\Drawings\rBB0414_PP_Temp_SBI-49 to CD Rd_01.dgn
REVISED DATE:

TRAFFIC SIGNAL NOTES

1. PERFORM ELECTRICAL WORK IN ACCORDANCE WITH THE CURRENT EDITIONS OF THE NFPA 70 (2014) NATIONAL ELECTRICAL CODE, NFPA 101 (2012) LIFE SAFETY CODE, STATE ELECTRICAL CODE AND LOCAL ELECTRICAL CODE.
2. EXTEND GREEN EQUIPMENT GROUNDING CONDUCTOR (EGC) FROM GROUND BAR AT MAIN BREAKER TO CONTROL PANEL AND TO FIRST POLE. SOLIDLY BOND EGC TO GROUND LUG OF CONTROL CABINET AND TO POLE GROUND. ENSURE THAT ONLY ONE NEUTRAL-TO-GROUND BOND EXISTS IN THE SYSTEM AND THAT IT IS AT THE MAIN BREAKER.
3. ELECTRICAL SERVICE SHALL BE PROVIDED BY THE CITY TO A SERVICE POLE WITH EXTERNAL RAINTIGHT BREAKER (MAIN BREAKER, GALVANIZED STEEL SERVICE RISER, METER LOOP (IF REQUIRED), AND WEATHERHEAD AT A MUTUALLY ACCEPTABLE POINT WITHIN THE RIGHT-OF-WAY. IF THE SERVICE POINT IS OVER 10 FEET FROM THE CONTROLLER, THE CONTRACTOR SHALL PROVIDE AND INSTALL A SEPARATE TWO CIRCUIT EXTERNAL BREAKER (SECONDARY BREAKER) ON OR NEAR THE TRAFFIC SIGNAL CONTROLLER CABINET AND SHALL INSTALL CONDUIT, ELECTRICAL SERVICE WIRE (2c/#6 USE RATED, WITH GROUND TYPICAL), AND PERFORM WIRING TO TAP INTO THE CITY'S MAIN BREAKER AS PART OF THIS CONTRACT. CONDUIT IS PAID FOR AS A SEPARATE ITEM OF THIS CONTRACT. TWO CIRCUIT BREAKERS, CONSIDERED SUBSIDIARY TO THE CONTROL EQUIPMENT, ARE NEEDED WHERE STREET LIGHTING IS INCLUDED. AS PART OF THE SIGNAL INSTALLATION, STREET LIGHTING CIRCUIT (2c/#12 AWG UF RATED, TYPICAL) SHALL BE KEPT FROM THE CIRCUIT SERVING THE TRAFFIC SIGNAL CONTROL EQUIPMENT FROM THE POINT OF TIE-IN AT THE SECONDARY BREAKER PROVIDED BY THE CONTRACTOR.
4. CONTRACTOR SHALL CONNECT A SEPARATE NEUTRAL FOR EACH LOAD SWITCH REPRESENTED ON EACH SIGNAL POLE.
5. TRAFFIC CONTROLLER CABINET AND LAYOUT SHALL BE SUCH THAT IT IS NOT NECESSARY TO SHUT DOWN POWER OR REMOVE LOAD SWITCHES IN ORDER TO EASILY TEST OR MODIFY DETECTOR INPUTS TO THE CONTROLLER.
6. CONTROLLER CABINET SHALL BE WIRED SUCH THAT DURING FLASH OPERATIONS POWER TO THE LOAD SWITCHES CANNOT BACKFEED TO LOAD SWITCH POWER BUSS.
7. ALL PARTS OF THIS INSTALLATION SHALL BE IN ACCORDANCE WITH THE ARKANSAS HIGHWAY AND TRANSPORTATION DEPARTMENT STANDARDS AND DETAILS AND WITH THE MANUAL ON UNIFORM TRAFFIC CONTROL DEVICES, CURRENT EDITIONS.
8. CONDUIT INSTALLED UNDER ROADWAY SURFACES SHALL BE INSTALLED BY PUSHING OR BORING METHODS. IF THE ENGINEER DETERMINES THIS IS NOT FEASIBLE, THEN A TRENCHING METHOD AS SHOWN IN THE DETAILS MAY BE USED.
9. TRAFFIC SIGNAL POLES SHALL BE GALVANIZED. BACKPLATES SHALL BE SUPPLIED FOR ALL SIGNAL HEADS.
10. PAVEMENT MARKING SHOWN FOR REFERENCE ONLY. SEE PAVEMENT MARKING PLAN SHEETS.
11. FOUNDATION FOR ALL POLES SHALL BE EXTENDED IF NECESSARY TO ACCOMMODATE THE REQUIREMENTS FOR SIGNAL HEAD CLEARANCE ABOVE ROADWAY ONLY AT LOCATIONS WHERE THE GROUND ELEVATION AT THE POLE IS BELOW THE ELEVATION OF THE ROADWAY (SEE NOTES ON SPECIAL DETAILS). PAYMENT WILL BE INCLUDED IN SECTION 714, AHTD STANDARD SPECIFICATIONS FOR HIGHWAY CONSTRUCTION.
12. ALL BOXES SHALL BE (TYPE 2 HD) UNLESS OTHERWISE INDICATED. ALL CONDUIT SHALL BE 3" DIAMETER UNLESS SPECIFIED ON PLANS.
13. CONTRACTOR SHALL NOTIFY ALL EXISTING UTILITY OWNERS BEFORE BEGINNING WORK ON THIS PROJECT.
14. LUMINAIRE ASSEMBLIES SHALL BE OF THE FULL CUTOFF TYPE.
15. HARDWARE INPUTS MAY BE DETERMINED BY SUPPLIER. EACH DETECTOR OUTPUT SHALL INPUT THE CONTROLLER THROUGH A SEPARATE INPUT UNLESS OTHERWISE NOTED AND BE PROGRAMMED TO ACTUATE THE ASSOCIATED PHASE. COMBINATION (COMB.) DETECTORS SHALL ALSO BE PROGRAMMED TO PROVIDE VEHICLE COUNT/OCCUPANCY DATA.
16. THE LOCAL RADIO WITH ANTENNA SHALL BE COMPATIBLE WITH THE EXISTING CLOSED LOOP SYSTEM IN THE CITY.
17. TO DETERMINE UTILITY CLEARANCES ABOVE THE TRAFFIC SIGNAL POLE, REFER TO THE POLE SCHEDULE FOR VERTICAL SHAFT HEIGHT. WHERE THE POLE SCHEDULE INDICATES THAT A LUMINAIRE ARM WILL BE USED, 38 FEET SHOULD BE USED TO DETERMINE UTILITY CLEARANCE ABOVE THE LUMINAIRE ARM. WHERE THE POLE SCHEDULE INDICATES A TRAFFIC SIGNAL POLE WITHOUT A LUMINAIRE ARM, A HEIGHT OF 21 FEET SHOULD BE USED TO DETERMINE UTILITY CLEARANCE ABOVE THE TRAFFIC SIGNAL MAST ARM. AN ADDITIONAL 6 FEET SHOULD BE USED DIRECTLY ABOVE "VIDEO DETECTOR" AT LOCATIONS SHOWN ON THE SIGNAL PLANS.
18. THE DESIRABLE MINIMUM DISTANCE FROM THE FACE OF ROADWAY CURB OR SHOULDER EDGE TO THE FACE OF NON-BREAKAWAY POLE OR OBSTRUCTION IS 6 FEET. REFER TO TRAFFIC SIGNAL PLANS FOR SPECIFIC LOCATION OF POLES, CONTROLLER AND ANY OTHER NON-BREAKAWAY OBSTRUCTIONS. REFER TO "DESIGN PARAMETERS, MINIMUM CLEAR ZONE DISTANCE" FOR MINIMUM DISTANCE FROM THE EDGE OF TRAVELED WAY TO THE FACE OF A NON-BREAKAWAY POLE OR OBSTRUCTION. TRAFFIC SIGNAL POLES OR ANY OTHER NON-BREAKAWAY OBSTRUCTION SHALL NOT BE INSTALLED WITHIN THE CLEAR ZONE.
19. AS DETERMINED BY THE ENGINEER, FOUNDATION EMBEDMENT MAY BE DECREASED BY A MAXIMUM OF TWO FEET IF COMPETENT ROCK IS ENCOUNTERED PRIOR TO ACHIEVING PLAN EMBEDMENT AND AT LEAST HALF OF THE REMAINING PLAN EMBEDMENT IS KEYED INTO COMPETENT ROCK.
20. CONNECTION OF TRAFFIC SIGNAL DISPLAY TO FIELD WIRING SHALL UTILIZE AN APPROVED TERMINAL STRIP BEHIND HANDHOLE COVER AT BASE OF POLE. TERMINAL STRIP SHALL PROVIDE PROTECTION TO PREVENT EXPOSURE TO THE PUBLIC IN THE EVENT THAT POLE COVER IS MISSING. PAYMENT FOR TERMINAL STRIPS SHALL BE INCLUDED IN ITEM 714-TRAFFIC SIGNAL MAST ARM POLE WITH FOUNDATION.
21. CONTROLLER CABINET LAYOUT AND ORIENTATION SHALL CONFORM TO IMSA STANDARDS.
22. ONE VIDEO PROGRAMMING MODULE SHALL BE PROVIDED FOR AIMING AND SETUP OF DETECTORS IF THE VIDEO SYSTEM CANNOT BE ADJUSTED THROUGH HARDWARE AND SOFTWARE PROVIDED BY ITEMS WITHIN THE JOB.
23. TRAFFIC SIGNAL CONTRACTOR MUST NOTIFY RESIDENT ENGINEER OR ASSIGNED DEPARTMENT PROJECT INSPECTOR EACH DAY PRIOR TO SIGNAL RELATED WORK. NO WORK ON TRAFFIC SIGNALS WILL BE ALLOWED OR APPROVED WITHOUT THIS PRIOR NOTIFICATION.
24. ALL STEEL POLES SHALL BE DESIGNED TO MEET THE AASHTO STANDARD SPECIFICATIONS FOR STRUCTURAL SUPPORTS FOR HIGHWAY SIGNS, LUMINAIRES, AND TRAFFIC SIGNALS, 4TH EDITION (2001) WITH 2003 AND 2006 INTERIMS.
25. DOOR PANEL TEST PUSH BUTTONS SHALL ACTUATE INDICATED PHASES. DETECTOR ASSIGNMENTS AND/OR SIDE PANEL JUMPERS MAY REQUIRE MODFICATION.
26. NEW TRAFFIC SIGNALS MUST BE OPERATIONAL PRIOR TO REMOVAL OF EXISTING SIGNALS.
27. TRAFFIC SIGNAL EQUIPMENT REMOVED FROM THE INTERSECTIONS SHALL BE THE PROPERTY OF THE CITY OF FAYETTEVILLE. (SEE SPECIAL PROVISION)
28. ALL SYSTEM DETECTOR RACKS AND ASSOCIATED EQUIPMENT SHALL BE PROTECTED BY THE MAIN CONTROLLER CABINET POWER SURGE PROTECTION.

DATE REVISED	DATE FILMED	DATE REVISED	DATE FILMED	FED.RD. DIST.NO.	STATE	FED.AID PROJ.NO.	SHEET NO.	TOTAL SHEETS
				6	ARK.			
				JOB NO.		BB0414	324	886
				(2)	TRAFFIC SIGNAL NOTES AND SUMM. OF QUANT.			

STATE OF ARKANSAS
REGISTERED PROFESSIONAL ENGINEER
No. 8141
NICCI D. TINER
3-20-16

SUMMARY OF TRAFFIC SIGNAL QUANTITIES

ITEM NO.	ITEM	TRUCKERS DR. AT HWY. 112	SB I-49 RAMP AT HWY. 112	NB I-49 RAMP AT HWY. 112	DRAKE ST. AT HWY. 112	TOTAL	UNIT	
SP & 701	SYSTEM LOCAL CONTROLLER TS 2-TYPE 2 (8 PHASES)	1	1	1	1	4	EACH	
SP & 706	TRAFFIC SIGNAL HEAD, LED, (3 SECTION, 1 WAY)	8	10	8	11	37	EACH	
SP & 706	TRAFFIC SIGNAL HEAD, LED, (4 SECTION, 1 WAY)	4	1	1	2	8	EACH	
SP & 707	COUNTDOWN PEDESTRIAN SIGNAL HEAD, LED	8	6	6	2	22	EACH	
708	TRAFFIC SIGNAL CABLE (5C/14 A.W.G.)	1299	1601	1484	964	5348	LIN. FT.	
708	TRAFFIC SIGNAL CABLE (7C/14 A.W.G.)	176	65	77	86	404	LIN. FT.	
708	TRAFFIC SIGNAL CABLE (12C/14 A.W.G.)	166	465	475	263	1369	LIN. FT.	
708	TRAFFIC SIGNAL CABLE (20C/14 A.W.G.)	489	354	17	313	1173	LIN. FT.	
709	GALVANIZED STEEL CONDUIT (1.25")	25	24	25	26	100	LIN. FT.	
710	NON-METALLIC CONDUIT (2")	40	84	34	29	187	LIN. FT.	
710	NON-METALLIC CONDUIT (3")	527	496	400	507	1930	LIN. FT.	
711	CONCRETE PULL BOX (TYPE 1)	0	1	0	0	1	EACH	
711	CONCRETE PULL BOX (TYPE 2)	0	2	2	1	5	EACH	
711	CONCRETE PULL BOX (TYPE 1 HD)	0	1	0	0	1	EACH	
711	CONCRETE PULL BOX (TYPE 2 HD)	10	4	4	6	24	EACH	
714	TRAFFIC SIGNAL MAST ARM AND POLE WITH FOUNDATION (28')	0	0	0	1	1	EACH	
714	TRAFFIC SIGNAL MAST ARM AND POLE WITH FOUNDATION (38')	1	0	0	1	2	EACH	
714	TRAFFIC SIGNAL MAST ARM AND POLE WITH FOUNDATION (44')	1	1	0	0	2	EACH	
714	TRAFFIC SIGNAL MAST ARM AND POLE WITH FOUNDATION (46')	0	0	0	2	2	EACH	
714	TRAFFIC SIGNAL MAST ARM AND POLE WITH FOUNDATION (48')	1	0	0	0	1	EACH	
714	TRAFFIC SIGNAL MAST ARM AND POLE WITH FOUNDATION (52')	1	1	0	0	2	EACH	
714	TRAFFIC SIGNAL MAST ARM AND POLE WITH FOUNDATION (54')	0	0	1	0	1	EACH	
714	TRAFFIC SIGNAL MAST ARM AND POLE WITH FOUNDATION (42'-32')	0	1	0	0	1	EACH	
714	TRAFFIC SIGNAL MAST ARM AND POLE WITH FOUNDATION (66'-38')	0	0	1	0	1	EACH	
715	TRAFFIC SIGNAL PEDESTAL POLE WITH FOUNDATION	4	4	4	2	14	EACH	
SP & 733	VEHICLE DETECTOR RACK (16 CHANNEL)	1	0	1	1	3	EACH	
SP & 733	VEHICLE DETECTOR RACK (20 CHANNEL)	0	1	0	0	1	EACH	
733	VIDEO CABLE	1220	1175	757	1243	4395	LIN. FT.	
SP & 733	VIDEO DETECTOR (CLR)	7	6	5	6	24	EACH	*
733	VIDEO MONITOR (CLR)	1	1	1	1	4	EACH	
SP & 733	VIDEO PROCESSOR, EDGE CARD (2 CAMERA)	5	3	3	4	15	EACH	
SP & 733	VIDEO EDGE CARD EXTENDER	0	2	1	0	3	EACH	*
SP	ANTENNA CABLE (TYPE 6)	52	48	47	50	197	LIN. FT.	
SP	ELECTRICAL CONDUCTORS-IN-CONDUIT (2C/6 A.W.G.)	25	24	25	26	100	LIN. FT.	
SP	ELECTRICAL CONDUCTORS-IN-CONDUIT (1C/8 A.W.G, E.G.C.)	638	668	466	653	2425	LIN. FT.	
SP	ELECTRICAL CONDUCTORS-IN-CONDUIT (1C/12 A.W.G, E.G.C.)	150	150	110	200	610	LIN. FT.	
SP	ELECTRICAL CONDUCTORS FOR LUMINAIRES	639	531	308	776	2254	LIN. FT.	
SP	LOCAL RADIO WITH ANTENNA	1	1	1	1	4	EACH	
SP	LED LUMINAIRE ASSEMBLY	3	3	2	4	12	EACH	
SP	REMOVAL OF TRAFFIC SIGNAL EQUIPMENT	0.25	0.25	0.25	0.25	1.00	L.S.	
SP	SERVICE POINT ASSEMBLY (2 CIRCUITS)	1	1	1	1	4	EACH	
SP	18" STREET NAME SIGN	4	3	3	4	14	EACH	

* ONE ADDITIONAL VIDEO DETECTOR AND ONE ADDITIONAL VIDEO PROCESSOR, EDGE CARD SHALL BE PROVIDED AT TRUCKERS DRIVE FOR FUTURE USE.

LOCATION: HWY. 112
CITY: FAYETTEVILLE
COUNTY: WASHINGTON
DISTRICT: 04 SCALE: 1"=NA" DRAWN BY: CEM

DATE: 03/14/16 FILE NAME: tBB0414_qty1.dgn

AEWierclok 3/20/2016 11:56:58 AM
WORKSPACE: AHTD
L:\2011\11017107 - I-540 Widening & Interchange Improvement\Drawings\tBB0414_qty1.dgn
REVISED DATE:

DATE REVISED	DATE FILMED	DATE REVISED	DATE FILMED	FED.RD. DIST.NO.	STATE	FED.AID PROJ.NO.	SHEET NO.	TOTAL SHEETS
				6	ARK.			
				JOB NO.		BB0414	325	886
				(2)	TRAFFIC SIGNAL QUANTITIES			

STATE OF ARKANSAS
REGISTERED PROFESSIONAL ENGINEER
No.8141
NICCI D. TINER

3-20-16

TRAFFIC SIGNAL QUANTITIES TRUCKERS DR. AT HWY. 112

ITEM NO.	ITEM	STAGE 1A	STAGE 2	TOTAL	UNIT	
SP & 701	SYSTEM LOCAL CONTROLLER TS 2-TYPE 2 (8 PHASES)	1	0	1	EACH	
SP & 706	TRAFFIC SIGNAL HEAD, LED, (3 SECTION, 1 WAY)	8	0	8	EACH	
SP & 706	TRAFFIC SIGNAL HEAD, LED, (4 SECTION, 1 WAY)	4	0	4	EACH	
SP & 707	COUNTDOWN PEDESTRIAN SIGNAL HEAD, LED	8	0	8	EACH	
708	TRAFFIC SIGNAL CABLE (5C/14 A.W.G.)	1299	0	1299	LIN. FT.	
708	TRAFFIC SIGNAL CABLE (7C/14 A.W.G.)	176	0	176	LIN. FT.	
708	TRAFFIC SIGNAL CABLE (12C/14 A.W.G.)	166	0	166	LIN. FT.	
708	TRAFFIC SIGNAL CABLE (20C/14 A.W.G.)	489	0	489	LIN. FT.	
709	GALVANIZED STEEL CONDUIT (1.25")	25	0	25	LIN. FT.	
710	NON-METALLIC CONDUIT (2")	40	0	40	LIN. FT.	
710	NON-METALLIC CONDUIT (3")	527	0	527	LIN. FT.	
711	CONCRETE PULL BOX (TYPE 2 HD)	10	0	10	EACH	
714	TRAFFIC SIGNAL MAST ARM AND POLE WITH FOUNDATION (38')	1	0	1	EACH	
714	TRAFFIC SIGNAL MAST ARM AND POLE WITH FOUNDATION (44')	1	0	1	EACH	
714	TRAFFIC SIGNAL MAST ARM AND POLE WITH FOUNDATION (48')	1	0	1	EACH	
714	TRAFFIC SIGNAL MAST ARM AND POLE WITH FOUNDATION (52')	1	0	1	EACH	
715	TRAFFIC SIGNAL PEDESTAL POLE WITH FOUNDATION	4	0	4	EACH	
SP & 733	VEHICLE DETECTOR RACK (16 CHANNEL)	1	0	1	EACH	
733	VIDEO CABLE	1220	0	1220	LIN. FT.	
SP & 733	VIDEO DETECTOR (CLR)	7	0	7	EACH	*
733	VIDEO MONITOR (CLR)	1	0	1	EACH	
SP & 733	VIDEO PROCESSOR, EDGE CARD (2 CAMERA)	5	0	5	EACH	*
SP	ANTENNA CABLE (TYPE 6)	52	0	52	LIN. FT.	
SP	ELECTRICAL CONDUCTORS-IN-CONDUIT (2C/6 A.W.G.)	25	0	25	LIN. FT.	
SP	ELECTRICAL CONDUCTORS-IN-CONDUIT (1C/8 A.W.G, E.G.C.)	638	0	638	LIN. FT.	
SP	ELECTRICAL CONDUCTORS-IN-CONDUIT (1C/12 A.W.G, E.G.C.)	150	0	150	LIN. FT.	
SP	ELECTRICAL CONDUCTORS FOR LUMINAIRES	639	0	639	LIN. FT.	
SP	LOCAL RADIO WITH ANTENNA	1	0	1	EACH	
SP	LED LUMINAIRE ASSEMBLY	3	0	3	EACH	
SP	REMOVAL OF TRAFFIC SIGNAL EQUIPMENT	0.00	0.25	0.25	L.S.	
SP	SERVICE POINT ASSEMBLY (2 CIRCUITS)	1	0	1	EACH	
SP	18" STREET NAME SIGN	4	0	4	EACH	

* ONE ADDITIONAL VIDEO DETECTOR AND ONE ADDITIONAL VIDEO PROCESSOR, EDGE CARD SHALL BE PROVIDED FOR FUTURE USE.

TRAFFIC SIGNAL QUANTITIES I-49 SB RAMPS AT HWY. 112

ITEM NO.	ITEM	STAGE 1A	STAGE 2	TOTAL	UNIT
SP & 701	SYSTEM LOCAL CONTROLLER TS 2-TYPE 2 (8 PHASES)	1	0	1	EACH
SP & 706	TRAFFIC SIGNAL HEAD, LED, (3 SECTION, 1 WAY)	10	0	10	EACH
SP & 706	TRAFFIC SIGNAL HEAD, LED, (4 SECTION, 1 WAY)	1	0	1	EACH
SP & 707	COUNTDOWN PEDESTRIAN SIGNAL HEAD, LED	6	0	6	EACH
708	TRAFFIC SIGNAL CABLE (5C/14 A.W.G.)	1601	0	1601	LIN. FT.
708	TRAFFIC SIGNAL CABLE (7C/14 A.W.G.)	65	0	65	LIN. FT.
708	TRAFFIC SIGNAL CABLE (12C/14 A.W.G.)	465	0	465	LIN. FT.
708	TRAFFIC SIGNAL CABLE (20C/14 A.W.G.)	354	0	354	LIN. FT.
709	GALVANIZED STEEL CONDUIT (1.25")	24	0	24	LIN. FT.
710	NON-METALLIC CONDUIT (2")	84	0	84	LIN. FT.
710	NON-METALLIC CONDUIT (3")	496	0	496	LIN. FT.
711	CONCRETE PULL BOX (TYPE 1)	1	0	1	EACH
711	CONCRETE PULL BOX (TYPE 2)	2	0	2	EACH
711	CONCRETE PULL BOX (TYPE 1 HD)	1	0	1	EACH
711	CONCRETE PULL BOX (TYPE 2 HD)	4	0	4	EACH
714	TRAFFIC SIGNAL MAST ARM AND POLE WITH FOUNDATION (44')	1	0	1	EACH
714	TRAFFIC SIGNAL MAST ARM AND POLE WITH FOUNDATION (52')	1	0	1	EACH
714	TRAFFIC SIGNAL MAST ARM AND POLE WITH FOUNDATION (42'-32')	1	0	1	EACH
715	TRAFFIC SIGNAL PEDESTAL POLE WITH FOUNDATION	4	0	4	EACH
SP & 733	VEHICLE DETECTOR RACK (20 CHANNEL)	1	0	1	EACH
733	VIDEO CABLE	1175	0	1175	LIN. FT.
SP & 733	VIDEO DETECTOR (CLR)	6	0	6	EACH
733	VIDEO MONITOR (CLR)	1	0	1	EACH
SP & 733	VIDEO PROCESSOR, EDGE CARD (2 CAMERA)	3	0	3	EACH
SP & 733	VIDEO EDGE CARD EXTENDER	2	0	2	EACH
SP	ANTENNA CABLE (TYPE 6)	48	0	48	LIN. FT.
SP	ELECTRICAL CONDUCTORS-IN-CONDUIT (2C/6 A.W.G.)	24	0	24	LIN. FT.
SP	ELECTRICAL CONDUCTORS-IN-CONDUIT (1C/8 A.W.G, E.G.C.)	668	0	668	LIN. FT.
SP	ELECTRICAL CONDUCTORS-IN-CONDUIT (1C/12 A.W.G, E.G.C.)	150	0	150	LIN. FT.
SP	ELECTRICAL CONDUCTORS FOR LUMINAIRES	531	0	531	LIN. FT.
SP	LOCAL RADIO WITH ANTENNA	1	0	1	EACH
SP	LED LUMINAIRE ASSEMBLY	3	0	3	EACH
SP	REMOVAL OF TRAFFIC SIGNAL EQUIPMENT	0.00	0.25	0.25	L.S.
SP	SERVICE POINT ASSEMBLY (2 CIRCUITS)	1	0	1	EACH
SP	18" STREET NAME SIGN	3	0	3	EACH

AEWierclok 3/20/2016 11:57:02 AM
WORKSPACE: AHTD
L:\201\100707 - I-540 Widening & Interchange Improvement\Drawings\tBB0414_qty2.dgn
REVISED DATE:

DATE: 03/09/16 FILE NAME: tBB0414_qty2.dgn

LOCATION: HWY. 112
CITY: FAYETTEVILLE
COUNTY: WASHINGTON
DISTRICT: 04 SCALE: 1"=NA" DRAWN BY: CEM

DATE REVISED	DATE FILMED	DATE REVISED	DATE FILMED	FED.RD. DIST.NO.	STATE	FED.AID PROJ.NO.	SHEET NO.	TOTAL SHEETS
				6	ARK.			
				JOB NO.		BB0414	326	886
				(2)	TRAFFIC SIGNAL QUANTITIES			

STATE OF ARKANSAS
REGISTERED PROFESSIONAL ENGINEER
No. 8441
NICCI D. TINER
3-20-16

TRAFFIC SIGNAL QUANTITIES I-49 NB RAMPS AT HWY. 112

ITEM NO.	ITEM	STAGE 1	STAGE 1A	STAGE 1B	STAGE 2	TOTAL	UNIT
SP & 701	SYSTEM LOCAL CONTROLLER TS 2-TYPE 2 (8 PHASES)	1	0	0	0	1	EACH
SP & 706	TRAFFIC SIGNAL HEAD, LED, (3 SECTION, 1 WAY)	7	0	0	1	8	EACH
SP & 706	TRAFFIC SIGNAL HEAD, LED, (4 SECTION, 1 WAY)	1	0	0	0	1	EACH
SP & 707	COUNTDOWN PEDESTR I AN SIGNAL HEAD, LED	1	0	3	2	6	EACH
708	TRAFFIC SIGNAL CABLE (5C/14 A.W.G.)	1414	0	33	37	1484	LIN. FT.
708	TRAFFIC SIGNAL CABLE (7C/14 A.W.G.)	77	0	0	0	77	LIN. FT.
708	TRAFFIC SIGNAL CABLE (12C/14 A.W.G.)	475	0	0	0	475	LIN. FT.
708	TRAFFIC SIGNAL CABLE (20C/14 A.W.G.)	17	0	0	0	17	LIN. FT.
709	GALVANIZED STEEL CONDUIT (1.25")	25	0	0	0	25	LIN. FT.
710	NON-METALLIC CONDUIT (2")	20	0	14	0	34	LIN. FT.
710	NON-METALLIC CONDUIT (3")	198	0	98	104	400	LIN. FT.
711	CONCRETE PULL BOX (TYPE 2)	0	0	1	1	2	EACH
711	CONCRETE PULL BOX (TYPE 2 HD)	3	0	1	0	4	EACH
714	TRAFFIC SIGNAL MAST ARM AND POLE WITH FOUNDATION (54')	1	0	0	0	1	EACH
714	TRAFFIC SIGNAL MAST ARM AND POLE WITH FOUNDATION (66'-38')	1	0	0	0	1	EACH
715	TRAFFIC SIGNAL PEDESTAL POLE WITH FOUNDATION	1	0	2	1	4	EACH
SP & 733	VEHICLE DETECTOR RACK (16 CHANNEL)	1	0	0	0	1	EACH
733	VIDEO CABLE	757	0	0	0	757	LIN. FT.
SP & 733	VIDEO DETECTOR (CLR)	5	0	0	0	5	EACH
733	VIDEO MONITOR (CLR)	1	0	0	0	1	EACH
SP & 733	VIDEO PROCESSOR, EDGE CARD (2 CAMERA)	3	0	0	0	3	EACH
SP & 733	VIDEO EDGE CARD EXTENDER	1	0	0	0	1	EACH
SP	ANTENNA CABLE (TYPE 6)	47	0	0	0	47	LIN. FT.
SP	ELECTRICAL CONDUCTORS-IN-CONDUIT (2C/6 A.W.G.)	25	0	0	0	25	LIN. FT.
SP	ELECTRICAL CONDUCTORS-IN-CONDUIT (1C/8 A.W.G, E.G.C.)	466	0	0	0	466	LIN. FT.
SP	ELECTRICAL CONDUCTORS-IN-CONDUIT (1C/12 A.W.G, E.G.C.)	110	0	0	0	110	LIN. FT.
SP	ELECTRICAL CONDUCTORS FOR LUMINAIRES	308	0	0	0	308	LIN. FT.
SP	LOCAL RADIO WITH ANTENNA	1	0	0	0	1	EACH
SP	LED LUMINAIRE ASSEMBLY	2	0	0	0	2	EACH
SP	REMOVAL OF TRAFFIC SIGNAL EQUIPMENT	0.00	0.25	0.00	0.00	0.25	L.S.
SP	SERVICE POINT ASSEMBLY (2 CIRCUITS)	1	0	0	0	1	EACH
SP	18" STREET NAME SIGN	3	0	0	0	3	EACH

TRAFFIC SIGNAL QUANTITIES DRAKE ST. AT HWY. 112

ITEM NO.	ITEM	STAGE 1A	STAGE 2	TOTAL	UNIT
SP & 701	SYSTEM LOCAL CONTROLLER TS 2-TYPE 2 (8 PHASES)	1	0	1	EACH
SP & 706	TRAFFIC SIGNAL HEAD, LED, (3 SECTION, 1 WAY)	11	0	11	EACH
SP & 706	TRAFFIC SIGNAL HEAD, LED, (4 SECTION, 1 WAY)	2	0	2	EACH
SP & 707	COUNTDOWN PEDESTR I AN SIGNAL HEAD, LED	2	0	2	EACH
708	TRAFFIC SIGNAL CABLE (5C/14 A.W.G.)	953	11	964	LIN. FT.
708	TRAFFIC SIGNAL CABLE (7C/14 A.W.G.)	86	0	86	LIN. FT.
708	TRAFFIC SIGNAL CABLE (12C/14 A.W.G.)	263	0	263	LIN. FT.
708	TRAFFIC SIGNAL CABLE (20C/14 A.W.G.)	313	0	313	LIN. FT.
709	GALVANIZED STEEL CONDUIT (1.25")	26	0	26	LIN. FT.
710	NON-METALLIC CONDUIT (2")	22	7	29	LIN. FT.
710	NON-METALLIC CONDUIT (3")	448	59	507	LIN. FT.
711	CONCRETE PULL BOX (TYPE 2)	0	1	1	EACH
711	CONCRETE PULL BOX (TYPE 2 HD)	6	0	6	EACH
714	TRAFFIC SIGNAL MAST ARM AND POLE WITH FOUNDATION (28')	1	0	1	EACH
714	TRAFFIC SIGNAL MAST ARM AND POLE WITH FOUNDATION (38')	1	0	1	EACH
714	TRAFFIC SIGNAL MAST ARM AND POLE WITH FOUNDATION (46')	2	0	2	EACH
715	TRAFFIC SIGNAL PEDESTAL POLE WITH FOUNDATION	1	1	2	EACH
SP & 733	VEHICLE DETECTOR RACK (16 CHANNEL)	1	0	1	EACH
733	VIDEO CABLE	1243	0	1243	LIN. FT.
SP & 733	VIDEO DETECTOR (CLR)	6	0	6	EACH
733	VIDEO MONITOR (CLR)	1	0	1	EACH
SP & 733	VIDEO PROCESSOR, EDGE CARD (2 CAMERA)	4	0	4	EACH
SP	ANTENNA CABLE (TYPE 6)	50	0	50	LIN. FT.
SP	ELECTRICAL CONDUCTORS-IN-CONDUIT (2C/6 A.W.G.)	26	0	26	LIN. FT.
SP	ELECTRICAL CONDUCTORS-IN-CONDUIT (1C/8 A.W.G, E.G.C.)	653	0	653	LIN. FT.
SP	ELECTRICAL CONDUCTORS-IN-CONDUIT (1C/12 A.W.G, E.G.C.)	200	0	200	LIN. FT.
SP	ELECTRICAL CONDUCTORS FOR LUMINAIRES	776	0	776	LIN. FT.
SP	LOCAL RADIO WITH ANTENNA	1	0	1	EACH
SP	LED LUMINAIRE ASSEMBLY	4	0	4	EACH
SP	REMOVAL OF TRAFFIC SIGNAL EQUIPMENT	0.00	0.25	0.25	L.S.
SP	SERVICE POINT ASSEMBLY (2 CIRCUITS)	1	0	1	EACH
SP	18" STREET NAME SIGN	4	0	4	EACH

AEWorkSpace 3/20/2016 1:37:25 PM
WORKSPACE: AHTD
L:\2011\001707 - I-540 Widening & Interchange Improvement\Drawings\tBB0414_qty3.dgn
REVISED DATE:

DATE: 03/11/16 FILE NAME: tBB0414_qty3.dgn

LOCATION: HWY. 112
CITY: FAYETTEVILLE
COUNTY: WASHINGTON
DISTRICT: 04 SCALE: 1"=NA" DRAWN BY: CEM

DATE REVISED	DATE FILMED	DATE REVISED	DATE FILMED	FED.RD. DIST.NO.	STATE	FED.AID PROJ.NO.	SHEET NO.	TOTAL SHEETS
				6	ARK.			
				JOB NO.		BB0414	327	886
				(2)	MAST ARM MOUNTED SIGNS			

STATE OF ARKANSAS
REGISTERED PROFESSIONAL ENGINEER
No. 8147
NICCI D. TINER

3-20-16

TYPICAL OVERHEAD STREET NAME MARKER
MAST ARM MOUNTED
HWY. 112 AT NB I-49 RAMPS

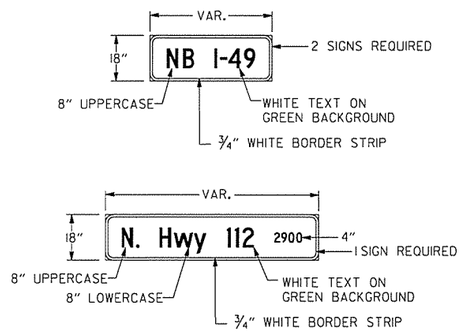

NOTES:

1. REFLECTIVE SHEETING SHALL COMPLY WITH ASTM 4956 TYPE 8 OR TYPE 9 REFLECTIVE SHEETING. SHEETING AND LEGEND SHALL BE APPLIED IN SUCH A MANNER TO PROVIDE WRINKLE AND BUBBLE FREE SURFACES. APPLICATION OF SHEETING IS CAUSE FOR REJECTION OF MATERIALS DUE TO WORKMANSHIP.

2. ALUMINUM SIGN BLANK SHALL BE ALLOY 6061-T6 OR 5052-H38. THE ALUMINUM SIGN SHALL ALSO BE ANODIZED. THE ALUMINUM SHEETING SHALL BE 0.100 INCH NOMINAL THICKNESS AND OF THE SIZE SHOWN WITH 1.5" CORNER RADII. PRIOR TO FABRICATION OF THE SIGNS, THE LAYOUT SHALL FIRST BE APPROVED BY AN AGENT OF THE CITY OF FAYETTEVILLE.

3. SEE STD. DETAIL SHEET FOR MORE INFORMATION FOR MOUNTING ON MAST ARM ASSEMBLY.

4. THE SERIES C 2000 FONT SHALL BE USED FOR ALL LETTERS.

5. STREET NAME "NB I-49." ON POLES A AND D (NB), "N. HWY 112" ON POLE D (EB).

TYPICAL OVERHEAD STREET NAME MARKER
MAST ARM MOUNTED
HWY. 112 AT SB I-49 RAMPS

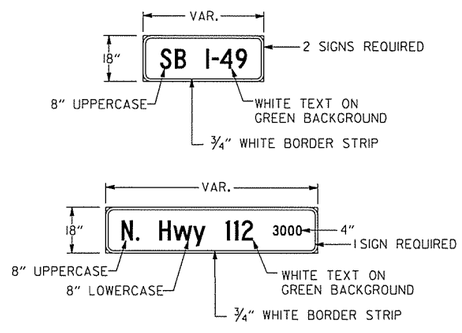

NOTES:

1. REFLECTIVE SHEETING SHALL COMPLY WITH ASTM 4956 TYPE 8 OR TYPE 9 REFLECTIVE SHEETING. SHEETING AND LEGEND SHALL BE APPLIED IN SUCH A MANNER TO PROVIDE WRINKLE AND BUBBLE FREE SURFACES. APPLICATION OF SHEETING IS CAUSE FOR REJECTION OF MATERIALS DUE TO WORKMANSHIP.

2. ALUMINUM SIGN BLANK SHALL BE ALLOY 6061-T6 OR 5052-H38. THE ALUMINUM SIGN SHALL ALSO BE ANODIZED. THE ALUMINUM SHEETING SHALL BE 0.100 INCH NOMINAL THICKNESS AND OF THE SIZE SHOWN WITH 1.5" CORNER RADII. PRIOR TO FABRICATION OF THE SIGNS, THE LAYOUT SHALL FIRST BE APPROVED BY AN AGENT OF THE CITY OF FAYETTEVILLE.

3. SEE STD. DETAIL SHEET FOR MORE INFORMATION FOR MOUNTING ON MAST ARM ASSEMBLY.

4. THE SERIES C 2000 FONT SHALL BE USED FOR ALL LETTERS.

5. STREET NAME "SB I-49." ON POLES D AND F (NB), "N. HWY 112" ON POLE F (EB).

TYPICAL OVERHEAD STREET NAME MARKER
MAST ARM MOUNTED
HWY. 112 (GARLAND AVE.) AT DRAKE ST.

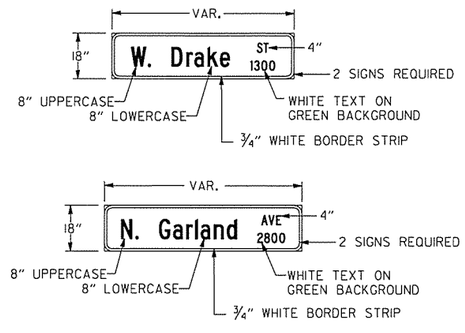

NOTES:

1. REFLECTIVE SHEETING SHALL COMPLY WITH ASTM 4956 TYPE 8 OR TYPE 9 REFLECTIVE SHEETING. SHEETING AND LEGEND SHALL BE APPLIED IN SUCH A MANNER TO PROVIDE WRINKLE AND BUBBLE FREE SURFACES. APPLICATION OF SHEETING IS CAUSE FOR REJECTION OF MATERIALS DUE TO WORKMANSHIP.

2. ALUMINUM SIGN BLANK SHALL BE ALLOY 6061-T6 OR 5052-H38. THE ALUMINUM SIGN SHALL ALSO BE ANODIZED. THE ALUMINUM SHEETING SHALL BE 0.100 INCH NOMINAL THICKNESS AND OF THE SIZE SHOWN WITH 1.5" CORNER RADII. PRIOR TO FABRICATION OF THE SIGNS, THE LAYOUT SHALL FIRST BE APPROVED BY AN AGENT OF THE CITY OF FAYETTEVILLE.

3. SEE STD. DETAIL SHEET FOR MORE INFORMATION FOR MOUNTING ON MAST ARM ASSEMBLY.

4. THE SERIES C 2000 FONT SHALL BE USED FOR ALL LETTERS.

5. STREET NAME "W. DRAKE ST." ON POLES A AND D, "N. GARLAND AVE." ON POLES B AND F.

TYPICAL OVERHEAD STREET NAME MARKER
MAST ARM MOUNTED
HWY. 112 AT TRUCKERS DR

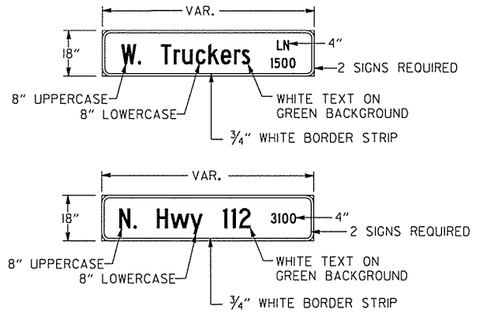

NOTES:

1. REFLECTIVE SHEETING SHALL COMPLY WITH ASTM 4956 TYPE 8 OR TYPE 9 REFLECTIVE SHEETING. SHEETING AND LEGEND SHALL BE APPLIED IN SUCH A MANNER TO PROVIDE WRINKLE AND BUBBLE FREE SURFACES. APPLICATION OF SHEETING IS CAUSE FOR REJECTION OF MATERIALS DUE TO WORKMANSHIP.

2. ALUMINUM SIGN BLANK SHALL BE ALLOY 6061-T6 OR 5052-H38. THE ALUMINUM SIGN SHALL ALSO BE ANODIZED. THE ALUMINUM SHEETING SHALL BE 0.100 INCH NOMINAL THICKNESS AND OF THE SIZE SHOWN WITH 1.5" CORNER RADII. PRIOR TO FABRICATION OF THE SIGNS, THE LAYOUT SHALL FIRST BE APPROVED BY AN AGENT OF THE CITY OF FAYETTEVILLE.

3. SEE STD. DETAIL SHEET FOR MORE INFORMATION FOR MOUNTING ON MAST ARM ASSEMBLY.

4. THE SERIES C 2000 FONT SHALL BE USED FOR ALL LETTERS.

5. STREET NAME "W. TRUCKERS DR." ON POLES A AND E, "N. HWY 112" ON POLES C AND H.

AEWerclok 3/20/2016 11:57:13 AM
WORKSPACE: AHTD
L:\20\NI0\T107 - I-540 Widening & Interchange Improvement\Drawings\tBB0414_qty4.dgn
REVISED DATE:

DATE: 03/09/16 FILE NAME: tBB0414_qty4.dgn

LOCATION:	HWY. 112		
CITY:	FAYETTEVILLE		
COUNTY:	WASHINGTON		
DISTRICT:	04	SCALE: 1"=NA"	DRAWN BY: CEM

DATE REVISED	DATE FILMED	DATE REVISED	DATE FILMED

FED.RD. DIST.NO.	STATE	FED.AID PROJ.NO.	SHEET NO.	TOTAL SHEETS
6	ARK.			
JOB NO.		BB0414	328	886

SYSTEM MAP

NOTES:

1. ALL ANTENNA ORIENTATIONS SHALL BE VERIFIED BY THE CITY OF FAYETTEVILLE.

STATE OF ARKANSAS
REGISTERED PROFESSIONAL ENGINEER
No.8141
NICCI D. TINER
3-20-16

ANTENNA ORIENTATION

HWY. 112 (GARLAND AVE.) AT TRUCKERS DR.

HWY. 112 (GARLAND AVE.) AT TRUCKERS DR.
LOCAL RADIO WITH ANTENNA

HWY. 112 (GARLAND AVE.) I-49 SB RAMPS
LOCAL RADIO WITH ANTENNA

HWY. 112 (GARLAND AVE.) I-49 NB RAMPS
LOCAL RADIO WITH ANTENNA

ANTENNA ORIENTATION

HWY. 112 (GARLAND AVE.) AT I-49 NB RAMPS.

ANTENNA ORIENTATION

HWY. 112 (GARLAND AVE.) AT I-49 SB RAMPS.

HWY. 112 (GARLAND AVE.) AT DRAKE ST.
LOCAL RADIO WITH ANTENNA

ANTENNA ORIENTATION

HWY. 112 (GARLAND AVE.) AT DRAKE ST.

EXISTING MASTER ANTENNA

SCALE IN FEET
0 1500 3000 6000

LOCATION:	HWY. 112		
CITY:	FAYETTEVILLE		
COUNTY:	WASHINGTON		
DISTRICT:	04	SCALE: AS SHOWN	DRAWN BY: CEM

DATE: 03/14/16 FILE NAME: tBB0414_sys.dgn

AEWterlok 3/20/2016 11:57:13 AM
WORKSPACE: AHTD
L:\2011\011707 - I-540 Widening & Interchange Improvement\Drawings\tBB0414_sys.dgn
REVISED DATE:

DATE REVISED	DATE FILMED	DATE REVISED	DATE FILMED	FED.RD. DIST.NO.	STATE	FED.AID PROJ.NO.	SHEET NO.	TOTAL SHEETS
				6	ARK.			
				JOB NO.		BB0414	329	886

(2) SIGNALIZATION PLANS (HWY. 112 AT TRUCKERS DR.)

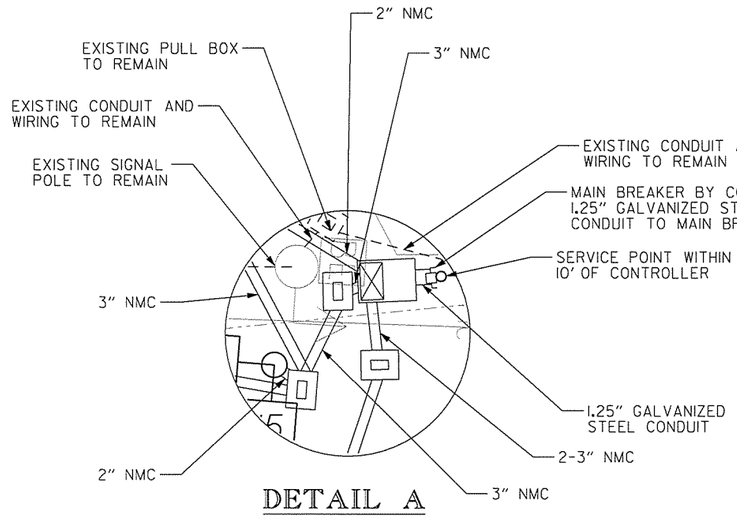

DETAIL A

EXISTING SIGNAL FACES

12" LENSES

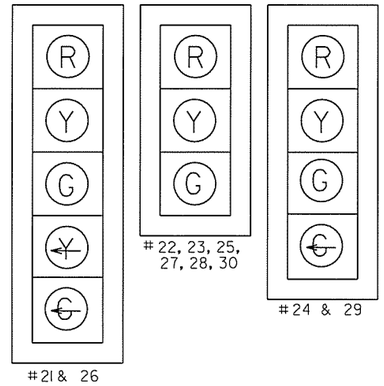

EXISTING PHASING DIAGRAM

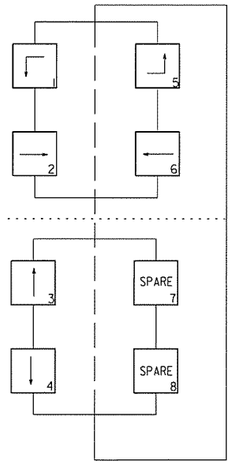

LEGEND

- TYPE 1HD PULL BOX
- TYPE 1PULL BOX
- TYPE 2 HD PULL BOX
- TYPE 2 PULL BOX
- CONTROLLER CABINET
- SIGNAL HEAD
- SIGNAL POLE, MAST ARM AND LUMINAIRE ARM
- NMC - NON-METALLIC CONDUIT
- VIDEO DETECTOR
- ANTENNA

STATE OF ARKANSAS
REGISTERED PROFESSIONAL ENGINEER
No.8141
NICCI D. TINER
3-20-16

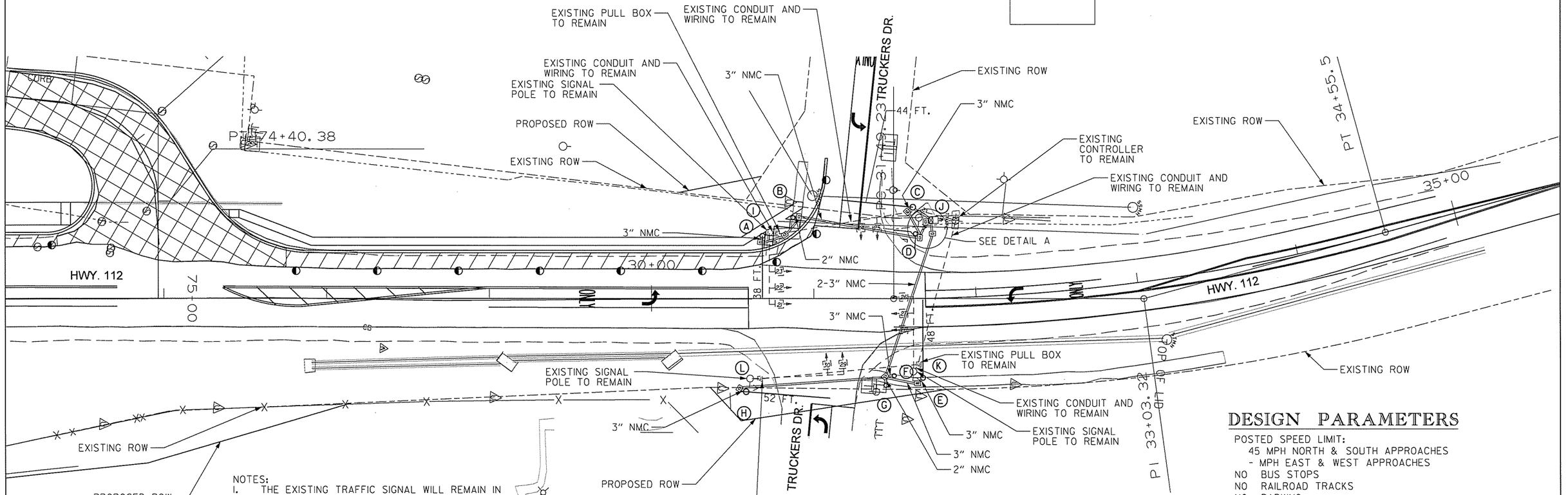

NOTES:
1. THE EXISTING TRAFFIC SIGNAL WILL REMAIN IN OPERATION THRU STAGE IA.
2. SEE STAGE 2 PLANS FOR SIGNAL HEAD AND VIDEO DETECTOR PLACEMENT ON MAST ARMS.
3. PEDESTRIAN SIGNALS SHALL REMAIN BLANK DURING STAGE CONSTRUCTION.
4. EXISTING POLES AND CONTROLLER SHALL BE REMOVED AFTER STAGE 2 SIGNAL IS OPERATIONAL.
5. SEE STAGE 2 PLANS FOR SIGNAL HEAD AND VIDEO DETECTOR PLACEMENT ON MAST ARMS.
6. FOR STAGE IA WIRING SEE WIRING DIAGRAM FOR PERMANENT TRAFFIC SIGNAL.
7. ADDITIONAL 0.5" NMC REQUIRED FROM POLE AND CONTROLLER TO NEAREST PULL BOX. REFER TO STANDARD DRAWING SD-6, HEAVY DUTY PULL BOX. COST OF ADDITIONAL 0.5" NMC INCLUDED IN ITEMS 701, 714, & 715.

DESIGN PARAMETERS

POSTED SPEED LIMIT:
45 MPH NORTH & SOUTH APPROACHES
- MPH EAST & WEST APPROACHES
NO BUS STOPS
NO RAILROAD TRACKS
NO PARKING
NO FIRE STATION
2' MIN. CLEAR ZONE DISTANCE (BARRIER CURB SECTION)
28' CLEAR ZONE HWY. 112
14' CLEAR ZONE TRUCKERS DR.

N

SCALE IN FEET
0 30 60 120

STAGE IA PLANS

LOCATION:	HWY. 112 AT TRUCKERS DR.
CITY:	FAYETTEVILLE
COUNTY:	WASHINGTON
DISTRICT:	04 SCALE: AS SHOWN DRAWN BY: CEM

DATE: 03/14/16 FILE NAME: tBB0414_STG1A_p01.dgn

AEWierciok 3/20/2016 11:57:14 AM
WORKSPACE: AHTD
L:\20#\10\7707 - I-540 Widening & Interchange Improvement\Drawings\tBB0414_STG1A_p01.dgn
REVISED DATE:

DATE REVISED	DATE FILMED	DATE REVISED	DATE FILMED	FED.RD. DIST.NO.	STATE	FED.AID PROJ.NO.	SHEET NO.	TOTAL SHEETS
				6	ARK.			
				JOB NO.		BB0414	330	886

(2) SIGNALIZATION PLANS (HWY. 112 AT TRUCKERS DR.)

EXISTING PHASING DIAGRAM

EXISTING SIGNAL FACES

12" LENSES

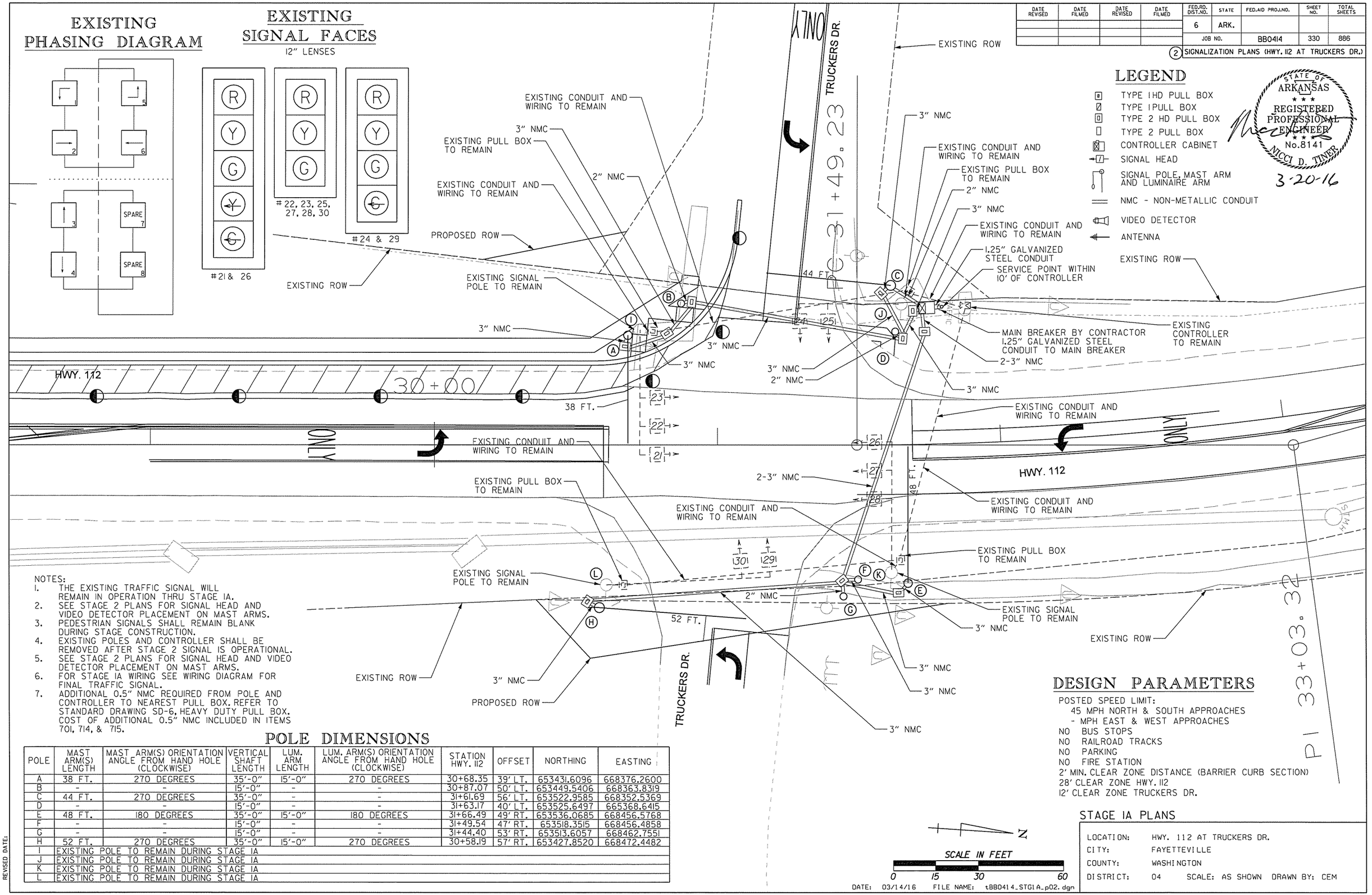

LEGEND

- TYPE 1HD PULL BOX
- TYPE 1PULL BOX
- TYPE 2 HD PULL BOX
- TYPE 2 PULL BOX
- CONTROLLER CABINET
- SIGNAL HEAD
- SIGNAL POLE, MAST ARM AND LUMINAIRE ARM
- NMC - NON-METALLIC CONDUIT
- VIDEO DETECTOR
- ANTENNA

STATE OF ARKANSAS
REGISTERED PROFESSIONAL ENGINEER
No.8141
NICCI D. TINER
3-20-16

NOTES:
1. THE EXISTING TRAFFIC SIGNAL WILL REMAIN IN OPERATION THRU STAGE 1A.
2. SEE STAGE 2 PLANS FOR SIGNAL HEAD AND VIDEO DETECTOR PLACEMENT ON MAST ARMS.
3. PEDESTRIAN SIGNALS SHALL REMAIN BLANK DURING STAGE CONSTRUCTION.
4. EXISTING POLES AND CONTROLLER SHALL BE REMOVED AFTER STAGE 2 SIGNAL IS OPERATIONAL.
5. SEE STAGE 2 PLANS FOR SIGNAL HEAD AND VIDEO DETECTOR PLACEMENT ON MAST ARMS.
6. FOR STAGE 1A WIRING SEE WIRING DIAGRAM FOR FINAL TRAFFIC SIGNAL.
7. ADDITIONAL 0.5" NMC REQUIRED FROM POLE AND CONTROLLER TO NEAREST PULL BOX. REFER TO STANDARD DRAWING SD-6, HEAVY DUTY PULL BOX. COST OF ADDITIONAL 0.5" NMC INCLUDED IN ITEMS 701, 714, & 715.

POLE DIMENSIONS

POLE	MAST ARM(S) LENGTH	MAST ARM(S) ORIENTATION ANGLE FROM HAND HOLE (CLOCKWISE)	VERTICAL SHAFT LENGTH	LUM. ARM LENGTH	LUM. ARM(S) ORIENTATION ANGLE FROM HAND HOLE (CLOCKWISE)	STATION HWY. 112	OFFSET	NORTHING	EASTING
A	38 FT.	270 DEGREES	35'-0"	15'-0"	270 DEGREES	30+68.35	39' LT.	653431.6096	668376.2600
B	-	-	15'-0"	-	-	30+87.07	50' LT.	653449.5406	668363.8319
C	44 FT.	270 DEGREES	35'-0"	-	-	31+61.69	56' LT.	653522.9585	668352.5369
D	-	-	15'-0"	-	-	31+63.17	40' LT.	653525.6497	668368.6415
E	48 FT.	180 DEGREES	35'-0"	15'-0"	180 DEGREES	31+66.49	49' RT.	653536.0685	668456.5768
F	-	-	15'-0"	-	-	31+49.54	47' RT.	653518.3515	668456.4858
G	-	-	15'-0"	-	-	31+44.40	53' RT.	653513.6057	668462.7551
H	52 FT.	270 DEGREES	35'-0"	15'-0"	270 DEGREES	30+58.19	57' RT.	653427.8520	668472.4482
I	EXISTING POLE TO REMAIN DURING STAGE 1A								
J	EXISTING POLE TO REMAIN DURING STAGE 1A								
K	EXISTING POLE TO REMAIN DURING STAGE 1A								
L	EXISTING POLE TO REMAIN DURING STAGE 1A								

DESIGN PARAMETERS

POSTED SPEED LIMIT:
45 MPH NORTH & SOUTH APPROACHES
- MPH EAST & WEST APPROACHES
NO BUS STOPS
NO RAILROAD TRACKS
NO PARKING
NO FIRE STATION
2' MIN. CLEAR ZONE DISTANCE (BARRIER CURB SECTION)
28' CLEAR ZONE HWY. 112
12' CLEAR ZONE TRUCKERS DR.

N

SCALE IN FEET
0 15 30 60

DATE: 03/14/16 FILE NAME: tBB0414_STG1A_p02.dgn

STAGE 1A PLANS

LOCATION:	HWY. 112 AT TRUCKERS DR.
CITY:	FAYETTEVILLE
COUNTY:	WASHINGTON
DISTRICT:	04 SCALE: AS SHOWN DRAWN BY: CEM

AEWerclok 3/20/2016 11:57:15 AM
WORKSPACE: AHTD
L:\2016\160707 - I-540 Widening & Interchange Improvement\Drawings\tBB0414_STG1A_p02.dgn
REVISED DATE:

DATE REVISED	DATE FILMED	DATE REVISED	DATE FILMED	FED.RD. DIST.NO.	STATE	FED.AID PROJ.NO.	SHEET NO.	TOTAL SHEETS
				6	ARK.			
				JOB NO.		BB0414	331	886

(2) SIGNALIZATION PLANS (HWY. 112 AT TRUCKERS DR.)

STAGE 2 SIGNAL FACES

12" LENSES

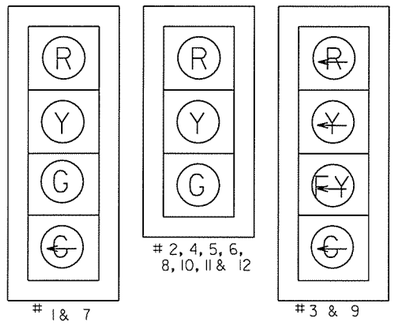

NOTES:
1. PEDESTRIAN SIGNALS SHALL REMAIN BLANK DURING STAGE CONSTRUCTION.
2. FOR STAGE 2 WIRING DIAGRAM, DETECTOR CHART AND INTERVAL CHART SEE FINAL TRAFFIC SIGNAL.
3. EXISTING POLES AND CONTROLLER SHALL BE REMOVED AFTER STAGE 2 SIGNAL IS OPERATIONAL.

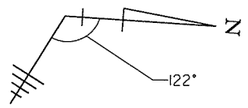

ANTENNA ORIENTATION

STAGE 2 PHASING DIAGRAM

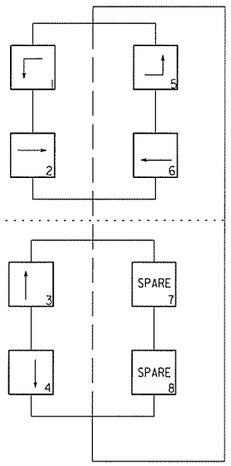

LEGEND

- TYPE 1HD PULL BOX
- TYPE 1 PULL BOX
- TYPE 2 HD PULL BOX
- TYPE 2 PULL BOX
- CONTROLLER CABINET
- SIGNAL HEAD
- SIGNAL POLE, MAST ARM AND LUMINAIRE ARM
- NMC - NON-METALLIC CONDUIT
- VIDEO DETECTOR
- ANTENNA
- STAGE 2 CONSTRUCTION

STATE OF ARKANSAS
REGISTERED PROFESSIONAL ENGINEER
No. 8141
NICCI D. TINER
3-20-16

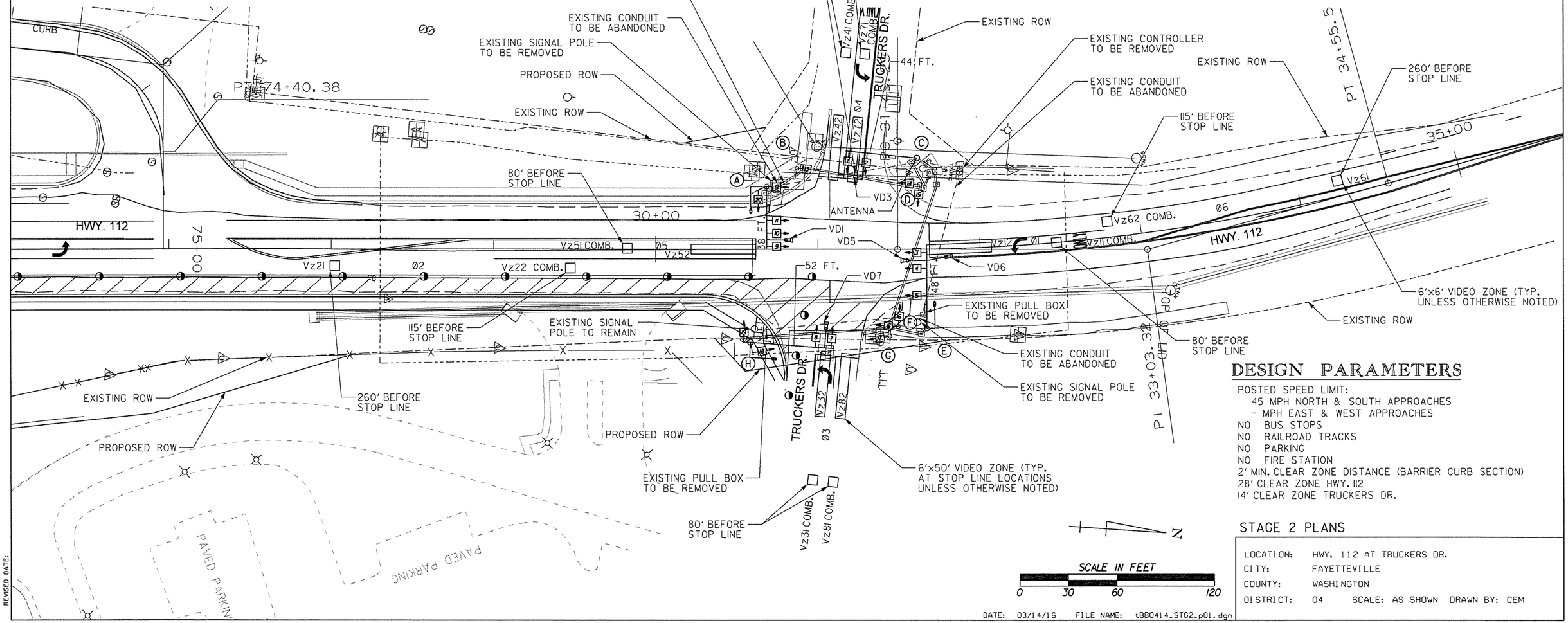

DESIGN PARAMETERS

POSTED SPEED LIMIT:
45 MPH NORTH & SOUTH APPROACHES
- MPH EAST & WEST APPROACHES
NO BUS STOPS
NO RAILROAD TRACKS
NO PARKING
NO FIRE STATION
2' MIN. CLEAR ZONE DISTANCE (BARRIER CURB SECTION)
28' CLEAR ZONE HWY. 112
14' CLEAR ZONE TRUCKERS DR.

N

SCALE IN FEET
0 30 60 120

STAGE 2 PLANS

LOCATION:	HWY. 112 AT TRUCKERS DR.
CITY:	FAYETTEVILLE
COUNTY:	WASHINGTON
DISTRICT:	04 SCALE: AS SHOWN DRAWN BY: CEM

DATE: 03/14/16 FILE NAME: tBB0414_STG2_p01.dgn

AEWierciak 3/20/2016 11:57:15 AM
WORKSPACE: AHTD
L:\2011\10171O7 - I-540 Widening & Interchange Improvement\Drawings\tBB0414_STG2_p01.dgn
REVISED DATE:

DATE REVISED	DATE FILMED	DATE REVISED	DATE FILMED	FED.RD. DIST.NO.	STATE	FED.AID PROJ.NO.	SHEET NO.	TOTAL SHEETS
				6	ARK.			
				JOB NO.		BB0414	332	886

(2) SIGNALIZATION PLANS (HWY. 112 AT TRUCKERS DR.)

STAGE 2 PHASING DIAGRAM

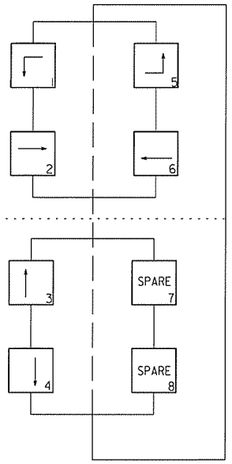

STAGE 2 SIGNAL FACES

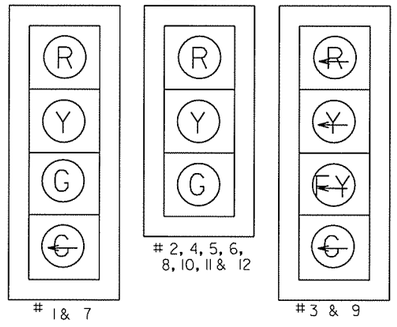

LEGEND

- TYPE 1HD PULL BOX
- TYPE 1 PULL BOX
- TYPE 2 HD PULL BOX
- TYPE 2 PULL BOX
- CONTROLLER CABINET
- SIGNAL HEAD
- SIGNAL POLE, MAST ARM AND LUMINAIRE ARM
- NMC - NON-METALLIC CONDUIT
- VIDEO DETECTOR
- ANTENNA
- STAGE 2 CONSTRUCTION

STATE OF ARKANSAS
REGISTERED PROFESSIONAL ENGINEER
No. 8144
NICCI D. TINER
3-20-16

80' BEFORE STOP LINE
Vz71 COMB.
Vz41 COMB.
TRUCKERS DR.
Ø4
EXISTING CONDUIT TO BE ABANDONED
EXISTING PULL BOX TO BE REMOVED
EXISTING CONDUIT TO BE ABANDONED
PROPOSED ROW
EXISTING SIGNAL POLE TO BE REMOVED
EXISTING ROW
Vz42
Vz72
EXISTING SIGNAL POLE TO BE REMOVED
EXISTING PULL BOX TO BE REMOVED
EXISTING ROW
EXISTING CONTROLLER TO BE REMOVED
EXISTING CONDUIT TO BE ABANDONED
115' BEFORE STOP LINE
VD3
44 FT.
ANTENNA
EXISTING CONDUIT TO BE ABANDONED
30+00
HWY. 112
6'x6' VIDEO ZONE (TYP. UNLESS OTHERWISE NOTED)
80' BEFORE STOP LINE
Vz51 COMB.
Ø5
Vz52
38 FT.
VD1
Vz62 COMB.
Ø6
Vz12
Ø1
Vz11 COMB.
HWY. 112
VD5
48 FT.
VD6
Vz22 COMB.
Ø2
EXISTING CONDUIT TO BE ABANDONED
EXISTING PULL BOX TO BE REMOVED
115' BEFORE STOP LINE
EXISTING SIGNAL POLE TO BE REMOVED
VD7
80' BEFORE STOP LINE
EXISTING PULL BOX TO BE REMOVED
52 FT.
EXISTING CONDUIT TO BE ABANDONED
EXISTING ROW
EXISTING SIGNAL POLE TO BE REMOVED
EXISTING ROW
PROPOSED ROW
TRUCKERS DR.
Vz32
Vz82
Ø3
6'x50' VIDEO ZONE (TYP. AT STOP LINE LOCATIONS UNLESS OTHERWISE NOTED)
Vz31 COMB.
Vz81 COMB.
80' BEFORE STOP LINE
PI 33+03.34
PI 31+49.23

NOTES:
1. PEDESTRIAN SIGNALS SHALL REMAIN BLANK DURING STAGE CONSTRUCTION.
2. FOR STAGE 2 WIRING DIAGRAM, DETECTOR CHART, AND INTERVAL CHART SEE FINAL TRAFFIC SIGNAL.
3. EXISTING POLES AND CONTROLLER SHALL BE REMOVED AFTER STAGE 2 SIGNAL IS OPERATIONAL.

DESIGN PARAMETERS

POSTED SPEED LIMIT:
45 MPH NORTH & SOUTH APPROACHES
- MPH EAST & WEST APPROACHES
NO BUS STOPS
NO RAILROAD TRACKS
NO PARKING
NO FIRE STATION
2' MIN. CLEAR ZONE DISTANCE (BARRIER CURB SECTION)
28' CLEAR ZONE HWY. 112
12' CLEAR ZONE TRUCKERS DR.

N

SCALE IN FEET
0 15 30 60

STAGE 2 PLANS

LOCATION:	HWY. 112 AT TRUCKERS DR.
CITY:	FAYETTEVILLE
COUNTY:	WASHINGTON
DISTRICT:	04 SCALE: AS SHOWN DRAWN BY: CEM

DATE: 03/14/16 FILE NAME: tBB0414_STG2_p02.dgn

AEWierciak 3/20/2016 11:57:16 AM
WORKSPACE: AHTD
L:\201\101707 - I-540 Widening & Interchange Improvement\Drawings\tBB0414_STG2_p02.dgn
REVISED DATE:

FINAL SIGNAL FACES

12" LENSES

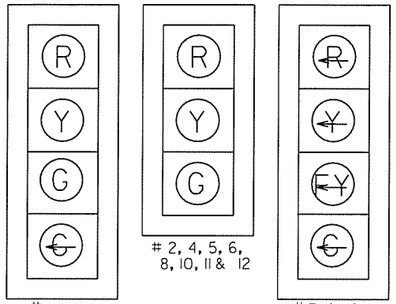

#1 & 7

2, 4, 5, 6, 8, 10, 11 & 12

#3 & 9

ONE SECTION (SOLID SYMBOL)

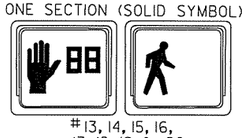

13, 14, 15, 16, 17, 18, 19 & 20

FINAL PHASING DIAGRAM

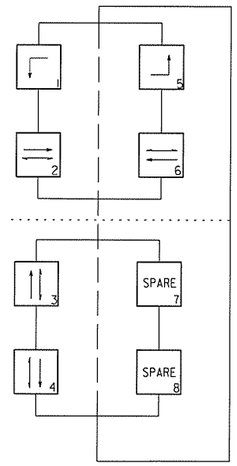

DATE REVISED	DATE FILMED	DATE REVISED	DATE FILMED	FED.RD. DIST.NO.	STATE	FED.AID PROJ.NO.	SHEET NO.	TOTAL SHEETS
				6	ARK.			
				JOB NO.		BB0414	333	886

(2) SIGNALIZATION PLANS (HWY. 112 AT TRUCKERS DR.)

LEGEND

- TYPE 1HD PULL BOX
- TYPE 1PULL BOX
- TYPE 2 HD PULL BOX
- TYPE 2 PULL BOX
- CONTROLLER CABINET
- SIGNAL HEAD
- SIGNAL POLE, MAST ARM AND LUMINAIRE ARM
- NMC - NON-METALLIC CONDUIT
- VIDEO DETECTOR
- ANTENNA

STATE OF ARKANSAS
REGISTERED PROFESSIONAL ENGINEER
No. 8141
NICCI D. TINER
3-20-16

NOTES:
1. CROSSWALKS NOT SHOWN FOR CLARITY.
2. FINAL SIGNALIZATION PLANS SHOW ITEMS INSTALLED DURING STAGE IA.
3. NEW SIGNALS AT THIS INTERSECTION MUST BE OPERATIONAL PRIOR TO FIVE LANE OPERATION AT THIS INTERSECTION.
4. 0.50" NMC FOR CONTROLLER OR POLE GROUND ROD CONNECTION. THE COST OF 0.50" NMC IS INCLUDED IN ITEM NO. 701, 714 OR 715, RESPECTIVELY.

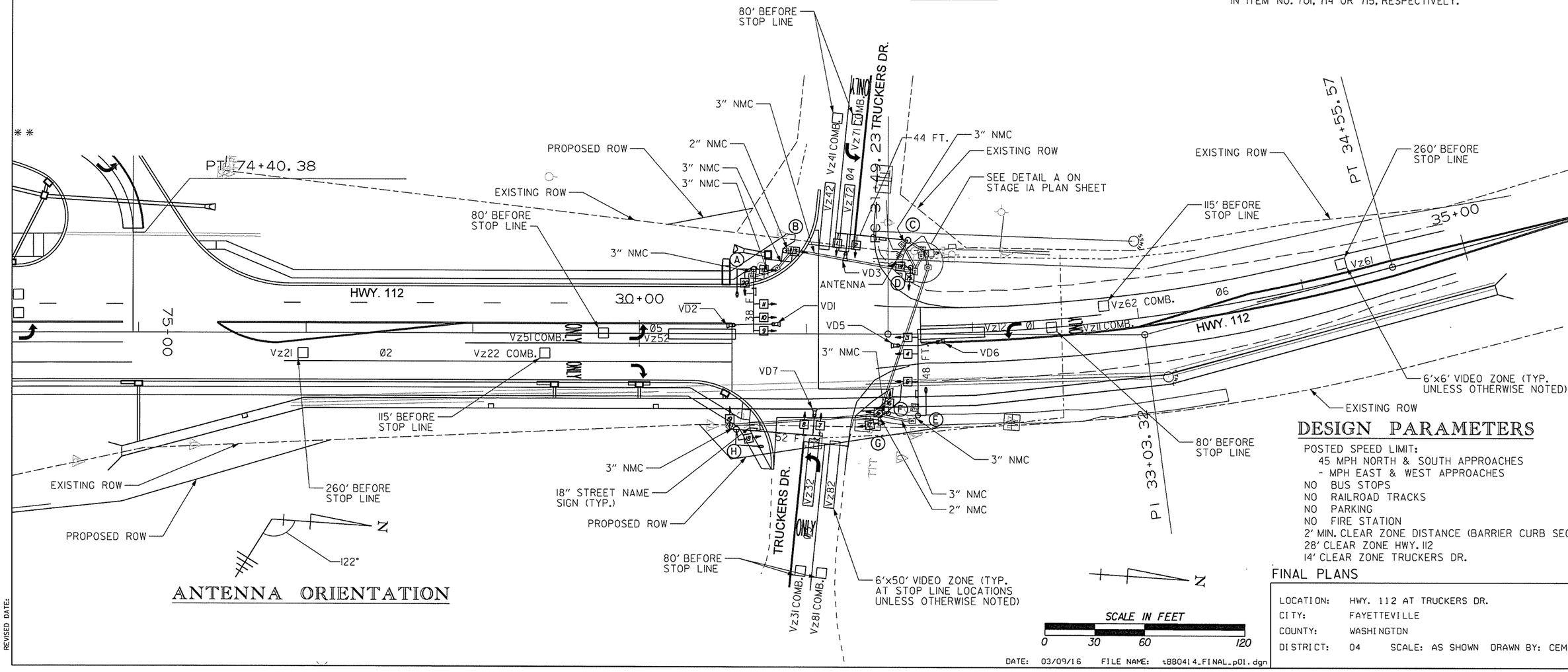

ANTENNA ORIENTATION

DESIGN PARAMETERS

POSTED SPEED LIMIT:
45 MPH NORTH & SOUTH APPROACHES
- MPH EAST & WEST APPROACHES
NO BUS STOPS
NO RAILROAD TRACKS
NO PARKING
NO FIRE STATION
2' MIN. CLEAR ZONE DISTANCE (BARRIER CURB SECTION)
28' CLEAR ZONE HWY. 112
14' CLEAR ZONE TRUCKERS DR.

FINAL PLANS

LOCATION: HWY. 112 AT TRUCKERS DR.
CITY: FAYETTEVILLE
COUNTY: WASHINGTON
DISTRICT: 04 SCALE: AS SHOWN DRAWN BY: CEM

DATE: 03/09/16 FILE NAME: tBB0414_FINAL_p01.dgn

AEWierciak 3/20/2016 11:57:46 AM
WORKSPACE: AHTD
L:\20IN\I40I7707 - I-540 Widening & Interchange Improvement\Drawings\1BB0414_FINAL_p01.dgn
REVISED DATE:

DATE REVISED	DATE FILMED	DATE REVISED	DATE FILMED	FED.RD. DIST.NO.	STATE	FED.AID PROJ.NO.	SHEET NO.	TOTAL SHEETS
				6	ARK.			
				JOB NO.		BB0414	334	886

(2) SIGNALIZATION PLANS (HWY. 112 AT TRUCKERS DR.)

FINAL PHASING DIAGRAM

FINAL SIGNAL FACES

12" LENSES

ONE SECTION (SOLID SYMBOL)

#13, 14, 15, 16, 17, 18, 19 & 20

LEGEND

- TYPE 2 PULL BOX
- TYPE 1 PULL BOX
- CONTROLLER CABINET
- SIGNAL HEAD
- SIGNAL POLE, MAST ARM AND LUMINAIRE ARM
- NMC - NON-METALLIC CONDUIT
- VIDEO DETECTOR
- ANTENNA

STATE OF ARKANSAS
REGISTERED PROFESSIONAL ENGINEER
No. 8141
NICCI D. TINER
3-20-16

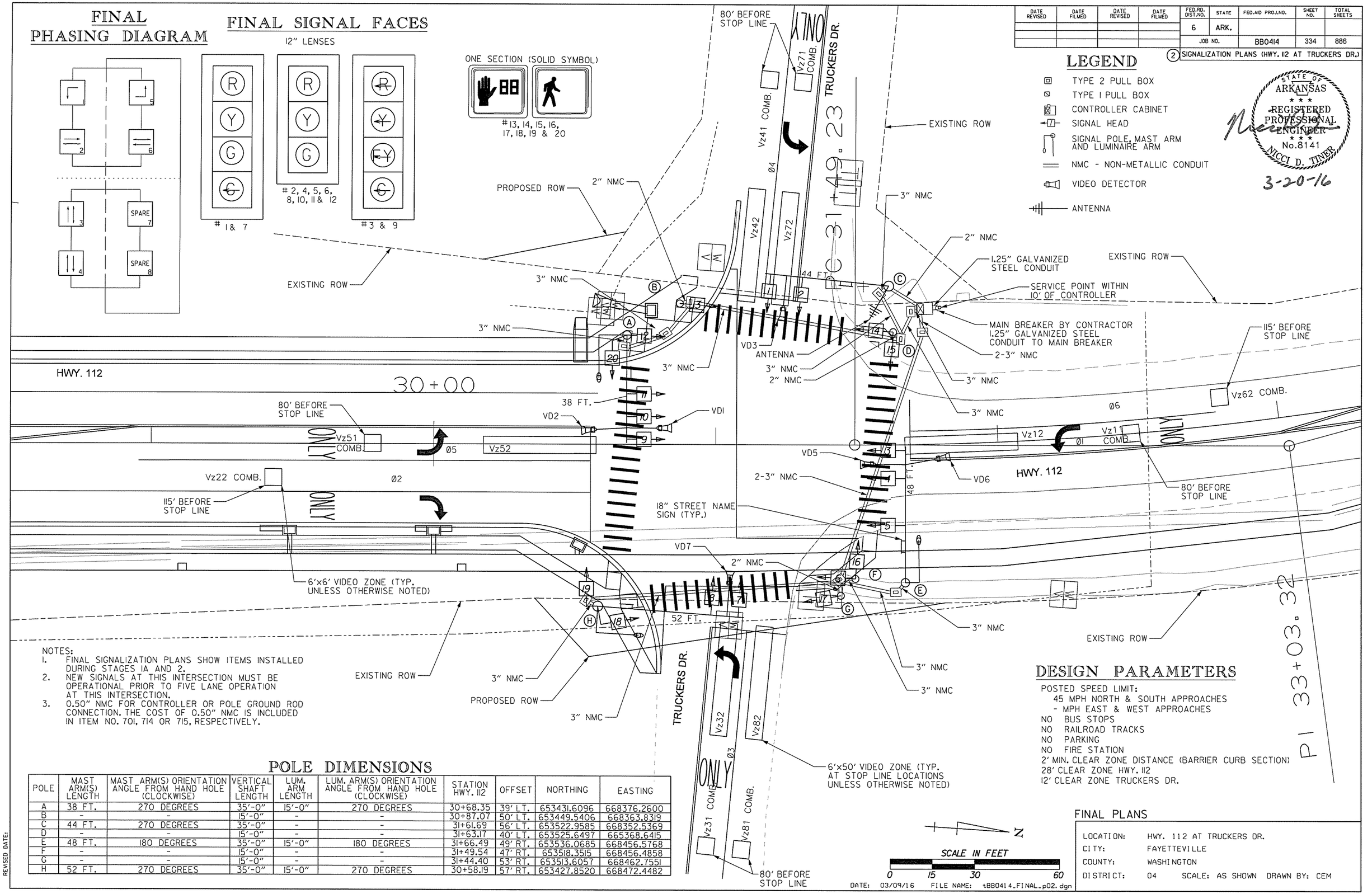

NOTES:
1. FINAL SIGNALIZATION PLANS SHOW ITEMS INSTALLED DURING STAGES 1A AND 2.
2. NEW SIGNALS AT THIS INTERSECTION MUST BE OPERATIONAL PRIOR TO FIVE LANE OPERATION AT THIS INTERSECTION.
3. 0.50" NMC FOR CONTROLLER OR POLE GROUND ROD CONNECTION. THE COST OF 0.50" NMC IS INCLUDED IN ITEM NO. 701, 714 OR 715, RESPECTIVELY.

POLE DIMENSIONS

POLE	MAST ARM(S) LENGTH	MAST ARM(S) ORIENTATION ANGLE FROM HAND HOLE (CLOCKWISE)	VERTICAL SHAFT LENGTH	LUM. ARM LENGTH	LUM. ARM(S) ORIENTATION ANGLE FROM HAND HOLE (CLOCKWISE)	STATION HWY. 112	OFFSET	NORTHING	EASTING
A	38 FT.	270 DEGREES	35'-0"	15'-0"	270 DEGREES	30+68.35	39' LT.	653431.6096	668376.2600
B	-	-	15'-0"	-	-	30+87.07	50' LT.	653449.5406	668363.8319
C	44 FT.	270 DEGREES	35'-0"	-	-	31+61.69	56' LT.	653522.9585	668352.5369
D	-	-	15'-0"	-	-	31+63.17	40' LT.	653525.6497	668368.6415
E	48 FT.	180 DEGREES	35'-0"	15'-0"	180 DEGREES	31+66.49	49' RT.	653536.0685	668456.5768
F	-	-	15'-0"	-	-	31+49.54	47' RT.	653518.3515	668456.4858
G	-	-	15'-0"	-	-	31+44.40	53' RT.	653513.6057	668462.7551
H	52 FT.	270 DEGREES	35'-0"	15'-0"	270 DEGREES	30+58.19	57' RT.	653427.8520	668472.4482

DESIGN PARAMETERS

POSTED SPEED LIMIT:
45 MPH NORTH & SOUTH APPROACHES
- MPH EAST & WEST APPROACHES
NO BUS STOPS
NO RAILROAD TRACKS
NO PARKING
NO FIRE STATION
2' MIN. CLEAR ZONE DISTANCE (BARRIER CURB SECTION)
28' CLEAR ZONE HWY. 112
12' CLEAR ZONE TRUCKERS DR.

N

SCALE IN FEET
0 15 30 60

DATE: 03/09/16 FILE NAME: tBB0414_FINAL_p02.dgn

FINAL PLANS

LOCATION:	HWY. 112 AT TRUCKERS DR.
CITY:	FAYETTEVILLE
COUNTY:	WASHINGTON
DISTRICT:	04 SCALE: AS SHOWN DRAWN BY: CEM

AEWierdak 3/20/2016 11:57:16 AM
WORKSPACE: AHTD
L:\20IN\I0I707 - I-540 Widening & Interchange Improvement\Drawings\tBB0414_FINAL_p02.dgn
REVISED DATE:

DETECTOR CHART (FINAL)

DETECTOR ASSIGNMENTS				HARDWARE INPUTS BY SUPPLIER			PROGRAM ASSIGNMENTS			VIDEO DET. TUBE LENGTH	COMMENT
DETECTOR I.D. #	DIRECTION & LOCATION	TYPE	DET. #	CAB. TRM. #	AMP CHN. #	CON. INP. #	LOCAL PHS.	LOCAL SYS. DET. #	MSTR. SYS. DET. #		
Vz11	SB LEFT FAR	COMB.			1	V9	1	1		23"	VD1
Vz12	SB LEFT NEAR	LOCAL			2	V1	1			23"	VD1
Vz21	NB FAR	LOCAL			5	V2	2			74"	VD2
Vz22	NB NEAR	COMB.			6	V10	2	2		23"	VD5
Vz31	WB LEFT FAR	COMB.			9	V11	3	3		23"	VD3
Vz32	WB LEFT NEAR	LOCAL			10	V3	3			23"	VD3
Vz41	EB FAR	COMB.			13	V12	4	4		23"	VD7
Vz42	EB NEAR	LOCAL			14	V4	4			23"	VD7
Vz51	NB LEFT FAR	COMB.			7	V13	5	5		23"	VD5
Vz52	NB LEFT NEAR	LOCAL			8	V5	5			23"	VD5
Vz61	SB FAR	LOCAL			3	V6	6			74"	VD6
Vz62	SB NEAR	COMB.			4	V14	6	6		23"	VD1
Vz71	EB LEFT FAR	COMB.			15	V15	4	7		23"	VD7
Vz72	EB LEFT NEAR	LOCAL			16	V7	4			23"	VD7
Vz81	WB FAR	COMB.			11	V16	3			23"	VD3
Vz82	WB NEAR	LOCAL			12	V8	3	8		23"	VD3
P2	S TO N	PED.			P2	P2	2				
P4	W TO E	PED.			P4	P4	4				
P6	N TO S	PED.			P6	P6	6				
P8	E TO W	PED.			P8	P8	3				

SPARE AMP CHN. #= NONE

CONTROLLER INPUT ABBREVIATIONS:
V = VEHICLE INPUT
D = SYSTEM OR AUXILIARY INPUT
P = PEDESTRIAN INPUT

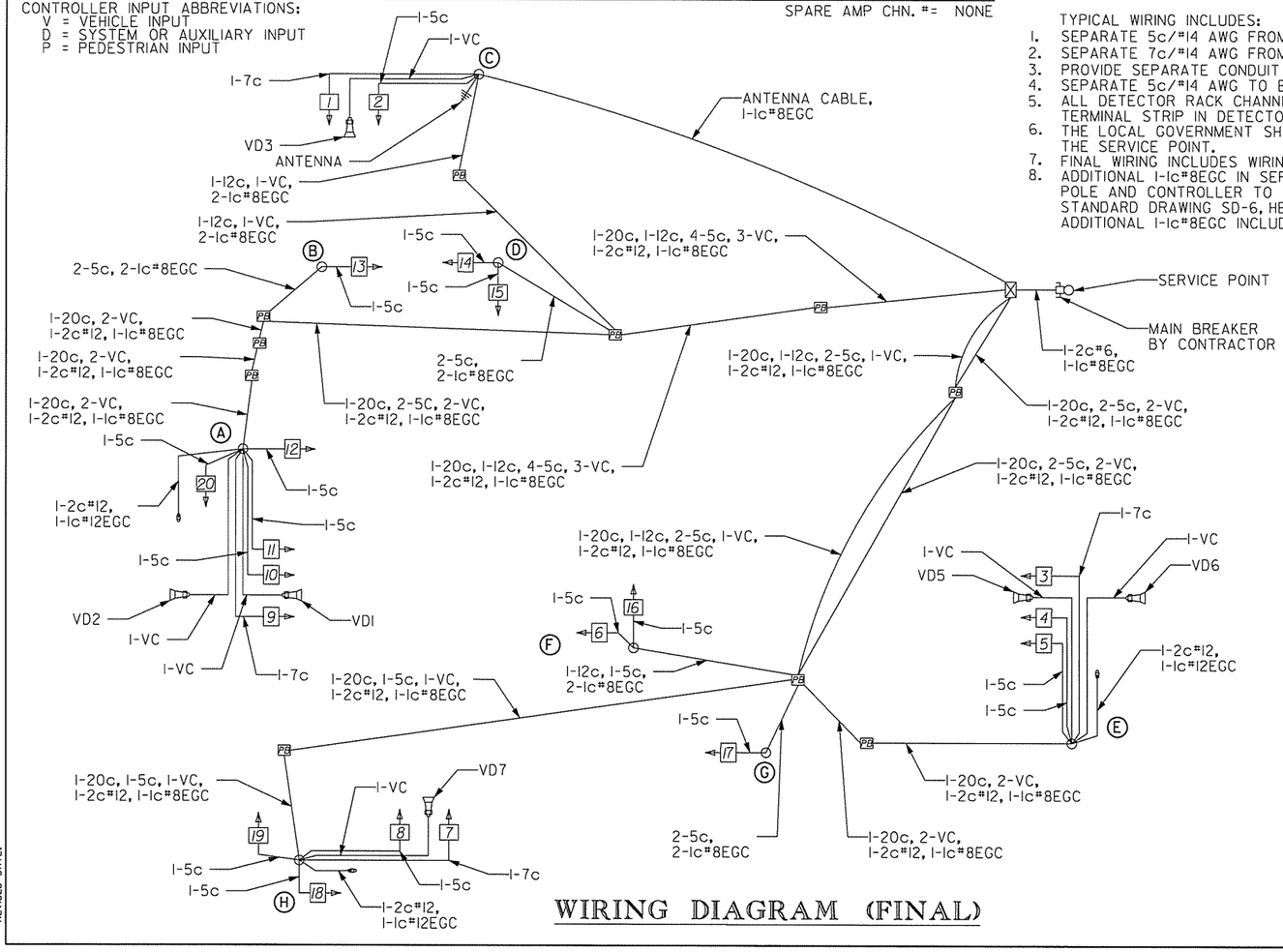

WIRING DIAGRAM (FINAL)

INTERVAL CHART (FINAL)

SIGNAL FACES	INTERSECTION INTERVALS												FLASH SEQ.
	I+5	CLR.	I+6	CLR.	2+5	CLR.	2+6	CLR.	3	CLR.	4	CLR.	
1	R	R	R	R	R	R	R	R	G/⊖	Y	R	R	R
2	R	R	R	R	R	R	R	R	G	Y	R	R	R
3	⊖	*	⊖	⊖	⊖	*	FY	***	⊖	⊖	⊖	⊖	⊖
4, 5, & 6	R	R	R	R	G	**	G	**	R	R	R	R	Y
7	R	R	R	R	R	R	R	R	R	R	G/⊖	Y	R
8	R	R	R	R	R	R	R	R	R	R	G	Y	R
9	⊖	*	⊖	*	⊖	⊖	FY	***	⊖	⊖	⊖	⊖	⊖
10, 11, & 12	R	R	G	**	R	R	G	**	R	R	R	R	Y
# 13 & 14	DW	DW	DW	DW	DW	DW	W	FDW	DW	DW	DW	DW	B
# 15 & 16	DW	DW	DW	DW	DW	DW	DW	DW	W	FDW	DW	DW	B
# 17 & 18	DW	DW	DW	DW	DW	DW	W	FDW	DW	DW	DW	DW	B
# 19 & 20	DW	DW	DW	DW	DW	DW	DW	DW	DW	DW	W	FDW	B

* DENOTES GREEN OR YELLOW ARROW DEPENDING ON NEXT PHASE
** DENOTES GREEN OR YELLOW BALL DEPENDING ON NEXT PHASE
*** DENOTES YELLOW OR FLASHING YELLOW ARROW DEPENDING ON NEXT PHASE
\# DURING STAGES 1A AND 2, PEDESTRIAN SIGNAL HEADS SHALL BE BLANK

TYPICAL WIRING INCLUDES:
1. SEPARATE 5c/#14 AWG FROM EACH 3 SEC SIGNAL HEAD TO BASE OF POLE.
2. SEPARATE 7c/#14 AWG FROM EACH 4 SEC SIGNAL HEAD TO BASE OF POLE.
3. PROVIDE SEPARATE CONDUIT FOR ANTENNA CABLE.
4. SEPARATE 5c/#14 AWG TO EACH POLE WITH PEDESTRIAN PUSH BUTTONS.
5. ALL DETECTOR RACK CHANNELS, INCLUDING UNUSED, SHALL BE BROUGHT TO TERMINAL STRIP IN DETECTOR AREA ON CABINET.
6. THE LOCAL GOVERNMENT SHALL BE RESPONSIBLE FOR PROVIDING POWER TO THE SERVICE POINT.
7. FINAL WIRING INCLUDES WIRING FROM STAGED CONSTRUCTION.
8. ADDITIONAL I-Ic#8EGC IN SEPARATE CONDUIT REQUIRED FROM POLE AND CONTROLLER TO NEAREST PULL BOX. REFER TO STANDARD DRAWING SD-6, HEAVY DUTY PULL BOX. COST OF ADDITIONAL I-Ic#8EGC INCLUDED IN ITEMS 701, 714, & 715.

DATE REVISED	DATE FILMED	DATE REVISED	DATE FILMED	FED.RD. DIST.NO.	STATE	FED.AID PROJ.NO.	SHEET NO.	TOTAL SHEETS
				6	ARK.			
				JOB NO.		BB0414	335	886

(2) SIGNALIZATION PLANS (HWY. 112 AT TRUCKERS DR.)

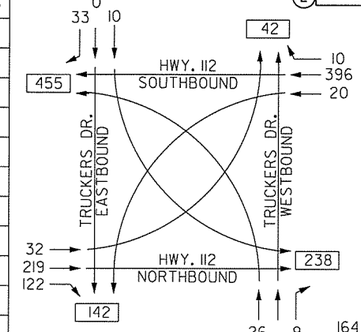

HWY. 112 AT TRUCKERS DR.
TRAFFIC FLOW DIAGRAM
TRAFFIC VOLUME
A.M. PEAK HOUR

NOTE:
2011 TRAFFIC VOLUMES

STATE OF ARKANSAS
REGISTERED PROFESSIONAL ENGINEER
No. 8141
NICCI D. TINER
3-20-16

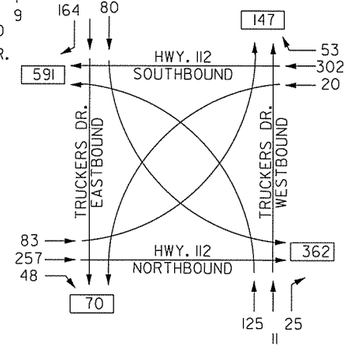

HWY. 112 AT TRUCKERS DR.
TRAFFIC FLOW DIAGRAM
TRAFFIC VOLUME
P.M. PEAK HOUR

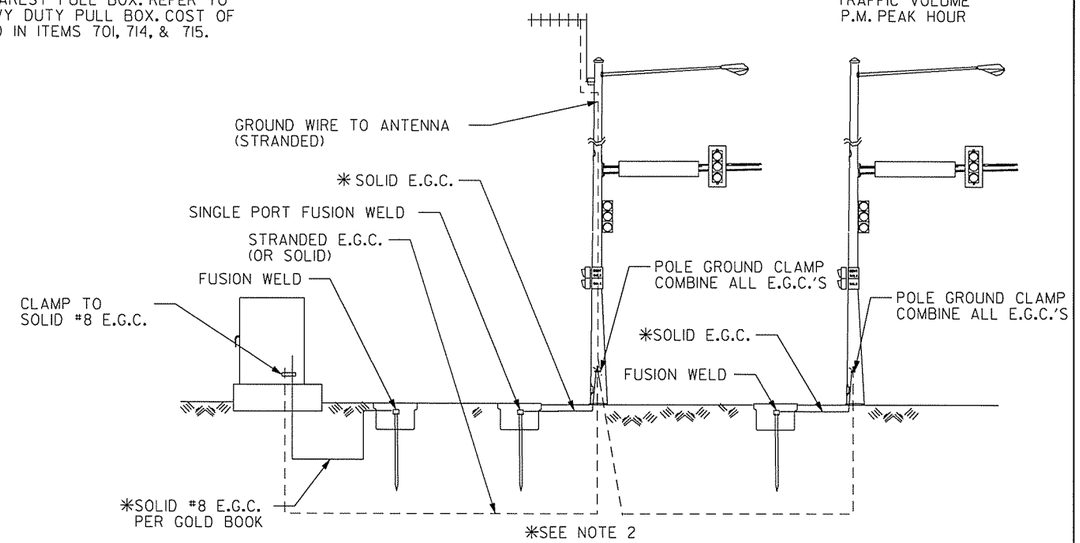

GROUNDING ARRAY
SINGLE-PORT FUSION WELDS

FINAL PLANS

LOCATION:	HWY. 112 AT TRUCKERS DR.
CITY:	FAYETTEVILLE
COUNTY:	WASHINGTON
DISTRICT:	04 SCALE: AS SHOWN DRAWN BY: CEM

DATE: 03/14/16 FILE NAME: tBB0414_FINAL_p03.dgn

AEWierciak 3/20/2016 11:57:17 AM
WORKSPACE: AHTD
L:\20IN\10\7707 - I-540 Widening & Interchange Improvement\Drawings\tBB0414_FINAL_p03.dgn
REVISED DATE:

DATE REVISED	DATE FILMED	DATE REVISED	DATE FILMED	FED.RD. DIST.NO.	STATE	FED.AID PROJ.NO.	SHEET NO.	TOTAL SHEETS
				6	ARK.			
				JOB NO.		BB0414	336	886

(2) SIGNALIZATION PLANS (HWY. 112 AT I-49 SB RAMPS)

EXISTING SIGNAL FACES

12" LENSES

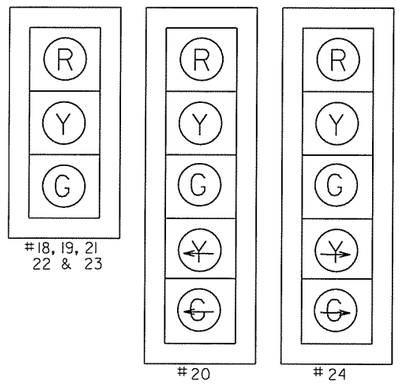

EXISTING PHASING DIAGRAM

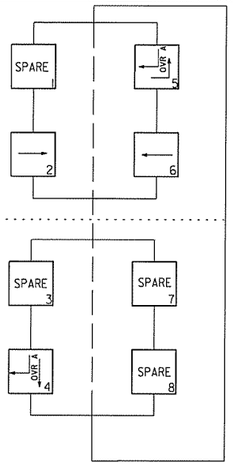

DESIGN PARAMETERS

POSTED SPEED LIMIT:
45 MPH NORTH & SOUTH APPROACHES
- MPH WEST APPROACH
NO BUS STOPS
NO RAILROAD TRACKS
NO PARKING
NO FIRE STATION
2' MIN. CLEAR ZONE DISTANCE (BARRIER CURB SECTION)

NOTES:
1. THE EXISTING TRAFFIC SIGNAL WILL REMAIN IN OPERATION THRU STAGE IA.
2. PRIOR TO LANE SHIFT FROM STAGE IA TO STAGE 2, THE NEW TRAFFIC SIGNALS SHALL BE INSTALLED AND OPERATIONAL.
3. SEE STAGE 2 PLANS FOR SIGNAL HEAD AND VIDEO DETECTOR PLACEMENT ON MAST ARMS.
4. EXISTING POLES H AND I AND TRAFFIC CONTROLLER SHALL BE REMOVED AFTER STAGE IB SIGNALS ARE OPERATIONAL.
5. SEE STAGE 2 PLANS FOR SIGNAL HEAD AND VIDEO DETECTOR PLACEMENT ON MAST ARMS.
6. SEE STAGE 2 PLANS FOR WIRING TO BE INSTALLED DURING STAGE IA.
7. ADDITIONAL 0.5" NMC REQUIRED FROM POLE AND CONTROLLER TO NEAREST PULL BOX. REFER TO STANDARD DRAWING SD-6, HEAVY DUTY PULL BOX. COST OF ADDITIONAL 0.5" NMC INCLUDED IN ITEMS 701, 714, & 715.

LEGEND

- TYPE I HD PULL BOX
- TYPE I PULL BOX
- TYPE 2 HD PULL BOX
- TYPE 2 PULL BOX
- EXISTING PULL BOX
- CONTROLLER CABINET
- EXISTING CONTROLLER CABINET
- SIGNAL HEAD
- SIGNAL POLE, MAST ARM AND LUMINAIRE ARM
- EXISTING SIGNAL POLE AND MAST ARM
- NMC - NON-METALLIC CONDUIT
- EXISTING CONDUIT
- VIDEO DETECTOR
- ANTENNA
- STAGE IA CONSTRUCTION UNDER TRAFFIC
- STAGE IA CONSTRUCTION

STATE OF ARKANSAS
REGISTERED PROFESSIONAL ENGINEER
No. 8141
NICCI D. TINER
3-20-16

ANTENNA ORIENTATION

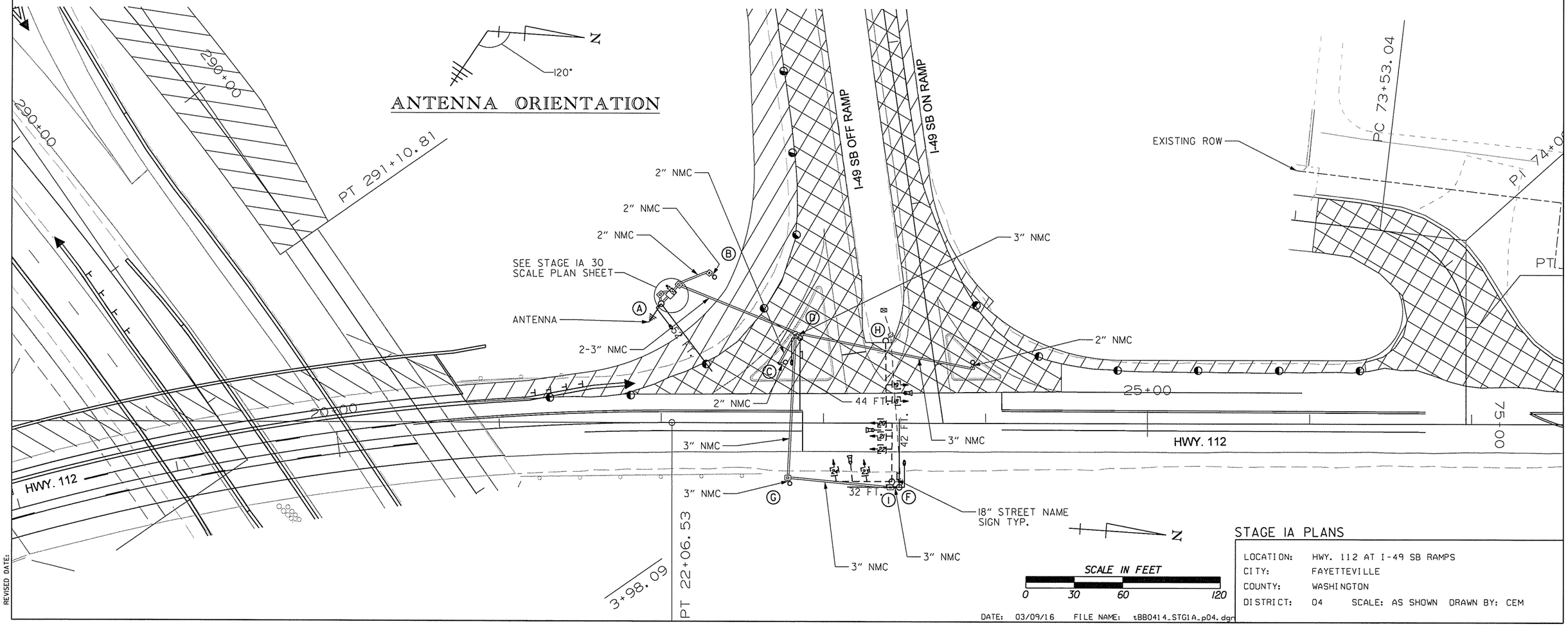

STAGE IA PLANS

LOCATION: HWY. 112 AT I-49 SB RAMPS
CITY: FAYETTEVILLE
COUNTY: WASHINGTON
DISTRICT: 04 SCALE: AS SHOWN DRAWN BY: CEM
DATE: 03/09/16 FILE NAME: tBB0414_STG1A_p04.dgn

AEWierciak 3/20/2016 11:57:17 AM
WORKSPACE: AHTD
L:\20IN\001707 - I-540 Widening & Interchange Improvement\Drawings\tBB0414_STG1A_p04.dgn
REVISED DATE:

DATE REVISED	DATE FILMED	DATE REVISED	DATE FILMED	FED.RD. DIST.NO.	STATE	FED.AID PROJ.NO.	SHEET NO.	TOTAL SHEETS
				6	ARK.			
				JOB NO.		BB0414	337	886

(2) SIGNALIZATION PLANS (HWY. 112 AT I-49 SB RAMPS)

EXISTING SIGNAL FACES

12" LENSES

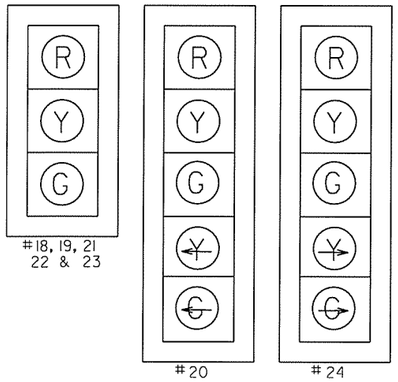

DESIGN PARAMETERS

POSTED SPEED LIMIT:
45 MPH NORTH & SOUTH APPROACHES
- MPH WEST APPROACH
NO BUS STOPS
NO RAILROAD TRACKS
NO PARKING
NO FIRE STATION
2' MIN. CLEAR ZONE DISTANCE (BARRIER CURB SECTION)

NOTES:
1. THE EXISTING TRAFFIC SIGNAL WILL REMAIN IN OPERATION THRU STAGE IA.
2. PRIOR TO LANE SHIFT FROM STAGE IA TO STAGE 2, THE NEW TRAFFIC SIGNALS SHALL BE INSTALLED AND OPERATIONAL.
3. SEE STAGE 2 PLANS FOR SIGNAL HEAD AND VIDEO DETECTOR PLACEMENT ON MAST ARMS.
4. EXISTING POLES H AND I AND TRAFFIC CONTROLLER SHALL BE REMOVED AFTER STAGE IB SIGNALS ARE OPERATIONAL.
5. SEE STAGE 2 PLANS FOR SIGNAL HEAD AND VIDEO DETECTOR PLACEMENT ON MAST ARMS.
6. SEE STAGE 2 PLANS FOR WIRING TO BE INSTALLED DURING STAGE IA.
7. ADDITIONAL 0.5" NMC REQUIRED FROM POLE AND CONTROLLER TO NEAREST PULL BOX. REFER TO STANDARD DRAWING SD-6, HEAVY DUTY PULL BOX. COST OF ADDITIONAL 0.5" NMC INCLUDED IN ITEMS 701, 714 & 715.

ANTENNA ORIENTATION

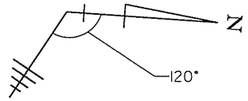

EXISTING PHASING DIAGRAM

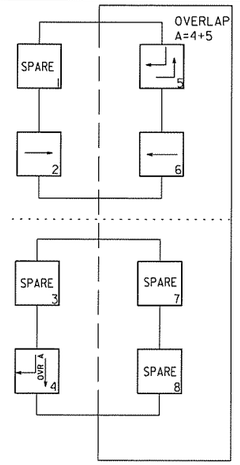

STATE OF ARKANSAS
REGISTERED PROFESSIONAL ENGINEER
No. 8141
NICCI D. TINER
3-20-16

LEGEND

- TYPE 1HD PULL BOX
- TYPE 1 PULL BOX
- TYPE 2 HD PULL BOX
- TYPE 2 PULL BOX
- EXISTING PULL BOX
- CONTROLLER CABINET
- EXISTING CONTROLLER CABINET
- SIGNAL HEAD
- SIGNAL POLE, MAST ARM AND LUMINAIRE ARM
- EXISTING SIGNAL POLE AND MAST ARM
- NMC - NON-METALLIC CONDUIT
- EXISTING CONDUIT
- VIDEO DETECTOR
- ANTENNA
- STAGE IA CONSTRUCTION UNDER TRAFFIC
- STAGE IA CONSTRUCTION

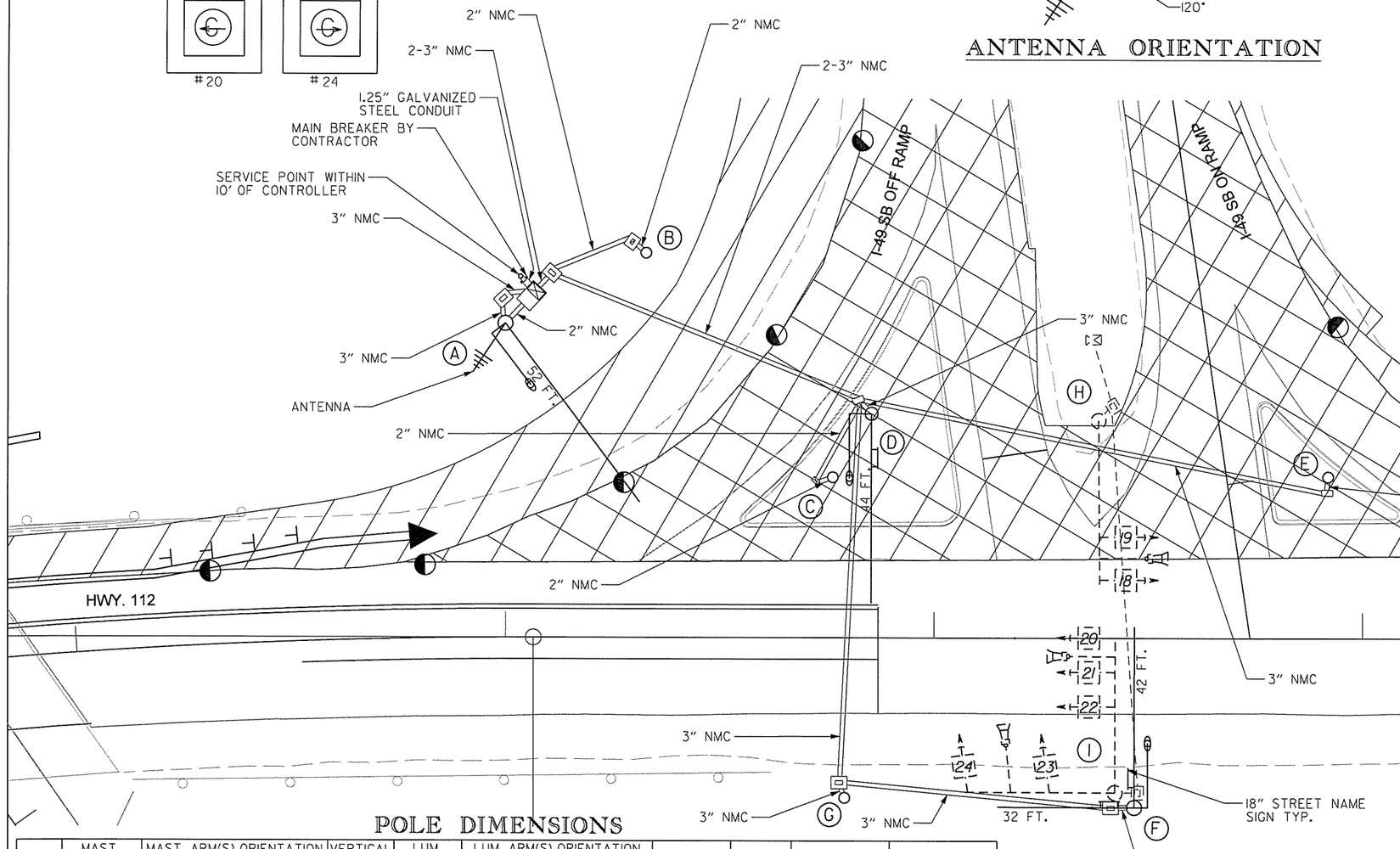

POLE DIMENSIONS

POLE	MAST ARM(S) LENGTH	MAST ARM(S) ORIENTATION ANGLE FROM HAND HOLE (CLOCKWISE)	VERTICAL SHAFT LENGTH	LUM. ARM LENGTH	LUM. ARM(S) ORIENTATION ANGLE FROM HAND HOLE (CLOCKWISE)	STATION HWY. 112	OFFSET	NORTHING	EASTING
A	52 FT.	180 DEGREES	35'-0"	15'-0"	180 DEGREES	22+00.19	73' LT.	652562.7837	668399.7803
B	-	-	15'-0"	-	-	22+32.73	89' LT.	652594.4542	668381.2250
C	-	-	15'-0"	-	-	22+76.44	37' LT.	652641.5373	668430.2698
D	44 FT.	180 DEGREES	35'-0"	15'-0"	180 DEGREES	22+85.45	52' LT.	652649.5472	668414.9088
E	-	-	15'-0"	-	-	29+92.04	38' LT.	652756.8662	668422.3249
F	42 FT.	180 DEGREES	35'-0"	15'-0"	180 DEGREES	23+46.80	39' RT.	652716.8656	668502.1148
	32 FT.**	90 DEGREES							
G	-	-	15'-0"	-	-	22+79.16	37' RT.	652649.2240	668504.4744
H	EXISTING POLE TO BE REMOVED AFTER STAGE 2 SIGNAL IS OPERATIONAL								
I	EXISTING POLE TO BE REMOVED AFTER STAGE 2 SIGNAL IS OPERATIONAL								

**MAST ARM LENGTH ALLOWS FOR FUTURE LEFT TURN ARROW

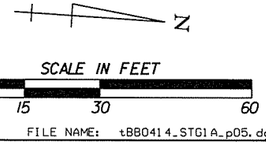

DATE: 03/11/16 FILE NAME: tBB0414_STG1A_p05.dgn

STAGE IA PLANS

LOCATION: HWY. 112 AT I-49 SB RAMPS
CITY: FAYETTEVILLE
COUNTY: WASHINGTON
DISTRICT: 04 SCALE: AS SHOWN DRAWN BY: CEM

AEWierciak 3/20/2016 11:57:17 AM
WORKSPACE: AHTD
L:\20INOI7707 - I-540 Widening & Interchange Improvement\Drawings\tBB0414_STG1A_p05.dgn
REVISED DATE:

DATE REVISED	DATE FILMED	DATE REVISED	DATE FILMED	FED.RD. DIST.NO.	STATE	FED.AID PROJ.NO.	SHEET NO.	TOTAL SHEETS
				6	ARK.			
				JOB NO.		BB0414	338	886

(2) SIGNALIZATION PLANS (HWY. 112 AT I-49 SB RAMPS)

STAGE 2 PHASING DIAGRAM

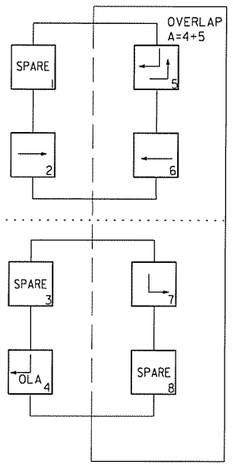

STAGE 2 SIGNAL FACES

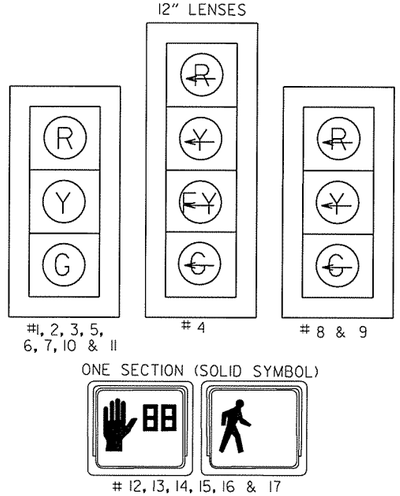

NOTE:
1. PEDESTRIAN SIGNAL HEADS SHALL REMAIN BLANK DURING STAGE CONSTRUCTION

DESIGN PARAMETERS

POSTED SPEED LIMIT:
45 MPH NORTH & SOUTH APPROACHES
- MPH WEST APPROACH
NO BUS STOPS
NO RAILROAD TRACKS
NO PARKING
NO FIRE STATION
2' MIN. CLEAR ZONE DISTANCE (BARRIER CURB SECTION)

NOTES:
1. NEW TRAFFIC SIGNALS INSTALLED DURING STAGE 1A SHALL BE OPERATIONAL PRIOR TO STAGE 2.
2. EXISTING SIGNAL EQUIPMENT SHALL BE REMOVED AFTER NEW TRAFFIC SIGNALS ARE OPERATIONAL.

LEGEND

- TYPE 1HD PULL BOX
- TYPE 1 PULL BOX
- TYPE 2 HD PULL BOX
- TYPE 2 PULL BOX
- CONTROLLER CABINET
- SIGNAL HEAD
- SIGNAL POLE, MAST ARM AND LUMINAIRE ARM
- NMC - NON-METALLIC CONDUIT
- VIDEO DETECTOR
- ANTENNA
- STAGE 2 CONSTRUCTION

STATE OF ARKANSAS
REGISTERED PROFESSIONAL ENGINEER
No. 8141
NICCI D. TINER
3-2016

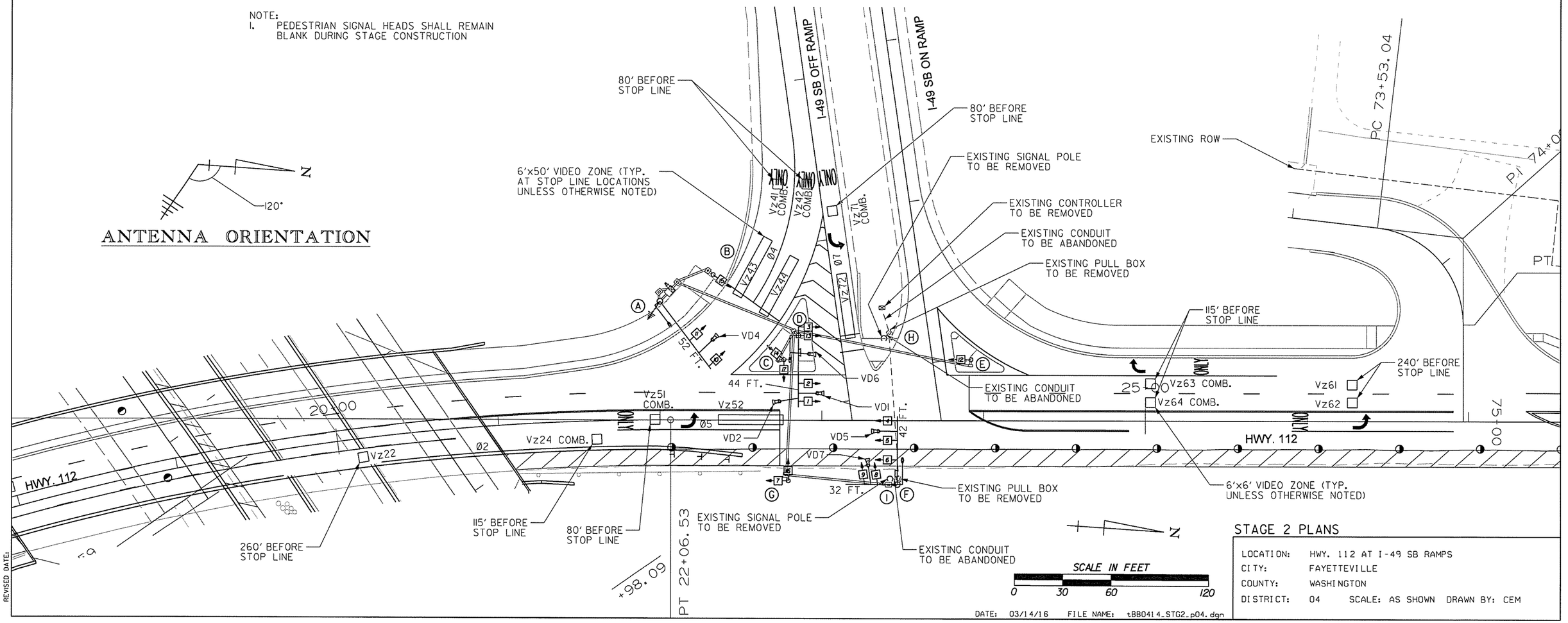

STAGE 2 PLANS

LOCATION:	HWY. 112 AT I-49 SB RAMPS
CITY:	FAYETTEVILLE
COUNTY:	WASHINGTON
DISTRICT:	04 SCALE: AS SHOWN DRAWN BY: CEM

DATE: 03/14/16 FILE NAME: tBB0414_STG2_p04.dgn

AEWerclok 3/20/2016 11:57:18 AM
WORKSPACE: AHTD
L:\20IN\10\7107 - I-540 Widening & Interchange Improvement\Drawings\1BB0414_STG2_p04.dgn
REVISED DATE:

DATE REVISED	DATE FILMED	DATE REVISED	DATE FILMED	FED.RD. DIST.NO.	STATE	FED.AID PROJ.NO.	SHEET NO.	TOTAL SHEETS
				6	ARK.			
				JOB NO.		BB0414	339	886

(2) SIGNALIZATION PLANS (HWY. 112 AT I-49 SB RAMPS)

STAGE 2 PHASING DIAGRAM

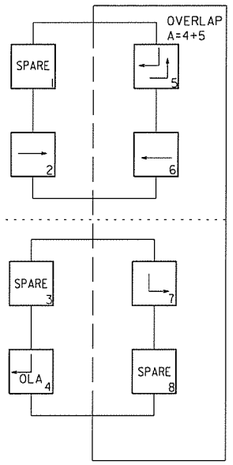

STAGE 2 SIGNAL FACES

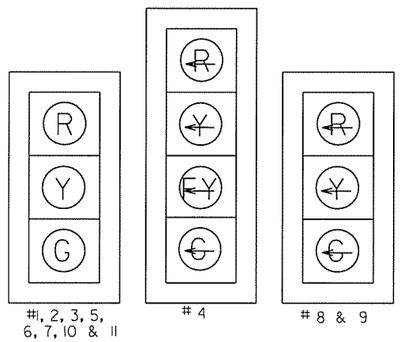

ONE SECTION (SOLID SYMBOL)

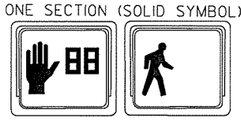

12, 13, 14, 15, 16 & 17

NOTE:
1. PEDESTRIAN SIGNAL HEADS SHALL REMAIN BLANK DURING STAGE CONSTRUCTION.

NOTES:
1. NEW TRAFFIC SIGNALS INSTALLED DURING STAGE IA SHALL BE OPERATIONAL PRIOR TO STAGE 2.
2. EXISTING SIGNAL EQUIPMENT SHALL BE REMOVED AFTER NEW TRAFFIC SIGNALS ARE OPERATIONAL.

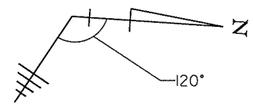

ANTENNA ORIENTATION

LEGEND

- TYPE 1HD PULL BOX
- TYPE 1PULL BOX
- TYPE 2 HD PULL BOX
- TYPE 2 PULL BOX
- CONTROLLER CABINET
- SIGNAL HEAD
- SIGNAL POLE, MAST ARM AND LUMINAIRE ARM
- NMC - NON-METALLIC CONDUIT
- VIDEO DETECTOR
- ANTENNA
- STAGE 2 CONSTRUCTION

STATE OF ARKANSAS
REGISTERED PROFESSIONAL ENGINEER
No. 8141
NICCI D. TINER
3-20-16

DESIGN PARAMETERS

POSTED SPEED LIMIT:
45 MPH NORTH & SOUTH APPROACHES
- MPH WEST APPROACH
NO BUS STOPS
NO RAILROAD TRACKS
NO PARKING
NO FIRE STATION
2' MIN. CLEAR ZONE DISTANCE (BARRIER CURB SECTION)

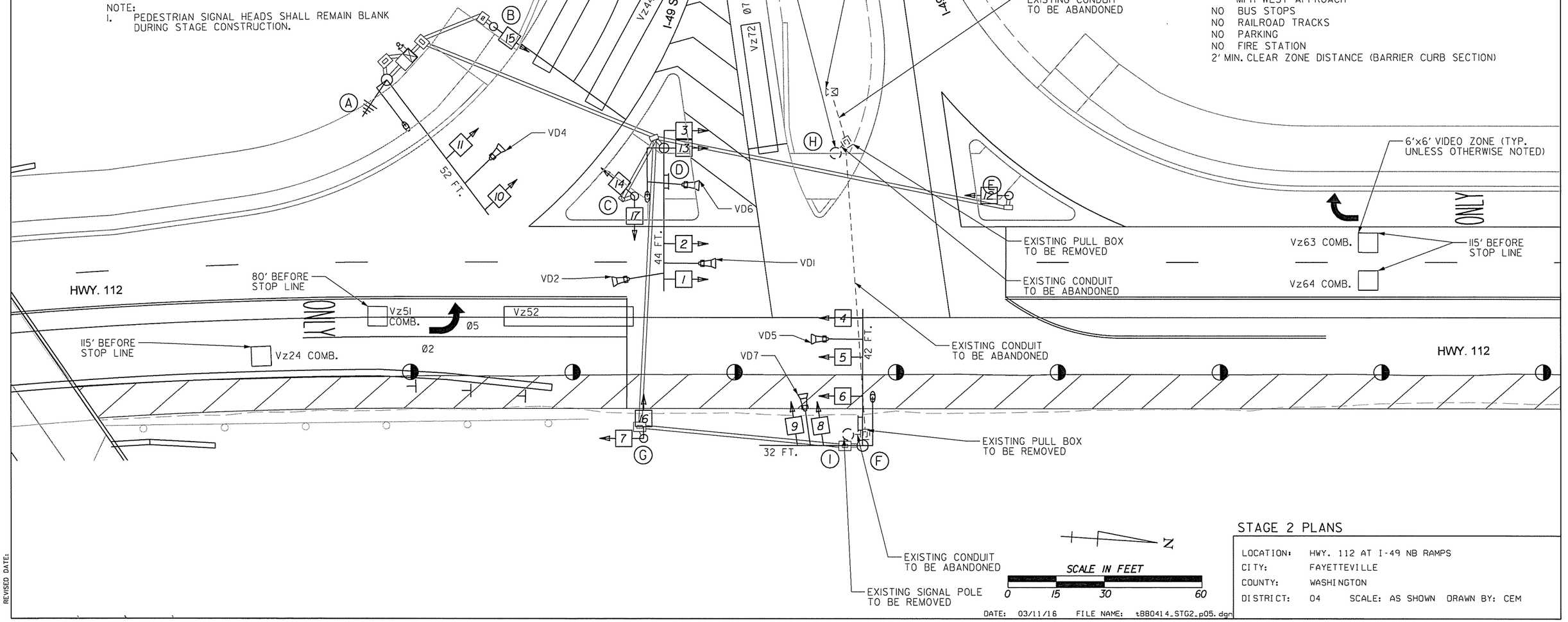

STAGE 2 PLANS

LOCATION: HWY. 112 AT I-49 NB RAMPS
CITY: FAYETTEVILLE
COUNTY: WASHINGTON
DISTRICT: 04 SCALE: AS SHOWN DRAWN BY: CEM

DATE: 03/11/16 FILE NAME: tBB0414_STG2_p05.dgn

AEWerclok 3/20/2016 11:26:57 PM
WORKSPACE: AHTD
L:\20IN\10I7107 - I-540 Widening & Interchange Improvement\Drawings\1BB0414_STG2_p05.dgn
REVISED DATE:

STAGE 2C PHASING DIAGRAM

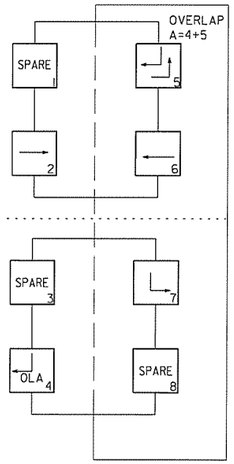

STAGE 2C SIGNAL FACES

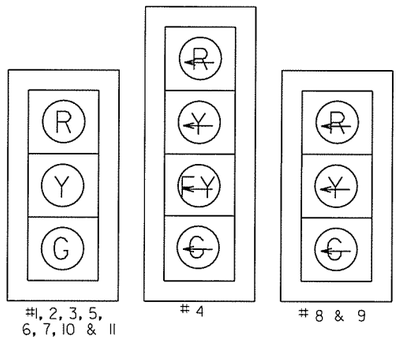

ONE SECTION (SOLID SYMBOL)

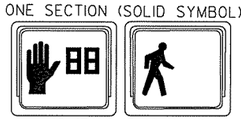

12, 13, 14, 15, 16 & 17

NOTE:
1. PEDESTRIAN SIGNAL HEADS SHALL REMAIN BLANK DURING STAGE CONSTRUCTION

DESIGN PARAMETERS

POSTED SPEED LIMIT:
45 MPH NORTH & SOUTH APPROACHES
- MPH WEST APPROACH
NO BUS STOPS
NO RAILROAD TRACKS
NO PARKING
NO FIRE STATION
2' MIN. CLEAR ZONE DISTANCE (BARRIER CURB SECTION)

DATE REVISED	DATE FILMED	DATE REVISED	DATE FILMED	FED.RD. DIST.NO.	STATE	FED.AID PROJ.NO.	SHEET NO.	TOTAL SHEETS
				6	ARK.			
				JOB NO.		BB0414	340	886

(2) SIGNALIZATION PLANS (HWY. 112 AT I-49 SB RAMPS)

LEGEND

- TYPE 1HD PULL BOX
- TYPE 1PULL BOX
- TYPE 2 HD PULL BOX
- TYPE 2 PULL BOX
- CONTROLLER CABINET
- SIGNAL HEAD
- SIGNAL POLE, MAST ARM AND LUMINAIRE ARM
- NMC - NON-METALLIC CONDUIT
- VIDEO DETECTOR
- ANTENNA
- STAGE 2C CONSTRUCTION

STATE OF ARKANSAS
REGISTERED PROFESSIONAL ENGINEER
No.8141
NICCI D. TINER
3-20-16

ANTENNA ORIENTATION

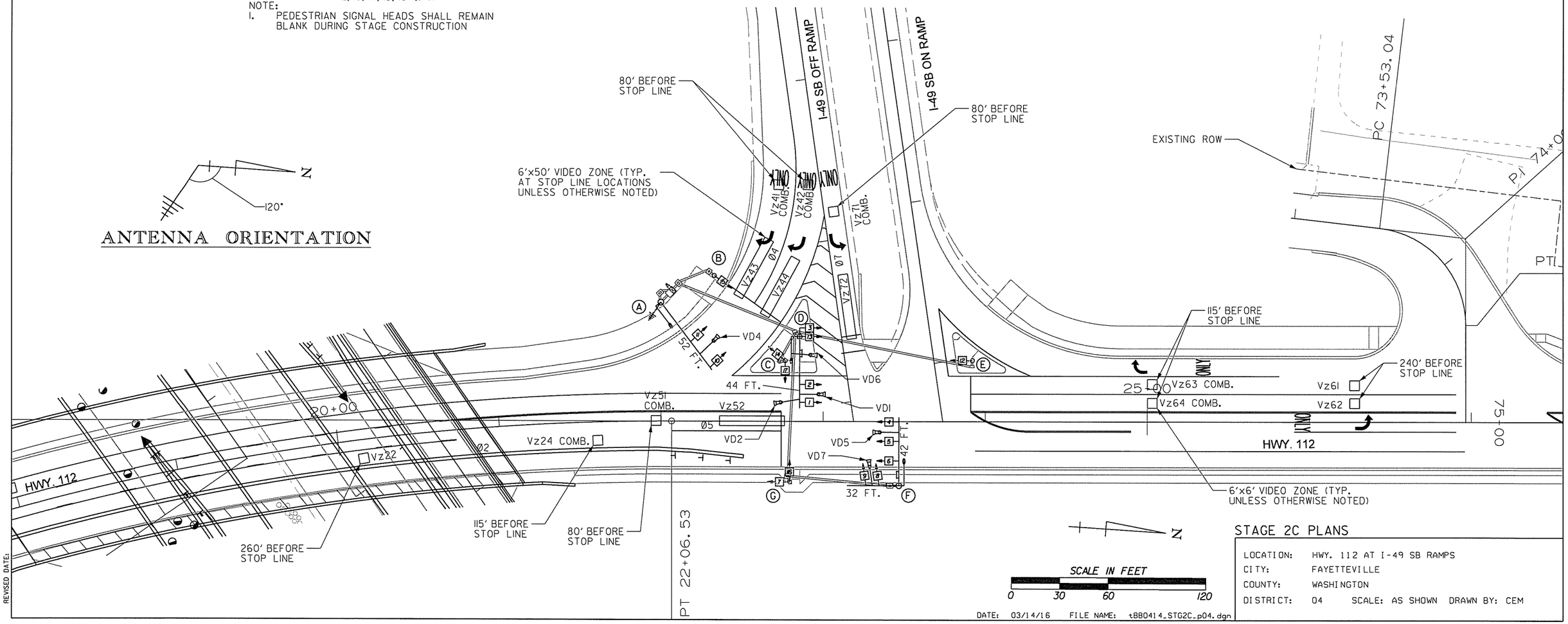

STAGE 2C PLANS

LOCATION: HWY. 112 AT I-49 SB RAMPS
CITY: FAYETTEVILLE
COUNTY: WASHINGTON
DISTRICT: 04 SCALE: AS SHOWN DRAWN BY: CEM

DATE: 03/14/16 FILE NAME: tBB0414_STG2C_p04.dgn

AEWerclok 3/20/2016 11:57:18 AM
WORKSPACE: AHTD
L:\2016\160707 - I-540 Widening & Interchange Improvement\Drawings\1BB0414_STG2C_p04.dgn
REVISED DATE:

DATE REVISED	DATE FILMED	DATE REVISED	DATE FILMED	FED.RD. DIST.NO.	STATE	FED.AID PROJ.NO.	SHEET NO.	TOTAL SHEETS
				6	ARK.			
				JOB NO.		BB0414	341	886

(2) SIGNALIZATION PLANS (HWY. 112 AT I-49 SB RAMPS)

STAGE 2C PHASING DIAGRAM

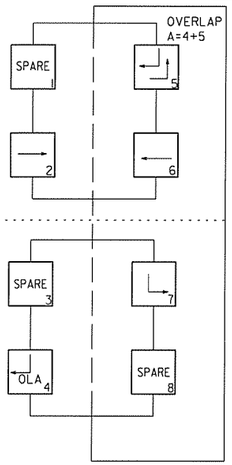

STAGE 2C SIGNAL FACES

12" LENSES

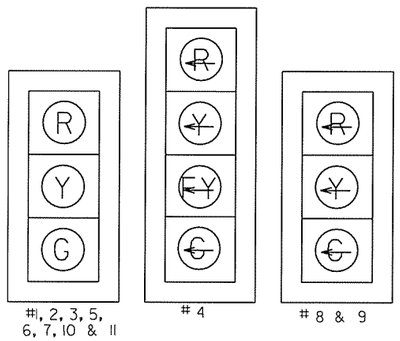

ONE SECTION (SOLID SYMBOL)

NOTE:
1. PEDESTRIAN SIGNAL HEADS SHALL REMAIN BLANK DURING STAGE CONSTRUCTION.

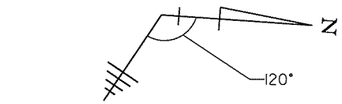

ANTENNA ORIENTATION

LEGEND

- TYPE 1HD PULL BOX
- TYPE 1PULL BOX
- TYPE 2 HD PULL BOX
- TYPE 2 PULL BOX
- CONTROLLER CABINET
- SIGNAL HEAD
- SIGNAL POLE, MAST ARM AND LUMINAIRE ARM
- NMC - NON-METALLIC CONDUIT
- VIDEO DETECTOR
- ANTENNA
- STAGE 2C CONSTRUCTION

STATE OF ARKANSAS
REGISTERED PROFESSIONAL ENGINEER
No.8141
NICCI D. TINER
3-20-16

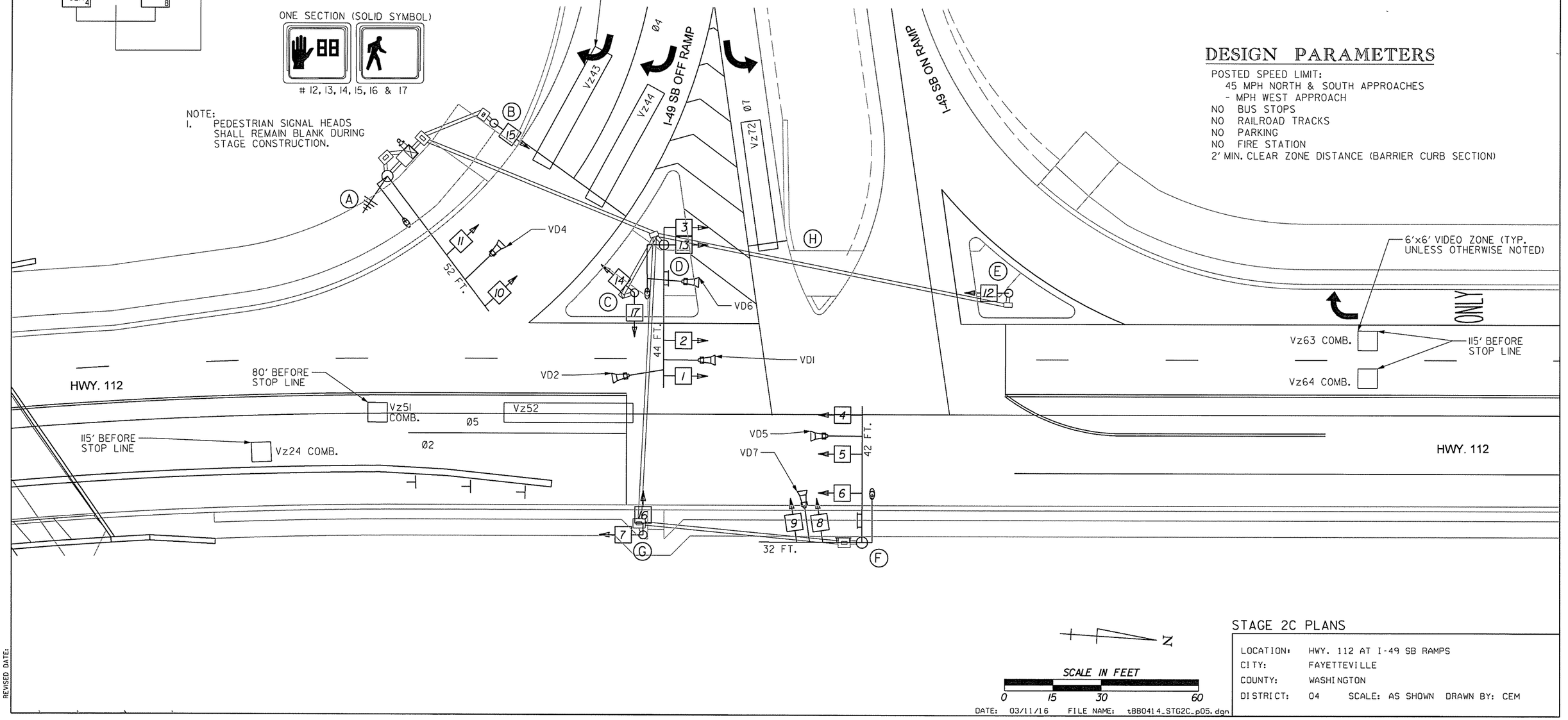

DESIGN PARAMETERS

POSTED SPEED LIMIT:
45 MPH NORTH & SOUTH APPROACHES
- MPH WEST APPROACH
NO BUS STOPS
NO RAILROAD TRACKS
NO PARKING
NO FIRE STATION
2' MIN. CLEAR ZONE DISTANCE (BARRIER CURB SECTION)

N

SCALE IN FEET
0 15 30 60

DATE: 03/11/16 FILE NAME: tBB0414_STG2C_p05.dgn

STAGE 2C PLANS

LOCATION: HWY. 112 AT I-49 SB RAMPS
CITY: FAYETTEVILLE
COUNTY: WASHINGTON
DISTRICT: 04 SCALE: AS SHOWN DRAWN BY: CEM

AEWierzbicki 3/20/2016 11:57:19 AM
WORKSPACE: AHTD
L:\2016\160707 - I-540 Widening & Interchange Improvement\Drawings\tBB0414_STG2C_p05.dgn
REVISED DATE:

DETECTOR CHART (STAGE 2 & 2C)

DETECTOR ASSIGNMENTS				HARDWARE INPUTS BY SUPPLIER			PROGRAM ASSIGNMENTS			VIDEO DET. TUBE LENGTH	COMMENT
							LOCAL		MSTR.		
DETECTOR I.D. #	DIRECTION & LOCATION	TYPE	DET. #	CAB. TRM. #	AMP CHN. #	CON. INP. #	PHS.	SYS. DET. #	SYS. DET. #		
Vz22	NB FAR	LOCAL			6	V2	2			74"	VD2
Vz24	NB NEAR	COMB.			8	V10	2	2		23"	VD5
Vz41	EB RIGHT OUTSIDE FAR	COMB.			17	V11	4	3		23"	VD7
Vz42	EB RIGHT INSIDE FAR	COMB.			18	V12	4	4		23"	VD7
Vz43	EB RIGHT OUTSIDE NEAR	LOCAL			15	V3	4			23"	VD4
Vz44	EB RIGHT INSIDE NEAR	LOCAL			16	V4	4			23"	VD4
Vz51	NB LEFT FAR	COMB.			9	V13	5	5		23"	VD5
Vz52	NB LEFT NEAR	LOCAL			10	V5	5			23"	VD5
Vz61	SB OUTSIDE FAR	LOCAL			1	V6	6			23"	VD6
Vz62	SB INSIDE FAR	LOCAL			2	V8	6			23"	VD6
Vz63	SB OUTSIDE NEAR	COMB.			3	V14	6	6		23"	VDI
Vz64	SB INSIDE NEAR	COMB.			4	V16	6	8		23"	VDI
Vz71	EB LEFT FAR	COMB.			19	V15	7	7		23"	VD7
Vz72	EB LEFT NEAR	LOCAL			20	V7	7			23"	VD7

CONTROLLER INPUT ABBREVIATIONS:
V = VEHICLE INPUT
D = SYSTEM OR AUXILIARY INPUT
P = PEDESTRIAN INPUT

SPARE AMP CHN. #= 5, 7, 11, 12, 13 & 14

INTERVAL CHART (STAGE 2 & 2C)

SIGNAL FACES	INTERSECTION INTERVALS						FLASH SEQ.
	2+5	CLR.	2+6	CLR.	4+7	CLR.	
1, 2 & 3	R	R	G	Y	R	R	R
4	~~G~~	***	~~FY~~	*	~~R~~	~~R~~	~~R~~
5, 6 & 7	G	**	G	**	R	R	R
8 & 9	~~R~~	~~R~~	~~R~~	~~R~~	~~G~~	~~Y~~	~~R~~
10 & 11	G	**	R	R	G	**	R
12 & 13	B	B	B	B	B	B	B
14 & 15	B	B	B	B	B	B	B
16 & 17	B	B	B	B	B	B	B

* DENOTES GREEN OR YELLOW ARROW DEPENDING ON NEXT PHASE
** DENOTES GREEN OR YELLOW BALL DEPENDING ON NEXT PHASE
*** DENOTES YELLOW OR FLASHING YELLOW ARROW DEPENDING ON NEXT PHASE

DATE REVISED	DATE FILMED	DATE REVISED	DATE FILMED	FED.RD. DIST.NO.	STATE	FED.AID PROJ.NO.	SHEET NO.	TOTAL SHEETS
				6	ARK.			
				JOB NO.		BB0414	342	886

(2) SIGNALIZATION PLANS (HWY. 112 AT I-49 SB RAMPS)

STATE OF ARKANSAS
REGISTERED PROFESSIONAL ENGINEER
No. 8141
NICCI D. TINER
3-20-16

STAGE 2 & 2C PHASING DIAGRAM

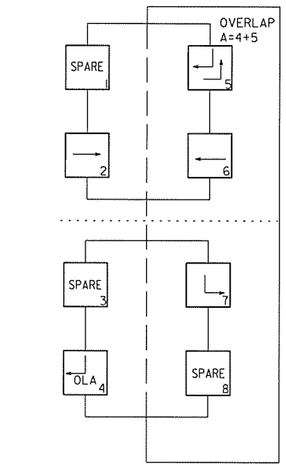

STAGE 2 & 2C SIGNAL FACES

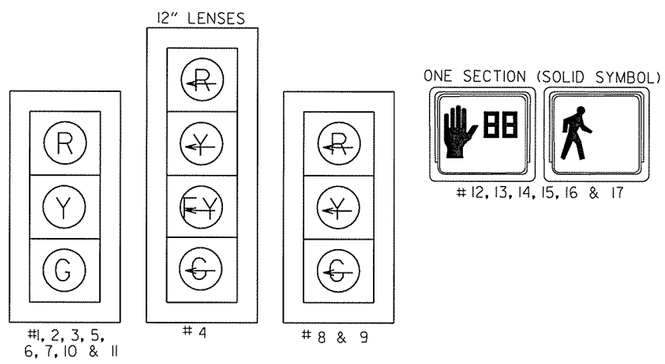

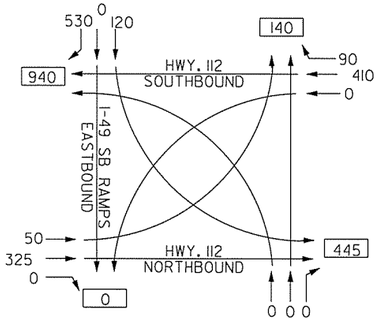

I-49 SB RAMPS AT HWY. 112
TRAFFIC FLOW DIAGRAM
TRAFFIC VOLUME
A.M. PEAK HOUR

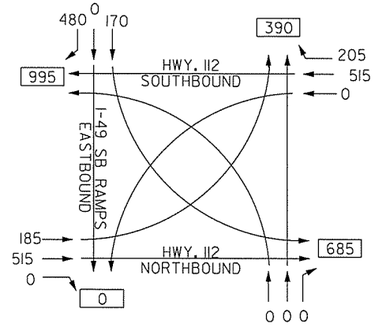

I-49 SB RAMPS AT HWY. 112
TRAFFIC FLOW DIAGRAM
TRAFFIC VOLUME
P.M. PEAK HOUR

NOTE:
2011 TRAFFIC VOLUMES

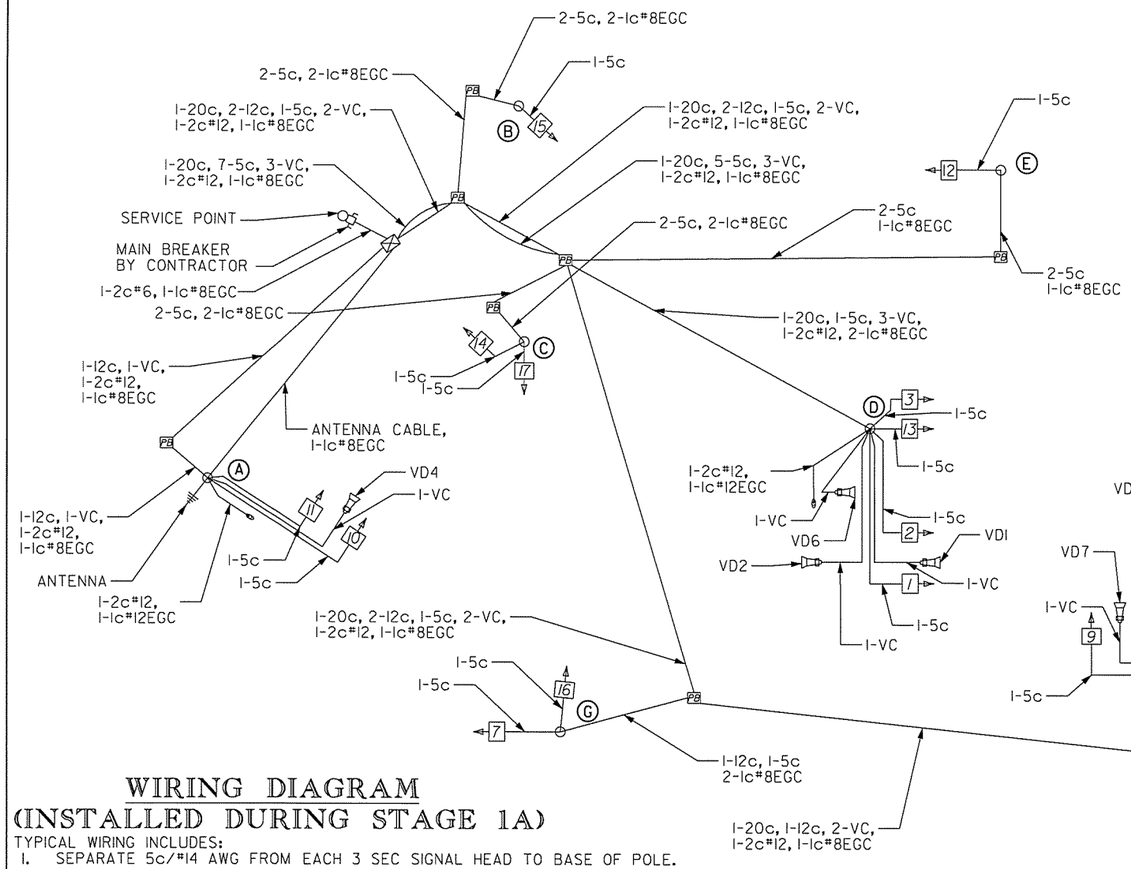

WIRING DIAGRAM (INSTALLED DURING STAGE 1A)

TYPICAL WIRING INCLUDES:
1. SEPARATE 5c/#14 AWG FROM EACH 3 SEC SIGNAL HEAD TO BASE OF POLE.
2. SEPARATE 7c/#14 AWG FROM EACH 4 SEC SIGNAL HEAD TO BASE OF POLE.
3. PROVIDE SEPARATE CONDUIT FOR ANTENNA CABLE.
4. SEPARATE 5c/#14 AWG TO EACH POLE WITH PEDESTRIAN PUSH BUTTONS.
5. ALL DETECTOR RACK CHANNELS, INCLUDING UNUSED, SHALL BE BROUGHT TO TERMINAL STRIP IN DETECTOR AREA ON CABINET.
6. THE LOCAL GOVERNMENT SHALL BE RESPONSIBLE FOR PROVIDING POWER TO THE SERVICE POINT.

NOTES:
1. ADDITIONAL 1-1c#8EGC IN SEPARATE CONDUIT REQUIRED FROM POLE AND CONTROLLER TO NEAREST PULL BOX. REFER TO STANDARD DRAWING SD-6, HEAVY DUTY PULL BOX. COST OF ADDITIONAL 1-1c#8EGC INCLUDED IN ITEMS 701, 714, & 715.
2. SEE FINAL WIRING DIAGRAM FOR GROUNDING DETAIL.

N

STAGE 2 & 2C PLANS

LOCATION:	HWY. 112 AT I-49 SB RAMPS
CITY:	FAYETTEVILLE
COUNTY:	WASHINGTON
DISTRICT:	04 SCALE: AS SHOWN DRAWN BY: CEM

DATE: 03/09/16 FILE NAME: tBB0414_STG2C_p06.dgn

AEWierdak 3/20/2016 11:57:19 AM
WORKSPACE: AHTD
L:\20IN\I0I707 - I-540 Widening & Interchange Improvement\Drawings\tBB0414_STG2C_p06.dgn
REVISED DATE:

DATE REVISED	DATE FILMED	DATE REVISED	DATE FILMED	FED.RD. DIST.NO.	STATE	FED.AID PROJ.NO.	SHEET NO.	TOTAL SHEETS
				6	ARK.			
				JOB NO.		BB0414	343	886

(2) SIGNALIZATION PLANS (HWY. 112 AT I-49 SB RAMPS)

NOTES:
1. CROSSWALKS ARE NOT SHOWN FOR CLARITY.
2. FINAL SIGNALIZATION PLANS SHOW ITEMS INSTALLED DURING STAGE CONSTRUCTION.
3. NEW SIGNALS AT THIS INTERSECTION MUST BE OPERATIONAL PRIOR TO FIVE LANE OPERATION AT THIS INTERSECTION.
4. SIGNAL HEADS 1 AND 2 AND VIDEO DETECTOR VD-1 SHALL BE RELOCATED ON MAST ARM AS SHOWN.
5. ADDITIONAL 0.5" NMC REQUIRED FROM POLE AND CONTROLLER TO NEAREST PULL BOX. REFER TO STANDARD DRAWING SD-6, HEAVY DUTY PULL BOX. COST OF ADDITIONAL 0.5" NMC INCLUDED IN ITEMS 701, 714, & 715.

FINAL PHASING DIAGRAM

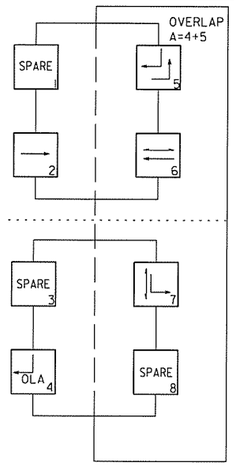

FINAL SIGNAL FACES

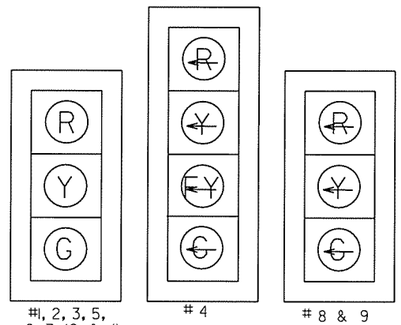

ONE SECTION (SOLID SYMBOL)

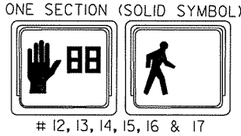

12, 13, 14, 15, 16 & 17

LEGEND

- TYPE 1HD PULL BOX
- TYPE 1PULL BOX
- TYPE 2 HD PULL BOX
- TYPE 2 PULL BOX
- CONTROLLER CABINET
- SIGNAL HEAD
- SIGNAL POLE, MAST ARM AND LUMINAIRE ARM
- NMC - NON-METALLIC CONDUIT
- VIDEO DETECTOR
- ANTENNA

STATE OF ARKANSAS
REGISTERED PROFESSIONAL ENGINEER
No. 8141
NICCI D. TINER
3-20-16

DESIGN PARAMETERS

POSTED SPEED LIMIT:
45 MPH NORTH & SOUTH APPROACHES
- MPH WEST APPROACH
NO BUS STOPS
NO RAILROAD TRACKS
NO PARKING
NO FIRE STATION
2' MIN. CLEAR ZONE DISTANCE (BARRIER CURB SECTION)

**

ANTENNA ORIENTATION

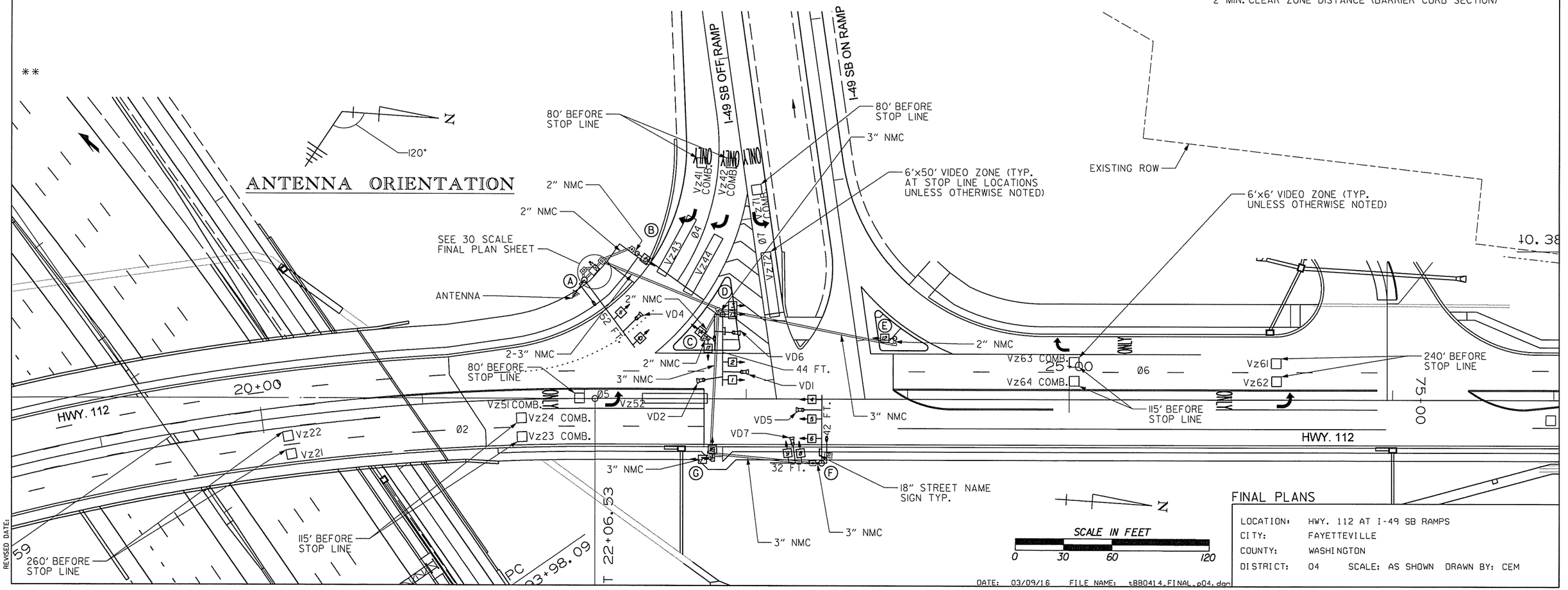

FINAL PLANS

LOCATION:	HWY. 112 AT I-49 SB RAMPS
CITY:	FAYETTEVILLE
COUNTY:	WASHINGTON
DISTRICT:	04 SCALE: AS SHOWN DRAWN BY: CEM

DATE: 03/09/16 FILE NAME: tBB0414_FINAL_p04.dgn

AEWierclck 3/20/2016 11:57:20 AM
WORKSPACE: AHTD
L:\20IN\10\7107 - I-540 Widening & Interchange Improvement\Drawings\tBB0414_FINAL_p04.dgn
REVISED DATE:

NOTES:
1. FINAL SIGNALIZATION PLANS SHOW ITEMS INSTALLED DURING STAGES 1 AND 2.
2. NEW SIGNALS AT THIS INTERSECTION MUST BE OPERATIONAL PRIOR TO FIVE LANE OPERATION AT THIS INTERSECTION.
3. SIGNAL HEADS 1 AND 2 AND VIDEO DETECTOR VD-1 SHALL BE RELOCATED ON MAST ARM AS SHOWN.
4. ADDITIONAL 0.5" NMC REQUIRED FROM POLE AND CONTROLLER TO NEAREST PULL BOX. REFER TO STANDARD DRAWING SD-6, HEAVY DUTY PULL BOX. COST OF ADDITIONAL 0.5" NMC INCLUDED IN ITEMS 701, 714, & 715.

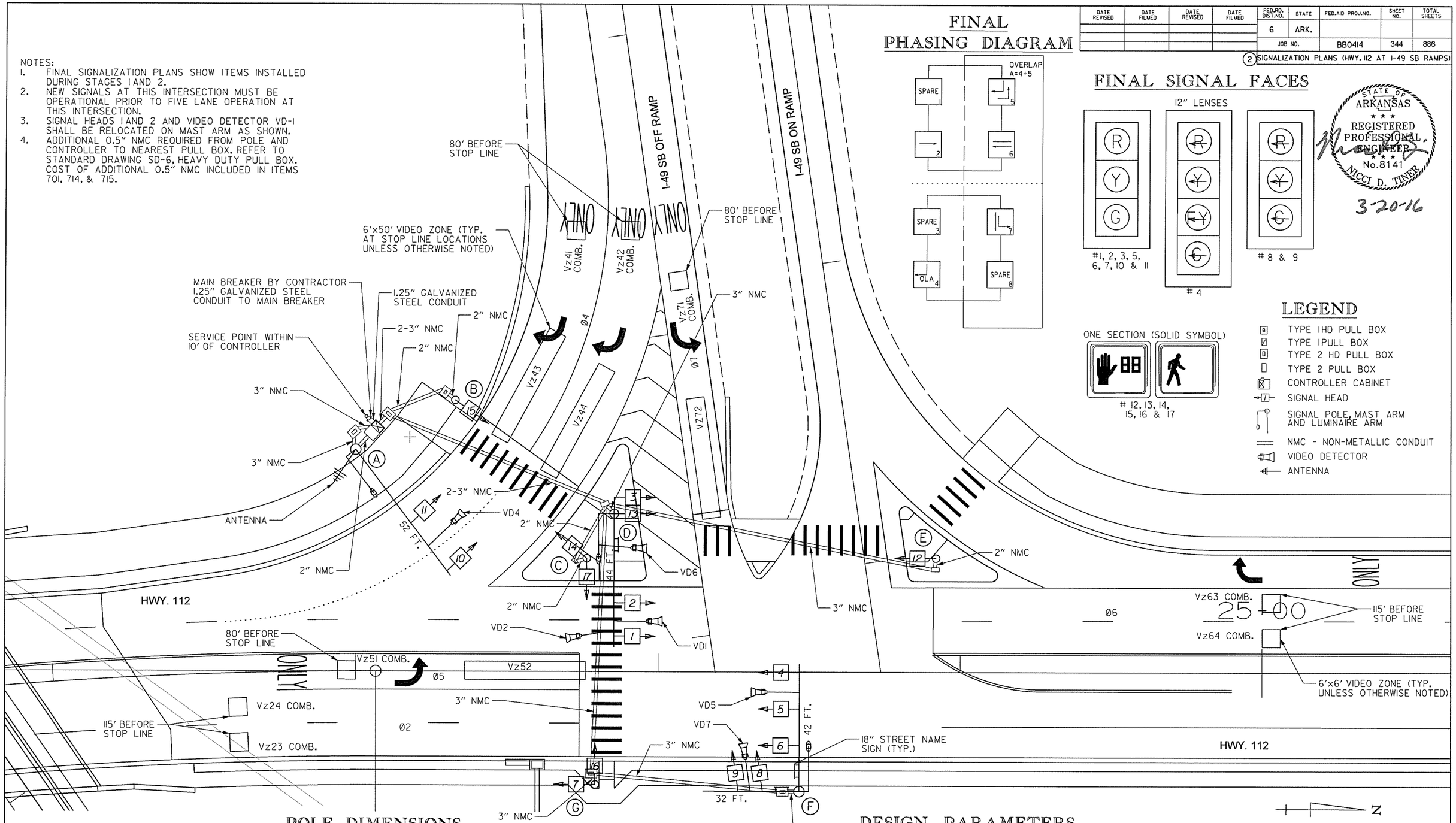

FINAL PHASING DIAGRAM

FINAL SIGNAL FACES

LEGEND

- TYPE 1HD PULL BOX
- TYPE 1PULL BOX
- TYPE 2 HD PULL BOX
- TYPE 2 PULL BOX
- CONTROLLER CABINET
- SIGNAL HEAD
- SIGNAL POLE, MAST ARM AND LUMINAIRE ARM
- NMC - NON-METALLIC CONDUIT
- VIDEO DETECTOR
- ANTENNA

STATE OF ARKANSAS
REGISTERED PROFESSIONAL ENGINEER
No. 8141
NICCI D. TINER
3-20-16

DATE REVISED	DATE FILMED	DATE REVISED	DATE FILMED	FED.RD. DIST.NO.	STATE	FED.AID PROJ.NO.	SHEET NO.	TOTAL SHEETS
				6	ARK.			
				JOB NO.		BB0414	344	886

(2) SIGNALIZATION PLANS (HWY. 112 AT I-49 SB RAMPS)

POLE DIMENSIONS

POLE	MAST ARM(S) LENGTH	MAST ARM(S) ORIENTATION ANGLE FROM HAND HOLE (CLOCKWISE)	VERTICAL SHAFT LENGTH	LUM. ARM LENGTH	LUM. ARM(S) ORIENTATION ANGLE FROM HAND HOLE (CLOCKWISE)	STATION HWY. 112	OFFSET	NORTHING	EASTING
A	52 FT.	180 DEGREES	35'-0"	15'-0"	180 DEGREES	22+00.19	73' LT.	652562.7837	668399.7803
B	-	-	15'-0"	-	-	22+32.73	89' LT.	652594.4542	668381.2250
C	-	-	15'-0"	-	-	22+76.44	37' LT.	652641.5373	668430.2698
D	44 FT.	180 DEGREES	35'-0"	15'-0"	180 DEGREES	22+85.45	52' LT.	652649.5472	668414.9088
E	-	-	15'-0"	-	-	23+92.04	38' LT.	652756.8662	668422.3249
F	42 FT. 32 FT.**	180 DEGREES 90 DEGREES	35'-0"	15'-0"	180 DEGREES	23+46.80	39' RT.	652716.8656	668502.1148
G	-	-	15'-0"	-	-	22+79.16	37' RT.	652649.2240	668504.4744

**MAST ARM LENGTH ALLOWS FOR FUTURE LEFT TURN ARROW

DESIGN PARAMETERS

POSTED SPEED LIMIT:
45 MPH NORTH & SOUTH APPROACHES
- MPH WEST APPROACH
NO BUS STOPS
NO RAILROAD TRACKS
NO PARKING
NO FIRE STATION
2' MIN. CLEAR ZONE DISTANCE (BARRIER CURB SECTION)

N

SCALE IN FEET
0 15 30 60

FINAL PLANS

LOCATION:	HWY. 112 AT I-49 SB RAMPS
CITY:	FAYETTEVILLE
COUNTY:	WASHINGTON
DISTRICT:	04 SCALE: AS SHOWN DRAWN BY: CEM

DATE: 03/09/16 FILE NAME: tBB0414_FINAL_p05.dgn

AEWierciak 3/20/2016 11:57:20 AM
WORKSPACE: AHTD
L:\20IN\10I7707 - I-540 Widening & Interchange Improvement\Drawings\tBB0414_FINAL_p05.dgn
REVISED DATE:

DETECTOR CHART (FINAL)

DETECTOR ASSIGNMENTS				HARDWARE INPUTS BY SUPPLIER			PROGRAM ASSIGNMENTS			VIDEO DET. TUBE LENGTH	COMMENT
							LOCAL		MSTR.		
DETECTOR I.D. #	DIRECTION & LOCATION	TYPE	DET. #	CAB. TRM. #	AMP CHN. #	CON. INP. #	PHS.	SYS. DET. #	SYS. DET. #		
Vz21	NB OUTSIDE FAR	LOCAL			5	VI	2			74"	VD2
Vz22	NB INSIDE FAR	LOCAL			6	V2	2			74"	VD2
Vz23	NB OUTSIDE NEAR	COMB.			7	V9	2	1		23"	VD5
Vz24	NB INSIDE NEAR	COMB.			8	VI0	2	2		23"	VD5
Vz41	EB RIGHT OUTSIDE FAR	COMB.			17	VII	4	3		23"	VD4
Vz42	EB RIGHT INSIDE FAR	COMB.			18	VI2	4	4		23"	VD4
Vz43	EB RIGHT OUTSIDE NEAR	LOCAL			15	V3	4			23"	VD4
Vz44	EB RIGHT INSIDE NEAR	LOCAL			16	V4	4			23"	VD4
Vz51	NB LEFT FAR	COMB.			9	VI3	5	5		23"	VD5
Vz52	NB LEFT NEAR	LOCAL			10	V5	5			23"	VD5
Vz61	SB OUTSIDE FAR	LOCAL			1	V6	6			23"	VD6
Vz62	SB INSIDE FAR	LOCAL			2	V8	6			23"	VD6
Vz63	SB OUTSIDE NEAR	COMB.			3	VI4	6	6		23"	VDI
Vz64	SB INSIDE NEAR	COMB.			4	VI6	6	8		23"	VDI
Vz71	EB LEFT FAR	COMB.			19	VI5	7	7		23"	VD7
Vz72	EB LEFT NEAR	LOCAL			20	V7	7			23"	VD7
PB6	N TO S	PED.				P6	6				
PB2	S TO N	PED.				P2	6				
PB7	E TO W	PED.				P7	7				

CONTROLLER INPUT ABBREVIATIONS:
V = VEHICLE INPUT
D = SYSTEM OR AUXILIARY INPUT
P = PEDESTRIAN INPUT

SPARE AMP CHN. #= 11, 12, 13 & 14

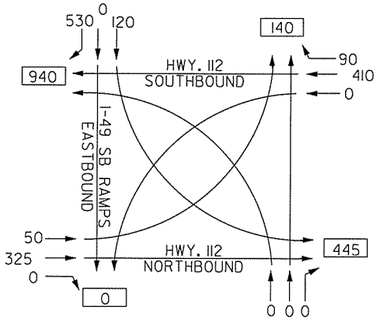

I-49 SB RAMPS AT HWY. 112
TRAFFIC FLOW DIAGRAM
TRAFFIC VOLUME
A.M. PEAK HOUR

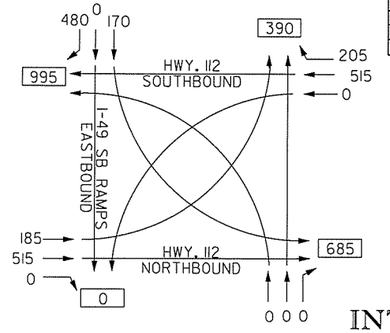

I-49 SB RAMPS AT HWY. 112
TRAFFIC FLOW DIAGRAM
TRAFFIC VOLUME
P.M. PEAK HOUR

NOTE:
2011 TRAFFIC VOLUMES

FINAL PHASING DIAGRAM

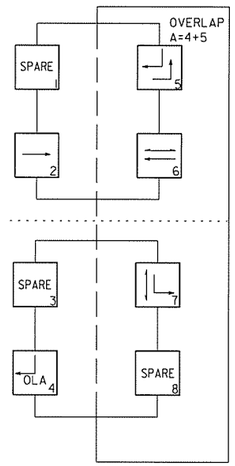

INTERVAL CHART (FINAL)

SIGNAL FACES	INTERSECTION INTERVALS						FLASH SEQ.
	2+5	CLR.	2+6	CLR.	4+7	CLR.	
1, 2 & 3	R	R	G	Y	R	R	R
4	~~G~~	***	~~Y~~	*	~~R~~	~~R~~	~~R~~
5, 6 & 7	G	**	G	**	R	R	R
8 & 9	~~R~~	~~R~~	~~R~~	~~R~~	~~G~~	~~Y~~	~~R~~
10 & 11	G	**	R	R	G	**	R
12 & 13	DW	DW	W	FDW	DW	DW	B
14 & 15	DW	DW	W	FDW	DW	DW	B
16 & 17	DW	DW	DW	DW	W	FDW	B

* DENOTES GREEN OR YELLOW ARROW DEPENDING ON NEXT PHASE
** DENOTES GREEN OR YELLOW BALL DEPENDING ON NEXT PHASE
*** DENOTES YELLOW OR FLASHING YELLOW ARROW DEPENDING ON NEXT PHASE

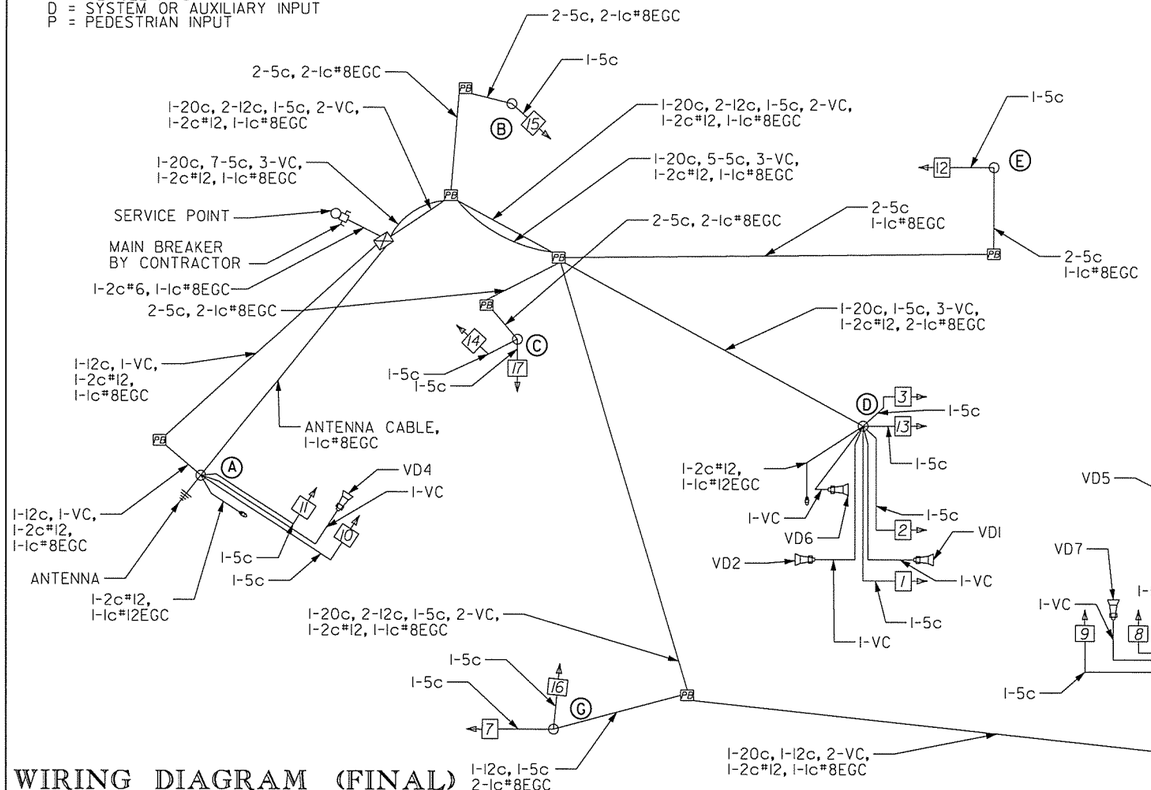

WIRING DIAGRAM (FINAL)

TYPICAL WIRING INCLUDES:
1. SEPARATE 5c/#14 AWG FROM EACH 3 SEC SIGNAL HEAD TO BASE OF POLE.
2. SEPARATE 7c/#14 AWG FROM EACH 4 SEC SIGNAL HEAD TO BASE OF POLE.
3. PROVIDE SEPARATE CONDUIT FOR ANTENNA CABLE.
4. SEPARATE 5c/#14 AWG TO EACH POLE WITH PEDESTRIAN PUSH BUTTONS.
5. ALL DETECTOR RACK CHANNELS, INCLUDING UNUSED, SHALL BE BROUGHT TO TERMINAL STRIP IN DETECTOR AREA ON CABINET.
6. THE LOCAL GOVERNMENT SHALL BE RESPONSIBLE FOR PROVIDING POWER TO THE SERVICE POINT.

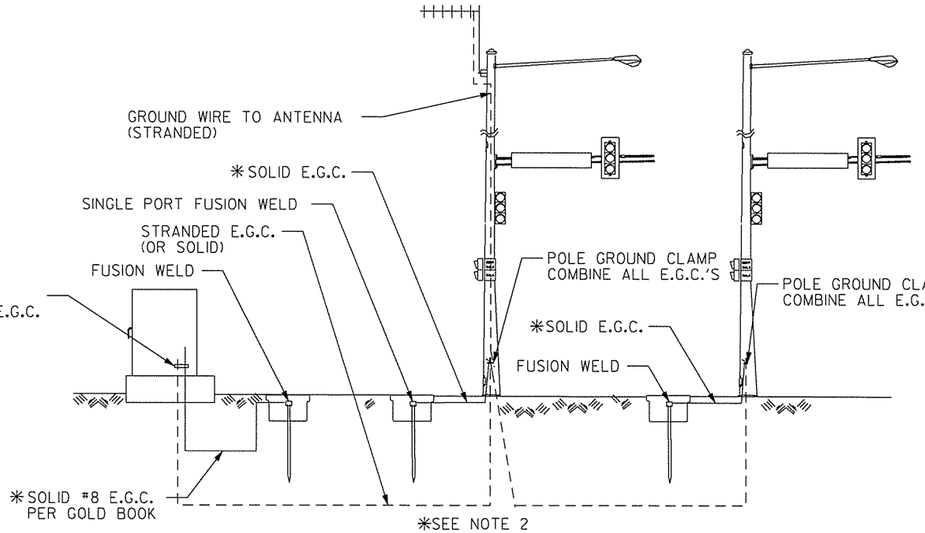

GROUNDING ARRAY
SINGLE-PORT FUSION WELDS

NOTES:
1. FINAL WIRING INCLUDES WIRING FROM STAGED CONSTRUCTION.
2. ADDITIONAL I-Ic#8EGC IN SEPARATE CONDUIT REQUIRED FROM POLE AND CONTROLLER TO NEAREST PULL BOX. REFER TO STANDARD DRAWING SD-6, HEAVY DUTY PULL BOX. COST OF ADDITIONAL I-Ic#8EGC INCLUDED IN ITEMS 701, 714, & 715.

N

DATE: 03/14/16 FILE NAME: tBB0414_FINAL_p06.dgn

DATE REVISED	DATE FILMED	DATE REVISED	DATE FILMED	FED.RD. DIST.NO.	STATE	FED.AID PROJ.NO.	SHEET NO.	TOTAL SHEETS
				6	ARK.			
				JOB NO.		BB0414	345	886

(2) SIGNALIZATION PLANS (HWY. 112 AT I-49 SB RAMPS)

STATE OF ARKANSAS
REGISTERED PROFESSIONAL ENGINEER
No. 8141
MICCI D. TINER
3-20-16

FINAL PLANS

LOCATION: HWY. 112 AT I-49 SB RAMPS
CITY: FAYETTEVILLE
COUNTY: WASHINGTON
DISTRICT: 04 SCALE: AS SHOWN DRAWN BY: CEM

AEWierclok 3/20/2006 11:57:20 AM
WORKSPACE: AHTD
L:\2011\011707 - I-540 Widening & Interchange Improvement\Drawings\tBB0414_FINAL_p06.dgn
REVISED DATE:

DATE REVISED	DATE FILMED	DATE REVISED	DATE FILMED	FED.RD. DIST.NO.	STATE	FED.AID PROJ.NO.	SHEET NO.	TOTAL SHEETS
				6	ARK.			
				JOB NO.		BB0414	346	886

(2) SIGNALIZATION PLANS (HWY. 112 AT I-49 NB RAMPS)

EXISTING SIGNAL FACES

12" LENSES

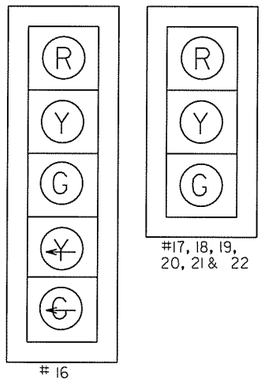

#17, 18, 19, 20, 21 & 22

16

ANTENNA ORIENTATION

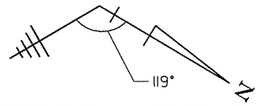

EXISTING PHASING DIAGRAM

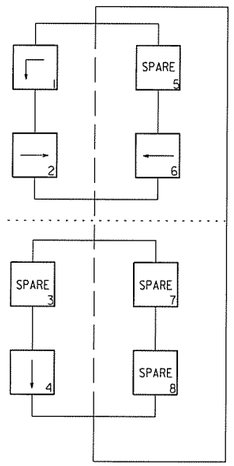

NOTES:
1. THE EXISTING TRAFFIC SIGNAL WILL REMAIN IN OPERATION UNTIL PRIOR TO STAGE IA.
2. PRIOR TO LANE SHIFT FROM STAGE I TO STAGE IA, THE NEW TRAFFIC CONTROLLER AND NEW POLES A, D & E SHALL BE INSTALLED AND OPERATIONAL.
3. SEE STAGE IA PLANS FOR SIGNAL HEAD AND VIDEO DETECTOR PLACEMENT ON MAST ARMS.
4. EXISTING POLES G AND H AND CONTROLLER SHALL BE REMOVED AFTER STAGE IA SIGNALS ARE OPERATIONAL.
5. ADDITIONAL 0.5" NMC REQUIRED FROM POLE AND CONTROLLER TO NEAREST PULL BOX. REFER TO STANDARD DRAWING SD-6, HEAVY DUTY PULL BOX. COST OF ADDITIONAL 0.5" NMC INCLUDED IN ITEMS 701 & 714.
6. SEE STAGE IA PLANS FOR WIRING TO BE INSTALLED DURING STAGE I.

STATE OF ARKANSAS
REGISTERED PROFESSIONAL ENGINEER
No. 8141
NICCI D. TINER
3-20-16

LEGEND

- TYPE I HD PULL BOX
- TYPE I PULL BOX
- TYPE 2 HD PULL BOX
- TYPE 2 PULL BOX
- CONTROLLER CABINET
- SIGNAL HEAD
- SIGNAL POLE, MAST ARM AND LUMINAIRE ARM
- NMC - NON-METALLIC CONDUIT
- VIDEO DETECTOR
- ANTENNA

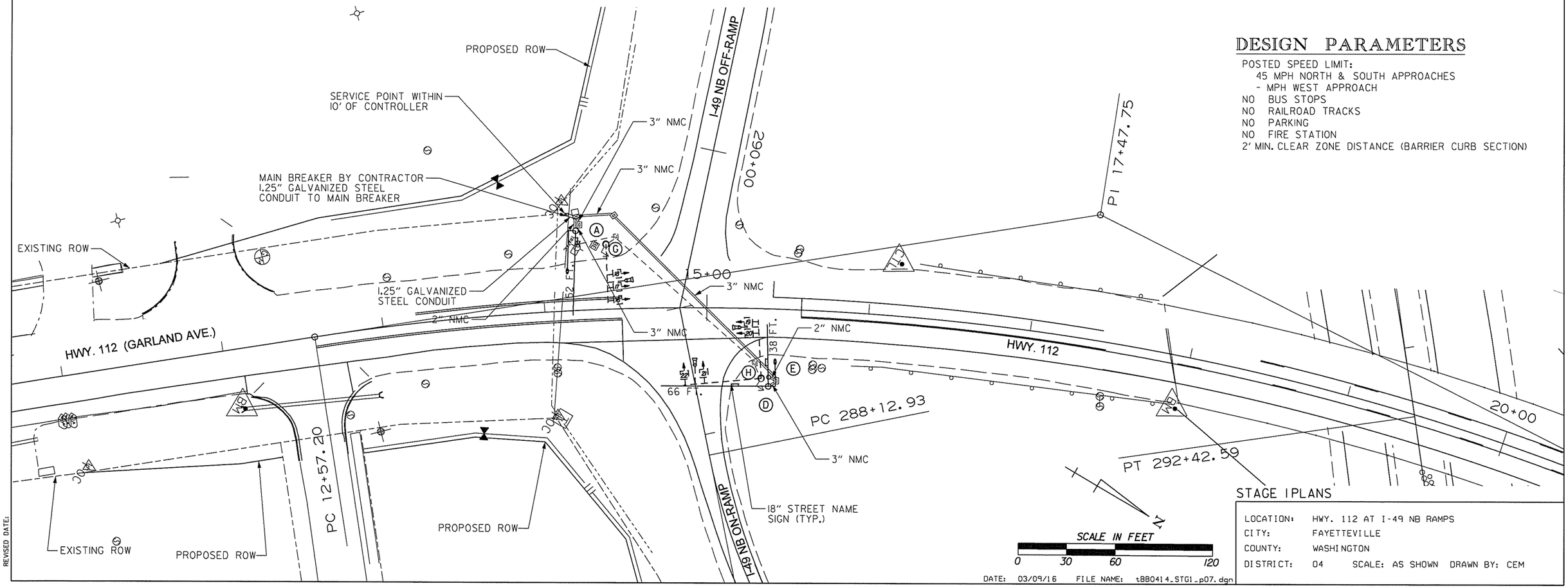

DESIGN PARAMETERS

POSTED SPEED LIMIT:
45 MPH NORTH & SOUTH APPROACHES
- MPH WEST APPROACH
NO BUS STOPS
NO RAILROAD TRACKS
NO PARKING
NO FIRE STATION
2' MIN. CLEAR ZONE DISTANCE (BARRIER CURB SECTION)

STAGE I PLANS

LOCATION:	HWY. 112 AT I-49 NB RAMPS
CITY:	FAYETTEVILLE
COUNTY:	WASHINGTON
DISTRICT:	04 SCALE: AS SHOWN DRAWN BY: CEM

DATE: 03/09/16 FILE NAME: tBB0414_STG1_p07.dgn

AEWierciak 3/20/2016 11:57:21 AM
WORKSPACE: AHTD
L:\201\101707 - I-540 Widening & Interchange Improvement\Drawings\tBB0414_STG1_p07.dgn
REVISED DATE:

POLE DIMENSIONS

POLE	MAST ARM(S) LENGTH	MAST ARM(S) ORIENTATION ANGLE FROM HAND HOLE (CLOCKWISE)	VERTICAL SHAFT LENGTH	LUM. ARM LENGTH	LUM. ARM(S) ORIENTATION ANGLE FROM HAND HOLE (CLOCKWISE)	STATION HWY. 112	OFFSET	NORTHING	EASTING
A	54 FT.	180 DEGREES	35'-0"	25'-0"	180 DEGREES	14+21.29	49' LT.	651811.1234	668678.2829
D	66 FT.	90 DEGREES	35'-0"	15'-0"	180 DEGREES	15+39.11	48' RT.	651961.8420	668700.1077
	38 FT.	180 DEGREES							
E	-	-	15'-0"	-	-	15+39.18	42' RT.	651959.1800	668695.1288
G	EXISTING POLE TO BE REMOVED AFTER STAGE IA SIGNAL IS OPERATIONAL								
H	EXISTING POLE TO BE REMOVED AFTER STAGE IA SIGNAL IS OPERATIONAL								

NOTES:
1. THE EXISTING TRAFFIC SIGNAL WILL REMAIN IN OPERATION UNTIL PRIOR TO STAGE IA.
2. PRIOR TO LANE SHIFT FROM STAGE I TO STAGE IA, THE NEW TRAFFIC CONTROLLER AND NEW POLES A, D & E SHALL BE INSTALLED AND OPERATIONAL.
3. SEE STAGE IA PLANS FOR SIGNAL HEAD AND VIDEO DETECTOR PLACEMENT ON MAST ARMS.
4. EXISTING POLES G AND H AND CONTROLLER SHALL BE REMOVED AFTER STAGE IA SIGNALS ARE OPERATIONAL.
5. ADDITIONAL 0.5" NMC REQUIRED FROM POLE AND CONTROLLER TO NEAREST PULL BOX. REFER TO STANDARD DRAWING SD-6, HEAVY DUTY PULL BOX. COST OF ADDITIONAL 0.5" NMC INCLUDED IN ITEMS 701, 714 & 715.
6. SEE STAGE IA PLANS FOR WIRING TO BE INSTALLED DURING STAGE I.

LEGEND

- TYPE 1HD PULL BOX
- TYPE 1PULL BOX
- TYPE 2 HD PULL BOX
- TYPE 2 PULL BOX
- CONTROLLER CABINET
- SIGNAL HEAD
- SIGNAL POLE, MAST ARM AND LUMINAIRE ARM
- NMC - NON-METALLIC CONDUIT
- VIDEO DETECTOR
- ANTENNA

ANTENNA ORIENTATION

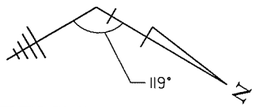

EXISTING SIGNAL FACES

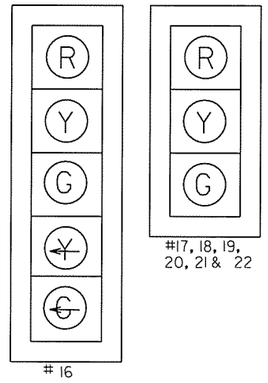

EXISTING PHASING DIAGRAM

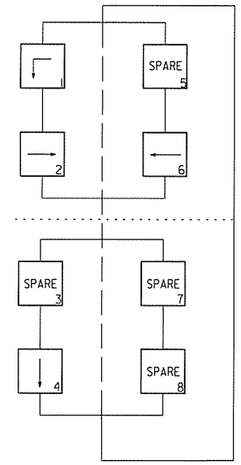

DATE REVISED	DATE FILMED	DATE REVISED	DATE FILMED	FED.RD. DIST.NO.	STATE	FED.AID PROJ.NO.	SHEET NO.	TOTAL SHEETS
				6	ARK.			
				JOB NO.		BB0414	347	886

(2) SIGNALIZATION PLANS (HWY. 112 AT I-49 NB RAMPS)

STATE OF ARKANSAS
REGISTERED PROFESSIONAL ENGINEER
No. 8141
NICCI D. TINER
3-20-16

DESIGN PARAMETERS

POSTED SPEED LIMIT:
45 MPH NORTH & SOUTH APPROACHES
- MPH WEST APPROACH
NO BUS STOPS
NO RAILROAD TRACKS
NO PARKING
NO FIRE STATION
2' MIN. CLEAR ZONE DISTANCE (BARRIER CURB SECTION)

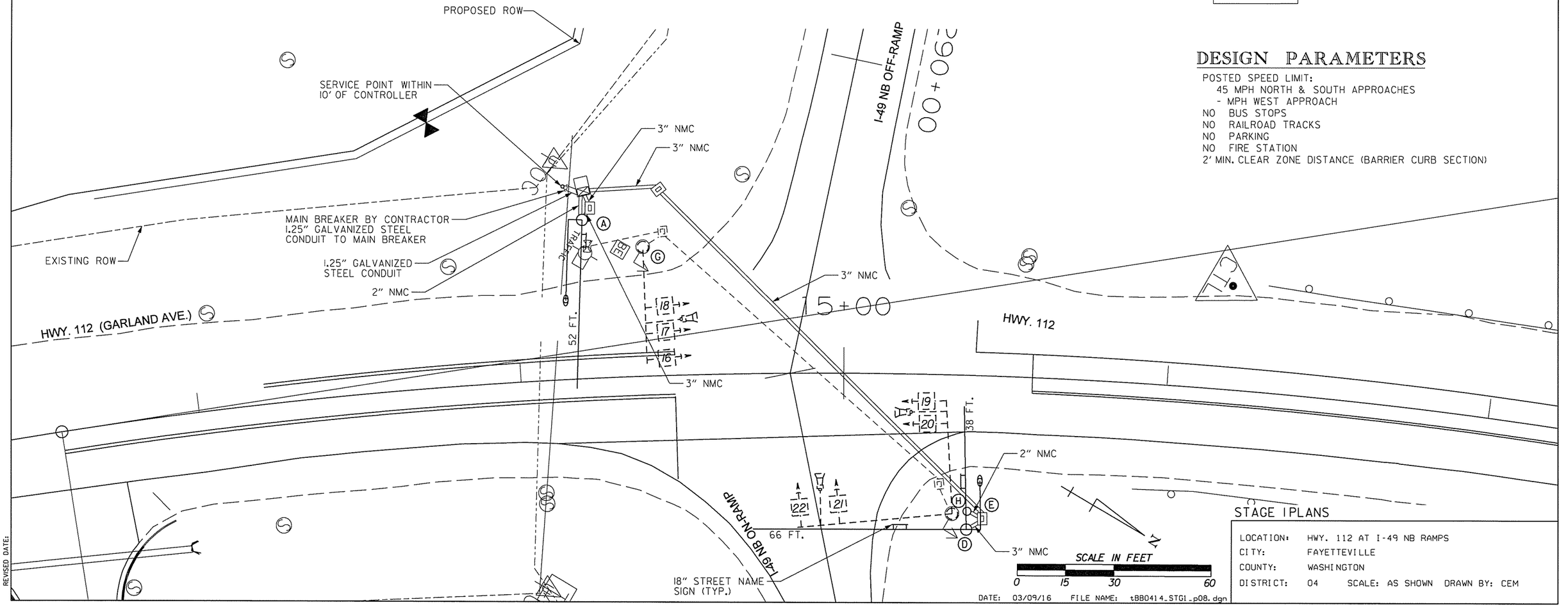

STAGE IPLANS

LOCATION:	HWY. 112 AT I-49 NB RAMPS
CITY:	FAYETTEVILLE
COUNTY:	WASHINGTON
DISTRICT:	04 SCALE: AS SHOWN DRAWN BY: CEM

DATE: 03/09/16 FILE NAME: tBB0414_STG1_p08.dgn

AEWerclak 3/20/2016 11:57:21 AM
WORKSPACE: AHTD
L:\ZONING\017107 - I-540 Widening & Interchange Improvement\Drawings\tBB0414_STG1_p08.dgn
REVISED DATE:

DATE REVISED	DATE FILMED	DATE REVISED	DATE FILMED	FED.RD. DIST.NO.	STATE	FED.AID PROJ.NO.	SHEET NO.	TOTAL SHEETS
				6	ARK.			
				JOB NO.		BB0414	348	886

(2) SIGNALIZATION PLANS (HWY. 112 AT I-49 NB RAMPS)

STAGE 1A SIGNAL FACES

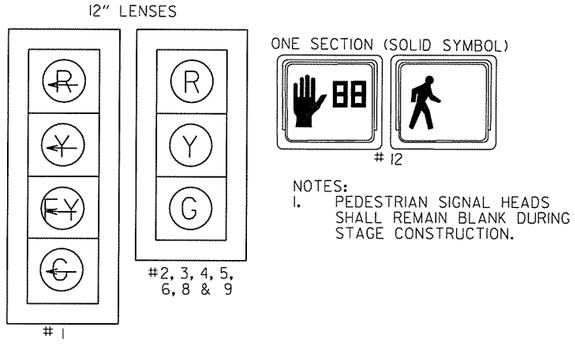

NOTES:
1. PEDESTRIAN SIGNAL HEADS SHALL REMAIN BLANK DURING STAGE CONSTRUCTION.

STAGE 1A PHASING DIAGRAM

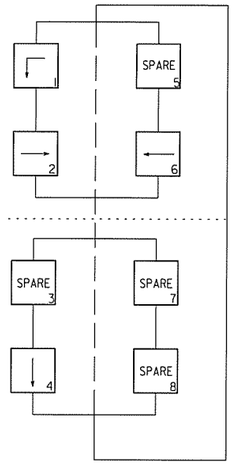

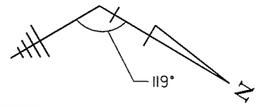

ANTENNA ORIENTATION

NOTES:
1. NEW TRAFFIC SIGNALS INSTALLED DURING STAGE I SHALL BE OPERATIONAL PRIOR TO STAGE IA.
2. EXISTING SIGNAL EQUIPMENT SHALL BE REMOVED AFTER NEW TRAFFIC SIGNALS ARE OPERATIONAL.

STATE OF ARKANSAS
REGISTERED PROFESSIONAL ENGINEER
No. 8141
NICCI D. TINER
3-20-16

LEGEND

- TYPE IHD PULL BOX
- TYPE IPULL BOX
- TYPE 2 HD PULL BOX
- TYPE 2 PULL BOX
- CONTROLLER CABINET
- SIGNAL HEAD
- SIGNAL POLE, MAST ARM AND LUMINAIRE ARM
- NMC - NON-METALLIC CONDUIT
- VIDEO DETECTOR
- ANTENNA
- STAGE IA CONSTRUCTION

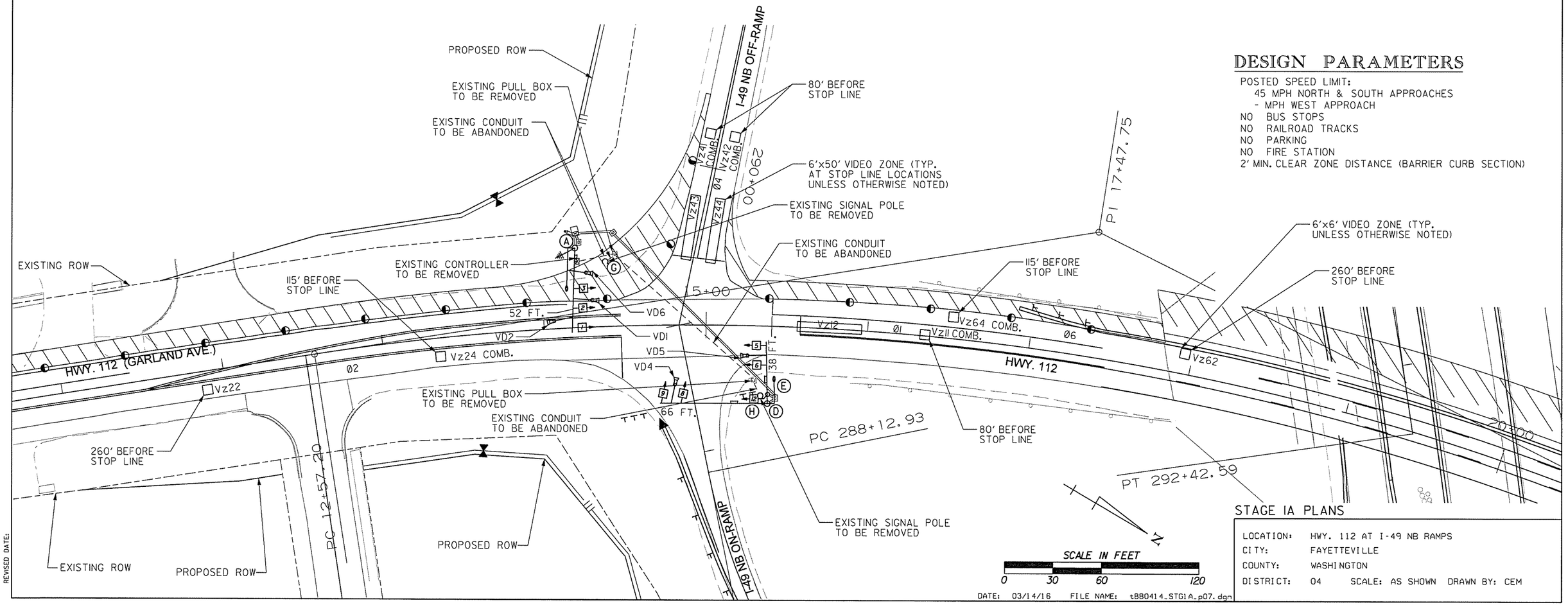

DESIGN PARAMETERS

POSTED SPEED LIMIT:
45 MPH NORTH & SOUTH APPROACHES
- MPH WEST APPROACH
NO BUS STOPS
NO RAILROAD TRACKS
NO PARKING
NO FIRE STATION
2' MIN. CLEAR ZONE DISTANCE (BARRIER CURB SECTION)

STAGE IA PLANS

LOCATION:	HWY. 112 AT I-49 NB RAMPS
CITY:	FAYETTEVILLE
COUNTY:	WASHINGTON
DISTRICT:	04 SCALE: AS SHOWN DRAWN BY: CEM

DATE: 03/14/16 FILE NAME: tBB0414_STG1A_p07.dgn

AEWierciak 3/20/2016 11:57:21 AM
WORKSPACE: AHTD
L:\20II\II0I707 - I-540 Widening & Interchange Improvement\Drawings\tBB0414_STG1A_p07.dgn
REVISED DATE:

DATE REVISED	DATE FILMED	DATE REVISED	DATE FILMED	FED.RD. DIST.NO.	STATE	FED.AID PROJ.NO.	SHEET NO.	TOTAL SHEETS
				6	ARK.			
				JOB NO.		BB0414	349	886

(2) SIGNALIZATION PLANS (HWY. 112 AT I-49 NB RAMPS)

NOTES:
1. NEW TRAFFIC SIGNALS INSTALLED DURING STAGE I SHALL BE OPERATIONAL PRIOR TO STAGE IA.
2. EXISTING SIGNAL EQUIPMENT SHALL BE REMOVED AFTER NEW TRAFFIC SIGNALS ARE OPERATIONAL.

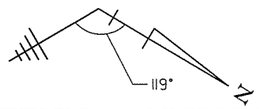

ANTENNA ORIENTATION

LEGEND

- TYPE 1HD PULL BOX
- TYPE 1PULL BOX
- TYPE 2 HD PULL BOX
- TYPE 2 PULL BOX
- CONTROLLER CABINET
- SIGNAL HEAD
- SIGNAL POLE, MAST ARM AND LUMINAIRE ARM
- NMC - NON-METALLIC CONDUIT
- VIDEO DETECTOR
- ANTENNA
- STAGE IA CONSTRUCTION

STAGE 1A PHASING DIAGRAM

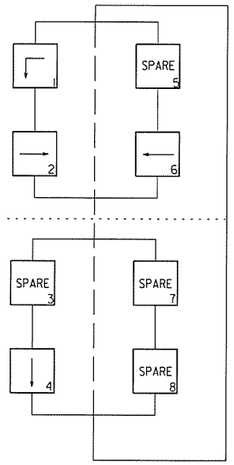

STAGE 1A SIGNAL FACES

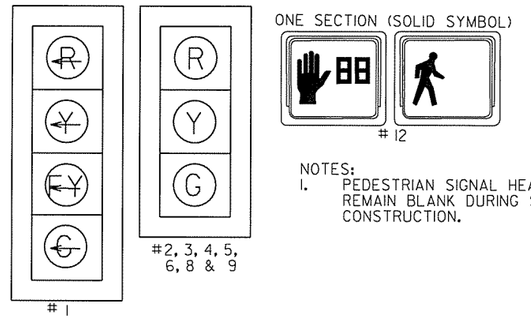

NOTES:
1. PEDESTRIAN SIGNAL HEADS SHALL REMAIN BLANK DURING STAGED CONSTRUCTION.

STATE OF ARKANSAS
REGISTERED PROFESSIONAL ENGINEER
No. 8141
NICCI D. TINER
3-20-16

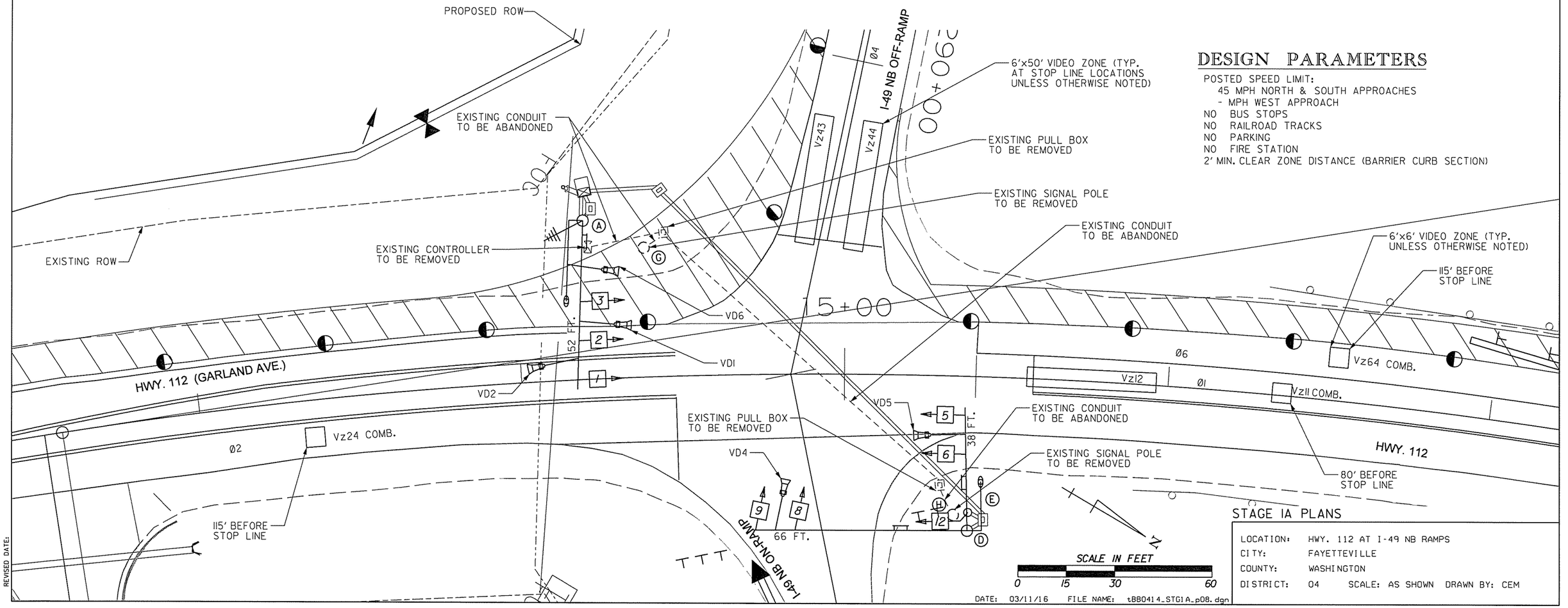

DESIGN PARAMETERS

POSTED SPEED LIMIT:
45 MPH NORTH & SOUTH APPROACHES
- MPH WEST APPROACH
NO BUS STOPS
NO RAILROAD TRACKS
NO PARKING
NO FIRE STATION
2' MIN. CLEAR ZONE DISTANCE (BARRIER CURB SECTION)

STAGE IA PLANS

LOCATION:	HWY. 112 AT I-49 NB RAMPS
CITY:	FAYETTEVILLE
COUNTY:	WASHINGTON
DISTRICT:	04 SCALE: AS SHOWN DRAWN BY: CEM

DATE: 03/11/16 FILE NAME: tBB0414_STG1A_p08.dgn

AEWierciak 3/20/2016 11:57:22 AM
WORKSPACE: AHTD
L:\20\1\10\7707 - I-540 Widening & Interchange Improvement\Drawings\tBB0414_STG1A_p08.dgn
REVISED DATE:

DETECTOR CHART (STAGE 1A)

DETECTOR ASSIGNMENTS				HARDWARE INPUTS BY SUPPLIER			PROGRAM ASSIGNMENTS			VIDEO DET. TUBE LENGTH	COMMENT
							LOCAL		MSTR. SYS. DET. #		
DETECTOR I.D. #	DIRECTION & LOCATION	TYPE	DET. #	CAB. TRM. #	AMP CHN. #	CON. INP. #	PHS.	SYS. DET. #			
Vz11	SB LEFT FAR	COMB.			1	V9	1	1		23"	VD1
Vz12	SB LEFT NEAR	LOCAL			2	V1	1			23"	VD1
Vz22	NB FAR	LOCAL			10	P1	2			74"	VD2
Vz24	NB NEAR	COMB.			12	V11	2	3		23"	VD5
Vz41	EB RIGHT FAR	COMB.			13	V12	4	4		23"	VD4
Vz42	EB LEFT FAR	COMB.			14	V16	4	8		23"	VD4
Vz43	EB RIGHT NEAR	LOCAL			15	V4	4			23"	VD4
Vz44	EB LEFT NEAR	LOCAL			16	P3	4	6		23"	VD4
Vz62	SB FAR	LOCAL			4	V6	6			23"	VD6
Vz64	SB NEAR	COMB.			6	V14	6			23"	VD1

SPARE AMP CHN. #= 3, 5, 7, 8, 9 & 11

CONTROLLER INPUT ABBREVIATIONS:
V = VEHICLE INPUT
D = SYSTEM OR AUXILIARY INPUT
P = PEDESTRIAN INPUT

INTERVAL CHART (STAGE 1A)

SIGNAL FACES	INTERSECTION INTERVALS						FLASH SEQ.
	1+6	CLR.	2+6	CLR.	4	CLR.	
1	~~G~~	***	~~FY~~	*	~~R~~	~~R~~	~~R~~
2, 3 & 4	G	**	G	**	R	R	R
5, 6 & 7	R	R	G	Y	R	R	R
8 & 9	R	R	R	R	G	Y	R
12	B	B	B	B	B	B	B

* DENOTES GREEN OR YELLOW ARROW DEPENDING ON NEXT PHASE
** DENOTES GREEN OR YELLOW BALL DEPENDING ON NEXT PHASE
*** DENOTES YELLOW OR FLASHING YELLOW ARROW DEPENDING ON NEXT PHASE

DATE REVISED	DATE FILMED	DATE REVISED	DATE FILMED	FED.RD. DIST.NO.	STATE	FED.AID PROJ.NO.	SHEET NO.	TOTAL SHEETS
				6	ARK.			
				JOB NO.		BB0414	350	886

(2) SIGNALIZATION PLANS (HWY. 112 AT I-49 NB RAMPS)

STATE OF ARKANSAS
REGISTERED PROFESSIONAL ENGINEER
No. 8141
NICCI D. TINER
3-20-16

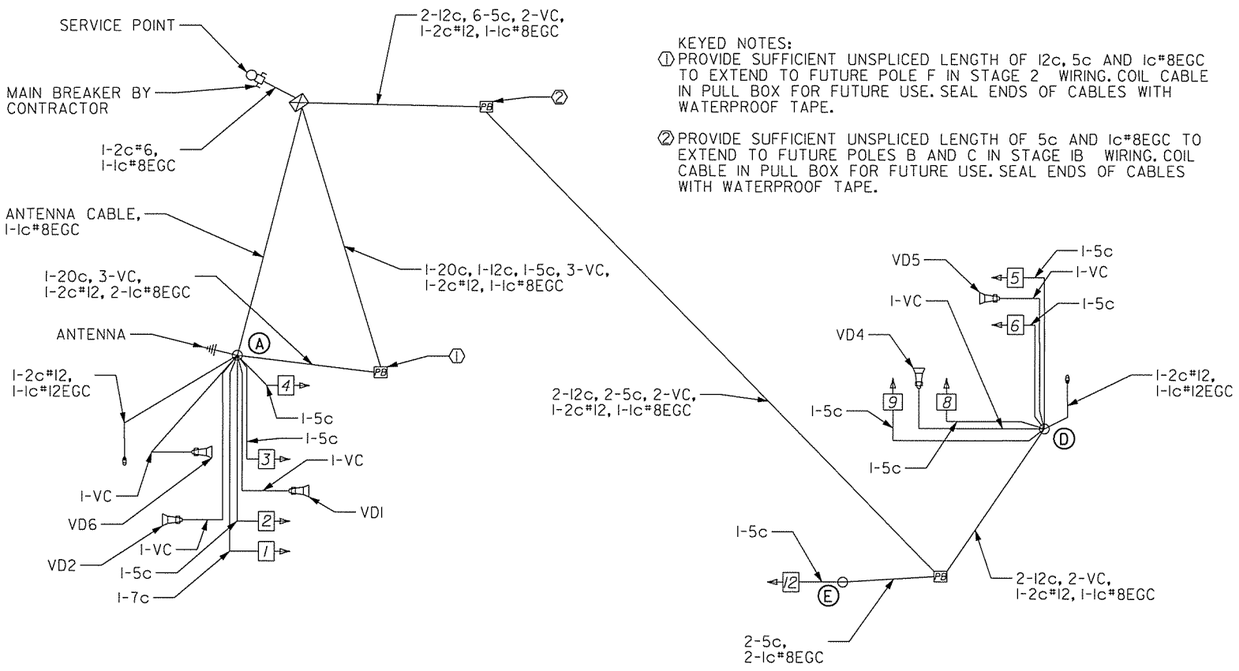

KEYED NOTES:
① PROVIDE SUFFICIENT UNSPLICED LENGTH OF 12c, 5c AND 1c#8EGC TO EXTEND TO FUTURE POLE F IN STAGE 2 WIRING. COIL CABLE IN PULL BOX FOR FUTURE USE. SEAL ENDS OF CABLES WITH WATERPROOF TAPE.

② PROVIDE SUFFICIENT UNSPLICED LENGTH OF 5c AND 1c#8EGC TO EXTEND TO FUTURE POLES B AND C IN STAGE 1B WIRING. COIL CABLE IN PULL BOX FOR FUTURE USE. SEAL ENDS OF CABLES WITH WATERPROOF TAPE.

STAGE 1A PHASING DIAGRAM

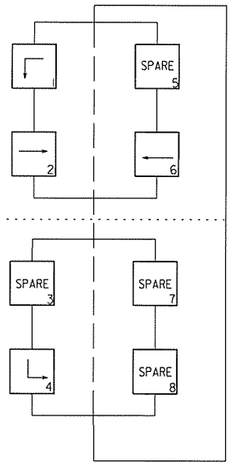

STAGE 1A SIGNAL FACES

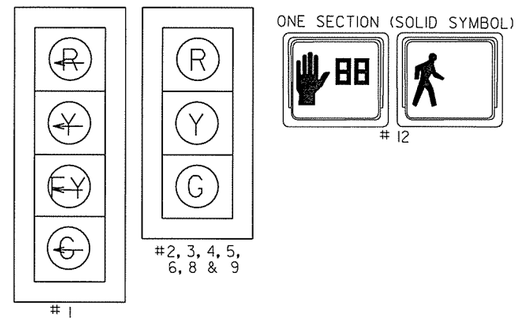

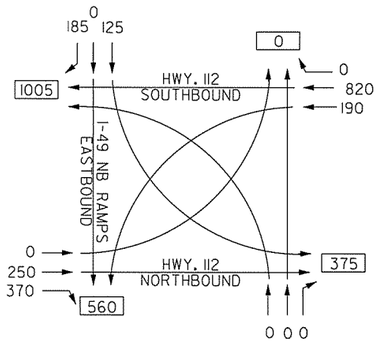

I-49 NB RAMPS AT HWY. 112
TRAFFIC FLOW DIAGRAM
TRAFFIC VOLUME
A.M. PEAK HOUR

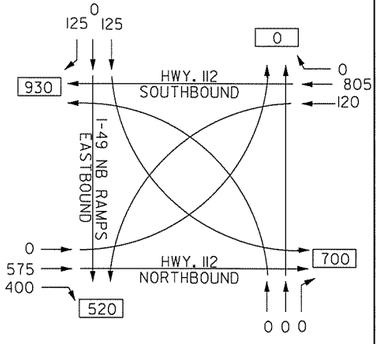

I-49 NB RAMPS AT HWY. 112
TRAFFIC FLOW DIAGRAM
TRAFFIC VOLUME
P.M. PEAK HOUR

NOTE:
2011 TRAFFIC VOLUMES

WIRING DIAGRAM (INSTALLED DURING STAGE 1)

TYPICAL WIRING INCLUDES:
1. SEPARATE 5c/#14 AWG FROM EACH 3 SEC SIGNAL HEAD TO BASE OF POLE.
2. SEPARATE 7c/#14 AWG FROM EACH 4 SEC SIGNAL HEAD TO BASE OF POLE.
3. PROVIDE SEPARATE CONDUIT FOR ANTENNA CABLE.
4. SEPARATE 5c/#14 AWG TO EACH POLE WITH PEDESTRIAN PUSH BUTTONS.
5. ALL DETECTOR RACK CHANNELS, INCLUDING UNUSED, SHALL BE BROUGHT TO TERMINAL STRIP IN DETECTOR AREA ON CABINET.
6. THE LOCAL GOVERNMENT SHALL BE RESPONSIBLE FOR PROVIDING POWER TO THE SERVICE POINT.

NOTES:
1. ADDITIONAL 1-1c#8EGC IN SEPARATE CONDUIT REQUIRED FROM POLE AND CONTROLLER TO NEAREST PULL BOX. REFER TO STANDARD DRAWING SD-6, HEAVY DUTY PULL BOX. COST OF ADDITIONAL 1-1c#8EGC INCLUDED IN ITEMS 701, 714, & 715.
2. SEE FINAL PLAN WIRING DIAGRAM FOR GROUNDING DETAIL.

N

DATE: 03/09/16 FILE NAME: tBB0414_STG1A_p09.dgn

STAGE 1A PLANS

LOCATION:	HWY. 112 AT I-49 NB RAMPS
CITY:	FAYETTEVILLE
COUNTY:	WASHINGTON
DISTRICT:	04 SCALE: AS SHOWN DRAWN BY: CEM

AEWierciak 3/20/2016 11:57:22 AM
WORKSPACE: AHTD
L:\20IN\10177OT - I-540 Widening & Interchange Improvement\Drawings\tBB0414_STG1A_p09.dgn
REVISED DATE:

DATE REVISED	DATE FILMED	DATE REVISED	DATE FILMED	FED.RD. DIST.NO.	STATE	FED.AID PROJ.NO.	SHEET NO.	TOTAL SHEETS
				6	ARK.			
				JOB NO.		BB0414	351	886

(2) SIGNALIZATION PLANS (HWY. 112 AT I-49 NB RAMPS)

STAGE 1B PHASING DIAGRAM

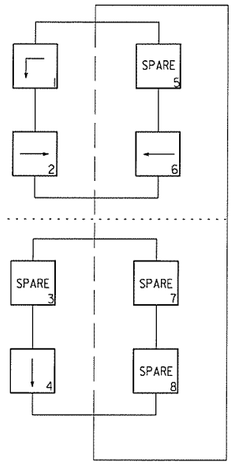

STAGE 1B SIGNAL FACES

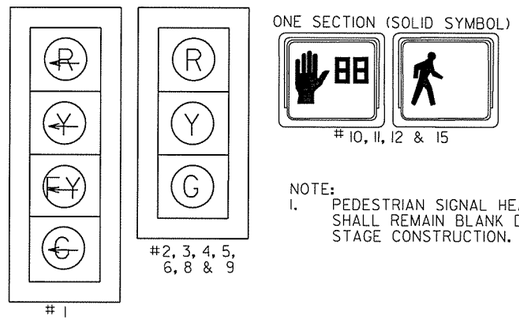

NOTE:
1. PEDESTRIAN SIGNAL HEADS SHALL REMAIN BLANK DURING STAGE CONSTRUCTION.

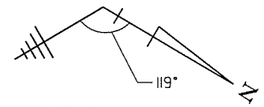

ANTENNA ORIENTATION

STATE OF ARKANSAS
REGISTERED PROFESSIONAL ENGINEER
No. 8141
NICCI D. TINER
3-20-16

NOTE:
1. ADDITIONAL 0.5" NMC REQUIRED FROM POLES B AND C TO NEAREST PULL BOX. REFER TO STANDARD DRAWING SD-6, HEAVY DUTY PULL BOX. COST OF ADDITIONAL 0.5" NMC INCLUDED IN ITEMS 701, 714, & 715.
2. SIGNAL HEADS 8 & 9 AND VIDEO DETECTOR VD-4 SHALL BE RELOCATED ON MAST ARM D AS SHOWN.

LEGEND

- TYPE 1HD PULL BOX
- TYPE 1PULL BOX
- TYPE 2 HD PULL BOX
- TYPE 2 PULL BOX
- CONTROLLER CABINET
- SIGNAL HEAD
- SIGNAL POLE, MAST ARM AND LUMINAIRE ARM
- NMC - NON-METALLIC CONDUIT
- VIDEO DETECTOR
- ANTENNA
- STAGE 1B CONSTRUCTION

DESIGN PARAMETERS

POSTED SPEED LIMIT:
45 MPH NORTH & SOUTH APPROACHES
- MPH WEST APPROACH
NO BUS STOPS
NO RAILROAD TRACKS
NO PARKING
NO FIRE STATION
2' MIN. CLEAR ZONE DISTANCE (BARRIER CURB SECTION)

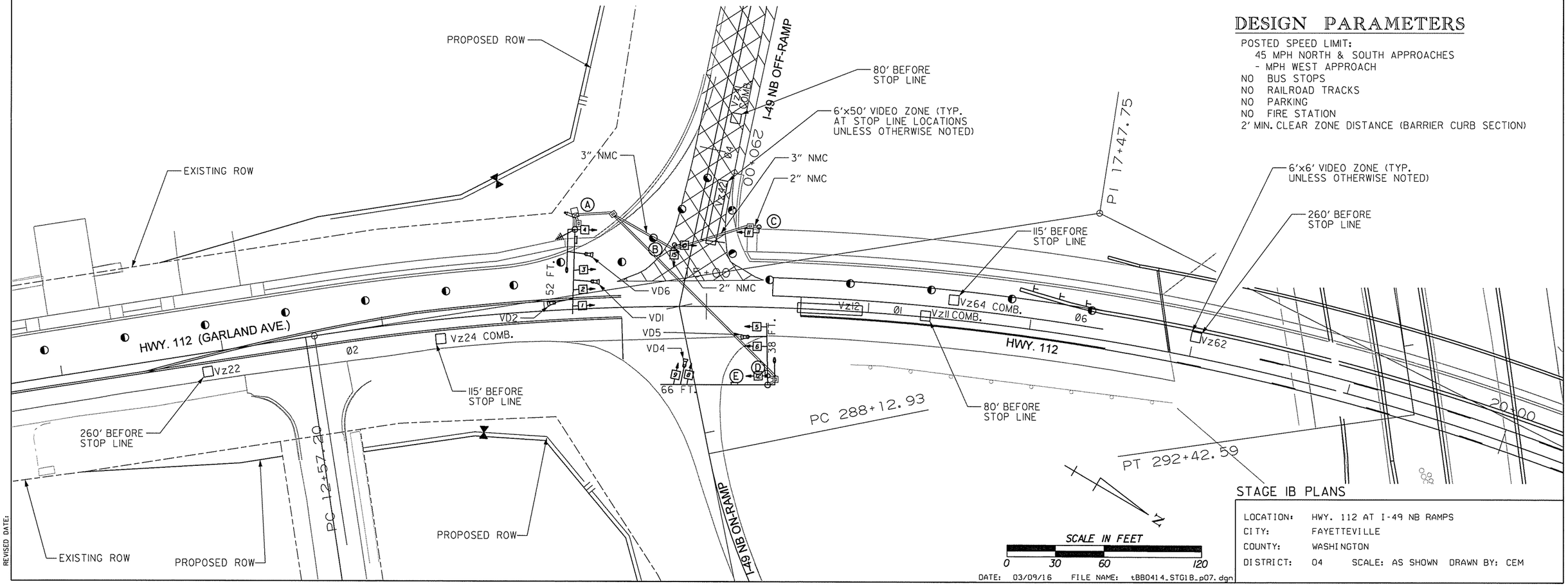

DATE: 03/09/16 FILE NAME: tBB0414_STG1B_p07.dgn

STAGE 1B PLANS

LOCATION:	HWY. 112 AT I-49 NB RAMPS
CITY:	FAYETTEVILLE
COUNTY:	WASHINGTON
DISTRICT:	04 SCALE: AS SHOWN DRAWN BY: CEM

AEWierciak 3/20/2016 11:57:23 AM
WORKSPACE: AHTD
L:\2016\16017\07 - I-540 Widening & Interchange Improvement\Drawings\tBB0414_STG1B_p07.dgn
REVISED DATE:

DATE REVISED	DATE FILMED	DATE REVISED	DATE FILMED	FED.RD. DIST.NO.	STATE	FED.AID PROJ.NO.	SHEET NO.	TOTAL SHEETS
				6	ARK.			
				JOB NO.		BB0414	352	886

(2) SIGNALIZATION PLANS (HWY. 112 AT I-49 NB RAMPS)

POLE DIMENSIONS

POLE	MAST ARM(S) LENGTH	MAST ARM(S) ORIENTATION ANGLE FROM HAND HOLE (CLOCKWISE)	VERTICAL SHAFT LENGTH	LUM. ARM LENGTH	LUM. ARM(S) ORIENTATION ANGLE FROM HAND HOLE (CLOCKWISE)	STATION HWY. 112	OFFSET	NORTHING	EASTING
A	POLE INSTALLED DURING STAGE I								
B	-	-	15'-0"	-	-	14+80.73	38' LT.	651868.7795	668655.1486
C	-	-	15'-0"	-	-	15+31.32	49' LT.	651908.0463	668619.1266
D	POLE INSTALLED DURING STAGE I								
E	POLE INSTALLED DURING STAGE I								

LEGEND

- TYPE IHD PULL BOX
- TYPE IPULL BOX
- TYPE 2 HD PULL BOX
- TYPE 2 PULL BOX
- CONTROLLER CABINET
- SIGNAL HEAD
- SIGNAL POLE, MAST ARM AND LUMINAIRE ARM
- NMC - NON-METALLIC CONDUIT
- VIDEO DETECTOR
- ANTENNA
- STAGE IB CONSTRUCTION

NOTE:
1. ADDITIONAL 0.5" NMC REQUIRED FROM POLES B AND C TO NEAREST PULL BOX. REFER TO STANDARD DRAWING SD-6, HEAVY DUTY PULL BOX. COST OF ADDITIONAL 0.5" NMC INCLUDED IN ITEMS 701, 714, & 715.
2. SIGNAL HEADS 8 & 9 AND VIDEO DETECTOR VD-4 SHALL BE RELOCATED ON MAST ARM D AS SHOWN.

STAGE 1B PHASING DIAGRAM

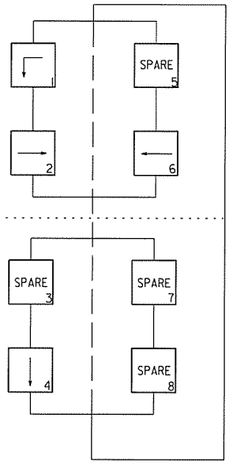

STAGE 1B SIGNAL FACES

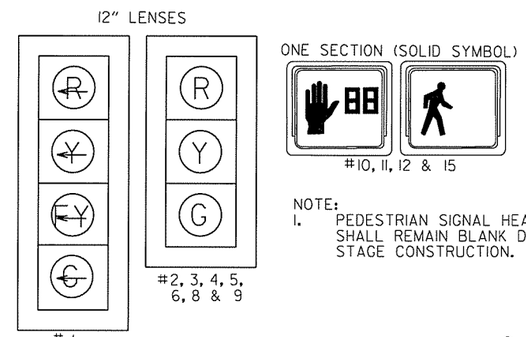

NOTE:
1. PEDESTRIAN SIGNAL HEADS SHALL REMAIN BLANK DURING STAGE CONSTRUCTION.

STATE OF ARKANSAS ★★★ REGISTERED PROFESSIONAL ENGINEER ★★★ No.8141 NICCI D. TINER
3-20-16

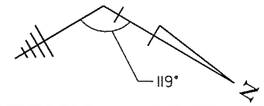

ANTENNA ORIENTATION

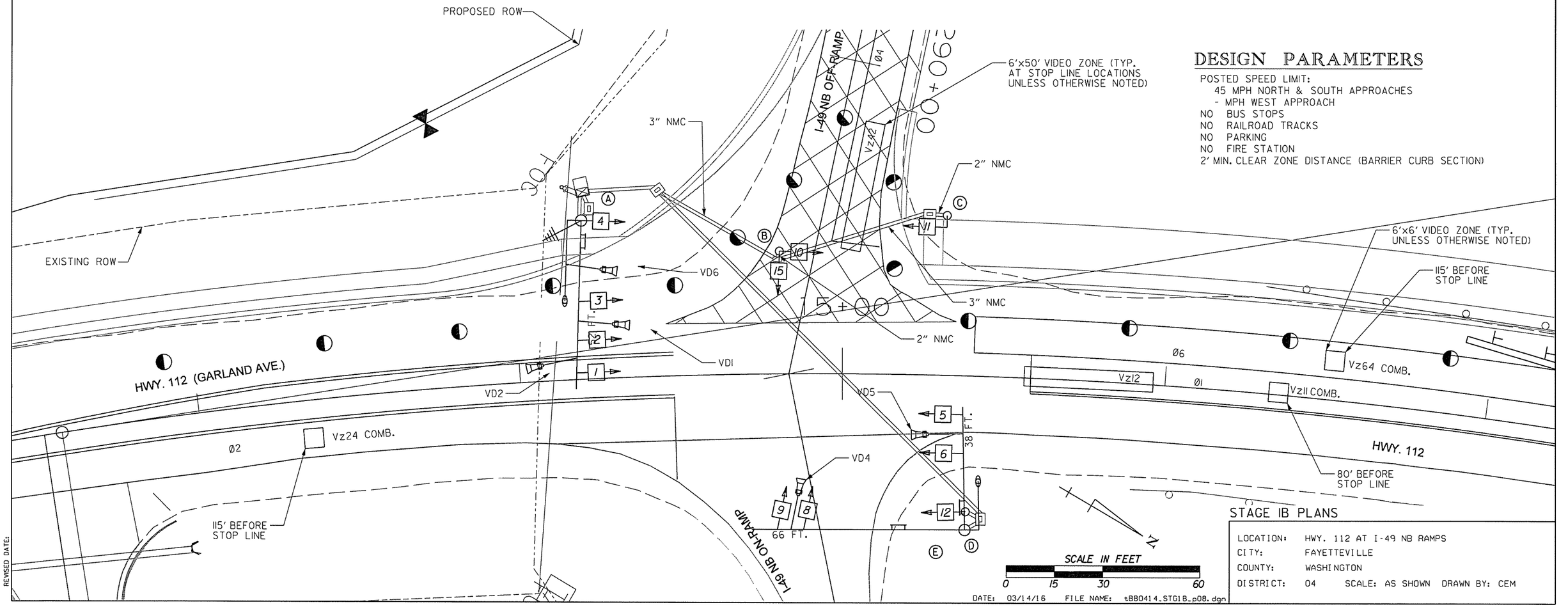

DESIGN PARAMETERS

POSTED SPEED LIMIT:
45 MPH NORTH & SOUTH APPROACHES
- MPH WEST APPROACH
NO BUS STOPS
NO RAILROAD TRACKS
NO PARKING
NO FIRE STATION
2' MIN. CLEAR ZONE DISTANCE (BARRIER CURB SECTION)

STAGE IB PLANS

LOCATION:	HWY. 112 AT I-49 NB RAMPS
CITY:	FAYETTEVILLE
COUNTY:	WASHINGTON
DISTRICT:	04 SCALE: AS SHOWN DRAWN BY: CEM

DATE: 03/14/16 FILE NAME: tBB0414_STG1B_p08.dgn

AEWierciok 3/20/2016 11:57:23 AM
WORKSPACE: AHTD
L:\20IN\10I7707 - I-540 Widening & Interchange Improvement\Drawings\tBB0414_STG1B_p08.dgn
REVISED DATE:

DETECTOR CHART (STAGE 1B)

DETECTOR ASSIGNMENTS				HARDWARE INPUTS BY SUPPLIER			PROGRAM ASSIGNMENTS			VIDEO DET. TUBE LENGTH	COMMENT
							LOCAL		MSTR. SYS. DET. #		
DETECTOR I.D. #	DIRECTION & LOCATION	TYPE	DET. #	CAB. TRM. #	AMP CHN. #	CON. INP. #	PHS.	SYS. DET. #			
Vz11	SB LEFT FAR	COMB.			1	V9	1	1		23"	VD1
Vz12	SB LEFT NEAR	LOCAL			2	V1	1			23"	VD1
Vz22	NB FAR	LOCAL			10	P1	2			74"	VD2
Vz24	NB NEAR	COMB.			12	V11	2	3		23"	VD5
vz41	EB LEFT FAR	COMB.			13	V12	4	4		23"	VD4
vz42	EB LEFT NEAR	LOCAL			14	V4	4			23"	VD4
Vz62	SB FAR	LOCAL			4	V6	6			74"	VD6
Vz64	SB NEAR	COMB.			6	V14	6	6		23"	VD1

CONTROLLER INPUT ABBREVIATIONS:
V = VEHICLE INPUT
D = SYSTEM OR AUXILIARY INPUT
P = PEDESTRIAN INPUT

SPARE AMP CHN. #= 3, 5, 7, 8, 9, 15 & 16

INTERVAL CHART (STAGE 1B)

SIGNAL FACES	INTERSECTION INTERVALS						FLASH SEQ.
	1+6	CLR.	2+6	CLR.	4	CLR.	
1	~~G~~	***	~~FY~~	*	~~R~~	~~R~~	~~R~~
2, 3 & 4	G	**	G	**	R	R	R
5, 6 & 7	R	R	G	Y	R	R	R
8 & 9	R	R	R	R	G	Y	R
10 & 11	B	B	B	B	B	B	B
12	B	B	B	B	B	B	B
15	B	B	B	B	B	B	B

* DENOTES GREEN OR YELLOW ARROW DEPENDING ON NEXT PHASE
** DENOTES GREEN OR YELLOW BALL DEPENDING ON NEXT PHASE
*** DENOTES YELLOW OR FLASHING YELLOW ARROW DEPENDING ON NEXT PHASE

DATE REVISED	DATE FILMED	DATE REVISED	DATE FILMED	FED.RD. DIST.NO.	STATE	FED.AID PROJ.NO.	SHEET NO.	TOTAL SHEETS
				6	ARK.			
				JOB NO.		BB0414	353	886

(2) SIGNALIZATION PLANS (HWY. 112 AT I-49 NB RAMPS)

STATE OF ARKANSAS
REGISTERED PROFESSIONAL ENGINEER
No. 8141
NICCI D. TINER
3-20-16

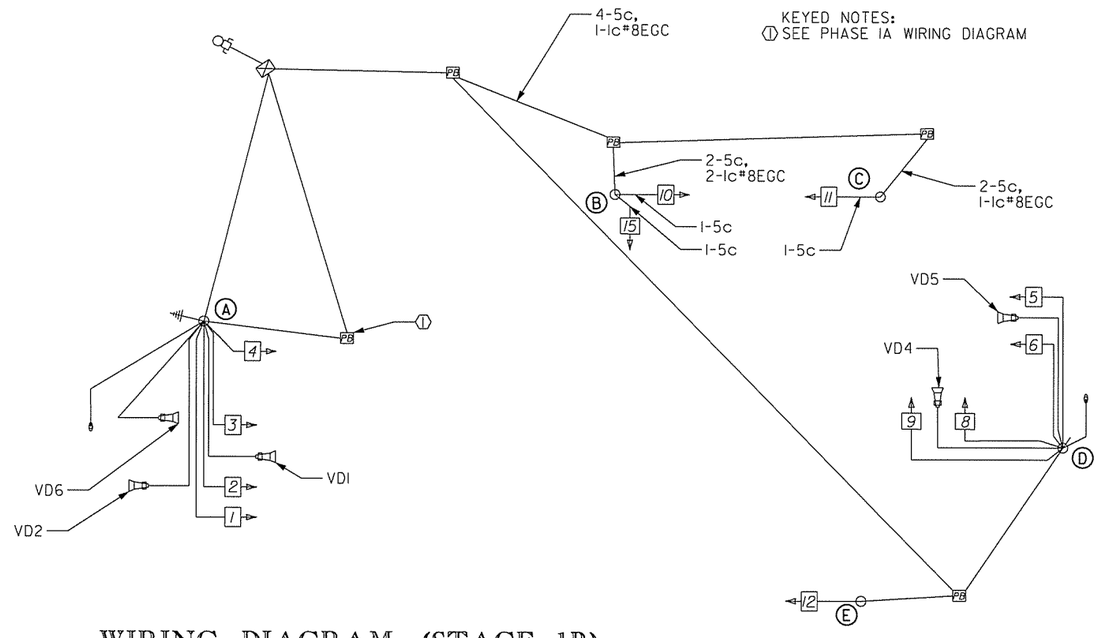

WIRING DIAGRAM (STAGE 1B)

TYPICAL WIRING INCLUDES:
1. SEPARATE 5c/#14 AWG FROM EACH 3 SEC SIGNAL HEAD TO BASE OF POLE.
2. SEPARATE 7c/#14 AWG FROM EACH 4 SEC SIGNAL HEAD TO BASE OF POLE.
3. PROVIDE SEPARATE CONDUIT FOR ANTENNA CABLE.
4. SEPARATE 5c/#14 AWG TO EACH POLE WITH PEDESTRIAN PUSH BUTTONS.
5. ALL DETECTOR RACK CHANNELS, INCLUDING UNUSED, SHALL BE BROUGHT TO TERMINAL STRIP IN DETECTOR AREA ON CABINET.
6. THE LOCAL GOVERNMENT SHALL BE RESPONSIBLE FOR PROVIDING POWER TO THE SERVICE POINT.

NOTES:
1. STAGE IB WIRING INCLUDES WIRING FROM STAGE IA.
2. ADDITIONAL 1-Ic#8EGC IN SEPARATE CONDUIT REQUIRED FROM POLE AND CONTROLLER TO NEAREST PULL BOX. REFER TO STANDARD DRAWING SD-6, HEAVY DUTY PULL BOX. COST OF ADDITIONAL 1-Ic#8EGC INCLUDED IN ITEMS 701, 714, & 715.
3. SEE FINAL PLAN WIRING DIAGRAM FOR GROUNDING DETAILS.

STAGE 1B PHASING DIAGRAM

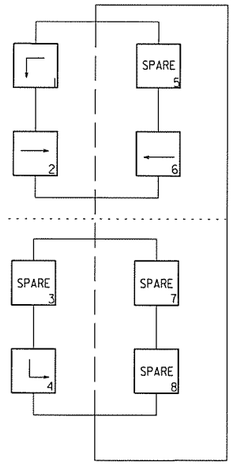

STAGE 1B SIGNAL FACES

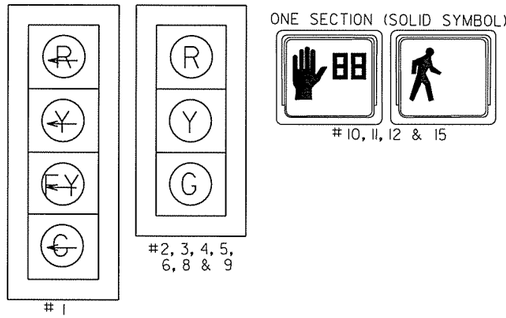

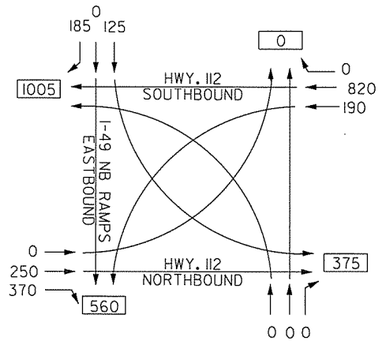

I-49 NB RAMPS AT HWY. 112
TRAFFIC FLOW DIAGRAM
TRAFFIC VOLUME
A.M. PEAK HOUR

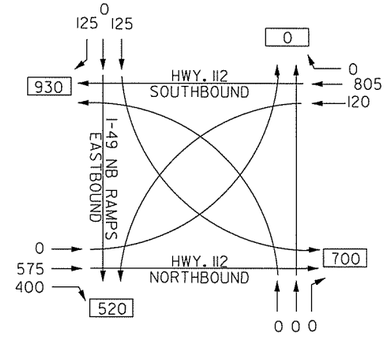

I-49 NB RAMPS AT HWY. 112
TRAFFIC FLOW DIAGRAM
TRAFFIC VOLUME
P.M. PEAK HOUR

NOTE:
2011 TRAFFIC VOLUMES

STAGE IB PLANS

LOCATION:	HWY. 112 AT I-49 NB RAMPS
CITY:	FAYETTEVILLE
COUNTY:	WASHINGTON
DISTRICT:	04 SCALE: AS SHOWN DRAWN BY: CEM

DATE: 03/14/16 FILE NAME: tBB0414_STG1B_p09.dgn

AEWierciak 3/20/2016 11:57:23 AM
WORKSPACE: AHTD
L:\201\101707 - I-540 Widening & Interchange Improvement\Drawings\tBB0414_STG1B_p09.dgn
REVISED DATE:

DATE REVISED	DATE FILMED	DATE REVISED	DATE FILMED	FED.RD. DIST.NO.	STATE	FED.AID PROJ.NO.	SHEET NO.	TOTAL SHEETS
				6	ARK.			
				JOB NO.		BB0414	354	886

(2) SIGNALIZATION PLANS (HWY. 112 AT I-49 NB RAMPS)

STAGE 2 PHASING DIAGRAM

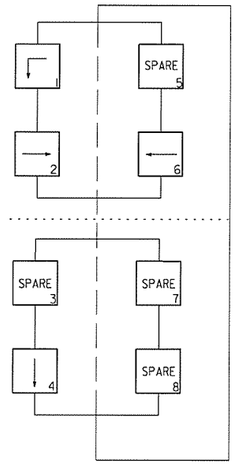

STAGE 2 SIGNAL FACES

12" LENSES

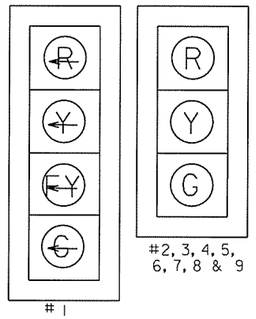

#1

#2, 3, 4, 5, 6, 7, 8 & 9

ONE SECTION (SOLID SYMBOL)

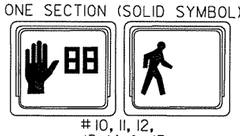

#10, 11, 12, 13, 14 & 15

NOTE:
1. PEDESTRIAN SIGNAL HEADS SHALL REMAIN BLANK DURING STAGE CONSTRUCTION.

ANTENNA ORIENTATION

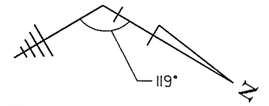

NOTE:
1. ADDITIONAL 0.5" NMC REQUIRED FROM POLE F TO NEAREST PULL BOX. REFER TO STANDARD DRAWING SD-6, HEAVY DUTY PULL BOX. COST OF ADDITIONAL 0.5" NMC INCLUDED IN ITEMS 701, 714, & 715.
2. POLE F TO BE INSTALLED AFTER NEW ISLAND IS CONSTRUCTED.

LEGEND

- TYPE 1HD PULL BOX
- TYPE 1PULL BOX
- TYPE 2 HD PULL BOX
- TYPE 2 PULL BOX
- CONTROLLER CABINET
- SIGNAL HEAD
- SIGNAL POLE, MAST ARM AND LUMINAIRE ARM
- NMC - NON-METALLIC CONDUIT
- VIDEO DETECTOR
- ANTENNA
- STAGE 2 CONSTRUCTION UNDER TRAFFIC
- STAGE 2 CONSTRUCTION

STATE OF ARKANSAS
REGISTERED PROFESSIONAL ENGINEER
No. 8141
NICCI D. TINER
3-2016

DESIGN PARAMETERS

POSTED SPEED LIMIT:
45 MPH NORTH & SOUTH APPROACHES
- MPH WEST APPROACH
NO BUS STOPS
NO RAILROAD TRACKS
NO PARKING
NO FIRE STATION
2' MIN. CLEAR ZONE DISTANCE (BARRIER CURB SECTION)

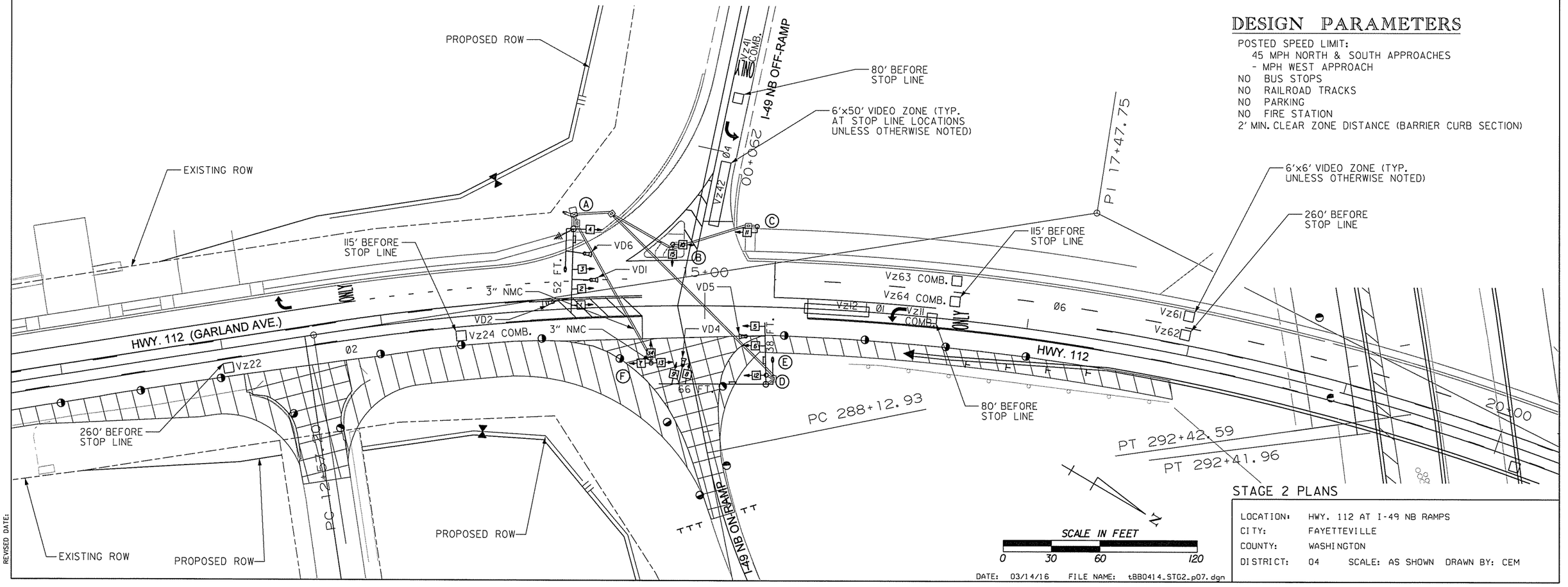

DATE: 03/14/16 FILE NAME: tBB0414_STG2_p07.dgn

STAGE 2 PLANS

LOCATION:	HWY. 112 AT I-49 NB RAMPS
CITY:	FAYETTEVILLE
COUNTY:	WASHINGTON
DISTRICT:	04 SCALE: AS SHOWN DRAWN BY: CEM

AEWierciak 3/20/2016 11:57:24 AM
WORKSPACE: AHTD
L:\20N\10\7707 - I-540 Widening & Interchange Improvement\Drawings\tBB0414_STG2_p07.dgn
REVISED DATE:

DATE REVISED	DATE FILMED	DATE REVISED	DATE FILMED	FED.RD. DIST.NO.	STATE	FED.AID PROJ.NO.	SHEET NO.	TOTAL SHEETS
				6	ARK.			
				JOB NO.		BB0414	355	886

(2) SIGNALIZATION PLANS (HWY. 112 AT I-49 NB RAMPS)

POLE DIMENSIONS

POLE	MAST ARM(S) LENGTH	MAST ARM(S) ORIENTATION ANGLE FROM HAND HOLE (CLOCKWISE)	VERTICAL SHAFT LENGTH	LUM. ARM LENGTH	LUM. ARM(S) ORIENTATION ANGLE FROM HAND HOLE (CLOCKWISE)	STATION HWY. 112	OFFSET	NORTHING	EASTING
A	POLE INSTALLED DURING STAGE 1								
B	POLE INSTALLED DURING STAGE 1B								
C	POLE INSTALLED DURING STAGE 1B								
D	POLE INSTALLED DURING STAGE 1								
E	POLE INSTALLED DURING STAGE 1								
F	-	-	15'-0"	-	-	14+66.25	35' RT.	651894.2717	668724.9303

ANTENNA ORIENTATION

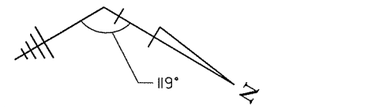

LEGEND

- TYPE 1HD PULL BOX
- TYPE 1PULL BOX
- TYPE 2 HD PULL BOX
- TYPE 2 PULL BOX
- CONTROLLER CABINET
- SIGNAL HEAD
- SIGNAL POLE, MAST ARM AND LUMINAIRE ARM
- NMC - NON-METALLIC CONDUIT
- VIDEO DETECTOR
- ANTENNA
- STAGE 2 CONSTRUCTION UNDER TRAFFIC
- STAGE 2 CONSTRUCTION

STAGE 2 PHASING DIAGRAM

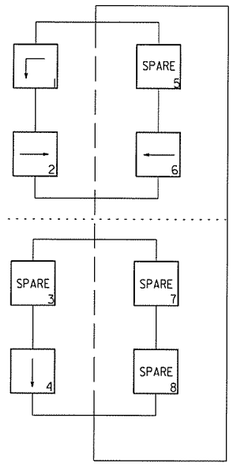

STAGE 2 SIGNAL FACES

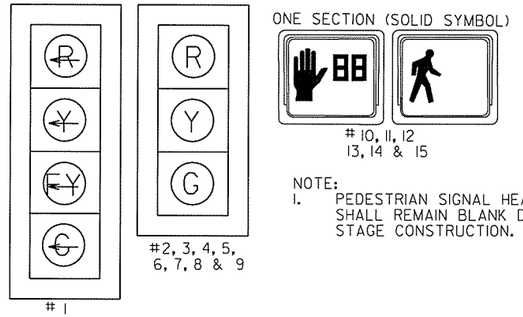

NOTE:
1. PEDESTRIAN SIGNAL HEADS SHALL REMAIN BLANK DURING STAGE CONSTRUCTION.

STATE OF ARKANSAS
REGISTERED PROFESSIONAL ENGINEER
No. 8141
NICCI D. TINER
3-20-16

NOTE:
1. ADDITIONAL 0.5" NMC REQUIRED FROM POLE F TO NEAREST PULL BOX. REFER TO STANDARD DRAWING SD-6, HEAVY DUTY PULL BOX. COST OF ADDITIONAL 0.5" NMC INCLUDED IN ITEMS 701, 714, & 715.
2. POLE F TO BE INSTALLED AFTER NEW ISLAND IS CONSTRUCTED.

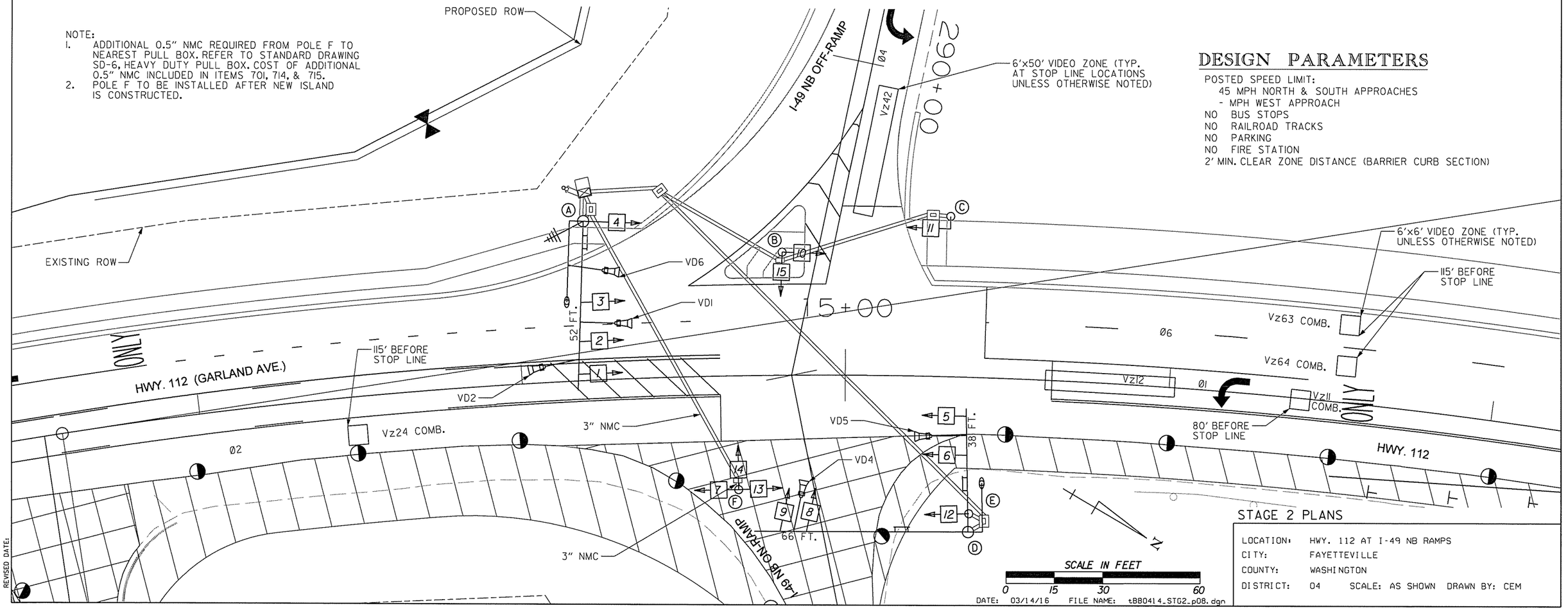

DESIGN PARAMETERS

POSTED SPEED LIMIT:
45 MPH NORTH & SOUTH APPROACHES
- MPH WEST APPROACH
NO BUS STOPS
NO RAILROAD TRACKS
NO PARKING
NO FIRE STATION
2' MIN. CLEAR ZONE DISTANCE (BARRIER CURB SECTION)

STAGE 2 PLANS

LOCATION:	HWY. 112 AT I-49 NB RAMPS
CITY:	FAYETTEVILLE
COUNTY:	WASHINGTON
DISTRICT:	04 SCALE: AS SHOWN DRAWN BY: CEM

DATE: 03/14/16 FILE NAME: tBB0414_STG2_p08.dgn

AEWierciak 3/20/2016 11:57:24 AM
WORKSPACE: AHTD
L:\ZONING\0177\07 - I-540 Widening & Interchange Improvement\Drawings\1BB0414_STG2_p08.dgn
REVISED DATE:

DETECTOR CHART (STAGE 2, 2B & 2C)

DETECTOR ASSIGNMENTS				HARDWARE INPUTS BY SUPPLIER			PROGRAM ASSIGNMENTS			VIDEO DET. TUBE LENGTH	COMMENT
							LOCAL		MSTR. SYS. DET. #		
DETECTOR I.D. #	DIRECTION & LOCATION	TYPE	DET. #	CAB. TRM. #	AMP CHN. #	CON. INP. #	PHS.	SYS. DET. #			
Vz11	SB LEFT FAR	COMB.			1	V9	1	1		23"	VD1
Vz12	SB LEFT NEAR	LOCAL			2	V1	1			23"	VD1
Vz22	NB FAR	LOCAL			10	P1	2			74"	VD2
Vz24	NB NEAR	COMB.			12	V11	2	3		23"	VD5
Vz41	EB LEFT FAR	COMB.			13	V12	4	4		23"	VD4
vz42	EB LEFT NEAR	LOCAL			14	V4	4			23"	VD4
Vz61	SB OUTSIDE FAR	LOCAL			3	P5	6			23"	VD6
Vz62	SB INSIDE FAR	LOCAL			4	V6	6			23"	VD6
Vz63	SB OUTSIDE NEAR	COMB.			5	V13	6	5		23"	VD1
Vz64	SB INSIDE NEAR	COMB.			6	V14	6	6		23"	VD1

CONTROLLER INPUT ABBREVIATIONS:
V = VEHICLE INPUT
D = SYSTEM OR AUXILIARY INPUT
P = PEDESTRIAN INPUT

SPARE AMP CHN. #= 7, 8, 9, 11, 15 & 16

INTERVAL CHART (STAGE 2, 2B & 2C)

SIGNAL FACES	INTERSECTION INTERVALS						FLASH SEQ.
	1+6	CLR.	2+6	CLR.	4	CLR.	
1	~~G~~	***	~~FY~~	*	~~R~~	~~R~~	~~R~~
2, 3 & 4	G	**	G	**	R	R	R
5, 6 & 7	R	R	G	Y	R	R	R
8 & 9	R	R	R	R	G	Y	R
10 & 11	B	B	B	B	B	B	B
12 & 13	B	B	B	B	B	B	B
14 & 15	B	B	B	B	B	B	B

* DENOTES GREEN OR YELLOW ARROW DEPENDING ON NEXT PHASE
** DENOTES GREEN OR YELLOW BALL DEPENDING ON NEXT PHASE
*** DENOTES YELLOW OR FLASHING YELLOW ARROW DEPENDING ON NEXT PHASE

DATE REVISED	DATE FILMED	DATE REVISED	DATE FILMED	FED.RD. DIST.NO.	STATE	FED.AID PROJ.NO.	SHEET NO.	TOTAL SHEETS
				6	ARK.			
				JOB NO.		BB0414	356	886

(2) SIGNALIZATION PLANS (HWY. 112 AT I-49 NB RAMPS)

STATE OF ARKANSAS
REGISTERED PROFESSIONAL ENGINEER
No. 8141
NICCI D. TINER
3-20-16

STAGE 2, 2B & 2C PHASING DIAGRAM

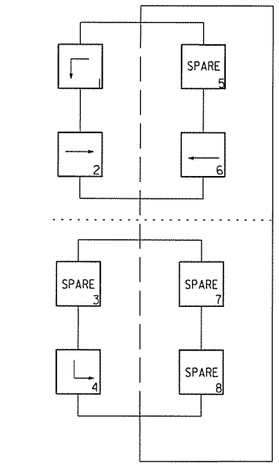

STAGE 2, 2B & 2C SIGNAL FACES

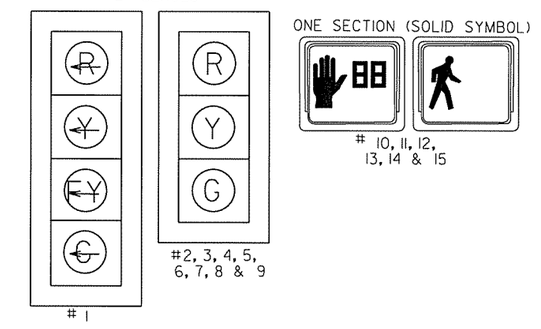

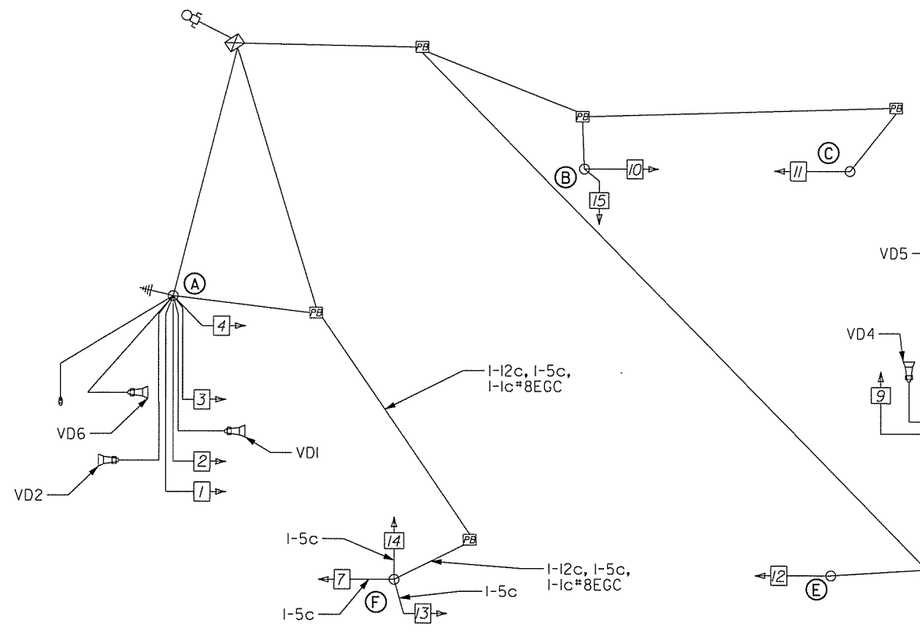

WIRING DIAGRAM (STAGE 2, 2B, 2C)

TYPICAL WIRING INCLUDES:
1. SEPARATE 5c/#14 AWG FROM EACH 3 SEC SIGNAL HEAD TO BASE OF POLE.
2. SEPARATE 7c/#14 AWG FROM EACH 4 SEC SIGNAL HEAD TO BASE OF POLE.
3. PROVIDE SEPARATE CONDUIT FOR ANTENNA CABLE.
4. SEPARATE 5c/#14 AWG TO EACH POLE WITH PEDESTRIAN PUSH BUTTONS.
5. ALL DETECTOR RACK CHANNELS, INCLUDING UNUSED, SHALL BE BROUGHT TO TERMINAL STRIP IN DETECTOR AREA ON CABINET.
6. THE LOCAL GOVERNMENT SHALL BE RESPONSIBLE FOR PROVIDING POWER TO THE SERVICE POINT.

NOTES:
1. STAGE 2 WIRING INCLUDES WIRING FROM STAGES IA AND IB.
2. ADDITIONAL I-1c#8EGC IN SEPARATE CONDUIT REQUIRED FROM POLE F TO NEAREST PULL BOX. REFER TO STANDARD DRAWING SD-6, HEAVY DUTY PULL BOX. COST OF ADDITIONAL 0.5" NMC INCLUDED IN ITEMS 701, 714, & 715.
3. SEE FINAL PLAN WIRING DIAGRAM FOR GROUNDING DETAILS.

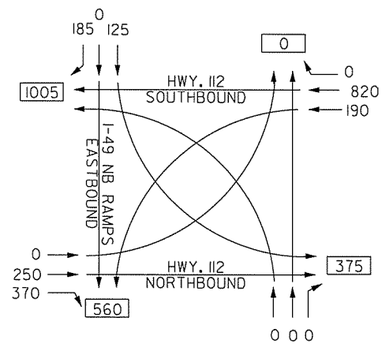

I-49 NB RAMPS AT HWY. 112
TRAFFIC FLOW DIAGRAM
TRAFFIC VOLUME
A.M. PEAK HOUR

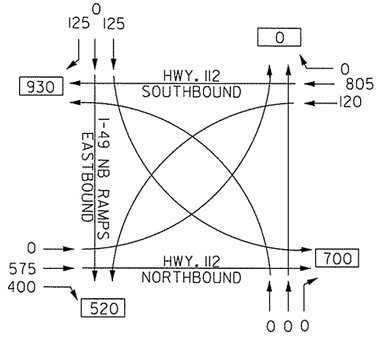

I-49 NB RAMPS AT HWY. 112
TRAFFIC FLOW DIAGRAM
TRAFFIC VOLUME
P.M. PEAK HOUR

NOTE:
2011 TRAFFIC VOLUMES

DATE: 03/09/16 FILE NAME: tBB0414_STG2_p09.dgn

STAGE 2, 2B AND 2C PLANS

LOCATION: HWY. 112 AT I-49 NB RAMPS
CITY: FAYETTEVILLE
COUNTY: WASHINGTON
DISTRICT: 04 SCALE: AS SHOWN DRAWN BY: CEM

AEWierdak 3/20/2016 11:57:24 AM
WORKSPACE: AHTD
L:\20IN\10I7707 - I-540 Widening & Interchange Improvement\Drawings\tBB0414_STG2_p09.dgn
REVISED DATE:

DATE REVISED	DATE FILMED	DATE REVISED	DATE FILMED	FED.RD. DIST.NO.	STATE	FED.AID PROJ.NO.	SHEET NO.	TOTAL SHEETS
				6	ARK.			
				JOB NO.		BB0414	357	886

(2) SIGNALIZATION PLANS (HWY. 112 AT I-49 NB RAMPS)

STATE OF ARKANSAS
REGISTERED PROFESSIONAL ENGINEER
No. 8141
NICCI D. TINER
3-20-16

STAGE 2B PHASING DIAGRAM

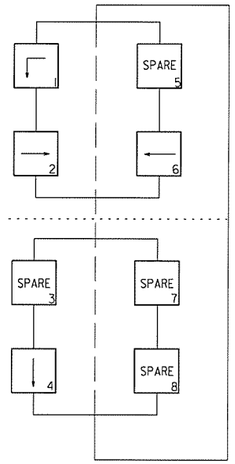

STAGE 2B SIGNAL FACES

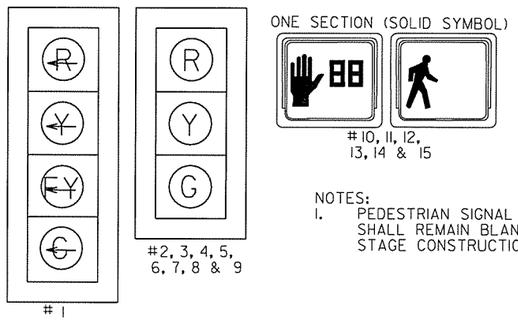

NOTES:
1. PEDESTRIAN SIGNAL HEADS SHALL REMAIN BLANK DURING STAGE CONSTRUCTION.

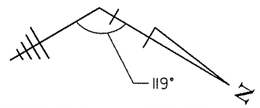

ANTENNA ORIENTATION

LEGEND

- TYPE 1HD PULL BOX
- TYPE 1PULL BOX
- TYPE 2 HD PULL BOX
- TYPE 2 PULL BOX
- CONTROLLER CABINET
- SIGNAL HEAD
- SIGNAL POLE, MAST ARM AND LUMINAIRE ARM
- NMC - NON-METALLIC CONDUIT
- VIDEO DETECTOR
- ANTENNA

NOTE:
1. SIGNAL HEADS 8 & 9 AND VIDEO DETECTOR VD-4 SHALL BE RELOCATED ON MAST ARM D AS SHOWN.

DESIGN PARAMETERS

POSTED SPEED LIMIT:
45 MPH NORTH & SOUTH APPROACHES
- MPH WEST APPROACH
NO BUS STOPS
NO RAILROAD TRACKS
NO PARKING
NO FIRE STATION
2' MIN. CLEAR ZONE DISTANCE (BARRIER CURB SECTION)

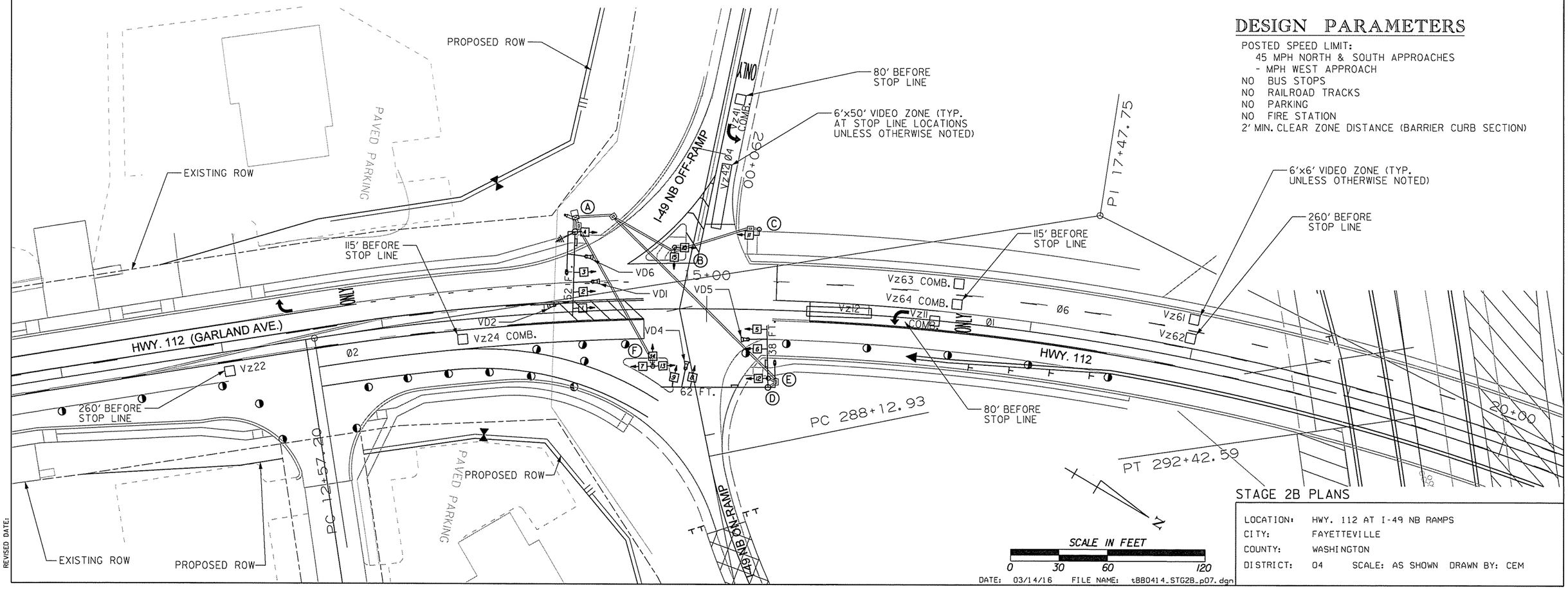

DATE: 03/14/16 FILE NAME: tBB0414_STG2B_p07.dgn

STAGE 2B PLANS

LOCATION:	HWY. 112 AT I-49 NB RAMPS
CITY:	FAYETTEVILLE
COUNTY:	WASHINGTON
DISTRICT:	04 SCALE: AS SHOWN DRAWN BY: CEM

AEWierciak 3/20/2016 11:57:25 AM
WORKSPACE: AHTD
L:\2014\014707 - I-540 Widening & Interchange Improvement\Drawings\tBB0414_STG2B_p07.dgn
REVISED DATE:

DATE REVISED	DATE FILMED	DATE REVISED	DATE FILMED	FED.RD. DIST.NO.	STATE	FED.AID PROJ.NO.	SHEET NO.	TOTAL SHEETS
				6	ARK.			
				JOB NO.		BB0414	358	886

(2) SIGNALIZATION PLANS (HWY. 112 AT I-49 NB RAMPS)

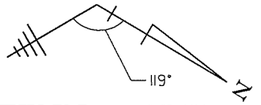

ANTENNA ORIENTATION

NOTES:
1. PEDESTRIAN SIGNAL HEADS SHALL REMAIN BLANK DURING STAGE CONSTRUCTION.

STAGE 2B PHASING DIAGRAM

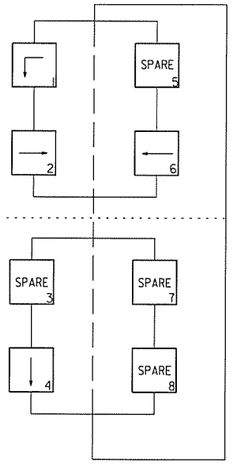

STAGE 2B SIGNAL FACES

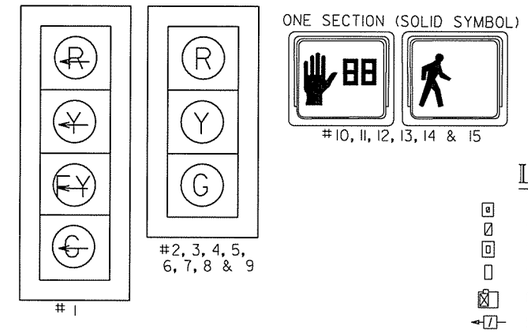

STATE OF ARKANSAS
REGISTERED PROFESSIONAL ENGINEER
No. 8141
NICCI D. TINER
3-20-16

LEGEND

- TYPE 1HD PULL BOX
- TYPE 1PULL BOX
- TYPE 2 HD PULL BOX
- TYPE 2 PULL BOX
- CONTROLLER CABINET
- SIGNAL HEAD
- SIGNAL POLE, MAST ARM AND LUMINAIRE ARM
- NMC - NON-METALLIC CONDUIT
- VIDEO DETECTOR
- ANTENNA

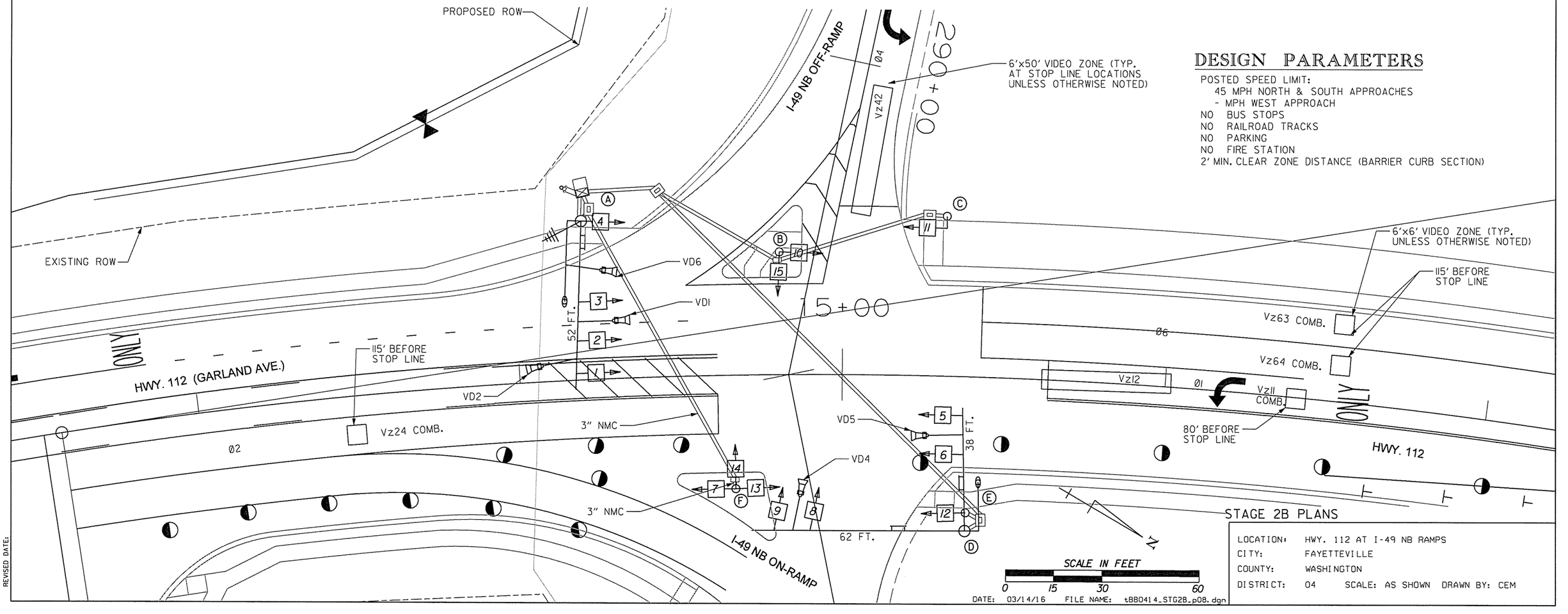

DESIGN PARAMETERS

POSTED SPEED LIMIT:
45 MPH NORTH & SOUTH APPROACHES
- MPH WEST APPROACH
NO BUS STOPS
NO RAILROAD TRACKS
NO PARKING
NO FIRE STATION
2' MIN. CLEAR ZONE DISTANCE (BARRIER CURB SECTION)

STAGE 2B PLANS

LOCATION:	HWY. 112 AT I-49 NB RAMPS
CITY:	FAYETTEVILLE
COUNTY:	WASHINGTON
DISTRICT:	04 SCALE: AS SHOWN DRAWN BY: CEM

DATE: 03/14/16 FILE NAME: tBB0414_STG2B_p08.dgn

AEWterclok 3/20/2016 11:57:25 AM
WORKSPACE: AHTD
L:\20IN\1017107 - I-540 Widening & Interchange Improvement\Drawings\1BB0414_STG2B_p08.dgn
REVISED DATE:

DATE REVISED	DATE FILMED	DATE REVISED	DATE FILMED	FED.RD. DIST.NO.	STATE	FED.AID PROJ.NO.	SHEET NO.	TOTAL SHEETS
				6	ARK.			
				JOB NO.		BB0414	359	886

(2) SIGNALIZATION PLANS (HWY. 112 AT I-49 NB RAMPS)

STAGE 2C PHASING DIAGRAM

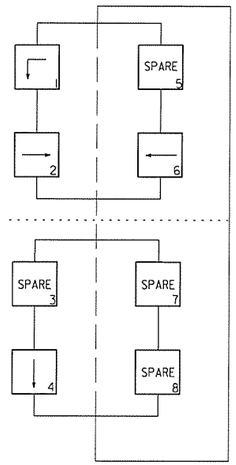

STAGE 2C SIGNAL FACES

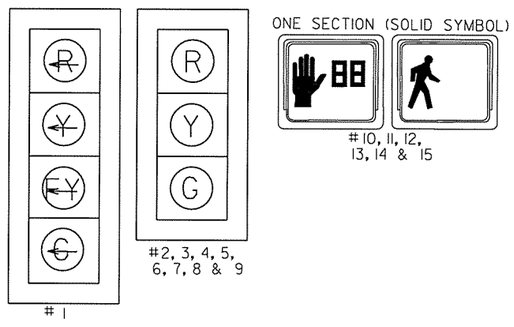

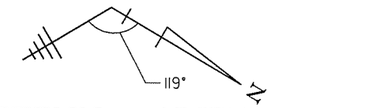

ANTENNA ORIENTATION

STATE OF ARKANSAS
REGISTERED PROFESSIONAL ENGINEER
No.8141
NICCI D. TINER
3-20-16

NOTES:
1. PEDESTRIAN SIGNAL HEADS SHALL REMAIN BLANK DURING STAGE CONSTRUCTION.

LEGEND

- TYPE IHD PULL BOX
- TYPE IPULL BOX
- TYPE 2 HD PULL BOX
- TYPE 2 PULL BOX
- CONTROLLER CABINET
- SIGNAL HEAD
- SIGNAL POLE, MAST ARM AND LUMINAIRE ARM
- NMC - NON-METALLIC CONDUIT
- VIDEO DETECTOR
- ANTENNA

DESIGN PARAMETERS

POSTED SPEED LIMIT:
45 MPH NORTH & SOUTH APPROACHES
- MPH WEST APPROACH
NO BUS STOPS
NO RAILROAD TRACKS
NO PARKING
NO FIRE STATION
2' MIN. CLEAR ZONE DISTANCE (BARRIER CURB SECTION)

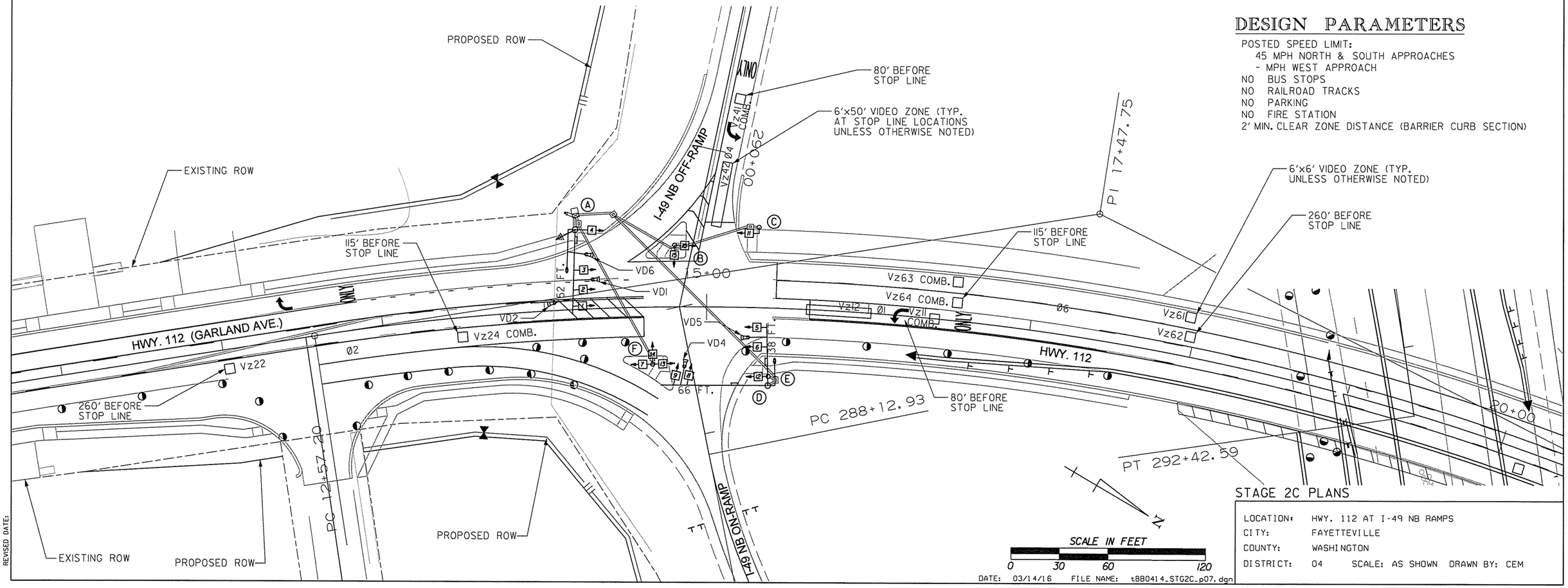

DATE: 03/14/16 FILE NAME: tBB0414_STG2C_p07.dgn

STAGE 2C PLANS

LOCATION:	HWY. 112 AT I-49 NB RAMPS
CITY:	FAYETTEVILLE
COUNTY:	WASHINGTON
DISTRICT:	04 SCALE: AS SHOWN DRAWN BY: CEM

AEWerclak 3/20/2016 11:57:25 AM
WORKSPACE: AHTD
L:\20IN\10I707 - I-540 Widening & Interchange Improvement\Drawings\tBB0414_STG2C_p07.dgn
REVISED DATE:

DATE REVISED	DATE FILMED	DATE REVISED	DATE FILMED	FED.RD. DIST.NO.	STATE	FED.AID PROJ.NO.	SHEET NO.	TOTAL SHEETS
				6	ARK.			
				JOB NO.		BB0414	360	886

(2) SIGNALIZATION PLANS (HWY. 112 AT I-49 NB RAMPS)

ANTENNA ORIENTATION

NOTES:
1. PEDESTRIAN SIGNAL HEADS SHALL REMAIN BLANK DURING STAGE CONSTRUCTION.

STAGE 2C PHASING DIAGRAM

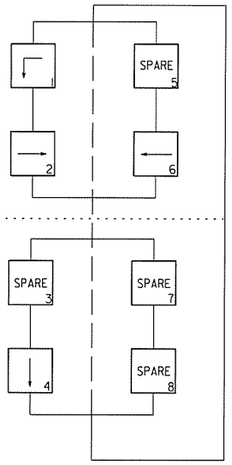

STAGE 2C SIGNAL FACES

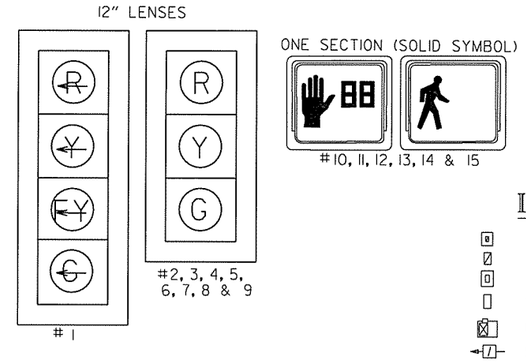

STATE OF ARKANSAS
REGISTERED PROFESSIONAL ENGINEER
No.8141
NICCI D. TINER
3-20-16

LEGEND

- TYPE IHD PULL BOX
- TYPE IPULL BOX
- TYPE 2 HD PULL BOX
- TYPE 2 PULL BOX
- CONTROLLER CABINET
- SIGNAL HEAD
- SIGNAL POLE, MAST ARM AND LUMINAIRE ARM
- NMC - NON-METALLIC CONDUIT
- VIDEO DETECTOR
- ANTENNA

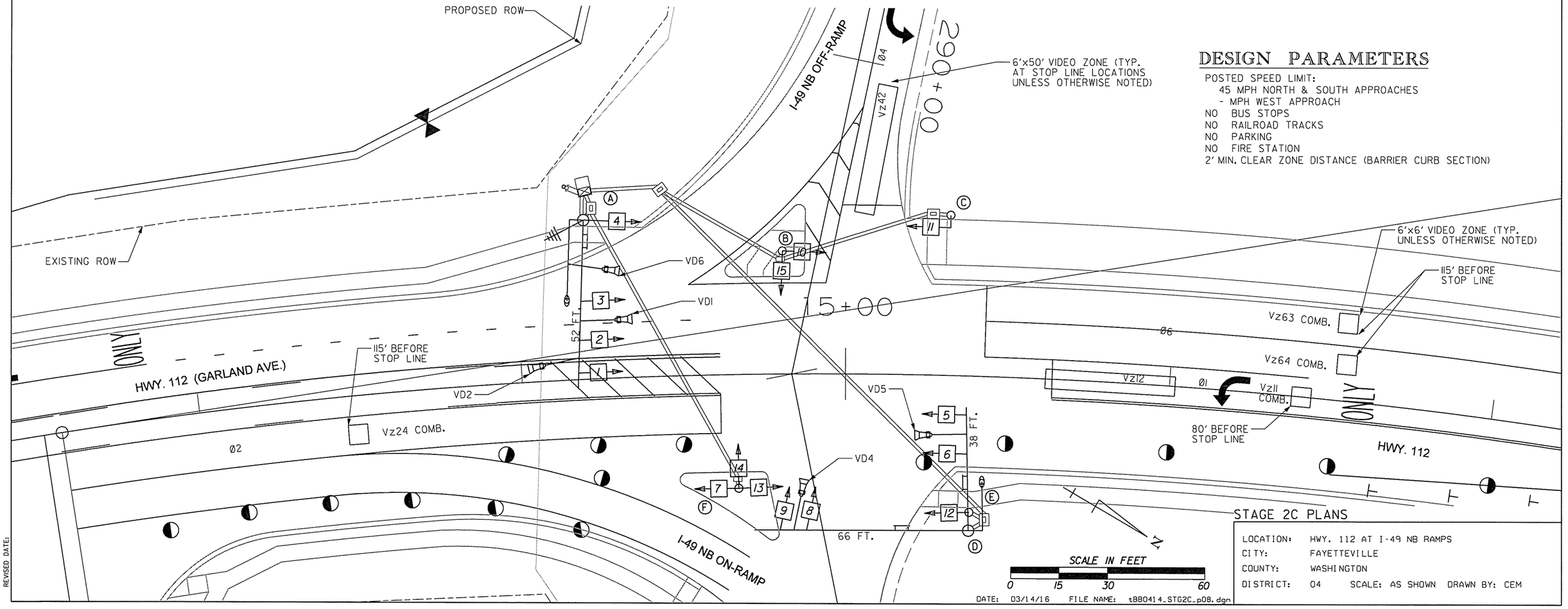

DESIGN PARAMETERS

POSTED SPEED LIMIT:
45 MPH NORTH & SOUTH APPROACHES
- MPH WEST APPROACH
NO BUS STOPS
NO RAILROAD TRACKS
NO PARKING
NO FIRE STATION
2' MIN. CLEAR ZONE DISTANCE (BARRIER CURB SECTION)

STAGE 2C PLANS

LOCATION: HWY. 112 AT I-49 NB RAMPS
CITY: FAYETTEVILLE
COUNTY: WASHINGTON
DISTRICT: 04 SCALE: AS SHOWN DRAWN BY: CEM

DATE: 03/14/16 FILE NAME: tBB0414_STG2C_p08.dgn

AEWierciak 3/20/2016 11:57:26 AM
WORKSPACE: AHTD
L:\20II\II0I7707 - I-540 Widening & Interchange Improvement\Drawings\tBB0414_STG2C_p08.dgn
REVISED DATE:

DATE REVISED	DATE FILMED	DATE REVISED	DATE FILMED	FED.RD. DIST.NO.	STATE	FED.AID PROJ.NO.	SHEET NO.	TOTAL SHEETS
				6	ARK.			
				JOB NO.		BB0414	361	886

(2) SIGNALIZATION PLANS (HWY. 112 AT I-49 NB RAMPS)

FINAL PHASING DIAGRAM

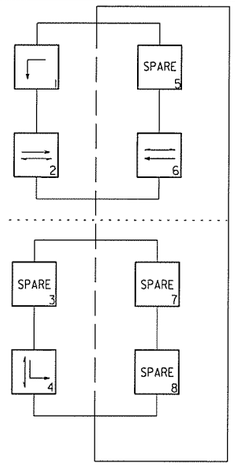

FINAL SIGNAL FACES

12" LENSES

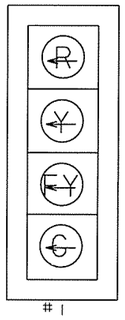

#1

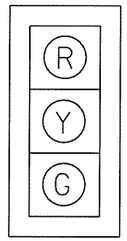

#2, 3, 4, 5, 6, 7, 8 & 9

ONE SECTION (SOLID SYMBOL)

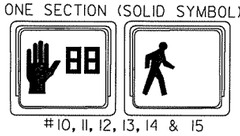

#10, 11, 12, 13, 14 & 15

NOTES:
1. CROSSWALKS NOT SHOWN FOR CLARITY.
2. FINAL SIGNALIZATION PLANS SHOW ITEMS INSTALLED DURING STAGE CONSTRUCTION.
3. NEW SIGNALS AT THIS INTERSECTION MUST BE OPERATIONAL PRIOR TO FIVE LANE OPERATION AT THIS INTERSECTION.
4. ADDITIONAL 0.5" NMC REQUIRED FROM POLE AND CONTROLLER TO NEAREST PULL BOX. REFER TO STANDARD DRAWING SD-6, HEAVY DUTY PULL BOX. COST OF 0.5" NMC INCLUDED IN ITEMS 701, 714, & 715.

LEGEND

- TYPE 1HD PULL BOX
- TYPE 1PULL BOX
- TYPE 2 HD PULL BOX
- TYPE 2 PULL BOX
- CONTROLLER CABINET
- SIGNAL HEAD
- SIGNAL POLE, MAST ARM AND LUMINAIRE ARM
- NMC - NON-METALLIC CONDUIT
- VIDEO DETECTOR
- ANTENNA

STATE OF ARKANSAS
REGISTERED PROFESSIONAL ENGINEER
No. 8141
NICCI D. TINER
3-20-16

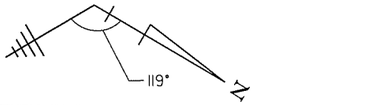

ANTENNA ORIENTATION

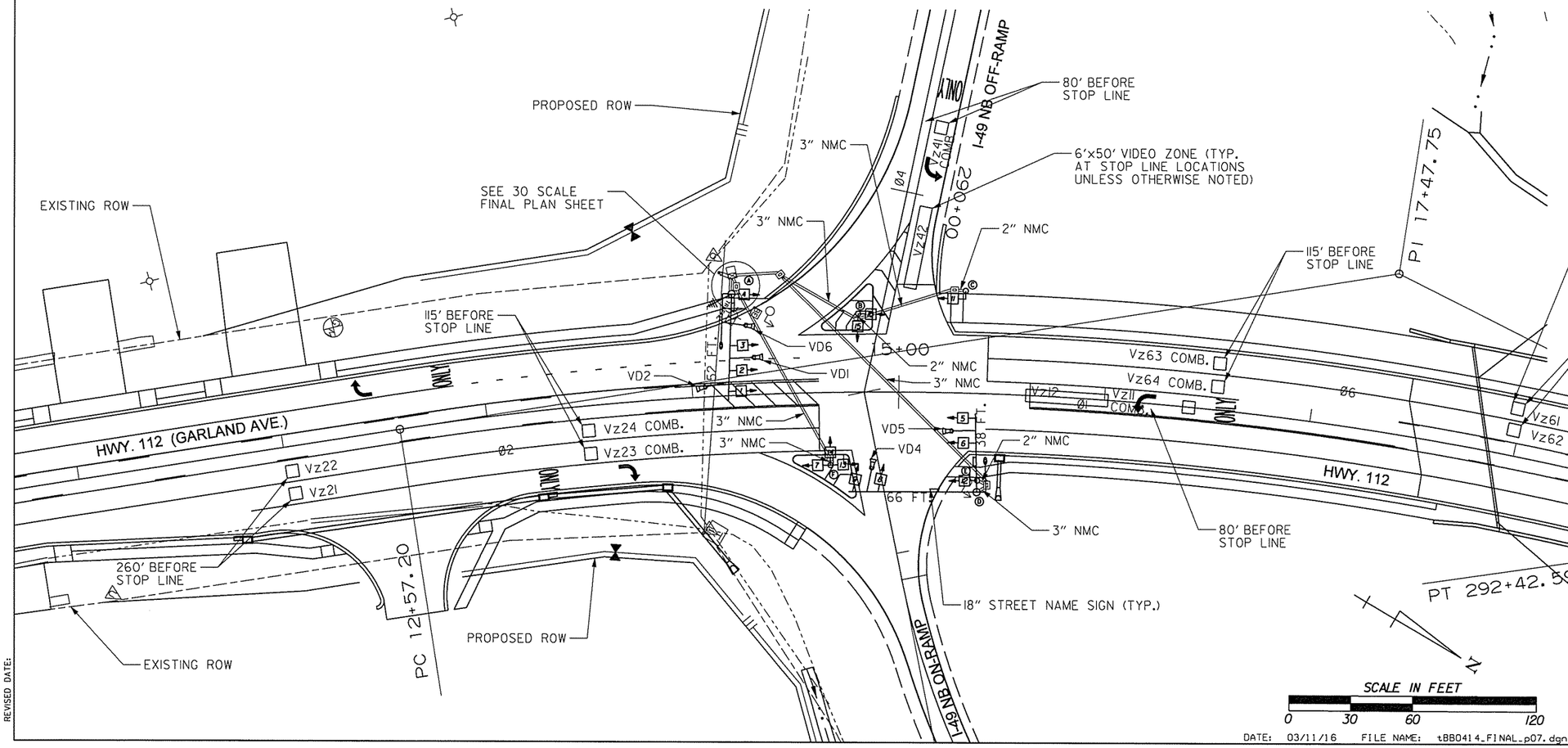

DESIGN PARAMETERS

POSTED SPEED LIMIT:
45 MPH NORTH & SOUTH APPROACHES
- MPH WEST APPROACH
NO BUS STOPS
NO RAILROAD TRACKS
NO PARKING
NO FIRE STATION
2' MIN. CLEAR ZONE DISTANCE (BARRIER CURB SECTION)

FINAL PLANS

LOCATION:	HWY. 112 AT I-49 NB RAMPS		
CITY:	FAYETTEVILLE		
COUNTY:	WASHINGTON		
DISTRICT:	04	SCALE: AS SHOWN	DRAWN BY: CEM

DATE: 03/11/16 FILE NAME: tBB0414_FINAL_p07.dgn

AEWierciak 3/20/2016 11:57:26 AM
WORKSPACE: AHTD
L:\ZOIN\60177OT - I-540 Widening & Interchange Improvement\Drawings\tBB0414_FINAL_p07.dgn
REVISED DATE:

DATE REVISED	DATE FILMED	DATE REVISED	DATE FILMED	FED.RD. DIST.NO.	STATE	FED.AID PROJ.NO.	SHEET NO.	TOTAL SHEETS
				6	ARK.			
				JOB NO.		BB0414	362	886

(2) SIGNALIZATION PLANS (HWY. 112 AT I-49 NB RAMPS)

FINAL PHASING DIAGRAM

FINAL SIGNAL FACES

LEGEND

- TYPE 1HD PULL BOX
- TYPE 1PULL BOX
- TYPE 2 HD PULL BOX
- TYPE 2 PULL BOX
- CONTROLLER CABINET
- SIGNAL HEAD
- SIGNAL POLE, MAST ARM AND LUMINAIRE ARM
- NMC - NON-METALLIC CONDUIT
- VIDEO DETECTOR
- ANTENNA

NOTES:
1. FINAL SIGNALIZATION PLANS SHOW ITEMS INSTALLED DURING STAGE CONSTRUCTION.
2. NEW SIGNALS AT THIS INTERSECTION MUST BE OPERATIONAL PRIOR TO FIVE LANE OPERATION AT THIS INTERSECTION.
3. ADDITIONAL 0.5" NMC REQUIRED FROM POLE AND CONTROLLER TO NEAREST PULL BOX. REFER TO STANDARD DRAWING SD-6, HEAVY DUTY PULL BOX. COST OF 0.5" NMC INCLUDED IN ITEMS 701, 714, & 715.

STATE OF ARKANSAS
REGISTERED PROFESSIONAL ENGINEER
No. 8141
NICCI D. TINER
3-20-16

ANTENNA ORIENTATION

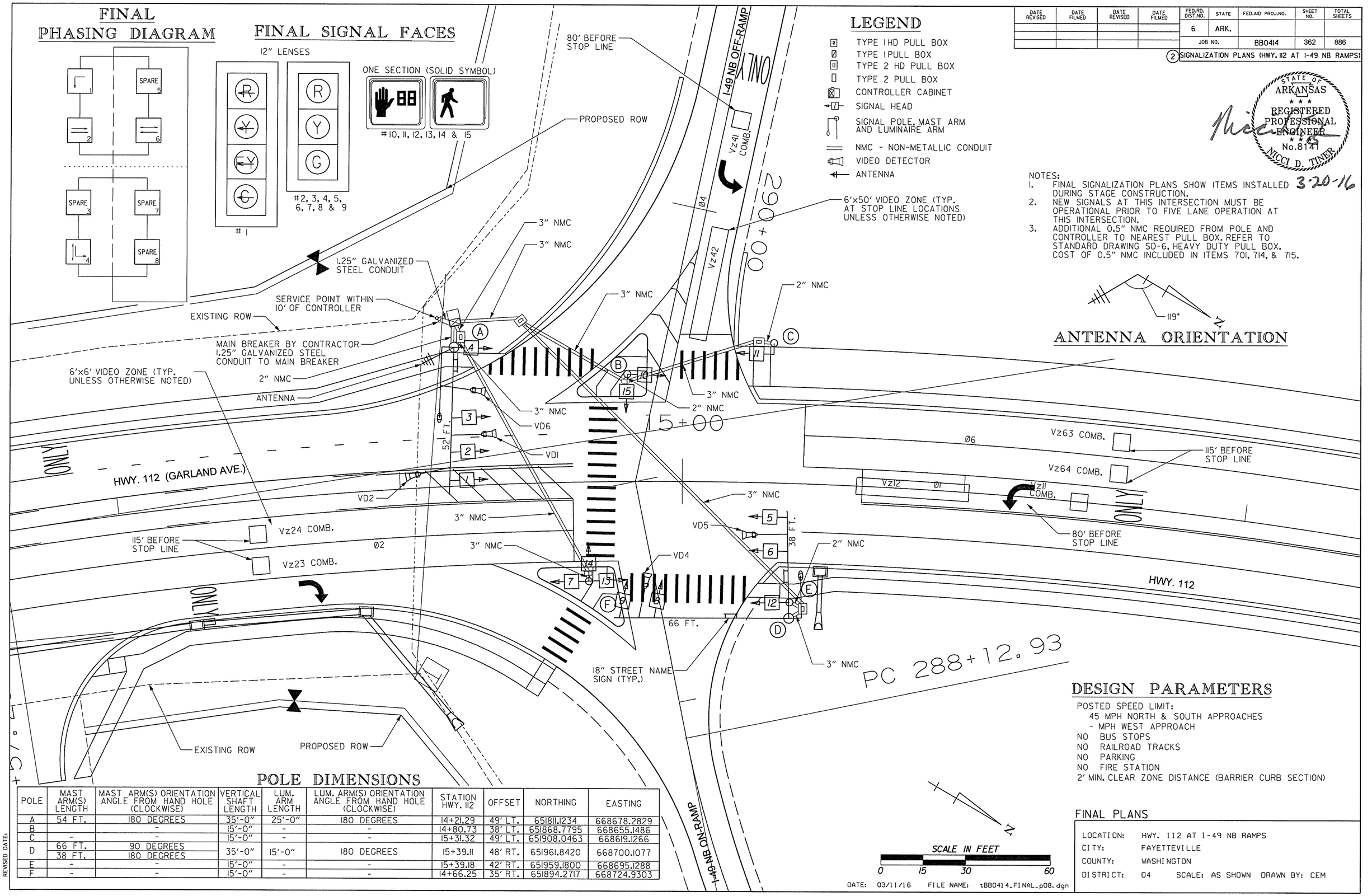

POLE DIMENSIONS

POLE	MAST ARM(S) LENGTH	MAST ARM(S) ORIENTATION ANGLE FROM HAND HOLE (CLOCKWISE)	VERTICAL SHAFT LENGTH	LUM. ARM LENGTH	LUM. ARM(S) ORIENTATION ANGLE FROM HAND HOLE (CLOCKWISE)	STATION HWY. 112	OFFSET	NORTHING	EASTING
A	54 FT.	180 DEGREES	35'-0"	25'-0"	180 DEGREES	14+21.29	49' LT.	651811.1234	668678.2829
B		-	15'-0"	-	-	14+80.73	38' LT.	651868.7795	668655.1486
C	-	-	15'-0"	-	-	15+31.32	49' LT.	651908.0463	668619.1266
D	66 FT.	90 DEGREES	35'-0"	15'-0"	180 DEGREES	15+39.11	48' RT.	651961.8420	668700.1077
	38 FT.	180 DEGREES							
E	-	-	15'-0"	-	-	15+39.18	42' RT.	651959.1800	668695.1288
F	-	-	15'-0"	-	-	14+66.25	35' RT.	651894.2717	668724.9303

DESIGN PARAMETERS

POSTED SPEED LIMIT:
45 MPH NORTH & SOUTH APPROACHES
- MPH WEST APPROACH
NO BUS STOPS
NO RAILROAD TRACKS
NO PARKING
NO FIRE STATION
2' MIN. CLEAR ZONE DISTANCE (BARRIER CURB SECTION)

FINAL PLANS

LOCATION:	HWY. 112 AT I-49 NB RAMPS
CITY:	FAYETTEVILLE
COUNTY:	WASHINGTON
DISTRICT:	04 SCALE: AS SHOWN DRAWN BY: CEM

DATE: 03/11/16 FILE NAME: tBB0414_FINAL_p08.dgn

AEWerclok 3/20/2016 11:57:26 AM
WORKSPACE: AHTD
L:\20N\10\7707 - I-540 Widening & Interchange Improvement\Drawings\tBB0414_FINAL_p08.dgn
REVISED DATE:

DETECTOR CHART (FINAL)

DETECTOR ASSIGNMENTS				HARDWARE INPUTS BY SUPPLIER			PROGRAM ASSIGNMENTS			VIDEO DET. TUBE LENGTH	COMMENT
							LOCAL		MSTR.		
DETECTOR I.D. #	DIRECTION & LOCATION	TYPE	DET. #	CAB. TRM. #	AMP CHN. #	CON. INP. #	PHS.	SYS. DET. #	SYS. DET. #		
Vz11	SB LEFT FAR	COMB.			1	V9	1	1		23"	VD1
Vz12	SB LEFT NEAR	LOCAL			2	V1	1			23"	VD1
Vz21	NB OUTSIDE FAR	LOCAL			9	V2	2			74"	VD2
Vz22	NB INSIDE FAR	LOCAL			10	P1	2			74"	VD2
Vz23	NB OUTSIDE NEAR	COMB.			11	V10	2	2		23"	VD5
Vz24	NB INSIDE NEAR	COMB.			12	V11	2	3		23"	VD5
Vz41	EB LEFT FAR	COMB.			13	V12	4	4		23"	VD4
Vz42	EB LEFT NEAR	LOCAL			14	V4	4			23"	VD4
Vz61	SB OUTSIDE FAR	LOCAL			3	P5	6			23"	VD6
Vz62	SB INSIDE FAR	LOCAL			4	V6	6			23"	VD6
Vz63	SB OUTSIDE NEAR	COMB.			5	V13	6	5		23"	VD1
Vz64	SB INSIDE NEAR	COMB.			6	V14	6	6		23"	VD1
PB2	S TO N	PED				P2	2				
PB4	W TO E	PED				P4	4				
PB6	N TO S	PED				P6	6				

CONTROLLER INPUT ABBREVIATIONS:
V = VEHICLE INPUT
D = SYSTEM OR AUXILIARY INPUT
P = PEDESTRIAN INPUT

SPARE AMP CHN. #= 7, 8, 15 & 16

INTERVAL CHART (FINAL)

SIGNAL FACES	INTERSECTION INTERVALS						FLASH SEQ.
	1+6	CLR.	2+6	CLR.	4	CLR.	
1	~~G~~	***	~~FY~~	*	~~R~~	~~R~~	~~R~~
2, 3 & 4	G	**	G	**	R	R	R
5, 6 & 7	R	R	G	Y	R	R	R
8 & 9	R	R	R	R	G	Y	R
10 & 11	W	FDW	W	FDW	DW	DW	B
12 & 13	DW	DW	W	FDW	DW	DW	B
14 & 15	DW	DW	DW	DW	W	FDW	B

* DENOTES GREEN OR YELLOW ARROW DEPENDING ON NEXT PHASE
** DENOTES GREEN OR YELLOW BALL DEPENDING ON NEXT PHASE
*** DENOTES YELLOW OR FLASHING YELLOW ARROW DEPENDING ON NEXT PHASE

DATE REVISED	DATE FILMED	DATE REVISED	DATE FILMED	FED.RD. DIST.NO.	STATE	FED.AID PROJ.NO.	SHEET NO.	TOTAL SHEETS
				6	ARK.			
				JOB NO.		BB0414	363	886

(2) SIGNALIZATION PLANS (HWY. 112 AT I-49 NB RAMPS)

STATE OF ARKANSAS
REGISTERED PROFESSIONAL ENGINEER
No. 8141
NICCI D. TINER
3-20-16

FINAL PHASING DIAGRAM

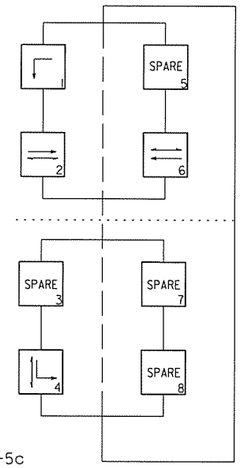

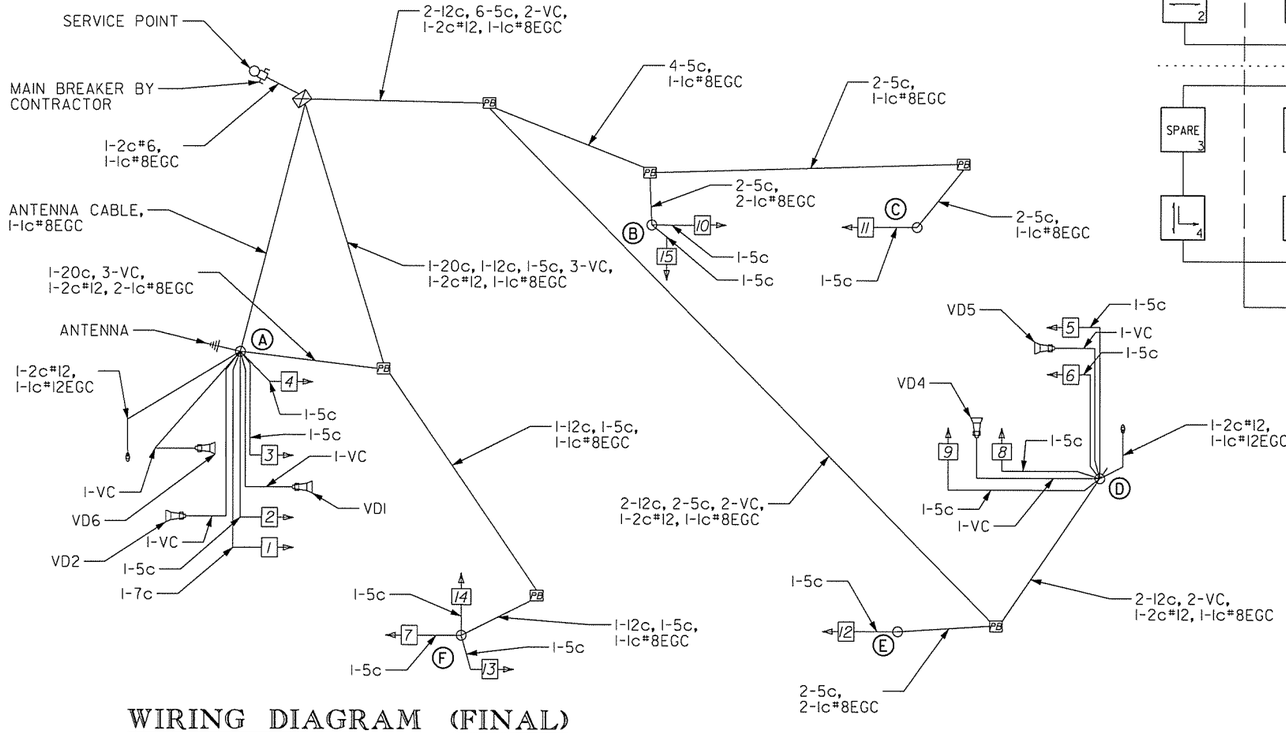

WIRING DIAGRAM (FINAL)

TYPICAL WIRING INCLUDES:
1. SEPARATE 5c/#14 AWG FROM EACH 3 SEC SIGNAL HEAD TO BASE OF POLE.
2. SEPARATE 7c/#14 AWG FROM EACH 4 SEC SIGNAL HEAD TO BASE OF POLE.
3. PROVIDE SEPARATE CONDUIT FOR ANTENNA CABLE.
4. SEPARATE 5c/#14 AWG TO EACH POLE WITH PEDESTRIAN PUSH BUTTONS.
5. ALL DETECTOR RACK CHANNELS, INCLUDING UNUSED, SHALL BE BROUGHT TO TERMINAL STRIP IN DETECTOR AREA ON CABINET.
6. THE LOCAL GOVERNMENT SHALL BE RESPONSIBLE FOR PROVIDING POWER TO THE SERVICE POINT.

NOTES:
1. FINAL WIRING INCLUDES WIRING FROM STAGED CONSTRUCTION.
2. ADDITIONAL 1-1C#8EGC IN SEPARATE CONDUIT REQUIRED FROM POLE AND CONTROLLER TO NEAREST PULL BOX. REFER TO STANDARD DRAWING SD-6, HEAVY DUTY PULL BOX. COST OF ADDITIONAL 1-1C#8EGC INCLUDED IN ITEMS 701, 714, & 715.

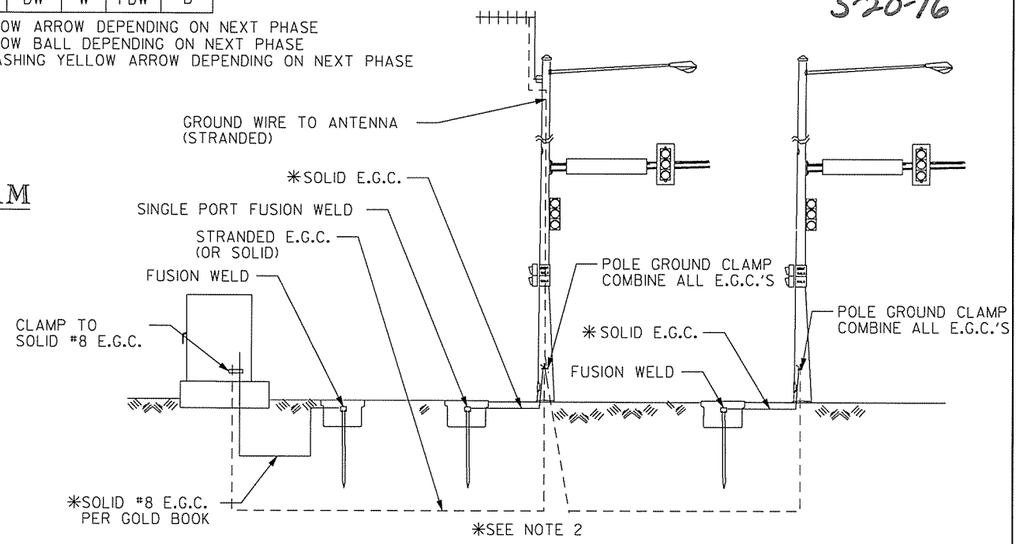

*SEE NOTE 2

GROUNDING ARRAY SINGLE-PORT FUSION WELDS

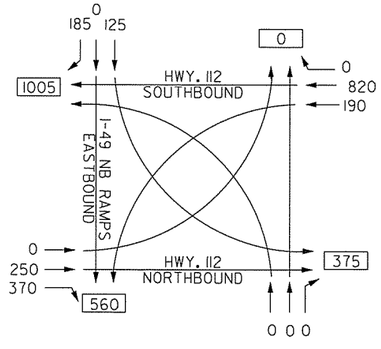

I-49 NB RAMPS AT HWY. 112
TRAFFIC FLOW DIAGRAM
TRAFFIC VOLUME
A.M. PEAK HOUR

NOTE:
2011 TRAFFIC VOLUMES

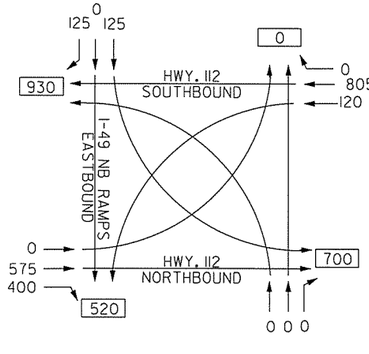

I-49 NB RAMPS AT HWY. 112
TRAFFIC FLOW DIAGRAM
TRAFFIC VOLUME
P.M. PEAK HOUR

N

FINAL PLANS

LOCATION:	HWY. 112 AT I-49 NB RAMPS
CITY:	FAYETTEVILLE
COUNTY:	WASHINGTON
DISTRICT:	04 SCALE: AS SHOWN DRAWN BY: CEM

DATE: 03/14/16 FILE NAME: tBB0414_FINAL_p09.dgn

AEWierdick 3/20/2016 11:57:27 AM
WORKSPACE: AHTD
L:\20IN\I007107 - I-540 Widening & Interchange Improvement\Drawings\tBB0414_FINAL_p09.dgn
REVISED DATE:

DATE REVISED	DATE FILMED	DATE REVISED	DATE FILMED	FED.RD. DIST.NO.	STATE	FED.AID PROJ.NO.	SHEET NO.	TOTAL SHEETS
				6	ARK.			
				JOB NO.		BB0414	364	886
				(2)	SIGNALIZATION PLANS (HWY. 112 AT DRAKE ST.)			

NOTES:
1. THE EXISTING TRAFFIC SIGNAL WILL REMAIN IN OPERATION THRU STAGE IA.
2. SEE STAGE 2 PLANS FOR SIGNAL HEAD AND VIDEO DETECTOR PLACEMENT ON MAST ARMS.
3. EXISTING POLES AND CONTROLLER SHALL BE REMOVED AFTER STAGE 2 CONSTRUCTION.
4. ADDITIONAL 0.5" NMC REQUIRED FROM POLE AND CONTROLLER TO NEAREST PULL BOX. REFER TO STANDARD DRAWING SD-6, HEAVY DUTY PULL BOX. COST OF ADDITIONAL 0.5" NMC INCLUDED IN ITEMS 701, 714, & 715.

LEGEND

- TYPE 2 PULL BOX
- TYPE 1 PULL BOX
- CONTROLLER CABINET
- SIGNAL HEAD
- SIGNAL POLE, MAST ARM AND LUMINAIRE ARM
- NMC - NON-METALLIC CONDUIT
- VIDEO DETECTOR
- ANTENNA
- STAGE IA CONSTRUCTION

EXISTING SIGNAL FACES

12" LENSES

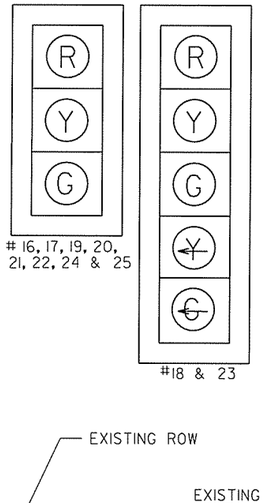

#16, 17, 19, 20, 21, 22, 24 & 25

#18 & 23

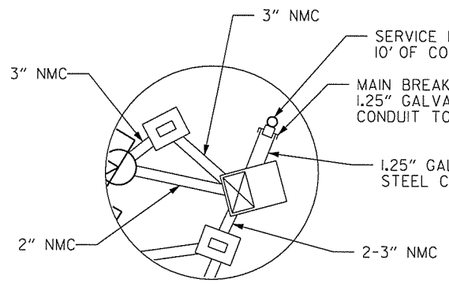

DETAIL A

EXISTING PHASING DIAGRAM

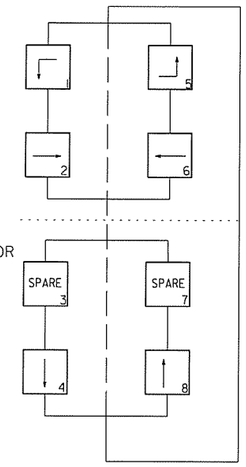

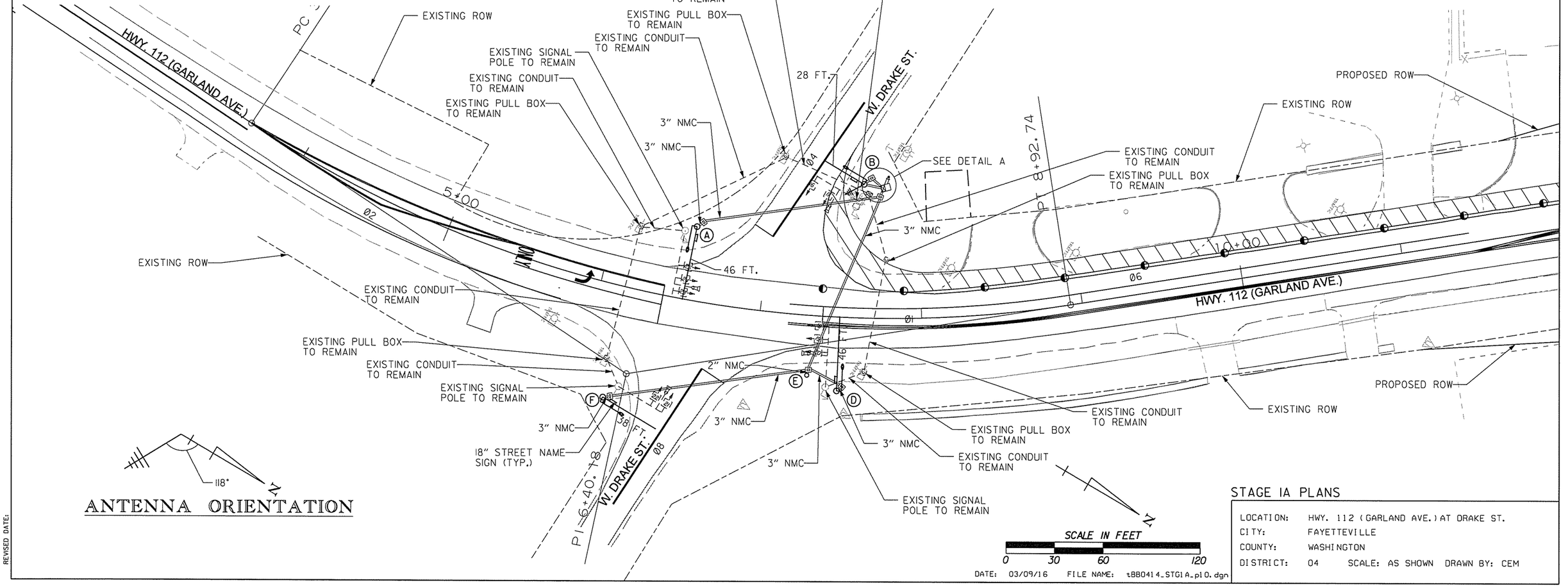

ANTENNA ORIENTATION

DESIGN PARAMETERS

POSTED SPEED LIMIT:
45 MPH NORTH, SOUTH & EAST APPROACHES
- MPH WEST APPROACH
NO BUS STOPS
NO RAILROAD TRACKS
NO PARKING
NO FIRE STATION
2' MIN. CLEAR ZONE DISTANCE (BARRIER CURB SECTION)
22' UNCURBED SECTION HWY. 112 AND DRAKE ST.

STATE OF ARKANSAS
REGISTERED PROFESSIONAL ENGINEER
No. 8141
NICCI D. TINER
3-20-16

STAGE IA PLANS

LOCATION:	HWY. 112 (GARLAND AVE.) AT DRAKE ST.
CITY:	FAYETTEVILLE
COUNTY:	WASHINGTON
DISTRICT:	04 SCALE: AS SHOWN DRAWN BY: CEM

DATE: 03/09/16 FILE NAME: tBB0414_STG1A_pl0.dgn

AEWierciak 3/20/2016 11:57:27 AM
WORKSPACE: AHTD
L:\2011\11017OT - I-540 Widening & Interchange Improvement\Drawings\tBB0414_STG1A_pl0.dgn
REVISED DATE:

POLE DIMENSIONS

POLE	MAST ARM(S) LENGTH	MAST ARM(S) ORIENTATION ANGLE FROM HAND HOLE (CLOCKWISE)	VERTICAL SHAFT LENGTH	LUM. ARM LENGTH	LUM. ARM(S) ORIENTATION ANGLE FROM HAND HOLE (CLOCKWISE)	STATION HWY. 112	OFFSET	NORTHING	EASTING
A	46 FT.	270 DEGREES	35'-0"	15'-0"	270 DEGREES	6+52.24	45' LT.	651200.9669	669124.2103
B	28 FT.	270 DEGREES	35'-0"	15'-0"	270 DEGREES	7+62.28	82' LT.	651276.6763	669049.0356
D	46 FT.	180 DEGREES	35"-0"	15'-0"	180 DEGREES	7+49.51	45' RT.	651326.6992	669167.3560
E	-	-	15'-0"	-		7+31.56	37' RT.	651305.9210	669168.4626
F	38' FT.	180 DEGREES	35'-0"	15'-0"	180 DEGREES	6+17.22	69' RT.	651204.2309	669244.3944

DESIGN PARAMETERS

POSTED SPEED LIMIT:
45 MPH NORTH, SOUTH & EAST APPROACHES
- MPH WEST APPROACH
NO BUS STOPS
NO RAILROAD TRACKS
NO PARKING
NO FIRE STATION
2' MIN. CLEAR ZONE DISTANCE (BARRIER CURB SECTION)
22' UNCURBED SECTION HWY. 112 AND DRAKE ST.

NOTES:
1. THE EXISTING TRAFFIC SIGNAL WILL REMAIN IN OPERATION THRU STAGE IA.
2. SEE STAGE 2 PLANS FOR SIGNAL HEAD AND VIDEO DETECTOR PLACEMENT ON MAST ARMS.
3. EXISTING POLES AND CONTROLLER SHALL BE REMOVED AFTER STAGE 2 CONSTRUCTION.
4. ADDITIONAL 0.5" NMC REQUIRED FROM POLE AND CONTROLLER TO NEAREST PULL BOX. REFER TO STANDARD DRAWING SD-6, HEAVY DUTY PULL BOX. COST OF ADDITIONAL 0.5" NMC INCLUDED IN ITEMS 701, 714, & 715.

DATE REVISED	DATE FILMED	DATE REVISED	DATE FILMED	FED.RD. DIST.NO.	STATE	FED.AID PROJ.NO.	SHEET NO.	TOTAL SHEETS
				6	ARK.			
				JOB NO.		BB0414	365	886

(2) SIGNALIZATION PLANS (HWY. 112 AT DRAKE ST.)

LEGEND

- TYPE 2 PULL BOX
- TYPE I PULL BOX
- CONTROLLER CABINET
- SIGNAL HEAD
- SIGNAL POLE, MAST ARM AND LUMINAIRE ARM
- NMC - NON-METALLIC CONDUIT
- VIDEO DETECTOR
- ANTENNA
- STAGE IA CONSTRUCTION

STATE OF ARKANSAS
REGISTERED PROFESSIONAL ENGINEER
No. 8141
NICCI D. TINER
3-20-16

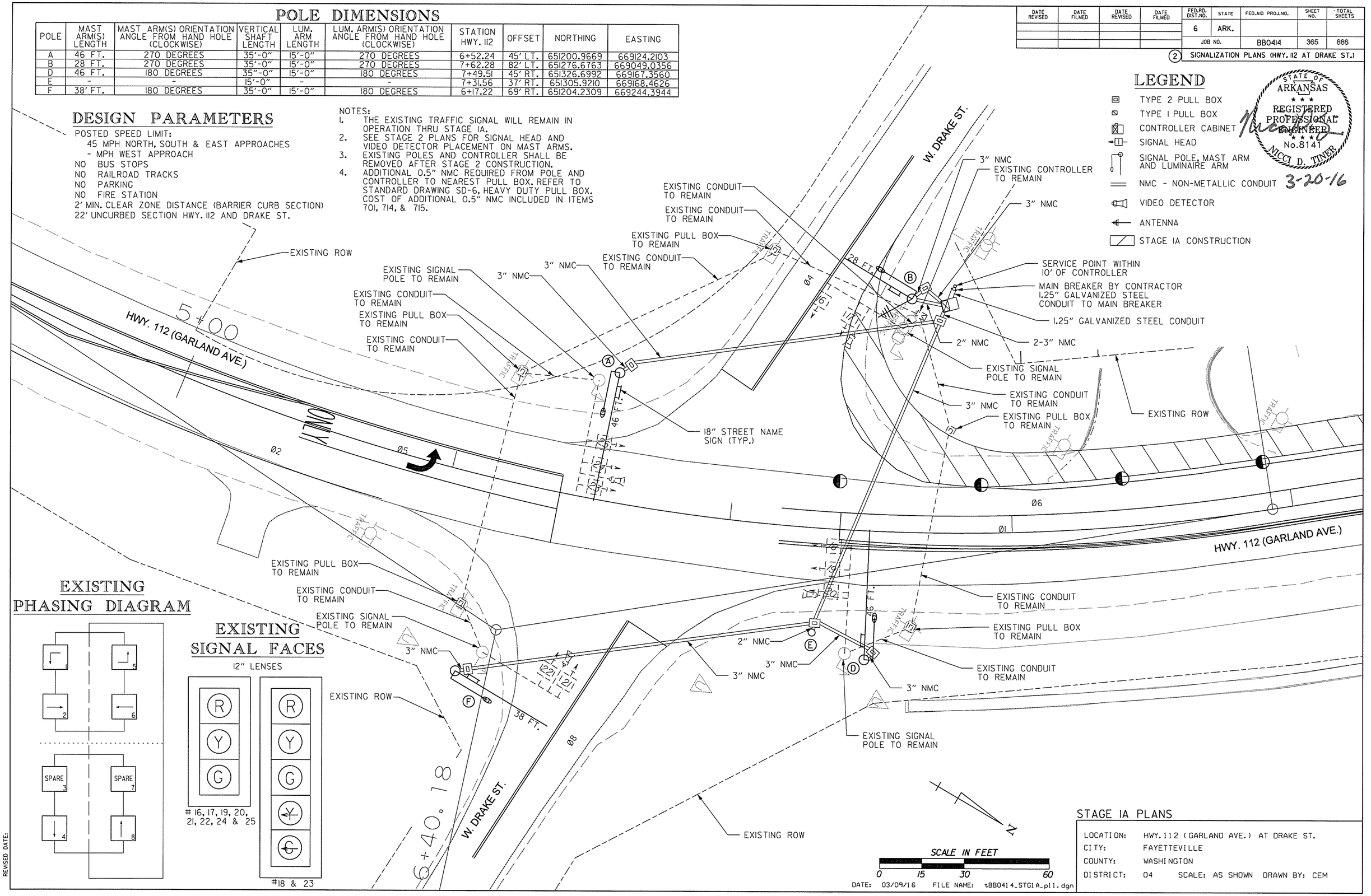

EXISTING PHASING DIAGRAM

EXISTING SIGNAL FACES

12" LENSES

STAGE IA PLANS

LOCATION:	HWY. 112 (GARLAND AVE.) AT DRAKE ST.
CITY:	FAYETTEVILLE
COUNTY:	WASHINGTON
DISTRICT:	04 SCALE: AS SHOWN DRAWN BY: CEM

SCALE IN FEET
0 15 30 60

DATE: 03/09/16 FILE NAME: tBB0414_STG1A_pl1.dgn

AEWierdick 3/20/2016 11:57:28 AM
WORKSPACE: AHTD
L:\2016\16017707 - I-540 Widening & Interchange Improvement\Drawings\1BB0414_STG1A_pl1.dgn
REVISED DATE:

DATE REVISED	DATE FILMED	DATE REVISED	DATE FILMED	FED.RD. DIST.NO.	STATE	FED.AID PROJ.NO.	SHEET NO.	TOTAL SHEETS
				6	ARK.			
				JOB NO.		BB0414	366	886
				(2)	SIGNALIZATION PLANS (HWY. 112 AT DRAKE ST.)			

STAGE 2 PHASING DIAGRAM

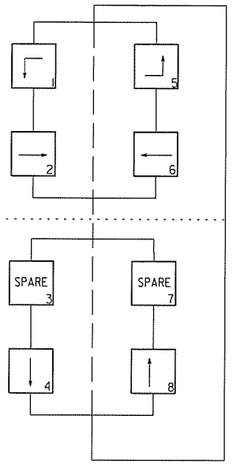

STAGE 2 SIGNAL FACES

12" LENSES

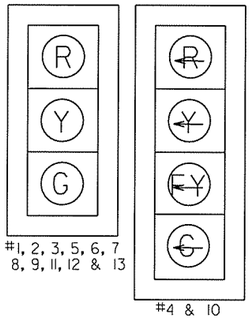

#1, 2, 3, 5, 6, 7 8, 9, 11, 12 & 13

#4 & 10

ONE SECTION (SOLID SYMBOL)

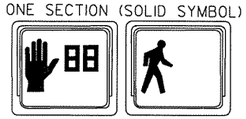

#14 & 15

STATE OF ARKANSAS
REGISTERED PROFESSIONAL ENGINEER
No.8141
NICCI D. TINER
3-20-16

NOTES:
1. PEDESTRIAN SIGNAL HEADS SHALL BE BLANK DURING CONSTRUCTION STAGING.
2. CONTRACTOR SHALL HAVE STAGE 2 TRAFFIC SIGNAL OPERATIONAL PRIOR TO STAGE 2 CONSTRUCTION BEGINNING.
3. ADDITIONAL 0.5" NMC REQUIRED FROM POLE AND CONTROLLER TO NEAREST PULL BOX. REFER TO STANDARD DRAWING SD-6, HEAVY DUTY PULL BOX. COST OF ADDITIONAL 0.5" NMC INCLUDED IN ITEMS 701, 714, & 715.

LEGEND

- TYPE 2 PULL BOX
- TYPE I PULL BOX
- CONTROLLER CABINET
- SIGNAL HEAD
- SIGNAL POLE, MAST ARM AND LUMINAIRE ARM
- NMC - NON-METALLIC CONDUIT
- VIDEO DETECTOR
- ANTENNA
- STAGE 2 CONSTRUCTION

DESIGN PARAMETERS

POSTED SPEED LIMIT:
45 MPH NORTH, SOUTH & EAST APPROACHES
- MPH WEST APPROACH
NO BUS STOPS
NO RAILROAD TRACKS
NO PARKING
NO FIRE STATION
2' MIN. CLEAR ZONE DISTANCE (BARRIER CURB SECTION)
28' UNCURBED SECTION HWY. 112 AND DRAKE ST.

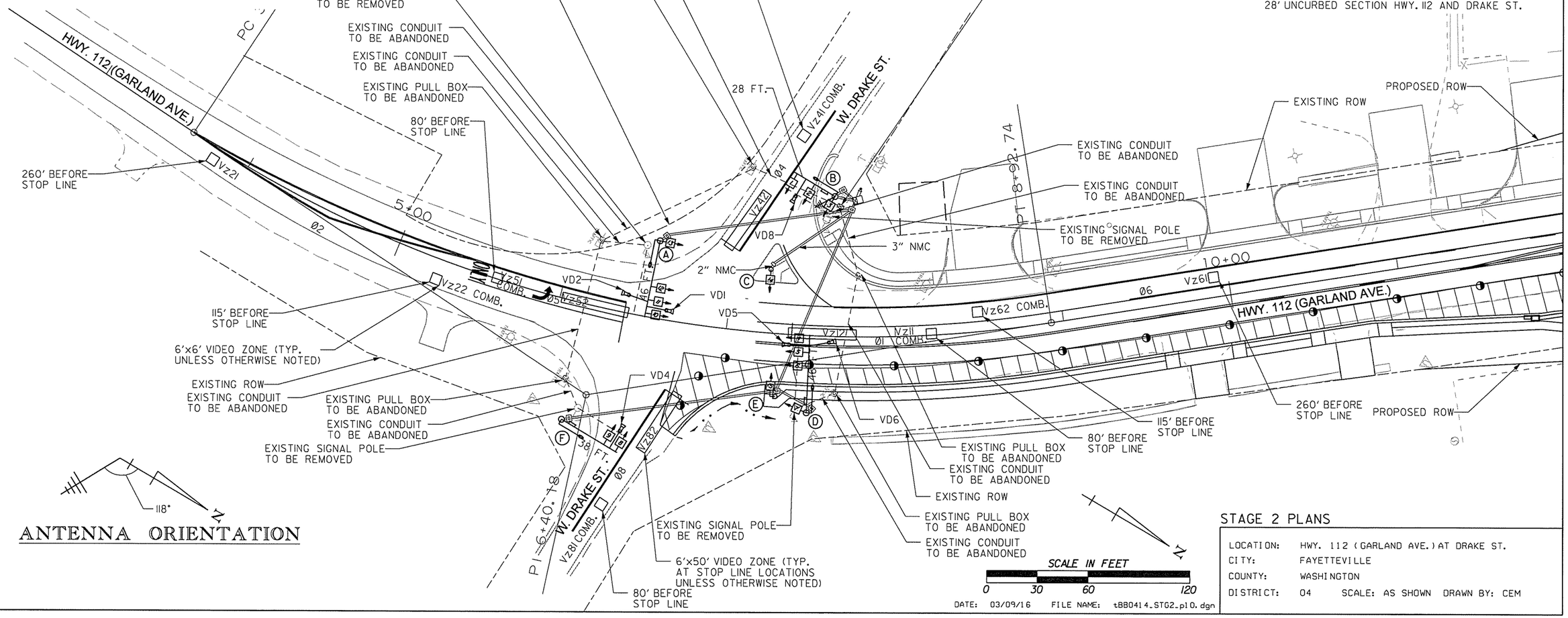

ANTENNA ORIENTATION

STAGE 2 PLANS

LOCATION:	HWY. 112 (GARLAND AVE.) AT DRAKE ST.
CITY:	FAYETTEVILLE
COUNTY:	WASHINGTON
DISTRICT:	04 SCALE: AS SHOWN DRAWN BY: CEM

SCALE IN FEET
0 30 60 120

DATE: 03/09/16 FILE NAME: tBB0414_STG2_pl0.dgn

AEWierciak 3/20/2016 11:51:28 AM
WORKSPACE: AHTD
L:\20II\II0I707 - I-540 Widening & Interchange Improvement\Drawings\tBB04I4_STG2_pl0.dgn
REVISED DATE:

POLE DIMENSIONS

POLE	MAST ARM(S) LENGTH	MAST ARM(S) ORIENTATION ANGLE FROM HAND HOLE (CLOCKWISE)	VERTICAL SHAFT LENGTH	LUM. ARM LENGTH	LUM. ARM(S) ORIENTATION ANGLE FROM HAND HOLE (CLOCKWISE)	STATION HWY. 112	OFFSET	NORTHING	EASTING
A	INSTALLED DURING STAGE 1A								
B	INSTALLED DURING STAGE 1A								
C	-	-	15'-0"	-	-	7+23.62	37' LT.	651265.9591	669105.2678
D	INSTALLED DURING STAGE 1A								
E	INSTALLED DURING STAGE 1A								
F	INSTALLED DURING STAGE 1A								

DESIGN PARAMETERS

POSTED SPEED LIMIT:
45 MPH NORTH, SOUTH & EAST APPROACHES
- MPH WEST APPROACH
NO BUS STOPS
NO RAILROAD TRACKS
NO PARKING
NO FIRE STATION
2' MIN. CLEAR ZONE DISTANCE (BARRIER CURB SECTION)
22' UNCURBED SECTION HWY. 112 AND DRAKE ST.

NOTES:
1. PEDESTRIAN SIGNAL HEADS SHALL BE BLANK DURING CONSTRUCTION STAGING.
2. CONTRACTOR SHALL HAVE STAGE 2 TRAFFIC SIGNAL OPERATIONAL PRIOR TO STAGE 2 CONSTRUCTION BEGINNING.
3. ADDITIONAL 0.5" NMC REQUIRED FROM POLE AND CONTROLLER TO NEAREST PULL BOX. REFER TO STANDARD DRAWING SD-6, HEAVY DUTY PULL BOX. COST OF ADDITIONAL 0.5" NMC INCLUDED IN ITEMS 701, 714, & 715.

DATE REVISED	DATE FILMED	DATE REVISED	DATE FILMED	FED.RD. DIST.NO.	STATE	FED.AID PROJ.NO.	SHEET NO.	TOTAL SHEETS
				6	ARK.			
				JOB NO.		BB0414	367	886

(2) SIGNALIZATION PLANS (HWY. 112 AT DRAKE ST.)

LEGEND

- TYPE 2 PULL BOX
- TYPE I PULL BOX
- CONTROLLER CABINET
- SIGNAL HEAD
- SIGNAL POLE, MAST ARM AND LUMINAIRE ARM
- NMC - NON-METALLIC CONDUIT
- VIDEO DETECTOR
- ANTENNA
- STAGE 2 CONSTRUCTION AREA

STATE OF ARKANSAS
REGISTERED PROFESSIONAL ENGINEER
No. 8145
NICCI D. TINER
3-20-16

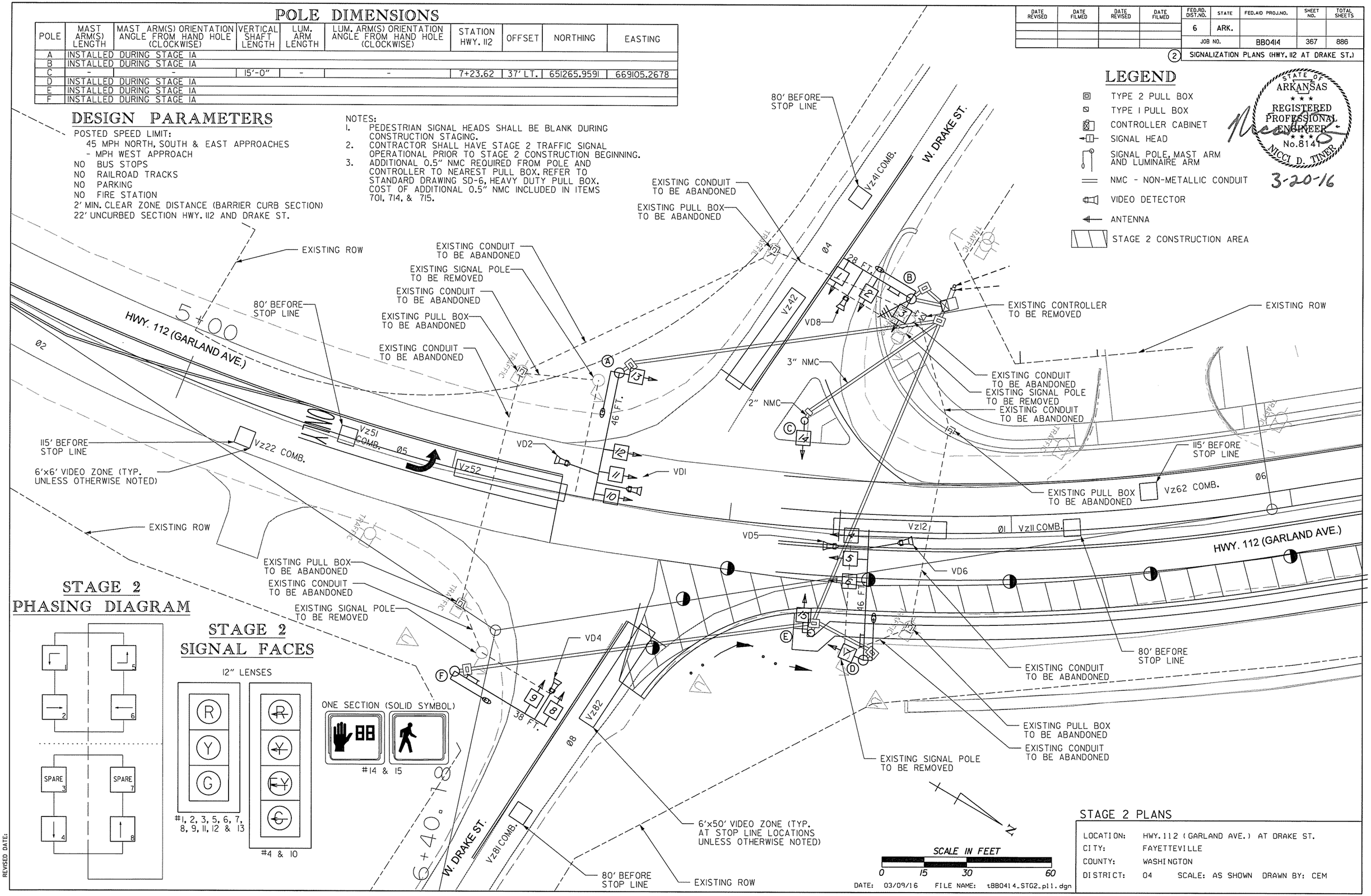

STAGE 2 PHASING DIAGRAM

STAGE 2 SIGNAL FACES

STAGE 2 PLANS

LOCATION:	HWY. 112 (GARLAND AVE.) AT DRAKE ST.
CITY:	FAYETTEVILLE
COUNTY:	WASHINGTON
DISTRICT:	04 SCALE: AS SHOWN DRAWN BY: CEM

DATE: 03/09/16 FILE NAME: tBB0414_STG2_pl1.dgn

AEWerclak 3/20/2016 11:57:28 AM
WORKSPACE: AHTD
L:\ROW\NIOI\TOT - I-540 Widening & Interchange Improvement\Drawings\tBB0414_STG2_pl.dgn
REVISED DATE:

DETECTOR CHART (STAGE 2, 2B & 2C)

DETECTOR ASSIGNMENTS				HARDWARE INPUTS BY SUPPLIER			PROGRAM ASSIGNMENTS			VIDEO DET. TUBE LENGTH	COMMENT
							LOCAL		MSTR.		
DETECTOR I.D. #	DIRECTION & LOCATION	TYPE	DET. #	CAB. TRM. #	AMP CHN. #	CON. INP. #	PHS.	SYS. DET. #	SYS. DET. #		
Vz11	SB LEFT FAR	COMB.			1	V9	1	1		23"	VD1
Vz12	SB LEFT NEAR	LOCAL			2	V1	1			23"	VD1
Vz21	NB FAR	LOCAL			5	V2	2			74"	VD2
Vz22	NB NEAR	COMB.			6	V10	2	2		23"	VD5
Vz41	EB FAR	COMB.			9	V12	4	4		23"	VD4
Vz42	EB NEAR	LOCAL			10	V4	4			23"	VD4
Vz51	NB LEFT FAR	COMB.			7	V13	5	5		23"	VD5
Vz52	NB LEFT NEAR	LOCAL			8	V5	5			23"	VD5
Vz61	SB FAR	LOCAL			3	V6	6			74"	VD6
Vz62	SB NEAR	COMB.			4	V14	6	6		23"	VD1
Vz81	WB FAR	COMB.			13	V16	8	8		23"	VD8
Vz82	WB NEAR	LOCAL			14	V8	8			23"	VD8

CONTROLLER INPUT ABBREVIATIONS:
V = VEHICLE INPUT
D = SYSTEM OR AUXILIARY INPUT
P = PEDESTRIAN INPUT

SPARE AMP CHN. #= 11, 12, 15 & 16

INTERVAL CHART (STAGE 2, 2B & 2C)

SIGNAL FACES	INTERSECTION INTERVALS										FLASH SEQ.
	1+5	CLR.	1+6	CLR.	2+5	CLR.	2+6	CLR.	4+8	CLR.	
1, 2 & 3	R	R	R	R	R	R	R	R	G	Y	R
4	~~G~~	***	R	R	~~G~~	***	~~FY~~	*	~~R~~	~~R~~	~~R~~
5, 6 & 7	R	R	R	R	G	**	G	**	R	R	R
8 & 9	R	R	R	R	R	R	R	R	G	Y	R
10	~~G~~	***	~~G~~	***	R	R	~~FY~~	*	~~R~~	~~R~~	~~R~~
11, 12 & 13	R	R	G	**	R	R	G	**	R	R	R
14 & 15	B	B	B	B	B	B	B	B	B	B	B

* DENOTES GREEN OR YELLOW ARROW DEPENDING ON NEXT PHASE
** DENOTES GREEN OR YELLOW BALL DEPENDING ON NEXT PHASE
*** DENOTES YELLOW OR FLASHING YELLOW ARROW DEPENDING ON NEXT PHASE

DATE REVISED	DATE FILMED	DATE REVISED	DATE FILMED	FED.RD. DIST.NO.	STATE	FED.AID PROJ.NO.	SHEET NO.	TOTAL SHEETS
				6	ARK.			
				JOB NO.		BB0414	368	886

(2) SIGNALIZATION PLANS (HWY. 112 AT DRAKE ST.)

STATE OF ARKANSAS
REGISTERED PROFESSIONAL ENGINEER
No. 8141
NICCI D. TINER
3-20-16

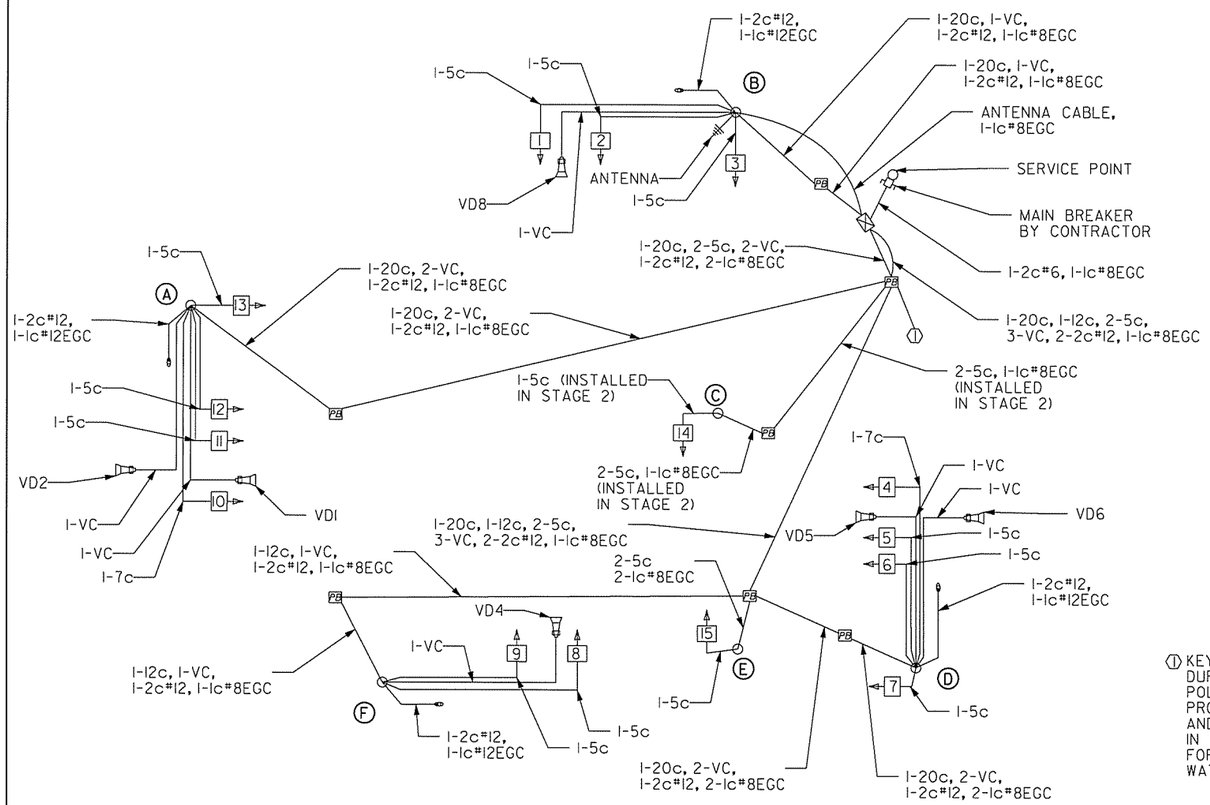

STAGE 2, 2B & 2C PHASING DIAGRAM

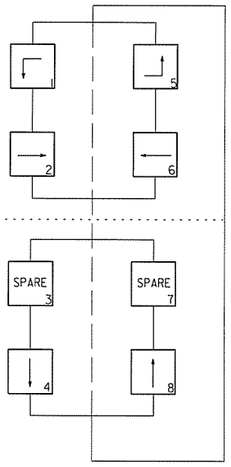

(1) KEYED NOTE:
DURING STAGE 1A CONDUIT AND PULL BOX FOR POLE C WILL NOT BE INSTALLED. THEREFORE, PROVIDE SUFFICIENT UNSPLICED LENGTH OF 5c AND 1c#8EGC TO EXTEND TO FUTURE POLE C IN STAGE 2 WIRING. COIL CABLE IN PULL BOX FOR FUTURE USE. SEAL ENDS OF CABLES WITH WATERPROOF TAPE.

STAGE 2, 2B & 2C SIGNAL FACES

12" LENSES

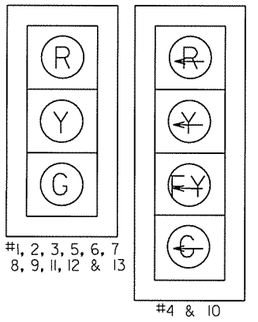

ONE SECTION (SOLID SYMBOL)

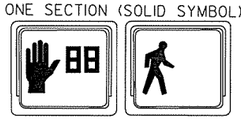

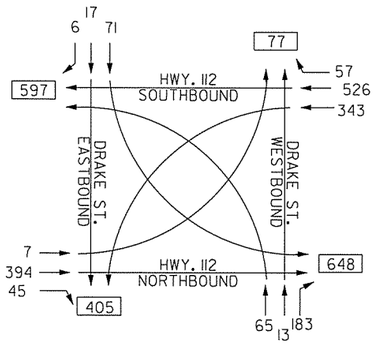

HWY. 112 AT DRAKE ST.
TRAFFIC FLOW DIAGRAM
TRAFFIC VOLUME
A.M. PEAK HOUR

NOTE:
2011 TRAFFIC VOLUMES

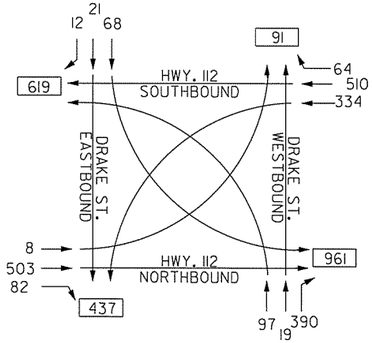

HWY. 112 AT DRAKE ST.
TRAFFIC FLOW DIAGRAM
TRAFFIC VOLUME
P.M. PEAK HOUR

WIRING DIAGRAM (INSTALLED DURING STAGE 1A EXCEPT AS NOTED)

TYPICAL WIRING INCLUDES:
1. SEPARATE 5c/#14 AWG FROM EACH 3 SEC SIGNAL HEAD TO BASE OF POLE.
2. SEPARATE 7c/#14 AWG FROM EACH 4 SEC SIGNAL HEAD TO BASE OF POLE.
3. PROVIDE SEPARATE CONDUIT FOR ANTENNA CABLE.
4. SEPARATE 5c/#14 AWG TO EACH POLE WITH PEDESTRIAN PUSH BUTTONS.
5. ALL DETECTOR RACK CHANNELS, INCLUDING UNUSED, SHALL BE BROUGHT TO TERMINAL STRIP IN DETECTOR AREA ON CABINET.
6. THE LOCAL GOVERNMENT SHALL BE RESPONSIBLE FOR PROVIDING POWER TO THE SERVICE POINT.

NOTE:
1. STAGE 2 WIRING INCLUDES WIRING FROM STAGE 1A.
2. ADDITIONAL 1-1c*8EGC REQUIRED FROM POLE AND CONTROLLER TO NEAREST PULL BOX. REFER TO STANDARD DRAWING SD-6, HEAVY DUTY PULL BOX. COST OF ADDITIONAL 1-1c*8EGC INCLUDED IN ITEMS 701, 714, & 715.
3. SEE FINAL WIRING DIAGRAM FOR GROUNDING DETAIL.

N

DATE: 03/09/16 FILE NAME: tBB0414_STG2_pl2.dgn

STAGE 2, 2B & 2C PLANS

LOCATION:	HWY. 112 (GARLAND AVE.) AT DRAKE ST.
CITY:	FAYETTEVILLE
COUNTY:	WASHINGTON
DISTRICT:	04 SCALE: AS SHOWN DRAWN BY: CEM

AEWerclok 3/20/2016 11:57:29 AM
WORKSPACE: AHTD
L:\20IN\10I707 - I-540 Widening & Interchange Improvement\Drawings\tBB04I4_STG2_pl2.dgn
REVISED DATE:

DATE REVISED	DATE FILMED	DATE REVISED	DATE FILMED	FED.RD. DIST.NO.	STATE	FED.AID PROJ.NO.	SHEET NO.	TOTAL SHEETS
				6	ARK.			
				JOB NO.		BB0414	369	886
				(2)	SIGNALIZATION PLANS (HWY. 112 AT DRAKE ST.)			

NOTES:
1. PEDESTRIAN SIGNAL HEADS SHALL BE BLANK DURING CONSTRUCTION STAGING.

LEGEND

- TYPE 2 PULL BOX
- TYPE 1 PULL BOX
- CONTROLLER CABINET
- SIGNAL HEAD
- SIGNAL POLE, MAST ARM AND LUMINAIRE ARM
- NMC - NON-METALLIC CONDUIT
- VIDEO DETECTOR
- ANTENNA

STAGE 2B & 2C PHASING DIAGRAM

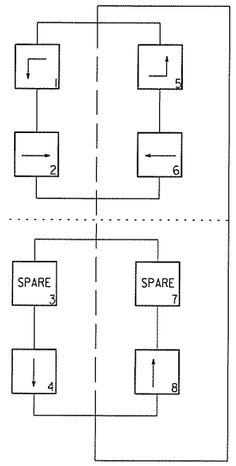

STAGE 2B & 2C SIGNAL FACES

12" LENSES

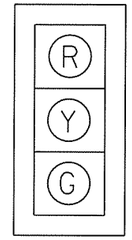

#1, 2, 3, 5, 6, 7 8, 9, 11, 12 & 13

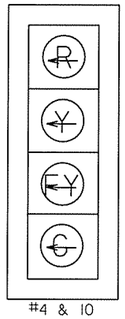

#4 & 10

ONE SECTION (SOLID SYMBOL)

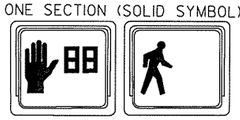

#14 & 15

STATE OF ARKANSAS
- REGISTERED PROFESSIONAL ENGINEER -
No.8141
NICCI D. TINER
3-20-16

DESIGN PARAMETERS

POSTED SPEED LIMIT:
45 MPH NORTH, SOUTH & EAST APPROACHES
- MPH WEST APPROACH
NO BUS STOPS
NO RAILROAD TRACKS
NO PARKING
NO FIRE STATION
2' MIN. CLEAR ZONE DISTANCE (BARRIER CURB SECTION)
28' UNCURBED SECTION HWY. 112 AND DRAKE ST.

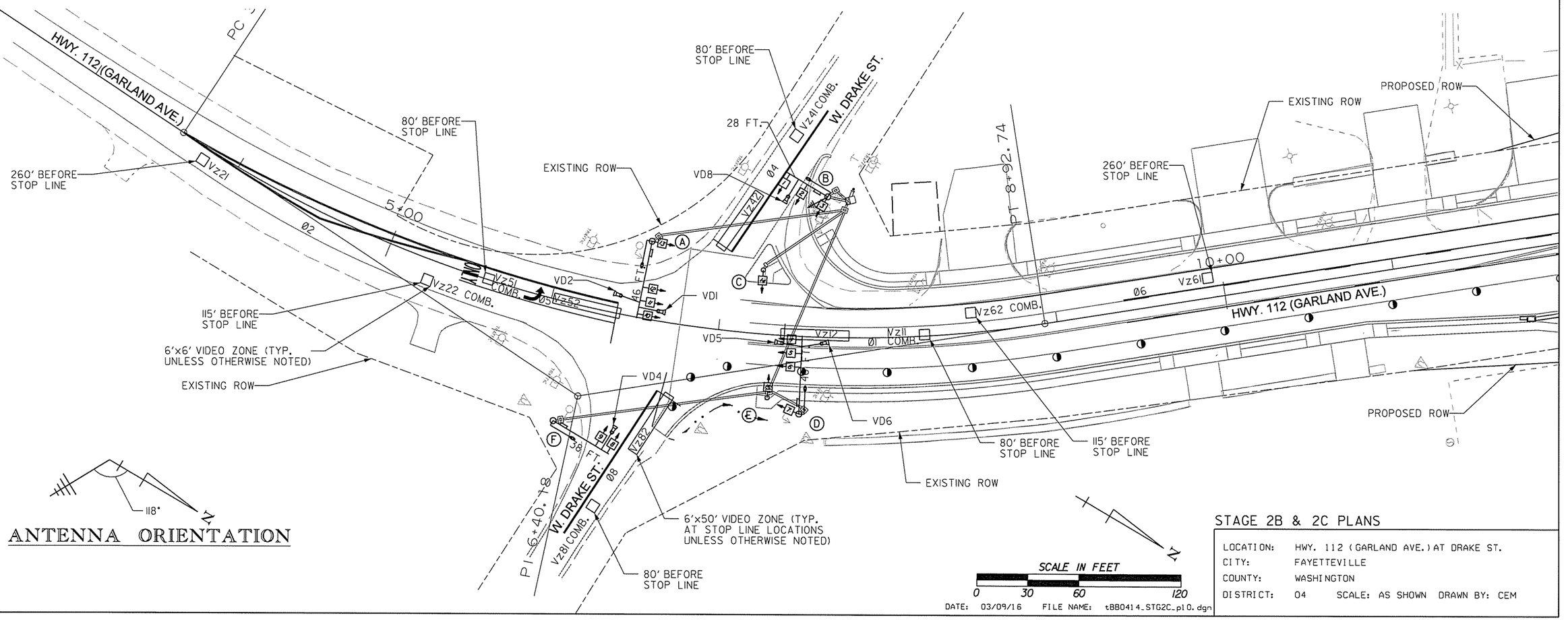

ANTENNA ORIENTATION

STAGE 2B & 2C PLANS

LOCATION: HWY. 112 (GARLAND AVE.) AT DRAKE ST.
CITY: FAYETTEVILLE
COUNTY: WASHINGTON
DISTRICT: 04 SCALE: AS SHOWN DRAWN BY: CEM
DATE: 03/09/16 FILE NAME: tBB0414_STG2C_pl0.dgn

AEWerclok 3/20/2016 11:57:29 AM
WORKSPACE: AHTD
L:\20\N\1017707 - I-540 Widening & Interchange Improvement\Drawings\tBB0414_STG2C_pl0.dgn
REVISED DATE:

DATE REVISED	DATE FILMED	DATE REVISED	DATE FILMED	FED.RD. DIST.NO.	STATE	FED.AID PROJ.NO.	SHEET NO.	TOTAL SHEETS
				6	ARK.			
				JOB NO.		BB0414	370	886
				(2)	SIGNALIZATION PLANS (HWY. 112 AT DRAKE ST.)			

DESIGN PARAMETERS

POSTED SPEED LIMIT:
45 MPH NORTH, SOUTH & EAST APPROACHES
- MPH WEST APPROACH
NO BUS STOPS
NO RAILROAD TRACKS
NO PARKING
NO FIRE STATION
2' MIN. CLEAR ZONE DISTANCE (BARRIER CURB SECTION)
22' UNCURBED SECTION HWY. 112 AND DRAKE ST.

NOTES:
1. PEDESTRIAN SIGNAL HEADS SHALL BE BLANK DURING CONSTRUCTION STAGING.

LEGEND

- TYPE 2 PULL BOX
- TYPE 1 PULL BOX
- CONTROLLER CABINET
- SIGNAL HEAD
- SIGNAL POLE, MAST ARM AND LUMINAIRE ARM
- NMC - NON-METALLIC CONDUIT
- VIDEO DETECTOR
- ANTENNA

STATE OF ARKANSAS
REGISTERED PROFESSIONAL ENGINEER
No.8141
NICCI D. TINER
3-20-16

EXISTING ROW
80' BEFORE STOP LINE
5+00
HWY. 112 (GARLAND AVE.)
Ø2
ONE WAY
Vz51 COMB.
Ø5
Vz52
115' BEFORE STOP LINE
Vz22 COMB.
6'x6' VIDEO ZONE (TYP. UNLESS OTHERWISE NOTED)
EXISTING ROW
80' BEFORE STOP LINE
Vz41 COMB.
W. DRAKE ST.
Ø4
28 FT.
VZ42
VD8
VD2
46 FT.
VD1
VD4
38 FT.
Vz82
Ø8
6+40.78
W. DRAKE ST.
Vz81 COMB.
80' BEFORE STOP LINE
6'x50' VIDEO ZONE (TYP. AT STOP LINE LOCATIONS UNLESS OTHERWISE NOTED)
EXISTING ROW
115' BEFORE STOP LINE
Vz62 COMB.
Ø6
Vz12
Ø1
Vz11 COMB.
VD5
VD6
46 FT.
HWY. 112 (GARLAND AVE.)
80' BEFORE STOP LINE

STAGE 2B & 2C PHASING DIAGRAM

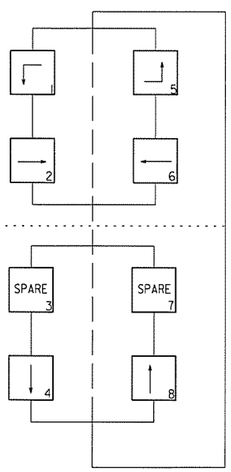

STAGE 2B & 2C SIGNAL FACES

12" LENSES

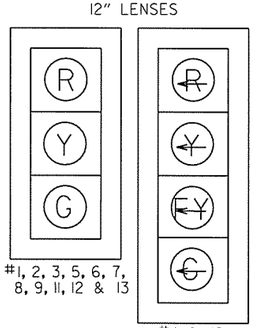

#1, 2, 3, 5, 6, 7, 8, 9, 11, 12 & 13

#4 & 10

ONE SECTION (SOLID SYMBOL)

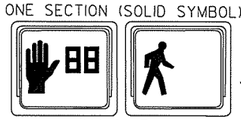

#14 & 15

N

SCALE IN FEET
0 15 30 60

DATE: 03/09/16 FILE NAME: tBB0414_STG2C_pl1.dgn

STAGE 2B & 2C PLANS

LOCATION: HWY. 112 (GARLAND AVE.) AT DRAKE ST.
CITY: FAYETTEVILLE
COUNTY: WASHINGTON
DISTRICT: 04 SCALE: AS SHOWN DRAWN BY: CEM

AEWierciak 3/20/2016 11:57:29 AM
WORKSPACE: AHTD
L:\201\N\101707 - I-540 Widening & Interchange Improvement\Drawings\tBB0414_STG2C_pl1.dgn
REVISED DATE:

DATE REVISED	DATE FILMED	DATE REVISED	DATE FILMED	FED.RD. DIST.NO.	STATE	FED.AID PROJ.NO.	SHEET NO.	TOTAL SHEETS
				6	ARK.			
				JOB NO.		BB0414	371	886
				(2)	SIGNALIZATION PLANS (HWY. 112 AT DRAKE ST.)			

FINAL PHASING DIAGRAM

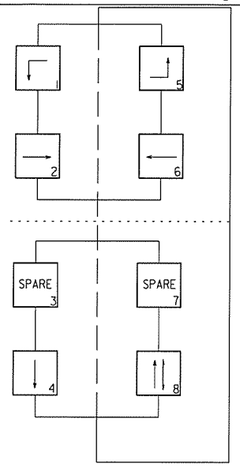

FINAL SIGNAL FACES

12" LENSES

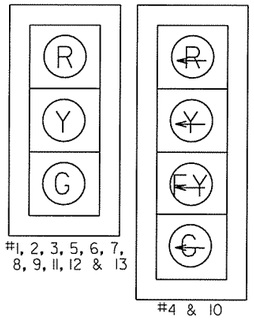

#1, 2, 3, 5, 6, 7, 8, 9, 11, 12 & 13

#4 & 10

ONE SECTION (SOLID SYMBOL)

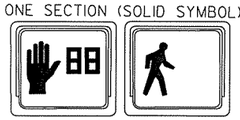

14 & 15

LEGEND

- TYPE 2 PULL BOX
- TYPE 1 PULL BOX
- CONTROLLER CABINET
- SIGNAL HEAD
- SIGNAL POLE, MAST ARM AND LUMINAIRE ARM
- NMC - NON-METALLIC CONDUIT
- VIDEO DETECTOR
- ANTENNA

NOTES:
1. CROSSWALKS ARE NOT SHOWN FOR CLARITY.
2. FINAL SIGNALIZATION PLANS SHOW ITEMS INSTALLED DURING STAGE CONSTRUCTION.
3. NEW SIGNALS AT THIS INTERSECTION MUST BE OPERATIONAL PRIOR TO FIVE LANE OPERATION AT THIS INTERSECTION.
4. ADDITIONAL 0.5" NMC REQUIRED FROM POLE AND CONTROLLER TO NEAREST PULL BOX. REFER TO STANDARD DRAWING SD-6, HEAVY DUTY PULL BOX. COST OF ADDITIONAL 0.5" NMC INCLUDED IN ITEMS 701, 714, & 715.

STATE OF ARKANSAS
REGISTERED PROFESSIONAL ENGINEER
No. 8144
NICCI D. TINER
3-20-16

DESIGN PARAMETERS

POSTED SPEED LIMIT:
45 MPH NORTH, SOUTH & EAST APPROACHES
- MPH WEST APPROACH
NO BUS STOPS
NO RAILROAD TRACKS
NO PARKING
NO FIRE STATION
2' MIN. CLEAR ZONE DISTANCE (BARRIER CURB SECTION)
28' UNCURBED SECTION HWY. 112 AND DRAKE ST.

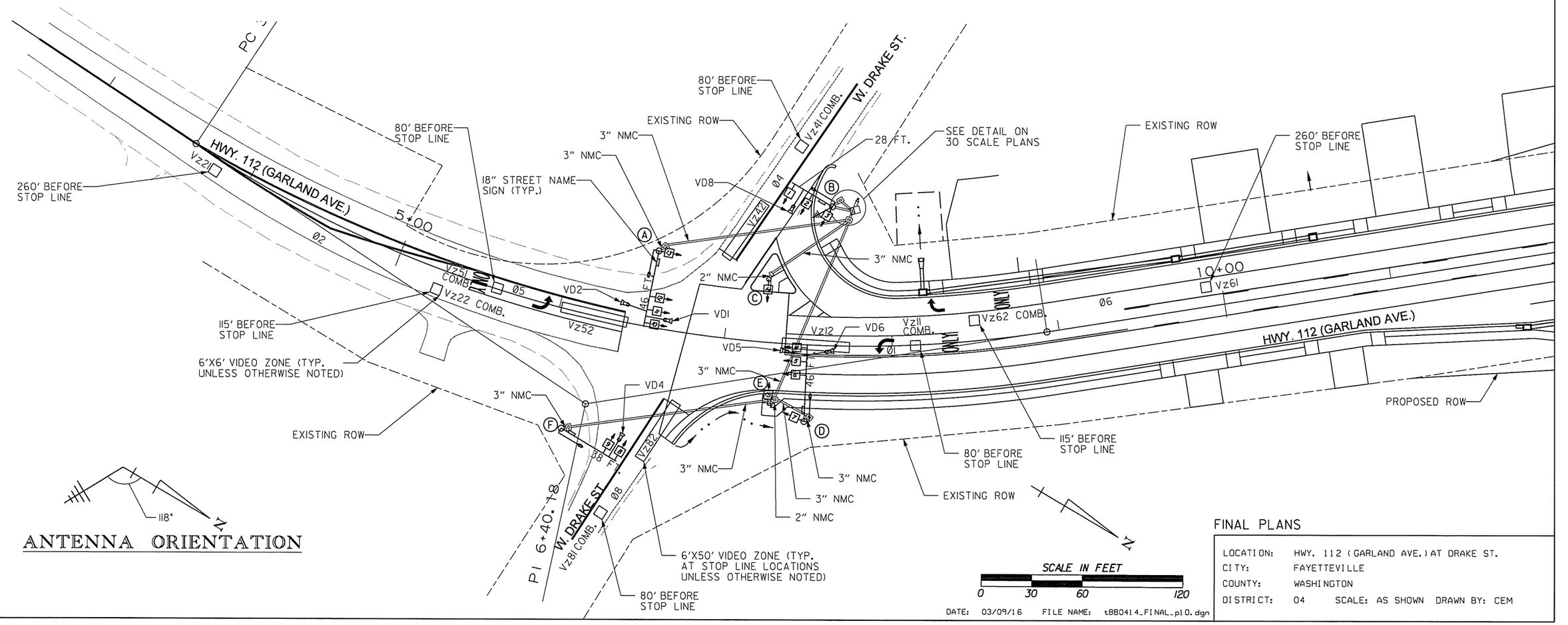

ANTENNA ORIENTATION

SCALE IN FEET
0 30 60 120

DATE: 03/09/16 FILE NAME: tBB0414_FINAL_pl0.dgn

FINAL PLANS

LOCATION:	HWY. 112 (GARLAND AVE.) AT DRAKE ST.
CITY:	FAYETTEVILLE
COUNTY:	WASHINGTON
DISTRICT:	04 SCALE: AS SHOWN DRAWN BY: CEM

AEWler-clark 3/20/2016 11:57:30 AM
WORKSPACE: AHTD
L:\20IN\10I7707 - I-540 Widening & Interchange Improvement\Drawings\tBB04I4_FINAL_pl0.dgn
REVISED DATE:

POLE DIMENSIONS

POLE	MAST ARM(S) LENGTH	MAST ARM(S) ORIENTATION ANGLE FROM HAND HOLE (CLOCKWISE)	VERTICAL SHAFT LENGTH	LUM. ARM LENGTH	LUM. ARM(S) ORIENTATION ANGLE FROM HAND HOLE (CLOCKWISE)	STATION HWY. 112	OFFSET	NORTHING	EASTING
A	46 FT.	270 DEGREES	35'-0"	15'-0"	270 DEGREES	6+52.24	45' LT.	651200.9669	669124.2103
B	28 FT.	270 DEGREES	35'-0"	15'-0"	270 DEGREES	7+62.28	82' LT.	651276.6763	669049.0356
C	-	-	15'-0"	-	-	7+23.62	37' LT.	651265.9591	669105.2678
D	46 FT.	180 DEGREES	35'-0"	15'-0"	180 DEGREES	7+49.51	45' RT.	651326.6992	669167.3560
E	-	-	15'-0"	-	-	7+31.56	37' RT.	651305.9210	669168.4626
F	38 FT.	180 DEGREES	35'-0"	15'-0"	180 DEGREES	6+17.22	69' RT.	651204.2309	669244.3944

NOTES:
1. NEW SIGNALS AT THIS INTERSECTION MUST BE OPERATIONAL PRIOR TO FIVE LANE OPERATION AT THIS INTERSECTION.
2. ADDITIONAL 0.5" NMC REQUIRED FROM POLE AND CONTROLLER TO NEAREST PULL BOX. REFER TO STANDARD DRAWING SD-6, HEAVY DUTY PULL BOX. COST OF ADDITIONAL 0.5" NMC INCLUDED IN ITEMS 701, 714, & 715.

DATE REVISED	DATE FILMED	DATE REVISED	DATE FILMED	FED.RD. DIST.NO.	STATE	FED.AID PROJ.NO.	SHEET NO.	TOTAL SHEETS
				6	ARK.			
				JOB NO.		BB0414	372	886

(2) SIGNALIZATION PLANS (HWY. 112 AT DRAKE ST.)

STATE OF ARKANSAS
REGISTERED PROFESSIONAL ENGINEER
No. 8141
NICCI D. TINER
3-20-16

FINAL SIGNAL FACES

12" LENSES

#1, 2, 3, 5, 6, 7, 8, 9, 11, 12 & 13

#4 & 10

ONE SECTION (SOLID SYMBOL)

14 & 15

FINAL PHASING DIAGRAM

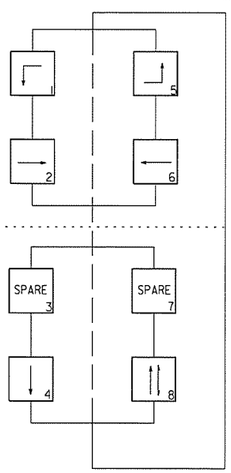

LEGEND

- TYPE 2 PULL BOX
- TYPE 1 PULL BOX
- CONTROLLER CABINET
- SIGNAL HEAD
- SIGNAL POLE, MAST ARM AND LUMINAIRE ARM
- NMC - NON-METALLIC CONDUIT
- VIDEO DETECTOR
- ANTENNA

DESIGN PARAMETERS

POSTED SPEED LIMIT:
45 MPH NORTH SOUTH & EAST APPROACHES
- MPH WEST APPROACH
NO BUS STOPS
NO RAILROAD TRACKS
NO PARKING
NO FIRE STATION
2' MIN. CLEAR ZONE DISTANCE (BARRIER CURB SECTION)
28' UNCURBED SECTION HWY. 112 AND DRAKE ST.

SCALE IN FEET
0 15 30 60

DATE: 03/09/16 FILE NAME: tBB0414_FINAL_pl1.dgn

FINAL PLANS

LOCATION: HWY. 112 (GARLAND AVE.) AT DRAKE ST.
CITY: FAYETTEVILLE
COUNTY: WASHINGTON
DISTRICT: 04 SCALE: AS SHOWN DRAWN BY: CEM

AEWierciok 3/20/2016 11:57:30 AM
WORKSPACE: AHTD
L:\ROW\NOTOT - I-540 Widening & Interchange Improvement\Drawings\tBB0414_FINAL_pl1.dgn
REVISED DATE:

DETECTOR CHART (FINAL)

DETECTOR ASSIGNMENTS				HARDWARE INPUTS BY SUPPLIER			PROGRAM ASSIGNMENTS			VIDEO DET. TUBE LENGTH	COMMENT
DETECTOR I.D. #	DIRECTION & LOCATION	TYPE	DET. #	CAB. TRM. #	AMP CHN. #	CON. INP. #	LOCAL PHS.	LOCAL SYS. DET. #	MSTR. SYS. DET. #		
Vzll	SB LEFT FAR	COMB.			1	V9	1	1		23"	VDI
Vzl2	SB LEFT NEAR	LOCAL			2	VI	1			23"	VDI
Vz2l	NB FAR	LOCAL			5	V2	2			74"	VD2
Vz22	NB NEAR	COMB.			6	VIO	2	2		23"	VD5
Vz4l	EB FAR	COMB.			9	VI2	4	4		23"	VD4
Vz42	EB NEAR	LOCAL			IO	V4	4			23"	VD4
Vz5l	NB LEFT FAR	COMB.			7	VI3	5	5		23"	VD5
Vz52	NB LEFT NEAR	LOCAL			8	V5	5			23"	VD5
Vz6l	SB FAR	LOCAL			3	V6	6			74"	VD6
Vz62	SB NEAR	COMB.			4	VI4	6	6		23"	VDI
Vz8l	WB FAR	COMB.			I3	VI6	8	8		23"	VD8
Vz82	WB NEAR	LOCAL			I4	V8	8			23"	VD8
PB8	E TO W	PED				P8	8				

CONTROLLER INPUT ABBREVIATIONS:
V = VEHICLE INPUT
D = SYSTEM OR AUXILIARY INPUT
P = PEDESTRIAN INPUT

SPARE AMP CHN. #= 11, 12, 15 & 16

INTERVAL CHART (FINAL)

SIGNAL FACES	INTERSECTION INTERVALS										FLASH SEQ.
	1+5	CLR.	1+6	CLR.	2+5	CLR.	2+6	CLR.	4+8	CLR.	
1, 2 & 3	R	R	R	R	R	R	R	R	G	Y	R
4	~~G~~	***	R	R	~~G~~	***	FY	*	~~R~~	~~R~~	~~R~~
5, 6 & 7	R	R	R	R	G	**	G	**	R	R	R
8 & 9	R	R	R	R	R	R	R	R	G	Y	R
10	~~G~~	***	~~G~~	***	R	R	FY	*	~~R~~	~~R~~	~~R~~
11, 12 & 13	R	R	G	**	R	R	G	**	R	R	R
14 & 15	DW	DW	DW	DW	DW	DW	DW	DW	W	FDW	B

* DENOTES GREEN OR YELLOW ARROW DEPENDING ON NEXT PHASE
** DENOTES GREEN OR YELLOW BALL DEPENDING ON NEXT PHASE
*** DENOTES YELLOW OR FLASHING YELLOW ARROW DEPENDING ON NEXT PHASE

DATE REVISED	DATE FILMED	DATE REVISED	DATE FILMED	FED.RD. DIST.NO.	STATE	FED.AID PROJ.NO.	SHEET NO.	TOTAL SHEETS
				6	ARK.			
				JOB NO.		BB0414	373	886

(2) SIGNALIZATION PLANS (HWY. 112 AT DRAKE ST.)

STATE OF ARKANSAS
REGISTERED PROFESSIONAL ENGINEER
No. 8141
NICCI D. TINER
3-20-16

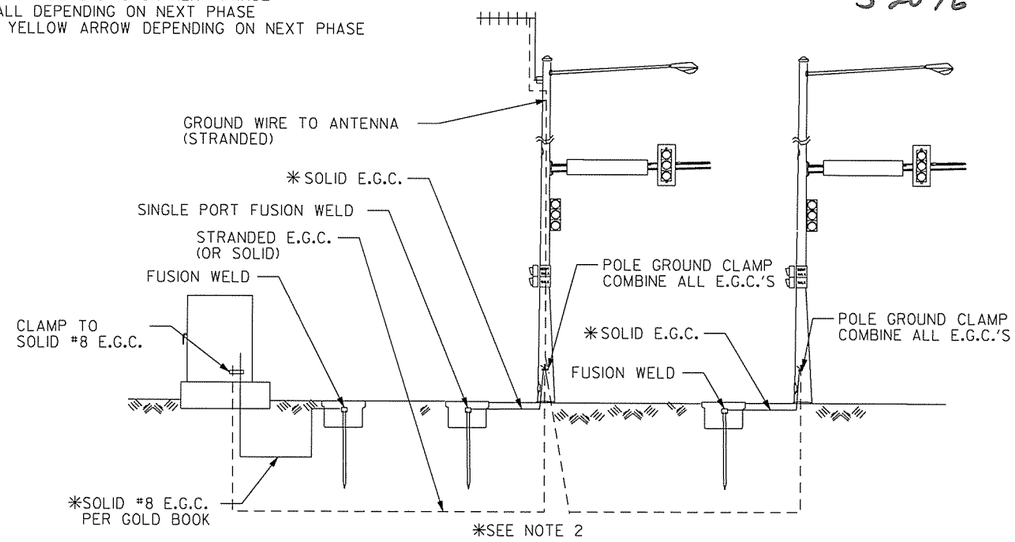

GROUNDING ARRAY
SINGLE-PORT FUSION WELDS

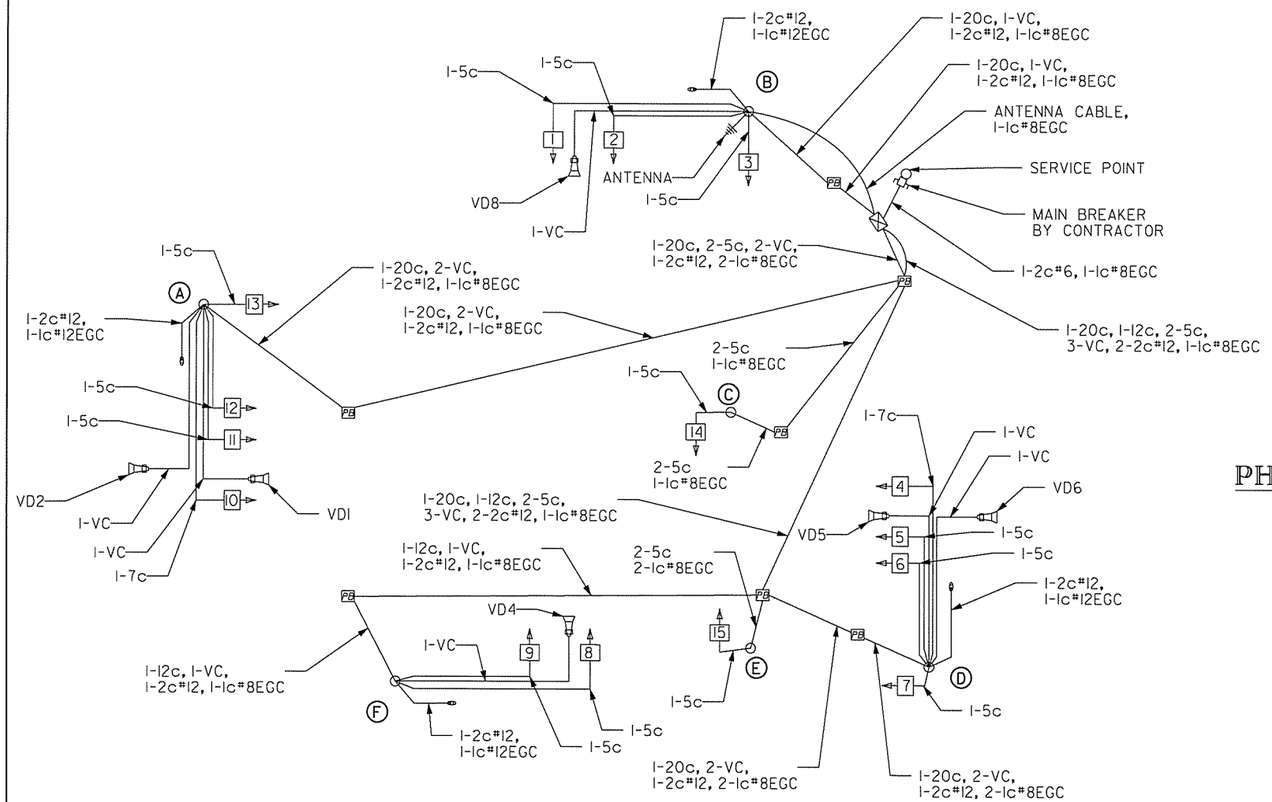

WIRING DIAGRAM (FINAL)

TYPICAL WIRING INCLUDES:
1. SEPARATE 5c/#14 AWG FROM EACH 3 SEC SIGNAL HEAD TO BASE OF POLE.
2. SEPARATE 7c/#14 AWG FROM EACH 4 SEC SIGNAL HEAD TO BASE OF POLE.
3. PROVIDE SEPARATE CONDUIT FOR ANTENNA CABLE.
4. SEPARATE 5c/#14 AWG TO EACH POLE WITH PEDESTRIAN PUSH BUTTONS.
5. ALL DETECTOR RACK CHANNELS, INCLUDING UNUSED, SHALL BE BROUGHT TO TERMINAL STRIP IN DETECTOR AREA ON CABINET.
6. THE LOCAL GOVERNMENT SHALL BE RESPONSIBLE FOR PROVIDING POWER TO THE SERVICE POINT.

NOTE:
1. FINAL WIRING INCLUDES WIRING FROM STAGES 1 AND 2.
2. ADDITIONAL I-Ic#8EGC REQUIRED FROM POLE AND CONTROLLER TO NEAREST PULL BOX. REFER TO STANDARD DRAWING SD-6, HEAVY DUTY PULL BOX. COST OF ADDITIONAL I-Ic#8EGC INCLUDED IN ITEMS 701, 714, & 715.

FINAL PHASING DIAGRAM

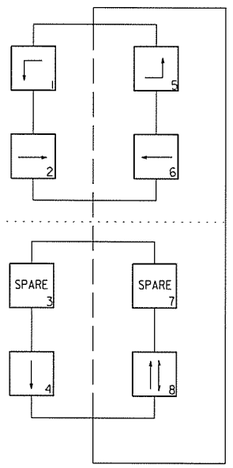

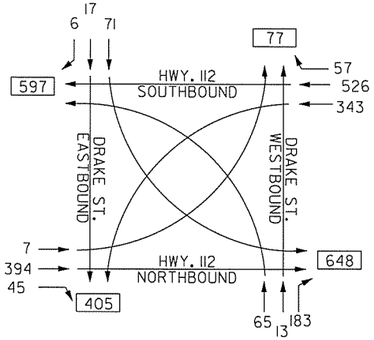

HWY. 112 AT DRAKE ST.
TRAFFIC FLOW DIAGRAM
TRAFFIC VOLUME
A.M. PEAK HOUR

NOTE:
2011 TRAFFIC VOLUMES

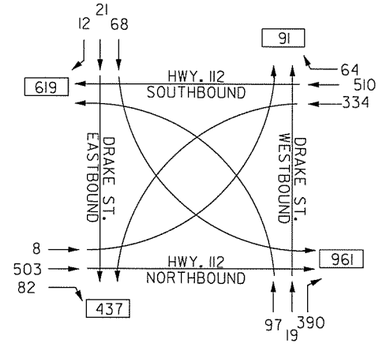

HWY. 112 AT DRAKE ST.
TRAFFIC FLOW DIAGRAM
TRAFFIC VOLUME
P.M. PEAK HOUR

FINAL PLANS

LOCATION:	HWY. 112 (GARLAND AVE.) AT DRAKE ST.
CITY:	FAYETTEVILLE
COUNTY:	WASHINGTON
DISTRICT:	04 SCALE: AS SHOWN DRAWN BY: CEM

DATE: 03/14/16 FILE NAME: tBB0414_FINAL_pl2.dgn

AEWierciak 3/20/2016 11:57:30 AM
WORKSPACE: AHTD
L:\2011\11007107 - I-540 Widening & Interchange Improvement\Drawings\tBB0414_FINAL_pl2.dgn
REVISED DATE:

DATE REVISED	DATE FILMED	DATE REVISED	DATE FILMED	FED.RD. DIST.NO.	STATE	FED.AID PROJ.NO.	SHEET NO.	TOTAL SHEETS
				6	ARK.			
				JOB NO.		BB0414	374	886

(2) CULVERT DIAGRAMS

STATE OF ARKANSAS
LICENSED PROFESSIONAL ENGINEER
No. 13422
JOHN F. CANTABERY
3-20-16

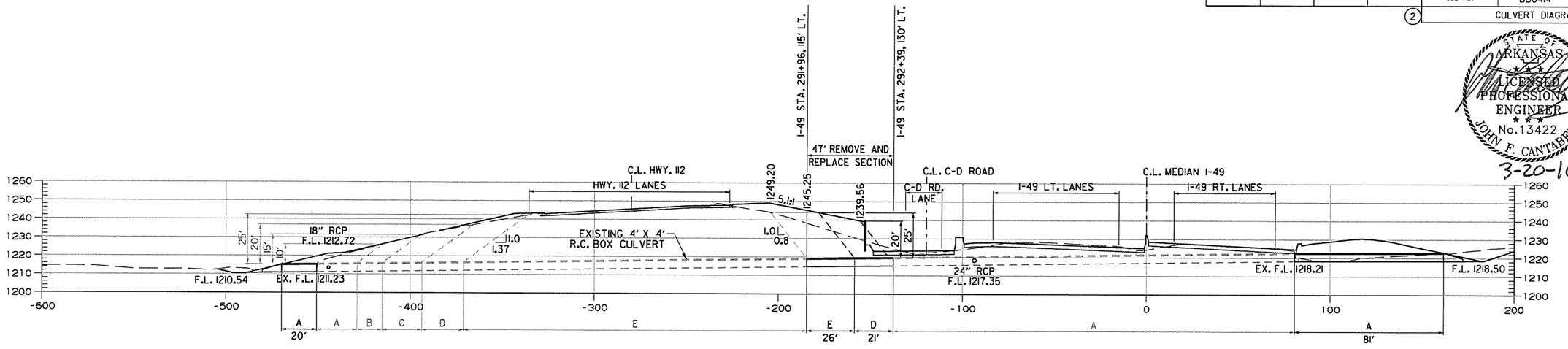

I-49 STA. 291+27 - CULVERT DIAGRAM

STA. 291+27 IN PLACE
4' X 4' X 525' R.C. BOX CULVERT
29° LT. FWD. SKEW
WITH 3:1 WINGS (45°) LT. & RT.
MODIFY DROP INLET IN MEDIAN
(SEE SPECIAL DETAIL)
RETAIN AND EXTEND
20' LT. & 81' RT.
REMOVE AND REPLACE 47' SECTION
Q50 = 103 CFS DA = 47.9 ACRES

NOTE:

EXTENTS OF EXISTING CULVERT SECTION TYPES ESTIMATED FROM SURVEYED FILL HEIGHTS OVER CULVERT, ADJUSTED FOR SKEW ANGLE.

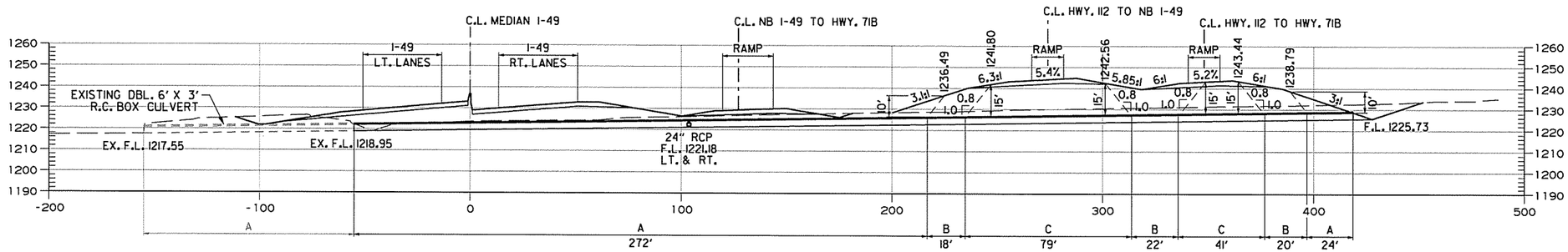

I-49 STA. 313+17 - CULVERT DIAGRAM

STA. 313+17 IN PLACE
DBL. 6' X 3' X 98' R.C. BOX CULVERT
9° LT. FWD. SKEW
WITH 3:1 WINGS LT. & RT.
RETAIN AND EXTEND 476' RT.
16° LT. FWD. SKEW
Q50 = 70 CFS DA = 22.2 ACRES

AEWtercloK 3/20/2016 11:57:31 AM
WORKSPACE: AHTD
L:\2011\011707 - I-540 Widening & Interchange Improvement\Drawings\rBB0414_CD_ALL.dgn
REVISED DATE:

DATE REVISED	DATE FILMED	DATE REVISED	DATE FILMED	FED.RD. DIST.NO.	STATE	FED.AID PROJ.NO.	SHEET NO.	TOTAL SHEETS
				6	ARK.			
				JOB NO.		BB0414	375	886

(2) CULVERT DIAGRAMS

STATE OF ARKANSAS
LICENSED PROFESSIONAL ENGINEER
No. 13422
JOHN F. CANTABERY
3-20-16

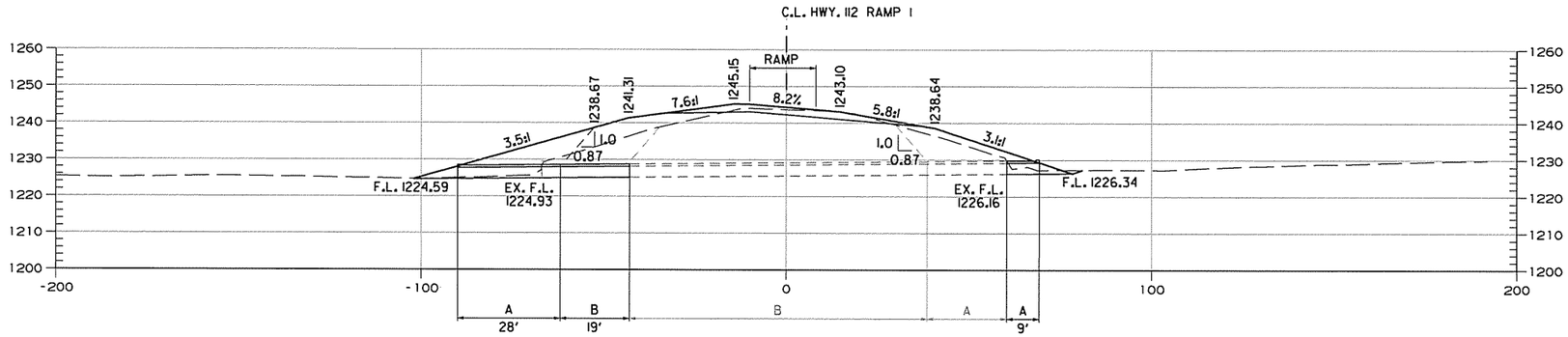

HWY. 112 RAMP 1 STA. 287+17 - CULVERT DIAGRAM

STA. 287+17 IN PLACE
4' X 3' X 128' R.C. BOX CULVERT
23° LT. FWD. SKEW
WITH 3:1 WINGS LT. & RT.
RETAIN AND EXTEND 9' RT. AND
REMOVE 24' LT. AND EXTEND 47' LT.
Q50 = 88 CFS DA = 42.9 ACRES

NOTE:

EXTENTS OF EXISTING CULVERT SECTION TYPES ESTIMATED FROM SURVEYED FILL HEIGHTS OVER CULVERT, ADJUSTED FOR SKEW ANGLE.

AEWercloK 3/20/2016 11:57:31 AM
WORKSPACE: AHTD
L:\20IN\0I7707 - I-540 Widening & Interchange Improvement\Drawings\rBB0414_CD_ALL.dgn
REVISED DATE:

DATE REVISED	DATE FILMED	DATE REVISED	DATE FILMED	FED. ROAD DIST. NO.	STATE	FED. AID PROJ. NO.	SHEET NO.	TOTAL SHEETS
				6	ARK.			
				JOB NO.		BB0414	376	886
				① 05692, 07379, A7380, B7380, A7381, B7381		GENERAL NOTES		58099

GENERAL NOTES:

CONSTRUCTION SPECIFICATIONS: Arkansas State Highway and Transportation Department Standard Specifications For Highway Construction (2014 Edition) with applicable Supplemental Specifications and Special Provisions. Unless otherwise noted in the plans, Section and Subsection refer to The Standard Construction Specifications.

MATERIALS AND STRENGTHS:

Class S(AE) - Bridge Concrete (Superstructure)	f'c = 4,000 psi
Class S - Bridge Concrete (Substructure)	f'c = 3,500 psi
Reinforcing Steel (AASHTO M 31 Or M 322 Type A, GR. 60)	fy = 60,000 psi
Structural Steel (AASHTO M 270, GR. 50W)	Fy = 50,000 psi
Structural Steel (AASHTO M 270, GR. 36)	Fy = 36,000 psi
Structural Steel (AASHTO M 270, GR. 50) (Piling)	Fy = 50,000 psi
Structural Pipe (ASTM A847) (Spit Pipe Bearing Stiffeners)	Fy = 50,000 psi

BORING LOGS: Boring Logs may be obtained from the Construction Contract Procurement Section of the Program Management Division.

BRIDGE DECK: The concrete bridge deck shall be given a tine finish as specified for final finishing in Subsection 802.19 for Class 5 Tined Bridge Roadway Surface Finish. The 14'-0" shared use path, 5'-0" buffer & 6'-6" sidewalk shall be given a broomed finish as specified for final finishing in Subsection 802.19 for Class 6, Broomed Finish.

CLASS 2 PROTECTIVE SURFACE TREATMENT: Class 2 Protective Surface Treatment shall be applied to the roadway (new construction only), sidewalk, roadway face of concrete parapet, and shared use path surfaces. Class 2 Protective Surface Treatment shall meet the requirements of Section 803.

TEXTURED COATING FINISH: Class 3 Textured Coating Finish shall be applied to all areas as specified in SP JOB NO. BB0414 "TEXTURED COATING FINISH" and in accordance with Subsection 802.19(b)(3). Textured Coating Finish shall not be applied on surfaces where Class 2 Protective Surface Treatment is applied.

MAINTENANCE OF TRAFFIC: See Roadway Plans

BRIDGE NO. 05692 (HWY. 112 OVER I-49)

BENCH MARK: PN: 9912, PD: AHTD CAP IN SOUTHEAST CORNER OF BRIDGE NO. 05692
ST: 17+96.95 (CL Construction)
OF: 32.54' RT. of CL Construction
ZC: 1253.10

DESIGN SPECIFICATIONS: AASHTO Standard Specifications For Highway Bridges 17th Edition (2002) with current Interim Revisions

FUTURE WEARING SURFACE DESIGN LOADING: 0 psf

LIVE LOADING: HS20 & Sidewalk Loading   METHOD OF DESIGN: LFD

SEISMIC PERFORMANCE CATEGORY: A

EXISTING BRIDGE: Existing Bridge No. 05692 is 60.83' wide and 305.48' long and consists of a continuous unit with steel girders and a concrete deck supported by a concrete substructure with steel piling. Plans of the existing structure may be obtained upon request to the Program Management Division.

PAINT: The existing structural steel shall be cleaned and painted in accordance with Section 820 "CLEANING AND PAINTING EXISTING STRUCTURAL STEEL (TYPE II)". The color of the paint shall be Brown and shall match Federal Standard 595B, Color Chip No. 30070. For additional information see SP JOB NO. BB0414 "CONTAINMENT SYSTEM", "CONTRACTOR CERTIFICATION" AND "PAINT CONTRACTOR LABEL".

PILE FOOTING: The top of footings shall be set a minimum of 2'-0" below proposed finished grade. Foundations for footings shall be prepared in accordance with Subsection 801.04 and backfilled in accordance with Subsection 801.08.

STEEL PILING: All new piling shall be HP12x53 (Grade 50) and shall be driven with an approved air, steam or diesel hammer to a safe bearing capacity of 97 tons. Drive all piles into the material designated as moderately hard to hard light gray limestone in the boring legend. Drive all piles at Bent No. 5 to a minimum penetration of 5' below leveling pad. All other piles shall be driven to a minimum penetration of 10' below natural ground or 10' below bottom of cap or footing, whichever is greater. Lengths of piling shown are for estimating quantities and for use in determining payment for cut-off and build-up in accordance with Section 805. Actual lengths are to be determined in the field. Piles will be measured and paid for as the actual linear foot of accepted pile left in place. The Contractor shall use approved steel H-pile driving points.

Piling in Bent No. 1 shall be driven after embankment to bottom of new cap construction is in place. Piling in Bent No. 5 shall be driven prior to installation of soil nails at Retaining Wall No. 1.

PREBORING: Preboring is required for all piling at Bent No. 2 and may be required at Bent Nos. 3, 4 and 5. The depth of preboring shall be sufficient to provide the specified minimum pile penetration and to set the pile tips into the above designated material. Quantities of preboring shown are for bidding purposes only. The actual size and depths of preboring are to be determined in the field by the Engineer. The Contractor shall be responsible for keeping prebored holes free from debris prior to backfilling, which may require casings or other methods. After driving is completed, the prebored holes shall be backfilled with Class S Concrete or non-shrink grout to completely fill voids. The backfill and any required casings will not be paid for directly but shall be considered subsidiary to the item "PREBORING". Preboring will be paid for in accordance with Section 805.

THE PROPOSED WORK CONSISTS OF: Widening of Existing Bridge No. 05692, modifying the existing bents, modifying existing concrete deck, cleaning and painting existing beams and crossframes (see "METHOD OF WORK" on Dwg. No. 58131 for additional details), modifying existing approach slabs and replacing joint seals. For additional requirements in conducting the work, see Section 821.

VERIFICATION: Except as noted, components of the existing bridge are to be retained and joined to the proposed work. The information and dimensions shown are based on the stationing and vertical curve data provided and also on dimensions shown in the existing bridge plans. The Contractor is to adhere strictly to the requirements for verification of the geometry of the existing bridge and its relationship to the proposed work to the existing structure. See Section 821 for additional requirements. Payment for this work shall be considered subsidiary to the pay item "MODIFICATION OF EXISTING BRIDGE STRUCTURE (BRIDGE NO. _)".

CONCRETE RIPRAP: Remove existing concrete riprap and replace with new concrete riprap, as shown on the plans (See Std. Dwg. 55002). Removal shall extend to the location of an existing construction joint, unless otherwise directed by the the Engineer. Payment for removal shall be considered subsidiary to the pay item "MODIFICATION OF EXISTING BRIDGE STRUCTURE (BRIDGE NO. _)".

REMOVAL AND SALVAGE: All material removed, including concrete riprap, from the existing bridge under Item 821 shall be disposed of according to Section 205. All material removed from the existing bridge shall become property of the Contractor.

BRIDGE NO. 05692 (HWY. 112 OVER I-49) (CONTINUED)

DETAIL DRAWINGS:	DRAWING NO:
Staged Construction	58102-58105
End Bents	58106-58112
Transitional Approach Railing	58113
Intermediate Bents	58114-58121
303' Continuous Composite W-Beam Unit	58122-58136
Elastomeric Bearings	58137
Type Special Approach Slabs	58261-58262
Steel Piling	55020
Concrete Riprap	55002

BRIDGE NO. 07379 (HWY. 112 TO NB I-49 OVER NB I-49 TO HWY. 71B)

BENCH MARK: PN: 943, PD: SOUTHEAST CORNER OF BRIDGE NO. 05916
ST: 324+42.56 (CL Construction)
OF: 22.74' RT. of CL Construction
ZC: 1248.57

DESIGN SPECIFICATIONS: AASHTO LRFD Bridge Design Specifications 7th Edition (2014)

FUTURE WEARING SURFACE DESIGN LOADING: 24 psf

LIVE LOADING: HL93   METHOD OF DESIGN: LRFD

SEISMIC ZONE: I   SI = 0.052,   Fv = 1.70

OPERATIONAL IMPORTANCE CATEGORY: ESSENTIAL

STEEL PILING: Piling at end bents shall be HP14x73 (Grade 50) and shall be driven with an approved air, steam or diesel hammer to a minimum safe bearing capacity of 133 tons. All piling shall be driven into the material designated as moderately hard to hard light gray and gray limestone in the boring legend. Piling shall be driven to a minimum penetration of 10' below natural ground. Lengths of piling shown are for estimating quantities and for use in determining payment for cutoff and build-up in accordance with Section 805. Actual lengths will be determined in the field. Piles will be measured and paid for as the actual linear foot of accepted pile left in place. Piles in end bents shall be driven after required embankment to bottom of cap is in place. The Contractor shall use approved steel H-Pile driving points on all piles.

PREBORING: Preboring may be required for piling at End Bent Nos. 1 and 4. The depth of preboring shall be sufficient to provide the specified minimum pile penetration and to set the pile tips into the above designated material. The actual size and depths of preboring are to be determined in the field by the Engineer. The Contractor shall be responsible for keeping prebored holes free from debris prior to backfilling, which may require casings or other methods. After driving is completed, the prebored holes shall be backfilled in accordance with Subsection 805.08(a) to completely fill voids. The backfill and any required casings will not be paid for directly but shall be considered subsidiary to the item "PREBORING". Preboring will be paid for in accordance with Section 805.

SPREAD FOOTING: Footings at intermediate bents 2 & 3 shall be set a minimum of 2'-0" into competent material designated as hard light gray and gray limestone on the boring legend. The top of footings shall be set a minimum of 2'-0" below lowest adjacent proposed finished grade. Foundations for footings shall be prepared in accordance with Subsection 801.04. Rock excavations shall be made to neat lines of the concrete footings. Care shall be taken to avoid shattering of rock faces by excessive blasting. Concrete in footings shall be poured directly against excavated surfaces of rock. Excavations shall be backfilled and compacted to the level of surrounding ground in accordance with Subsection 801.08.

After excavation for footings at Bent Nos. 2 & 3 has been completed, a minimum of sixteen (16) 3 inch probe holes shall be drilled at each footing to a minimum depth of 5 feet. This work shall be performed in accordance with Subsection 801.03 and will not be paid for directly but shall be considered subsidiary to the item "UNCLASSIFIED EXCAVATION FOR STRUCTURES-BRIDGE".

DETAIL DRAWINGS:	DRAWING NO:
End Bents	58140-58148
Intermediate Bents	58149 & 58150
536' Continuous Composite Plate Girder Unit	58151-58166
Joint Details	58167
Elastomeric Bearings	58168
Type Special Approach Gutters	58254 & 58255
Type Special Approach Slabs	58263 & 58264
Steel Piling	55020
Concrete Riprap	55002

BRIDGE NOS. A7380 & B7380 (I-49 OVER HWY. 71B)

BENCH MARK: PN: 943, PD: SOUTHEAST CORNER OF BRIDGE NO. 05916
ST: 325+95.18 (CL Construction)
OF: 140.80' RT. of CL Construction
ZC: 1248.57

DESIGN SPECIFICATIONS: AASHTO LRFD Bridge Design Specifications 7th Edition (2014)

FUTURE WEARING SURFACE DESIGN LOADING: 24 psf

LIVE LOADING: HL93   METHOD OF DESIGN: LRFD

SEISMIC ZONE: I   SI = 0.052,   Fv = 1.70

OPERATIONAL IMPORTANCE CATEGORY: ESSENTIAL

PILE FOOTING: The top of footings shall be set a minimum of 2'-0" below existing ground line. Foundations for footings shall be prepared in accordance with Subsection 801.04 and backfilled in accordance with Subsection 801.08.

STEEL PILING: All Piling shall be HP12x53 (Grade 50) and shall be driven with an approved air, steam or diesel hammer to a minimum safe bearing capacity of 97 tons. All piling shall be driven into the material designated as moderately hard to hard dark gray shale or siltstone in the boring legend. Drive all piles at Bent Nos. 1A & 1B to a minimum penetration of 5' below leveling pad. Piling at Bent No. 3 shall be driven to a minimum penetration of 10' below natural ground. Piling at Bent Nos. 2A & 2B shall be driven to a minimum penetration of 10' below bottom of footing elevation. Lengths of piling shown are for estimating quantities and for use in determining payment for cut-off and build-up in accordance with Section 805. Actual lengths will be determined in the field. Piles will be measured and paid for as the actual linear foot of accepted pile left in place. The Contractor shall use approved steel H-pile driving points on all piles.

Piling in Bent No. 3 shall be driven after embankment to bottom of cap is in place.
The Contractor may drive the piling in Bent Nos. 1A & 1B in one of the following sequences:

1. Piling may be driven after excavation to bottom of leveling pad or any undercut is complete, after any required preboring, and prior to backfilling.
2. Piling may be driven after embankment construction. Pile casings shall be used for all piling that are within the limits of the MSE Wall reinforced zone or any undercut at Bent Nos. 1A & 1B and shall be installed prior to or during embankment construction extending from bottom of leveling pad or undercut to bottom of cap. Pile casing material shall have sufficient strength to retain its original form free from harmful distortions after compaction of the fill material surrounding it. The minimum inside diameter of the casing shall be 18". Piles shall be driven after any required preboring and through the open casings, where required, after embankment to bottom of cap is in place. After driving is completed, the pile casing shall be backfilled with an approved non-shrink grout, or other approved material in a single continuous operation to completely fill voids. Pile casings and backfill will not be paid for directly but shall be considered subsidiary to the item "STEEL PILING (HP12x53)".

CONCRETE RIPRAP: Remove and replace Bridge No. 05916 concrete riprap as shown on the plans (See Std. Dwg. No. 55002). Removal shall extend to the location of an existing construction joint. Payment for removal shall be considered subsidiary to other items in the contract.

BRIDGE A7380 DETAIL DRAWINGS:	DRAWING NO:
End Bents	58172-58183
Intermediate Bent	58189, 58191 & 58192
364' Continuous Composite Plate Girder Unit	58193-58205
Common Superstructure Details	58206 & 58207
Joint Details	58221
Elastomeric Bearings	58222
Type Special Approach Gutters	58256-58259
Type Special Approach Slabs	58265 & 58267
Steel Piling	55020
Concrete Riprap	55002

BRIDGE B7380 DETAIL DRAWINGS:	DRAWING NO:
End Bents	58177-58188
Intermediate Bent	58190-58192
306' Continuous Composite Plate Girder Unit	58208-58220
Common Superstructure Details	58206 & 58207
Joint Details	58221
Elastomeric Bearings	58222
Type Special Approach Gutters	58256-58259
Type Special Approach Slabs	58266 & 58268
Steel Piling	55020
Concrete Riprap	55002

STATE OF ARKANSAS
LICENSED PROFESSIONAL ENGINEER
No. 14498
ADAM B. HALL
3-20-16

BRIDGE ENGINEER

SHEET 1 OF 2
GENERAL NOTES
PORTER RD. - HWY. 112/71B
WIDENING & INTCHNG. IMPVTS. (S)
WASHINGTON COUNTY
ROUTE   SEC.
ARKANSAS STATE HIGHWAY COMMISSION
LITTLE ROCK, ARK.

DRAWN BY: JES   DATE: AUG. 2014   FILENAME: BBB0414_GN1.dgn
CHECKED BY: RLW   DATE: AUG. 2014   SCALE: NONE
DESIGNED BY: JES   DATE: AUG. 2014
BRIDGE NO. 05692, 07379, A7380, B7380, A7381, B7381   DRAWING NO. 58099

jeskinner   3/20/2016   3:34:44 PM
WORKSPACE: AHTD Bridge
L:\2011\1017707 - I-540 Widening & Interchange Improvement\Drawings\I540-PROJECT-S101-GN.dgn
REVISED DATE:

GENERAL NOTES (CONTINUED):

BRIDGE NOS. A7381 & B7381 (I-49 OVER VAN ASCHE DRIVE)

BENCH MARK: PN: 947, PD: SQUARE CUT IN SOUTHEAST CORNER OF BRIDGE NO. B5918
ST: 364+08.77 (CL Construction)
OF: 70.40' RT. of CL Construction
ZC: 1251.72

DESIGN SPECIFICATIONS: AASHTO LRFD Bridge Design Specifications 7th Edition (2014)

FUTURE WEARING SURFACE DESIGN LOADING: 24 psf

LIVE LOADING: HL93 METHOD OF DESIGN: LRFD

SEISMIC PERFORMANCE ZONE: I SI = 0.052, Fv = 1.70

OPERATIONAL IMPORTANCE CATEGORY: ESSENTIAL

EXISTING BRIDGE: Existing Bridge Nos. A5918 & B5918 are 42.83' wide and 166.42' long and consist of a continuous unit with steel beams and a concrete deck supported by a concrete substructure with steel piling. Plans of the existing structures may be obtained upon request to the Program Management Division.

STEEL PILING: All piling shall be HP14x73 (Grade 50) and shall be driven with an approved air, steam or diesel hammer to a minimum safe bearing capacity of 133 tons. All piling shall be driven into the material designated as moderately hard to hard dark gray shale in the boring legend. Drive all piles at Bent Nos. 1 & 2 to a minimum penetration of 5' below leveling pad. Lengths of piling shown are for estimating quantities and for use in determining payment for cut-off and build-up in accordance with Section 805. Actual lengths will be determined in the field. Piles will be measured and paid for as the actual linear foot of accepted pile left in place. The Contractor shall use approved steel H-pile driving points on all piles.

The Contractor may drive the piling in Bent Nos. 1 and 2 in one of the following sequences:

1. Piling may be driven after excavation to bottom of leveling pad or any undercut is complete, after any required preboring, and prior to backfilling.

2. Piling may be driven after embankment construction. Pile casings shall be used for all piling and shall be installed prior to or during embankment construction extending from bottom of leveling pad or any undercut to bottom of cap. Pile casing material shall have sufficient strength to retain its original form free from harmful distortions after compaction of the fill material surrounding it. The minimum inside diameter of the casing shall be 22". Piles shall be driven after preboring and through the open casings after embankment to bottom of cap is in place. After driving is completed, the pile casing shall be backfilled with an approved non-shrink grout, or other approved material in a single continuous operation to completely fill voids. Pile casings and backfill will not be paid for directly but shall be considered subsidiary to the item "STEEL PILING (HP14x73)".

PREBORING: Preboring is required for all piling at End Bent No. 1. The depth of preboring shall be sufficient to provide the specified minimum pile penetration and to set the pile tips into the above designated material. After driving is completed, the prebored holes shall be backfilled in accordance with Subsection 805.08(a) to completely fill voids.

Preboring is required for all piling at End Bent No. 2 after excavation to the top of leveling pad is complete and to a 3' depth into material designated as moderately hard to hard dark gray shale in the boring legend, or to a 5' depth below leveling pad, whichever is greater. After driving is completed, the prebored holes shall be backfilled with Class S Concrete to the top of rock and the remaining length of prebored hole shall be backfilled with an approved non-shrink grout, or other approved material in a single continuous operation to completely fill voids.

Quantities of preboring shown are for bidding purposes only. The actual size and depths of preboring are to be determined in the field by the Engineer. The Contractor shall be responsible for keeping prebored holes free from debris prior to backfilling, which may require casings or other methods. The backfill and any required casings will not be paid for directly but shall be considered subsidiary to the item "PREBORING". Preboring will be paid for in accordance with Section 805.

REMOVAL AND SALVAGE: Existing Bridge Nos. A5918 & B5918 shall be removed, including concrete riprap, in accordance with Section 205. All material from the existing bridge shall become property of the Contractor.

BRIDGE A7381 DETAIL DRAWINGS:	DRAWING NO:
Staged Construction	58225-58228
End Bents	58229-58240
118' Composite Plate Girder Span	58241-58244, 58249-58252
Elastomeric Bearings	58253
Type Special Approach Gutters	58260
Type Special Approach Slabs	58269-58270, 58272-58273
Steel Piling	55020
Concrete Riprap	55002

BRIDGE B7381 DETAIL DRAWINGS:	DRAWING NO:
Staged Construction	58225-58228
End Bents	58229-58240
118' Composite Plate Girder Span	58245-58248, 58249-58252
Elastomeric Bearings	58253
Type Special Approach Gutters	58260
Type Special Approach Slabs	58269-58272, 58274
Steel Piling	55020
Concrete Riprap	55002

N VALUES

(Hwy 112 over I-49)

Sta. 17+59 Offset 30' Rt.	Sta. 18+55 Offset 46' Lt.	Sta. 20+15 Offset 50' Lt.	Sta. 21+40 Offset 37' Rt.	Sta. 21+10 Offset 40' Lt.
0.5-1.5, N=47	0.5-1.5, N=21	0.5-1.5, N=14	0.5-1.5, N=32	0.5-1.5, N=32
2.5-3.5, N=18	2.5-3.5, N=16	2.5-3.5, N=27	2.5-3.5, N=41	2.5-3.5, N=29
4.5-5.5, N=25	4.5-5.5, N=19	4.5-5.5, N=50/8"	4.5-5.5, N=50/9"	4.5-5.5, N=26
6.5-7.5, N=16	6.0-6.5, N=50/6"	6.5-7.5, N=26	6.5-7.5, N=27	6.5-7.5, N=24
9.0-10.0, N=14	8.5-10.0, N=25/0"	9.0-10.0, N=50/8"	9.0-10.0, N=37	9.0-10.0, N=20
14.0-15.0, N=42	13.5-15.0, N=25/0"	13.5-15.0, N=25/0"	14.0-15.0, N=28	14.0-15.0, N=50/9"
19.0-20.0, N=31	18.5-20.0, N=25/0"	18.5-20.0, N=25/0"	19.0-20.0, N=50/8"	19.0-20.0, N=45
24.0-25.0, N=48	23.5-25.0, N=25/0"	28.5-30.0, N=25/0"	24.0-25.0, N=45	24.0-25.0, N=50/8"
29.0-30.0, N=50/9"	28.5-30.0, N=25/0"	34.5-36.0, N=25/0"	29.0-30.0, N=50/7"	29.0-30.0, N=50/7"
34.0-35.0, N=50/8"	33.5-35.0, N=25/0"	38.5-40.0, N=25/0"	34.0-35.0, N=32	34.0-35.0, N=15
39.0-40.0, N=50/7"	38.5-40.0, N=25/0"		39.0-40.0, N=34	39.0-40.0, N=14
44.0-45.0, N=31	43.5-45.0, N=25/0"		44.0-45.0, N=34	43.5-45.0, N=25/0"
48.5-50.0, N=25/0"	48.5-50.0, N=25/0"		48.5-50.0, N=25/0"	48.5-50.0, N=25/0"
53.5-55.0, N=25/0"			53.5-55.0, N=25/0"	53.5-55.0, N=25/0"
58.5-60.0, N=25/0"			58.5-60.0, N=25/0"	58.5-60.0, N=25/0"
63.5-65.0, N=25/0"			63.5-65.0, N=25/0"	

N VALUES

(I-49 over Hwy. 71B)

Sta. 323+75 Offset 55' Lt.	Sta. 325+75 Offset 45' Lt.	Sta. 327+55 Offset 50' Lt.	Sta. 326+70 Offset 45' Rt.	Sta. 328+15 Offset 50' Rt.
0.5-1.5, N=9	0.5-1.5, N=19	0.5-1.5, N=22	0.5-1.5, N=29	0.5-1.5, N=25
18.5-19.0, N=50/3"	2.5-3.5, N=33	2.5-3.5, N=20	2.5-3.5, N=26	2.5-3.5, N=21
23.5-25.0, N=25/0"	4.5-5.5, N=16	4.5-5.5, N=30	4.5-5.5, N=17	4.5-5.5, N=16
28.5-30.0, N=25/0"	9.0-10.0, N=15	6.5-7.5, N=26	6.5-7.5, N=15	6.5-7.5, N=11
33.5-35.0, N=25/0"	14.0-15.0, N=16	9.0-10.0, N=18	9.0-10.0, N=13	9.0-10.0, N=12
38.5-40.0, N=25/0"	19.0-20.0, N=29	14.0-15.0, N=29	14.0-15.0, N=17	14.0-15.0, N=17
43.5-45.0, N=25/0"	24.0-24.5, N=50/3"	19.0-20.0, N=50/8"	19.0-20.0, N=50/10"	19.0-20.0, N=50/9"
48.5-50.0, N=25/0"	28.5-30.0, N=25/0"	24.5-25.0, N=50/3"	24.0-24.5, N=50/4"	24.0-24.5, N=50/2"
53.5-55.0, N=25/0"	33.5-35.0, N=25/0"	38.5-40.0, N=25/0"	27.0-28.5, N=25/0"	28.5-30.0, N=25/0"
58.5-60.0, N=25/0"	38.5-40.0, N=25/0"	43.5-45.0, N=25/0"	43.5-45.0, N=25/0"	33.5-35.0, N=25/0"
	43.5-45.0, N=25/0"	48.5-50.0, N=25/0"	48.5-50.0, N=25/0"	38.5-40.0, N=25/0"
	48.5-50.0, N=25/0"	53.5-55.0, N=25/0"		43.5-45.0, N=25/0"
		58.5-60.0, N=25/0"		48.5-50.0, N=25/0"
				53.5-55.0, N=25/0"
				58.5-60.0, N=25/0"

N VALUES

(Hwy. 112 to NB I-49 over NB I-49 to Hwy. 71B)

Sta. 312+00 At CL	Sta. 313+60 At CL	Sta. 315+90 At CL	Sta. 317+55 At CL
0.5-1.5, N=14	0.5-1.5, N=16	0.5-1.5, N=18	0.0-1.0, N=50/9"
2.5-3.5, N=39	2.5-3.5, N=22	2.5-3.5, N=19	2.5-3.5, N=30
4.5-5.5, N=25/0"	4.5-5.5, N=31	4.5-5.5, N=16	4.5-5.5, N=35
6.0-7.0, N=25/0"	6.5-7.5, N=47	8.5-9.5, N=50/7"	6.0-7.0, N=50/9"
8.5-9.5, N=25/0"	8.5-9.0, N=8	13.5-14.0, N=25/0"	8.5-9.5, N=50/8"
13.0-13.5, N=25/0"	10.0-10.5, N=25/0"	28.5-30.0, N=25/0"	13.5-15.0, N=25/0"
28.5-30.0, N=25/0"	23.5-25.0, N=50/0"	33.5-37.0, N=25/0"	19.0-20.0, N=28
33.5-35.0, N=25/0"	28.5-30.0, N=50/0"		24.0-25.0, N=40
38.5-40.0, N=25/0"	33.5-35.0, N=50/0"		28.5-30.0, N=25/0"
43.5-45.0, N=25/0"	38.5-40.0, N=50/0"		33.5-35.0, N=25/0"
48.5-50.0, N=25/0"	43.5-45.0, N=50/0"		38.5-40.0, N=25/0"
	48.5-50.0, N=50/0"		

N VALUES

(I-49 over Van Asche Drive)

Sta. 364+47 At CL	Sta. 366+30 At CL
0.5-1.5, N=9	0.5-1.5, N=16
2.5-3.5, N=29	2.5-3.5, N=24
4.5-5.5, N=25	4.5-5.5, N=50/10"
6.5-7.5, N=16	6.5-7.5, N=24
9.0-10.0, N=20	9.0-10.0, N=23
14.0-15.0, N=50/10"	14.0-15.0, N=24
19.0-20.0, N=50/9"	19.0-20.0, N=30
24.0-25.0, N=22	24.0-25.0, N=9
29.0-30.0, N=14	29.0-29.5, N=50/3"
33.5-35.0, N=25/0"	33.5-35.0, N=25/0"
38.5-40.0, N=25/0"	38.5-40.0, N=25/0"
43.5-45.0, N=25/0"	43.5-45.0, N=25/0"
48.5-50.0, N=25/0"	48.5-50.0, N=25/0"
53.5-55.0, N=25/0"	53.5-55.0, N=25/0"
58.5-60.0, N=25/0"	58.5-60.0, N=25/0"
63.5-65.0, N=25/0"	
68.5-70.0, N=25/0"	

BORING LEGEND

A - Asphalt concrete
B - Stiff reddish brown cherty clay w/ cobbles (fill)
C - Moderately hard tan and light gray chert w/ interbedded clay seams and layers
D - Hard light gray limestone w/ numerous chert nodules and inclusions
E - Stiff reddish brown silty clay w/ trace chert fragments and occasional clay pockets (fill)
F - Moderately hard to hard light gray limestone w/ chert nodules and inclusions
G - Medium dense gray crushed limestone and shale fragments (fill)
H - Very stiff reddish brown cherty clay w/ fine to coarse chert fragment and cobbles
I - Crushed stone base and shale fragments (fill)
J - Very stiff reddish brown cherty clay w/ chert cobbles (fill)
K - Very stiff gray silty clay
L - Very stiff tan and light gray fine to coarse sandy clay w/ chert nodules
M - Crushed stone base (fill)
N - Stiff to very stiff reddish brown cherty clay w/ chert cobbles (fill)
O - Stiff gray and brown silty clay w/ some chert fragments
P - Firm dark gray silty clay w/some organics
Q - Firm reddish tan and gray silty clay w/occasional silt pockets
R - Stiff reddish tan and gray clay, slightly sandy w/occasional silt pockets and ferrous stains and nodules
S - Moderately hard dark gray shale, carbonaceous
T - Stiff brown silty clay w/some shale fragments and crushed stone (fill)
U - Stiff gray silty clay w/occasional silt pockets
V - Stiff to very stiff tan and gray silty clay w/ferrous nodules and stains and occasional silt pockets
W - Low hardness brown and dark gray clayey shale, carbonaceous
X - Moderately hard to hard dark gray shale
Y - Stiff brownish gray clayey silt, dry
Z - Stiff tan and gray clay w/ferrous stains and nodules and occasional silt partings
AA - Moderately hard brown and dark gray weathered clayey shale, carbonaceous
BB - Moderately hard to hard dark gray shale, carbonaceous w/very close interbedded limestone and siltstone seams
CC - Very stiff brown fine sandy clay w/trace organics and trace fine gravel (fill)
DD - Stiff tan and gray silty clay w/occasional silt pockets
EE - Low hardness brown and dark gray weathered clayey shale, carbonaceous
FF - Moderately hard to hard dark gray siltstone w/interbedded shale seams and limestone inclusions
GG - Moderately hard to hard dark gray shale w/medium close sandstone partings and seams
HH - Very stiff gray and reddish tan silty clay w/chert fragments (fill)
II - Stiff tan and gray silty clay w/ferrous stains and nodules and occasional silt partings
JJ - Low hardness to moderately hard reddish tan and dark gray weathered clayey shale, carbonaceous
KK - Moderately hard dark gray with some tan slightly weathered shale w/medium close sandstone partings, seams & layers
LL - Moderately hard to hard dark gray shale w/medium close sandstone partings
MM - Stiff brown clayey silt
NN - Very stiff reddish brown and brown silty clay w/chert fragments
OO - Very stiff to hard reddish brown cherty clay w/chert seams
PP - Hard light gray and gray limestone w/chert nodules and inclusions
QQ - Stiff dark brown clayey silt
RR - Stiff reddish tan and tan silty clay w/chert fragments
SS - Very stiff tan and reddish brown cherty clay
TT - Hard light gray and gray slightly weathered limestone w/chert inclusions, slightly stylolitic
UU - Stiff tan silty clay w/ferrous nodules and some fine to coarse chert fragments
VV - Moderately hard to hard light gray slightly weathered limestone
WW - Very stiff reddish brown cherty clay w/chert seams
XX - Very stiff reddish tan and gray clay w/occasional silt pockets and ferrous nodules and stains
YY - Moderately hard to hard light gray weathered limestone w/occasional silty clay seams
ZZ - Moderately hard to hard light gray and gray limestone w/chert nodules and inclusions
AAA - Firm dark brown silty clay, sandy (fill)
BBB - Stiff gray and reddish tan clay w/a little chert fragments
CCC - Moderately hard tan, gray and dark gray weathered shale
DDD - Stiff dark brown silty clay (fill)
EEE - Stiff to very stiff reddish brown and dark brown cherty clay w/cobbles (fill)
FFF - Firm gray and tan clay w/some fine chert fragments

BRIDGE ENGINEER

SHEET 2 OF 2
GENERAL NOTES
PORTER RD. - HWY. 112/71B
WIDENING & INTCHNG. IMPVTS. (S)
WASHINGTON COUNTY
ROUTE SEC.
ARKANSAS STATE HIGHWAY COMMISSION
LITTLE ROCK, ARK.

DRAWN BY: JES DATE: AUG. 2014 FILENAME: BBB0414_GN2.dgn
CHECKED BY: RLW DATE: AUG. 2014 SCALE: NONE
DESIGNED BY: JES DATE: AUG. 2014
BRIDGE NO. 05692, 07379, A7380, B7380, A7381, B7381 DRAWING NO. 58100

jeskinner 3/20/2016 3:34:44 PM
WORKSPACE: AHTD Bridge
L:\2011\1017707 - I-540 Widening & Interchange Improvement\Drawings\I540-PROJECT-S102-GN.dgn
REVISED DATE:

DATE REVISED	DATE FILMED	DATE REVISED	DATE FILMED	FED. ROAD DIST. NO.	STATE	FED. AID PROJ. NO.	SHEET NO.	TOTAL SHEETS
				6	ARK.			
				JOB NO.		BB0414	378	886
				(1) 05692		LAYOUT		58101

FOR R/W DATA, SEE RDWY. PLANS

NOTES:
CL Existing Bridge is on a 3°45' Curve Right. Longitudinal lines on the Proposed Bridge are concentric with CL Existing Bridge. The Widening shall be constructed on curves concentric with CL Existing Bridge.

Remove existing approach gutters on west side of bridge during Stage IA and widen existing approach slab to curb and gutter. Similar work on east side of bridge shall occur during Stage 2C. For details of Type Special Approach Slabs, see Dwg. Nos. 58261 & 58262.

(1) Measured from a Radial Line to CL joint for Bent Nos. 1 & 5 and CL Bearing for Bent Nos. 2-4

(2) Limits of existing concrete riprap removal shall match the location of an existing construction joint.

(3) Minimum Vertical Clearance

(4) Measured from a Radial Line to a tangent to CL Median I-49 at Intersection Point.

(5) Shoring may be required during construction. Payment for this work, if required, shall be included in the pay item "SHORING".

(6) Left and right designations are looking upstation.

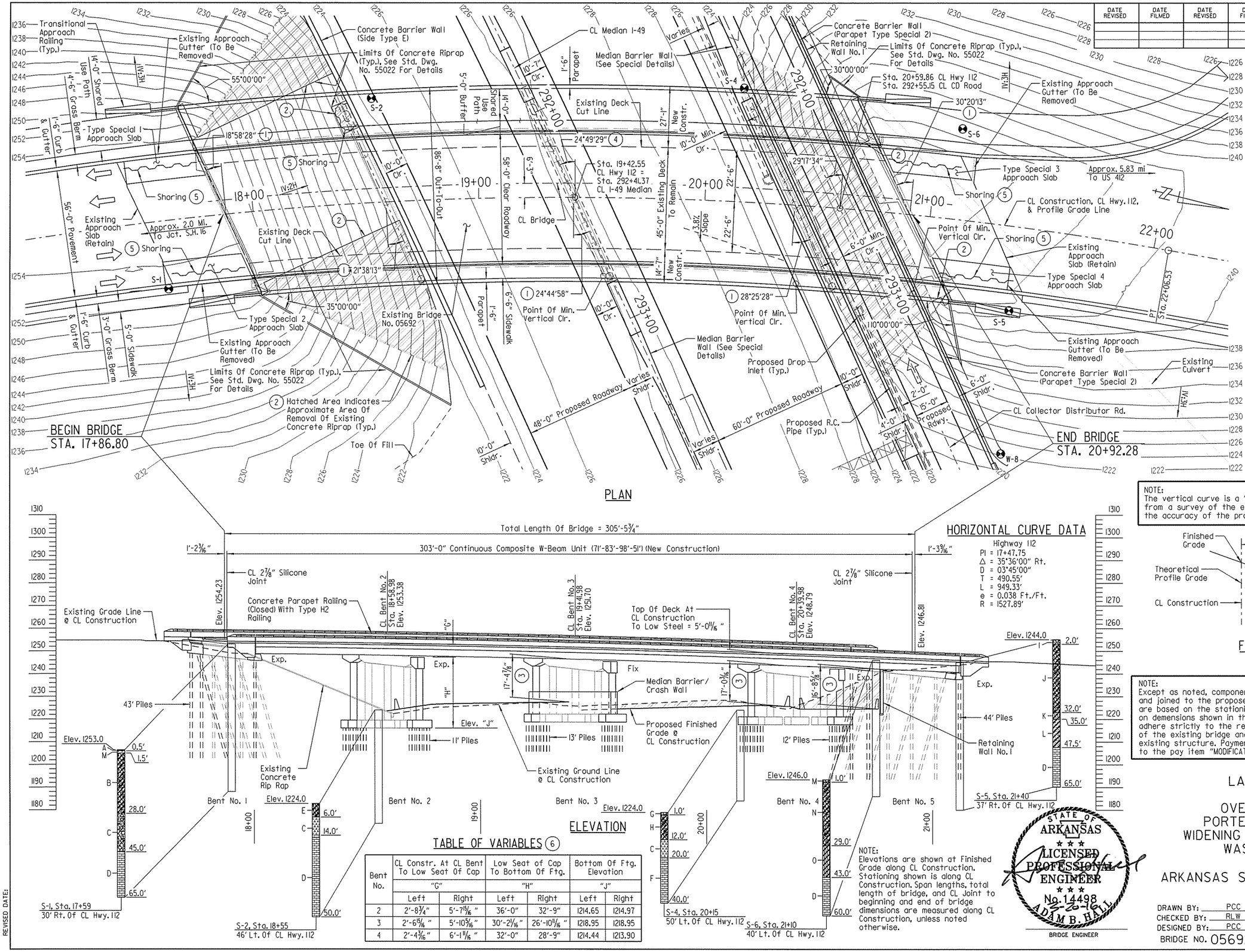

PLAN

ELEVATION

TABLE OF VARIABLES (6)

Bent No.	CL Constr. At CL Bent To Low Seat Of Cap "G" Left	"G" Right	Low Seat of Cap To Bottom Of Ftg. "H" Left	"H" Right	Bottom Of Ftg. Elevation "J" Left	"J" Right
2	2'-8¾"	5'-7⅝"	36'-0"	32'-9"	1214.65	1214.97
3	2'-6⅝"	5'-10⅝"	30'-2⅛"	26'-10⅛"	1218.95	1218.95
4	2'-4⅜"	6'-1⅛"	32'-0"	28'-9"	1214.44	1213.90

NOTE:
Elevations are shown at Finished Grade along CL Construction. Stationing shown is along CL Construction. Span lengths, total length of bridge, and CL Joint to beginning and end of bridge dimensions are measured along CL Construction, unless noted otherwise.

HORIZONTAL CURVE DATA

Highway 112
PI = 17+47.75
Δ = 35°36'00" Rt.
D = 03°45'00"
T = 490.55'
L = 949.33'
e = 0.038 Ft./Ft.
R = 1527.89'

VERTICAL CURVE DATA

PVI Sta. 19+25.00
Elev. 1258.30
V.C. = 700'
+1.45% -6.00%

Highway 112
(Theoretical Profile Grade Along CL Construction)

NOTE:
The vertical curve is a "best-fit" curve based on elevations obtained from a survey of the existing bridge deck. The Contractor shall verify the accuracy of the proposed vertical curve prior to any construction.

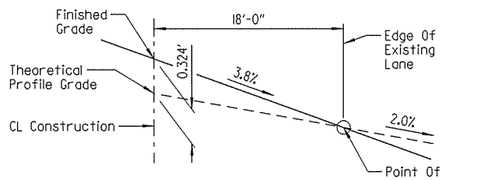

FINISHED GRADE SKETCH

(Looking Forward)
No Scale

NOTE:
Except as noted, components of the existing bridge are to be retained and joined to the proposed work. The information and dimensions shown are based on the stationing and vertical curve data provided and also on demensions shown in the existing bridge plans. The Contractor is to adhere strictly to the requirements for verification of the geometry of the existing bridge and its relationship to the proposed work to the existing structure. Payment for this work shall be considered subsidiary to the pay item "MODIFICATION OF EXISTING BRIDGE STRUCTURE (BR. NO.)".

LAYOUT OF BRIDGE
HIGHWAY 112
OVER INTERSTATE 49
PORTER RD. - HWY. 112/71B
WIDENING & INTCHNG. IMPVTS. (S)
WASHINGTON COUNTY

ROUTE 49 SEC. 28

ARKANSAS STATE HIGHWAY COMMISSION

LITTLE ROCK, ARK.

STATE OF ARKANSAS ★★★ LICENSED PROFESSIONAL ENGINEER ★★★ No. 14498 ADAM B. HALL 12-20-16
BRIDGE ENGINEER

DRAWN BY: PCC DATE: MAR. 2014 FILENAME: BBB0414XL_LL.dgn
CHECKED BY: RLW DATE: AUG. 2014 SCALE: 1" = 20'-0"
DESIGNED BY: PCC DATE: MAR. 2014

BRIDGE NO. 05692 DRAWING NO. 58101

Jeskinner 3/20/2016 3:34:46 PM
WORKSPACE: AHTD Bridge
L:\2016\16017707 - I-540 Widening & Interchange Improvement\Drawings\I540-HWY112-SI01-L0.dgn
REVISED DATE:

DATE REVISED	DATE FILMED	DATE REVISED	DATE FILMED	FED. ROAD DIST. NO.	STATE	FED. AID PROJ. NO.	SHEET NO.	TOTAL SHEETS
				6	ARK.			
				JOB NO.		BB0414	379	886
				(1) 05692		STAGE CONST.		58102

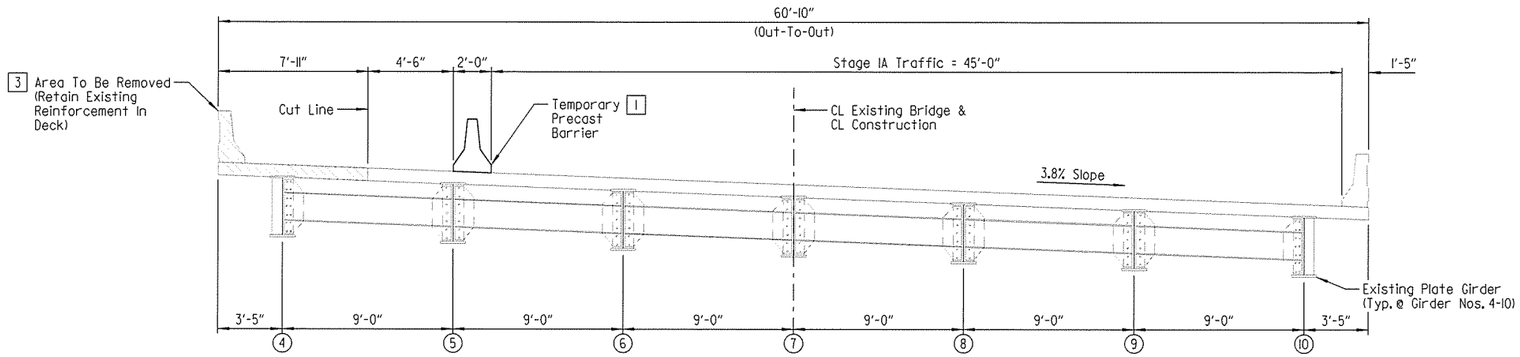

STAGE IA - DEMOLITION

Scale: 1/4" = 1'-0"

(X) Beam or Girder Number

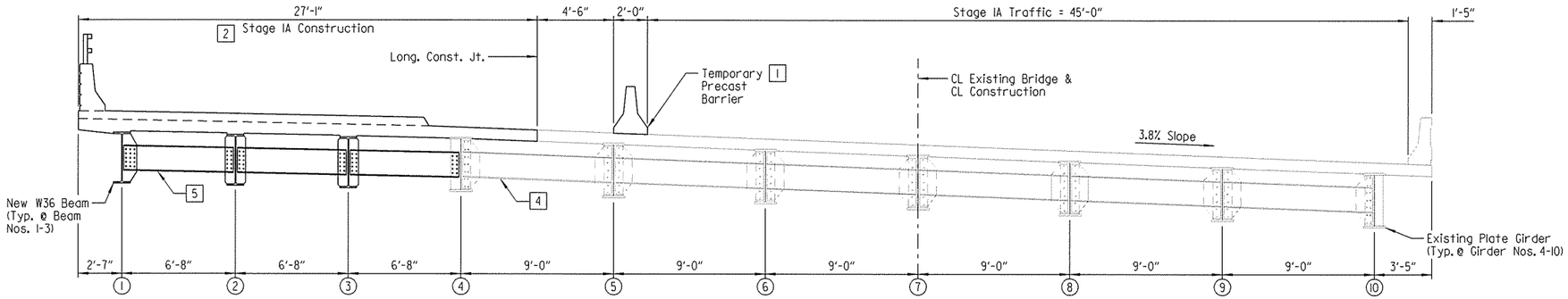

STAGE IA - CONSTRUCTION

Scale: 1/4" = 1'-0"

NOTES:
Existing CL Bridge is on a 3°45' Curve Right. Longitudinal lines on the Proposed Bridge are concentric with Existing CL Bridge. The Widening shall be constructed on curves concentric with Existing CL Bridge.

Dimensions are measured along a radial line projected from Existing CL Bridge.

Details which relate to maintenance of traffice are shown on the bridge plans for information only. See Roadway Plans for Maintenance of Traffic.

1. For details of Temporary Precast Barrier, see Std. Dwg. No. TC-4. Do not connect Temporary Precast Barrier to deck.
2. Bent 1 & 5 new construction (left side only - looking ahead) will occur during Stages I & IA. See End Bent Details.
3. Care shall be exercised during the removal of the existing deck to ensure that the bolted field splices, girders, diaphragms, shear studs and connection plates are not damaged. Damaged items that are not salvageable, as determined by the Engineer, shall be replaced by the Contractor with no additional payment.
4. Diaphragm bolts in this bay only shall be loosened to the satisfaction of the Engineer prior to installation of the adjacent new diaphragms. Any existing bolt that is loosened shall be replaced with a new high-strength bolt, which shall be be tightened immediately after completion of the Stage IA deck pour.
5. Installation of new diaphragms and connection plates, including field drilling and installing new high-strength bolts in existing exterior connection plates, shall occur prior to Stage IA deck pour.

STATE OF ARKANSAS
LICENSED PROFESSIONAL ENGINEER
No. 14498
ADAM B. HALL
3-20-2016
BRIDGE ENGINEER

SHEET 1 OF 4
DETAILS OF STAGE CONSTRUCTION
HIGHWAY 112
OVER INTERSTATE 49

ROUTE SEC.

ARKANSAS STATE HIGHWAY COMMISSION
LITTLE ROCK, ARK.

DRAWN BY: PCC DATE: MAR. 2014 FILENAME: BBB0414X1_SC1.dgn
CHECKED BY: RLW DATE: AUG. 2014 SCALE: AS SHOWN
DESIGNED BY: PCC DATE: MAR. 2014
BRIDGE NO. 05692 DRAWING NO. 58102

jeskinner 3/20/2016 3:34:47 PM
WORKSPACE: AHTD_Bridge
L:\2014\001707 - I-540 Widening & Interchange Improvement\Drawings\I540-HWY112-SI02-SC.dgn
REVISED DATE:

DATE REVISED	DATE FILMED	DATE REVISED	DATE FILMED	FED. ROAD DIST. NO.	STATE	FED. AID PROJ. NO.	SHEET NO.	TOTAL SHEETS
				6	ARK.			
				JOB NO.		BB0414	380	886
				(1) 05692		STAGE CONST.		58103

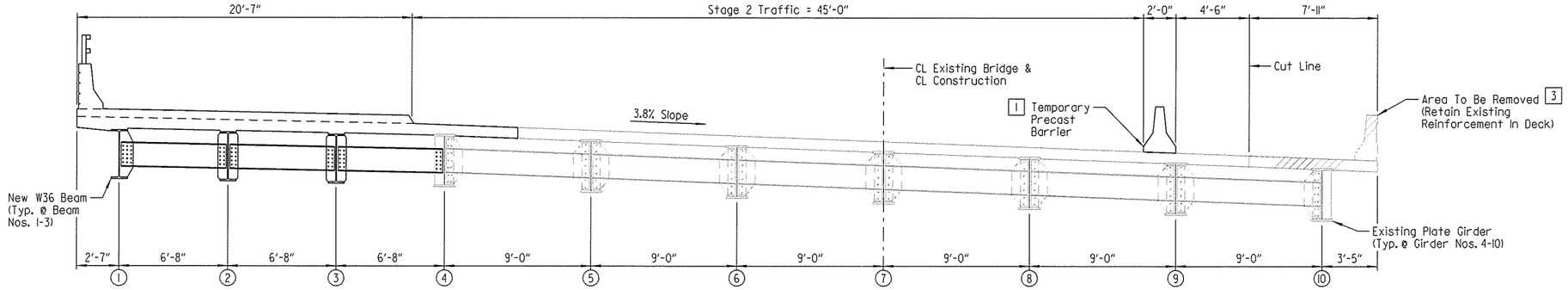

STAGE 2 - DEMOLITION

Scale: 1/4" = 1'-0"

(X) Beam or Girder Number

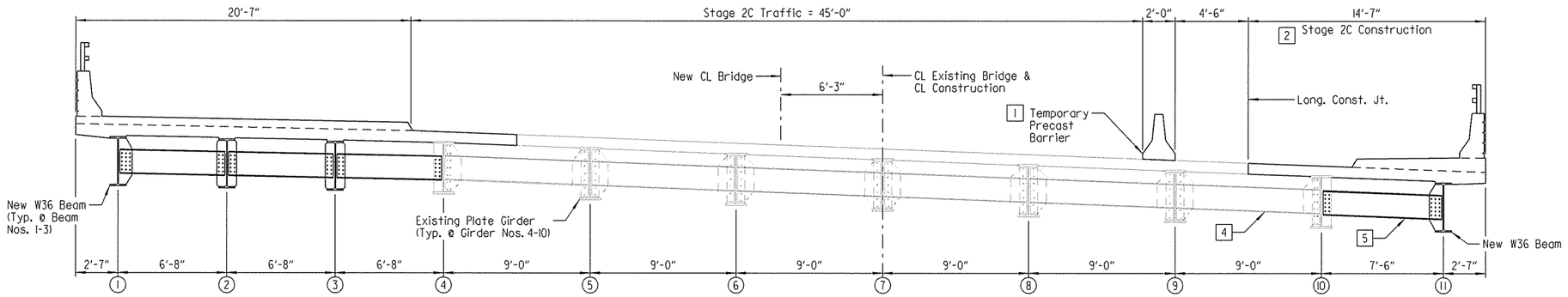

STAGE 2C - CONSTRUCTION

Scale: 1/4" = 1'-0"

NOTES:
Existing CL Bridge is on a 3°45' Curve Right. Longitudinal lines on the Proposed Bridge are concentric with Existing CL Bridge. The Widening shall be constructed on curves concentric with Existing CL Bridge.

Dimensions are measured along a radial line projected from Existing CL Bridge.

Details which relate to maintenance of traffice are shown on the bridge plans for information only. See Roadway Plans for Maintenance of Traffic.

1. For details of Temporary Precast Barrier, see Std. Dwg. No. TC-4. Do not connect Temporary Precast Barrier to deck.
2. Bent 1 & 5 new construction (right side only - looking ahead) will occur during Stage 2. See End Bent Details.
3. Care shall be exercised during the removal of the existing deck to ensure that the bolted field splices, girders, diaphragms, shear studs and connection plates are not damaged. Damaged items that are not salvageable, as determined by the Engineer, shall be replaced by the Contractor with no additional payment.
4. Diaphragm bolts in this bay only shall be loosened to the satisfaction of the Engineer prior to installation of the adjacent new diaphragms. Any existing bolt that is loosened shall be replaced with a new high-strength bolt, which shall be be tightened immediately after completion of the Stage 2C deck pour.
5. Installation of new diaphragms and connection plates, including field drilling and installing new high-strength bolts in existing exterior connection plates, shall occur prior to Stage 2C deck pour.

STATE OF ARKANSAS
LICENSED PROFESSIONAL ENGINEER
No. 14498
3-20-16
ADAM B. HALL
BRIDGE ENGINEER

SHEET 2 OF 4
DETAILS OF STAGE CONSTRUCTION
HIGHWAY 112
OVER INTERSTATE 49

ROUTE SEC.

ARKANSAS STATE HIGHWAY COMMISSION

LITTLE ROCK, ARK.

DRAWN BY: PCC DATE: MAR. 2014 FILENAME: BBB0414X1_SC2.dgn
CHECKED BY: RLW DATE: AUG. 2014 SCALE: AS SHOWN
DESIGNED BY: PCC DATE: MAR. 2014
BRIDGE NO. 05692 DRAWING NO. 58103

jeskinner 3/20/2016 3:34:47 PM
WORKSPACE: AHTD Bridge
L:\2014\14077 I-540 Widening & Interchange Improvement\Drawings\540-HWY112-SI03-SC.dgn
REVISED DATE:

DATE REVISED	DATE FILMED	DATE REVISED	DATE FILMED	FED. ROAD DIST. NO.	STATE	FED. AID PROJ. NO.	SHEET NO.	TOTAL SHEETS
				6	ARK.			
				JOB NO.		BB0414	381	886
				(1) 05692		STAGE CONST.		58104

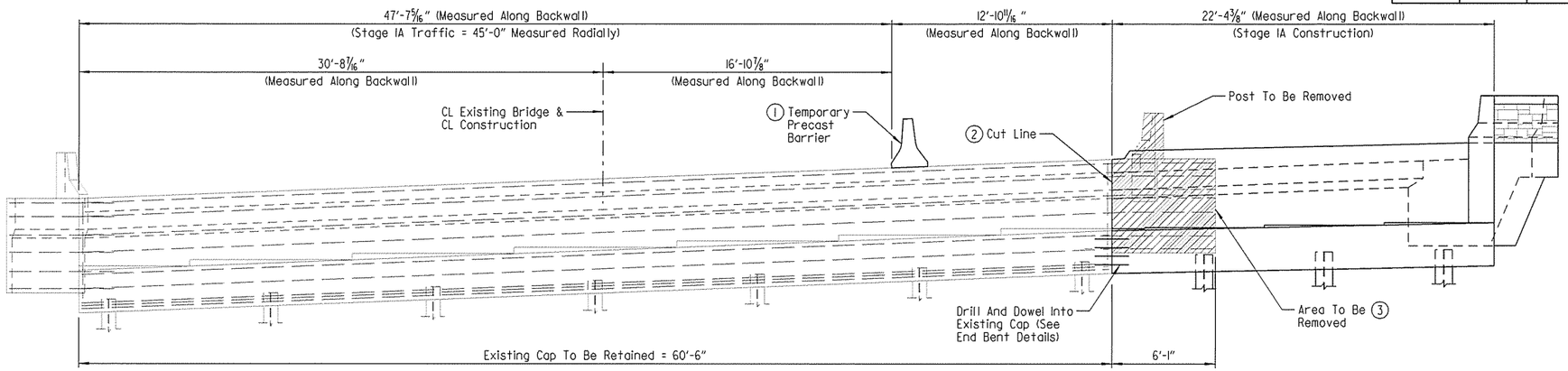

END BENT NO. 1 ELEVATION - STAGE IA CONSTRUCTION

(Looking Back)
Scale: 1/4" = 1'-0"

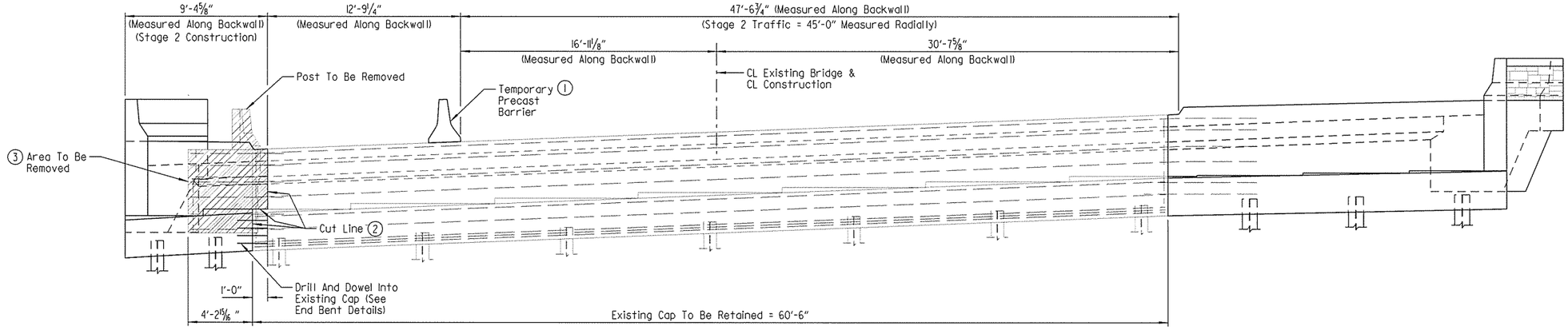

END BENT NO. 1 ELEVATION - STAGE 2 CONSTRUCTION

(Looking Back)
Scale: 1/4" = 1'-0"

(1) For details of Temporary Precast Barrier, see Std. Dwg. No. TC-4. Do not connect Temporary Precast Barrier to backwall.

(2) Existing backwall shall be cut to clean lines.

(3) Concrete shall be removed from existing backwall as shown. The existing reinforcing steel shall be retained to be lapped to the new reinforcing steel as shown in the End Bent Details. See Dwg. Nos. 58106 - 58107.

NOTES:
Details which relate to maintenance of traffic are shown on the bridge plans for information only. See Roadway Plans for Maintenance of Traffic.

Dimensions are measured along front face of backwall.

STATE OF ARKANSAS
LICENSED PROFESSIONAL ENGINEER
No. 14498
3-22-16
ADAM B. HALL
BRIDGE ENGINEER

SHEET 3 OF 4
DETAILS OF STAGE CONSTRUCTION
HIGHWAY 112
OVER INTERSTATE 49
ROUTE SEC.
ARKANSAS STATE HIGHWAY COMMISSION
LITTLE ROCK, ARK.

DRAWN BY: CWT DATE: DEC. 2015 FILENAME: BBB0414XI_SC3.dgn
CHECKED BY: ABH DATE: JAN. 2016 SCALE: AS SHOWN
DESIGNED BY: JES DATE: DEC. 2015
BRIDGE NO. 05692 DRAWING NO. 58104

JesKinner 3/20/2016 3:34:47 PM
WORKSPACE: AHTD_Edge
L:\ROW\107\107 -1540 Widening & Interchange Improvement\Drawings\1540-HWY112-S104-SC.dgn
REVISED DATE:

DATE REVISED	DATE FILMED	DATE REVISED	DATE FILMED	FED. ROAD DIST. NO.	STATE	FED. AID PROJ. NO.	SHEET NO.	TOTAL SHEETS
				6	ARK.			
				JOB NO.		BB0414	382	886
				(1) 05692		STAGE CONST.		58105

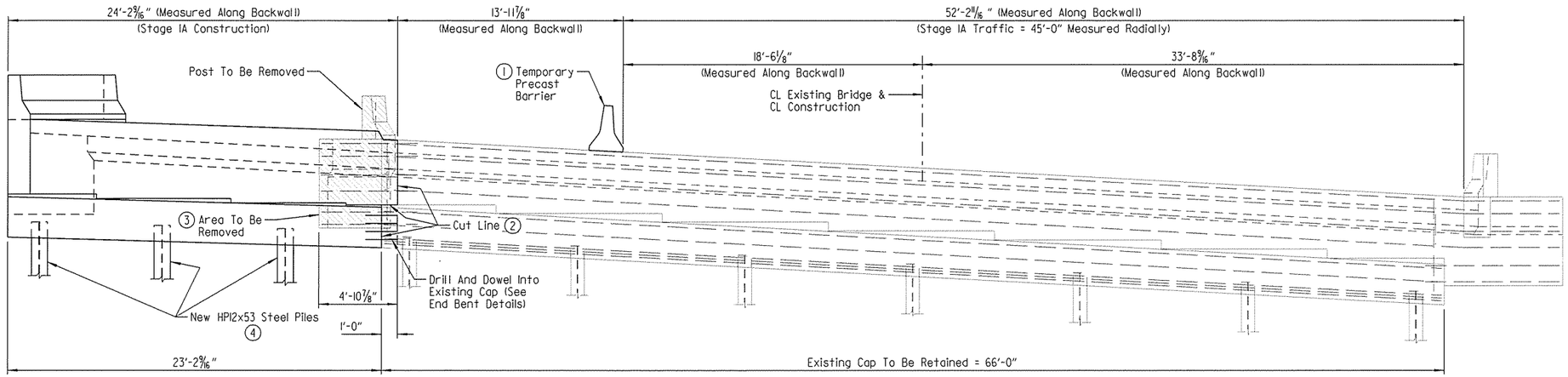

END BENT NO. 5 ELEVATION - STAGE IA CONSTRUCTION

(Looking Ahead)
Scale: 1/4" = 1'-0"

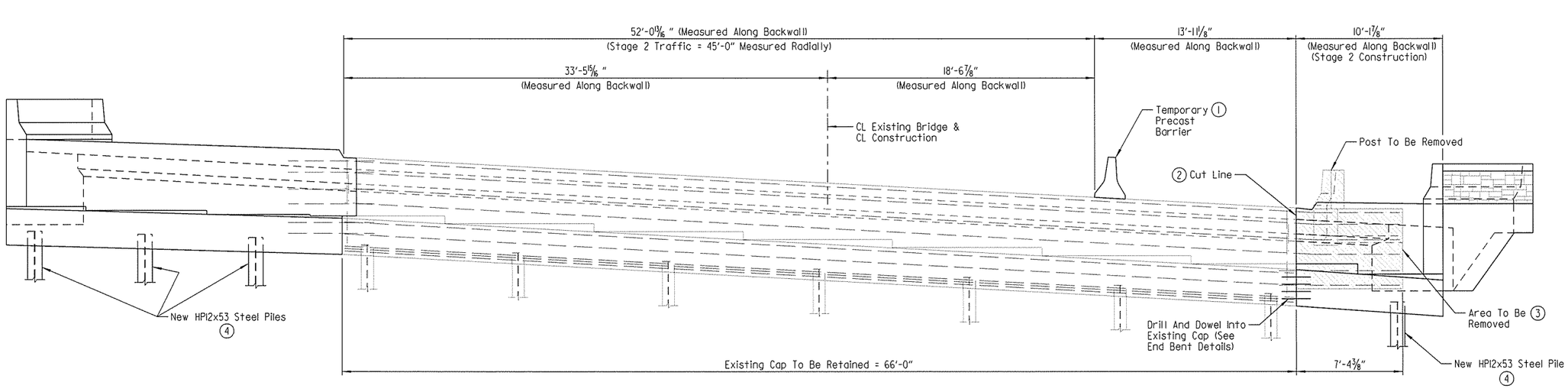

END BENT NO. 5 ELEVATION - STAGE 2 CONSTRUCTION

(Looking Ahead)
Scale: 1/4" = 1'-0"

(1) For details of Temporary Precast Barrier, see Std. Dwg. No. TC-4. Do not connect Temporary Precast Barrier to backwall.

(2) Existing backwall shall be cut to clean lines.

(3) Concrete shall be removed from existing backwall as shown. The existing reinforcing steel shall be retained to be lapped to the new reinforcing steel as shown in the End Bent Details. See Dwg. Nos. 58108 & 58109.

(4) New piles are to be driven in place during Stage I Construction before soil nails are placed and Retaining Wall No. 1 is constructed.

NOTES:
Details which relate to maintenance of traffic are shown on the bridge plans for information only. See Roadway Plans for Maintenance of Traffic.

Dimensions are measured along front face of backwall.

STATE OF ARKANSAS
LICENSED PROFESSIONAL ENGINEER
No. 14498
3-28-16
ADAM B. HALL
BRIDGE ENGINEER

SHEET 4 OF 4
DETAILS OF STAGE CONSTRUCTION
HIGHWAY 112
OVER INTERSTATE 49

ROUTE SEC.

ARKANSAS STATE HIGHWAY COMMISSION

LITTLE ROCK, ARK.

DRAWN BY: JES DATE: JAN. 2016 FILENAME: BBB0414XI_SC4.dgn
CHECKED BY: ABH DATE: JAN. 2016 SCALE: AS SHOWN
DESIGNED BY: JES DATE: JAN. 2016

BRIDGE NO. 05692 DRAWING NO. 58105

jeskinner 3/20/2016 3:34:48 PM
WORKSPACE: AHTD_Bridge
L:\20INI\007\07 - I-540 Widening & Interchange Improvement\Drawings\I540-HWY112-SI05-SC.dgn
REVISED DATE:

DATE REVISED	DATE FILMED	DATE REVISED	DATE FILMED	FED. ROAD DIST. NO.	STATE	FED. AID PROJ. NO.	SHEET NO.	TOTAL SHEETS
				6	ARK.			
				JOB NO.		BB0414	383	886
				(1) 05692		END BENT DETAILS		58106

(1) Wing and rail shall be constructed on arcs concentric to CL Construction.

(2) Existing HP10x42 steel piles to remain in place

(3) Dimensions and elevations are based on the following:

1) The best-fit Vertical Curve Data and end bent stationing as shown on the layout
2) The end bent skew angle as shown on existing plans and on this drawing
3) The bridge deck cross slope as shown on existing plans

Prior to construction of any portion of the end bents, the Contractor shall field verify these elevations and dimensions. The Contractor shall be responsible for establishing final bearing elevations and adjusting elements of the new construction accordingly. See notes on layout drawing for additional verification requirements prior to construction.

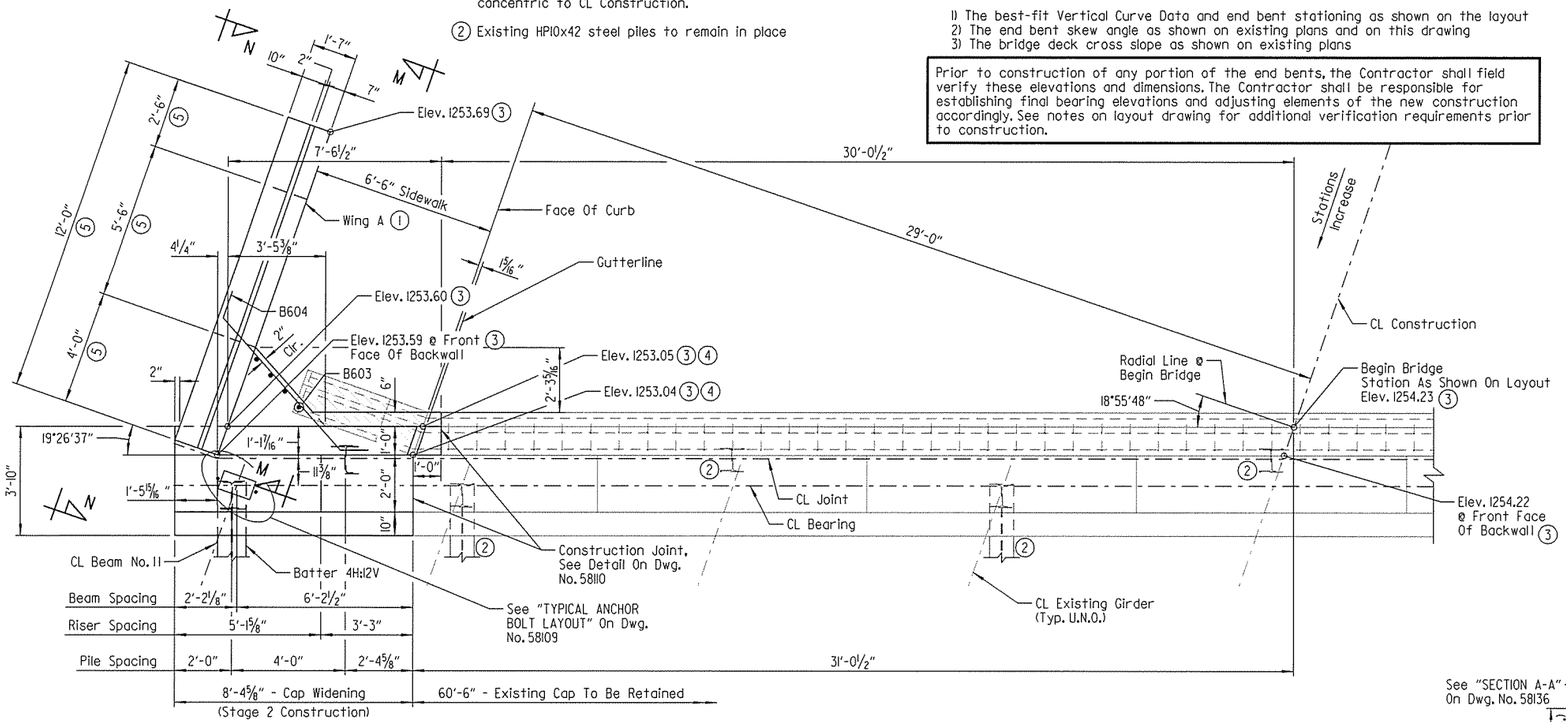

LEFT PLAN - END BENT NO. 1

Scale: ⅜" = 1'-0"

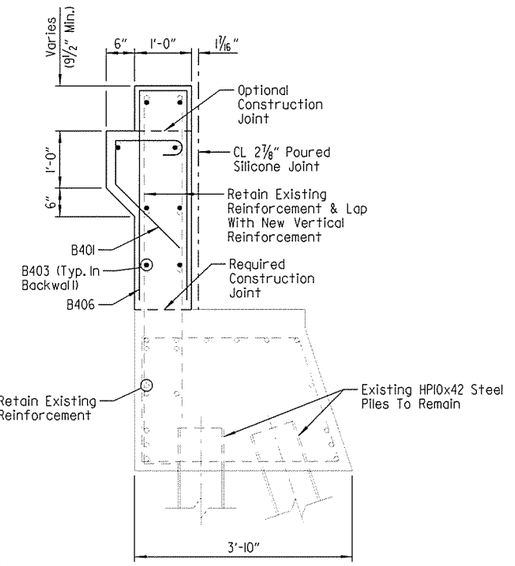

SECTION B-B

Scale: ¾" = 1'-0"

(4) At Gutterline

(5) Measured along front face of wing

(6) 7-B405 @ 6" O.C. (B401 Spaced With B405 In Paving Bracket)

(7) 2 Spaces @ 6"

(8) For correct bar marks, see elevation views on this drawing and Dwg. No. 58107.

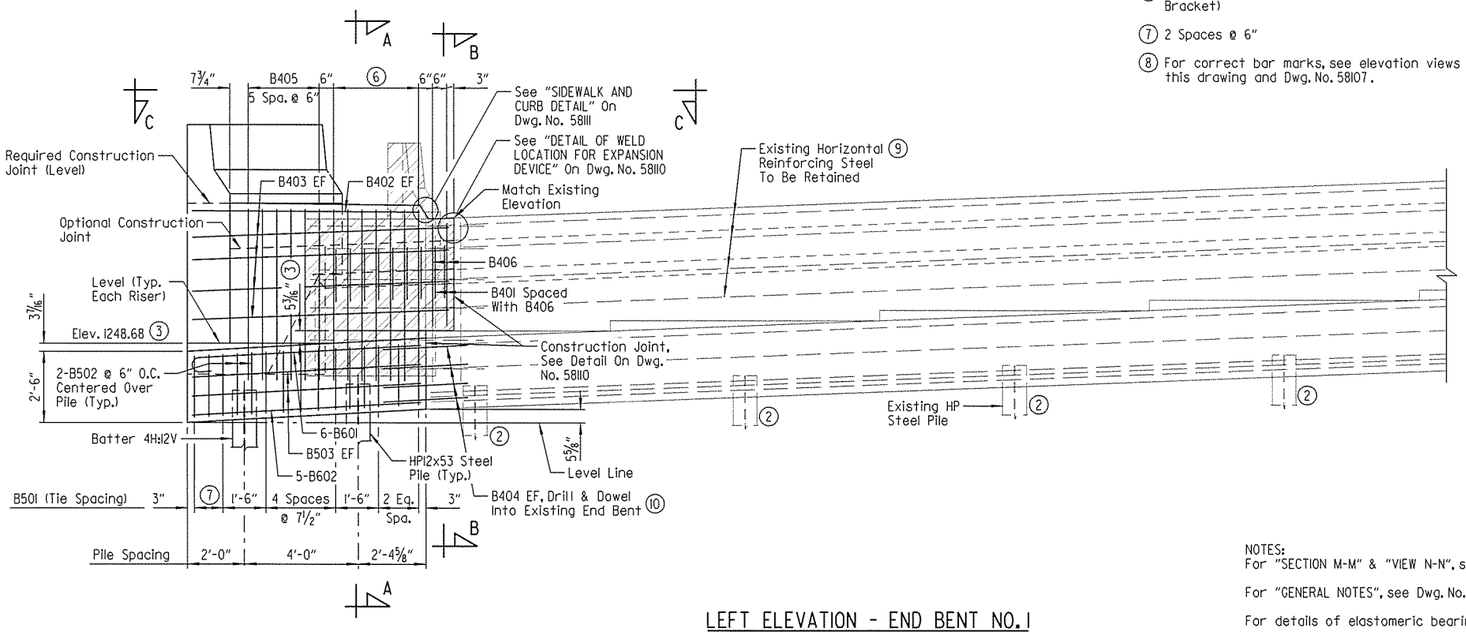

LEFT ELEVATION - END BENT NO. 1

(Looking Back)
Scale: ⅜" = 1'-0"

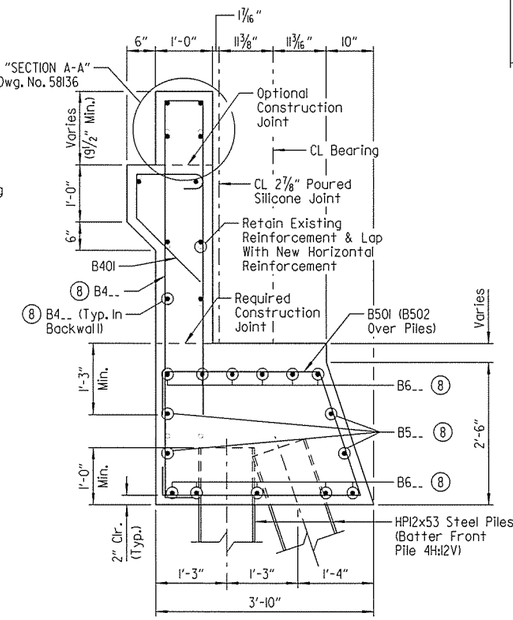

SECTION A-A

Scale: ¾" = 1'-0"

(9) Retain and clean existing reinforcing steel from existing end bent, field bend as required, and lap with new reinforcing steel as shown. Any damaged reinforcing steel shall be replaced by dowel bars drilled and grouted into place at the Contractor's expense.

(10) Grout B404 Bars into 1'-3" min. deep drilled holes. Grout used shall be an approved epoxy grout listed on the QPL. Hole diameter and installation procedure shall be as recommended by the grout Manufacturer.

B404 Bars shall be located to avoid damaging the existing cap reinforcing steel. Payment for grouting and placement of bars shall be considered subsidiary to pay item "MODIFICATION OF EXISTING BRIDGE STRUCTURE (BRIDGE NO.)".

LEGEND

EF = Each Face
U.N.O. = Unless Noted Otherwise

NOTES:
For "SECTION M-M" & "VIEW N-N", see Dwg. No. 58110.

For "GENERAL NOTES", see Dwg. No. 58107.

For details of elastomeric bearings, see Dwg. No. 58137.

Spacing of vertical reinforcing steel in backwall is measured along front face of backwall.

For "SECTION C-C", see Dwg. No. 58112.

STATE OF ARKANSAS
LICENSED PROFESSIONAL ENGINEER
No. 16458
3-20-16
JOEL E. SKINNER
BRIDGE ENGINEER

SHEET 1 OF 7
DETAILS OF END BENTS
HIGHWAY 112
OVER INTERSTATE 49

ROUTE SEC.

ARKANSAS STATE HIGHWAY COMMISSION
LITTLE ROCK, ARK.

DRAWN BY: CWT DATE: DEC. 2015 FILENAME: BBB0414XI_A1.dgn
CHECKED BY: ABH DATE: JAN. 2016 SCALE: AS SHOWN
DESIGNED BY: JES DATE: DEC. 2015

BRIDGE NO. 05692 DRAWING NO. 58106

jeskinner 3/20/2016 3:34:48 PM
WORKSPACE: AHTD Bridge
L:\20AN\001707 - I-540 Widening & Interchange Improvement\Drawings\I540-HWY112-S201-AB.dgn
REVISED DATE:

DATE REVISED	DATE FILMED	DATE REVISED	DATE FILMED	FED. ROAD DIST. NO.	STATE	FED. AID PROJ. NO.	SHEET NO.	TOTAL SHEETS
				6	ARK.			
				JOB NO.		BB0414	384	886
				(1) 05692		END BENT DETAILS		58107

(1) Wings and rails shall be constructed on arcs concentric to CL Construction

(2) Existing HP10x42 steel piles to remain in place

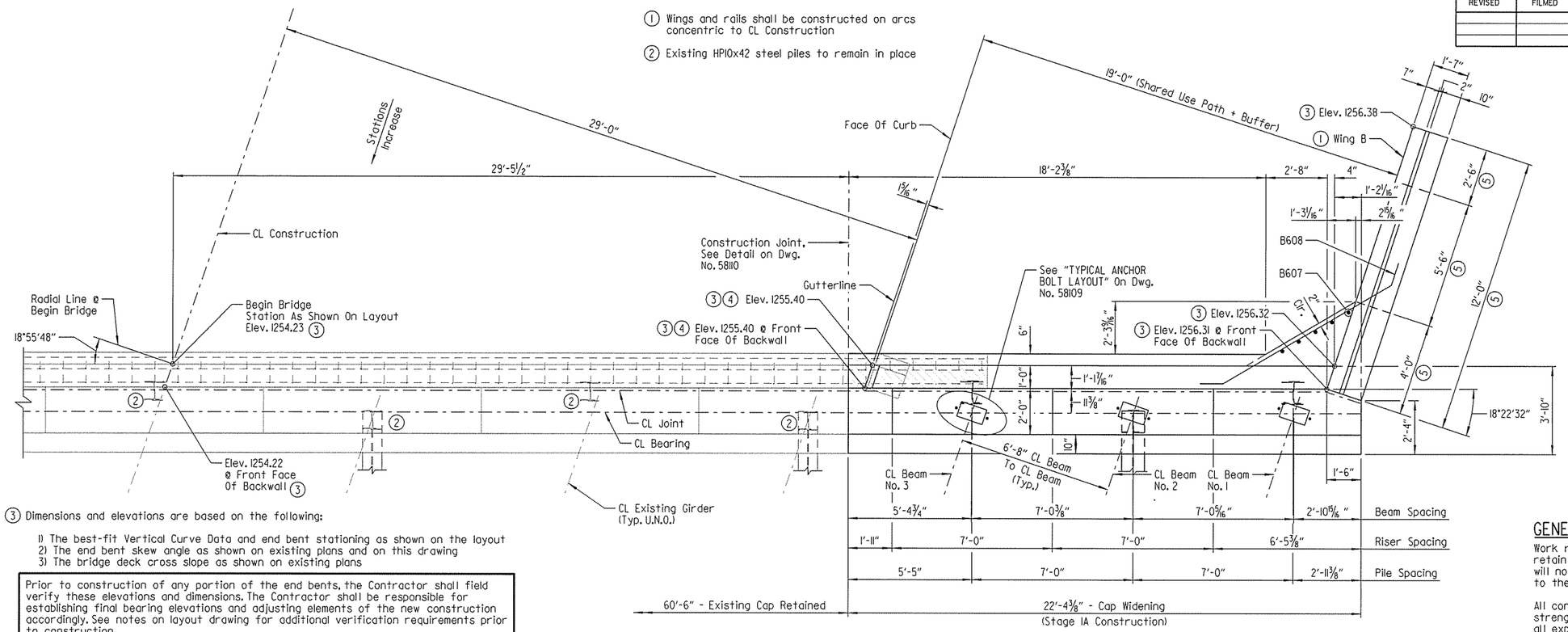

(3) Dimensions and elevations are based on the following:

1) The best-fit Vertical Curve Data and end bent stationing as shown on the layout
2) The end bent skew angle as shown on existing plans and on this drawing
3) The bridge deck cross slope as shown on existing plans

Prior to construction of any portion of the end bents, the Contractor shall field verify these elevations and dimensions. The Contractor shall be responsible for establishing final bearing elevations and adjusting elements of the new construction accordingly. See notes on layout drawing for additional verification requirements prior to construction.

(4) At Gutterline

(5) Measured along front face of wing

(6) Retain and clean existing reinforcing steel from existing end bent and lap with new reinforcing steel as shown. Any damaged reinforcing steel shall be replaced by dowel bars drilled and grouted into place at the Contractor's expense.

(7) Grout B404 Bars into 1'-3" min. deep drilled holes. Grout used shall be an approved epoxy grout listed on the QPL. Hole diameter and installation procedure shall be as recommended by the grout Manufacturer.

B404 Bars shall be located to avoid damaging the existing cap reinforcing steel. Payment for grouting and placement of bars shall be considered subsidiary to pay item "MODIFICATION OF EXISTING BRIDGE STRUCTURE (BRIDGE NO. _)".

RIGHT PLAN - END BENT NO. 1

Scale: ⅜" = 1'-0"

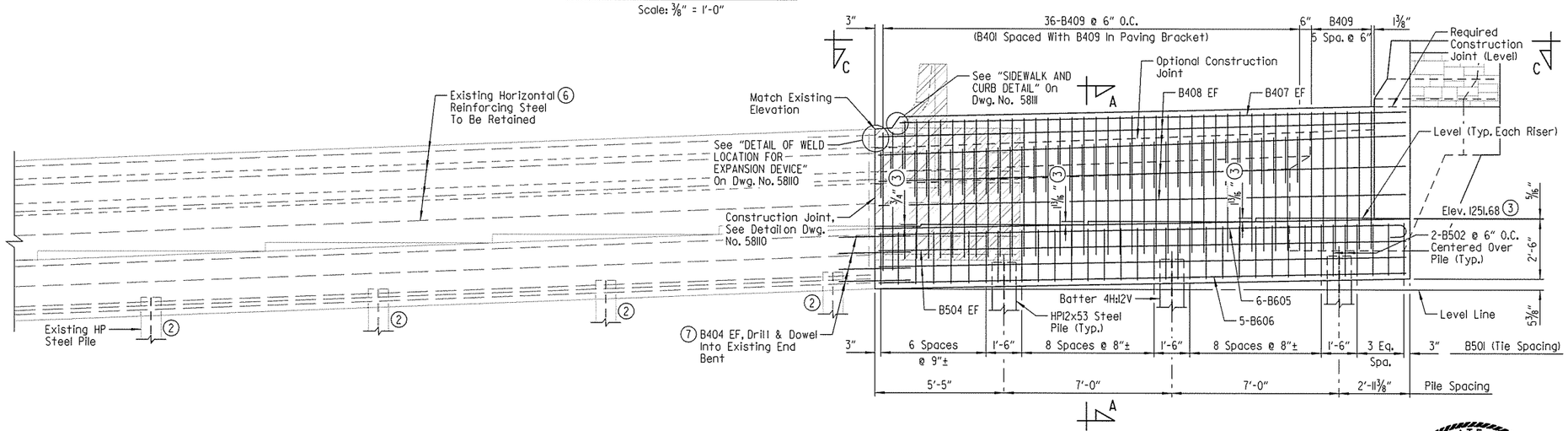

RIGHT ELEVATION - END BENT NO. 1

(Looking Back)
Scale: ⅜" = 1'-0"

GENERAL NOTES

Work required to remove and dispose portions of the existing bridge, retain and clean existing reinforcing steel and any required doweling will not be paid for directly but will be considered subsidiary to the item "MODIFICATION OF EXISTING BRIDGE STRUCTURE (BRIDGE NO. _)".

All concrete shall be Class "S" with a minimum 28 day compressive strength f'c = 3,500 psi. Concrete shall be poured in the dry, and all exposed corners to be chamfered ¾" unless otherwise noted.

All reinforcing steel shall conform to AASHTO M31 or M322 Type A, Grade 60 (yield strength = 60,000 psi), with mill test reports.

All piles shall be HP12x53 (AASHTO M270, Gr. 50).

Structural steel in end bents shall be AASHTO M270, Gr. 50W and shall be paid for as "STRUCTURAL STEEL IN BEAM SPANS (AASHTO M270, GR. 50W)".

Top reinforcing bars in cap shall be properly placed to avoid damage or interference with anchor bolts or sheet metal sleeves.

For additional information, see layout.

Class 2 Protective Surface Treatment shall be applied to the top of backwall (New Construction Only), sidewalk, roadway face of concrete parapet, and Shared Use Path + Buffer surfaces. Class 3 Textured Coating Finish shall be applied in accordance with SP JOB NO. BB0414 "TEXTURED COATING FINISH" and in accordance with Subsection 802.19. Textured Coating Finish shall not be applied on surfaces where Class 2 Protective Surface Treatment is applied.

LEGEND

EF = Each Face
U.N.O. = Unless Noted Otherwise

NOTES:
For "SECTION A-A", see Dwg. No. 58107.

For details of elastomeric bearings, see Dwg. No. 58137.

Spacing of vertical reinforcing steel in backwall is measured along front face of backwall.

For "SECTION C-C", see Dwg. No. 58112.

STATE OF ARKANSAS
LICENSED PROFESSIONAL ENGINEER
No. 16458
3-20-16
JOEL E. SKINNER

BRIDGE ENGINEER

SHEET 2 OF 7
DETAILS OF END BENTS
HIGHWAY 112
OVER INTERSTATE 49

ROUTE SEC.

ARKANSAS STATE HIGHWAY COMMISSION
LITTLE ROCK, ARK.

DRAWN BY: CWT DATE: DEC. 2015 FILENAME: BBB0414X1_A2.dgn
CHECKED BY: ABH DATE: JAN. 2016 SCALE: AS SHOWN
DESIGNED BY: JES DATE: DEC. 2015
BRIDGE NO. 05692 DRAWING NO. 58107

jeskinner 3/20/2016 3:34:49 PM
WORKSPACE: AHTD Bridge
L:\ROW\007707 - I-540 Widening & Interchange Improvement\Drawings\I540-HWY112-S202-AB.dgn
REVISED DATE:

DATE REVISED	DATE FILMED	DATE REVISED	DATE FILMED	FED. ROAD DIST. NO.	STATE	FED. AID PROJ. NO.	SHEET NO.	TOTAL SHEETS
				6	ARK.			
				JOB NO.		BB0414	385	886
				(1) 05692		END BENT DETAILS		58108

(1) Wing and rail shall be constructed on arcs concentric to CL Construction

(2) Existing HPI0x42 steel piles to remain in place

(3) Dimensions and elevations are based on the following:

1) The best-fit Vertical Curve Data and end bent stationing as shown on the layout
2) The end bent skew angle as shown on existing plans and on this drawing
3) The bridge deck cross slope as shown on existing plans

Prior to construction of any portion of the end bents, the Contractor shall field verify these elevations and dimensions. The Contractor shall be responsible for establishing final bearing elevations and adjusting elements of the new construction accordingly. See notes on layout drawing for additional verification requirements prior to construction.

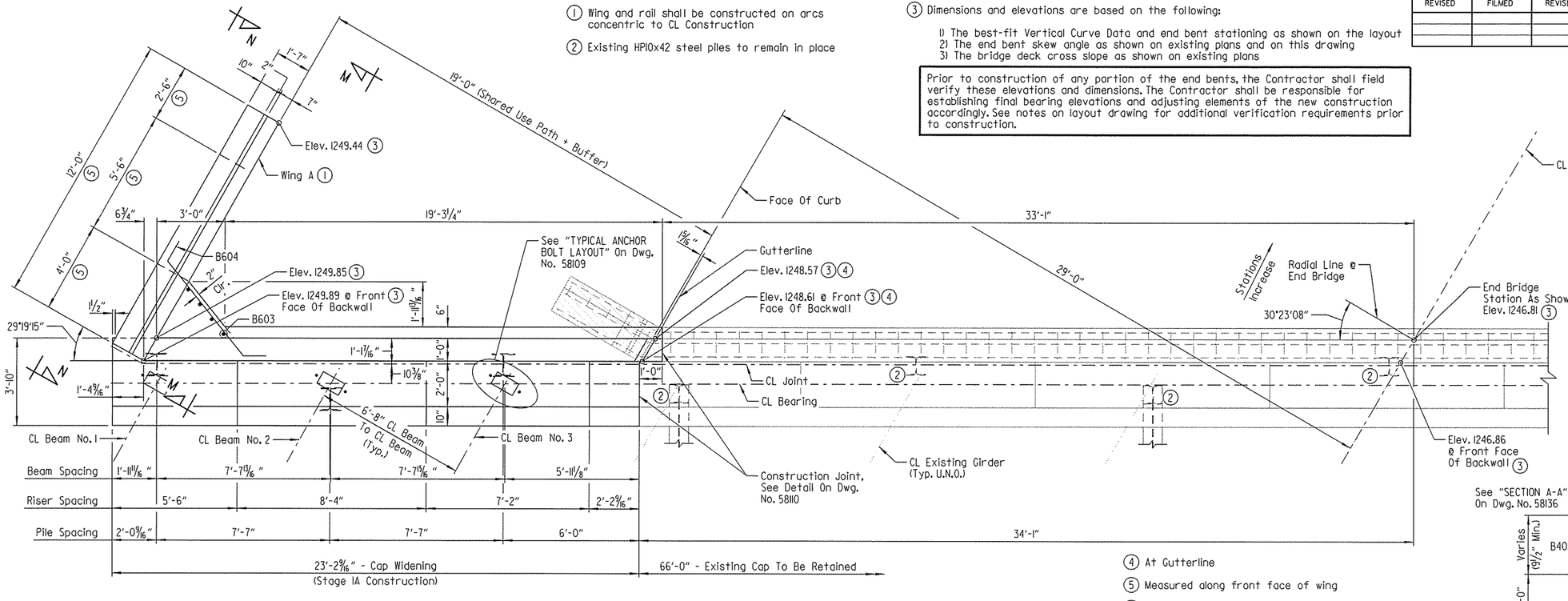

LEFT PLAN - END BENT NO. 5

Scale: ⅜" = 1'-0"

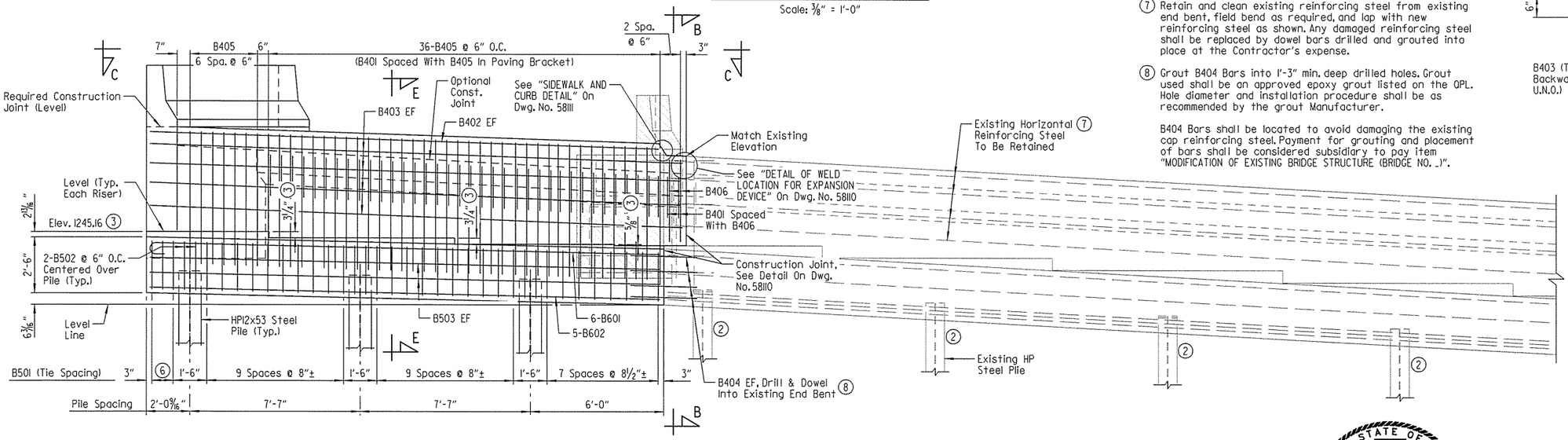

LEFT ELEVATION - END BENT NO. 5

(Looking Ahead)
Scale: ⅜" = 1'-0"

(4) At Gutterline

(5) Measured along front face of wing

(6) 2 Equal Spaces

(7) Retain and clean existing reinforcing steel from existing end bent, field bend as required, and lap with new reinforcing steel as shown. Any damaged reinforcing steel shall be replaced by dowel bars drilled and grouted into place at the Contractor's expense.

(8) Grout B404 Bars into 1'-3" min. deep drilled holes. Grout used shall be an approved epoxy grout listed on the QPL. Hole diameter and installation procedure shall be as recommended by the grout Manufacturer.

B404 Bars shall be located to avoid damaging the existing cap reinforcing steel. Payment for grouting and placement of bars shall be considered subsidiary to pay item "MODIFICATION OF EXISTING BRIDGE STRUCTURE (BRIDGE NO. _)".

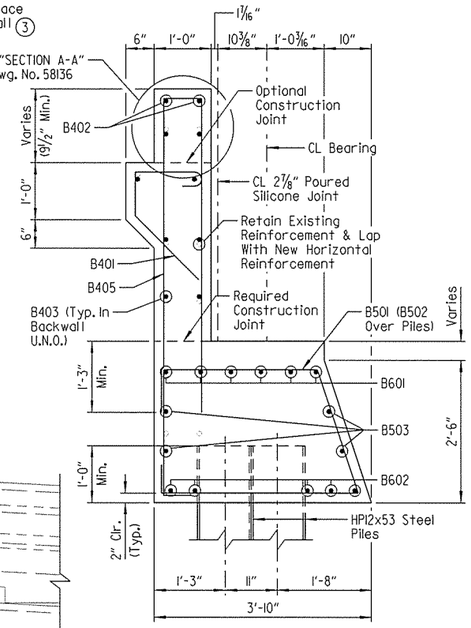

SECTION E-E

Scale: ¾" = 1'-0"

NOTES:
For "SECTION M-M" & "VIEW N-N", see Dwg. No. 58110.

For "SECTION B-B", see Dwg. No. 58106

For "SECTION C-C", see Dwg. No. 58112.

For "GENERAL NOTES", See Dwg. No. 58107

For details of elastomeric bearings, see Dwg. No. 58137

Spacing of vertical reinforcing steel in backwall is measured along front face of backwall.

LEGEND

EF = Each Face
U.N.O. = Unless Noted Otherwise

STATE OF ARKANSAS
LICENSED PROFESSIONAL ENGINEER
No. 16458
3-20-16
JOEL E. SKINNER
BRIDGE ENGINEER

SHEET 3 OF 7
DETAILS OF END BENTS
HIGHWAY 112
OVER INTERSTATE 49
ROUTE SEC.
ARKANSAS STATE HIGHWAY COMMISSION
LITTLE ROCK, ARK.

DRAWN BY: CWT DATE: DEC. 2015 FILENAME: BBB0414XL_A3.dgn
CHECKED BY: ABH DATE: JAN. 2016 SCALE: AS SHOWN
DESIGNED BY: JES DATE: DEC. 2015
BRIDGE NO. 05692 DRAWING NO. 58108

jeskinner 3/20/2016 3:34:49 PM
WORKSPACE: AHTD Bridge
L:\CON\NOI7107 - I-540 Widening & Interchange Improvement\Drawings\I540-HWY12-S203-AB.dgn
REVISED DATE:

DATE REVISED	DATE FILMED	DATE REVISED	DATE FILMED	FED. ROAD DIST. NO.	STATE	FED. AID PROJ. NO.	SHEET NO.	TOTAL SHEETS
				6	ARK.			
				JOB NO.		BB0414	386	886
				(1) 05692		END BENT DETAILS		58109

(1) Wing and rail shall be constructed on arcs concentric to CL Construction.

(2) Existing HP10x42 steel piles to remain in place

(3) Dimensions and elevations are based on the following:

1) The best-fit Vertical Curve Data and end bent stationing as shown on the layout
2) The end bent skew angle as shown on existing plans and on this drawing
3) The bridge deck cross slope as shown on existing plans

Prior to construction of any portion of the end bents, the Contractor shall field verify these elevations and dimensions. The Contractor shall be responsible for establishing final bearing elevations and adjusting elements of the new construction accordingly. See notes on layout drawing for additional verification requirements prior to construction.

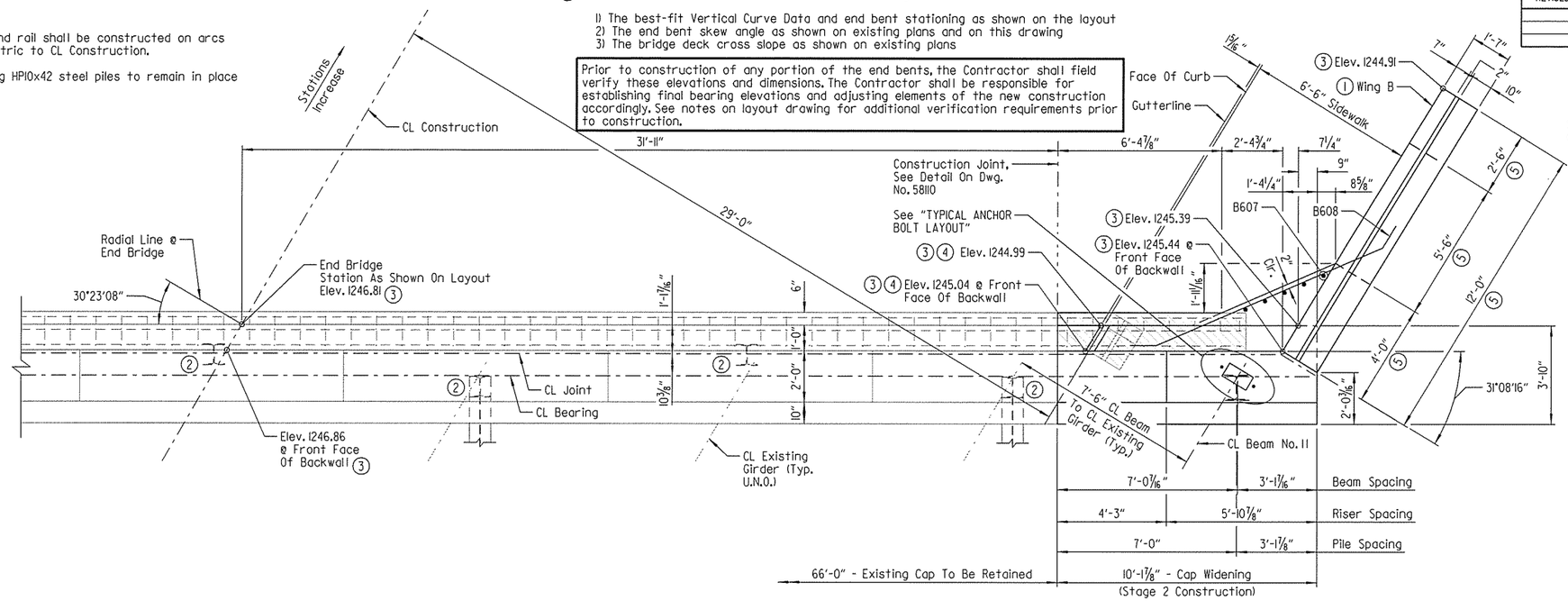

RIGHT PLAN - END BENT NO. 5

Scale: 3/8" = 1'-0"

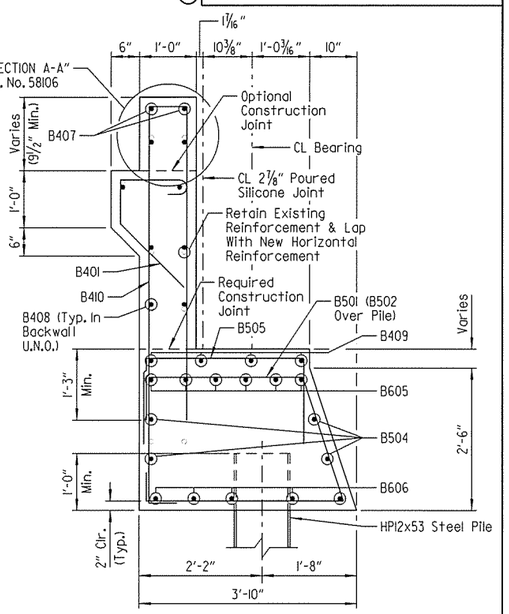

SECTION F-F

Scale: 3/4" = 1'-0"

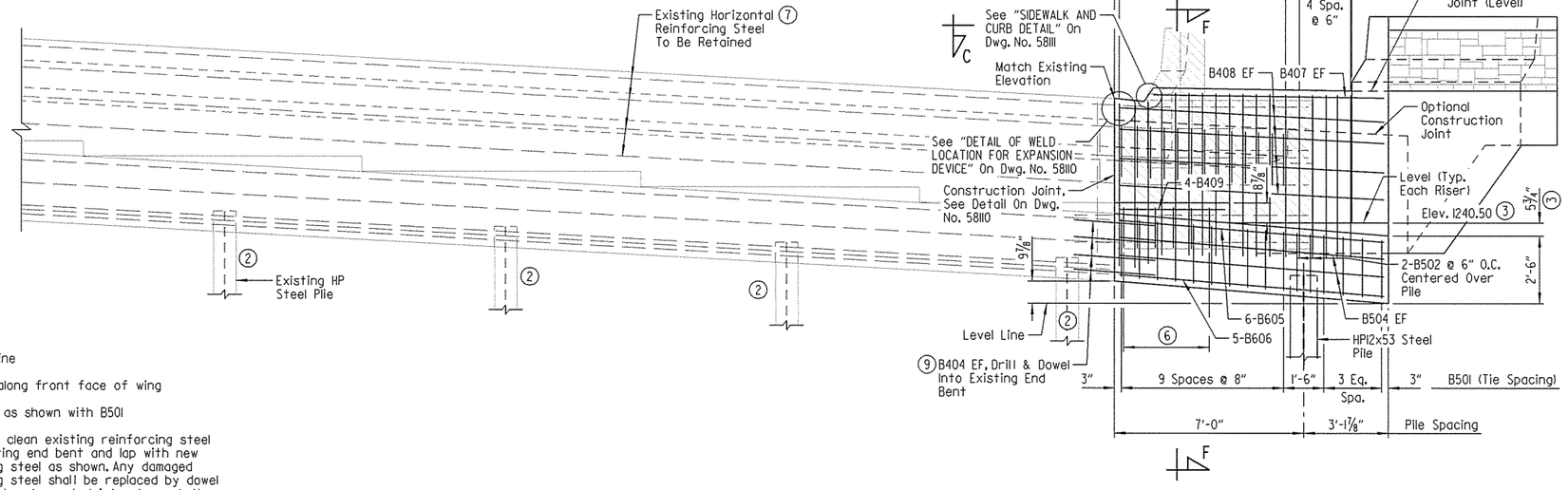

RIGHT ELEVATION - END BENT NO. 5

(Looking Ahead)
Scale: 3/8" = 1'-0"

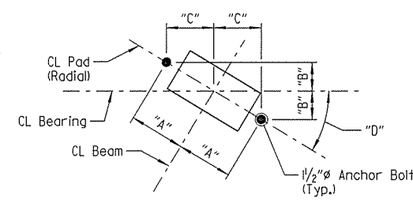

TYPICAL ANCHOR BOLT LAYOUT

Scale: 1" = 1'-0"

TABLE OF VARIABLES					
BENT NO.	BEAM NO.	"A"	"B"	"C"	"D"
1	1	8 1/2"	2 11/16"	8/16"	18°25'26"
	2	8 1/2"	2 11/16"	8/16"	18°30'18"
	3	8 1/2"	2 11/16"	8/16"	18°35'13"
	11	8 1/2"	2 13/16"	8"	19°28'07"
5	1	8 3/4"	4 5/16"	7 5/8"	29°18'19"
	2	8 3/4"	4 5/16"	7 5/8"	29°26'31"
	3	8 3/4"	4 5/16"	7 5/8"	29°34'49"
	11	8 3/4"	4 1/2"	7 1/2"	31°04'33"

(4) At Gutterline

(5) Measured along front face of wing

(6) B505 place as shown with B501

(7) Retain and clean existing reinforcing steel from existing end bent and lap with new reinforcing steel as shown. Any damaged reinforcing steel shall be replaced by dowel bars drilled and grouted into place at the Contractor's expense.

(8) 13-B410 @ 6" O.C. (B401 Spaced With B410 In Paving Bracket)

(9) Grout B404 Bars into 1'-3" min. deep drilled holes. Grout used shall be an approved epoxy grout listed on the OPL. Hole diameter and installation procedure shall be as recommended by the grout Manufacturer.

B404 Bars shall be located to avoid damaging the existing cap reinforcing steel. Payment for grouting and placement of bars shall be considered subsidiary to pay item "MODIFICATION OF EXISTING BRIDGE STRUCTURE (BRIDGE NO. _)".

LEGEND

EF = Each Face
U.N.O. = Unless Noted Otherwise

NOTES:
For "GENERAL NOTES", see Dwg. No. 58107.

For details of elastomeric bearings, see Dwg. No. 58137.

For "SECTION C-C", see Dwg. No. 58112.

Spacing of vertical reinforcing steel in backwall is measured along front face of backwall.

STATE OF ARKANSAS
LICENSED PROFESSIONAL ENGINEER
No. 16458
3-20-16
JOEL E. SKINNER

BRIDGE ENGINEER

SHEET 4 OF 7
DETAILS OF END BENTS
HIGHWAY 112
OVER INTERSTATE 49

ROUTE SEC.

ARKANSAS STATE HIGHWAY COMMISSION
LITTLE ROCK, ARK.

DRAWN BY: CWT DATE: DEC. 2015 FILENAME: BBB0414XL_A4.dgn
CHECKED BY: ABH DATE: JAN. 2016 SCALE: AS SHOWN
DESIGNED BY: JES DATE: DEC. 2015

BRIDGE NO. 05692 DRAWING NO. 58109

jeskinner 3/20/2016 3:34:49 PM
WORKSPACE: AHTD_Bridge
L:\2014\0014707 - I-540 Widening & Interchange Improvement\Drawings\I540-HWY112-S204-AB.dgn
REVISED DATE:

DATE REVISED	DATE FILMED	DATE REVISED	DATE FILMED	FED. ROAD DST. NO.	STATE	FED. AID PROJ. NO.	SHEET NO.	TOTAL SHEETS
				6	ARK.			
				JOB NO.		BB0414	387	886
				(1) 05692		END BENT DETAILS		58110

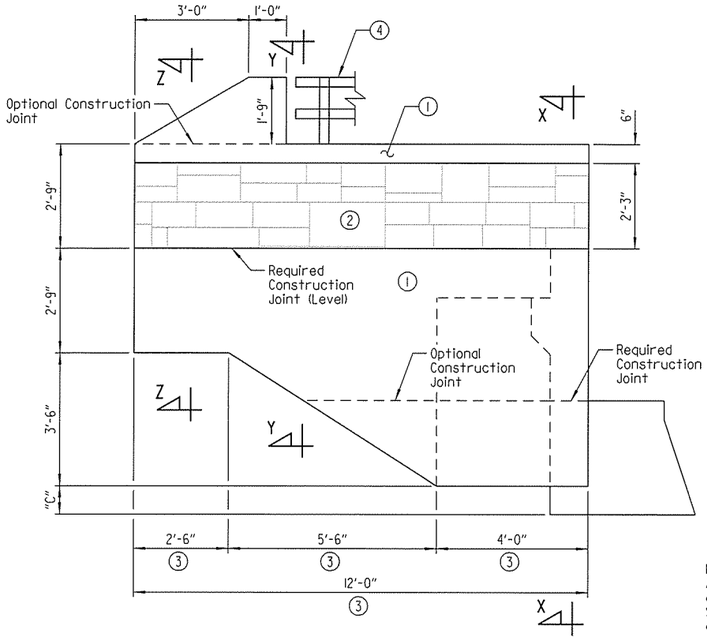

VIEW N-N
Scale: 1/2" = 1'-0"

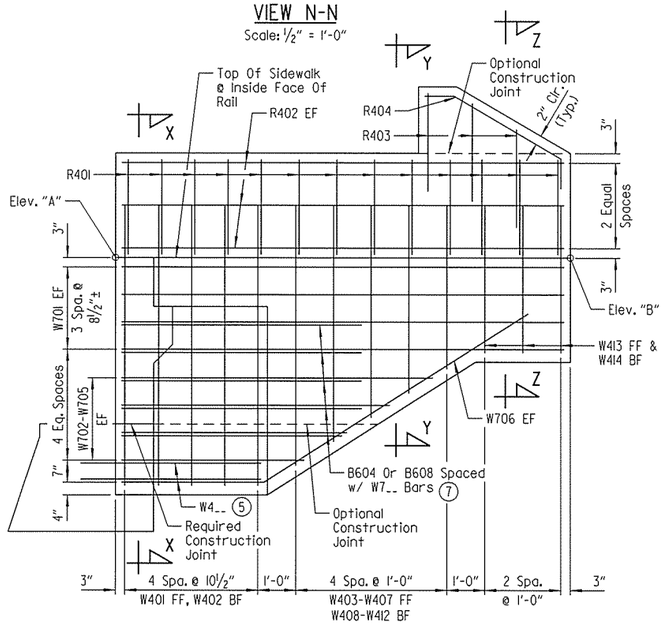

SECTION M-M
Scale: 1/2" = 1'-0"

TABLE OF VARIABLES			
LOCATION	"A"	"B"	"C"
END BENT 1 - WING A	1253.59	1253.69	1'-6 9/16"
END BENT 1 - WING B	1256.31	1256.38	1 11/16"
END BENT 5 - WING A	1249.89	1249.44	9 7/16"
END BENT 5 - WING B	1245.44	1244.91	1'-1 11/16"

(1) A Class 3 Textured Coating Finish (Color = Brown, Color Chip No. 33578)

(2) "Ashlar Stone" Form Liner & Class 3 Textured Coating Finish (Color = Brown, Color Chip No. 30219)

Form liner shall be a max. depth of 2" to provide a min. clearance of 1 1/2" to rail reinforcing. See SP JOB NO. BB0414 "ARCHITECTURAL FINISH".

(3) Measured Along Front Face Of Wing

(4) For details of Type H2 Metal Rail, see Dwg. No. 58132.

(5) For correct bar marks, see "SECTION D-D" on Dwg. No. 58112.

(6) Grind flush

(7) Trim bottom B604 or B608 as required to ensure a minimum clear cover of 3" is maintained.

NOTE:
A Class 3 Textured Coating Finish shall be applied to bridge surfaces as specified in SP JOB NO. BB0414 "TEXTURED COATING FINISH" and in accordance with Subsection 802.19.

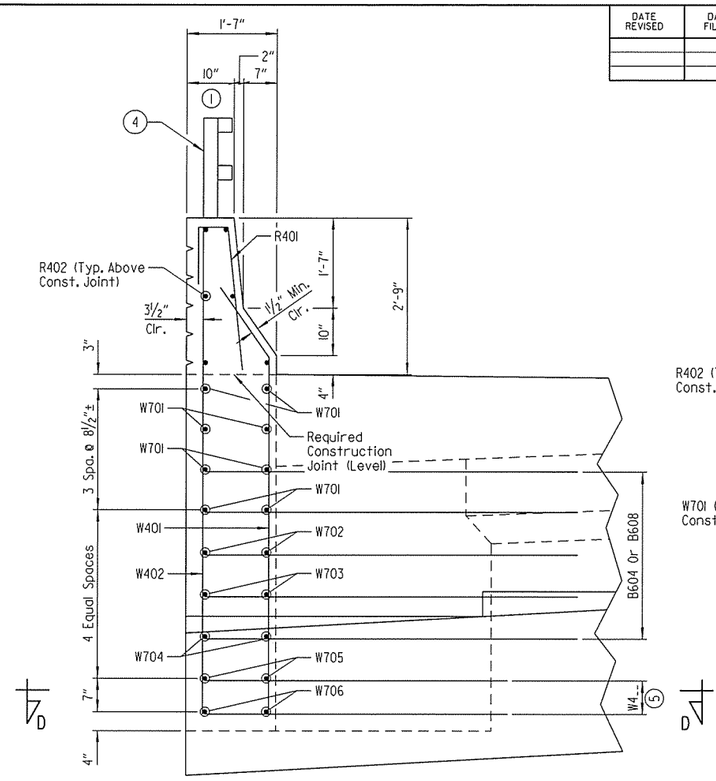

SECTION X-X
Scale: 3/4" = 1'-0"

LEGEND
FF = Front Face
BF = Back Face
EF = Each Face
U.N.O. = Unless Noted Otherwise

NOTE:
For "SECTION D-D", see Dwg. No. 58112.

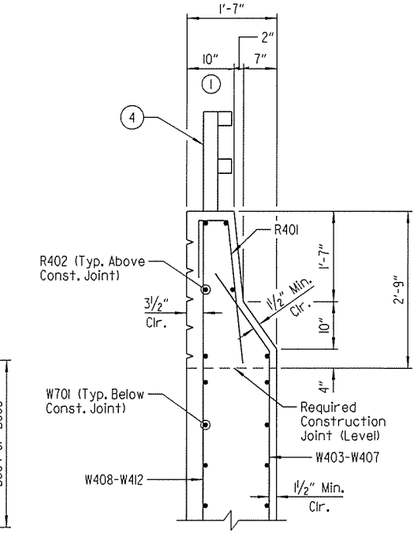

SECTION Y-Y
Scale: 3/4" = 1'-0"

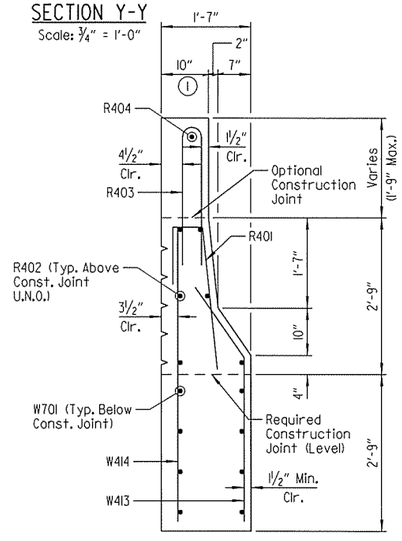

SECTION Z-Z
Scale: 3/4" = 1'-0"

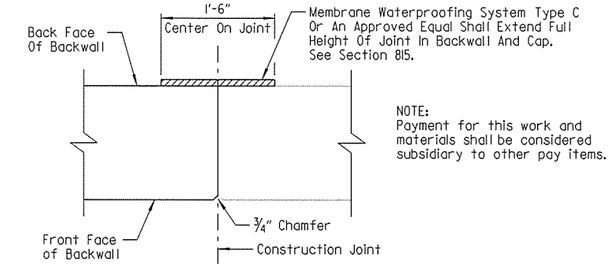

CONSTRUCTION JOINT DETAIL
Scale: 1" = 1'-0"

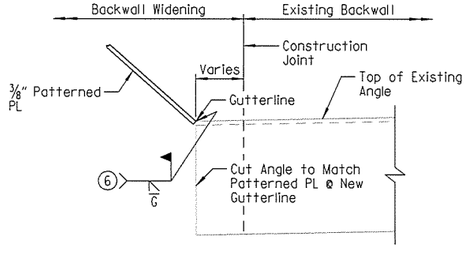

DETAIL OF WELD LOCATION FOR EXPANSION DEVICE
No Scale

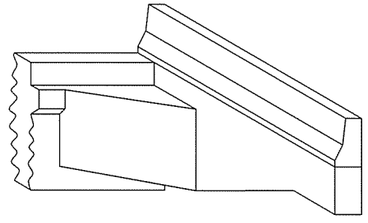

THREE DIMENSIONAL VIEW OF RAIL
No Scale

STATE OF ARKANSAS
LICENSED PROFESSIONAL ENGINEER
No. 16458
3-20-16
JOEL E. SKINNER
BRIDGE ENGINEER

SHEET 5 OF 7
DETAILS OF END BENTS
HIGHWAY 112
OVER INTERSTATE 49
ROUTE SEC.
ARKANSAS STATE HIGHWAY COMMISSION
LITTLE ROCK, ARK.

DRAWN BY: CWT DATE: DEC. 2015 FILENAME: BBB0414X1_A5.dgn
CHECKED BY: ABH DATE: JAN. 2016 SCALE: AS SHOWN
DESIGNED BY: JES DATE: DEC. 2015
BRIDGE NO. 05692 DRAWING NO. 58110

jeskinner 3/20/2016 3:34:50 PM
WORKSPACE: AHTD_Bridge
L:\2016\16077 - I-540 Widening & Interchange Improvement\Drawings\I540-HWY112-S205-AB.dgn
REVISED DATE:

DATE REVISED	DATE FILMED	DATE REVISED	DATE FILMED	FED. ROAD DIST. NO.	STATE	FED. AID PROJ. NO.	SHEET NO.	TOTAL SHEETS
				6	ARK.			
				JOB NO.		BB0414	388	886
				① 05692		END BENT DETAILS		58111

BAR LIST - BENT NO. 1

Mark	No. Req'd	Length	"A"	"B"	Pin Dia.
B401	45	3'-11"			2"
B402	2	8'-0"			STR.
B403	8	9'-1"			STR.
B404	16	3'-0"			STR.
B405	13	12'-6"	6'-0"	8"	2"
B406	2	7'-8"	3'-7"	8"	2"
B407	2	21'-2"			STR.
B408	8	22'-2"			STR.
B409	42	12'-0"	5'-9"	8"	2"
B501	40	11'-1"			2½"
B502	10	7'-0"			2½"
B503	4	8'-1"			STR.
B504	4	22'-0"			STR.
B601	6	8'-9"	8'-1"		4½"
B602	5	8'-1"			STR.
B603	4	4'-1"			STR.
B604	5	8'-2"	6'-2"		4½"
B605	6	22'-8"	22'-0"		4½"
B606	5	22'-0"			STR.
B607	5	4'-9"			STR.
B608	5	10'-6"	8'-6"		4½"
R401	26	3'-9"			2"
R402	12	11'-8"			STR.
R403	6	5'-4"			3"
R404	2	5'-0"			3"
W401	10	7'-5½"	6'-3½"		3"
W402	10	8'-7"			STR.
W403 To W407	2 Each	6'-11" To 4'-4½"	5'-9" To 3'-2½"		3"
W408 To W412	2 Each	8'-1" To 5'-6"			STR.
W413	6	3'-11½"	2'-9½"		3"
W414	6	5'-1"			STR.
W415	2	11'-10"			2"
W416	2	14'-0"			2"
W701	16	11'-8"			STR.
W702 To W705	4 Each	8'-2½" To 4'-9½"			STR.
W706	4	12'-3"			5¼"

NOTE:
Dimensions of bars are out-to-out.

BAR LIST - BENT NO. 5

Mark	No. Req'd	Length	"A"	"B"	Pin Dia.
B401	51	3'-11"			2"
B402	2	22'-10"			STR.
B403	8	23'-3"			STR.
B404	16	3'-0"			STR.
B405	43	12'-6"	6'-0"	8"	2"
B406	2	7'-10"	3'-8"	8"	2"
B407	2	8'-9"			STR.
B408	8	10'-3"			STR.
B409	4	3'-11"			STR.
B410	18	12'-10"	6'-2"	8"	2"
B501	45	11'-1"			2½"
B502	8	7'-0"			2½"
B503	4	22'-10"			STR.
B504	4	9'-10"			STR.
B505	6	5'-5½"	1'-6"	2'-8"	2½"
B601	6	23'-6"	22'-10"		4½"
B602	5	22'-10"			STR.
B603	4	5'-3"			STR.
B604	4	7'-2"	5'-2"		4½"
B605	6	10'-6"	9'-10"		4½"
B606	5	9'-10"			STR.
B607	5	4'-9"			STR.
B608	4	11'-6"	9'-6"		4½"
R401	26	3'-9"			2"
R402	12	11'-8"			STR.
R403	6	5'-4"			3"
R404	2	5'-0"			3"
W401	10	7'-9½"	6'-7½"		3"
W402	10	8'-11"			STR.
W403 To W407	2 Each	7'-3" To 4'-6"	6'-1" To 3'-4½"		3"
W408 To W412	2 Each	8'-4" To 5'-8"			STR.
W413	6	3'-11½"	2'-9½"		3"
W414	6	5'-1"			STR.
W415	2	11'-0½"			2"
W416	2	13'-5"			2"
W701	16	11'-8"			STR.
W702 To W705	4 Each	8'-3½" To 4'-9½"			STR.
W706	4	12'-3"			5¼"

BAR BENDING DIAGRAMS

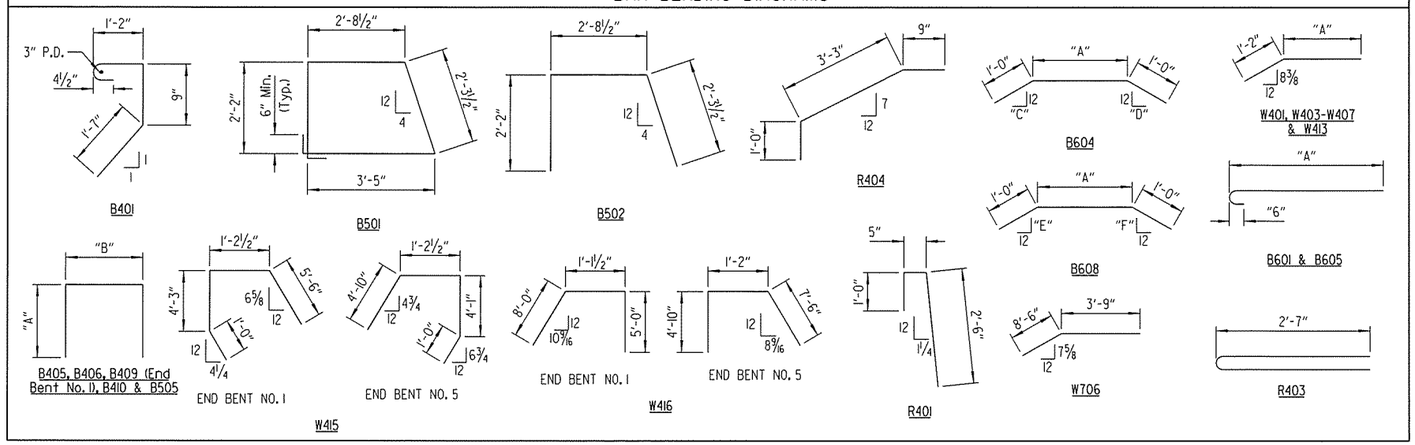

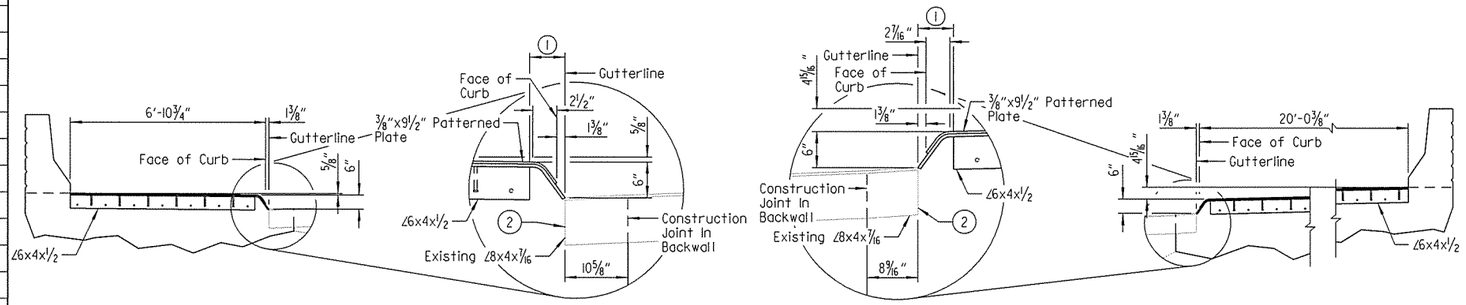

END BENT NO. 1 - LEFT SIDE
(Looking Back)

① Cope vertical leg of angle 6" from face of curb and bend horizontal leg of angle to conform to curb

END BENT NO. 1 - RIGHT SIDE
(Looking Back)

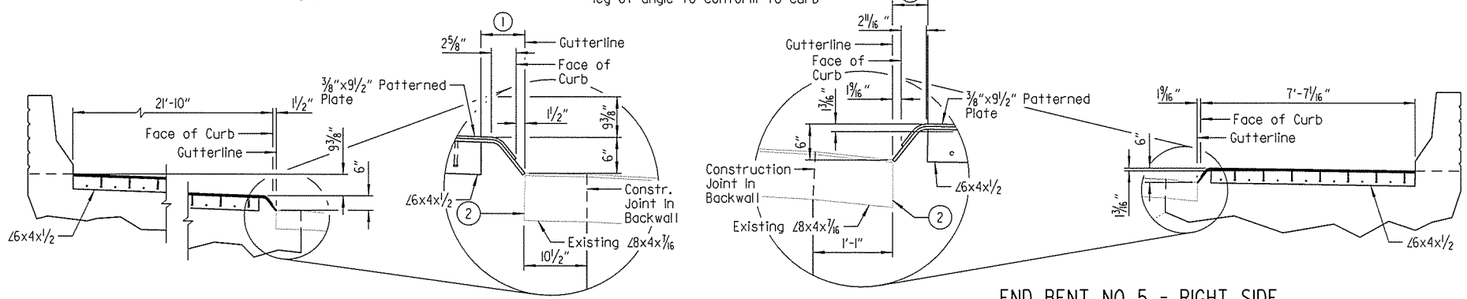

END BENT NO. 5 - LEFT SIDE
(Looking Ahead)

END BENT NO. 5 - RIGHT SIDE
(Looking Ahead)

NOTE:
See "SECTION A-A" on Dwg. No. 58136 for additional details.

② Cut existing angle to match patterened plate at new gutterline.

SIDEWALK AND CURB DETAIL

(All Horizontal Dimensions Shown Are Measured Along Front Face Of Backwall)
No Scale

TABLE OF VARIABLES

LOCATION	"C"	"D"	"E"	"F"
END BENT NO. 1	6 11/16	10 11/16	7	10 5/8
END BENT NO. 5	4 3/4	9 11/16	5 3/16	8 1/2

STATE OF ARKANSAS
LICENSED PROFESSIONAL ENGINEER
No. 16458
3-20-16
JOEL E. SKINNER
BRIDGE ENGINEER

SHEET 6 OF 7
DETAILS OF END BENTS
HIGHWAY 112
OVER INTERSTATE 49

ROUTE SEC.

ARKANSAS STATE HIGHWAY COMMISSION
LITTLE ROCK, ARK.

DRAWN BY: CWT DATE: DEC. 2015 FILENAME: BBB0414XI_A6.dgn
CHECKED BY: ABH DATE: JAN. 2016 SCALE: AS SHOWN
DESIGNED BY: JES DATE: DEC. 2015
BRIDGE NO. 05692 DRAWING NO. 58111

jeskinner 3/20/2016 3:34:50 PM
WORKSPACE: AHTD_Bridge
L:\ZDATA\00707 - I-540 Widening & Interchange Improvement\Drawings\I540-HWY112-S206-A8.dgn
REVISED DATE:

DATE REVISED	DATE FILMED	DATE REVISED	DATE FILMED	FED. ROAD DIST. NO.	STATE	FED. AID PROJ. NO.	SHEET NO.	TOTAL SHEETS
				6	ARK.			
				JOB NO.		BB0414	389	886
				(1) 05692		END BENT DETAILS		58112

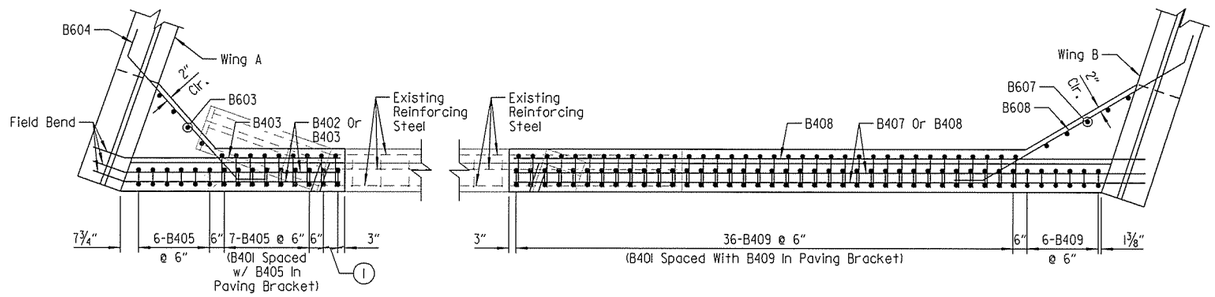

SECTION C-C
(Shown For End Bent No. 1)
Scale: ⅜" = 1'-0"

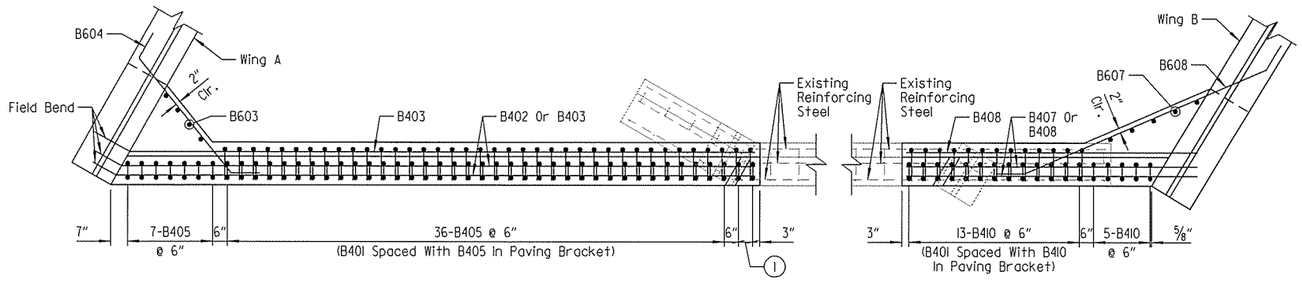

SECTION C-C
(Shown For End Bent No. 5)
Scale: ⅜" = 1'-0"

(1) 2-B406 @ 6" (B401 Spaced With B406 In Paving Bracket)

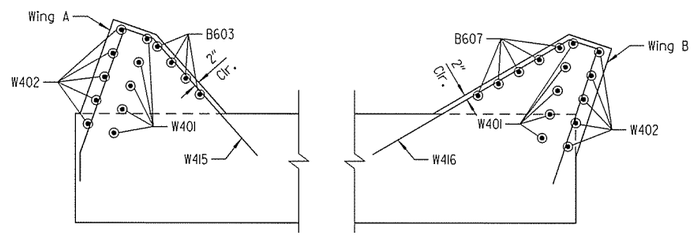

SECTION D-D
(Shown For End Bent No. 1)
Scale: ⅜" = 1'-0"

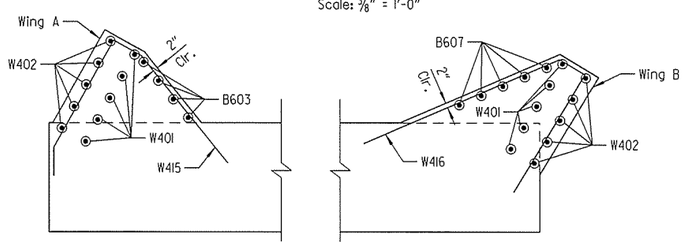

SECTION D-D
(Shown For End Bent No. 5)
Scale: ⅜" = 1'-0"

STATE OF ARKANSAS
LICENSED PROFESSIONAL ENGINEER
No. 16458
3-20-16
JOEL E. SKINNER

BRIDGE ENGINEER

SHEET 7 OF 7
DETAILS OF END BENTS
HIGHWAY 112
OVER INTERSTATE 49

ROUTE SEC.

ARKANSAS STATE HIGHWAY COMMISSION
LITTLE ROCK, ARK.

DRAWN BY: CWT DATE: DEC. 2015 FILENAME: BBB0414XI_A7.dgn
CHECKED BY: ABH DATE: JAN. 2016 SCALE: AS SHOWN
DESIGNED BY: JES DATE: DEC. 2015
BRIDGE NO. 05692 DRAWING NO. 58112

Jeskinner 3/20/2016 3:34:51 PM
WORKSPACE: AHTD Bridge
L:\208\MOT707 - I-540 Widening & Interchange Improvement\Drawings\540-HWY112-S207-AB.dgn
REVISED DATE:

DATE REVISED	DATE FILMED	DATE REVISED	DATE FILMED	FED. ROAD DIST. NO.	STATE	FED. AID PROJ. NO.	SHEET NO.	TOTAL SHEETS
				6	ARK.			
				JOB NO.		BB0414	390	886
				(1) 05692		TRANSITIONAL RAILING		58113

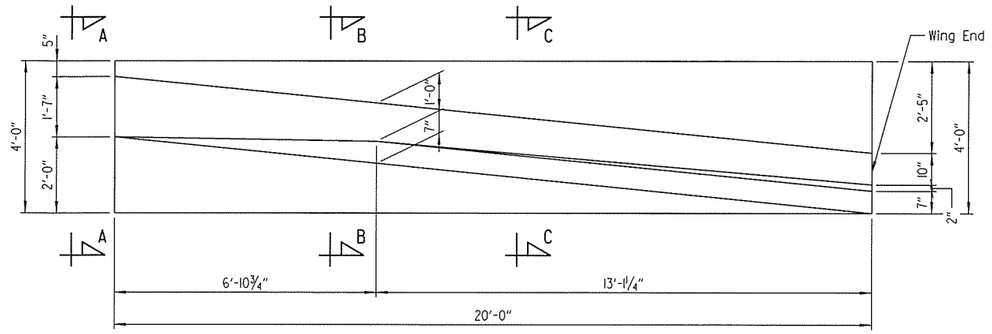

NOTE:
Railings on each side of roadway are opposite hand to each other.

PLAN
Scale: ½" = 1'-0"

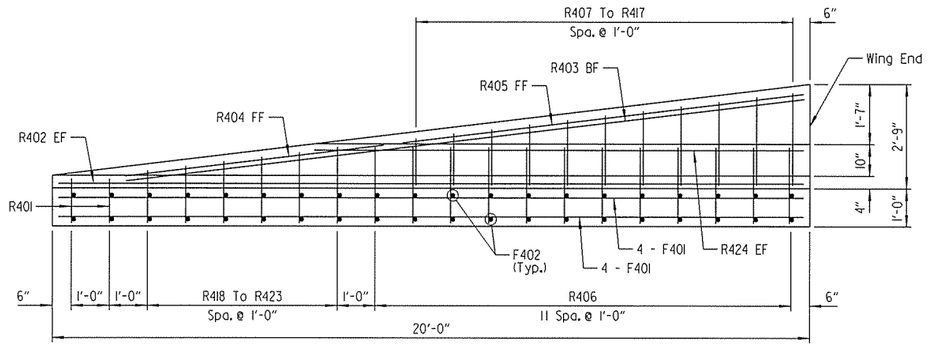

ELEVATION
Scale: ½" = 1'-0"

NOTES:
Transitional Approach Railing shall be placed at ends of turnback wings at locations shown on the layout.

All concrete shall be Class "S" and shall be poured in the dry. All exposed corners shall be chamfered ¾" unless otherwise noted.

All reinforcing steel shall conform to AASHTO M31 or M322 Type A, Grade 60 (yield strength = 60,000 psi), with mill test reports.

Class 2 Protective Surface Treatment shall be applied to the roadway face of railing.

Class 3 Textured Coating Finish shall be applied to meet the requirements specified in SP JOB NO. BB0414 "TEXTURED COATING FINISH" and in accordance with Subsection 802.19.

Architectural Finish shall meet the requirements specified in SP JOB NO. BB0414 "ARCHITECTURAL FINISH".

Class 3 Textured Coating Finish and Architectural Finish shall not be paid for directly but shall be considered incidental to the unit price bid for "TRANSITIONAL APPROACH RAILING".

Transitional Approach Railing shall conform to Section 806 and shall be paid for at the contract unit price bid per each for "TRANSITIONAL APPROACH RAILING".

SCHEDULE OF QUANTITIES - FOR INFO ONLY

CLASS "S" CONCRETE	REINFORCING STEEL (GRADE 60)	CLASS 3 TEXTURED COATING FINISH	ARCHITECTURAL FINISH
4.40 C.Y.	384.7 Lbs.	5.8 Sq. Yds.	19.6 Sq. Ft.

Quantities shown are for one transitional approach rail only.

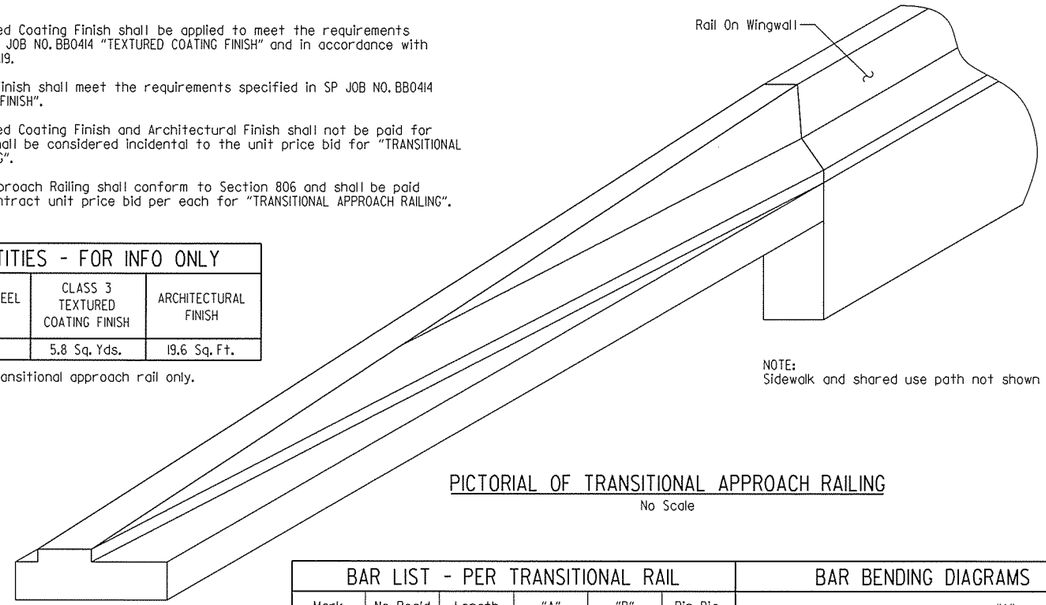

NOTE:
Sidewalk and shared use path not shown for clarity.

PICTORIAL OF TRANSITIONAL APPROACH RAILING
No Scale

LEGEND
FF = Front Face
BF = Back Face
EF = Each Face

① Class 3 Textured Coating Finish (Color = Brown, Color Chip No. 33578)

② "ASHLAR STONE" Form Liner and Class 3 Textured Coating Finish (Color = Brown, Color Chip No. 30219)

Form liner shall be a max. depth of 2" to provide a min. clearance of 1½" to rail reinforcing. See SP JOB NO. BB0414 "ARCHITECTURAL FINISH".

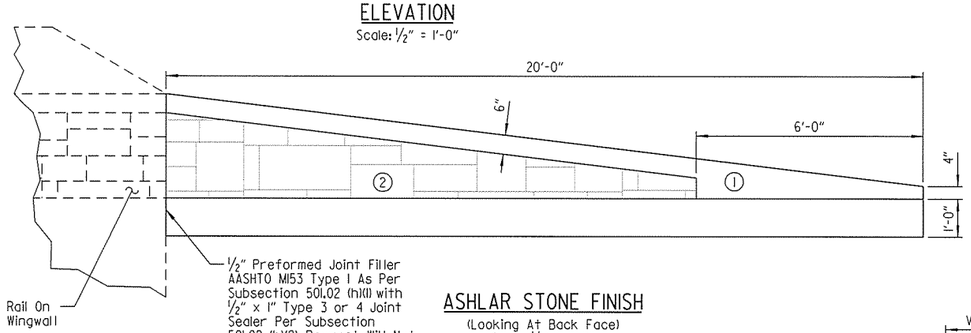

ASHLAR STONE FINISH
(Looking At Back Face)
Scale: ½" = 1'-0"

BAR LIST - PER TRANSITIONAL RAIL					
Mark	No. Req'd	Length	"A"	"B"	Pin Dia.
F401	8	19'-8"			Str.
F402	40	3'-8"			Str.
R401	2	4'-9"	1'-2"	1'-0½"	2"
R402	2	19'-9"			Str.
R403	1	18'-3"			Str.
R404	1	5'-0"			Str.
R405	1	12'-10"			Str.
R406	12	6'-3"			2"
R407 To R417	1 Ea.	3'-0" To 5'-4"	1'-3" To 2'-5"	1'-3" To 2'-5"	2"
R418 To R423	1 Ea.	3'-8½" To 5'-0"	1'-4" To 1'-11"	3" To 11½"	2"
R424	2	12'-6"			Str.

NOTE:
Number of bars shown is for one transitional approach rail only.

BAR BENDING DIAGRAMS

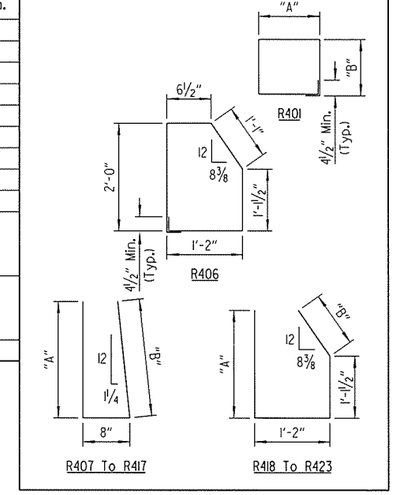

NOTE:
Dimensions of bars are out-to-out.

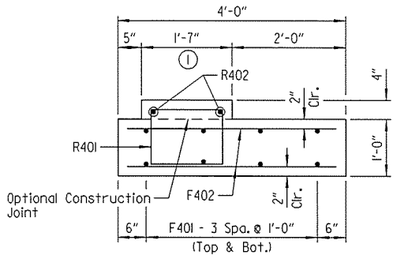

VIEW A-A
Scale: ¾" = 1'-0"

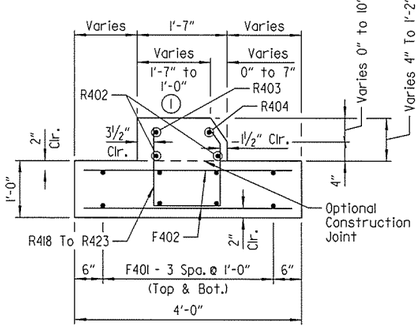

SECTION B-B
Scale: ¾" = 1'-0"

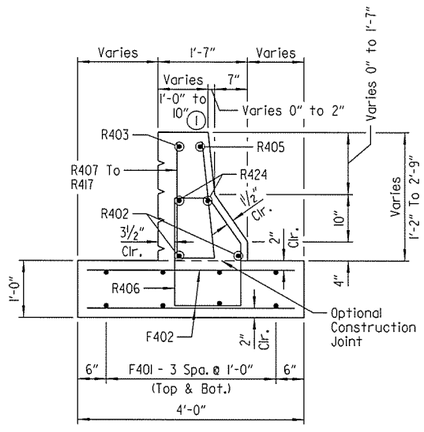

SECTION C-C
Scale: ¾" = 1'-0"

STATE OF ARKANSAS
LICENSED PROFESSIONAL ENGINEER
No. 16458
3-20-16
JOEL E. SKINNER
BRIDGE ENGINEER

DETAILS OF TRANSITIONAL APPROACH RAILING HIGHWAY 112 OVER INTERSTATE 49

ROUTE SEC.

ARKANSAS STATE HIGHWAY COMMISSION
LITTLE ROCK, ARK.

DRAWN BY: CWT DATE: DEC. 2015 FILENAME: BBB0414XI_TR.dgn
CHECKED BY: ABH DATE: JAN. 2016 SCALE: AS SHOWN
DESIGNED BY: JES DATE: DEC. 2015
BRIDGE NO. 05692 DRAWING NO. 58113

jeskinner 3/20/2016 3:34:51 PM
WORKSPACE, AHTD Bridge
L:\ROADWAY\707 - I-540 Widening & Interchange Improvement\Drawings\I540-HWY112-S208-MD.dgn
REVISED DATE:

DATE REVISED	DATE FILMED	DATE REVISED	DATE FILMED	FED. ROAD DIST. NO.	STATE	FED. AID PROJ. NO.	SHEET NO.	TOTAL SHEETS
				6	ARK.			
				JOB NO.		BB0414	391	886
				(1) 05692		INTERMEDIATE BENT DETAILS		58114

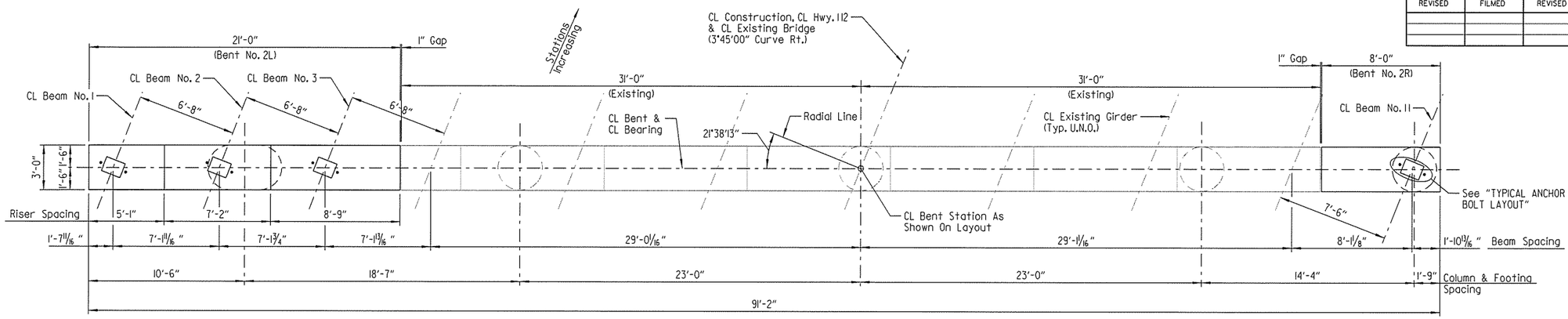

PLAN

(Bent Nos. 2L & 2R)
Scale: 1/4" = 1'-0"

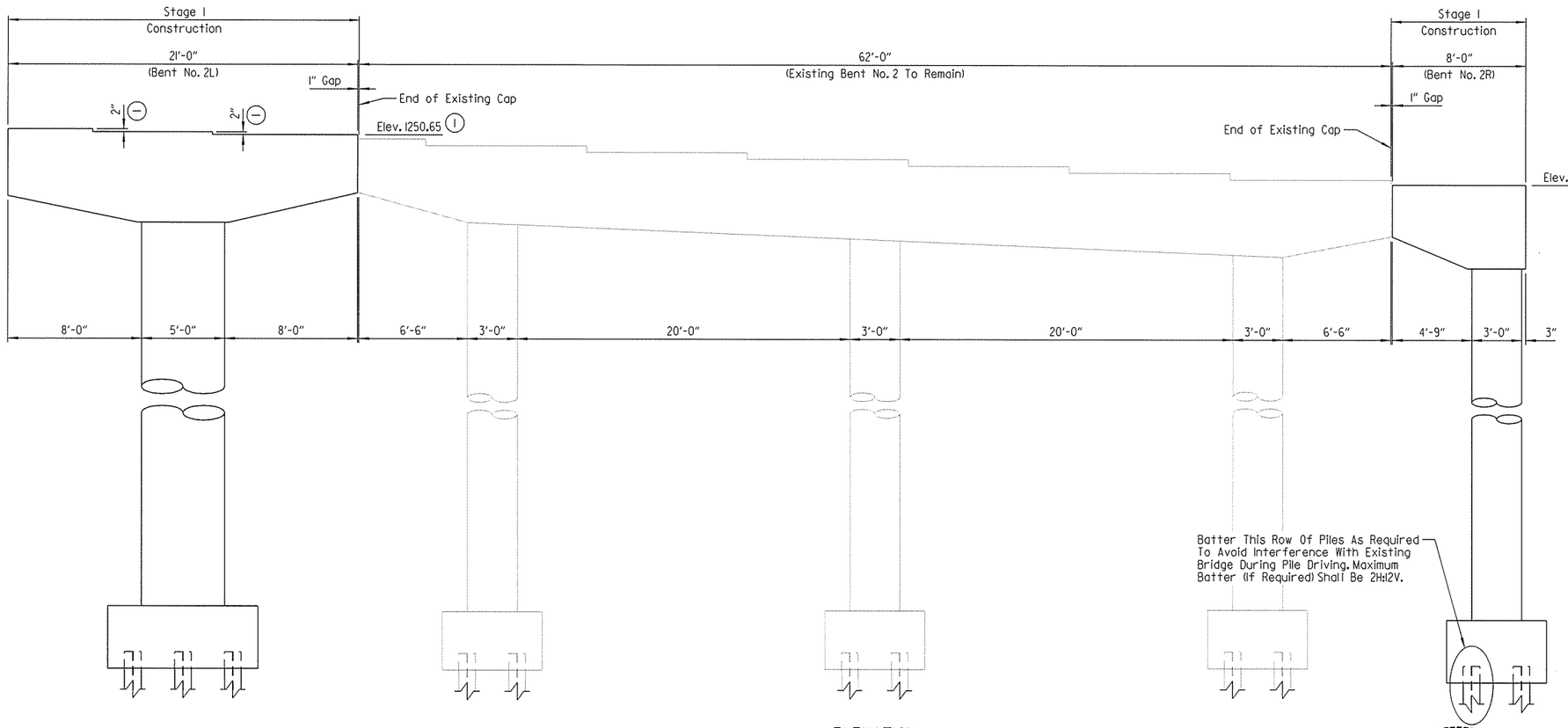

ELEVATION

(Bent Nos. 2L & 2R, Looking Ahead)
Scale: 1/4" = 1'-0"

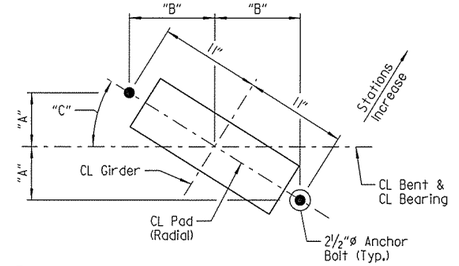

TYPICAL ANCHOR BOLT LAYOUT

No Scale

TABLE OF VARIABLES				
Bent No.	Beam No.	"A"	"B"	"C"
2	1	3 15/16"	10 1/4"	20°57'37"
	2	3 15/16"	10 1/4"	21°03'13"
	3	3 15/16"	10 1/4"	21°08'52"
	11	4 1/8"	10 3/16"	22°09'47"
3	1	4 1/16"	10 1/16"	23°57'49"
	2	4 1/2"	10 1/16"	24°04'19"
	3	4 1/2"	10 1/16"	24°10'53"
	11	4 11/16"	9 15/16"	25°21'40"
4	1	5 1/16"	9 3/4"	27°30'11"
	2	5 1/8"	9 3/4"	27°37'47"
	3	5 1/8"	9 3/4"	27°45'29"
	11	5 3/8"	9 5/8"	29°08'36"

LEGEND

U.N.O. = Unless Noted Otherwise

(1) Dimensions and elevations are based on the following:

1. The best fit Vertical Curve Data and bent stationing as shown on the layout
2. The bent skew angle as shown on existing plans and on this drawing
3. The bridge deck cross slope as shown on existing plans

Prior to construction of any portion of the bents, the Contractor shall field verify these elevations and dimensions. The Contractor shall be responsible for establishing final bearing elevations and adjusting elements of the new construction accordingly. See notes on layout drawing for additional verification requirements prior to construction.

NOTE:
For details of Bent Nos. 2L and 2R, see Dwg. Nos. 58117 - 58120.

STATE OF ARKANSAS
LICENSED PROFESSIONAL ENGINEER
No. 14498
3-20-16
ADAM B. HALL
BRIDGE ENGINEER

SHEET 1 OF 8
DETAILS OF INTERMEDIATE BENTS
HIGHWAY 112
OVER INTERSTATE 49

ROUTE SEC.

ARKANSAS STATE HIGHWAY COMMISSION
LITTLE ROCK, ARK.

DRAWN BY: WMM DATE: DEC. 2015 FILENAME: BBB0414XI_BI.dgn
CHECKED BY: ABH DATE: JAN. 2016 SCALE: AS SHOWN
DESIGNED BY: WMM DATE: DEC. 2015
BRIDGE NO. 05692 DRAWING NO. 58114

jeskinner 3/20/2016 3:34:51 PM
WORKSPACE: AHTD_Bridge
L:\2016\160701 - I-540 Widening & Interchange Improvement\Drawings\I540-HWY112-S209-BE.dgn
REVISED DATE:

DATE REVISED	DATE FILMED	DATE REVISED	DATE FILMED	FED. ROAD DIST. NO.	STATE	FED. AID PROJ. NO.	SHEET NO.	TOTAL SHEETS
				6	ARK.			
				JOB NO.		BB0414	392	886

(1) 05692 INTERMEDIATE BENT DETAILS 58115

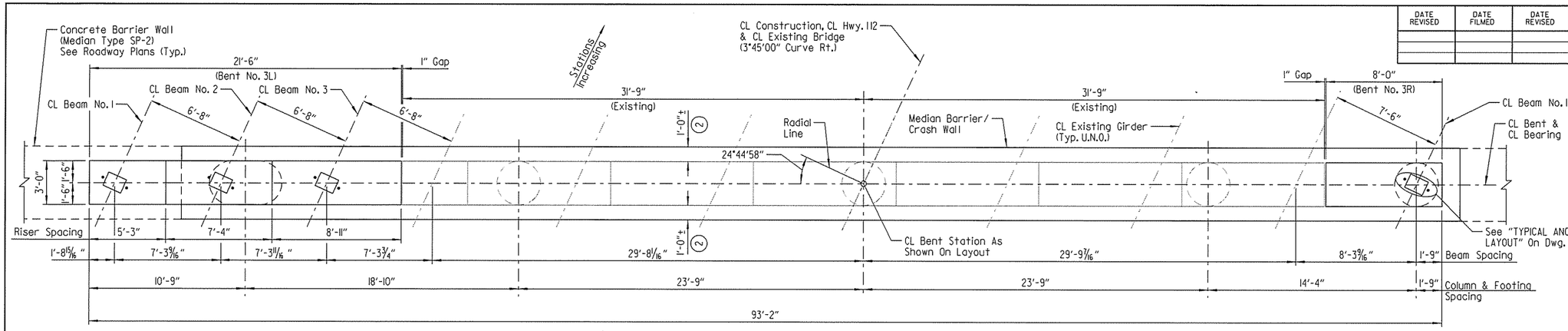

PLAN
(Bent Nos. 3L & 3R)
Scale: 1/4" = 1'-0"

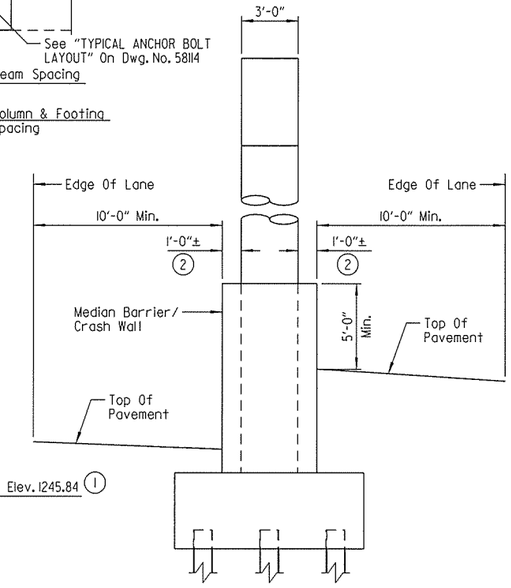

SECTION A-A
(Bent Nos. 3L and 3R)
Scale: 1/4" = 1'-0"

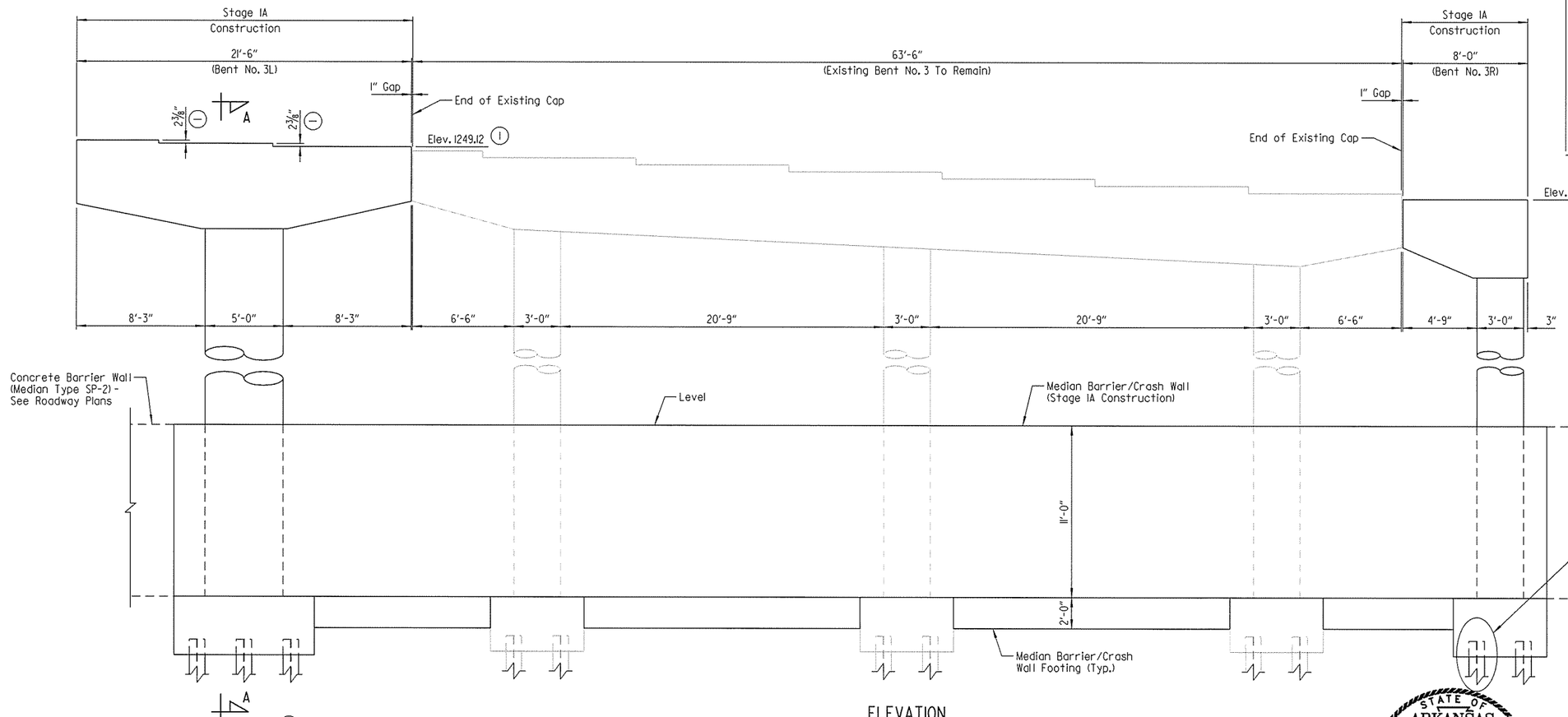

ELEVATION
(Bent Nos. 3L & 3R, Looking Ahead)
Scale: 1/4" = 1'-0"

(1) Dimensions and elevations are based on the following:

1. The best fit Vertical Curve Data and bent stationing as shown on the layout.
2. The bent skew angle as shown on existing plans and on this drawing.
3. The bridge deck cross slope as shown on existing plans.

Prior to construction of any portion of the bents, the Contractor shall field verify these elevations and dimensions. The Contractor shall be responsible for establishing final bearing elevations and adjusting elements of the new construction accordingly. See notes on layout drawing for additional verification requirements prior to construction.

NOTE:
For details of Bent Nos. 3L and 3R, see Dwg. Nos. 58117 - 58120.

For details of Median Barrier/Crash Wall, see Dwg. No. 58121.

LEGEND

U.N.O. = Unless Noted Otherwise

STATE OF ARKANSAS
LICENSED PROFESSIONAL ENGINEER
No. 14498
3-20-16
ADAM B. HALL
BRIDGE ENGINEER

SHEET 2 OF 8
DETAILS OF INTERMEDIATE BENTS
HIGHWAY 112
OVER INTERSTATE 49
ROUTE SEC.

ARKANSAS STATE HIGHWAY COMMISSION
LITTLE ROCK, ARK.

DRAWN BY: WMM DATE: DEC. 2015 FILENAME: BBB0414XI_B2.dgn
CHECKED BY: ABH DATE: JAN. 2016 SCALE: AS SHOWN
DESIGNED BY: WMM DATE: DEC. 2015
BRIDGE NO. 05692 DRAWING NO. 58115

jeskinner 3/20/2016 3:34:52 PM
WORKSPACE: AHTD Bridge
L:\2016\16077\07 I-540 Widening & Interchange Improvement\Drawings\I540-HWY112-S210-BE.dgn
REVISED DATE:

DATE REVISED	DATE FILMED	DATE REVISED	DATE FILMED	FED. ROAD DIST. NO.	STATE	FED. AID PROJ. NO.	SHEET NO.	TOTAL SHEETS
				6	ARK.			
				JOB NO.		BB0414	393	886
				(1) 05692		INTERMEDIATE BENT DETAILS		58116

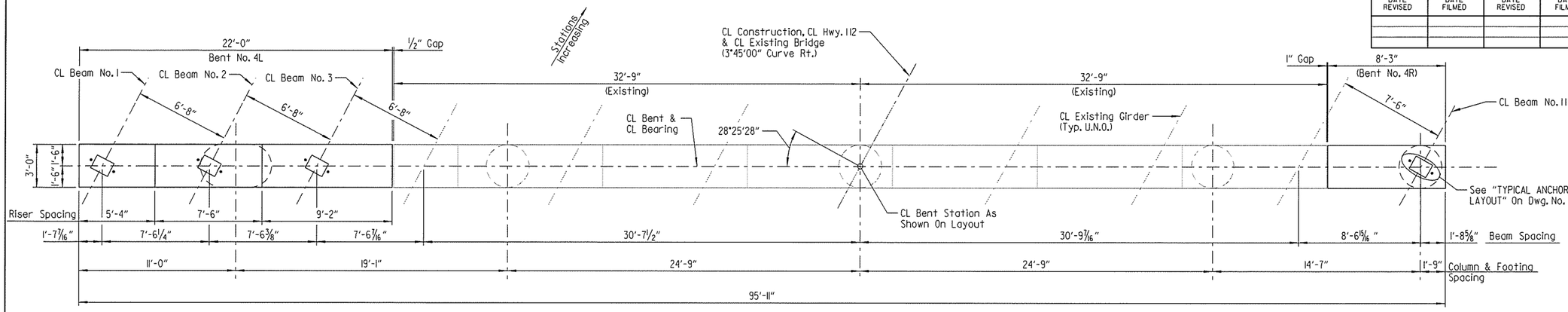

PLAN

(Bent Nos. 4L & 4R)
Scale: 1/4" = 1'-0"

NOTE:
For details of Bent Nos. 4L and 4R, see Dwg. Nos. 58117 - 58120.

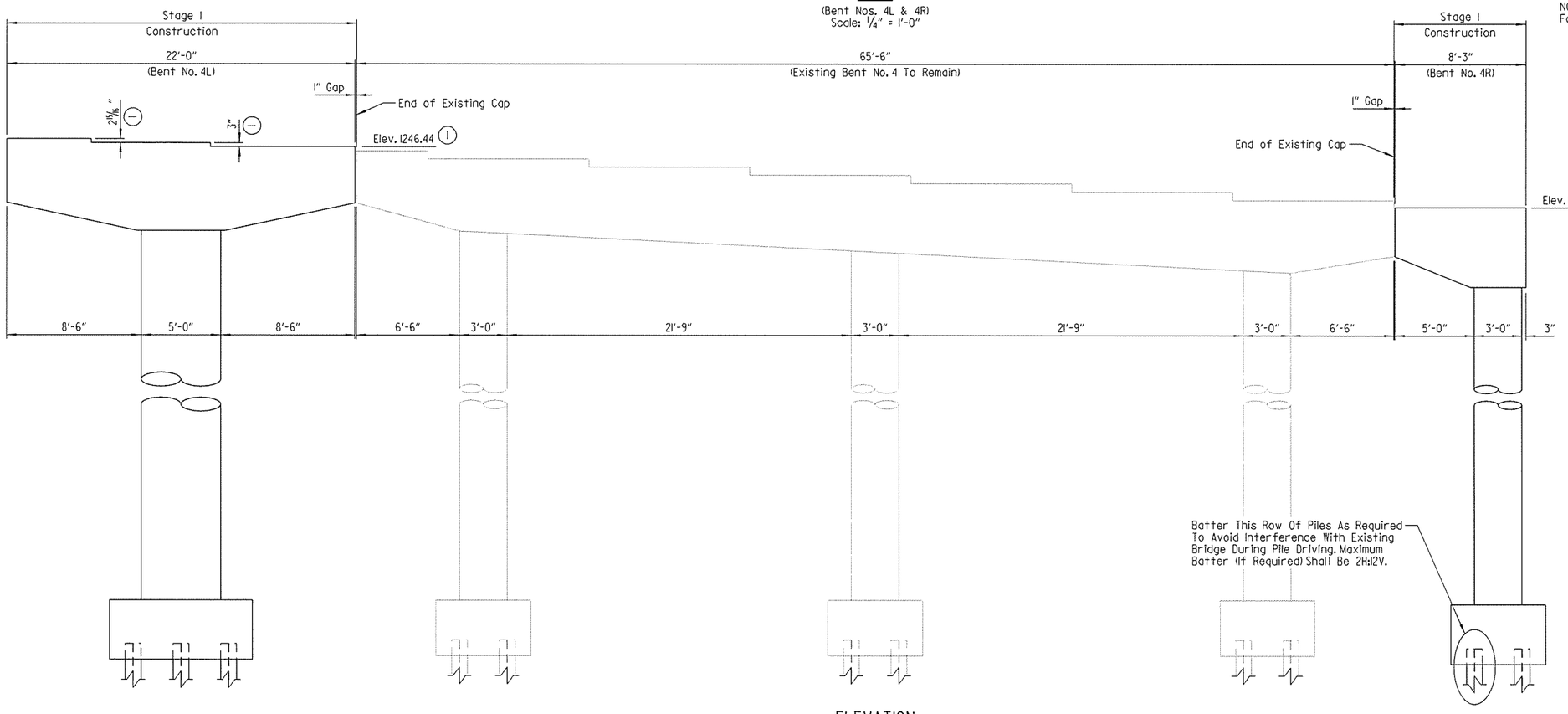

ELEVATION

(Bent Nos. 4L & 4R, Looking Ahead)
Scale: 1/4" = 1'-0"

LEGEND

U.N.O. = Unless Noted Otherwise

(1) Dimensions and elevations are based on the following:

1. The best fit Vertical Curve Data and bent stationing as shown on the layout.
2. The bent skew angle as shown on existing plans and on this drawing.
3. The bridge deck cross slope as shown on existing plans.

Prior to construction of any portion of the bents, the Contractor shall field verify these elevations and dimensions. The Contractor shall be responsible for establishing final bearing elevations and adjusting elements of the new construction accordingly. See notes on layout drawing for additional verification requirements prior to construction.

STATE OF ARKANSAS
LICENSED PROFESSIONAL ENGINEER
No. 14498
12-20-16
ADAM B. HALL
BRIDGE ENGINEER

SHEET 3 OF 8
DETAILS OF INTERMEDIATE BENTS
HIGHWAY 112
OVER INTERSTATE 49
ROUTE SEC.
ARKANSAS STATE HIGHWAY COMMISSION
LITTLE ROCK, ARK.

DRAWN BY: WMM DATE: DEC. 2015 FILENAME: BBB0414XI_B3.dgn
CHECKED BY: ABH DATE: JAN. 2016 SCALE: AS SHOWN
DESIGNED BY: WMM DATE: DEC. 2015
BRIDGE NO. 05692 DRAWING NO. 58116

Jeskinner 3/20/2016 3:34:52 PM
WORKSPACE: AHTD_Bridge
L:\20\NH0707 - I-540 Widening & Interchange Improvement\Drawings\I540-HWY112-S2h-BE.dgn
REVISED DATE:

DATE REVISED	DATE FILMED	DATE REVISED	DATE FILMED	FED. ROAD DIST. NO.	STATE	FED. AID PROJ. NO.	SHEET NO.	TOTAL SHEETS
				6	ARK.			
				JOB NO.		BB0414	394	886
				(1) 05692	INTERMEDIATE BENT DETAILS			58117

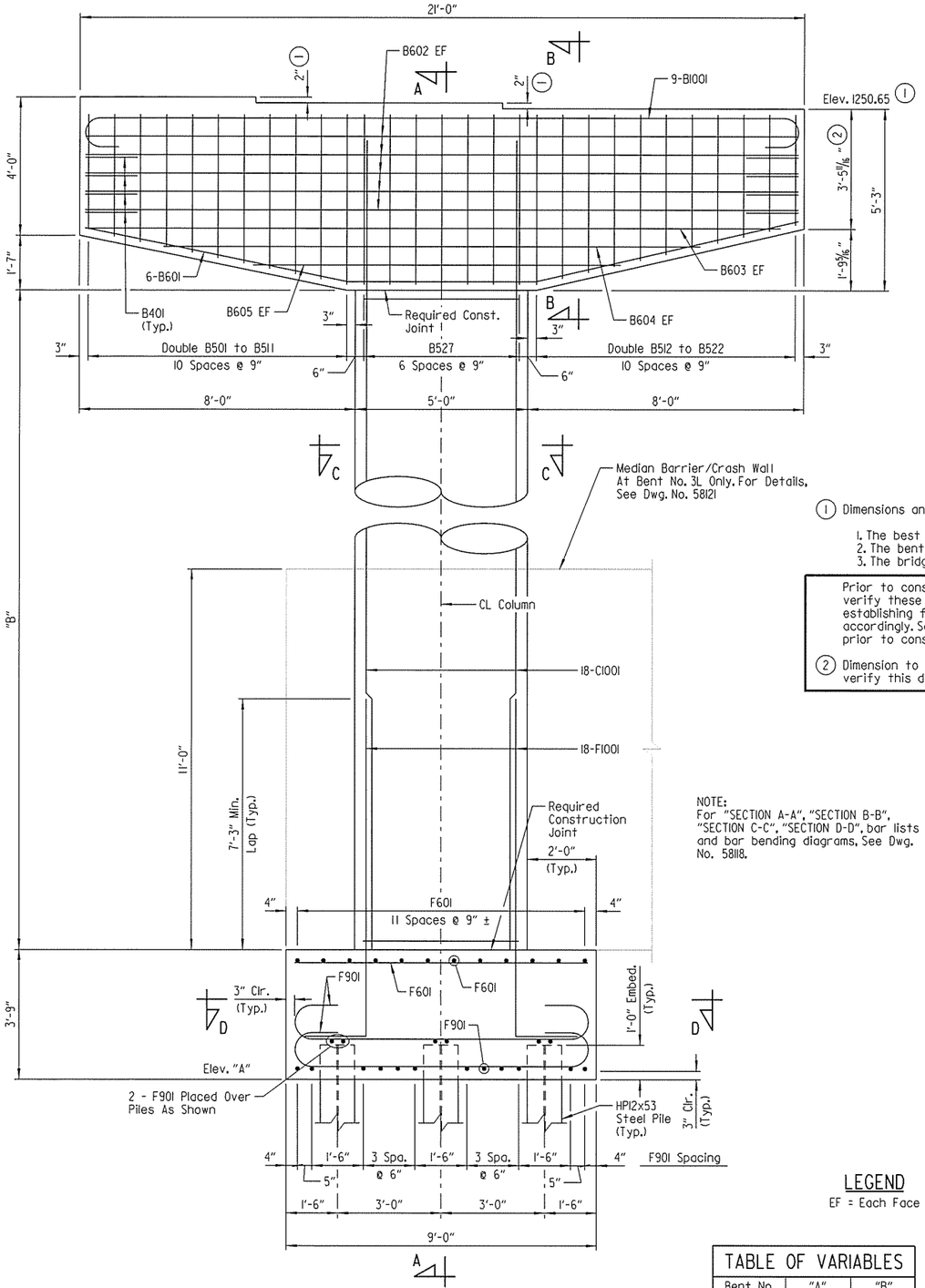

ELEVATION

(Bent No. 2L Cap Shown; Except As Noted, Column And Footing Details Shown Are Common to Bent Nos. 2L-4L) (Looking Ahead)
Scale: 1/2" = 1'-0"

NOTE:
For "SECTION A-A", "SECTION B-B", "SECTION C-C", "SECTION D-D", bar lists and bar bending diagrams, See Dwg. No. 58118.

LEGEND

EF = Each Face

TABLE OF VARIABLES		
Bent No.	"A"	"B"
2L	1214.65	27'-0"
3L	1218.95 *	21'-2 1/16" *
4L	1214.44	23'-0"

* Top of footing shall match the top of existing footings.

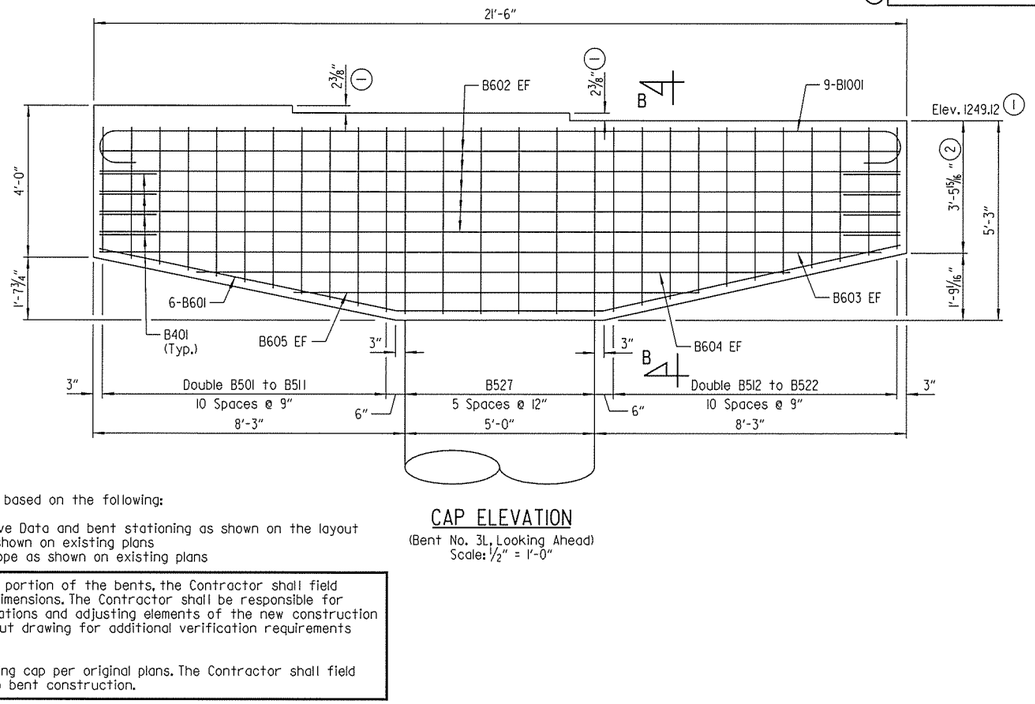

CAP ELEVATION

(Bent No. 3L, Looking Ahead)
Scale: 1/2" = 1'-0"

(1) Dimensions and elevations are based on the following:

1. The best fit Vertical Curve Data and bent stationing as shown on the layout
2. The bent skew angle as shown on existing plans
3. The bridge deck cross slope as shown on existing plans

Prior to construction of any portion of the bents, the Contractor shall field verify these elevations and dimensions. The Contractor shall be responsible for establishing final bearing elevations and adjusting elements of the new construction accordingly. See notes on layout drawing for additional verification requirements prior to construction.

(2) Dimension to bottom of existing cap per original plans. The Contractor shall field verify this dimension prior to bent construction.

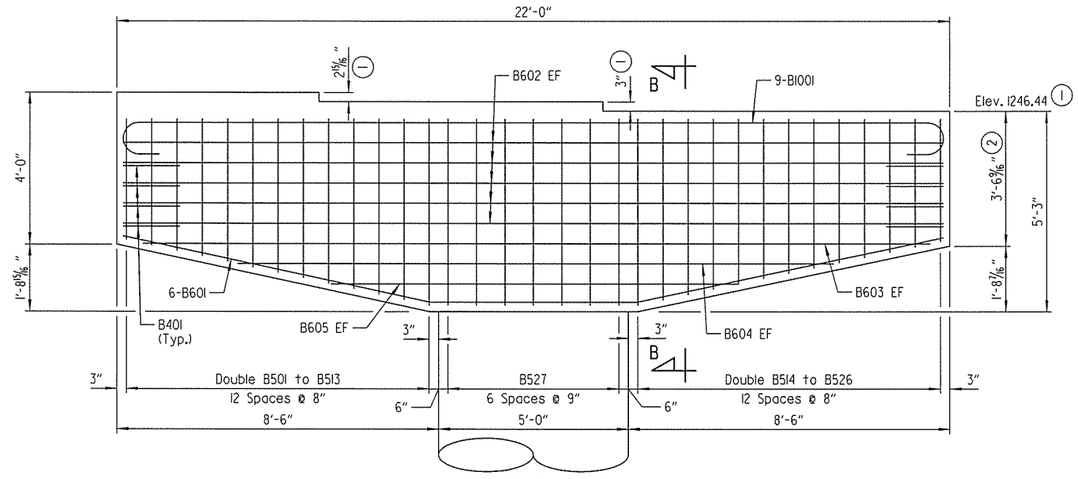

CAP ELEVATION

(Bent No. 4L, Looking Ahead)
Scale: 1/2" = 1'-0"

GENERAL NOTES

All concrete shall be Class "S" with a minimum 28-day compressive strength f'c = 3500 psi. Concrete shall be poured in the dry and all exposed corners shall be chamfered 3/4" unless otherwise noted.

All reinforcing steel shall conform to AASHTO M31 or M322 Type A, Grade 60 (Yield Strength = 60,000 psi), with mill test reports.

Reinforcing bars in top of cap shall be properly placed to avoid damage or interference with anchor bolts or sheet metal sleeves.

Class 3 Textured Coating Finish shall be applied to bent surfaces as specified in SP JOB NO. BB0414 "TEXTURED COATING FINISH".

For additional information, see Layout.

STATE OF ARKANSAS
LICENSED PROFESSIONAL ENGINEER
No. 14498
ADAM B. HALL
3-20-16

BRIDGE ENGINEER

SHEET 4 OF 8
DETAILS OF INTERMEDIATE BENTS
HIGHWAY 112
OVER INTERSTATE 49

ROUTE SEC.

ARKANSAS STATE HIGHWAY COMMISSION
LITTLE ROCK, ARK.

DRAWN BY: WMM DATE: DEC. 2015 FILENAME: BBB0414XL_B4.dgn
CHECKED BY: ABH DATE: JAN. 2016 SCALE: AS SHOWN
DESIGNED BY: WMM DATE: DEC. 2015

BRIDGE NO. 05692 DRAWING NO. 58117

jeskinner 3/20/2016 3:34:52 PM
WORKSPACE: AHTD_B-Bridge
L:\ROW\MGR\707 - I-540 Widening & Interchange Improvement\Drawings\I540-HWY112-S322-BE.dgn
REVISED DATE:

DATE REVISED	DATE FILMED	DATE REVISED	DATE FILMED

FED. ROAD DIST. NO.	STATE	FED. AID PROJ. NO.	SHEET NO.	TOTAL SHEETS
6	ARK.			
JOB NO.		BB0414	395	886
① 05692	INTERMEDIATE BENT DETAILS			58118

BAR LIST - BENT NO. 2L

Mark	No. Req'd	Length	"A"	Pin Dia.
B401	8	5'-4½"		2"
B501 TO B511	2 Ea.	10'-10" TO 14'-0"	3'-4" TO 4'-11"	2½"
B512 TO B522	2 Ea.	14'-0" TO 10'-7"	4'-11" TO 3'-2½"	2½"
B523-B526	NOT USED			
B527	7	12-3½"		2½"
B601	6	20'-11½"	7'-9"	4½"
B602	10	20'-8"		Str.
B603	2	20'-3½"		Str.
B604	2	15'-11½"		Str.
B605	2	11'-1"		Str.
B1001	9	23'-6"	20'-8"	10"
C501	56	11'-3"		3¾"
C1001	18	31'-5"		Str.
F601	24	8'-6"		Str.
F602	4	4'-10"		4½"
F901	36	11'-0"		9"
F1001	18	11'-3½"		10"

BAR LIST - BENT NO. 3L

Mark	No. Req'd	Length	"A"	Pin Dia.
B401	8	5'-4½"		2"
B501 TO B511	2 Ea.	10'-10" TO 13'-11"	3'-4" TO 4'-10½"	2½"
B512 TO B522	2 Ea.	13'-11" TO 10'-7"	4'-10½" TO 3'-2½"	2½"
B523-B526	NOT USED			
B527	6	12-3½"		2½"
B601	6	21'-5½"	8'-0"	4½"
B602	10	21'-2"		Str.
B603	2	20'-10"		Str.
B604	2	16'-1"		Str.
B605	2	11'-2"		Str.
B1001	9	24'-0"	21'-2"	10"
C501	44	11'-3"		3¾"
C1001	18	25'-7"		Str.
F601	24	8'-6"		Str.
F602	4	4'-10"		4½"
F901	36	11'-0"		9"
F1001	18	11'-3½"		10"

BAR LIST - BENT NO. 4L

Mark	No. Req'd	Length	"A"	Pin Dia.
B401	8	5'-4½"		2"
B501 TO B513	2 Ea.	10'-7" TO 14'-0"	3'-2½" TO 4'-11"	2½"
B514 TO B526	2 Ea.	14'-0" TO 10'-8"	4'-11" TO 3'-3"	2½"
B527	7	12-3½"		2½"
B601	6	21'-11½"	8'-3"	4½"
B602	10	21'-8"		Str.
B603	2	21'-1"		Str.
B604	2	16'-2"		Str.
B605	2	11'-2½"		Str.
B1001	9	24'-6"	21'-8"	10"
C501	48	11'-3"		3¾"
C1001	18	27'-5"		Str.
F601	24	8'-6"		Str.
F602	4	4'-10"		4½"
F901	36	11'-0"		9"
F1001	18	11'-3½"		10"

BAR BENDING DIAGRAMS (BENT NOS. 2L-4L)

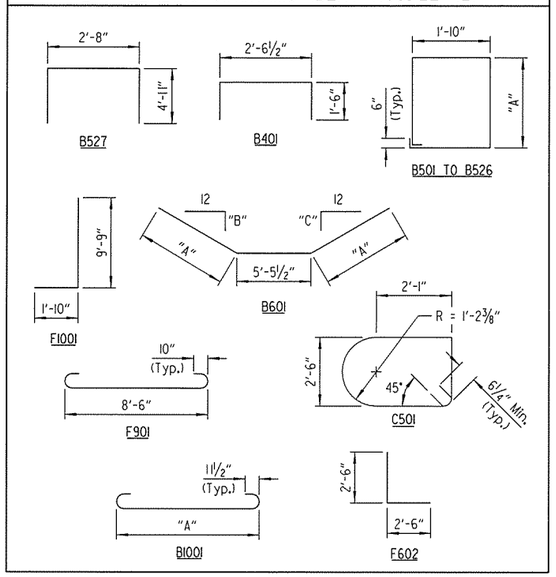

NOTE:
Dimensions of bars are out-to-out.

TABLE OF VARIABLES

Bent No.	"B"	"C"	"D"
2L	2 1/16	2¾	27
3L	2½	2⅝	21
4L	2 9/16	2½	23

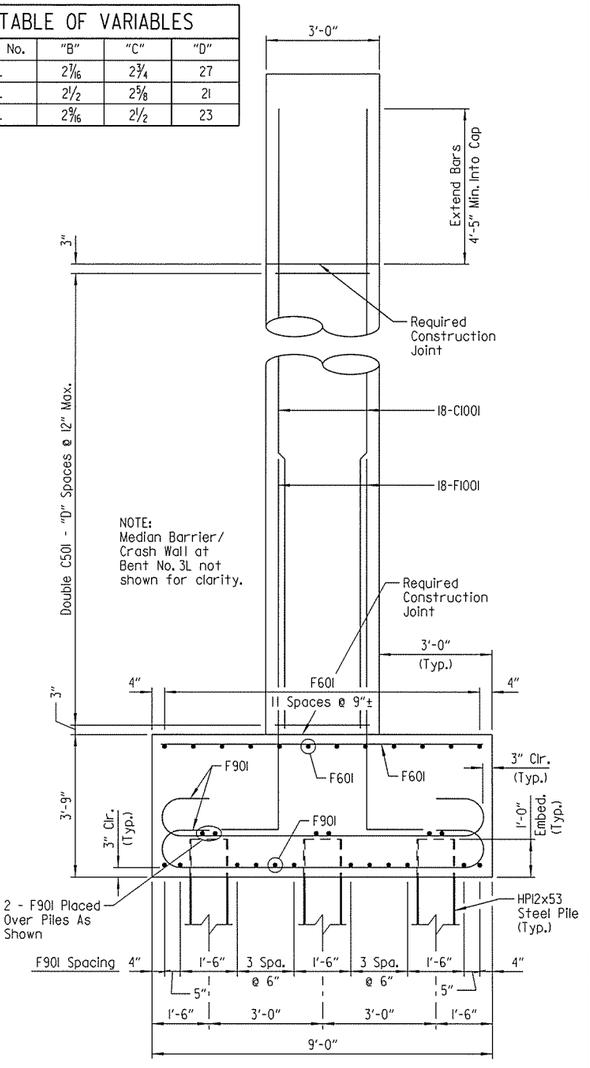

SECTION A-A
(Bent Nos. 2L-4L)
Scale: ½" = 1'-0"

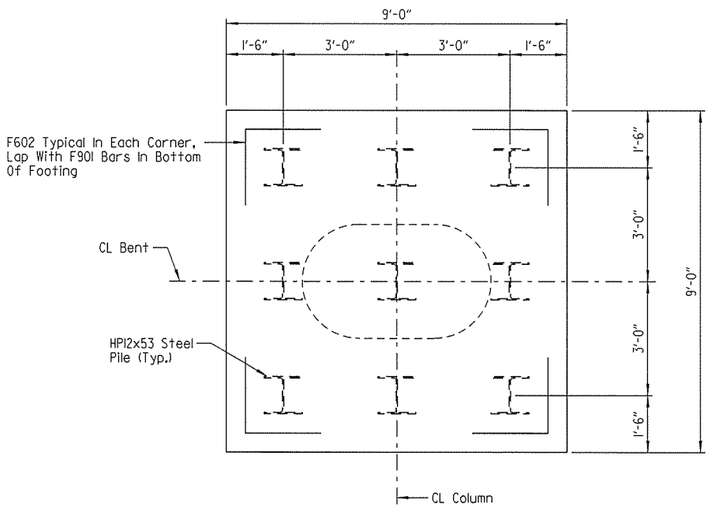

SECTION D-D
Scale: ½" = 1'-0"

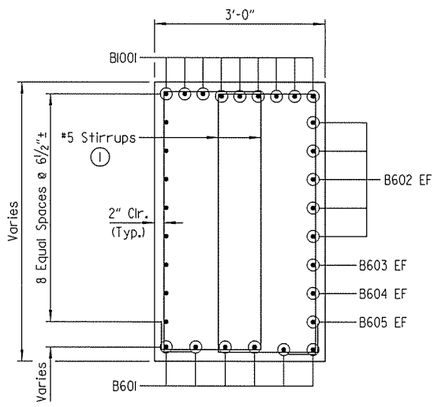

① See "CAP ELEVATION" details on Dwg. No. 58119 for correct bar marks.

SECTION B-B
Scale: ¾" = 1'-0"

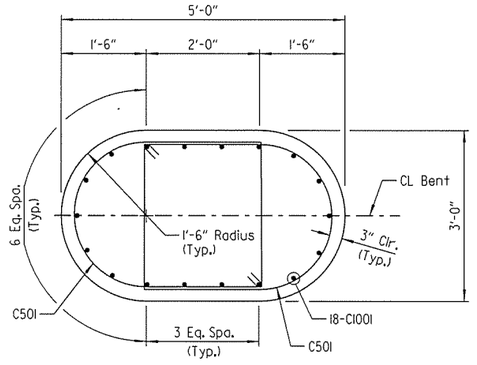

SECTION C-C
Scale: ¾" = 1'-0"

LEGEND
EF = Each Face

STATE OF ARKANSAS
LICENSED PROFESSIONAL ENGINEER
No. 14498
3-20-16
ADAM B. HALL
BRIDGE ENGINEER

SHEET 5 OF 8
DETAILS OF INTERMEDIATE BENTS
HIGHWAY 112
OVER INTERSTATE 49
ROUTE SEC.
ARKANSAS STATE HIGHWAY COMMISSION
LITTLE ROCK, ARK.

DRAWN BY: WMM DATE: DEC. 2015 FILENAME: BBB0414XL_B5.dgn
CHECKED BY: ABH DATE: JAN. 2016 SCALE: AS SHOWN
DESIGNED BY: WMM DATE: DEC. 2015
BRIDGE NO. 05692 DRAWING NO. 58118

jeskinner 3/20/2016 3:34:53 PM
WORKSPACE: AHTD_B-Flage
L:\ROW\NGI\707 - I-540 Widening & Interchange Improvement\Drawings\I540-HWY112-S213-BE.dgn
REVISED DATE:

DATE REVISED	DATE FILMED	DATE REVISED	DATE FILMED	FED. ROAD DIST. NO.	STATE	FED. AID PROJ. NO.	SHEET NO.	TOTAL SHEETS
				6	ARK.			
				JOB NO.		BB0414	396	886
				(1) 05692		INTERMEDIATE BENT DETAILS		58119

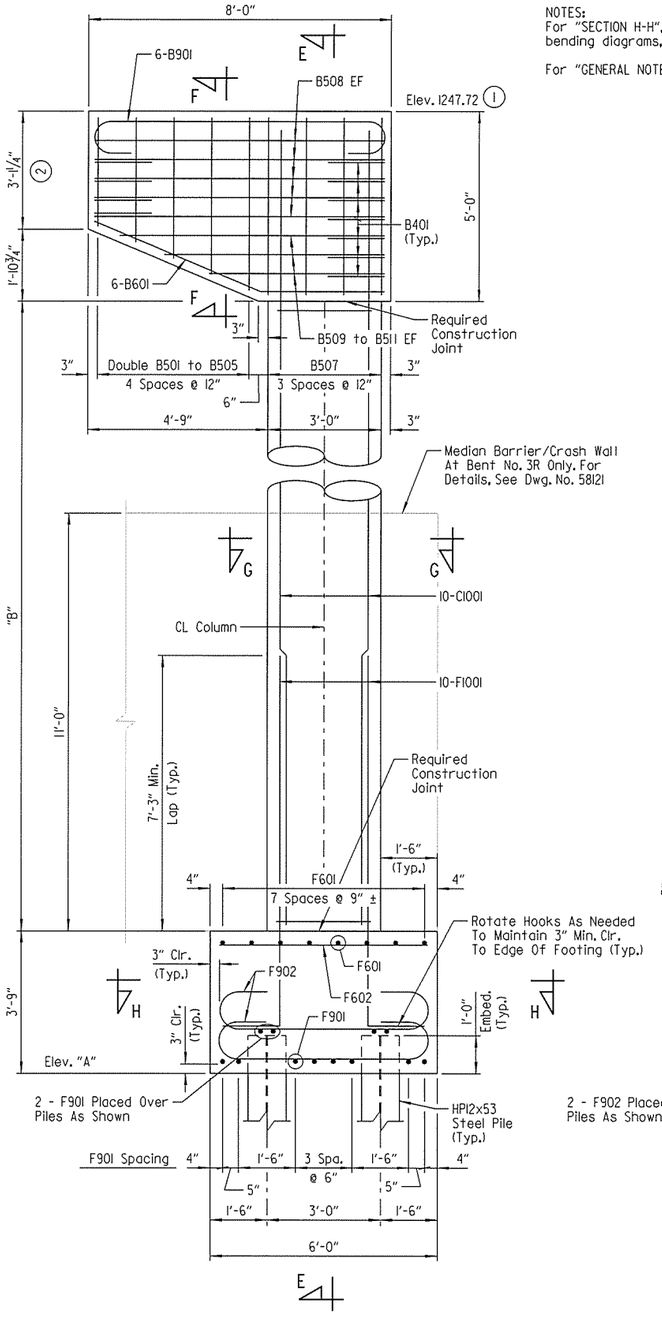

ELEVATION

Bent No. 2R Cap Shown; Except As Noted, Column And Footing Details Shown Are Common To Bent Nos. 2R-4R. (Looking Ahead)
Scale: ½" = 1'-0"

NOTES:
For "SECTION H-H", bar lists and bar bending diagrams, see Dwg. No. 58120.

For "GENERAL NOTES", see Dwg. No. 58117.

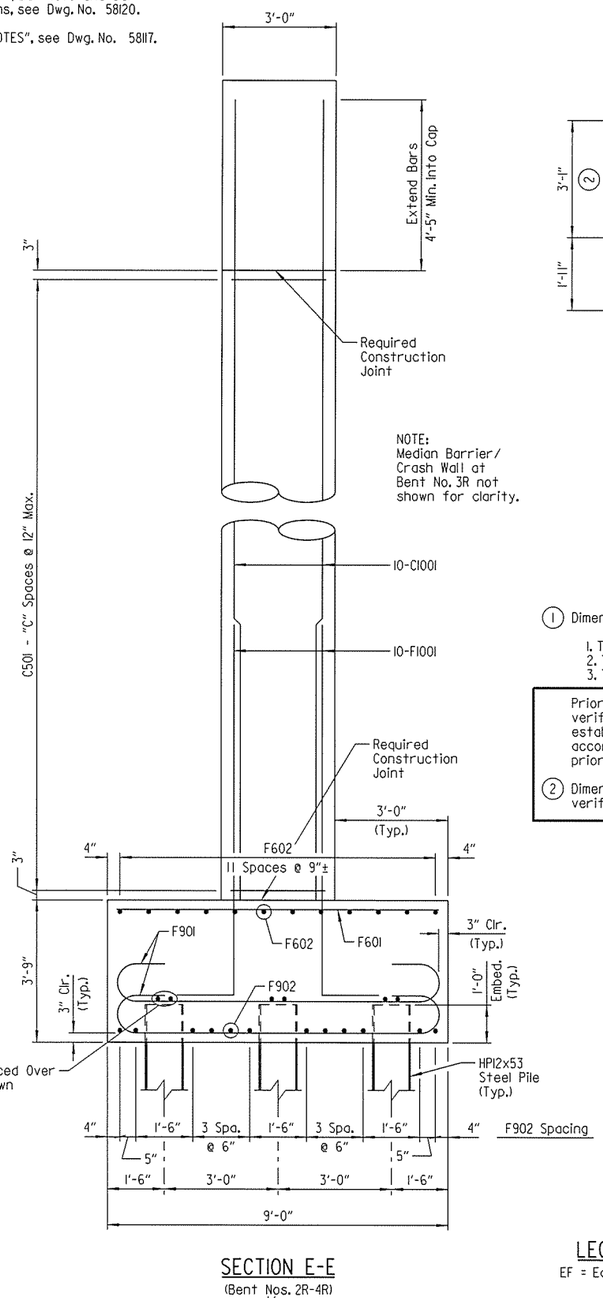

SECTION E-E

(Bent Nos. 2R-4R)
Scale: ½" = 1'-0"

NOTE:
Median Barrier/ Crash Wall at Bent No. 3R not shown for clarity.

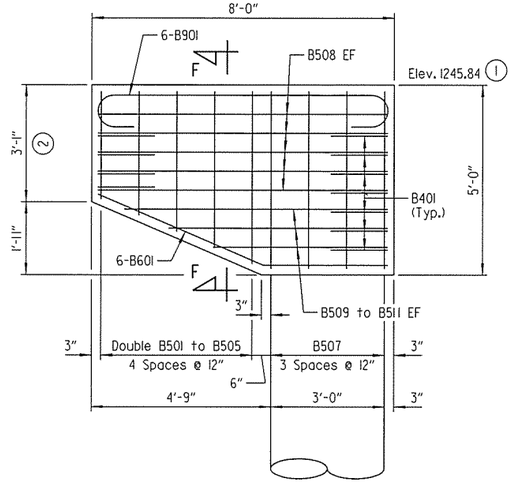

CAP ELEVATION

(Bent No. 3R, Looking Ahead)
Scale: ½" = 1'-0"

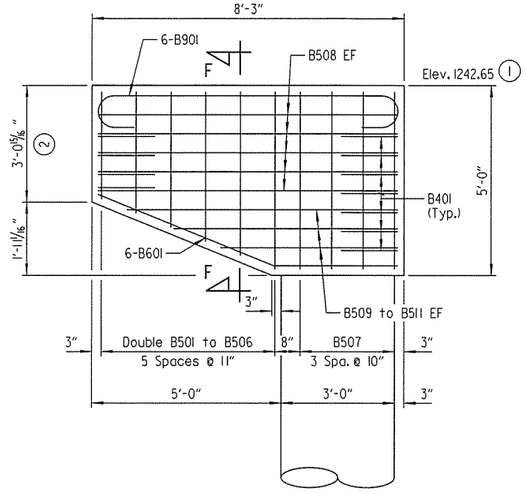

CAP ELEVATION

(Bent No. 4R, Looking Ahead)
Scale: ½" = 1'-0"

(1) Dimensions and elevations are based on the following:

1. The best fit Vertical Curve Data and bent stationing as shown on the layout
2. The bent skew angle as shown on existing plans
3. The bridge deck cross slope as shown on existing plans

Prior to construction of any portion of the bents, the Contractor shall field verify these elevations and dimensions. The Contractor shall be responsible for establishing final bearing elevations and adjusting elements of the new construction accordingly. See notes on layout drawing for additional verification requirements prior to construction.

(2) Dimension to bottom of existing cap per original plans. The Contractor shall field verify this dimension prior to bent construction.

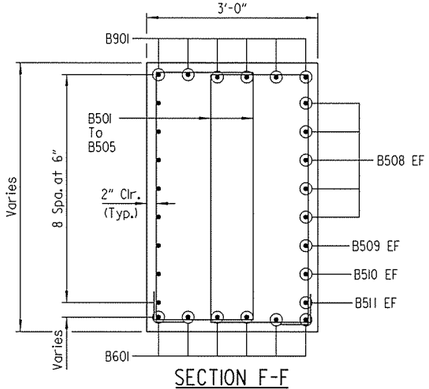

SECTION F-F

Scale: ¾" = 1'-0"

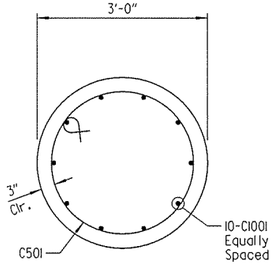

SECTION G-G

Scale: ¾" = 1'-0"

LEGEND

EF = Each Face

TABLE OF VARIABLES			
Bent No.	"A"	"B"	"C"
2R	1214.97	24'-0"	24
3R	*1218.95	*18'-11⅝"	18
4R	1213.90	20'-0"	20

*Top of footing shall match the top of existing footings.

STATE OF ARKANSAS
LICENSED PROFESSIONAL ENGINEER
No. 14498
12-20-16
ADAM B. HALL
BRIDGE ENGINEER

SHEET 6 OF 8
DETAILS OF INTERMEDIATE BENTS
HIGHWAY 112
OVER INTERSTATE 49

ROUTE SEC.

ARKANSAS STATE HIGHWAY COMMISSION
LITTLE ROCK, ARK.

DRAWN BY: WMM DATE: DEC. 2015 FILENAME: BBB0414XI_B6.dgn
CHECKED BY: ABH DATE: JAN. 2016 SCALE: AS SHOWN
DESIGNED BY: WMM DATE: DEC. 2015
BRIDGE NO. 05692 DRAWING NO. 58119

jeskinner 3/20/2016 3:34:53 PM
WORKSPACE: AHTD Bridge
L:\2016\16017\07 I-540 Widening & Interchange Improvement\Drawings\I540-HWY112-S214-BE.dgn
REVISED DATE:

DATE REVISED	DATE FILMED	DATE REVISED	DATE FILMED	FED. ROAD DIST. NO.	STATE	FED. AID PROJ. NO.	SHEET NO.	TOTAL SHEETS
				6	ARK.			
				JOB NO.		BB0414	397	886
				1	05692	INTERMEDIATE BENT DETAILS		58120

BAR LIST - BENT NO. 2R

Mark	No. Req'd	Length	"A"	Pin Dia.
B401	11	5'-4½"		2"
B501 TO B505	2 Ea.	9'-11" TO 13'-3"	2'-10½" TO 4'-6½"	2½"
B506	NOT USED			
B507	4	11-9½"		2½"
B508	10	7'-8"		Str.
B509 TO B511	2 Ea.	7'-0" TO 4'-7½"		Str.
B601	6	8'-0½"		4½"
B901	6	10'-2"	7'-8"	9"
C501	25	9'-3"		3¾"
C1001	10	28'-5"		Str.
F601	8	8'-6"		Str.
F602	12	5'-6"		Str.
F603	4	4'-10"		4½"
F901	12	11'-0"	8'-6"	9"
F902	18	8'-0"	5'-6"	9"
F1001	10	11'-3½"		10"

BAR LIST - BENT NO. 3R

Mark	No. Req'd	Length	"A"	Pin Dia.
B401	11	5'-4½"		2"
B501 TO B505	2 Ea.	9'-10" TO 13'-3"	2'-10" TO 4'-6½"	2½"
B506	NOT USED			
B507	4	11-9½"		2½"
B508	10	7'-8"		Str.
B509 TO B511	2 Ea.	6'-11½" TO 4'-7½"		Str.
B601	6	8'-0½"		4½"
B901	6	10'-2"	7'-8"	9"
C501	19	9'-3"		3¾"
C1001	10	22'-7"		Str.
F601	8	8'-6"		Str.
F602	12	5'-6"		Str.
F603	4	4'-10"		4½"
F901	12	11'-0"	8'-6"	9"
F902	18	8'-0"	5'-6"	9"
F1001	10	11'-3½"		10"

BAR LIST - BENT NO. 4R

Mark	No. Req'd	Length	"A"	Pin Dia.
B401	11	5'-4½"		2"
B501 TO B506	2 Ea.	9'-10" TO 13'-6"	2'-10" TO 4'-8"	2½"
B507	4	11-9½"		2½"
B508	10	7'-11"		Str.
B509 TO B511	2 Ea.	7'-2" TO 4'-8"		Str.
B601	6	8'-3½"		4½"
B901	6	10'-5"	7'-11"	9"
C501	21	9'-3"		3¾"
C1001	10	24'-5"		Str.
F601	8	8'-6"		Str.
F602	12	5'-6"		Str.
F603	4	4'-10"		4½"
F901	12	11'-0"	8'-6"	9"
F902	18	8'-0"	5'-6"	9"
F1001	10	11'-3½"		10"

BAR BENDING DIAGRAMS (BENT NOS. 2R-4R)

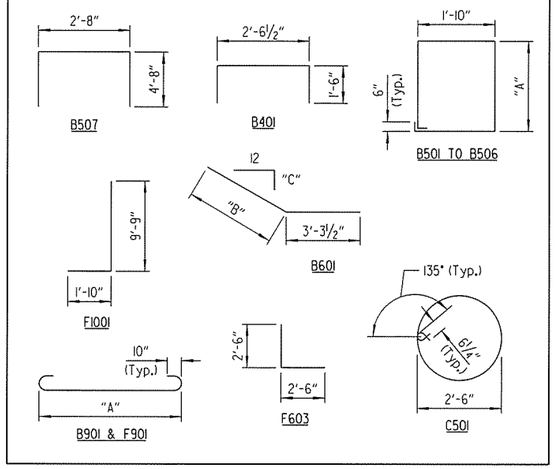

NOTE:
Dimensions of bars are out-to-out.

TABLE OF VARIABLES

Bent No.	"B"	"C"
2R	4'-9"	5/16
3R	4'-9"	5/8
4R	5'-0"	4/8

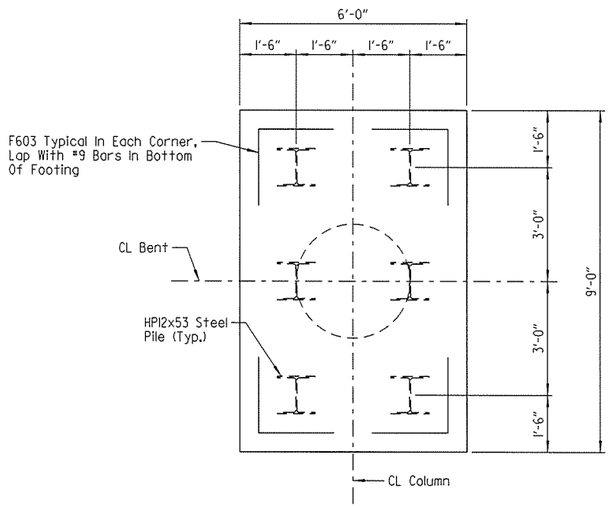

SECTION H-H
Scale: ½" = 1'-0"

STATE OF ARKANSAS
LICENSED PROFESSIONAL ENGINEER
No. 14498
3-22-16
ADAM B. HALL
BRIDGE ENGINEER

SHEET 7 OF 8
DETAILS OF INTERMEDIATE BENTS
HIGHWAY 112
OVER INTERSTATE 49
ROUTE SEC.
ARKANSAS STATE HIGHWAY COMMISSION
LITTLE ROCK, ARK.

DRAWN BY: WMM DATE: DEC. 2015 FILENAME: BBB0414X1_B7.dgn
CHECKED BY: ABH DATE: JAN. 2016 SCALE: AS SHOWN
DESIGNED BY: WMM DATE: DEC. 2015
BRIDGE NO. 05692 DRAWING NO. 58120

jeskinner 3/20/2016 3:34:54 PM
WORKSPACE: AHTD Bridge
L:\2016\160707 - I-540 Widening & Interchange Improvement\Drawings\I540-HWY112-S215-BE.dgn
REVISED DATE:

DATE REVISED	DATE FILMED	DATE REVISED	DATE FILMED	FED. ROAD DIST. NO.	STATE	FED. AID PROJ. NO.	SHEET NO.	TOTAL SHEETS
				6	ARK.			
				JOB NO.		BB0414	398	886
				(1) 05692		INTERMEDIATE BENT DETAILS		58121

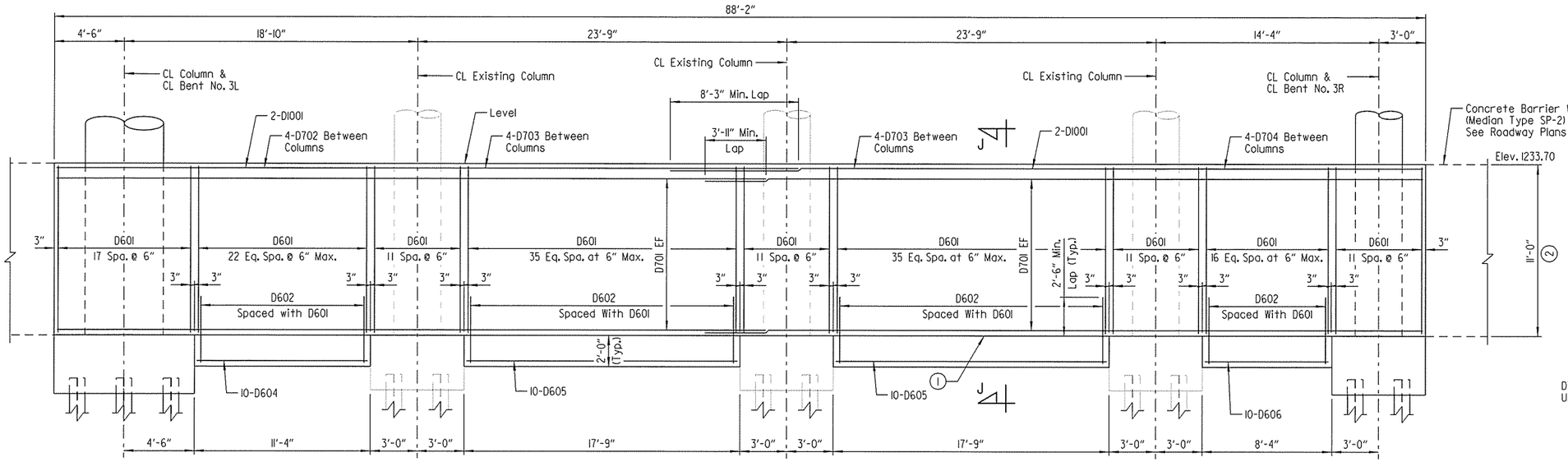

ELEVATION

Median Barrier/Crash Wall
(Bent Nos. 3L & 3R, Looking Ahead)
Scale: 1/4" = 1'-0"

BAR LIST - CRASHWALL			
Mark	No. Req'd	Length	Pin Dia.
D601	178	25-4"	4 1/2"
D602	112	12'-8"	4 1/2"
D603	288	5'-10"	4 1/2"
D604	10	11'-0"	Str.
D605	20	17'-5"	Str.
D606	10	8'-0"	Str.
D607	112	10'-2 1/2"	4 1/2"
D701	64	45'-11"	Str.
D702	4	14'-8"	Str.
D703	8	20'-7"	Str.
D704	4	11'-2"	Str.
D1001	4	48-1"	Str.

BAR BENDING DIAGRAMS

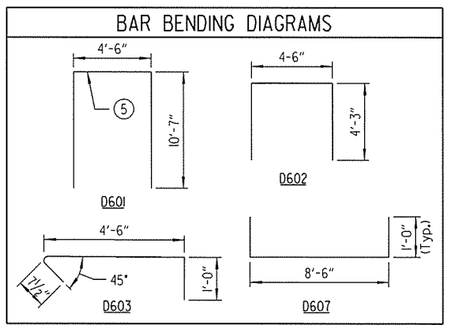

NOTE: Dimensions of bars are out-to-out.

(1) Required construction joint at top of footing (Typ.)

(2) The Contractor shall check measurements to verify a 10'-0" min. clearance between edge of crash wall and edge of lane is maintained, and that the top of crash wall is 5'-0" min. above the top of adjacent pavement. See "SECTION A-A" on Dwg. No. 58115.

(3) See "ELEVATION" for correct bar marks and locations.

(4) Omit D03 bars at column locations.

(5) Clip horizontal leg of D601 as required at column locations.

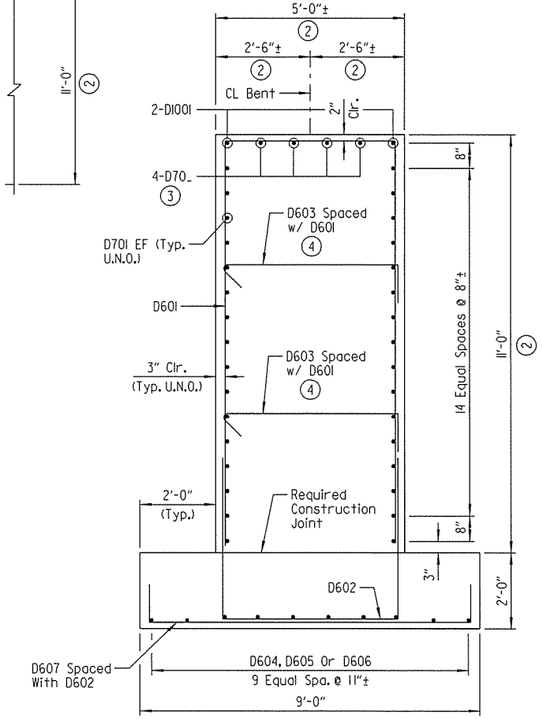

SECTION J-J

Scale: 1/2" = 1'-0"

NOTE:
For "GENERAL NOTES", see Dwg. No. 58117.

LEGEND

U.N.O. = Unless Noted Otherwise
EF = Each Face

STATE OF ARKANSAS
LICENSED PROFESSIONAL ENGINEER
No. 14498
12-20-16
ADAM B. HALL

BRIDGE ENGINEER

SHEET 8 OF 8
DETAILS OF INTERMEDIATE BENTS
HIGHWAY 112
OVER INTERSTATE 49

ROUTE SEC.

ARKANSAS STATE HIGHWAY COMMISSION
LITTLE ROCK, ARK.

DRAWN BY: WMM DATE: DEC. 2015 FILENAME: BBB0414XI_B8.dgn
CHECKED BY: ABH DATE: JAN. 2016 SCALE: AS SHOWN
DESIGNED BY: WMM DATE: DEC. 2015
BRIDGE NO. 05692 DRAWING NO. 58121

Jeskinner 3/20/2016 3:34:54 PM
WORKSPACE: AHTD Bridge
L:\ROW\NOT707 - I-540 Widening & Interchange Improvement\Drawings\I540-HWY112-S216-BE.dgn
REVISED DATE:

DATE REVISED	DATE FILMED	DATE REVISED	DATE FILMED	FED. ROAD DIST. NO.	STATE	FED. AID PROJ. NO.	SHEET NO.	TOTAL SHEETS
				6	ARK.			
				JOB NO.		BB0414	399	886
				(1) 05692		303'-0" W-BEAM UNIT		58122

Note:
Class 2 Protective Surface Treatment shall be applied to the roadway surface, sidewalk, roadway face of concrete parapet, and shared use path and buffer surfaces. Class 3 Textured Coating Finish shall be applied to areas as specified in SP JOB NO. BB0414 "TEXTURED COATING FINISH" and in accordance with Subsection 802.19. Textured Coating Finish shall not be applied on surfaces where Class 2 Protective Surface Treatment is applied.

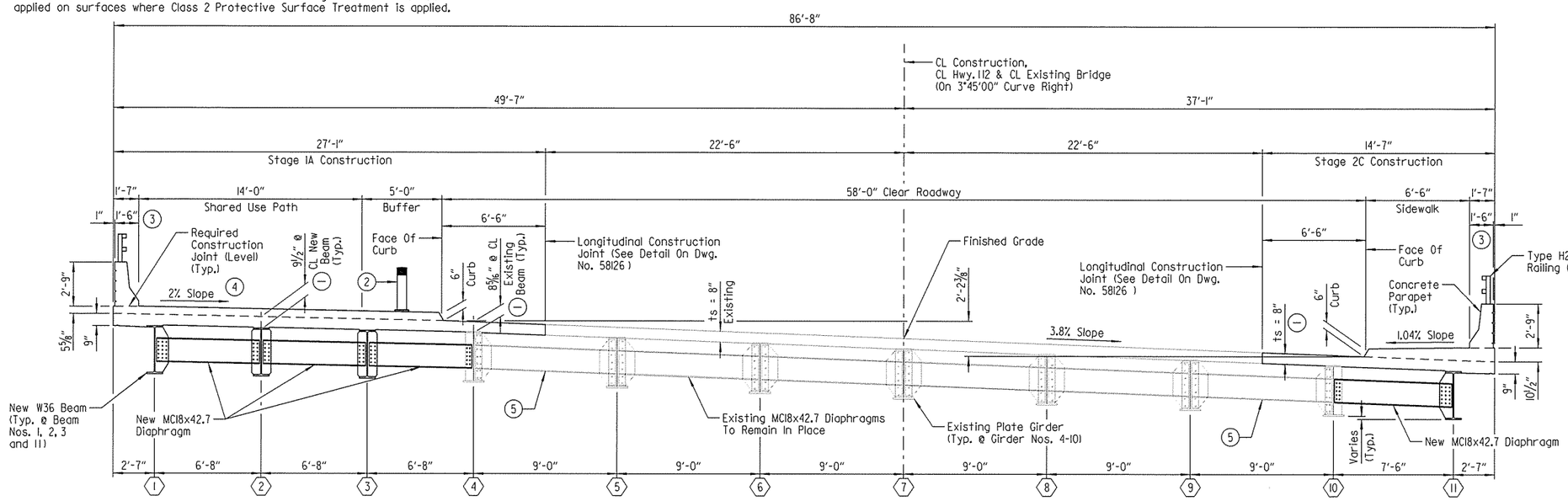

TYPICAL SECTION

(Showing Overall Dimensions, Looking Ahead)
Scale: 1/4" = 1'-0"

Notes:
Care shall be exercised during the removal of the existing deck to ensure that the bolted field splices, girders, diaphragms, shear studs and connection plates are not damaged. Damaged items that are not salvageable, as determined by the Engineer, shall be replaced by the Contractor at no additional payment.

Installation of new diaphragms and connection plates, including field drilling and installing new high-strength bolts in existing exterior connection plates, shall occur prior to Stage 1A & Stage 2C deck pours.

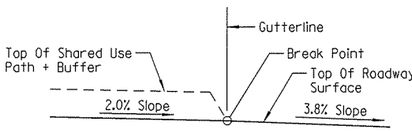

SUPERELEVATION BREAK POINT DETAIL

(Looking Ahead)
No Scale

Note:
For slab reinforcing details, see Dwg. No. 58123.

Horizontal dimensions are measured along a radial line projected from CL Existing Bridge.

(X) Beam or Girder Number

(1) See "ADJUSTMENT FOR SLAB THICKNESS TOLERANCE WHEN REMOVABLE DECK FORMING IS USED".

(2) Solar powered bollards to be placed in Buffer by Others.

(3) Widened parapet to accommodate form liner and metal bridge railing. See Dwg. Nos. 58132 - 58135.

(4) Deck cross slope shall match shared used path slope from edge of deck to gutterline. See "SUPERELEVATION BREAK POINT DETAIL".

(5) Bolts in this bay only shall be loosened to the satisfaction of the Engineer prior to the new deck pour. Any existing bolt that is loosened shall be replaced with a new high-strength bolt. These bolts shall be tightened immediately after completion of the new adjacent deck pour. All new high-strength bolts shall be paid for as "STRUCTURAL STEEL IN BEAM SPANS (M270, GR. 50W)".

For each stage of construction, an external means of supporting the temporary overhang of existing deck shall be provided and shall remain in place until after completion of the new adjacent deck pour. See "DECK SUPPORT AT LONGITUDINAL CONSTRUCTION JOINT".

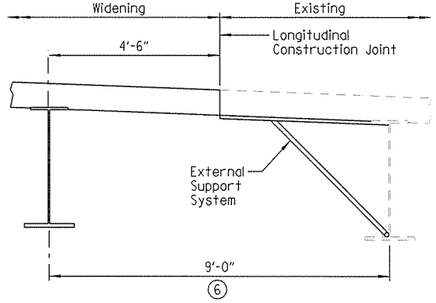

NOTE:
External supports at Girder Nos. 5 and 9 shall remain in place until after completion of the deck pour. See Subsection 802.15 for additional information regarding the removal of the support system.

DECK SUPPORT AT LONGITUDINAL CONSTRUCTION JOINT

No Scale

(6) Existing stay-in-place metal deck forms shall remain in place.

LEGEND

U.N.O. = Unless Noted Otherwise

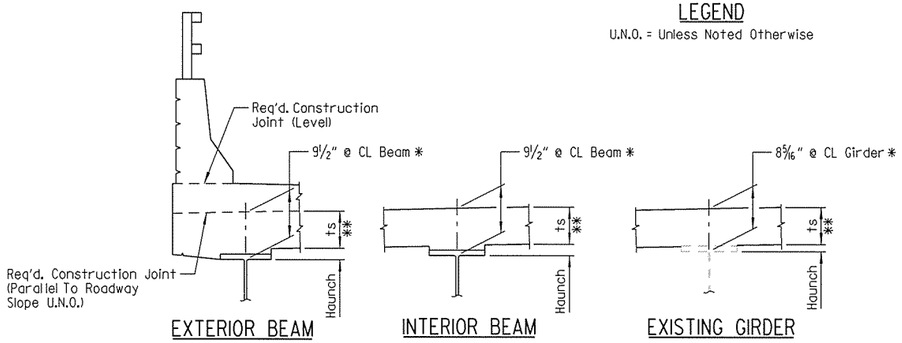

EXTERIOR BEAM | INTERIOR BEAM | EXISTING GIRDER

Note: t_S = Slab Thickness as shown on "TYPICAL SECTION".

* Measured to bottom of top flange

** Tolerance when removable deck forming is used is + ½", - ¼". Haunch forming is required and shall be adjusted to maintain slab thickness tolerance.

ADJUSTMENT FOR SLAB THICKNESS TOLERANCE WHEN REMOVABLE DECK FORMING IS USED

No Scale

Haunch dimension may vary within the following limits to maintain the grade and slab thickness tolerance: minimum - occurs when the top flange contacts the bottom reinforcing steel; maximum - top flange thickness plus 1¼". No increase in concrete and structural steel quantities will be made to maintain tolerances.

Tolerances shown are applicable only when removable deck forming is used. See Std. Dwg. No. 55005 for tolerances when permanent steel deck forms are used. Payment for concrete shall be based on removable deck forming.

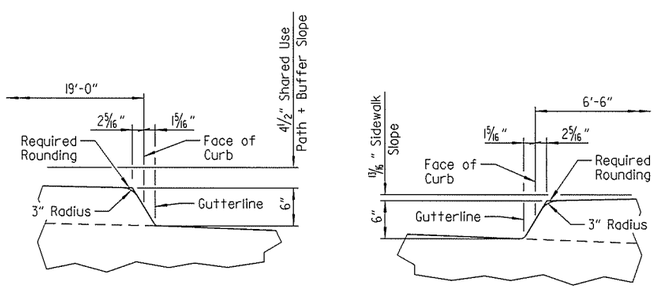

SIDEWALK CURB DETAIL

(Looking Ahead)
No Scale

STATE OF ARKANSAS
LICENSED PROFESSIONAL ENGINEER
No. 15902
PRESTON C. CAMPBELL
3-20-16
BRIDGE ENGINEER

SHEET 1 OF 15
DETAILS OF 303'-0" CONTINUOUS COMPOSITE W-BEAM UNIT HIGHWAY 112 OVER INTERSTATE 49

ROUTE SEC.

ARKANSAS STATE HIGHWAY COMMISSION
LITTLE ROCK, ARK.

DRAWN BY: HEW DATE: DEC. 2015 FILENAME: BBB0414XI_SI.dgn
CHECKED BY: ABH DATE: DEC. 2015 SCALE: AS SHOWN
DESIGNED BY: PCC DATE: NOV. 2015
BRIDGE NO. 05692 DRAWING NO. 58122

jaskinner 3/20/2016 3:34:54 PM
WORKSPACE: AHTD Bridge
L:\ROW\00707 - I-540 Widening & Interchange Improvement\Drawings\I540-HWY112-S301-SX.dgn
REVISED DATE:

DATE REVISED	DATE FILMED	DATE REVISED	DATE FILMED	FED. ROAD DIST. NO.	STATE	FED. AID PROJ. NO.	SHEET NO.	TOTAL SHEETS
				6	ARK.			
				JOB NO.		BB0414	400	886
				① 05692		303'-0" W-BEAM UNIT		58123

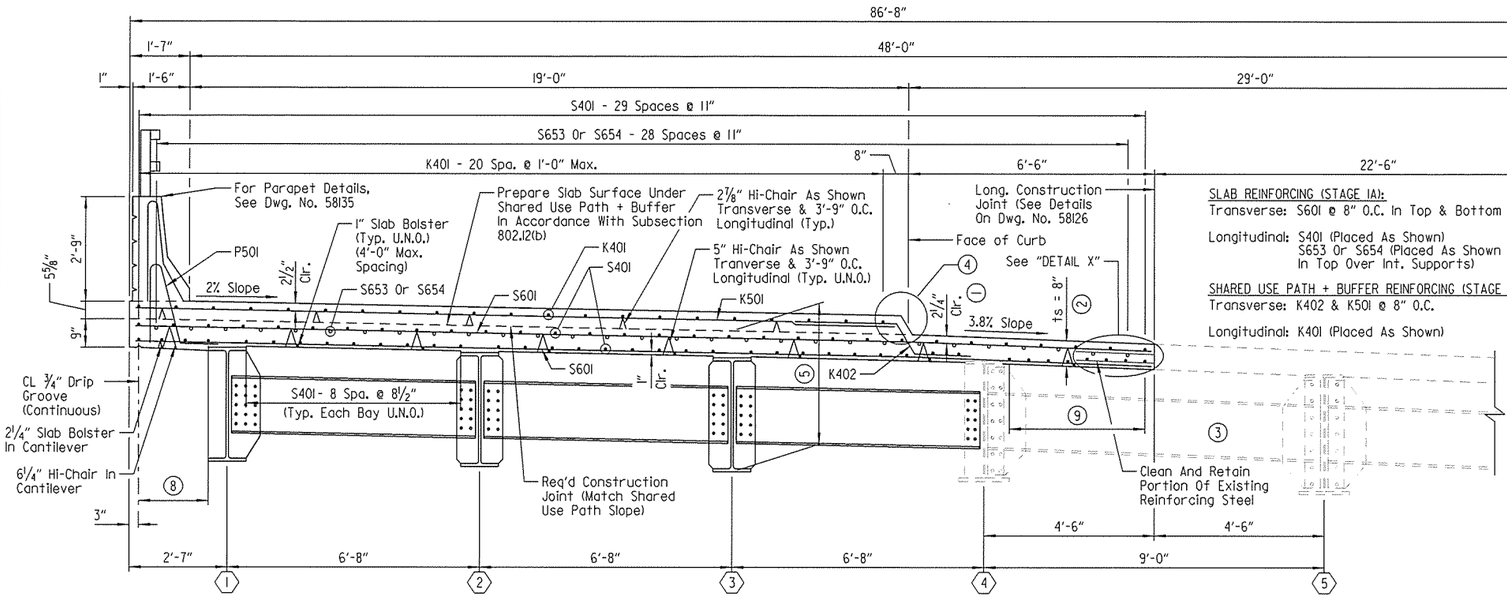

SLAB REINFORCING (STAGE IA):
Transverse: S601 @ 8" O.C. In Top & Bottom

Longitudinal: S401 (Placed As Shown)
S653 Or S654 (Placed As Shown In Top Over Int. Supports)

SHARED USE PATH + BUFFER REINFORCING (STAGE IA):
Transverse: K402 & K501 @ 8" O.C.

Longitudinal: K401 (Placed As Shown)

CL Construction, CL Hwy. 112 & CL Existing Bridge (On 3°45'00" Curve Right)

⑧ S401 - 3 Spaces @ 7½"±

⑨ S401 - 7 Spaces @ 6½"±

PARTIAL SECTION - DECK & SHARED USE PATH + BUFFER REINFORCING

(Stage IA, Looking Ahead)
Scale: ½" = 1'-0"

(X) Beam or Girder Number

① TOLERANCE:
Minus = ¼"
Plus = Amount of slab thickening used to meet slab thickness tolerance - See "ADJUSTMENT FOR SLAB THICKNESS TOLERANCE WHEN REMOVABLE DECK FORMING IS USED" on Dwg. No. 58122.

② See "ADJUSTMENT FOR SLAB THICKNESS TOLERANCE WHEN REMOVABLE DECK FORMING IS USED" on Dwg. No. 58122.

③ Bolts in this bay only shall be loosened to the satisfaction of the Engineer prior to the new deck pour. Any existing bolt that is loosened shall be replaced with a new high-strength bolt. These bolts shall be tightened immediately after completion of the new adjacent deck pour. All new high-strength bolts shall be paid for as "STRUCTURAL STEEL IN BEAM SPANS (M270, GR. 50W)".

For each stage of construction, an external means of supporting the temporary overhang of existing deck shall be provided and shall remain in place until after completion of the new adjacent deck pour. See "DECK SUPPORT AT LONGITUDINAL CONSTRUCTION JOINT" on Dwg. No. 58122.

④ See "SIDEWALK CURB DETAIL" on Dwg. No. 58122.

⑤ 3'-7½" + bottom flange thickness, measured @ CL Beam (Typ. @ all new beams)

Notes:
Horizontal dimensions are measured along a radial line projected from CL Existing Bridge.

For "BAR LIST" & "BAR BENDING DIAGRAMS", see Dwg. No. 58127.

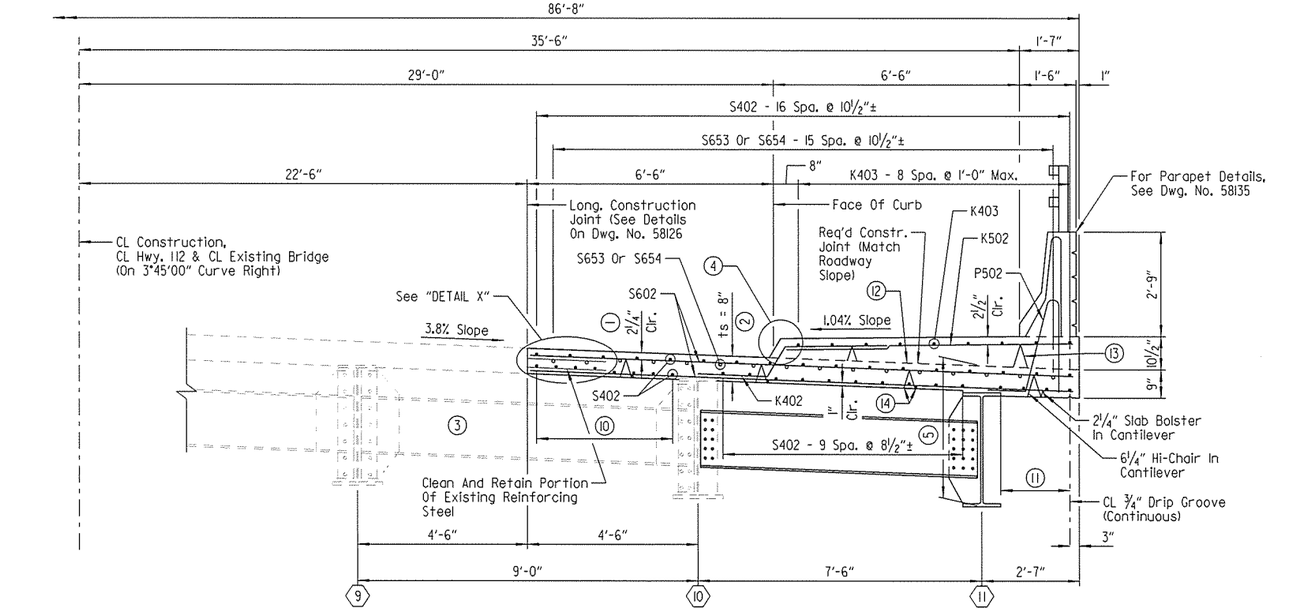

SLAB REINFORCING (STAGE 2C):
Transverse: S602 @ 8" O.C. In Top & Bottom

Longitudinal: S402 (Placed As Shown)
S653 Or S654 (Placed As Shown In Top Over Int. Supports)

SIDEWALK REINFORCING (STAGE 2C):
Transverse: K402 & K502 @ 8" O.C.

Longitudinal: K403 (Placed As Shown)

PARTIAL SECTION - DECK & SIDEWALK REINFORCING

(Stage 2C, Looking Ahead)
Scale: ½" = 1'-0"

⑩ S402 - 7 Spaces @ 6½"±

⑪ S402 - 3 Spaces @ 7½"±

⑫ Prepare Slab Surface Under Sidewalk In Accordance With Subsection 802.12(b)

⑬ Height of Hi-Chairs in sidewalk area shall be set as necessary to maintain 2½" clear cover to top transverse bars. Space as shown transverse and 3'-9" O.C. longitudinal.

⑭ 5" Hi-Chair and 1" Slab Bolster as shown transverse and 3'-9" O.C. longitudinal (Typ. U.N.O.)

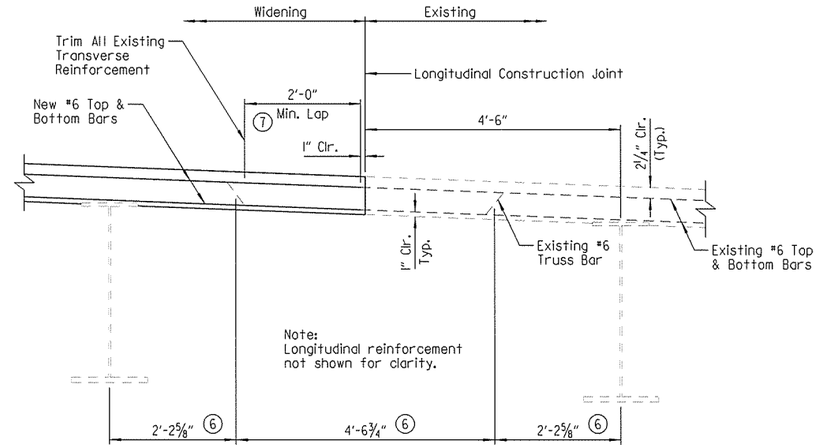

DETAIL X

Scale: ¾" = 1'-0"

⑥ Based on existing plans. The Contractor shall verify dimensions in the field.

⑦ New reinforcing steel shall not be tied to existing transverse reinforcing steel.

STATE OF ARKANSAS
LICENSED PROFESSIONAL ENGINEER
No. 15902
PRESTON C. CAMPBELL
3-20-16
BRIDGE ENGINEER

SHEET 2 OF 15
DETAILS OF 303'-0" CONTINUOUS COMPOSITE W-BEAM UNIT
HIGHWAY 112
OVER INTERSTATE 49

ROUTE SEC.

ARKANSAS STATE HIGHWAY COMMISSION
LITTLE ROCK, ARK.

DRAWN BY: HEW DATE: DEC. 2015 FILENAME: BBB0414XI_S2.dgn
CHECKED BY: ABH DATE: DEC. 2015 SCALE: AS SHOWN
DESIGNED BY: PCC DATE: NOV. 2015
BRIDGE NO. 05692 DRAWING NO. 58123

jeskinner 3/20/2016 3:34:55 PM
WORKSPACE: AHTD Bridge
L:\2016\16017\01 - I-540 Widening & Interchange Improvement\Drawings\540-HWY112-S302-SX.dgn
REVISED DATE:

DATE REVISED	DATE FILMED	DATE REVISED	DATE FILMED	FED. ROAD DIST. NO.	STATE	FED. AID PROJ. NO.	SHEET NO.	TOTAL SHEETS
				6	ARK.			
				JOB NO.		BB0414	401	886
				(1) 05692		303'-0" W-BEAM UNIT		58124

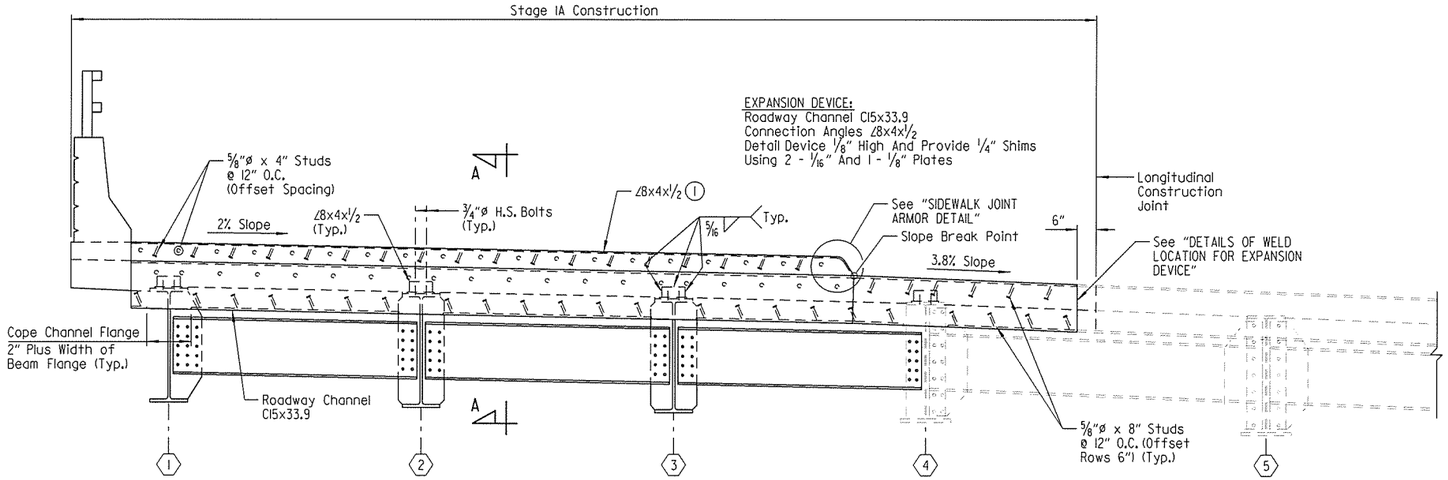

TYPICAL SECTION THRU JOINT

(Stage IA, Looking Ahead)
No Scale

(1) Trim vertical leg of split channel or angle as required.

Notes:
The profile of the Roadway Channel shall be established based on the Vertical Curve in conjunction with the skew.

For details of poured silicone joint and "SECTION A-A", see Dwg. No. 58136 .

(X) Beam or Girder Number

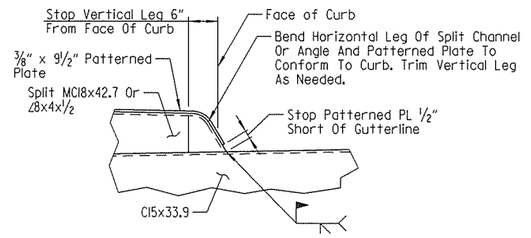

SIDEWALK JOINT ARMOR DETAIL

No Scale

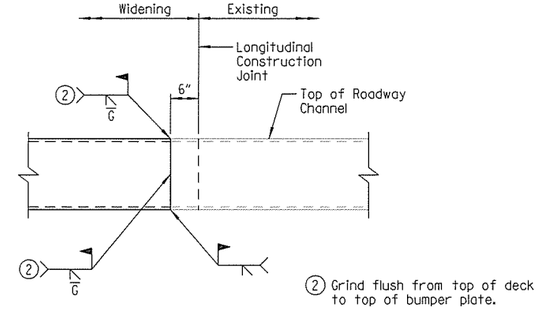

(2) Grind flush from top of deck to top of bumper plate.

DETAILS OF WELD LOCATION FOR EXPANSION DEVICE

No Scale

(3) At new connections to existing beams (Girders No. 4 & 10), 15/16 "ø holes in angle shall be field drilled in lieu of the 15/16 " x 1 1/2" slots. 15/16 "ø holes in angle shall align with existing holes in existing girder flanges.

TABLE OF VARIABLES			
	BEAM NO.	BENT NO.	"A"
NEW	1	1	18°23'15"
		5	29°20'29"
	2	1	18°28'07"
		5	29°28'42"
	3	1	18°33'01"
		5	29°37'00"
	11	1	19°25'49"
		5	31°06'53"
EXSITNG	4	1	18°37'58"
		5	29°45'23"
	10	1	19°19'45"
		5	30°56'31"

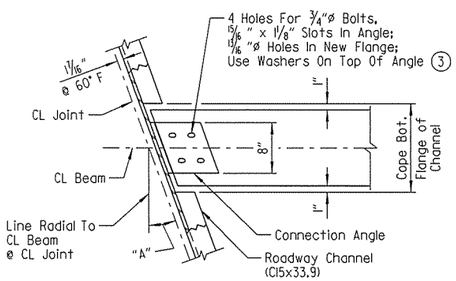

CHANNEL CONNECTION DETAIL

No Scale

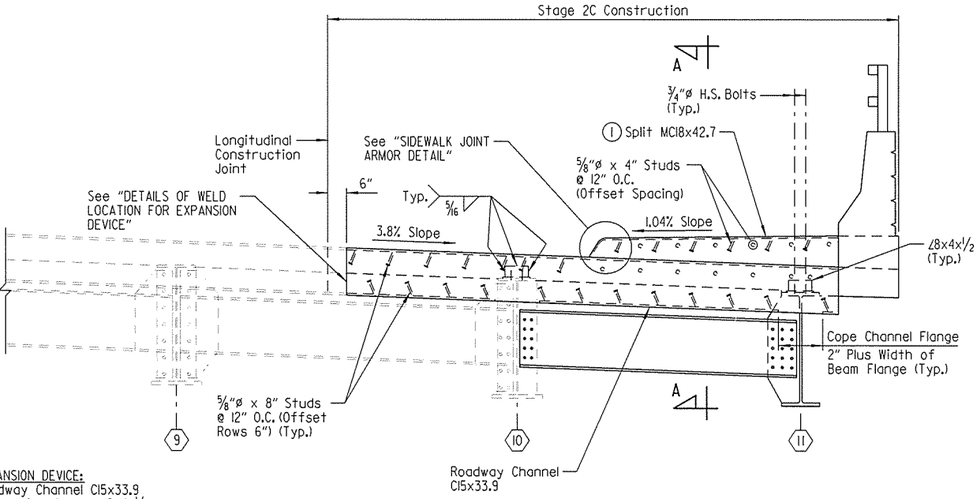

EXPANSION DEVICE:
Roadway Channel C15x33.9
Connection Angles ∠8x4x1/2
Detail Device 1/8" High And Provide 1/4" Shims
Using 2 - 1/16" And 1 - 1/8" Plates

TYPICAL SECTION THRU JOINT

(Stage 2C, Looking Ahead)
No Scale

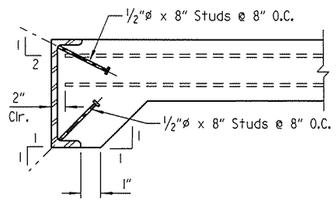

DETAIL OF ALTERNATE ANCHORS

No Scale

Note:
As an alternate to 5/8"ø studs, 1/2"ø x 8" studs spaced as shown may be used. Use weight of 5/8"ø stud as basis of measurement of structural steel.

STATE OF ARKANSAS
LICENSED PROFESSIONAL ENGINEER
No. 15902
3-20-16
PRESTON C. CAMPBELL
BRIDGE ENGINEER

SHEET 3 OF 15
DETAILS OF 303'-0" CONTINUOUS COMPOSITE W-BEAM UNIT HIGHWAY 112 OVER INTERSTATE 49

ROUTE SEC.

ARKANSAS STATE HIGHWAY COMMISSION
LITTLE ROCK, ARK.

DRAWN BY: HEW DATE: DEC. 2015 FILENAME: BBB0414XI_S3.dgn
CHECKED BY: ABH DATE: DEC. 2015 SCALE: AS SHOWN
DESIGNED BY: PCC DATE: NOV. 2015
BRIDGE NO. 05692 DRAWING NO. 58124

jaskinner 3/20/2016 3:34:55 PM
WORKSPACE: AHTD_Bridge
L:\ROW\WORK\07107 - I-540 Widening & Interchange Improvement\Drawings\I540-HWY112-S303-SX.dgn
REVISED DATE:

DATE REVISED	DATE FILMED	DATE REVISED	DATE FILMED	FED. ROAD DIST. NO.	STATE	FED. AID PROJ. NO.	SHEET NO.	TOTAL SHEETS
				6	ARK.			
				JOB NO.		BB0414	402	886
				(1) 05692		303'-0" W-BEAM UNIT		58125

(1) Parapet joint spacing measured along inside face of parapet. Parapet joints designated with symbol (F) shall be stopped 4" from top of slab. All other parapet joints with symbol (P) shall be partial depth joints stopped 1'-2" from top of slab.

(2) See "SLAB JOINT DETAIL" on Dwg. No. 58126 .

(3) See "LONGITUDINAL CONSTRUCTION JOINT DETAIL" on Dwg. No. 58126 .

(4) Placed as shown on partial sections on Dwg. No. 58123

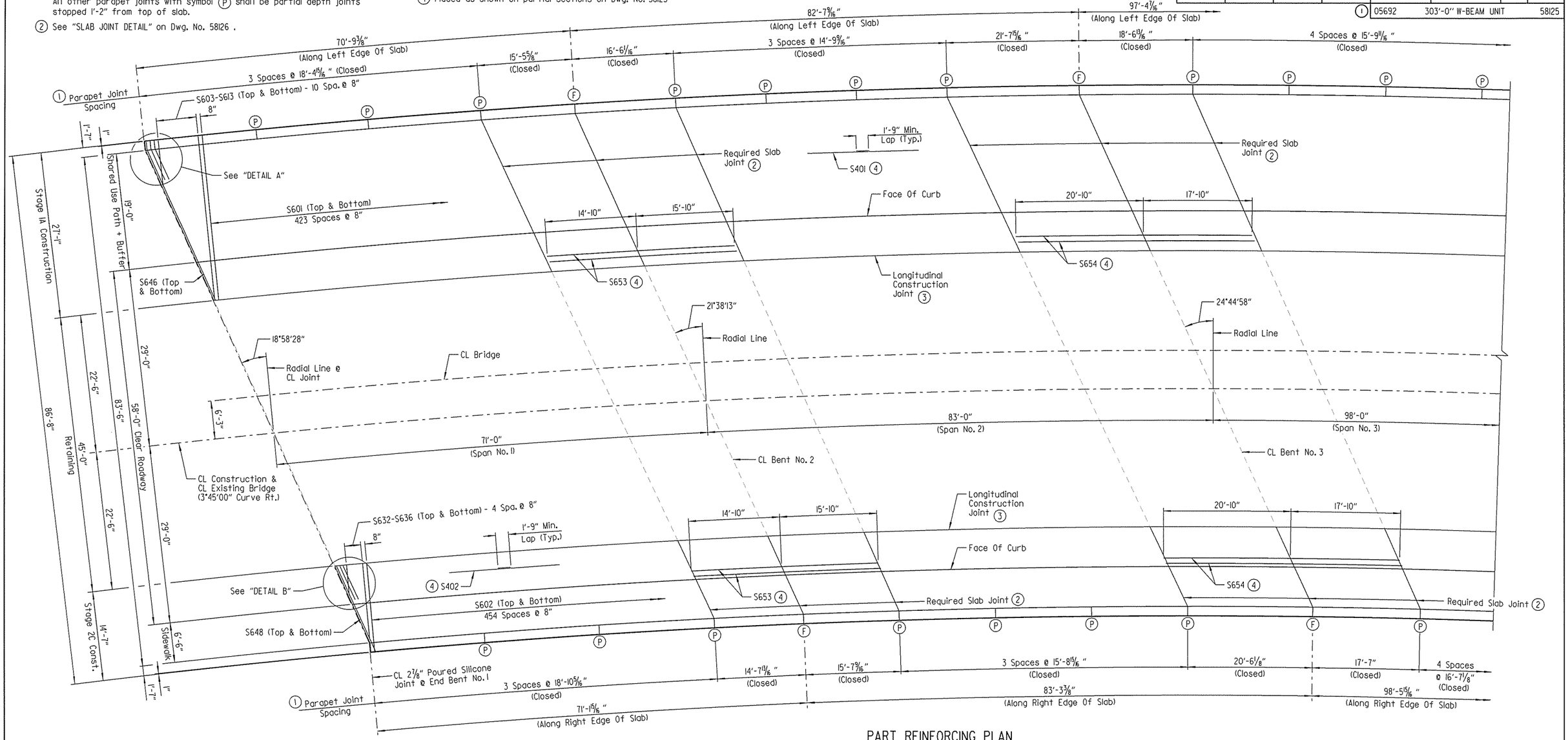

PART REINFORCING PLAN

Scale: 1/8" = 1'-0"

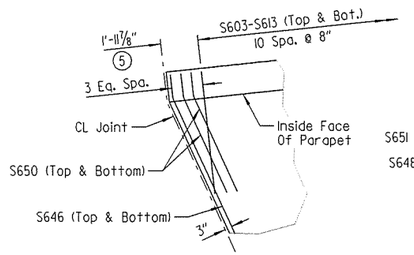

DETAIL A

Scale: 1/4" = 1'-0"

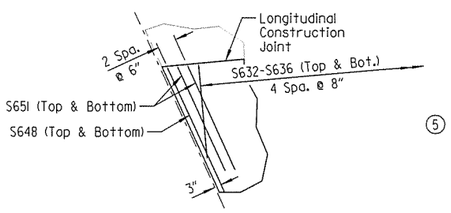

DETAIL B

Scale: 1/4" = 1'-0"

(5) Measured Along Edge Of Slab

NOTES:
Unless noted otherwise, spacing shown for all transverse reinforcing is measured along CL Construction. All transverse reinforcing shall be placed on lines radial to CL Construction.

All longitudinal lines and longitudinal slab reinforcing shall be placed along curves concentric with CL Construction (3°45'00" curve).

Required slab joints shall align with the parapet open joints.

For parapet reinforcing details, see Dwg. Nos. 58133 - 58135.

For shared used path + buffer and sidewalk reinforcing details, see Dwg. No. 58133.

For "CONCRETE PLACEMENT PROCEDURE", see Dwg. No. 58133.

STATE OF ARKANSAS
LICENSED PROFESSIONAL ENGINEER
No. 15902
3-9-16
PRESTON C. CAMPBELL
BRIDGE ENGINEER

SHEET 4 OF 15
DETAILS OF 303'-0" CONTINUOUS COMPOSITE W-BEAM UNIT
HIGHWAY 112
OVER INTERSTATE 49

ROUTE SEC.

ARKANSAS STATE HIGHWAY COMMISSION

LITTLE ROCK, ARK.

DRAWN BY: HEW DATE: DEC. 2015 FILENAME: BBB0414XL_S4.dgn
CHECKED BY: ABH DATE: DEC. 2015 SCALE: AS SHOWN
DESIGNED BY: PCC DATE: NOV. 2015

BRIDGE NO. 05692 DRAWING NO. 58125

Jeskinner 3/20/2016 3:34:56 PM
WORKSPACE: AHTD_Bridge
L:\CONWAY\707 - I-540 Widening & Interchange Improvement\Drawings\I540-HWY112-S304-58.dgn
REVISED DATE:

DATE REVISED	DATE FILMED	DATE REVISED	DATE FILMED	FED. ROAD DIST. NO.	STATE	FED. AID PROJ. NO.	SHEET NO.	TOTAL SHEETS
				6	ARK.			
				JOB NO.		BB0414	403	886
				(1) 05692		303'-0" W-BEAM UNIT		58126

(1) Parapet joint spacing measured along inside face of parapet. Parapet joints designated with symbol (F) shall be stopped 4" from top of slab. All other parapet joints with symbol (P) shall be partial depth joints stopped 1'-2" from top of slab.

(2) See "SLAB JOINT DETAIL".

(3) See "LONGITUDINAL CONSTRUCTION JOINT DETAIL".

(4) Placed as shown on partial sections on Dwg. No. 58123

(5) Measured Along Edge Of Slab

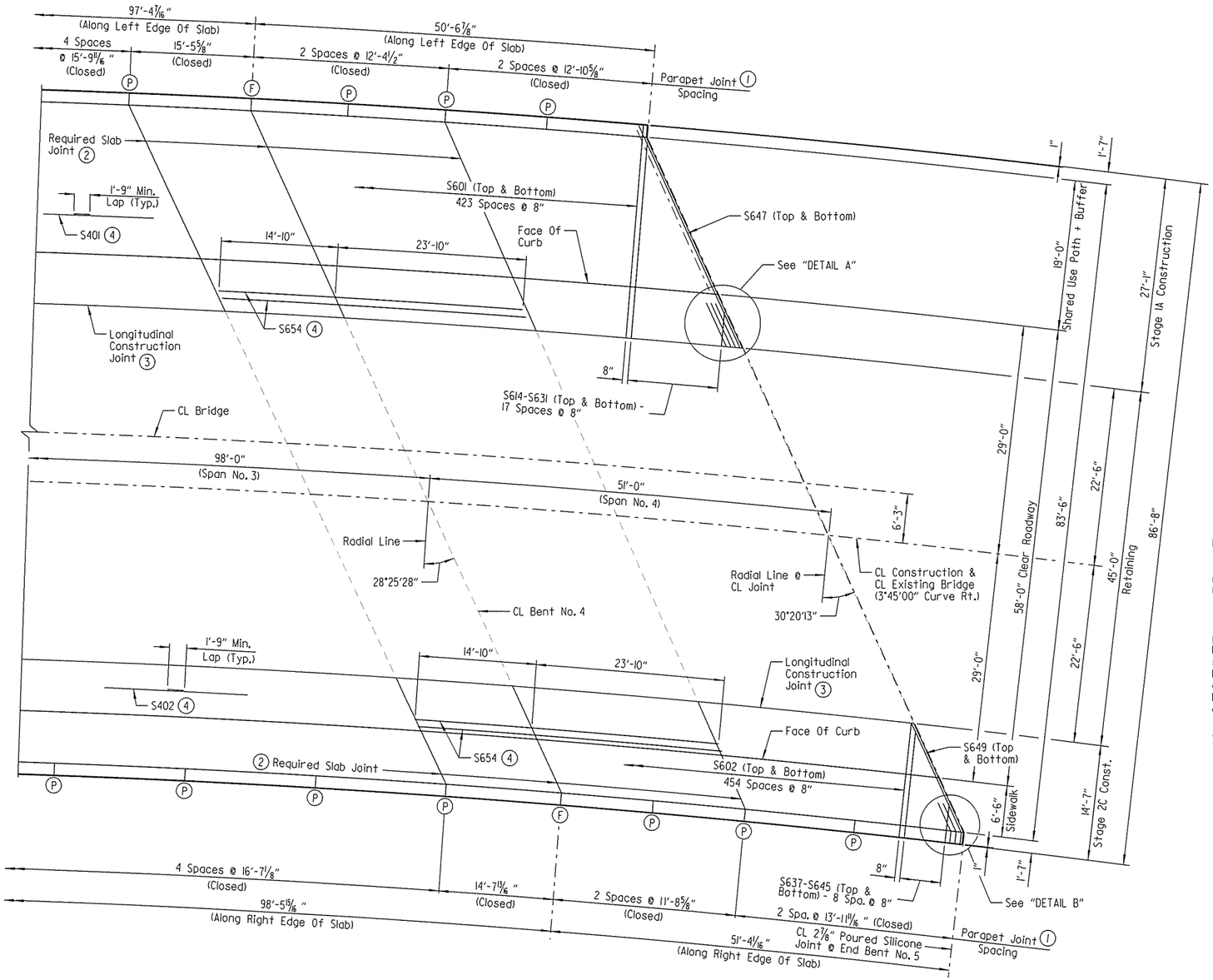

PART REINFORCING PLAN

Scale: 1/8" = 1'-0"

NOTES:
Unless noted otherwise, spacing shown for all transverse reinforcing is measured along CL Construction. All transverse reinforcing shall be placed on lines radial to CL Construction.

All longitudinal lines and longitudinal slab reinforcing shall be placed along curves concentric with CL Construction (3°45'00" curve).

Required slab joints shall align with the parapet open joints.

For parapet reinforcing details, see Dwg. Nos. 58133 - 58135.

For shared use path + buffer and sidewalk reinforcing details, see Dwg. No. 58133.

For "CONCRETE PLACEMENT PROCEDURE", see Dwg. No. 58133.

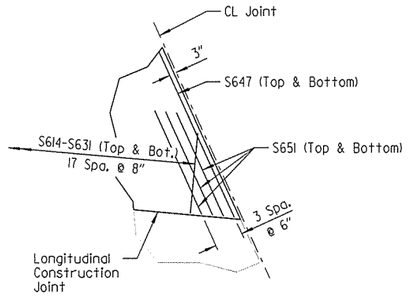

DETAIL A

Scale: 1/4" = 1'-0"

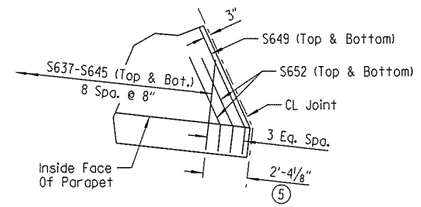

DETAIL B

Scale: 1/4" = 1'-0"

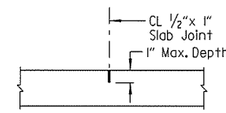

NOTE:
The 1/2" x 1" poured joint sealer (Type 3 or 4) in slab shall conform to Subsections 501.02(h) and 501.05(j). Backer rod filler will not be required. The poured joint sealer shall be paid for as "CLASS S(AE) CONCRETE-BRIDGE". Slab joints shall extend to the outside edge of the deck slab. Slab joints in the deck shall be installed before the sidewalk is poured. Slab joints in the sidewalk shall extend to the outside of the sidewalk and shall be installed before the parapet railing is poured. If slab joints are to be sawed, they shall be sawed as soon as the concrete has sufficiently set to allow sawing of the joint without damage to the slab. Slab joints shall be placed at all required slab joint locations. The joint sealer shall extend across the deck slab and across the top of the sidewalk. No joint sealer shall be placed on the deck slab under the sidewalk or parapet rail.

All references to sidewalk in the note above are also applicable to the shared use path and buffer.

SLAB JOINT DETAIL

No Scale

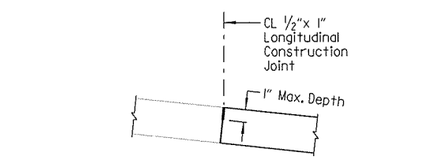

NOTE:
The 1/2" x 1" poured joint sealer (type 3 or 4) in slab shall conform to Subsections 501.02(h) and 501.05(j). Backer rod filler will not be required. Joint sealer shall be measured and paid for as "CLASS S(AE) CONCRETE-BRIDGE". This joint shall be formed. Seal must be Gray or other color similar to concrete.

LONGITUDINAL CONSTRUCTION JOINT DETAIL

No Scale

STATE OF ARKANSAS
LICENSED PROFESSIONAL ENGINEER
No. 15902
PRESTON C. CAMPBELL
6-20-16
BRIDGE ENGINEER

SHEET 5 OF 15
DETAILS OF 303'-0" CONTINUOUS COMPOSITE W-BEAM UNIT HIGHWAY 112 OVER INTERSTATE 49

ROUTE SEC.

ARKANSAS STATE HIGHWAY COMMISSION
LITTLE ROCK, ARK.

DRAWN BY: HEW DATE: DEC. 2015 FILENAME: BBB0414XI_S5.dgn
CHECKED BY: ABH DATE: DEC. 2015 SCALE: AS SHOWN
DESIGNED BY: PCC DATE: NOV. 2015
BRIDGE NO. 05692 DRAWING NO. 58126

Jeskinner 3/20/2016 3:34:56 PM
WORKSPACE: AHTD Bridge
L:\208\I001707 - I-540 Widening & Interchange Improvement\Drawings\I540-HWYII2-S305-SB.dgn
REVISED DATE:

DATE REVISED	DATE FILMED	DATE REVISED	DATE FILMED	FED. ROAD DIST. NO.	STATE	FED. AID PROJ. NO.	SHEET NO.	TOTAL SHEETS
				6	ARK.			
				JOB NO.		BB0414	404	886
				(1) 05692		303'-0" W-BEAM UNIT		58127

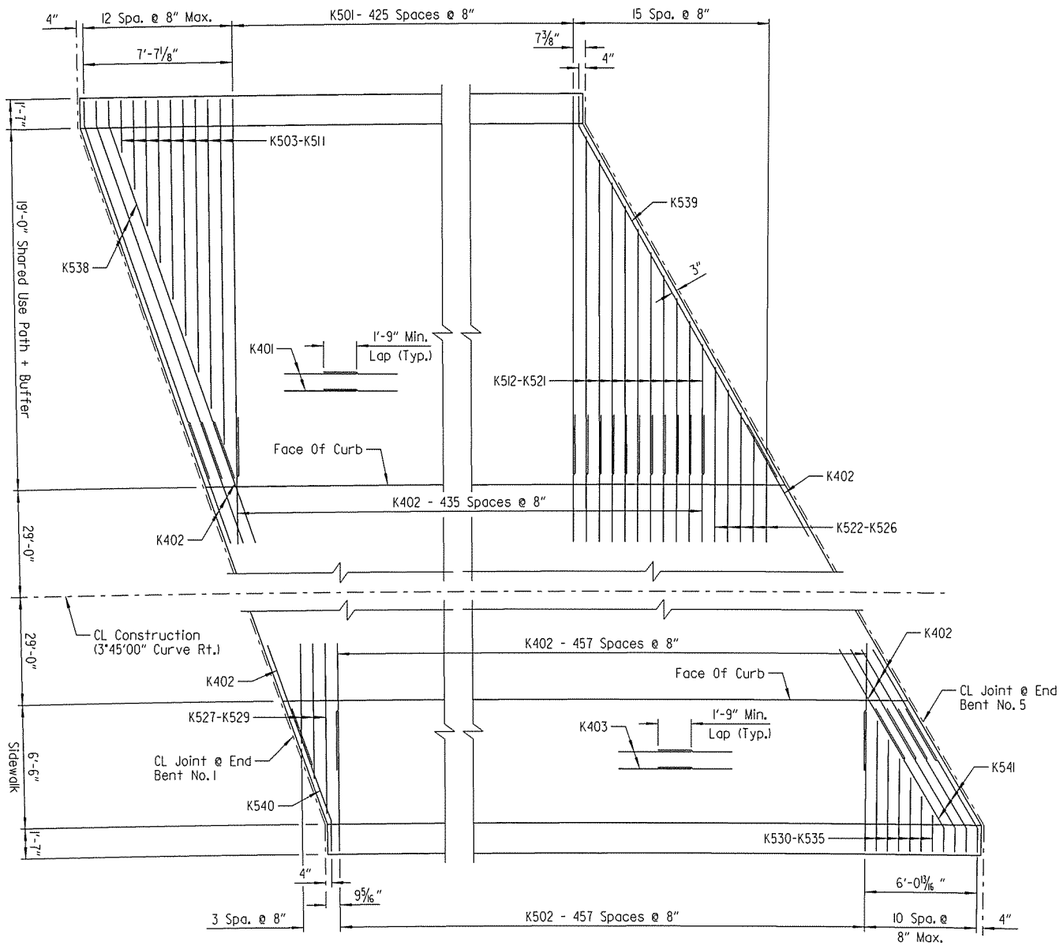

SHARED USE PATH + BUFFER AND SIDEWALK REINFORCING PLAN

Scale: 1/4" = 1'-0"

NOTES:
Spacing shown for all transverse reinforcing in shared use path + buffer and sidewalk is measured along CL Construction. All transverse reinforcing in shared use path + buffer and sidewalk shall be placed on lines radial to CL Construction.

All longitudinal reinforcing in shared use path + buffer and sidewalk shall be placed along curves concentric with CL Construction (3°45'00" curve).

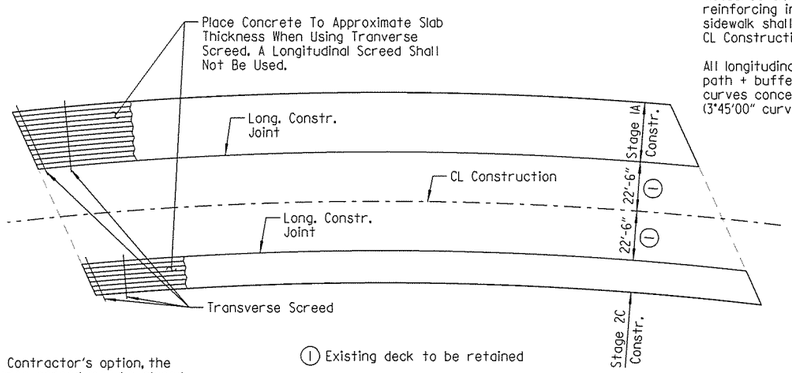

NOTE:
At the Contractor's option, the transverse screed may be placed parallel to the skew or radial to CL Construction.

(1) Existing deck to be retained

CONCRETE PLACEMENT PROCEDURE

No Scale

NOTES:
For each stage of construction, concrete placement for entire unit shall be made in one continuous deck pour, beginning at End Bent No. 5 and ending at End Bent No. 1. For each stage of construction, 72 hours shall elapse between the completion of the entire deck and the pouring of the sidewalk or shared use path, and 72 hours shall elapse between the completion of the sidewalk or shared use path and the pouring of the parapet railing.

The Contractor must obtain approval from the Engineer for any deviations from the pouring sequence noted.

Concrete in bridge superstructure shall be consolidated for the entire pour before any concrete has taken its initial set. This may require the use of a retarding agent.

BAR LIST

Mark	No. Req'd.	Length	Pin Dia.
S401	552	39'-3"	Str.
S402	312	39'-7"	Str.
S601	848	26'-10"	Str.
S602	910	14'-4"	Str.
S603 TO S613	2 Ea.	6'-5 1/2" TO 26'-9"	Str.
S614 TO S631	2 Ea.	24'-9" TO 4'-3"	Str.
S632 TO S636	2 Ea.	4'-11" TO 12'-4"	Str.
S637 TO S645	2 Ea.	13'-6" TO 4'-9"	Str.
S646	2	28'-3"	4 1/2"
S647	2	30'-10"	Str.
S648	2	15'-2"	Str.
S649	2	16'-6"	4 1/2"
S650	4	6'-9"	4 1/2"
S651	10	6'-0"	Str.
S652	4	5'-4"	4 1/2"
S653	45	30'-8"	Str.
S654	90	38'-8"	Str.
P401	1227	5'-6"	3"
P402	9	18'-0"	Str.
P403	6	15'-1"	Str.
P404	3	16'-2"	Str.
P405	9	14'-5"	Str.
P406	3	21'-4"	Str.
P407	3	18'-2"	Str.
P408	21	15'-5"	Str.
P409	6	12'-0"	Str.
P410	6	12'-6"	Str.
P411	16	36'-4"	Str.
P412	24	28'-11"	Str.
P413	24	34'-0"	Str.
P414	16	26'-5"	Str.
P415	6	13'-6"	Str.
P416	6	11'-4"	Str.
P417	6	14'-3"	Str.
P418	12	16'-3"	Str.
P419	3	17'-3"	Str.
P420	3	20'-2"	Str.
P421	3	15'-3"	Str.
P422	9	18'-5"	Str.
P501	608	6'-0"	3 3/4"
P502	619	6'-7"	3 3/4"

BAR LIST (CONTINUED)

Mark	No. Req'd.	"A"	Length	Pin Dia.
K401	168		39'-3"	Str.
K402	903		5'-8"	3"
K403	72		39'-7"	Str.
K501	426		20'-1"	Str.
K502	458		7'-7"	Str.
K503 TO K511	1 Ea.		3'-0" TO 19'-11"	Str.
K512 TO K521	1 Ea.		18'-0" TO 7'-1"	Str.
K522 TO K526	1 Ea.	6'-0" TO 1'-2"	8'-8" TO 3'-10"	3 3/4"
K527 TO K529	1 Ea.	2'-1" TO 5'-9"	4'-9" TO 8'-5"	3 3/4"
K530 TO K535	1 Ea.		7'-1" TO 2'-2"	Str.
K538	3		21'-0"	3 3/4"
K539	1		22'-8"	3 3/4"
K540	1		7'-10"	3 3/4"
K541	4		8'-7"	3 3/4"

BAR BENDING DIAGRAMS

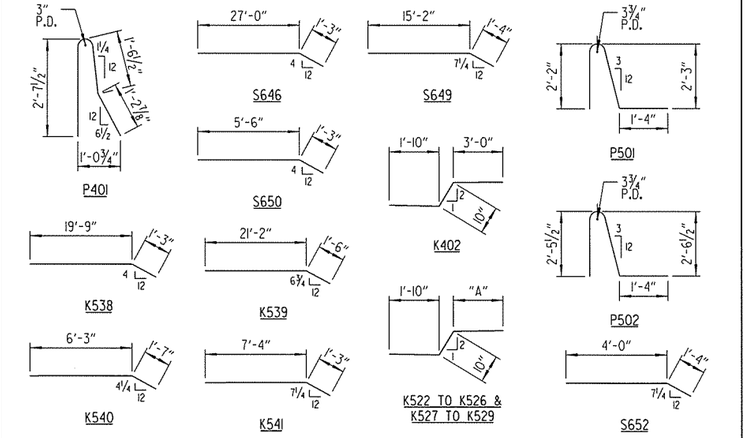

NOTE:
Dimensions of bars are out-to-out.

STATE OF ARKANSAS
LICENSED PROFESSIONAL ENGINEER
No. 15902
3-20-16
PRESTON C. CAMPBELL
BRIDGE ENGINEER

SHEET 6 OF 15
DETAILS OF 303'-0" CONTINUOUS COMPOSITE W-BEAM UNIT HIGHWAY 112 OVER INTERSTATE 49

ROUTE SEC.

ARKANSAS STATE HIGHWAY COMMISSION

LITTLE ROCK, ARK.

DRAWN BY: HEW DATE: DEC. 2015 FILENAME: BBB0414X1_S6.dgn
CHECKED BY: ABH DATE: DEC. 2015 SCALE: AS SHOWN
DESIGNED BY: PCC DATE: NOV. 2015

BRIDGE NO. 05692 DRAWING NO. 58127

Jeskinner 3/20/2016 3:34:56 PM
WORKSPACE: AHTD Bridge
L:\20\NOI7107 - I-540 Widening & Interchange Improvement\Drawings\I540-HWY112-S306-SB.dgn
REVISED DATE:

DATE REVISED	DATE FILMED	DATE REVISED	DATE FILMED	FED. ROAD DIST. NO.	STATE	FED. AID PROJ. NO.	SHEET NO.	TOTAL SHEETS
				6	ARK.			
				JOB NO.		BB0414	405	886
				(1) 05692		303'-0" W-BEAM UNIT		58128

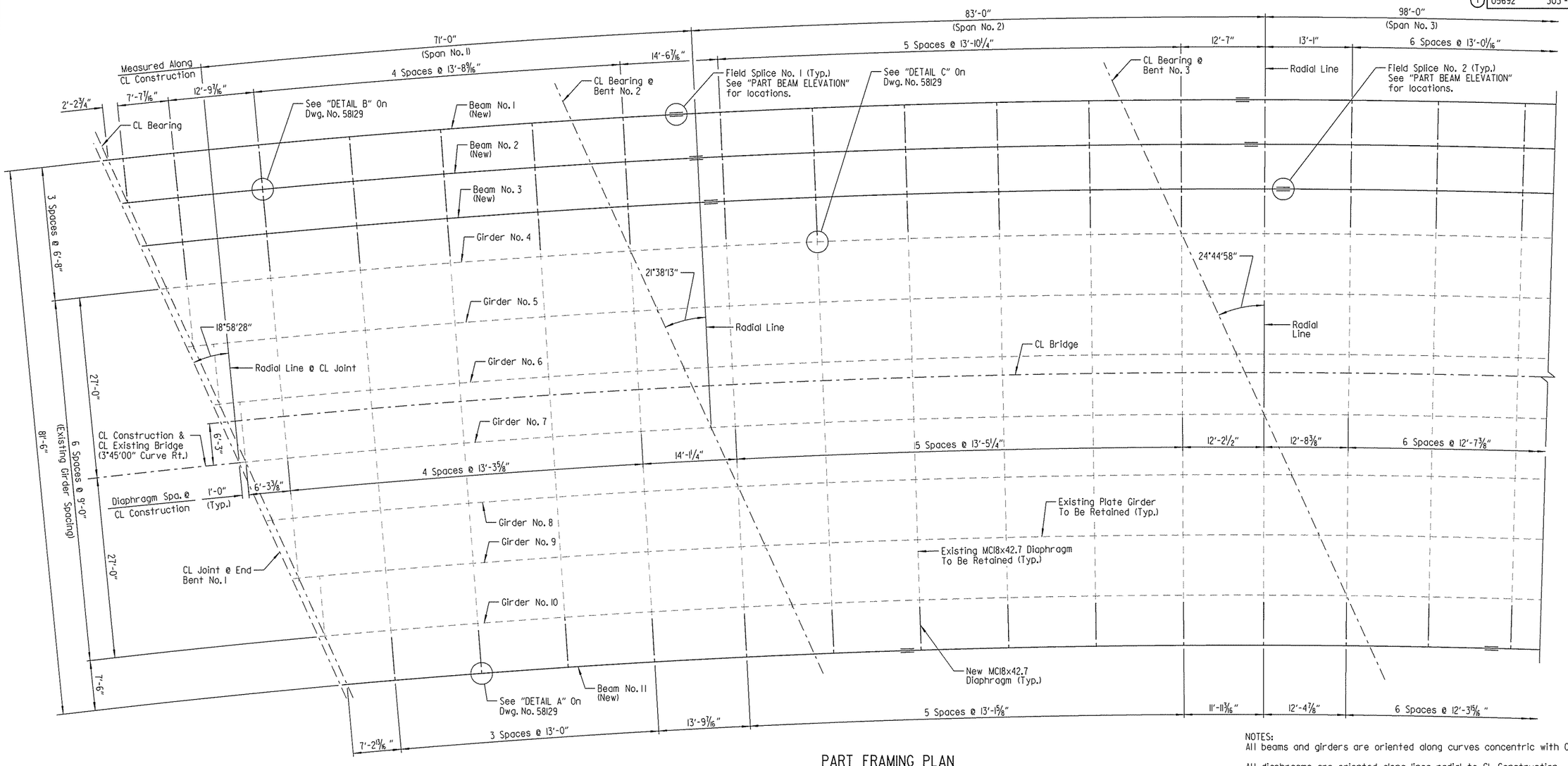

PART FRAMING PLAN

Scale: ⅛" = 1'-0"

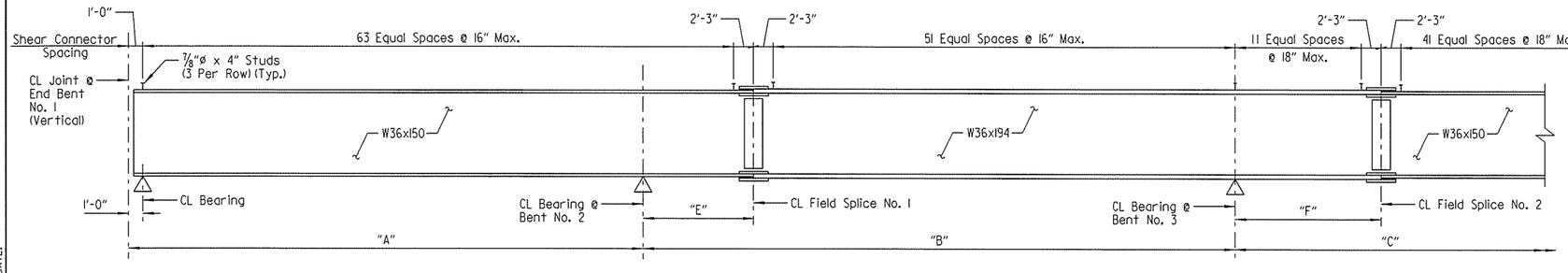

PART BEAM ELEVATION

(Dimensions Measured Along CL Beam)
No Scale

NOTE:
For "TABLE OF VARIABLES", see Dwg. No. 58129 .

NOTES:
All beams and girders are oriented along curves concentric with CL Construction.

All diaphragms are oriented along lines radial to CL Construction.

For connection plate and diaphragm details, see Dwg. No. 58129 .

For "GENERAL NOTES", see Dwg. No. 58131 .

STATE OF ARKANSAS
LICENSED PROFESSIONAL ENGINEER
No. 15902
3-20-16
PRESTON C. CAMPBELL
BRIDGE ENGINEER

SHEET 7 OF 15
DETAILS OF 303'-0" CONTINUOUS COMPOSITE W-BEAM UNIT
HIGHWAY 112
OVER INTERSTATE 49

ROUTE SEC.

ARKANSAS STATE HIGHWAY COMMISSION
LITTLE ROCK, ARK.

DRAWN BY: HEW DATE: DEC. 2015 FILENAME: BBB0414XI_S7.dgn
CHECKED BY: ABH DATE: DEC. 2015 SCALE: AS SHOWN
DESIGNED BY: PCC DATE: NOV. 2015
BRIDGE NO. 05692 DRAWING NO. 58128

jeskinner 3/20/2016 3:34:57 PM
WORKSPACE: AHTD Bridge
L:\20R\I40I7701 - I-540 Widening & Interchange Improvement\Drawings\I540-HRY12-S307-SF.dgn
REVISED DATE:

DATE REVISED	DATE FILMED	DATE REVISED	DATE FILMED	FED. ROAD DIST. NO.	STATE	FED. AID PROJ. NO.	SHEET NO.	TOTAL SHEETS
				6	ARK.			
				JOB NO.		BB0414	406	886
				① 05692		303'-0" W-BEAM UNIT		58129

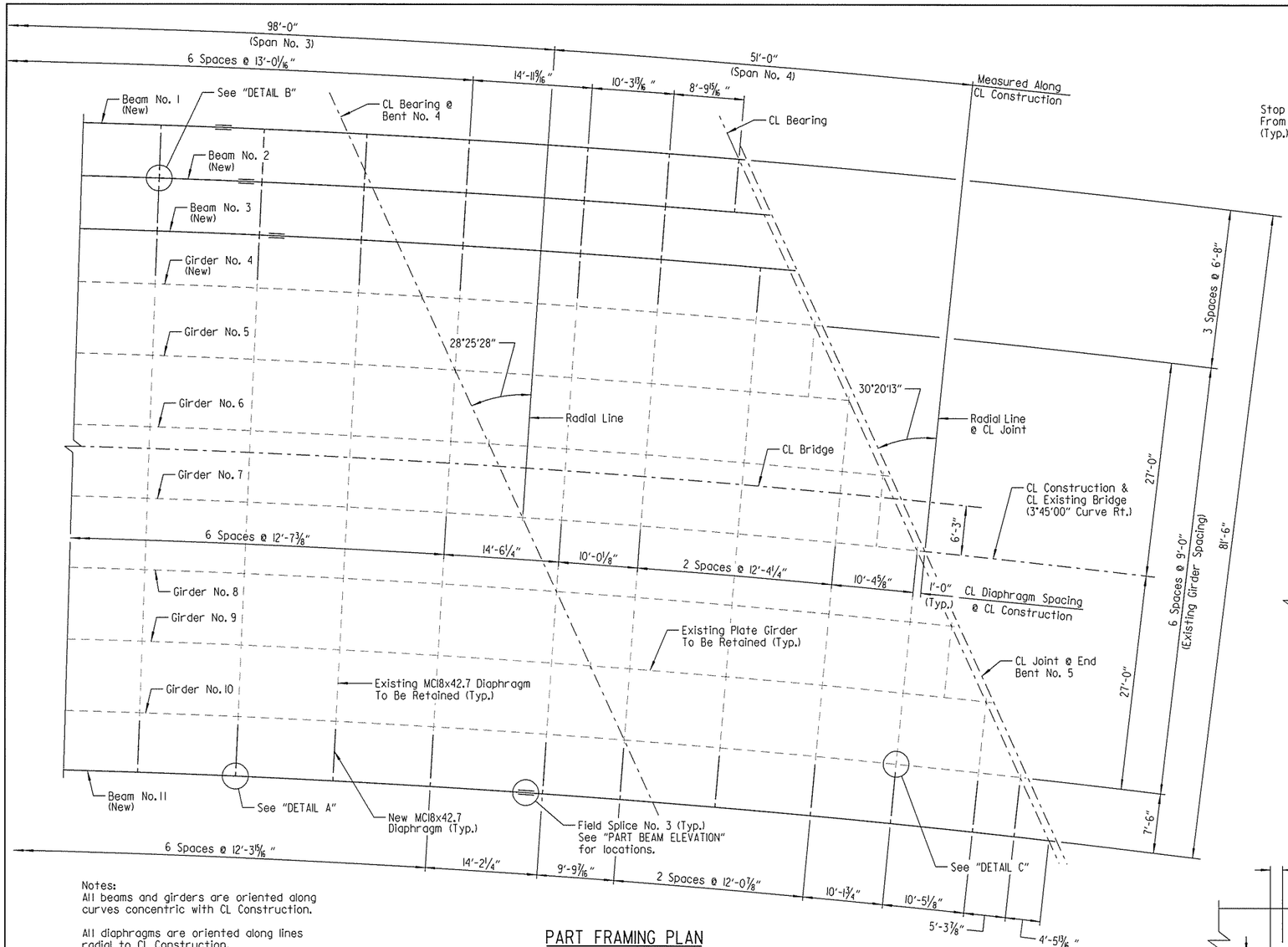

Notes:
All beams and girders are oriented along curves concentric with CL Construction.

All diaphragms are oriented along lines radial to CL Construction.

For "GENERAL NOTES", see Dwg. No. 58131.

PART FRAMING PLAN
Scale: 1/8" = 1'-0"

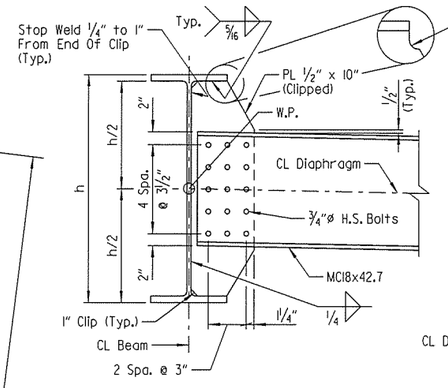

DETAIL A
Scale: 1" = 1'-0"

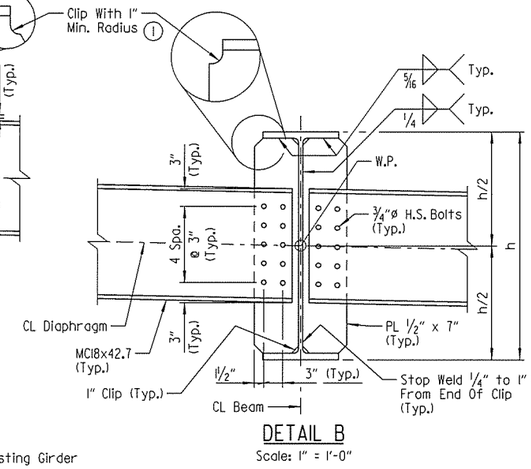

DETAIL B
Scale: 1" = 1'-0"

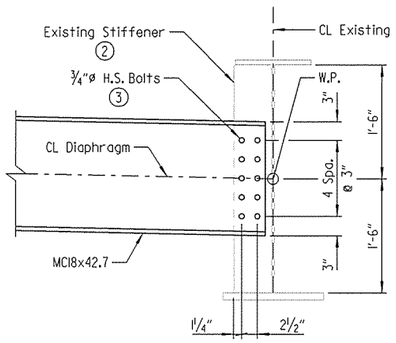

DETAIL C
(Connection to Existing)
Scale: 1" = 1'-0"

① If permanent steel bridge deck forms are used, the Fabricator shall clip the plate as necessary to accomodate the deck form support.

② PL 3/8" x 6" in Spans
PL 5/8" x 7" at Bent Nos. 2 & 4
PL 3/4" x 7" at Bent No. 3
PL 1/2" x 5 1/2" at Bent No. 5

③ Field drill 13/16"ø holes in existing stiffeners to facilitate connection using new 3/4"ø H.S. bolts. Modification of existing stiffeners shall be considered subsidiary to the item "MODIFICATION OF EXISTING BRIDGE STRUCTURE (BR. NO. _)". New 3/4"ø H.S. bolts shall be paid for as "STRUCTURAL STEEL IN BEAM SPANS (M270, GR. 50W)".

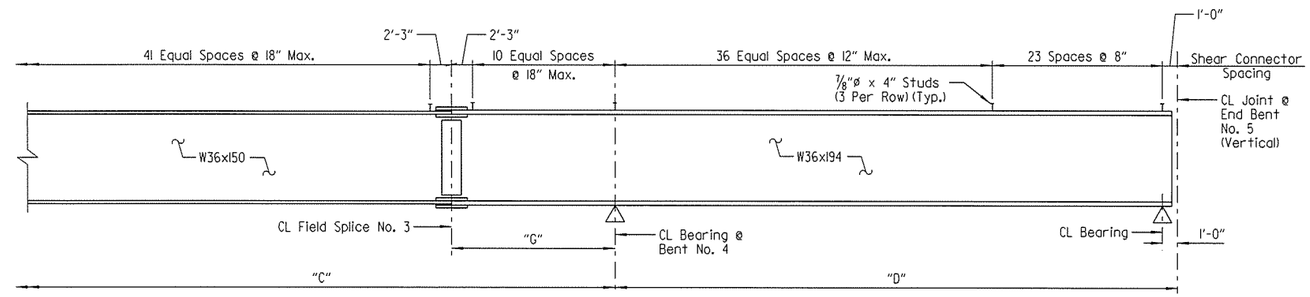

PART BEAM ELEVATION
(Dimensions Measured Along CL Beam)
No Scale

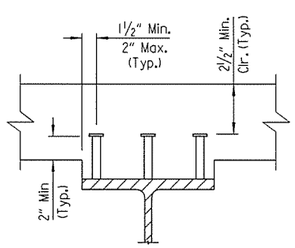

Stud shear connectors shown shall be 7/8"ø x 4" long, granular flux filled, solid fluxed or equal, and automatically end welded to the flange in accordance with the recommendations of the Manufacturer. 3/4"ø studs may be used in place of the 7/8"ø studs shown, at the ratio of 1.361- 3/4"ø studs in place of one 7/8"ø stud. 7/8"ø studs will be used as basis for measurement of structural steel.

SHEAR CONNECTOR DETAIL
No Scale

TABLE OF VARIABLES							
BEAM NO.	"A"	"B"	"C"	"D"	"E"	"F"	"G"
1	70'-8 9/16"	82'-6 5/8"	97'-3 7/16"	50'-6 3/8"	15'-9"	18'-3"	15'-9"
2	70'-9 1/16"	82'-7 3/8"	97'-4 9/16"	50'-7 1/8"	15'-9"	16'-6"	16'-0"
3	70'-9 1/2"	82'-8 1/8"	97'-5 3/4"	50'-7 7/8"	15'-0"	18'-3"	15'-3"
11	71'-2 3/4"	83'-4 5/16"	98'-6 5/16"	51'-4 9/16"	14'-0"	18'-3"	16'-0"

STATE OF ARKANSAS
LICENSED PROFESSIONAL ENGINEER
No. 15902
PRESTON C. CAMPBELL
3-10-16
BRIDGE ENGINEER

SHEET 8 OF 15
DETAILS OF 303'-0" CONTINUOUS COMPOSITE W-BEAM UNIT
HIGHWAY 112
OVER INTERSTATE 49

ROUTE SEC.

ARKANSAS STATE HIGHWAY COMMISSION
LITTLE ROCK, ARK.

DRAWN BY: HEW DATE: DEC. 2015 FILENAME: BBB0414XI_S8.dgn
CHECKED BY: ABH DATE: DEC. 2015 SCALE: AS SHOWN
DESIGNED BY: PCC DATE: NOV. 2015
BRIDGE NO. 05692 DRAWING NO. 58129

Jeskinner 3/20/2016 3:34:57 PM
WORKSPACE: AHTD Bridge
L:\SDM\MOT707 I-540 Widening & Interchange Improvement\Drawings\I540-HW112-S308-SF.dgn
REVISED DATE:

DATE REVISED	DATE FILMED	DATE REVISED	DATE FILMED	FED. ROAD DST. NO.	STATE	FED. AID PROJ. NO.	SHEET NO.	TOTAL SHEETS
				6	ARK.			
				JOB NO.		BB0414	407	886
				(1) 05692		303'-0" W-BEAM UNIT		58130

TABLE OF DEAD LOAD DEFLECTIONS (INCHES)

	Point Of Deflection	Beam I			Beam 2			Beam 3			Beam II		
		Structural Steel	Structural Steel + Slab	Structural Steel + Slab + Shared Use Path + Buffer + Sidewalk + Parapet	Structural Steel	Structural Steel + Slab	Structural Steel + Slab + Shared Use Path + Buffer + Sidewalk + Parapet	Structural Steel	Structural Steel + Slab	Structural Steel + Slab + Shared Use Path + Buffer + Sidewalk + Parapet	Structural Steel	Structural Steel + Slab	Structural Steel + Slab + Sidewalk + Parapet
SPAN NO. 1	1.0	0.000	0.000	0.000	0.000	0.000	0.000	0.000	0.000	0.000	0.000	0.000	0.000
	1.1	0.105	0.345	0.412	0.124	0.364	0.428	0.133	0.377	0.437	0.105	0.355	0.388
	1.2	0.195	0.643	0.768	0.229	0.674	0.793	0.247	0.703	0.815	0.195	0.658	0.720
	1.3	0.257	0.849	1.016	0.303	0.894	1.052	0.326	0.929	1.078	0.257	0.872	0.954
	1.4	0.286	0.951	1.140	0.338	1.001	1.178	0.364	1.040	1.207	0.287	0.977	1.068
	1.5	0.280	0.937	1.124	0.333	0.989	1.165	0.357	1.024	1.188	0.282	0.964	1.054
	1.6	0.241	0.815	0.979	0.290	0.867	1.021	0.311	0.897	1.041	0.245	0.843	0.921
	1.7	0.180	0.618	0.744	0.218	0.658	0.775	0.234	0.680	0.790	0.184	0.641	0.700
	1.8	0.106	0.372	0.448	0.131	0.402	0.473	0.144	0.423	0.491	0.110	0.391	0.426
	1.9	0.041	0.150	0.181	0.051	0.162	0.190	0.055	0.167	0.194	0.043	0.160	0.175
SPAN NO. 2	2.0	0.000	0.000	0.000	0.000	0.000	0.000	0.000	0.000	0.000	0.000	0.000	0.000
	2.1	0.008	-0.004	-0.005	0.006	-0.009	-0.010	0.003	-0.011	-0.010	0.008	-0.002	-0.003
	2.2	0.049	0.096	0.117	0.049	0.087	0.105	0.045	0.087	0.108	0.048	0.102	0.110
	2.3	0.089	0.199	0.243	0.104	0.219	0.263	0.092	0.202	0.244	0.090	0.218	0.235
	2.4	0.115	0.265	0.324	0.136	0.293	0.352	0.120	0.270	0.324	0.117	0.291	0.313
	2.5	0.120	0.275	0.338	0.141	0.300	0.361	0.122	0.272	0.327	0.120	0.296	0.317
	2.6	0.097	0.209	0.261	0.116	0.233	0.282	0.096	0.204	0.248	0.097	0.229	0.243
	2.7	0.055	0.094	0.122	0.070	0.117	0.144	0.050	0.087	0.110	0.057	0.114	0.117
	2.8	0.012	-0.018	-0.014	0.014	-0.017	-0.015	-0.001	-0.037	-0.037	0.010	-0.015	-0.023
	2.9	-0.013	-0.069	-0.079	-0.019	-0.083	-0.096	-0.028	-0.094	-0.106	-0.019	-0.084	-0.096
SPAN NO. 3	3.0	0.000	0.000	0.000	0.000	0.000	0.000	0.000	0.000	0.000	0.000	0.000	0.000
	3.1	0.107	0.361	0.432	0.123	0.376	0.443	0.139	0.399	0.463	0.112	0.379	0.420
	3.2	0.266	0.879	1.054	0.313	0.937	1.106	0.344	0.978	1.136	0.279	0.928	1.026
	3.3	0.436	1.423	1.708	0.499	1.480	1.747	0.552	1.562	1.814	0.447	1.474	1.626
	3.4	0.557	1.805	2.168	0.644	1.897	2.239	0.699	1.975	2.292	0.578	1.897	2.090
	3.5	0.608	1.963	2.362	0.702	2.061	2.433	0.764	2.156	2.501	0.627	2.054	2.260
	3.6	0.573	1.848	2.228	0.663	1.941	2.293	0.720	2.032	2.358	0.590	1.934	2.126
	3.7	0.461	1.486	1.797	0.537	1.571	1.857	0.581	1.641	1.905	0.475	1.560	1.713
	3.8	0.302	0.976	1.184	0.349	1.021	1.209	0.380	1.076	1.250	0.306	1.009	1.107
	3.9	0.129	0.418	0.508	0.153	0.450	0.533	0.165	0.470	0.546	0.133	0.442	0.484
SPAN NO. 4	4.0	0.000	0.000	0.000	0.000	0.000	0.000	0.000	0.000	0.000	0.000	0.000	0.000
	4.1	-0.034	-0.113	-0.137	-0.037	-0.114	-0.134	-0.042	-0.124	-0.143	-0.032	-0.113	-0.124
	4.2	-0.050	-0.169	-0.204	-0.053	-0.170	-0.200	-0.059	-0.179	-0.206	-0.045	-0.164	-0.179
	4.3	-0.052	-0.180	-0.218	-0.053	-0.178	-0.209	-0.060	-0.188	-0.215	-0.043	-0.168	-0.184
	4.4	-0.045	-0.162	-0.196	-0.044	-0.158	-0.185	-0.051	-0.168	-0.191	-0.034	-0.146	-0.160
	4.5	-0.036	-0.134	-0.162	-0.032	-0.127	-0.148	-0.038	-0.133	-0.150	-0.022	-0.112	-0.123
	4.6	-0.025	-0.099	-0.119	-0.018	-0.087	-0.101	-0.024	-0.094	-0.106	-0.010	-0.074	-0.081
	4.7	-0.015	-0.065	-0.078	-0.008	-0.055	-0.064	-0.013	-0.059	-0.065	-0.002	-0.043	-0.047
	4.8	-0.007	-0.037	-0.045	-0.002	-0.029	-0.034	-0.006	-0.033	-0.036	0.002	-0.021	-0.023
	4.9	-0.003	-0.016	-0.019	0.001	-0.011	-0.013	-0.002	-0.014	-0.015	0.003	-0.007	-0.008
	5.0	0.000	0.000	0.000	0.000	0.000	0.000	0.000	0.000	0.000	0.000	0.000	0.000

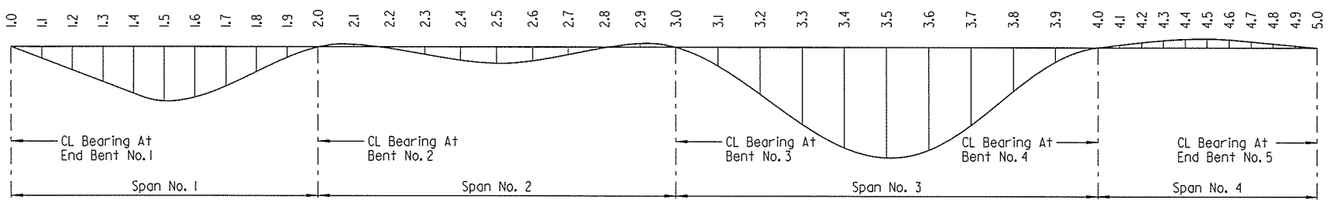

DEAD LOAD DEFLECTION DIAGRAM

No Scale

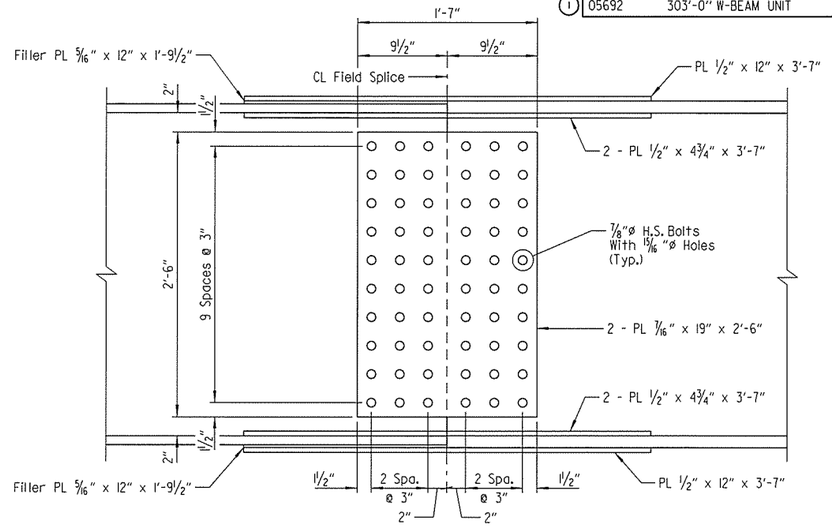

ELEVATION OF FIELD SPLICE

Scale: 1½" = 1'-0"

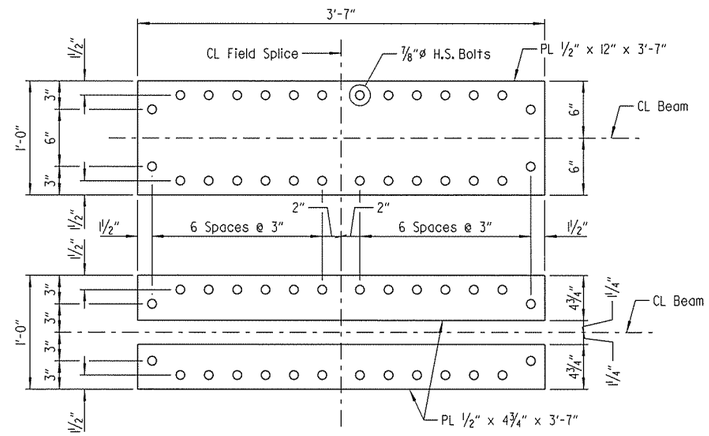

TOP & BOTTOM FLANGE SPLICE

Scale: 1½" = 1'-0"

NOTES:
Camber for dead load deflection plus vertical curve +/- ¼" tolerance. Deflections shown are along CL Beam from the plane perpendicular to the web extending from CL Bearing to CL Bearing. Vertical curve corrections are not included. Negative sign (-) indicates point above chord.

Dead load deflections shown are based on removable deck forms.

Revision to the deflection tables may be necessary upon review of the Contractor's submitted forming details.

NOTES:
All field splice bolts shall be ⅞"ø H.S. bolts.

All holes for field splice bolts shall be 15/16 "ø.

All field splice plates shall be AASHTO M270, Gr. 50W steel.

Bolted field splices shown may be eliminated or shop welded splices may be substituted with approval of the Engineer. Payment will be made on the basis of the plan quantities.

STATE OF ARKANSAS
LICENSED PROFESSIONAL ENGINEER
No. 15902
3-20-16
PRESTON C. CAMPBELL
BRIDGE ENGINEER

SHEET 9 OF 15
DETAILS OF 303'-0" CONTINUOUS COMPOSITE W-BEAM UNIT
HIGHWAY 112
OVER INTERSTATE 49

ROUTE SEC.

ARKANSAS STATE HIGHWAY COMMISSION
LITTLE ROCK, ARK.

DRAWN BY: HEW DATE: DEC. 2015 FILENAME: BBB0414XI_S9.dgn
CHECKED BY: ABH DATE: DEC. 2015 SCALE: AS SHOWN
DESIGNED BY: PCC DATE: NOV. 2015
BRIDGE NO. 05692 DRAWING NO. 58130

jeskinner 3/20/2016 3:34:57 PM
WORKSPACE: AHTD Bridge
L:\ROW\107107 - I-540 Widening & Interchange Improvement\Drawings\I540-HWY112-S309-SD.dgn
REVISED DATE:

DATE REVISED	DATE FILMED	DATE REVISED	DATE FILMED	FED. ROAD DIST. NO.	STATE	FED. AID PROJ. NO.	SHEET NO.	TOTAL SHEETS
				6	ARK.			
				JOB NO.		BB0414	408	886
				① 05692		303'-0" W-BEAM UNIT		58131

GENERAL NOTES

CONCRETE:

Concrete shall be poured in the dry, and all exposed corners shall be chamfered ¾" unless otherwise noted. All concrete shall be Class S(AE) with a minimum 28 day compressive strength f'c = 4,000 psi.

The superstructure details shown are for use when removable deck forming is used and are the basis for measurements of Class S(AE) Concrete. See Standard Drawing No. 55005 for allowable modifications when permanent steel bridge deck forms are used.

Concrete in bridge superstructure shall be placed, consolidated and screeded off for the entire pour before any concrete has taken its initial set. This may require the use of a retarding agent.

The concrete deck shall be given a tine finish in accordance with Subsection 802.19 for Class 5 Tined Bridge Roadway Surface Finish. Shared Use Path + Buffer and Sidewalk shall receive a broomed finish as specified in Subsection 802.19 for Class 6 Broomed Finish. Movement of the finishing machine across new concrete shall be on planks placed on the surface and shall be prohibited for 72 hours after finishing the pour. Sufficient concrete must be placed ahead of the strike-off to fully load the girder. A minimum of 72 hours shall elapse between completion of the bridge deck slab and the pouring of the sidewalk or shared use path, and a minimum of 72 hours shall elapse between the pouring of the sidewalk or shared use path and the pouring of the parapet railing. Any railing pours made before the entire slab has been placed and cured must be approved by the Engineer. The use of a longitudinal screed is prohibited.

Slab joints from Stage 1A and Stage 2C construction shall align with slab joints from existing construction. Required slab joints shall align with the parapet open joint.

REINFORCING STEEL:

All reinforcing steel shall be Grade 60 (Yield Strength = 60,000 psi) conforming to AASHTO M31 or M322, Type A, with mill test reports. The reinforcing steel is to be accurately located in the forms and firmly held in place by steel wire supports, sufficient in number and size to prevent displacement during the course of construction. The wire supports will not be paid for directly but will be considered subsidiary to the item "REINFORCING STEEL (GRADE 60)".

NEW STRUCTURAL STEEL:

All new structural steel shall be AASHTO M270, Gr. 50W unless noted otherwise and shall be paid for at the unit price per pound bid for "STRUCTURAL STEEL IN BEAM SPANS (M270, GR. 50W)". Grade 50W steel shall not be painted.
All exposed surfaces shall be cleaned in accordance with Subsection 807.84(e) unless noted otherwise. Structural steel completely embedded in concrete may be AASHTO M270 Gr. 36 unless noted otherwise. See Drawing No. 58137 for cleaning requirements of external load plates on elastomeric bearings.

Requests for substitution of structural steel shapes shown with shapes of greater size must be submitted by the Contractor to the Engineer for approval. Steels of equal or greater strengths will be accepted only when shown on approved shop drawings. Shapes and materials shown in the plans will be the basis of payment, and no additional compensation will be made for any adjustments due to substitutions.

Drawings show general features of design only. Shop drawings shall be prepared in accordance with Subsection 807.04, submitted and approved before fabrication is begun.

Bolted field splices shown may be eliminated or shop welded splices may be substituted with approval of the Engineer. Payment will be made on the basis of plan quantities.

All beams, splice plates, diaphragms and connection plates are considered main load carrying members and shall meet the Longitudinal Charpy V-Notch Test specified in Subsection 807.05. This work and material will not be paid for directly but are considered as subsidiary to the item "STRUCTURAL STEEL IN BEAM SPANS (M270, GR. 50W)".

Steel plates for main load carrying members shall be cut and fabricated so that the primary direction of rolling is parallel to the direction of the main tensile and/or compressive stresses.

All welding that is to be done during fabrication of structural steel, including temporary welds, shall be detailed on the shop drawings and submitted for approval. If additional welds are required, whether temporary or permanent, a formal request with detailed drawings shall be submitted to the Engineer for approval; however, additional welds used for attaching falsework support devices or screed rail supports to the structural steel that do not exceed the limitations of Subsection 802.13 will not require approval prior to construction. All welding shall conform to Subsection 807.26.

All beams shall be blocked in their true positions with webs horizontal in the shop as specified in Subsection 807.54 (b)(2). The camber, length of sections, distance between bearings and openings of joints shall be measured with the beams in their true positions, and this information shall become a part of the permanent records of this job. The component parts shall be match marked in this assembly, and these marks shall be shown on the erection diagram. All beam dimensions are based on a temperature of 60°F. A tolerance of +/- ¼" is allowed for camber.

Unless noted otherwise, all connection plates and intermediate stiffeners shall be fabricated normal to the top flange and on the side of the beam web as indicated on the framing plan. No intermediate stiffeners are to be placed on the outside of the exterior beams except as noted.

Diaphragms shall be installed as beams are erected. Unless noted otherwise, all bolts in diaphragms and field splices shall be installed and tightened in accordance with Subsection 807.71 prior to pouring of the concrete deck.

Field connections shall be bolted with high-strength bolts and shall be ¾"ø bolts conforming to AASHTO M164 unless otherwise noted. Open holes shall be 13/16"ø unless otherwise noted. Bolts shall be placed with heads on the outside face of the exterior beam webs and on the bottom of the beam flanges.

All contact surfaces between plates at field splices shall be free of oil, rust or scale before assembly.

All stud shear connectors shall be granular flux filled, solid fluxed or equal and shall be automatically end welded in accordance with recommendations of the Manufacturer.

Anchor bolts shall be AASHTO designation M314 Gr. 55, including supplemental requirement S1, and shall be galvanized to conform to AASHTO M232, Class C or ASTM B695 Class 50. Anchor bolts will be paid for at the contract unit price bid for "STRUCTURAL STEEL IN BEAM SPANS (M270, GR. 50W)".

ERECTION OF STRUCTURAL STEEL:

The erection of the structural steel shall be performed according to a plan permitting the steel to be erected plumb with bolts tightened while the steel is as close as possible to the no-load condition, so that the bolt holes can be aligned. This requirement may necessitate the use of large capacity cranes, temporary shoring or jacking frames.

The Contractor shall submit to the Engineer for informational and record purposes details of falsework construction in accordance with Subsection 807.64.

The Contractor shall ensure that beams are stable throughout the erection process. The Contractor will be responsible for providing temporary bracing or stiffening devices to accomodate handling stresses in individual members or segments of the structure during erection.

EXISTING STRUCTURAL STEEL:

The existing paint system used on the existing girders may consist of a lead based paint system. The Contractor shall take all necessary steps to protect the workers modifying the existing girders. The existing structural steel shall be cleaned and painted in accordance with Section 820 "CLEANING AND PAINTING EXISTING STRUCTURAL STEEL" (Type II). The color of the paint shall be Brown and shall match Federal Standard 595B, Color Chip No. 30070. For additional information, see SP JOB NO. BB0414 "CONTAINMENT SYSTEM", "CONTRACTOR CERTIFICATION" and "PAINT CONTRACTOR LABEL".

Any existing bolts that are loosened or removed during construction shall be replaced with new high-strength bolts, nuts and washers.

The elastomeric bearing pads shall be protected against overspray.

REMOVAL OF EXISTING DECK:

Care shall be exercised during removal of portions of the existing deck to ensure that the existing paint system and the existing structural steel, including shear connectors, are not damaged. Damaged items that are not salvageable, as determined by the Engineer, shall be replaced at the Contractor's expense.

The deck removal shall progress in a manner that will ensure the stability of the existing structure. The concrete deck in the end spans shall not be removed before the deck in the interior spans has been removed.

Portions of the existing concrete deck shall be removed to the top flange of the existing girders as shown in the stage construction details. The portions of the top flange that will be embedded in new concrete shall be cleaned and free of laitance and protected until the new deck is placed for the respective Stage of Construction. This work will not be paid for directly but will be considered subsidiary to the item "MODIFICATION OF EXISTING BRIDGE STRUCTURE (BR. NO. _)".

METHOD OF WORK:

The Contractor shall remove portions of the existing deck in stages as shown in the stage construction details on Dwg. Nos. 58102 and 58103. For each stage of construction, the Contractor shall loosen diaphragm bolts in the outer bay after existing deck removal. Prior to the new deck pour, new beams shall be erected and new diaphragms shall be installed with connections fully tightened in accordance with Subsection 807.71. After completion of the new deck pour to the satisfaction of the Engineer, loosened bolts in the existing outer diaphragms shall be removed and replaced with new high-strength bolts, fully tightened in accordance with Subsection 807.71. Unless noted otherwise in the plans, this work will not be paid for directly but will be considered subsidiary to the item "MODIFICATION OF EXISTING BRIDGE STRUCTURE (BR. NO. _)".

The existing structural steel, except top of girder flanges embedded in concrete, shall be cleaned and painted upon completion of all required modifications and deferred until the adjoining concrete work has been placed and finished.

All applicable provisions of Section 807, as determined by the Engineer, shall be followed. See SP JOB NO. BB0414 "SPECIAL SAFETY REQUIREMENTS FOR BRIDGES" for additional information.

TABLE FOR WELDS		
Material Thickness Of Thicker Part Joined (Inches)	Minimum Size Of Fillet Weld (Inches)	Single Pass Weld Must Be Used
To ¾" Inclusive	¼"	
Over ¾"	5/16"	

Note:
When a fillet weld size, as shown on the plans, is larger than the minimum, the first pass shall be that specified for minimum size of fillet weld.

STATE OF ARKANSAS
LICENSED PROFESSIONAL ENGINEER
No. 15902
PRESTON C. CAMPBELL
BRIDGE ENGINEER

SHEET 10 OF 15
DETAILS OF 303'-0" CONTINUOUS COMPOSITE W-BEAM UNIT
HIGHWAY 112
OVER INTERSTATE 49

ROUTE SEC.

ARKANSAS STATE HIGHWAY COMMISSION
LITTLE ROCK, ARK.

DRAWN BY: HEW DATE: DEC. 2015 FILENAME: BBB0414XI_S10.dgn
CHECKED BY: ABH DATE: DEC. 2015 SCALE: AS SHOWN
DESIGNED BY: PCC DATE: NOV. 2015
BRIDGE NO. 05692 DRAWING NO. 58131

Jeskinner 3/20/2016 3:34:58 PM
WORKSPACE: AHTD Bridge
L:\20IN\601707 - I-540 Widening & Interchange Improvement\Drawings\I540-HWY112-S10-GN.dgn
REVISED DATE:

DATE REVISED	DATE FILMED	DATE REVISED	DATE FILMED	FED. ROAD DIST. NO.	STATE	FED. AID PROJ. NO.	SHEET NO.	TOTAL SHEETS
				6	ARK.			
				JOB NO.		BB0414	409	886
				① 05692		303'-0" W-BEAM UNIT		58132

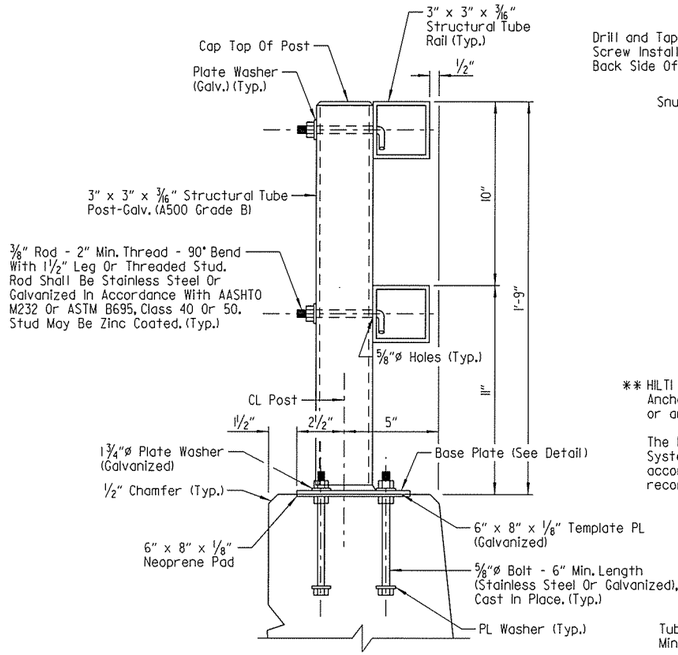

TYPE H2 RAIL
Scale: 3" = 1'-0"

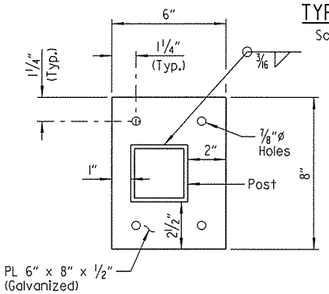

BASE PLATE
Scale: 3" = 1'-0"

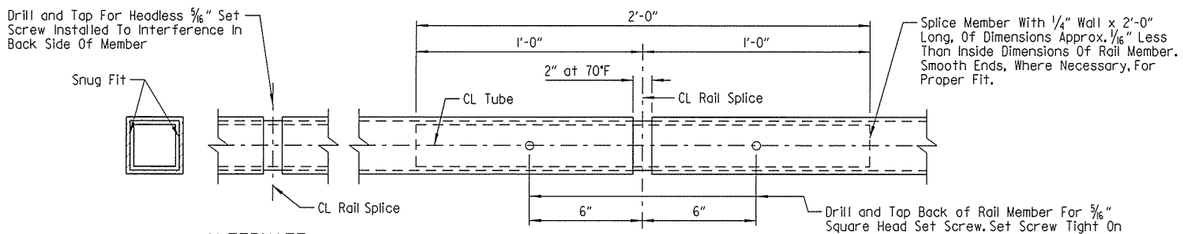

ALTERNATE INSTALLATION

SPLICE DETAIL
Scale: 3" = 1'-0"

** HILTI HIT RE 500 Epoxy Adhesive Anchor System with 4 1/2" embedment or an approved equal.

The HILTI Epoxy Adhesive Anchor System shall be installed in accordance with Manufacturer's recommendations.

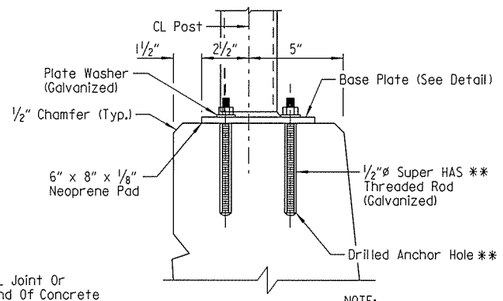

NOTE:
For details of post and rail not shown, see alternate for cast in place bolts.

DETAILS OF ALTERNATE POST ANCHOR SYSTEM
(Epoxy Adhesive Anchors)
Scale: 3" = 1'-0"

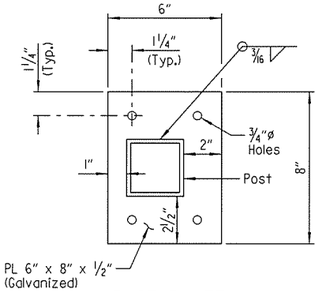

BASE PLATE

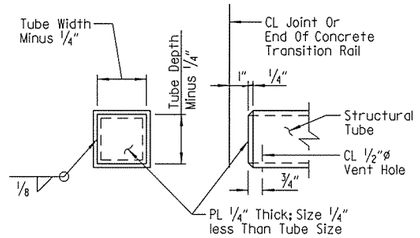

END ELEV. SIDE ELEV.

DETAILS OF END CAPS
Scale: 3" = 1'-0"

① Left Parapet: 3 Spa. @ 18'-4 15/16", 1 Spa. @ 15'-5 5/8", 1 Spa. @ 16'-6 1/16", 3 Spa. @ 14'-9 7/16", 1 Spa. @ 21'-7 1/16", 1 Spa. @ 18'-6 7/16", 4 Spa. @ 15'-9 7/16", 1 Spa. @ 15'-5 7/8", 2 Spa. @ 12'-4 1/2", 2 Spa. @ 12'-10 7/8"

Right Parapet: 3 Spa. @ 18'-10 5/16", 1 Spa. @ 14'-7 11/16", 1 Spa. @ 15'-7 7/16", 3 Spa. @ 15'-8 15/16", 1 Spa. @ 20'-6 7/8", 1 Spa. @ 17'-7", 4 Spa. @ 16'-7 1/8", 1 Spa. @ 14'-7 11/16", 2 Spa. @ 11'-8 7/8", 2 Spa. @ 13'-11 7/16"

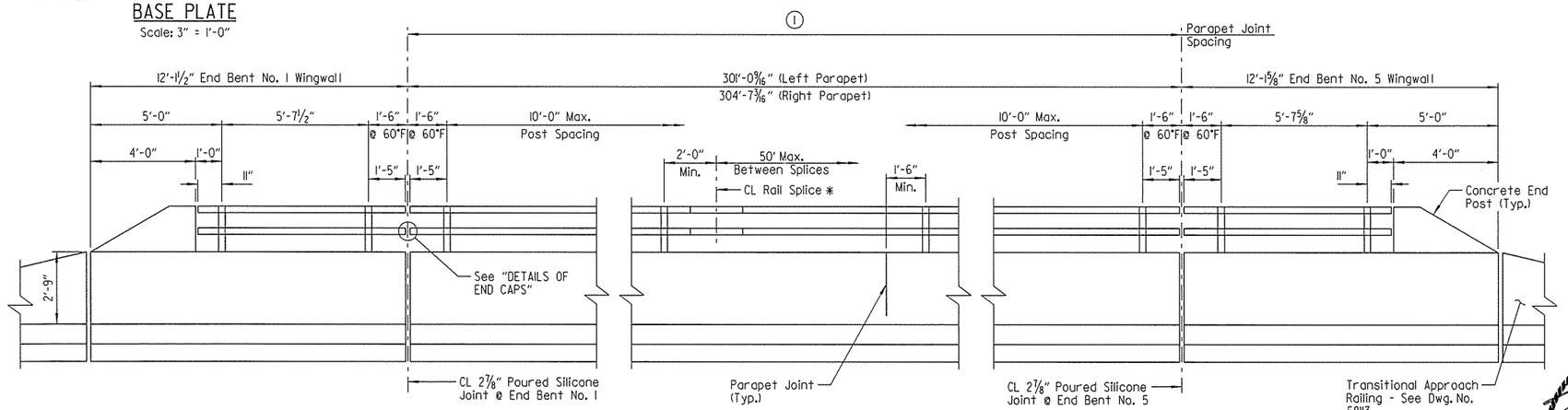

* Rail splices to be at 50' max. spacing. Rail sections must be fabricated to attach to at least three posts. CL splices shall be located at a minimum of 2'-0" from CL post. See "SPLICE DETAIL".

RAIL POST SPACING DETAIL
(Horizontal dimensions are along inside face of rail and do not include a vertical curve correction)
No Scale

NOTES FOR BRIDGE RAILING:

Rail layout shall conform to vertical and horizontal alignment of Bridge. All posts shall be vertical.

Maximum post spacing = 10'-0".

Minimum distance from centerline post to centerline open or contraction joints in parapet = 1'-6".

Base plates shall not be placed upon areas that are improperly finished, deformed or irregular.

Shop drawings showing details of railing shall be submitted and approval secured before fabrication is begun.

MATERIALS:

Tubing, Posts, and Accessories: AASHTO M270, Gr. 36 or ASTM A500-Grade B.

Railing End Caps: AASHTO M270, Gr. 36 galvanized.

Steel rail members shall be galvanized in accordance with AASHTO M111 after fabrication and shall receive a powder coating process after galvanizing. Galvanizing shall not interfere with the powder coating process. Galvanized surfaces shall be prepared in accordance with Subsection 807.87 and the powder coating Manufacturer's recommendations before application of the powder coating process. The powder coating process shall be a two coat system applied using electrostatic spray. The base coat shall be a thermosetting epoxy powder with a minimum thickness of 2-4 mils. The top coat shall be a tough polyester powder coat with a minimum thickness of 2-4 mils. Color shall be Black and as approved by the Engineer. Coated galvanized framework shall have a salt spray resistance of 3,000 hours using ASTM B117 without loss of adhesion. The powder coating process shall be in accordance with Manufacturer's recommendations.

The Contractor shall submit a paint color sample prior to fabrication for Owner's approval.

Cast in place anchor bolts shall be of stainless steel or high strength steel. Stainless steel anchor bolts shall conform to ASTM A193 or A320-Grade B8 with a minimum yield strength of 80,000 psi. High strength steel anchor bolts shall conform to AASHTO M164 or A354-Grade BC galvanized in accordance with AASHTO M232 or ASTM B695, Class 40 or 50.

Splice Set Screws shall conform to the requirments of ASTM A193 or A320-Gr. B8 (Stainless steel) or AASHTO M270, Gr. 36 (Galvanized).

Nuts shall conform to AASHTO M292, Gr. 8A (Stainless steel) or galvanized in accordance with AASHTO M232 or ASTM B695, Class 40 or 50.

Threads on bolts, screws and nuts shall conform to American Standard Coarse Series, Class 2 FIT, ASA Specification B1.1.

Washers shall be stainless steel and conform to the requirements of ASTM A276 or A167-Type 302 with dimensions meeting ASTM F436, or high strength steel conforming to AASHTO M293 and galvanized in accordance with AASHTO M232 or ASTM B695, Class 40 or 50.

Plate Washers shall be stainless steel and conform to the requirements of ASTM A167-Type 302 or AASHTO M270, Gr.36, galvanized in accordance with AASHTO M232 or ASTM B695, Class 40 or 50. Plate washers shall have dimensions meeting the requirments of ANSI/ASME B18.22.1, Type A plain washer (Wide Series).

Mixing of stainless steel and galvanized fasteners will not be permitted.

Metal Bridge Railing, including posts, fasteners, base plates, template plates, anchor bolts, neoprene pad, galvanizing and powder coatings; fabrication and erection; and all incidentals necessary to complete the work shall be paid for in accordance with Section 806 at the contract unit price per linear foot bid for "METAL BRIDGE RAILING (TYPE H2)".

STATE OF ARKANSAS
LICENSED PROFESSIONAL ENGINEER
No. 15902
2-20-16
PRESTON C. CAMPBELL
BRIDGE ENGINEER

SHEET 11 OF 15
DETAILS OF 303'-0" CONTINUOUS COMPOSITE W-BEAM UNIT HIGHWAY 112 OVER INTERSTATE 49

ROUTE SEC.

ARKANSAS STATE HIGHWAY COMMISSION
LITTLE ROCK, ARK.

DRAWN BY: HEW DATE: DEC. 2015 FILENAME: BBB0414XI_S11.dgn
CHECKED BY: ABH DATE: DEC. 2015 SCALE: AS SHOWN
DESIGNED BY: PCC DATE: NOV. 2015

BRIDGE NO. 05692 DRAWING NO. 58132

Jeskinner 3/20/2016 3:34:58 PM
WORKSPACE: AHTD Bridge
L:\ZONAL\01707 - I-540 Widening & Interchange Improvement\Drawings\I540-HWY112-S3I-MD.dgn
REVISED DATE:

DATE REVISED	DATE FILMED	DATE REVISED	DATE FILMED	FED. ROAD DIST. NO.	STATE	FED. AID PROJ. NO.	SHEET NO.	TOTAL SHEETS
				6	ARK.			
				JOB NO.		BB0414	410	886
				(1) 05692		303'-0" W-BEAM UNIT		58133

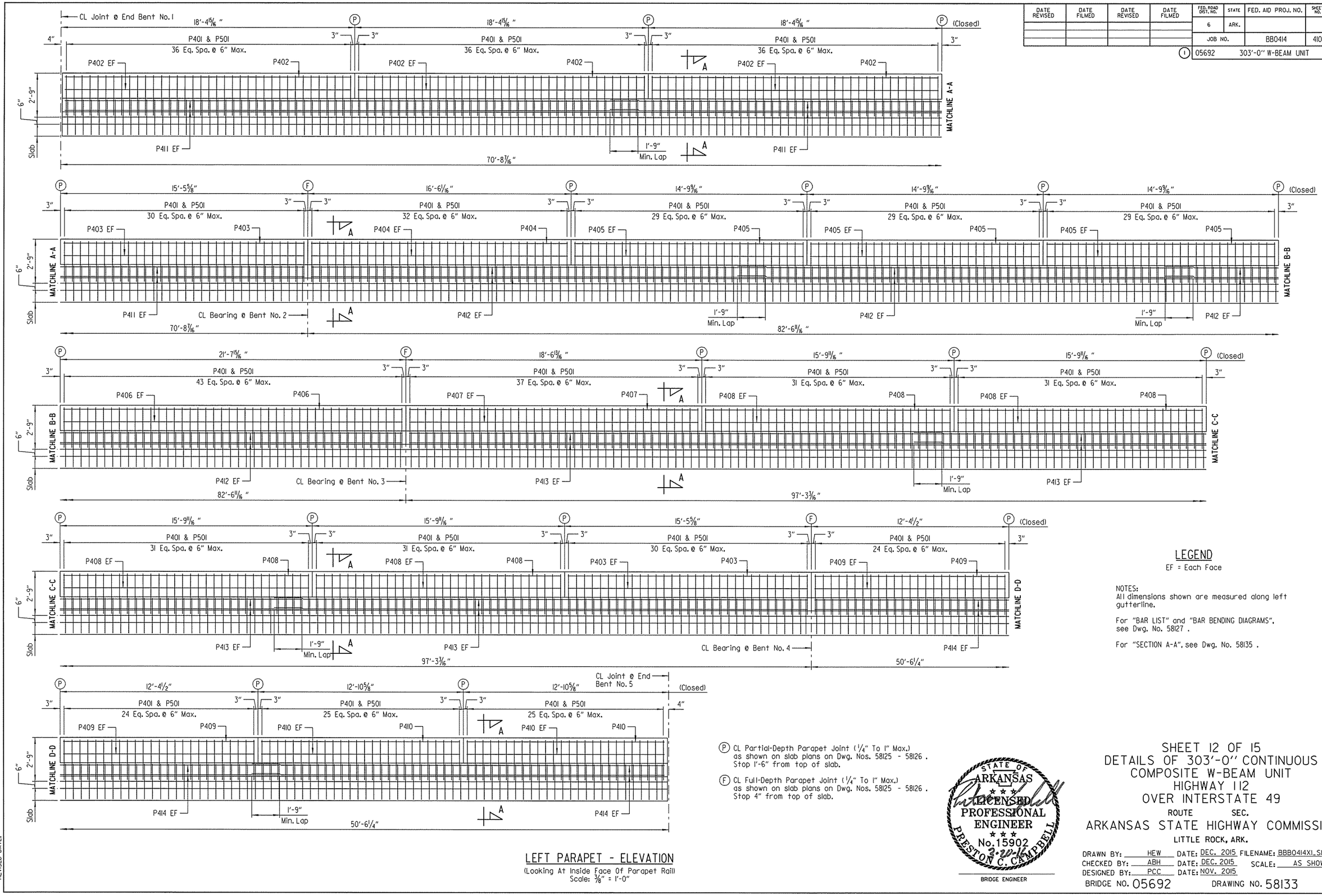

LEGEND

EF = Each Face

NOTES:
All dimensions shown are measured along left gutterline.

For "BAR LIST" and "BAR BENDING DIAGRAMS", see Dwg. No. 58127 .

For "SECTION A-A", see Dwg. No. 58135 .

(P) CL Partial-Depth Parapet Joint (1/4" To 1" Max.) as shown on slab plans on Dwg. Nos. 58125 - 58126 . Stop 1'-6" from top of slab.

(F) CL Full-Depth Parapet Joint (1/4" To 1" Max.) as shown on slab plans on Dwg. Nos. 58125 - 58126 . Stop 4" from top of slab.

LEFT PARAPET - ELEVATION

(Looking At Inside Face Of Parapet Rail)
Scale: 3/8" = 1'-0"

STATE OF ARKANSAS
LICENSED PROFESSIONAL ENGINEER
No. 15902
2-20-16
PRESTON C. CAMPBELL
BRIDGE ENGINEER

SHEET 12 OF 15
DETAILS OF 303'-0" CONTINUOUS COMPOSITE W-BEAM UNIT HIGHWAY 112 OVER INTERSTATE 49

ROUTE SEC.

ARKANSAS STATE HIGHWAY COMMISSION
LITTLE ROCK, ARK.

DRAWN BY: HEW DATE: DEC. 2015 FILENAME: BBB0414X1_S12.dgn
CHECKED BY: ABH DATE: DEC. 2015 SCALE: AS SHOWN
DESIGNED BY: PCC DATE: NOV. 2015
BRIDGE NO. 05692 DRAWING NO. 58133

jeskinner 3/20/2016 3:34:58 PM
WORKSPACE: AHTD Bridge
L:\CON\NOT707 - I-540 Widening & Interchange Improvement\Drawings\I540-HWY112-S312-MD.dgn
REVISED DATE:

DATE REVISED	DATE FILMED	DATE REVISED	DATE FILMED	FED. ROAD DIST. NO.	STATE	FED. AID PROJ. NO.	SHEET NO.	TOTAL SHEETS
				6	ARK.			
				JOB NO.		BB0414	411	886
				(I) 05692		303'-0" W-BEAM UNIT		58134

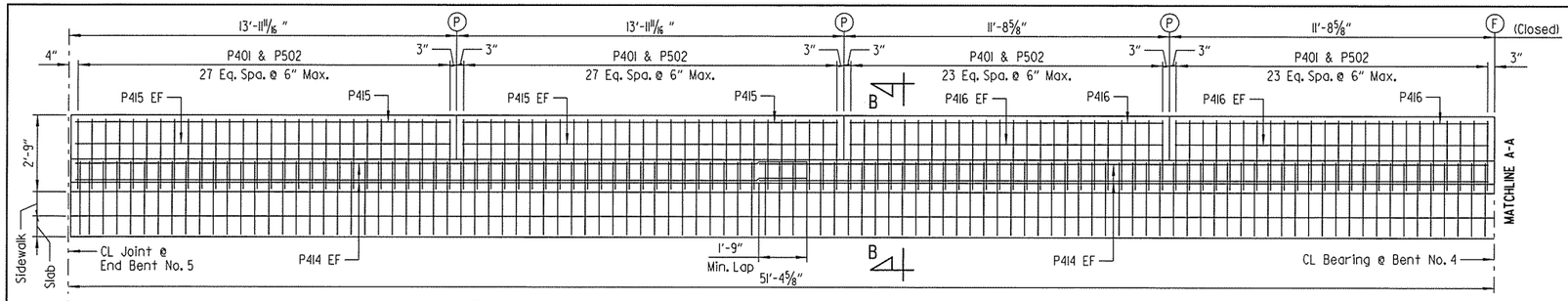

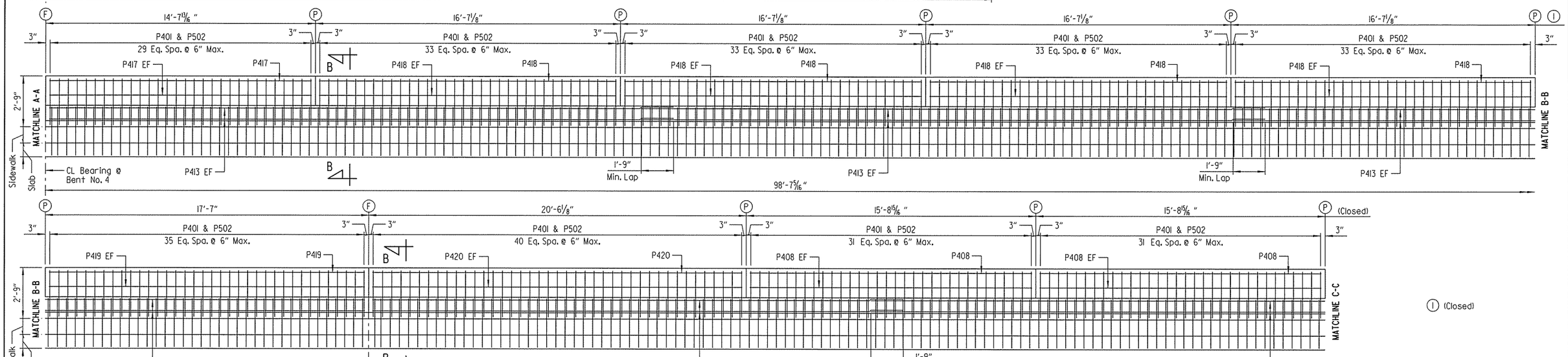

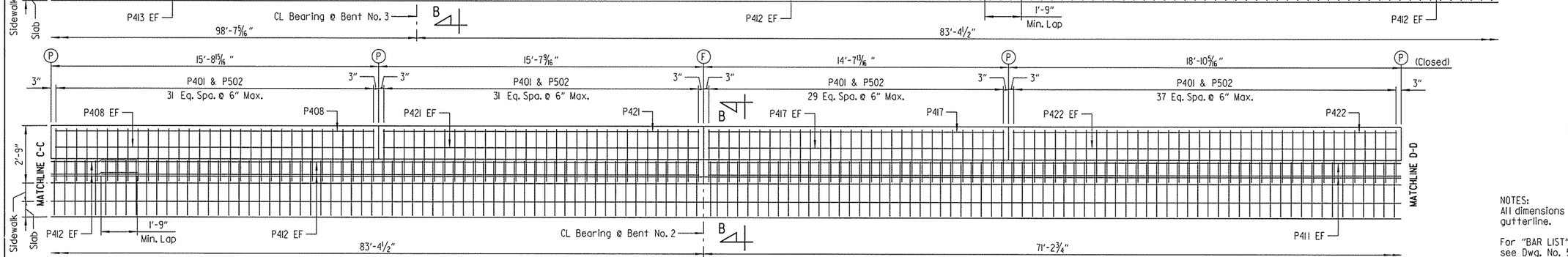

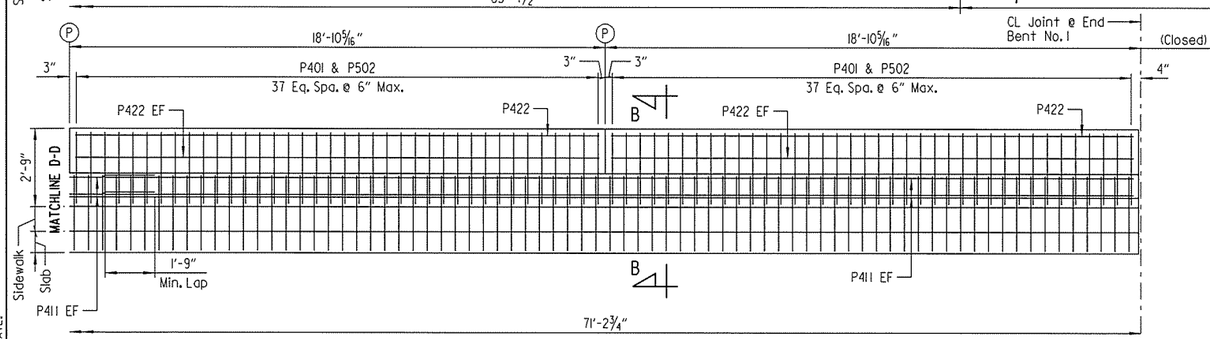

RIGHT PARAPET - ELEVATION

(Looking At Inside Face Of Parapet Rail)
Scale: 3/8" = 1'-0"

(I) (Closed)

LEGEND

EF = Each Face

NOTES:
All dimensions shown are measured along right gutterline.

For "BAR LIST" and "BAR BENDING DIAGRAMS", see Dwg. No. 58127.

For "SECTION B-B", see Dwg. No. 58135.

(P) CL Partial-Depth Parapet Joint (1/4" To 1" Max.) as shown on slab plans on Dwg. Nos. 58125 - 58126. Stop 1'-6" from top of slab.

(F) CL Full-Depth Parapet Joint (1/4" To 1" Max.) as shown on slab plans on Dwg. Nos. 58125 - 58126. Stop 4" from top of slab.

STATE OF ARKANSAS
LICENSED PROFESSIONAL ENGINEER
No. 15902
PRESTON C. CAMPBELL
2-29-16
BRIDGE ENGINEER

SHEET 13 OF 15
DETAILS OF 303'-0" CONTINUOUS COMPOSITE W-BEAM UNIT
HIGHWAY 112
OVER INTERSTATE 49

ROUTE SEC.

ARKANSAS STATE HIGHWAY COMMISSION
LITTLE ROCK, ARK.

DRAWN BY: HEW DATE: DEC. 2015 FILENAME: BBB0414X1_SI3.dgn
CHECKED BY: ABH DATE: DEC. 2015 SCALE: AS SHOWN
DESIGNED BY: PCC DATE: NOV. 2015
BRIDGE NO. 05692 DRAWING NO. 58134

REVISED DATE:
jeskinner 3/20/2016 3:34:59 PM
WORKSPACE: AHTD Bridge
L:\208\100707 - I-540 Widening & Interchange Improvement\Drawings\540-HWY112-S3S-MD.dgn

DATE REVISED	DATE FILMED	DATE REVISED	DATE FILMED	FED. ROAD DIST. NO.	STATE	FED. AID PROJ. NO.	SHEET NO.	TOTAL SHEETS
				6	ARK.			
				JOB NO.		BB0414	412	886
				(1) 05692		303'-0" W-BEAM UNIT		58135

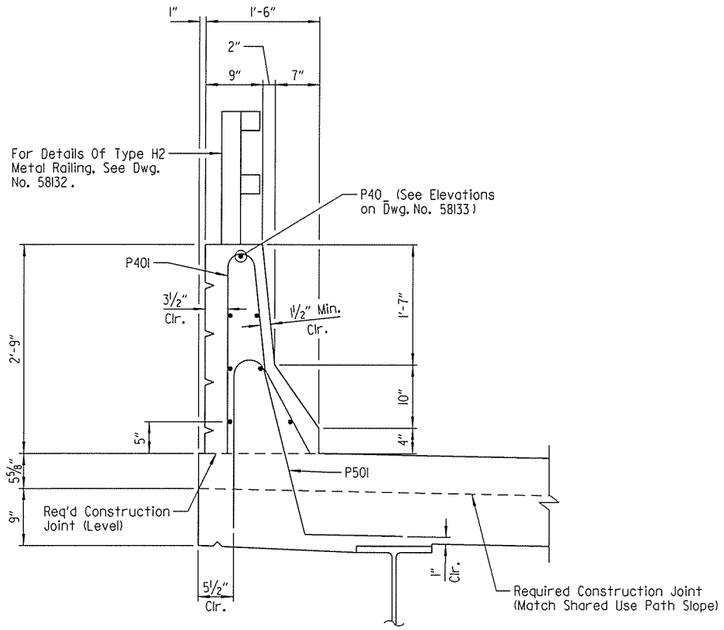

SECTION A-A
Scale" 1" = 1'-0"

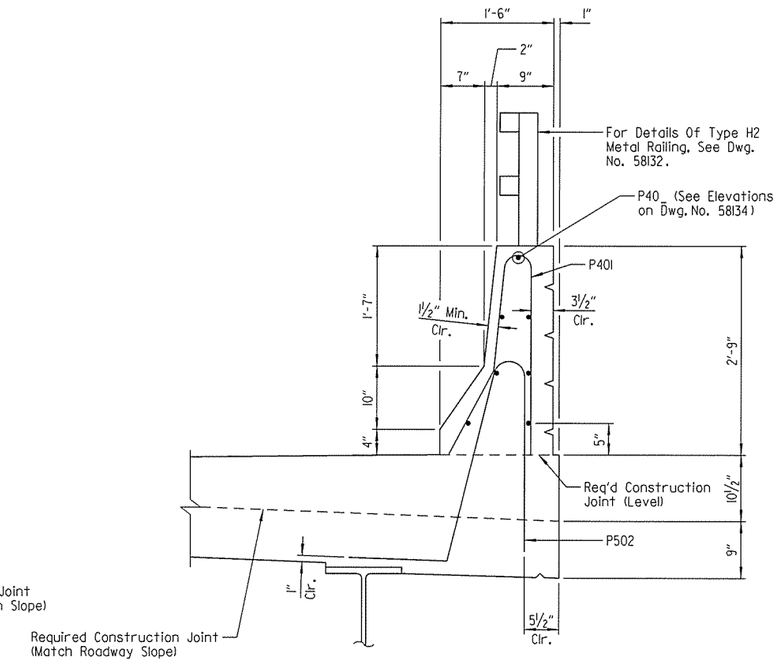

SECTION B-B
Scale" 1" = 1'-0"

GENERAL NOTES

CONCRETE: All concrete shall be Class S(AE) with a minimum 28 day compressive strength f'c = 4000 psi.

REINFORCING STEEL: All reinforcing steel shall be Grade 60 conforming to AASHTO M31 or M322, Type A with mill test reports.

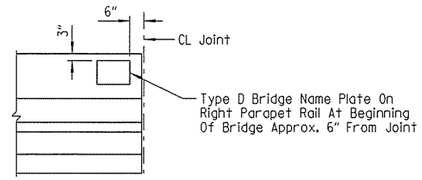

VIEW SHOWING LOCATION OF NAME PLATE
(Showing Inside Face Of Parapet)
No Scale

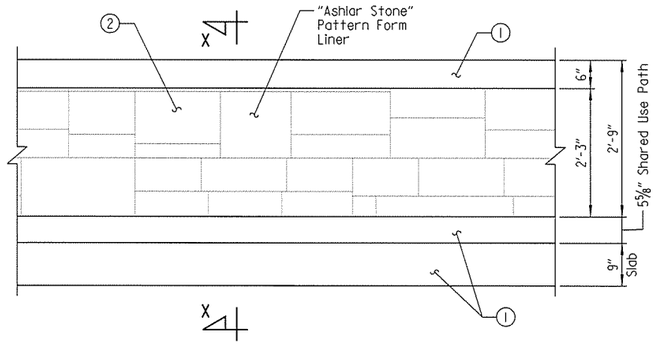

ARCHITECTURAL FINISH ELEVATION
(Showing Outside Face Of Left Parapet, Outside Face Of Right Parapet Similiar)
Scale: ¾" = 1'-0"

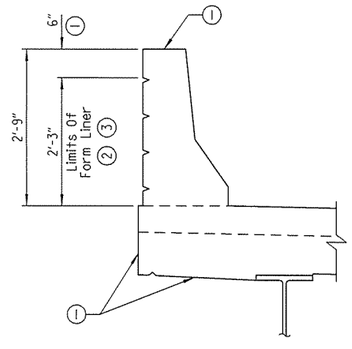

SECTION X-X
Scale: ¾" = 1'-0"

(1) Class 3 Textured Coating Finish (Color = Brown, Color Chip No. 33578)

(2) Class 3 Textured Coating Finish (Color = Brown, Color Chip No. 30219)

(3) "Ashlar Stone" Pattern

Note:
Form liner shall be a max. depth of 2" to provide a min. clearance of 1½" to parapet reinforcing.

STATE OF ARKANSAS
LICENSED PROFESSIONAL ENGINEER
No. 15902
3-20-16
PRESTON C. CAMPBELL
BRIDGE ENGINEER

SHEET 14 OF 15
DETAILS OF 303'-0" CONTINUOUS COMPOSITE W-BEAM UNIT
HIGHWAY 112
OVER INTERSTATE 49
ROUTE SEC.
ARKANSAS STATE HIGHWAY COMMISSION
LITTLE ROCK, ARK.

DRAWN BY: HEW DATE: DEC. 2015 FILENAME: BBB0414XL_S14.dgn
CHECKED BY: ABH DATE: DEC. 2015 SCALE: AS SHOWN
DESIGNED BY: PCC DATE: NOV. 2015
BRIDGE NO. 05692 DRAWING NO. 58135

jeskinner 3/20/2016 3:34:59 PM
WORKSPACE: AHTD_Bridge
L:\ROW\907\907 - I-540 Widening & Interchange Improvement\Drawings\I540-HWY112-S314-MD.dgn
REVISED DATE:

DATE REVISED	DATE FILMED	DATE REVISED	DATE FILMED	FED. ROAD DIST. NO.	STATE	FED. AID PROJ. NO.	SHEET NO.	TOTAL SHEETS
				6	ARK.			
				JOB NO.		BB0414	413	886
				(1) 05692		303'-0" W-BEAM UNIT		58136

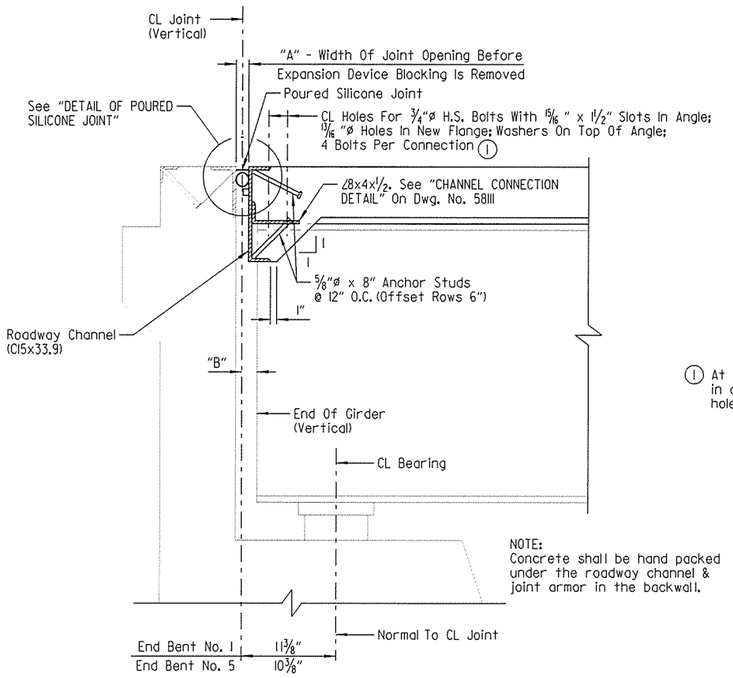

SECTION THRU SILICONE JOINT

(Section Taken Normal To CL Joint)
(Existing Girder Shown; Similar For New Beams)
No Scale

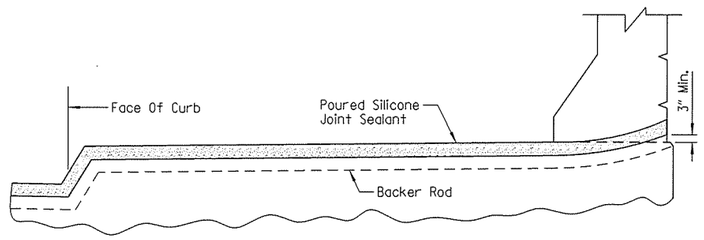

JOINT SEAL PLACEMENT AT SIDEWALK OR SHARED USE PATH AND PARAPET

No Scale

(1) At new connection to existing beams (Beam Nos. 4 & 10), 15/16 "ø holes in angle shall be field drilled in lieu oon the 15/16 " x 1 1/2" slots. 15/16 "ø holes in angle shall align with existing holes in existing beam flange.

SILICONE JOINT DATA					
"A" Width Perpendicular To Joint At 24 Hour Average Temperature (4) Of:			"B" Perpendicular To Joint At 60°F	"D"	Bumper Plate Size
40°F	60°F	80°F			
3 1/8"	2 7/8"	2 5/8"	2 3/4" ±	5"	13/8" x 1" x 12"

(4) Joint width data shown is based on existing bridge plans and is provided for information only. The Contractor shall field verify the existing joint opening prior to installation of new joint armor. At time of installation, the Contractor shall adjust the new joint armor as required to maintain a constant joint opening along the full length of the new expansion device that matches the existing joint opening.

NOTES:
The temperature limitations recommended by the Sealant Manufacturer shall be observed.

The sealant may be installed in skewed joints only when the average 24 hour air temperature is between 40° and 80°F.

(5) BACKER ROD NOTE:
Use an appropriately sized backer rod at the depth shown in the Manufacturer's literature based on the joint width at the time of sealing. Except as noted, do not install more backer rod than can be sealed in the same day. The Contractor shall verify separation of the backer rod from the joint material after the joint material has set.

Backer rods shall be extended beyond length of poured joint in Stage IA so that the two pieces can be properly spliced together prior to installing sealant for Stage 2C and existing. Manufacturer's recommendations shall be followed to prevent sealant from "running out of the joint" during stage construction.

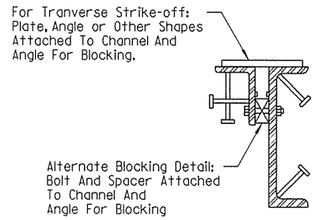

EXPANSION DEVICE INSTALLATION AT END BENTS (FOR STAGE IA CONSTRUCTION ONLY):

The Contractor may elect to install the expansion device using one of the following two alternatives.

1) The concrete span pour adjacent to joint shall be placed before the end bent backwall is placed. After the end bent backwall forms are in place and the beams erected, the blocked expansion device shall be installed and adjusted for grade. All connection bolts shall be fully tightened prior to placing the deck concrete adjacent to the bent. Immediately prior to pouring the backwall concrete, the blocking shall be removed, the opening adjusted for temperature (see Note (4)), and the backwall constructed.

2) The backwall shall be poured to the optional construction joint after beams are erected. The blocked expansion device shall be installed and adjusted for grade. All connection bolts shall be fully tightened prior to placing the deck concrete adjacent to the bent. Immediately prior to pouring the remainder of the backwall concrete, the blocking shall be removed and the opening adjusted for temperature (see Note (4)). Backfill shall not be placed behind the new backwall until the new deck concrete on the adjacent span has been placed.

DETAILS FOR BLOCKING EXPANSION JOINT DEVICE

No Scale

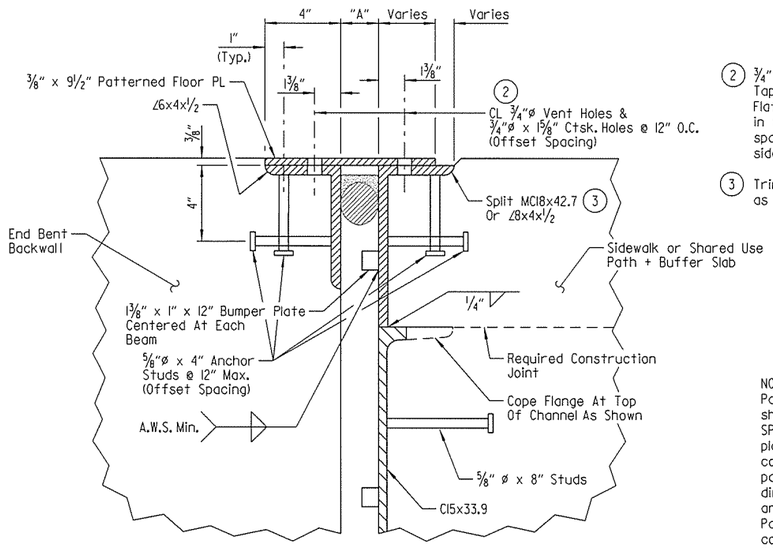

(2) 3/4" x 15/8" ctsk. slots in 3/8" Patterned PL. Tap 4" leg of angles and channel for 5/8"ø Flat Head Cap screws @ 12" O.C. Install screws in the shop and ship as a unit. Screws on span side to be removed. Screws on backwall side to remain in place after erection.

(3) Trim vertical leg of Split MC18x42.7 or L8x4x1/2 as needed.

NOTE:
Patterned plates shall be AASHTO M270, Gr. 36 and shall be paid for as "STRUCTURAL STEEL IN BEAM SPANS (M270, GR. 50W)". The surfaces of the patterned plates, angles and channel which will not be in contact with the concrete shall be cleaned and painted in accordance with Section 638, or as directed by the Engineer. Only one coat is required and shall be applied in the Fabricator's shop. Painting shall not be paid for directly but will be considered subsidiary to "STRUCTURAL STEEL IN BEAM SPANS (M270, GR. 50W)".

NOTE:
Concrete shall be hand packed under the joint armor in the shared use path + buffer and sidewalk.

SECTION A-A

Scale: 3" = 1'-0"

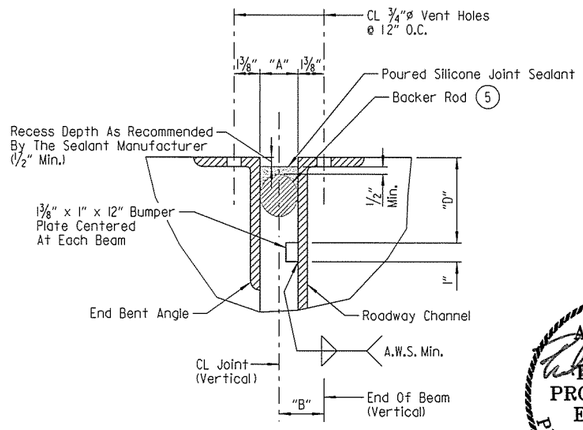

DETAIL OF POURED SILICONE JOINT

No Scale

STATE OF ARKANSAS
LICENSED PROFESSIONAL ENGINEER
No. 15902
3-20-16
PRESTON C. CAMPBELL

BRIDGE ENGINEER

SHEET 15 OF 15
DETAILS OF 303'-0" CONTINUOUS COMPOSITE W-BEAM UNIT
HIGHWAY 112
OVER INTERSTATE 49

ROUTE SEC.

ARKANSAS STATE HIGHWAY COMMISSION

LITTLE ROCK, ARK.

DRAWN BY: HEW DATE: DEC. 2015 FILENAME: BBB0414XI_SI5.dgn
CHECKED BY: ABH DATE: DEC. 2015 SCALE: AS SHOWN
DESIGNED BY: PCC DATE: NOV. 2015

BRIDGE NO. 05692 DRAWING NO. 58136

jeskinner 3/20/2016 3:34:59 PM
WORKSPACE: AHTD Bridge
L:\ROW\I40\I707 - I-540 Widening & Interchange Improvement\Drawings\I540-HWY112-SJ15-JN.dgn
REVISED DATE:

DATE REVISED	DATE FILMED	DATE REVISED	DATE FILMED	FED. ROAD DIST. NO.	STATE	FED. AID PROJ. NO.	SHEET NO.	TOTAL SHEETS
				6	ARK.			
				JOB NO.		BB0414	414	886
				① 05692		ELASTOMERIC BEARINGS		58137

① Care shall be taken to ensure that the external load plate is in full and complete contact with the beam flange before welding begins.

② Centerline elastomeric pad shall be aligned with centerline beam.

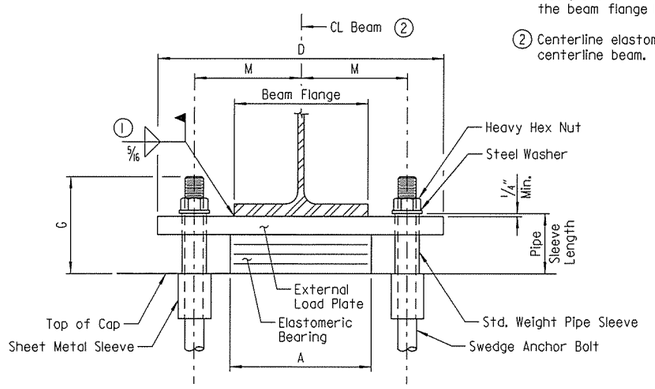

FRONT VIEW - AT BENT NOS. 1, 2, 3 & 4

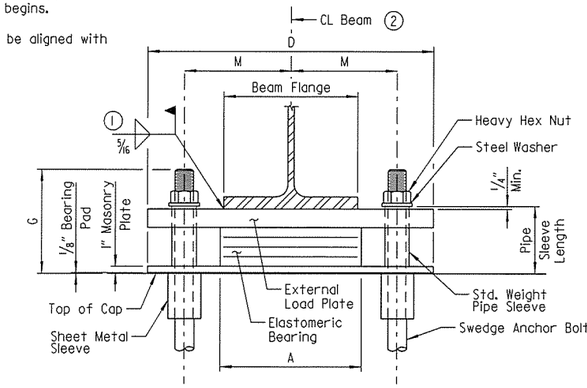

FRONT VIEW - AT BENT NO. 5

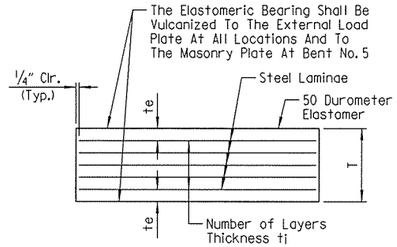

t_e = Thickness Of Elastomer Cover On Top And Bottom Of Pad
t_i = Thickness Of Elastomer Between Steel Laminae
N = Number Of Elastomer Layers Of Thickness t_i

ELASTOMERIC BEARING

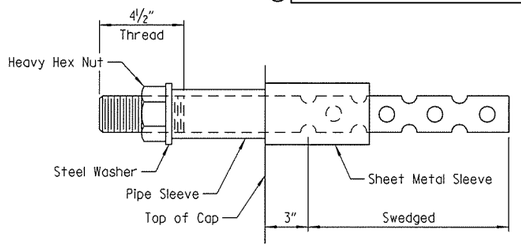

ANCHOR BOLT DETAIL

NOTE:
Anchor bolts may be cast in place or drilled and grouted into place. If anchor bolts are to be cast in place, the galvanized sheet metal sleeves will not be required.

If anchor bolts are to be drilled and grouted in place, the galvanized sheet metal sleeves shall be cast in place as shown. Sleeves shall be dry packed with styrofoam, urethane foam or approved equal prior to pouring of concrete. After pouring of the cap and prior to erection of structural steel, the dry pack shall be removed and holes for the anchor bolts shall be accurately drilled into the masonry. Bolts placed in drilled holes shall be accurately set and fixed using a QPL approved epoxy or non-shrink grout that completely fills the holes. Galvanized sheet metal sleeves will not be paid for directly but will be considered subsidiary to the item "STRUCTURAL STEEL IN BEAM SPANS (M270, GR. 50W)".

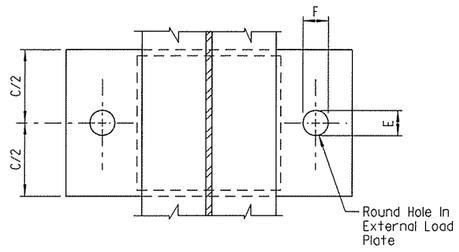

PLAN VIEW - AT BENT NO. 3

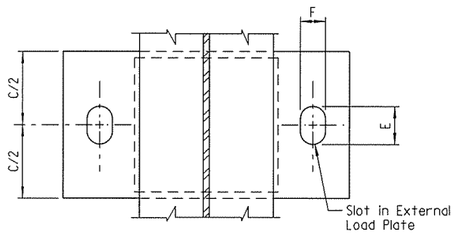

PLAN VIEW - AT BENT NOS. 1, 2, & 4

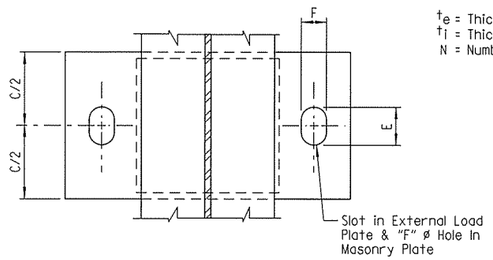

PLAN VIEW - AT BENT NO. 5

GENERAL NOTES

Elastomeric bearings shall conform to Section 808 and shall be paid for at the unit price bid for "ELASTOMERIC BEARINGS."

External load plates and masonry plates shall conform to AASHTO M270, Grade 50W. Pipe sleeves shall be ASTM A53, Grade B, and shall be galvanized to conform to AASHTO M232, Class C or ASTM B695, Class 50.

External load plates and masonry plates shall be completely fabricated (including bevel, bolt holes and all shop welding) and shall be cleaned before vulcanizing to the elastomeric bearing. The surfaces in contact with the elastomeric bearing shall be cleaned in accordance with Subsection 808.03. Other surfaces shall be blast cleaned in accordance with Subsection 807.84(e) for unpainted weathering steel.

Anchor bolts, washers and nuts shall conform to Subsection 807.07. The anchor bolt grade of steel shall be as specified in the "TABLE OF FABRICATOR VARIABLES". Indentations shall be circular with rounded bottoms and staggered as shown in the details.

Pipe sleeves, anchor bolts, washers and nuts shall be paid for at the unit price bid for "STRUCTURAL STEEL IN BEAMS SPANS (M270, GR. 50W)". External load plates and masonry plates will not be measured or paid for separately but will be included in the unit price bid for "ELASTOMERIC BEARINGS".

Bearings with masonry plates shall be seated in accordance with Subsection 807.66. Bearings without masonry plates shall be seated in accordance with Subsection 808.08. This work and materials are considered subsidiary to the item "ELASTOMERIC BEARINGS" and will not be paid for directly.

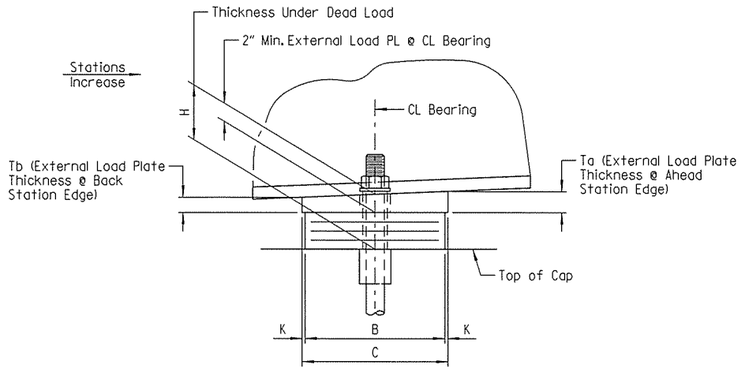

SIDE VIEW - AT BENT NOS. 1, 2, 3 & 4

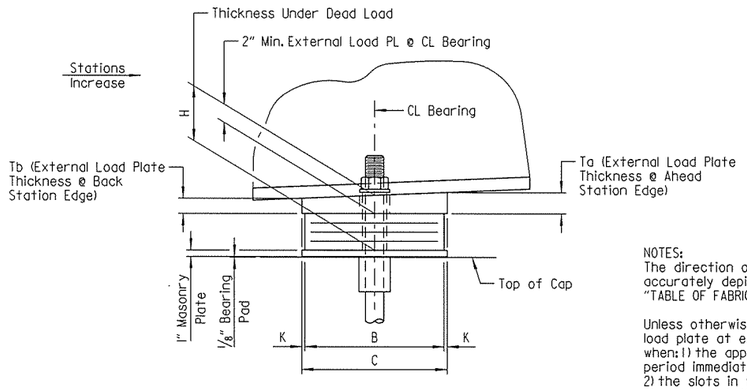

SIDE VIEW - AT BENT NO. 5

NOTES:
The direction of the bevel of the external load plate may not be accurately depicted with respect to Ta and Tb values shown in "TABLE OF FABRICATOR VARIABLES".

Unless otherwise approved by the Engineer, welding of the external load plate at expansion bearings to the beam will be allowed only when: 1) the approximate average air temperature during the 24 hour period immediately preceding welding is between 40°F and 80°F; and 2) the slots in the external load plate are positioned to center on the anchor bolts; and 3) no horizontal deformation of the elastomeric pad is evident. If welding at other temperatures is required, the Engineer will provide adjustment data.

TABLE OF FABRICATOR VARIABLES

Bridge No.	Location		Bearing Type	No. Of Bearings Each Bent	* Maximum Design Load (Kips)	Elastomeric Pad							External Load Plate									Anchor Bolt				
	Bent No.	Beam No.				G	H	A	B	N	t_i	t_e	No. & Thickness Of Steel Laminae	T	C	D	E **	F	J	K	M	T_a	T_b	Anchor Bolt (Dia. x L)	Grade	Pipe Sleeve Size (Dia. x L)	Sheet Metal Sleeve Size (Dia. x L)	Steel Washer Size (O.D.)
05692	1	1, 2, 3 & 11	Exp.	4	77	7 11/16"	4 5/16"	12"	8"	4	1/2"	1/4"	5 @ 12 Ga.	3"	9"	22 1/2"	4 3/4"	2 1/4"	-	1/2"	8 1/2"	1.97"	2.03"	1 1/2" x 25"	55	1 1/2" x 5 3/16"	3" x 7"	3"
	2	1, 2, 3 & 11	Exp.	4	182	8 11/16"	4 5/16"	16"	12"	4	1/2"	1/4"	5 @ 12 Ga.	3"	13"	29"	5 1/4"	3 3/4"	-	1/2"	11"	1.90"	2.10"	2 1/2" x 37"	55	3" x 5 3/16"	4" x 12"	4 1/2"
	3	1, 2, 3 & 11	Fixed	4	191	8 11/16"	4 5/16"	16"	12"	4	1/2"	1/4"	5 @ 12 Ga.	3"	13"	29"	3 3/4"	3 3/4"	-	1/2"	11"	1.85"	2.15"	2 1/2" x 37"	55	3" x 5 3/16"	4" x 12"	4 1/2"
	4	1, 2, 3 & 11	Exp.	4	182	8 11/16"	4 5/16"	16"	12"	4	1/2"	1/4"	5 @ 12 Ga.	3"	13"	29"	5 1/2"	3 3/4"	-	1/2"	11"	1.78"	2.22"	2 1/2" x 37"	55	3" x 5 3/16"	4" x 12"	4 1/2"
	5	1, 2, 3 & 11	Exp.	4	60	8 11/16"	6 11/16"	13"	7"	4	1/2"	1/4"	5 @ 12 Ga.	3"	8"	23"	4 1/2"	2 1/4"	-	1/2"	8 3/4"	1.84"	2.16"	1 1/2" x 26"	55	1 1/2" x 6 5/16"	3" x 7"	3"

* Maximum Design Load = Service Load

** The "E" dimension does not apply to masonry plates. See "PLAN VIEW" - AT BENT NO. 5".

STATE OF ARKANSAS
LICENSED PROFESSIONAL ENGINEER
No. 16458
3-20-16
JOEL E. SKINNER
BRIDGE ENGINEER

DETAILS OF ELASTOMERIC BEARINGS
HIGHWAY 112
OVER INTERSTATE 49
ROUTE SEC.
ARKANSAS STATE HIGHWAY COMMISSION
LITTLE ROCK, ARK.

DRAWN BY: JES DATE: DEC. 2015 FILENAME: BBB0414XI_EI.dgn
CHECKED BY: ABH DATE: JAN. 2016 SCALE: AS SHOWN
DESIGNED BY: JES DATE: DEC. 2015
BRIDGE NO. 05692 DRAWING NO. 58137

jeskinner 3/20/2016 3:35:00 PM
WORKSPACE: AHTD Bridge
L:\208\M007707 - I-540 Widening & Interchange Improvement\Drawings\540-HWY112-S3I6-BG.dgn
REVISED DATE:

DATE REVISED	DATE FILMED	DATE REVISED	DATE FILMED	FED. ROAD DIST. NO.	STATE	FED. AID PROJ. NO.	SHEET NO.	TOTAL SHEETS
				6	ARK.			
				JOB NO.		BB0414	415	886
				① 07379		LAYOUT		58138

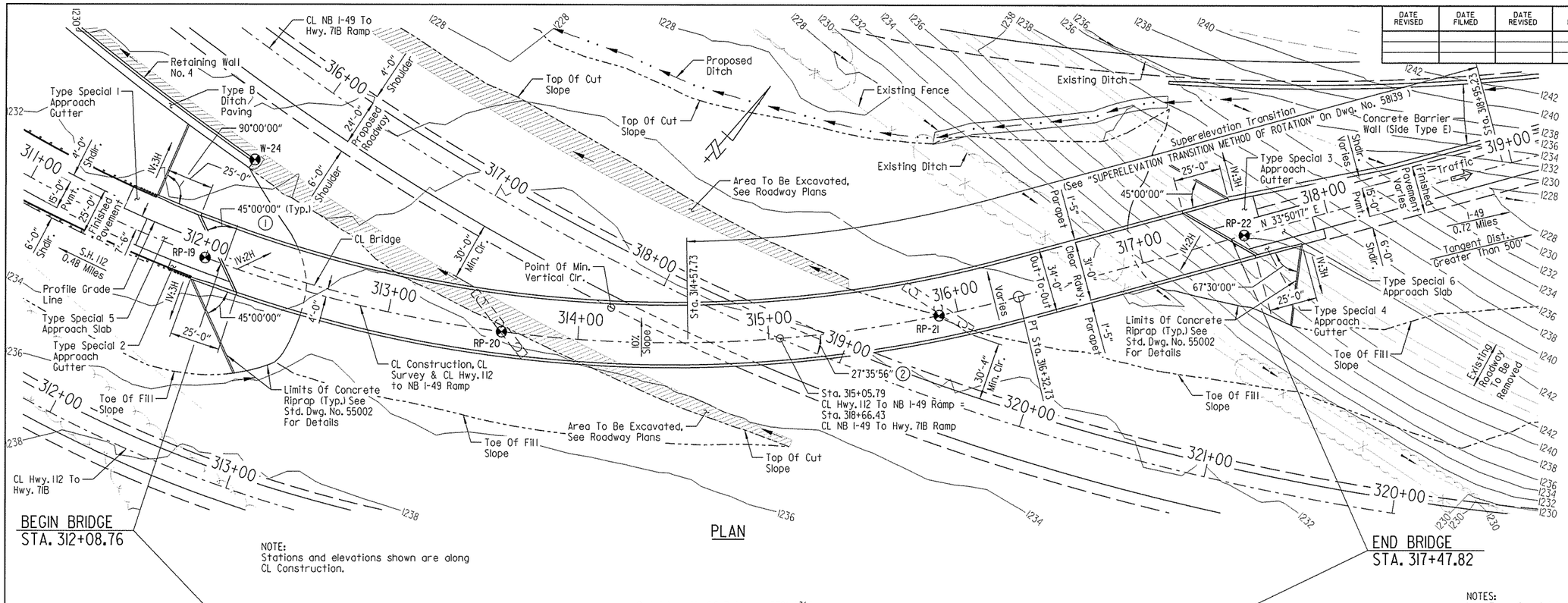

NOTE:
Stations and elevations shown are along CL Construction.

FOR R/W DATA AND GUARDRAIL DETAILS, SEE ROADWAY PLANS

① Measured From a Radial Line To CL Joint For Bents 1 & 4 And CL Bent For Bents 2 & 3

② Meaured Between Line Tangent To CL Hwy. 112 To NB I-49 Ramp Curve and CL NB I-49 To Hwy. 71B Ramp Curve At Intersection Point

③ Top Of Deck At CL Construction & CL Bent To Low Side Top Of Cap = 10'-11¼"

④ Top Of Deck At CL Construction & CL Bent To Low Side Top Of Cap = 10'-2⅜"

⑤ 17'-3" Minimum Vertical Clearance

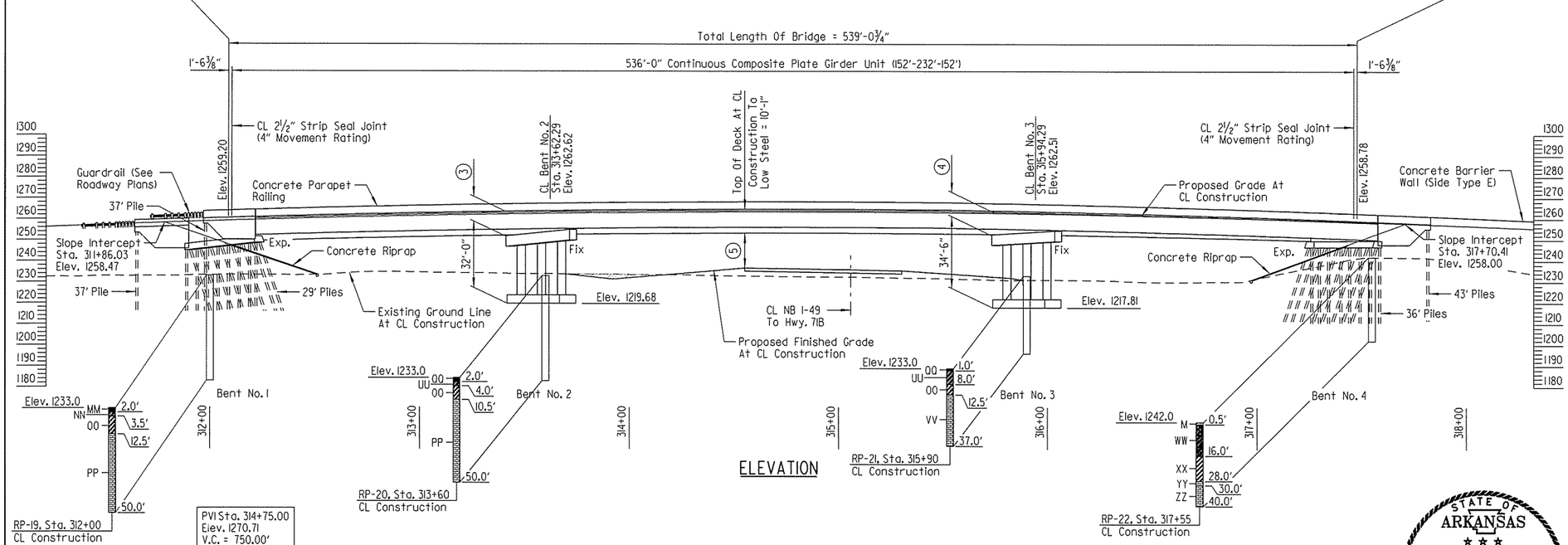

VERTICAL CURVE DATA

Highway 112 To NB I-49 Ramp
(Profile Grade 7'-6" Left Of CL Construction)

HORIZONTAL CURVE DATA

CL NB I-49 To Hwy. 71B Ramp
PI = 322+02.48
Δ = 65°25'09" Lt.
D = 4°15'00"
T = 865.80'
L = 1539.27'
e = 0.075 Ft./Ft.
R = 1348.14

HORIZONTAL CURVE DATA

CL Hwy. 112 To NB I-49 Ramp
PI = 313+00.40
Δ = 61°30'55" Lt.
D = 8°15'00"
T = 413.31'
L = 745.64'
e = 0.10 Ft./Ft.
R = 694.49'

NOTES:
Use Type Special 1 Approach Gutter (W = 12'-0") at left side of Begin Bridge, Type Special 2 Approach Gutter (W = 4'-0") at right side of Begin Bridge, Type Special 3 Approach Gutter (W = 12'-0") at left side of End Bridge and Type Special 4 Approach Gutter (W = 4'-0") at right side of End Bridge. See Dwg. Nos. 58254-58255.

Use Type Special 5 Approach Slab at Begin Bridge and Type Special 6 Approach Slab at End Bridge. See Dwg. Nos. 58263-58264.

For "GENERAL NOTES", see Dwg. No. 58097.

For "BORING LEGEND" & "N VALUES", see Dwg. No. 58098.

STAGED CONSTRUCTION NOTES:
Work to be completed during Stage 1A includes construction of End Bent No. 1 and corresponding embankment, construction of Intermediate Bent Nos. 2 and 3, erection of all girders between End Bent No. 1 and Field Splice No. 4 and placement of safety platforms as stated in SP JOB NO. BB0414 "SPECIAL SAFETY REQUIREMENTS FOR BRIDGES".

Work to be completed during Stage 2 includes construction of End Bent No. 4 and corresponding embankment, erection of remaining girder sections, construction of deck, and any other miscellaneous items required.

For details of traffic phasing, see Maintence Of Traffic Plans.

For additional information, see Roadway Plans.

STATE OF ARKANSAS
LICENSED PROFESSIONAL ENGINEER
No. 14498
ADAM B. HALL
4-20-14
BRIDGE ENGINEER

SHEET 1 OF 2
LAYOUT OF BRIDGE
HWY. 112 TO NB I-49
OVER NB I-49 TO HWY. 71B
PORTER RD. - HWY. 112/71B
WIDENING & INTCHNG. IMPVTS. (S)
WASHINGTON COUNTY

ROUTE 49 SEC. 28

ARKANSAS STATE HIGHWAY COMMISSION

LITTLE ROCK, ARK.

DRAWN BY: CWT DATE: FEB. 2014 FILENAME: BBB0414X2_LI.dgn
CHECKED BY: RLW DATE: AUG. 2014 SCALE: 1" = 30'-0"
DESIGNED BY: JES DATE: FEB. 2014
BRIDGE NO. 07379 DRAWING NO. 58138

jeskinner 3/20/2016 3:35:07 PM
WORKSPACE: ANTD Bridge
\\gfrcorDATA\Projects\LITProjects\20IM\IM017707 - I-540 Widening & Interchange Improvement\Drawings\I540-I12RMP-SI01-L0.dgn
REVISED DATE:

DATE REVISED	DATE FILMED	DATE REVISED	DATE FILMED	FED. ROAD DIST. NO.	STATE	FED. AID PROJ. NO.	SHEET NO.	TOTAL SHEETS
				6	ARK.			
				JOB NO.		BB0414	416	886
				(1) 07379		LAYOUT		58139

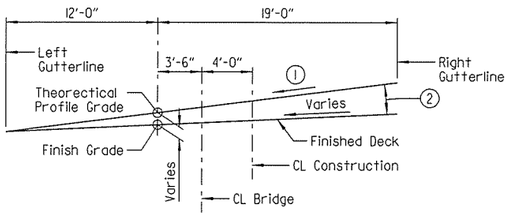

SKETCH #1 - STATION 314+57.73 TO 316+32.73
(Looking Ahead)

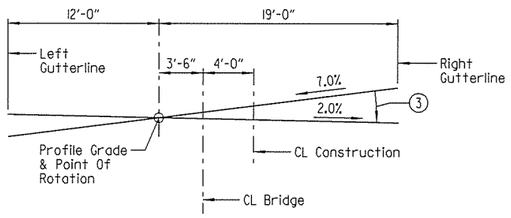

SKETCH #2 - STATION 316+32.73 TO 318+95.23
(Looking Ahead)

SUPERELEVATION TRANSITION METHOD OF ROTATION

(1) Slope At Begin And End Of Correction Curve. Slope Is 10% @ Sta. 314+57.73 & 7% @ Sta. 316+32.73.

(2) Finished Cross Slope Within The Correction Curve Is A Straight Line Between The Left And Right Gutterline.

(3) Cross Slope Varies From 7% (Sta. 316+32.73) To 2% (Sta. 318+95.23), As Shown.

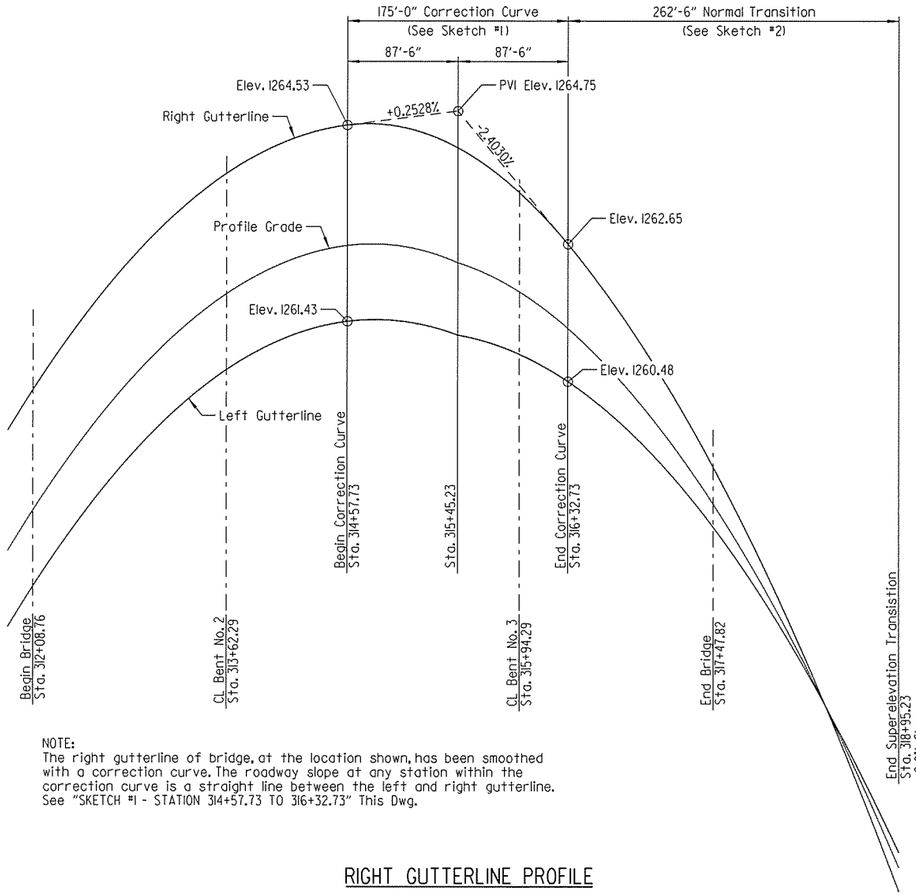

NOTE:
The right gutterline of bridge, at the location shown, has been smoothed with a correction curve. The roadway slope at any station within the correction curve is a straight line between the left and right gutterline. See "SKETCH #1 - STATION 314+57.73 TO 316+32.73" This Dwg.

RIGHT GUTTERLINE PROFILE

STATE OF ARKANSAS
LICENSED PROFESSIONAL ENGINEER
No. 14498
3-20-16
ADAM B. HALL
BRIDGE ENGINEER

SHEET 2 OF 2
LAYOUT OF BRIDGE
HWY. 112 TO NB I-49
OVER NB I-49 TO HWY. 71B
PORTER RD. - HWY. 112/71B
WIDENING & INTCHNG. IMPVTS. (S)
WASHINGTON COUNTY
ROUTE 49 SEC. 28
ARKANSAS STATE HIGHWAY COMMISSION
LITTLE ROCK, ARK.

DRAWN BY: CWT DATE: FEB. 2014 FILENAME: BBB0414X2_L2.dgn
CHECKED BY: RLW DATE: AUG. 2014 SCALE: NONE
DESIGNED BY: JES DATE: FEB. 2014
BRIDGE NO. 07379 DRAWING NO. 58139

jeskinner 3/20/2016 3:35:07 PM
WORKSPACE: AHTD Bridge
\\gitfarch01\Projects\LITProjects\201\107707 - I-540 Widening & Interchange Improvement\Drawings\I540-112RMP-S102-L0.dgn
REVISED DATE:

DATE REVISED	DATE FILMED	DATE REVISED	DATE FILMED	FED. ROAD DIST. NO.	STATE	FED. AID PROJ. NO.	SHEET NO.	TOTAL SHEETS
				6	ARK.			
				JOB NO.		BB0414	417	886
				(1) 07379		END BENT DETAILS		58140

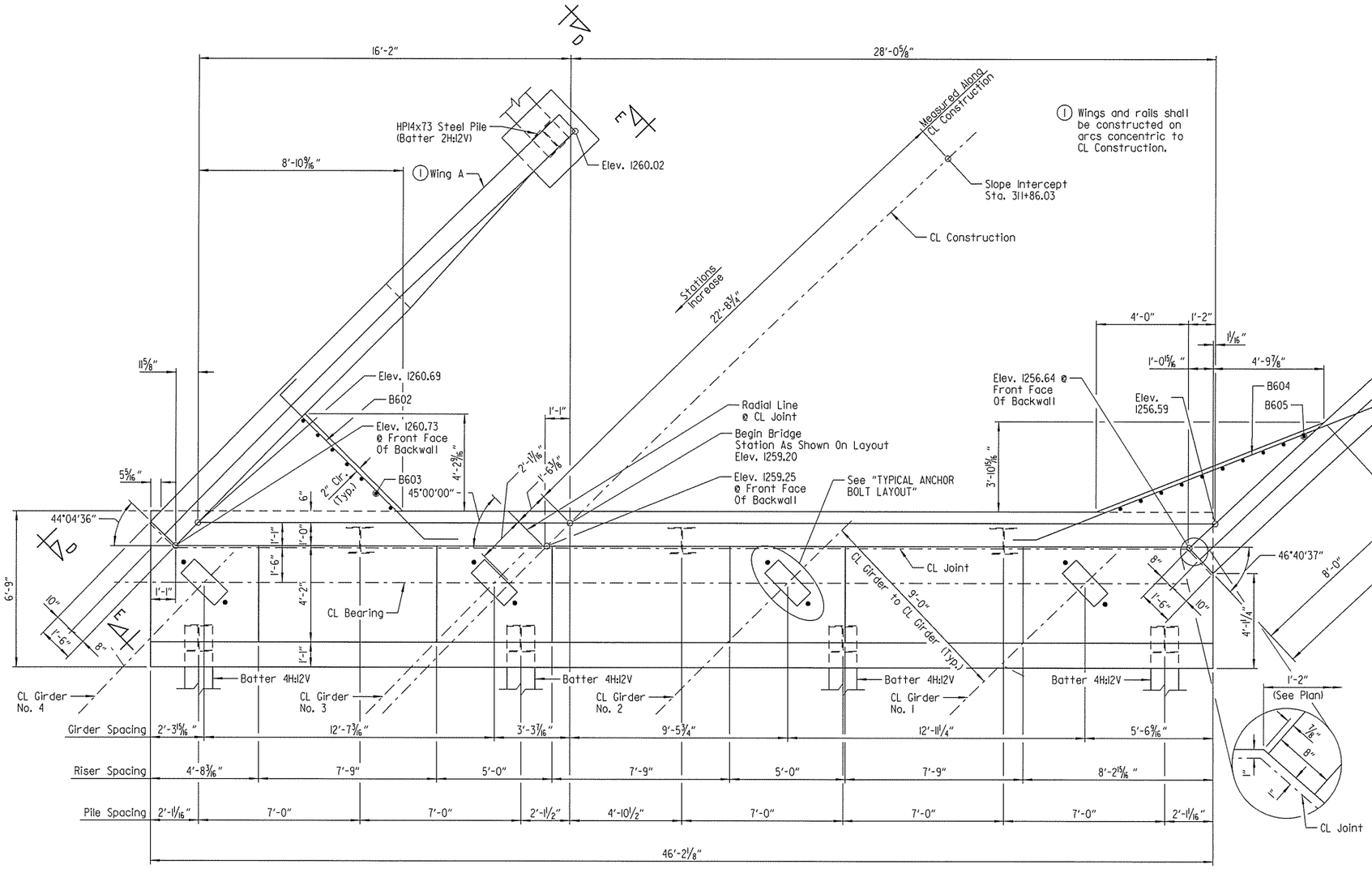

PLAN

Scale: 3/8" = 1'-0"

(2) Measured Along Gutterline

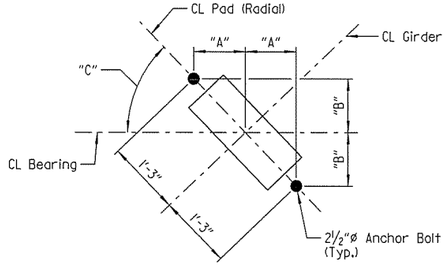

TYPICAL ANCHOR BOLT LAYOUT

Scale: 3/4" = 1'-0"

TABLE OF VARIABLES			
Girder No.	"A"	"B"	"C"
1	10 3/8"	10 7/8"	46°19'00"
2	10 1/2"	10 11/16"	45°32'07"
3	10 5/8"	10 9/16"	44°47'03"
4	10 3/4"	10 7/16"	44°03'43"

GENERAL NOTES

All concrete shall be Class "S" with a minimum 28 day compressive strength f'c = 3,500 psi. Concrete shall be poured in the dry, and all exposed corners to be chamfered 3/4" unless otherwise noted.

All reinforcing steel shall conform to AASHTO M31 or M322 Type A, Grade 60 (yield strength = 60,000 psi), with mill test reports.

All piles shall be HP14x73 (AASHTO M270, Gr. 50).

No portion of the backwall shall be poured before girders are in place. The portion of the backwall above the optional construction joint at the paving bracket shall not be placed until the deck pour has been made. Refer to "EXPANSION DEVICE INSTALLATION AT END BENTS" note on Dwg. No. 58167.

Finish top of backwall to match the bridge deck.

Structural steel in end bents shall be AASHTO M270, Gr. 50W and shall be paid for as "STRUCTURAL STEEL IN PLATE GIRDER SPANS (AASHTO M270, GR. 50W)".

Top reinforcing bars in cap shall be properly placed to avoid damage or interference with anchor bolts or sheet metal sleeves.

For additional information, see layout.

Class 2 Protective Surface Treatment shall be applied to the top of backwall and roadway face of concrete parapet. Class 3 Textured Coating Finish shall be applied in accordance with SP JOB NO. BB0414 "TEXTURED COATING FINISH" and in accordance with Subsection 802.19. Textured Coating Finish shall not be applied on surfaces where Class 2 Protective Surface Treatment is applied.

For details of elastomeric bearings, see Dwg. No. 58168.

For "VIEW D-D" & "VIEW E-E", see Dwg. No. 58142.

STATE OF ARKANSAS
LICENSED PROFESSIONAL ENGINEER
No. 14498
12-20-16
ADAM B. HALL
BRIDGE ENGINEER

SHEET 1 OF 4
DETAILS OF END BENT NO. 1
HWY. 112 TO NB I-49
OVER NB I-49 TO HWY. 71B

ROUTE SEC.

ARKANSAS STATE HIGHWAY COMMISSION
LITTLE ROCK, ARK.

DRAWN BY: CWT DATE: JULY 2015 FILENAME: BBB0414X2_A1.dgn
CHECKED BY: ABH DATE: AUG. 2015 SCALE: AS SHOWN
DESIGNED BY: RH DATE: JULY 2015
BRIDGE NO. 07379 DRAWING NO. 58140

jeskinner 3/20/2016 3:35:08 PM
WORKSPACE: AHTD_Bridge
L:\2015\107107 - I-540 Widening & Interchange Improvement\Drawings\540-112RMP-S201-AB.dgn
REVISED DATE:

DATE REVISED	DATE FILMED	DATE REVISED	DATE FILMED	FED. ROAD DIST. NO.	STATE	FED. AID PROJ. NO.	SHEET NO.	TOTAL SHEETS
				6	ARK.			
				JOB NO.		BB0414	418	886
				(1) 07379		END BENT DETAILS		58141

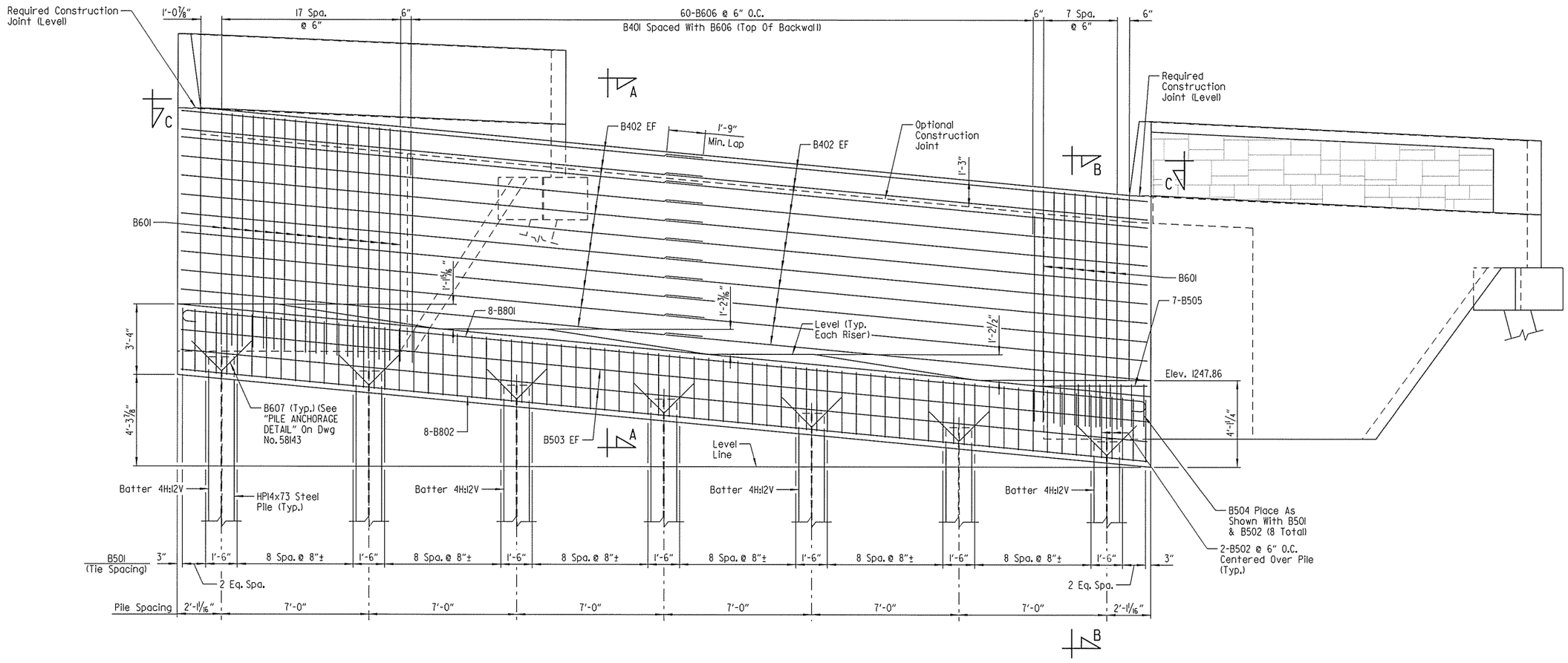

ELEVATION
(Looking Back)
Scale: ⅞" = 1'-0"

LEGEND
EF = Each Face

NOTES:
For "SECTION A-A", "SECTION B-B" & "SECTION C-C", see Dwg. No. 58143 .

Spacing of vertical reinforcing steel in backwall is measured along front face of backwall.

STATE OF ARKANSAS
LICENSED PROFESSIONAL ENGINEER
No. 14498
3-2016
ADAM B. HALL
BRIDGE ENGINEER

SHEET 2 OF 4
DETAILS OF END BENT NO. 1
HWY. 112 TO NB I-49
OVER NB I-49 TO HWY. 71B
ROUTE SEC.
ARKANSAS STATE HIGHWAY COMMISSION
LITTLE ROCK, ARK.

DRAWN BY: CWT DATE: JULY 2015 FILENAME: BBB0414X2_A2.dgn
CHECKED BY: ABH DATE: AUG. 2015 SCALE: AS SHOWN
DESIGNED BY: RH DATE: JULY 2015
BRIDGE NO. 07379 DRAWING NO. 58141

jeskinner 3/20/2016 3:35:08 PM
WORKSPACE, AHTD_Bridge
L:\2016\16DOT01 - I-540 Widening & Interchange Improvement\Drawings\I540-I12RMP-S202-AB.dgn
REVISED DATE:

DATE REVISED	DATE FILMED	DATE REVISED	DATE FILMED	FED. ROAD DIST. NO.	STATE	FED. AID PROJ. NO.	SHEET NO.	TOTAL SHEETS
				6	ARK.			
				JOB NO.		BB0414	419	886
				(1) 07379		END BENT DETAILS		58142

(1) Class 3 Textured Coating Finish (Color = Brown, Color Chip No. 33578)

(2) "Ashlar Stone" Form Liner & Class 3 Textured Coating Finish (Color = Brown, Color Chip No. 30219)

Form liner shall be a max. depth of 2" to provide a min. clearance of 1½" to parapet reinforcing. See SP JOB NO. BB0414 "ARCHITECTURAL FINISH".

(3) Measured Along Gutterline

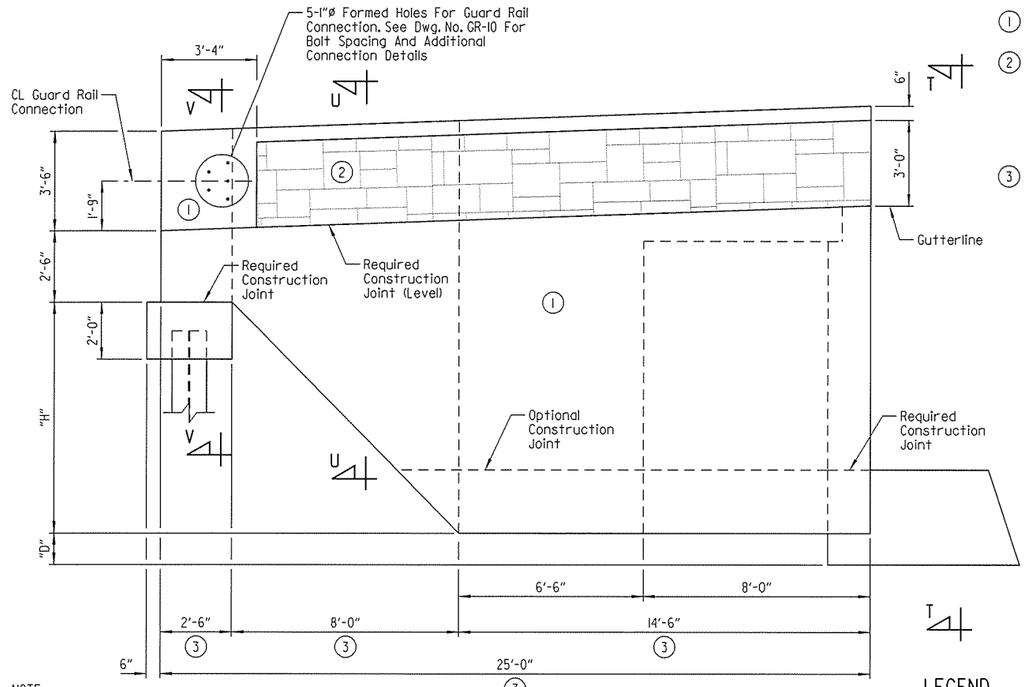

VIEW D-D
Scale: ⅜" = 1'-0"

NOTE:
A Class 3 Textured Coating Finish shall be applied to bridge surfaces as specified in SP JOB NO. BB0414 "TEXTURED COATING FINISH" and in accordance with Subsection 802.19.

LEGEND
FF = Front Face
BF = Back Face
EF = Each Face

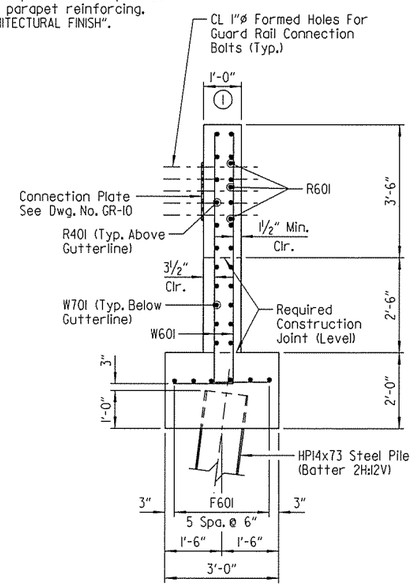

SECTION V-V
Scale: ½" = 1'-0"

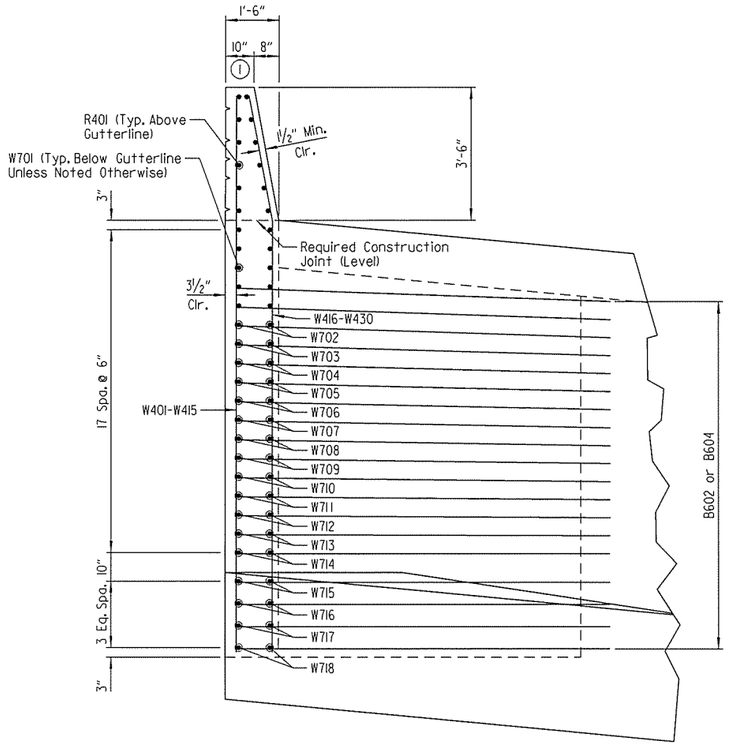

VIEW T-T
Scale: ½" = 1'-0"

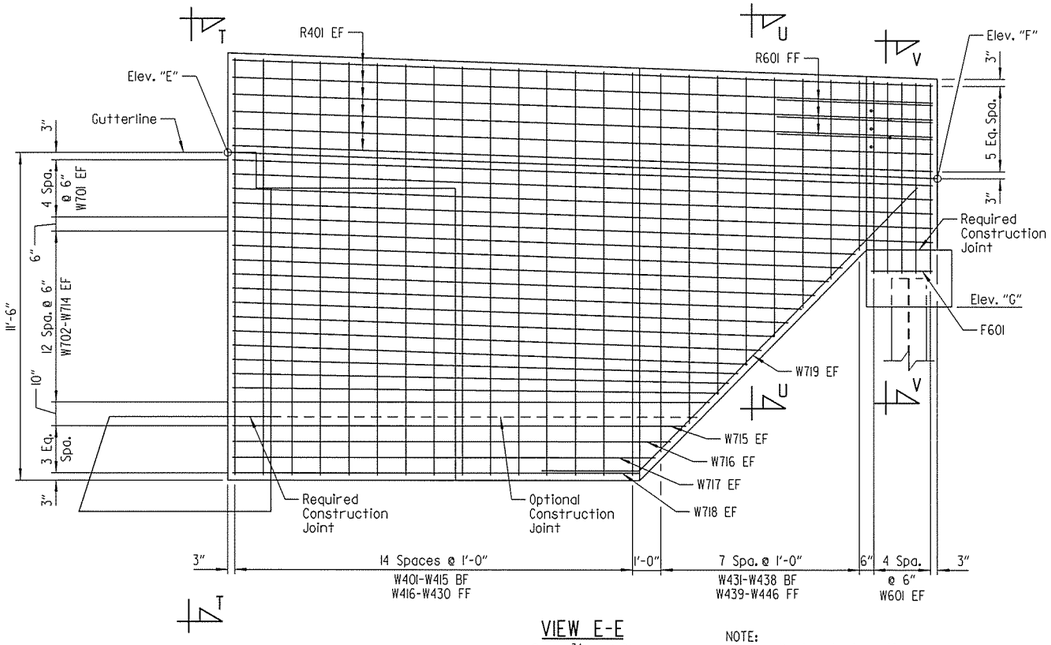

VIEW E-E
Scale: ⅜" = 1'-0"

NOTE:
At the Contractor's option, a single lap splice of 3'-6" (min.) may be used on bars W701 thru W718. Payment will be based on the weight of the bars shown in the plans.

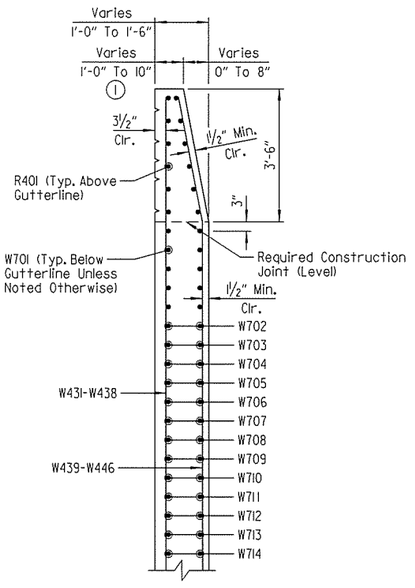

SECTION U-U
Scale: ½" = 1'-0"

TABLE OF VARIABLES					
LOCATION	"D"	"E"	"F"	"G"	"H"
Wing A	1'-1³⁄₁₆"	1260.73	1260.02	1255.52	8'-3½"
Wing B	1'-4⅝"	1256.64	1255.70	1251.20	8'-0¹¹⁄₁₆"

STATE OF ARKANSAS
LICENSED PROFESSIONAL ENGINEER
No. 14498
3-20-16
ADAM B. HALL
BRIDGE ENGINEER

SHEET 3 OF 4
DETAILS OF END BENT NO. 1
HWY. 112 TO NB I-49
OVER NB I-49 TO HWY. 71B

ROUTE SEC.

ARKANSAS STATE HIGHWAY COMMISSION
LITTLE ROCK, ARK.

DRAWN BY: CWT DATE: JULY 2015 FILENAME: BBB0414X2_A3.dgn
CHECKED BY: ABH DATE: AUG. 2015 SCALE: AS SHOWN
DESIGNED BY: RH DATE: JULY 2015
BRIDGE NO. 07379 DRAWING NO. 58142

JeskInner 3/20/2016 3:35:08 PM
WORKSPACE: AHTD_Bridge
L:\ROW\607707 - I-540 Widening & Interchange Improvement\Drawings\I540-I12RMP-S203-AB.dgn
REVISED DATE:

DATE REVISED	DATE FILMED	DATE REVISED	DATE FILMED	FED. ROAD DIST. NO.	STATE	FED. AID PROJ. NO.	SHEET NO.	TOTAL SHEETS
				6	ARK.			
				JOB NO.		BB0414	420	886
				(1) 07379		END BENT DETAILS		58143

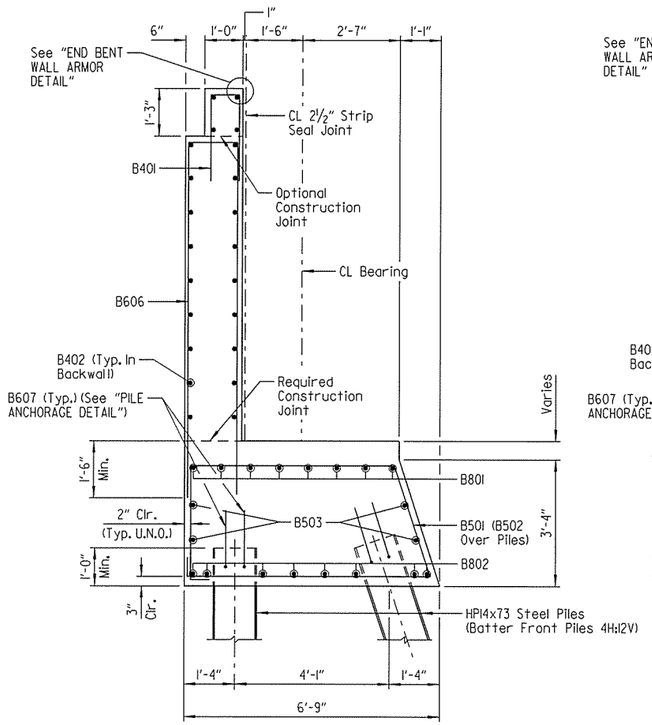

SECTION A-A
Scale: ½" = 1'-0"

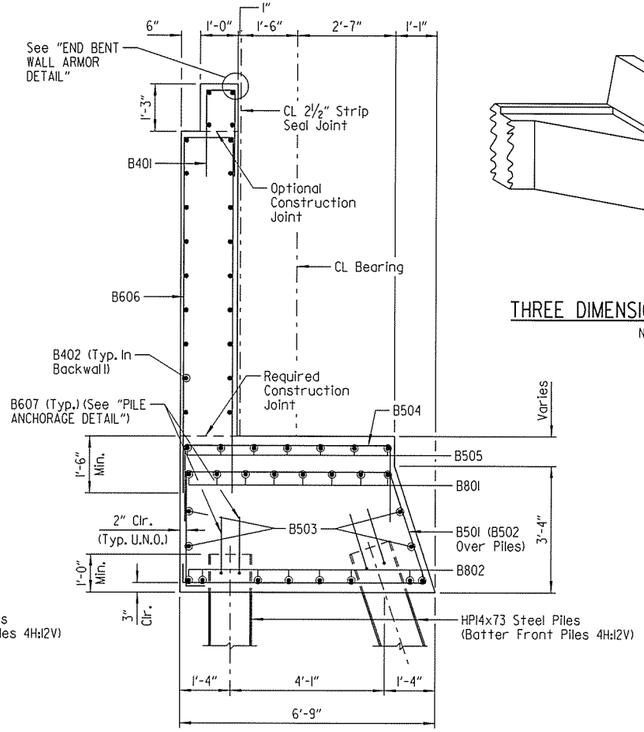

SECTION B-B
Scale: ½" = 1'-0"

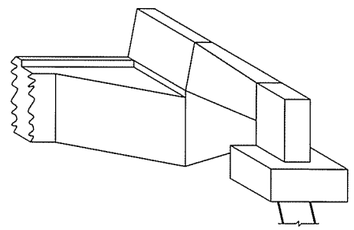

THREE DIMENSIONAL VIEW OF RAIL
No Scale

BAR LIST

Mark	No. Req'd	Length	"A"	"B"	Pin Dia.
B401	60	4'-8"	8"	2'-1"	2"
B402	44	24'-5"	23'-1"	1'-4"	3"
B501	60	18'-11½"			2½"
B502	14	11'-11½"			2½"
B503	4	45'-10"			Str.
B504	8	9'-11½"	5'-4"	2'-0"	2½"
B505	7	5'-2"			Str.
B601	26	21'-10"	8"	10'-9"	4½"
B602	19	11'-7"			4½"
B603	7	9'-1"			Str.
B604	19	19'-10"			4½"
B605	10	9'-11"			Str.
B606	60	19'-10"	1'-2"	9'-6"	4½"
B607	14	3'-10"			4½"
B608	1	10'-9"			Str.
B801	8	47'-8"			6"
B802	8	45'-10"			Str.
F601	12	2'-8"			Str.
R401	24	24'-8"			Str.
R601	6	5'-0"			Str.
W401 To W415	2 Each	14'-8" To 14'-2"			Str.
W416 To W430	2 Each	14'-8" To 14'-2"	11'-4" To 10'-10"		3"
W431 To W438	2 Each	13'-4" To 5'-11"			Str.
W439 To W446	2 Each	13'-4" To 5'-11"	10'-0" To 2'-7"		3"
W601	20	8'-0"	6'-7"	1'-7"	4½"

BAR LIST

Mark	No. Req'd	Length	"A"	"B"	Pin Dia.
W701	20	24'-8"			Str.
W702 To W714	4 Each	16'-9½" To 21'-11½"			Str.
W715 To W718	4 Each	17'-0" To 15'-4"	16'-0" To 14'-4"	1'-2"	5¼"
W719	4	17'-4"	3'-5"	14'-0"	5¼"

NOTE:
Dimensions of bars are out-to-out.

BAR BENDING DIAGRAMS

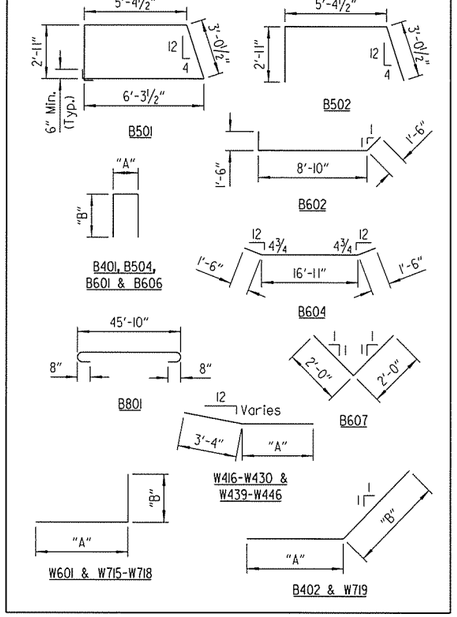

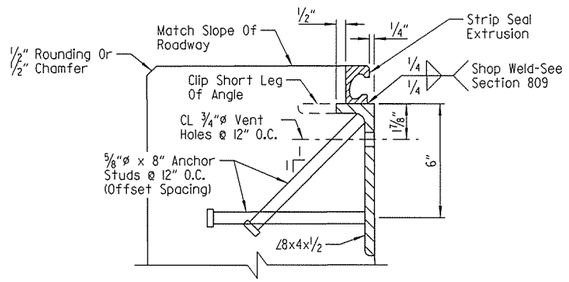

END BENT WALL ARMOR DETAIL
No Scale

NOTES:
Concrete shall be hand packed under joint armor.

Special care shall be taken to properly and thoroughly consolidate the concrete in the vicinity of the expansion joint device in the backwall. See Subsection 802.09(a)(3).

The profile of the backwall angle shall be established based on the vertical curve in conjunction with the skew.

Transverse spacing between top anchor studs and vent holes shall be 6".

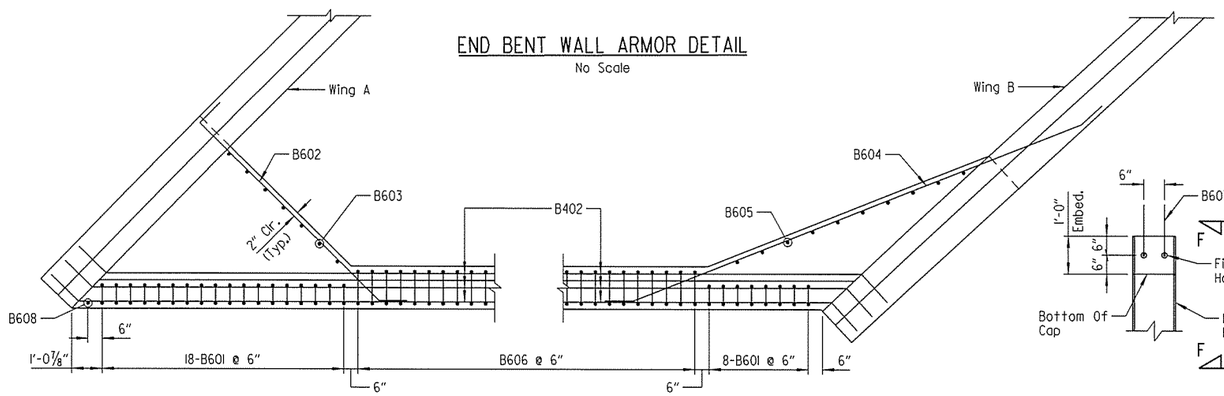

SECTION C-C
Scale: ½" = 1'-0"

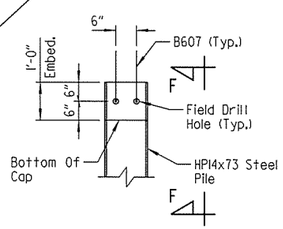

PILE ANCHORAGE DETAIL
No Scale

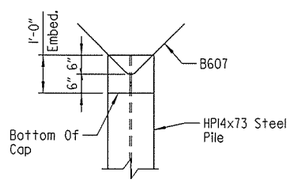

VIEW F-F
No Scale

LEGEND
U.N.O. = Unless Noted Otherwise

STATE OF ARKANSAS
LICENSED PROFESSIONAL ENGINEER
No. 14498
3-20-16
ADAM B. HALL
BRIDGE ENGINEER

SHEET 4 OF 4
DETAILS OF END BENT NO. 1
HWY. 112 TO NB I-49
OVER NB I-49 TO HWY. 71B
ROUTE SEC.

ARKANSAS STATE HIGHWAY COMMISSION
LITTLE ROCK, ARK.

DRAWN BY: CWT DATE: JULY 2015 FILENAME: BBB0414X2_A4.dgn
CHECKED BY: ABH DATE: AUG. 2015 SCALE: AS SHOWN
DESIGNED BY: RH DATE: JULY 2015
BRIDGE NO. 07379 DRAWING NO. 58143

JesKinner 3/20/2016 3:35:09 PM
WORKSPACE: AHTD_Bridge
L:\20NWD1707 - I-540 Widening & Interchange Improvement\Drawings\I540-I12RMP-S204-AB.dgn
REVISED DATE:

DATE REVISED	DATE FILMED	DATE REVISED	DATE FILMED	FED. ROAD DIST. NO.	STATE	FED. AID PROJ. NO.	SHEET NO.	TOTAL SHEETS
				6	ARK.			
				JOB NO.		BB0414	421	886
				(1) 07379		END BENT DETAILS		58144

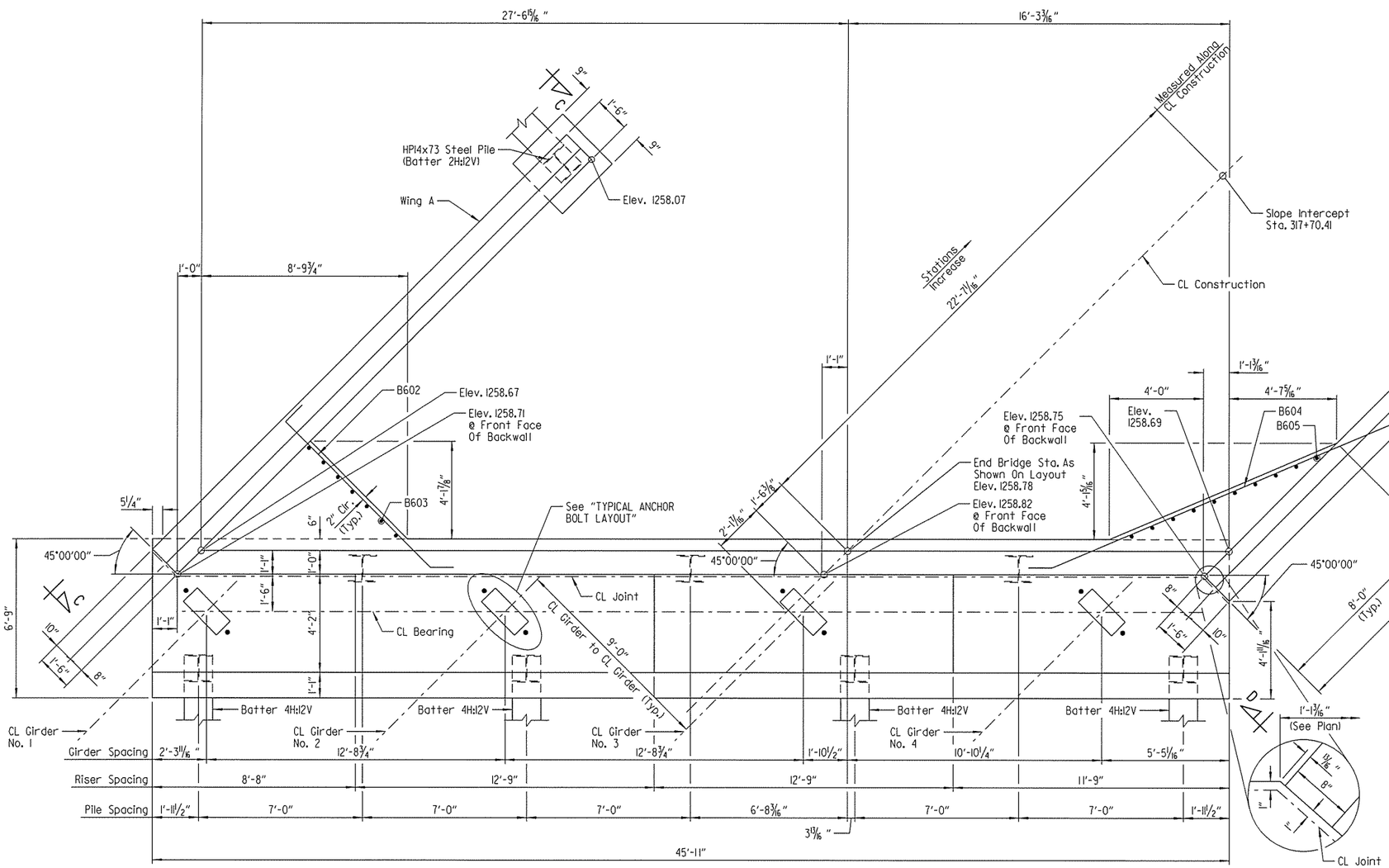

PLAN

Scale: 3/8" = 1'-0"

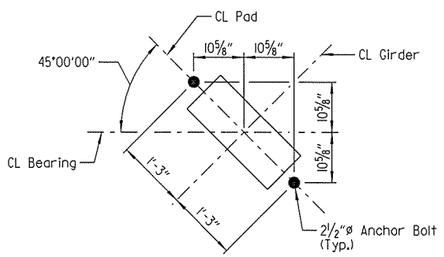

TYPICAL ANCHOR BOLT LAYOUT

Scale: 3/4" = 1'-0"

GENERAL NOTES

All concrete shall be Class "S" with a minimum 28 day compressive strength f'c = 3,500 psi. Concrete shall be poured in the dry, and all exposed corners to be chamfered 3/4" unless otherwise noted.

All reinforcing steel shall conform to AASHTO M31 or M322 Type A, Grade 60 (yield strength = 60,000 psi), with mill test reports.

All piles shall be HPI4x73 (AASHTO M270, Gr. 50).

No portion of the backwall shall be poured before girders are in place. The portion of the backwall above the optional construction joint at the paving bracket shall not be placed until the deck pour has been made. Refer to "EXPANSION DEVICE INSTALLATION AT END BENTS" note on Dwg. No. 58167.

Finish top of backwall to match the bridge deck.

Structural steel in end bents shall be AASHTO M270, Gr. 50W and shall be paid for as "STRUCTURAL STEEL IN PLATE GIRDER SPANS (AASHTO M270, GR. 50W)".

Top reinforcing bars in cap shall be properly placed to avoid damage or interference with anchor bolts or sheet metal sleeves.

For additional information, see layout.

Class 2 Protective Surface Treatment shall be applied to the top of backwall and roadway face of concrete parapet. Class 3 Textured Coating Finish shall be applied in accordance with SP JOB NO. BB0414 "TEXTURED COATING FINISH" and in accordance with Subsection 802.19. Textured Coating Finish shall not be applied on surfaces where Class 2 Protective Surface Treatment is applied.

For details of elastomeric bearings, see Dwg. No. 58168.

For "VIEW C-C" & "VIEW D-D", see Dwg. No. 58146.

STATE OF ARKANSAS
LICENSED PROFESSIONAL ENGINEER
No. 14498
3-20-16
ADAM B. HALL

BRIDGE ENGINEER

SHEET 1 OF 5
DETAILS OF END BENT NO. 4
HWY. 112 TO NB I-49
OVER NB I-49 TO HWY. 71B

ROUTE SEC.

ARKANSAS STATE HIGHWAY COMMISSION

LITTLE ROCK, ARK.

DRAWN BY: CWT DATE: SEPT. 2015 FILENAME: BBB0414X2_A5.dgn
CHECKED BY: ABH DATE: OCT. 2015 SCALE: AS SHOWN
DESIGNED BY: RH DATE: JULY 2015
BRIDGE NO. 07379 DRAWING NO. 58144

Jeskinner 3/20/2016 3:35:09 PM
WORKSPACE: AHTD_Bridge
L:\20IN\IN07707 - I-540 Widening & Interchange Improvement\Drawings\I540-112RMP-5205-AB.dgn
REVISED DATE:

DATE REVISED	DATE FILMED	DATE REVISED	DATE FILMED	FED. ROAD DIST. NO.	STATE	FED. AID PROJ. NO.	SHEET NO.	TOTAL SHEETS
				6	ARK.			
				JOB NO.		BB0414	422	886
				(1) 07379		END BENT DETAILS		58145

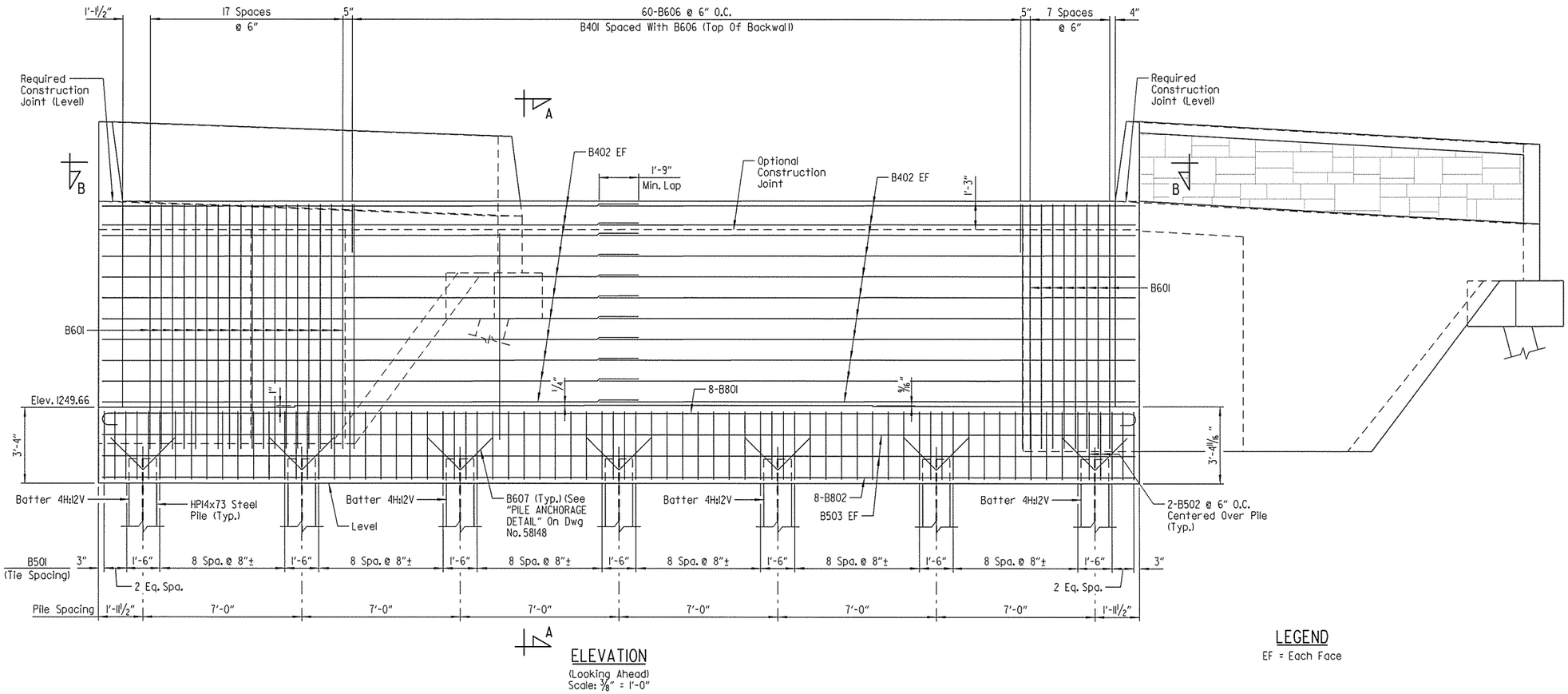

ELEVATION
(Looking Ahead)
Scale: ⅜" = 1'-0"

LEGEND
EF = Each Face

NOTES:
For "SECTION A-A" & "SECTION B-B", see Dwg. No. 58146 .

Spacing of vertical reinforcing steel in backwall is measured along front face of backwall.

STATE OF ARKANSAS
LICENSED PROFESSIONAL ENGINEER
No. 14498
3-20-16
ADAM B. HALL
BRIDGE ENGINEER

SHEET 2 OF 5
DETAILS OF END BENT NO. 4
HWY. 112 TO NB I-49
OVER NB I-49 TO HWY. 71B
ROUTE SEC.
ARKANSAS STATE HIGHWAY COMMISSION
LITTLE ROCK, ARK.

DRAWN BY: CWT DATE: SEPT. 2015 FILENAME: BBB0414X2_A6.dgn
CHECKED BY: ABH DATE: OCT. 2015 SCALE: AS SHOWN
DESIGNED BY: RH DATE: JULY 2015
BRIDGE NO. 07379 DRAWING NO. 58145

jeskinner 3/20/2016 3:35:10 PM
WORKSPACE: AHTD Bridge
L:\20\NBOI707 - I-540 Widening & Interchange Improvement\Drawings\I540-I2RMP-S206-AB.dgn
REVISED DATE:

DATE REVISED	DATE FILMED	DATE REVISED	DATE FILMED	FED. ROAD DIST. NO.	STATE	FED. AID PROJ. NO.	SHEET NO.	TOTAL SHEETS
				6	ARK.			
				JOB NO.		BB0414	423	886
				(1) 07379		END BENT DETAILS		58146

(1) Class 3 Textured Coating Finish (Color = Brown, Color Chip No. 33578)

(2) "Ashlar Stone" Form Liner & Class 3 Textured Coating Finish (Color = Brown, Color Chip No. 30219)

Form liner shall be a max. depth of 2" to provide a min. clearance of 1½" to parapet reinforcing. See SP JOB NO. BB0414 "ARCHITECTURAL FINISH".

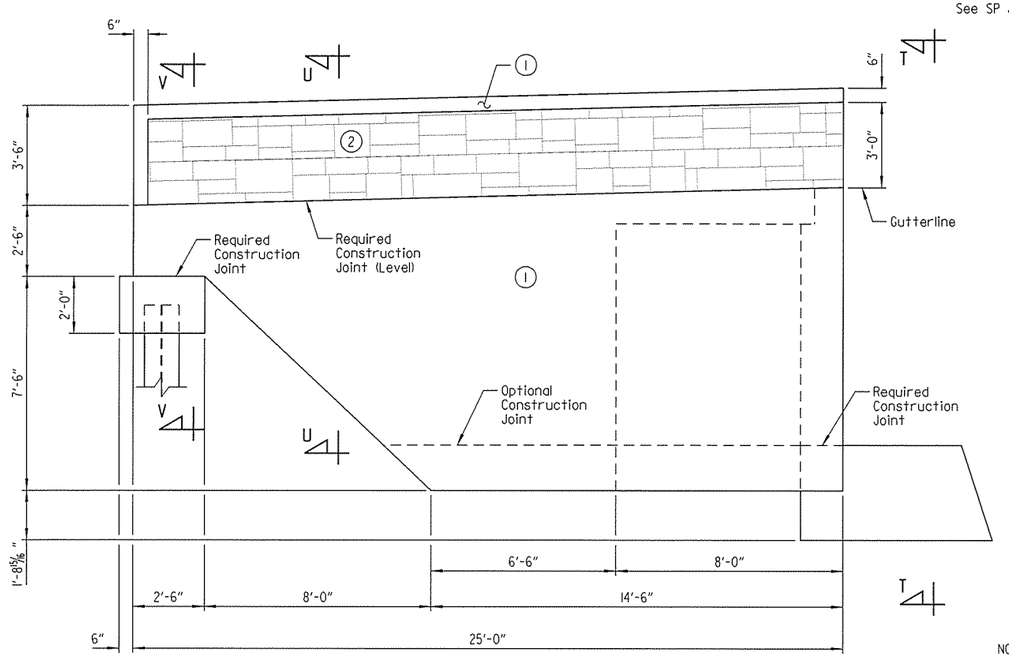

VIEW C-C
Scale: ⅜" = 1'-0"

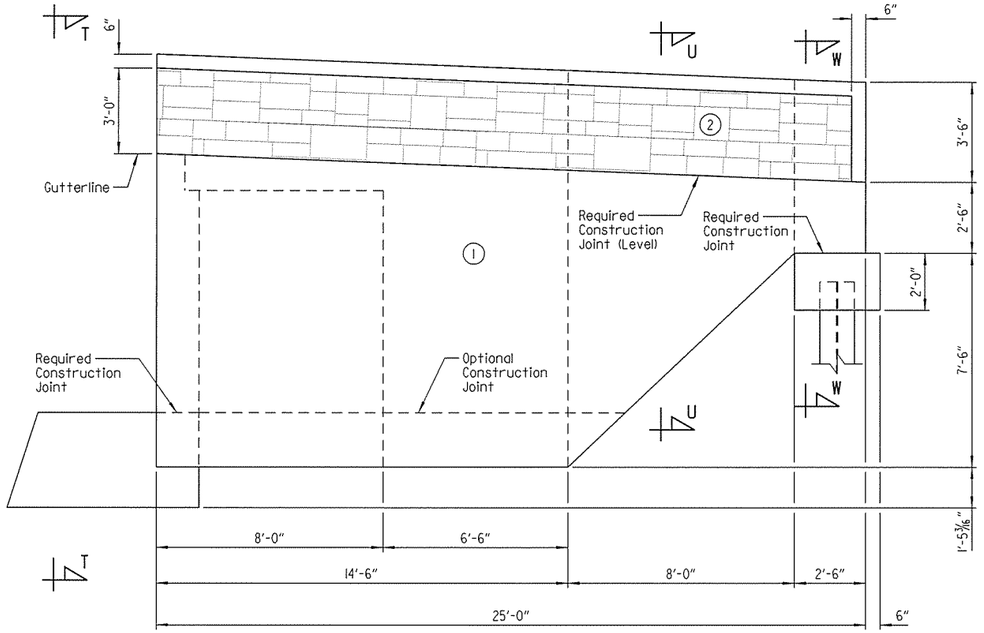

VIEW D-D
Scale: ⅜" = 1'-0"

NOTE:
A Class 3 Textured Coating Finish shall be applied to bridge surfaces as specified in SP JOB NO. BB0414 "TEXTURED COATING FINISH" and in accordance with Subsection 802.19.

NOTE:
For "SECTION U-U" & "VIEW T-T", See Dwg. No. 58147.

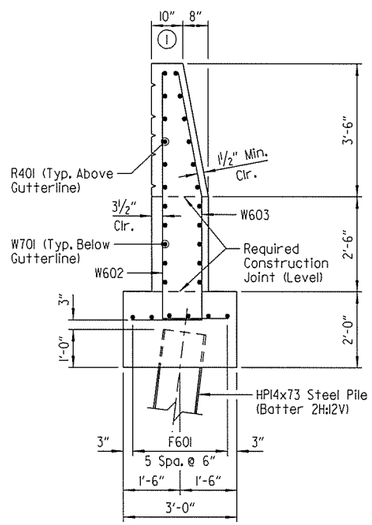

SECTION V-V
Scale: ½" = 1'-0"

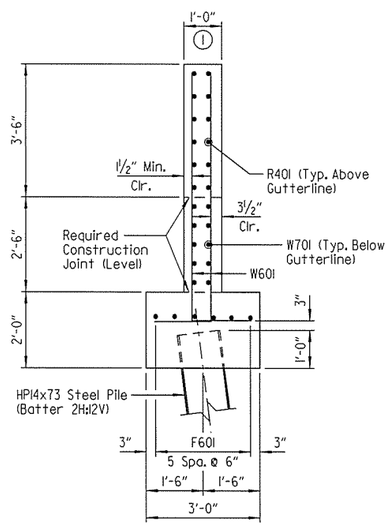

SECTION W-W
Scale: ½" = 1'-0"

STATE OF ARKANSAS
LICENSED PROFESSIONAL ENGINEER
No. 14498
3-20-16
ADAM B. HALL
BRIDGE ENGINEER

SHEET 3 OF 5
DETAILS OF END BENT NO. 4
HWY. 112 TO NB I-49
OVER NB I-49 TO HWY. 71B
ROUTE SEC.
ARKANSAS STATE HIGHWAY COMMISSION
LITTLE ROCK, ARK.

DRAWN BY: CWT DATE: SEPT. 2015 FILENAME: BBB0414X2_A7.dgn
CHECKED BY: ABH DATE: OCT. 2015 SCALE: AS SHOWN
DESIGNED BY: RH DATE: JULY 2015
BRIDGE NO. 07379 DRAWING NO. 58146

jeskinner 3/20/2016 3:35:10 PM
WORKSPACE: AHTD_Bridge
L:\20\N007707 - I-540 Widening & Interchange Improvement\Drawings\I540-I12RMP-S207-AB.dgn
REVISED DATE:

DATE REVISED	DATE FILMED	DATE REVISED	DATE FILMED	FED. ROAD DIST. NO.	STATE	FED. AID PROJ. NO.	SHEET NO.	TOTAL SHEETS
				6	ARK.			
				JOB NO.		BB0414	424	886
				① 07379		END BENT DETAILS		58147

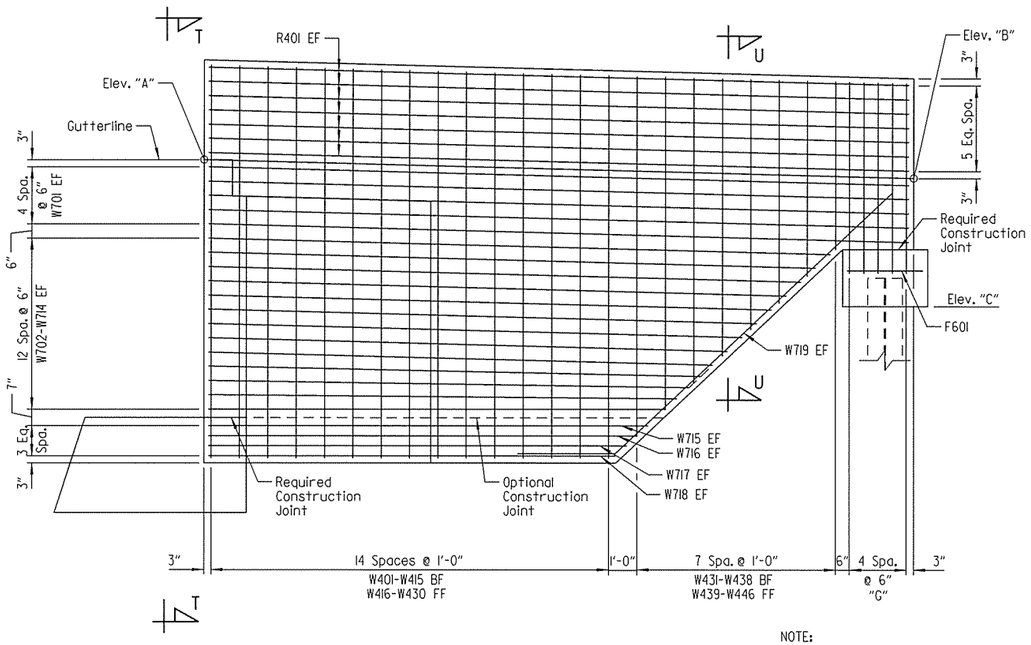

WINGWALL REINFORCEMENT DETAILS

Scale: 3/8" = 1'-0"

NOTE:
At the Contractor's option, a single lap splice of 3'-6" (min.) may be used on bars W701 thru W718. Payment will be based on the weight of the bars shown in the plans.

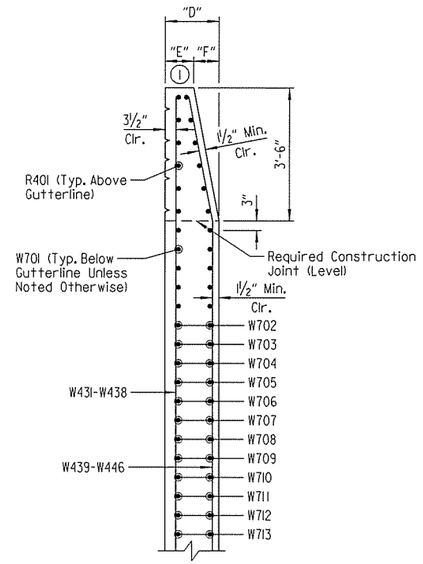

SECTION U-U

Scale: ½" = 1'-0"

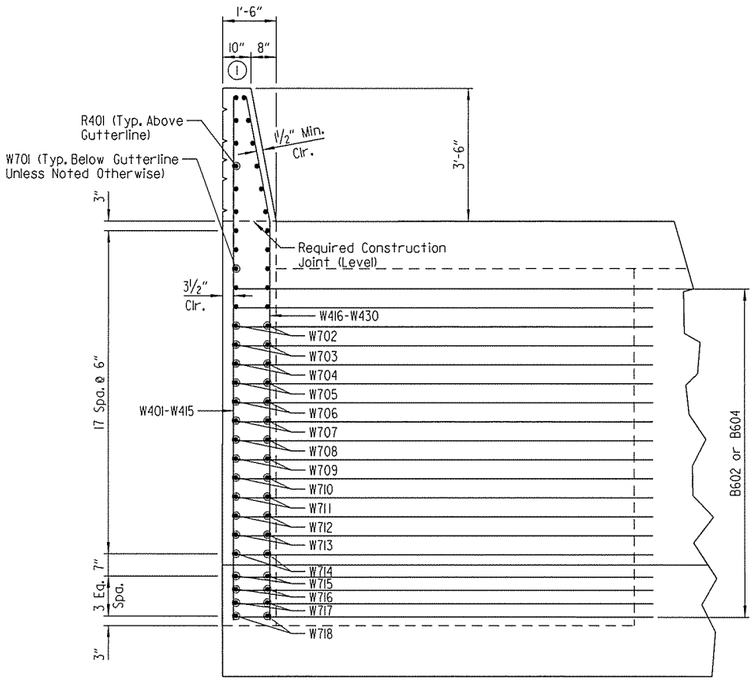

VIEW T-T

Scale: ½" = 1'-0"

LEGEND

FF = Front Face
BF = Back Face
EF = Each Face

① Class 3 Textured Coating Finish (Color = Brown, Color Chip No. 33578)

TABLE OF VARIABLES

LOCATION	"A"	"B"	"C"	"D"	"E"	"F"	"G"
Wing A	1258.71	1258.07	1253.57	1'-6"	10"	8"	W602 BF, W603 FF
Wing B	1258.75	1257.76	1253.26	Varies 1'-0" To 1'-6"	Varies 1'-0" To 10"	Varies 0" To 8"	W601 EF

STATE OF ARKANSAS
LICENSED PROFESSIONAL ENGINEER
No. 14498
3-20-16
ADAM B. HALL
BRIDGE ENGINEER

SHEET 4 OF 5
DETAILS OF END BENT NO. 4
HWY. 112 TO NB I-49
OVER NB I-49 TO HWY. 71B
ROUTE SEC.
ARKANSAS STATE HIGHWAY COMMISSION
LITTLE ROCK, ARK.

DRAWN BY: CWT DATE: SEPT. 2015 FILENAME: BBB0414X2_A8.dgn
CHECKED BY: ABH DATE: OCT. 2015 SCALE: AS SHOWN
DESIGNED BY: RH DATE: JULY 2015
BRIDGE NO. 07379 DRAWING NO. 58147

jeskinner 3/20/2016 3:35:10 PM
WORKSPACE: AHTD Bridge
L:\ZONING\07707 - I-540 Widening & Interchange Improvement\Drawings\I540-I12RMP-S208-A8.dgn
REVISED DATE:

DATE REVISED	DATE FILMED	DATE REVISED	DATE FILMED	FED. ROAD DIST. NO.	STATE	FED. AID PROJ. NO.	SHEET NO.	TOTAL SHEETS
				6	ARK.			
				JOB NO.		BB0414	425	886
				(1) 07379		END BENT DETAILS		58148

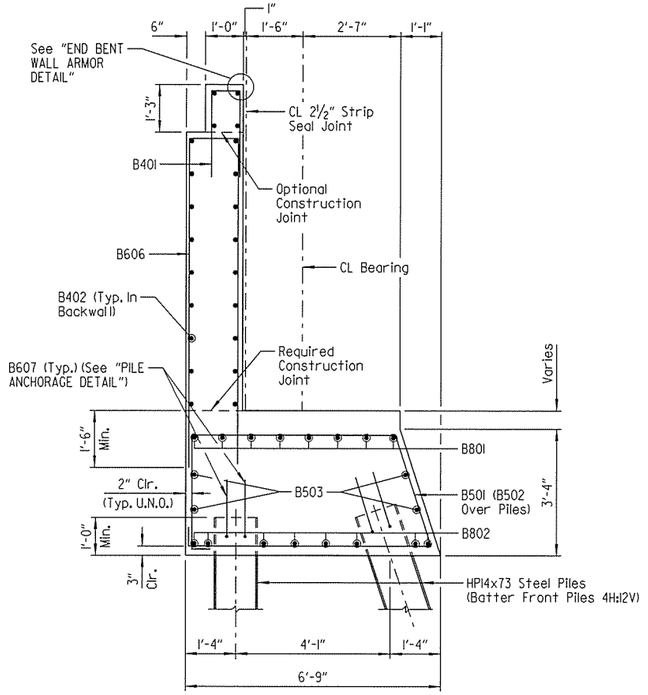

SECTION A-A
Scale: ½" = 1'-0"

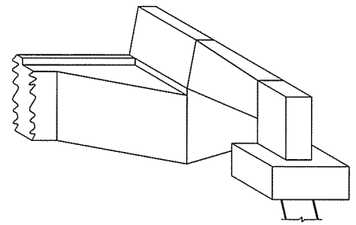

THREE DIMENSIONAL VIEW OF RAIL
No Scale

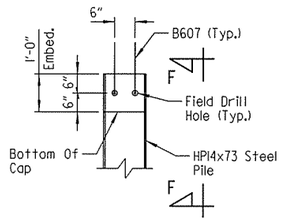

PILE ANCHORAGE DETAIL
No Scale

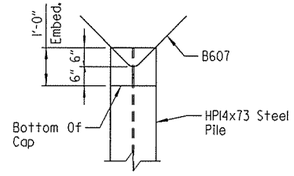

VIEW F-F
No Scale

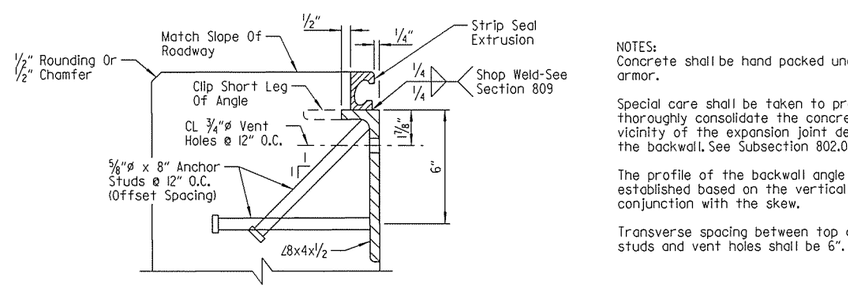

END BENT WALL ARMOR DETAIL
No Scale

NOTES:
Concrete shall be hand packed under joint armor.

Special care shall be taken to properly and thoroughly consolidate the concrete in the vicinity of the expansion joint device in the backwall. See Subsection 802.09(a)(3).

The profile of the backwall angle shall be established based on the vertical curve in conjunction with the skew.

Transverse spacing between top anchor studs and vent holes shall be 6".

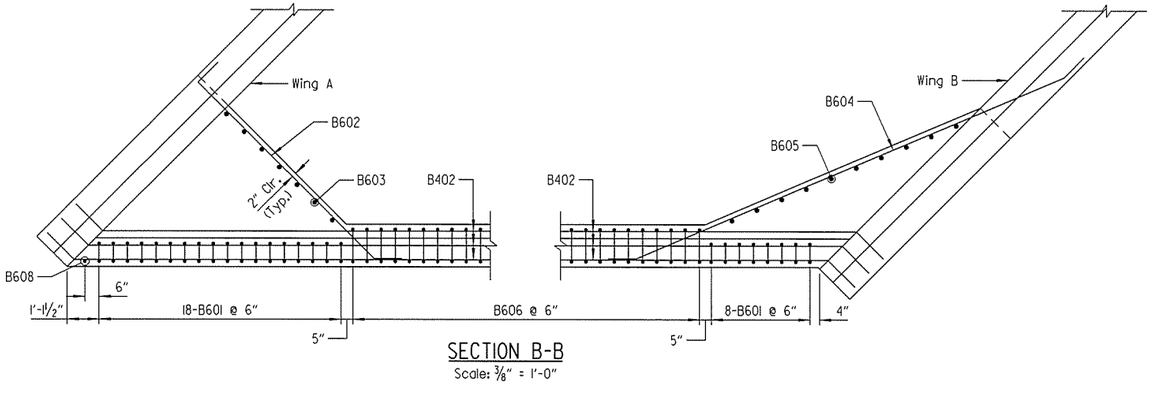

SECTION B-B
Scale: ⅜" = 1'-0"

BAR LIST

Mark	No. Req'd	Length	"A"	"B"	Pin Dia.
B401	60	4'-8"	8"	2'-1"	2"
B402	44	24'-2"			3"
B501	60	18'-1½"			2½"
B502	14	11'-1½"			2½"
B503	4	45'-7"			Str.
B601	26	21'-2"	8"	10'-5"	4½"
B602	19	11'-5"			4½"
B603	7	8'-10"			Str.
B604	19	19'-3"			4½"
B605	10	9'-1"			Str.
B606	60	19'-2"	1'-2"	9'-2"	4½"
B607	14	3'-10"			4½"
B608	1	10'-5"			Str.
B801	8	47'-5"			6"
B802	8	45'-7"			Str.
F601	12	2'-8"			Str.
R401	24	24'-8"			Str.
W401		13'-10"			
To	2 Each	To			Str.
W415		13'-6"			
W416		13'-10"	10'-6"		
To	2 Each	To	To		3"
W430		13'-6"	10'-2"		
W431		12'-8"			
To	2 Each	To			Str.
W438		5'-11"			
W439		12'-8"	9'-4"		
To	2 Each	To	To		3"
W446		5'-11"	2'-7"		
W601	10	8'-0"	6'-7"	1'-7"	4½"
W602	5	8'-2"	6'-7"	1'-9"	4½"
W603	5	8'-4"			4½"

BAR LIST

Mark	No. Req'd	Length	"A"	"B"	Pin Dia.
W701	20	24'-8"			Str.
W702		16'-1"			
To	4 Each	To			Str.
W714		21'-11"			
W715		16'-6"	15'-6"		
To	4 Each	To	To	1'-2"	5¼"
W718		15'-4"	14'-4"		
W719	4	16'-10"			5¼"

NOTE:
Dimensions of bars are out-to-out.

BAR BENDING DIAGRAMS

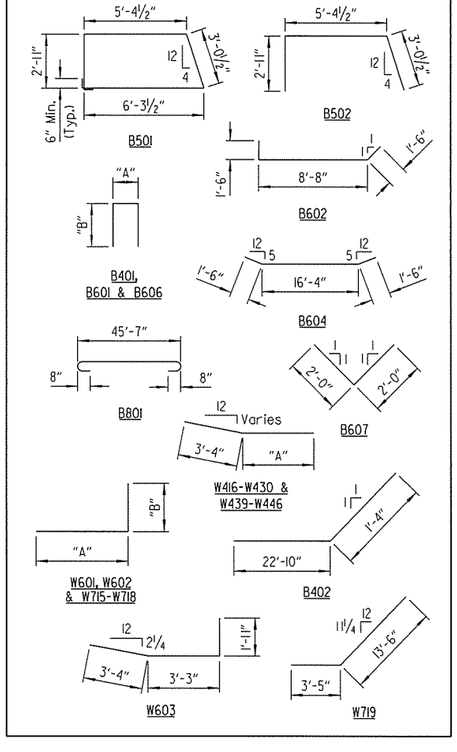

LEGEND

U.N.O. = Unless Noted Otherwise

STATE OF ARKANSAS
LICENSED PROFESSIONAL ENGINEER
No. 14498
11-20-16
ADAM B. HILL
BRIDGE ENGINEER

SHEET 5 OF 5
DETAILS OF END BENT NO. 4
HWY. 112 TO NB I-49
OVER NB I-49 TO HWY. 71B
ROUTE SEC.
ARKANSAS STATE HIGHWAY COMMISSION
LITTLE ROCK, ARK.

DRAWN BY: CWT DATE: SEPT. 2015 FILENAME: BBB0414X2_A9.dgn
CHECKED BY: ABH DATE: OCT. 2015 SCALE: AS SHOWN
DESIGNED BY: RH DATE: JULY 2015
BRIDGE NO. 07379 DRAWING NO. 58148

jeskinner 3/20/2016 3:35:11 PM
WORKSPACE: AHTD Bridge
\\gorverfnc.local\gdata\Projects\20I\I001707 - I-540 Widening & Interchange Improvement\Drawings\I540-I2RMP-S209-AB.dgn
REVISED DATE:

DATE REVISED	DATE FILMED	DATE REVISED	DATE FILMED	FED. ROAD DIST. NO.	STATE	FED. AID PROJ. NO.	SHEET NO.	TOTAL SHEETS
				6	ARK.			
				JOB NO.		BB0414	426	886
				(1) 07379		INTERMEDIATE BENT DETAILS		58149

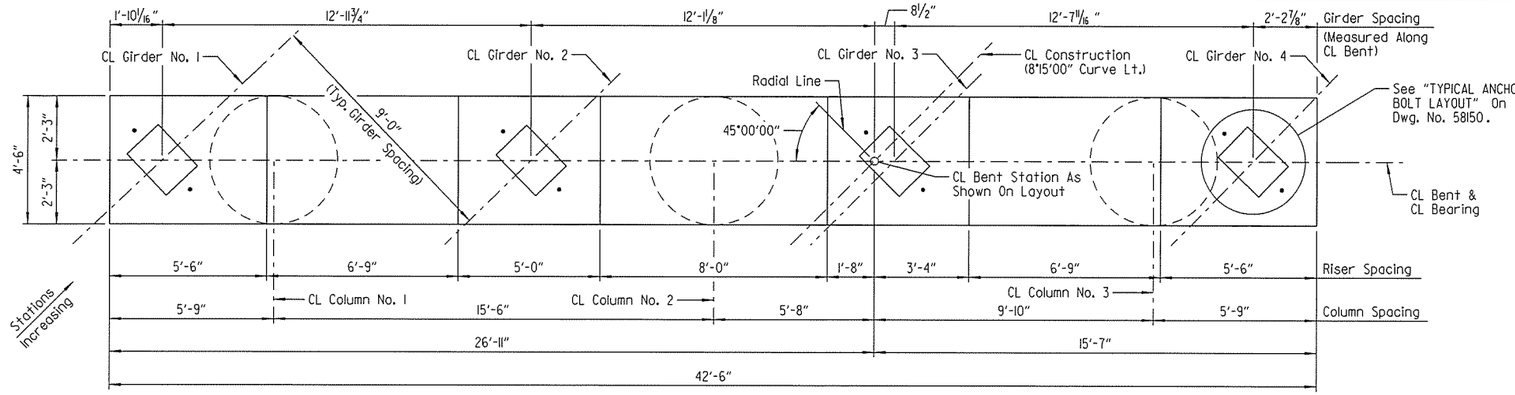

(1) Double B502 & Single B503, 6 Spaces @ 6"

PLAN
Scale: 3/8" = 1'-0"

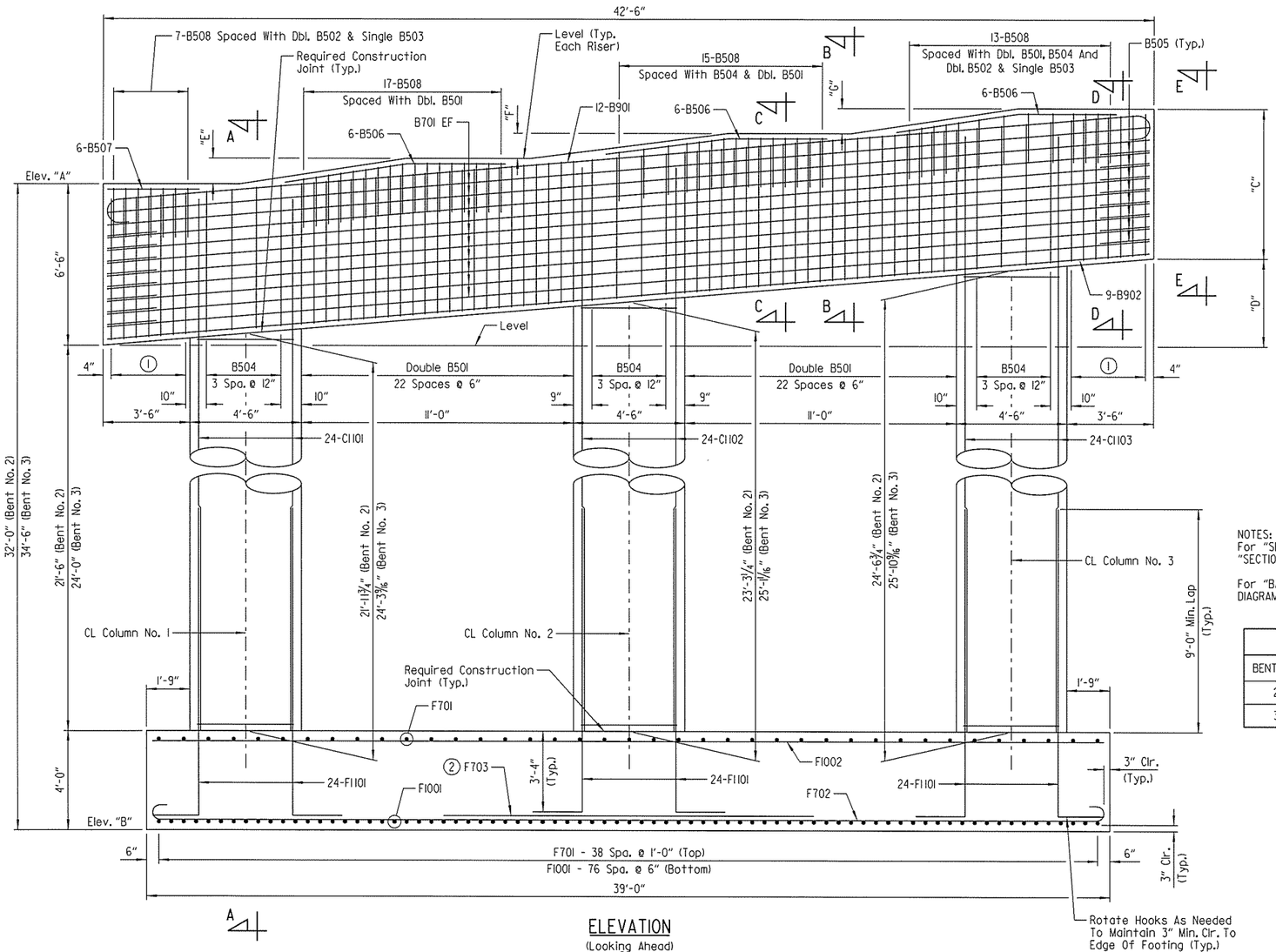

ELEVATION
(Looking Ahead)
Scale: 3/8" = 1'-0"

Rotate Hooks As Needed To Maintain 3" Min. Clr. To Edge Of Footing (Typ.)

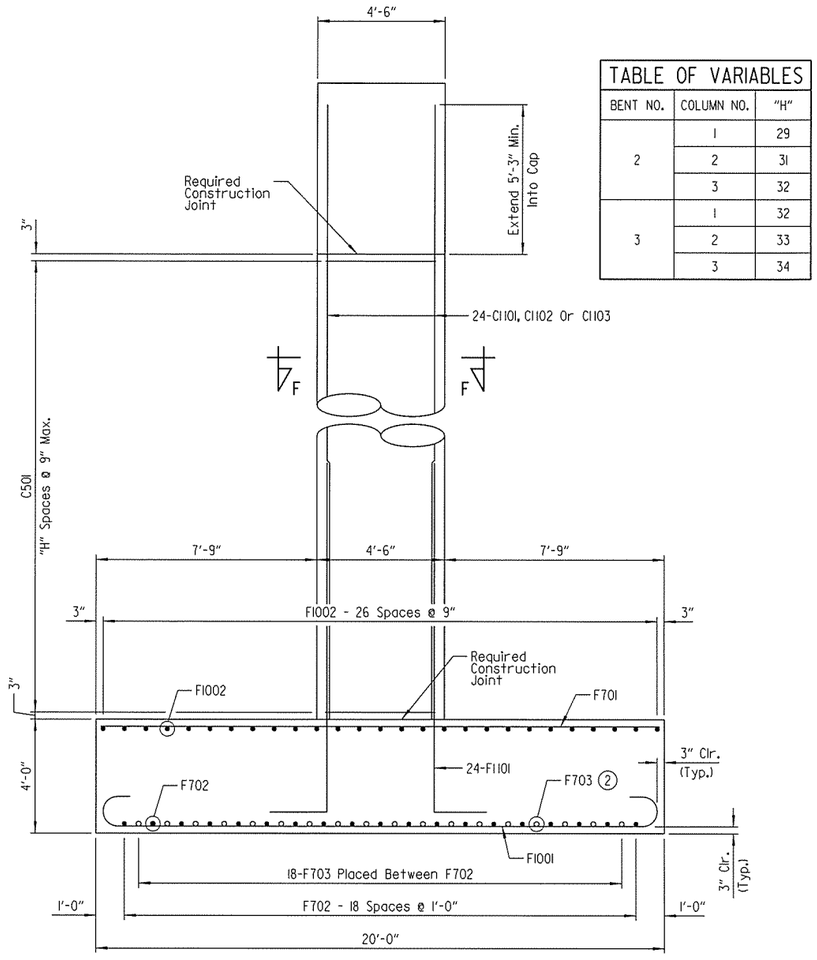

TABLE OF VARIABLES		
BENT NO.	COLUMN NO.	"H"
2	1	29
	2	31
	3	32
3	1	32
	2	33
	3	34

SECTION A-A
No Scale

(2) Centered under Column No. 2

NOTES:
For "SECTION B-B", "SECTION C-C", "SECTION D-D", "VIEW E-E" & "SECTION F-F", see Dwg. No. 58150.

For "BAR LIST - BENT NO. 2", "BAR LIST - BENT NO. 3", "BAR BENDING DIAGRAMS" & "GENERAL NOTES", see Dwg. No. 58150.

TABLE OF VARIABLES							
BENT NO.	"A"	"B"	"C"	"D"	"E"	"F"	"G"
2	1251.68	1219.68	6'-0 9/16"	3'-6 1/2"	1'-0 9/16"	1'-0 5/16"	1'-0 3/16"
3	1252.31	1217.81	6'-2 5/8"	2'-2 1/8"	8 3/16"	7 5/8"	6 15/16"

LEGEND
EF = Each Face

STATE OF ARKANSAS
LICENSED PROFESSIONAL ENGINEER
No. 15902
PRESTON C. CAMPBELL
BRIDGE ENGINEER

SHEET 1 OF 2
DETAILS OF INTERMEDIATE BENT NOS. 2 & 3
HWY. 112 TO NB I-49
OVER NB I-49 TO HWY. 71B
ROUTE SEC.
ARKANSAS STATE HIGHWAY COMMISSION
LITTLE ROCK, ARK.

DRAWN BY: HEW DATE: JUNE 2015 FILENAME: BBB0414X2_BI.dgn
CHECKED BY: ABH DATE: SEPT. 2015 SCALE: AS SHOWN
DESIGNED BY: PCC DATE: APR. 2015
BRIDGE NO. 07379 DRAWING NO. 58149

jeskinner 3/20/2016 3:35:41 PM
WORKSPACE: AHTD Bridge
\\garver.fs\cloud\gdot6\Projects\2011\101707 - I-540 Widening & Interchange Improvement\Drawings\I540-I12RMP-S210-BE.dgn
REVISED DATE:

DATE REVISED	DATE FILMED	DATE REVISED	DATE FILMED	FED. ROAD DIST. NO.	STATE	FED. AID PROJ. NO.	SHEET NO.	TOTAL SHEETS
				6	ARK.			
				JOB NO.		BB0414	427	886

(1) 07379 INTERMEDIATE BENT DETAILS 58150

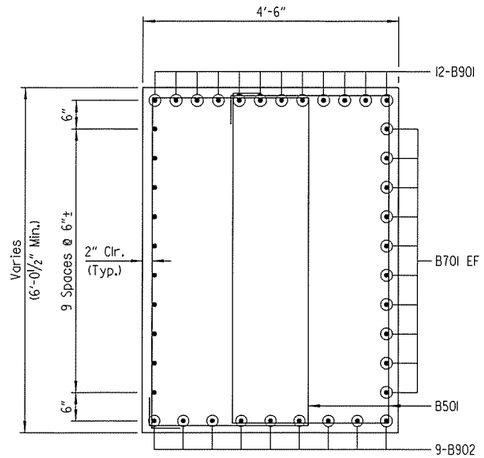

SECTION B-B
Scale: ¾" = 1'-0"

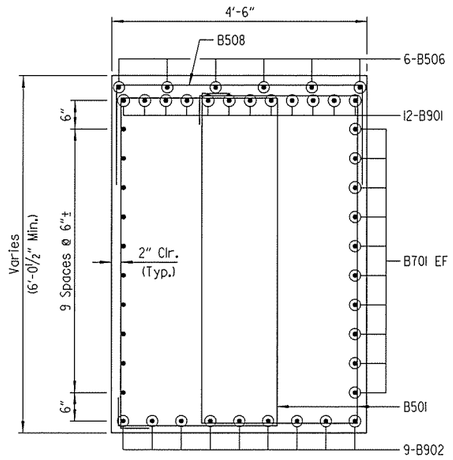

SECTION C-C
Scale: ¾" = 1'-0"

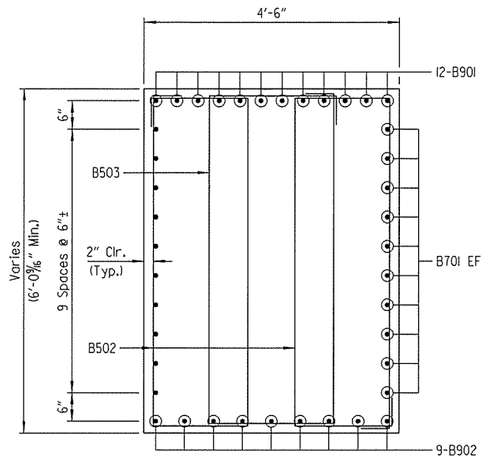

SECTION D-D
Scale: ¾" = 1'-0"

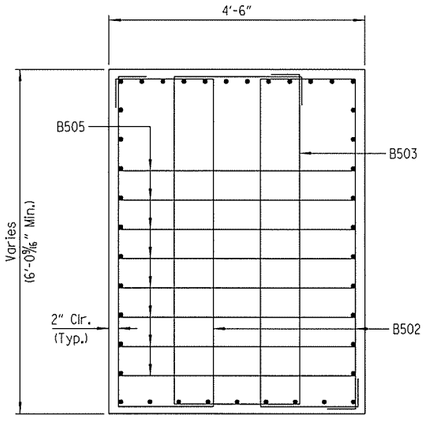

VIEW E-E
Scale: ¾" = 1'-0"

BAR BENDING DIAGRAMS

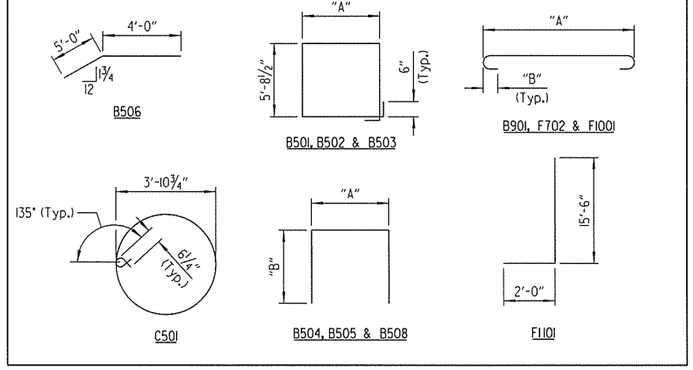

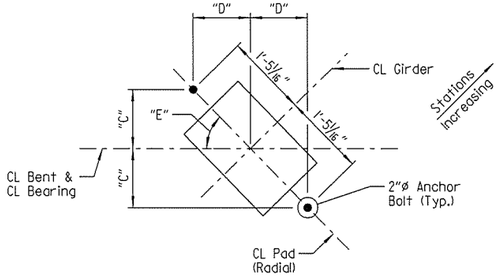

TYPICAL ANCHOR BOLT LAYOUT
No Scale

TABLE OF VARIABLES			
GIRDER NO.	"C"	"D"	"E"
1	1'-0⅜"	11¾"	46°30'03"
2	1'-0⅜"	11¹⁵⁄₁₆"	45°42'52"
3	1'-0¹⁄₁₆"	1'-0¹⁄₁₆"	44°57'32"
4	11⅞"	1'-0¼"	44°13'55"

NOTE:
For details of elastomeric bearings, see Dwg. No. 58168 .

BAR LIST - BENT NO. 2

Mark	No. Req'd	Length	"A"	"B"	Pin Dia.
B501	92	17'-5"	2'-9"		2½"
B502	28	15'-3"	1'-8"		2½"
B503	14	16'-5"	2'-3"		2½"
B504	12	15'-4½"	4'-2"	5'-8½"	2½"
B505	16	7'-10"	4'-0½"	2'-0"	2½"
B506	18	9'-0"			2½"
B507	6	3'-9"			Str.
B508	52	8'-0"	4'-2"	2'-0"	2½"
B701	20	42'-2"			Str.
B901	12	44'-8"	42'-2"	10"	9"
B902	9	42'-2"			Str.
C501	95	13'-7"			3¾"
C1101	24	27'-5"			Str.
C1102	24	28'-9"			Str.
C1103	24	30'-0"			Str.
F701	39	19'-6"			Str.
F702	19	40'-2"	38'-6"	7"	5¼"
F703	18	15'-0"			Str.
F1001	77	22'-4"	19'-6"	11½"	10"
F1002	27	38'-6"			Str.
F1101	72	17'-2"			11¼"

BAR LIST - BENT NO. 3

Mark	No. Req'd	Length	"A"	"B"	Pin Dia.
B501	92	17'-5"	2'-9"		2½"
B502	28	15'-3"	1'-8"		2½"
B503	14	16'-5"	2'-3"		2½"
B504	12	15'-4½"	4'-2"	5'-8½"	2½"
B505	16	7'-10"	4'-0½"	2'-0"	2½"
B506	18	9'-0"			2½"
B507	6	3'-9"			Str.
B508	52	8'-0"	4'-2"	2'-0"	2½"
B701	20	42'-2"			Str.
B901	12	44'-8"	42'-2"	10"	9"
B902	9	42'-2"			Str.
C501	102	13'-7"			3¾"
C1101	24	29'-8"			Str.
C1102	24	30'-6"			Str.
C1103	24	31'-3"			Str.
F701	39	19'-6"			Str.
F702	19	40'-2"	38'-6"	7"	5¼"
F703	18	15'-0"			Str.
F1001	77	22'-4"	19'-6"	11½"	10"
F1002	27	38'-6"			Str.
F1101	72	17'-2"			11¼"

NOTE:
Dimensions of bars are out-to-out.

LEGEND
EF = Each Face

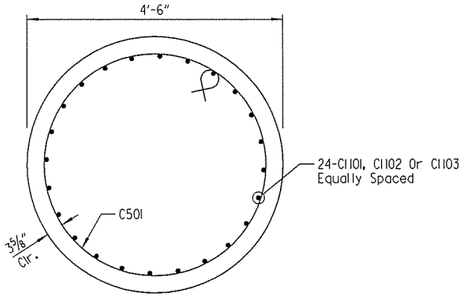

SECTION F-F
Scale: ¾" = 1'-0"

GENERAL NOTES

All concrete shall be Class "S" with a minimum 28-day compressive strength f'c = 3500 psi. Concrete shall be poured in the dry and all exposed corners to be chamfered ¾" unless otherwise noted.

All reinforcing steel shall conform to AASHTO M31 or M322 Type A, Grade 60 (Yield Strength = 60,000 psi), with mill test reports.

Reinforcing bars in top of cap shall be properly placed to avoid damage or interference with anchor bolts or sheet metal sleeves.

Class 3 Textured Coating Finish shall be applied to bent surfaces as specified in SP JOB NO. BB0414 "TEXTURED COATING FINISH".

For additional information, see Layout.

STATE OF ARKANSAS ★★★ LICENSED PROFESSIONAL ENGINEER ★★★ No.15902 PRESTON C. CAMPBELL 3-20-16
BRIDGE ENGINEER

SHEET 2 OF 2
DETAILS OF INTERMEDIATE BENT NOS. 2 & 3
HWY. 112 TO NB I-49
OVER NB I-49 TO HWY. 71B
ROUTE SEC.

ARKANSAS STATE HIGHWAY COMMISSION
LITTLE ROCK, ARK.

DRAWN BY: HEW DATE: JUNE 2015 FILENAME: BBB0414X2_B2.dgn
CHECKED BY: ABH DATE: SEPT. 2015 SCALE: AS SHOWN
DESIGNED BY: PCC DATE: APR. 2016
BRIDGE NO. 07379 DRAWING NO. 58150

jeskinner 3/20/2016 3:35:12 PM
WORKSPACE: AHTD Bridge
\\garverfinc.local\gdata\Projects\2011\11017707 - I-540 Widening & Interchange Improvement\Drawings\I540-112RMP-S2it-BE.dgn
REVISED DATE:

DATE REVISED	DATE FILMED	DATE REVISED	DATE FILMED	FED. ROAD DIST. NO.	STATE	FED. AID PROJ. NO.	SHEET NO.	TOTAL SHEETS
				6	ARK.			
				JOB NO.		BB0414	428	886
				(1) 07379		536'-0" PL GIRDER UNIT		58151

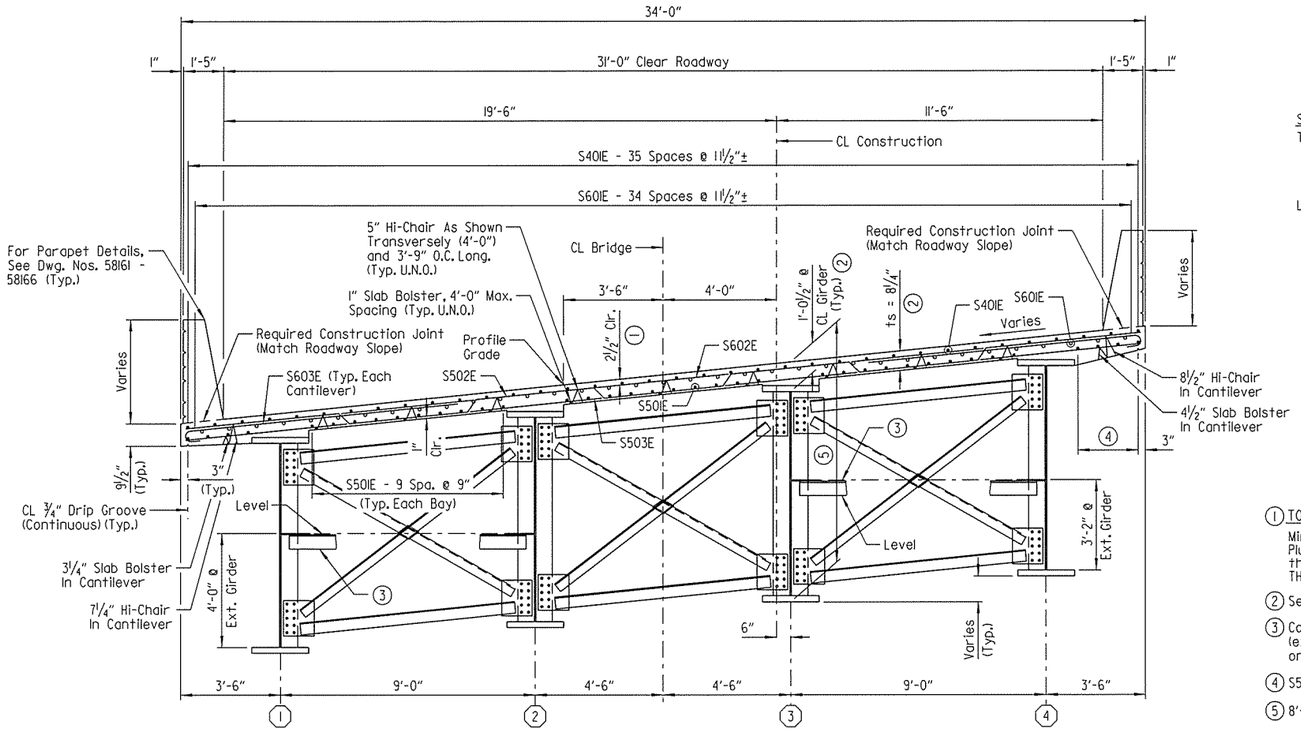

TYPICAL SECTION

(Looking Ahead)
Scale: ⅜" = 1'-0"

(X) Girder Number

EXPANSION DEVICE:
Roadway Channel MC18x42.7
Connection Angles ∠8x4x½
Neoprene Strip Seal with steel extrusion
Detail Device ⅛" high and provide ¼" shims using 2 - 1/16" and 1 - ⅛" plates

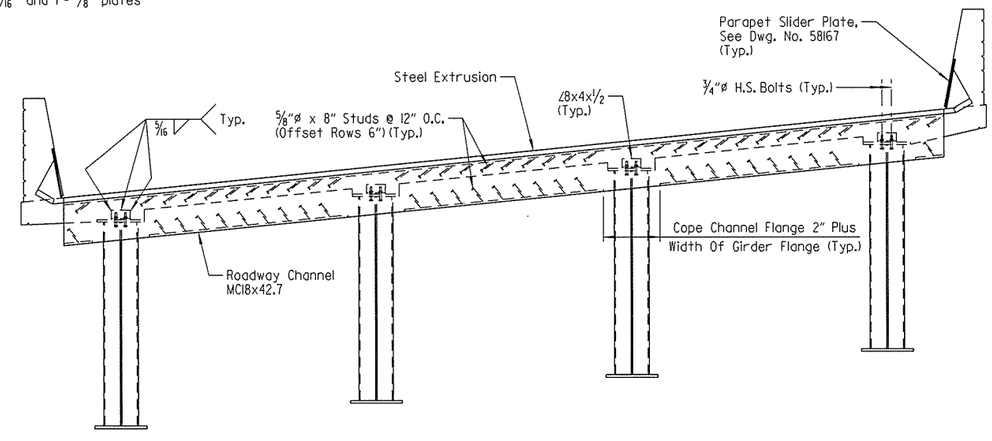

TYPICAL SECTION THRU JOINT

Scale: ⅜" = 1'-0"

NOTE:
The profile of the Roadway Channel shall be established based on the Vertical Curve in conjunction with the skew.

SLAB REINFORCING:
Transverse: S502E @ 12" O.C. Bent Up Over Girders — Alternating
S503E @ 12" O.C. In Bottom
S602E @ 12" O.C. In Top
S603E Bundled with #5 & #6 Bars In Top At Gutterline (Both Sides)

Longitudinal: S401E (Placed As Shown In Top)
S501E (Placed As Shown In Bottom)
S601E (Placed As Shown In Top Over Int. Supports)

(1) TOLERANCE:
Minus = ¼"
Plus = Amount of slab thickening used to meet slab thickness tolerance - see "ADJUSTMENT FOR SLAB THICKNESS TOLERANCE".

(2) See "ADJUSTMENT FOR SLAB THICKNESS TOLERANCE".

(3) Construction lateral bracing required in Span 2 (exterior bays only). See "FRAMING PLAN - SPAN NO. 2" on Dwg. No. 58156 for location. See details on Dwg. No. 58160.

(4) S501E - 3 Spa. @ 8½" (Typ. Each Cantilever)

(5) 8'-2½" + Bottom Flange Thickness, measured @ CL Girder (Typ.)

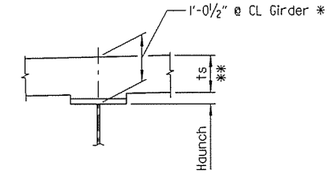

Note: t_s = Slab Thickness as shown on "TYPICAL SECTION".
* Measured to bottom of top flange
** Tolerance when removable deck forming is used is + ½", - ¼". Haunch forming is required and shall be adjusted to maintain slab thickness tolerance.

ADJUSTMENT FOR SLAB THICKNESS TOLERANCE

No Scale

NOTE:
Unless noted otherwise, haunch dimension may vary within the following limits to maintain the grade and slab thickness tolerance: minimum - occurs when the top edge of top flange is positioned ½" below the bottom of 8¼" slab; maximum - top flange thickness plus 3¾". In regions with 2¾" x 24" top flange, haunch dimension may vary within the following limits to maintain the grade and slab thickness tolerance: minimum - occurs when the top flange contacts the bottom reinforcing steel; maximum - top flange thickness plus 2¾". No increase in concrete and structural steel quantities will be made to maintain tolerances.

Tolerances shown are applicable when removable deck forming or permanent steel deck forming is used. Payment for concrete shall be based on removable deck forming.

NOTES:
At the Contractor's option, one epoxy coated #5 bar in the top and one epoxy coated #5 bar in the bottom may be substitued for each bar S502E. Payment will be based on the weight of bar S502E.

Class 2 Protective Surface Treatment shall be applied to the roadway surface and roadway face of concrete parapet. Class 3 Textured Coating Finish shall be applied to bridge surfaces as specified in SP JOB NO. BB0414 "TEXTURED COATING FINISH" and in accordance with Subsection 802.19. Textured Coating Finish shall not be applied on surfaces where Class 2 Protective Surface Treatment is applied.

For "BAR LIST" & "BAR BENDING DIAGRAMS", see Dwg. No. 58160.

For details of neoprene strip seal joint, see Dwg. No. 58167.

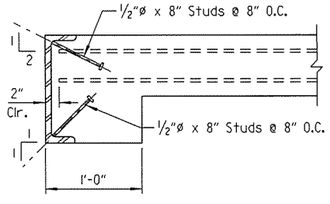

DETAIL OF ALTERNATE ANCHORS

No Scale

NOTE:
As an alternate to ⅝"ø studs, ½"ø x 8" studs spaced as shown may be used. Use weight of ⅝"ø stud as basis of measurement of structural steel.

LEGEND

U.N.O. = Unless Noted Otherwise

STATE OF ARKANSAS
LICENSED
PROFESSIONAL ENGINEER
No. 15902
PRESTON C. CAMPBELL
3-20-16
BRIDGE ENGINEER

SHEET 1 OF 16
DETAILS OF 536'-0" CONTINUOUS COMPOSITE PLATE GIRDER UNIT
HWY. 112 TO NB I-49
OVER NB I-49 TO HWY. 71B

ROUTE SEC.

ARKANSAS STATE HIGHWAY COMMISSION
LITTLE ROCK, ARK.

DRAWN BY: CWT DATE: MAR. 2015 FILENAME: BBB0414X2_SI.dgn
CHECKED BY: ABH DATE: JULY 2015 SCALE: AS SHOWN
DESIGNED BY: PCC DATE: MAR. 2015

BRIDGE NO. 07379 DRAWING NO. 58151

Jeskinner 3/20/2016 3:35:12 PM
WORKSPACE: AHTD Bridge
\\gltfar01\Projects\LITProjects\201\W017707 - I-540 Widening & Interchange Improvement\Drawings\I540-112RMP-S301-SX.dgn
REVISED DATE:

DATE REVISED	DATE FILMED	DATE REVISED	DATE FILMED	FED. ROAD DIST. NO.	STATE	FED. AID PROJ. NO.	SHEET NO.	TOTAL SHEETS
				6	ARK.			
				JOB NO.		BB0414	429	886
				(1) 07379		536'-0" PL GIRDER UNIT		58152

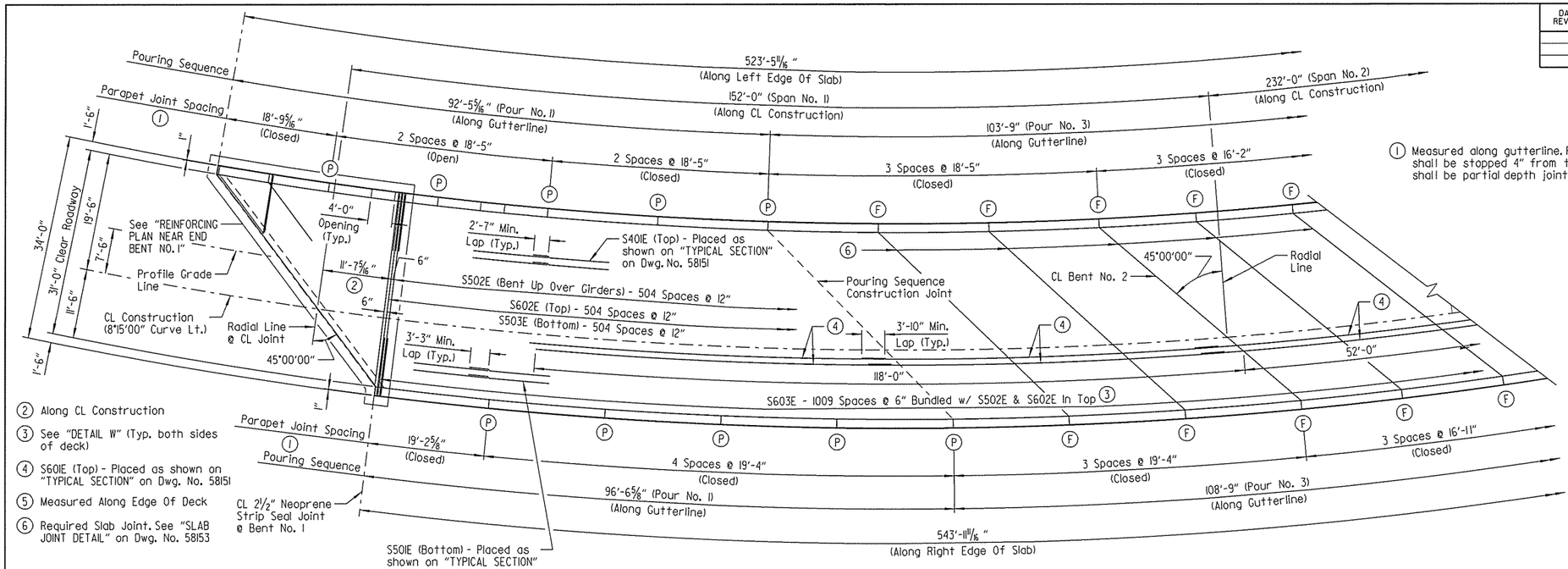

(2) Along CL Construction

(3) See "DETAIL W" (Typ. both sides of deck)

(4) S601E (Top) - Placed as shown on "TYPICAL SECTION" on Dwg. No. 58151

(5) Measured Along Edge Of Deck

(6) Required Slab Joint. See "SLAB JOINT DETAIL" on Dwg. No. 58153

(1) Measured along gutterline. Parapet joints designated with symbol (F) shall be stopped 4" from top of slab. All other parapet joints with symbol (P) shall be partial depth joints stopped 1'-2" from top of slab.

REINFORCING PLAN AND POURING SEQUENCE - SPAN NO. 1

Scale: 1/32" = 1'-0"

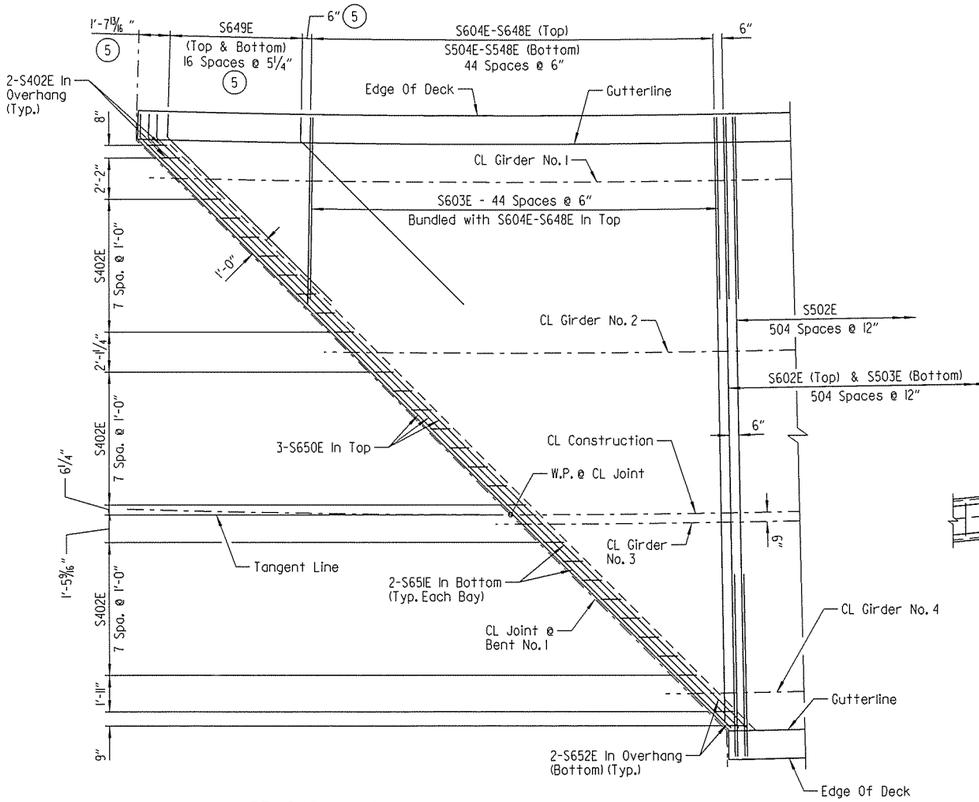

REINFORCING PLAN NEAR END BENT NO. 1

Scale: 1/4" = 1'-0"

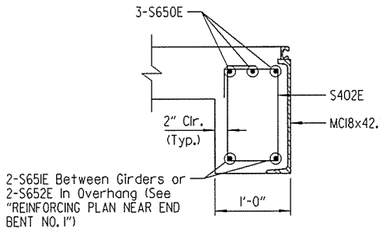

SECTION OF TURNDOWN AT BENT NO. 1

Scale: 1" = 1'-0"

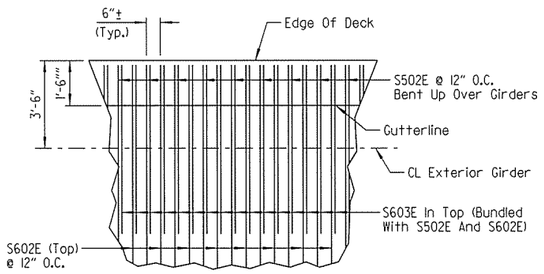

DETAIL W

No Scale

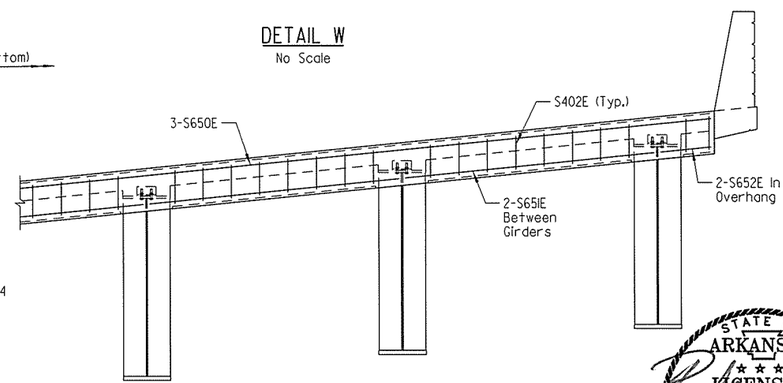

ELEVATION OF TURNDOWN AT BENT NO. 1

Scale: 3/8" = 1'-0"

NOTES:
Pours with the same number may be placed simultaneously or separately. All pours (1) must be placed before pour (2) can be placed. 48 hours shall elapse between the end of a pour and the start of the next pour. 72 hours shall elapse between the end of a pour and the start of an adjacent pour. 72 hours shall elapse between the completion of the entire deck and the pouring of the parapet. Any railing pours made before the entire slab unit has been placed must be approved by the Engineer.

The Contractor must obtain approval from the Engineer for any deviations from the pouring sequence shown.

Concrete in bridge superstructure shall be consolidated for the entire pour before any concrete has taken its initial set. This may require the use of a retarding agent.

For "CONCRETE PLACEMENT PROCEDURE", see Dwg. No. 58153.

Required slab joints and pouring sequence joints shall align with the parapet open joints at the gutterline.

Unless noted otherwise, spacing shown for all transverse reinforcing is measured along CL Construction. All transverse reinforcing shall be placed on lines radial to CL Construction.

All longitudinal lines and longitudinal slab reinforcing shall be placed along curves concentric with CL Construction (8°15'00" curve).

For parapet reinforcing details, see Dwg. Nos. 58161 - 58166.

STATE OF ARKANSAS
LICENSED PROFESSIONAL ENGINEER
No. 15902
PRESTON C. CAMPBELL
3-20-15
BRIDGE ENGINEER

SHEET 2 OF 16
DETAILS OF 536'-0" CONTINUOUS COMPOSITE PLATE GIRDER UNIT HWY. 112 TO NB I-49 OVER NB I-49 TO HWY. 71B

ROUTE SEC.

ARKANSAS STATE HIGHWAY COMMISSION

LITTLE ROCK, ARK.

DRAWN BY: CWT DATE: MAR. 2015 FILENAME: BBB0414X2_S2.dgn
CHECKED BY: ABH DATE: JULY 2015 SCALE: AS SHOWN
DESIGNED BY: PCC DATE: MAR. 2015

BRIDGE NO. 07379 DRAWING NO. 58152

Jeskinner 3/20/2016 3:35:13 PM
WORKSPACE: AHTD_Bridge
\\gltarchfs\Projects\LITProjects\20IN\I007707 - I-540 Widening & Interchange Improvement\Drawings\I540-I12RMP-S302-SB.dgn
REVISED DATE:

DATE REVISED	DATE FILMED	DATE REVISED	DATE FILMED	FED. ROAD DIST. NO.	STATE	FED. AID PROJ. NO.	SHEET NO.	TOTAL SHEETS
				6	ARK.			
				JOB NO.		BB0414	430	886
				①	07379	536'-0" PL GIRDER UNIT		58153

① Measured along gutterline. Parapet joints designated with symbol (F) shall be stopped 4" from top of slab. All other parapet joints with symbol (P) shall be partial depth joints stopped 1'-2" from top of slab.

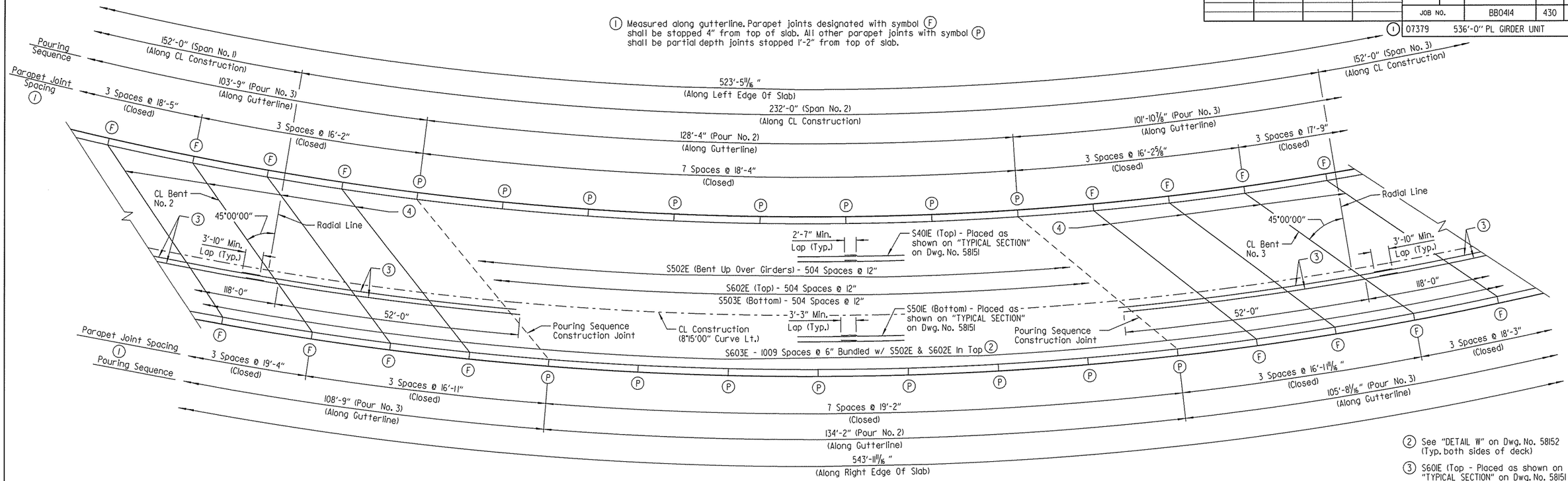

REINFORCING PLAN AND POURING SEQUENCE - SPAN NO. 2

Scale: 1/32 " = 1'-0"

② See "DETAIL W" on Dwg. No. 58152 (Typ. both sides of deck)

③ S601E (Top - Placed as shown on "TYPICAL SECTION" on Dwg. No. 58151)

④ Required Slab Joint. See "SLAB JOINT DETAIL"

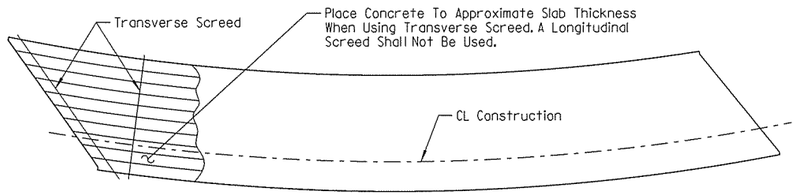

CONCRETE PLACEMENT PROCEDURE

No Scale

NOTE:
At the Contractor's option, the Transverse Screed may be placed parallel to the skew or radial to CL Construction.

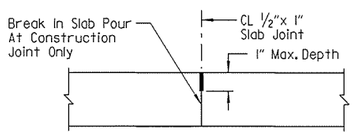

The 1/2" x 1" Poured Joint Sealer (Type 3 or 4) in slab shall conform to Subsection 501.02 (H) and 501.05 (J). Backer Rod filler will not be required. The Poured Joint Sealer shall be paid for as "CLASS S(AE) CONCRETE-BRIDGE". Slab joints shall extend to the outside edge of the deck slab. Slab joints shall be installed before the parapet railing is poured. If slab joints are to be sawed, they shall be sawed as soon as the concrete has sufficiently set to allow sawing of the joint without damage to the slab. Slab joints shall be placed at all pouring sequence construction joints and required slab joint locations. The joint sealer shall extend across the deck from gutterline to gutterline.

SLAB JOINT DETAIL

No Scale

NOTE:
If a transverse finishing machine is used, the rail shall be supported directly over the exterior girders, or as an alternate, the rail may be supported by the overhang brackets if the strutting system detailed on this drawing is used. The strutting system may be omitted if 1/2" x 6 1/2" web stiffeners are welded to the insides of the exterior girders at the location of each bracket or if the alternate bracket shown below is used. The alternate bracket arrangement shall extend down to the junction of the web and bottom flange. The stiffeners shall conform to the details for crossframe connection plates shown on Dwg. No. 58159 . No direct payment will be made for brackets, timber bracing, supports, or welded stiffeners. Payment shall be subsidiary to "STRUCTURAL STEEL IN PLATE GIRDER SPANS (M270, GR. 50W)."

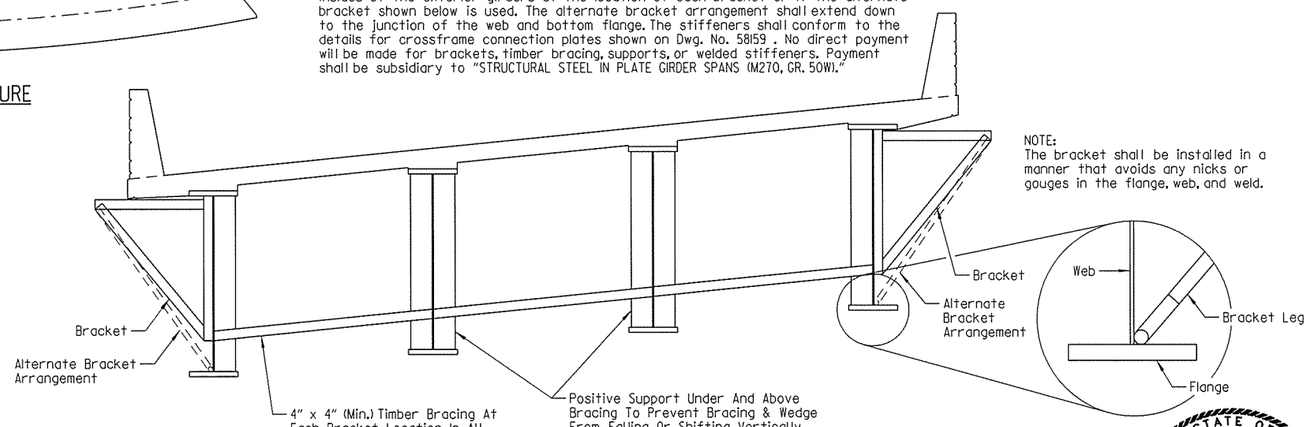

NOTE:
The bracket shall be installed in a manner that avoids any nicks or gouges in the flange, web, and weld.

SCREED RAIL SUPPORT DETAIL

No Scale

NOTES:
Pours with the same number may be placed simultaneously or separately. All pours (1) must be placed before pour (2) can be placed. 48 hours shall elapse between the end of a pour and the start of the next pour. 72 hours shall elapse between the end of a pour and the start of an adjacent pour. 72 hours shall elapse between the completion of the entire deck and the pouring of the parapet. Any railing pours made before the entire slab unit has been placed must be approved by the Engineer.

The Contractor must obtain approval from the Engineer for any deviations from the pouring sequence shown.

Concrete in bridge superstructure shall be consolidated for the entire pour before any concrete has taken its initial set. This may require the use of a retarding agent.

Required slab joints and pouring sequence joints shall align with the parapet open joints at the gutterline.

Unless noted otherwise, spacing shown for all transverse reinforcing is measured along CL Construction. All transverse reinforcing shall be placed on lines radial to CL Construction.

All longitudinal lines and longitudinal slab reinforcing shall be placed along curves concentric with CL Construction (8°15'00" curve).

For parapet reinforcing details, see Dwg. Nos. 58161 - 58166.

STATE OF ARKANSAS
LICENSED PROFESSIONAL ENGINEER
No. 15902
PRESTON C. CAMPBELL
BRIDGE ENGINEER

SHEET 3 OF 16
DETAILS OF 536'-0" CONTINUOUS COMPOSITE PLATE GIRDER UNIT
HWY. 112 TO NB I-49
OVER NB I-49 TO HWY. 71B

ROUTE SEC.

ARKANSAS STATE HIGHWAY COMMISSION
LITTLE ROCK, ARK.

DRAWN BY: CWT DATE: MAR. 2015 FILENAME: BBB0414X2_S3.dgn
CHECKED BY: ABH DATE: JULY 2015 SCALE: AS SHOWN
DESIGNED BY: PCC DATE: MAR. 2015
BRIDGE NO. 07379 DRAWING NO. 58153

jeskinner 3/20/2016 3:35:13 PM
WORKSPACE: ARTD Bridge
\\ahtorch\Projects\LITProjects\2011\011707 - I-540 Widening & Interchange Improvement\Drawings\I540-112RMP-S303-SB.dgn
REVISED DATE:

DATE REVISED	DATE FILMED	DATE REVISED	DATE FILMED	FED. ROAD DIST. NO.	STATE	FED. AID PROJ. NO.	SHEET NO.	TOTAL SHEETS
				6	ARK.			
				JOB NO.		BB0414	431	886
				(1) 07379		536'-0" PL GIRDER UNIT		58154

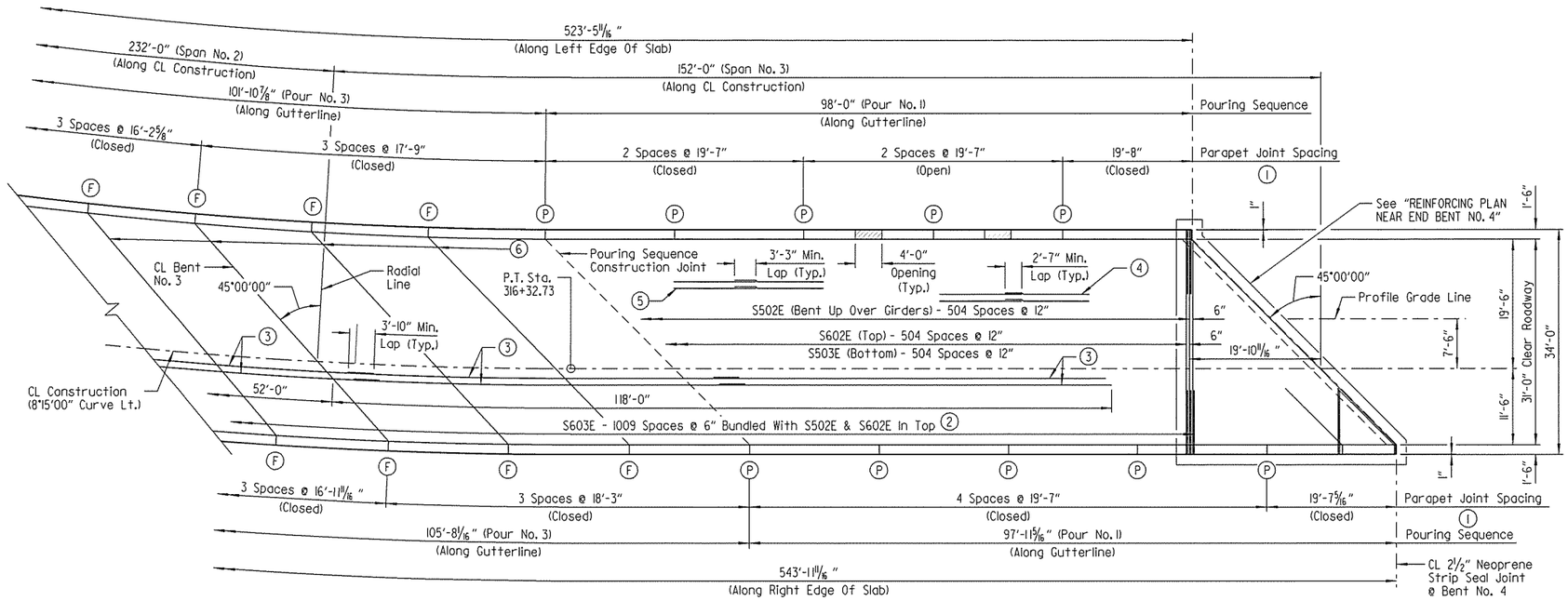

REINFORCING PLAN AND POURING SEQUENCE - SPAN NO. 3

Scale: 1/32" = 1'-0"

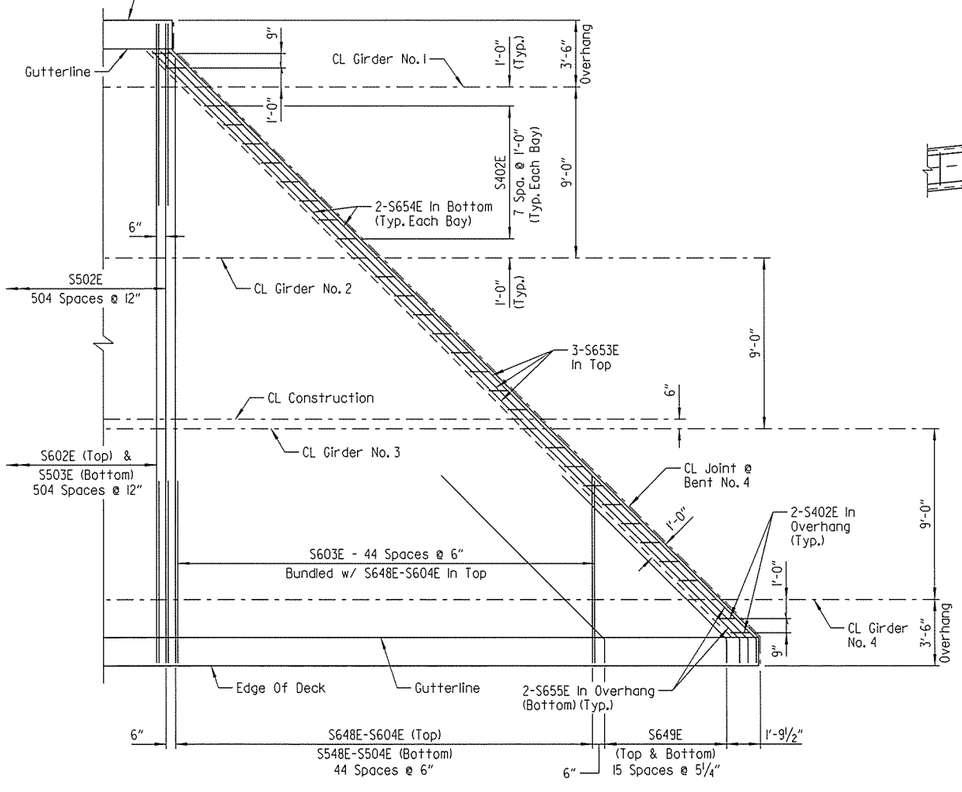

REINFORCING PLAN NEAR END BENT NO. 4

Scale: 1/4" = 1'-0"

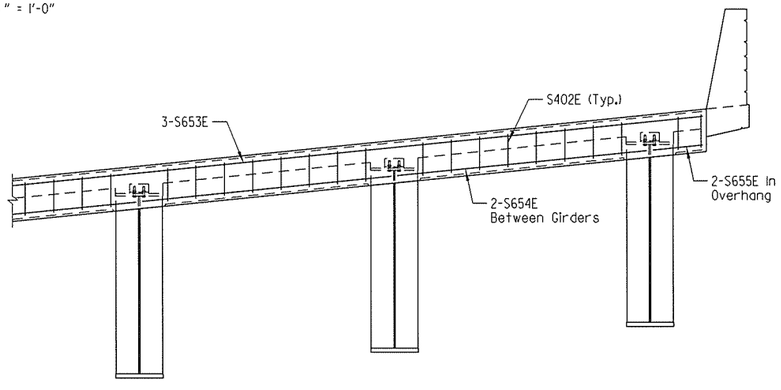

ELEVATION OF TURNDOWN AT BENT NO. 4

Scale: 3/8" = 1'-0"

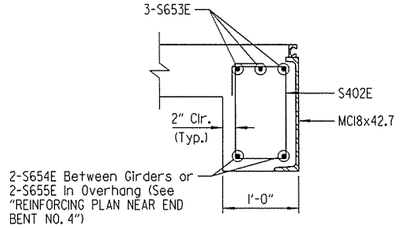

SECTION OF TURNDOWN AT BENT NO. 4

Scale: 1" = 1'-0"

(1) Measured along gutterline. Parapet joints designated with symbol (F) shall be stopped 4" from top of slab. All other parapet joints with symbol (P) shall be partial depth joints stopped 1'-2" from top of slab.

(2) See "DETAIL W" on Dwg. No. 58152 (Typ. both sides of deck)

(3) S601E (Top) - Placed as shown on "TYPICAL SECTION" on Dwg. No. 58151

(4) S401E (Top) - Placed as shown on "TYPICAL SECTION" on Dwg. No. 58151

(5) S501E (Bottom) - Placed as shown on "TYPICAL SECTION" on Dwg. No. 58151

(6) Required Slab Joint. See "SLAB JOINT DETAIL" on Dwg. No. 58153

NOTES:
Pours with the same number may be placed simultaneously or separately. All pours (1) must be placed before pour (2) can be placed. 48 hours shall elapse between the end of a pour and the start of the next pour. 72 hours shall elapse between the end of a pour and the start of an adjacent pour. 72 hours shall elapse between the completion of the entire deck and the pouring of the parapet. Any railing pours made before the entire slab unit has been placed must be approved by the Engineer.

The Contractor must obtain approval from the Engineer for any deviations from the pouring sequence shown.

Concrete in bridge superstructure shall be consolidated for the entire pour before any concrete has taken its initial set. This may require the use of a retarding agent.

For "CONCRETE PLACEMENT PROCEDURE", see Dwg. No. 58153.

Required slab joints and pouring sequence joints shall align with the parapet open joints at the gutterline.

Unless noted otherwise, spacing shown for all transverse reinforcing is measured along CL Construction. Before the P.T. Station, all transverse reinforcing shall be placed on lines radial to CL Construction.

Before the P.T. Station, all longitudinal lines and longitudinal slab reinforcing shall be placed along curves concentric with CL Construction (8°15'00" curve).

For parapet reinforcing details, see Dwg. Nos. 58161 - 58166.

STATE OF ARKANSAS
LICENSED PROFESSIONAL ENGINEER
No. 15902
PRESTON C. CAMPBELL
BRIDGE ENGINEER

SHEET 4 OF 16
DETAILS OF 536'-0" CONTINUOUS COMPOSITE PLATE GIRDER UNIT HWY. 112 TO NB I-49 OVER NB I-49 TO HWY. 71B

ROUTE SEC.

ARKANSAS STATE HIGHWAY COMMISSION

LITTLE ROCK, ARK.

DRAWN BY: CWT DATE: MAR. 2015 FILENAME: BBB0414X2_S4.dgn
CHECKED BY: ABH DATE: JULY 2015 SCALE: AS SHOWN
DESIGNED BY: PCC DATE: MAR. 2015

BRIDGE NO. 07379 DRAWING NO. 58154

Jeskinner 3/20/2016 3:35:14 PM
WORKSPACE: AHTD Bridge
\\gftarch01\Projects\LITProjects\201W\001707 - I-540 Widening & Interchange Improvement\Drawings\540-I12RMP-S304-SB.dgn
REVISED DATE:

DATE REVISED	DATE FILMED	DATE REVISED	DATE FILMED	FED. ROAD DIST. NO.	STATE	FED. AID PROJ. NO.	SHEET NO.	TOTAL SHEETS
				6	ARK.			
				JOB NO.		BB0414	432	886
				(1) 07379	536'-0" PL GIRDER UNIT			58155

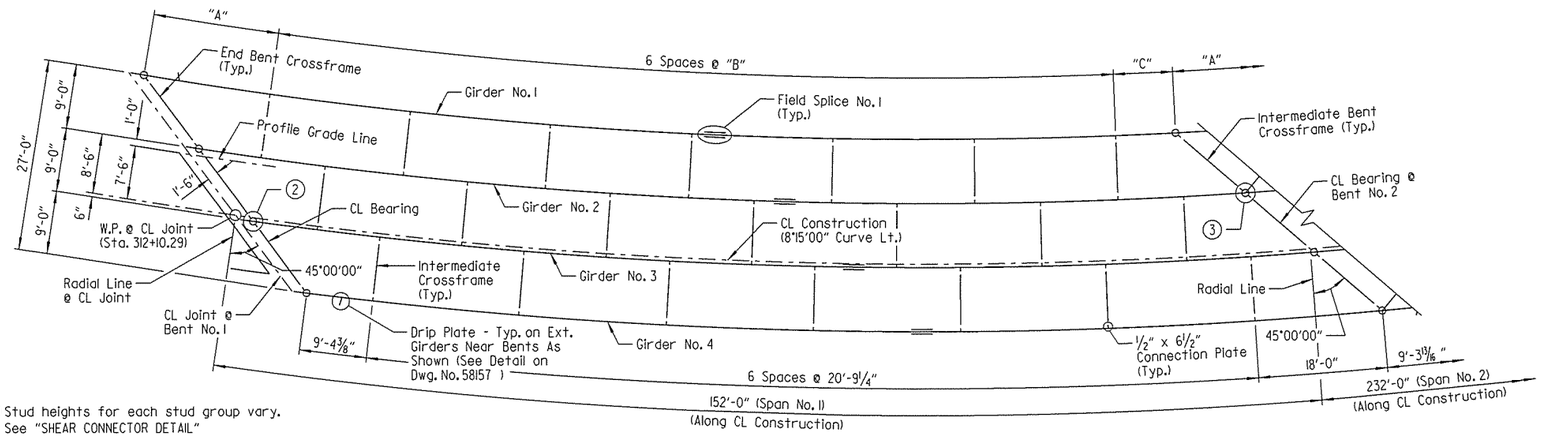

FRAMING PLAN - SPAN NO. 1

Scale: 1/32 " = 1'-0"

(1) Stud heights for each stud group vary. See "SHEAR CONNECTOR DETAIL"

(2) Split HSI4.000x0.500 Bearing Stiffener & 1/2" x 6 1/2" Connection PL (Typ. @ Bent No. 1)

(3) Split HSI8.000x0.500 Bearing Stiffener & 1/2" x 6 1/2" Connection PL (Typ. @ Bent No. 2)

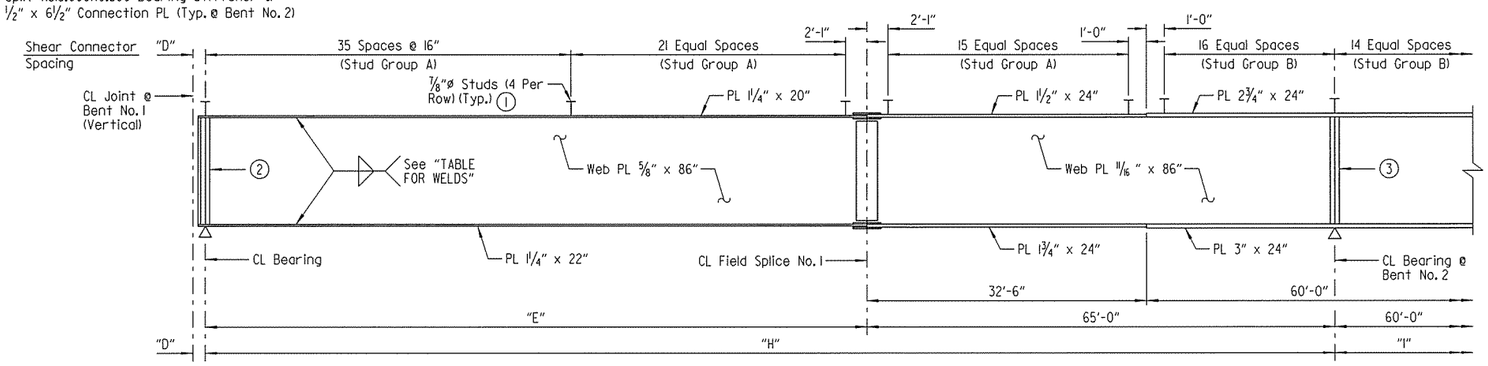

GIRDER ELEVATION - SPAN NO. 1

(Dimension Measured Along CL Girder)
No Scale

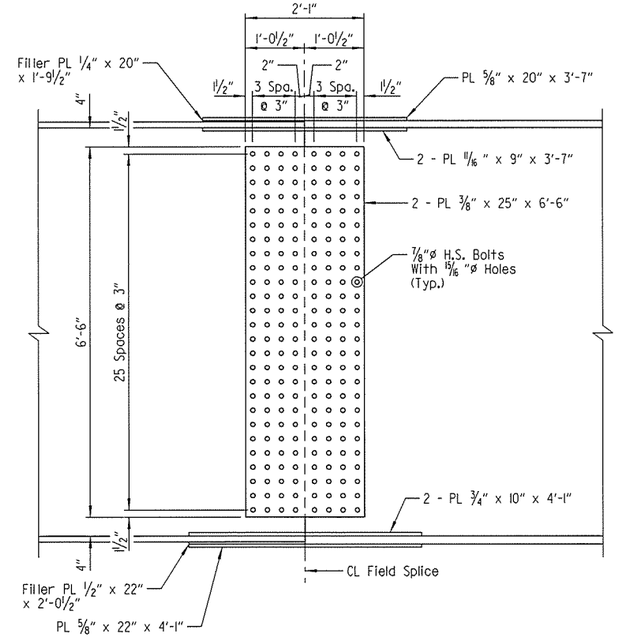

ELEVATION OF FIELD SPLICE NOS. 1 & 4

Scale: 3/4" = 1'-0"

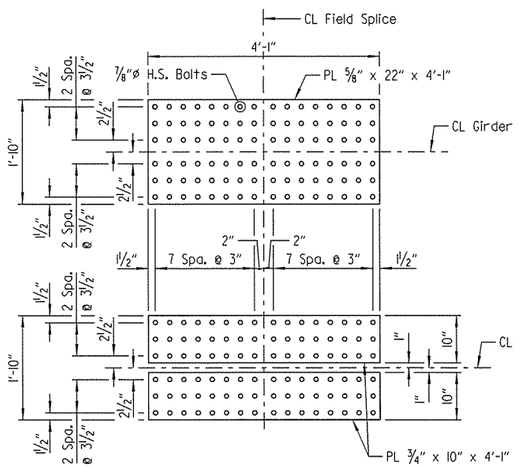

BOTTOM FLANGE SPLICE - FIELD SPLICE NOS. 1 & 4

Scale: 3/4" = 1'-0"

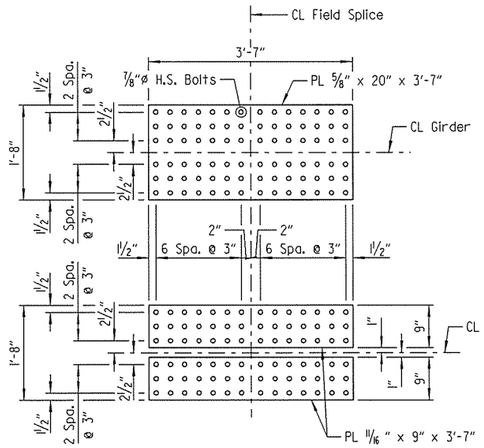

TOP FLANGE SPLICE - FIELD SPLICE NOS. 1 & 4

Scale: 3/4" = 1'-0"

NOTES:
All field splice bolts shall 7/8"ø H.S. bolts.

All holes for field splice bolts shall 15/16 "ø.

All field splice plates shall be AASHTO M270, Gr. 50W steel.

Bolted field splices shown may be eliminated or shop welded splices may be substituted with approval of the Engineer. Payment will be made on the basis of the plan quantities.

TABLE OF VARIABLES									
GIRDER NO.	"A"	"B"	"C"	"D"	"E"	"F"	"G"	"H"	"I"
1	18'-0"	19'-11 1/16"	8'-5 9/16"	2'-2 1/8"	80'-11 5/16"	1'-6 15/16"	46°19'00"	145'-11 5/16"	226'-1 7/8"
2	18'-0"	20'-2 3/16"	8'-8 9/16"	2'-1 3/4"	82'-11 5/16"	1'-6 5/8"	45°32'07"	147'-11 5/16"	229'-1 5/16"
3	18'-0"	20'-6 1/16"	8'-11 9/16"	2'-1 3/8"	84'-11 5/16"	1'-6 3/8"	44°47'03"	149'-11 5/16"	232'-2"
4	-	-	-	2'-1 1/16"	86'-11 7/8"	1'-6 3/16"	44°03'43"	151'-11 7/8"	235'-2 1/16"

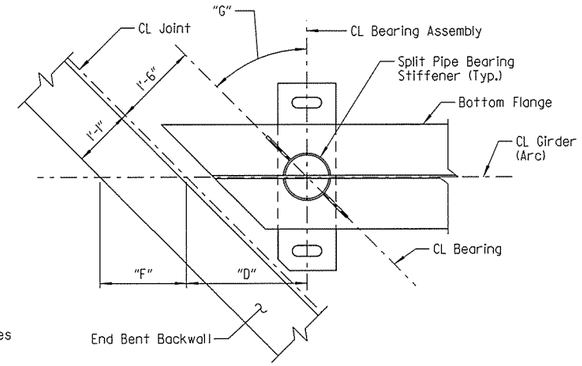

PLAN OF BEARING AT END BENT 1

No Scale

NOTES:
All girders are oriented along curves concentric with CL Construction.

All crossframes are oriented along lines radial to CL Construction.

For bearing stiffener details, see Dwg. No. 58158.

For connection plate details and crossframe details, see Dwg. No. 58159.

For "GENERAL NOTES", see Dwg. No. 58160.

TABLE OF VARIABLES				
STUD GROUP	"W"	"X"	"Y"	"Z"
A	6"	7"	7"	8"
B	5"	5"	6"	7"
C	5"	5"	6"	6"
D	6"	6"	7"	7"
E	6"	6"	6"	7"

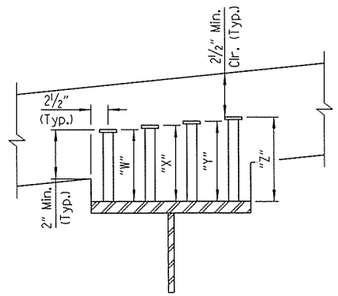

SHEAR CONNECTOR DETAIL

(Looking Ahead)
No Scale

Stud shear connectors shown shall be 7/8"ø, granular flux filled, solid fluxed or equal, and automatically end welded to the flange in accordance with the recommendations of the Manufacturer. 3/4"ø studs may be used in place of the 7/8"ø studs shown, at the ratio of 1.361- 3/4"ø studs in place of one 7/8"ø stud. 7/8"ø studs will be used as basis for measurement of structural steel.

TABLE FOR WELDS		
Material Thickness Of Thicker Part Joined (Inches)	Minimum Size Of Fillet Weld (Inches)	Single Pass Weld Must Be Used
To 3/4" Inclusive	1/4"	
Over 3/4"	5/16"	

NOTE:
When a fillet weld size, as shown on the plans, is larger than the minimum, the first pass shall be that specified for minimum size of fillet weld.

STATE OF ARKANSAS
LICENSED PROFESSIONAL ENGINEER
No. 15902
PRESTON C. CAMPBELL
BRIDGE ENGINEER

SHEET 5 OF 16
DETAILS OF 536'-0" CONTINUOUS COMPOSITE PLATE GIRDER UNIT
HWY. 112 TO NB I-49
OVER NB I-49 TO HWY. 71B

ROUTE SEC.

ARKANSAS STATE HIGHWAY COMMISSION
LITTLE ROCK, ARK.

DRAWN BY: CWT DATE: MAR. 2015 FILENAME: BBB0414X2_S5.dgn
CHECKED BY: ABH DATE: JULY 2015 SCALE: AS SHOWN
DESIGNED BY: PCC DATE: MAR. 2015
BRIDGE NO. 07379 DRAWING NO. 58155

jeskinner 3/20/2016 3:35:14 PM
WORKSPACE: AHTD Bridge
\\gftrcnbh\Projects\LITP-Projects\20IN\I007707 - I-540 Widening & Interchange Improvement\Drawings\I540-I12RMP-5305-SF.dgn
REVISED DATE:

DATE REVISED	DATE FILMED	DATE REVISED	DATE FILMED	FED. ROAD DIST. NO.	STATE	FED. AID PROJ. NO.	SHEET NO.	TOTAL SHEETS
				6	ARK.			
				JOB NO.		BB0414	433	886
				(1) 07379		536'-0" PL GIRDER UNIT		58156

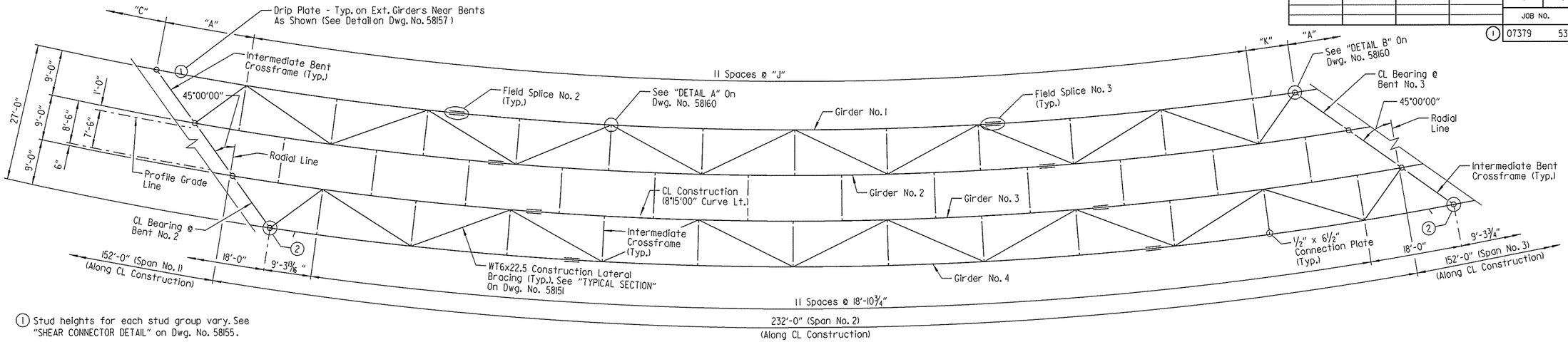

(1) Stud heights for each stud group vary. See "SHEAR CONNECTOR DETAIL" on Dwg. No. 58155.

(2) Split HSI8.000x0.500 Bearing Stiffener & 1/2" x 6 1/2" Connection PL (Typ. @ Bent Nos. 2 & 3)

FRAMING PLAN - SPAN NO. 2

Scale: 3/32" = 1'-0"

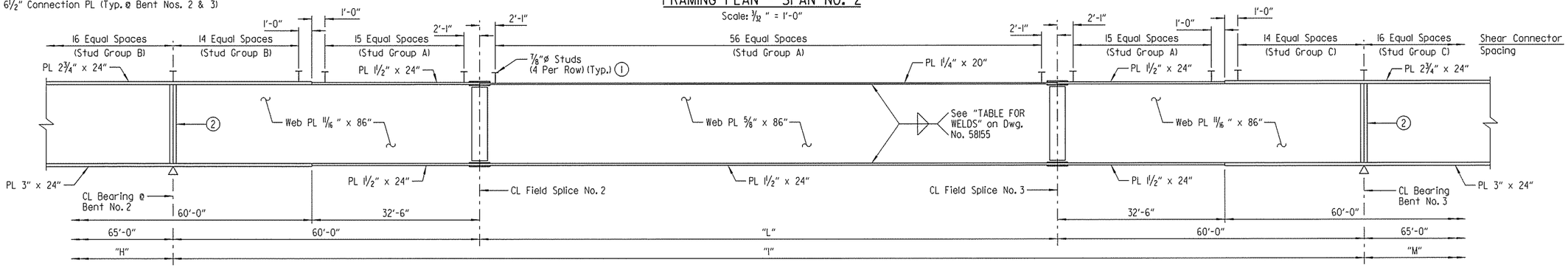

GIRDER ELEVATION - SPAN NO. 2

(Dimensions Measured Along CL Girder)
No Scale

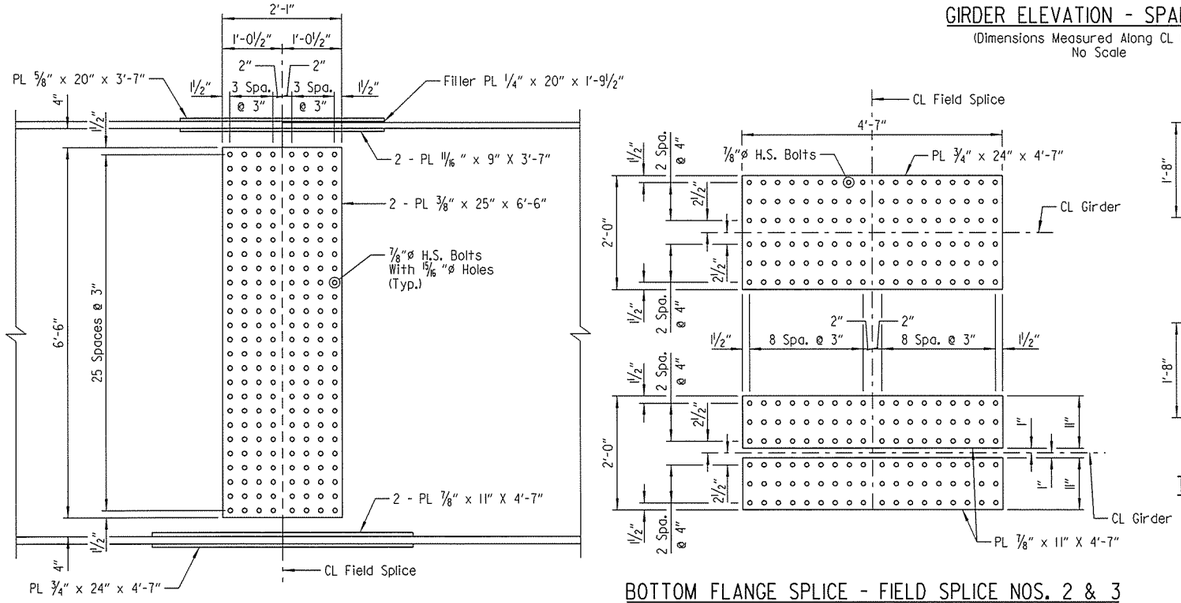

ELEVATION OF FIELD SPLICE NOS. 2 & 3

Scale: 3/4" = 1'-0"

BOTTOM FLANGE SPLICE - FIELD SPLICE NOS. 2 & 3

Scale: 3/4" = 1'-0"

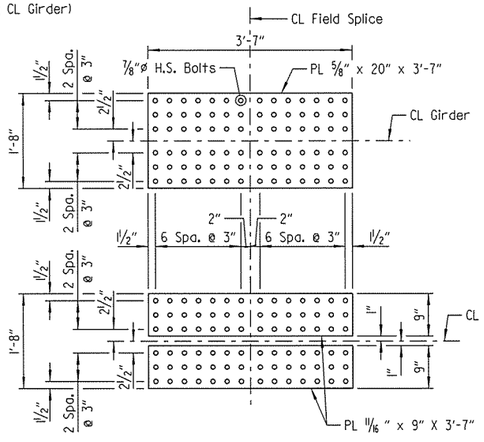

TOP FLANGE SPLICE - FIELD SPLICE NOS. 2 & 3

Scale: 3/4" = 1'-0"

NOTES:
All field splice bolts shall 7/8"ø H.S. bolts.

All holes for field splice bolts shall 15/16"ø.

All field splice plates shall be AASHTO M270, Gr. 50W steel.

Bolted field splices shown may be eliminated or shop welded splices may be substituted with approval of the Engineer. Payment will be made on the basis of the plan quantities.

NOTES:
All girders are oriented along curves concentric with CL Construction.

All crossframes are oriented along lines radial to CL Construction.

For bearing stiffener details, see Dwg. No. 58158.

For connection plate details and crossframe details, see Dwg. No. 58159.

For "GENERAL NOTES", see Dwg. No. 58160.

For dimensions "A", "C", "H" and "I", see "TABLE OF VARIABLES" on Dwg. No. 58155.

TABLE OF VARIABLES				
GIRDER NO.	"J"	"K"	"L"	"M"
1	18'-1 13/16"	8'-5 5/16"	106'-1 7/8"	149'-1 3/4"
2	18'-4 7/8"	8'-8 5/16"	109'-11 5/16"	149'-5 5/16"
3	18'-7 7/8"	8'-11 3/8"	112'-2"	149'-10 7/8"
4	-	-	115'-2 1/16"	150'-5 5/8"

STATE OF ARKANSAS
LICENSED PROFESSIONAL ENGINEER
No. 15902
PRESTON C. CAMPBELL
BRIDGE ENGINEER

SHEET 6 OF 16
DETAILS OF 536'-0" CONTINUOUS COMPOSITE PLATE GIRDER UNIT
HWY. 112 TO NB I-49
OVER NB I-49 TO HWY. 71B

ROUTE SEC.

ARKANSAS STATE HIGHWAY COMMISSION
LITTLE ROCK, ARK.

DRAWN BY: CWT DATE: MAR. 2015 FILENAME: BBB0414X2_S6.dgn
CHECKED BY: ABH DATE: JULY 2015 SCALE: AS SHOWN
DESIGNED BY: PCC DATE: MAR. 2015
BRIDGE NO. 07379 DRAWING NO. 58156

jeskinner 3/20/2016 3:35:15 PM
WORKSPACE: AHTD Bridge
\\ghtarchsh\Projects\LITProjects\201N\001707 - I-540 Widening & Interchange Improvement\Drawings\I540-I12RMP-5306-SF.dgn
REVISED DATE:

DATE REVISED	DATE FILMED	DATE REVISED	DATE FILMED	FED. ROAD DIST. NO.	STATE	FED. AID PROJ. NO.	SHEET NO.	TOTAL SHEETS
				6	ARK.			
				JOB NO.		BB0414	434	886
				(1) 07379		536'-0" PL GIRDER UNIT		58157

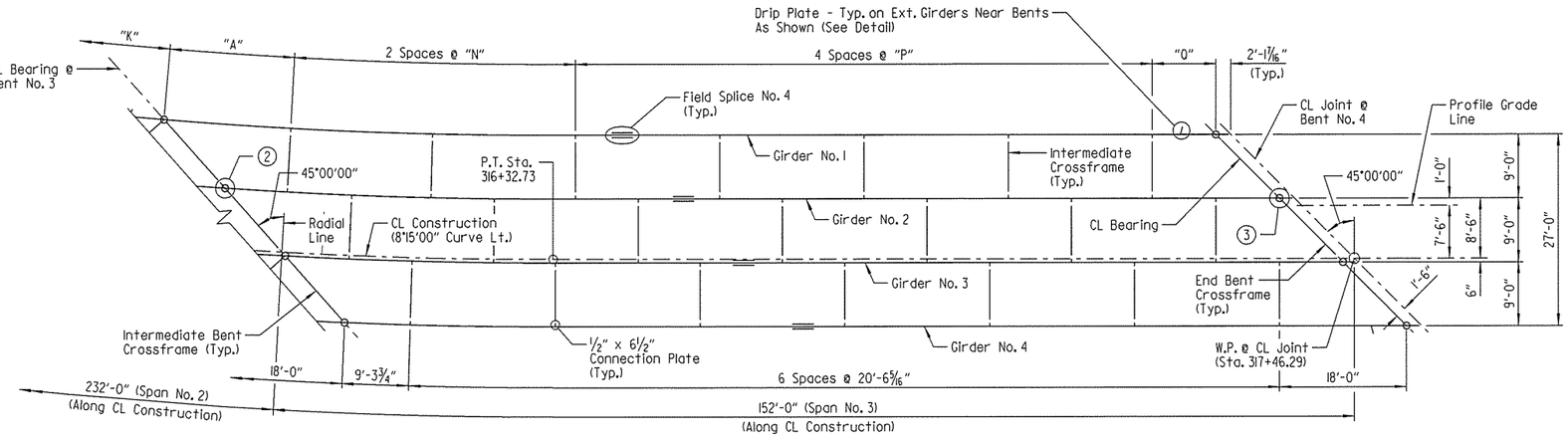

FRAMING PLAN - SPAN NO. 3

Scale: 3/32 " = 1'-0"

TABLE OF VARIABLES				
GIRDER NO.	"N"	"P"	"O"	"R"
1	20'-2 5/16"	20'-5 1/4"	9'-0"	84'-1 3/4"
2	20'-3 1/16"	20'-5 11/16"	9'-0"	84'-5 3/16"
3	20'-4 3/4"	20'-6 5/16"	9'-0"	84'-10 7/8"
4	-	-	-	85'-5 5/8"

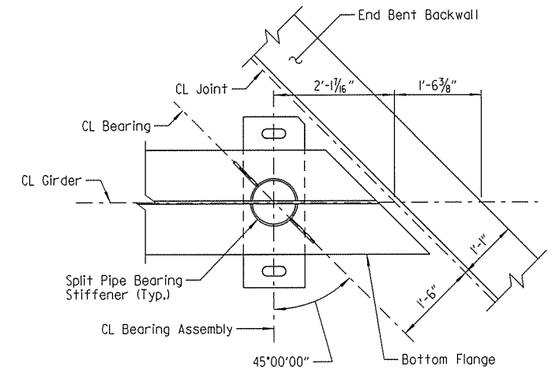

PLAN OF BEARING AT END BENT 4

No Scale

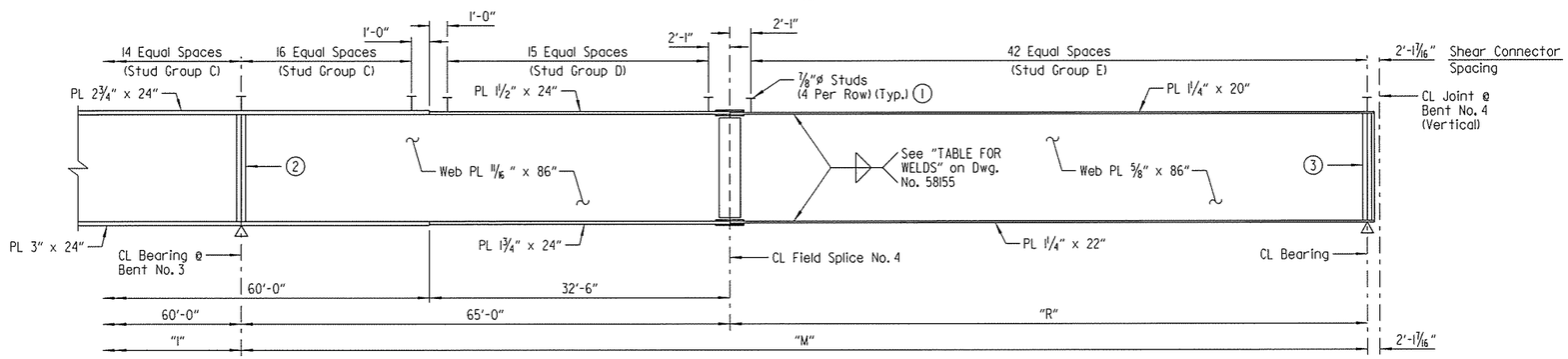

GIRDER ELEVATION - SPAN NO. 3

(Dimensions Measured Along CL Girder)
No Scale

(1) Stud heights for each stud group vary. See "SHEAR CONNECTOR DETAIL" on Dwg. No. 58155 .

(2) Split HSI8.000x0.500 Bearing Stiffener & 1/2" x 6 1/2" Connection PL (Typ. @ Bent No. 3)

(3) Split HSI4.000x0.500 Bearing Stiffener & 1/2" x 6 1/2" Connection PL (Typ. @ Bent No. 4)

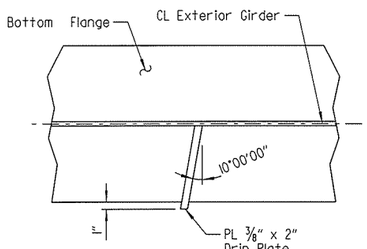

PLAN

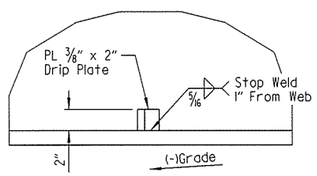

ELEVATION

BOTTOM FLANGE DRIP PLATE

No Scale

NOTES:
Bottom flange drip plate to be welded to the outside flange of the exterior girders only.

Locate drip plate 5'-0" from CL Bearing on the high side of Bent Nos. I-4.

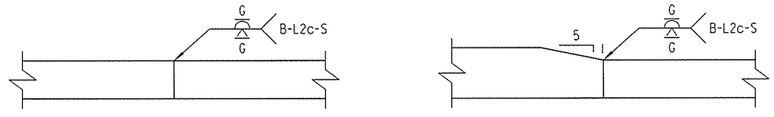

FLANGE SPLICE
(Flanges < or = 2" Thick)

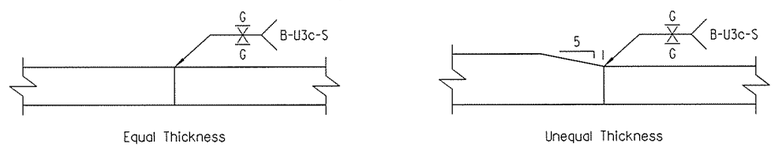

FLANGE SPLICE
(Flanges > 2" Thick)

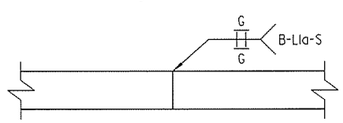

WEB SPLICE

DETAILS OF WELDED SPLICES

No Scale

NOTES:
Before the P.T. Station, all girders are oriented along curves concentric with CL Construction.

Before the P.T. Station, all crossframes are oriented along lines radial to CL Construction.

For bearing stiffener details, see Dwg. No. 58158.

For connection plate details and crossframe details, see Dwg. No. 58159.

For "GENERAL NOTES", see Dwg. No. 58160.

For dimensions "A" and "I", see "TABLE OF VARIABLES" on Dwg. No. 58155.

For dimensions "K" and "M", see "TABLE OF VARIABLES" on Dwg. No. 58156.

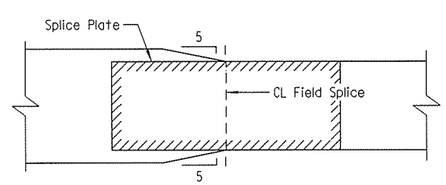

DETAIL OF BOTTOM FLANGE TRANSITION

No Scale

STATE OF ARKANSAS
LICENSED PROFESSIONAL ENGINEER
No. 15902
PRESTON C. CAMPBELL
BRIDGE ENGINEER

SHEET 7 OF 16
DETAILS OF 536'-0" CONTINUOUS COMPOSITE PLATE GIRDER UNIT
HWY. 112 TO NB I-49
OVER NB I-49 TO HWY. 71B

ROUTE SEC.

ARKANSAS STATE HIGHWAY COMMISSION
LITTLE ROCK, ARK.

DRAWN BY: CWT DATE: MAR. 2015 FILENAME: BBB0414X2_S7.dgn
CHECKED BY: ABH DATE: JULY 2015 SCALE: AS SHOWN
DESIGNED BY: PCC DATE: MAR. 2015
BRIDGE NO. 07379 DRAWING NO. 58157

Jaskinner 3/20/2016 3:35:15 PM
WORKSPACE: AHTD Bridge
\\ghtrchn\Projects\LITProjects\20IN\I007707 - I-540 Widening & Interchange Improvement\Drawings\I540-I2RMP-5307-SF.dgn
REVISED DATE:

DATE REVISED	DATE FILMED	DATE REVISED	DATE FILMED	FED. ROAD DIST. NO.	STATE	FED. AID PROJ. NO.	SHEET NO.	TOTAL SHEETS
				6	ARK.			
				JOB NO.		BB0414	435	886
				①	07379	536'-0" PL GIRDER UNIT		58158

TABLE OF DEAD LOAD DEFLECTIONS (INCHES)

	Point Of Deflection	Girder 1			Girder 2			Girder 3			Girder 4		
		Structural Steel	Structural Steel + Slab	Structural Steel + Slab + Parapet	Structural Steel	Structural Steel + Slab	Structural Steel + Slab + Parapet	Structural Steel	Structural Steel + Slab	Structural Steel + Slab + Parapet	Structural Steel	Structural Steel + Slab	Structural Steel + Slab + Parapet
SPAN NO. 1	1.0	0.000	0.000	0.000	0.000	0.000	0.000	0.000	0.000	0.000	0.000	0.000	0.000
	1.1	0.091	0.392	0.432	0.087	0.393	0.430	0.068	0.355	0.384	0.022	0.342	0.365
	1.2	0.165	0.721	0.792	0.153	0.710	0.775	0.116	0.637	0.686	0.026	0.603	0.639
	1.3	0.192	0.875	0.963	0.183	0.888	0.965	0.130	0.786	0.839	0.000	0.696	0.728
	1.4	0.187	0.904	0.993	0.172	0.904	0.976	0.107	0.780	0.822	-0.055	0.616	0.626
	1.5	0.154	0.804	0.879	0.125	0.761	0.813	0.055	0.627	0.644	-0.142	0.328	0.302
	1.6	0.098	0.596	0.645	0.056	0.501	0.523	-0.013	0.369	0.355	-0.223	-0.048	-0.113
	1.7	0.039	0.347	0.368	-0.010	0.216	0.209	-0.072	0.094	0.054	-0.267	-0.350	-0.441
	1.8	-0.011	0.113	0.110	-0.054	-0.005	-0.031	-0.102	-0.105	-0.158	-0.259	-0.507	-0.604
	1.9	-0.028	-0.017	-0.029	-0.058	-0.102	-0.129	-0.086	-0.163	-0.206	-0.173	-0.394	-0.463
SPAN NO. 2	2.0	0.000	0.000	0.000	0.000	0.000	0.000	0.000	0.000	0.000	0.000	0.000	0.000
	2.1	0.176	0.470	0.549	0.246	0.652	0.761	0.303	0.793	0.939	0.465	1.240	1.437
	2.2	0.438	1.242	1.440	0.604	1.675	1.940	0.720	1.966	2.312	1.085	2.999	3.465
	2.3	0.710	2.070	2.389	0.975	2.762	3.186	1.139	3.177	3.724	1.712	4.826	5.560
	2.4	0.912	2.698	3.106	1.244	3.567	4.107	1.439	4.059	4.751	2.169	6.170	7.096
	2.5	0.983	2.932	3.370	1.336	3.847	4.429	1.542	4.366	5.111	2.323	6.621	7.612
	2.6	0.911	2.724	3.129	1.227	3.527	4.066	1.425	4.025	4.717	2.133	6.053	6.964
	2.7	0.710	2.119	2.435	0.947	2.699	3.121	1.121	3.137	3.684	1.659	4.651	5.360
	2.8	0.437	1.285	1.478	0.580	1.622	1.885	0.709	1.946	2.293	1.039	2.850	3.294
	2.9	0.175	0.497	0.573	0.234	0.630	0.738	0.300	0.793	0.940	0.446	1.177	1.366
SPAN NO. 3	3.0	0.000	0.000	0.000	0.000	0.000	0.000	0.000	0.000	0.000	0.000	0.000	0.000
	3.1	-0.024	-0.031	-0.040	-0.051	-0.093	-0.118	-0.083	-0.165	-0.208	-0.159	-0.343	-0.406
	3.2	0.010	0.131	0.140	-0.036	0.023	0.002	-0.094	-0.099	-0.151	-0.230	-0.397	-0.483
	3.3	0.074	0.396	0.437	0.017	0.266	0.268	-0.059	0.116	0.077	-0.240	-0.250	-0.332
	3.4	0.155	0.717	0.797	0.093	0.581	0.616	0.006	0.424	0.413	-0.201	0.041	-0.015
	3.5	0.224	0.978	1.091	0.166	0.859	0.926	0.076	0.708	0.729	-0.141	0.324	0.300
	3.6	0.267	1.124	1.257	0.214	1.011	1.099	0.130	0.878	0.924	-0.074	0.530	0.536
	3.7	0.263	1.080	1.210	0.220	0.987	1.078	0.150	0.882	0.939	-0.022	0.595	0.620
	3.8	0.210	0.851	0.955	0.181	0.787	0.862	0.131	0.714	0.765	0.010	0.514	0.544
	3.9	0.119	0.478	0.537	0.103	0.439	0.482	0.077	0.402	0.432	0.014	0.300	0.320
	4.0	0.000	0.000	0.000	0.000	0.000	0.000	0.000	0.000	0.000	0.000	0.000	0.000

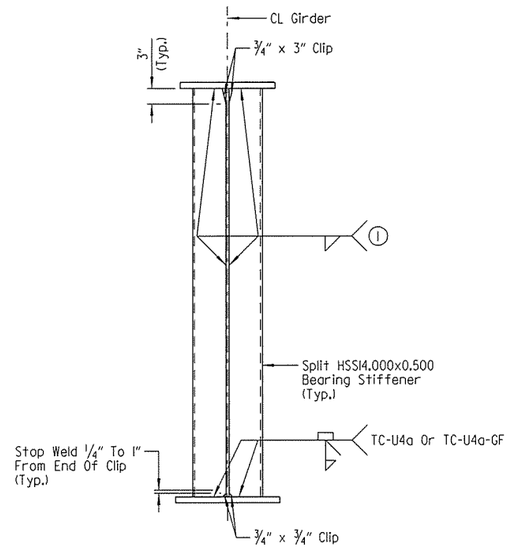

BEARING STIFFENER AT END BENT NOS. 1 & 4

Scale: 3/4" = 1'-0"

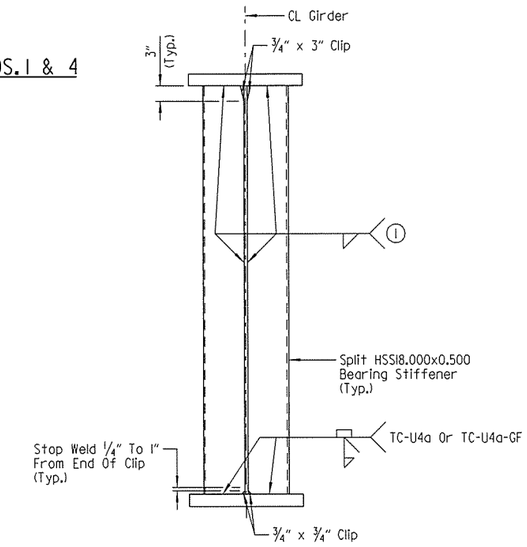

BEARING STIFFENER AT BENT NOS. 2 & 3

Scale: 3/4" = 1'-0"

NOTE:
Split Pipe Bearing Stiffeners to be fabricated so as to be vertical in their final position.

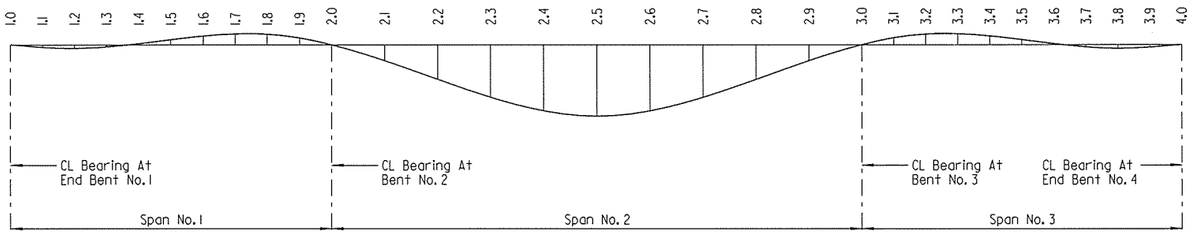

DEAD LOAD DEFLECTION DIAGRAM

No Scale

NOTES:
Camber for dead load deflection plus vertical curve +/- 1/4" tolerance. Deflections shown are along CL Girder from the plane perpendicular to the web extending from CL Bearing to CL Bearing. Vertical curve and deck transition corrections are not included. Negative sign (-) indicates point above chord.

Dead load deflections shown are based on removable deck forms.

Revision to the deflection tables may be necessary upon review of the Contractor's submitted forming details.

STATE OF ARKANSAS
LICENSED PROFESSIONAL ENGINEER
No. 15902
PRESTON C. CAMPBELL
BRIDGE ENGINEER

SHEET 8 OF 16
DETAILS OF 536'-0" CONTINUOUS COMPOSITE PLATE GIRDER UNIT
HWY. 112 TO NB I-49
OVER NB I-49 TO HWY. 71B

ROUTE SEC.

ARKANSAS STATE HIGHWAY COMMISSION

LITTLE ROCK, ARK.

DRAWN BY: PCC DATE: MAR. 2015 FILENAME: BBB0414X2_S8.dgn
CHECKED BY: ABH DATE: JULY 2015 SCALE: AS SHOWN
DESIGNED BY: PCC DATE: MAR. 2015

BRIDGE NO. 07379 DRAWING NO. 58158

JasKinner 3/20/2016 3:35:16 PM
WORKSPACE: AHTD Bridge
\\gitarchON\Projects\LITProjects\20IN\101707 - I-540 Widening & Interchange Improvement\Drawings\I540-I2RMP-S308-SD.dgn
REVISED DATE:

DATE REVISED	DATE FILMED	DATE REVISED	DATE FILMED	FED. ROAD DIST. NO.	STATE	FED. AID PROJ. NO.	SHEET NO.	TOTAL SHEETS
				6	ARK.			
				JOB NO.		BB0414	436	886

(1) 07379 536'-0" PL GIRDER UNIT 58159

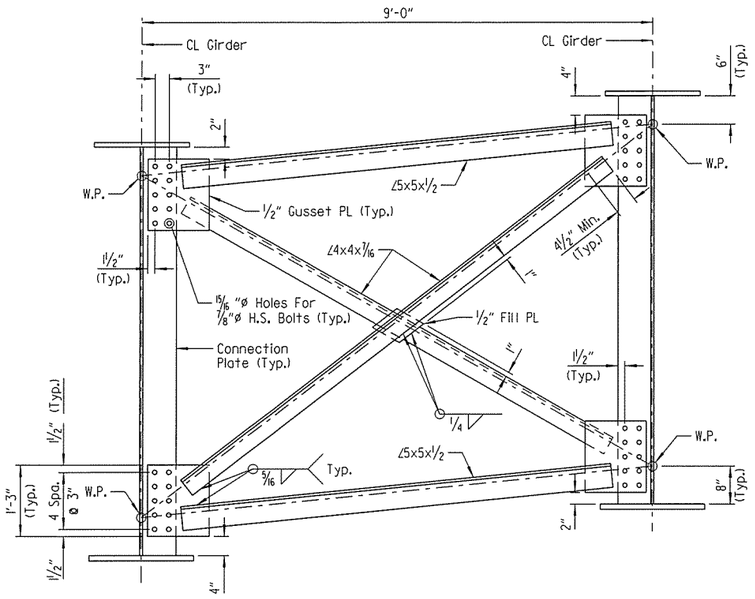

INTERMEDIATE CROSSFRAME

(Looking Ahead)
Scale: 3/4" = 1'-0"

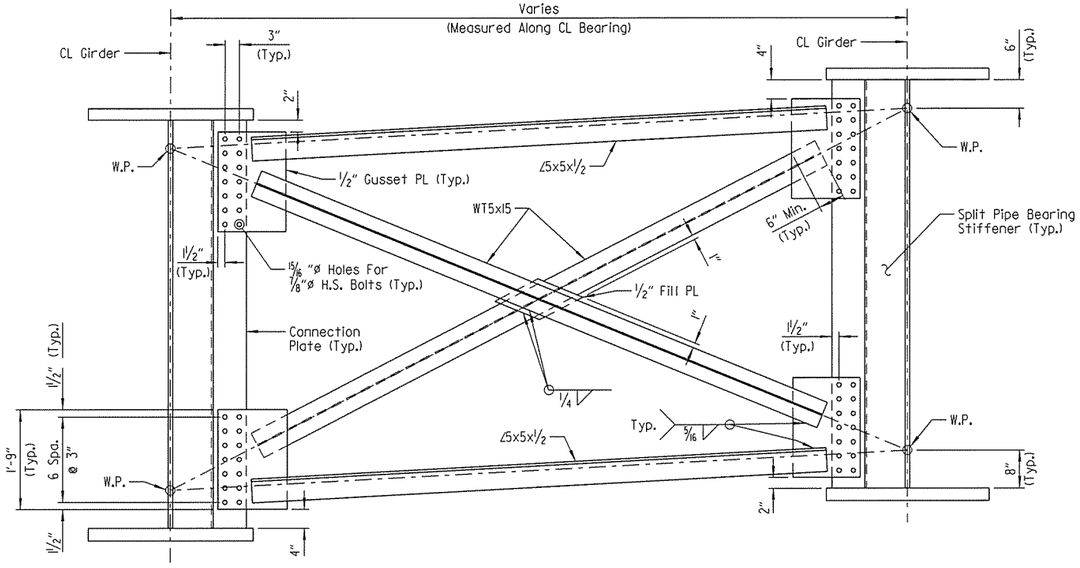

INTERMEDIATE BENT CROSSFRAME

(Looking Ahead)
No Scale

(3) Split HSSI8.000x0.500 Bearing Stiffener at Intermediate Bents
Split HSSI4.000x0.500 Bearing Stiffener at End Bents

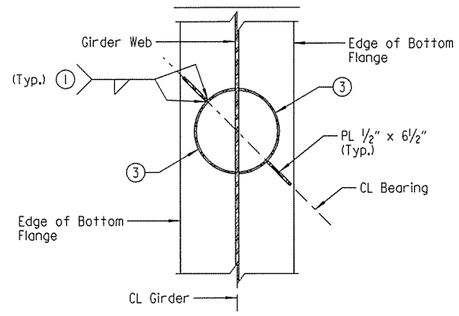

SECTION X-X

No Scale

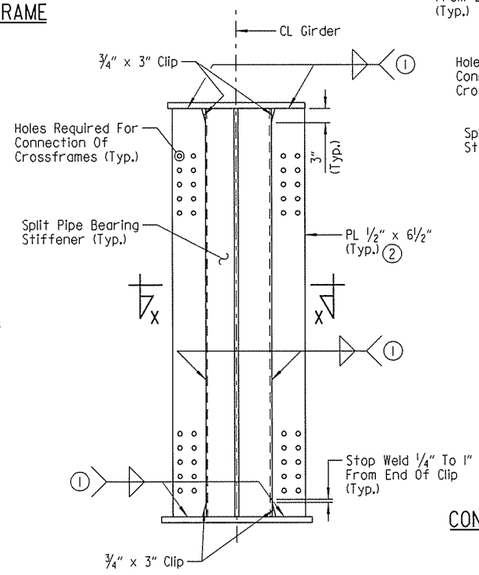

CONNECTION PLATE DETAIL AT END BENTS

Scale: 3/4" = 1'-0"

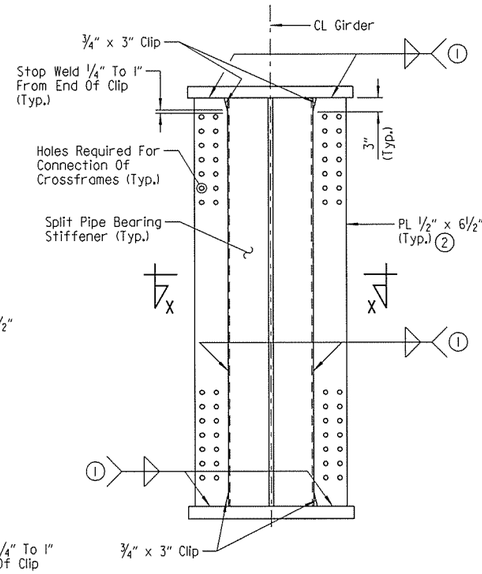

CONNECTION PLATE DETAIL AT INTERMEDIATE BENTS

Scale: 3/4" = 1'-0"

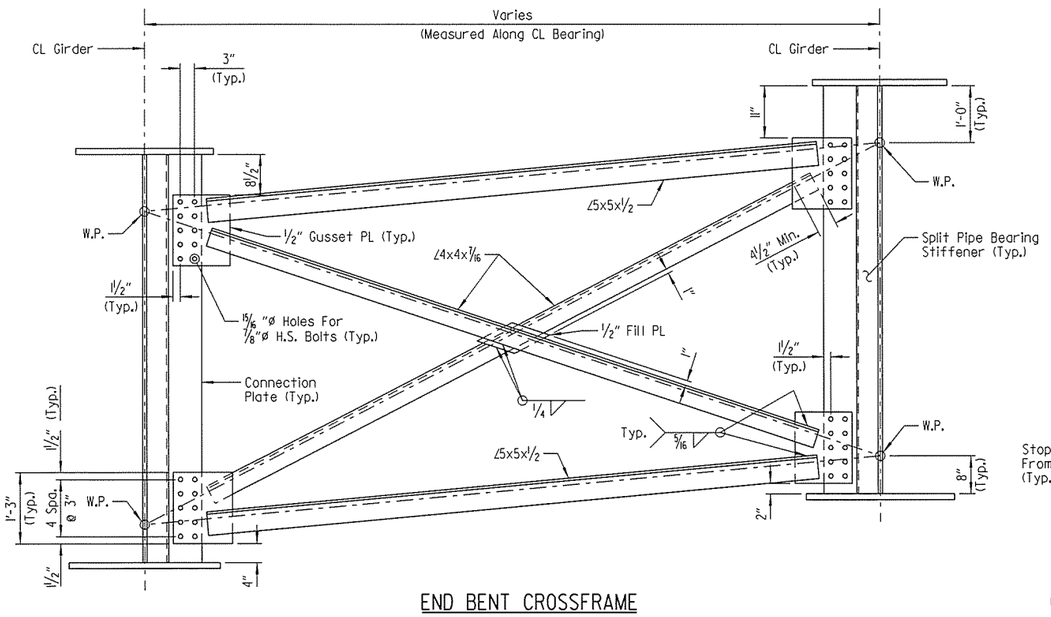

END BENT CROSSFRAME

(Looking Ahead)
No Scale

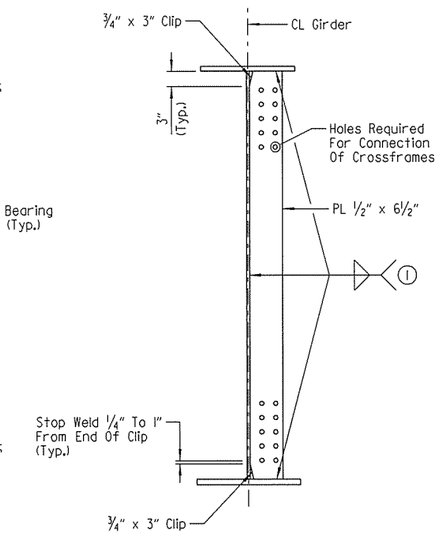

CONNECTION PLATE DETAIL WITHIN SPAN

Scale: 3/4" = 1'-0"

(1) See "TABLE FOR WELDS" on Dwg. No. 58155 for min. weld size.

(2) Omit connection plate where crossframes are not present.

NOTE:
Connection plates at intermediate and end bents to be fabricated so as to be vertical in their final position.

STATE OF ARKANSAS
LICENSED PROFESSIONAL ENGINEER
No.15902
PRESTON C. CAMPBELL
3-20-16
BRIDGE ENGINEER

SHEET 9 OF 16
DETAILS OF 536'-0" CONTINUOUS
COMPOSITE PLATE GIRDER UNIT
HWY. 112 TO NB I-49
OVER NB I-49 TO HWY. 71B

ROUTE SEC.

ARKANSAS STATE HIGHWAY COMMISSION
LITTLE ROCK, ARK.

DRAWN BY: PCC DATE: MAR. 2015 FILENAME: BBB0414X2_S9.dgn
CHECKED BY: ABH DATE: JULY 2015 SCALE: AS SHOWN
DESIGNED BY: PCC DATE: MAR. 2015
BRIDGE NO. 07379 DRAWING NO. 58159

JesKinner 3/20/2016 3:35:16 PM
WORKSPACE: AHTD Bridge
\\gfforcnt01\Projects\LITProjects\20INV0017707 - I-540 Widening & Interchange Improvement\Drawings\I540-I12RMP-S309-SD.dgn
REVISED DATE:

GENERAL NOTES

CONCRETE:

Concrete shall be poured in the dry, and all exposed corners shall be chamfered ¾" unless otherwise noted. All concrete shall be Class S(AE) with a minimum 28 day compressive strength f'c = 4,000 psi.

The superstructure details shown are for use when removable deck forming is used and are the basis for measurements of Class S(AE) Concrete. See Standard Drawing No. 55005 for allowable modifications when permanent steel bridge deck forms are used.

Concrete in bridge superstructure shall be placed, consolidated and screeded off for the entire pour before any concrete has taken its initial set. This may require the use of a retarding agent.

The concrete deck shall be given a tine finish in accordance with Subsection 802.19 for Class 5 Tined Bridge Roadway Surface Finish. Movement of the finishing machine across new concrete shall be on planks placed on the surface and shall be prohibited for 72 hours after finishing the pour. Sufficient concrete must be placed ahead of the strike-off to fully load the girder. A minimum of 72 hours shall elapse between completion of the bridge deck slab and the pouring of the parapet railing. Any railing pours made before the entire slab has been placed and cured must be approved by the Engineer. The use of a longitudinal screed is prohibited.

REINFORCING STEEL:

All reinforcing steel shall be Grade 60 (Yield Strength = 60,000 psi) conforming to AASHTO M31 or M322, Type A, with mill test reports. The reinforcing steel is to be accurately located in the forms and firmly held in place by steel wire supports, sufficient in number and size to prevent displacement during the course of construction. The wire supports will not be paid for directly but will be considered subsidiary to the item "EPOXY COATED REINFORCING STEEL (GRADE 60)".

STRUCTURAL STEEL:

All structural steel shall be AASHTO M270, Gr. 50W unless noted otherwise and shall be paid for at the unit price per pound bid for "STRUCTURAL STEEL IN PLATE GIRDER SPANS (M270, GR. 50W)". Split pipe bearing stiffeners shall conform to ASTM A847 and shall be paid for at the unit price per pound bid for "STRUCTURAL STEEL IN PLATE GIRDER SPANS (M270, GR. 50W)". Grade 50W steel shall not be painted. All exposed surfaces shall be cleaned in accordance with Subsection 807.84(e) unless noted otherwise. Structural steel completely embedded in concrete may be AASHTO M270 Gr. 36 unless noted otherwise. See Drawing No. 58168 for cleaning requirements of external load plates on elastomeric bearings.

Requests for substitution of structural steel shapes shown with shapes of greater size must be submitted by the Contractor to the Engineer for approval. Steels of equal or greater strengths will be accepted only when shown on approved shop drawings. Shapes and materials shown in the plans will be the basis of payment, and no additional compensation will be made for any adjustments due to substitutions.

Drawings show general features of design only. Shop drawings shall be prepared in accordance with Subsection 807.04, submitted and approved before fabrication is begun.

Bolted field splices shown may be eliminated or shop welded splices may be substituted with approval of the Engineer. Payment will be made on the basis of plan quantities.

All girder webs, flanges of plate girders, splice plates, crossframes, split pipe bearing stiffeners and connection plates are considered main load carrying members and shall meet the Longitudinal Charpy V-Notch Test specified in Subsection 807.05. This work and material will not be paid for directly but are considered as subsidiary to the item "STRUCTURAL STEEL IN PLATE GIRDER SPANS (M270, GR. 50W)".

Steel plates for main load carrying members shall be cut and fabricated so that the primary direction of rolling is parallel to the direction of the main tensile and/or compressive stresses.

Girder webs may be made by shop splicing with a minimum length of 25'-0" for sections. Flange plates longer than 50'-0" may be made by shop splicing with a minimum length of 25'-0" for sections. Material specifications and locations of shop-welded splices, if any, shall be shown on the shop drawings. No additional payment for these welded splices will be made.

All welding that is to be done during fabrication of structural steel, including temporary welds, shall be detailed on the shop drawings and submitted for approval. If additional welds are required, whether temporary or permanent, a formal request with detailed drawings shall be submitted to the Engineer for approval; however, additional welds used for attaching falsework support devices or screed rail supports to the structural steel that do not exceed the limitations of Subsection 802.13 will not require approval prior to construction. All welding shall conform to Subsection 807.26.

All girders shall be blocked in their true positions with webs horizontal in the shop as specified in Subsection 807.54 (b)(2). The camber, length of sections, distance between bearings and openings of joints shall be measured with the girders in their true positions, and this information shall become a part of the permanent records of this job. The component parts shall be match marked in this assembly, and these marks shall be shown on the erection diagram. All girder dimensions are based on a temperature of 60°F. A tolerance of +/- ¼" is allowed for camber.

Groove welds in flange and web plates shall be Quality Control (Q.C.) tested by nondestructive testing, as required by the Standard Specifications. Fillet welds at flange to web plate connections shall be Quality Control (Q.C.) tested by the magnetic particle method. All Quality Control (Q. C.) testing is at the Contractor's expense.

Unless noted otherwise, all connection plates and intermediate stiffeners shall be fabricated normal to the top flange and on the side of the girder web as indicated on the framing plan. No intermediate stiffeners are to be placed on the outside of the exterior girders except as noted. All split pipe bearing stiffeners and connection plates attached to split pipe bearing stiffeners shall be fabricated to be plumb in their final positions.

Crossframes shall be installed as girders are erected. Unless noted otherwise, all bolts in crossframes and field splices shall be installed and tightened in accordance with Subsection 807.71 prior to pouring of the concrete deck.

Field connections shall be bolted with high-strength bolts and shall be ⅞"ø bolts conforming to AASHTO M164 unless otherwise noted. Open holes shall be 15/16 "ø unless otherwise noted. Bolts shall be placed with heads on the outside face of the exterior girder webs and on the bottom of the girder flanges.

All contact surfaces between plates at field splices shall be free of oil, rust or scale before assembly.

All stud shear connectors shall be granular flux filled, solid fluxed or equal and shall be automatically end welded in accordance with recommendations of the Manufacturer.

Anchor bolts shall be AASHTO designation M314 Gr. 55, including supplemental requirement S1, and shall be galvanized to conform to AASHTO M232, Class C or ASTM B695 Class 50. Anchor bolts will be paid for at the contract unit price bid for "STRUCTURAL STEEL IN PLATE GIRDER SPANS (M270, GR. 50W)".

ERECTION OF STRUCTURAL STEEL:

The erection of the structural steel shall be performed according to a plan permitting the steel to be erected plumb with bolts tightened while the steel is as close as possible to the no-load condition, so that the bolt holes can be aligned. This requirement may necessitate the use of large capacity cranes, temporary shoring or jacking frames.

The Contractor shall submit to the Engineer for informational and record purposes details of falsework construction in accordance with Subsection 807.64.

The Contractor shall ensure that girders are stable throughout the erection process. The Contractor will be responsible for providing temporary bracing or stiffening devices to accomodate handling stresses in individual members or segments of the structure during erection.

BAR LIST

Mark	No. Req'd.	Length	Pin Dia.	Mark	No. Req'd.	Length	Pin Dia.
S401E	540	38'-8"	STR.	P401E	5	18'-4"	STR.
S402E	56	4'-6"	2"	P402E	47	18'-1"	STR.
				P403E	54	15'-10"	STR.
S501E	380	57'-4"	STR.	P404E	35	18'-0"	STR.
S502E	505	34'-5"	3"	P405E	27	17'-5"	STR.
S503E	505	33'-8"	STR.	P406E	50	19'-3"	STR.
S504E TO S548E	2 Each	9'-10" TO 31'-10"	STR.	P407E	18	38'-8"	STR.
				P408E	30	34'-3"	STR.
				P409E	24	30'-10"	STR.
				P410E	40	18'-10"	STR.
S601E	210	59'-4"	STR.	P411E	47	19'-0"	STR.
S602E	505	33'-8"	STR.	P412E	54	16'-7"	STR.
S603E	2110	10'-3"	4½"	P413E	27	17'-11"	STR.
S604E TO S648E	2 Each	9'-10" TO 31'-10"	STR.	P414E	24	30'-11"	STR.
				P415E	30	35'-8"	STR.
				P416E	24	31'-0"	STR.
S649E	66	13'-6"	4½"				
S650E	3	45'-2"	4½"	P501E	2128	6'-8"	3¾"
S651E	6	12'-5"	STR.	P502E	2128	5'-4"	3¾", 6
S652E	4	2'-6"	STR.	P503E	36	6'-2½"	3¾"
S653E	3	44'-11"	4½"				
S654E	6	12'-4"	STR.				
S655E	4	2'-5"	STR.				

NOTES:
Dimensions of bars are out-to-out.
Bar designations ending with "E" indicate epoxy coated bars.

BAR BENDING DIAGRAMS

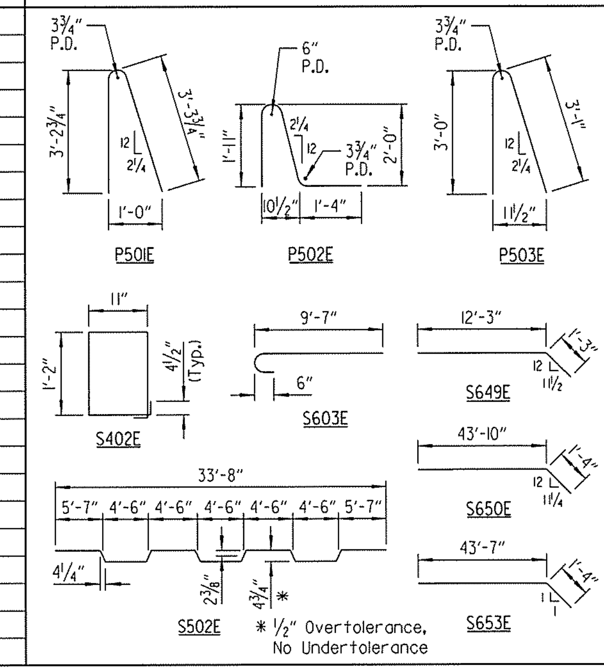

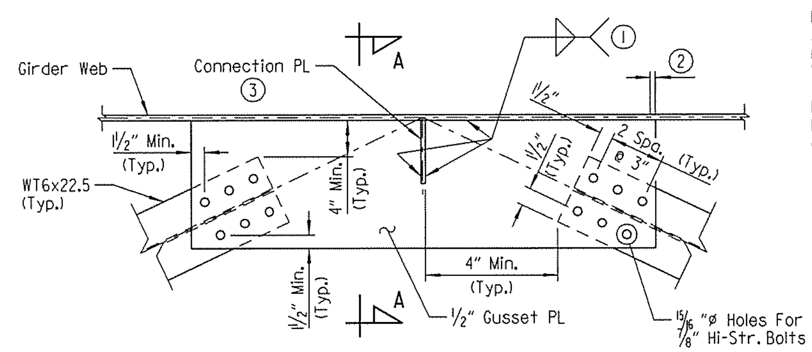

DETAIL A
No Scale

NOTES:
At the Contractor's option, 15/16 "ø holes may be field drilled in one end of each WT6x22.5 member.

For locations of construction lateral bracing, see "FRAMING PLAN - SPAN NO. 2" on Dwg. No. 58156.

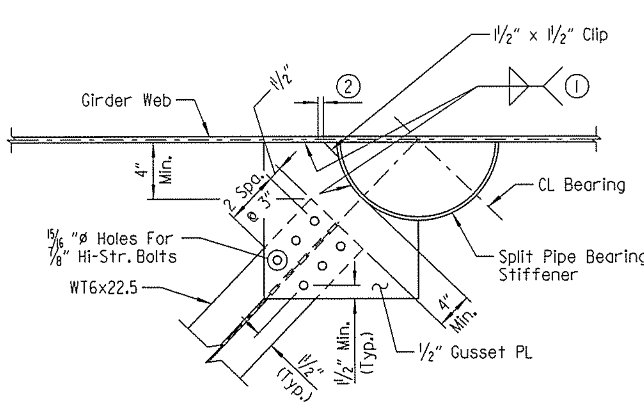

DETAIL B
No Scale

(1) See "TABLE FOR WELDS" on Dwg. No. 58155 for min. weld size.

(2) Stop weld ¼" from the edge of all corners, both clipped and unclipped.

(3) Connection plates shall be discontinuous at lateral bracing gusset plates.

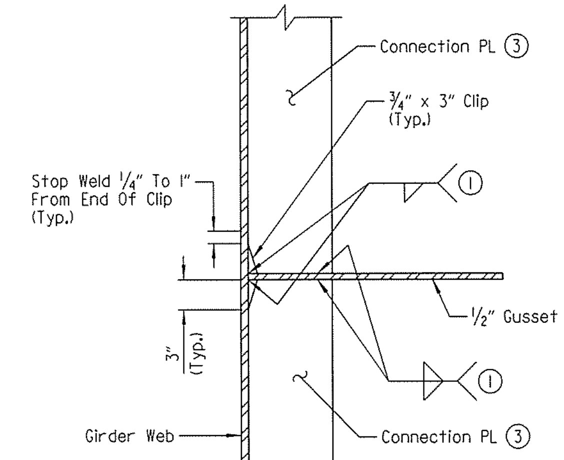

NOTE:
WT6x22.5 construction lateral bracing member not shown for clarity.

SECTION A-A
Scale: 1½" = 1'-0"

BRIDGE ENGINEER

SHEET 10 OF 16
DETAILS OF 536'-0" CONTINUOUS
COMPOSITE PLATE GIRDER UNIT
HWY. 112 TO NB I-49
OVER NB I-49 TO HWY. 71B

ROUTE SEC.

ARKANSAS STATE HIGHWAY COMMISSION
LITTLE ROCK, ARK.

DRAWN BY: PCC DATE: MAR. 2015 FILENAME: BBB0414X2_S10.dgn
CHECKED BY: ABH DATE: JULY 2015 SCALE: AS SHOWN
DESIGNED BY: PCC DATE: MAR. 2015
BRIDGE NO. 07379 DRAWING NO. 58160

Jeskinner 3/20/2016 3:35:17 PM
WORKSPACE: AHTD Bridge
\\gitarch01\Projects\LITProjects\2011\11017707 - I-540 Widening & Interchange Improvement\Drawings\I540-112RMP-S310-GN.dgn
REVISED DATE:

DATE REVISED	DATE FILMED	DATE REVISED	DATE FILMED

FED. ROAD DIST. NO.	STATE	FED. AID PROJ. NO.	SHEET NO.	TOTAL SHEETS
6	ARK.			
JOB NO.		BB0414	438	886

(I) 07379 536'-0" PL GIRDER UNIT 58161

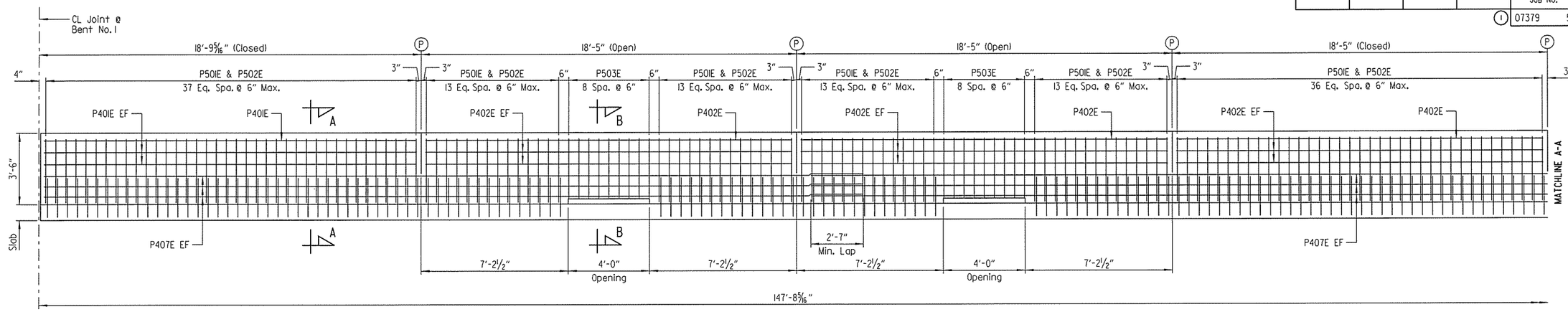

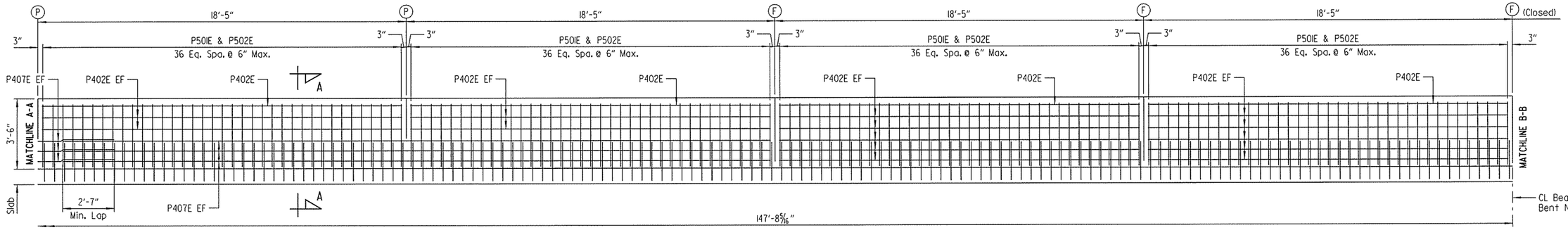

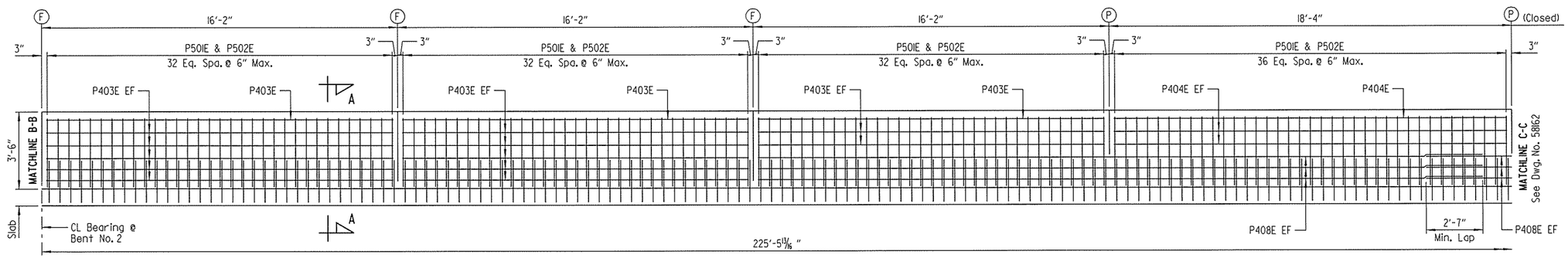

LEFT PARAPET - ELEVATION

(Looking At Inside Face Of Parapet Rail)
Scale: 3/8" = 1'-0"

(P) CL Partial-Depth Parapet Joint (1/4" To 1" Max.) as shown on slab plans on Dwg. Nos. 58152 - 58154. Stop 1'-6" from top of slab.

(F) CL Full-Depth Parapet Joint (1/4" To 1" Max.) as shown on slab plans on Dwg. Nos. 58152 - 58154. Stop 4" from top of slab.

LEGEND

EF = Each Face

NOTES:
All dimensions shown are measured along left gutterline.

For "BAR LIST" and "BAR BENDING DIAGRAMS", see Dwg. No. 58160 .

For "SECTION A-A" and "SECTION B-B", see Dwg. No. 58163 .

STATE OF ARKANSAS
LICENSED PROFESSIONAL ENGINEER
No. 15902
PRESTON C. CAMPBELL
BRIDGE ENGINEER

SHEET 11 OF 16
DETAILS OF 536'-0" CONTINUOUS COMPOSITE PLATE GIRDER UNIT HWY. 112 TO NB I-49 OVER NB I-49 TO HWY. 71B

ROUTE SEC.

ARKANSAS STATE HIGHWAY COMMISSION
LITTLE ROCK, ARK.

DRAWN BY: PCC DATE: MAR. 2015 FILENAME: BBB0414X2_S11.dgn
CHECKED BY: ABH DATE: JULY 2015 SCALE: AS SHOWN
DESIGNED BY: PCC DATE: MAR. 2015

BRIDGE NO. 07379 DRAWING NO. 58161

REVISED DATE:
Jeskinner 3/20/2016 3:35:17 PM
WORKSPACE: AHTD Bridge
\\gftarchDATA\Projects\LITProjects\2011\H017707 - I-540 Widening & Interchange Improvement\Drawings\I540-112RMP-S3R-MD.dgn

DATE REVISED	DATE FILMED	DATE REVISED	DATE FILMED	FED. ROAD DIST. NO.	STATE	FED. AID PROJ. NO.	SHEET NO.	TOTAL SHEETS
				6	ARK.			
				JOB NO.		BB0414	439	886
				(I) 07379		536'-0" PL GIRDER UNIT		58162

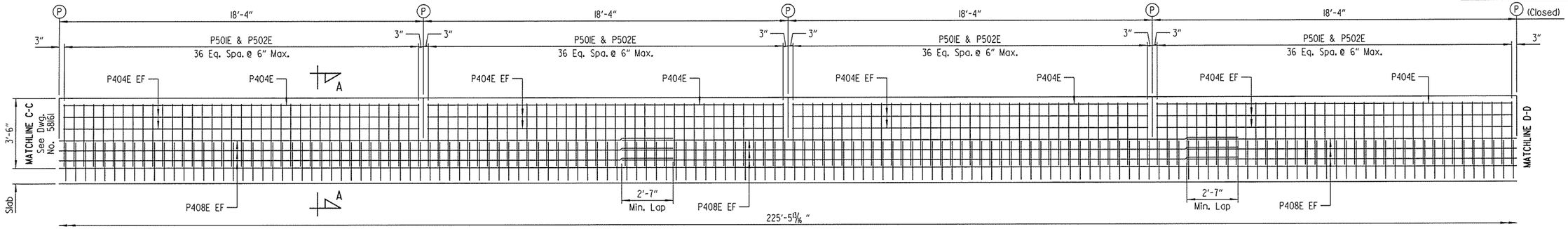

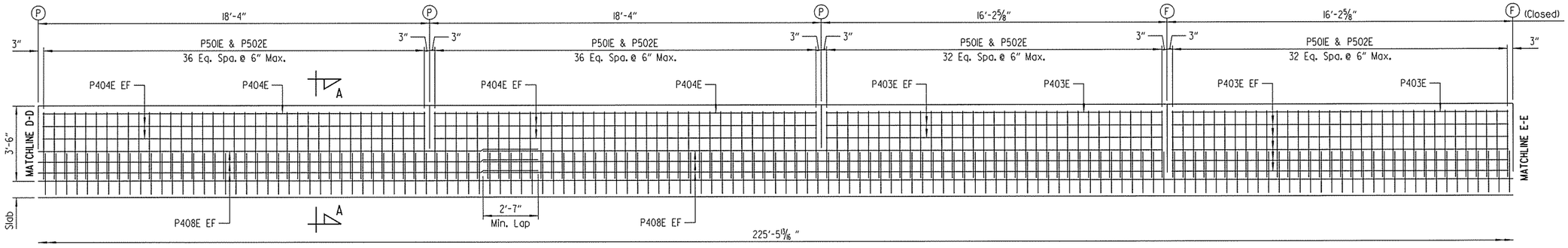

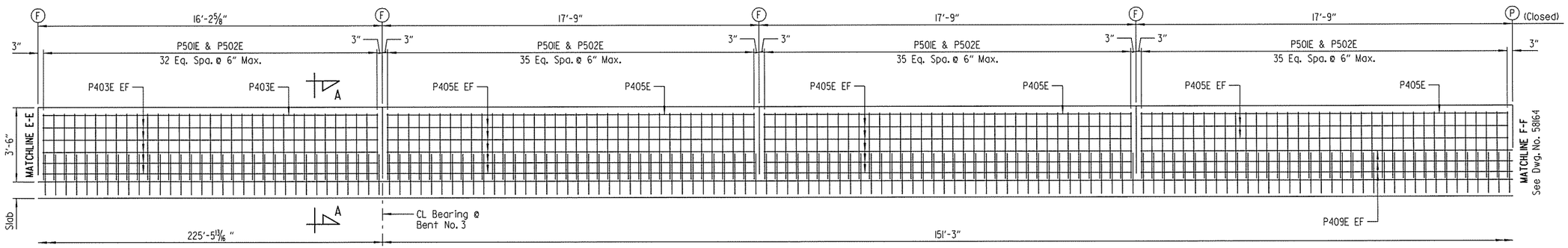

LEFT PARAPET - ELEVATION

(Looking At Inside Face Of Parapet Rail)
Scale: 3/8" = 1'-0"

(P) CL Partial-Depth Parapet Joint (1/4" To 1" Max.) as shown on slab plans on Dwg. Nos. 58152 - 58154. Stop 1'-6" from top of slab.

(F) CL Full-Depth Parapet Joint (1/4" To 1" Max.) as shown on slab plans on Dwg. Nos. 58152 - 58154. Stop 4" from top of slab.

LEGEND

EF = Each Face

NOTES:
All dimensions shown are measured along left gutterline.

For "BAR LIST" and "BAR BENDING DIAGRAMS", see Dwg. No. 58160 .

For "SECTION A-A", see Dwg. No. 58163 .

STATE OF ARKANSAS
LICENSED
PROFESSIONAL ENGINEER
No. 15902
PRESTON C. CAMPBELL
3-20-15
BRIDGE ENGINEER

SHEET 12 OF 16
DETAILS OF 536'-0" CONTINUOUS COMPOSITE PLATE GIRDER UNIT
HWY. 112 TO NB I-49
OVER NB I-49 TO HWY. 71B

ROUTE SEC.

ARKANSAS STATE HIGHWAY COMMISSION
LITTLE ROCK, ARK.

DRAWN BY: PCC DATE: MAR. 2015 FILENAME: BBB0414X2_SI2.dgn
CHECKED BY: ABH DATE: JULY 2015 SCALE: AS SHOWN
DESIGNED BY: PCC DATE: MAR. 2015
BRIDGE NO. 07379 DRAWING NO. 58162

Jeskinner 3/20/2016 3:35:18 PM
WORKSPACE: ANTD Bridge
\\Gitfarch01\Projects\LITProjects\2011\011707 - I-540 Widening & Interchange Improvement\Drawings\I540-I12RMP-S312-ND.dgn
REVISED DATE:

DATE REVISED	DATE FILMED	DATE REVISED	DATE FILMED	FED. ROAD DIST. NO.	STATE	FED. AID PROJ. NO.	SHEET NO.	TOTAL SHEETS
				6	ARK.			
				JOB NO.		BB0414	440	886

(1) 07379 536'-0" PL GIRDER UNIT 58163

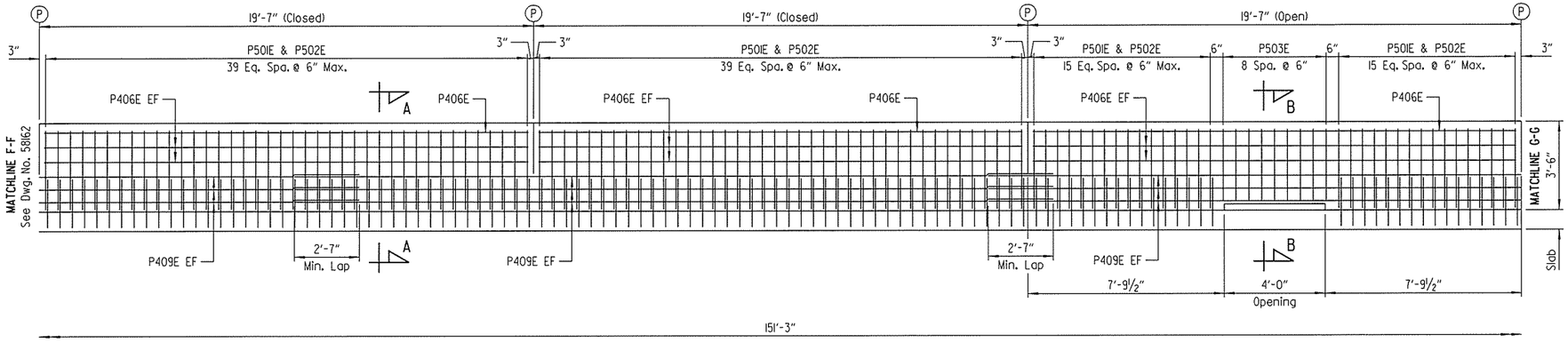

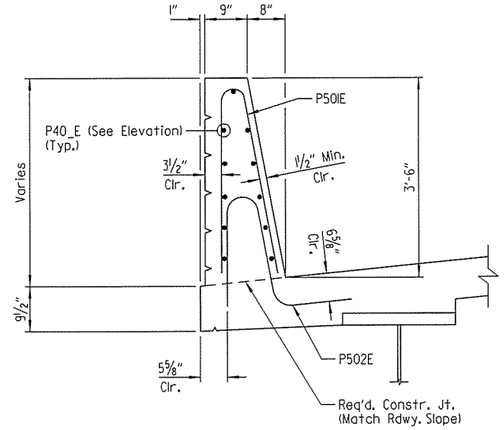

SECTION A-A
Scale: ¾" = 1'-0"

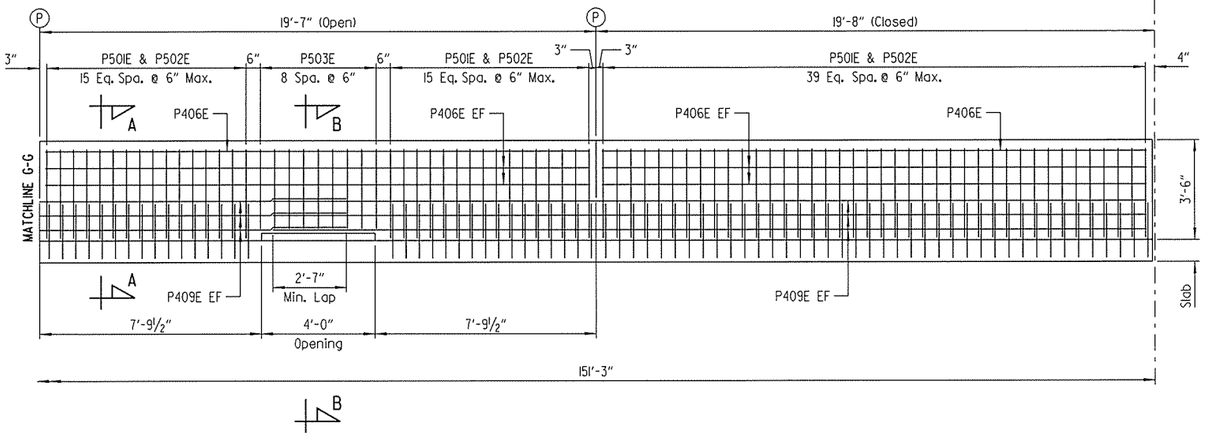

LEFT PARAPET - ELEVATION
(Looking At Inside Face Of Parapet Rail)
Scale: ⅜" = 1'-0"

LEGEND
EF = Each Face

(P) CL Partial-Depth Parapet Joint (¼" To 1" Max.) as shown on slab plans on Dwg. Nos. 58152 - 58154. Stop 1'-6" from top of slab.

(F) CL Full-Depth Parapet Joint (¼" To 1" Max.) as shown on slab plans on Dwg. Nos. 58152 - 58154. Stop 4" from top of slab.

NOTES:
All dimensions shown are measured along left gutterline.

For "BAR LIST" and "BAR BENDING DIAGRAMS", see Dwg. No. 58160.

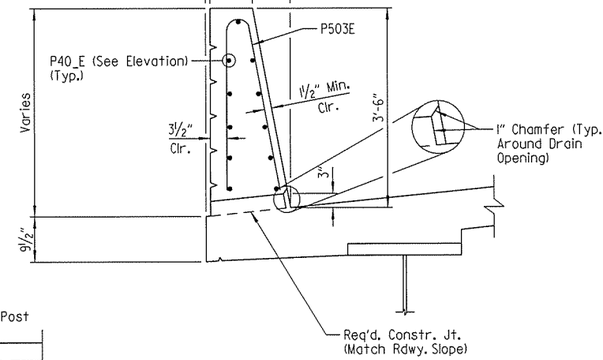

SECTION B-B
Scale: ¾" = 1'-0"

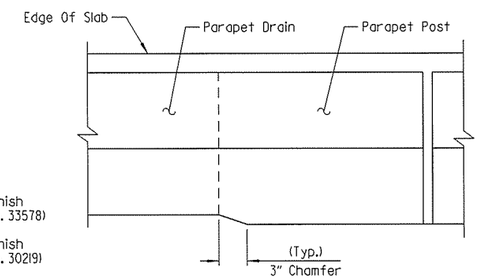

PLAN OF RAIL POST CHAMFER
(Typ. For Open Drain Panels Only)
No Scale

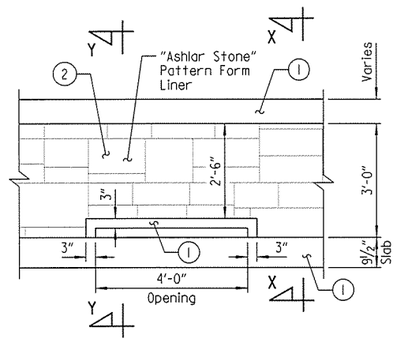

ARCHITECTURAL FINISH ELEVATION - LEFT PARAPET
(Showing Outside Face Of Parapet)
Scale: ½" = 1'-0"

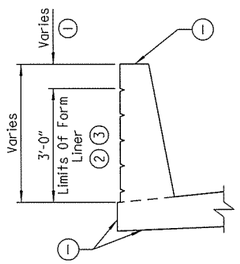

SECTION X-X
Scale: ½" = 1'-0"

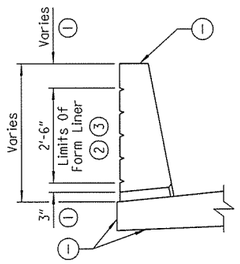

SECTION Y-Y
Scale: ½" = 1'-0"

(1) Class 3 Textured Coating Finish (Color = Brown, Color Chip No. 33578)

(2) Class 3 Textured Coating Finish (Color = Brown, Color Chip No. 30219)

(3) "Ashlar Stone" Pattern

NOTE:
Form liner on back face of parapet shall be a max. depth of 2" to provide a min. clearance of 1½" to parapet reinforcing.

STATE OF ARKANSAS
LICENSED PROFESSIONAL ENGINEER
No. 15902
PRESTON C. CAMPBELL
3-20-16
BRIDGE ENGINEER

SHEET 13 OF 16
DETAILS OF 536'-0" CONTINUOUS COMPOSITE PLATE GIRDER UNIT
HWY. 112 TO NB I-49
OVER NB I-49 TO HWY. 71B

ROUTE SEC.

ARKANSAS STATE HIGHWAY COMMISSION
LITTLE ROCK, ARK.

DRAWN BY: PCC DATE: MAR. 2015 FILENAME: BBB0414X2_SI3.dgn
CHECKED BY: ABH DATE: JULY 2015 SCALE: AS SHOWN
DESIGNED BY: PCC DATE: MAR. 2015
BRIDGE NO. 07379 DRAWING NO. 58163

JaskInner 3/20/2016 3:35:18 PM
WORKSPACE: AHTD Bridge
\\gitfarch0\Projects\LITProjects\20IN\I007707 - I-540 Widening & Interchange Improvement\Drawings\I540-I12RMP-S313-MD.dgn
REVISED DATE:

DATE REVISED	DATE FILMED	DATE REVISED	DATE FILMED	FED. ROAD DIST. NO.	STATE	FED. AID PROJ. NO.	SHEET NO.	TOTAL SHEETS
				6	ARK.			
				JOB NO.		BB0414	441	886
				(1) 07379		536'-0" PL GIRDER UNIT		58164

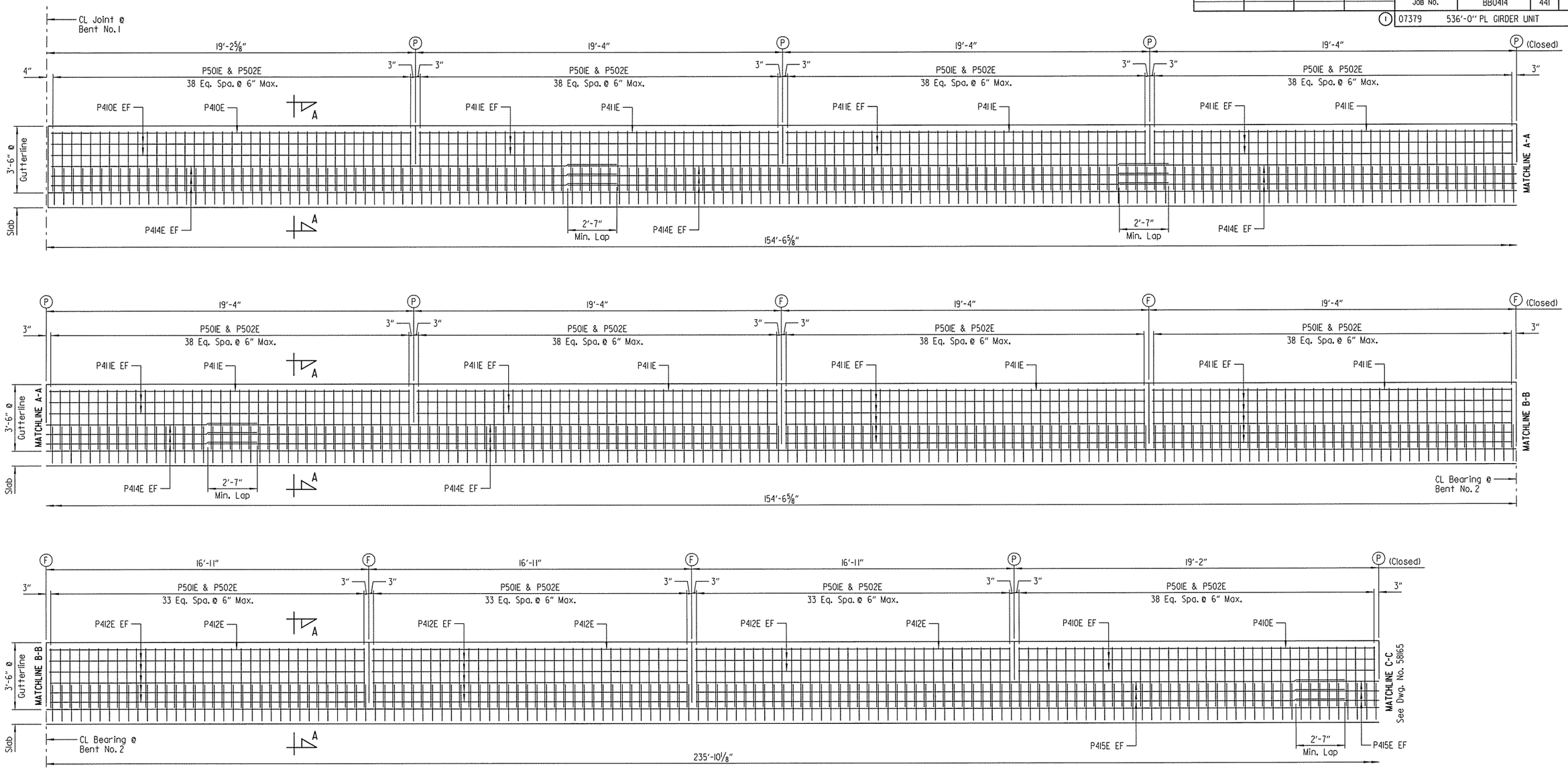

(P) CL Partial-Depth Parapet Joint (¼" To 1" Max.) as shown on slab plans on Dwg. Nos. 58152 - 58154. Stop 1'-6" from top of slab.

(F) CL Full-Depth Parapet Joint (¼" To 1" Max.) as shown on slab plans on Dwg. Nos. 58152 - 58154. Stop 4" from top of slab.

RIGHT PARAPET - ELEVATION

(Looking At Outside Face Of Parapet Rail)
Scale: ⅜" = 1'-0"

LEGEND

EF = Each Face

NOTES:
All dimensions shown are measured along right gutterline.

For "BAR LIST" and "BAR BENDING DIAGRAMS", see Dwg. No. 58160.

For "SECTION A-A", see Dwg. No. 58166.

STATE OF ARKANSAS
LICENSED PROFESSIONAL ENGINEER
No. 15902
3-20-15
PRESTON C. CAMPBELL
BRIDGE ENGINEER

SHEET 14 OF 16
DETAILS OF 536'-0" CONTINUOUS COMPOSITE PLATE GIRDER UNIT
HWY. 112 TO NB I-49
OVER NB I-49 TO HWY. 71B

ROUTE SEC.

ARKANSAS STATE HIGHWAY COMMISSION
LITTLE ROCK, ARK.

DRAWN BY: PCC DATE: MAR. 2015 FILENAME: BBB0414X2_S14.dgn
CHECKED BY: ABH DATE: JULY 2015 SCALE: AS SHOWN
DESIGNED BY: PCC DATE: MAR. 2015

BRIDGE NO. 07379 DRAWING NO. 58164

JeskInner 3/20/2016 3:35:18 PM
WORKSPACE: AHTD Bridge
\\gltfarch0\Projects\LITProjects\20IN\N017707 - I-540 Widening & Interchange Improvement\Drawings\I540-I12RMP-S314-MD.dgn
REVISED DATE:

DATE REVISED	DATE FILMED	DATE REVISED	DATE FILMED	FED. ROAD DIST. NO.	STATE	FED. AID PROJ. NO.	SHEET NO.	TOTAL SHEETS
				6	ARK.			
				JOB NO.		BB0414	442	886
				(1) 07379		536'-0" PL GIRDER UNIT		58165

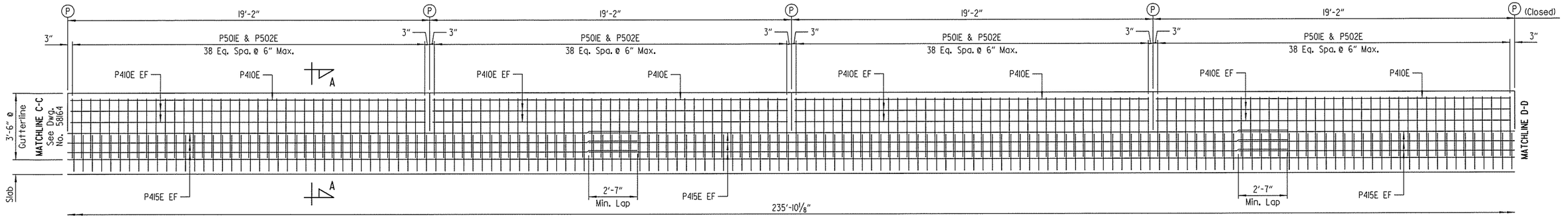

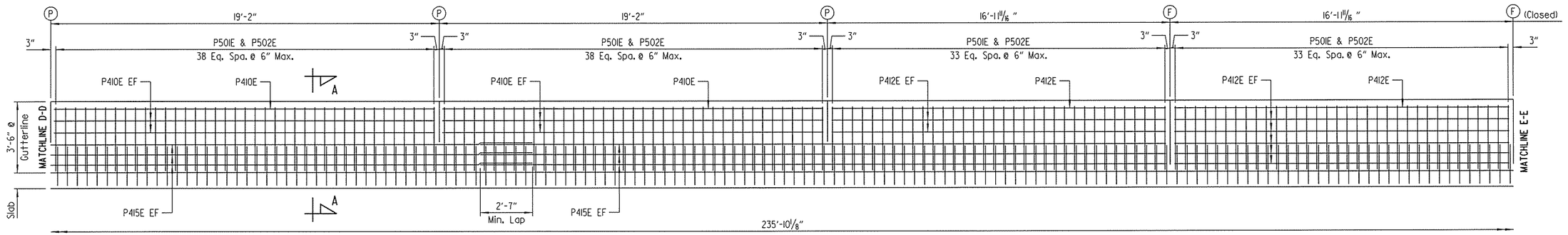

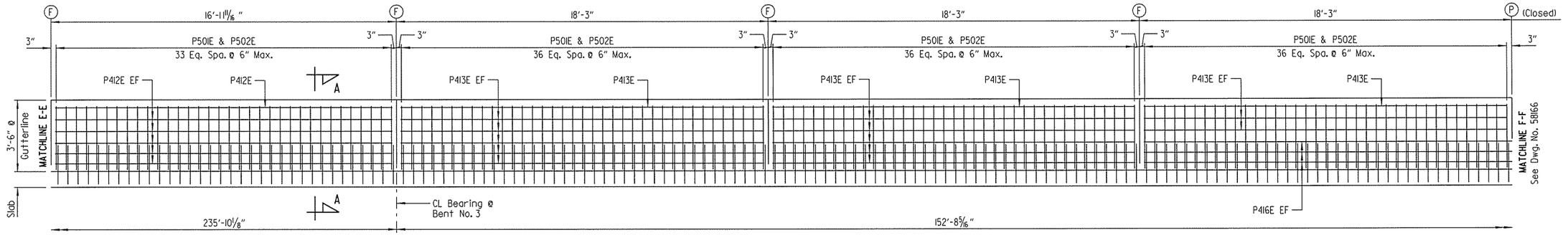

(P) CL Partial-Depth Parapet Joint (1/4" To 1" Max.) as shown on slab plans on Dwg. Nos. 58154 - 58160 Stop 1'-6" from top of slab.

(F) CL Full-Depth Parapet Joint (1/4" To 1" Max.) as shown on slab plans on Dwg. Nos. 58154 - 58160 Stop 4" from top of slab.

RIGHT PARAPET - ELEVATION

(Looking At Outside Face Of Parapet Rail)
Scale: 3/8" = 1'-0"

LEGEND

EF = Each Face

NOTES:
All dimensions shown are measured along right gutterline.

For "BAR LIST" and "BAR BENDING DIAGRAMS", see Dwg. No. 58166.

For "SECTION A-A", see Dwg. No. 58166.

STATE OF ARKANSAS
LICENSED PROFESSIONAL ENGINEER
No. 15902
3-20-16
PRESTON C. CAMPBELL
BRIDGE ENGINEER

SHEET 15 OF 16
DETAILS OF 536'-0" CONTINUOUS COMPOSITE PLATE GIRDER UNIT
HWY. 112 TO NB I-49
OVER NB I-49 TO HWY. 71B

ROUTE SEC.

ARKANSAS STATE HIGHWAY COMMISSION
LITTLE ROCK, ARK.

DRAWN BY: PCC DATE: MAR. 2015 FILENAME: BBB0414X2_S15.dgn
CHECKED BY: ABH DATE: JULY 2015 SCALE: AS SHOWN
DESIGNED BY: PCC DATE: MAR. 2015

BRIDGE NO. 07379 DRAWING NO. 58165

Jeskinner 3/20/2016 3:35:19 PM
WORKSPACE: AHTD Bridge
\\gltfarch0\Projects\LITProjects\201\101707 - I-540 Widening & Interchange Improvement\Drawings\I540-I12RMP-S315-MD.dgn
REVISED DATE:

DATE REVISED	DATE FILMED	DATE REVISED	DATE FILMED	FED. ROAD DIST. NO.	STATE	FED. AID PROJ. NO.	SHEET NO.	TOTAL SHEETS
				6	ARK.			
				JOB NO.		BB0414	443	886
				(1) 07379		536'-0" PL GIRDER UNIT		58166

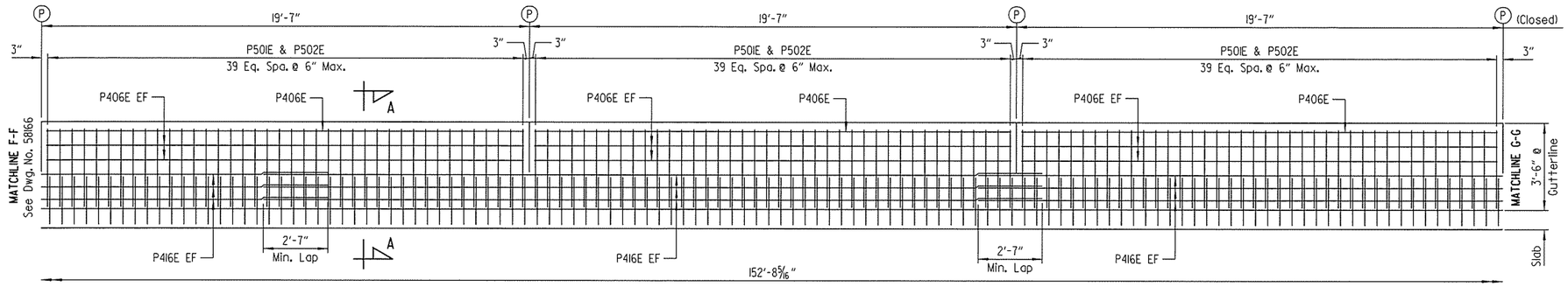

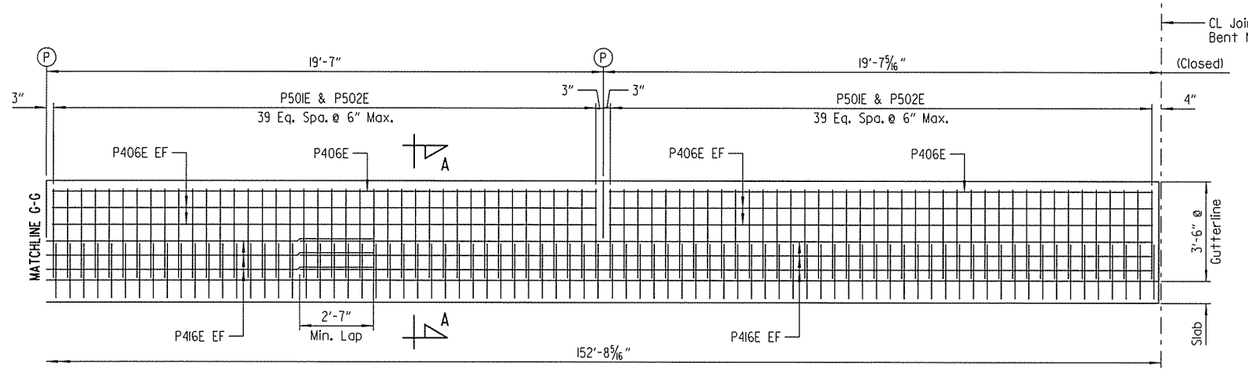

RIGHT PARAPET - ELEVATION

(Looking At Outside Face Of Parapet Rail)
Scale: ⅜" = 1'-0"

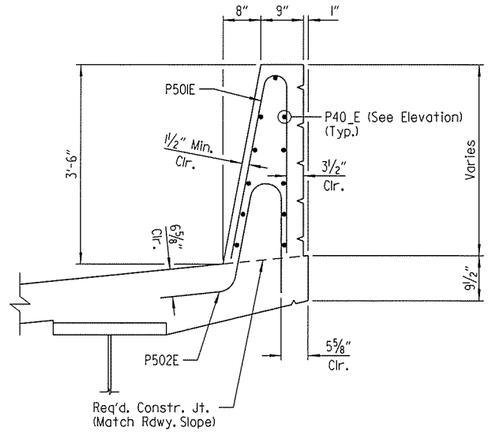

SECTION A-A

Scale: ¾" = 1'-0"

LEGEND

EF = Each Face

(P) CL Partial-Depth Parapet Joint (¼" To 1" Max.) as shown on slab plans on Dwg. Nos. 58152 - 58154. Stop 1'-6" from top of slab.

(F) CL Full-Depth Parapet Joint (¼" To 1" Max.) as shown on slab plans on Dwg. Nos. 58152 - 58154. Stop 4" from top of slab.

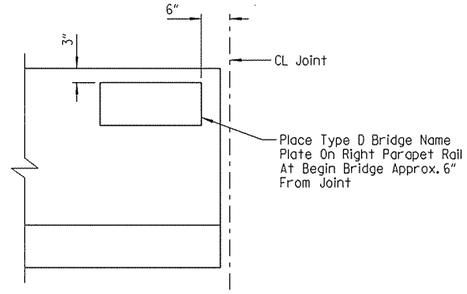

VIEW SHOWING LOCATION OF NAME PLATE

(Showing Inside Face Of Parapet)
No Scale

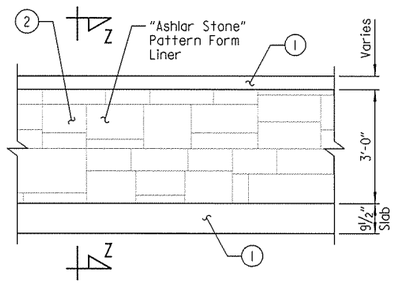

ARCHITECTURAL FINISH ELEVATION - RIGHT PARAPET

(Showing Outside Face Of Parapet)
Scale: ½" = 1'-0"

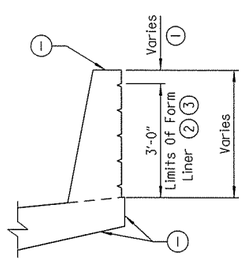

SECTION Z-Z

Scale: ½" = 1'-0"

(1) Class 3 Textured Coating Finish (Color = Brown, Color Chip No. 33578)

(2) Class 3 Textured Coating Finish (Color = Brown, Color Chip No. 30219)

(3) "Ashlar Stone" Pattern

NOTE:
Form liner on back face of parapet shall be a max. depth of 2" to provide a min. clearance of 1½" to parapet reinforcing.

GENERAL NOTES

CONCRETE: All concrete shall be Class S(AE) with a minimum 28 day compressive strength f'c = 4000 psi.

REINFORCING STEEL: All reinforcing steel shall be Grade 60 conforming to AASHTO M31 or M322, Type A with mill test reports.

NOTES:
All dimensions shown are measured along right gutterline.

For "BAR LIST" and "BAR BENDING DIAGRAMS", see Dwg. No. 58160.

STATE OF ARKANSAS
LICENSED PROFESSIONAL ENGINEER
No. 15902
3-20-16
PRESTON C. CAMPBELL
BRIDGE ENGINEER

SHEET 16 OF 16
DETAILS OF 536'-0" CONTINUOUS COMPOSITE PLATE GIRDER UNIT
HWY. 112 TO NB I-49
OVER NB I-49 TO HWY. 71B
ROUTE SEC.

ARKANSAS STATE HIGHWAY COMMISSION
LITTLE ROCK, ARK.

DRAWN BY: PCC DATE: MAR. 2015 FILENAME: BBB0414X2_SI6.dgn
CHECKED BY: ABH DATE: JULY 2015 SCALE: AS SHOWN
DESIGNED BY: PCC DATE: MAR. 2015
BRIDGE NO. 07379 DRAWING NO. 58166

jeskinner 3/20/2016 3:35:19 PM
WORKSPACE: AHTD Bridge
\\gitfarch01\Projects\LITProjects\20N\N017707 - I-540 Widening & Interchange Improvement\Drawings\I540-412RMP-S316-M0.dgn
REVISED DATE:

DATE REVISED	DATE FILMED	DATE REVISED	DATE FILMED	FED. ROAD DST. NO.	STATE	FED. AID PROJ. NO.	SHEET NO.	TOTAL SHEETS
				G	ARK.			
				JOB NO.		BB0414	444	886
				1	07379	JOINT DETAILS		58167

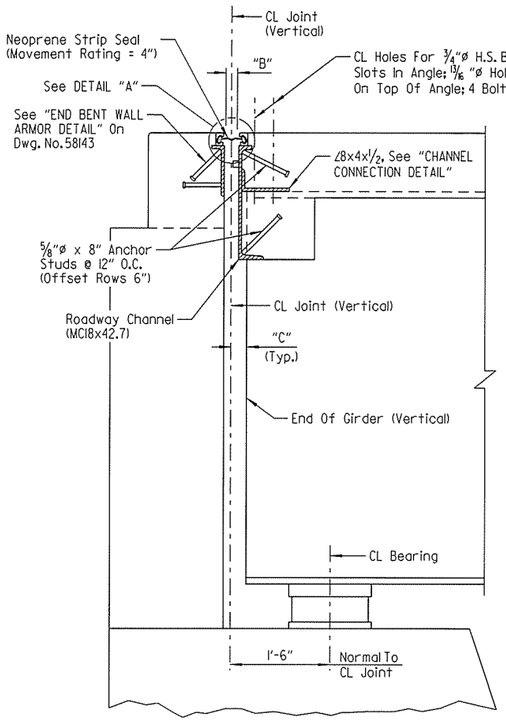

SECTION THRU JOINT AT END BENTS
(Section Taken Normal To CL Joint)
No Scale

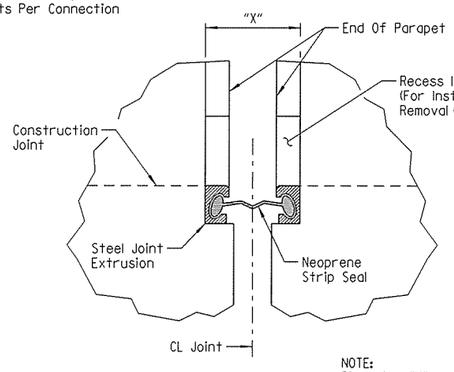

SECTION D-D
No Scale

NOTE:
Dimension "X" equals the width of the recess in parapet at gutterline to allow for removal or repair of joint.

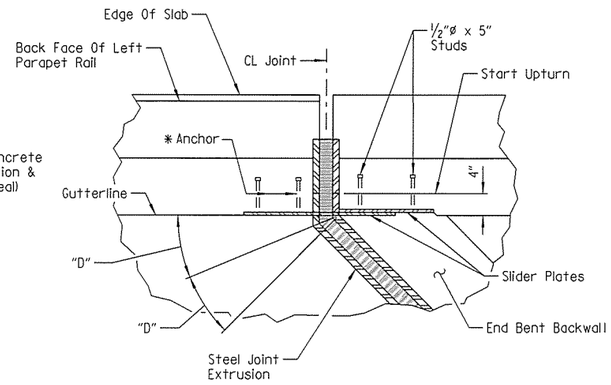

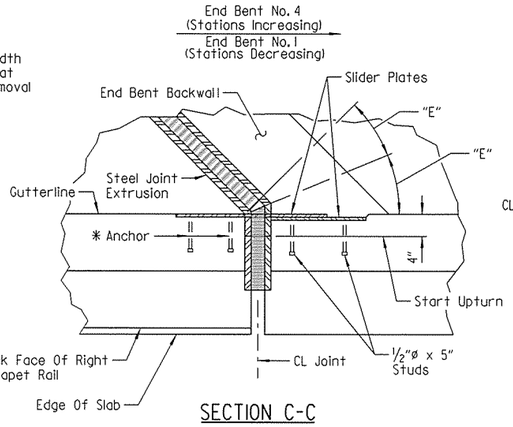

SECTION C-C
No Scale

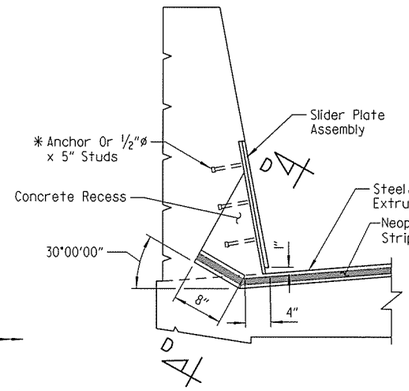

SECTION B-B
No Scale

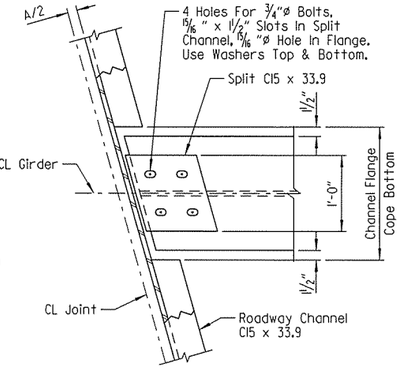

CHANNEL CONNECTION DETAIL
Scale: N.T.S.

NOTE:
Concrete shall be hand packed under the joint armor in the backwall and in the span.

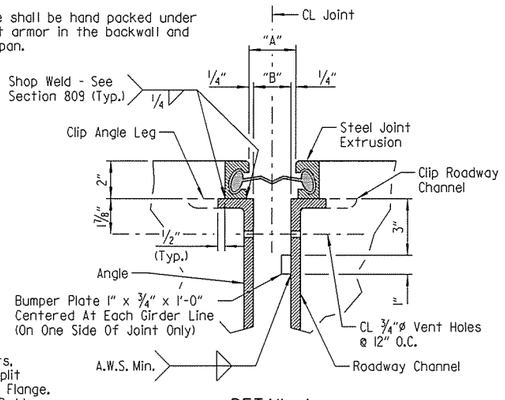

DETAIL A
No Scale

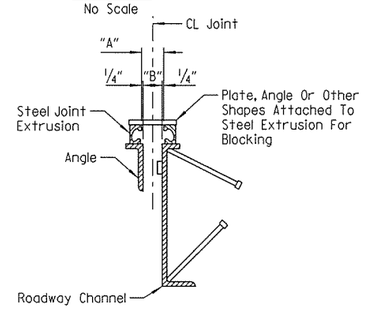

Note:
Each expansion joint device shall be blocked in the shop by the Fabricator to the dimension "A" shown for 60°F, and the blocking details shall be shown on the shop drawings. Blocking shall be placed within 2' of each end of the device and with a maximum spacing of 8'.

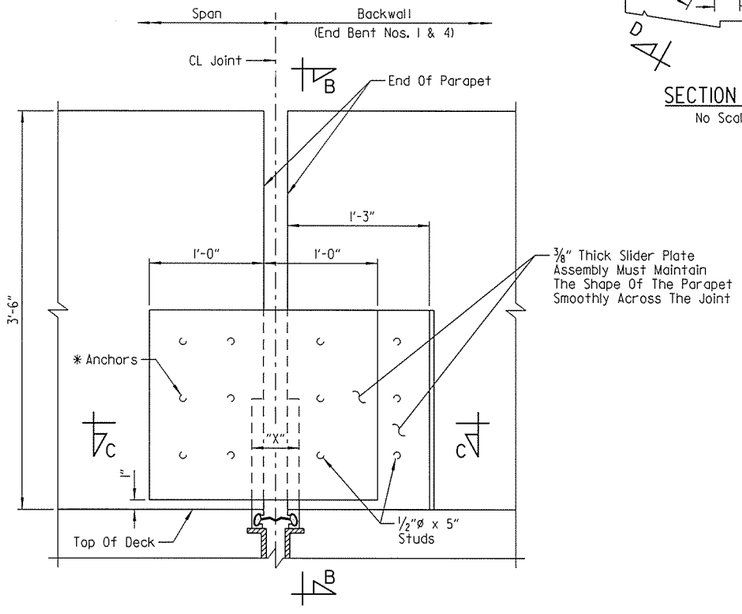

DETAIL OF STRIP SEAL AT PARAPET GUTTERLINE
No Scale

* The method of attachment of the slider plate assembly or similar device must be such that it may be removed in order to provide for future replacement of the neoprene seal.

Anchors will not be paid for directly but will be considered subsidiary to "STRUCTURAL STEEL IN PLATE GIRDER SPANS (M270, GR. 50W)".

TABLE OF VARIABLES

Bent No.	"D"	"E"
1	22°02'18"	23°20'19"
4	22°30'00"	22°30'00"

** The temperature used to set the joint opening shall be the approximate air temperature during the 24 hour period immediately before the bolts are tightened. The Engineer shall establish the temperature. Interpolation of the table may be necessary.

GENERAL NOTES

EXPANSION NEOPRENE STRIP SEAL: The expansion device shall provide a movement of 4" as shown in the "STRIP SEAL JOINT DATA" table. The expansion joint shall be capable of sealing the deck surface and parapet area to prevent moisture and other contaminants from descending through the joint.

All structural steel shall be AASHTO M270, GR. 50W unless otherwise noted.

All structural steel, except for the steel extrusion for the strip seal, shall be paid for as "STRUCTURAL STEEL IN PLATE GIRDER SPANS (M270, GR. 50W)". The steel extrusion and neoprene strip seal shall be paid for in accordance with Section 809.

Details of the proposed slider plate assembly shall be submitted to and approved by the Engineer prior to fabrication of the structural steel at the expansion device.

Slider plates shall be AASHTO M270, GR. 36 and shall be paid for as "STRUCTURAL STEEL IN PLATE GIRDER SPANS (M270, GR. 50W)". Exposed surfaces of the parapet slider plates shall be cleaned and painted in accordance with Section 807 and shall match the texture coating color as specified in SP JOB BB0414 "TEXTURE COATING FINISH" for parapets. Painting shall not be paid for directly but will be considered sudsidiary to "STRUCTURAL STEEL IN PLATE GIRDER SPANS (M270, GR. 50W)".

Method of installation and fabrication shall be determined by the Manufacturer.

DETAILS FOR BLOCKING EXPANSION JOINT DEVICE

EXPANSION DEVICE INSTALLATION AT END BENTS:

The Contractor may elect to install the expansion device using one of the following two alternatives.

1) The concrete span pour adjacent to joint shall be placed before the end bent backwall is placed. After the end bent backwall forms are in place and the girders erected, the blocked expansion device shall be installed and adjusted for grade. All connection bolts shall be fully tightened prior to placing the deck concrete adjacent to the bent. Immediately prior to pouring the backwall concrete, the blocking shall be removed, the opening adjusted for temperature, and the backwall constructed.

2) The backwall shall be poured to the optional construction joint after girders are erected. The blocked expansion device shall be installed and adjusted for grade. All connection bolts shall be fully tightened prior to placing the deck concrete adjacent to the bent. Immediately prior to pouring the remainder of the backwall concrete, the blocking shall be removed and the opening adjusted for temperature.

STRIP SEAL JOINT DATA

Bent No.	Movement Rating (inch)	"A" Width Perpendicular To Joint At 24 Hour Average Temperature ** Of:			"B" Width Perpendicular To Joint At 24 Hour Average Temperature ** Of:			"C" Perpendicular To Joint At 24 Hour Average Temperature Of 60°F
		40°F	60°F	80°F	40°F	60°F	80°F	
1	4"	2 13/16"	2 1/2"	2 3/16"	2 5/16"	2"	1 11/16"	2 1/4"±
4	4"	2 13/16"	2 1/2"	2 3/16"	2 5/16"	2"	1 11/16"	2 1/4"±

STATE OF ARKANSAS
LICENSED PROFESSIONAL ENGINEER
No.15902
3-20-16
PRESTON C. CAMPBELL
BRIDGE ENGINEER

DETAILS OF STRIP SEAL JOINT
HWY. 112 TO NB I-49
OVER NB I-49 TO HWY. 71B

ROUTE SEC.

ARKANSAS STATE HIGHWAY COMMISSION
LITTLE ROCK, ARK.

DRAWN BY: PCC DATE: JULY 2015 FILENAME: BBB0414X2_JI.dgn
CHECKED BY: ABH DATE: AUG. 2015 SCALE: AS SHOWN
DESIGNED BY: PCC DATE: JULY 2015
BRIDGE NO. 07379 DRAWING NO. 58167

jeskinner 3/20/2016 3:35:20 PM
WORKSPACE: AHTD Bridge
L:\2014\007107 - I-540 Widening & Interchange Improvement\Drawings\I540-I12RMP-S317-JN.dgn
REVISED DATE:

DATE REVISED	DATE FILMED	DATE REVISED	DATE FILMED	FED. ROAD DST. NO.	STATE	FED. AID PROJ. NO.	SHEET NO.	TOTAL SHEETS
				6	ARK.			
				JOB NO.		BB0414	445	886
				(1) 07379		ELASTOMERIC BEARINGS		58168

(1) Care shall be taken to ensure that the external load plate is in full and complete contact with the girder flange before welding begins.

(2) Centerline elastomeric pad shall be aligned with centerline girder.

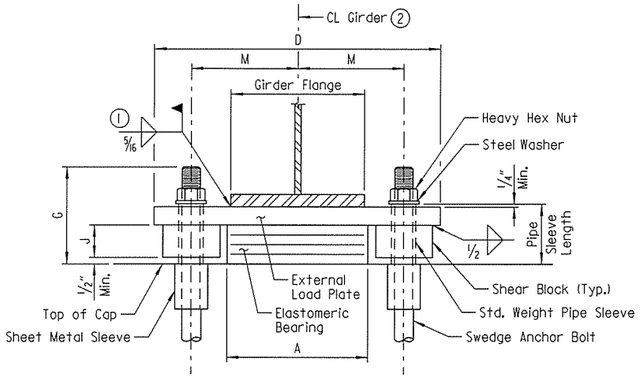

FRONT VIEW - AT BENT NOS. 2 & 3

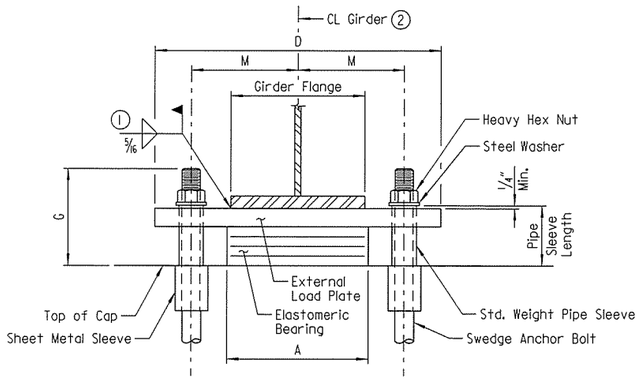

FRONT VIEW - AT BENT NOS. 1 & 4

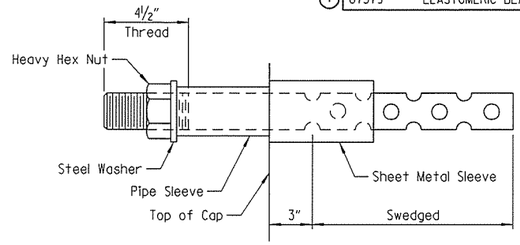

ANCHOR BOLT DETAIL

NOTE:
Anchor bolts may be cast in place or drilled and grouted into place. If anchor bolts are to be cast in place, the galvanized sheet metal sleeves will not be required.

If anchor bolts are to be drilled and grouted in place, the galvanized sheet metal sleeves shall be cast in place as shown. Sleeves shall be dry packed with styrofoam, urethane foam or approved equal prior to pouring of concrete. After pouring of the cap and prior to erection of structural steel, the dry pack shall be removed and holes for the anchor bolts shall be accurately drilled into the masonry. Bolts placed in drilled holes shall be accurately set and fixed using a QPL approved epoxy or non-shrink grout that completely fills the holes. Galvanized sheet metal sleeves will not be paid for directly but will be considered subsidiary to the item "STRUCTURAL STEEL IN PLATE GIRDER SPANS (M270, GR. 50W)".

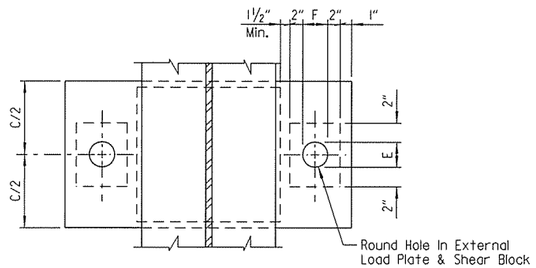

PLAN VIEW - AT BENT NOS. 2 & 3

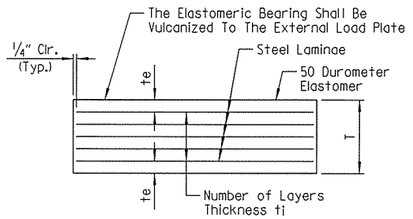

t_e = Thickness Of Elastomer Cover On Top And Bottom Of Pad
t_i = Thickness Of Elastomer Between Steel Laminae
N = Number Of Elastomer Layers Of Thickness t_i

ELASTOMERIC BEARING

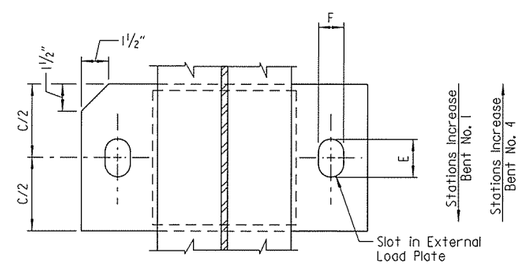

PLAN VIEW - AT BENT NOS. 1 & 4

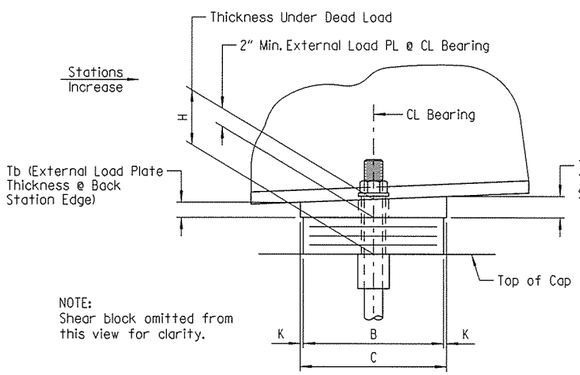

NOTE:
Shear block omitted from this view for clarity.

SIDE VIEW - AT BENT NOS. 2 & 3

NOTES:
The direction of the bevel of the external load plate may not be accurately depicted with respect to Ta and Tb values shown in "TABLE OF FABRICATOR VARIABLES".

Unless otherwise approved by the Engineer, welding of the external load plate at expansion bearings to the girder will be allowed only when: 1) the approximate average air temperature during the 24 hour period immediately preceding welding is between 40°F and 80°F; and 2) the slots in the external load plate are positioned to center on the anchor bolts; and 3) no horizontal deformation of the elastomeric pad is evident. If welding at other temperatures is required, the Engineer will provide adjustment data.

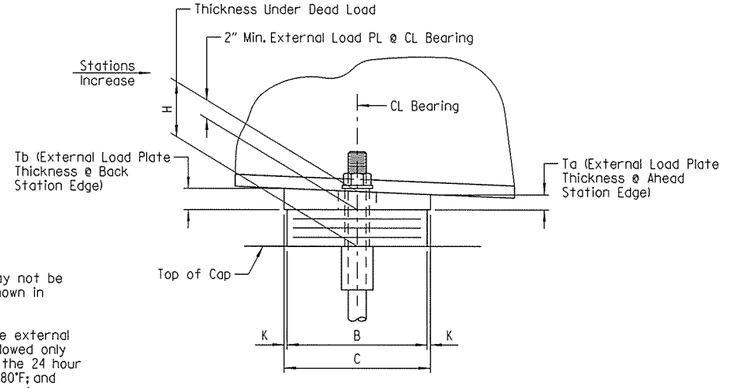

SIDE VIEW - AT BENT NOS. 1 & 4

GENERAL NOTES

Elastomeric bearings shall conform to Section 808 and shall be paid for at the unit price bid for "ELASTOMERIC BEARINGS."

External load plates and shear blocks shall conform to AASHTO M270, Grade 50W. Pipe sleeves shall be ASTM A53, Grade B, and shall be galvanized to conform to AASHTO M232, Class C or ASTM B695, Class 50.

External load plates and shear blocks shall be completely fabricated (including bevel, bolt holes and all shop welding) and shall be cleaned before vulcanizing to the elastomeric bearing. The surfaces in contact with the elastomeric bearing shall be cleaned in accordance with Subsection 808.03. Other surfaces shall be blast cleaned in accordance with Subsection 807.84(e) for unpainted weathering steel.

Anchor bolts, washers and nuts shall conform to Subsection 807.07. The anchor bolt grade of steel shall be as specified in the "TABLE OF FABRICATOR VARIABLES". Indentations shall be circular with rounded bottoms and staggered as shown in the details.

Pipe sleeves, anchor bolts, washers and nuts shall be paid for at the unit price bid for "STRUCTURAL STEEL IN PLATE GIRDER SPANS (M270, GR. 50W)". External load plates and shear blocks will not be measured or paid for separately but will be included in the unit price bid for "ELASTOMERIC BEARINGS".

Bearings shall be seated in accordance with Subsection 808.08. This work and materials are considered subsidiary to the item "ELASTOMERIC BEARINGS" and will not be paid for directly.

TABLE OF FABRICATOR VARIABLES

Bridge No.	Location		Bearing Type	No. Of Bearings Each Bent	* Maximum Design Load (Kips)	Elastomeric Pad								External Load Plate									Anchor Bolt				
	Bent No.	Girder No.				G	H	A	B	N	t_i	t_e	No. & Thickness Of Steel Laminae	T	C	D	E	F	J	K	M	T_a	T_b	Anchor Bolt (Dia. x L)	Anchor Bolt Grade	Pipe Sleeve Size (Dia. x L)	Sheet Metal Sleeve Size (Dia. x L)	Steel Washer Size (O.D.)
07379	1	All	Exp.	4	197	13 3/16"	9 13/16"	24"	10"	12	1/2"	1/4"	13 @ 12 Ga.	7 7/8"	11"	37"	7 3/4"	3 3/4"	-	1/2"	15"	2.17"	1.83"	2 1/2" x 41"	55	3" x 10 1/16"	4" x 8"	4 1/2"
	2	All	Fixed	4	797	8 13/16"	5 3/16"	24"	18"	5	1/2"	1/4"	6 @ 12 Ga.	3 5/8"	19"	43 1/4"	3 1/8"	3 1/8"	3"	1/2"	17 1/16"	2.13"	1.87"	2" x 31"	55	2 1/2" x 5 13/16"	4" x 8"	3 3/4"
	3	All	Fixed	4	797	8 13/16"	5 3/16"	24"	18"	5	1/2"	1/4"	6 @ 12 Ga.	3 5/8"	19"	43 1/4"	3 1/8"	3 1/8"	3"	1/2"	17 1/16"	1.88"	2.12"	2" x 31"	55	2 1/2" x 5 13/16"	4" x 8"	3 3/4"
	4	All	Exp.	4	197	13 3/16"	9 13/16"	24"	10"	12	1/2"	1/4"	13 @ 12 Ga.	7 7/8"	11"	37"	8"	3 3/4"	-	1/2"	15"	1.84"	2.16"	2 1/2" x 41"	55	3" x 10 1/16"	4" x 6"	4 1/2"

* Maximum Design Load = LRFD Service I Limit State

STATE OF ARKANSAS
LICENSED PROFESSIONAL ENGINEER
No. 15902
PRESTON C. CAMPBELL
BRIDGE ENGINEER

DETAILS OF ELASTOMERIC BEARINGS HWY. 112 TO NB I-49 OVER NB I-49 TO HWY. 71B

ROUTE SEC.

ARKANSAS STATE HIGHWAY COMMISSION

LITTLE ROCK, ARK.

DRAWN BY: PCC DATE: JULY 2015 FILENAME: BBB0414X2_EI.dgn
CHECKED BY: ABH DATE: AUG. 2015 SCALE: AS SHOWN
DESIGNED BY: PCC DATE: JULY 2015

BRIDGE NO. 07379 DRAWING NO. 58168

jeskinner 3/20/2016 3:35:20 PM
WORKSPACE: AHTD Bridge
L:\2014\140770T - I-540 Widening & Interchange Improvement\Drawings\I540-I12RMP-S318-B6.dgn
REVISED DATE:

DATE REVISED	DATE FILMED	DATE REVISED	DATE FILMED	FED. ROAD DIST. NO.	STATE	FED. AID PROJ. NO.	SHEET NO.	TOTAL SHEETS
				6	ARK.			
				JOB NO.		BB0414	446	886
				(1) A7380		LAYOUT		58169

FOR R/W DATA AND GUARDRAIL DETAILS, SEE ROADWAY PLANS

NOTES:
Use Type Special 5 Approach Gutter (W = 12'-0") at left side of Begin Bridge, Type Special 9 Approach Gutter (W = 10'-0") at right side of Begin Bridge, Type Special 7 Approach Gutter (W = 12'-0") at left side of End Bridge and Type Special 11A Approach Gutter (W = 10'-0") at right side of End Bridge. See Dwg. Nos. 58256 - 58259.

Use Type Special 7 Approach Slab at Begin Bridge & Type Special 9 Approach Slab at End Bridge. See Dwg. Nos. 58265 & 58267.

For "GENERAL NOTES", see Dwg. No. 58099.

For "BORING LEGEND" & "N VALUES", see Dwg. No. 58100.

PVI Sta. 326+50.00
Elev. 1260.05
V.C. = 1000.00'

3.00% -2.63%

VERTICAL CURVE DATA

Interstate 49
(Profile Grade 13'-0" Left Of CL Median I-49)

HORIZONTAL CURVE DATA

CL Median I-49
PI = 364+78.03
Δ = 156°24'39" Lt.
D = 5°15'00"
T = 5226.47'
L = 2979.26'
e = 0.100 Ft./Ft.
R = 1091.35'

NOTE:
Elevations shown are along CL Bridge A. Stationing is along CL Median I-49. Stations shown in elevation are determined by a radial projection from CL Bridge A to CL Median I-49. Span lengths, total length of bridge, and CL Joint to beginning and end of bridge dimensions are measured along CL Bridge A, unless noted otherwise.

PLAN

ELEVATION

(1) Measured From a Radial Line To CL Joint For Bent Nos. 1A & 3 And To CL Bent For Bent No. 2A

(2) Top Of Deck At CL Bridge A To Low Steel = 10'-2⅛"

(3) Top Of Deck At CL Bridge A & CL Bent To Low Side Top Of Cap = 10'-9⅜"

(4) Minimum Vertical Clearance

NOTE:
Wing pile at the west side of Bent No. 3 not shown for clarity. Length of wing pile is 51'.

LAYOUT OF BRIDGE A
INTERSTATE 49
OVER HIGHWAY 71B
PORTER RD. - HWY. 112/71B
WIDENING & INTCHNG. IMPVTS. (S)
WASHINGTON COUNTY

ROUTE 49 SEC. 28

ARKANSAS STATE HIGHWAY COMMISSION

LITTLE ROCK, ARK.

STATE OF ARKANSAS
LICENSED PROFESSIONAL ENGINEER
No. 14498
3-20-16
ADAM B. HALL
BRIDGE ENGINEER

DRAWN BY: JES DATE: FEB. 2014 FILENAME: BBB0414A3_LI.dgn
CHECKED BY: RLW DATE: AUG. 2014 SCALE: 1" = 20'-0"
DESIGNED BY: JES DATE: FEB. 2014
BRIDGE NO. A7380 DRAWING NO. 58169

jeskinner 3/20/2016 3:35:22 PM
WORKSPACE: AHTD Bridge
L:\2016\16I707 - I-540 Widening & Interchange Improvement\Drawings\I540-HWY71B-SI01-L0.dgn
REVISED DATE:

DATE REVISED	DATE FILMED	DATE REVISED	DATE FILMED	FED. ROAD DIST. NO.	STATE	FED. AID PROJ. NO.	SHEET NO.	TOTAL SHEETS
				6	ARK.			
				JOB NO.		BB0414	447	886
				(1) B7380		LAYOUT		58170

FOR R/W DATA AND GUARDRAIL DETAILS, SEE ROADWAY PLANS

NOTES:
Use Type Special 10 Approach Gutter (W = 12'-0") at left side of Begin Bridge, Type Special 6 Approach Gutter (W = 10'-0") at right side of Begin Bridge, Type Special 11B Approach Gutter (W = 12'-0") at left side of End Bridge and Type Special 8 Approach Gutter (W = 10'-0") at right side of End Bridge. See Dwg. Nos. 58256 - 58259.

Use Type Special 8 Approach Slab at Begin Bridge & Type Special 10 Approach Slab at End Bridge. See Dwg. Nos. 58266 & 58268.

For "GENERAL NOTES", see Dwg. No. 58099.

For "BORING LEGEND" & "N VALUES", see Dwg. No. 58100.

PVI Sta. 326+50.00
Elev. 1258.05
V.C. = 1000.00'
3.00% -2.63%

VERTICAL CURVE DATA

Interstate 49
(Profile Grade 13'-0" Right Of CL Median I-49)

PLAN

HORIZONTAL CURVE DATA

CL Median I-49
PI = 364+78.03
Δ = 156°24'39" Lt.
D = 5°15'00"
T = 5226.47'
L = 2979.26'
e = 0.100 Ft./Ft.
R = 1091.35'

NOTE:
Elevations shown are along CL Bridge B. Stationing is along CL Median I-49. Stations shown in elevation are determined by a radial projection from CL Bridge B to CL Median I-49. Span lengths, total length of bridge, and CL Joint to beginning and end of bridge dimensions are measured along CL Bridge B, unless noted otherwise.

ELEVATION

(1) Measured From a Radial Line To CL Joint For Bent Nos. 1B & 3 And To CL Bent For Bent No. 2B

(2) Top Of Deck At CL Bridge B To Low Steel = 9'-1"

(3) Top Of Deck At CL Bridge B & CL Bent To Low Side Top Of Cap = 9'-5⅞"

(4) Minimum Vertical Clearance

STATE OF ARKANSAS ★★★ LICENSED PROFESSIONAL ENGINEER ★★★ No. 14498 3-20-16 ADAM B. HALL
BRIDGE ENGINEER

LAYOUT OF BRIDGE B
INTERSTATE 49
OVER HIGHWAY 71B
PORTER RD. - HWY. 112/71B
WIDENING & INTCHNG. IMPVTS. (S)
WASHINGTON COUNTY

ROUTE 49 SEC. 28

ARKANSAS STATE HIGHWAY COMMISSION
LITTLE ROCK, ARK.

DRAWN BY: JES DATE: FEB. 2014 FILENAME: BBB0414B3_L2.dgn
CHECKED BY: RLW DATE: AUG. 2014 SCALE: 1" = 20'-0"
DESIGNED BY: JES DATE: FEB. 2014
BRIDGE NO. B7380 DRAWING NO. 58170

jaskinner 3/20/2016 3:35:22 PM
WORKSPACE: AHTD Bridge
L:\2016\16017017 I-540 Widening & Interchange Improvement\Drawings\I540-HWY71B-S102-L0.dgn
REVISED DATE:

DATE REVISED	DATE FILMED	DATE REVISED	DATE FILMED	FED. ROAD DIST. NO.	STATE	FED. AID PROJ. NO.	SHEET NO.	TOTAL SHEETS
				6	ARK.			
				JOB NO.		BB0414	448	886
				(1) A7380 & B7380		LAYOUT		58171

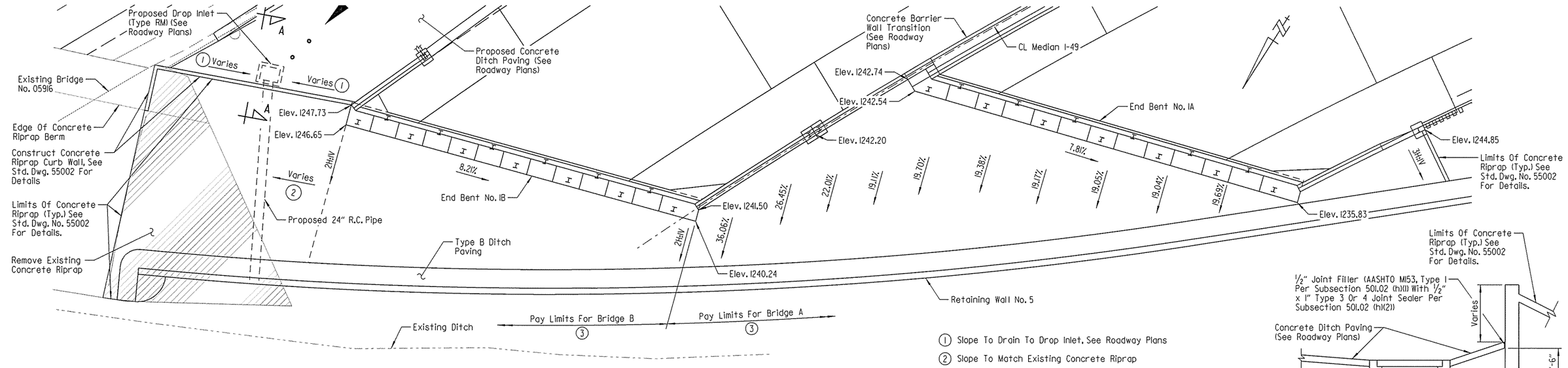

LOCATION SKETCH - CONCRETE RIRAP AT BEGIN BRIDGE

Scale: 1/32 " = 1'-0"

(1) Slope To Drain To Drop Inlet, See Roadway Plans

(2) Slope To Match Existing Concrete Riprap

(3) Pay Limits for Concrete Riprap and Texture Coating Finish applied to Concrete Riprap

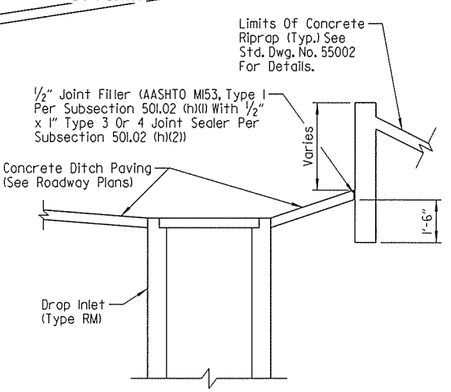

SECTION A-A

No Scale

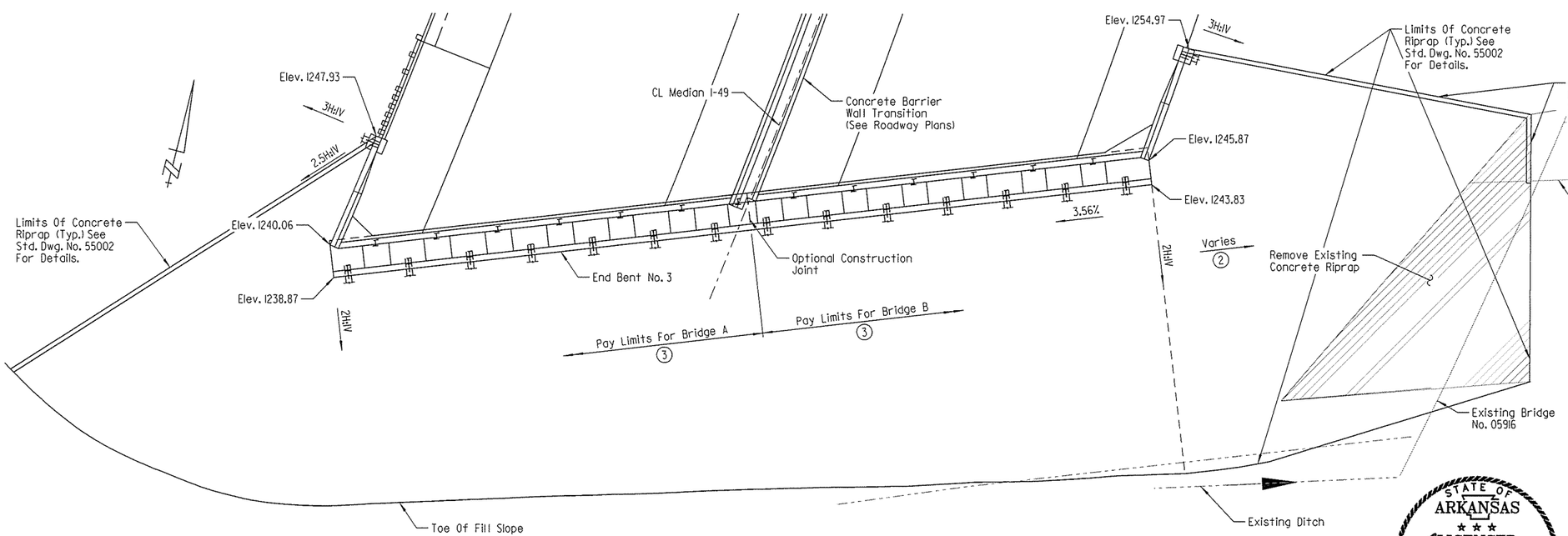

LOCATION SKETCH - CONCRETE RIPRAP AT END BRIDGE

Scale: 1/32 " = 1'-0"

NOTE:
All elevations shown are for top of concrete riprap.

STATE OF ARKANSAS
LICENSED PROFESSIONAL ENGINEER
No. 14498
3-20-16
ADAM B. HALL
BRIDGE ENGINEER

LAYOUT OF BRIDGE
INTERSTATE 49
OVER HIGHWAY 71B
PORTER RD. - HWY. 112/71B
WIDENING & INTCHNG. IMPVTS. (S)
WASHINGTON COUNTY

ROUTE 49 SEC. 28

ARKANSAS STATE HIGHWAY COMMISSION

LITTLE ROCK, ARK.

DRAWN BY: JES DATE: NOV. 2015 FILENAME: BBB0414M3_L3.dgn
CHECKED BY: ABH DATE: DEC. 2015 SCALE: AS SHOWN
DESIGNED BY: JES DATE: NOV. 2015

BRIDGE NO. A7380 & B7380 DRAWING NO. 58171

JasKinner 3/20/2016 3:35:23 PM
WORKSPACE: AHTD_Bridge
L:\ROW\MOT707 - I-540 Widening & Interchange Improvement\Drawings\I540-HWY71B-SH03-L0.dgn
REVISED DATE:

DATE REVISED	DATE FILMED	DATE REVISED	DATE FILMED	FED. ROAD DIST. NO.	STATE	FED. AID PROJ. NO.	SHEET NO.	TOTAL SHEETS
				6	ARK.			
				JOB NO.		BB0414	449	886
				(1) A7380		END BENT DETAILS		58172

(1) Wings and rails shall be constructed on arcs concentric to CL Bridge A

(2) Measures along CL Bridge A

(3) 2'-2" Min. Lap - #5 Bars
4'-6" Min. Lap - #8 Bars

(4) Measured Along Gutterline (Bridge A)

(5) Measured Along Gutterline (Bridge B)

(6) For correct bar marks and bar placement, see "SECTION D-D" on Dwg. No. 58175.

(7) Slope ½"/Ft.

(8) B507 Placed As Shown w/ B501 & B502

(9) 3-B507 @ 8½" O.C.

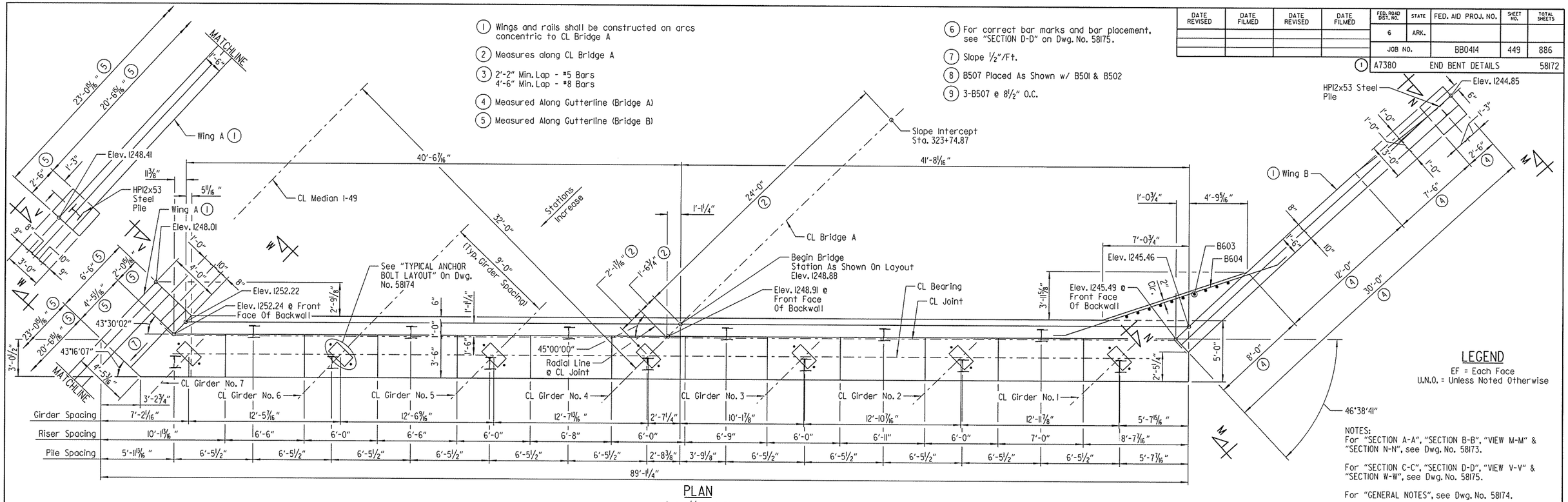

PLAN
Scale: ¼" = 1'-0"

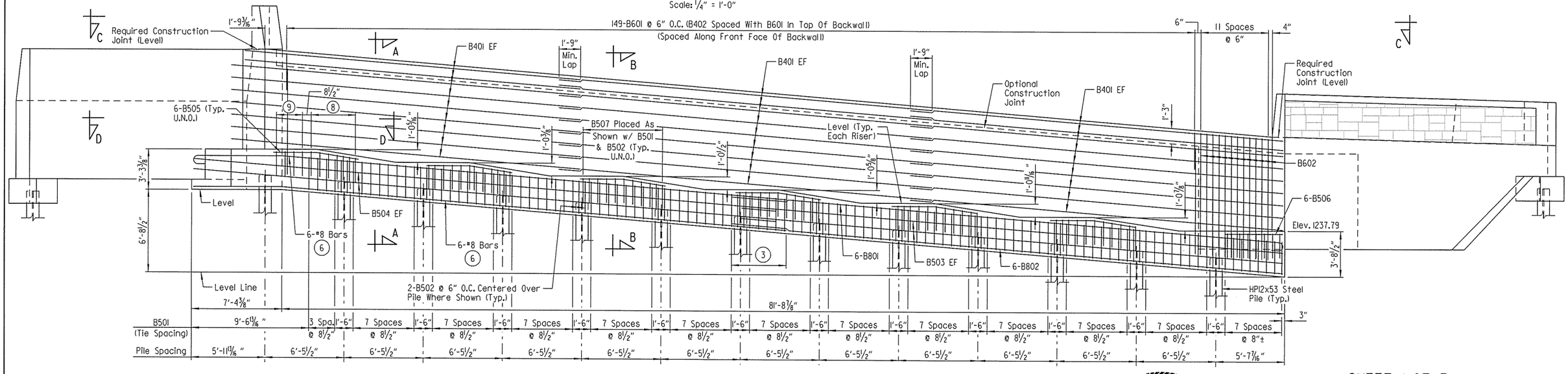

NOTE:
B508 thru B516 bars not shown in "ELEVATION" for clarity. See "SECTION D-D" on Dwg. No. 58175.

ELEVATION
(Looking Back)
Scale: ¼" = 1'-0"

LEGEND
EF = Each Face
U.N.O. = Unless Noted Otherwise

NOTES:
For "SECTION A-A", "SECTION B-B", "VIEW M-M" & "SECTION N-N", see Dwg. No. 58173.

For "SECTION C-C", "SECTION D-D", "VIEW V-V" & "SECTION W-W", see Dwg. No. 58175.

For "GENERAL NOTES", see Dwg. No. 58174.

STATE OF ARKANSAS
LICENSED PROFESSIONAL ENGINEER
No. 16458
4-22-16
JOEL E. SKINNER
BRIDGE ENGINEER

SHEET 1 OF 5
DETAILS OF END BENT NO. 1A
BRIDGE A
I-49 OVER HWY. 71B
ROUTE SEC.
ARKANSAS STATE HIGHWAY COMMISSION
LITTLE ROCK, ARK.

DRAWN BY: CWT DATE: AUG. 2015 FILENAME: BBB0414A3_A1.dgn
CHECKED BY: ABH DATE: OCT. 2015 SCALE: AS SHOWN
DESIGNED BY: JES DATE: AUG. 2015
BRIDGE NO. A7380 DRAWING NO. 58172

abhall 4/22/2016 10:20:00 AM
WORKSPACE_AHTD Bridge
L:\2008\080707 - I-540 Widening & Interchange Improvement\Drawings\540-HWY71B-S201-AB.dgn
REVISED DATE:

DATE REVISED	DATE FILMED	DATE REVISED	DATE FILMED	FED. ROAD DIST. NO.	STATE	FED. AID PROJ. NO.	SHEET NO.	TOTAL SHEETS
				6	ARK.			
				JOB NO.		BB0414	450	886
				(1) A7380		END BENT DETAILS		58173

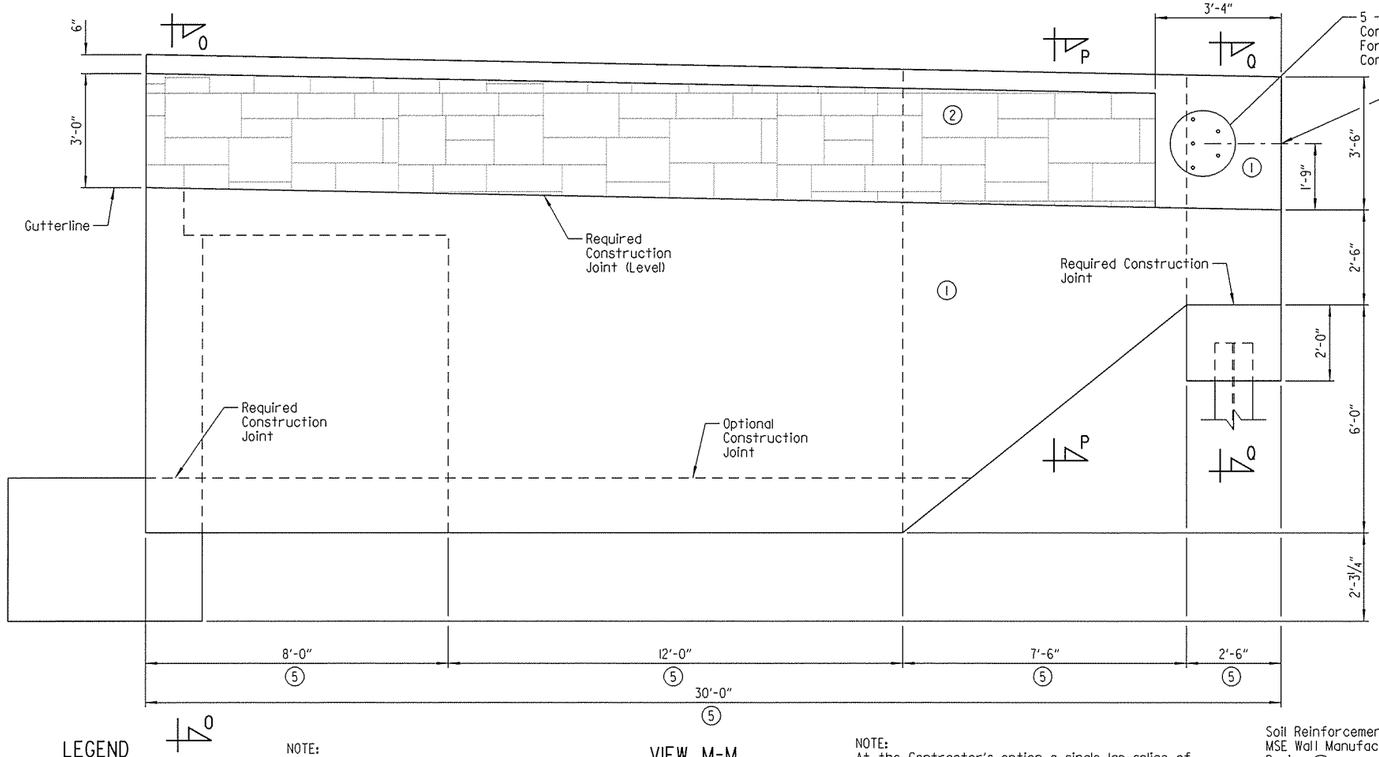

LEGEND

EF = Each Face
FF = Front Face
BF = Back Face
U.N.O. = Unless Noted Otherwise

NOTE:
A Class 3 Textured Coating Finish shall be applied to bridge surfaces as specified in SP JOB NO. BB0414 "TEXTURED COATING FINISH" and in accordance with Subsection 802.19.

VIEW M-M

Scale: ½" = 1'-0"

NOTE:
At the Contractor's option, a single lap splice of 3'-6" (min.) may be used on bars W701 thru W710. Payment will be based on the weight of the bars shown in the plans.

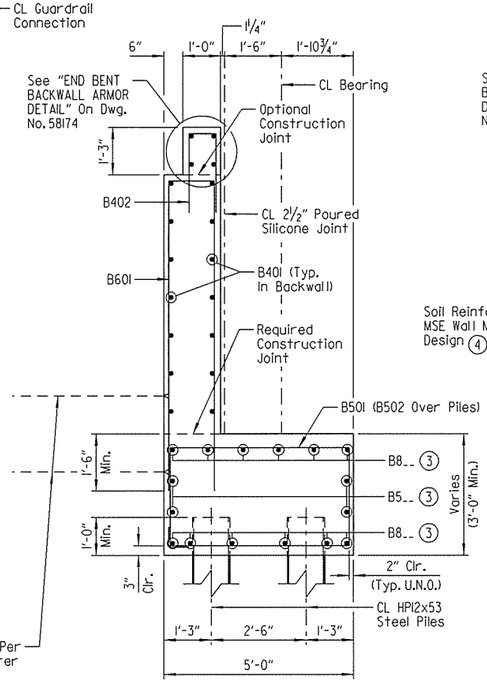

SECTION A-A

Scale: ½" = 1'-0"

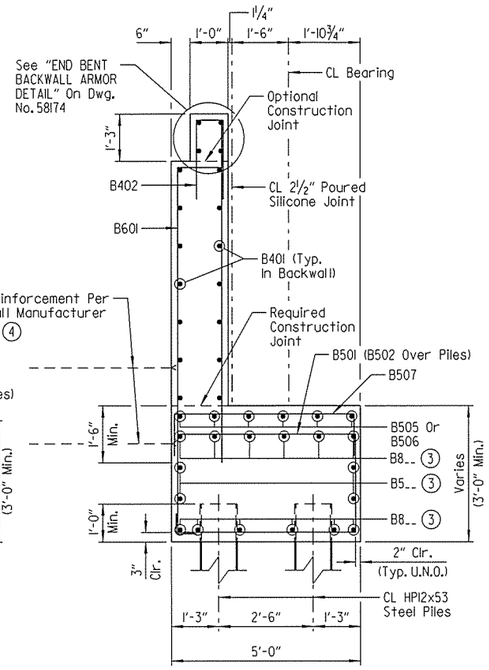

SECTION B-B

Scale: ½" = 1'-0"

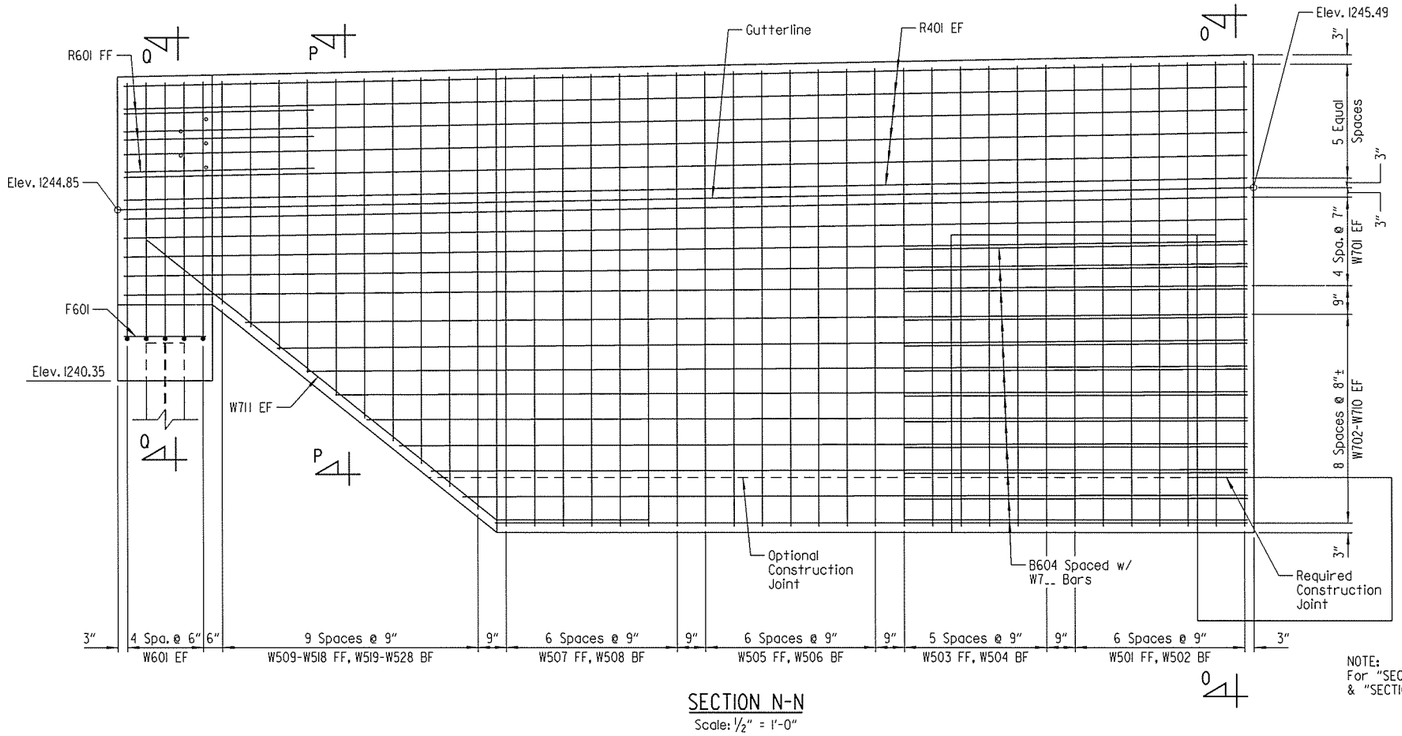

SECTION N-N

Scale: ½" = 1'-0"

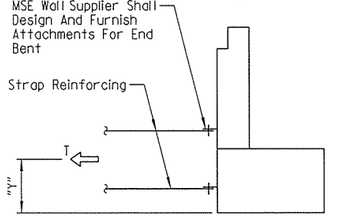

END BENT STRAP DETAIL

No Scale

T = Resultant Force required to be resisted by strap reinforcing.

Y = Centroid of strap reinforcing.

LIMIT STATE	T	Y
	Kips/Ft	Ft
Service	5.8	3.0
Strength	8.5	3.0

NOTE:
For "SECTION 0-0", "SECTION P-P" & "SECTION 0-0", see Dwg. No. 58174 .

(1) Class 3 Textured Coating Finish (Color = Brown, Color Chip No. 33578)

(2) "Ashlar Stone" Form Liner & Class 3 Textured Coating Finish (Color = Brown, Color Chip No. 30219)

Form liner shall be a max. depth of 2" to provide a min. clearance of 1½" to parapet reinforcing. See SP JOB NO. BB0414 "ARCHITECTURAL FINISH".

(3) For correct bar marks, see "ELEVATION" on Dwg. No. 58172 .

(4) Soil reinforcement shall be attached at the back of End Bent. Type, size and spacing of soil reinforcement shall be designed by the Contractor. The design details and computations shall accompany the wall design submittal for review by the Engineer. Cost shall be subsidiary to item "MSE RETAINING WALL". For additional details, see SP JOB NO. BB0414 "MSE RETAINING WALLS" and Retaining Wall Plans.

(5) Measured Along Gutterline

STATE OF ARKANSAS
LICENSED PROFESSIONAL ENGINEER
No. 16458
3-20-16
JOEL E. SKINNER
BRIDGE ENGINEER

SHEET 2 OF 5
DETAILS OF END BENT NO. 1A
BRIDGE A
I-49 OVER HWY. 71B

ROUTE SEC.

ARKANSAS STATE HIGHWAY COMMISSION
LITTLE ROCK, ARK.

DRAWN BY: CWT DATE: AUG. 2015 FILENAME: BBB0414A3_A2.dgn
CHECKED BY: ABH DATE: OCT. 2015 SCALE: AS SHOWN
DESIGNED BY: JES DATE: AUG. 2015
BRIDGE NO. A7380 DRAWING NO. 58173

jeskinner 3/20/2016 3:35:23 PM
WORKSPACE: AHTD_Bridge
L:\CON\060707 - I-540 Widening & Interchange Improvement\Drawings\I540-HWY71B-S202-AB.dgn
REVISED DATE:

DATE REVISED	DATE FILMED	DATE REVISED	DATE FILMED	FED. ROAD DIST. NO.	STATE	FED. AID PROJ. NO.	SHEET NO.	TOTAL SHEETS
				6	ARK.			
				JOB NO.		BB0414	451	886
				(1)	A7380	END BENT DETAILS		58174

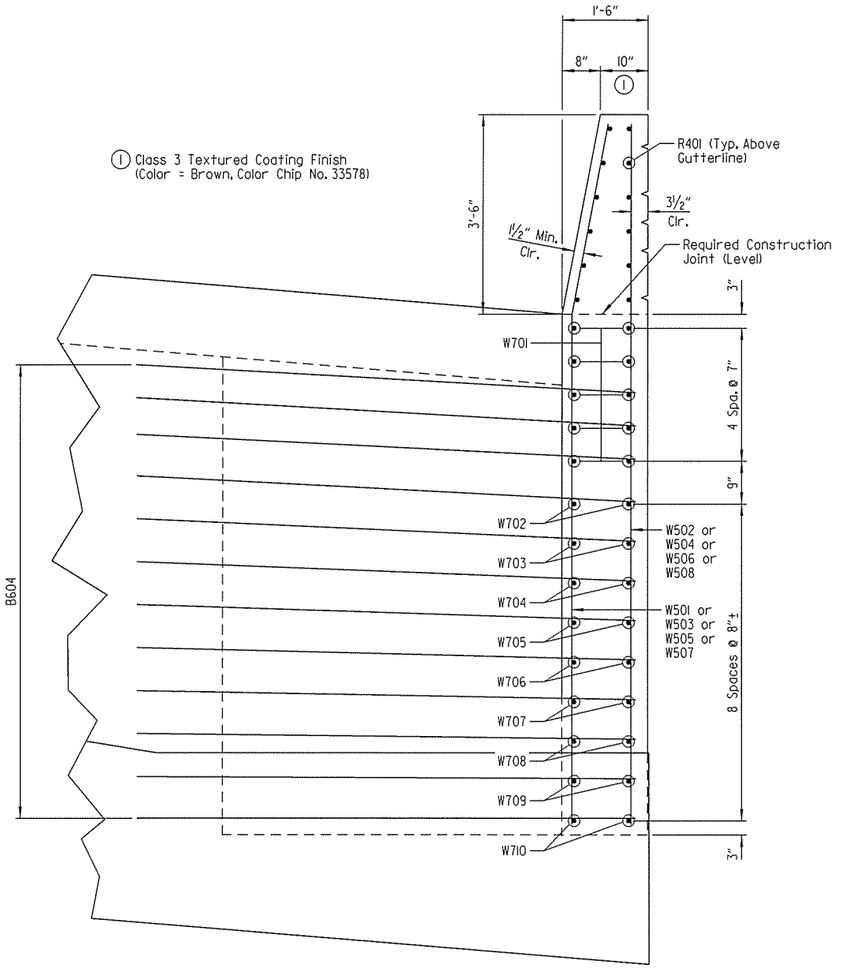

SECTION O-O
Scale: ¾" = 1'-0"

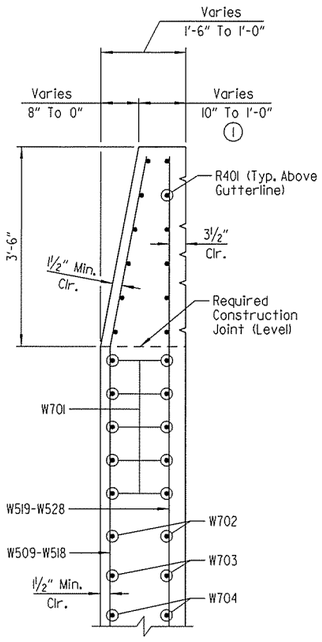

SECTION P-P
Scale: ¾" = 1'-0"

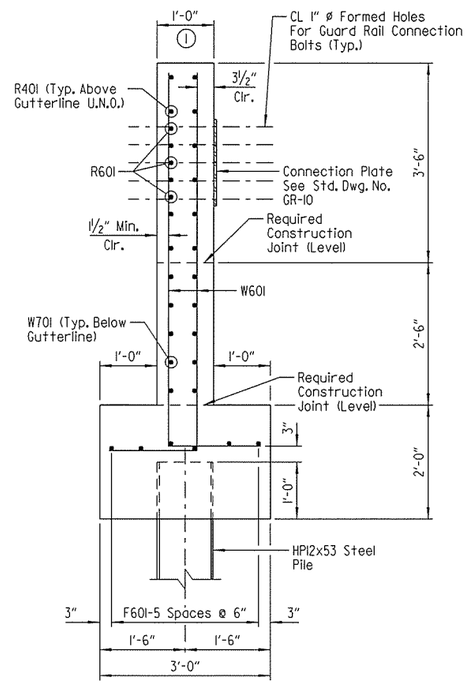

SECTION Q-Q
Scale: ¾" = 1'-0"

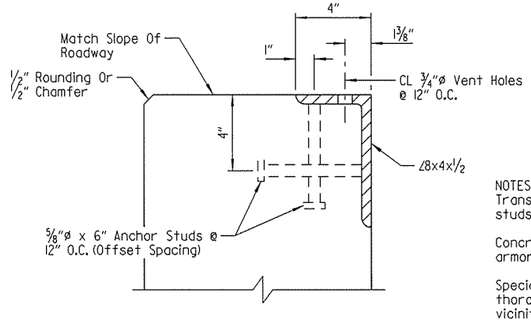

END BENT BACKWALL ARMOR DETAIL
No Scale

NOTES:
Transverse spacing between vertical anchor studs and vent holes shall be 6".

Concrete shall be hand packed under joint armor.

Special care shall taken to properly and thoroughly consolidate the concrete in the vicinity of the expansion joint device in the backwall. See Subsection 802.09(a)(3).

The profile of the backwall angle shall be established based on the vertical curve in conjunction with the skew.

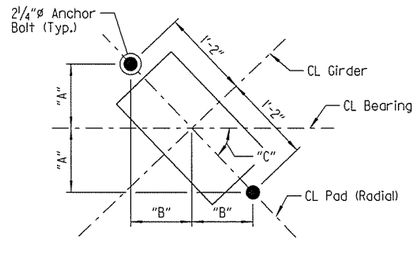

TYPICAL ANCHOR BOLT LAYOUT
Scale: 1" = 1'-0"

TABLE OF VARIABLES			
GIRDER NO.	"A"	"B"	"C"
1	10⅛"	9⅝"	46°23'53"
2	10⅛"	9¾"	45°52'50"
3	9⅝"	9⅞"	45°22'35"
4	9⅞"	9⅞"	44°53'07"
5	9⅞"	10"	44°24'24"
6	9⅞"	10⅛"	43°56'23"
7	9⅝"	10⅜"	43°29'02"

NOTE:
For details of elastomeric bearings, see Dwg. No. 58221.

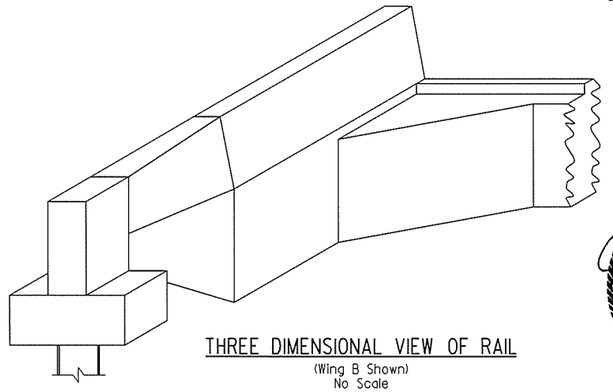

THREE DIMENSIONAL VIEW OF RAIL
(Wing B Shown)
No Scale

STATE OF ARKANSAS
LICENSED PROFESSIONAL ENGINEER
No. 16458
3-20-16
JOEL E. SKINNER
BRIDGE ENGINEER

GENERAL NOTES

All concrete shall be Class "S" with a minimum 28 day compressive strength f'c = 3,500 psi. Concrete shall be poured in the dry, and all exposed corners to be chamfered ¾" unless otherwise noted.

All reinforcing steel shall conform to AASHTO M31 or M322 Type A, Grade 60 (yield strength = 60,000 psi), with mill test reports.

All piles shall be HP12x53 (AASHTO M270, Gr. 50).

No portion of the backwall shall be poured before girders are in place. The portion of the backwall above the optional construction joint at the paving bracket shall not be placed until the deck pour has been made. Refer to "EXPANSION DEVICE INSTALLATION AT END BENTS" note on Dwg. No. 58221.

Finish top of backwall to match the bridge deck.

Structural steel in end bents shall be AASHTO M270, Gr. 50W and shall be paid for as "STRUCTURAL STEEL IN PLATE GIRDER SPANS (AASHTO M270, GR. 50W)".

Top reinforcing bars in cap shall be properly placed to avoid damage or interference with anchor bolts or sheet metal sleeves.

For additional information, see layout.

Class 2 Protective Surface Treatment shall be applied to the top of backwall and roadway face of concrete parapet. Class 3 Textured Coating Finish shall be applied in accordance with SP JOB NO. BB0414 "TEXTURED COATING FINISH" and in accordance with Subsection 802.19. Textured Coating Finish shall not be applied on surfaces where Class 2 Protective Surface Treatment is applied.

SHEET 3 OF 5
DETAILS OF END BENT NO. 1A
BRIDGE A
I-49 OVER HWY. 71B
ROUTE SEC.
ARKANSAS STATE HIGHWAY COMMISSION
LITTLE ROCK, ARK.

DRAWN BY: CWT DATE: AUG. 2015 FILENAME: BBB0414A3_A3.dgn
CHECKED BY: ABH DATE: OCT. 2015 SCALE: AS SHOWN
DESIGNED BY: JES DATE: AUG. 2015
BRIDGE NO. A7380 DRAWING NO. 58174

Jeskinner 3/20/2016 3:35:24 PM
WORKSPACE: AHTD_Bridge
L:\ROW\07707 - I-540 Widening & Interchange Improvement\Drawings\I540-HWY71B-S203-AB.dgn
REVISED DATE:

DATE REVISED	DATE FILMED	DATE REVISED	DATE FILMED	FED. ROAD DIST. NO.	STATE	FED. AID PROJ. NO.	SHEET NO.	TOTAL SHEETS
				6	ARK.			
				JOB NO.		BB0414	452	886
				(1) A7380		END BENT DETAILS		58175

NOTE:
A Class 3 Textured Coating Finish shall be applied to bridge surfaces as specified in SP JOB NO. BB0414 "TEXTURED COATING FINISH" and in accordance with Subsection 802.19.

NOTE:
For "SECTION X-X", "SECTION Y-Y" & "SECTION Z-Z", see Dwg. No. 58176.

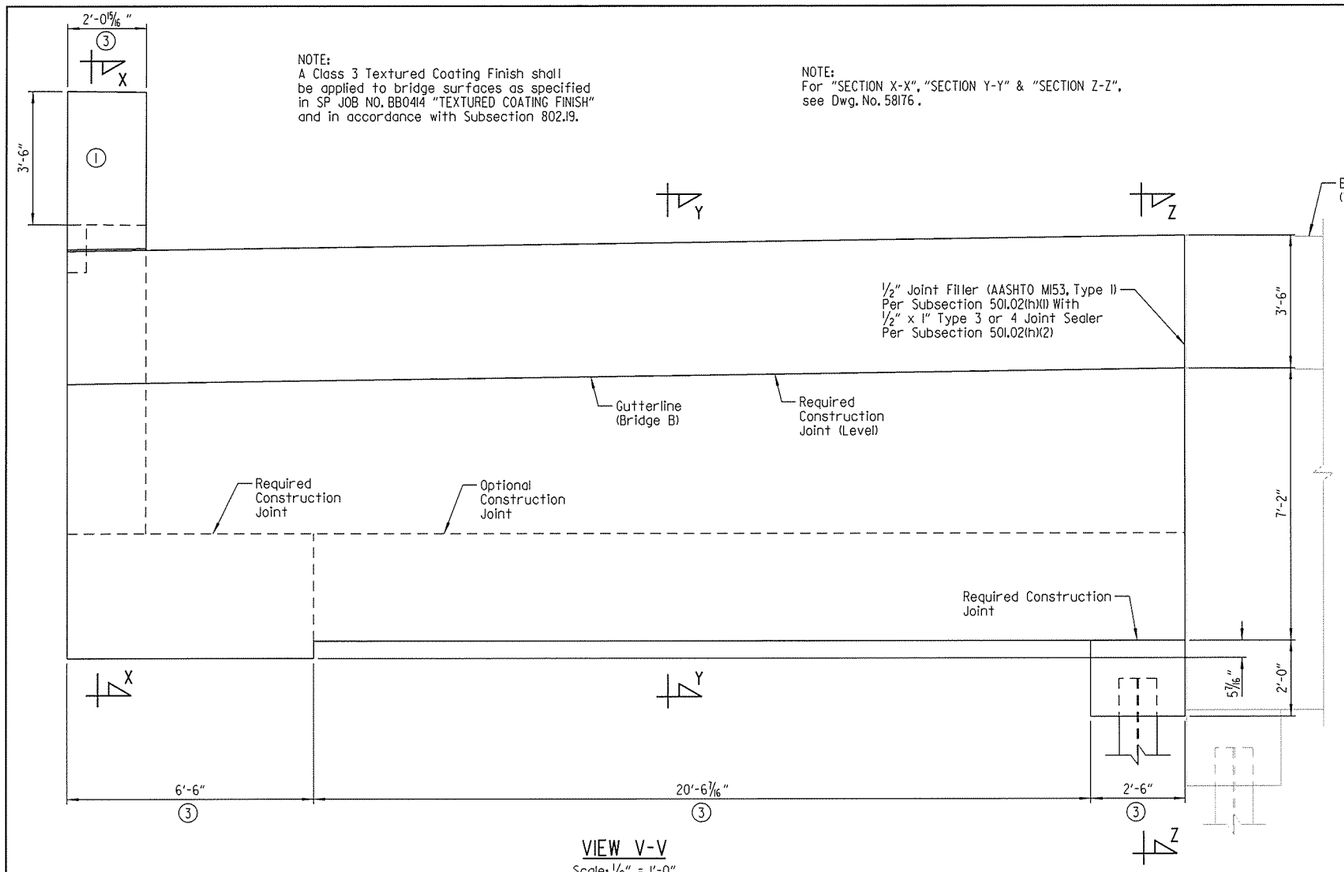

VIEW V-V
Scale: 1/2" = 1'-0"

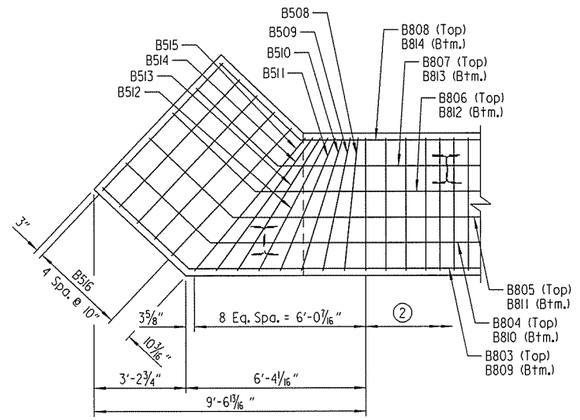

SECTION D-D
Scale: 3/8" = 1'-0"

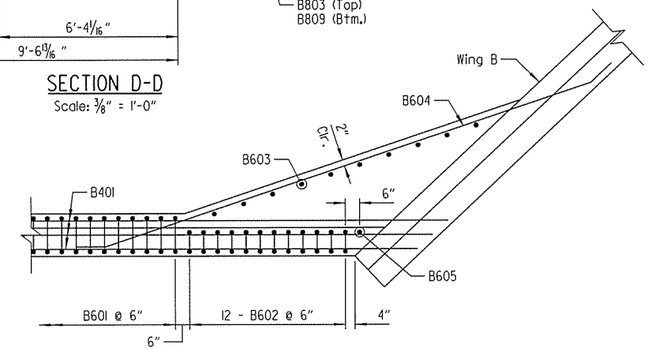

SECTION C-C (WING B)
Scale: 3/8" = 1'-0"

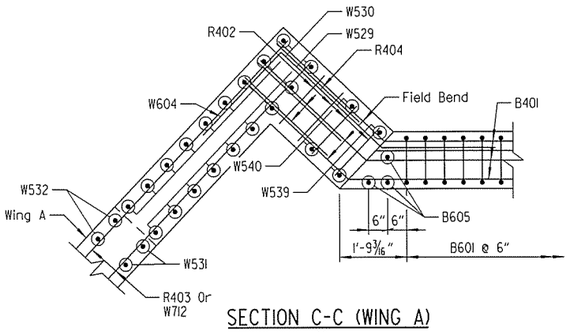

SECTION C-C (WING A)
Scale: 1/2" = 1'-0"

LEGEND

FF = Front Face
BF = Back Face
EF = Each Face

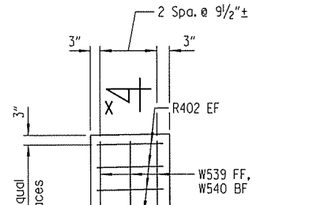

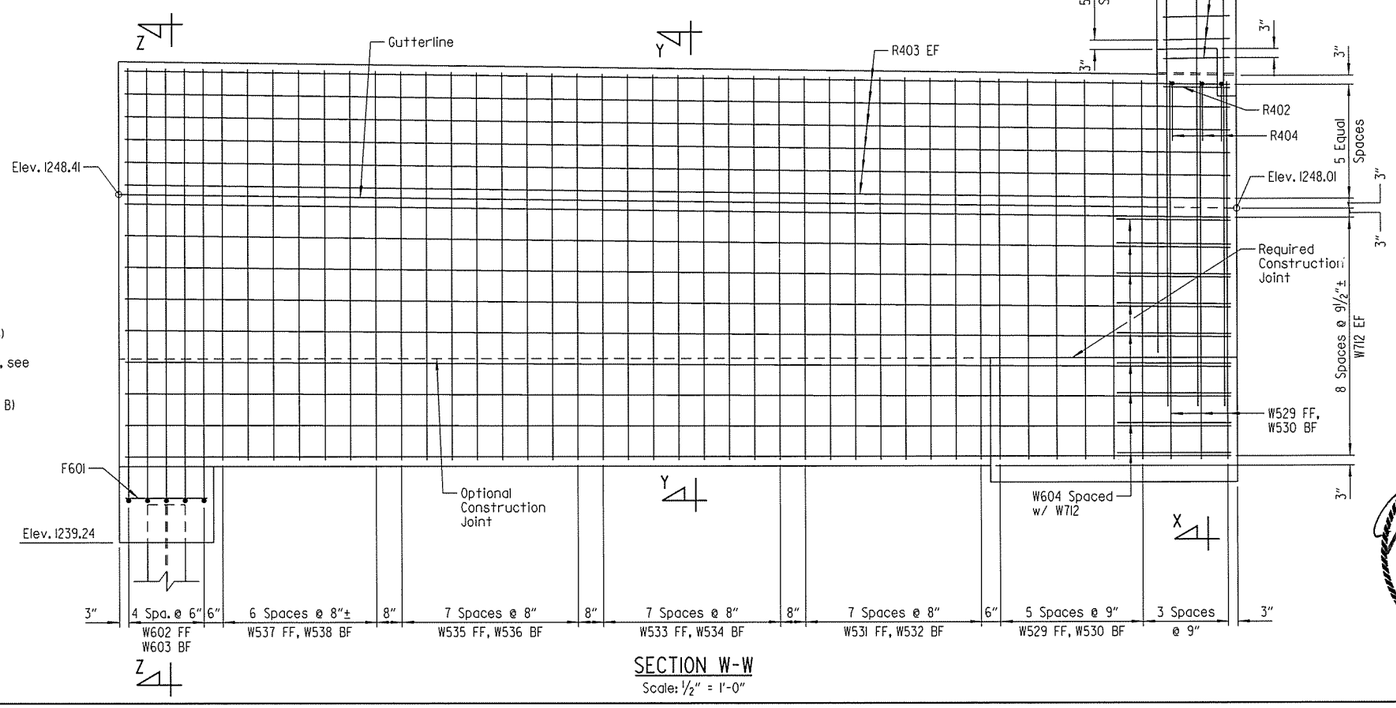

SECTION W-W
Scale: 1/2" = 1'-0"

1. Class 3 Textured Coating Finish (Color = Brown, Color Chip No. 33578)
2. For correct bar marks & spacing, see Dwg. No. 58172.
3. Measured Along Gutterline (Bridge B)

STATE OF ARKANSAS
LICENSED PROFESSIONAL ENGINEER
No. 16458
3-20-16
JOEL E. SKINNER
BRIDGE ENGINEER

SHEET 4 OF 5
DETAILS OF END BENT NO. 1A
BRIDGE A
I-49 OVER HWY. 71B
ROUTE SEC.
ARKANSAS STATE HIGHWAY COMMISSION
LITTLE ROCK, ARK.

DRAWN BY: CWT DATE: AUG. 2015 FILENAME: BBB0414A3_A4.dgn
CHECKED BY: ABH DATE: OCT. 2015 SCALE: AS SHOWN
DESIGNED BY: JES DATE: AUG. 2015
BRIDGE NO. A7380 DRAWING NO. 58175

JesKinner 3/20/2016 3:35:24 PM
WORKSPACE: AHTD Bridge
L:\208\100707 - I-540 Widening & Interchange Improvement\Drawings\I540-HWY71B-S204-AB.dgn
REVISED DATE:

DATE REVISED	DATE FILMED	DATE REVISED	DATE FILMED	FED. ROAD DIST. NO.	STATE	FED. AID PROJ. NO.	SHEET NO.	TOTAL SHEETS
				6	ARK.			
				JOB NO.		BB0414	453	886
				(1) A7380		END BENT DETAILS		58176

BAR LIST

Mark	No. Req'd	Length	"A"	"B"	Pin Dia.
B401	54	30'-6"			Str.
B402	149	4'-8"	2'-1"	8"	2"
B501	100	15'-0"	2'-7"	4'-8"	2½"
B502	24	9'-7½"	2'-7"	4'-8"	2½"
B503	4	45'-11"			Str.
B504	4	45'-11"			3¾"
B505	36	7'-0"			3¾"
B506	6	4'-9"			Str.
B507	74	8'-5½"	2'-0"	4'-8"	2½"
B508	1	15'-1"	2'-7"	4'-8½"	2½"
B509	1	15'-2"	2'-7"	4'-9"	2½"
B510	1	15'-5"	2'-7"	4'-10½"	2½"
B511	1	15'-9"	2'-7"	5'-0½"	2½"
B512	1	10'-2½"	2'-7"	5'-3"	2½"
B513	1	10'-5½"	2'-7"	5'-6"	2½"
B514	1	17'-2"	2'-7"	5'-9"	2½"
B515	1	17'-9"	2'-7"	6'-0½"	2½"
B516	5	17'-10"	2'-7"	6'-1"	2½"
B601	149	18'-0"	8'-7"	1'-2"	4½"
B602	12	20'-0"	9'-10"	8"	4½"
B603	10	7'-6"			Str.
B604	12	20'-4"			4½"
B605	4	9'-10"			Str.
B801	6	48'-3"			6"
B802	6	47'-4"			Str.
B803	1	47'-8"	4'-0½"	38'-9½"	6"
B804	1	47'-8"	3'-3½"	39'-6½"	6"
B805	1	47'-8"	2'-6"	40'-4"	6"
B806	1	47'-8"	1'-8½"	41'-1½"	6"
B807	1	47'-8"	11"	41'-11"	6"
B808	1	47'-8"	1"	42'-9"	6"
B809	1	46'-9"	4'-0½"	38'-9½"	6"
B810	1	46'-9"	3'-3½"	39'-6½"	6"
B811	1	46'-9"	2'-6"	40'-4"	6"
B812	1	46'-9"	1'-8½"	41'-1½"	6"
B813	1	46'-9"	11"	41'-11"	6"
B814	1	46'-9"	1"	42'-9"	6"
F601	12	2'-2"			Str.
R401	12	29'-8"			Str.
R402	16	1'-9"			Str.
R403	12	29'-2"			Str.
R404	3	4'-5"			2"
R601	3	5'-0"			Str.
W501	7	12'-2"	8'-10"		3¾"
W502	7	12'-2"			Str.
W503	6	12'-1"	8'-9"		3¾"
W504	6	12'-1"			Str.
W505	7	11'-11"	8'-7"		3¾"
W506	7	11'-11"			Str.

BAR LIST

Mark	No. Req'd	Length	"A"	"B"	Pin Dia.
W507	7	11'-10"	8'-6"		3¾"
W508	7	11'-10"			Str.
W509 To W518	1 Each	5'-10" To 11'-4"	2'-6" To 8'-0"		3¾"
W519 To W528	1 Each	5'-10" To 11'-4"			Str.
W529	9	9'-11"			Str.
W530	9	9'-11"	6'-7"		3¾"
W531	8	10'-0"			Str.
W532	8	10'-0"	6'-8"		3¾"
W533	8	10'-1"			Str.
W534	8	10'-1"	6'-9"		3¾"
W535	8	10'-2"			Str.
W536	8	10'-2"	6'-10"		3¾"
W537	7	10'-3"			Str.
W538	7	10'-3"	6'-11"		3¾"
W539	3	12'-11"	9'-7"		3¾"
W540	3	12'-11"			Str.

BAR LIST

Mark	No. Req'd	Length	"A"	"B"	Pin Dia.
W601	10	8'-0"	6'-7"	1'-7"	4½"
W602	5	13'-0"	11'-3"	1'-11"	4½"
W603	5	13'-0"			4½"
W604	9	9'-9"			4½"
W701	10	29'-8"			Str.
W702 To W710	2 Each	19'-10" To 26'-6"			Str.
W711	2	15'-3"			5¼"
W712	9	29'-2"			Str.

NOTE:
Dimension of bars are out-to-out.

BAR BENDING DIAGRAMS

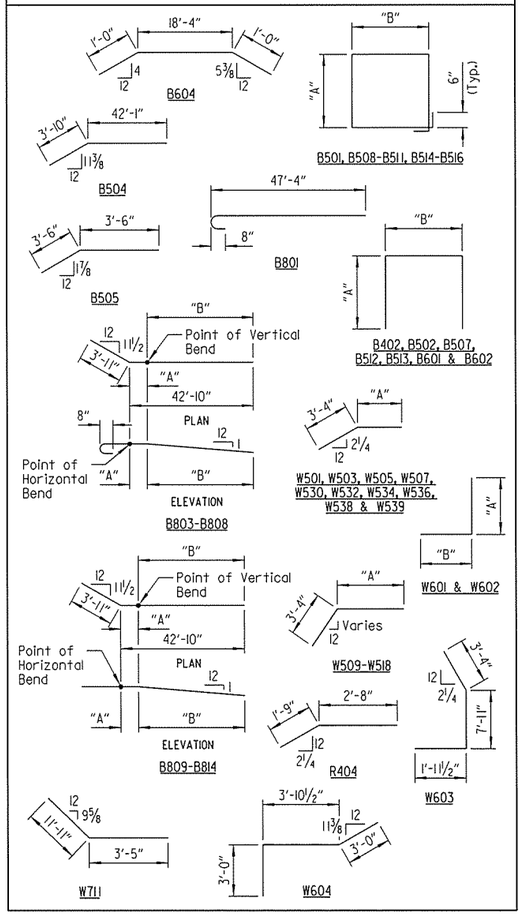

(1) Class 3 Textured Coating Finish (Color = Brown, Color Chip No. 33578)

(2) Soil reinforcement shall be attached at the back of Wing A. Type, size and spacing of soil reinforcement shall be designed by the Contractor. The design details and computations shall accompany the wall design submittal for review by the Engineer. Cost shall be subsidiary to item "MSE RETAINING WALL". For additional details, see SP JOB NO. BB0414 "MSE RETAINING WALLS" and Retaining Wall Plans.

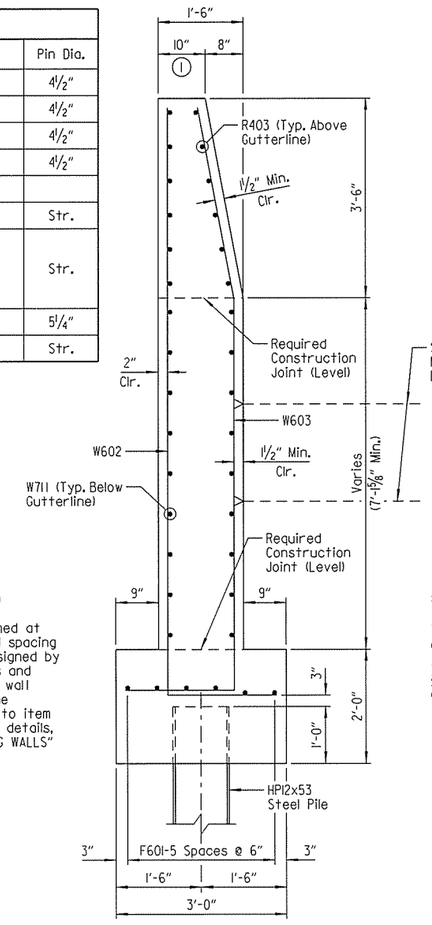

SECTION Z-Z

Scale: ¾" = 1'-0"

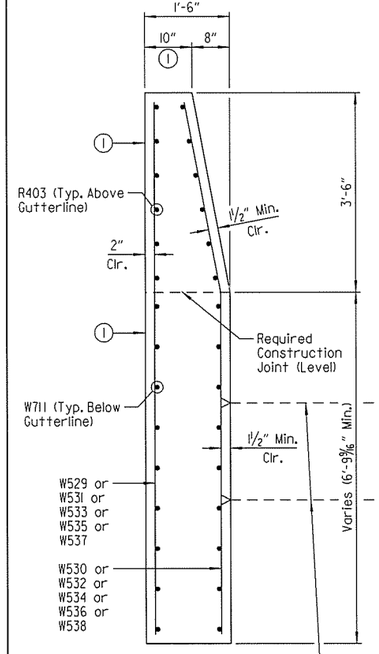

SECTION Y-Y

Scale: ¾" = 1'-0"

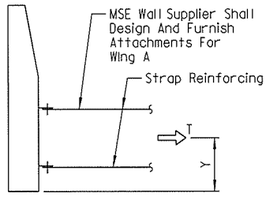

WING A STRAP DETAIL

No Scale

T = Resultant Force required to be resisted by strap reinforcing. Force is per foot along horizontal length of wing.

Y = Centroid of strap reinforcing

LIMIT STATE	T	Y
	Kips/Ft	Ft
Service	2.3	4
Strength	3.7	4
Extreme	2.6	4

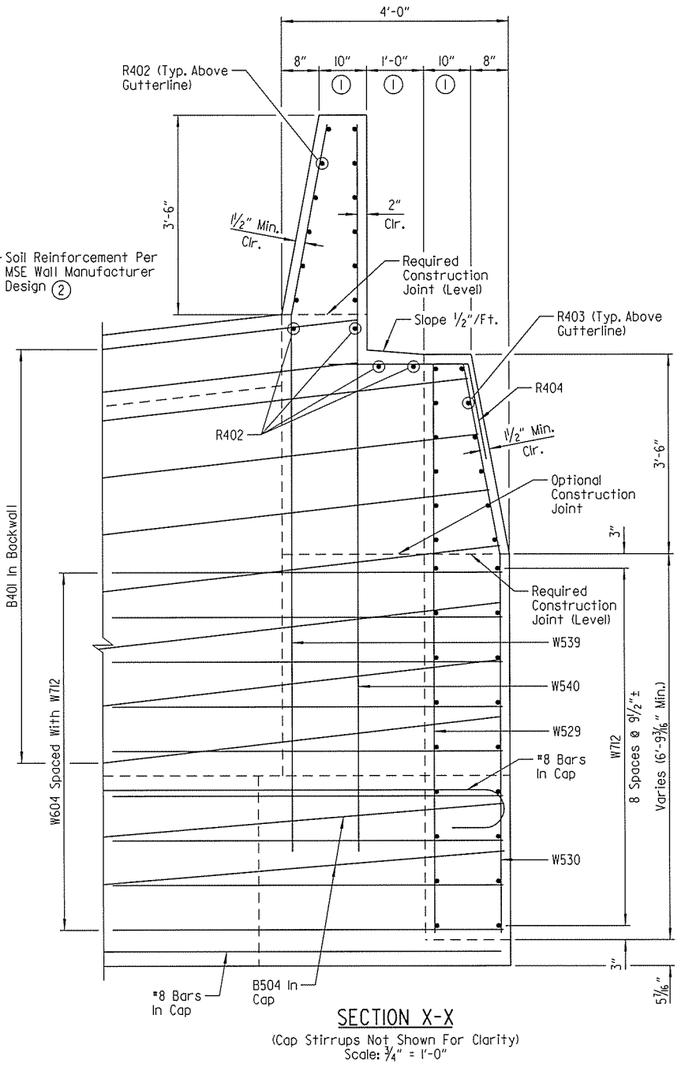

SECTION X-X

(Cap Stirrups Not Shown For Clarity)
Scale: ¾" = 1'-0"

STATE OF ARKANSAS
LICENSED PROFESSIONAL ENGINEER
No. 16458
3-20-16
JOEL E. SKINNER
BRIDGE ENGINEER

SHEET 5 OF 5
DETAILS OF END BENT NO. 1A
BRIDGE A
I-49 OVER HWY. 71B

ROUTE SEC.

ARKANSAS STATE HIGHWAY COMMISSION
LITTLE ROCK, ARK.

DRAWN BY: CWT DATE: AUG. 2015 FILENAME: BBB0414A3_A5.dgn
CHECKED BY: ABH DATE: OCT. 2015 SCALE: AS SHOWN
DESIGNED BY: JES DATE: AUG. 2015

BRIDGE NO. A7380 DRAWING NO. 58176

Jeskinner 3/20/2016 3:35:25 PM
WORKSPACE: AHTD Bridge
L:\2011\011707 - I-540 Widening & Interchange Improvement\Drawings\I540-HWY71B-S205-AB.dgn
REVISED DATE:

DATE REVISED	DATE FILMED	DATE REVISED	DATE FILMED	FED. ROAD DIST. NO.	STATE	FED. AID PROJ. NO.	SHEET NO.	TOTAL SHEETS
				6	ARK.			
				JOB NO.		BB0414	454	886
				(1) A7380 & B7380		END BENT DETAILS		58177

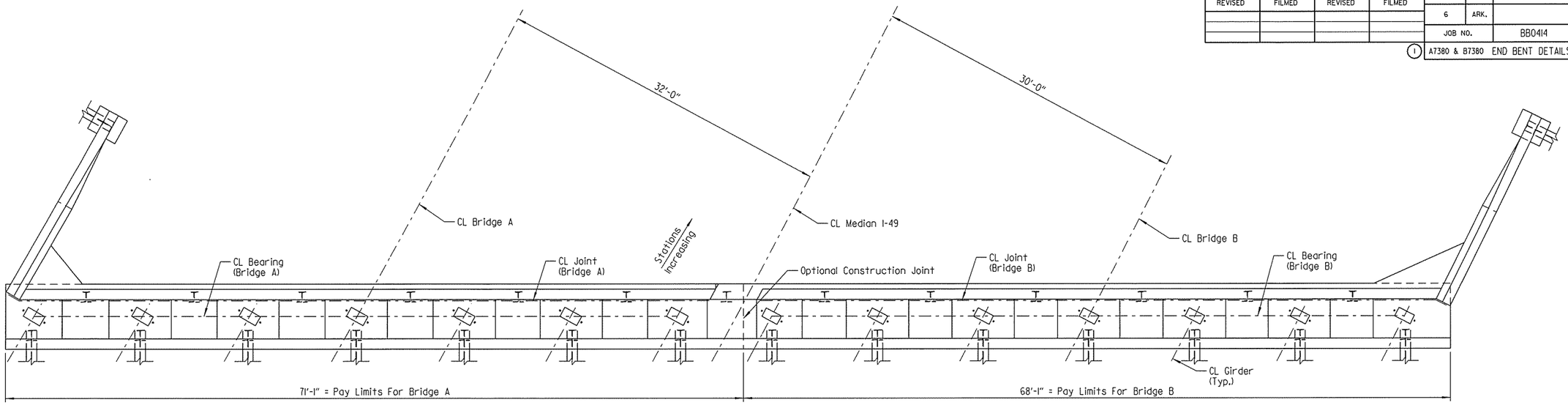

PLAN
Scale: 3/16" = 1'-0"

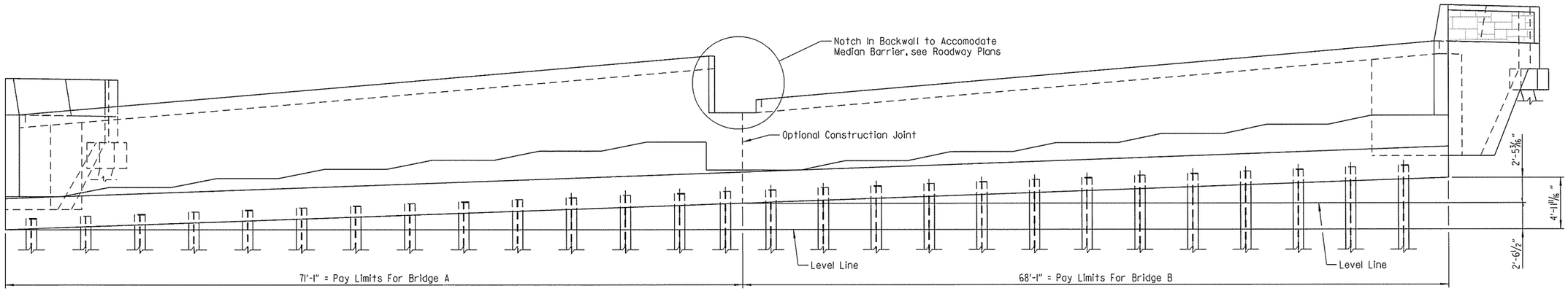

ELEVATION
(Looking Ahead)
Scale: 3/16" = 1'-0"

STATE OF ARKANSAS
LICENSED PROFESSIONAL ENGINEER
No. 16458
3-20-16
JOEL E. SKINNER

BRIDGE ENGINEER

SHEET 1 OF 7
DETAILS OF END BENT NO. 3
I-49 OVER HWY. 71B
ROUTE SEC.
ARKANSAS STATE HIGHWAY COMMISSION
LITTLE ROCK, ARK.

DRAWN BY: CWT DATE: AUG. 2015 FILENAME: BBB0414M3_A6.dgn
CHECKED BY: ABH DATE: OCT. 2015 SCALE: AS SHOWN
DESIGNED BY: JES DATE: AUG. 2015

BRIDGE NO. A7380 & B7380 DRAWING NO. 58177

JaskInner 3/20/2016 3:35:25 PM
WORKSPACE: AHTD Bridge
L:\208\N0I7707 - I-540 Widening & Interchange Improvement\Drawings\I540-HWY71B-S206-A8.dgn
REVISED DATE:

DATE REVISED	DATE FILMED	DATE REVISED	DATE FILMED	FED. ROAD DIST. NO.	STATE	FED. AID PROJ. NO.	SHEET NO.	TOTAL SHEETS
				6	ARK.			
				JOB NO.		BB0414	455	886
				(1)	A7380 & B7380	END BENT DETAILS		58178

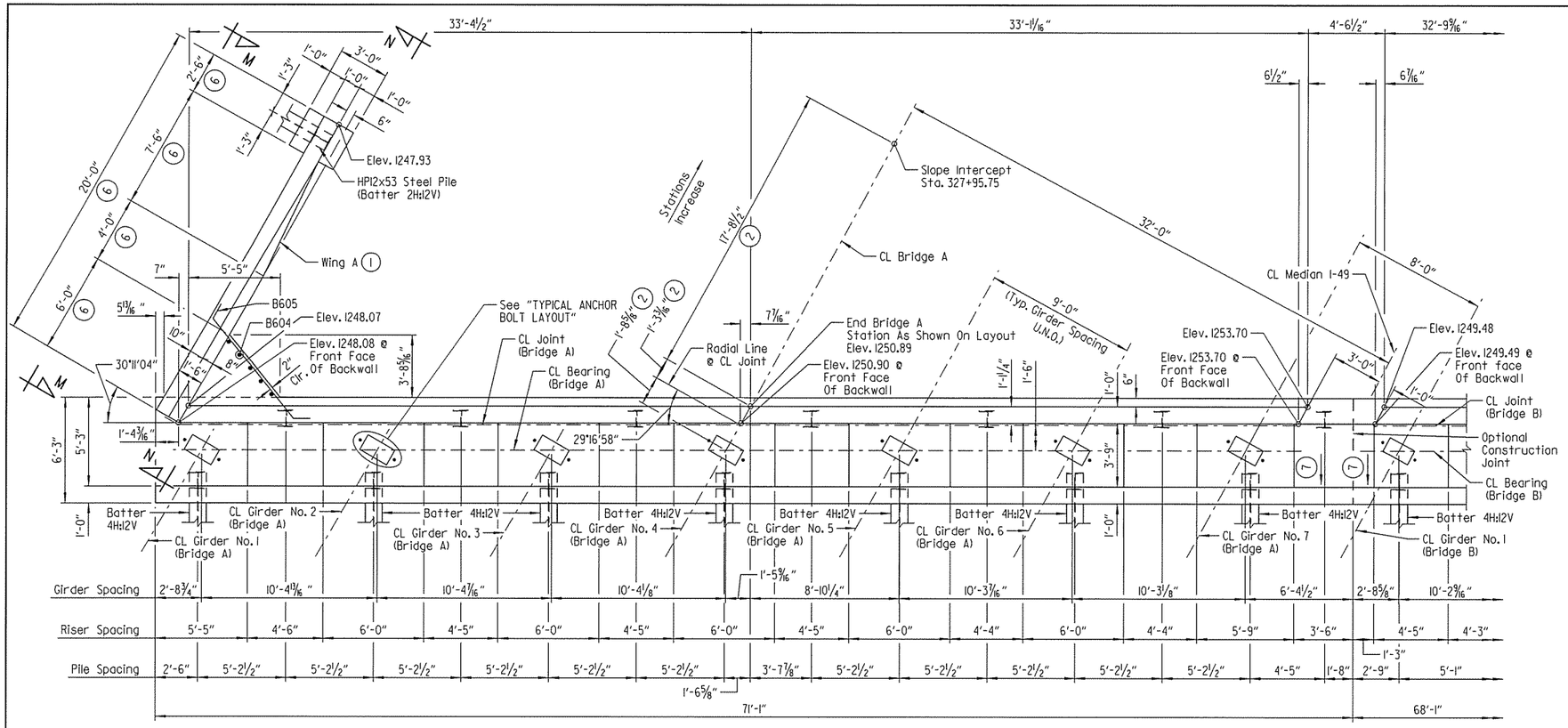

(1) Wing A and rail shall be constructed on arcs concentric to CL Bridge A

(2) Measures along CL Bridge A

(3) 2'-2" Min. Lap - #5 Bars
5'-9" Min. Lap - #9 Bars

(4) 118-B603 @ 6" O.C. (B402 Spaced With B603 In Top Of Backwall) (Spaced Along Front Face Of Backwall)

(5) Place As Shown With B501 & B502

(6) Measured Along Gutterline

(7) Slope ½"/Ft.

PLAN
Scale: ¼" = 1'-0"

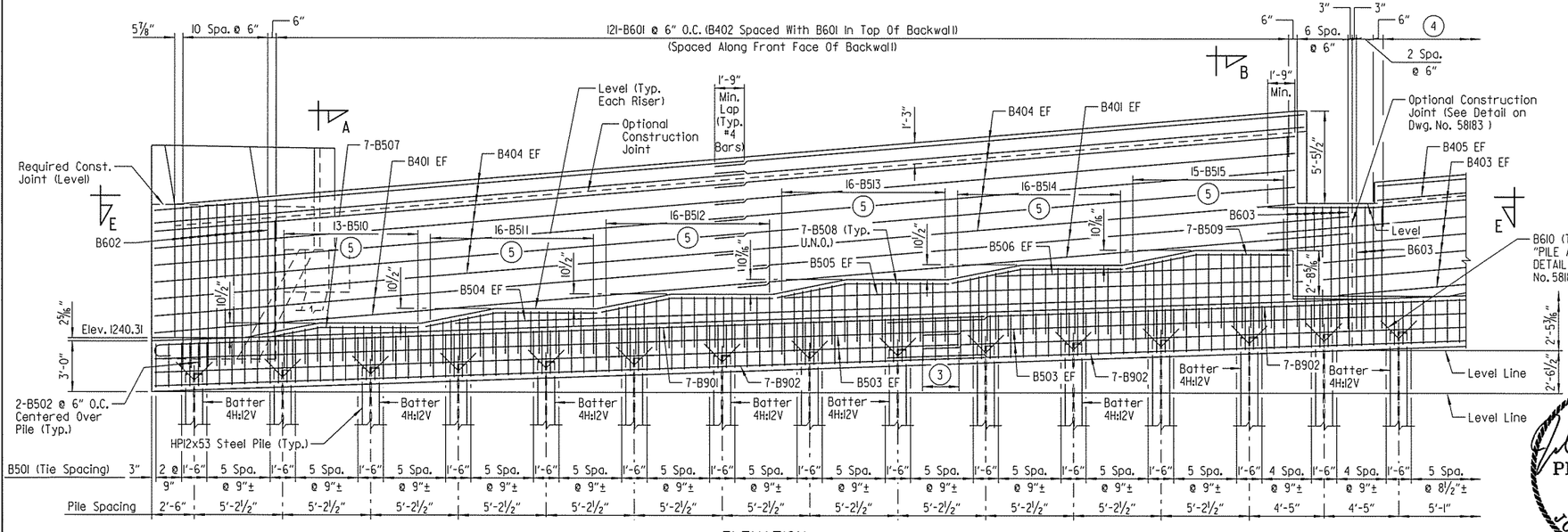

ELEVATION
(Looking Ahead)
Scale: ¼" = 1'-0"

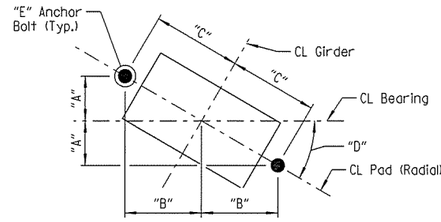

TYPICAL ANCHOR BOLT LAYOUT
Scale: 1" = 1'-0"

TABLE OF VARIABLES

BRIDGE NO.	GIRDER NO.	"A"	"B"	"C"	"D"	"E"
A7380	1	7 1/16"	1'-0 1/8"	1'-2"	30°13'22"	2 1/4"ø
	2	7"	1'-0 1/8"		29°56'05"	
	3	6 15/16"	1'-0 3/16"		29°39'09"	
	4	6 7/8"	1'-0 3/16"		29°22'33"	
	5	6 13/16"	1'-0 1/4"		29°06'16"	
	6	6 3/4"	1'-0 1/4"		28°50'18"	
	7	6 11/16"	1'-0 5/16"		28°34'38"	
B7380	1	6 3/16"	11 7/16"	1'-1"	28°20'58"	2"ø
	2	6 1/8"	11 7/16"		28°05'51"	
	3	6 1/16"	11 1/2"		27°51'01"	
	4	6"	11 1/2"		27°36'27"	
	5	6"	11 9/16"		27°22'09"	
	6	5 15/16"	11 9/16"		27°08'07"	
	7	5 7/8"	11 9/16"		26°54'19"	

NOTES:
For "SECTION A-A", "SECTION B-B" & "SECTION E-E", see Dwg. No. 58180 .

For "VIEW M-M" & "SECTION N-N", see Dwg. No. 58181 .

For "GENERAL NOTES", see Dwg. No. 58179.

LEGEND
U.N.O. = Unless Noted Otherwise
EF = Each Face

STATE OF ARKANSAS
LICENSED PROFESSIONAL ENGINEER
No. 16458
3-20-16
JOEL E. SKINNER
BRIDGE ENGINEER

SHEET 2 OF 7
DETAILS OF END BENT NO. 3
I-49 OVER HWY. 71B
ROUTE SEC.
ARKANSAS STATE HIGHWAY COMMISSION
LITTLE ROCK, ARK.

DRAWN BY: CWT DATE: AUG. 2015 FILENAME: BBB0414M3_A7.dgn
CHECKED BY: ABH DATE: OCT. 2015 SCALE: AS SHOWN
DESIGNED BY: JES DATE: AUG. 2015
BRIDGE NO. A7380 & B7380 DRAWING NO. 58178

Jeskinner 3/20/2016 3:35:26 PM
WORKSPACE: AHTD_Bridge
L:\2015\60170T - I-540 Widening & Interchange Improvement\Drawings\I540-HWY71B-S207-AB.dgn
REVISED DATE:

DATE REVISED	DATE FILMED	DATE REVISED	DATE FILMED	FED. ROAD DIST. NO.	STATE	FED. AID PROJ. NO.	SHEET NO.	TOTAL SHEETS
				6	ARK.			
				JOB NO.		BB0414	456	886
				(1) A7380 & B7380		END BENT DETAILS		58179

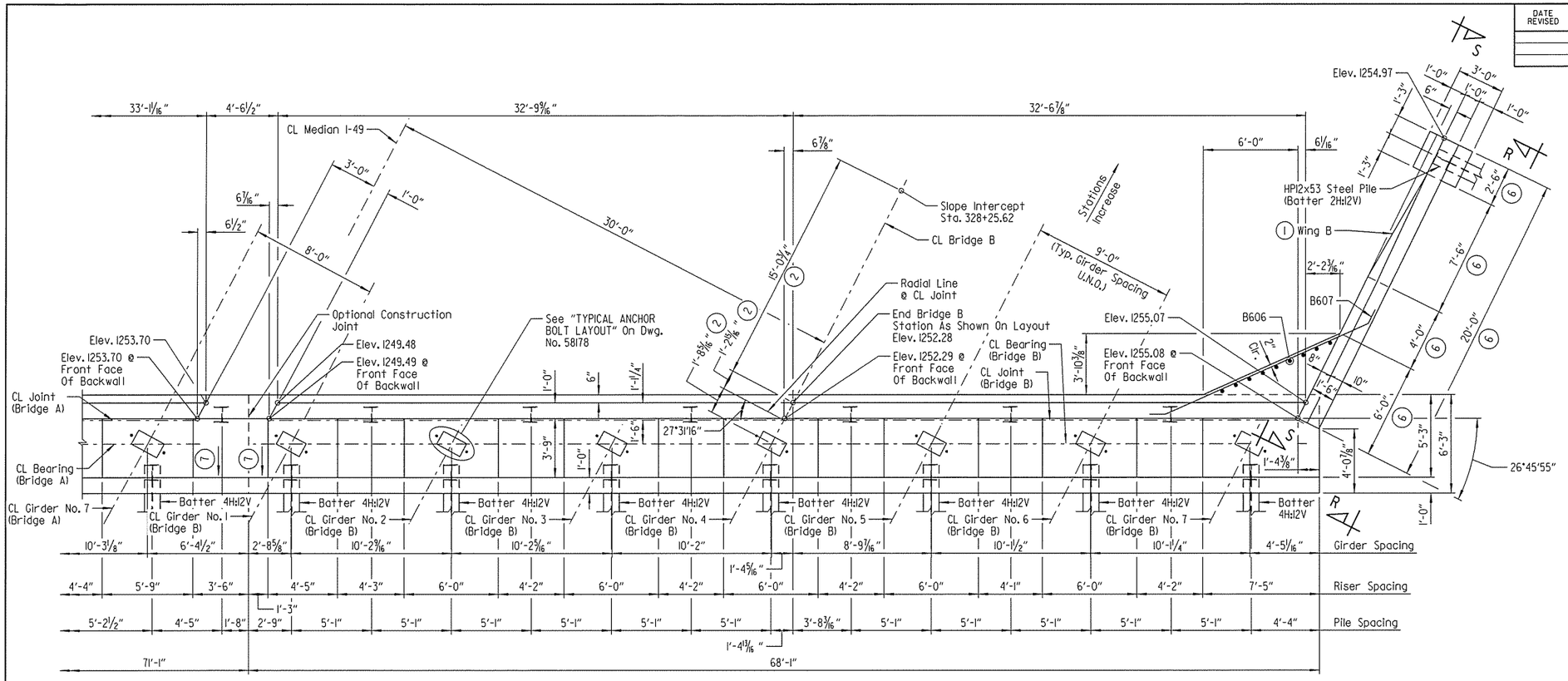

PLAN
Scale: 1/4" = 1'-0"

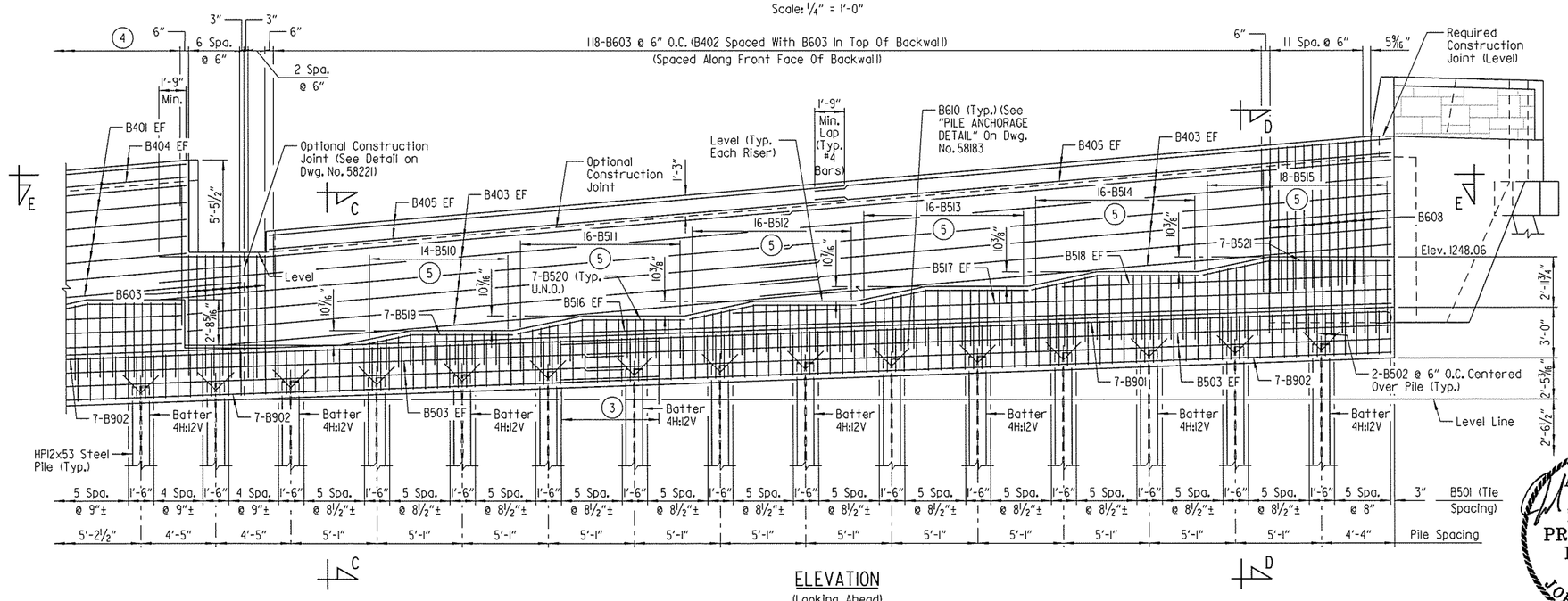

ELEVATION
(Looking Ahead)
Scale: 1/4" = 1'-0"

(1) Wing B and rail shall be constructed on arcs concentric to CL Bridge B

(2) Measures along CL Bridge B

(3) 2'-2" Min. Lap - #5 Bars
5'-9" Min. Lap - #9 Bars

(4) 121-B601 @ 6" O.C. (B402 Spaced With B601 In Top Of Backwall) (Spaced Along Front Face Of Backwall)

(5) Place As Shown With B501 & B502

(6) Measured Along Gutterline

(7) Slope 1/2"/Ft.

NOTES:
For "SECTION C-C", "SECTION D-D", & "SECTION E-E", see Dwg. No. 58180.

For "VIEW R-R" & "SECTION S-S", see Dwg. No. 58182.

GENERAL NOTES

All concrete shall be Class "S" with a minimum 28 day compressive strength f'c = 3,500 psi. Concrete shall be poured in the dry, and all exposed corners to be chamfered 3/4" unless otherwise noted.

All reinforcing steel shall conform to AASHTO M31 or M322 Type A, Grade 60 (yield strength = 60,000 psi), with mill test reports.

All piles shall be HPI2x53 (AASHTO M270, Gr. 50).

No portion of the backwall shall be poured before girders are in place. The portion of the backwall above the optional construction joint at the paving bracket shall not be placed until the deck pour has been made. Refer to "EXPANSION DEVICE INSTALLATION AT END BENTS" note on Dwg. No. 58221.

Finish top of backwall to match the bridge deck.

Structural steel in end bents shall be AASHTO M270, Gr. 50W and shall be paid for as "STRUCTURAL STEEL IN PLATE GIRDER SPANS (AASHTO M270, GR. 50W)".

Top reinforcing bars in cap shall be properly placed to avoid damage or interference with anchor bolts or sheet metal sleeves.

For additional information, see layout.

Class 2 Protective Surface Treatment shall be applied to the top of backwall and roadway face of concrete parapet. Class 3 Textured Coating Finish shall be applied in accordance with SP JOB NO. BB0414 "TEXTURED COATING FINISH" and in accordance with Subsection 802.19. Textured Coating Finish shall not be applied on surfaces where Class 2 Protective Surface Treatment is applied.

LEGEND

U.N.O. = Unless Noted Otherwise
EF = Each Face

STATE OF ARKANSAS
LICENSED PROFESSIONAL ENGINEER
No. 16458
3-20-16
JOEL E. SKINNER
BRIDGE ENGINEER

SHEET 3 OF 7
DETAILS OF END BENT NO. 3
I-49 OVER HWY. 71B

ROUTE SEC.

ARKANSAS STATE HIGHWAY COMMISSION
LITTLE ROCK, ARK.

DRAWN BY: CWT DATE: AUG. 2015 FILENAME: BBB0414M3_A8.dgn
CHECKED BY: ABH DATE: OCT. 2015 SCALE: AS SHOWN
DESIGNED BY: JES DATE: AUG. 2015
BRIDGE NO. A7380 & B7380 DRAWING NO. 58179

Jeskinner 3/20/2016 3:35:30 PM
WORKSPACE: AHTD_Bridge
L:\20IN\001707 - I-540 Widening & Interchange Improvement\Drawings\I540-HWY71B-S208-AB.dgn
REVISED DATE:

DATE REVISED	DATE FILMED	DATE REVISED	DATE FILMED	FED. ROAD DIST. NO.	STATE	FED. AID PROJ. NO.	SHEET NO.	TOTAL SHEETS
				6	ARK.			
				JOB NO.		BB0414	457	886
				(1) A7380 & B7380		END BENT DETAILS		58180

(1) For correct bar marks, see "ELEVATION" on Dwg. Nos. 58178 & 58179.

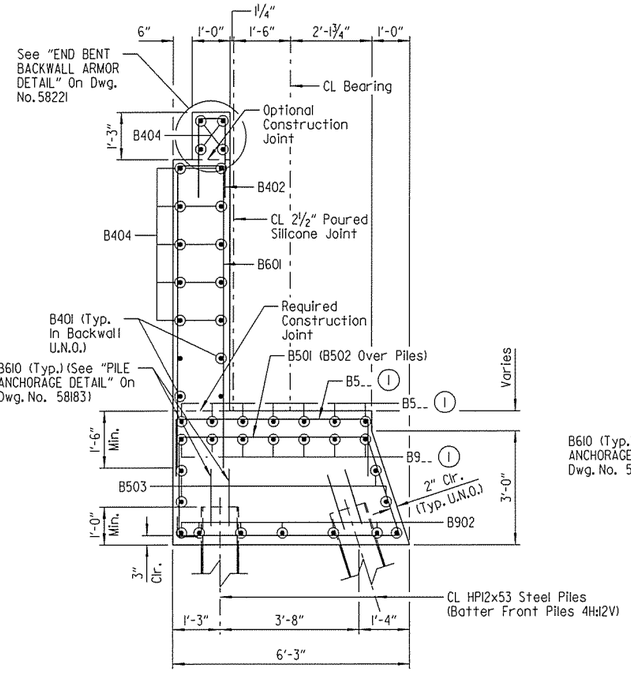

SECTION A-A
Scale: ½" = 1'-0"

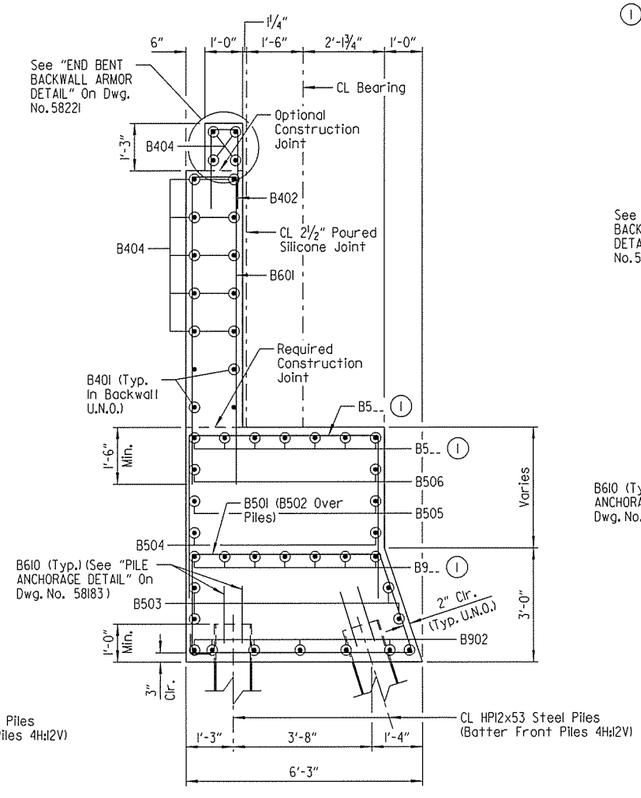

SECTION B-B
Scale: ½" = 1'-0"

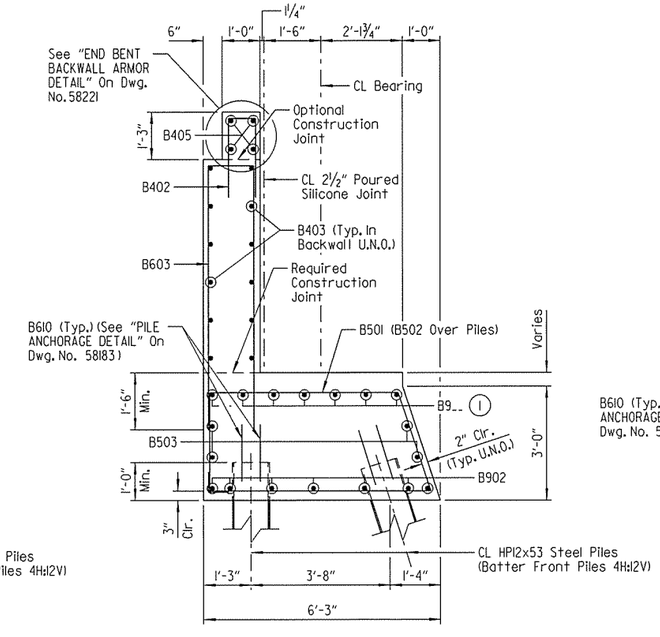

SECTION C-C
Scale: ½" = 1'-0"

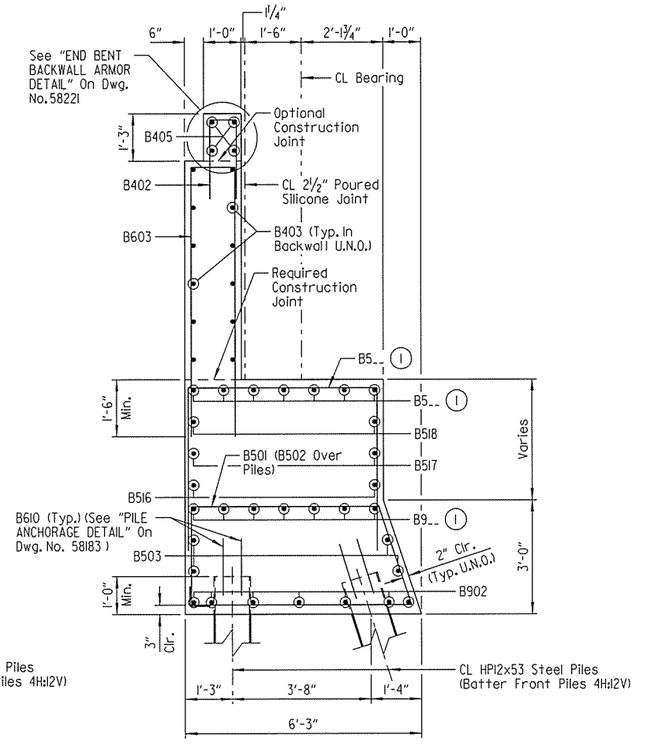

SECTION D-D
Scale: ½" = 1'-0"

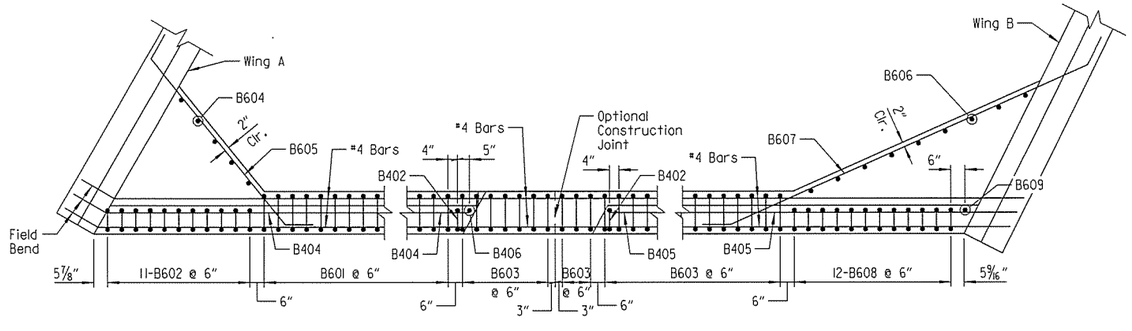

SECTION E-E
Scale: ⅜" = 1'-0"

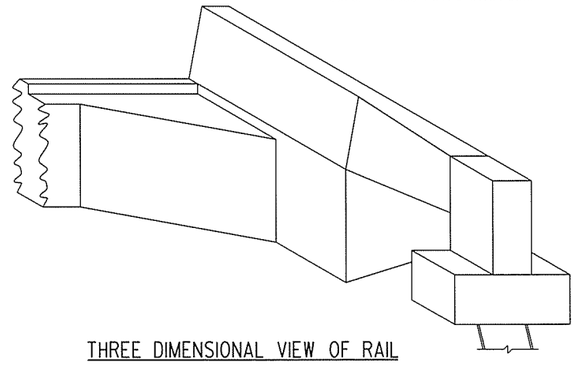

THREE DIMENSIONAL VIEW OF RAIL
No Scale

LEGEND
U.N.O. = Unless Noted Otherwise

STATE OF ARKANSAS
LICENSED PROFESSIONAL ENGINEER
No.16458
3-20-16
JOEL E. SKINNER

BRIDGE ENGINEER

SHEET 4 OF 7
DETAILS OF END BENT NO. 3
I-49 OVER HWY. 71B
ROUTE SEC.
ARKANSAS STATE HIGHWAY COMMISSION
LITTLE ROCK, ARK.

DRAWN BY: CWT DATE: AUG. 2015 FILENAME: BBB0414M3_A9.dgn
CHECKED BY: ABH DATE: NOV. 2015 SCALE: AS SHOWN
DESIGNED BY: JES DATE: AUG. 2015
BRIDGE NO. A7380 & B7380 DRAWING NO. 58180

jeskinner 3/20/2016 3:35:31 PM
WORKSPACE: AHTD Bridge
L:\208\100707 - I-540 Widening & Interchange Improvement\Drawings\I540-HWY71B-S209-AB.dgn
REVISED DATE:

DATE REVISED	DATE FILMED	DATE REVISED	DATE FILMED	FED. ROAD DIST. NO.	STATE	FED. AID PROJ. NO.	SHEET NO.	TOTAL SHEETS
				6	ARK.			
				JOB NO.		BB0414	458	886
				(1) A7380 & B7380		END BENT DETAILS		58181

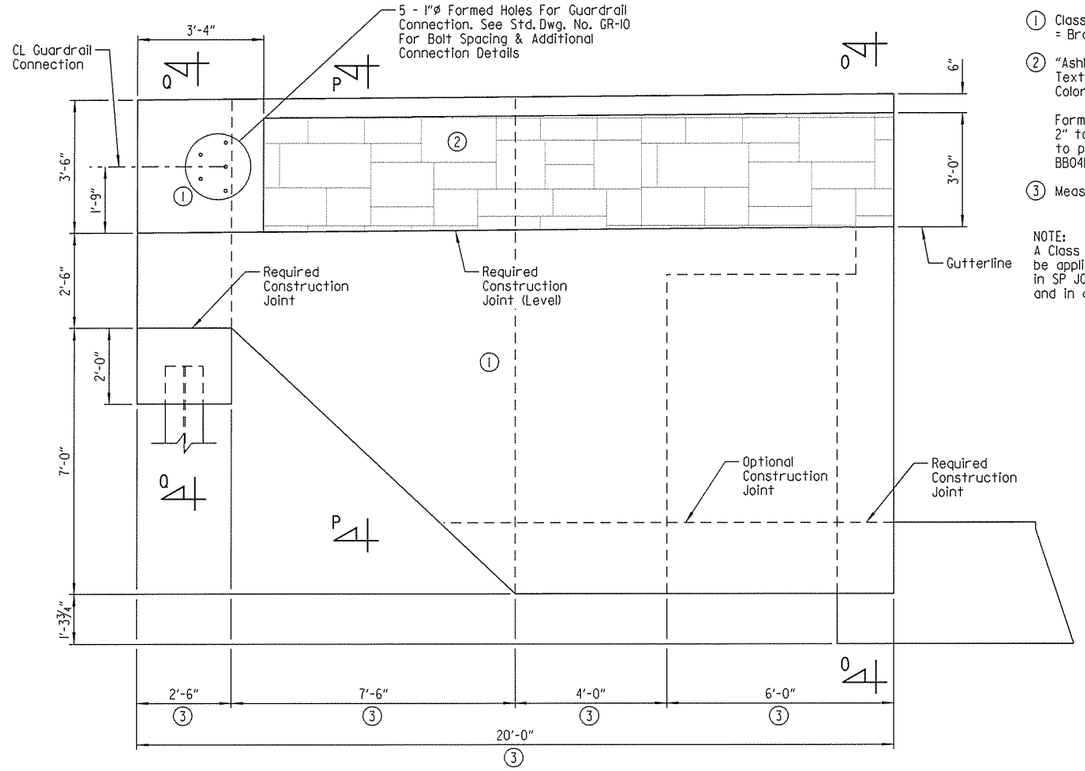

VIEW M-M
Scale: ½" = 1'-0"

(1) Class 3 Textured Coating Finish (Color = Brown, Color Chip No. 33578)

(2) "Ashlar Stone" Form Liner & Class 3 Textured Coating Finish (Color = Brown, Color Chip No. 30219)

Form liner shall be a max. depth of 2" to provide a min. clearance of 1½" to parapet reinforcing. See SP JOB NO. BB0414 "ARCHITECTURAL FINISH".

(3) Measured Along Gutterline

NOTE:
A Class 3 Textured Coating Finish shall be applied to bridge surfaces as specified in SP JOB NO. BB0414 "TEXTURED COATING FINISH" and in accordance with Subsection 802.19.

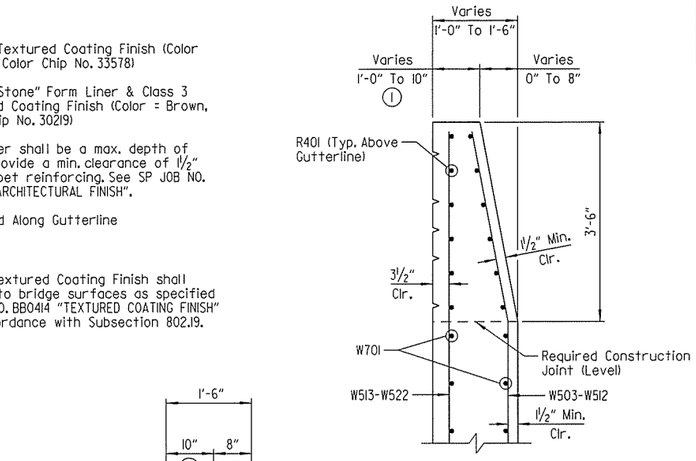

SECTION P-P
Scale: ¾" = 1'-0"

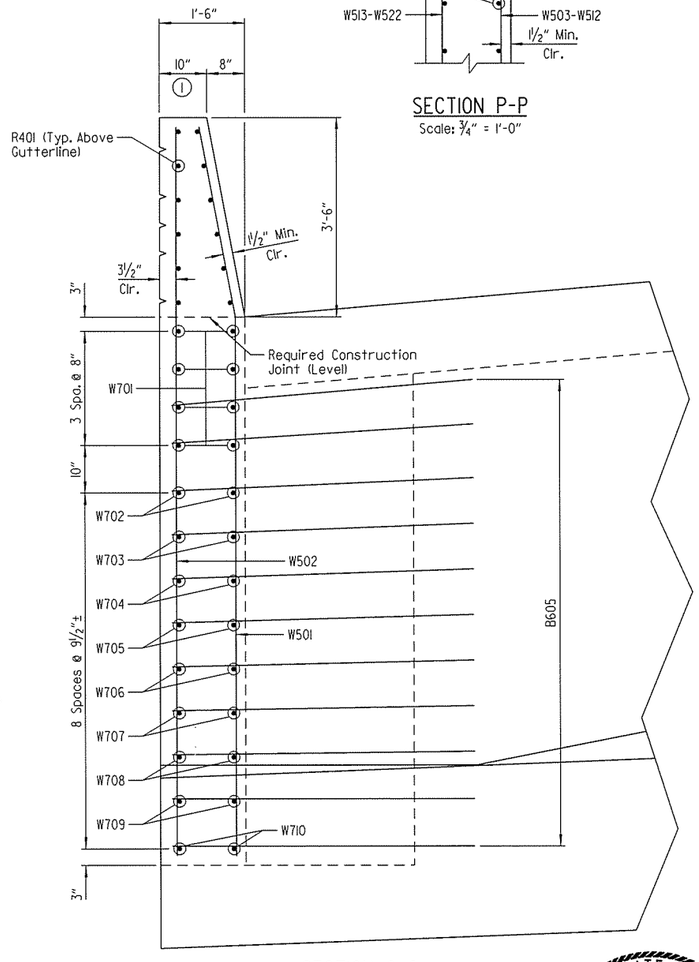

SECTION O-O
Scale: ¾" = 1'-0"

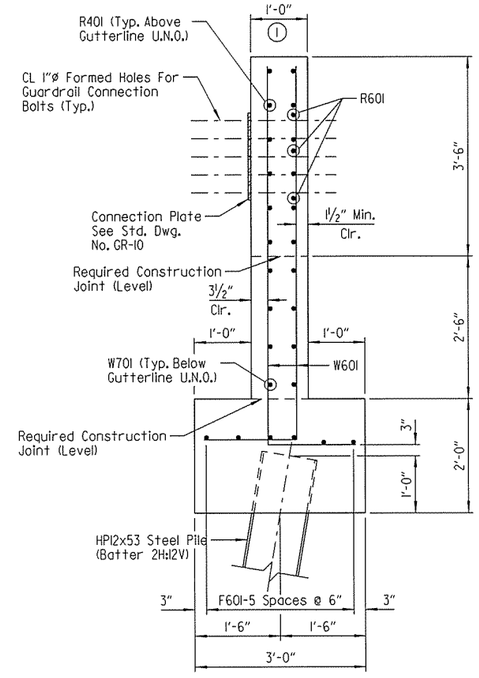

SECTION O-O
Scale: ¾" = 1'-0"

NOTE:
At the Contractor's option, a single lap splice of 3'-6" (min.) may be used on bars W701 thru W710. Payment will be based on the weight of the bars shown in the plans.

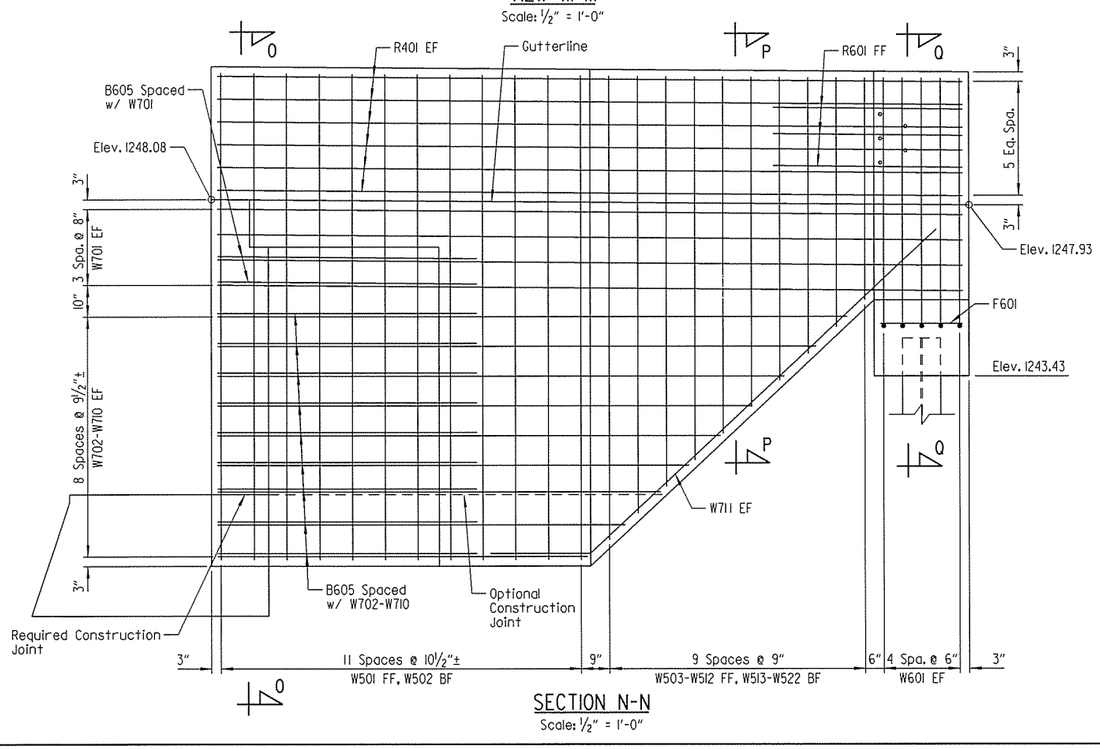

SECTION N-N
Scale: ½" = 1'-0"

LEGEND
U.N.O. = Unless Noted Otherwise
EF = Each Face
FF = Front Face
BF = Back Face

STATE OF ARKANSAS
LICENSED PROFESSIONAL ENGINEER
No. 16458
3-20-16
JOEL E. SKINNER
BRIDGE ENGINEER

SHEET 5 OF 7
DETAILS OF END BENT NO. 3
I-49 OVER HWY. 71B
ROUTE SEC.
ARKANSAS STATE HIGHWAY COMMISSION
LITTLE ROCK, ARK.

DRAWN BY: CWT DATE: AUG. 2015 FILENAME: BBB0414M3_A10.dgn
CHECKED BY: ABH DATE: NOV. 2015 SCALE: AS SHOWN
DESIGNED BY: JES DATE: AUG. 2015
BRIDGE NO. A7380 & B7380 DRAWING NO. 58181

Jeskinner 3/20/2016 3:35:32 PM
WORKSPACE: AHTD_Bridge
L:\20IN\I007707 - I-540 Widening & Interchange Improvement\Drawings\I540-HWY71B-S20-AB.dgn
REVISED DATE:

DATE REVISED	DATE FILMED	DATE REVISED	DATE FILMED	FED. ROAD DIST. NO.	STATE	FED. AID PROJ. NO.	SHEET NO.	TOTAL SHEETS
				6	ARK.			
				JOB NO.		BB0414	459	886
				(1) A7380 & B7380		END BENT DETAILS		58182

LEGEND

U.N.O. = Unless Noted Otherwise
EF = Each Face
BF = Back Face
FF = Front Face

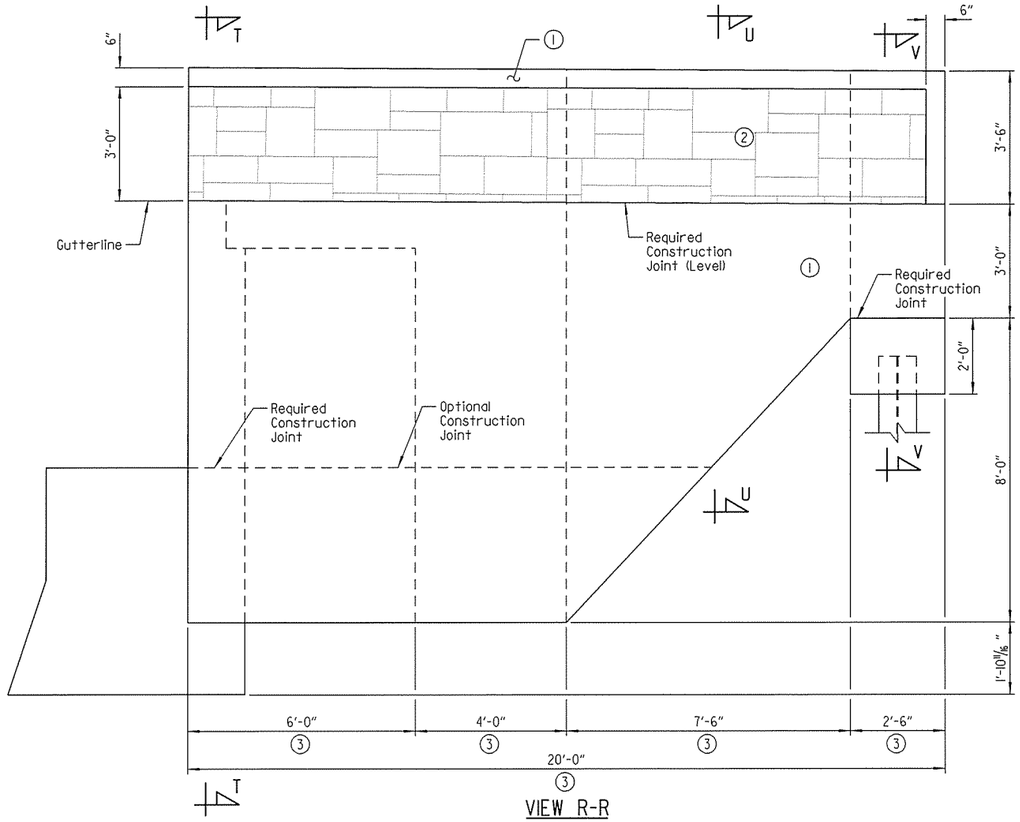

VIEW R-R
Scale: 1/2" = 1'-0"

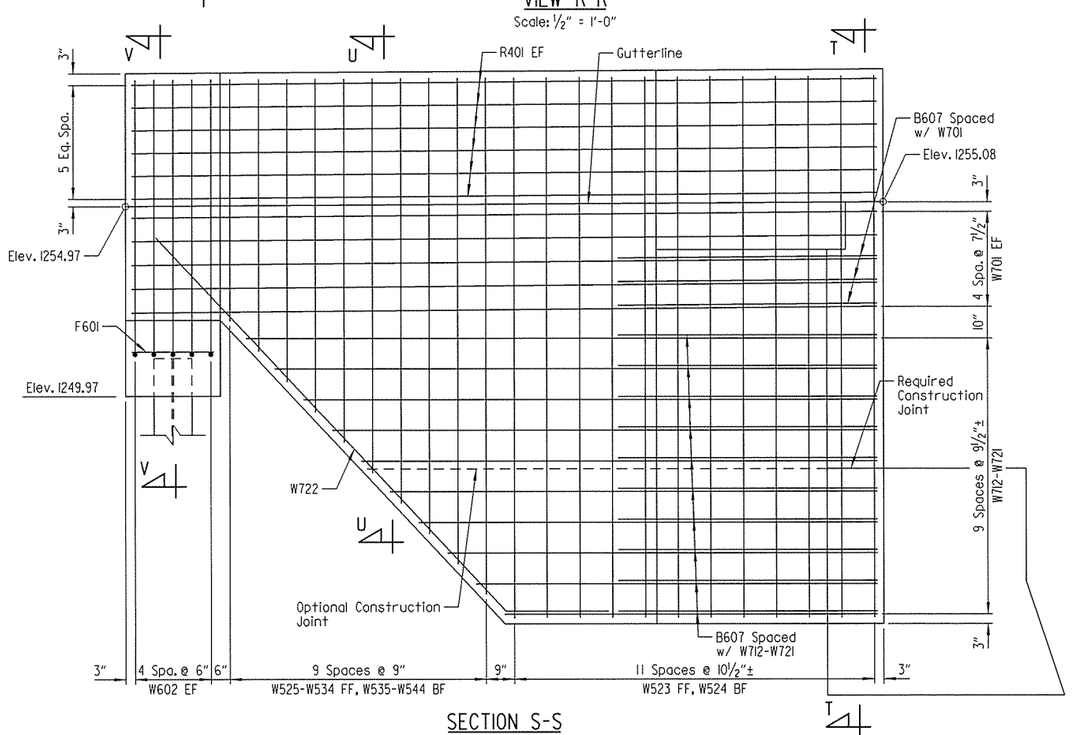

SECTION S-S
Scale: 1/2" = 1'-0"

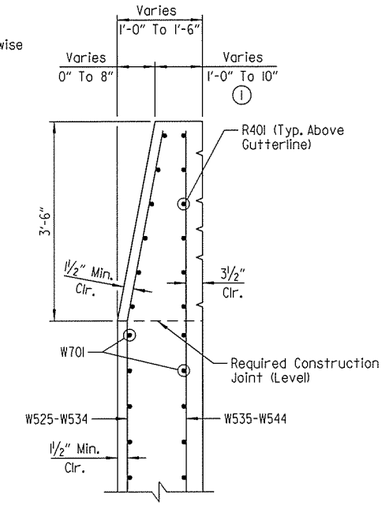

SECTION U-U
Scale: 3/4" = 1'-0"

NOTE:
A Class 3 Textured Coating Finish shall be applied to bridge surfaces as specified in SP JOB NO. BB0414 "TEXTURED COATING FINISH" and in accordance with Subsection 802.19.

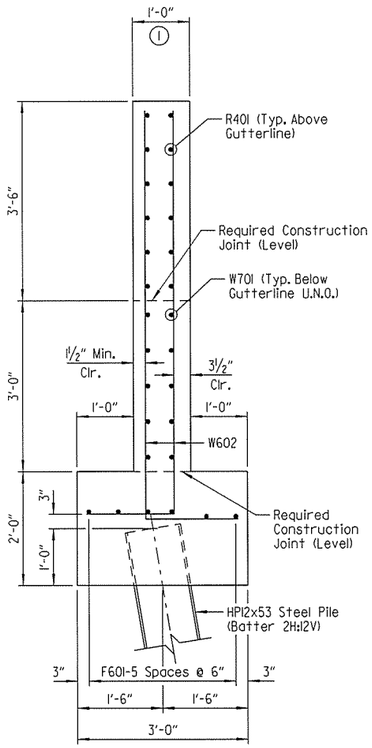

SECTION V-V
Scale: 3/4" = 1'-0"

(1) Class 3 Textured Coating Finish (Color = Brown, Color Chip No. 33578)

(2) "Ashlar Stone" Form Liner & Class 3 Textured Coating Finish (Color = Brown, Color Chip No. 30219)

Form liner shall be a max. depth of 2" to provide a min. clearance of 1 1/2" to parapet reinforcing. See SP JOB NO. BB0414 "ARCHITECTURAL FINISH".

(3) Measured Along Gutterline

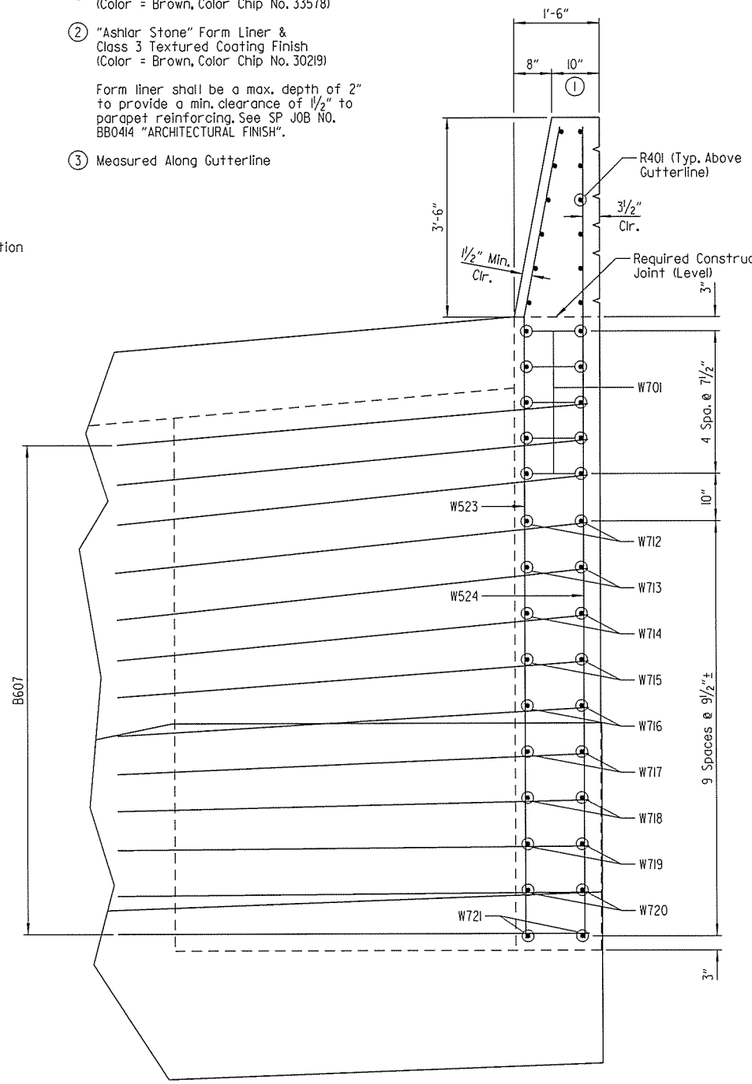

SECTION T-T
Scale: 3/4" = 1'-0"

NOTE:
At the Contractor's option, a single lap splice of 3'-6" (min.) may be used on bars W701 and W712 thru W721. Payment will be based on the weight of the bars shown in the plans.

STATE OF ARKANSAS
LICENSED PROFESSIONAL ENGINEER
No. 16458
3-20-16
JOEL E. SKINNER
BRIDGE ENGINEER

SHEET 6 OF 7
DETAILS OF END BENT NO. 3
I-49 OVER HWY. 71B

ROUTE SEC.

ARKANSAS STATE HIGHWAY COMMISSION
LITTLE ROCK, ARK.

DRAWN BY: CWT DATE: AUG. 2015 FILENAME: BBB0414M3_A11.dgn
CHECKED BY: ABH DATE: NOV. 2015 SCALE: AS SHOWN
DESIGNED BY: JES DATE: AUG. 2015
BRIDGE NO. A7380 & B7380 DRAWING NO. 58182

jaskinner 3/20/2016 3:35:32 PM
WORKSPACE: AHTD Bridge
L:\208\M001707 - I-540 Widening & Interchange Improvement\Drawings\I540-HWY71B-S2II-AB.dgn
REVISED DATE:

DATE REVISED	DATE FILMED	DATE REVISED	DATE FILMED	FED. ROAD DIST. NO.	STATE	FED. AID PROJ. NO.	SHEET NO.	TOTAL SHEETS
				6	ARK.			
				JOB NO.		BB0414	460	886
				(1) A7380 & B7380		END BENT DETAILS		58183

BAR LIST

Mark	No. Req'd	Length	"A"	"B"	Pin Dia.	Mark	No. Req'd	Length	"A"	"B"	Pin Dia.
B401	8	36'-4"			Str.	W503		12'-1"	8'-9"		
B402	240	4'-8"	2'-1"	8"	2"	To	1 Each	To	To		3¾"
B403	24	37'-8"			Str.	W512		5'-9"	2'-5"		
B404	28	34'-9"			Str.	W513		12'-1"			
B405	8	34'-4"			Str.	To	1 Each	To			Str.
B406	1	2'-1"			Str.	W522		5'-9"			
						W523	12	14'-2"	10'-10"		3¾"
B501	163	16'-7"			2½"	W524	12	14'-2"			Str.
B502	54	10'-0½"			2½"	W525		6'-3"	2'-11"		
B503	12	47'-9"			Str.	To	1 Each	To	To		3¾"
B504	2	49'-6"			Str.	W534		13'-6"	10'-2"		
B505	2	30'-0"			Str.	W535		6'-3"			
B506	2	17'-6"			Str.	To	1 Each	To			Str.
B507	7	8'-10"	3'-0"	5'-10"	3¾"	W544		13'-6"			
B508	28	10'-3"	4'-3"	6'-0"	3¾"						
B509	7	9'-9"	4'-3"	5'-6"	3¾"	W601	10	8'-0"	6'-7"		4½"
B510	27	8'-10½"	2'-1"	4'-11"	2½"	W602	10	8'-6"	7'-1"		4½"
B511	32	9'-8½"	2'-6"	4'-11"	2½"						
B512	32	10'-8½"	3'-0"	4'-11"	2½"	W701	18	19'-8"			Str.
B513	32	11'-8½"	3'-6"	4'-11"	2½"	W702		16'-6"			
B514	32	12'-10½"	4'-1"	4'-11"	2½"	To	2 Each	To			Str.
B515	33	13'-10½"	4'-7"	4'-11"	2½"	W710		9'-9"			
B516	2	50'-6"			Str.	W711	2	16'-0"			5¼"
B517	2	39'-0"			Str.	W712		16'-7"			
B518	2	19'-6"			Str.	To	2 Each	To			Str.
B519	7	9'-0"	3'-0"	6'-0"	3¾"	W721		9'-9"			
B520	28	10'-0"	4'-0"	6'-0"	3¾"	W722	2	17'-0"			5¼"
B521	7	11'-2"	4'-0"	7'-2"	3¾"						
						NOTE: Dimensions of bars are out-to-out.					
B601	121	17'-6"	8'-4"	1'-2"	4½"						
B602	11	19'-6"	9'-7"	8"	4½"						
B603	128	15'-4"	7'-3"	1'-2"	4½"						
B604	5	8'-1"			Str.						
B605	11	9'-7"			4½"						
B606	9	9'-0"			Str.						
B607	13	16'-1"			4½"						
B608	12	17'-4"	8'-6"	8"	4½"						
B609	1	8'-6"			Str.						
B610	54	3'-10"			4½"						
B901	14	51'-5"			9"						
B902	28	50'-2"			Str.						
F601	12	2'-2"			Str.						
R401	24	19'-8"			Str.						
R601	3	5'-0"			Str.						
W501	12	12'-8"	9'-4"		3¾"						
W502	12	12'-8"			Str.						

BAR BENDING DIAGRAMS

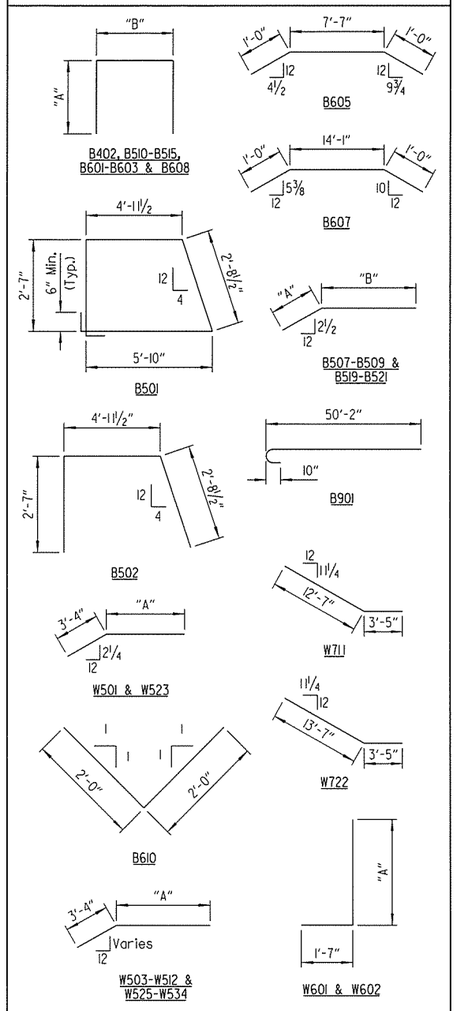

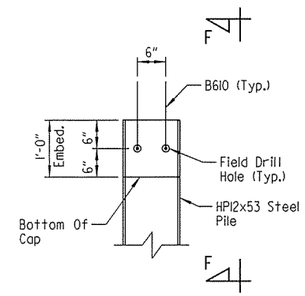

PILE ANCHORAGE DETAIL
No Scale

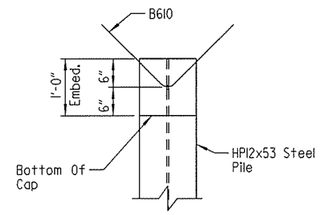

VIEW F-F
No Scale

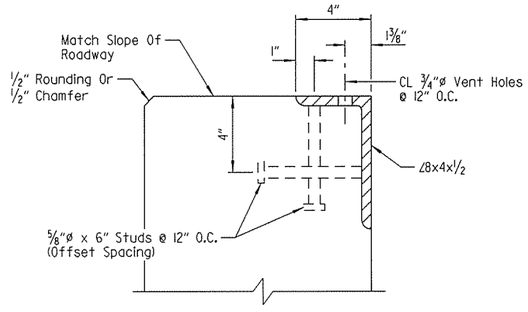

END BENT BACKWALL ARMOR DETAIL
No Scale

NOTES:
Concrete shall be hand packed under joint armor.

The profile of the backwall angle shall be established based on the vertical curve in conjunction with the skew.

Transverse spacing between vertical anchor studs and vent holes shall be 6".

Special care shall taken to properly and thoroughly consolidate the concrete in the vicinity of the expansion joint device in the backwall. See Subsection 802.09(a)(3).

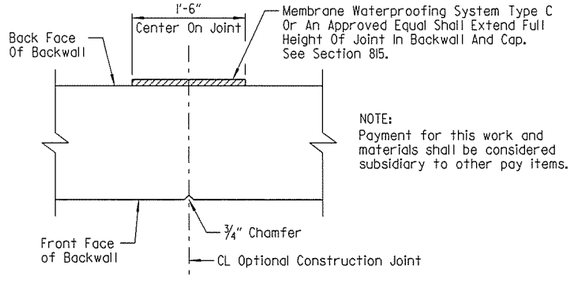

OPTIONAL CONSTRUCTION JOINT DETAIL
Scale: 1" = 1'-0"

STATE OF ARKANSAS
LICENSED PROFESSIONAL ENGINEER
No. 16458
3-20-16
JOEL E. SKINNER
BRIDGE ENGINEER

SHEET 7 OF 7
DETAILS OF END BENT NO. 3
I-49 OVER HWY. 71B
ROUTE SEC.
ARKANSAS STATE HIGHWAY COMMISSION
LITTLE ROCK, ARK.

DRAWN BY: CWT DATE: AUG. 2015 FILENAME: BBB0414M3_A12.dgn
CHECKED BY: ABH DATE: NOV. 2015 SCALE: AS SHOWN
DESIGNED BY: JES DATE: AUG. 2015
BRIDGE NO. A7380 & B7380 DRAWING NO. 58183

jeskinner 3/20/2016 3:35:32 PM
WORKSPACE: AHTD Bridge
L:\20R\I0071O7 - I-540 Widening & Interchange Improvement\Drawings\I540-HWY71B-S212-AB.dgn
REVISED DATE:

DATE REVISED	DATE FILMED	DATE REVISED	DATE FILMED

FED. ROAD DIST. NO.	STATE	FED. AID PROJ. NO.	SHEET NO.	TOTAL SHEETS
6	ARK.			
JOB NO.		BB0414	461	886
(1) B7380		END BENT DETAILS		58184

(1) Wings and rails shall be constructed on arcs concentric to CL Bridge B

(2) Measured along CL Bridge B

(3) 2'-2" Min. Lap - #5 Bars
4'-6" Min. Lap - #8 Bars

(4) Measured Along Gutterline

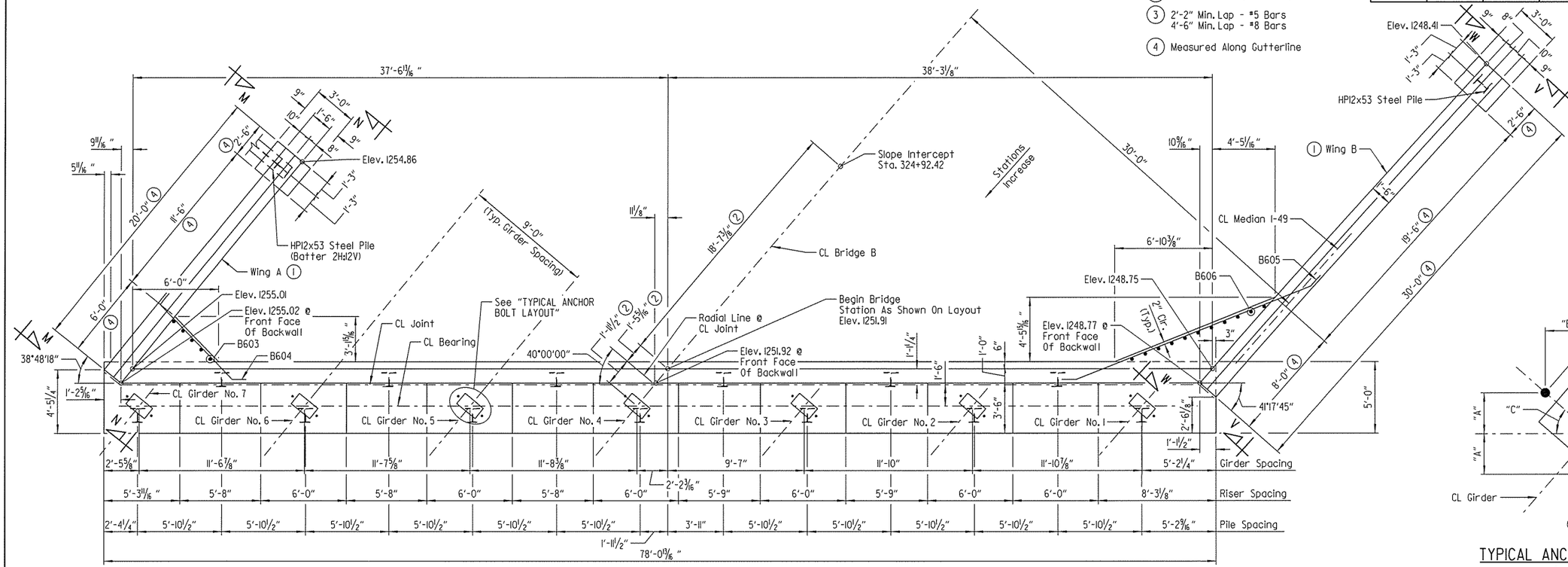

PLAN
Scale: 1/4" = 1'-0"

NOTES:
For "SECTION A-A", "SECTION B-B", "VIEW M-M" and "SECTION N-N", see Dwg. No. 58185.

For "SECTION C-C", "VIEW V-V" and "SECTION W-W", see Dwg. No. 58187.

For "GENERAL NOTES", see Dwg. No. 58183.

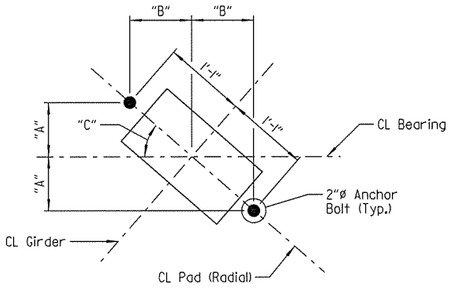

TYPICAL ANCHOR BOLT LAYOUT
Scale: 1" = 1'-0"

NOTE:
For details of elastomeric bearings, see Dwg. No. 58221.

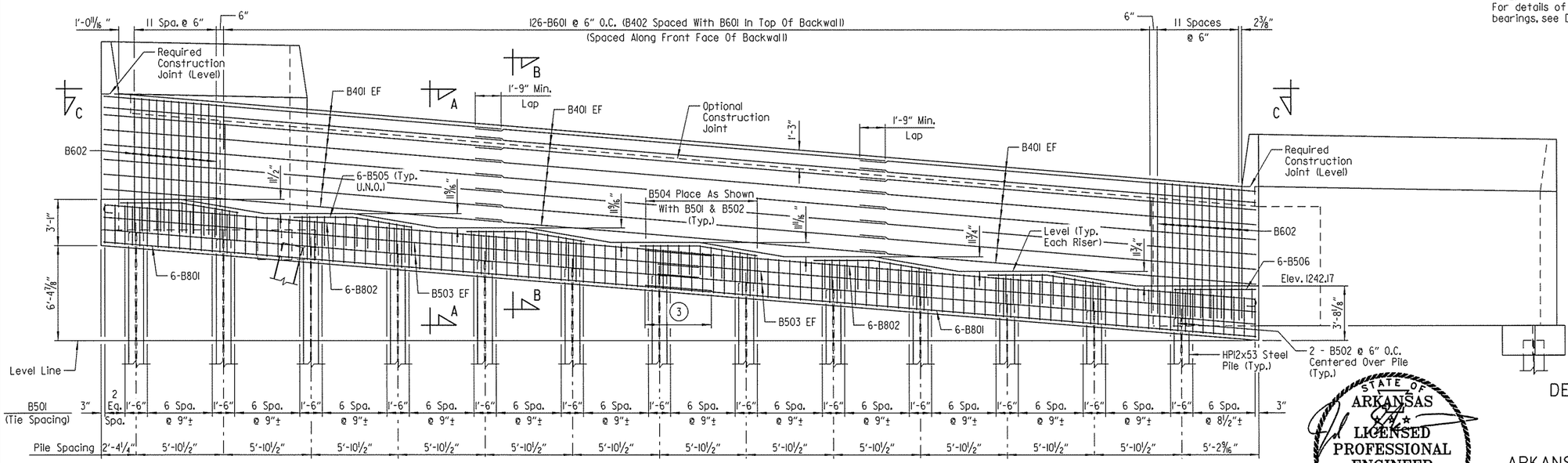

ELEVATION
(Looking Back)
Scale: 1/4" = 1'-0"

LEGEND
EF = Each Face
U.N.O. = Unless Noted Otherwise

TABLE OF VARIABLES			
GIRDER NO.	"A"	"B"	"C"
1	8 9/16"	9 13/16"	41°05'33"
2	8 1/2"	9 7/8"	40°41'10"
3	8 7/16"	9 15/16"	40°17'19"
4	8 5/16"	10"	39°54'00"
5	8 1/4"	10"	39°31'11"
6	8 3/16"	10 1/16"	39°08'50"
7	8 1/8"	10 1/8"	38°46'58"

STATE OF ARKANSAS
LICENSED PROFESSIONAL ENGINEER
No. 16458
3-20-16
JOEL E. SKINNER
BRIDGE ENGINEER

SHEET 1 OF 5
DETAILS OF END BENT NO. 1B
BRIDGE B
I-49 OVER HWY. 71B
ROUTE SEC.
ARKANSAS STATE HIGHWAY COMMISSION
LITTLE ROCK, ARK.

DRAWN BY: CWT DATE: AUG. 2015 FILENAME: BBB0414B3_A13.dgn
CHECKED BY: ABH DATE: NOV. 2015 SCALE: AS SHOWN
DESIGNED BY: JES DATE: AUG. 2015
BRIDGE NO. B7380 DRAWING NO. 58184

jeskinner 3/20/2016 3:35:33 PM
WORKSPACE, AHTD Bridge
L:\I-20\MA0707 - I-540 Widening & Interchange Improvement\Drawings\I540-HWY71B-5213-AB.dgn
REVISED DATE:

DATE REVISED	DATE FILMED	DATE REVISED	DATE FILMED	FED. ROAD DIST. NO.	STATE	FED. AID PROJ. NO.	SHEET NO.	TOTAL SHEETS
				6	ARK.			
				JOB NO.		BB0414	462	886
				(1) B7380		END BENT DETAILS		58185

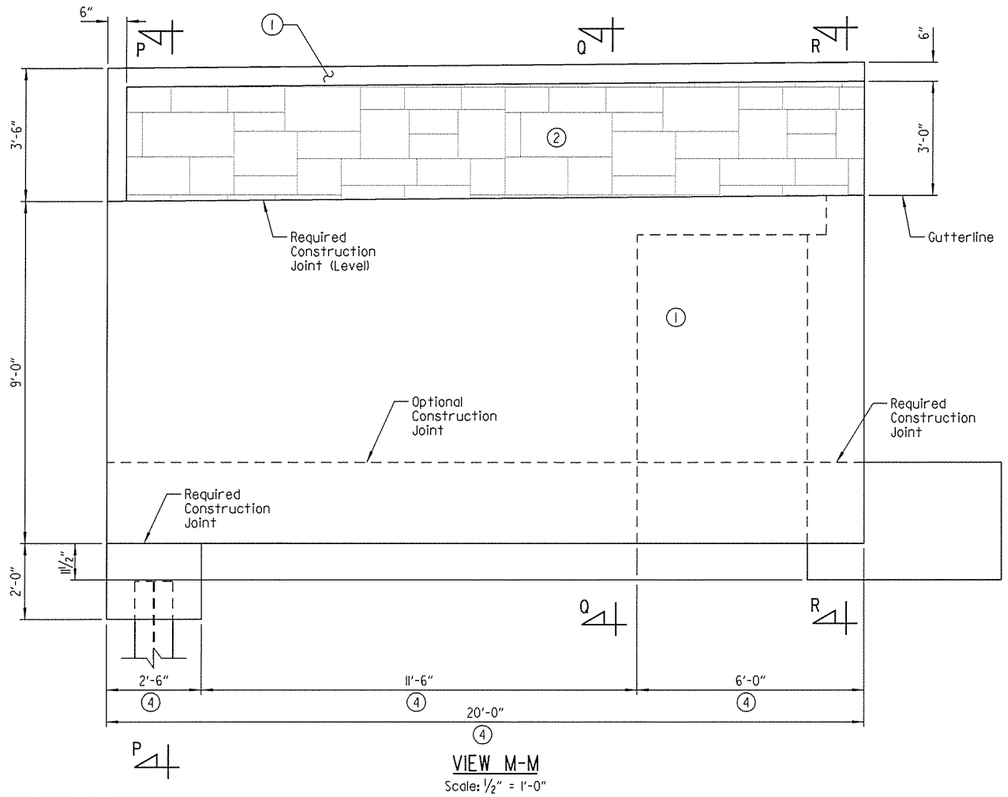

VIEW M-M
Scale: ½" = 1'-0"

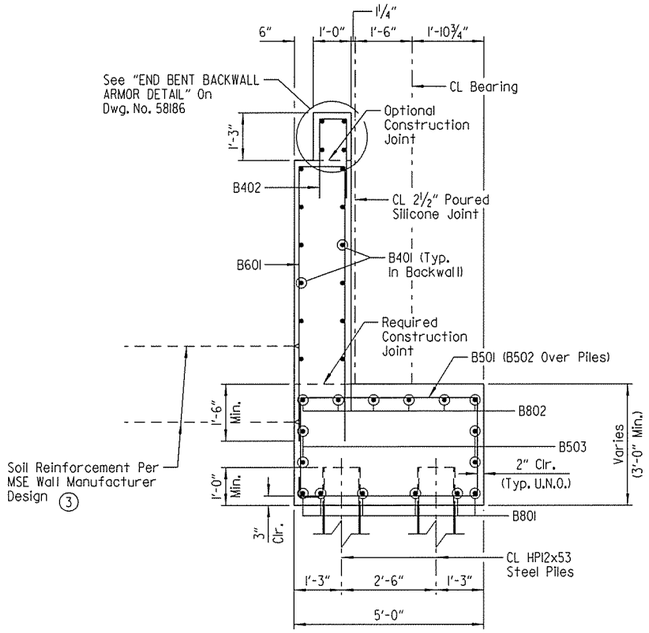

SECTION A-A
Scale: ½" = 1'-0"

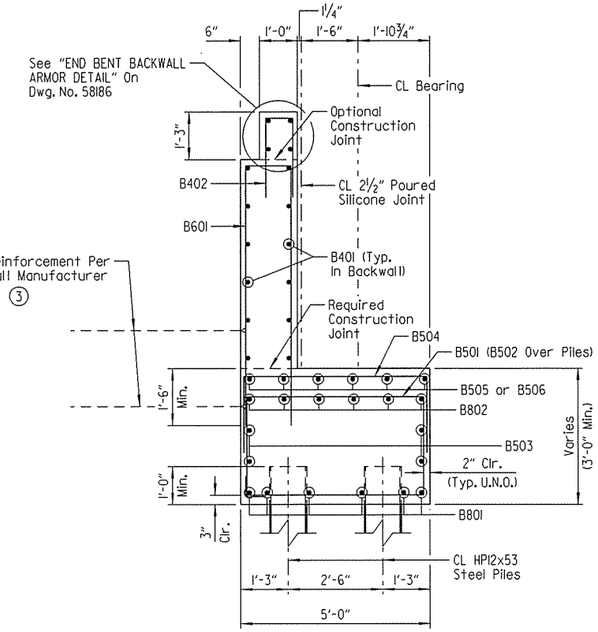

SECTION B-B
Scale: ½" = 1'-0"

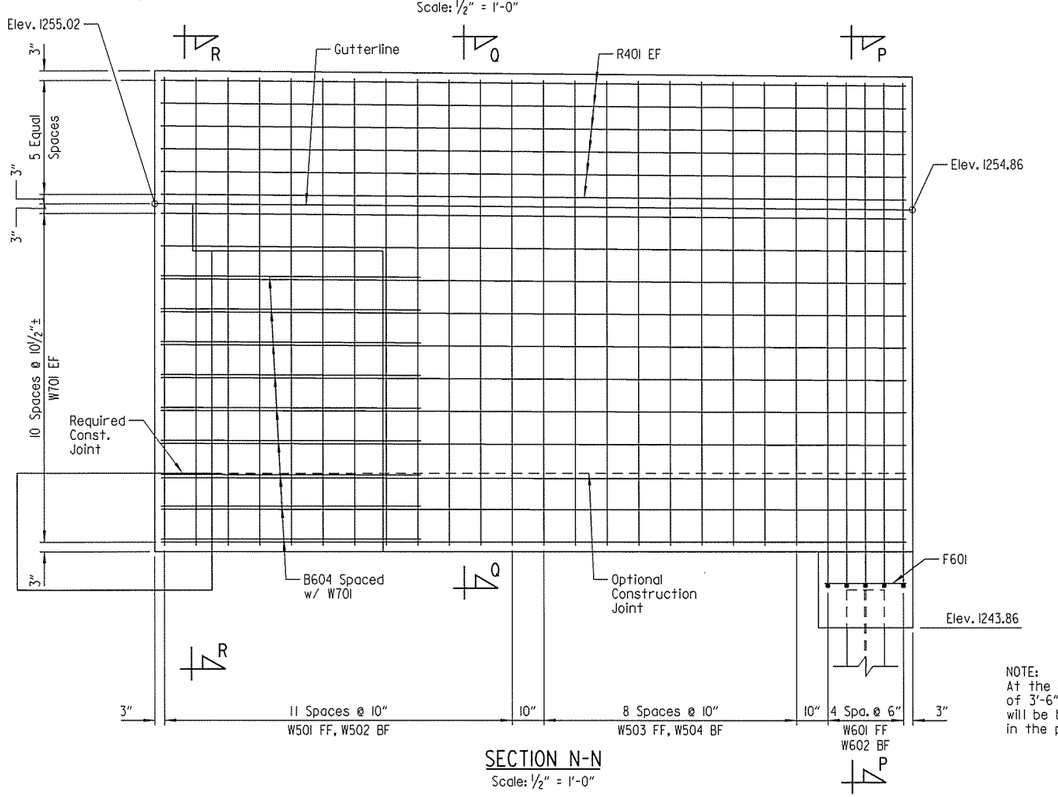

SECTION N-N
Scale: ½" = 1'-0"

NOTE:
For "SECTION R-R", "SECTION Q-Q" & "SECTION P-P", see Dwg. No. 58186 .

NOTE:
A Class 3 Textured Coating Finish shall be applied to bridge surfaces as specified in SP JOB NO. BB0414 "TEXTURED COATING FINISH" and in accordance with Subsection 802.19.

(1) Class 3 Textured Coating Finish (Color = Brown, Color Chip No. 33578)

(2) "Ashlar Stone" Form Liner & Class 3 Textured Coating Finish (Color = Brown, Color Chip No. 30219)

Form liner shall be a max. depth of 2" to provide a min. clearance of 1½" to parapet reinforcing. See SP JOB NO. BB0414 "ARCHITECTURAL FINISH".

(3) Soil reinforcement shall be attached at the back of End Bent. Type, size and spacing of soil reinforcement shall be designed by the Contractor. The design details and computations shall accompany the wall design submittal for review by the Engineer. Cost shall be subsidiary to item "MSE RETAINING WALL". For additional details, see SP JOB NO. BB0414 "MSE RETAINING WALLS" and Retaining Wall Plans.

(4) Measured Along Gutterline

NOTE:
At the Contractor's option, a single lap splice of 3'-6" (min.) may be used on bars W701. Payment will be based on the weight of the bars shown in the plans.

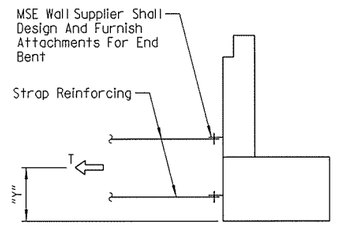

END BENT STRAP DETAIL
No Scale

T = Resultant Force required to be resisted by strap reinforcing

Y = Centroid of strap reinforcing

LIMIT STATE	T	Y
	Kips/Ft	Ft
Service	5.8	3.0
Strength	8.5	3.0

LEGEND
U.N.O. = Unless Noted Otherwise
EF = Each Face
BF = Back Face
FF = Front Face

STATE OF ARKANSAS
LICENSED PROFESSIONAL ENGINEER
No. 16458
3-20-16
JOEL E. SKINNER
BRIDGE ENGINEER

SHEET 2 OF 5
DETAILS OF END BENT NO. 1B
BRIDGE B
I-49 OVER HWY. 71B
ROUTE SEC.
ARKANSAS STATE HIGHWAY COMMISSION
LITTLE ROCK, ARK.

DRAWN BY: CWT DATE: AUG. 2015 FILENAME: BBB0414B3_A14.dgn
CHECKED BY: ABH DATE: NOV. 2015 SCALE: AS SHOWN
DESIGNED BY: JES DATE: AUG. 2015
BRIDGE NO. B7380 DRAWING NO. 58185

jskinner 3/20/2016 3:35:33 PM
WORKSPACE: AHTD_Bridge
L:\ROW\801707 I-540 Widening & Interchange Improvement\Drawings\I540-HWY71B-S2I4-AB.dgn
REVISED DATE:

DATE REVISED	DATE FILMED	DATE REVISED	DATE FILMED	FED. ROAD DIST. NO.	STATE	FED. AID PROJ. NO.	SHEET NO.	TOTAL SHEETS
				6	ARK.			
				JOB NO.		BB0414	463	886
				(1) B7380		END BENT DETAILS		58186

(1) Class 3 Textured Coating Finish (Color = Brown, Color Chip No. 33578)

(2) Soil reinforcement shall be attached at the front face of Wing A. Type, size and spacing of soil reinforcement shall be designed by the Contractor. The design details and computations shall accompany the wall design submittal for review by the Engineer. Cost shall be subsidiary to item "MSE RETAINING WALL". For additional details, see SP JOB NO. BB0414 "MSE RETAINING WALLS" and Retaining Wall Plans.

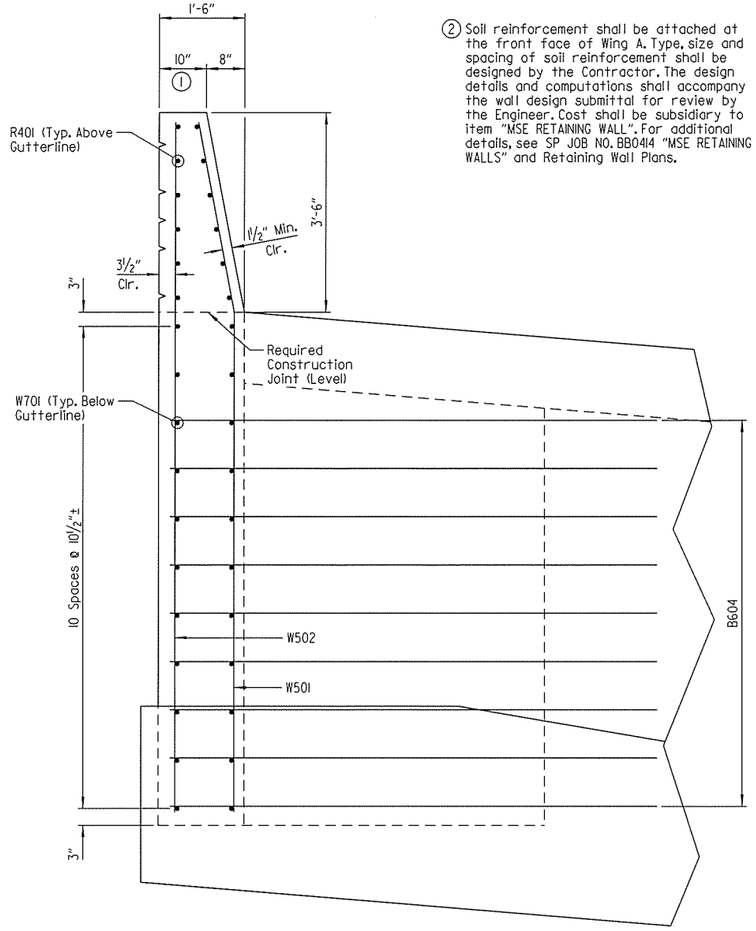

SECTION R-R
Scale: ¾" = 1'-0"

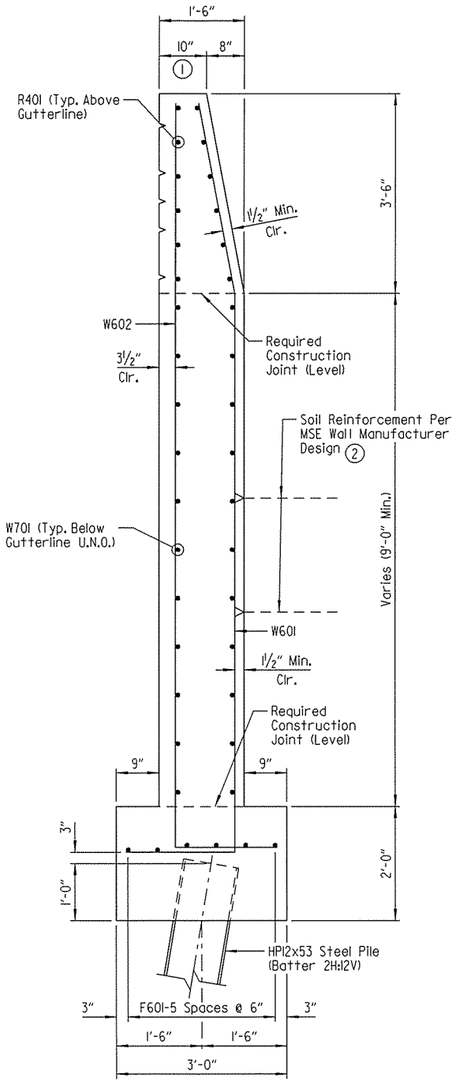

SECTION P-P
Scale: ¾" = 1'-0"

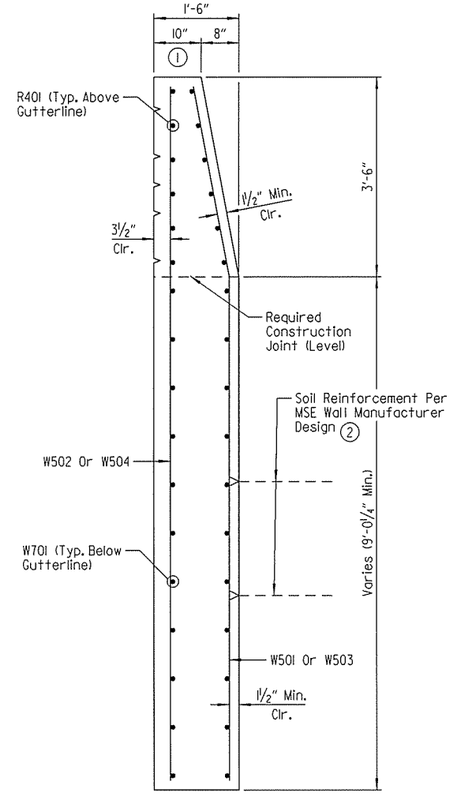

SECTION Q-Q
Scale: ¾" = 1'-0"

GENERAL NOTES

All concrete shall be Class "S" with a minimum 28 day compressive strength f'c = 3,500 psi. Concrete shall be poured in the dry, and all exposed corners to be chamfered ¾" unless otherwise noted.

All reinforcing steel shall conform to AASHTO M31 or M322 Type A, Grade 60 (yield strength = 60,000 psi), with mill test reports.

All piles shall be HP12x53 (AASHTO M270, Gr. 50).

No portion of the backwall shall be poured before girders are in place. The portion of the backwall above the optional construction joint at the paving bracket shall not be placed until the deck pour has been made. Refer to "EXPANSION DEVICE INSTALLATION AT END BENTS" note on Dwg. No. 58220.

Finish top of backwall to match the bridge deck.

Structural steel in end bents shall be AASHTO M270, Gr. 50W and shall be paid for as "STRUCTURAL STEEL IN PLATE GIRDER SPANS (AASHTO M270, GR. 50W)".

Top reinforcing bars in cap shall be properly placed to avoid damage or interference with anchor bolts or sheet metal sleeves.

For additional information, see layout.

Class 2 Protective Surface Treatment shall be applied to the top of backwall and roadway face of concrete parapet. Class 3 Textured Coating Finish shall be applied in accordance with SP JOB NO. BB0414 "TEXTURED COATING FINISH" and in accordance with Subsection 802.19. Textured Coating Finish shall not be applied on surfaces where Class 2 Protective Surface Treatment is applied.

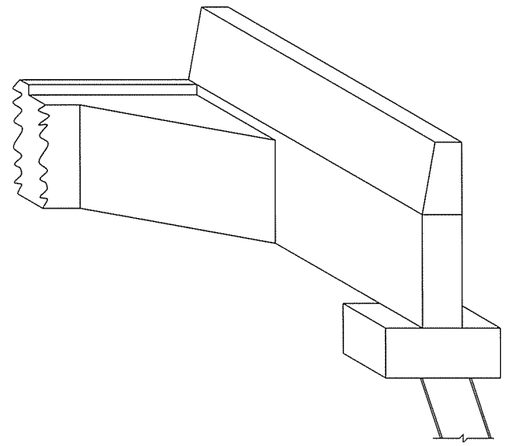

THREE DIMENSIONAL VIEW OF RAIL
No Scale

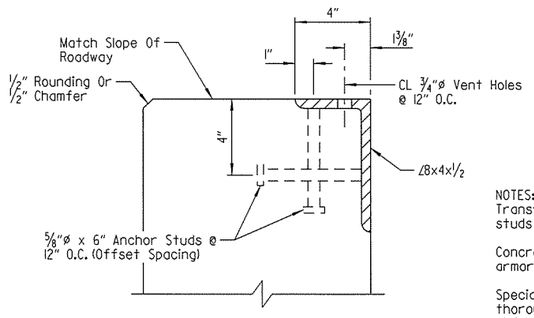

END BENT BACKWALL ARMOR DETAIL
No Scale

NOTES:
Transverse spacing between vertical anchor studs and vent holes shall be 6".

Concrete shall be hand packed under joint armor.

Special care shall taken to properly and thoroughly consolidate the concrete in the vicinity of the expansion joint device in the backwall. See Subsection 802.09(a)(3).

The profile of the backwall angle shall be established based on the vertical curve in conjunction with the skew.

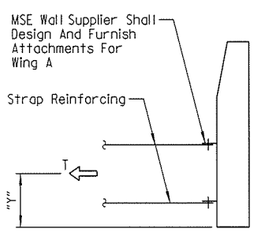

WING A STRAP DETAIL
No Scale

T = Resultant Force required to be resisted by strap reinforcing. Force is per foot along horizontal length of wing.

Y = Centroid of strap reinforcing

LEGEND

U.N.O. = Unless Noted Otherwise

LIMIT STATE	T	Y
	Kips/Ft	Ft
Service	3.0	4.5
Strength	4.8	4.5
Extreme	3.7	4.5

STATE OF ARKANSAS
LICENSED PROFESSIONAL ENGINEER
No. 16458
3-20-16
JOEL E. SKINNER

BRIDGE ENGINEER

SHEET 3 OF 5
DETAILS OF END BENT NO. 1B
BRIDGE B
I-49 OVER HWY. 71B
ROUTE SEC.
ARKANSAS STATE HIGHWAY COMMISSION
LITTLE ROCK, ARK.

DRAWN BY: CWT DATE: AUG. 2015 FILENAME: BBB0414B3_A15.dgn
CHECKED BY: ABH DATE: NOV. 2015 SCALE: AS SHOWN
DESIGNED BY: JES DATE: AUG. 2015
BRIDGE NO. B7380 DRAWING NO. 58186

jeskinner 3/20/2016 3:35:34 PM
WORKSPACE: AHTD_Bridge
L:\20IN\007\07 - I-540 Widening & Interchange Improvement\Drawings\540-HWY71B-S205-AB.dgn
REVISED DATE:

DATE REVISED	DATE FILMED	DATE REVISED	DATE FILMED	FED. ROAD DIST. NO.	STATE	FED. AID PROJ. NO.	SHEET NO.	TOTAL SHEETS
				6	ARK.			
				JOB NO.		BB0414	464	886
				(1) B7380		END BENT DETAILS		58187

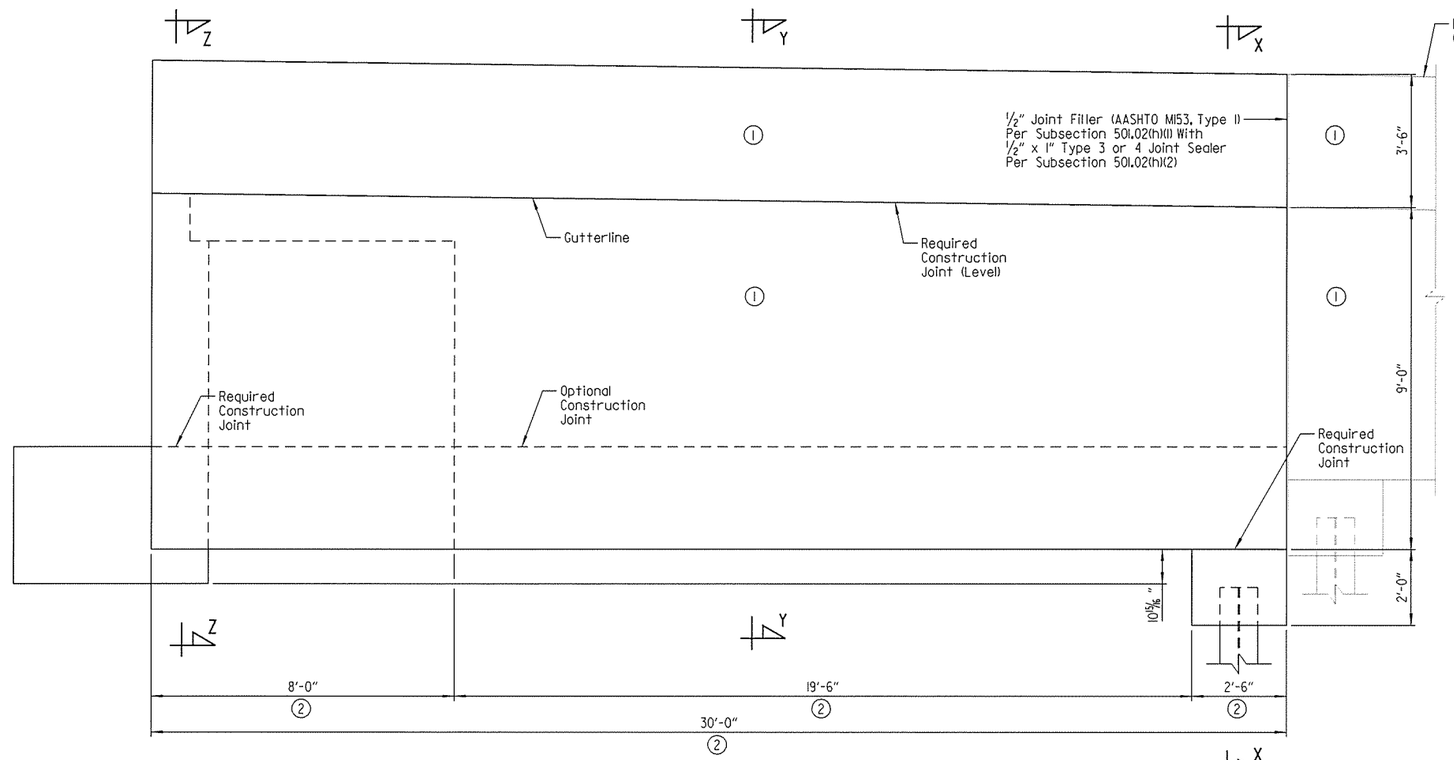

(1) Class 3 Textured Coating Finish (Color = Brown, Color Chip No. 33578)

(2) Measured Along Gutterline

NOTE:
A Class 3 Textured Coating Finish shall be applied to bridge surfaces as specified in SP JOB NO. BB0414 "TEXTURED COATING FINISH" and in accordance with Subsection 802.19.

LEGEND

EF = Each Face
BF = Back Face
FF = Front Face

NOTE:
For "SECTION X-X", "SECTION Y-Y" & "SECTION Z-Z", see Dwg. No. 58188.

VIEW V-V

Scale: 1/2" = 1'-0"

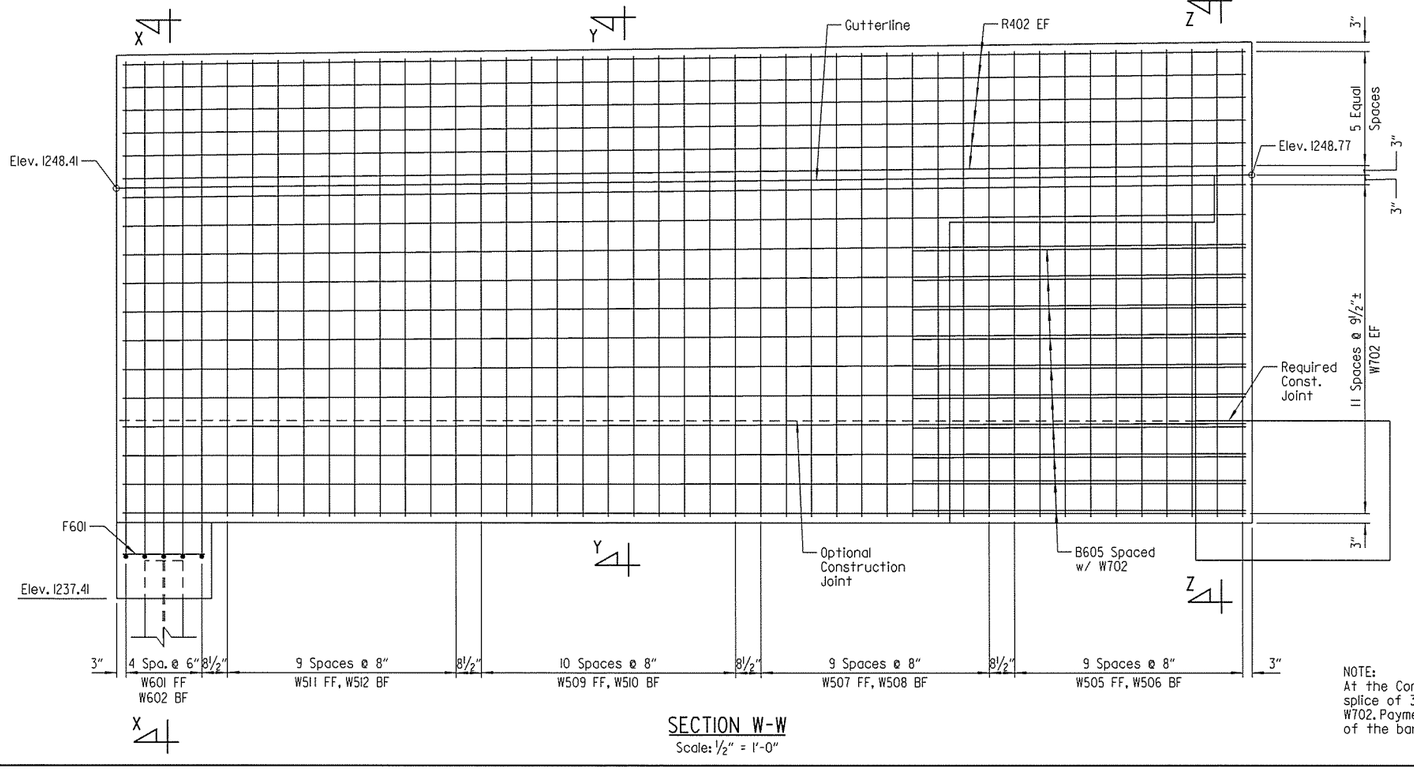

SECTION W-W

Scale: 1/2" = 1'-0"

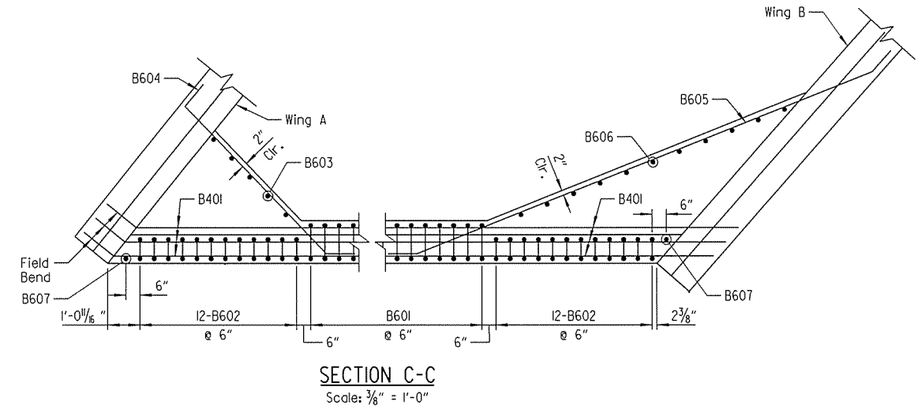

SECTION C-C

Scale: 3/8" = 1'-0"

NOTE:
At the Contractor's option, a single lap splice of 3'-6" (min.) may be used on bars W702. Payment will be based on the weight of the bars shown in the plans.

STATE OF ARKANSAS
LICENSED PROFESSIONAL ENGINEER
No. 16458
3-20-16
JOEL E. SKINNER

BRIDGE ENGINEER

SHEET 4 OF 5
DETAILS OF END BENT NO. 1B
BRIDGE B
I-49 OVER HWY. 71B

ROUTE SEC.

ARKANSAS STATE HIGHWAY COMMISSION

LITTLE ROCK, ARK.

DRAWN BY: CWT DATE: AUG. 2015 FILENAME: BBB0414B3_A16.dgn
CHECKED BY: ABH DATE: NOV. 2015 SCALE: AS SHOWN
DESIGNED BY: JES DATE: AUG. 2015

BRIDGE NO. B7380 DRAWING NO. 58187

jeskinner 3/20/2016 3:35:34 PM
WORKSPACE: AHTD Bridge
L:\220\A007707 - I-540 Widening & Interchange Improvement\Drawings\540-HWY71B-S216-AB.dgn
REVISED DATE:

DATE REVISED	DATE FILMED	DATE REVISED	DATE FILMED	FED. ROAD DIST. NO.	STATE	FED. AID PROJ. NO.	SHEET NO.	TOTAL SHEETS
				6	ARK.			
				JOB NO.		BB0414	465	886
				(1) B7380		END BENT DETAILS		58188

BAR LIST

Mark	No. Req'd	Length	"A"	"B"	Pin Dia.
B401	48	27'-6"			Str.
B402	126	4'-8"	2'-1"	8"	2"
B501	94	15'-0"			2½"
B502	26	9'-7½"	2'-7"	4'-8"	2½"
B503	8	40'-0"			Str.
B504	84	8'-5½"	2'-0"	4'-8"	2½"
B505	36	8'-0"			3¾"
B506	6	5'-6"			Str.
B601	126	15'-6"	7'-4"	1'-2"	4½"
B602	24	17'-6"	8'-7"	8"	4½"
B603	5	7'-6"			Str.
B604	9	9'-3"			4½"
B605	10	19'-8"			4½"
B606	11	7'-8"			Str.
B607	2	8'-7"			Str.
B801	12	41'-2"			Str.
B802	12	42'-1"			6"
F601	12	2'-2"			Str.
R401	12	18'-8"			Str.
R402	12	29'-8"			Str.
W501	12	12'-2"	8'-10"		3¾"
W502	12	12'-2"			Str.
W503	9	12'-1"	8'-9"		3¾"
W504	9	12'-1"			Str.
W505	10	12'-4½"	9'-0½"		3¾"
W506	10	12'-4½"			Str.
W507	10	12'-3½"	8'-11½"		3¾"
W508	10	12'-3½"			Str.
W509	11	12'-2½"	8'-10½"		3¾"
W510	11	12'-2½"			Str.
W511	10	12'-1½"	8'-9½"		3¾"
W512	10	12'-1½"			Str.
W601	10	14'-10"			4½"
W602	10	14'-9"			4½"
W701	22	19'-8"			Str.
W702	24	29'-8"			Str.

BAR BENDING DIAGRAMS

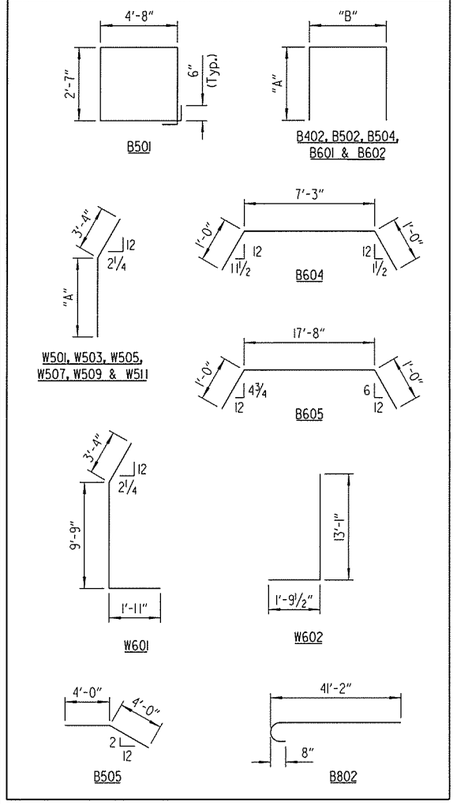

NOTE:
Dimensions of bars are out-to-out.

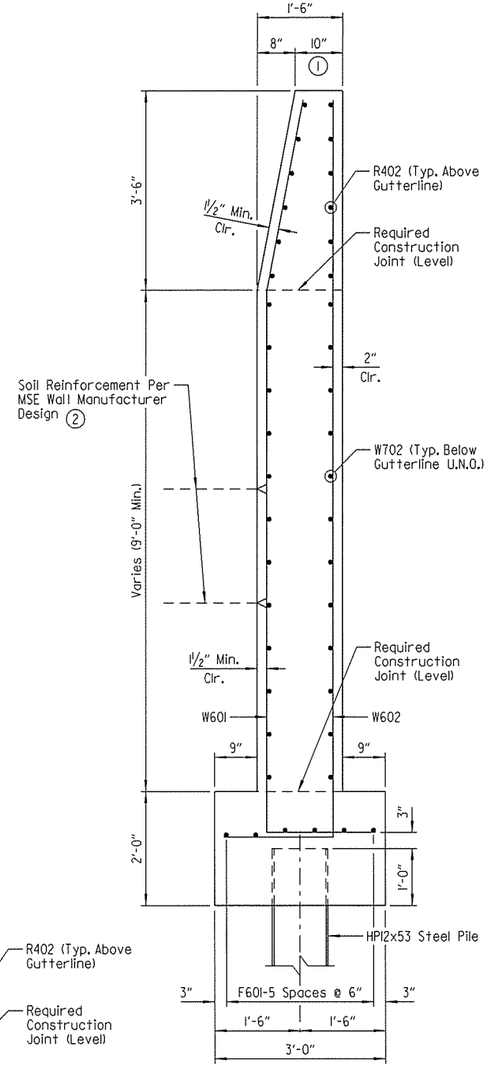

SECTION X-X
Scale: ¾" = 1'-0"

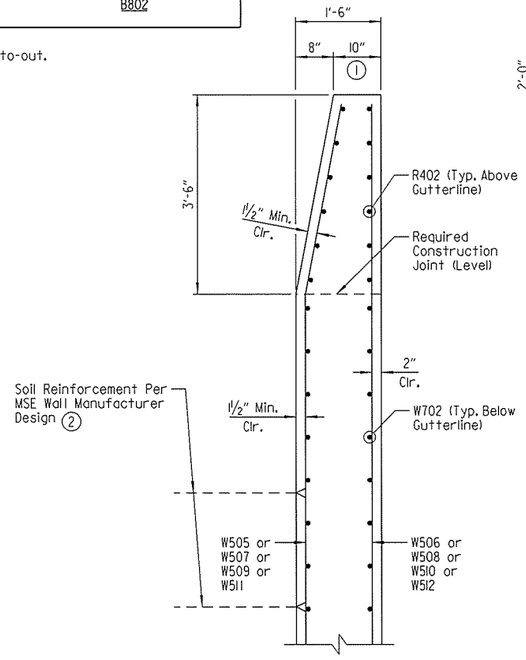

SECTION Y-Y
Scale: ¾" = 1'-0"

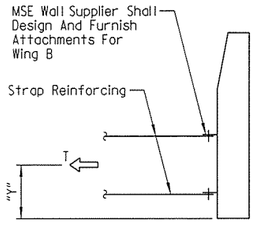

LIMIT STATE	T	Y
	Kips/Ft	Ft
Service	1.6	4
Strength	2.4	4
Extreme	2.8	4

WING B STRAP DETAIL

No Scale

T = Resultant Force required to be resisted by strap reinforcing. Force is per foot along horizontal length of wing.

Y = Centroid of strap reinforcing

(1) Class 3 Textured Coating Finish (Color = Brown, Color Chip No. 33578)

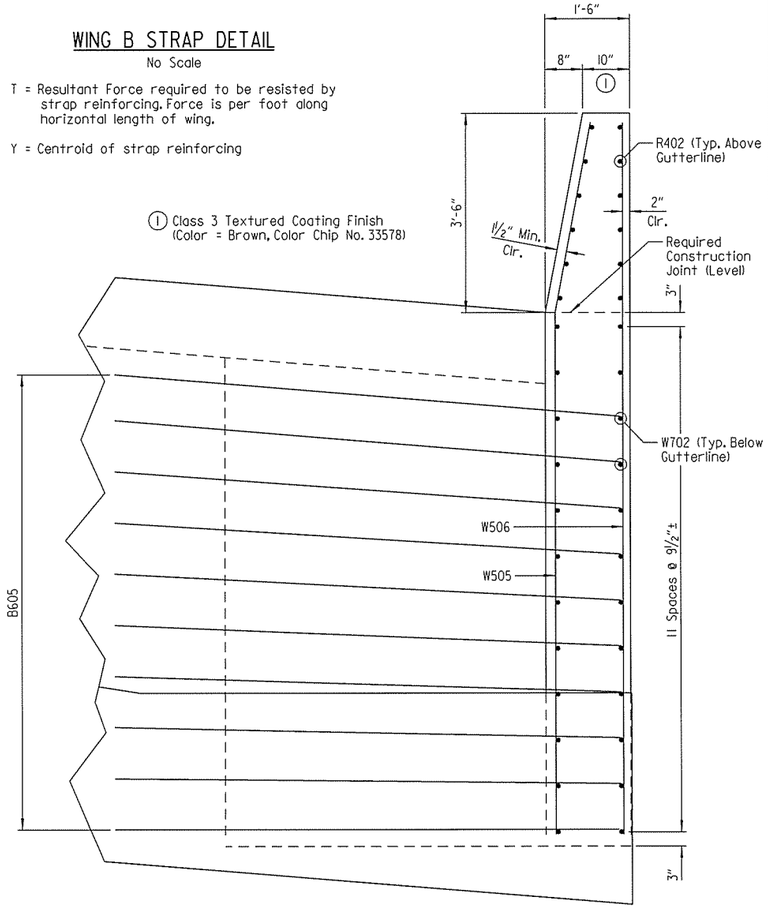

SECTION Z-Z
Scale: ¾" = 1'-0"

LEGEND

U.N.O. = Unless Noted Otherwise

(2) Soil reinforcement shall be attached at the front face of Wing B. Type, size and spacing of soil reinforcement shall be designed by the Contractor. The design details and computations shall accompany the wall design submittal for review by the Engineer. Cost shall be subsidiary to item "MSE RETAINING WALL". For additional details, see SP JOB NO. BB0414 "MSE RETAINING WALLS" and Retaining Wall Plans.

STATE OF ARKANSAS
LICENSED PROFESSIONAL ENGINEER
No. 16458
3-20-16
JOEL E. SKINNER
BRIDGE ENGINEER

SHEET 5 OF 5
DETAILS OF END BENT NO. 1B
BRIDGE B
I-49 OVER HWY. 71B
ROUTE SEC.
ARKANSAS STATE HIGHWAY COMMISSION
LITTLE ROCK, ARK.

DRAWN BY: CWT DATE: AUG. 2015 FILENAME: BBB0414B3_A17.dgn
CHECKED BY: ABH DATE: NOV. 2015 SCALE: AS SHOWN
DESIGNED BY: JES DATE: AUG. 2015
BRIDGE NO. B7380 DRAWING NO. 58188

JeskInner 3/20/2016 3:35:35 PM
WORKSPACE: AHTD Bridge
L:\2016\060707 - I-540 Widening & Interchange Improvement\Drawings\I540-HWY71B-S217-AB.dgn
REVISED DATE:

DATE REVISED	DATE FILMED	DATE REVISED	DATE FILMED	FED. ROAD DIST. NO.	STATE	FED. AID PROJ. NO.	SHEET NO.	TOTAL SHEETS
8-1-16				6	ARK.			
				JOB NO.		BB0414	466	8
				(1) A7380		INTERMEDIATE BENT DETAILS		5

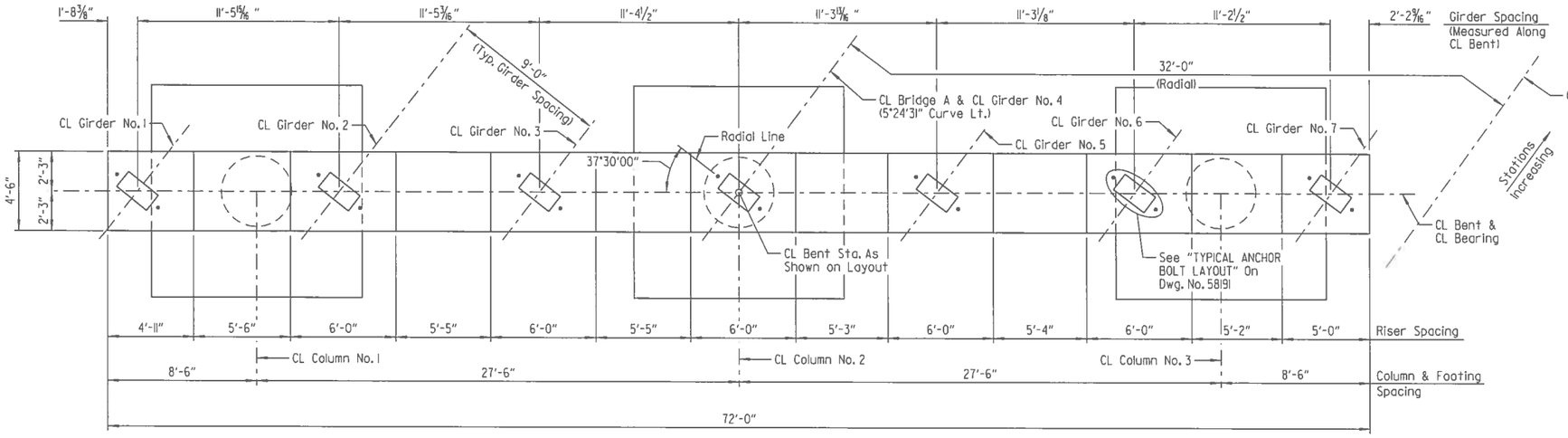

PLAN
Scale: 1/4" = 1'-0"

TABLE OF VARIABLES	
COLUMN NO.	"A"
1	15
2	17
3	20

(1) Lap splice bars at center of bay. Splices shall alternate between bays such that no two adjacent bars are spliced at the same location.

(2) Lap splice bars immediately adjacent to the face of center column and extend into bay. Splices shall alternate between bays such that no two adjacent bars are spliced at the same location.

NOTES:
For "SECTION B-B", "SECTION C-C", "VIEW D-D", "SECTION E-E" & "SECTION F-F", see Dwg. No. 58191.

For "BAR LIST - BENT NO. 2A", "BAR BENDING DIAGRAMS" & "GENERAL NOTES", see Dwg. No. 58192.

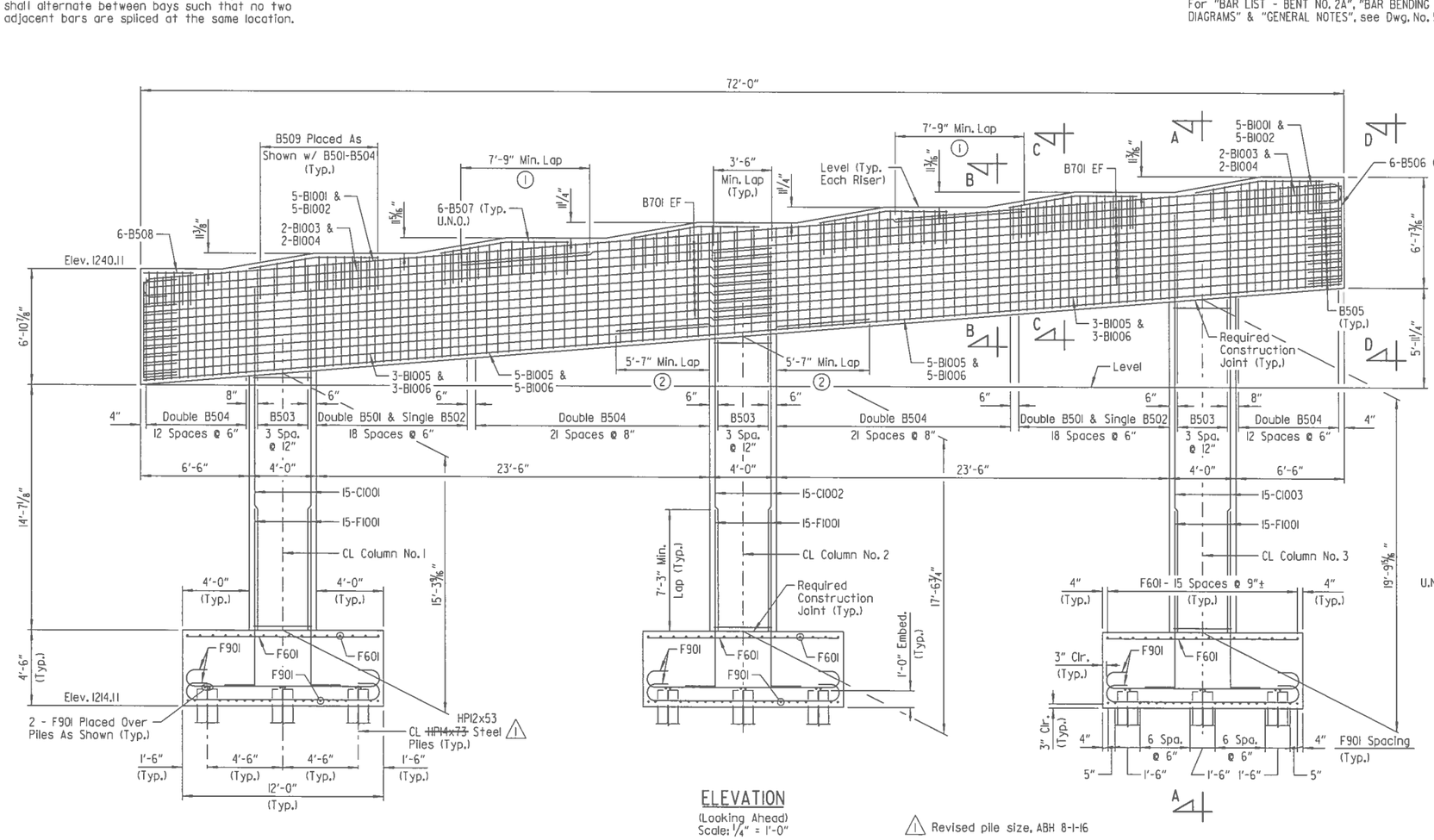

ELEVATION
(Looking Ahead)
Scale: 1/4" = 1'-0"

(1) Revised pile size, ABH 8-1-16

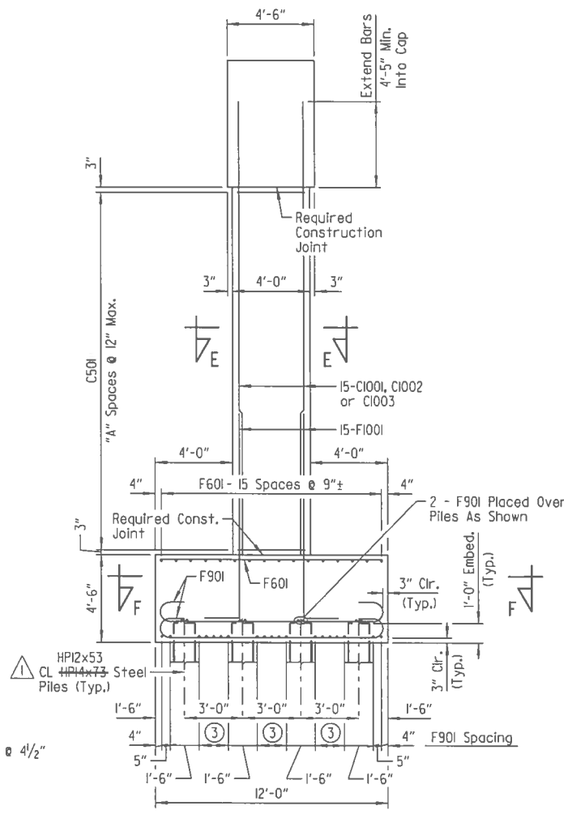

SECTION A-A
No Scale

LEGEND
EF = Each Face
U.N.O. = Unless Noted Otherwise

STATE OF ARKANSAS
LICENSED PROFESSIONAL ENGINEER
No. 16458
8-1-16
JOEL E. SKINNER
BRIDGE ENGINEER

DETAILS OF INTERMEDIATE BENT NO. 2A
BRIDGE A
I-49 OVER HWY. 71B

ROUTE SEC.

ARKANSAS STATE HIGHWAY COMMISSION
LITTLE ROCK, ARK.

DRAWN BY: CWT DATE: APR. 2015 FILENAME: BBB0414A3_BI.dgn
CHECKED BY: ABH DATE: SEPT. 2015 SCALE: AS SHOWN
DESIGNED BY: JES DATE: APR. 2015

BRIDGE NO. A7380 DRAWING NO. 58189

ABHoll 7/29/2016 12:01:29 PM
WORKSPACE: AHTD Bridge
L:\2016\160707 - I-540 Widening & Interchange Improvement\Drawings\I540-HWY71B-S28-BE.dgn
REVISED DATE:

DATE REVISED	DATE FILMED	DATE REVISED	DATE FILMED	FED. ROAD DIST. NO.	STATE	FED. AID PROJ. NO.	SHEET NO.	TOTAL SHEETS
8-1-16				6	ARK.			
				JOB NO.		BB0414	467	88
				(1) B7380		INTERMEDIATE BENT DETAILS		58

TABLE OF VARIABLES	
COLUMN NO.	"A"
1	18
2	20
3	22

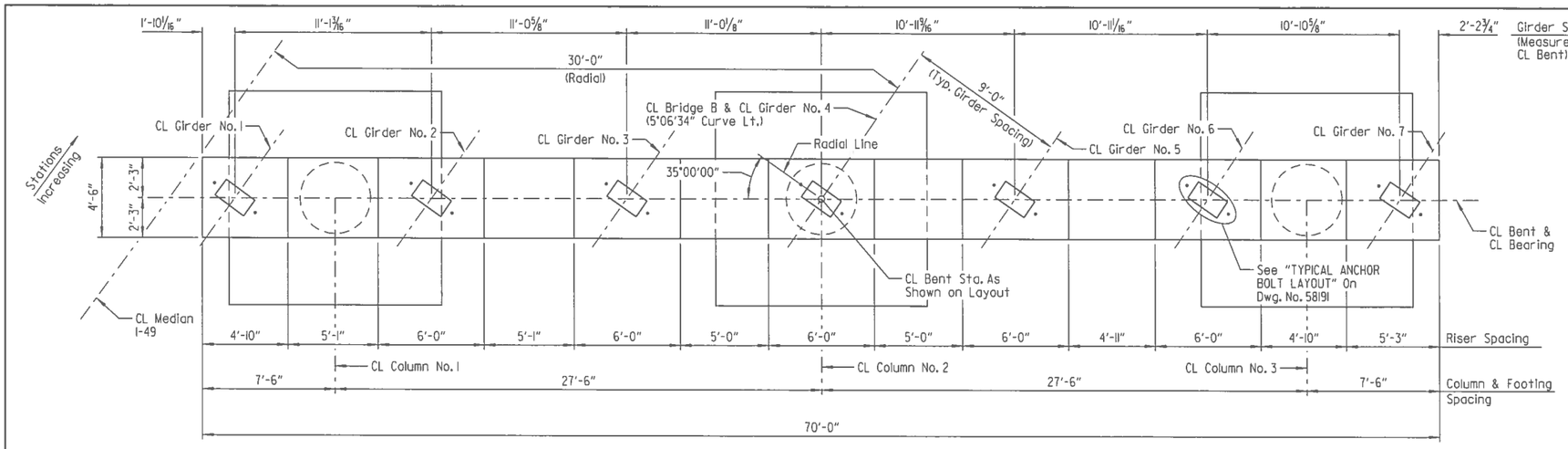

PLAN
Scale: 1/4" = 1'-0"

(1) Lap splice bars at center of bay. Splices shall alternate between bays such that no two adjacent bars are spliced at the same location.

(2) Lap splice bars immediately adjacent to the face of center column and extend into bay. Splices shall alternate between bays such that no two adjacent bars are spliced at the same location.

NOTES:
For "SECTION B-B", "VIEW C-C", "SECTION D-D", "SECTION E-E" & "SECTION F-F", see Dwg. No. 58191.

For "BAR LIST - BENT NO. 2B", "BAR BENDING DIAGRAMS" & "GENERAL NOTES", see Dwg. No. 58192.

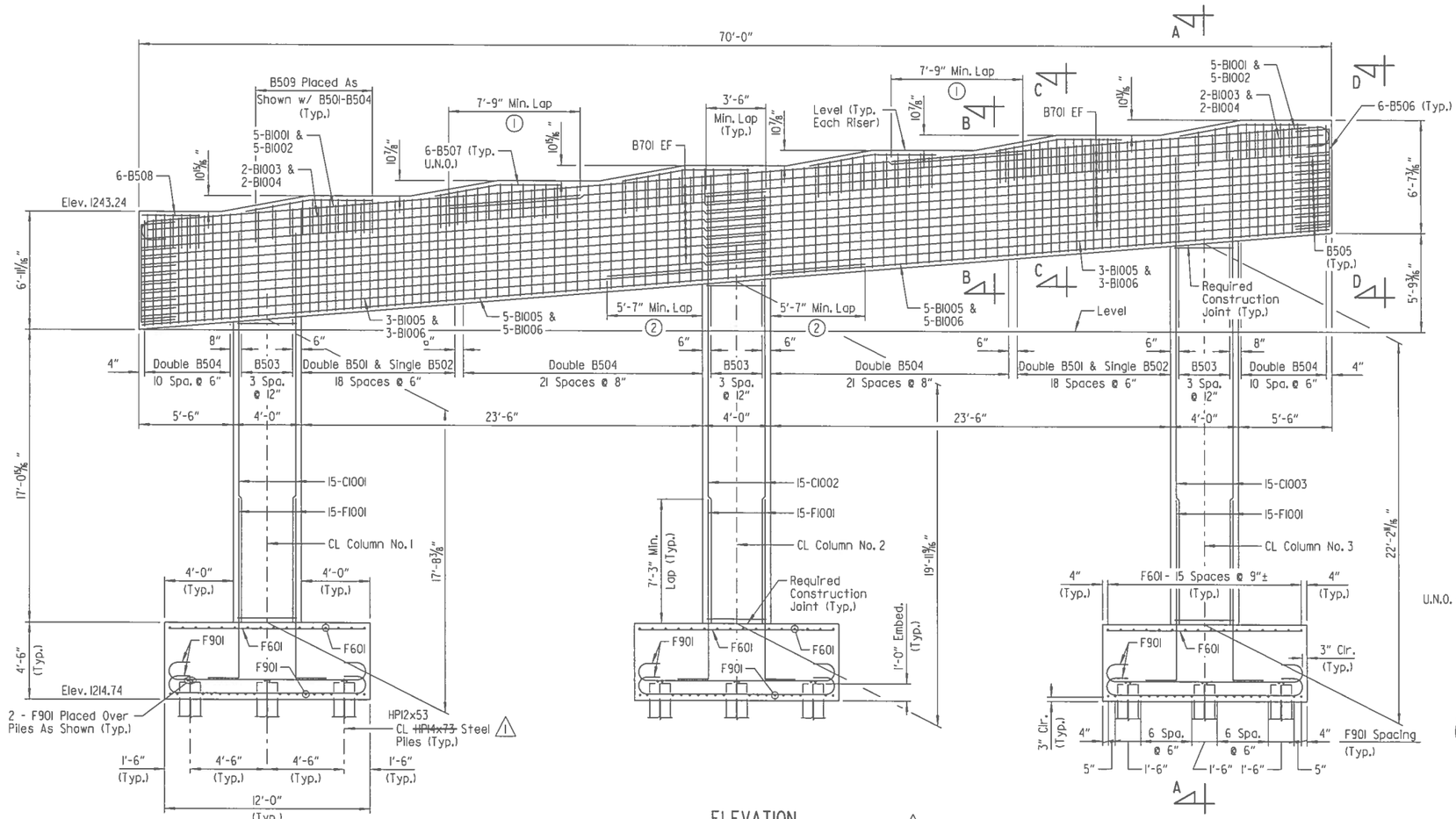

ELEVATION
(Looking Ahead)
Scale: 1/4" = 1'-0"

(1) Revised pile size, ABH 8-1-16

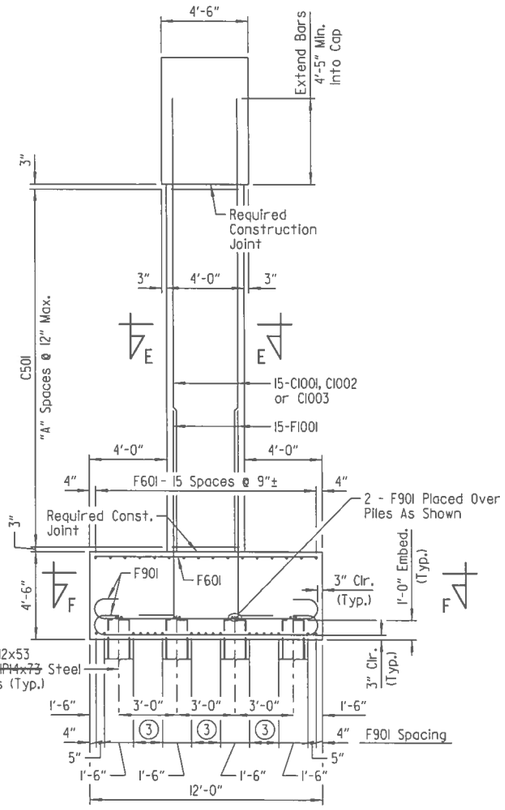

SECTION A-A
No Scale

LEGEND
EF = Each Face
U.N.O. = Unless Noted Otherwise

STATE OF ARKANSAS
LICENSED PROFESSIONAL ENGINEER
No. 16458
8-1-16
JOEL E. SKINNER
BRIDGE ENGINEER

DETAILS OF INTERMEDIATE BENT NO. 2B
BRIDGE B
I-49 OVER HWY. 71B

ROUTE SEC.

ARKANSAS STATE HIGHWAY COMMISSION
LITTLE ROCK, ARK.

DRAWN BY: CWT DATE: APR. 2015 FILENAME: BBB0414B3_B2.dgn
CHECKED BY: ABH DATE: SEPT. 2015 SCALE: AS SHOWN
DESIGNED BY: JES DATE: APR. 2015
BRIDGE NO. B7380 DRAWING NO. 58190

ABHall 7/29/2016 12:01:29 PM
WORKSPACE: AHTD_Bridge
L:\20N\I00707 - I-540 Widening & Interchange Improvement\Drawings\I540-HW71B-S219-BE.dgn
REVISED DATE:

DATE REVISED	DATE FILMED	DATE REVISED	DATE FILMED	FED. ROAD DIST. NO.	STATE	FED. AID PROJ. NO.	SHEET NO.	TO SHE
8-1-16				6	ARK.			
				JOB NO.		BB0414	468	BE
				(1) A7380 & B7380		INT. BENT DETAILS		5

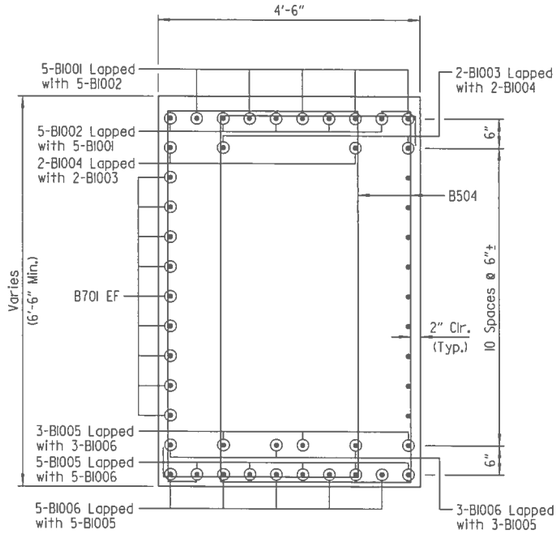

SECTION B-B
No Scale

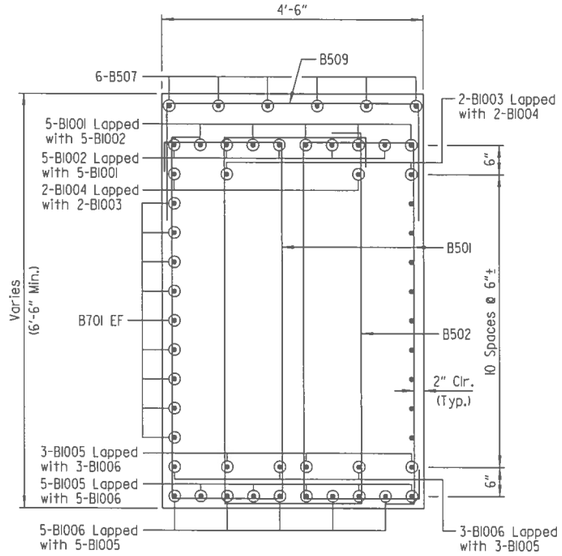

SECTION C-C
No Scale

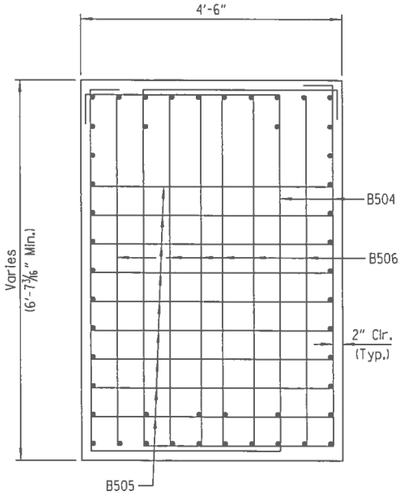

VIEW D-D
No Scale

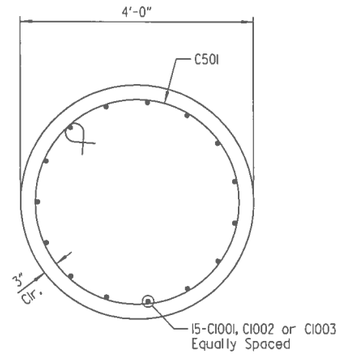

SECTION E-E
Scale: ¾" = 1'-0"

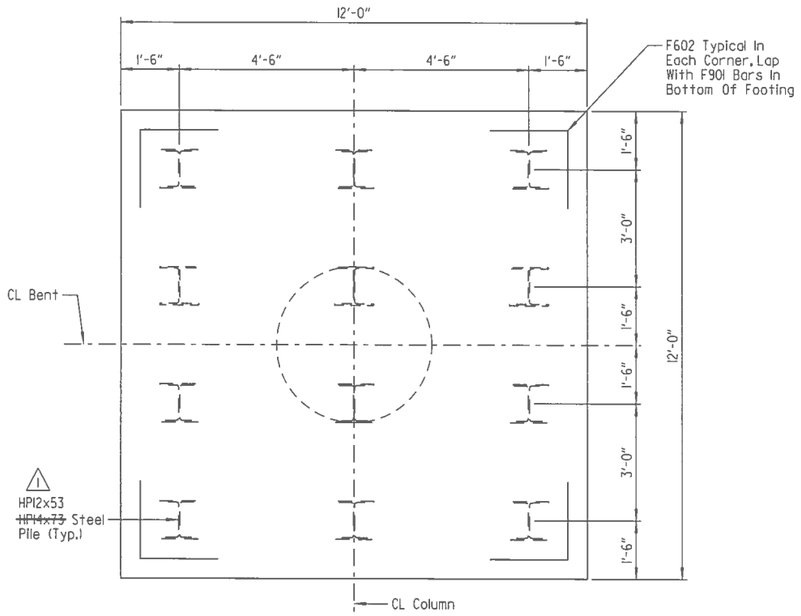

SECTION F-F
Scale: ½" = 1'-0"

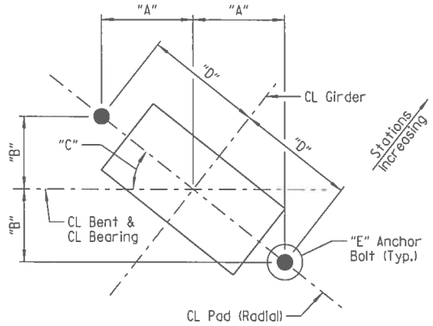

TYPICAL ANCHOR BOLT LAYOUT
No Scale

NOTE:
For details of elastomeric bearings, see Dwg. No. 58222.

LEGEND
EF = Each Face

TABLE OF VARIABLES

BENT NO.	GIRDER NO.	"A"	"B"	"C"	"D"	"E"
2A	1	1'-2 1/8"	11 5/16"	38°39'32"	1'-6 1/16"	2 1/4"ø
	2	1'-2 3/16"	11 3/16"	38°15'50"	1'-6 1/16"	2 1/4"ø
	3	1'-2 1/4"	11 1/16"	37°52'40"	1'-6 1/16"	2 1/4"ø
	4	1'-2 5/16"	11"	37°30'00"	1'-6 1/16"	2 1/4"ø
	5	1'-2 3/8"	10 7/8"	37°07'50"	1'-6 1/16"	2 1/4"ø
	6	1'-2 1/2"	10 15/16"	36°46'08"	1'-6 1/16"	2 1/4"ø
	7	1'-2 5/16"	10 3/4"	36°24'54"	1'-6 1/16"	2 1/4"ø
2B	1	1'-1 13/16"	10"	35°59'45"	1'-5 1/16"	2"ø
	2	1'-1 7/8"	9 15/16"	35°39'26"	1'-5 1/16"	2"ø
	3	1'-1 15/16"	9 7/8"	35°19'31"	1'-5 1/16"	2"ø
	4	1'-2"	9 13/16"	35°00'00"	1'-5 1/16"	2"ø
	5	1'-2"	9 11/16"	34°40'52"	1'-5 1/16"	2"ø
	6	1'-2 1/16"	9 5/8"	34°22'07"	1'-5 1/16"	2"ø
	7	1'-2 1/8"	9 9/16"	34°03'43"	1'-5 1/16"	2"ø

1 Revised pile size, ABH 8-1-16

STATE OF ARKANSAS
LICENSED PROFESSIONAL ENGINEER
No. 16458
8-1-16
JOEL E. SKINNER
BRIDGE ENGINEER

SHEET 1 OF 2
COMMON DETAILS OF INTERMEDIATE BENTS
I-49 OVER HWY. 71B
ROUTE SEC.
ARKANSAS STATE HIGHWAY COMMISSION
LITTLE ROCK, ARK.

DRAWN BY: CWT DATE: APR. 2015 FILENAME: BBB0414M3_B3.dgn
CHECKED BY: ABH DATE: SEPT. 2015 SCALE: AS SHOWN
DESIGNED BY: JES DATE: APR. 2015
BRIDGE NO. A7380 & B7380 DRAWING NO. 58191

ABHall 7/29/2016 12:01:31 PM
WORKSPACE: AHTD Bridge
L:\120\NORTOT - I-540 Widening & Interchange Improvement\Drawings\I540-HWY71B-S220-BE.dgn
REVISED DATE:

DATE REVISED	DATE FILMED	DATE REVISED	DATE FILMED	FED. ROAD DIST. NO.	STATE	FED. AID PROJ. NO.	SHEET NO.	TOTAL SHEETS
				6	ARK.			
				JOB NO.		BB0414	469	886
				(1) A7380 & B7380		INT. BENT DETAILS		58192

BAR LIST - BENT NO. 2A

Mark	No. Req'd	Length	"A"	"B"	Pin Dia.
B501	76	16'-10"	2'-0"		2½"
B502	38	17'-10"	2'-6"		2½"
B503	12	16'-4"	4'-2"	6'-2"	2½"
B504	140	19'-6"	3'-4"		2½"
B505	18	7'-10"	4'-0½"	2'-0"	2½"
B506	12	9'-10"	6'-0½"	2'-0"	2½"
B507	36	7'-9"	4'-0"	3'-9"	2½"
B508	6	3'-0"			Str.
B509	83	8'-0"	4'-2"	2'-0"	2½"
B701	36	37'-7"			Str.
B1001	10	27'-7"	26'-2"		10"
B1002	10	55'-1"	53'-8"		10"
B1003	4	26'-0"			Str.
B1004	4	53'-6"			Str.
B1005	16	43'-9"			Str.
B1006	16	33'-10"			Str.
C501	55	12'-4"			3¾"
C1001	15	19'-11"			Str.
C1002	15	22'-3"			Str.
C1003	15	24'-6"			Str.
F601	96	11'-6"			Str.
F602	12	4'-10"	2'-6"	2'-6"	4½"
F901	147	14'-0"			9"
F1001	45	12'-3"	1'-9½"	10'-9"	10"

BAR LIST - BENT NO. 2B

Mark	No. Req'd	Length	"A"	"B"	Pin Dia.
B501	76	16'-10"	2'-0"		2½"
B502	38	17'-10"	2'-6"		2½"
B503	12	16'-4"	4'-2"	6'-2"	2½"
B504	132	19'-6"	3'-4"		2½"
B505	18	7'-10"	4'-0½"	2'-0"	2½"
B506	12	9'-10"	6'-0½"	2'-0"	2½"
B507	36	7'-6"	3'-9"	3'-9"	2½"
B508	6	3'-5"			Str.
B509	79	8'-0"	4'-2"	2'-0"	2½"
B701	36	36'-7"			Str.
B1001	10	26'-7"	25'-2"		10"
B1002	10	54'-1"	52'-8"		10"
B1003	4	25'-0"			Str.
B1004	4	52'-6"			Str.
B1005	16	42'-9"			Str.
B1006	16	32'-10"			Str.
C501	63	12'-4"			3¾"
C1001	15	22'-5"			Str.
C1002	15	24'-8"			Str.
C1003	15	26'-11"			Str.
F601	96	11'-6"			Str.
F602	12	4'-10"	2'-6"	2'-6"	4½"
F901	147	14'-0"			9"
F1001	45	12'-3"	1'-9½"	10'-9"	10"

BAR BENDING DIAGRAMS

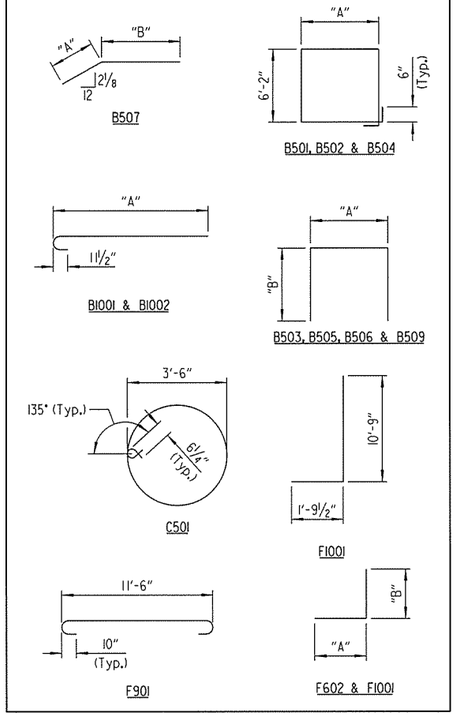

NOTE:
Dimensions of bars are out-to-out.

GENERAL NOTES

All concrete shall be Class "S" with a minimum 28-day compressive strength f'c = 3500 psi. Concrete shall be poured in the dry and all exposed corners to be chamfered ¾" unless otherwise noted.

All reinforcing steel shall conform to AASHTO M31 or M322 Type A, Grade 60 (Yield Strength = 60,000 psi), with mill test reports.

Reinforcing bars in top of cap shall be properly placed to avoid damage or interference with anchor bolts or sheet metal sleeves.

Class 3 Textured Coating Finish shall be applied to bent surfaces as specified in SP JOB NO. BB0414 "TEXTURED COATING FINISH".

For additional information, see Layout.

STATE OF ARKANSAS
LICENSED PROFESSIONAL ENGINEER
No. 16458
3-10-16
JOEL E. SKINNER

BRIDGE ENGINEER

SHEET 2 OF 2
COMMON DETAILS OF INTERMEDIATE BENTS
I-49 OVER HWY. 71B
ROUTE SEC.
ARKANSAS STATE HIGHWAY COMMISSION
LITTLE ROCK, ARK.

DRAWN BY: CWT DATE: APR. 2015 FILENAME: BBB0414M3_B4.dgn
CHECKED BY: ABH DATE: SEPT. 2015 SCALE: AS SHOWN
DESIGNED BY: JES DATE: APR. 2015

BRIDGE NO. A7380 & B7380 DRAWING NO. 58192

jeskinner 3/20/2016 3:35:36 PM
WORKSPACE: AHTD_Bridge
L:\20IN\001707 - I-540 Widening & Interchange Improvement\Drawings\I540-HWY71B-S22\BE.dgn
REVISED DATE:

DATE REVISED	DATE FILMED	DATE REVISED	DATE FILMED	FED. ROAD DIST. NO.	STATE	FED. AID PROJ. NO.	SHEET NO.	TOTAL SHEETS
				6	ARK.			
				JOB NO.		BB0414	470	886
				(1) A7380		364'-0" PL GIRDER UNIT		58193

SLAB REINFORCING:
Transverse: S5002E Lapped With S5003E @ 12" O.C. Bent Up Over Girders
S5004E Lapped With S5004E @ 12" O.C. In Bottom
S6003E Lapped With S6004E @ 12" O.C. In Top
} Alternating
S6002E Bundled With #5 & #6 Bars In Top At Gutterline (Both Sides)

Longitudinal: S40IE (Placed As Shown In Top)
S500IE (Placed As Shown In Bottom)
S600IE (Placed As Shown In Top Over Int. Supports)

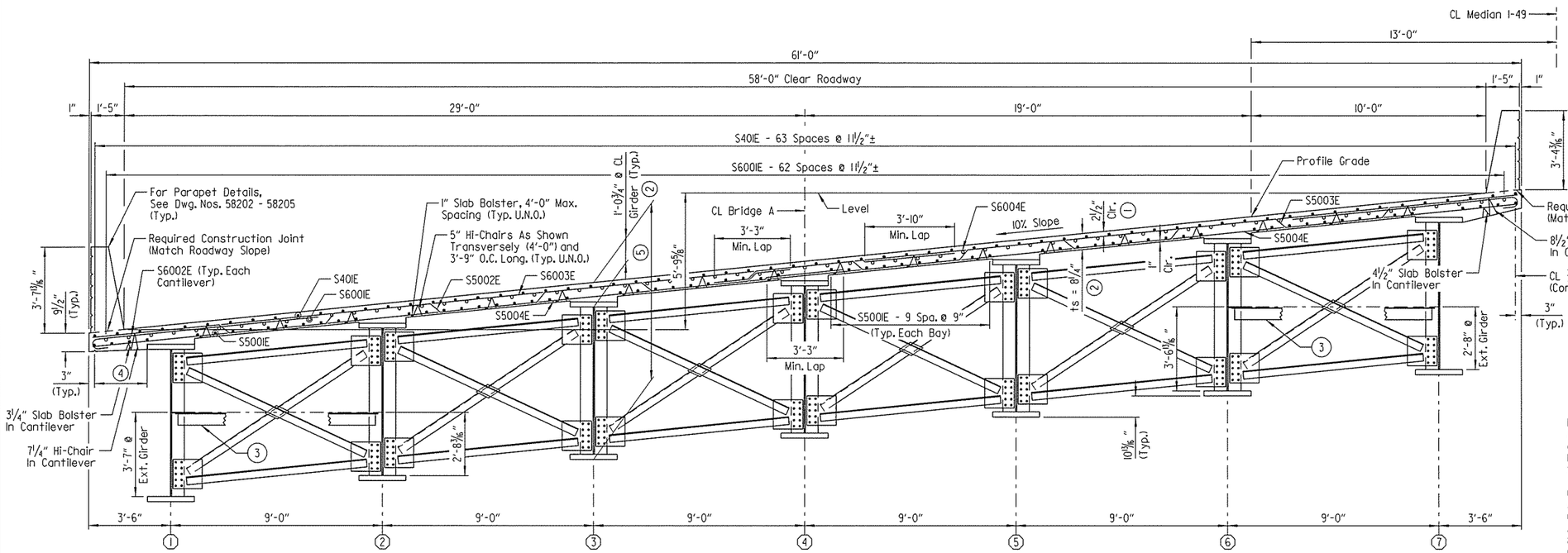

TYPICAL SECTION
(Looking Ahead)
Scale: ⅜" = 1'-0"

(X) Girder Number

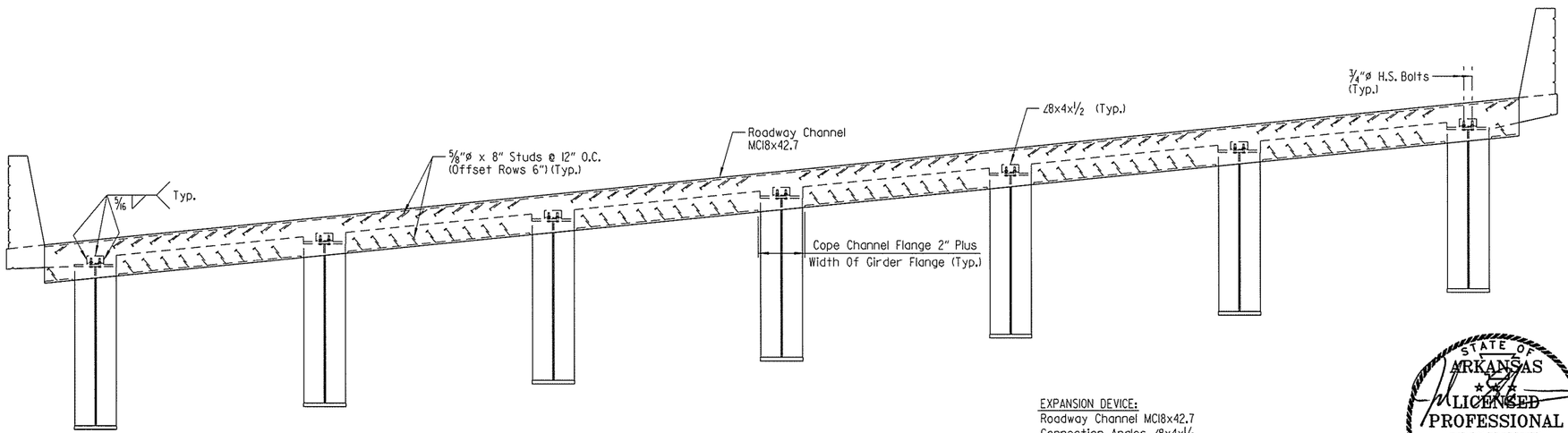

NOTE:
The profile of the Roadway Channel shall be established based on the Vertical Curve in conjunction with the skew.

TYPICAL SECTION THRU JOINT
Scale: ⅜" = 1'-0"

EXPANSION DEVICE:
Roadway Channel MC18x42.7
Connection Angles ∠8x4x½
Detail Device ⅛" high and provide ¼" shims using 2 - 1/16" and 1 - ⅛" plates

(1) TOLERANCE:
Minus = ¼"
Plus = Amount of slab thickening used to meet slab thickness tolerance - see "ADJUSTMENT FOR SLAB THICKNESS TOLERANCE" on Dwg. No. 58207.

(2) See "ADJUSTMENT FOR SLAB THICKNESS TOLERANCE" on Dwg. No. 58207.

(3) Construction Lateral Bracing (exterior bays only). See "FRAMING PLAN - SPAN NO. 1" and "FRAMING PLAN - SPAN NO. 2" on Dwg. Nos. 58197 & 58198 for location. See details on Dwg. No. 58199.

(4) S500IE - 3 Spa. @ 8½" (Typ. Each Cantilever)

(5) 7'-3¾" + Bottom Flange Thickness, measured @ CL Girder (Typ.)

NOTES:
At the Contractor's option, one epoxy coated #5 bar in the top and one epoxy coated #5 bar in the bottom may be substituted for each bar S5002E & S5003E. Payment will be based on the weight of bars S5002E & S5003E.

Class 2 Protective Surface Treatment shall be applied to the roadway surface and roadway face of concrete parapet. Class 3 Textured Coating Finish shall be applied to bridge surfaces as specified in SP JOB NO. BB0414 "TEXTURED COATING FINISH" and in accordance with Subsection 802.19. Textured Coating Finish shall not be applied on surfaces where Class 2 Protective Surface Treatment is applied.

For "BAR LIST" & "BAR BENDING DIAGRAMS", see Dwg. No. 58205.

For details of poured silicone joint, see Dwg. No. 58221.

For "DETAIL OF ALTERNATE ANCHORS", see Dwg. No. 58207.

LEGEND
U.N.O. = Unless Noted Otherwise

STATE OF ARKANSAS
LICENSED PROFESSIONAL ENGINEER
No. 16458
3-20-16
JOEL E. SKINNER
BRIDGE ENGINEER

SHEET 1 OF 13
DETAILS OF 364'-0" CONTINUOUS COMPOSITE PLATE GIRDER UNIT BRIDGE A I-49 OVER HWY. 71B

ROUTE SEC.

ARKANSAS STATE HIGHWAY COMMISSION
LITTLE ROCK, ARK.

DRAWN BY: CWT DATE: MAR. 2015 FILENAME: BBB0414A3_S1.dgn
CHECKED BY: ABH DATE: JULY 2015 SCALE: AS SHOWN
DESIGNED BY: JES DATE: MAR. 2015
BRIDGE NO. A7380 DRAWING NO. 58193

Jeskinner 3/20/2016 3:35:37 PM
WORKSPACE: AHTD_Bridge
L:\20IN\MOT707 - I-540 Widening & Interchange Improvement\Drawings\I540-HWY71B-S30I-SX.dgn
REVISED DATE:

DATE REVISED	DATE FILMED	DATE REVISED	DATE FILMED	FED. ROAD DIST. NO.	STATE	FED. AID PROJ. NO.	SHEET NO.	TOTAL SHEETS
				6	ARK.			
				JOB NO.		BB0414	471	886
				(1) A7380		364'-0" PL GIRDER UNIT		58194

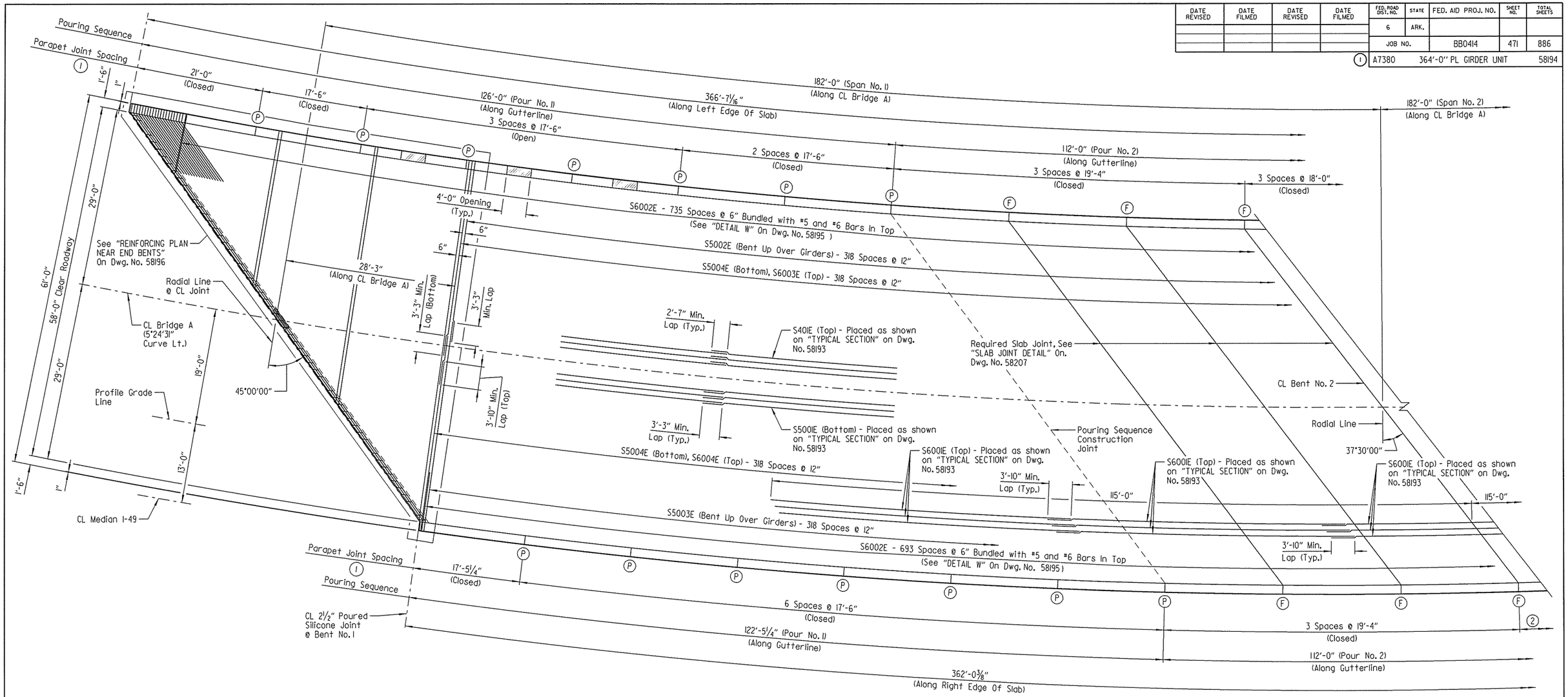

(1) Measured along gutterline. Parapet joints designated with symbol (F) shall be stopped 4" from top of slab. All other parapet joints with symbol (P) shall be partial depth joints stopped 1'-2" from top of slab.

(2) 3 Spaces @ 18'-0" (Closed)

REINFORCING PLAN AND POURING SEQUENCE - SPAN NO. 1

Scale: 1/8" = 1'-0"

NOTES:
Pours with the same number may be placed simultaneously or separately. All pours (1) must be placed before pour (2) can be placed. 48 hours shall elapse between the end of a pour and the start of the next pour. 72 hours shall elapse between the end of a pour and the start of an adjacent pour. 72 hours shall elapse between the completion of the entire deck and the pouring of the parapet. Any railing pours made before the entire slab unit has been placed must be approved by the Engineer.

The Contractor must obtain approval from the Engineer for any deviations from the pouring sequence shown.

Concrete in bridge superstructure shall be consolidated for the entire pour before any concrete has taken its initial set. This may require the use of a retarding agent.

For "CONCRETE PLACEMENT PROCEDURE", see Dwg. No. 58207

Required slab joints and pouring sequence joints shall align with the parapet open joints at the gutterline.

Unless noted otherwise, spacing shown for all transverse reinforcing is measured along CL Bridge A. All transverse reinforcing shall be placed on lines radial to CL Bridge A.

All longitudinal lines and longitudinal slab reinforcing shall be placed along curves concentric with CL Bridge A (5°24'31" curve).

For parapet reinforcing details, see Dwg. Nos. 58202 - 58205.

STATE OF ARKANSAS
LICENSED PROFESSIONAL ENGINEER
No. 16458
3-20-16
JOEL E. SKINNER
BRIDGE ENGINEER

SHEET 2 OF 13
DETAILS OF 364'-0" CONTINUOUS COMPOSITE PLATE GIRDER UNIT
BRIDGE A
I-49 OVER HWY. 71B
ROUTE SEC.
ARKANSAS STATE HIGHWAY COMMISSION
LITTLE ROCK, ARK.

DRAWN BY: CWT DATE: MAR. 2015 FILENAME: BBB0414A3_S2.dgn
CHECKED BY: ABH DATE: JULY 2015 SCALE: AS SHOWN
DESIGNED BY: JES DATE: MAR. 2015
BRIDGE NO. A7380 DRAWING NO. 58194

Jeskinner 3/20/2016 3:35:37 PM
WORKSPACE: AHTD_Bridge
L:\20IN\I0I707 - I-540 Widening & Interchange Improvement\Drawings\I540-HWY71B-S302-SB.dgn
REVISED DATE:

DATE REVISED	DATE FILMED	DATE REVISED	DATE FILMED	FED. ROAD DIST. NO.	STATE	FED. AID PROJ. NO.	SHEET NO.	TOTAL SHEETS
				6	ARK.			
				JOB NO.		BB0414	472	886

(1)	A7380	364'-0" PL GIRDER UNIT	58195

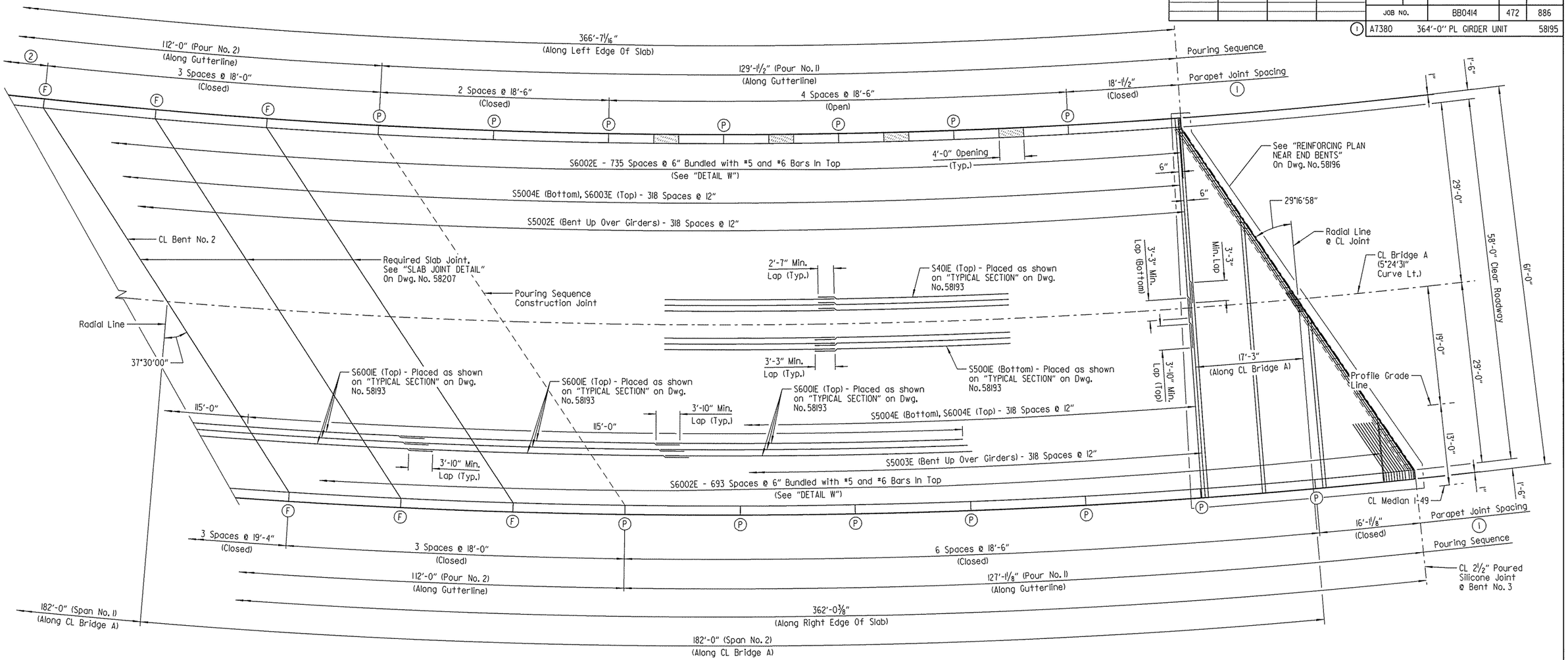

(1) Measured along gutterline. Parapet joints designated with symbol (F) shall be stopped 4" from top of slab. All other parapet joints with symbol (P) shall be partial depth joints stopped 1'-2" from top of slab.

(2) 3 Spaces @ 19'-4" (Closed)

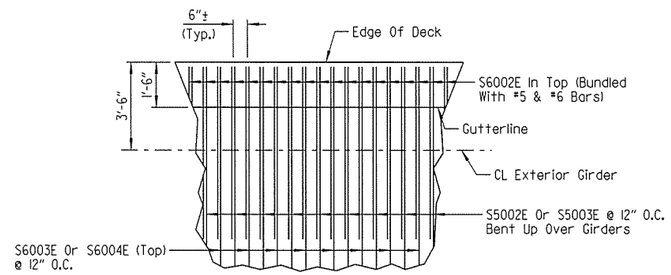

DETAIL W
No Scale

REINFORCING PLAN AND POURING SEQUENCE - SPAN NO. 2

Scale: 1/8" = 1'-0"

NOTES:
Pours with the same number may be placed simultaneously or separately. All pours (1) must be placed before pour (2) can be placed. 48 hours shall elapse between the end of a pour and the start of the next pour. 72 hours shall elapse between the end of a pour and the start of an adjacent pour. 72 hours shall elapse between the completion of the entire deck and the pouring of the parapet. Any railing pours made before the entire slab unit has been placed must be approved by the Engineer.

The Contractor must obtain approval from the Engineer for any deviations from the pouring sequence shown.

Concrete in bridge superstructure shall be consolidated for the entire pour before any concrete has taken its initial set. This may require the use of a retarding agent.

For "CONCRETE PLACEMENT PROCEDURE", see Dwg. No. 58207.

Required slab joints and pouring sequence joints shall align with the parapet open joints at the gutterline.

Unless noted otherwise, spacing shown for all transverse reinforcing is measured along CL Bridge A. All transverse reinforcing shall be placed on lines radial to CL Bridge A.

All longitudinal lines and longitudinal slab reinforcing shall be placed along curves concentric with CL Bridge A (5°24'31" curve).

For parapet reinforcing details, see Dwg. Nos. 58202 - 58205.

STATE OF ARKANSAS
LICENSED PROFESSIONAL ENGINEER
No. 16458
3-20-16
JOEL E. SKINNER

BRIDGE ENGINEER

SHEET 3 OF 13
DETAILS OF 364'-0" CONTINUOUS COMPOSITE PLATE GIRDER UNIT BRIDGE A I-49 OVER HWY. 71B

ROUTE SEC.

ARKANSAS STATE HIGHWAY COMMISSION
LITTLE ROCK, ARK.

DRAWN BY: CWT DATE: MAR. 2015 FILENAME: BBB0414A3_S3.dgn
CHECKED BY: ABH DATE: JULY 2015 SCALE: AS SHOWN
DESIGNED BY: JES DATE: MAR. 2015

BRIDGE NO. A7380 DRAWING NO. 58195

jeskinner 3/20/2016 3:35:37 PM
WORKSPACE: AHTD Bridge
L:\20NMDOT\07 I-540 Widening & Interchange Improvement\Drawings\I540-HWY71B-S303-SB.dgn
REVISED DATE:

DATE REVISED	DATE FILMED	DATE REVISED	DATE FILMED	FED. ROAD DIST. NO.	STATE	FED. AID PROJ. NO.	SHEET NO.	TOTAL SHEETS
				6	ARK.			
				JOB NO.		BB0414	473	886
				(1) A7380		364'-0" PL GIRDER UNIT		58196

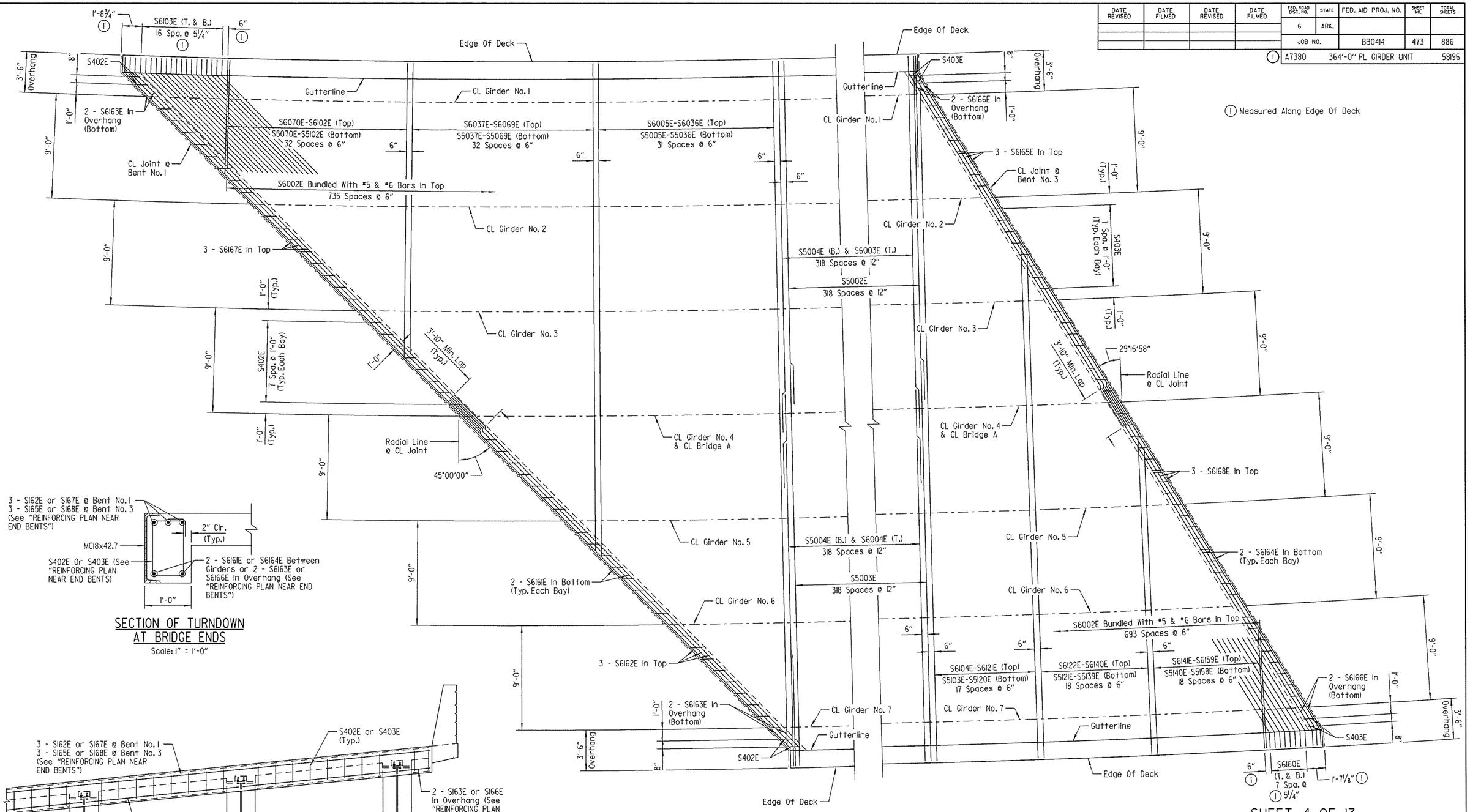

SECTION OF TURNDOWN AT BRIDGE ENDS

Scale: 1" = 1'-0"

ELEVATION OF TURNDOWN AT BRIDGE ENDS

Scale: ⅜" = 1'-0"

REINFORCING PLAN NEAR END BENTS

Scale: ¼" = 1'-0"

NOTE:
Unless noted otherwise, spacing shown for all transverse reinforcing is measured along CL Bridge A. All transverse reinforcing shall be placed on lines radial to CL Bridge A.

LEGEND

T. = Top
B. = Bottom

STATE OF ARKANSAS
LICENSED PROFESSIONAL ENGINEER
No. 16458
3-20-16
JOEL E. SKINNER
BRIDGE ENGINEER

SHEET 4 OF 13
DETAILS OF 364'-0" CONTINUOUS COMPOSITE PLATE GIRDER UNIT
BRIDGE A
I-49 OVER HWY. 71B

ROUTE SEC.

ARKANSAS STATE HIGHWAY COMMISSION
LITTLE ROCK, ARK.

DRAWN BY: JES DATE: MAR. 2015 FILENAME: BBB0414A3_S4.dgn
CHECKED BY: ABH DATE: JULY 2015 SCALE: AS SHOWN
DESIGNED BY: JES DATE: MAR. 2015

BRIDGE NO. A7380 DRAWING NO. 58196

jeskinner 3/20/2016 3:35:38 PM
WORKSPACE: AHTD Bridge
L:\ROW\NO1707 - I-540 Widening & Interchange Improvement\Drawings\I540-HWY71B-S304-SB.dgn
REVISED DATE:

DATE REVISED	DATE FILMED	DATE REVISED	DATE FILMED

FED. ROAD DIST. NO.	STATE	FED. AID PROJ. NO.	SHEET NO.	TOTAL SHEETS
6	ARK.			
JOB NO.		BB0414	474	886

(1) A7380 364'-0" PL GIRDER UNIT 58197

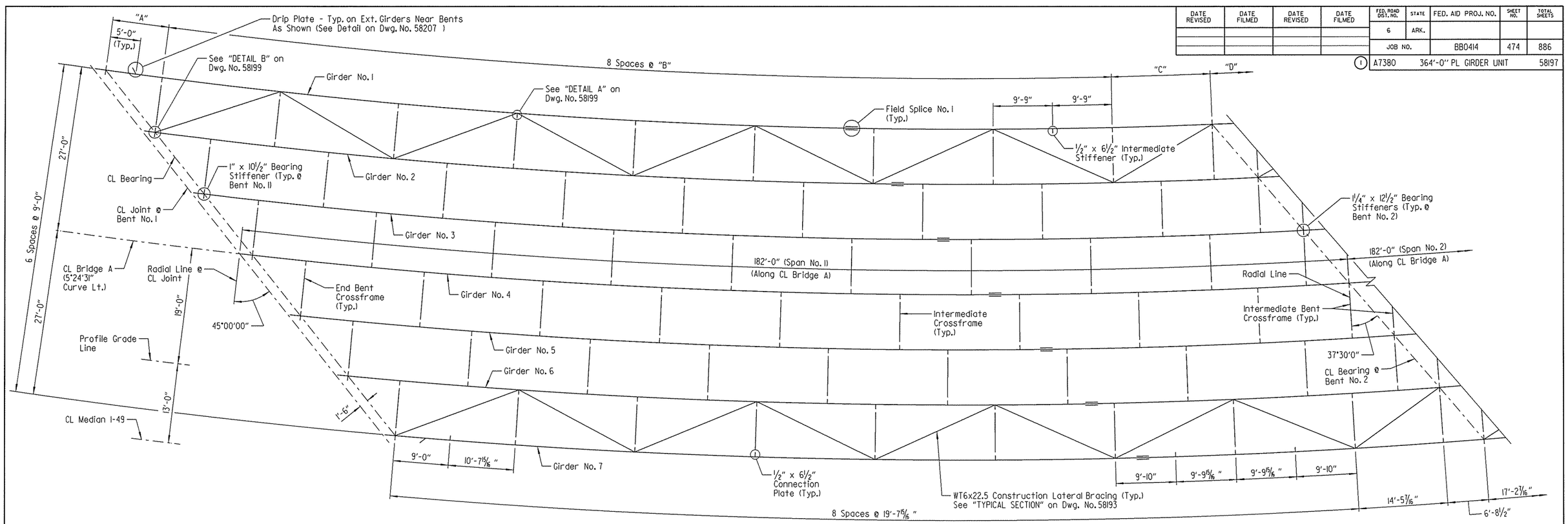

FRAMING PLAN - SPAN NO. 1

Scale: 1/8" = 1'-0"

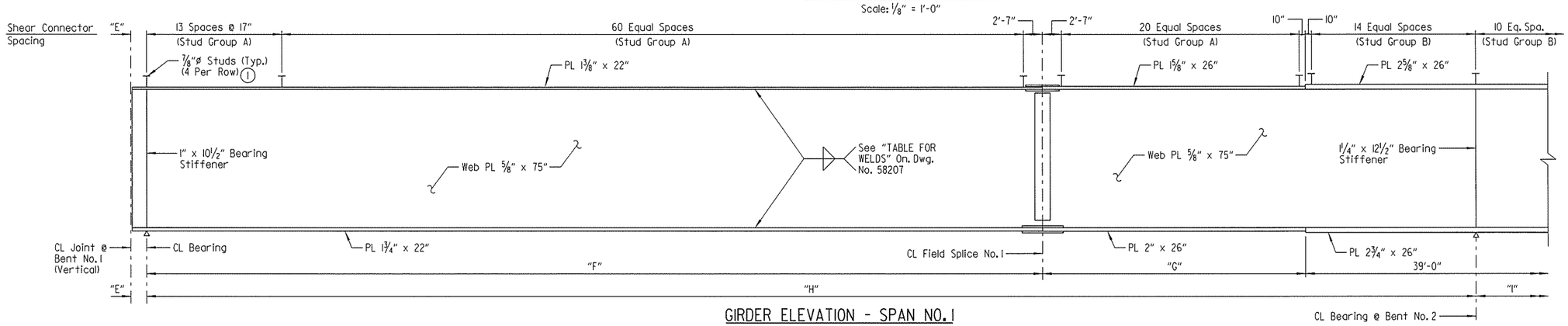

GIRDER ELEVATION - SPAN NO. 1

(Dimensions Measured Along CL Girder)
No Scale

TABLE OF VARIABLES									
GIRDER NO.	"A"	"B"	"C"	"D"	"E"	"F"	"G"	"H"	"I"
1	9'-3 7/16"	19'-6"	16'-4 1/8"	7'-1 7/16"	2'-2 1/8"	122'-8"	37'-6"	181'-8"	181'-3 5/8"
2	9'-1 5/16"	19'-6"	15'-10 3/8"	7'-0 1/4"	2'-1 7/8"	122'-0 5/16"	36'-6"	181'-0 5/16"	180'-11 1/4"
3	9'-0"	19'-6"	15'-5 1/8"	6'-11 1/16"	2'-1 5/8"	121'-5 3/16"	36'-6"	180'-5 3/16"	180'-7 3/16"
4	8'-10 1/4"	19'-6"	15'-0 3/8"	6'-10"	2'-1 7/16"	121'-10 9/16"	36'-6"	179'-10 9/16"	180'-3 3/8"
5	8'-8 1/2"	19'-6"	14'-7 15/16"	6'-8 7/8"	2'-1 1/4"	122'-4 7/16"	35'-6"	179'-4 7/16"	179'-11 3/4"
6	8'-6 13/16"	19'-6"	14'-4"	6'-7 7/8"	2'-1"	121'-10 13/16"	35'-0"	178'-10 13/16"	179'-8 7/16"
7	-	-	-	-	2'-0 13/16"	122'-5 9/16"	35'-0"	178'-5 9/16"	179'-5 5/16"

(1) Stud heights for Stud Group A and Stud Group B vary. See "SHEAR CONNECTOR DETAIL" on Dwg. No. 58207.

NOTES:
All girders are oriented along curves concentric with CL Bridge A.

All crossframes are oriented along lines radial to CL Bridge A.

For "BEARING STIFFENER DETAIL", "INTERMEDIATE STIFFENER DETAIL", "CONNECTION PLATE DETAIL" and crossframe details, see Dwg. No. 58201.

For "GENERAL NOTES", see Dwg. No. 58206.

STATE OF ARKANSAS
LICENSED PROFESSIONAL ENGINEER
No. 16458
3-20-16
JOEL E. SKINNER
BRIDGE ENGINEER

SHEET 5 OF 13
DETAILS OF 364'-0" CONTINUOUS COMPOSITE PLATE GIRDER UNIT BRIDGE A I-49 OVER HWY. 71B

ROUTE SEC.

ARKANSAS STATE HIGHWAY COMMISSION
LITTLE ROCK, ARK.

DRAWN BY: CWT DATE: MAR. 2015 FILENAME: BBB0414A3_S5.dgn
CHECKED BY: ABH DATE: JULY 2015 SCALE: AS SHOWN
DESIGNED BY: JES DATE: MAR. 2015
BRIDGE NO. A7380 DRAWING NO. 58197

jeskinner 3/20/2016 3:35:38 PM
WORKSPACE: ANTD_Bridge
L:\2016\16077 - I-540 Widening & Interchange Improvement\Drawings\I540-HWY71B-S305-SF.dgn
REVISED DATE:

DATE REVISED	DATE FILMED	DATE REVISED	DATE FILMED	FED. ROAD DIST. NO.	STATE	FED. AID PROJ. NO.	SHEET NO.	TOTAL SHEETS
				6	ARK.			
				JOB NO.		BB0414	475	886

(1) A7380 364'-0" PL GIRDER UNIT 58198

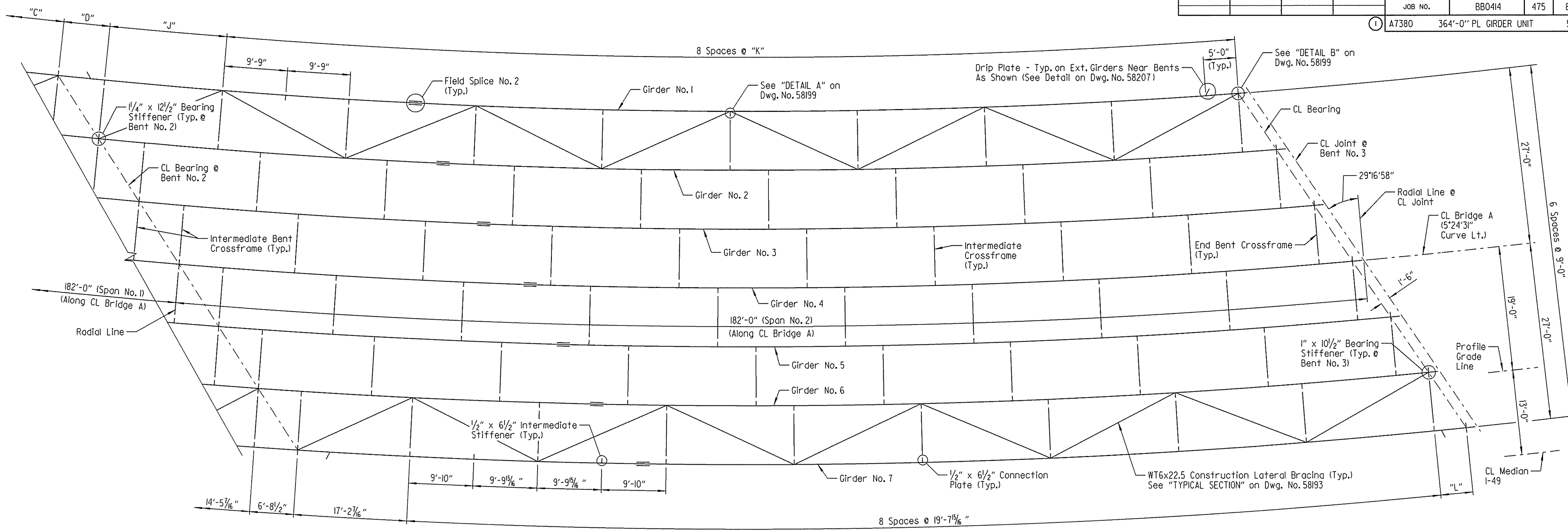

FRAMING PLAN - SPAN NO. 2

Scale: ⅛" = 1'-0"

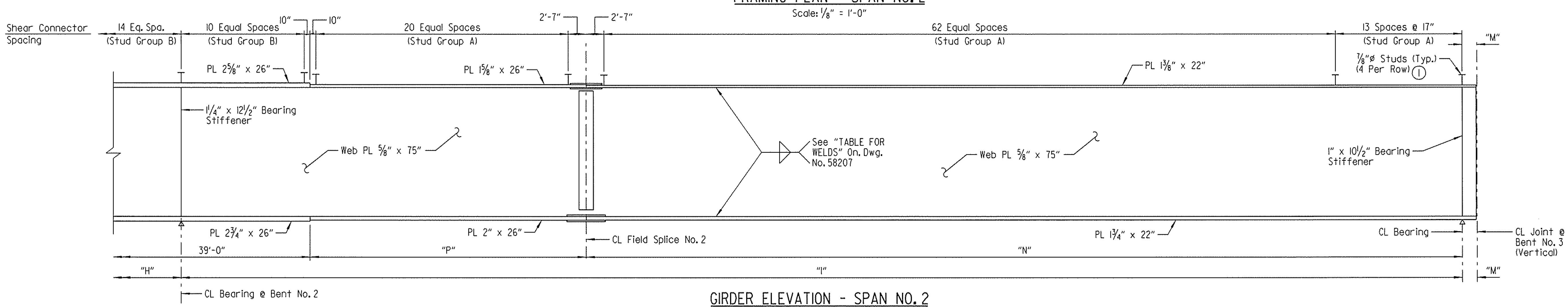

GIRDER ELEVATION - SPAN NO. 2

(Dimensions Measured Along CL Girder)
No Scale

TABLE OF VARIABLES						
GIRDER NO.	"J"	"K"	"L"	"M"	"N"	"P"
1	18'-2 3/16"	19'-6"	-	1'-8 13/16"	126'-3⅝"	37'-6"
2	17'-11"	19'-6"	5'-2 13/16"	1'-8¾"	127'-11¼"	36'-6"
3	17'-8⅛"	19'-6"	5'-2⅛"	1'-8 11/16"	127'-7 3/16"	36'-6"
4	17'-5⅜"	19'-6"	5'-1⅜"	1'-8⅝"	126'-3⅜"	36'-6"
5	17'-2⅞"	19'-6"	5'-0 11/16"	1'-8 9/16"	126'-11¾"	35'-6"
6	17'-0 9/16"	19'-6"	5'-0 1/16"	1'-8 9/16"	127'-8 7/16"	35'-0"
7	-	-	4'-11⅜"	1'-8½"	126'-5 5/16"	35'-0"

NOTES:
All girders are oriented along curves concentric with CL Bridge A.

All crossframes are oriented along lines radial to CL Bridge A.

For "BEARING STIFFENER DETAIL", "INTERMEDIATE STIFFENER DETAIL", "CONNECTION PLATE DETAIL" and crossframe details, see Dwg. No. 58201.

For "GENERAL NOTES", see Dwg. No. 58206.

For dimensions "C", "D", "H" and "I", see "TABLE OF VARIABLES" on Dwg. No. 58197.

(1) Stud heights for Stud Group A and Stud Group B vary. See "SHEAR CONNECTOR DETAIL" on Dwg. No. 58207.

STATE OF ARKANSAS LICENSED PROFESSIONAL ENGINEER ★★★ No. 16458 JOEL E. SKINNER 3-20-16

BRIDGE ENGINEER

SHEET 6 OF 13
DETAILS OF 364'-0" CONTINUOUS COMPOSITE PLATE GIRDER UNIT
BRIDGE A
I-49 OVER HWY. 71B
ROUTE SEC.
ARKANSAS STATE HIGHWAY COMMISSION
LITTLE ROCK, ARK.

DRAWN BY: CWT DATE: MAR. 2015 FILENAME: BBB0414A3_S6.dgn
CHECKED BY: ABH DATE: JULY 2015 SCALE: AS SHOWN
DESIGNED BY: JES DATE: MAR. 2015
BRIDGE NO. A7380 DRAWING NO. 58198

jeskinner 3/20/2016 3:35:38 PM
WORKSPACE: AHTD Bridge
L:\2011\011707 - I-540 Widening & Interchange Improvement\Drawings\540-HWY71B-S306-SF.dgn
REVISED DATE:

DATE REVISED	DATE FILMED	DATE REVISED	DATE FILMED	FED. ROAD DIST. NO.	STATE	FED. AID PROJ. NO.	SHEET NO.	TOTAL SHEETS
				6	ARK.			
				JOB NO.		BB0414	476	886

(1) A7380 364'-0" PL GIRDER UNIT 58199

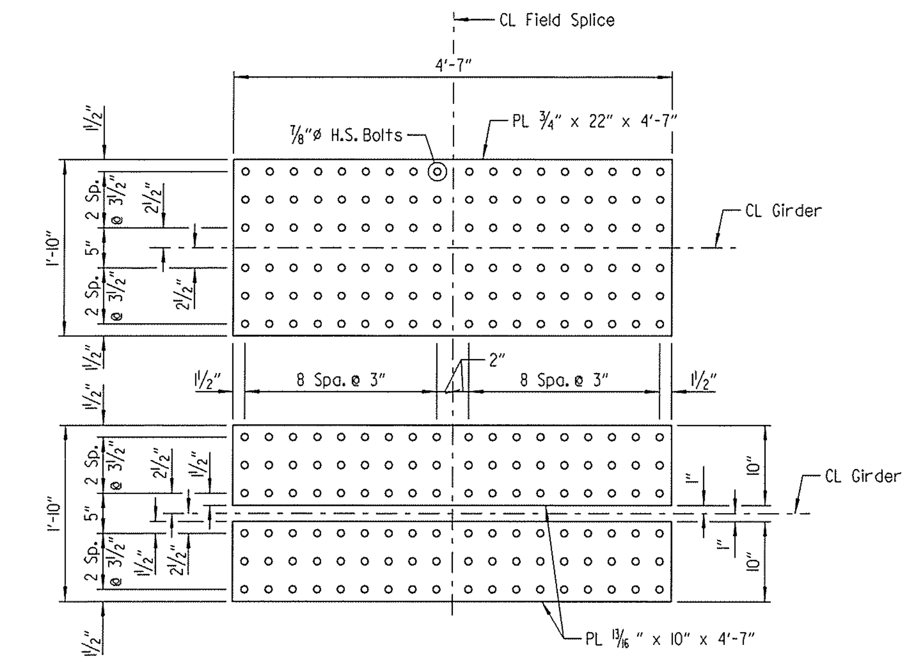

TOP FLANGE SPLICE
Scale: 1" = 1'-0"

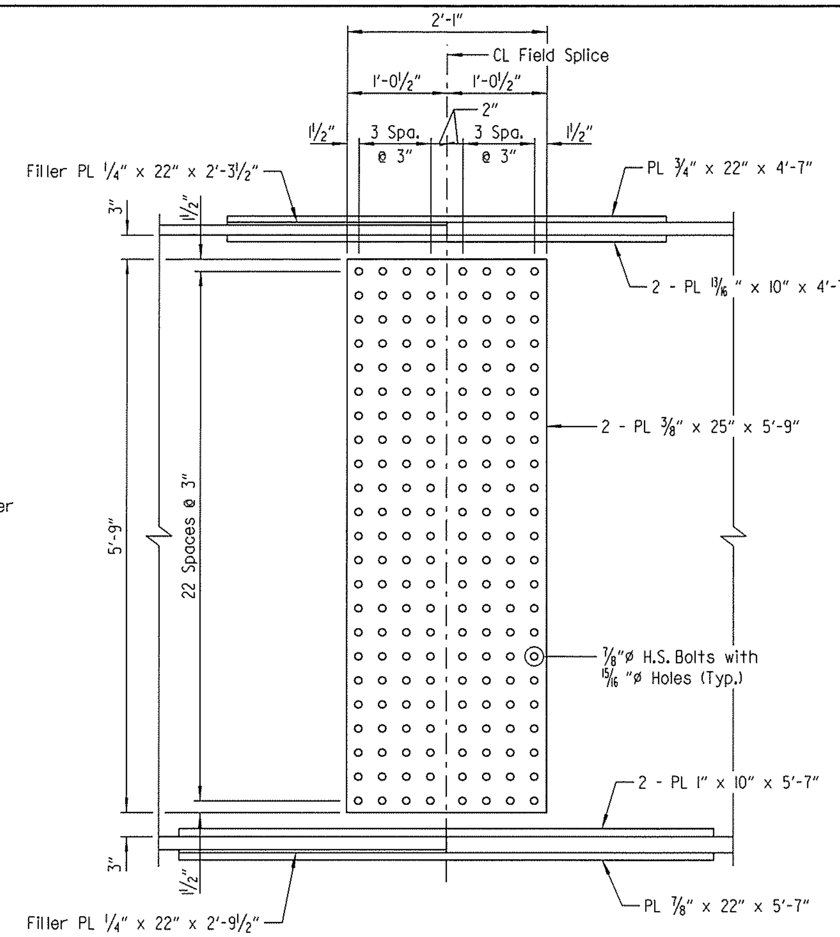

ELEVATION OF FIELD SPLICE
Scale: 1" = 1'-0"

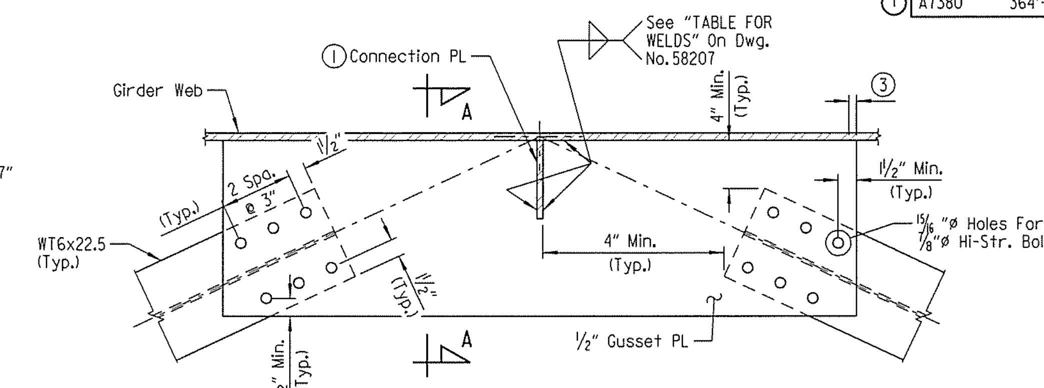

DETAIL A
Scale: 1 1/2" = 1'-0"

(1) Connection plates shall be discontinuous at lateral bracing gusset plates.

(2) Stop weld 1/4" to 1" from end of clip

(3) Stop weld 1/4" from the edge of all corners, both clipped and unclipped

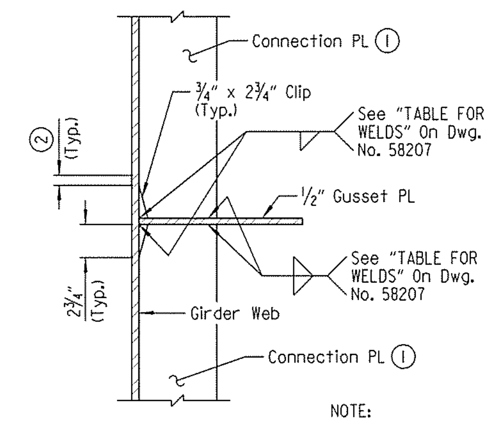

SECTION A-A
Scale: 1 1/2" = 1'-0"

NOTE:
WT6x22.5 construction lateral bracing member not shown for clarity.

NOTES:
At the Contractor's option, 15/16"ø holes may be field drilled in one end of each WT6x22.5 member.

For locations of construction lateral bracing, see "FRAMING PLAN - SPAN NO. 1" and "FRAMING PLAN - SPAN NO. 2" on Dwg. Nos. 58197 & 58198.

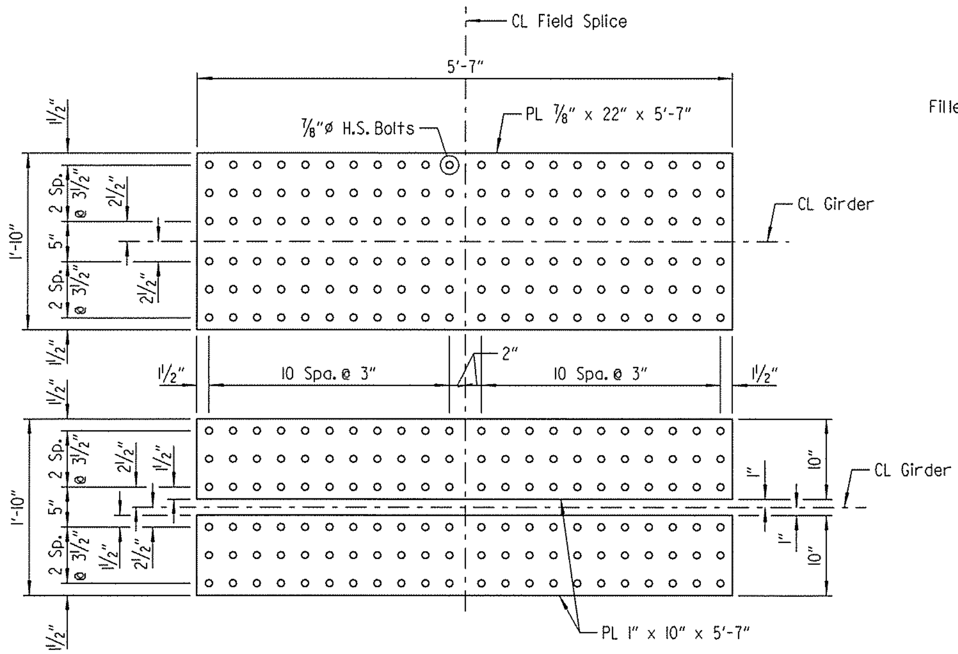

BOTTOM FLANGE SPLICE
Scale: 1" = 1'-0"

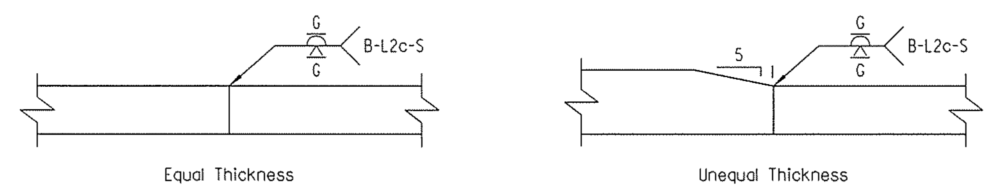

FLANGE SPLICE
(Flanges < or = 2" Thick)

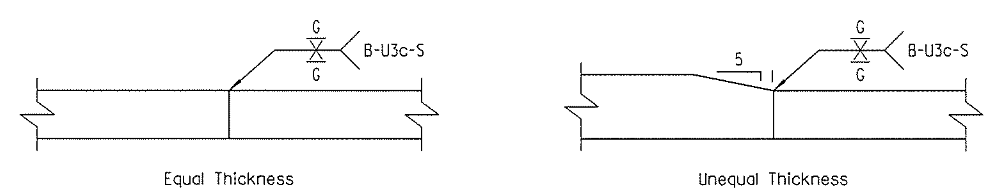

FLANGE SPLICE
(Flanges > 2" Thick)

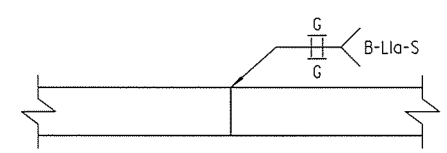

WEB SPLICE

DETAILS OF WELDED SPLICES
No Scale

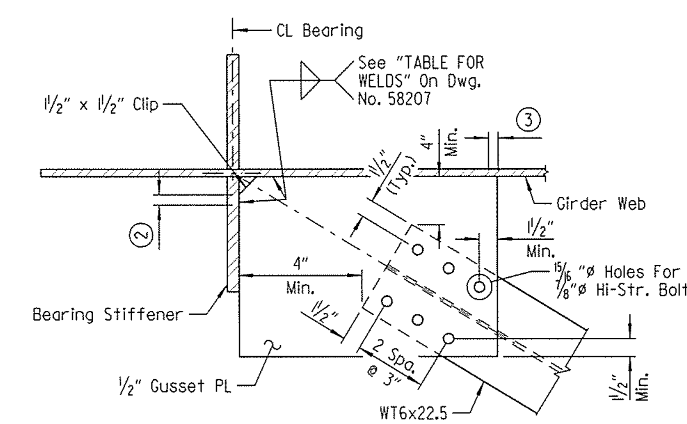

DETAIL B
Scale: 1 1/2" = 1'-0"

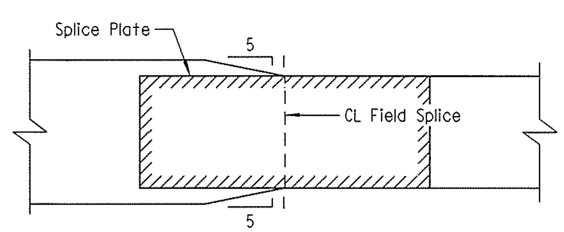

DETAIL OF BOTTOM FLANGE TRANSITION
No Scale

NOTES:
All field splice bolts shall 7/8"ø H.S. bolts.

All holes for field splice bolts shall 15/16"ø.

All field splice plates shall be AASHTO M270, Gr. 50W steel.

Bolted field splices shown may be eliminated or shop welded splices may be substituted with approval of the Engineer. Payment will be made on the basis of the plan quantities.

STATE OF ARKANSAS LICENSED PROFESSIONAL ENGINEER No. 16458 JOEL E. SKINNER 3-20-16

BRIDGE ENGINEER

SHEET 7 OF 13
DETAILS OF 364'-0" CONTINUOUS COMPOSITE PLATE GIRDER UNIT
BRIDGE A
I-49 OVER HWY. 71B
ROUTE SEC.
ARKANSAS STATE HIGHWAY COMMISSION
LITTLE ROCK, ARK.

DRAWN BY: CWT DATE: MAR. 2015 FILENAME: BBB0414A3_S7.dgn
CHECKED BY: ABH DATE: JULY 2015 SCALE: AS SHOWN
DESIGNED BY: JES DATE: MAR. 2015
BRIDGE NO. A7380 DRAWING NO. 58199

jeskinner 3/20/2016 3:35:39 PM
WORKSPACE: AHTD Bridge
L:\2011\011707 - I-540 Widening & Interchange Improvement\Drawings\I540-HWY71B-S307-SD.dgn
REVISED DATE:

DATE REVISED	DATE FILMED	DATE REVISED	DATE FILMED	FED. ROAD DIST. NO.	STATE	FED. AID PROJ. NO.	SHEET NO.	TOTAL SHEETS
				6	ARK.			
				JOB NO.		BB0414	477	886
				(1) A7380		364'-0" PL GIRDER UNIT		58200

TABLE OF DEAD LOAD DEFLECTIONS (INCHES) - GIRDERS 1-6

	Point Of Deflection	Girder 1			Girder 2			Girder 3			Girder 4			Girder 5			Girder 6		
		Structural Steel	Structural Steel + Slab	Structural Steel + Slab + Parapet	Structural Steel	Structural Steel + Slab	Structural Steel + Slab + Parapet	Structural Steel	Structural Steel + Slab	Structural Steel + Slab + Parapet	Structural Steel	Structural Steel + Slab	Structural Steel + Slab + Parapet	Structural Steel	Structural Steel + Slab	Structural Steel + Slab + Parapet	Structural Steel	Structural Steel + Slab	Structural Steel + Slab + Parapet
SPAN NO. 1	1.0	0.000	0.000	0.000	0.000	0.000	0.000	0.000	0.000	0.000	0.000	0.000	0.000	0.000	0.000	0.000	0.000	0.000	0.000
	1.1	0.348	1.094	1.183	0.427	1.324	1.417	0.425	1.310	1.403	0.407	1.254	1.346	0.392	1.209	1.300	0.377	1.164	1.257
	1.2	0.647	2.030	2.197	0.788	2.437	2.609	0.784	2.412	2.583	0.751	2.309	2.477	0.723	2.224	2.391	0.695	2.142	2.314
	1.3	0.853	2.670	2.892	1.029	3.173	3.399	1.025	3.144	3.368	0.980	3.005	3.224	0.943	2.891	3.108	0.908	2.788	3.011
	1.4	0.941	2.936	3.183	1.123	3.446	3.694	1.120	3.420	3.664	1.070	3.264	3.502	1.027	3.133	3.368	0.990	3.025	3.266
	1.5	0.908	2.816	3.055	1.067	3.253	3.491	1.067	3.235	3.467	1.016	3.077	3.302	0.974	2.949	3.170	0.939	2.847	3.073
	1.6	0.765	2.354	2.556	0.884	2.667	2.865	0.885	2.655	2.847	0.839	2.513	2.698	0.802	2.401	2.581	0.773	2.317	2.499
	1.7	0.547	1.665	1.810	0.617	1.835	1.974	0.619	1.830	1.964	0.583	1.717	1.844	0.555	1.633	1.755	0.534	1.572	1.694
	1.8	0.311	0.932	1.014	0.338	0.981	1.058	0.340	0.980	1.052	0.316	0.904	0.971	0.298	0.851	0.914	0.284	0.812	0.873
	1.9	0.111	0.325	0.354	0.114	0.313	0.338	0.115	0.313	0.336	0.103	0.276	0.296	0.095	0.252	0.269	0.088	0.232	0.247
	2.0	0.000	0.000	0.000	0.000	0.000	0.000	0.000	0.000	0.000	0.000	0.000	0.000	0.000	0.000	0.000	0.000	0.000	0.000
SPAN NO. 2	2.1	0.042	0.151	0.162	0.059	0.222	0.238	0.058	0.222	0.241	0.062	0.235	0.256	0.066	0.245	0.269	0.073	0.267	0.294
	2.2	0.218	0.717	0.773	0.274	0.927	0.992	0.271	0.926	0.997	0.264	0.903	0.978	0.268	0.911	0.990	0.280	0.951	1.038
	2.3	0.457	1.483	1.601	0.560	1.852	1.982	0.556	1.849	1.987	0.538	1.792	1.935	0.537	1.784	1.933	0.552	1.832	1.993
	2.4	0.680	2.201	2.377	0.838	2.744	2.936	0.832	2.738	2.939	0.805	2.652	2.858	0.798	2.624	2.838	0.811	2.668	2.897
	2.5	0.839	2.712	2.931	1.035	3.374	3.610	1.030	3.368	3.613	0.997	3.263	3.513	0.983	3.214	3.473	0.993	3.250	3.526
	2.6	0.896	2.895	3.130	1.105	3.590	3.842	1.100	3.585	3.845	1.065	3.474	3.738	1.046	3.409	3.681	1.054	3.438	3.729
	2.7	0.830	2.683	2.901	1.022	3.315	3.548	1.020	3.316	3.556	0.987	3.213	3.456	0.967	3.145	3.395	0.973	3.167	3.434
	2.8	0.642	2.076	2.245	0.789	2.557	2.737	0.789	2.562	2.747	0.764	2.482	2.670	0.747	2.426	2.618	0.751	2.441	2.646
	2.9	0.353	1.141	1.234	0.432	1.399	1.498	0.432	1.403	1.504	0.419	1.360	1.463	0.409	1.327	1.432	0.411	1.335	1.447
	3.0	0.000	0.000	0.000	0.000	0.000	0.000	0.000	0.000	0.000	0.000	0.000	0.000	0.000	0.000	0.000	0.000	0.000	0.000

TABLE OF DEAD LOAD DEFLECTIONS (INCHES) - GIRDER 7

	Point Of Deflection	Girder 7		
		Structural Steel	Structural Steel + Slab	Structural Steel + Slab + Parapet
SPAN NO. 1	1.0	0.000	0.000	0.000
	1.1	0.464	1.447	1.553
	1.2	0.846	2.632	2.823
	1.3	1.100	3.413	3.660
	1.4	1.192	3.679	3.944
	1.5	1.115	3.418	3.664
	1.6	0.896	2.716	2.910
	1.7	0.597	1.779	1.904
	1.8	0.297	0.854	0.912
	1.9	0.077	0.198	0.209
	2.0	0.000	0.000	0.000
SPAN NO. 2	2.1	0.098	0.347	0.380
	2.2	0.331	1.122	1.220
	2.3	0.645	2.150	2.329
	2.4	0.962	3.184	3.440
	2.5	1.200	3.953	4.263
	2.6	1.294	4.254	4.582
	2.7	1.214	3.984	4.288
	2.8	0.938	3.075	3.306
	2.9	0.516	1.690	1.816
	3.0	0.000	0.000	0.000

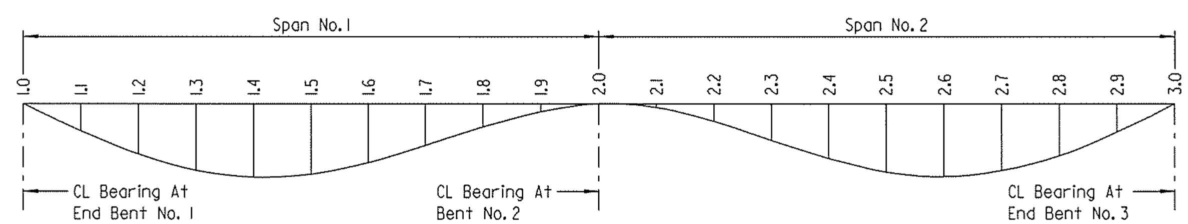

DEAD LOAD DEFLECTION DIAGRAM

No Scale

NOTES:
Camber for dead load deflection plus vertical curve +/- 1/4" tolerance. Deflections shown are along CL Girder from the plane perpendicular to the web extending from CL Bearing to CL Bearing. Vertical curve corrections are not included. Negative sign (-) indicates point above chord.

Dead load deflections shown are based on removable deck forms.

Revision to the deflection tables may be necessary upon review of the Contractor's submitted forming details.

STATE OF ARKANSAS LICENSED PROFESSIONAL ENGINEER No. 16458 JOEL E. SKINNER 3-20-16

BRIDGE ENGINEER

SHEET 8 OF 13

DETAILS OF 364'-0" CONTINUOUS COMPOSITE PLATE GIRDER UNIT BRIDGE A I-49 OVER HWY. 71B

ROUTE SEC.

ARKANSAS STATE HIGHWAY COMMISSION

LITTLE ROCK, ARK.

DRAWN BY: CWT DATE: MAR. 2015 FILENAME: BBB0414A3_S8.dgn
CHECKED BY: ABH DATE: JULY 2015 SCALE: AS SHOWN
DESIGNED BY: JES DATE: MAR. 2015
BRIDGE NO. A7380 DRAWING NO. 58200

jeskinner 3/20/2016 3:35:39 PM
WORKSPACE: AHTD Bridge
L:\2011\011707 - I-540 Widening & Interchange Improvement\Drawings\540-HWY71B-S308-S0.dgn
REVISED DATE:

DATE REVISED	DATE FILMED	DATE REVISED	DATE FILMED	FED. ROAD DIST. NO.	STATE	FED. AID PROJ. NO.	SHEET NO.	TOTAL SHEETS
				6	ARK.			
				JOB NO.		BB0414	478	886
				(1) A7380		364'-0" PL GIRDER UNIT		58201

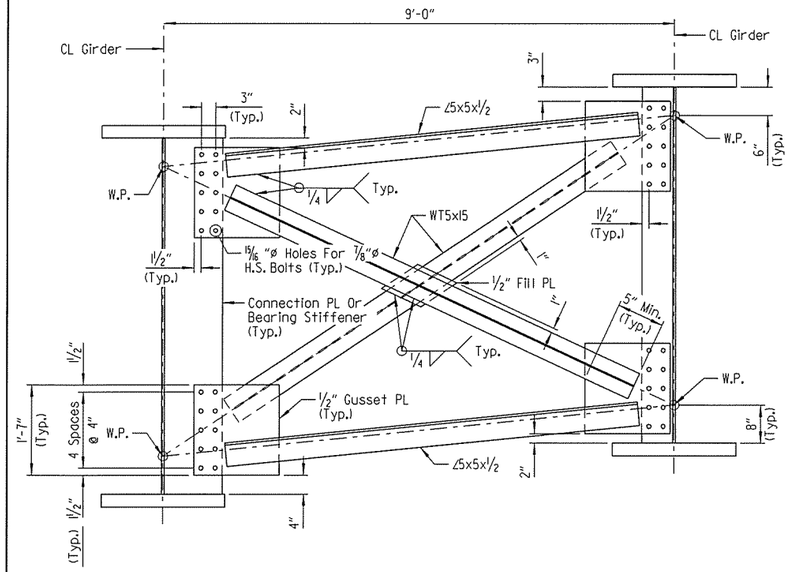

INTERMEDIATE BENT CROSSFRAME

(Looking Ahead)
Scale: ¾" = 1'-0"

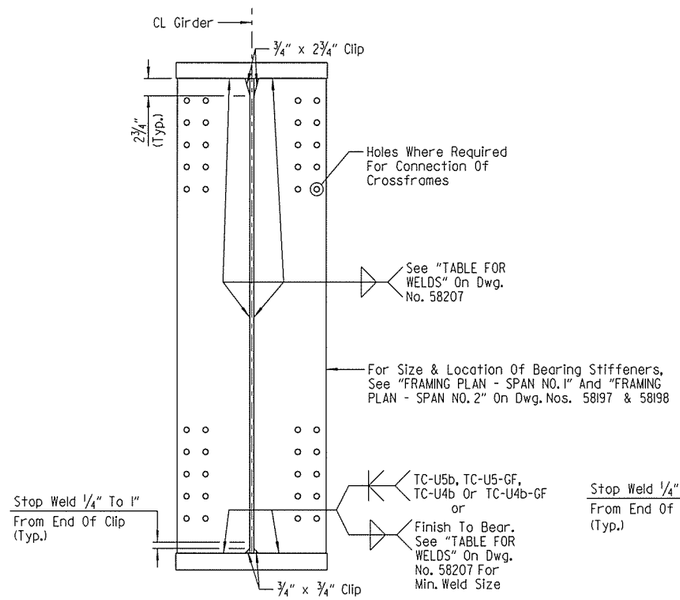

BEARING STIFFENER DETAIL

No Scale

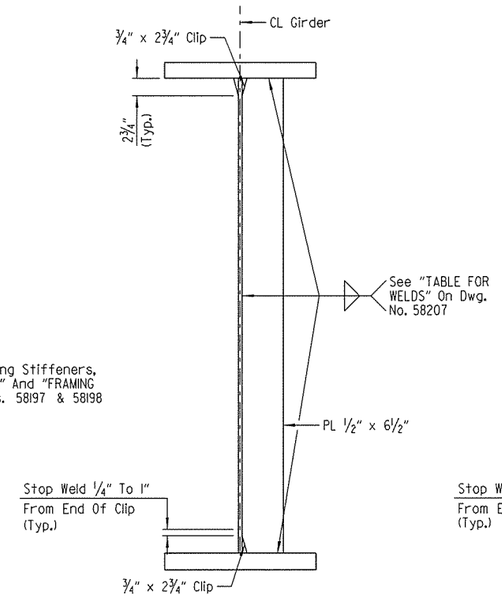

INTERMEDIATE STIFFENER DETAIL

Scale: 1" = 1'-0"

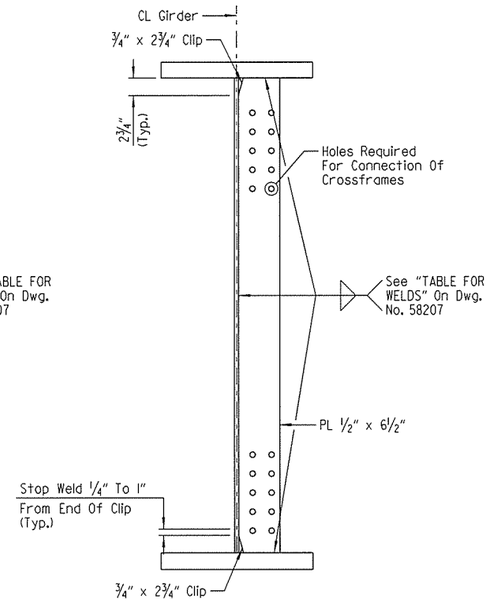

CONNECTION PLATE DETAIL

Scale: 1" = 1'-0"

NOTE:
Bearing Stiffeners to be fabricated so as to be vertical in their final position.

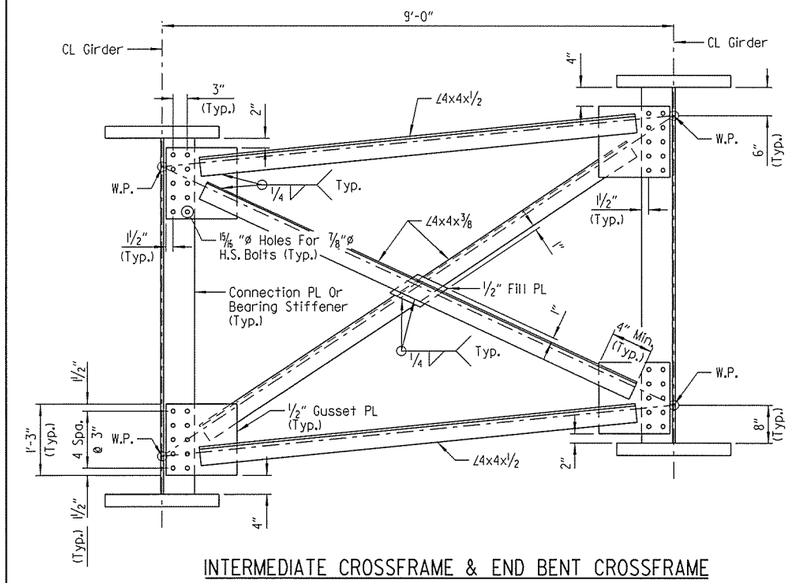

INTERMEDIATE CROSSFRAME & END BENT CROSSFRAME

(Looking Ahead)
No Scale

STATE OF ARKANSAS
LICENSED PROFESSIONAL ENGINEER
No. 16458
3-20-16
JOEL E. SKINNER

BRIDGE ENGINEER

SHEET 9 OF 13
DETAILS OF 364'-0" CONTINUOUS COMPOSITE PLATE GIRDER UNIT
BRIDGE A
I-49 OVER HWY. 71B

ROUTE SEC.

ARKANSAS STATE HIGHWAY COMMISSION
LITTLE ROCK, ARK.

DRAWN BY: CJH DATE: MAR. 2015 FILENAME: BBB0414A3_S9.dgn
CHECKED BY: ABH DATE: JULY 2015 SCALE: AS SHOWN
DESIGNED BY: JES DATE: MAR. 2015
BRIDGE NO. A7380 DRAWING NO. 58201

jeskinner 3/20/2016 3:35:40 PM
WORKSPACE_AHTD_Bridge
L:\2016\16017\07 I-540 Widening & Interchange Improvement\Drawings\I540-HWY71B-S309-SD.dgn
REVISED DATE:

DATE REVISED	DATE FILMED	DATE REVISED	DATE FILMED	FED. ROAD DIST. NO.	STATE	FED. AID PROJ. NO.	SHEET NO.	TOTAL SHEETS
				6	ARK.			
				JOB NO.		BB0414	479	886

(I)	A7380	364'-0" PL GIRDER UNIT	58202

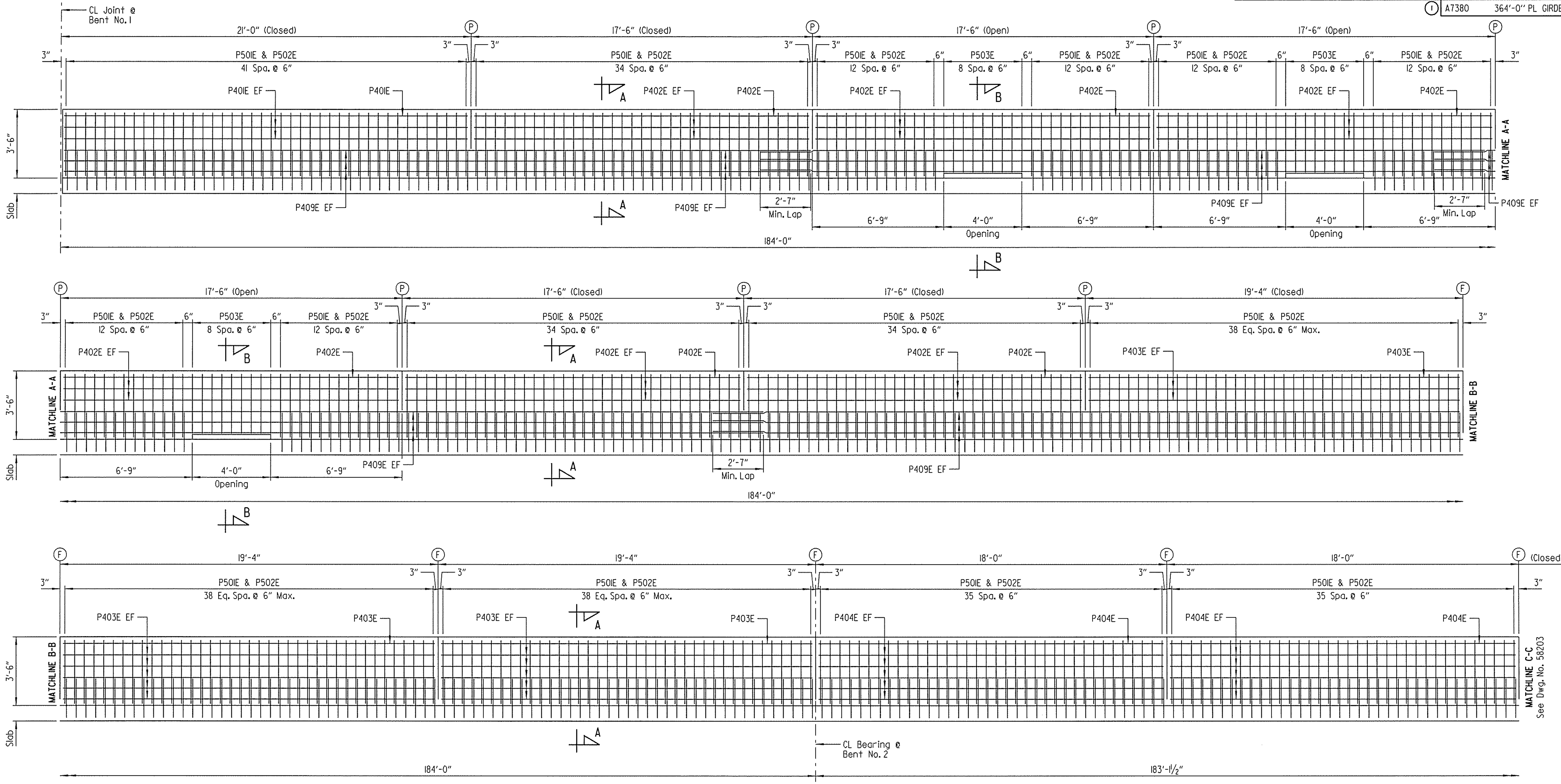

LEFT PARAPET - ELEVATION

(Looking At Inside Face Of Parapet Rail)
Scale: 3/8" = 1'-0"

(P) CL Partial-Depth Parapet Joint (1/4" to 1" Max.) as shown on "REINFORCING PLAN AND POURING SEQUENCE - SPAN NO. 1" and "REINFORCING PLAN AND POURING SEQUENCE - SPAN NO. 2" on Dwg. Nos. 58194 & 58195 . Stop 1'-6" from top of slab.

(F) CL Full-Depth Parapet Joint (1/4" to 1" Max.) as shown on "REINFORCING PLAN AND POURING SEQUENCE - SPAN NO. 1" and "REINFORCING PLAN AND POURING SEQUENCE - SPAN NO. 2" on Dwg. Nos. 58194 & 58195 . Stop 4" from top of slab.

LEGEND

EF = Each Face

NOTES:
All dimensions shown are measured along left gutterline.

For "BAR LIST" and "BAR BENDING DIAGRAMS", see Dwg. No. 58205.

For "SECTION A-A" & "SECTION B-B", see Dwg. No. 58203.

For "ARCHITECTURAL FINISH ELEVATION - LEFT PARAPET", see Dwg. No. 58206.

STATE OF ARKANSAS LICENSED PROFESSIONAL ENGINEER No. 16458 JOEL E. SKINNER 3-20-16

BRIDGE ENGINEER

SHEET 10 OF 13
DETAILS OF 364'-0" CONTINUOUS COMPOSITE PLATE GIRDER UNIT
BRIDGE A
I-49 OVER HWY. 71B

ROUTE SEC.

ARKANSAS STATE HIGHWAY COMMISSION
LITTLE ROCK, ARK.

DRAWN BY: CJH DATE: MAR. 2015 FILENAME: BBB0414A3_S10.dgn
CHECKED BY: ABH DATE: JULY 2015 SCALE: AS SHOWN
DESIGNED BY: JES DATE: MAR. 2015
BRIDGE NO. A7380 DRAWING NO. 58202

jeskinner 3/20/2016 3:35:40 PM
WORKSPACE: AHTD Bridge
L:\2011\1011707 - I-540 Widening & Interchange Improvement\Drawings\I540-HWY71B-S310-MD.dgn
REVISED DATE:

DATE REVISED	DATE FILMED	DATE REVISED	DATE FILMED	FED. ROAD DIST. NO.	STATE	FED. AID PROJ. NO.	SHEET NO.	TOTAL SHEETS
				6	ARK.			
				JOB NO.		BB0414	480	886
				(1) A7380		364'-0" PL GIRDER UNIT		58203

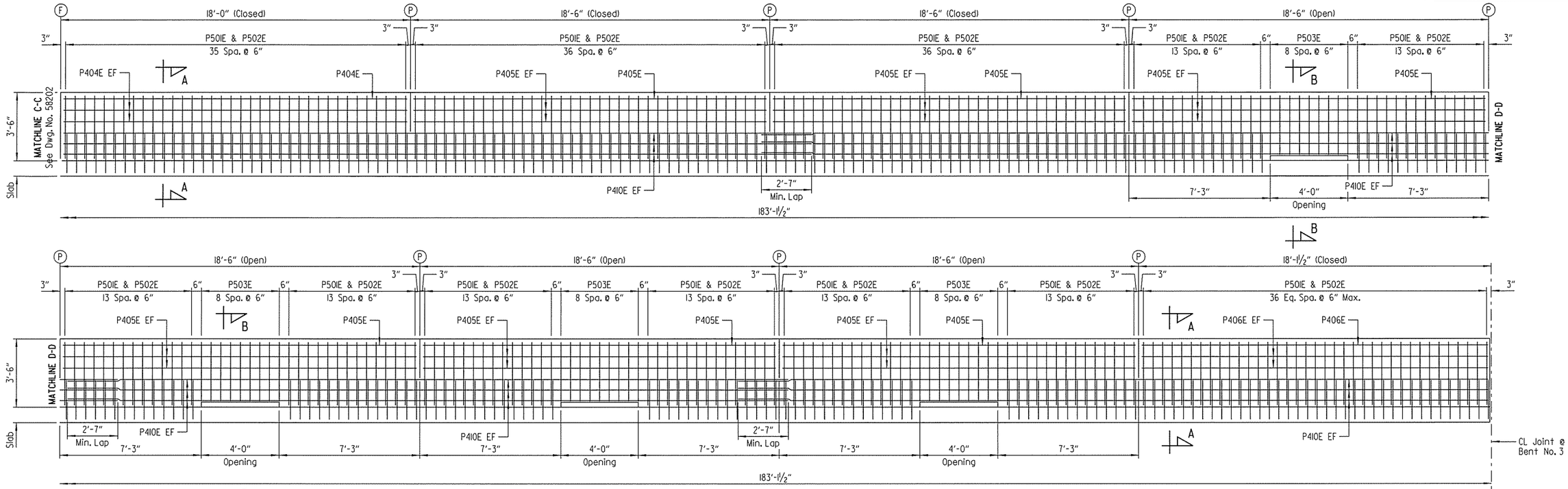

LEGEND

EF = Each Face

LEFT PARAPET - ELEVATION

(Looking At Inside Face Of Parapet Rail)
Scale: ⅜" = 1'-0"

NOTE:
Form liner on back face of parapet shall be a max. depth of 2" to provide a min. clearance of 1½" to parapet reinforcing.

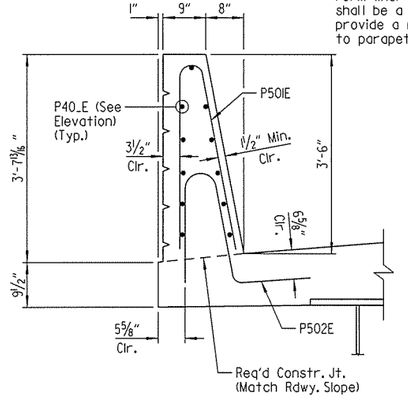

SECTION A-A

Scale: ¾" = 1'-0"

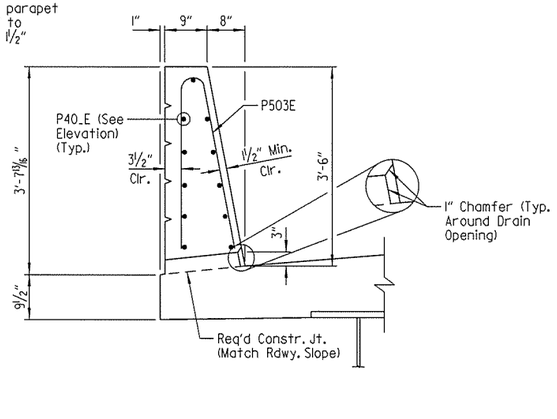

SECTION B-B

Scale: ¾" = 1'-0"

(P) CL Partial-Depth Parapet Joint (¼" to 1" Max.) as shown on "REINFORCING PLAN AND POURING SEQUENCE - SPAN NO. 2" on Dwg. No. 58195. Stop 1'-6" from top of slab.

(F) CL Full-Depth Parapet Joint (¼" to 1" Max.) as shown on "REINFORCING PLAN AND POURING SEQUENCE - SPAN NO. 2" on Dwg. No. 58195. Stop 4" from top of slab.

NOTES:
All dimensions shown are measured along left gutterline.

For "BAR LIST" and "BAR BENDING DIAGRAMS", see Dwg. No. 58205.

For "ARCHITECTURAL FINISH ELEVATION - LEFT PARAPET", see Dwg. No. 58206.

STATE OF ARKANSAS
LICENSED PROFESSIONAL ENGINEER
No. 16458
3-20-16
JOEL E. SKINNER

BRIDGE ENGINEER

SHEET 11 OF 13
DETAILS OF 364'-0" CONTINUOUS COMPOSITE PLATE GIRDER UNIT
BRIDGE A
I-49 OVER HWY. 71B
ROUTE SEC.
ARKANSAS STATE HIGHWAY COMMISSION
LITTLE ROCK, ARK.

DRAWN BY: CJH DATE: MAR. 2015 FILENAME: BBB0414A3_S11.dgn
CHECKED BY: ABH DATE: JULY 2015 SCALE: AS SHOWN
DESIGNED BY: JES DATE: MAR. 2015
BRIDGE NO. A7380 DRAWING NO. 58203

jskinner 3/20/2016 3:35:41 PM
WORKSPACE: AHTD B-Folder
L:\2011\011707 - I-540 Widening & Interchange Improvement\Drawings\I540-HWY71B-S311-MD.dgn
REVISED DATE:

DATE REVISED	DATE FILMED	DATE REVISED	DATE FILMED

FED. ROAD DIST. NO.	STATE	FED. AID PROJ. NO.	SHEET NO.	TOTAL SHEETS
6	ARK.			
JOB NO.		BB0414	481	886

(I) A7380 364'-0" PL GIRDER UNIT 58204

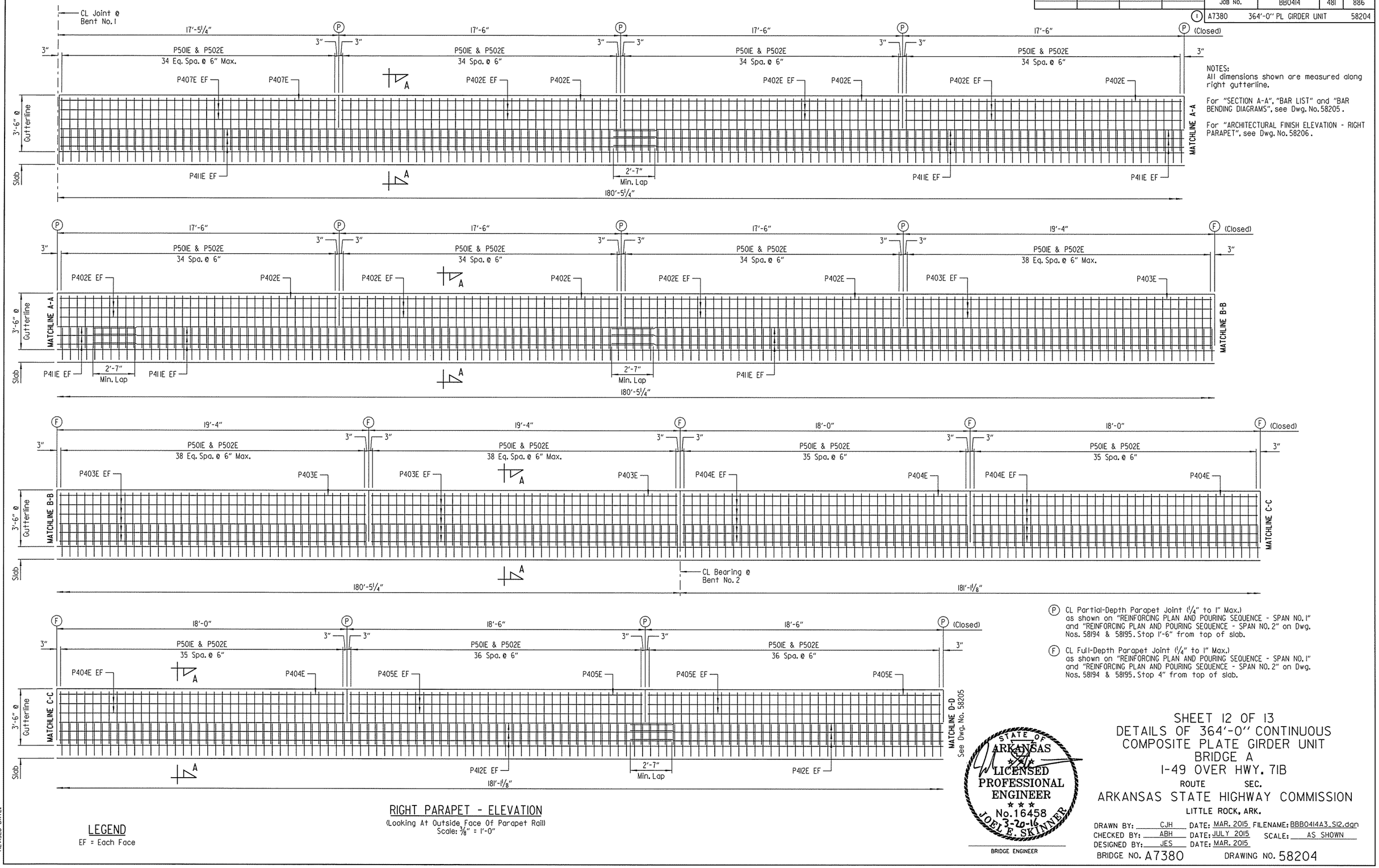

NOTES:
All dimensions shown are measured along right gutterline.

For "SECTION A-A", "BAR LIST" and "BAR BENDING DIAGRAMS", see Dwg. No. 58205.

For "ARCHITECTURAL FINISH ELEVATION - RIGHT PARAPET", see Dwg. No. 58206.

(P) CL Partial-Depth Parapet Joint (¼" to 1" Max.) as shown on "REINFORCING PLAN AND POURING SEQUENCE - SPAN NO. 1" and "REINFORCING PLAN AND POURING SEQUENCE - SPAN NO. 2" on Dwg. Nos. 58194 & 58195. Stop 1'-6" from top of slab.

(F) CL Full-Depth Parapet Joint (¼" to 1" Max.) as shown on "REINFORCING PLAN AND POURING SEQUENCE - SPAN NO. 1" and "REINFORCING PLAN AND POURING SEQUENCE - SPAN NO. 2" on Dwg. Nos. 58194 & 58195. Stop 4" from top of slab.

RIGHT PARAPET - ELEVATION

(Looking At Outside Face Of Parapet Rail)
Scale: ⅜" = 1'-0"

LEGEND

EF = Each Face

STATE OF ARKANSAS
LICENSED PROFESSIONAL ENGINEER
No. 16458
3-20-16
JOEL E. SKINNER
BRIDGE ENGINEER

SHEET 12 OF 13
DETAILS OF 364'-0" CONTINUOUS COMPOSITE PLATE GIRDER UNIT BRIDGE A
I-49 OVER HWY. 71B

ROUTE SEC.

ARKANSAS STATE HIGHWAY COMMISSION
LITTLE ROCK, ARK.

DRAWN BY: CJH DATE: MAR. 2015 FILENAME: BBB0414A3_SI2.dgn
CHECKED BY: ABH DATE: JULY 2015 SCALE: AS SHOWN
DESIGNED BY: JES DATE: MAR. 2015

BRIDGE NO. A7380 DRAWING NO. 58204

Jeskinner 3/20/2016 3:35:41 PM
WORKSPACE: AHTD Bridge
L:\2011\I001707 - I-540 Widening & Interchange Improvement\Drawings\I540-HWY71B-S312-MD.dgn
REVISED DATE:

DATE REVISED	DATE FILMED	DATE REVISED	DATE FILMED	FED. ROAD DIST. NO.	STATE	FED. AID PROJ. NO.	SHEET NO.	TOTAL SHEETS
				6	ARK.			
				JOB NO.		BB0414	482	886
				(1) A7380		364'-0" PL GIRDER UNIT		58205

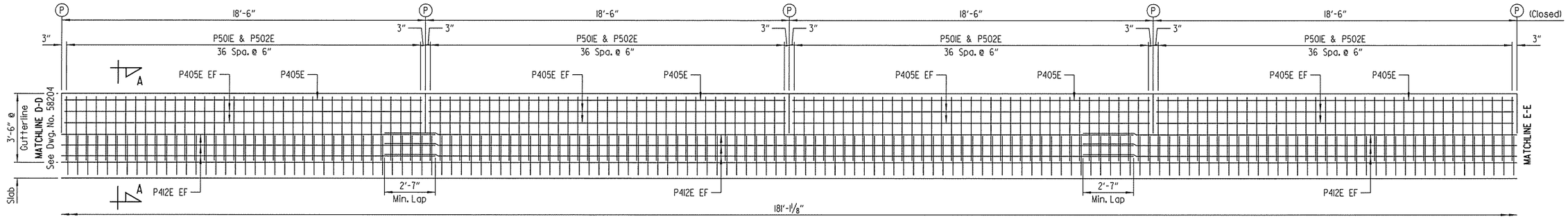

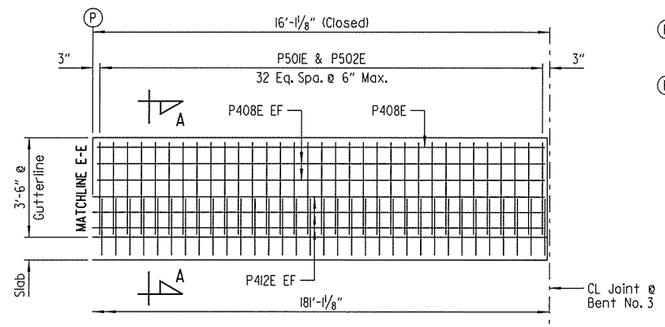

(P) CL Partial-Depth Parapet Joint (1/4" to 1" Max.) as shown on "REINFORCING PLAN AND POURING SEQUENCE - SPAN NO. 2" on Dwg. No. 58195. Stop 1'-6" from top of slab.

(F) CL Full-Depth Parapet Joint (1/4" to 1" Max.) as shown on "REINFORCING PLAN AND POURING SEQUENCE - SPAN NO. 2" on Dwg. No. 58195. Stop 4" from top of slab.

NOTES:
All dimensions shown are measured along right gutterline.

For "ARCHITECTURAL FINISH ELEVATION - RIGHT PARAPET", see Dwg. No. 58206.

LEGEND

EF = Each Face

GENERAL NOTES

CONCRETE: All concrete shall be Class S(AE) with a minimum 28 day compressive strength f'c = 4000 psi.

REINFORCING STEEL: All reinforcing steel shall be Grade 60 conforming to AASHTO M31 or M322, Type A with mill test reports.

NOTE:
Form liner on back face of parapet shall be a max. depth of 2" to provide a min. clearance of 1 1/2" to parapet reinforcing.

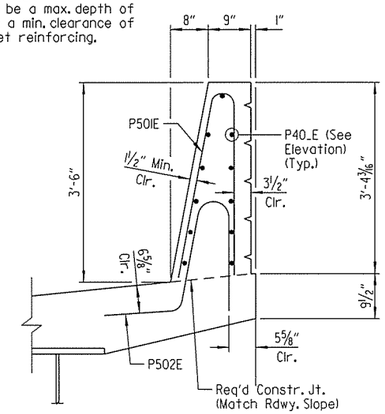

SECTION A-A

Scale: 3/4" = 1'-0"

RIGHT PARAPET - ELEVATION

(Looking At Outside Face Of Parapet Rail)
Scale: 3/8" = 1'-0"

BAR BENDING DIAGRAMS

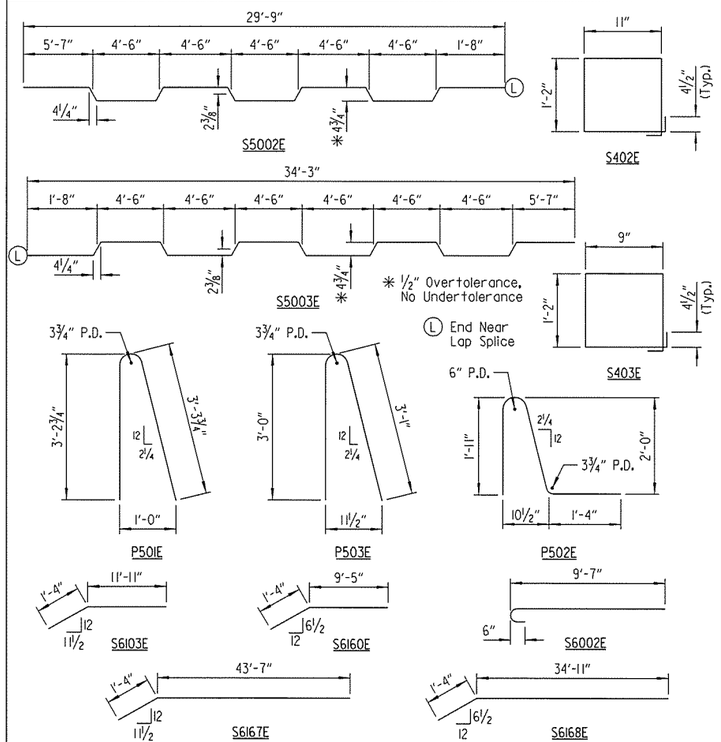

BAR LIST

Mark	No. Req'd.	Length	Pin. Dia.	Mark	No. Req'd.	Length	Pin. Dia.
S401E	640	39'-1"	STR.	S6037E TO S6069E	1 Each	25'-9" TO 41'-11"	STR.
S402E	52	4'-6"	2"				
S403E	52	4'-2"	2"				
				S6070E TO S6102E	1 Each	9'-9" TO 25'-3"	STR.
S5001E	476	55'-3"	STR.				
S5002E	319	30'-6"	3"				
S5003E	319	35'-1 1/2"	3"	S6103E	34	13'-3"	4 1/2"
S5004E	638	32'-0"	STR.	S6104E TO S6121E	1 Each	58'-8" TO 44'-3"	STR.
S5005E TO S5036E	1 Each	42'-5" TO 58'-10"	STR.				
S5037E TO S5069E	1 Each	25'-9" TO 41'-11"	STR.	S6122E TO S6140E	1 Each	43'-5" TO 27'-6"	STR.
S5070E TO S5102E	1 Each	9'-9" TO 25'-3"	STR.	S6141E TO S6159E	1 Each	26'-8" TO 10'-2"	STR.
				S6160E	16	10'-9"	4 1/2"
S5103E TO S5120E	1 Each	58'-8" TO 44'-3"	STR.	S6161E	12	12'-3"	STR.
				S6162E	6	42'-9"	STR.
				S6163E	4	2'-6"	STR.
S5121E TO S5139E	1 Each	43'-5" TO 27'-6"	STR.	S6164E	12	9'-11"	STR.
				S6165E	6	35'-0"	STR.
				S6166E	4	1'-10"	STR.
S5140E TO S5158E	1 Each	26'-8" TO 10'-2"	STR.	S6167E	3	44'-11"	4 1/2"
				S6168E	3	36'-3"	4 1/2"
				P401E	5	20'-7"	STR.
S6001E	315	49'-4"	STR.	P402E	60	17'-2"	STR.
S6002E	1430	10'-3"	4 1/2"	P403E	54	19'-0"	STR.
S6003E	319	36'-9"	STR.	P404E	54	17'-8"	STR.
S6004E	319	27'-9"	STR.	P405E	60	18'-2"	STR.
S6005E TO S6036E	1 Each	42'-5" TO 58'-10"	STR.	P406E	5	17'-9"	STR.
				P407E	5	17'-0"	STR.
				P408E	5	15'-8"	STR.

BAR LIST (Cont.)

Mark	No. Req'd.	Length	Pin. Dia.
P409E	24	38'-3"	STR.
P410E	24	38'-8"	STR.
P411E	24	37'-4"	STR.
P412E	24	38'-2"	STR.
P501E	1398	6'-8"	3 3/4"
P502E	1398	5'-4"	3 3/4", 6"
P503E	63	6'-2 1/2"	3 3/4"

NOTES:
1.) Dimensions of bars are out-to-out.
2.) Bar designations ending with "E" indicate epoxy coated bars.

STATE OF ARKANSAS
LICENSED PROFESSIONAL ENGINEER
No. 16458
3-20-16
JOEL E. SKINNER
BRIDGE ENGINEER

SHEET 13 OF 13
DETAILS OF 364'-0" CONTINUOUS COMPOSITE PLATE GIRDER UNIT BRIDGE A
I-49 OVER HWY. 71B

ROUTE SEC.

ARKANSAS STATE HIGHWAY COMMISSION
LITTLE ROCK, ARK.

DRAWN BY: CJH DATE: MAR. 2015 FILENAME: BBB0414A3_SI3.dgn
CHECKED BY: ABH DATE: JULY 2015 SCALE: AS SHOWN
DESIGNED BY: JES DATE: MAR. 2015
BRIDGE NO. A7380 DRAWING NO. 58205

jeskinner 3/20/2016 3:35:41 PM
WORKSPACE: AHTD Br 49 90
L:\20\W0117071 - I-540 Widening & Interchange Improvement\Drawings\I540-HWY71B-S313-ND.dgn
REVISED DATE:

DATE REVISED	DATE FILMED	DATE REVISED	DATE FILMED	FED. ROAD DIST. NO.	STATE	FED. AID PROJ. NO.	SHEET NO.	TOTAL SHEETS
				6	ARK.			
				JOB NO.		BB0414	483	886
				A7380 & B7380	SUPERSTR. DETAILS			58206

GENERAL NOTES

CONCRETE:

Concrete shall be poured in the dry, and all exposed corners shall be chamfered ¾" unless otherwise noted. All concrete shall be Class S(AE) with a minimum 28 day compressive strength f'c = 4,000 psi.

The superstructure details shown are for use when removable deck forming is used and are the basis for measurements of Class S(AE) Concrete. See Standard Drawing No. 55005 for allowable modifications when permanent steel bridge deck forms are used.

Concrete in bridge superstructure shall be placed, consolidated and screeded off for the entire pour before any concrete has taken its initial set. This may require the use of a retarding agent.

The concrete deck shall be given a tine finish in accordance with Subsection 802.19 for Class 5 Tined Bridge Roadway Surface Finish. Movement of the finishing machine across new concrete shall be on planks placed on the surface and shall be prohibited for 72 hours after finishing the pour. Sufficient concrete must be placed ahead of the strike-off to fully load the girder. A minimum of 72 hours shall elapse between completion of the bridge deck slab and the pouring of the parapet railing. Any railing pours made before the entire slab has been placed and cured must be approved by the Engineer. The use of a longitudinal screed is prohibited.

REINFORCING STEEL:

All reinforcing steel shall be Grade 60 (Yield Strength = 60,000 psi) conforming to AASHTO M31 or M322, Type A, with mill test reports. The reinforcing steel is to be accurately located in the forms and firmly held in place by steel wire supports, sufficient in number and size to prevent displacement during the course of construction. The wire supports will not be paid for directly but will be considered subsidiary to the item "EPOXY COATED REINFORCING STEEL (GRADE 60)".

STRUCTURAL STEEL:

All structural steel shall be AASHTO M270, Gr. 50W unless noted otherwise and shall be paid for at the unit price per pound bid for "STRUCTURAL STEEL IN PLATE GIRDER SPANS (M270, GR. 50W)". Grade 50W steel shall not be painted. All exposed surfaces shall be cleaned in accordance with Subsection 807.84(e) unless noted otherwise. Structural steel completely embedded in concrete may be AASHTO M270 Gr. 36 unless noted otherwise. See Drawing No. 58222 for cleaning requirements of external load plates on elastomeric bearings.

Requests for substitution of structural steel shapes shown with shapes of greater size must be submitted by the Contractor to the Engineer for approval. Steels of equal or greater strengths will be accepted only when shown on approved shop drawings. Shapes and materials shown in the plans will be the basis of payment, and no additional compensation will be made for any adjustments due to substitutions.

Drawings show general features of design only. Shop drawings shall be prepared in accordance with Subsection 807.04, submitted and approved before fabrication is begun.

All girder webs, flanges of plate girders, splice plates, crossframes and connection plates are considered main load carrying members and shall meet the Longitudinal Charpy V-Notch Test specified in Subsection 807.05. This work and material will not be paid for directly but are considered as subsidiary to the item "STRUCTURAL STEEL IN PLATE GIRDER SPANS (M270, GR. 50W)".

Steel plates for main load carrying members shall be cut and fabricated so that the primary direction of rolling is parallel to the direction of the main tensile and/or compressive stresses.

Girder webs may be made by shop splicing with a minimum length of 25'-0" for sections. Flange plates longer than 50'-0" may be made by shop splicing with a minimum length of 25'-0" for sections. Material specifications and locations of shop-welded splices, if any, shall be shown on the shop drawings. No additional payment for these welded splices will be made.

All welding that is to be done during fabrication of structural steel, including temporary welds, shall be detailed on the shop drawings and submitted for approval. If additional welds are required, whether temporary or permanent, a formal request with detailed drawings shall be submitted to the Engineer for approval; however, additional welds used for attaching falsework support devices or screed rail supports to the structural steel that do not exceed the limitations of Subsection 802.13 will not require approval prior to construction. All welding shall conform to Subsection 807.26.

All girders shall be blocked in their true positions with webs horizontal in the shop as specified in Subsection 807.54 (b)(2). The camber, length of sections, distance between bearings and openings of joints shall be measured with the girders in their true positions, and this information shall become a part of the permanent records of this job. The component parts shall be match marked in this assembly, and these marks shall be shown on the erection diagram. All girder dimensions are based on a temperature of 60°F. A tolerance of +/- ¼" is allowed for camber.

Groove welds in flange and web plates shall be Quality Control (Q.C.) tested by nondestructive testing, as required by the Standard Specifications. Fillet welds at flange to web plate connections shall be Quality Control (Q.C.) tested by the magnetic particle method. All Quality Control (Q. C.) testing is at the Contractor's expense.

All connection plates and intermediate stiffeners shall be fabricated normal to the top flange and on the side of the girder web as indicated on the framing plan. No intermediate stiffeners are to be placed on the outside of the exterior girders except as noted. All bearing stiffeners shall be fabricated to be plumb in their final positions.

Crossframes shall be installed as girders are erected. Unless noted otherwise, all bolts in crossframes and field splices shall be installed and tightened in accordance with Subsection 807.71 prior to pouring of the concrete deck.

Field connections shall be bolted with high-strength bolts and shall be ⅞"ø bolts conforming to AASHTO M164 unless otherwise noted. Open holes shall be $^{15}/_{16}$"ø unless otherwise noted. Bolts shall be placed with heads on the outside face of the exterior girder webs and on the bottom of the girder flanges.

All contact surfaces between plates at field splices shall be free of oil, rust or scale before assembly.

All stud shear connectors shall be granular flux filled, solid fluxed or equal and shall be automatically end welded in accordance with recommendations of the Manufacturer.

Anchor bolts shall be AASHTO designation M314 Gr. 55, including supplemental requirement S1, and shall be galvanized to conform to AASHTO M232, Class C or ASTM B695 Class 50. Anchor bolts will be paid for at the contract unit price bid for "STRUCTURAL STEEL IN PLATE GIRDER SPANS (M270, GR. 50W)".

ERECTION OF STRUCTURAL STEEL:

The erection of the structural steel shall be performed according to a plan permitting the steel to be erected plumb with bolts tightened while the steel is as close as possible to the no-load condition, so that the bolt holes can be aligned. This requirement may necessitate the use of large capacity cranes, temporary shoring or jacking frames.

The Contractor shall submit to the Engineer for informational and record purposes details of falsework construction in accordance with Subsection 807.64.

The Contractor shall ensure that girders are stable throughout the erection process. The Contractor will be responsible for providing temporary bracing or stiffening devices to accomodate handling stresses in individual members or segments of the structure during erection.

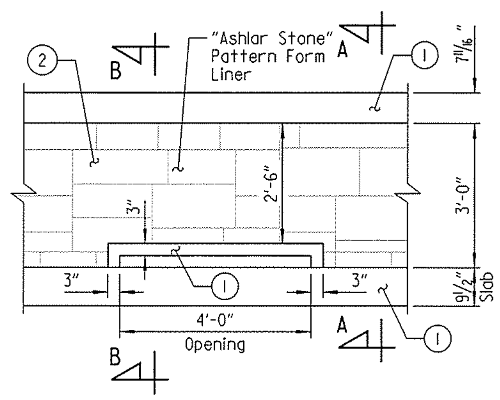

ARCHITECTURAL FINISH ELEVATION - LEFT PARAPET
(Bridge A Only)
(Showing Outside Face Of Parapet)
Scale: ½" = 1'-0"

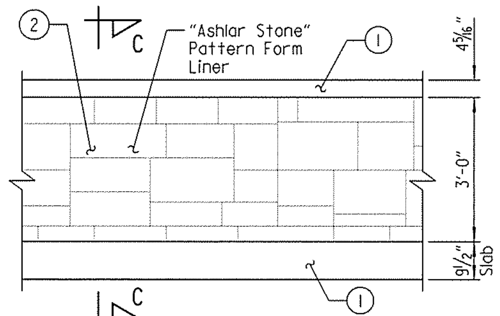

ARCHITECTURAL FINISH ELEVATION - RIGHT PARAPET
(Showing Outside Face Of Parapet)
Scale: ½" = 1'-0"

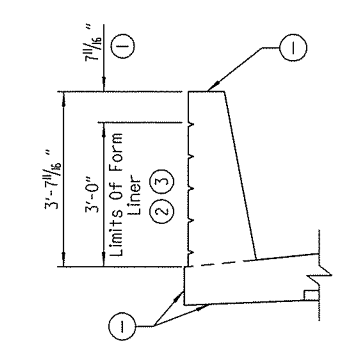

SECTION A-A
Scale: ½" = 1'-0"

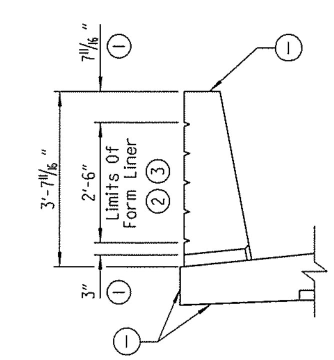

SECTION B-B
Scale: ½" = 1'-0"

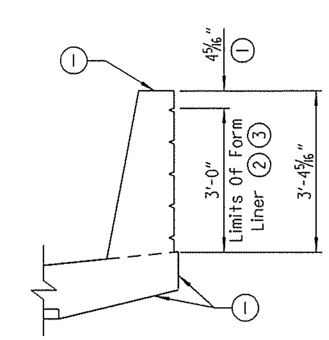

SECTION C-C
Scale: ½" = 1'-0"

(1) Class 3 Textured Coating Finish (Color = Brown, Color Chip No. 33578)

(2) Class 3 Textured Coating Finish (Color = Brown, Color Chip No. 30219)

(3) "Ashlar Stone" Pattern

NOTE:
Form liner shall be a max. depth of 2" to provide a min. clearance of 1½" to parapet reinforcing.

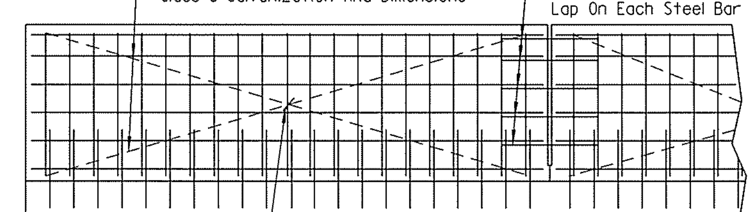

For actual placement of reinforcing steel, see parapet details.

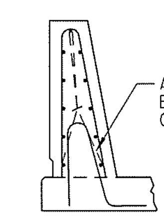

All panels shall be braced as shown to prevent racking. All open joints shall be sawed as soon as practical to a minimum width of ¼". To control cracking before sawing, all joints must be grooved before the concrete is set. Sawing of the joints must be controlled so it will follow the grooved joint.

The extruded parapet shall conform to the horizontal and vertical lines shown on the plans or as directed by the Engineer and shall present a smooth, uniform appearance and texture.

DETAILS OF OPTIONAL SLIPFORMING OF CONCRETE PARAPET RAIL
No Scale

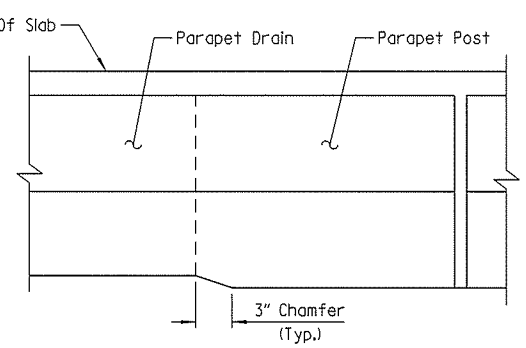

PLAN OF RAIL POST CHAMFER
(Typ. For Open Drain Panels Only)
No Scale

STATE OF ARKANSAS LICENSED PROFESSIONAL ENGINEER No. 16458 JOEL E. SKINNER 3-20-16

BRIDGE ENGINEER

SHEET 1 OF 2
COMMON DETAILS OF CONTINUOUS COMPOSITE PLATE GIRDER UNITS
I-49 OVER HWY. 71B
ROUTE SEC.
ARKANSAS STATE HIGHWAY COMMISSION
LITTLE ROCK, ARK.

DRAWN BY: CWT DATE: MAR. 2015 FILENAME: BBB0414M3_S14.dgn
CHECKED BY: ABH DATE: JULY 2015 SCALE: AS SHOWN
DESIGNED BY: JES DATE: MAR. 2015
BRIDGE NO. A7380 & B7380 DRAWING NO. 58206

jeskinner 3/20/2016 3:35:42 PM
WORKSPACE: AHTD Bridge
L:\2011\1017707 - I-540 Widening & Interchange Improvement\Drawings\I540-HWY71B-S314-GN.dgn
REVISED DATE:

DATE REVISED	DATE FILMED	DATE REVISED	DATE FILMED	FED. ROAD DIST. NO.	STATE	FED. AID PROJ. NO.	SHEET NO.	TOTAL SHEETS
				6	ARK.			
				JOB NO.		BB0414	484	886

(1) A7380 & B7380 SUPERSTR. DETAILS 58207

The ½" x 1" Poured Joint Sealer (Type 3 or 4) in slab shall conform to Subsection 501.02 (H) And 501.05 (J). Backer Rod filler will not be required. The Poured Joint Sealer shall be paid for as "CLASS S(AE) CONCRETE-BRIDGE". Slab joints shall extend to the outside edge of the deck slab. Slab joints shall be installed before the parapet railing is poured. If slab joints are to be sawed, they shall be sawed as soon as the concrete has sufficiently set to allow sawing of the joint without damage to the slab. Slab joints shall be placed at all pouring sequence construction joints and required slab joint locations. The joint sealer shall extend across the deck from gutterline to gutterline.

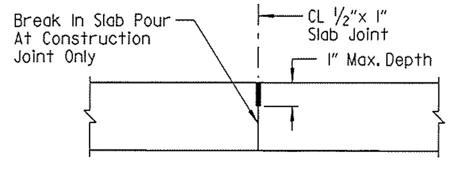

SLAB JOINT DETAIL
No Scale

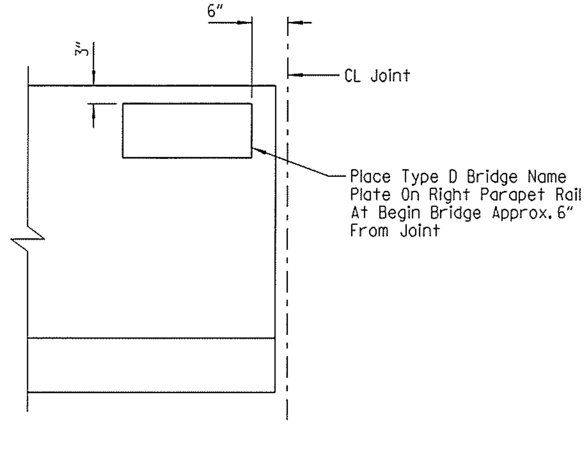

VIEW SHOWING LOCATION OF NAME PLATE
(Showing Inside Face Of Parapet)
No Scale

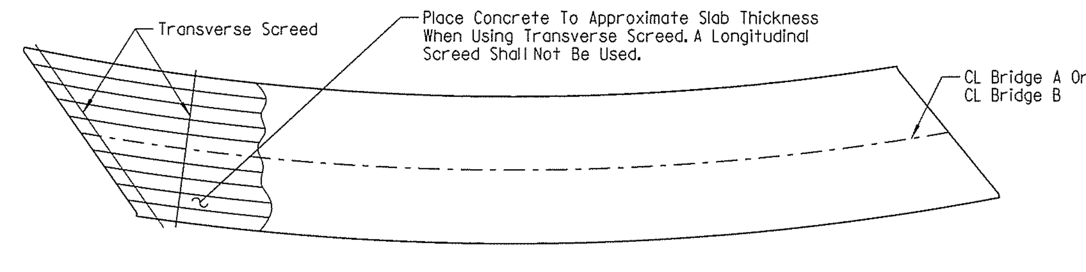

CONCRETE PLACEMENT PROCEDURE
No Scale

NOTE:
At the Contractor's option, the Transverse Screed may be placed parallel to the skew or radial to CL Bridge.

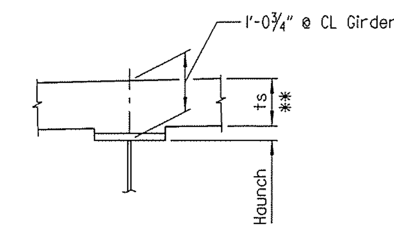

Note: t_s = Slab Thickness as shown on "TYPICAL SECTION" on Dwg. No. 58193 or 58208 .

* Measured to bottom of top flange

** Tolerance when removable deck forming is used is + ½", - ¼". Haunch forming is required and shall be adjusted to maintain slab thickness tolerance.

ADJUSTMENT FOR SLAB THICKNESS TOLERANCE
No Scale

NOTE:
Unless noted otherwise, haunch dimension may vary within the following limits to maintain the grade and slab thickness tolerance: minimum - occurs when the top edge of the top flange is positioned ½" below the bottom of the 8¼" slab; maximum - top flange thickness plus 4½". In regions with 2⅝" x 26" top flange (Bridge A) and 2¼" x 24" top flange (Bridge B), haunch dimension may vary within the following limits to maintain the grade and slab thickness tolerance: Minimum - occurs when the top flange contacts the bottom reinforcing steel; maximum - top flange thickness plus 3¼". No increase in concrete and structural steel quantities will be made to maintain tolerances.

Tolerances shown are applicable when removable deck forming or permanent steel deck forming is used. Payment for concrete shall be based on removable deck forming.

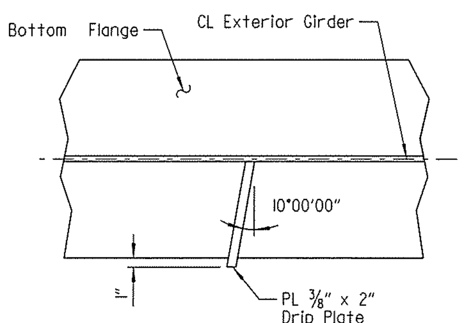

PLAN

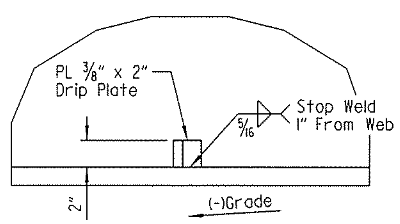

ELEVATION

BOTTOM FLANGE DRIP PLATE
No Scale

NOTES:
Bottom flange drip plate to be welded to the outside flange of the exterior girders only.

Locate drip plate 5'-0" from CL Bearing on the high side of Bent Nos. 1-3

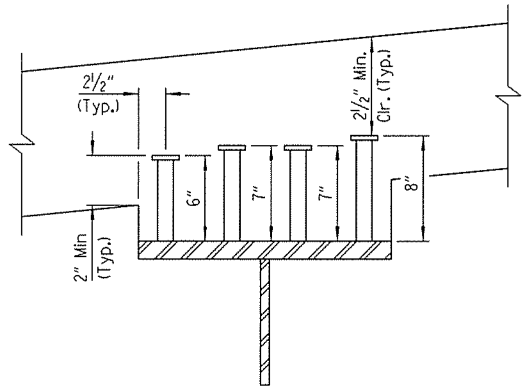

STUD GROUP A

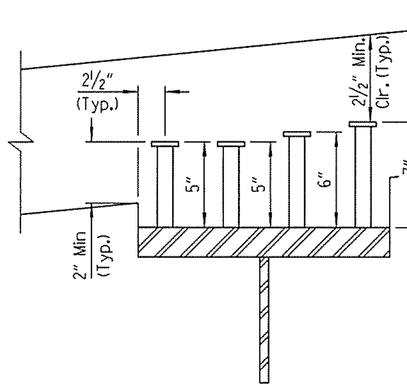

STUD GROUP B

SHEAR CONNECTOR DETAIL
(Looking Ahead)
No Scale

Stud shear connectors shown shall be ⅞"ø, granular flux filled, solid fluxed or equal, and automatically end welded to the flange in accordance with the recommendations of the Manufacturer. ¾"ø studs may be used in place of the ⅞"ø studs shown, at the ratio of 1.361- ¾"ø studs in place of one ⅞"ø stud. ⅞"ø studs will be used as basis for measurement of structural steel.

TABLE FOR WELDS

Material Thickness Of Thicker Part Joined (Inches)	Minimum Size Of Fillet Weld (Inches)	Single Pass Weld Must Be Used
To ¾" Inclusive	¼"	
Over ¾"	5/16"	

NOTE:
When a fillet weld size, as shown on the plans, is larger than the minimum, the first pass shall be that specified for minimum size of fillet weld.

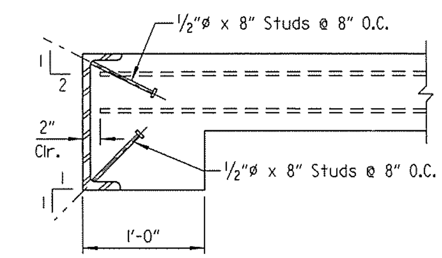

DETAIL OF ALTERNATE ANCHORS
No Scale

NOTE:
As an alternate to ⅞"ø studs, ½"ø x 8" studs spaced as shown may be used. Use weight of ⅞"ø stud as basis of measurement of structural steel.

NOTE:
If a transverse finishing machine is used, the rail shall be supported directly over the exterior girders, or as an alternate, the rail may be supported by the overhang brackets if the below strutting system is used. The strutting system may be omitted if ½" x 6½" web stiffeners are welded to the insides of the exterior girders at the location of each bracket or if the alternate bracket shown below is used. The alternate bracket arrangement shall extend down to the junction of the web and bottom flange. The stiffeners shall conform to the details for crossframe connection plates shown on Dwg. Nos. 58201 & 58216. No direct payment will be made for brackets, timber bracing, supports, or welded stiffeners. Payment shall be subsidiary to "STRUCTURAL STEEL IN PLATE GIRDER SPANS (M270, GR. 50W)."

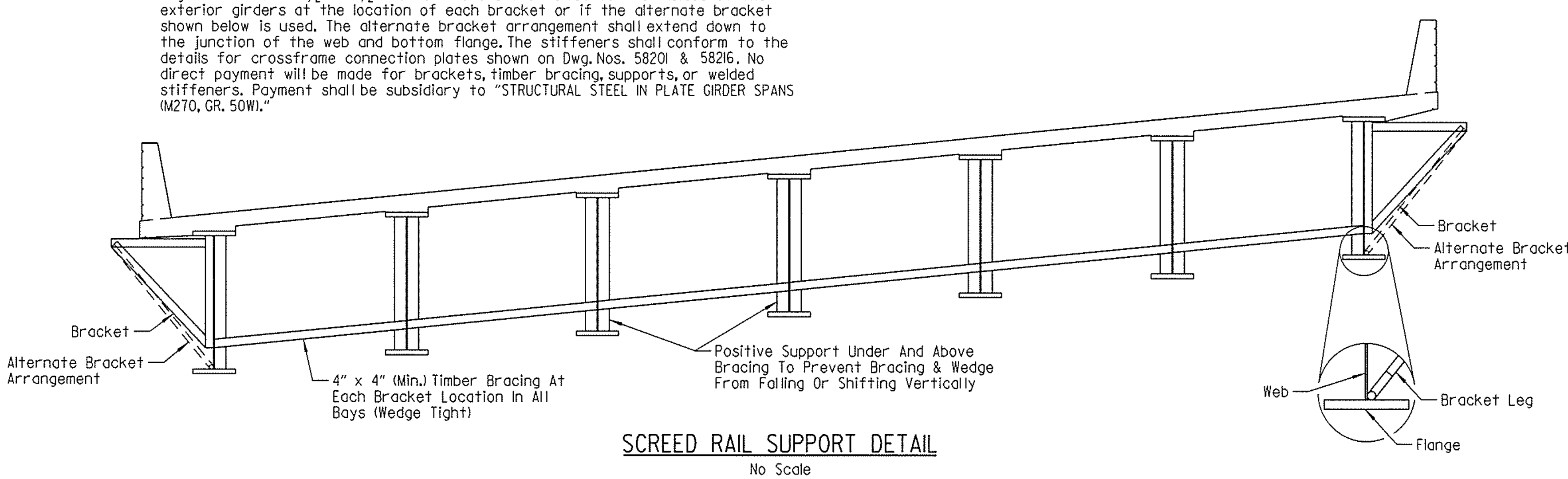

SCREED RAIL SUPPORT DETAIL
No Scale

NOTE:
The bracket shall be installed in a manner that avoids any nicks or gouges in the flange, web and weld.

BRIDGE ENGINEER

SHEET 2 OF 2
COMMON DETAILS OF CONTINUOUS COMPOSITE PLATE GIRDER UNITS
I-49 OVER HWY. 71B
ROUTE SEC.
ARKANSAS STATE HIGHWAY COMMISSION
LITTLE ROCK, ARK.

DRAWN BY: CWT DATE: MAR. 2015 FILENAME: BBB0414M3_S15.dgn
CHECKED BY: ABH DATE: JULY 2015 SCALE: AS SHOWN
DESIGNED BY: JES DATE: MAR. 2015
BRIDGE NO. A7380 & B7380 DRAWING NO. 58207

jeskinner 3/20/2016 3:35:42 PM
WORKSPACE: AHTD Bridge
L:\2011\101707 - I-540 Widening & Interchange Improvement\Drawings\540-HWY71B-S15-GN.dgn
REVISED DATE:

DATE REVISED	DATE FILMED	DATE REVISED	DATE FILMED	FED. ROAD DIST. NO.	STATE	FED. AID PROJ. NO.	SHEET NO.	TOTAL SHEETS
				6	ARK.			
				JOB NO.		BB0414	485	886

(1) B7380 306'-0" PL GIRDER UNIT 58208

SLAB REINFORCING:

Transverse: S5002E Lapped with S5003E @ 12" O.C. Bent Up Over Girders — Alternating
S5004E Lapped with S5004E @ 12" O.C. In Bottom — Alternating
S6003E Lapped with S6004E @ 12" O.C. In Top
S6002E Bundled with #5 & #6 Bars In Top At Gutterline (Both Sides)

Longitudinal: S401E (Placed As Shown In Top)
S5001E (Placed As Shown In Bottom)
S6001E (Placed As Shown In Top Over Int. Supports)

(1) TOLERANCE:
Minus = 1/4"
Plus = Amount of slab thickening used to meet slab thickness tolerance - see "ADJUSTMENT FOR SLAB THICKNESS TOLERANCE" on Dwg. No. 58207.

(2) See "ADJUSTMENT FOR SLAB THICKNESS TOLERANCE" on Dwg. No. 58207.

(3) S5001E - 3 Spa. @ 8 1/2" (Typ. Each Cantilever)

(4) 6'-2 3/4" + Bottom FL Thickness, measured @ CL Girder (Typ.)

NOTES:
At the Contractor's option, one epoxy coated #5 bar in the top and one epoxy coated #5 bar in the bottom may be substituted for each bar S5002E & S5003E. Payment will be based on the weight of bars S5002E & S5003E.

Class 2 Protective Surface Treatment shall be applied to the roadway surface and roadway face of concrete parapet. Class 3 Textured Coating Finish shall be applied to bridge surfaces as specified in SP JOB NO. BB0414 "TEXTURED COATING FINISH" and in accordance with Subsection 802.19. Textured Coating Finish shall not be applied on surfaces where Class 2 Protective Surface Treatment is applied.

For "BAR LIST" & "BAR BENDING DIAGRAMS", see Dwg. No. 58220.

For details of poured silicone joint, see Dwg. No. 58221.

For "DETAIL OF ALTERNATE ANCHORS", see Dwg. No. 58207.

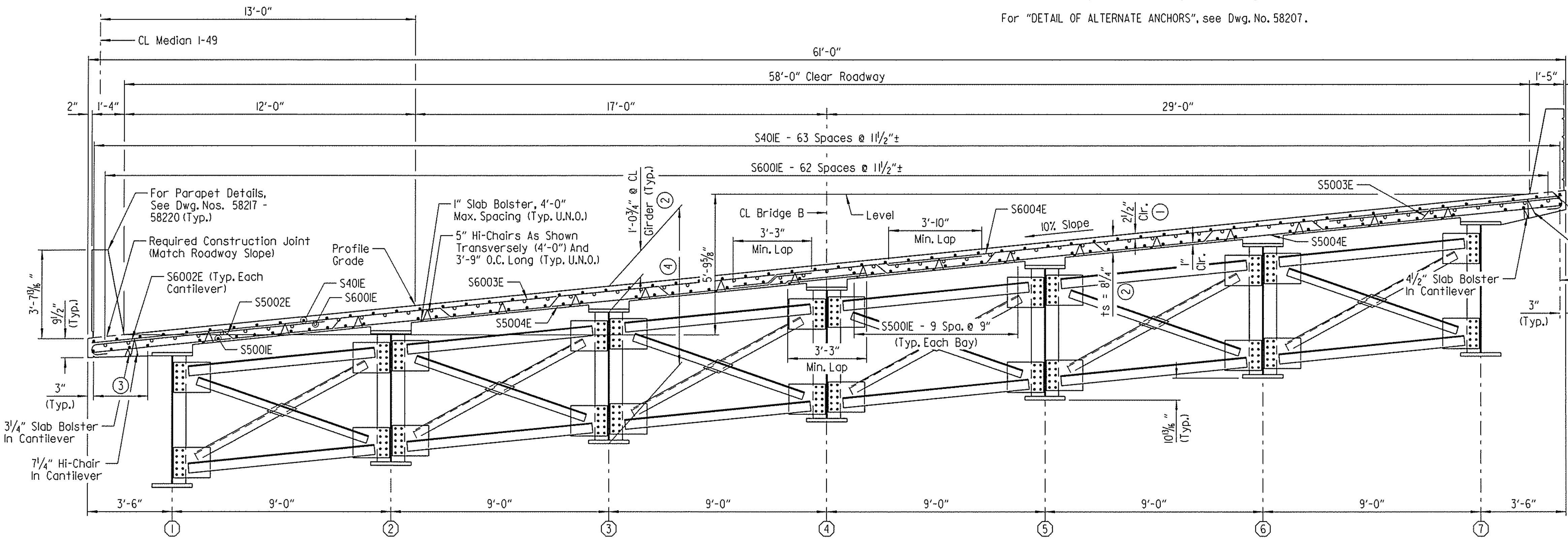

TYPICAL SECTION

(Looking Ahead)
Scale: 3/8" = 1'-0"

(X) Girder Number

LEGEND

U.N.O. = Unless Noted Otherwise

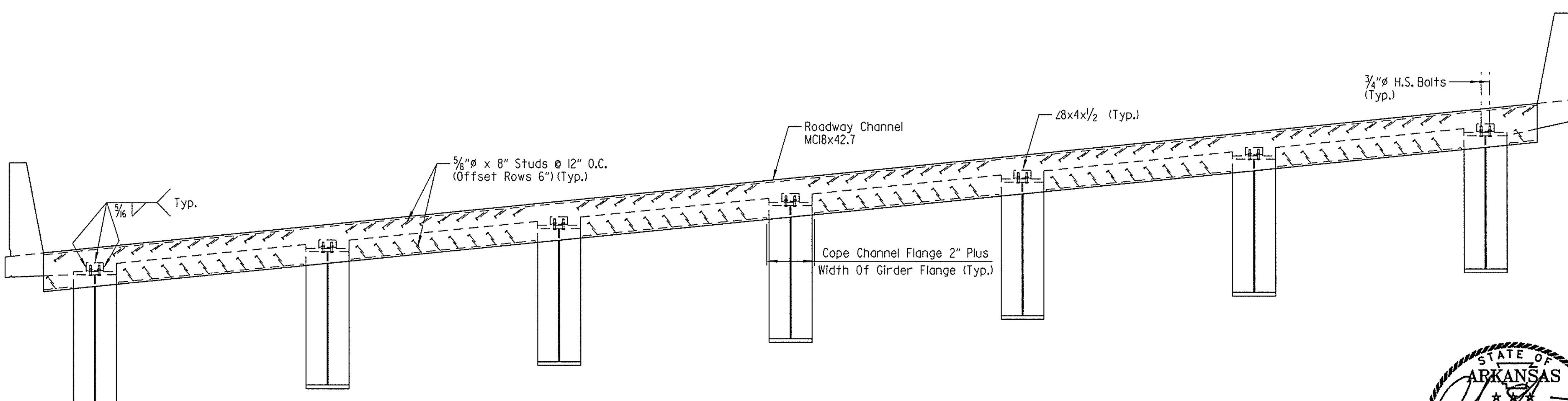

NOTE:
The profile of the roadway channel shall be established based on the vertical curve in conjunction with the skew.

EXPANSION DEVICE:
Roadway Channel MC18x42.7
Connection Angles ∠8x4x1/2
Detail Device 1/8" high and provide 1/4" shims using 2 - 1/16" and 1 - 1/8" plates

TYPICAL SECTION THRU JOINT

Scale: 3/8" = 1'-0"

STATE OF ARKANSAS LICENSED PROFESSIONAL ENGINEER No. 16458 JOEL E. SKINNER 3-20-16

BRIDGE ENGINEER

SHEET 1 OF 13
DETAILS OF 306'-0" CONTINUOUS COMPOSITE PLATE GIRDER UNIT
BRIDGE B
I-49 OVER HWY. 71B
ROUTE SEC.
ARKANSAS STATE HIGHWAY COMMISSION
LITTLE ROCK, ARK.

DRAWN BY: CWT DATE: MAR. 2015 FILENAME: BBB0414B3_S16.dgn
CHECKED BY: ABH DATE: JULY 2015 SCALE: AS SHOWN
DESIGNED BY: JES DATE: MAR. 2015
BRIDGE NO. B7380 DRAWING NO. 58208

jeskinner 3/20/2016 3:35:43 PM
WORKSPACE: AHTD Bridge
L:\2011\101707 - I-540 Widening & Interchange Improvement\Drawings\I540-HWY71B-S316-SX.dgn
REVISED DATE:

DATE REVISED	DATE FILMED	DATE REVISED	DATE FILMED

FED. ROAD DIST. NO.	STATE	FED. AID PROJ. NO.	SHEET NO.	TOTAL SHEETS
6	ARK.			
JOB NO.		BB0414	486	886

(1) B7380 306'-0" PL GIRDER UNIT 58209

(1) Measured along gutterline. Parapet joints designated with symbol (F) shall be stopped 4" from top of slab. All other parapet joints with symbol (P) shall be partial depth joints stopped 1'-2" from top of slab.

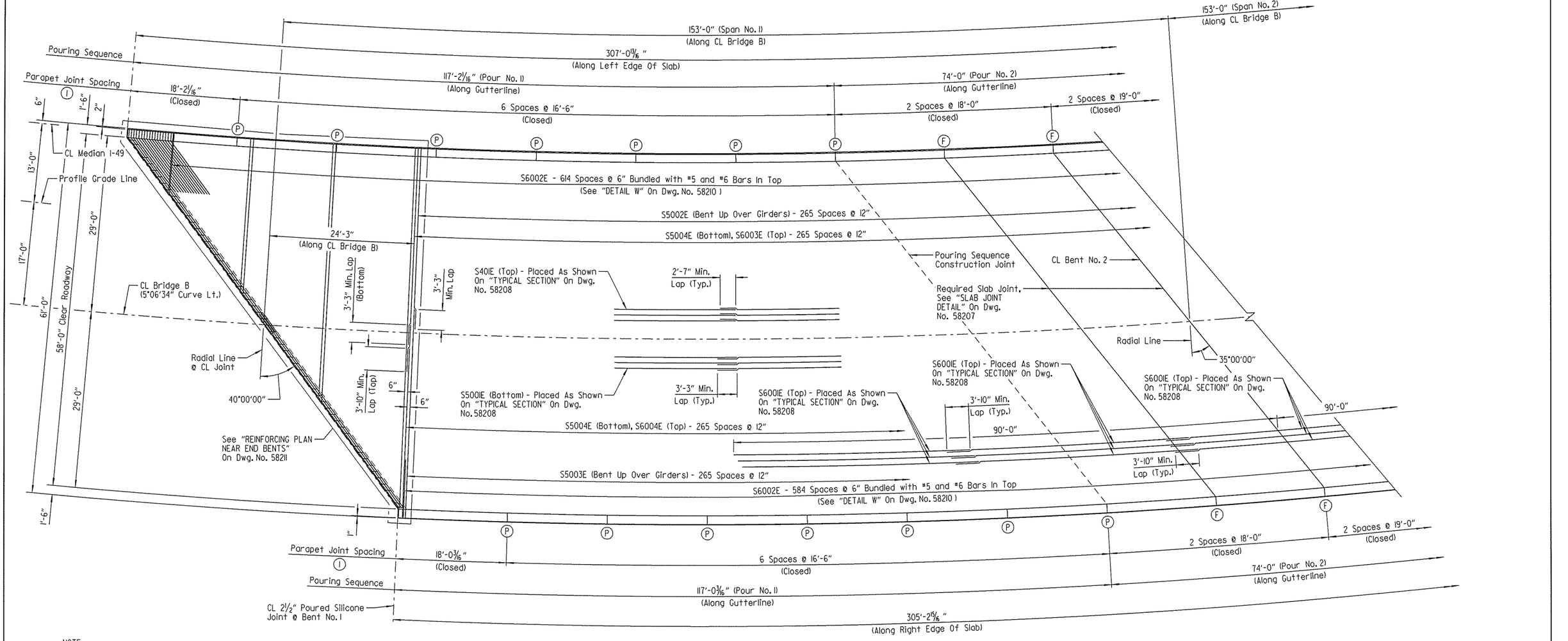

NOTE:
Pours with the same number may be placed simultaneously or separately. All pours (1) must be placed before pour (2) can be placed. 48 hours shall elapse between the end of a pour and the start of the next pour. 72 hours shall elapse between the end of a pour and the start of an adjacent pour. 72 hours shall elapse between the completion of the entire deck and the pouring of the parapet. Any railing pours made before the entire slab unit has been placed must be approved by the Engineer.

The Contractor must obtain approval from the Engineer for any deviations from the pouring sequence shown.

Concrete in bridge superstructure shall be consolidated for the entire pour before any concrete has taken its initial set. This may require the use of a retarding agent.

For "CONCRETE PLACEMENT PROCEDURE", see Dwg. No. 58207.

Required slab joints and pouring sequence joints shall align with the parapet open joints at the gutterline.

Unless noted otherwise, spacing shown for all transverse reinforcing is measured along CL Bridge B. All transverse reinforcing shall be placed on lines radial to CL Bridge B.

All longitudinal lines and longitudinal slab reinforcing shall be placed along curves concentric with CL Bridge B (5°06'34" curve).

For parapet reinforcing details, see Dwg. Nos. 58217 - 58220.

REINFORCING PLAN AND POURING SEQUENCE - SPAN NO. 1

Scale: 1/8" = 1'-0"

STATE OF ARKANSAS
LICENSED PROFESSIONAL ENGINEER
No. 16458
3-20-16
JOEL E. SKINNER
BRIDGE ENGINEER

SHEET 2 OF 13
DETAILS OF 306'-0" CONTINUOUS COMPOSITE PLATE GIRDER UNIT
BRIDGE B
I-49 OVER HWY. 71B

ROUTE SEC.

ARKANSAS STATE HIGHWAY COMMISSION
LITTLE ROCK, ARK.

DRAWN BY: CWT DATE: MAR. 2015 FILENAME: BBB0414B3_SI7.dgn
CHECKED BY: ABH DATE: JULY 2015 SCALE: AS SHOWN
DESIGNED BY: JES DATE: MAR. 2015

BRIDGE NO. B7380 DRAWING NO. 58209

jeskinner 3/20/2016 3:35:43 PM
WORKSPACE: AHTD Projects
L:\20\NH0707 - I-540 Widening & Interchange Improvement\Drawings\I540-HWY71B-S317-SB.dgn
REVISED DATE:

DATE REVISED	DATE FILMED	DATE REVISED	DATE FILMED	FED. ROAD DIST. NO.	STATE	FED. AID PROJ. NO.	SHEET NO.	TOTAL SHEETS
				6	ARK.			
				JOB NO.		BB0414	487	886
				(I) B7380		306'-0" PL GIRDER UNIT		58210

(I) Measured along gutterline. Parapet joints designated with symbol (F) shall be stopped 4" from top of slab. All other parapet joints with symbol (P) shall be partial depth joints stopped 1'-2" from top of slab.

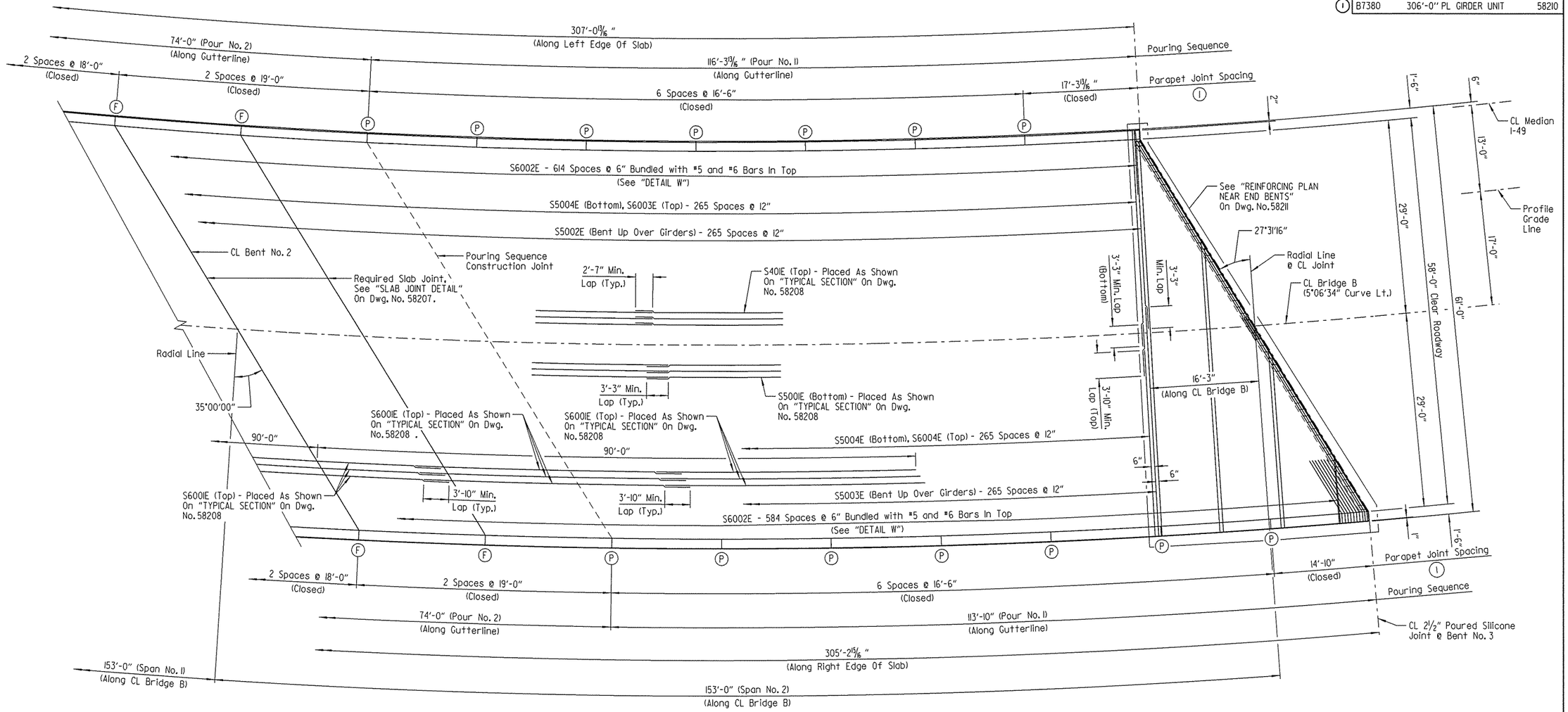

REINFORCING PLAN AND POURING SEQUENCE - SPAN NO. 2

Scale: 1/8" = 1'-0"

NOTES:
Pours with the same number may be placed simultaneously or separately. All pours (1) must be placed before pour (2) can be placed. 48 hours shall elapse between the end of a pour and the start of the next pour. 72 hours shall elapse between the end of a pour and the start of an adjacent pour. 72 hours shall elapse between the completion of the entire deck and the pouring of the parapet. Any railing pours made before the entire slab unit has been placed must be approved by the Engineer.

The Contractor must obtain approval from the Engineer for any deviations from the pouring sequence shown.

Concrete in bridge superstructure shall be consolidated for the entire pour before any concrete has taken its initial set. This may require the use of a retarding agent.

For "CONCRETE PLACEMENT PROCEDURE", see Dwg. No. 58207.

Required slab joints and pouring sequence joints shall align with the parapet open joints at the gutterline.

Unless noted otherwise, spacing shown for all transverse reinforcing is measured along CL Bridge B. All transverse reinforcing shall be placed on lines radial to CL Bridge B.

All longitudinal lines and longitudinal slab reinforcing shall be placed along curves concentric with CL Bridge B (5°06'34" curve).

For parapet reinforcing details, see Dwg. Nos. 58217 - 58220.

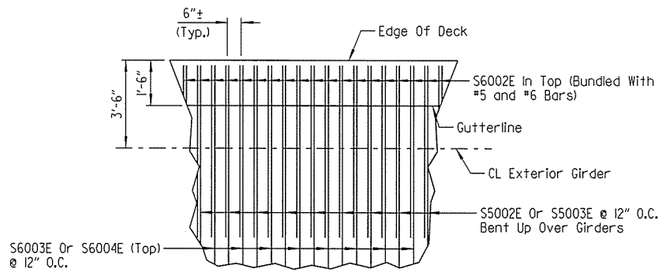

DETAIL W

No Scale

STATE OF ARKANSAS
LICENSED PROFESSIONAL ENGINEER
No. 16458
3-20-16
JOEL E. SKINNER

BRIDGE ENGINEER

SHEET 3 OF 13
DETAILS OF 306'-0" CONTINUOUS COMPOSITE PLATE GIRDER UNIT BRIDGE B I-49 OVER HWY. 71B

ROUTE SEC.

ARKANSAS STATE HIGHWAY COMMISSION
LITTLE ROCK, ARK.

DRAWN BY: CWT DATE: MAR. 2015 FILENAME: BBB0414B3_SI8.dgn
CHECKED BY: ABH DATE: JULY 2015 SCALE: AS SHOWN
DESIGNED BY: JES DATE: MAR. 2015
BRIDGE NO. B7380 DRAWING NO. 58210

jeskinner 3/20/2016 3:35:43 PM
WORKSPACE: AHTD Bridge
L:\2011\1007707 - I-540 Widening & Interchange Improvement\Drawings\I540-HWY71B-S318-SB.dgn
REVISED DATE:

DATE REVISED	DATE FILMED	DATE REVISED	DATE FILMED	FED. ROAD DIST. NO.	STATE	FED. AID PROJ. NO.	SHEET NO.	TOTAL SHEETS
				6	ARK.			
				JOB NO.		BB0414	488	886
				(1) B7380		306'-0" PL GIRDER UNIT		5821I

(1) Measured Along Edge Of Deck

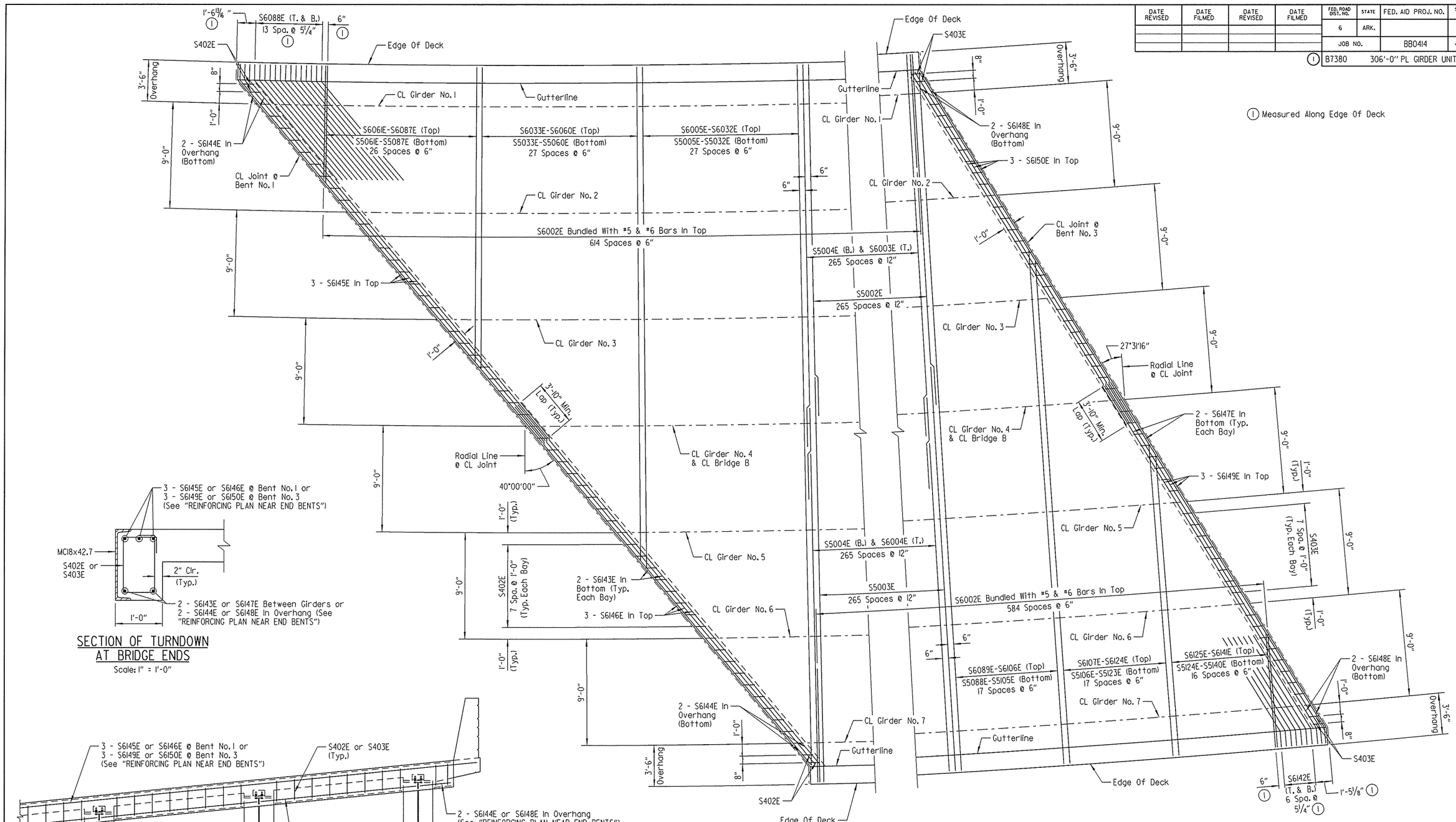

SECTION OF TURNDOWN AT BRIDGE ENDS

Scale: 1" = 1'-0"

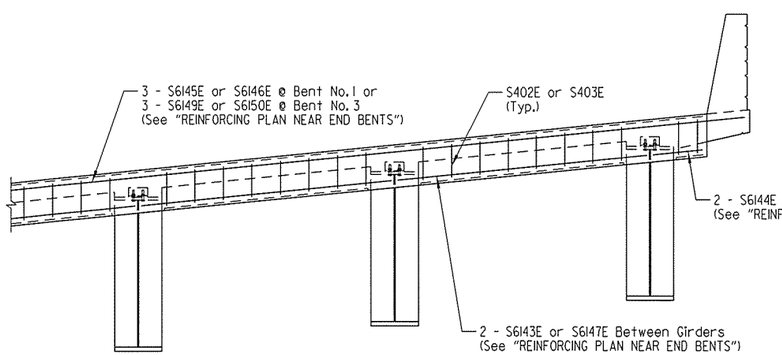

ELEVATION OF TURNDOWN AT BRIDGE ENDS

Scale: 3/8" = 1'-0"

LEGEND

T. = Top
B. = Bottom

REINFORCING PLAN NEAR END BENTS

Scale: 1/4" = 1'-0"

NOTE:
Unless noted otherwise, spacing shown for all transverse reinforcing is measured along CL Bridge B. All transverse reinforcing shall be placed on lines radial to CL Bridge B.

STATE OF ARKANSAS
LICENSED PROFESSIONAL ENGINEER
No. 16458
3-20-16
JOEL E. SKINNER

BRIDGE ENGINEER

SHEET 4 OF 13
DETAILS OF 306'-0" CONTINUOUS COMPOSITE PLATE GIRDER UNIT BRIDGE B
I-49 OVER HWY. 71B

ROUTE SEC.

ARKANSAS STATE HIGHWAY COMMISSION
LITTLE ROCK, ARK.

DRAWN BY: CJH DATE: MAR. 2015 FILENAME: BBB0414B3_S19.dgn
CHECKED BY: ABH DATE: JULY 2015 SCALE: AS SHOWN
DESIGNED BY: JES DATE: MAR. 2015
BRIDGE NO. B7380 DRAWING NO. 5821I

jeskinner 3/20/2016 3:35:44 PM
W:\Projects\HTD_Bridge\L\540\HWY71\07 I-540 Widening & Interchange Improvement\Drawings\I540-HWY71B-S319-SB.dgn
REVISED DATE:

DATE REVISED	DATE FILMED	DATE REVISED	DATE FILMED	FED. ROAD DIST. NO.	STATE	FED. AID PROJ. NO.	SHEET NO.	TOTAL SHEETS
				6	ARK.			
				JOB NO.		BB0414	489	886

(1) B7380 306'-0" PL GIRDER UNIT 58212

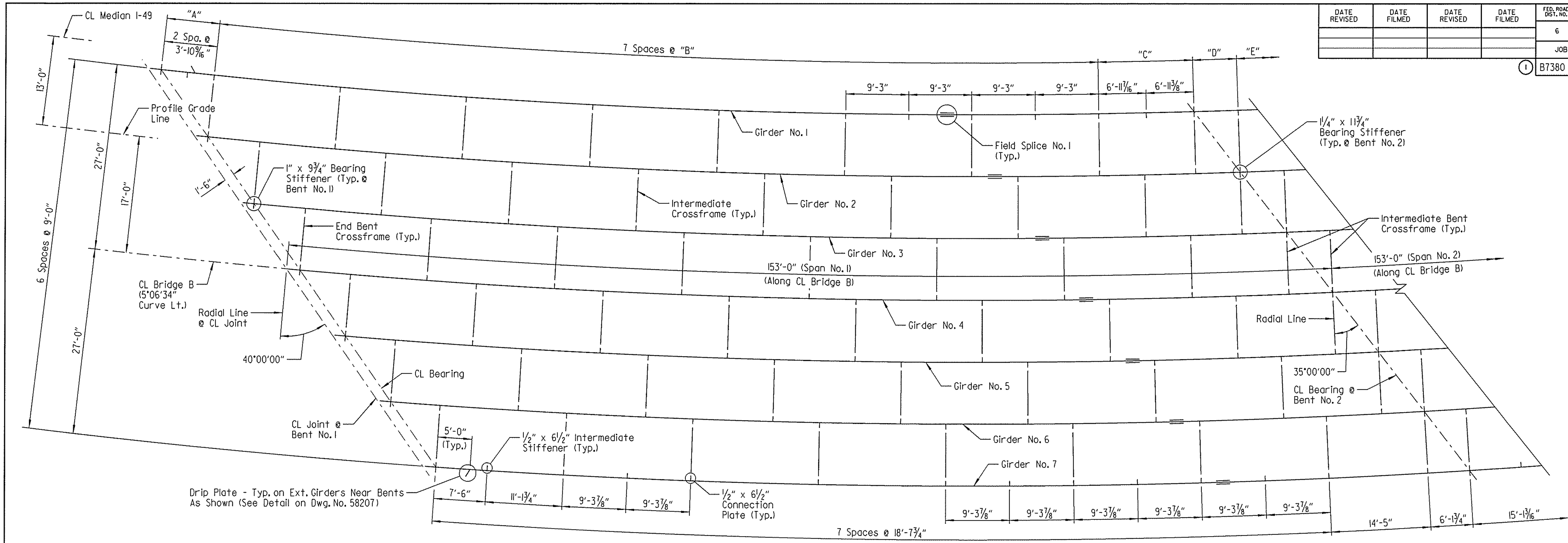

FRAMING PLAN - SPAN NO. 1

Scale: 1/8" = 1'-0"

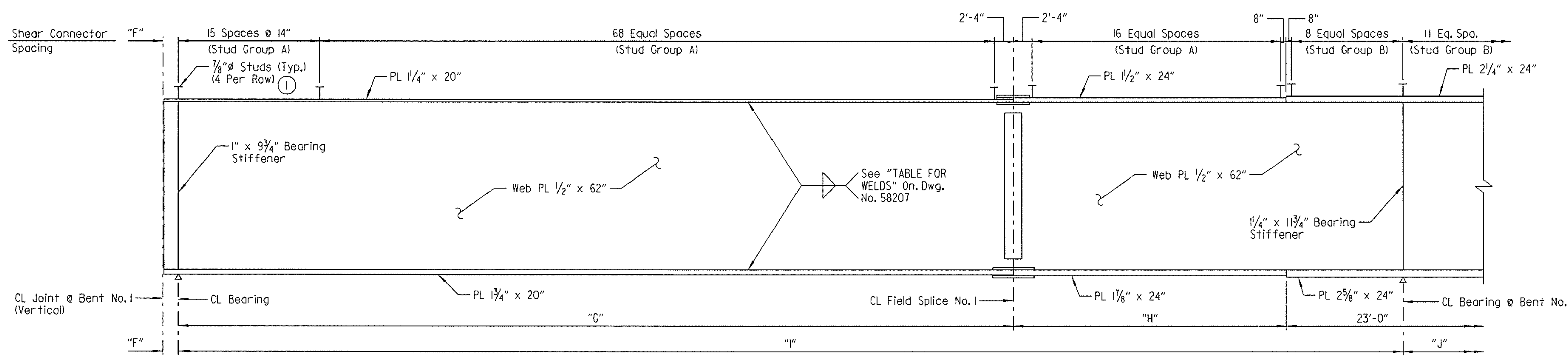

(1) Stud heights for Stud Group A and Stud Group B vary. See "SHEAR CONNECTOR DETAIL" on Dwg. No. 58207.

GIRDER ELEVATION - SPAN NO. 1

(Dimensions Measured Along CL Girder)
No Scale

TABLE OF VARIABLES

GIRDER NO.	"A"	"B"	"C"	"D"	"E"	"F"	"G"	"H"	"I"	"J"
1	7'-9 1/8"	18'-6"	13'-10 13/16"	6'-5 5/8"	16'-6 9/16"	1'-11 7/8"	115'-1 15/16"	25'-6"	151'-1 15/16"	152'-6 1/4"
2	7'-7 13/16"	18'-6"	13'-11 7/16"	6'-4 11/16"	16'-2 1/2"	1'-11 3/4"	115'-3 13/16"	25'-6"	151'-1 1/4"	152'-1 3/16"
3	7'-6 9/16"	18'-6"	14'-0 3/16"	6'-3 3/4"	15'-10 9/16"	1'-11 5/8"	115'-4 7/8"	25'-3"	151'-0 3/4"	151'-8 3/8"
4	7'-5 5/16"	18'-6"	14'-1 3/16"	6'-2 7/8"	15'-6 13/16"	1'-11 1/2"	115'-0 5/16"	25'-3"	151'-0 1/2"	151'-3 11/16"
5	7'-4 1/8"	18'-6"	14'-2 3/8"	6'-2"	15'-3 3/16"	1'-11 3/8"	115'-1 7/8"	25'-0"	151'-0 1/2"	150'-11 3/16"
6	7'-3"	18'-6"	14'-3 11/16"	6'-1 1/8"	14'-11 3/4"	1'-11 1/4"	114'-10 5/16"	25'-0"	151'-0 11/16"	150'-6 7/8"
7	-	-	-	-	-	1'-11 1/8"	115'-1"	25'-0"	151'-1"	150'-2 3/4"

NOTES:
All girders are oriented along curves concentric with CL Bridge B.

All crossframes are oriented along lines radial to CL Bridge B.

For "BEARING STIFFENER DETAIL", "CONNECTION PLATE DETAIL", "INTERMEDIATE STIFFENER DETAIL" and crossframe details, see Dwg. No. 58216.

For "GENERAL NOTES", see Dwg. No. 58206.

STATE OF ARKANSAS LICENSED PROFESSIONAL ENGINEER No. 16458 JOEL E. SKINNER 3-20-16

BRIDGE ENGINEER

SHEET 5 OF 13
DETAILS OF 306'-0" CONTINUOUS COMPOSITE PLATE GIRDER UNIT
BRIDGE B
I-49 OVER HWY. 71B
ROUTE SEC.
ARKANSAS STATE HIGHWAY COMMISSION
LITTLE ROCK, ARK.

DRAWN BY: CJH DATE: MAR. 2015 FILENAME: BBB0414B3_S20.dgn
CHECKED BY: ABH DATE: JULY 2015 SCALE: AS SHOWN
DESIGNED BY: JES DATE: MAR. 2015
BRIDGE NO. B7380 DRAWING NO. 58212

jeskinner 3/20/2016 3:35:44 PM
WORKSPACE: AHTD Bridge
L:\2011\101707 - I-540 Widening & Interchange Improvement\Drawings\I540-HWY71B-S320-SF.dgn
REVISED DATE:

DATE REVISED	DATE FILMED	DATE REVISED	DATE FILMED	FED. ROAD DIST. NO.	STATE	FED. AID PROJ. NO.	SHEET NO.	TOTAL SHEETS
				6	ARK.			
				JOB NO.		BB0414	490	886
				(1) B7380		306'-0" PL GIRDER UNIT		58213

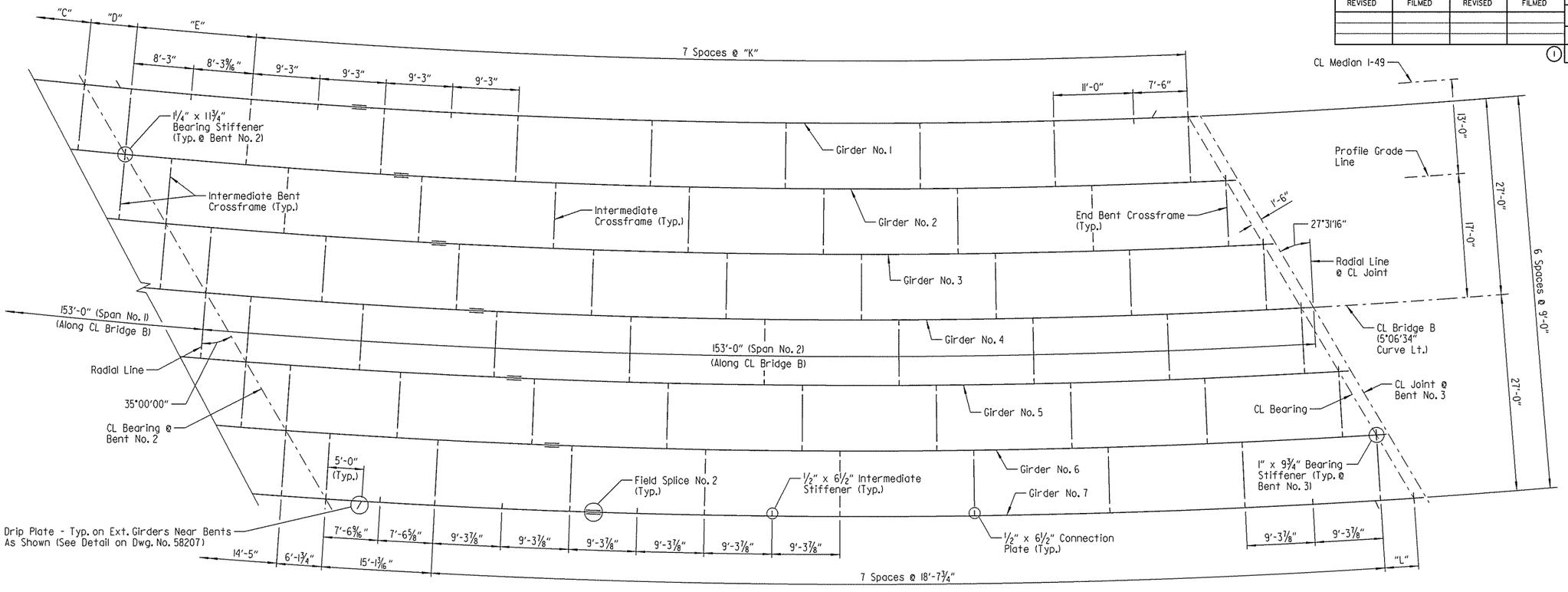

FRAMING PLAN - SPAN NO. 2

Scale: 1/8" = 1'-0"

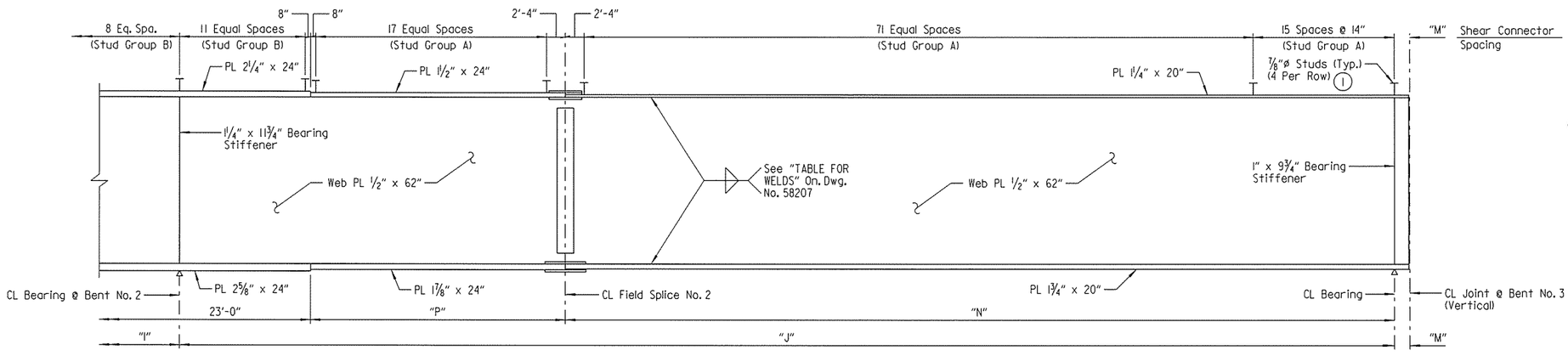

(1) Stud heights for Stud Group A and Stud Group B vary. See "SHEAR CONNECTOR DETAIL" on Dwg. No. 58212.

GIRDER ELEVATION - SPAN NO. 2

(Dimensions Measured Along CL Girder)
No Scale

TABLE OF VARIABLES					
GIRDER NO.	"K"	"L"	"M"	"N"	"P"
1	18'-6"	-	1'-8 7/16"	114'-6 1/4"	25'-6"
2	18'-6"	4'-10 3/16"	1'-8 3/8"	113'-10 5/8"	25'-6"
3	18'-6"	4'-9 5/8"	1'-8 3/8"	113'-10 1/4"	25'-3"
4	18'-6"	4'-9"	1'-8 5/16"	113'-9 7/8"	25'-3"
5	18'-6"	4'-8 7/16"	1'-8 1/4"	113'-9 9/16"	25'-0"
6	18'-6"	4'-7 7/8"	1'-8 3/16"	113'-9 1/4"	25'-0"
7	-	4'-7 5/16"	1'-8 3/16"	113'-2 3/4"	25'-0"

NOTES:
All girders are oriented along curves concentric with CL Bridge B.

All crossframes are oriented along lines radial to CL Bridge B.

For "BEARING STIFFENER DETAIL", "CONNECTION PLATE DETAIL", "INTERMEDIATE STIFFENER DETAIL" and crossframe details, see Dwg. No. 58216.

For dimensions "C", "D", "E", "I" and "J", see "TABLE OF VARIABLES" on Dwg. No. 58212.

For "GENERAL NOTES", see Dwg. No. 58206 .

STATE OF ARKANSAS
LICENSED PROFESSIONAL ENGINEER
No. 16458
3-20-16
JOEL E. SKINNER

BRIDGE ENGINEER

SHEET 6 OF 13
DETAILS OF 306'-0" CONTINUOUS COMPOSITE PLATE GIRDER UNIT
BRIDGE B
I-49 OVER HWY. 71B
ROUTE SEC.
ARKANSAS STATE HIGHWAY COMMISSION
LITTLE ROCK, ARK.

DRAWN BY: CJH DATE: MAR. 2015 FILENAME: BBB0414B3_S21.dgn
CHECKED BY: ABH DATE: JULY 2015 SCALE: AS SHOWN
DESIGNED BY: JES DATE: MAR. 2015
BRIDGE NO. B7380 DRAWING NO. 58213

jskinner 3/20/2016 3:35:45 PM
WORKSPACE: AHTD Bridge Standards
L:\20IN\I0I7707 - I-540 Widening & Interchange Improvement\Drawings\I540-HWY71B-S321-SF.dgn
REVISED DATE:

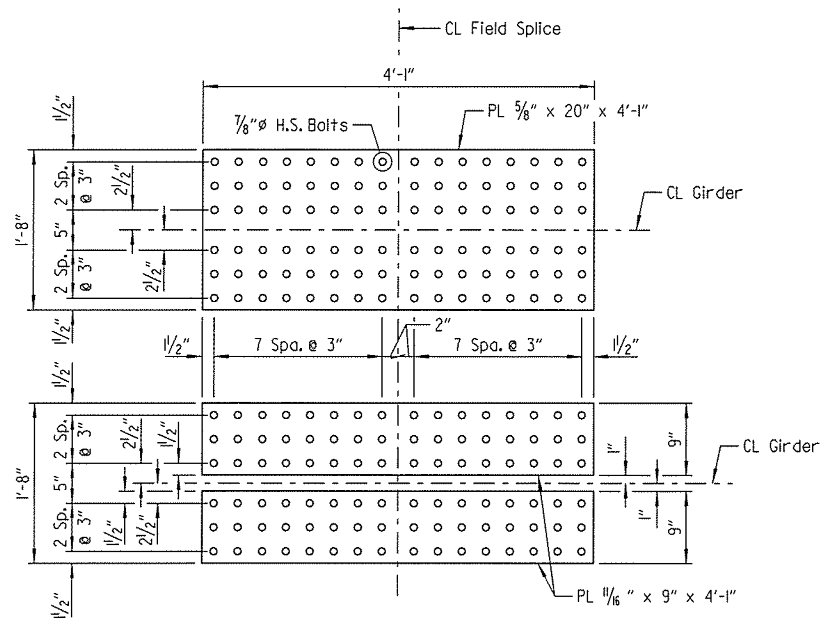

TOP FLANGE SPLICE
Scale: 1" = 1'-0"

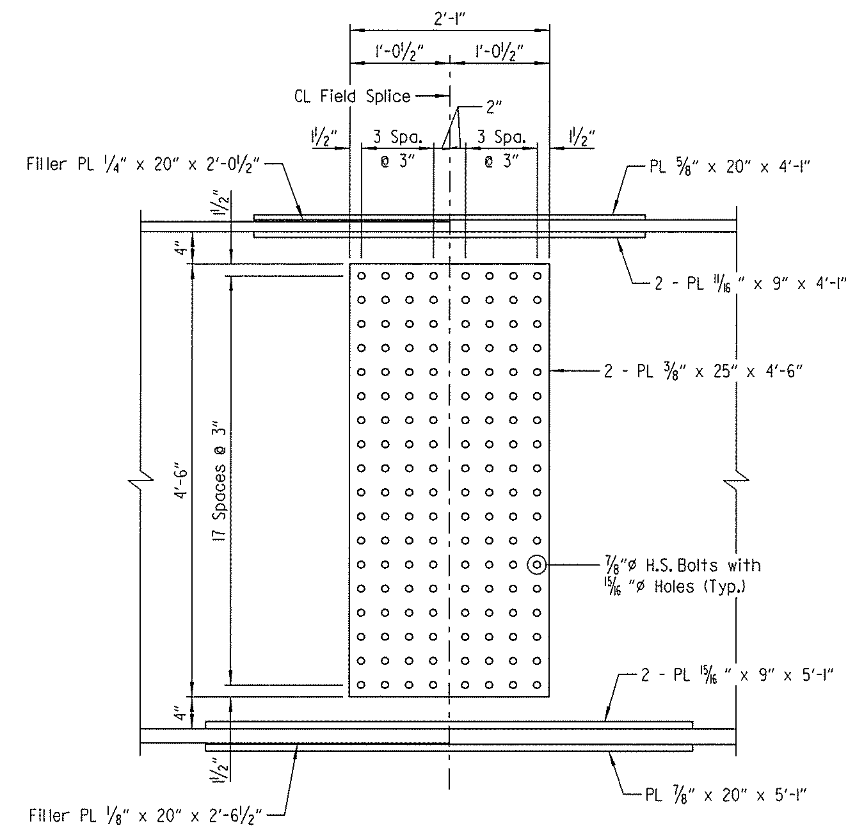

ELEVATION OF FIELD SPLICE
Scale: 1" = 1'-0"

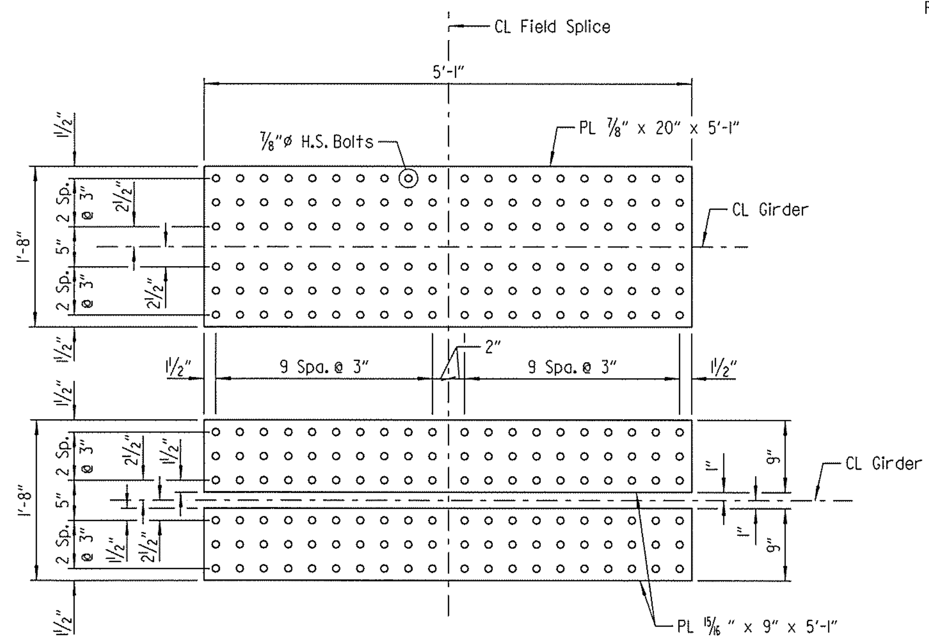

BOTTOM FLANGE SPLICE
Scale: 1" = 1'-0"

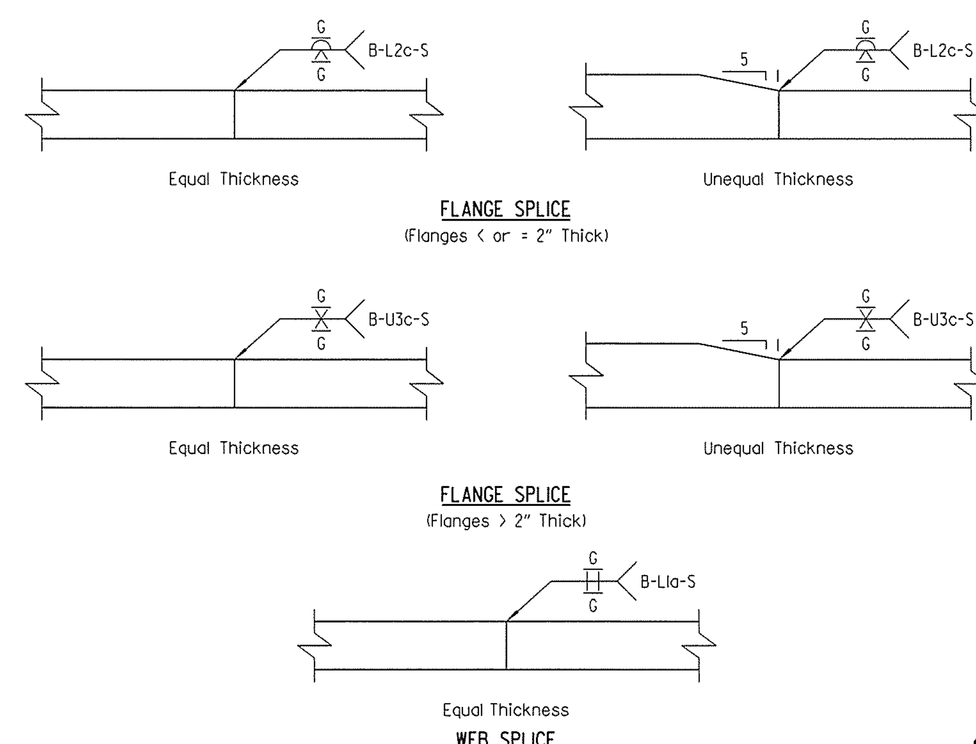

DETAILS OF WELDED SPLICES
No Scale

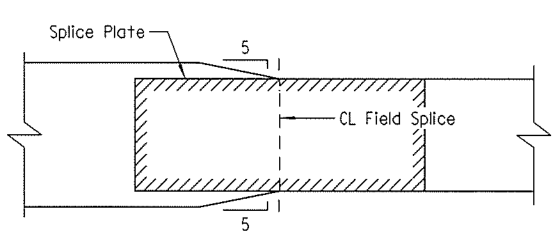

DETAIL OF BOTTOM FLANGE TRANSITION
No Scale

NOTES:
All field splice bolts shall 7/8"ø H.S. bolts.

All holes for field splice bolts shall 15/16"ø.

All field splice plates shall be AASHTO M270, Gr. 50W steel.

Bolted field splices shown may be eliminated or shop welded splices may be substituted with approval of the Engineer. Payment will be made on the basis of the plan quantities.

BRIDGE ENGINEER

SHEET 7 OF 13
DETAILS OF 306'-0" CONTINUOUS COMPOSITE PLATE GIRDER UNIT
BRIDGE B
I-49 OVER HWY. 71B

ROUTE SEC.

ARKANSAS STATE HIGHWAY COMMISSION
LITTLE ROCK, ARK.

DRAWN BY: CJH DATE: MAR. 2015 FILENAME: BBB0414B3_S22.dgn
CHECKED BY: ABH DATE: JULY 2015 SCALE: AS SHOWN
DESIGNED BY: JES DATE: MAR. 2015
BRIDGE NO. B7380 DRAWING NO. 58214

jeskinner 3/20/2016 3:35:45 PM
WORKSPACE: AHTD Bridge
L:\2011\101707 - I-540 Widening & Interchange Improvement\Drawings\I540-HWY71B-S322-SD.dgn
REVISED DATE:

TABLE OF DEAD LOAD DEFLECTIONS (INCHES) - GIRDERS 1-6

Span	Point Of Deflection	Girder 1 Structural Steel	Girder 1 Structural Steel + Slab	Girder 1 Structural Steel + Slab + Parapet	Girder 2 Structural Steel	Girder 2 Structural Steel + Slab	Girder 2 Structural Steel + Slab + Parapet	Girder 3 Structural Steel	Girder 3 Structural Steel + Slab	Girder 3 Structural Steel + Slab + Parapet
SPAN NO. 1	1.0	0.000	0.000	0.000	0.000	0.000	0.000	0.000	0.000	0.000
	1.1	0.236	0.891	0.959	0.290	1.069	1.139	0.291	1.070	1.140
	1.2	0.437	1.650	1.777	0.533	1.966	2.096	0.537	1.972	2.101
	1.3	0.574	2.164	2.333	0.693	2.555	2.725	0.700	2.568	2.737
	1.4	0.627	2.364	2.551	0.752	2.770	2.957	0.761	2.790	2.975
	1.5	0.599	2.256	2.438	0.709	2.608	2.787	0.718	2.631	2.807
	1.6	0.495	1.860	2.014	0.579	2.126	2.276	0.588	2.150	2.296
	1.7	0.345	1.296	1.407	0.394	1.442	1.547	0.401	1.462	1.564
	1.8	0.181	0.678	0.739	0.201	0.732	0.789	0.205	0.745	0.799
	1.9	0.054	0.201	0.221	0.053	0.191	0.208	0.055	0.197	0.212
SPAN NO. 2	2.0	0.000	0.000	0.000	0.000	0.000	0.000	0.000	0.000	0.000
	2.1	0.053	0.194	0.206	0.067	0.243	0.257	0.066	0.240	0.256
	2.2	0.189	0.700	0.748	0.236	0.861	0.914	0.235	0.854	0.910
	2.3	0.367	1.366	1.462	0.449	1.645	1.748	0.447	1.632	1.739
	2.4	0.534	1.996	2.139	0.651	2.391	2.541	0.647	2.368	2.522
	2.5	0.646	2.420	2.595	0.790	2.906	3.089	0.785	2.876	3.062
	2.6	0.683	2.561	2.748	0.834	3.071	3.265	0.827	3.035	3.231
	2.7	0.631	2.371	2.545	0.766	2.823	3.001	0.760	2.791	2.971
	2.8	0.485	1.824	1.958	0.589	2.172	2.310	0.585	2.149	2.288
	2.9	0.266	1.001	1.075	0.322	1.187	1.262	0.320	1.175	1.251
	3.0	0.000	0.000	0.000	0.000	0.000	0.000	0.000	0.000	0.000

Span	Point Of Deflection	Girder 4 Structural Steel	Girder 4 Structural Steel + Slab	Girder 4 Structural Steel + Slab + Parapet	Girder 5 Structural Steel	Girder 5 Structural Steel + Slab	Girder 5 Structural Steel + Slab + Parapet	Girder 6 Structural Steel	Girder 6 Structural Steel + Slab	Girder 6 Structural Steel + Slab + Parapet
SPAN NO. 1	1.0	0.000	0.000	0.000	0.000	0.000	0.000	0.000	0.000	0.000
	1.1	0.290	1.066	1.136	0.285	1.047	1.117	0.278	1.025	1.097
	1.2	0.534	1.961	2.089	0.525	1.927	2.055	0.512	1.887	2.020
	1.3	0.696	2.555	2.722	0.685	2.512	2.679	0.668	2.458	2.632
	1.4	0.757	2.775	2.957	0.745	2.731	2.913	0.726	2.671	2.860
	1.5	0.715	2.619	2.792	0.705	2.580	2.753	0.686	2.521	2.699
	1.6	0.586	2.143	2.286	0.578	2.112	2.254	0.563	2.064	2.209
	1.7	0.401	1.462	1.561	0.395	1.440	1.538	0.385	1.408	1.507
	1.8	0.206	0.749	0.801	0.203	0.737	0.787	0.197	0.718	0.768
	1.9	0.056	0.202	0.216	0.055	0.198	0.211	0.052	0.189	0.201
SPAN NO. 2	2.0	0.000	0.000	0.000	0.000	0.000	0.000	0.000	0.000	0.000
	2.1	0.062	0.226	0.243	0.063	0.228	0.246	0.064	0.234	0.254
	2.2	0.225	0.818	0.876	0.224	0.814	0.875	0.224	0.819	0.884
	2.3	0.432	1.575	1.684	0.428	1.562	1.675	0.425	1.556	1.676
	2.4	0.627	2.293	2.449	0.621	2.270	2.430	0.613	2.250	2.420
	2.5	0.761	2.788	2.976	0.752	2.755	2.948	0.741	2.725	2.928
	2.6	0.803	2.945	3.143	0.793	2.908	3.110	0.780	2.871	3.083
	2.7	0.738	2.709	2.890	0.728	2.671	2.856	0.716	2.637	2.831
	2.8	0.568	2.086	2.225	0.559	2.054	2.196	0.550	2.029	2.177
	2.9	0.310	1.140	1.216	0.305	1.121	1.198	0.301	1.109	1.190
	3.0	0.000	0.000	0.000	0.000	0.000	0.000	0.000	0.000	0.000

TABLE OF DEAD LOAD DEFLECTIONS (INCHES) - GIRDER 7

Span	Point Of Deflection	Girder 7 Structural Steel	Girder 7 Structural Steel + Slab	Girder 7 Structural Steel + Slab + Parapet
SPAN NO. 1	1.0	0.000	0.000	0.000
	1.1	0.324	1.223	1.306
	1.2	0.587	2.215	2.364
	1.3	0.772	2.910	3.104
	1.4	0.836	3.149	3.357
	1.5	0.787	2.960	3.154
	1.6	0.644	2.418	2.574
	1.7	0.443	1.658	1.762
	1.8	0.223	0.831	0.880
	1.9	0.061	0.225	0.236
SPAN NO. 2	2.0	0.000	0.000	0.000
	2.1	0.069	0.256	0.281
	2.2	0.230	0.860	0.934
	2.3	0.440	1.648	1.781
	2.4	0.651	2.444	2.634
	2.5	0.790	2.971	3.195
	2.6	0.837	3.151	3.384
	2.7	0.770	2.903	3.114
	2.8	0.596	2.248	2.410
	2.9	0.326	1.231	1.319
	3.0	0.000	0.000	0.000

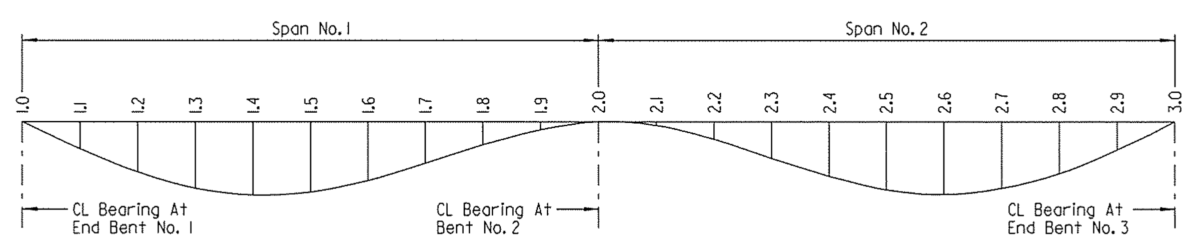

DEAD LOAD DEFLECTION DIAGRAM

No Scale

NOTES:
Camber for dead load deflection plus vertical curve +/- 1/4" tolerance. Deflections shown are along CL Girder from the plane perpendicular to the web extending from CL Bearing to CL Bearing. Vertical curve corrections are not included. Negative sign (-) indicates point above chord.

Dead load deflections shown are based on removable deck forms.

Revision to the deflection tables may be necessary upon review of the Contractor's submitted forming details.

STATE OF ARKANSAS LICENSED PROFESSIONAL ENGINEER No. 16458 JOEL E. SKINNER 3-20-16

BRIDGE ENGINEER

SHEET 8 OF 13
DETAILS OF 306'-0" CONTINUOUS COMPOSITE PLATE GIRDER UNIT
BRIDGE B
I-49 OVER HWY. 71B
ROUTE SEC.
ARKANSAS STATE HIGHWAY COMMISSION
LITTLE ROCK, ARK.

DRAWN BY: CJH DATE: MAR. 2015 FILENAME: BBB0414B3_S23.dgn
CHECKED BY: ABH DATE: JULY 2015 SCALE: AS SHOWN
DESIGNED BY: JES DATE: MAR. 2015
BRIDGE NO. B7380 DRAWING NO. 58215

jeskinner 3/20/2016 3:35:45 PM
WORKSPACE: AHTD Bridge
L:\2011\101707 - I-540 Widening & Interchange Improvement\Drawings\540-HWY71B-S323-SD.dgn
REVISED DATE:

DATE REVISED	DATE FILMED	DATE REVISED	DATE FILMED	FED. ROAD DIST. NO.	STATE	FED. AID PROJ. NO.	SHEET NO.	TOTAL SHEETS
				6	ARK.			
				JOB NO.		BB0414	493	886
				(1) B7380		306'-0" PL GIRDER UNIT		58216

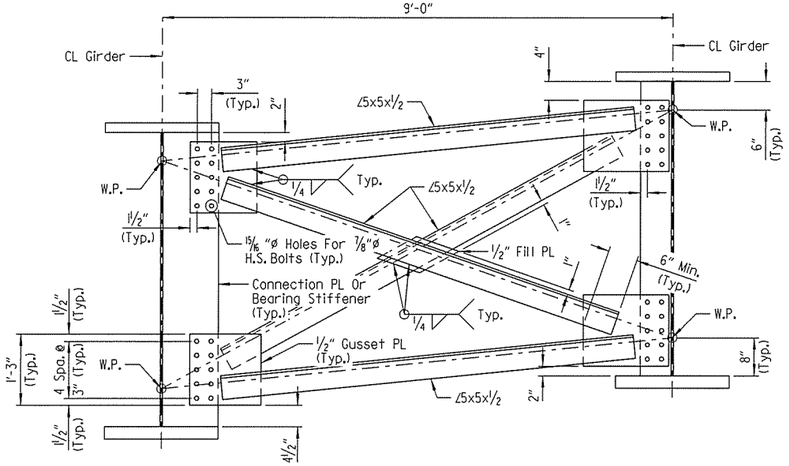

INTERMEDIATE BENT CROSSFRAME

(Looking Ahead)
Scale: ¾" = 1'-0"

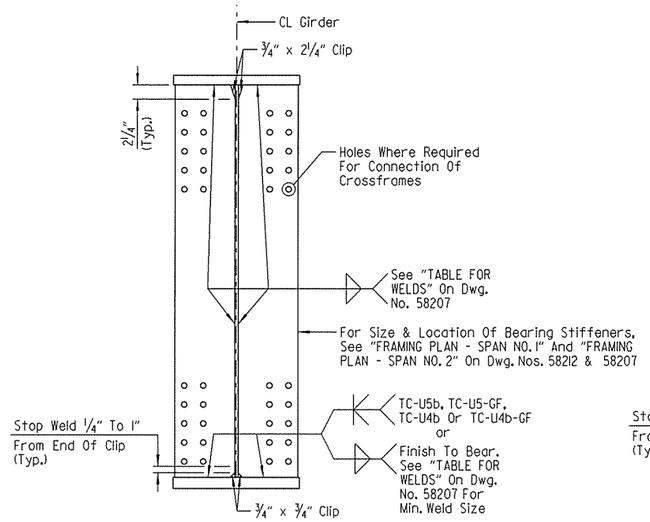

BEARING STIFFENER DETAIL

No Scale

NOTE:
Bearing Stiffeners to be fabricated so as to be vertical in their final position.

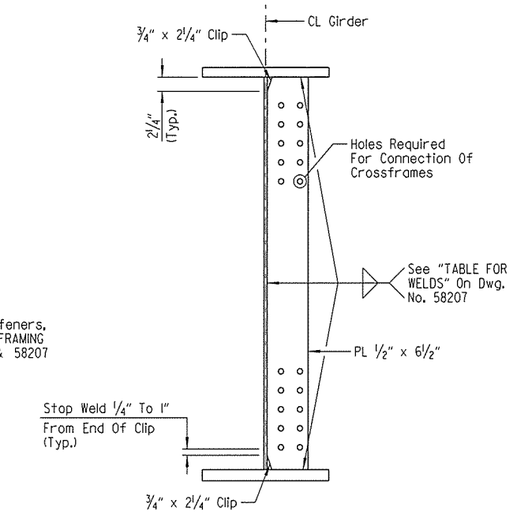

CONNECTION PLATE DETAIL

Scale: 1" = 1'-0"

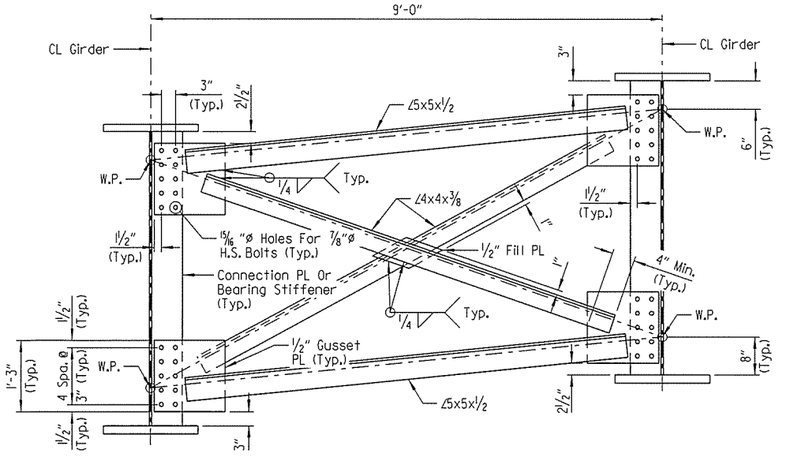

INTERMEDIATE CROSSFRAME & END BENT CROSSFRAME

(Looking Ahead)
No Scale

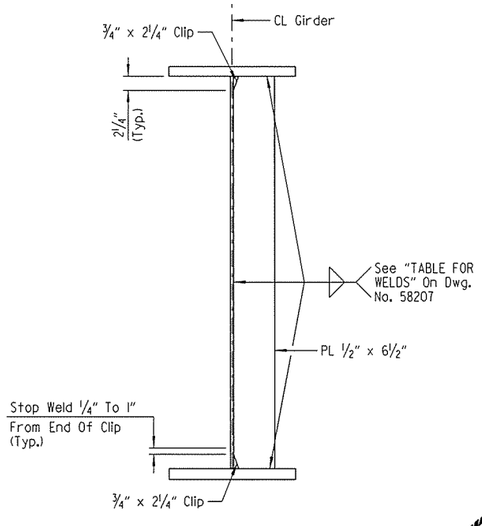

INTERMEDIATE STIFFENER DETAIL

No Scale

STATE OF ARKANSAS
LICENSED PROFESSIONAL ENGINEER
No. 16458
3-20-16
JOEL E. SKINNER

BRIDGE ENGINEER

SHEET 9 OF 13
DETAILS OF 306'-0" CONTINUOUS COMPOSITE PLATE GIRDER UNIT
BRIDGE B
I-49 OVER HWY. 71B

ROUTE SEC.

ARKANSAS STATE HIGHWAY COMMISSION
LITTLE ROCK, ARK.

DRAWN BY: CJH DATE: MAR. 2015 FILENAME: BBB0414B3_S24.dgn
CHECKED BY: ABH DATE: JULY 2015 SCALE: AS SHOWN
DESIGNED BY: JES DATE: MAR. 2015

BRIDGE NO. B7380 DRAWING NO. 58216

jeskinner 3/20/2016 3:35:46 PM
W:\ROADWAY\JES, AHTD BY:JES, CHKD BY:ABH
L:\2011\I407707 - I-540 Widening & Interchange Improvement\Drawings\I540-HWY71B-S324-SD.dgn
REVISED DATE:

DATE REVISED	DATE FILMED	DATE REVISED	DATE FILMED

FED. ROAD DIST. NO.	STATE	FED. AID PROJ. NO.	SHEET NO.	TOTAL SHEETS
6	ARK.			
JOB NO.		BB0414	494	886
(I) B7380	306'-0" PL GIRDER UNIT			58217

NOTES:
All dimensions shown are measured along left gutterline.

For "BAR LIST" and "BAR BENDING DIAGRAMS", see Dwg. No. 58220.

For "SECTION A-A", see Dwg. No. 58218.

For "ARCHITECTURAL FINISH ELEVATION - LEFT PARAPET" and "DETAILS OF OPTIONAL SLIPFORMING OF CONCRETE PARAPET RAIL", see Dwg. No. 58206.

(P) CL Partial-Depth Parapet Joint (1/4" to 1" Max.) as shown on "REINFORCING PLAN AND POURING SEQUENCE - SPAN NO. 1" and "REINFORCING PLAN AND POURING SEQUENCE - SPAN NO. 2" on Dwg. Nos. 58209 & 58210. Stop 1'-6" from top of slab.

(F) CL Full-Depth Parapet Joint (1/4" to 1" Max.) as shown on "REINFORCING PLAN AND POURING SEQUENCE - SPAN NO. 1" and "REINFORCING PLAN AND POURING SEQUENCE - SPAN NO. 2" on Dwg. Nos. 58209 & 58210. Stop 4" from top of slab.

LEFT PARAPET - ELEVATION

(Looking At Inside Face Of Parapet Rail)
Scale: 3/8" = 1'-0"

LEGEND

EF = Each Face

STATE OF ARKANSAS
LICENSED PROFESSIONAL ENGINEER
No. 16458
3-20-16
JOEL E. SKINNER

BRIDGE ENGINEER

SHEET 10 OF 13
DETAILS OF 306'-0" CONTINUOUS COMPOSITE PLATE GIRDER UNIT BRIDGE B
I-49 OVER HWY. 71B

ROUTE SEC.

ARKANSAS STATE HIGHWAY COMMISSION
LITTLE ROCK, ARK.

DRAWN BY: CWT DATE: MAR. 2015 FILENAME: BBB0414B3_S25.dgn
CHECKED BY: ABH DATE: JULY 2015 SCALE: AS SHOWN
DESIGNED BY: JES DATE: MAR. 2015
BRIDGE NO. B7380 DRAWING NO. 58217

jeskinner
WORKING OFFICE: AHTD - Log
LOCATION: I-540 Widening & Interchange Improvement\Drawings\I540-HWY71B-S325-MD.dgn
REVISED DATE: 3/20/2016 3:35:46 PM

DATE REVISED	DATE FILMED	DATE REVISED	DATE FILMED	FED. ROAD DIST. NO.	STATE	FED. AID PROJ. NO.	SHEET NO.	TOTAL SHEETS
				6	ARK.			
				JOB NO.		BB0414	495	886
				(1) B7380		306'-0" PL GIRDER UNIT		58218

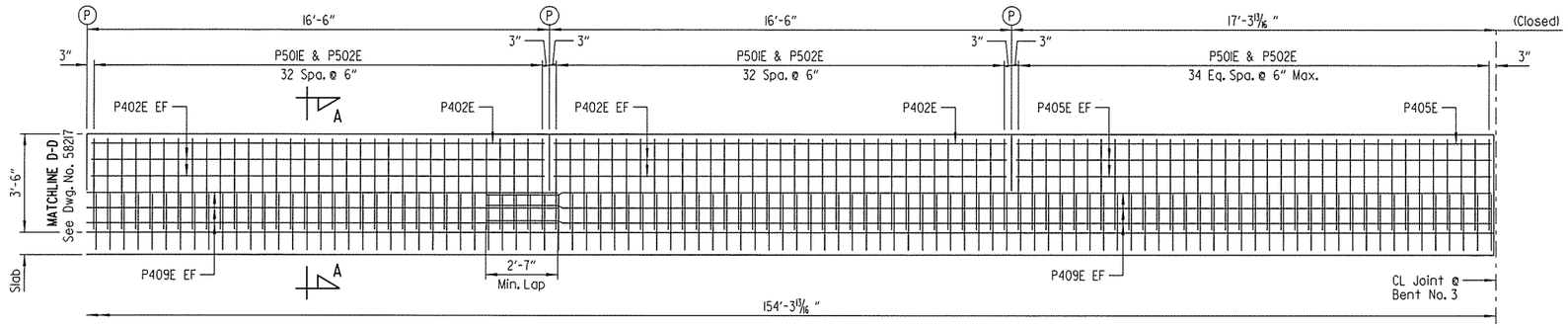

LEFT PARAPET - ELEVATION

(Looking At Inside Face Of Parapet Rail)
Scale: 3/8" = 1'-0"

(P) CL Partial-Depth Parapet Joint (1/4" to 1" Max.) as shown on "REINFORCING PLAN AND POURING SEQUENCE - SPAN NO. 2" on Dwg. No. 58210. Stop 1'-6" from top of slab.

(F) CL Full-Depth Parapet Joint (1/4" to 1" Max.) as shown on "REINFORCING PLAN AND POURING SEQUENCE - SPAN NO. 2" on Dwg. No. 58210. Stop 4" from top of slab.

LEGEND

EF = Each Face

NOTES:
All dimensions shown are measured along left gutterline.

For "BAR LIST" and "BAR BENDING DIAGRAMS", see Dwg. No. 58220.

For "ARCHITECTURAL FINISH ELEVATION - LEFT PARAPET" and "DETAILS OF OPTIONAL SLIPFORMING OF CONCRETE PARAPET RAIL", see Dwg. No. 58206

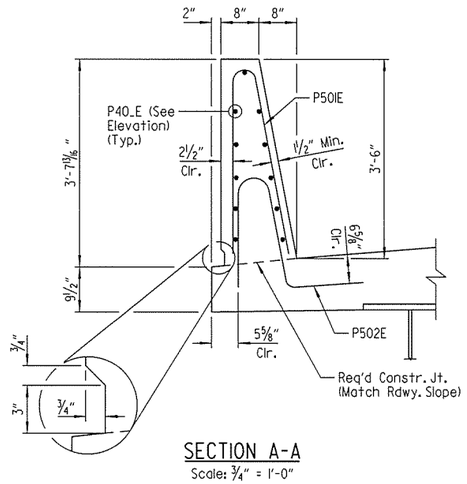

SECTION A-A

Scale: 3/4" = 1'-0"

GENERAL NOTES

CONCRETE: All concrete shall be Class S(AE) with a minimum 28 day compressive strength f'c = 4000 psi.

REINFORCING STEEL: All reinforcing steel shall be Grade 60 conforming to AASHTO M31 or M322, Type A with mill test reports.

STATE OF ARKANSAS
LICENSED PROFESSIONAL ENGINEER
No. 16458
3-20-16
JOEL E. SKINNER

BRIDGE ENGINEER

SHEET 11 OF 13
DETAILS OF 306'-0" CONTINUOUS COMPOSITE PLATE GIRDER UNIT
BRIDGE B
I-49 OVER HWY. 71B
ROUTE SEC.
ARKANSAS STATE HIGHWAY COMMISSION
LITTLE ROCK, ARK.

DRAWN BY: CWT DATE: MAR. 2015 FILENAME: BBB0414B3_S26.dgn
CHECKED BY: ABH DATE: JULY 2015 SCALE: AS SHOWN
DESIGNED BY: JES DATE: MAR. 2015
BRIDGE NO. B7380 DRAWING NO. 58218

jeskinner 3/20/2016 3:35:46 PM
WORKGROUP: AHTD Roadway
L:\2015\15077 I-540 Widening & Interchange Improvement\Drawings\540-HWY71B-S326-ND.dgn
REVISED DATE:

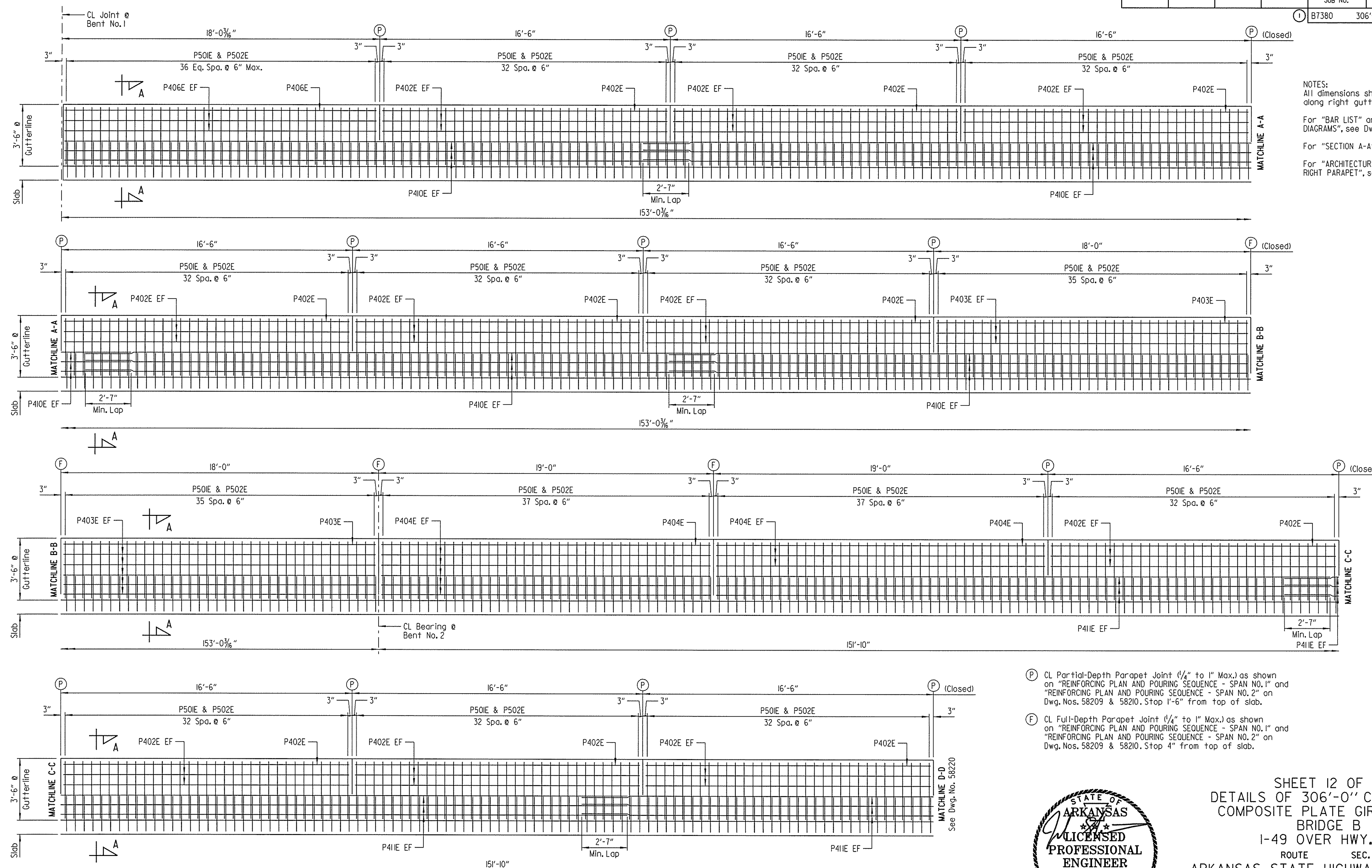

NOTES:
All dimensions shown are measured along right gutterline.

For "BAR LIST" and "BAR BENDING DIAGRAMS", see Dwg. No. 58220.

For "SECTION A-A", see Dwg. No. 58220.

For "ARCHITECTURAL FINISH ELEVATION - RIGHT PARAPET", see Dwg. No. 58206

(P) CL Partial-Depth Parapet Joint (1/4" to 1" Max.) as shown on "REINFORCING PLAN AND POURING SEQUENCE - SPAN NO. 1" and "REINFORCING PLAN AND POURING SEQUENCE - SPAN NO. 2" on Dwg. Nos. 58209 & 58210. Stop 1'-6" from top of slab.

(F) CL Full-Depth Parapet Joint (1/4" to 1" Max.) as shown on "REINFORCING PLAN AND POURING SEQUENCE - SPAN NO. 1" and "REINFORCING PLAN AND POURING SEQUENCE - SPAN NO. 2" on Dwg. Nos. 58209 & 58210. Stop 4" from top of slab.

LEGEND

EF = Each Face

RIGHT PARAPET - ELEVATION

(Looking At Outside Face Of Parapet Rail)
Scale: 3/8" = 1'-0"

STATE OF ARKANSAS LICENSED PROFESSIONAL ENGINEER No. 16458 3-20-16 JOEL E. SKINNER

BRIDGE ENGINEER

SHEET 12 OF 13
DETAILS OF 306'-0" CONTINUOUS
COMPOSITE PLATE GIRDER UNIT
BRIDGE B
I-49 OVER HWY. 71B

ROUTE SEC.

ARKANSAS STATE HIGHWAY COMMISSION
LITTLE ROCK, ARK.

DRAWN BY: CWT DATE: MAR. 2015 FILENAME: BBB0414B3_S27.dgn
CHECKED BY: ABH DATE: JULY 2015 SCALE: AS SHOWN
DESIGNED BY: JES DATE: MAR. 2015
BRIDGE NO. B7380 DRAWING NO. 58219

jeskinner 3/20/2016 3:35:47 PM
WORKSPACE: AHTD Bridge
L:\2011\101707 - I-540 Widening & Interchange Improvement\Drawings\540-HWY71B-S327-MD.dgn
REVISED DATE:

DATE REVISED	DATE FILMED	DATE REVISED	DATE FILMED	FED. ROAD DIST. NO.	STATE	FED. AID PROJ. NO.	SHEET NO.	TOTAL SHEETS
				6	ARK.			
				JOB NO.		BB0414	497	886
				(1) B7380		306'-0" PL GIRDER UNIT		58220

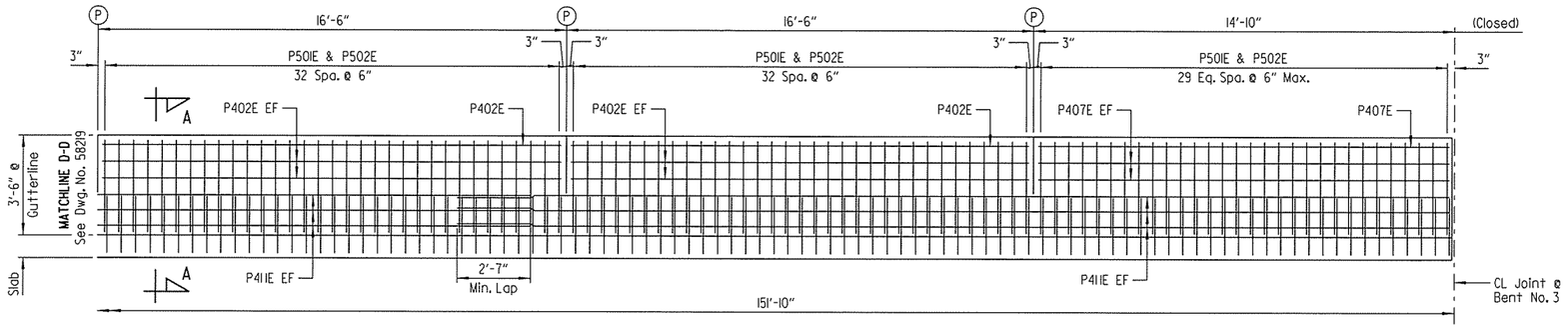

(P) CL Partial-Depth Parapet Joint (1/4" to 1" Max.) as shown on "REINFORCING PLAN AND POURING SEQUENCE - SPAN NO. 2" on Dwg. No. 58210. Stop 1'-6" from top of slab.

(F) CL Full-Depth Parapet Joint (1/4" to 1" Max.) as shown on "REINFORCING PLAN AND POURING SEQUENCE - SPAN NO. 2" on Dwg. No. 58210. Stop 4" from top of slab.

RIGHT PARAPET - ELEVATION

(Looking At Outside Face Of Parapet Rail)
Scale: 3/8" = 1'-0"

NOTES:
All dimensions shown are measured along right gutterline.

For "ARCHITECTURAL FINISH ELEVATION - RIGHT PARAPET", see Dwg. No.58206 .

LEGEND

EF = Each Face

BAR BENDING DIAGRAMS

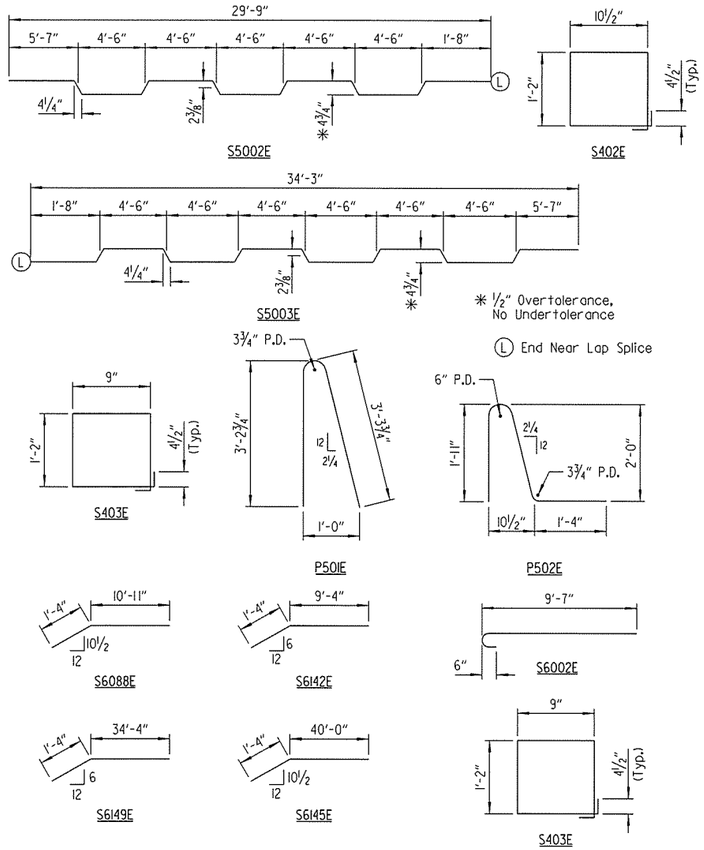

BAR LIST

Mark	No. Req'd.	Length	Pin. Dia.	Mark	No. Req'd.	Length	Pin. Dia.
S401E	576	36'-5"	STR.	S6088E	28	12'-3"	4 1/2"
S402E	52	4'-5"	2"	S6089E TO S6106E	1 Each	59'-1" TO 43'-5"	STR.
S403E	52	4'-2"	2"				
S5001E	408	53'-11"	STR.	S6107E TO S6124E	1 Each	42'-6" TO 26'-4"	STR.
S5002E	266	30'-6"	3"				
S5003E	266	35'-1 1/2"	3"				
S5004E	532	32'-0"	STR.	S6125E TO S6141E	1 Each	25'-5" TO 9'-8"	STR.
S5005E TO S5032E	1 Each	42'-3" TO 59'-2"	STR.				
S5033E TO S5060E	1 Each	25'-5" TO 41'-8"	STR.	S6142E	14	10'-8"	4 1/2"
				S6143E	12	11'-4"	STR.
				S6144E	4	2'-3"	STR.
				S6145E	3	41'-4"	4 1/2"
S5061E TO S5087E	1 Each	9'-10" TO 24'-10"	STR.	S6146E	3	39'-10"	STR.
				S6147E	12	9'-10"	STR.
				S6148E	4	1'-11"	STR.
S5088E TO S5105E	1 Each	59'-1" TO 43'-5"	STR.	S6149E	3	35'-8"	4 1/2"
				S6150E	3	35'-1"	STR.
S5106E TO S5123E	1 Each	42'-6" TO 26'-4"	STR.	P401E	5	17'-9"	STR.
				P402E	120	16'-2"	STR.
				P403E	32	17'-8"	STR.
S5124E TO S5140E	1 Each	25'-5" TO 9'-8"	STR.	P404E	32	18'-8"	STR.
				P405E	5	16'-11"	STR.
				P406E	5	17'-7"	STR.
				P407E	5	14'-5"	STR.
S6001E	315	39'-2"	STR.	P408E	24	35'-9"	STR.
S6002E	1200	10'-3"	4 1/2"	P409E	24	35'-11"	STR.
S6003E	266	36'-9"	STR.	P410E	24	35'-8"	STR.
S6004E	266	27'-9"	STR.	P411E	24	35'-4"	STR.
S6005E TO S6032E	1 Each	42'-3" TO 59'-2"	STR.				
				P501E	1227	6'-8"	3 3/4"
S6033E TO S6060E	1 Each	25'-5" TO 41'-8"	STR.	P502E	1227	5'-4"	3 3/4", 6"
S6061E TO S6087E	1 Each	9'-10" TO 24'-10"	STR.				

NOTES:
1.) Dimensions of bars are out-to-out.
2.) Bar designations ending with "E" indicate epoxy coated bars.

NOTE:
Form liner on back face of parapet shall be a max. depth of 2" to provide a min. clearance of 1 1/2" to parapet reinforcing.

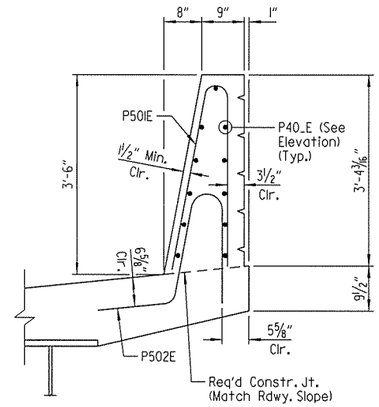

SECTION A-A

Scale: 3/4" = 1'-0"

STATE OF ARKANSAS
LICENSED PROFESSIONAL ENGINEER
No. 16458
3-20-16
JOEL E. SKINNER

BRIDGE ENGINEER

SHEET 13 OF 13
DETAILS OF 306'-0" CONTINUOUS COMPOSITE PLATE GIRDER UNIT
BRIDGE B
I-49 OVER HWY. 71B

ROUTE SEC.

ARKANSAS STATE HIGHWAY COMMISSION
LITTLE ROCK, ARK.

DRAWN BY: CWT DATE: MAR. 2015 FILENAME: BBB0414B3_S28.dgn
CHECKED BY: ABH DATE: JULY 2015 SCALE: AS SHOWN
DESIGNED BY: JES DATE: MAR. 2015
BRIDGE NO. B7380 DRAWING NO. 58220

jeskinner 3/20/2016 3:35:47 PM
W:\2015\001707 - I-540 Widening & Interchange Improvement\Drawings\I540-HWY71B-S328-MD.dgn
REVISED DATE:

DATE REVISED	DATE FILMED	DATE REVISED	DATE FILMED	FED. ROAD DIST. NO.	STATE	FED. AID PROJ. NO.	SHEET NO.	TOTAL SHEETS
				6	ARK.			
				JOB NO.		BB0414	498	886

(1) A7380 & B7380 JOINT DETAILS 58221

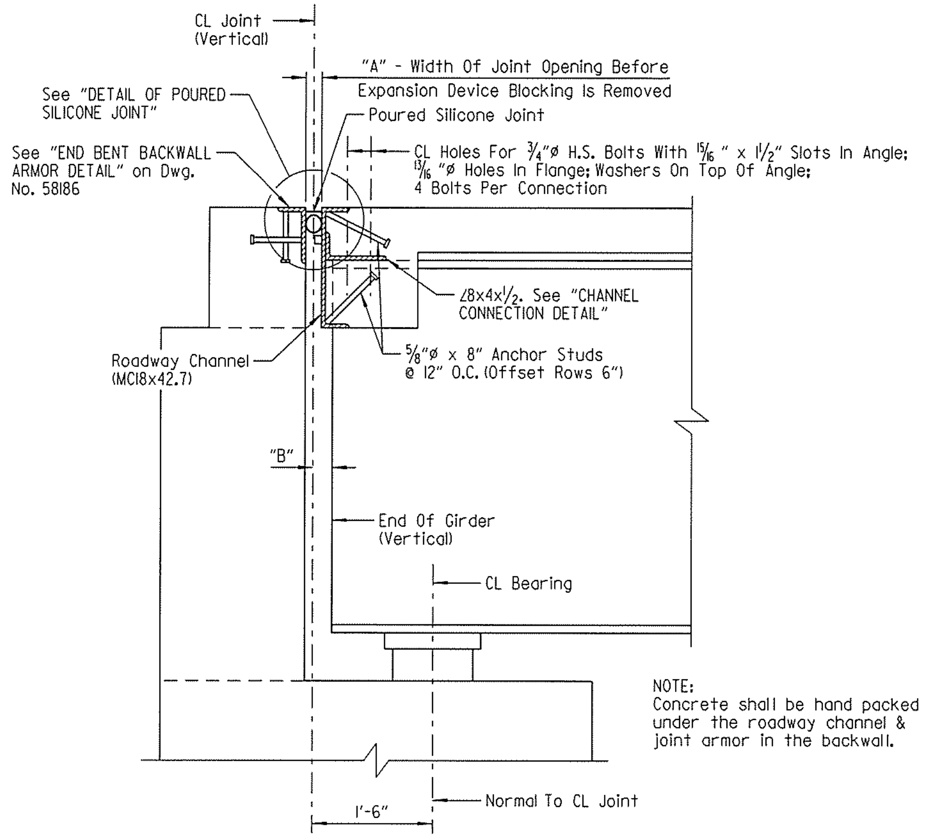

SECTION THRU SILICONE JOINT

(Section Taken Normal To CL Joint)
No Scale

SILICONE JOINT DATA						
"A" Width Perpendicular To Joint At 24 Hour Average Temperature (1) Of:			"B" Perpendicular To Joint At 60°F	"D"	Bumper Plate Size
40°F	60°F	80°F			
2 3/4"	2 1/2"	2 1/4"	2 1/2"±	5"	1 1/4" x 1" x 12"

(1) The temperature used to set the joint opening shall be the approximate average air temperature during the 24 hour period immediately before the bolts are tightened. The Engineer shall establish the temperature. Interpolation of the table may be necessary.

NOTES:
The temperature limitations recommended by the sealant Manufacturer shall be observed.

The sealant may be installed in skewed joints only when the average 24 hour air temperature is between 40° and 80°F.

(2) BACKER ROD NOTE:
Use an appropriately sized backer rod at the depth shown in the Manufacturer's literature based on the joint width at the time of sealing.

Except as noted, do not install more backer rod than can be sealed in the same day.

The Contractor shall verify separation of the backer rod from the joint material after the joint material has set.

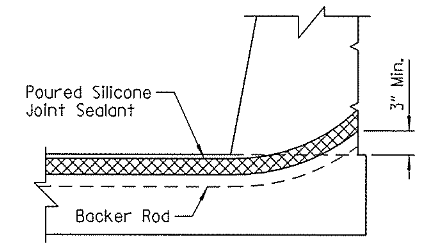

JOINT SEAL PLACEMENT AT CURB

No Scale

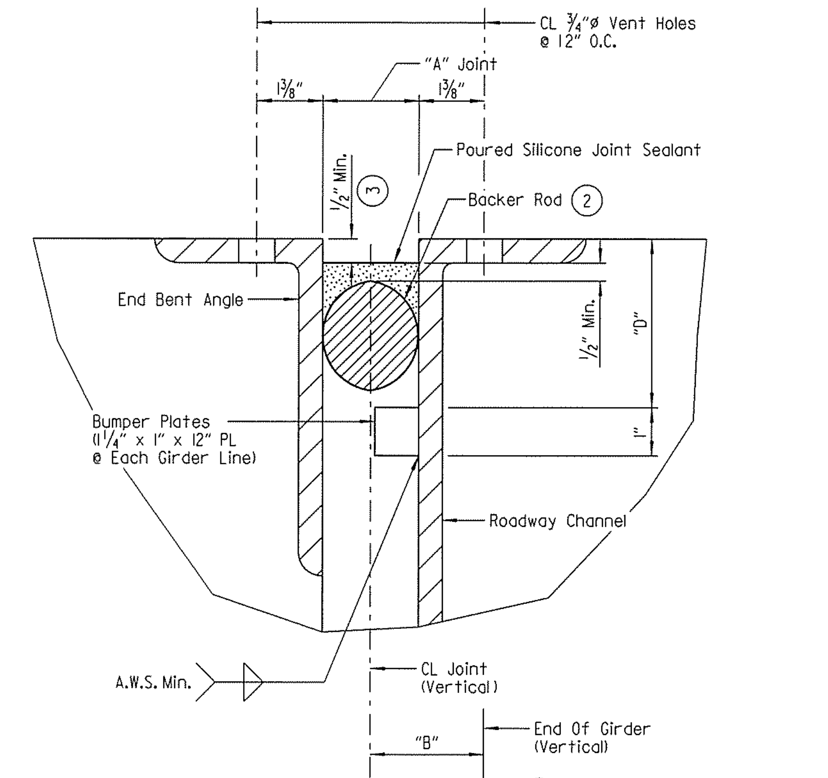

(3) Recess depth as recommended by the sealant Manufacturer

DETAIL OF POURED SILICONE JOINT

No Scale

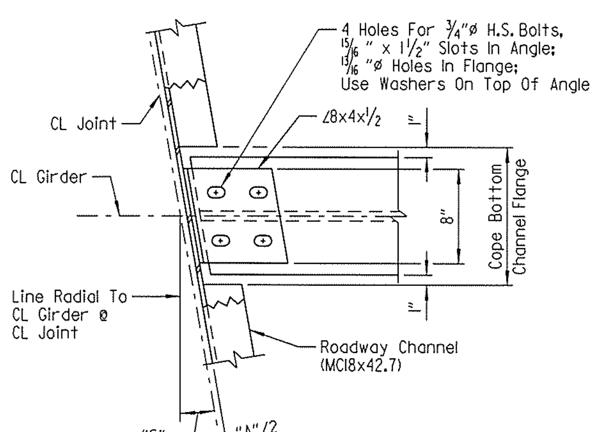

CHANNEL CONNECTION DETAIL

No Scale

GIRDER SKEW, "S"								
GIRDER		1	2	3	4	5	6	7
BRIDGE A	BENT NO. 1	46°31'08"	45°59'57"	45°29'35"	45°00'00"	44°31'10"	44°03'02"	43°35'35"
	BENT NO. 3	30°07'36"	29°50'23"	29°33'30"	29°16'58"	29°00'45"	28°44'50"	28°29'14"
BRIDGE B	BENT NO. 1	41°11'48"	40°47'20"	40°23'24"	40°00'00"	39°37'06"	39°14'41"	38°52'43"
	BENT NO. 3	28°15'37"	28°00'33"	27°45'46"	27°31'16"	27°17'01"	27°03'02"	26°49'17"

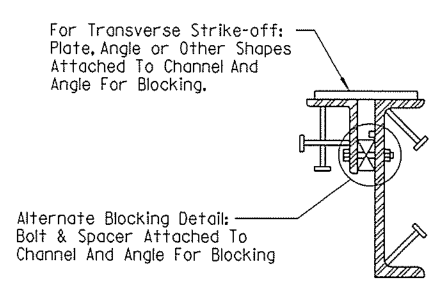

DETAILS FOR BLOCKING EXPANSION JOINT DEVICE

No Scale

NOTE:
Each expansion joint device shall be blocked in the shop by the Fabricator to the dimension "A" shown for 60°F, and the blocking details shall be shown on the shop drawings. Blocking shall be placed within 2' of each end of the device and with a maximum spacing of 8'.

EXPANSION DEVICE INSTALLATION AT END BENTS:

The Contractor may elect to install the expansion device using one of the following two alternatives.

1) The concrete span pour adjacent to joint shall be placed before the end bent backwall is placed. After the end bent backwall forms are in place and the girders erected, the blocked expansion device shall be installed and adjusted for grade. All connection bolts shall be fully tightened prior to placing the deck concrete adjacent to the bent. Immediately prior to pouring the backwall concrete, the blocking shall be removed, the opening adjusted for temperature, and the backwall constructed.

2) The backwall shall be poured to the optional construction joint after girders are erected. The blocked expansion device shall be installed and adjusted for grade. All connection bolts shall be fully tightened prior to placing the deck concrete adjacent to the bent. Immediately prior to pouring the remainder of the backwall concrete, the blocking shall be removed and the opening adjusted for temperature. Backfill shall not be placed behind the backwall until the deck concrete on the adjacent span has been placed.

STATE OF ARKANSAS LICENSED PROFESSIONAL ENGINEER ★★★ No. 16458 JOEL E. SKINNER 3-20-16

BRIDGE ENGINEER

DETAILS OF POURED SILICONE JOINT
I-49 OVER HWY. 71B

ROUTE SEC.

ARKANSAS STATE HIGHWAY COMMISSION
LITTLE ROCK, ARK.

DRAWN BY: CWT DATE: MAR. 2015 FILENAME: BBB0414M3_JI.dgn
CHECKED BY: ABH DATE: AUG. 2015 SCALE: AS SHOWN
DESIGNED BY: JES DATE: MAR. 2015
BRIDGE NO. A7380 & B7380 DRAWING NO. 58221

jeskinner 3/20/2016 3:35:47 PM
WORKSPACE: AHTD Bridge
L:\2011\110177\07 - I-540 Widening & Interchange Improvement\Drawings\540-HWY71B-S329-JN.dgn
REVISED DATE:

DATE REVISED	DATE FILMED	DATE REVISED	DATE FILMED	FED. ROAD DIST. NO.	STATE	FED. AID PROJ. NO.	SHEET NO.	TOTAL SHEETS
				6	ARK.			
				JOB NO.		BB0414	499	886

(1) A7380 & B7380 ELASTOMERIC BEARINGS 58222

(1) Care shall be taken to ensure that the external load plate is in full and complete contact with the girder flange before welding begins.

(2) Centerline elastomeric pad shall be aligned with centerline girder.

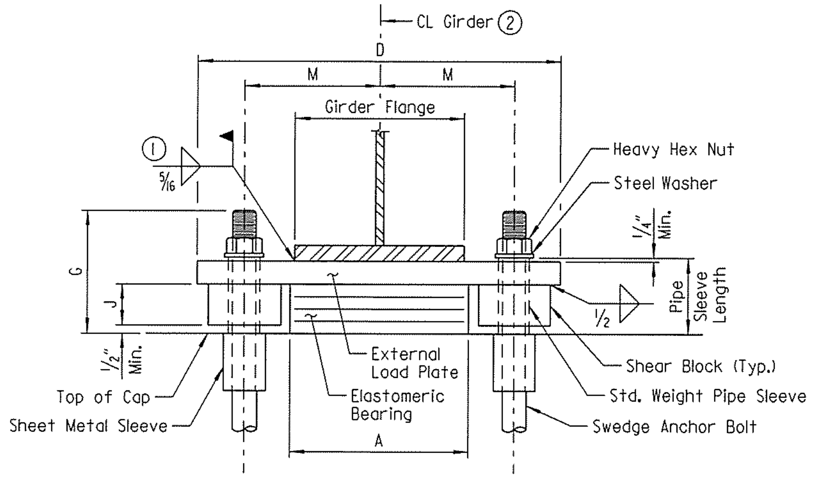

FRONT VIEW - AT BENT NO. 2

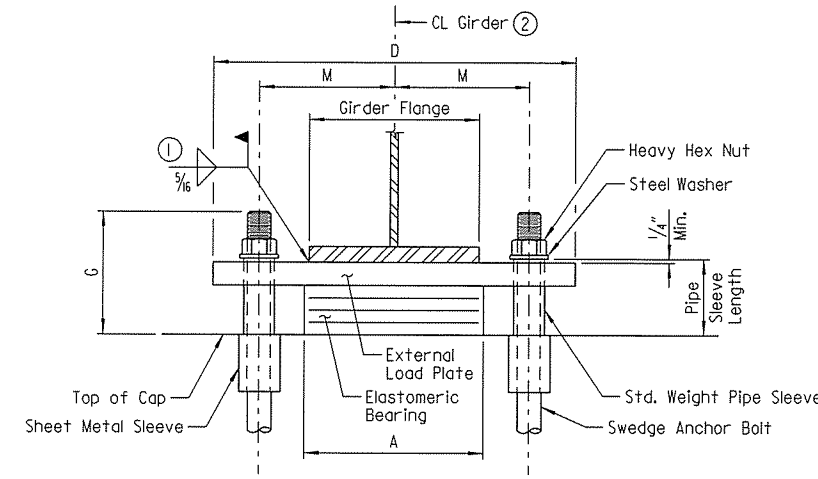

FRONT VIEW - AT BENT NOS. 1 & 3

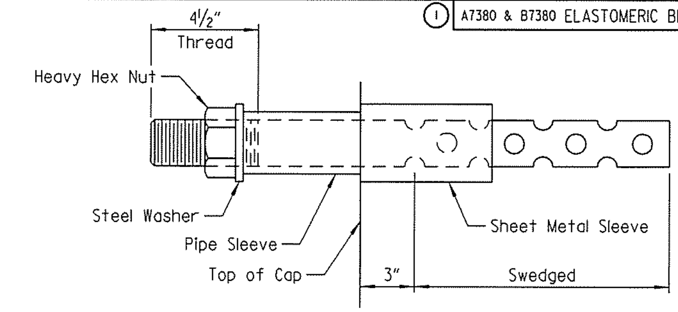

ANCHOR BOLT DETAIL

NOTE:
Anchor bolts may be cast in place or drilled and grouted into place. If anchor bolts are to be cast in place, the galvanized sheet metal sleeves will not be required.

If anchor bolts are to be drilled and grouted in place, the galvanized sheet metal sleeves shall be cast in place as shown. Sleeves shall be dry packed with styrofoam, urethane foam or approved equal prior to pouring of concrete. After pouring of the cap and prior to erection of structural steel, the dry pack shall be removed and holes for the anchor bolts shall be accurately drilled into the masonry. Bolts placed in drilled holes shall be accurately set and fixed using a QPL approved epoxy or non-shrink grout that completely fills the holes. Galvanized sheet metal sleeves will not be paid for directly but will be considered subsidiary to the item "STRUCTURAL STEEL IN PLATE GIRDER SPANS (M270, GR. 50W)".

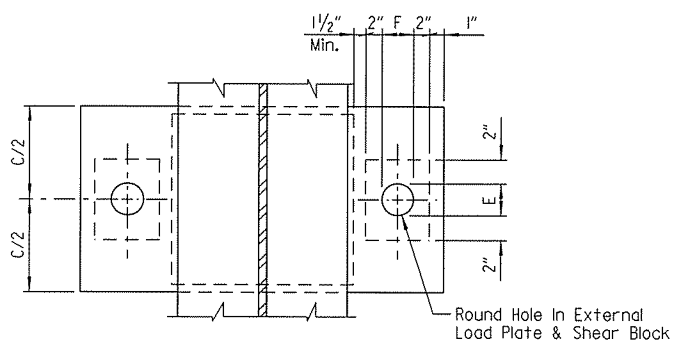

PLAN VIEW - AT BENT NO. 2

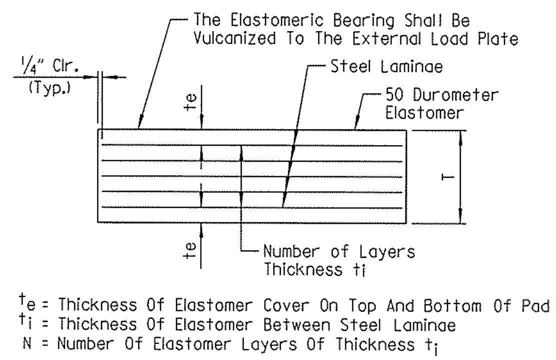

t_e = Thickness Of Elastomer Cover On Top And Bottom Of Pad
t_i = Thickness Of Elastomer Between Steel Laminae
N = Number Of Elastomer Layers Of Thickness t_i

ELASTOMERIC BEARING

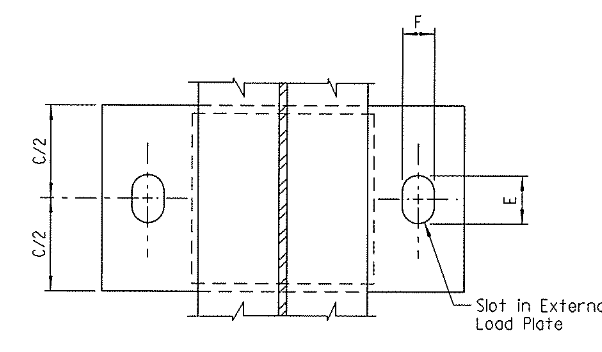

PLAN VIEW - AT BENT NOS. 1 & 3

GENERAL NOTES

Elastomeric bearings shall conform to Section 808 and shall be paid for at the unit price bid for "ELASTOMERIC BEARINGS."

External load plates and shear blocks shall conform to AASHTO M270, Grade 50W. Pipe sleeves shall be ASTM A53, Grade B, and shall be galvanized to conform to AASHTO M232, Class C or ASTM B695, Class 50.

External load plates and shear blocks shall be completely fabricated (including bevel, bolt holes and all shop welding) and shall be cleaned before vulcanizing to the elastomeric bearing. The surfaces in contact with the elastomeric bearing shall be cleaned in accordance with Subsection 808.03. Other surfaces shall be blast cleaned in accordance with Subsection 807.84(e) for unpainted weathering steel.

Anchor bolts, washers and nuts shall conform to Subsection 807.07. The anchor bolt grade of steel shall be as specified in the "TABLE OF FABRICATOR VARIABLES". Indentations shall be circular with rounded bottoms and staggered as shown in the details.

Pipe sleeves, anchor bolts, washers and nuts shall be paid for at the unit price bid for "STRUCTURAL STEEL IN PLATE GIRDER SPANS (M270, GR. 50W)". External load plates and shear blocks will not be measured or paid for separately but will be included in the unit price bid for "ELASTOMERIC BEARINGS".

Bearings shall be seated in accordance with Subsection 808.08. This work and materials are considered subsidiary to the item "ELASTOMERIC BEARINGS" and will not be paid for directly.

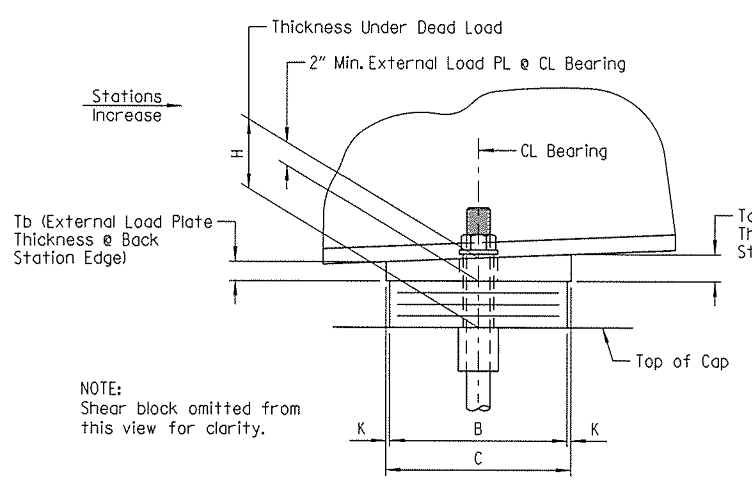

SIDE VIEW - AT BENT NO. 2

NOTES:
The direction of the bevel of the external load plate may not be accurately depicted with respect to Ta and Tb values shown in "TABLE OF FABRICATOR VARIABLES".

Unless otherwise approved by the Engineer, welding of the external load plate at expansion bearings to the girder will be allowed only when: 1) the approximate average air temperature during the 24 hour period immediately preceding welding is between 40°F and 80°F; and 2) the slots in the external load plate are positioned to center on the anchor bolts; and 3) no horizontal deformation of the elastomeric pad is evident. If welding at other temperatures is required, the Engineer will provide adjustment data.

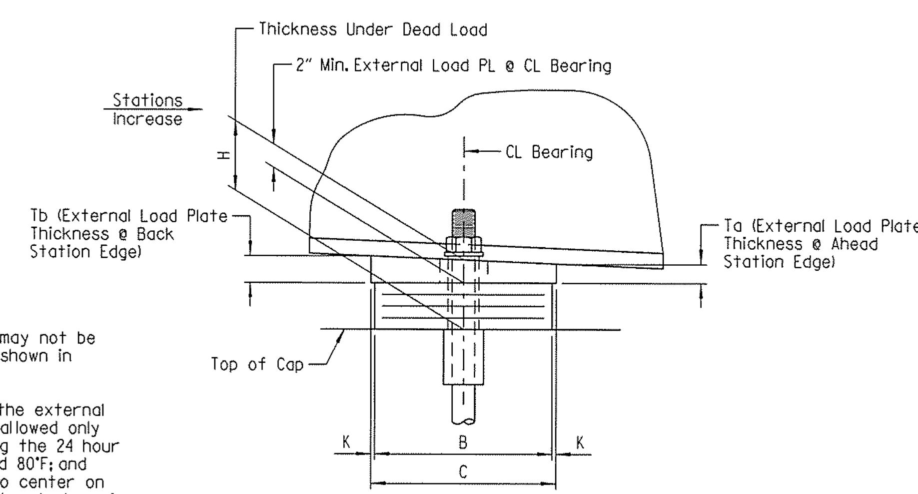

SIDE VIEW - AT BENT NOS. 1 & 3

TABLE OF VARIABLES			
Bridge No.	Girder No.	"Y"	"Z"
A7380	1-2	36"	12"
	3-5	41"	30"
	6-7	44"	42"
B7380	1-2	32"	12"
	3-5	37"	30"
	6-7	40"	42"

TABLE OF FABRICATOR VARIABLES

Bridge No.	Location: Bent No.	Location: Girder No.	Bearing Type	No. Of Bearings Each Bent	* Maximum Design Load (Kips)	G	H	Elastomeric Pad: A	B	N	t_i	t_e	No. & Thickness Of Steel Laminae	T	External Load Plate: C	D	E	F	J	K	M	T_a	T_b	Anchor Bolt: Anchor Bolt (Dia. x L)	Grade	Pipe Sleeve Size (Dia. x L)	Sheet Metal Sleeve Size (Dia. x L)	Steel Washer Size (O.D.)
A7380	1	All	Exp.	7	257	9 11/16"	6 3/16"	22"	12"	6	1/2"	1/4"	7 @ 12 Ga.	4 1/4"	13"	34 1/2"	6"	3 1/8"	-	1/2"	14"	2.10"	1.90"	2 1/4" x 36"	55	2 1/2" x 6 7/16"	4" x 10"	4"
	2	All	Fixed	7	707	8 7/16"	4 15/16"	26"	13"	4	1/2"	1/4"	5 @ 12 Ga.	3"	14"	45 1/4"	3 1/8"	3 1/8"	2 1/2"	1/2"	18 1/16"	2.04"	1.96"	2 1/4" x 36"	55	2 1/2" x 5 3/16"	4" x 15"	4"
	3	All	Exp.	7	257	9 11/16"	6 3/16"	22"	12"	6	1/2"	1/4"	7 @ 12 Ga.	4 1/4"	13"	34 1/2"	6"	3 1/8"	-	1/2"	14"	1.97"	2.03"	2 1/4" x "Y"	55	2 1/2" x 6 7/16"	4" x "Z"	4"
B7380	1	All	Exp.	7	212	8 13/16"	5 9/16"	20"	11"	5	1/2"	1/4"	6 @ 12 Ga.	3 5/8"	12"	32 1/2"	5 1/2"	3 1/8"	-	1/2"	13"	2.06"	1.94"	2" x 32"	55	2 1/2" x 5 13/16"	4" x 10"	3 3/4"
	2	All	Fixed	7	578	7"	3 3/4"	24"	13"	2	1/2"	1/4"	3 @ 12 Ga.	1 13/16"	14"	43 1/4"	3 1/8"	3 1/8"	1 1/4"	1/2"	17 1/16"	2.01"	1.99"	2" x 31"	55	2 1/2" x 4"	4" x 15"	3 3/4"
	3	All	Exp.	7	212	8 13/16"	5 9/16"	20"	11"	5	1/2"	1/4"	6 @ 12 Ga.	3 5/8"	12"	32 1/2"	5 1/2"	3 1/8"	-	1/2"	13"	1.96"	2.04"	2" x "Y"	55	2 1/2" x 5 13/16"	4" x "Z"	3 3/4"

* Maximum Design Load = LRFD Service I Limit State

STATE OF ARKANSAS
LICENSED PROFESSIONAL ENGINEER
No. 16458
JOEL E. SKINNER
3-20-16
BRIDGE ENGINEER

DETAILS OF ELASTOMERIC BEARINGS
I-49 OVER HWY. 71B
ROUTE SEC.
ARKANSAS STATE HIGHWAY COMMISSION
LITTLE ROCK, ARK.

DRAWN BY: CWT DATE: MAR. 2015 FILENAME: BBB0414M3_El.dgn
CHECKED BY: ABH DATE: SEPT. 2015 SCALE: AS SHOWN
DESIGNED BY: JES DATE: MAR. 2015
BRIDGE NO. A7380 & B7380 DRAWING NO. 58222

jeskinner 3/20/2016 3:35:48 PM
WORKSPACE: AHTD Bridge
L:\2011\1101707 - I-540 Widening & Interchange Improvement\Drawings\540-HWY71B-S330-Bc.dgn
REVISED DATE:

DATE REVISED	DATE FILMED	DATE REVISED	DATE FILMED	FED. ROAD DIST. NO.	STATE	FED. AID PROJ. NO.	SHEET NO.	TOTAL SHEETS
				6	ARK.			
				JOB NO.		BB0414	500	886
				(1) A7381		LAYOUT		58223

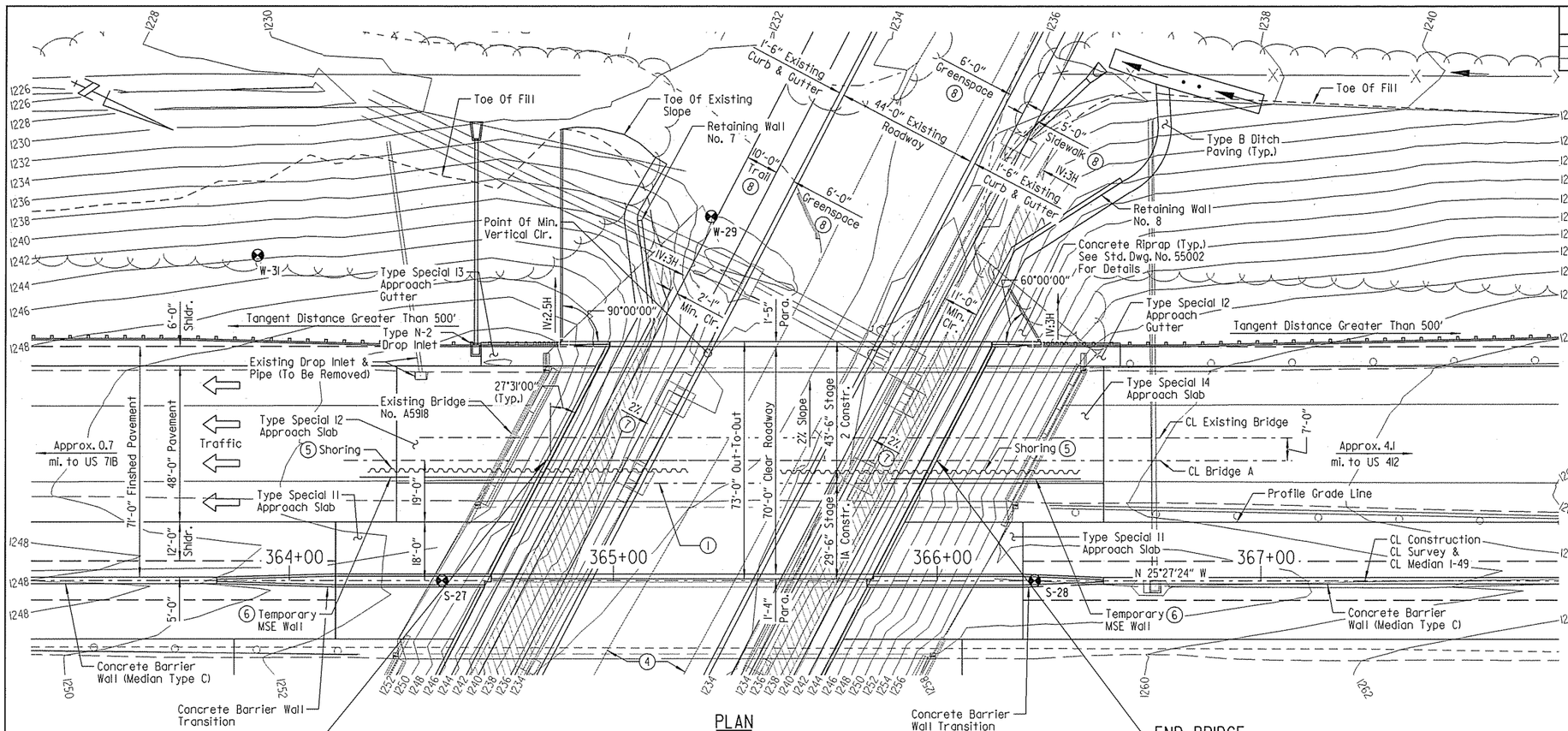

PLAN

BEGIN BRIDGE
STA. 364+79.31

END BRIDGE
STA. 365+99.76

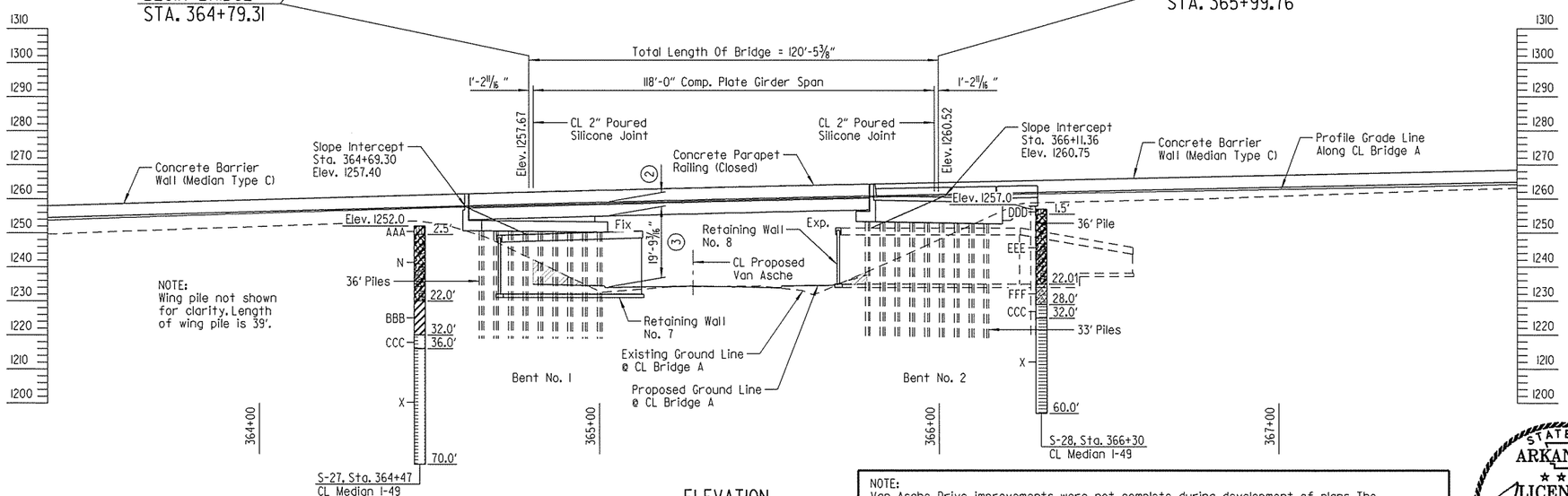

ELEVATION

NOTE:
Wing pile not shown for clarity. Length of wing pile is 39'.

FOR R/W DATA AND GUARDRAIL DETAILS, SEE ROADWAY PLANS

NOTES:
Use Type Special 13 Approach Gutter (W = 6'-0") at left side of Begin Bridge and Type Special 12 Approach Gutter (W = 6'-0") at left side of End Bridge. See Dwg. No. 58260.

Use Type Special 11 and Type Special 12 Approach Slabs at Begin Bridge. Use Type Special 11 and Type Special 14 Approach Slabs at End Bridge. See Dwg. Nos. 58269 & 58273.

Use Type N-2 Drop Inlet at left side of Begin Bridge.

For "GENERAL NOTES", see Dwg. Nos. 58099 & 58100.

For "BORING LEGEND" & "N VALUES", see Dwg. No. 58100.

NOTE:
Van Asche improvements were not complete during the development of plans. Approximately 245 cubic yards of additional excavation will be required in front of Retaining Wall Nos. 7 & 8. This quantity is for estimating only. Actual quantity to be determined in the field.

VERTICAL CURVE DATA

Interstate 49
(Profile Grade 18'-0" Left Of CL I-49 Median)

1. Longitudinal Construction Joint
2. Top Of Deck At Profile Grade Line To Low Steel = 5'-9⅝"
3. Minimum Vertical Clearance
4. Limits of Existing Van Asche Drive
5. Shoring, As Needed, Will Be Required To Excavate Existing Embankment And Construct Retaining Wall Nos. 7 & 8 While Maintaining Traffic On I-49. See SP JOB NO. BB0414 "SHORING".
6. Temporary MSE Wall Will Be Required To Remove Existing Bridge No. A5918 And Existing Embankment. See SP JOB NO. BB0414 "TEMPORARY RETAINING WALLS".
7. Slope From Front Face Of Retaining Wall To Top Of Curb.
8. Future Construction

NOTE:
Elevations shown are along CL Bridge A. Stationing is along CL Median I-49. Span lengths, total length of bridge, and CL Joint to beginning and end of bridge dimensions are measured along CL Bridge A, unless noted otherwise.

NOTE:
Van Asche Drive improvements were not complete during development of plans. The information and dimensions shown are based on information provided in the construction plans for improvements to Van Asche Drive provided by the City of Fayetteville. The Contractor is to adhere strictly to the requirements for verification of the existing geometry and its relationship to proposed work. The results of the verification process shall be submitted in writing to the Engineer and Bridge Engineer before the new construction is started. If the verification process reveals that adjustments are required, recommendations for such adjustments shall be included in the submittal for approval. This work will not be paid for directly but shall be considered subsidiary to other items.

STATE OF ARKANSAS
LICENSED PROFESSIONAL ENGINEER
No. 14498
9-19-16
ADAM B. HALL
BRIDGE ENGINEER

LAYOUT OF BRIDGE A
INTERSTATE 49
OVER VAN ASCHE DRIVE
PORTER RD. - HWY. 112/71B
WIDENING & INTCHNG. IMPVTS. (S)
WASHINGTON COUNTY

ROUTE 49 SEC. 28

ARKANSAS STATE HIGHWAY COMMISSION

LITTLE ROCK, ARK.

DRAWN BY: PCC DATE: AUG. 2014 FILENAME: BBB0414A4_LI.dgn
CHECKED BY: RLW DATE: AUG. 2014 SCALE: 1" = 20'-0"
DESIGNED BY: PCC DATE: AUG. 2014
BRIDGE NO. A7381 DRAWING NO. 58223

Jesskinner 4/19/2016 1:41:25 PM
WORKSPACE: AHTD Bridge
\\GLITARCHON\Projects\LITProjects\20111\101707 - I-540 Widening & Interchange Improvement\Drawings\I540-VASCHE-SI01-LI0.dgn
REVISED DATE:

DATE REVISED	DATE FILMED	DATE REVISED	DATE FILMED	FED. ROAD DIST. NO.	STATE	FED. AID PROJ. NO.	SHEET NO.	TOTAL SHEETS
				6	ARK.			
				JOB NO.		BB0414	501	886
				(1) B7381		LAYOUT		58224

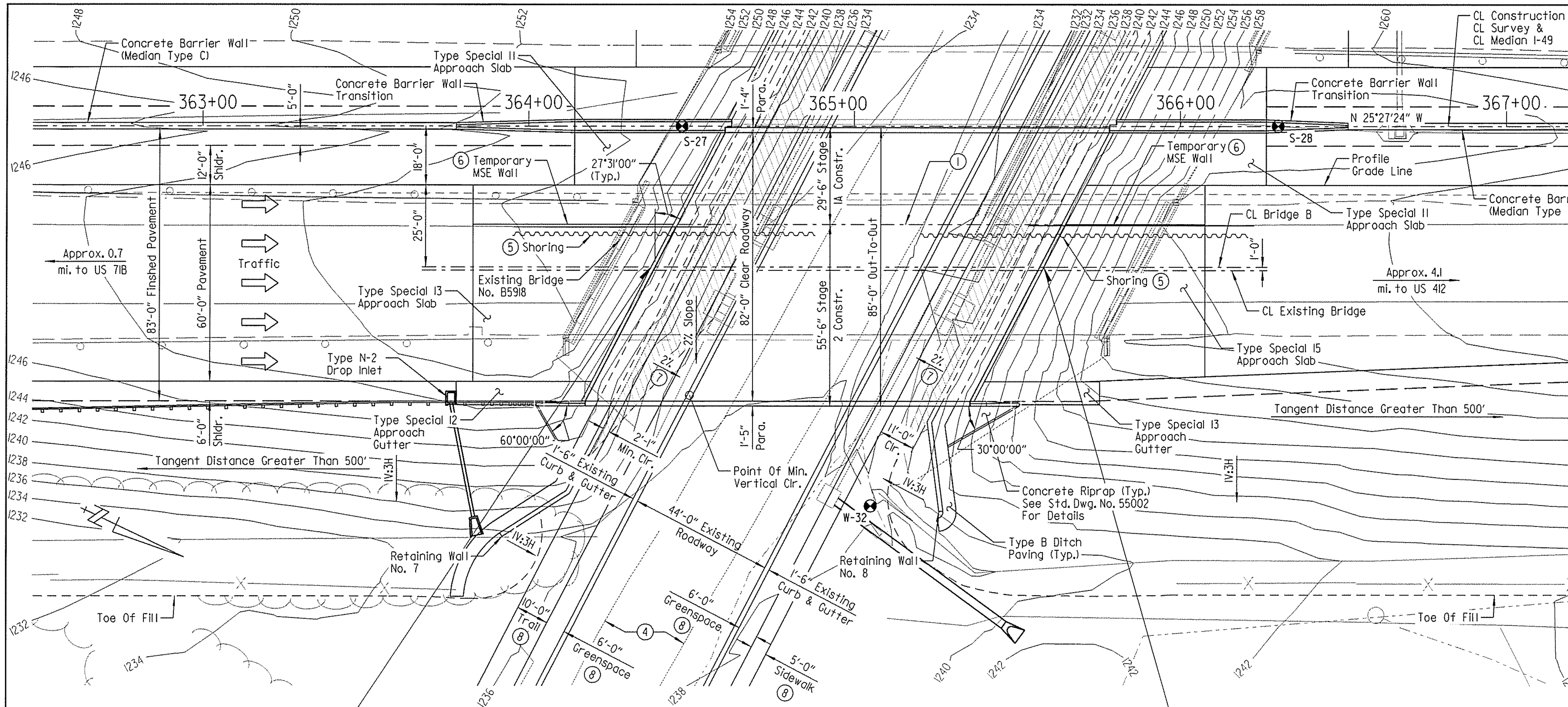

NOTES:
Use Type Special 12 Approach Gutter (W = 6'-0") at right side of Begin Bridge and Type Special 13 Approach Gutter (W = 6'-0") at right side of End Bridge. See Dwg. No. 58260.

Use Type Special 11 and Type Special 13 Approach Slabs at Begin Bridge. Use Type Special 11 and Type Special 15 Approach Slabs at End Bridge. See Dwg. Nos. 58269 & 58274.

Use Type N-2 Drop Inlet at right side of Begin Bridge.

For "GENERAL NOTES", see Dwg. Nos. 58099 & 58100.

For "BORING LEGEND" & "N VALUES", see Dwg. No. 58100.

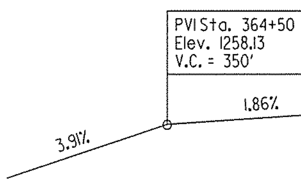

VERTICAL CURVE DATA
Interstate 49
(Profile Grade 18'-0" Right Of CL I-49 Median)

(1) Longitudinal Construction Joint
(2) Top Of Deck At Profile Grade Line To Low Steel = 6'-0⅜"
(3) Minimum Vertical Clearance
(4) Limits of Existing Van Asche Drive
(5) Shoring, As Needed, Will Be Required To Excavate Existing Embankment And Construct Retaining Wall Nos. 7 & 8 While Maintaining Traffic On I-49. See SP JOB NO. BB0414 "SHORING".
(6) Temporary MSE Wall Will Be Required To Remove Existing Bridge No. B5918 And Existing Embankment. See SP JOB NO. BB0414 "TEMPORARY RETAINING WALLS".
(7) Slope From Front Face Of Retaining Wall To Top Of Curb.
(8) Future Construction

NOTE:
Elevations shown are along CL Bridge B. Stationing is along CL Median I-49. Span lengths, total length of bridge, and CL Joint to beginning and end of bridge dimensions are measured along CL Bridge B, unless noted otherwise.

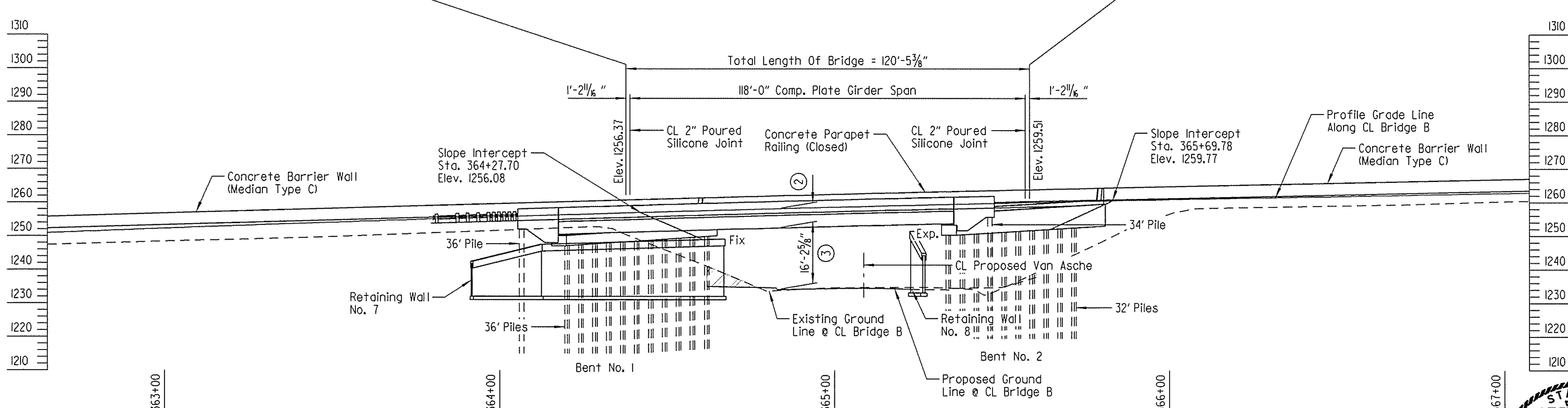

ELEVATION

FOR R/W DATA AND GUARDRAIL DETAILS, SEE ROADWAY PLANS

NOTE:
Van Asche improvements were not complete during the development of plans. Approximately 215 cubic yards of additional excavation will be required in front of Retaining Wall Nos. 7 & 8. This quantity is for estimating only. Actual quantity to be determined in the field.

NOTE:
Van Asche Drive improvements were not complete during development of plans. The information and dimensions shown are based on information provided in the construction plans for improvements to Van Asche Drive provided by the City of Fayetteville. The Contractor is to adhere strictly to the requirements for verification of the existing geometry and its relationship to proposed work. The results of the verification process shall be submitted in writing to the Engineer and Bridge Engineer before the new construction is started. If the verification process reveals that adjustments are required, recommendations for such adjustments shall be included in the submittal for approval. This work will not be paid for directly but shall be considered subsidiary to other items.

STATE OF ARKANSAS LICENSED PROFESSIONAL ENGINEER No. 14498 ADAM B. HALL 3-20-16

BRIDGE ENGINEER

LAYOUT OF BRIDGE B
INTERSTATE 49
OVER VAN ASCHE DRIVE
PORTER RD. - HWY. 112/71B
WIDENING & INTCHNG. IMPVTS. (S)
WASHINGTON COUNTY
ROUTE 49 SEC. 28
ARKANSAS STATE HIGHWAY COMMISSION
LITTLE ROCK, ARK.

DRAWN BY: PCC DATE: AUG. 2014 FILENAME: BBB0414B4_L2.dgn
CHECKED BY: RLW DATE: AUG. 2014 SCALE: 1" = 20'-0"
DESIGNED BY: PCC DATE: AUG. 2014
BRIDGE NO. B7381 DRAWING NO. 58224

jeskinner 3/20/2016 3:35:53 PM
WORKSPACE: AHTD Bridge
\\GLITARCHON\Projects\LITProjects\2011\017707 - I-540 Widening & Interchange Improvement\Drawings\I540-VASCHE-S102-L0.dgn
REVISED DATE:

DATE REVISED	DATE FILMED	DATE REVISED	DATE FILMED	FED. ROAD DIST. NO.	STATE	FED. AID PROJ. NO.	SHEET NO.	TOTAL SHEETS
				6	ARK.			
				JOB NO.		BB0414	502	886
				(1) A7381 & B7381		STAGE CONST.		58225

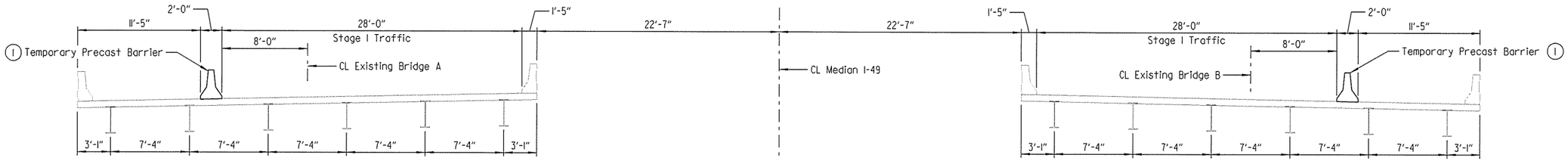

BRIDGE A

STAGE I

(Looking Ahead)
Scale: 3/16" = 1'-0"

BRIDGE B

Note:
Details which relate to maintenance of traffic are shown on bridge plans for information only. See Roadway Plans for Maintenance of Traffic.

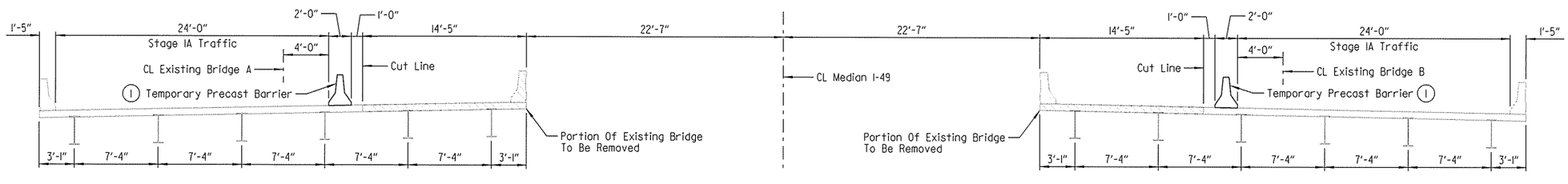

BRIDGE A

STAGE IA DEMOLITION

(Looking Ahead)
Scale: 3/16" = 1'-0"

BRIDGE B

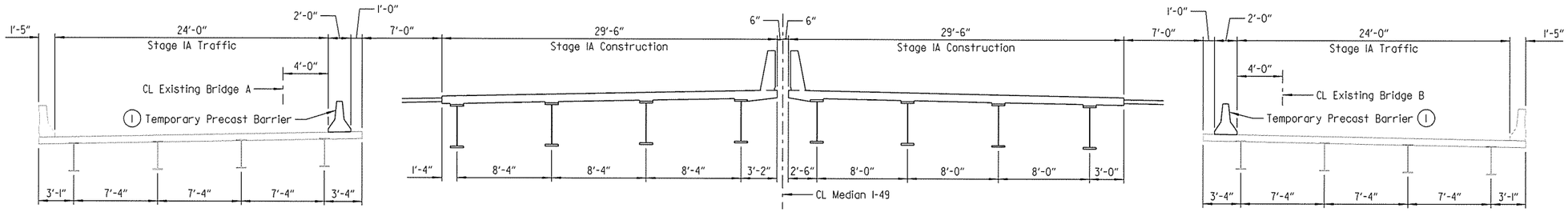

BRIDGE A

STAGE IA CONSTRUCTION

(Looking Ahead)
Scale: 3/16" = 1'-0"

BRIDGE B

(1) For details of temporary precast barrier, see Std. Dwg. No. TC4. (Connect To Deck)

STATE OF ARKANSAS
LICENSED PROFESSIONAL ENGINEER
No. 14498
3-20-16
ADAM B. HALL
BRIDGE ENGINEER

SHEET 1 OF 4
DETAILS OF STAGE CONSTRUCTION
I-49 OVER VAN ASCHE DRIVE

ROUTE SEC.

ARKANSAS STATE HIGHWAY COMMISSION
LITTLE ROCK, ARK.

DRAWN BY: PCC DATE: AUG. 2014 FILENAME: BBB0414M4_SCI.dgn
CHECKED BY: RLW DATE: AUG. 2014 SCALE: AS SHOWN
DESIGNED BY: PCC DATE: AUG. 2014

BRIDGE NO. A7381 & B7381 DRAWING NO. 58225

jeskinner 3/20/2016 3:35:53 PM
WORKSPACE: AHTD Design
V:\LITARCH\Projects\LITProjects\20IN\I007707 - I-540 Widening & Interchange Improvement\Drawings\I540-VASCHE-SI03-SC.dgn
REVISED DATE:

DATE REVISED	DATE FILMED	DATE REVISED	DATE FILMED

FED. ROAD DIST. NO.	STATE	FED. AID PROJ. NO.	SHEET NO.	TOTAL SHEETS
6	ARK.			
JOB NO.		BB0414	503	886
(1) A7381 & B7381		STAGE CONST.		58226

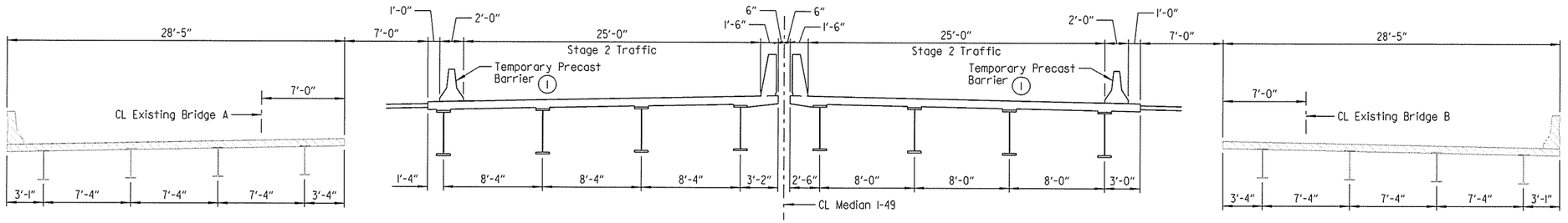

BRIDGE A

BRIDGE B

STAGE 2 DEMOLITION

(Looking Ahead)
Scale: 7/16" = 1'-0"

Note:
Details which relate to maintenance of traffic are shown on bridge plans for information only. See Roadway Plans for Maintenance of Traffic.

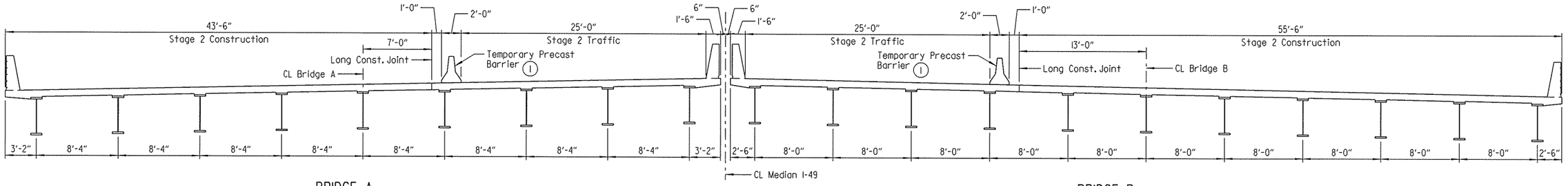

BRIDGE A

BRIDGE B

STAGE 2 CONSTRUCTION

(Looking Ahead)
Scale: 7/16" = 1'-0"

(1) For details of temporary precast barrier, see Std. Dwg. No. TC4. (Connect To Deck)

STATE OF ARKANSAS
LICENSED PROFESSIONAL ENGINEER
No. 14498
12-20-16
ADAM B. HALL
BRIDGE ENGINEER

SHEET 2 OF 4
DETAILS OF STAGE CONSTRUCTION
I-49 OVER VAN ASCHE DRIVE

ROUTE SEC.

ARKANSAS STATE HIGHWAY COMMISSION
LITTLE ROCK, ARK.

DRAWN BY: PCC DATE: AUG. 2014 FILENAME: BBB0414M4_SC2.dgn
CHECKED BY: RLW DATE: AUG. 2014 SCALE: AS SHOWN
DESIGNED BY: PCC DATE: AUG. 2014

BRIDGE NO. A7381 & B7381 DRAWING NO. 58226

jeskinner 3/20/2016 3:35:54 PM
WORKSPACE: ANTD Bridge
\\GLITRACION\Projects\LITProjects\20IN\I00707 - I-540 Widening & Interchange Improvement\Drawings\I540-VASCHE-SI04-SC.dgn
REVISED DATE:

DATE REVISED	DATE FILMED	DATE REVISED	DATE FILMED	FED. ROAD DIST. NO.	STATE	FED. AID PROJ. NO.	SHEET NO.	TOTAL SHEETS
				6	ARK.			
				JOB NO.		BB0414	504	886
				(1) A738I & B738I		STAGE CONST.		58227

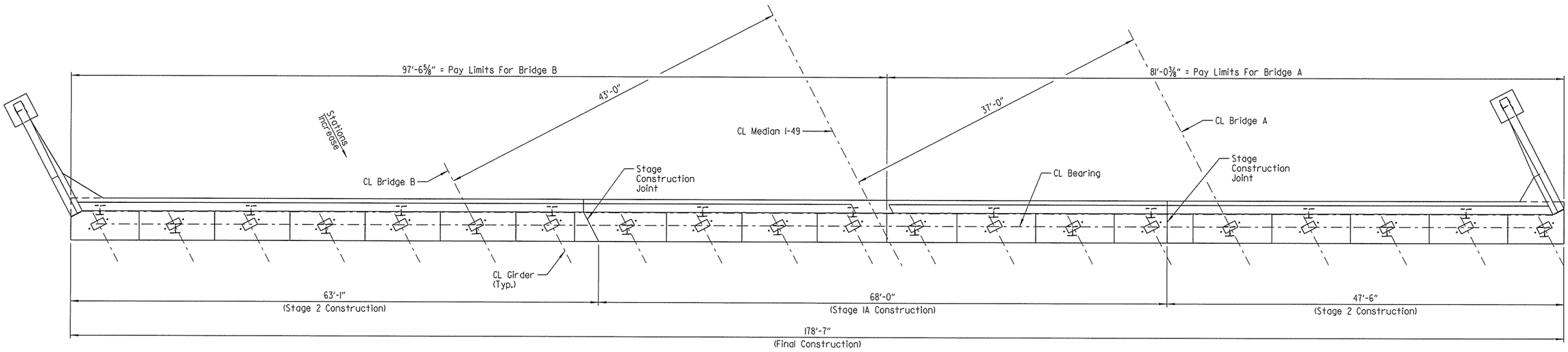

PLAN - END BENT NO. I

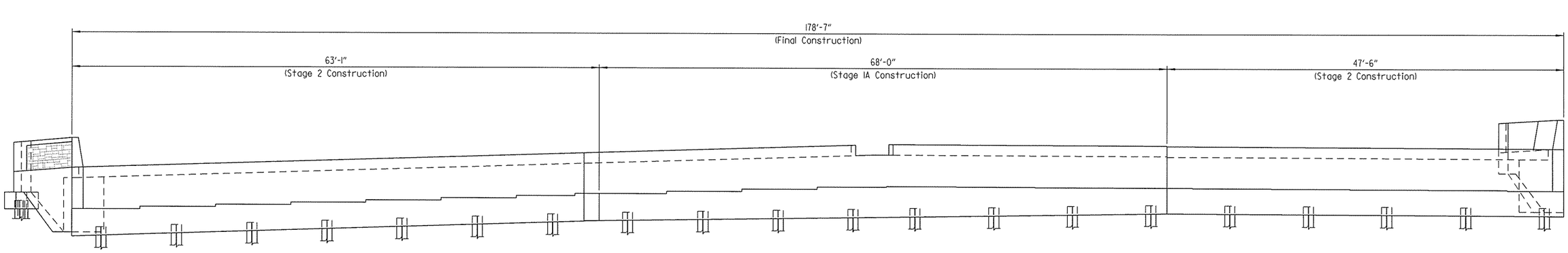

ELEVATION - END BENT NO. I
(Looking Back)

STATE OF ARKANSAS
LICENSED PROFESSIONAL ENGINEER
No. 14498
3-20-16
ADAM B. HALL

BRIDGE ENGINEER

SHEET 3 OF 4
DETAILS OF STAGE CONSTRUCTION
I-49 OVER VAN ASCHE DRIVE
ROUTE SEC.
ARKANSAS STATE HIGHWAY COMMISSION
LITTLE ROCK, ARK.

DRAWN BY: CWT DATE: JULY 2015 FILENAME: BBB0414M4_SC3.dgn
CHECKED BY: ABH DATE: OCT. 2015 SCALE: NO SCALE
DESIGNED BY: DRG DATE: JUNE 2015

BRIDGE NO. A738I & B738I DRAWING NO. 58227

jeskinner 3/20/2016 3:35:54 PM
WORKSPACE: AHTD Bridge
\\GLITARCH01\Projects\LITProjects\2011\1017707 - I-540 Widening & Interchange Improvement\Drawings\I540-VASCHE-SI05-SC.dgn
REVISED DATE:

DATE REVISED	DATE FILMED	DATE REVISED	DATE FILMED	FED. ROAD DIST. NO.	STATE	FED. AID PROJ. NO.	SHEET NO.	TOTAL SHEETS
				6	ARK.			
				JOB NO.		BB0414	505	886
				(1) A7381 & B7381		STAGE CONST.		58228

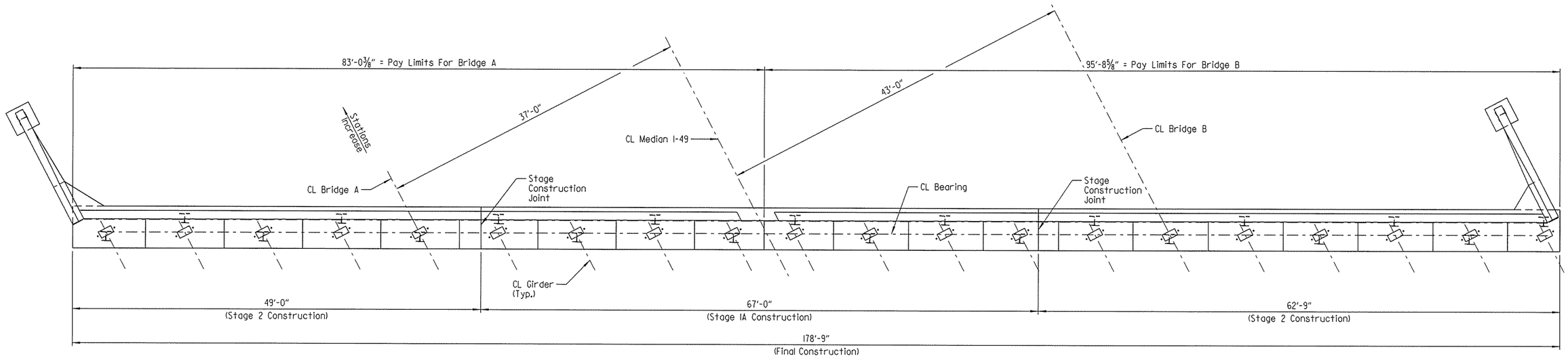

PLAN - END BENT NO. 2

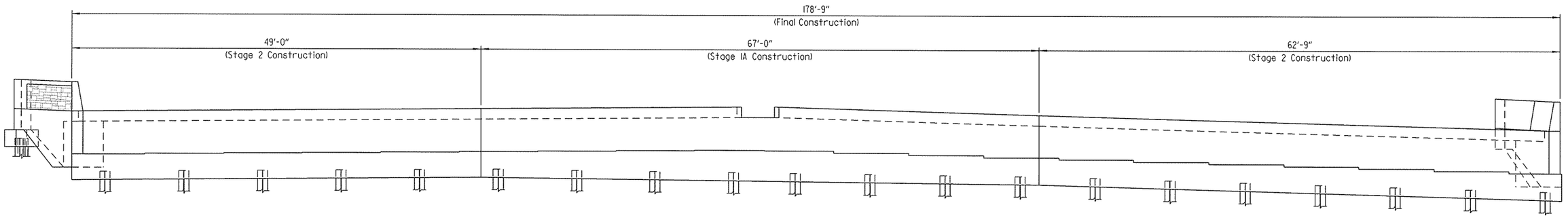

ELEVATION - END BENT NO. 2
(Looking Ahead)

STATE OF ARKANSAS
LICENSED PROFESSIONAL ENGINEER
No. 14498
3-20-16
ADAM B. HALL
BRIDGE ENGINEER

SHEET 4 OF 4
DETAILS OF STAGE CONSTRUCTION
I-49 OVER VAN ASCHE DRIVE
ROUTE SEC.
ARKANSAS STATE HIGHWAY COMMISSION
LITTLE ROCK, ARK.

DRAWN BY: CWT DATE: JULY 2015 FILENAME: BBB0414M4_SC4.dgn
CHECKED BY: ABH DATE: OCT. 2015 SCALE: NO SCALE
DESIGNED BY: DRG DATE: JUNE 2015
BRIDGE NO. A7381 & B7381 DRAWING NO. 58228

jeskinner 3/20/2016 3:35:55 PM
WORKSPACE: AHTD Bridge
\\GLITARCHIVE\Projects\LITProjects\2011\11017707 - I-540 Widening & Interchange Improvement\Drawings\I540-VASCHE-SI06-SC.dgn
REVISED DATE:

DATE REVISED	DATE FILMED	DATE REVISED	DATE FILMED	FED. ROAD DIST. NO.	STATE	FED. AID PROJ. NO.	SHEET NO.	TOTAL SHEETS
				6	ARK.			
				JOB NO.		BB0414	506	886
				(1) A7381 & B7381		END BENT DETAILS		58229

Stations Increase

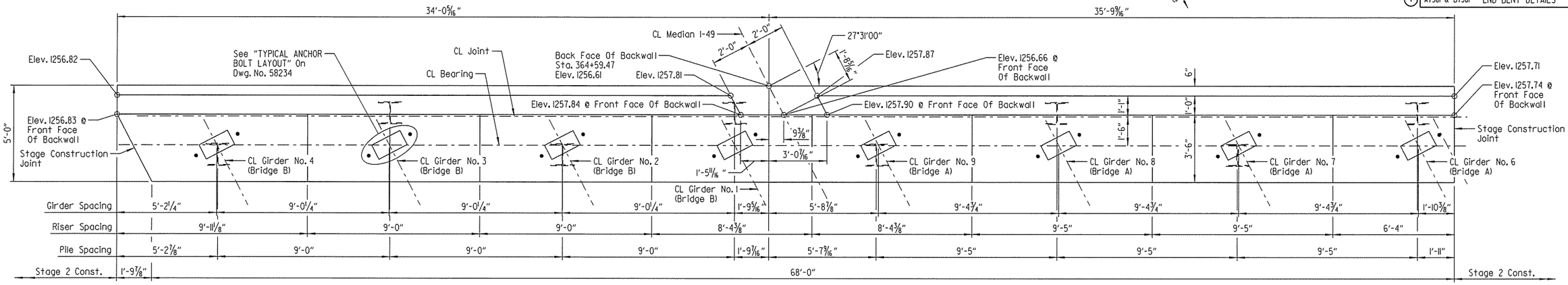

PLAN - STAGE IA CONSTRUCTION

Scale: 3/8" = 1'-0"

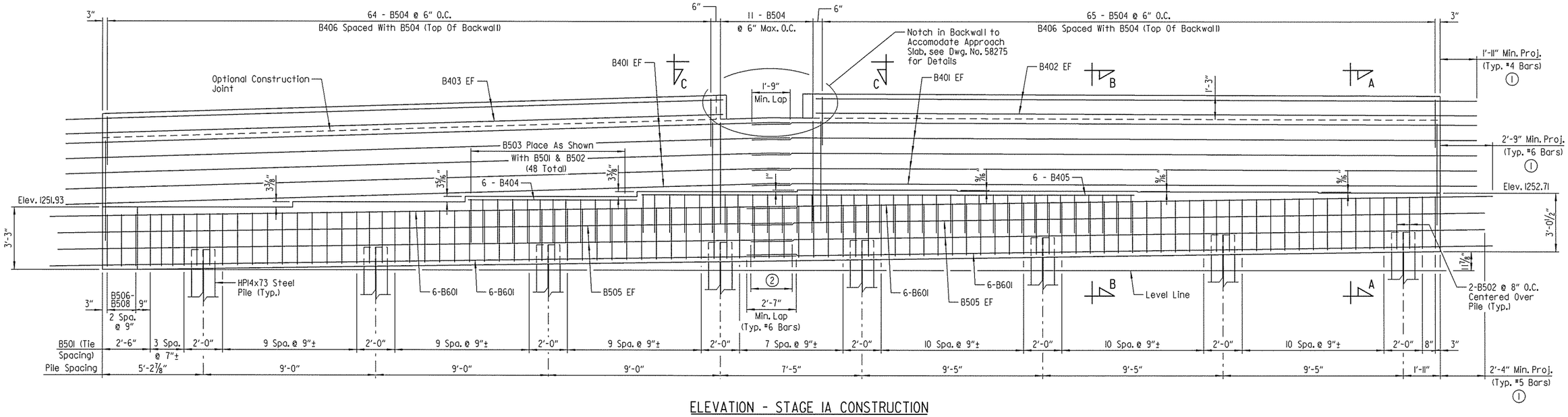

ELEVATION - STAGE IA CONSTRUCTION

(Looking Back)
Scale: 3/8" = 1'-0"

(1) Mechanical couplers may be used in place of lap splicing of bars between stages. See "OPTIONAL MECHANICAL COUPLER DETAIL" on Dwg. No. 58232 for requirements.

(2) 2'-2" Min. Lap (Typ. #5 Bars)

NOTES:

For "SECTION A-A", "SECTION B-B" & "VIEW C-C", see Dwg. No. 58232 .

For "GENERAL NOTES", see Dwg. No. 58234 .

Spacing of vertical reinforcing steel in backwall is measured along front face of backwall.

LEGEND

EF = Each Face

STATE OF ARKANSAS
LICENSED PROFESSIONAL ENGINEER
No. 16667
DANIEL R. GOAD
BRIDGE ENGINEER

SHEET 1 OF 6
DETAILS OF END BENT NO. 1
I-49 OVER VAN ASCHE DRIVE

ROUTE SEC.

ARKANSAS STATE HIGHWAY COMMISSION

LITTLE ROCK, ARK.

DRAWN BY: CWT DATE: JUNE 2015 FILENAME: BBB0414M4_A1.dgn
CHECKED BY: ABH DATE: SEPT. 2015 SCALE: AS SHOWN
DESIGNED BY: DRG DATE: JUNE 2015

BRIDGE NO. A7381 & B7381 DRAWING NO. 58229

jeskinner 3/20/2016 3:35:55 PM
WORKSPACE: AHTD Bridge
\\GLITARCHIVE\Projects\LITProjects\2011\11017707 - I-540 Widening & Interchange Improvement\Drawings\I540-VASCHE-S201-AB.dgn
REVISED DATE:

DATE REVISED	DATE FILMED	DATE REVISED	DATE FILMED	FED. ROAD DIST. NO.	STATE	FED. AID PROJ. NO.	SHEET NO.	TOTAL SHEETS
				6	ARK.			
				JOB NO.		BB0414	507	886
				(1) A738I & B738I		END BENT DETAILS		58230

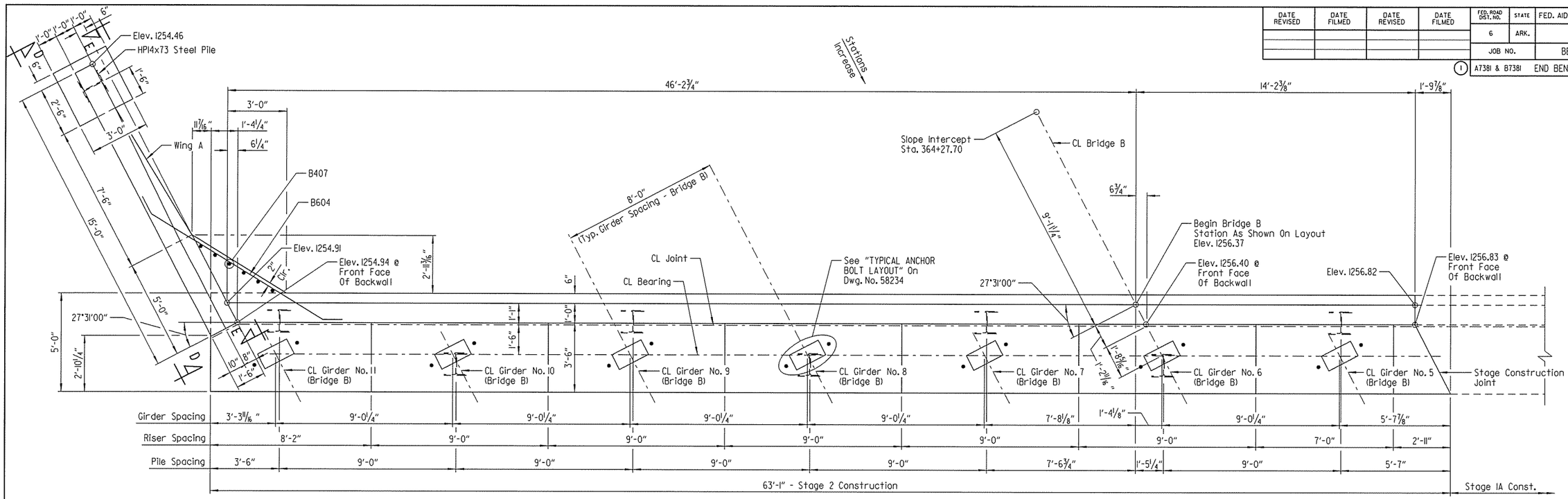

PLAN - STAGE 2 CONSTRUCTION

Scale: ⅜" = 1'-0"

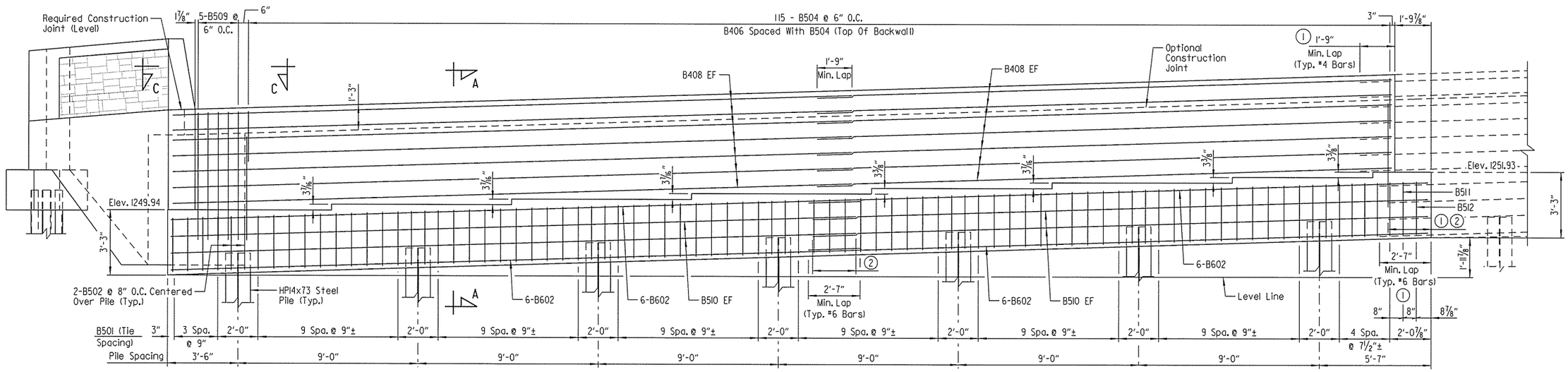

ELEVATION - STAGE 2 CONSTRUCTION

(Looking Back)
Scale: ⅜" = 1'-0"

(1) Mechanical couplers may be used in place of lap splicing of bars between stages. See "OPTIONAL MECHANICAL COUPLER DETAIL" on Dwg. No. 58232 for requirements.

(2) 2'-2" Min. Lap (Typ. #5 Bars)

NOTES:

For "SECTION A-A" & "VIEW C-C", see Dwg. No. 58232 .

For "VIEW D-D" & "SECTION E-E", see Dwg. No. 58233 .

For "GENERAL NOTES", see Dwg. No. 58234 .

For details of wing & rail, see Dwg. No. 58233.

Spacing of vertical reinforcing steel in backwall is measured along front face of backwall.

LEGEND

EF = Each Face

STATE OF ARKANSAS
LICENSED PROFESSIONAL ENGINEER
No. 16667
DANIEL R. GOAD
BRIDGE ENGINEER

SHEET 2 OF 6
DETAILS OF END BENT NO. 1
I-49 OVER VAN ASCHE DRIVE
ROUTE SEC.
ARKANSAS STATE HIGHWAY COMMISSION
LITTLE ROCK, ARK.

DRAWN BY: CWT DATE: JUNE 2015 FILENAME: BBB0414M4_A2.dgn
CHECKED BY: ABH DATE: SEPT. 2015 SCALE: AS SHOWN
DESIGNED BY: DRG DATE: JUNE 2015
BRIDGE NO. A7381 & B7381 DRAWING NO. 58230

jeskinner 3/20/2016 3:35:56 PM
WORKSPACE: AHTD Projects
\\GLITARCHIVE\Projects\LITProjects\2011\1101707 - I-540 Widening & Interchange Improvement\Drawings\1540-VASCHE-S202-AB.dgn
REVISED DATE:

DATE REVISED	DATE FILMED	DATE REVISED	DATE FILMED	FED. ROAD DIST. NO.	STATE	FED. AID PROJ. NO.	SHEET NO.	TOTAL SHEETS
				6	ARK.			
				JOB NO.		BB0414	508	886
				(1) A7381 & B7381		END BENT DETAILS		58231

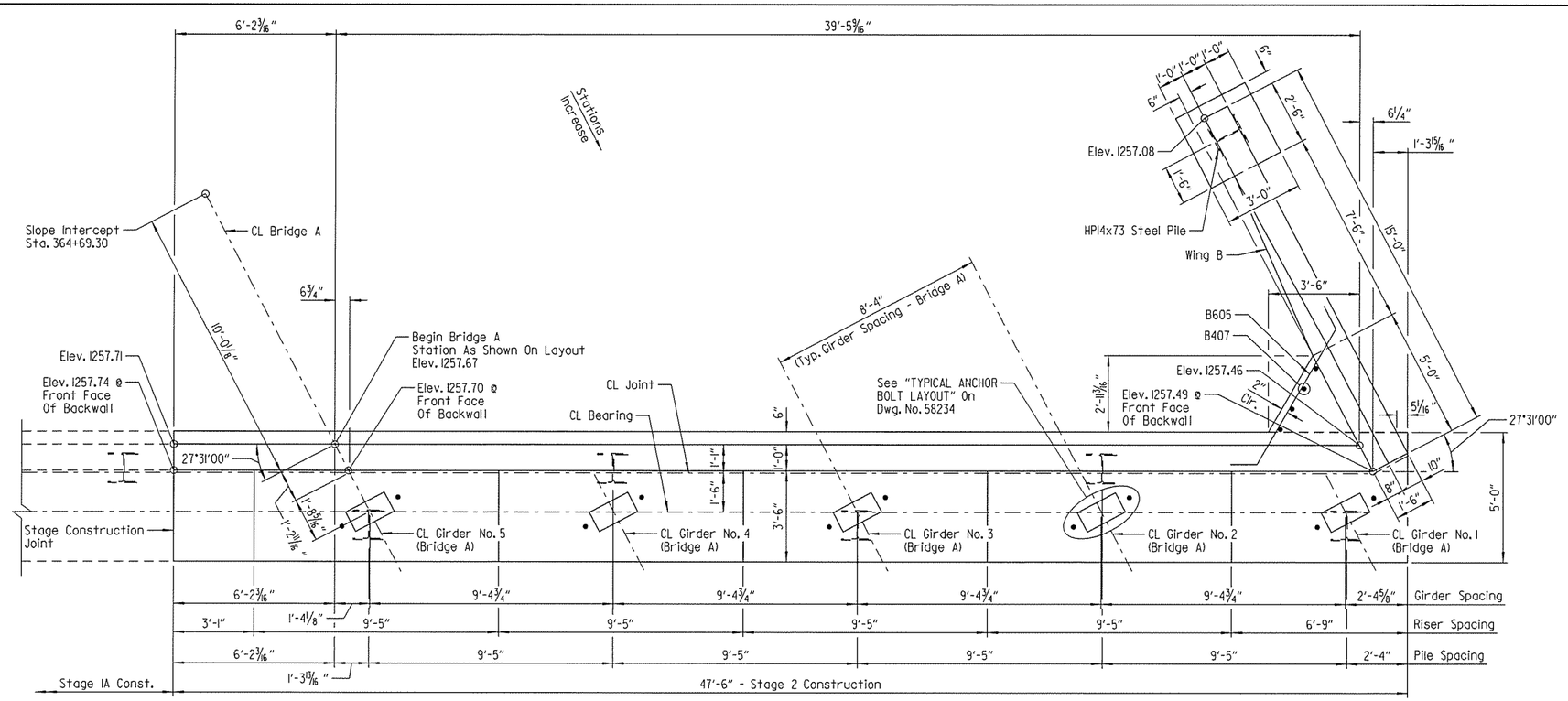

PLAN - STAGE 2 CONSTRUCTION

Scale: 3/8" = 1'-0"

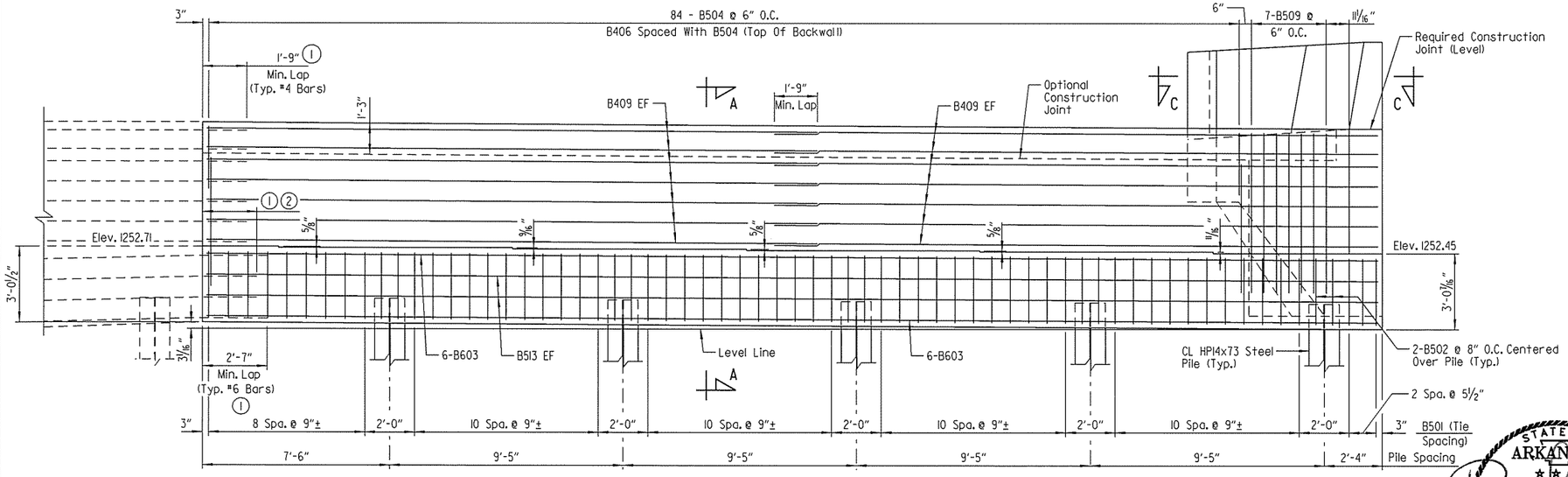

ELEVATION - STAGE 2 CONSTRUCTION

(Looking Back)
Scale: 3/8" = 1'-0"

NOTES:

For "SECTION A-A" & "VIEW C-C", see Dwg. No. 58232 .

For "GENERAL NOTES", see Dwg. No. 58234 .

For details of wing & rail, see Dwg. No. 58233.

Spacing of vertical reinforcing steel in backwall is measured along front face of backwall.

LEGEND

EF = Each Face

(1) Mechanical couplers may be used in place of lap splicing of bars between stages. See "OPTIONAL MECHANICAL COUPLER DETAIL" on Dwg. No. 58232 for requirements.

(2) 2'-2" Min. Lap (Typ. #5 Bars)

STATE OF ARKANSAS
LICENSED PROFESSIONAL ENGINEER
No. 16667
DANIEL R. GOAD
BRIDGE ENGINEER

SHEET 3 OF 6
DETAILS OF END BENT NO. 1
I-49 OVER VAN ASCHE DRIVE
ROUTE SEC.
ARKANSAS STATE HIGHWAY COMMISSION
LITTLE ROCK, ARK.

DRAWN BY: CWT DATE: JUNE 2015 FILENAME: BBB0414M4_A3.dgn
CHECKED BY: ABH DATE: SEPT. 2015 SCALE: AS SHOWN
DESIGNED BY: DRG DATE: JUNE 2015
BRIDGE NO. A7381 & B7381 DRAWING NO. 58231

jeskinner 3/20/2016 3:35:56 PM
WORKSPACE: AHTD Bridge
\\CLIT\ARCHIVE\Projects\2011\1007707 - I-540 Widening & Interchange Improvement\Drawings\I540-VASCHE-S203-AB.dgn
REVISED DATE:

DATE REVISED	DATE FILMED	DATE REVISED	DATE FILMED	FED. ROAD DIST. NO.	STATE	FED. AID PROJ. NO.	SHEET NO.	TOTAL SHEETS
				6	ARK.			
				JOB NO.		BB0414	509	886
				(1) A7381 & B7381		END BENT DETAILS		58232

(1) See elevations on Dwg. Nos. 58229 -58231 for correct bar mark.

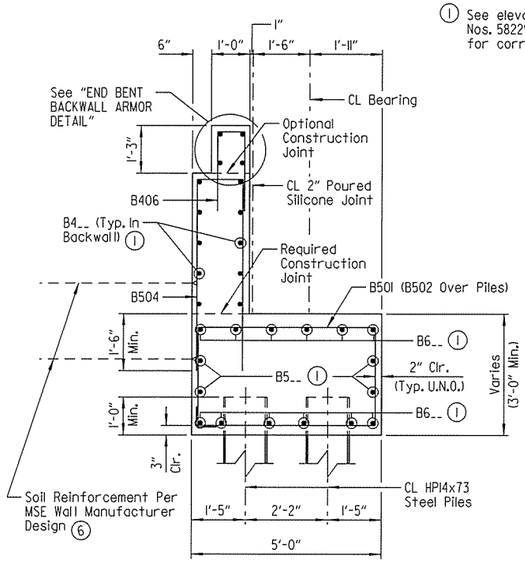

SECTION A-A
Scale: 1/2" = 1'-0"

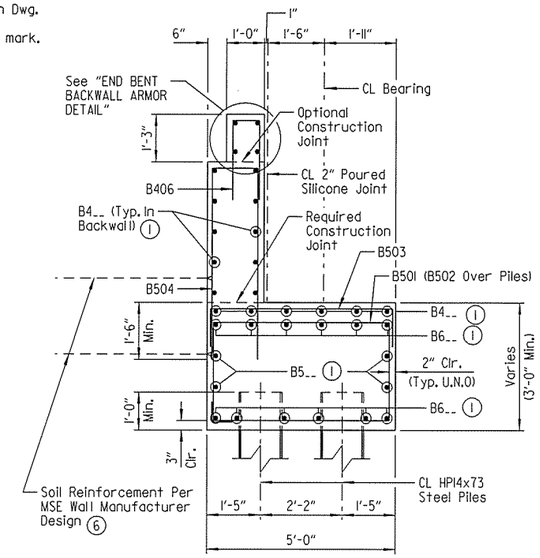

SECTION B-B
Scale: 1/2" = 1'-0"

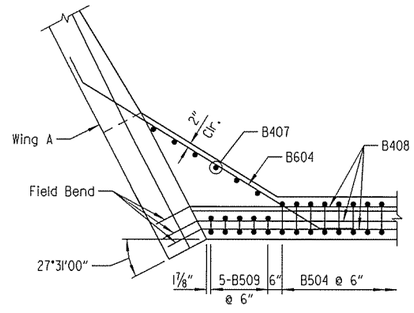

VIEW C-C (WING A)
Scale: 3/8" = 1'-0"

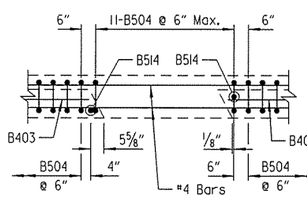

VIEW C-C (CL MEDIAN)
No Scale

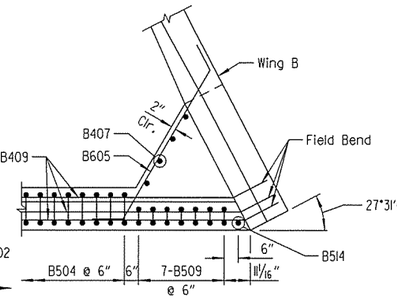

VIEW C-C (WING B)
Scale: 3/8" = 1'-0"

(6) Soil reinforcement shall be attached at the back of End Bent. Type, size and spacing of soil reinforcement shall be designed by the Contractor. The design details and computations shall accompany the wall design submittal for review by the Engineer. Cost shall be subsidiary to item "MSE RETAINING WALL". For additional details, see SP JOB NO. BB0414 "MSE RETAINING WALLS" and Retaining Wall Plans.

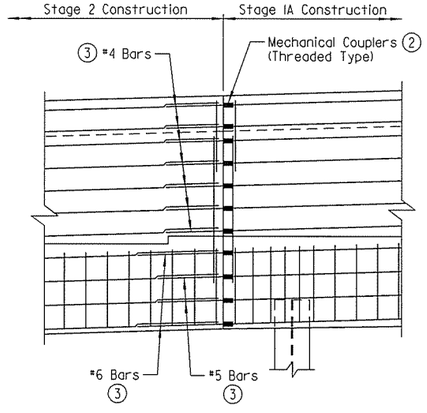

OPTIONAL MECHANICAL COUPLER DETAIL
No Scale

(2) The Mechanical Couplers shall be an approved type in accordance with the AHTD Qualified Products List (QPL).

The cost of Mechanical Couplers shall not be measured separately but shall be considered subsidiary to the item "REINFORCING STEEL-BRIDGE (GRADE 60)".

Mechanical couplers shall develop at least 125% of the specified yield strength of the reinforcing steel.

(3) One end of bar shall be threaded to match Mechanical Coupler. Length of bar shall match lap splice length detailed on plans.

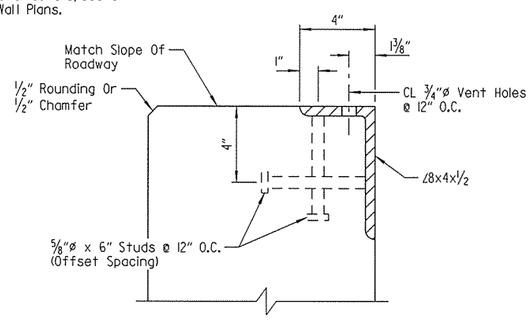

END BENT BACKWALL ARMOR DETAIL
No Scale

NOTES:
Concrete shall be hand packed under joint armor.

The profile of the backwall angle shall be established based on the vertical curve in conjunction with the skew.

Transverse spacing between vertical anchor studs and vent holes shall be 6".

Special care shall taken to properly and thoroughly consolidate the concrete in the vicinity of the expansion joint device in the backwall. See Subsection 802.09(a)(3).

LEGEND
U.N.O. = Unless Noted Otherwise

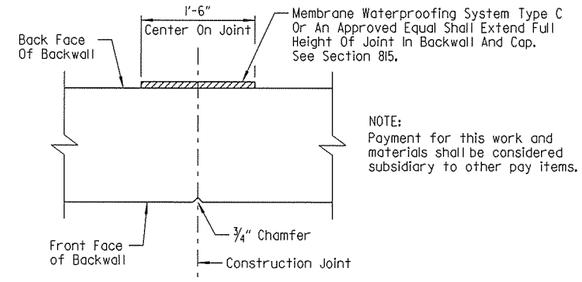

NOTE:
Payment for this work and materials shall be considered subsidiary to other pay items.

CONSTRUCTION JOINT DETAIL
Scale: 1" = 1'-0"

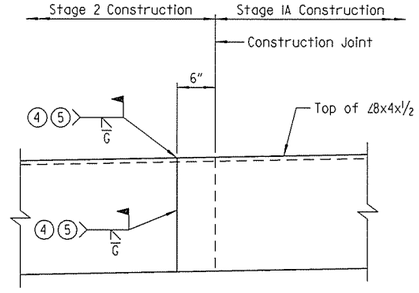

(4) Weld after Stage IA Pour & prior to Stage 2 Pour

(5) Grind flush

DETAIL OF WELD LOCATION FOR EXPANSION DEVICE
No Scale

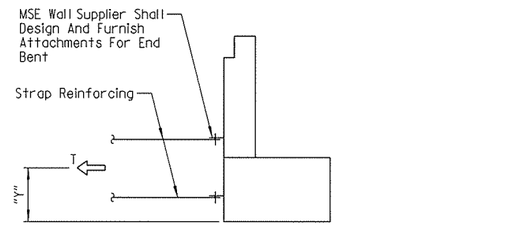

END BENT STRAP DETAIL
No Scale

T = Resultant Force required to be resisted by strap reinforcing.

Y = Centroid of strap reinforcing.

LIMIT STATE	T	Y
	Kips/Ft	Ft
Service	5.8	3.0
Strength	7.6	3.0

STATE OF ARKANSAS LICENSED PROFESSIONAL ENGINEER No.16667 DANIEL R. GOAD
3-20-16
BRIDGE ENGINEER

SHEET 4 OF 6
DETAILS OF END BENT NO. 1
I-49 OVER VAN ASCHE DRIVE
ROUTE SEC.
ARKANSAS STATE HIGHWAY COMMISSION
LITTLE ROCK, ARK.

DRAWN BY: CWT DATE: JUNE 2015 FILENAME: BBB0414M4_A4.dgn
CHECKED BY: ABH DATE: SEPT. 2015 SCALE: AS SHOWN
DESIGNED BY: DRG DATE: JUNE 2015
BRIDGE NO. A7381 & B7381 DRAWING NO. 58232

jeskinner 3/20/2016 3:35:56 PM
WORKSPACE: AHTD 8.5"x11"
\\GLITARCHIVE\Projects\LITProjects\201N\107707 - I-540 Widening & Interchange Improvement\Drawings\I540-VASCHE-S204-AB.dgn
REVISED DATE:

DATE REVISED	DATE FILMED	DATE REVISED	DATE FILMED	FED. ROAD DIST. NO.	STATE	FED. AID PROJ. NO.	SHEET NO.	TOTAL SHEETS
				6	ARK.			
				JOB NO.		BB0414	510	886
				(1) A7381 & B7381		END BENT DETAILS		58233

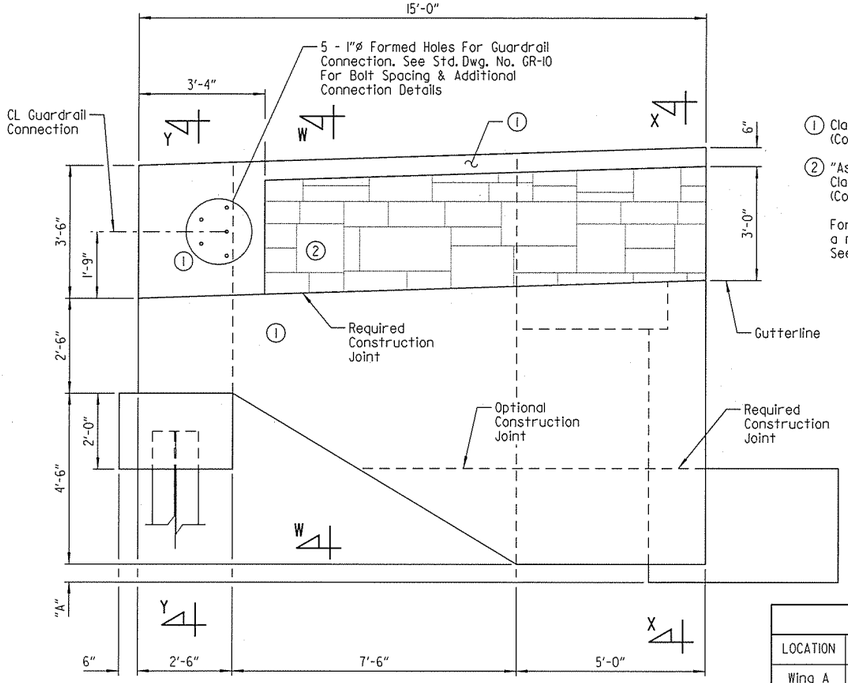

VIEW D-D
Scale: 1/2" = 1'-0"

(1) Class 3 Textured Coating Finish (Color = Brown, Color Chip No. 33578)

(2) "Ashlar Stone" Form Liner & Class 3 Textured Coating Finish (Color = Brown, Color Chip No. 30219)

Form liner shall be a max. depth of 2" to provide a min. clearance of 1½" to parapet reinforcing. See SP JOB NO. BB0414 "ARCHITECTURAL FINISH".

NOTE:
A Class 3 Textured Coating Finish shall be applied to bridge surfaces as specified in SP JOB NO. BB0414 "TEXTURED COATING FINISH" and in accordance with Subsection 802.19.

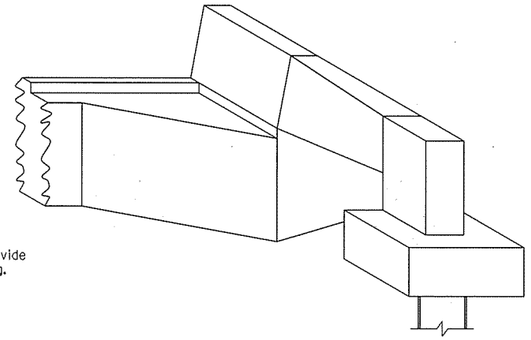

THREE DIMENSIONAL VIEW OF RAIL
No Scale

TABLE OF VARIABLES				
LOCATION	"A"	"B"	"C"	"D"
Wing A	9¼"	1254.94	1254.46	1249.96
Wing B	8"	1257.49	1257.08	1252.58

LEGEND
EF = Each Face
FF = Front Face
BF = Back Face

SECTION W-W
Scale: 3/4" = 1'-0"

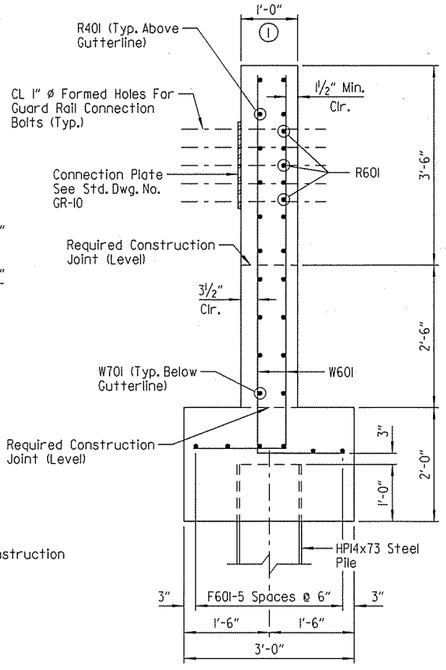

SECTION Y-Y
Scale: 3/4" = 1'-0"

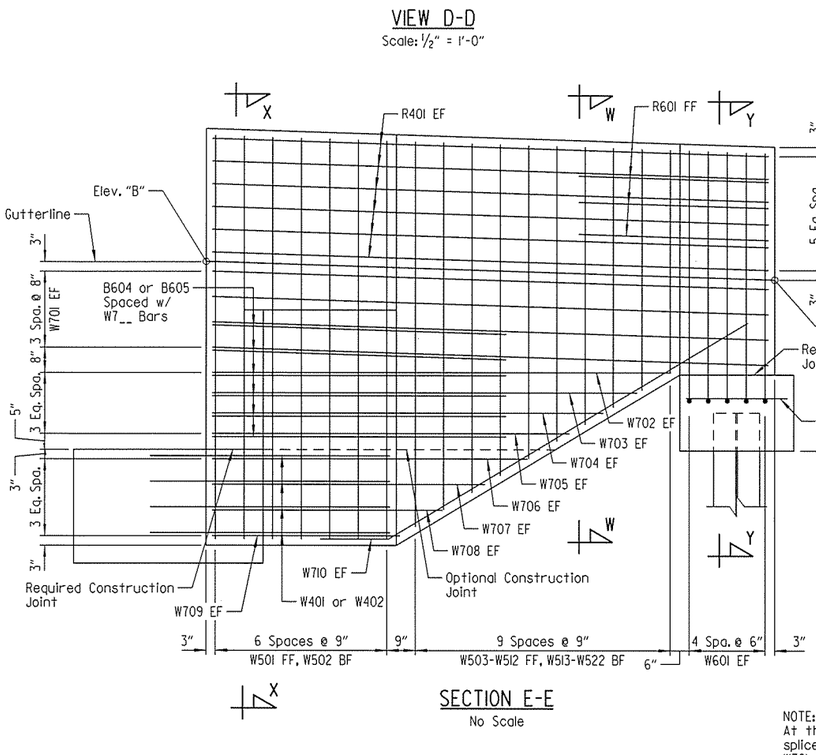

SECTION E-E
No Scale

NOTE:
At the Contractor's option, a single lap splice of 3'-6" (min.) may be used on bars W701 thru W709. Payment will be based on the weight of the bars shown in the plans.

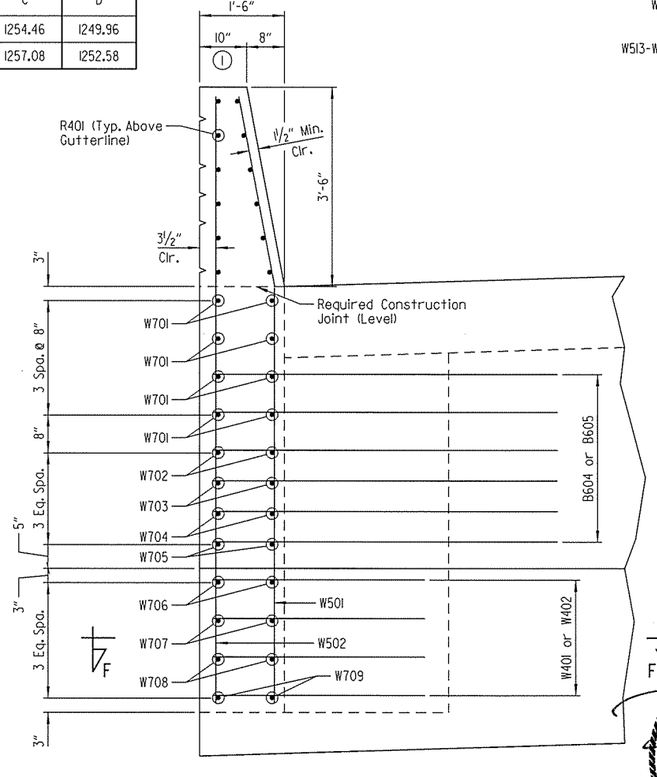

SECTION X-X
Scale: 3/4" = 1'-0"

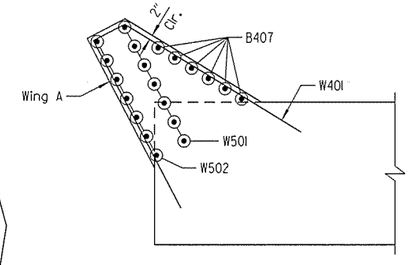

SECTION F-F (WING A)
Scale: 3/8" = 1'-0"

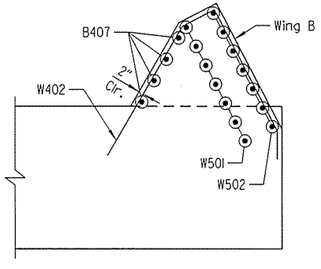

SECTION F-F (WING B)
Scale: 3/8" = 1'-0"

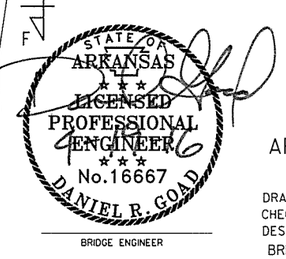

BRIDGE ENGINEER

SHEET 5 OF 6
DETAILS OF END BENT NO. 1
I-49 OVER VAN ASCHE DRIVE
ROUTE SEC.
ARKANSAS STATE HIGHWAY COMMISSION
LITTLE ROCK, ARK.

DRAWN BY: CWT DATE: JUNE 2015 FILENAME: BBB0414M4_A5.dgn
CHECKED BY: ABH DATE: SEPT. 2015 SCALE: AS SHOWN
DESIGNED BY: DRG DATE: JUNE 2015
BRIDGE NO. A7381 & B7381 DRAWING NO. 58233

JesKinner 4/19/2016 2:48:42 PM
WORKSPACE: AHTD Bridge
\\GLITARCHIVE\Projects\LITProjects\20IN\110I707 - I-540 Widening & Interchange Improvement\Drawings\I540-VASCHE-S205-AB.dgn
REVISED DATE:

DATE REVISED	DATE FILMED	DATE REVISED	DATE FILMED	FED. ROAD DIST. NO.	STATE	FED. AID PROJ. NO.	SHEET NO.	TOTAL SHEETS
				6	ARK.			
				JOB NO.		BB0414	511	886
				(1)	A7381 & B7381	END BENT DETAILS		58234

BAR LIST - STAGE IA CONSTRUCTION

Mark	No. Req'd	Length	"A"	"B"	Pin Dia.
B401	20	37'-9"			Str.
B402	4	34'-11"			Str.
B403	4	34'-3"			Str.
B404	6	8'-10"			Str.
B405	6	25'-9"			Str.
B406	129	4'-8"	8"	2'-1"	2"
B501	77	15'-0"	4'-8"		2½"
B502	16	9'-7½"	4'-8"	2'-7"	2½"
B503	48	8'-6"	4'-8"	2'-0"	2½"
B504	140	11'-10"	1'-2"	5'-5"	2½"
B505	8	38'-4"			Str.
B506 To B508	1 Each	8'-6" To 14'-4"	1'-5" To 4'-4"		2½"
B514	2	6'-8"			Str.
B601	24	39'-0"			Str.

BAR LIST - STAGE 2 CONSTRUCTION

Mark	No. Req'd	Length	"A"	"B"	Pin Dia.
B406	199	4'-8"	8"	2'-1"	2"
B407	10	5'-9"			Str.
B408	28	32'-0"			Str.
B409	28	24'-7"			Str.
B501	125	15'-0"	4'-8"		2½"
B502	24	9'-7½"	4'-8"	2'-7"	2½"
B504	199	11'-10"	1'-2"	5'-5"	2½"
B509	12	13'-10"	8"	6'-8"	2½"
B510	8	32'-6"			Str.
B511	1	10'-0"	2'-2"		2½"
B512	1	7'-4"	10"		2½"
B513	4	47'-2"			Str.
B514	1	6'-8"			Str.
B602	24	32'-7"			Str.
B603	12	47'-2"			Str.
B604	6	12'-0"			4½"
B605	6	8'-2"			4½"
F601	12	2'-8"			Str.
R401	24	14'-8"			Str.
R601	6	5'-0"			Str.
W401	4	14'-11"			2"
W402	4	12'-1"			2"
W501	14	10'-5"	7'-1"		3¾"
W502	14	10'-5"			Str.
W503 To W512	2 Each	10'-1" To 5'-10"	6'-9" To 2'-6"		3¾"
W513 To W522	2 Each	10'-1" To 5'-10"			Str.
W601	20	8'-0"			4½"
W701	16	14'-8"			Str.
W702 To W709	4 Each	12'-1" To 4'-11"			Str.
W710	4	14'-3"			5¼"

NOTE:
Number of bars in each bar list is for End Bent No. 1.

BAR BENDING DIAGRAMS

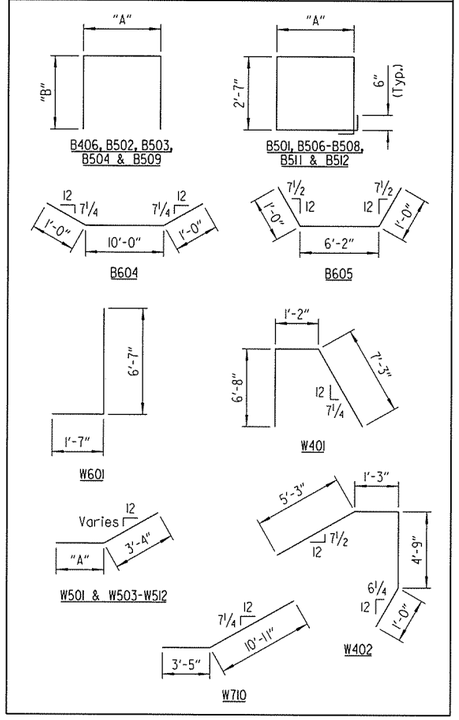

NOTE:
Dimensions of bars are out-to-out.

GENERAL NOTES

All concrete shall be Class "S" with a minimum 28 day compressive strength f'c = 3500 psi. Concrete shall be poured in the dry, and all exposed corners to be chamfered ¾" unless otherwise noted.

All reinforcing steel shall conform to AASHTO M31 or M322 Type A, Grade 60 (yield strength = 60,000 psi), with mill test reports.

All piles shall be HP14x73 (AASHTO M270, Gr. 50).

No portion of the backwall shall be poured before girders are in place. The portion of the backwall above the optional construction joint at the paving bracket shall not be placed until the deck pour has been made. Refer to "EXPANSION DEVICE INSTALLATION AT END BENTS" note on Dwg. No. 58253.

Finish top of backwall to match the bridge deck.

Structural steel in end bents shall be AASHTO M270, Gr. 50W and shall be paid for as "STRUCTURAL STEEL IN PLATE GIRDER SPANS (AASHTO M270, GR. 50W)".

Top reinforcing bars in cap shall be properly placed to avoid damage or interference with anchor bolts or sheet metal sleeves.

For additional information, see layout.

Class 2 Protective Surface Treatment shall be applied to the top of backwall and roadway face of concrete parapets. Class 3 Textured Coating Finish shall be applied in accordance with SP JOB NO. BB0414 "TEXTURED COATING FINISH" and in accordance with Subsection 802.19. Textured Coating Finish shall not be applied on surfaces where Class 2 Protective Surface Treatment is applied.

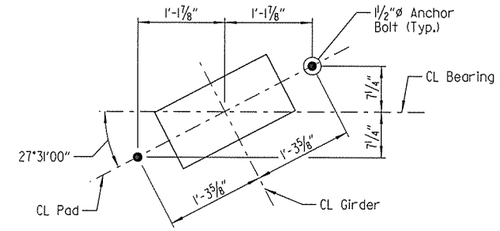

TYPICAL ANCHOR BOLT LAYOUT
Scale: 1" = 1'-0"

NOTE:
For details of elastomeric bearings, see Dwg. No. 58253.

STATE OF ARKANSAS
LICENSED PROFESSIONAL ENGINEER
No. 16667
DANIEL R. GOAD
BRIDGE ENGINEER

SHEET 6 OF 6
DETAILS OF END BENT NO. 1
I-49 OVER VAN ASCHE DRIVE
ROUTE SEC.
ARKANSAS STATE HIGHWAY COMMISSION
LITTLE ROCK, ARK.

DRAWN BY: CWT DATE: JUNE 2015 FILENAME: BBB0414M4_A6.dgn
CHECKED BY: ABH DATE: SEPT. 2015 SCALE: AS SHOWN
DESIGNED BY: DRG DATE: JUNE 2015
BRIDGE NO. A7381 & B7381 DRAWING NO. 58234

jeskinner 4/19/2016 2:48:42 PM
WORKSPACE: AHTD Bridge
\\GLITARCHIVE\Projects\LITProjects\20IN\I0I7707 - I-540 Widening & Interchange Improvement\Drawings\I540-VASCHE-5206-AB.dgn
REVISED DATE:

DATE REVISED	DATE FILMED	DATE REVISED	DATE FILMED	FED. ROAD DIST. NO.	STATE	FED. AID PROJ. NO.	SHEET NO.	TOTAL SHEETS
				6	ARK.			
				JOB NO.		BB0414	5I2	886
				(1) A738I & B738I		END BENT DETAILS		58235

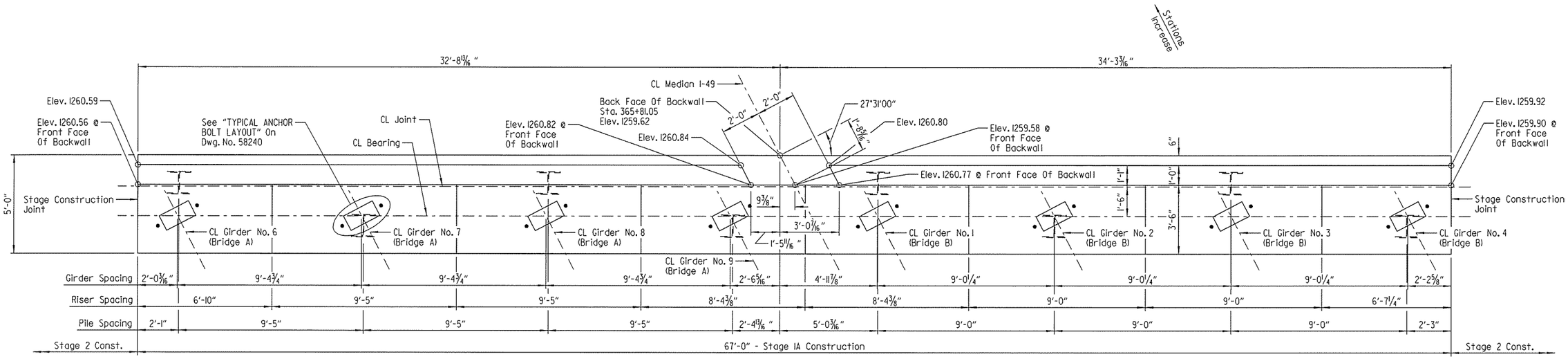

PLAN - STAGE IA CONSTRUCTION

Scale: 3/8" = 1'-0"

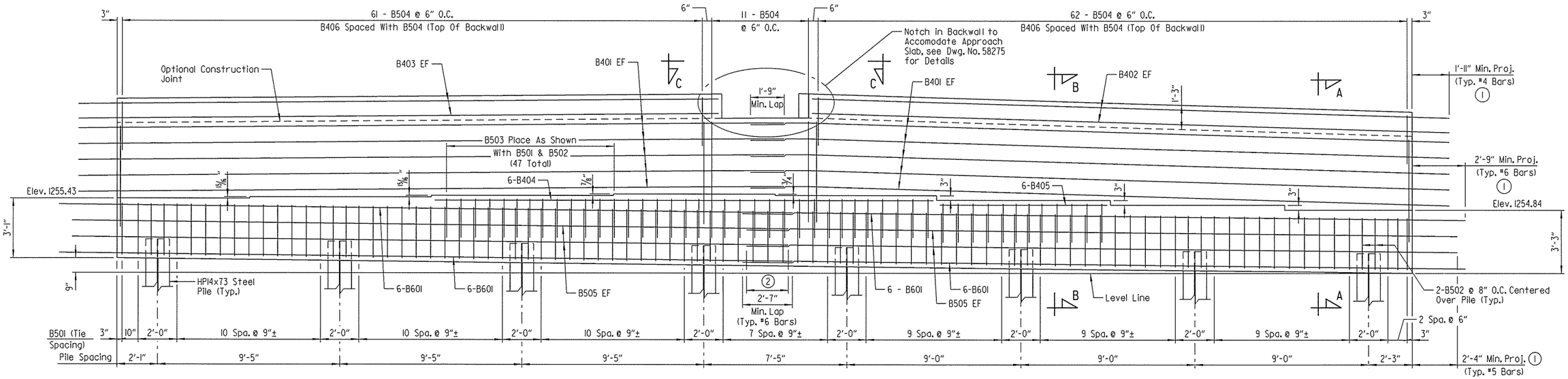

ELEVATION - STAGE IA CONSTRUCTION

(Looking Ahead)
Scale: 3/8" = 1'-0"

(1) Mechanical couplers may be used in place of lap splicing of bars between stages. See "OPTIONAL MECHANICAL COUPLER DETAIL" on Dwg. No. 58238 for requirements.

(2) 2'-2" Min. Lap (Typ. #5 Bars)

NOTES:

For "SECTION A-A", "SECTION B-B" & "VIEW C-C", see Dwg. No. 58238.

For "GENERAL NOTES", see Dwg. No. 58240 .

Spacing of vertical reinforcing steel in backwall is measured along front face of backwall.

LEGEND

EF = Each Face

STATE OF ARKANSAS LICENSED PROFESSIONAL ENGINEER No. 16667 DANIEL R. GOAD

BRIDGE ENGINEER

SHEET 1 OF 6
DETAILS OF END BENT NO. 2
I-49 OVER VAN ASCHE DRIVE

ROUTE SEC.

ARKANSAS STATE HIGHWAY COMMISSION

LITTLE ROCK, ARK.

DRAWN BY: CWT DATE: JUNE 2015 FILENAME: BBB0414M4_A7.dgn
CHECKED BY: ABH DATE: SEPT. 2015 SCALE: AS SHOWN
DESIGNED BY: DRG DATE: JUNE 2015

BRIDGE NO. A7381 & B7381 DRAWING NO. 58235

jeskinner 3/20/2016 3:35:58 PM
WORKSPACE: AHTD Bridge Design
\\GLITARCHIVE\Projects\LITProjects\2001\101707 - I-540 Widening & Interchange Improvement\Drawings\I540-VASCHE-S207-AB.dgn
REVISED DATE:

DATE REVISED	DATE FILMED	DATE REVISED	DATE FILMED	FED. ROAD DIST. NO.	STATE	FED. AID PROJ. NO.	SHEET NO.	TOTAL SHEETS
				6	ARK.			
				JOB NO.		BB0414	513	886
				(1) A7381 & B7381		END BENT DETAILS		58236

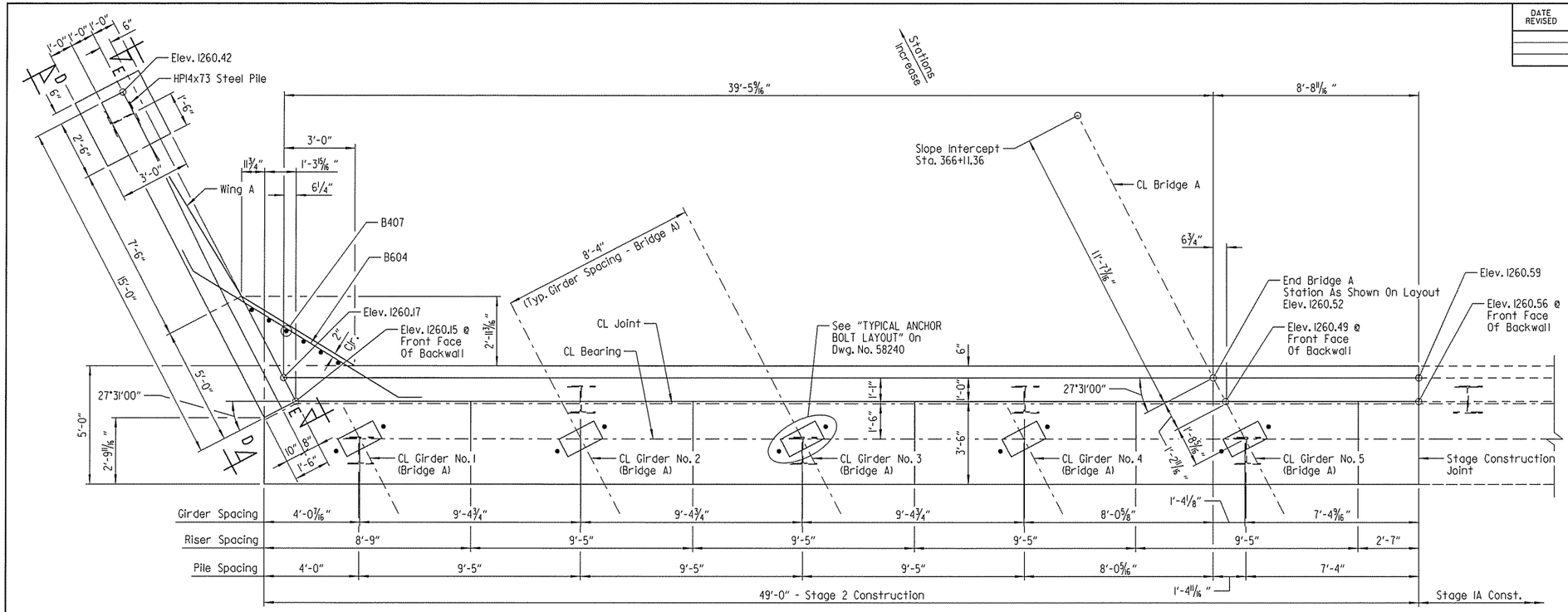

PLAN - STAGE 2 CONSTRUCTION

Scale: ⅜" = 1'-0"

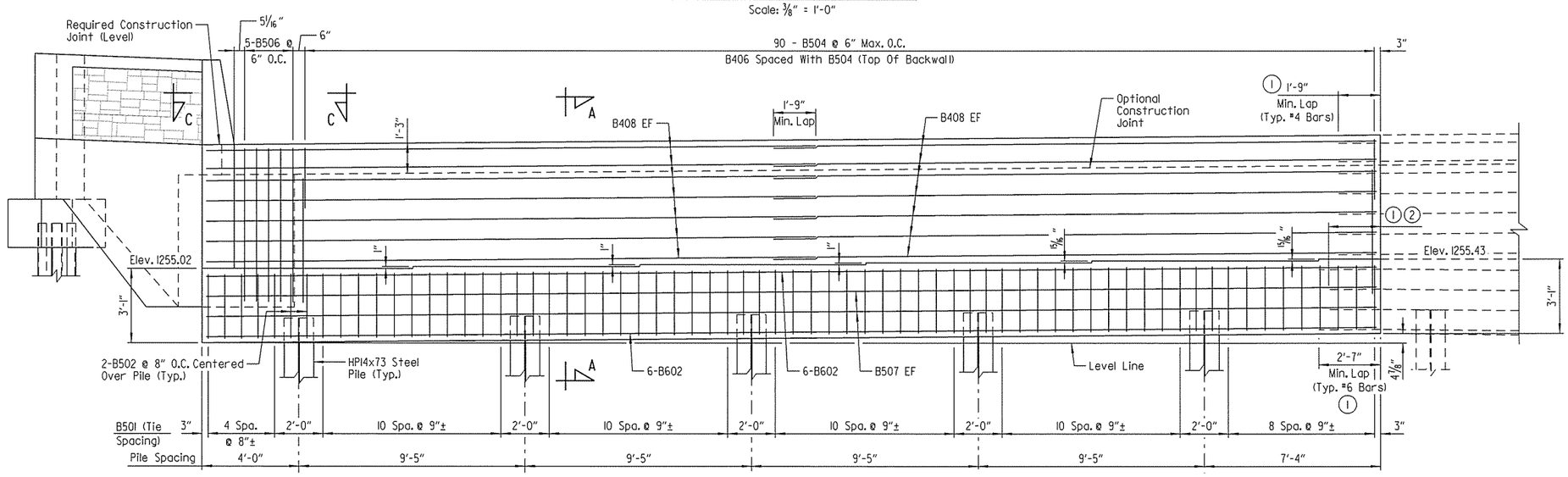

ELEVATION - STAGE 2 CONSTRUCTION

(Looking Ahead)
Scale: ⅜" = 1'-0"

(1) Mechanical couplers may be used in place of lap splicing of bars between stages. See "OPTIONAL MECHANICAL COUPLER DETAIL" on Dwg. No. 58238 for requirements.

(2) 2'-2" Min. Lap (Typ. #5 Bars)

NOTES:

For "SECTION A-A" & "VIEW C-C", see Dwg. No. 58238 .

For "VIEW D-D" & "SECTION E-E", see Dwg. No. 58239.

For "GENERAL NOTES", see Dwg. No. 58240 .

For details of wing & rail, see Dwg. No. 58239.

Spacing of vertical reinforcing steel in backwall is measured along front face of backwall.

LEGEND

EF = Each Face

STATE OF ARKANSAS LICENSED PROFESSIONAL ENGINEER No. 16667 DANIEL R. GOAD

BRIDGE ENGINEER

SHEET 2 OF 6
DETAILS OF END BENT NO. 2
I-49 OVER VAN ASCHE DRIVE

ROUTE SEC.

ARKANSAS STATE HIGHWAY COMMISSION
LITTLE ROCK, ARK.

DRAWN BY: CWT DATE: JUNE 2015 FILENAME: BBB0414M4_A8.dgn
CHECKED BY: ABH DATE: SEPT. 2015 SCALE: AS SHOWN
DESIGNED BY: DRG DATE: JUNE 2015

BRIDGE NO. A7381 & B7381 DRAWING NO. 58236

jeskinner 3/20/2016 3:35:58 PM
WORKSPACE AHTD Bridge
\\CLIT\ARCHIVE\Projects\LITProjects\20INV1017707 - I-540 Widening & Interchange Improvement\Drawings\I540-VASCHE-S208-AB.dgn
REVISED DATE:

DATE REVISED	DATE FILMED	DATE REVISED	DATE FILMED	FED. ROAD DIST. NO.	STATE	FED. AID PROJ. NO.	SHEET NO.	TOTAL SHEETS
				6	ARK.			
				JOB NO.		BB0414	514	886
				(1) A738I & B738I		END BENT DETAILS		58237

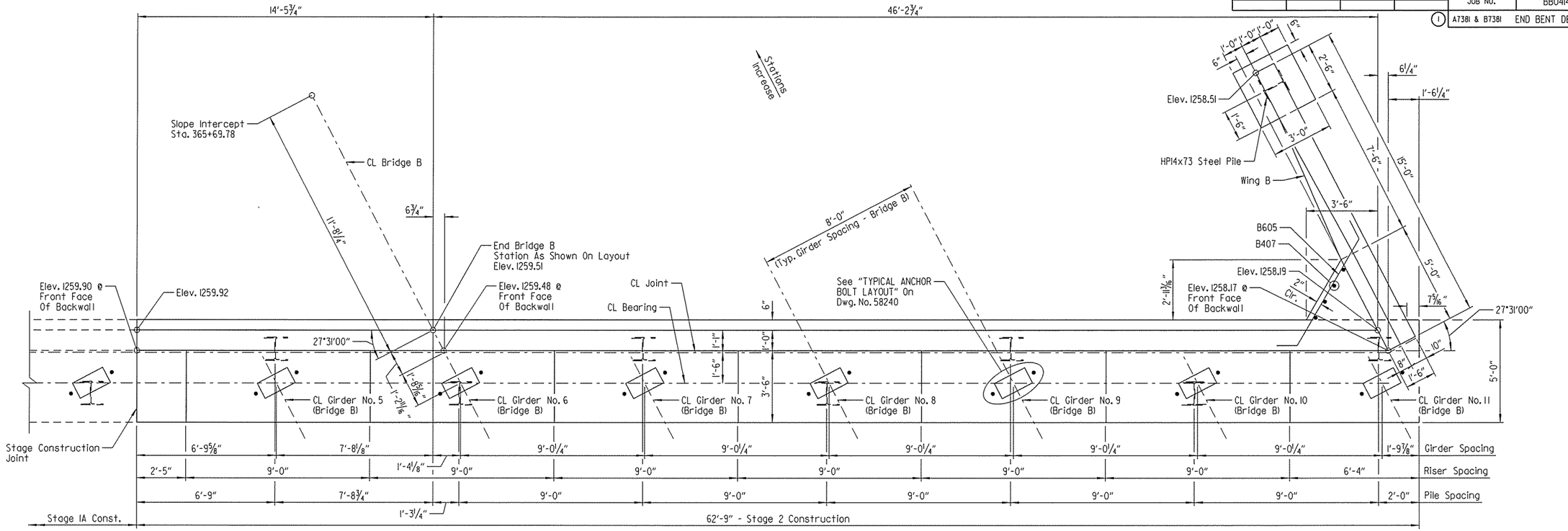

PLAN - STAGE 2 CONSTRUCTION

Scale: ⅜" = 1'-0"

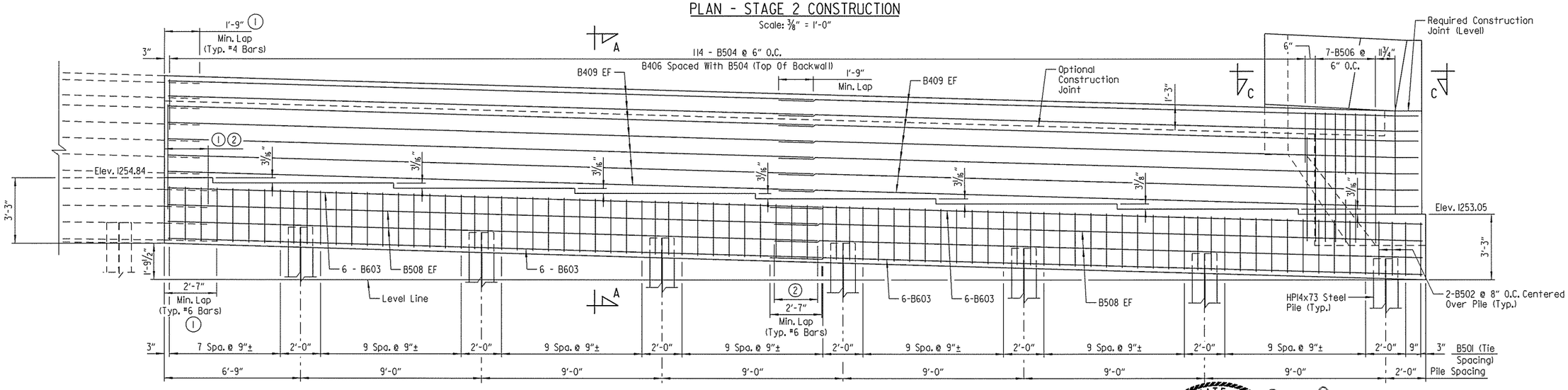

ELEVATION - STAGE 2 CONSTRUCTION

(Looking Ahead)
Scale: ⅜" = 1'-0"

(1) Mechanical couplers may be used in place of lap splicing of bars between stages. See "OPTIONAL MECHANICAL COUPLER DETAIL" on Dwg. No. 58238 for requirements.

(2) 2'-2" Min. Lap (Typ. #5 Bars)

NOTES:

For "SECTION A-A" & "VIEW C-C", see Dwg. No. 58238 .

For "GENERAL NOTES", see Dwg. No. 58240 .

For details of wing & rail, see Dwg. No. 58239.

Spacing of vertical reinforcing steel in backwall is measured along front face of backwall.

LEGEND

EF = Each Face

STATE OF ARKANSAS
LICENSED PROFESSIONAL ENGINEER
No. 16667
DANIEL R. GOAD
BRIDGE ENGINEER

SHEET 3 OF 6
DETAILS OF END BENT NO. 2
I-49 OVER VAN ASCHE DRIVE
ROUTE SEC.
ARKANSAS STATE HIGHWAY COMMISSION
LITTLE ROCK, ARK.

DRAWN BY: CWT DATE: JUNE 2015 FILENAME: BBB0414M4_A9.dgn
CHECKED BY: ABH DATE: SEPT. 2015 SCALE: AS SHOWN
DESIGNED BY: DRG DATE: JUNE 2015

BRIDGE NO. A738I & B738I DRAWING NO. 58237

jeskinner 3/20/2016 3:35:59 PM
WORKGROUP: AHTD Bridge
V:\GLITARCH\Projects\LITProjects\20IN\I017707 - I-540 Widening & Interchange Improvement\Drawings\I540-VASCHE-S209-AB.dgn
REVISED DATE:

(1) See elevations on Dwg. Nos. 58235 - 58237 for correct bar mark.

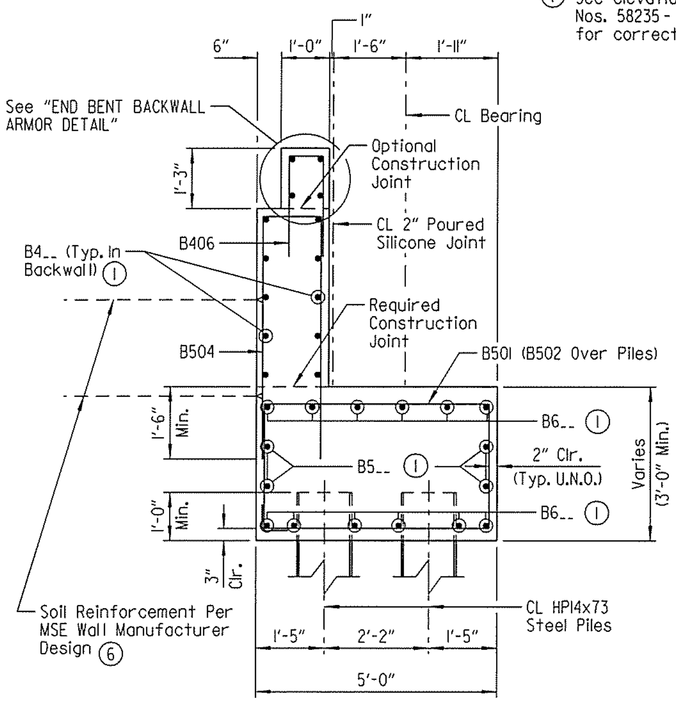

SECTION A-A

Scale: 1/2" = 1'-0"

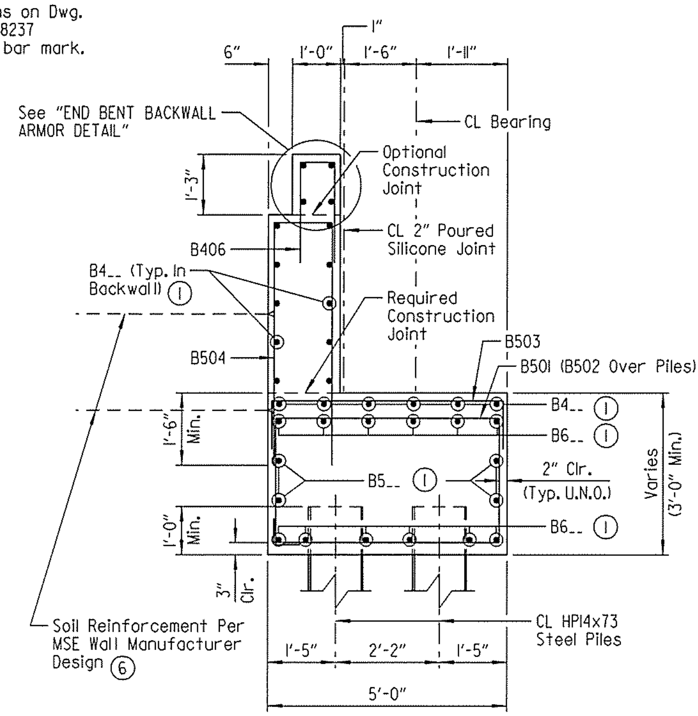

SECTION B-B

Scale: 1/2" = 1'-0"

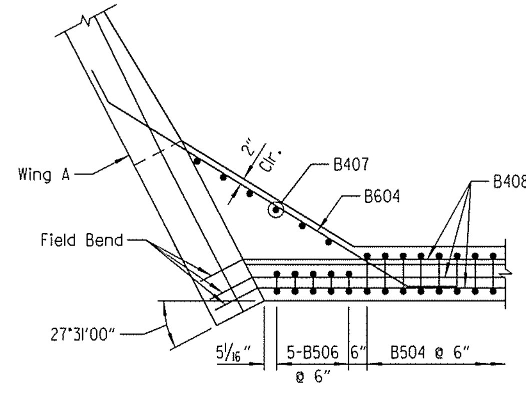

VIEW C-C (WING A)

Scale: 3/8" = 1'-0"

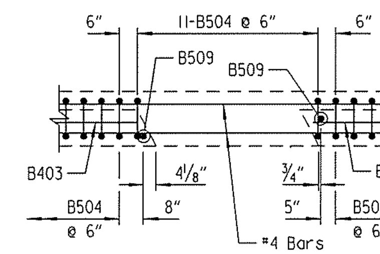

VIEW C-C (CL MEDIAN)

No Scale

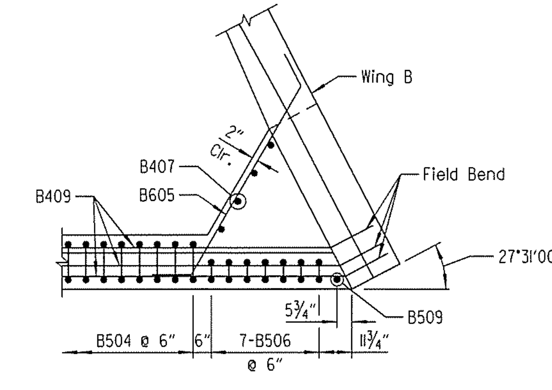

VIEW C-C (WING B)

Scale: 3/8" = 1'-0"

(6) Soil reinforcement shall be attached at the back of End Bent. Type, size and spacing of soil reinforcement shall be designed by the Contractor. The design details and computations shall accompany the wall design submittal for review by the Engineer. Cost shall be subsidiary to item "MSE RETAINING WALL". For additional details, see SP JOB NO. BB0414 "MSE RETAINING WALLS" and Retaining Wall Plans.

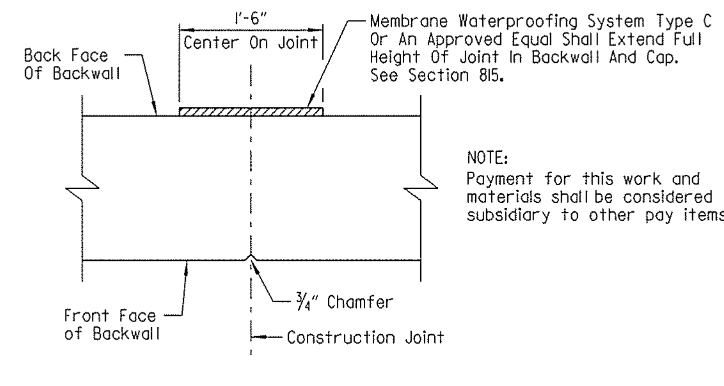

NOTE:
Payment for this work and materials shall be considered subsidiary to other pay items.

CONSTRUCTION JOINT DETAIL

Scale: 1" = 1'-0"

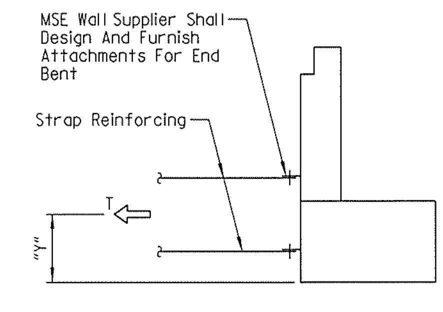

END BENT STRAP DETAIL

No Scale

T = Resultant Force required to be resisted by strap reinforcing

Y = Centroid of strap reinforcing

LIMIT STATE	T	Y
	Kips/Ft	Ft
Service	5.8	3.0
Strength	7.6	3.0

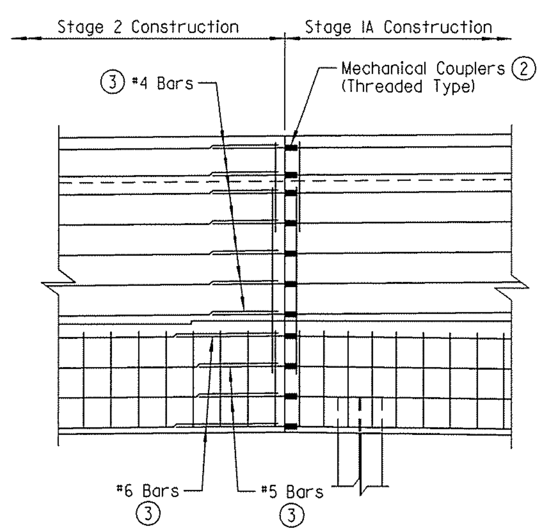

OPTIONAL MECHANICAL COUPLER DETAIL

No Scale

(2) The Mechanical Couplers shall be an approved type in accordance with the AHTD Qualified Products List (QPL).

The cost of Mechanical Couplers shall not be measured separately but shall be considered subsidiary to the item "REINFORCING STEEL-BRIDGE (GRADE 60)".

Mechanical couplers shall develop at least 125% of the specified yield strength of the reinforcing steel.

(3) One end of bar shall be threaded to match Mechanical Coupler. Length of bar shall match lap splice length detailed on plans.

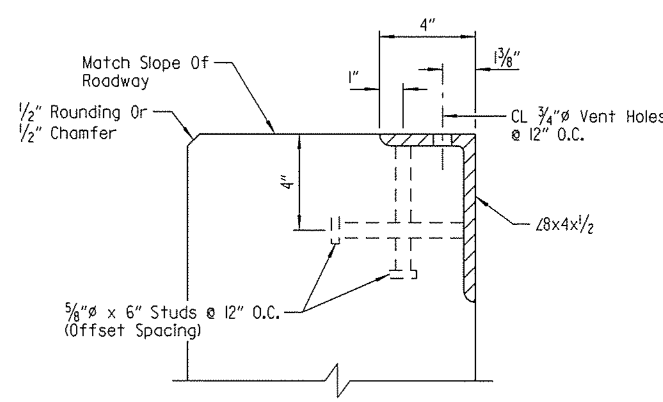

END BENT BACKWALL ARMOR DETAIL

No Scale

NOTES:
Concrete shall be hand packed under joint armor.

The profile of the backwall angle shall be established based on the vertical curve in conjunction with the skew.

Transverse spacing between vertical anchor studs and vent holes shall be 6".

Special care shall taken to properly and thoroughly consolidate the concrete in the vicinity of the expansion joint device in the backwall. See Subsection 802.09(a)(3).

LEGEND

U.N.O. = Unless Noted Otherwise

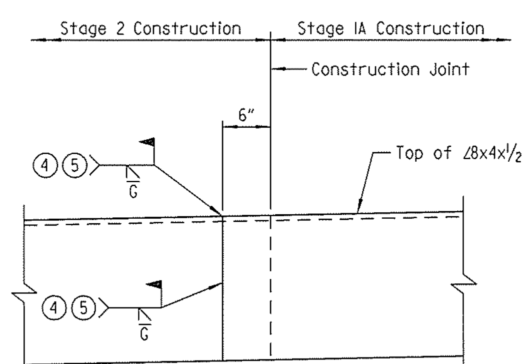

(4) Weld after Stage 1A Pour & prior to Stage 2 Pour

(5) Grind flush

DETAIL OF WELD LOCATION FOR EXPANSION DEVICE

No Scale

STATE OF ARKANSAS LICENSED PROFESSIONAL ENGINEER No.16667 DANIEL R. GOAD

BRIDGE ENGINEER

SHEET 4 OF 6
DETAILS OF END BENT NO. 2
I-49 OVER VAN ASCHE DRIVE

ROUTE SEC.

ARKANSAS STATE HIGHWAY COMMISSION

LITTLE ROCK, ARK.

DRAWN BY: CWT DATE: JUNE 2015 FILENAME: BBB0414M4_A10.dgn
CHECKED BY: ABH DATE: SEPT. 2015 SCALE: AS SHOWN
DESIGNED BY: DRG DATE: JUNE 2015
BRIDGE NO. A7381 & B7381 DRAWING NO. 58238

jeskinner 3/20/2016 3:35:59 PM
WORKSPACE: AHTD Bridge
L:\2011\011707 - I-540 Widening & Interchange Improvement\Drawings\I540-VASCHE-S210-AB.dgn
REVISED DATE:

DATE REVISED	DATE FILMED	DATE REVISED	DATE FILMED	FED. ROAD DIST. NO.	STATE	FED. AID PROJ. NO.	SHEET NO.	TOTAL SHEETS
				6	ARK.			
				JOB NO.		BB0414	516	886
				(1) A738I & B738I		END BENT DETAILS		58239

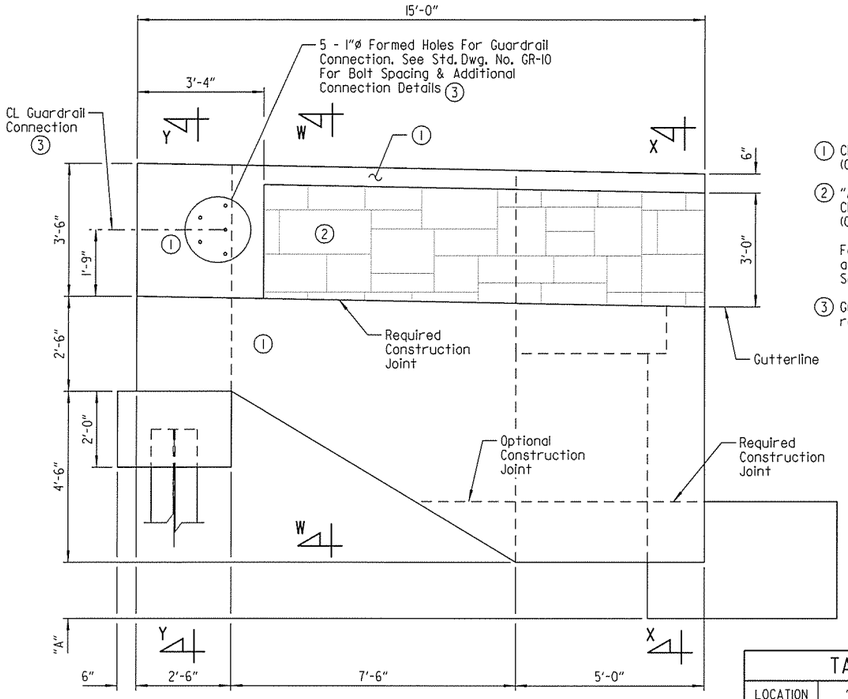

VIEW D-D
Scale: 1/2" = 1'-0"

(1) Class 3 Textured Coating Finish (Color = Brown, Color Chip No. 33578)

(2) "Ashlar Stone" Form Liner & Class 3 Textured Coating Finish (Color = Brown, Color Chip No. 30219)

Form liner shall be a max. depth of 2" to provide a min. clearance of 1 1/2" to parapet reinforcing. See SP JOB NO. BB0414 "ARCHITECTURAL FINISH".

(3) Guardrail connection and R601 bars required at Wing A only.

NOTE:
A Class 3 Textured Coating Finish shall be applied to bridge surfaces as specified in SP JOB NO. BB0414 "TEXTURED COATING FINISH" and in accordance with Subsection 802.19.

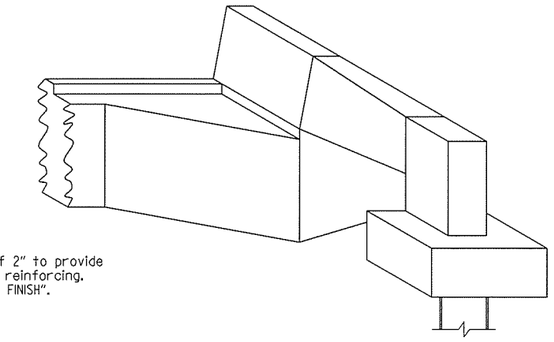

THREE DIMENSIONAL VIEW OF RAIL
No Scale

LEGEND
EF = Each Face
FF = Front Face
BF = Back Face

TABLE OF VARIABLES				
LOCATION	"A"	"B"	"C"	"D"
Wing A	1'-5 11/16"	1260.15	1260.42	1255.92
Wing B	1'-8 1/2"	1258.17	1258.51	1254.01

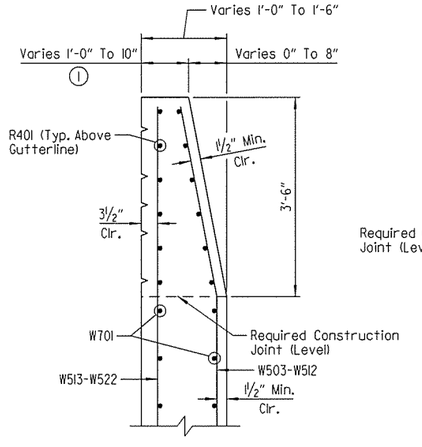

SECTION W-W
Scale: 3/4" = 1'-0"

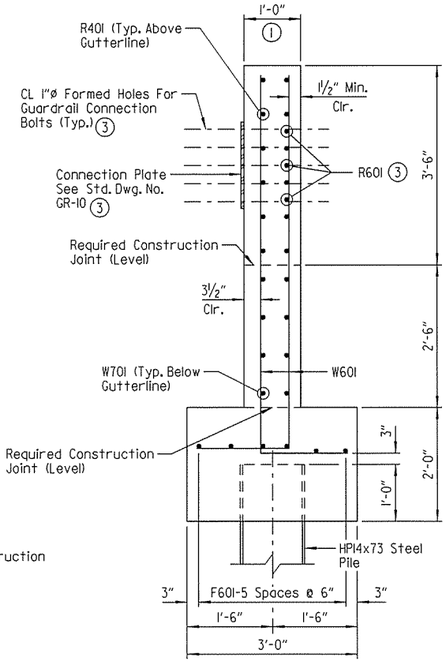

SECTION Y-Y
Scale: 3/4" = 1'-0"

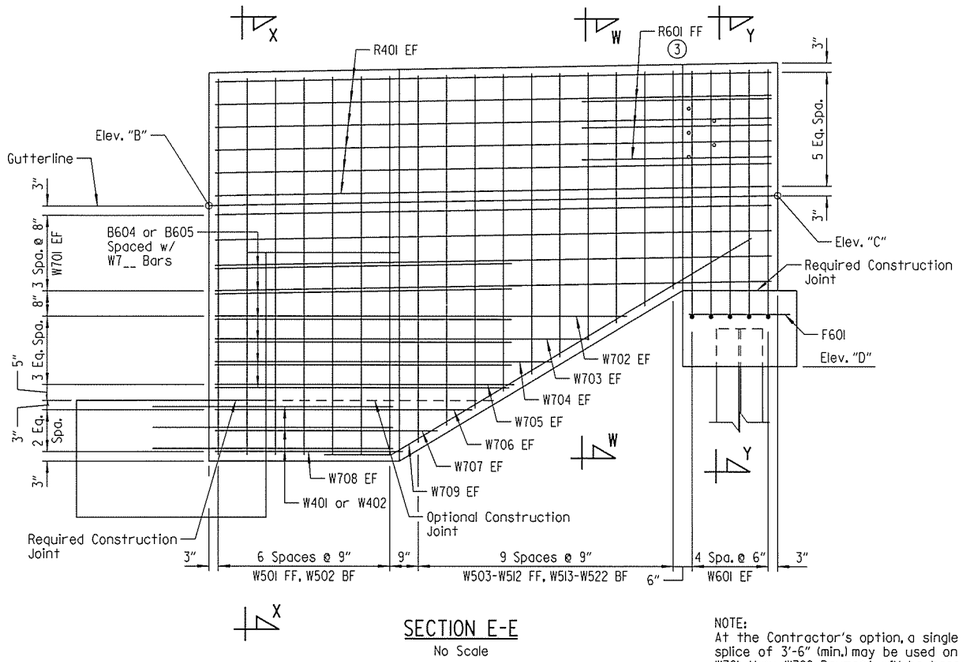

SECTION E-E
No Scale

NOTE:
At the Contractor's option, a single lap splice of 3'-6" (min.) may be used on bars W701 thru W709. Payment will be based on the weight of the bars shown in the plans.

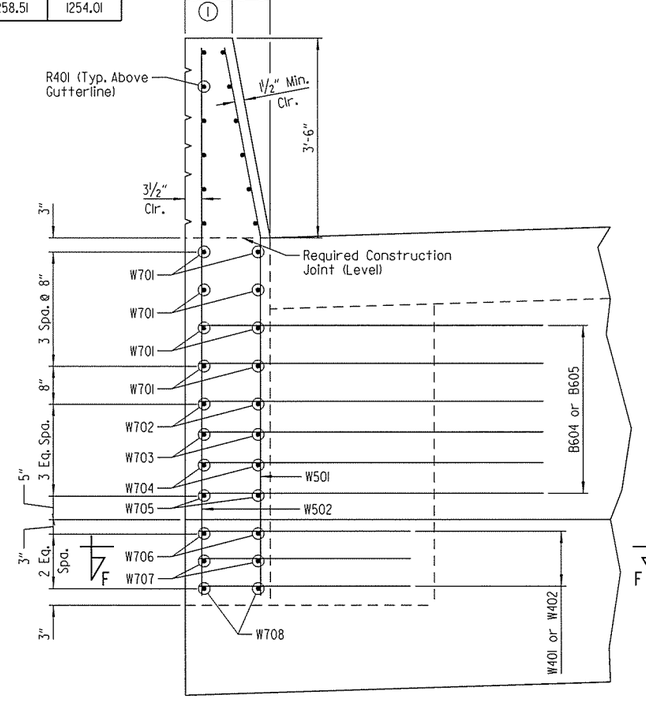

SECTION X-X
Scale: 3/4" = 1'-0"

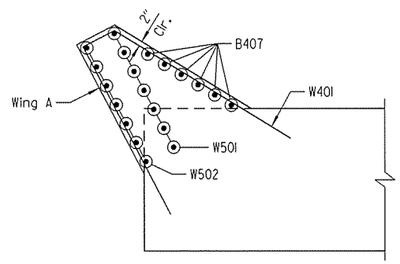

SECTION F-F (WING A)
Scale: 3/8" = 1'-0"

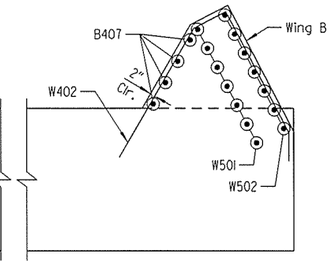

SECTION F-F (WING B)
Scale: 3/8" = 1'-0"

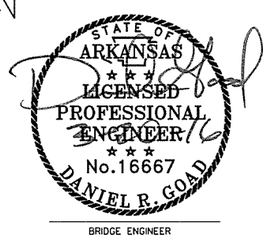

SHEET 5 OF 6
DETAILS OF END BENT NO. 2
I-49 OVER VAN ASCHE DRIVE
ROUTE SEC.
ARKANSAS STATE HIGHWAY COMMISSION
LITTLE ROCK, ARK.

DRAWN BY: CWT DATE: JUNE 2015 FILENAME: BBB0414M4_A11.dgn
CHECKED BY: ABH DATE: SEPT. 2015 SCALE: AS SHOWN
DESIGNED BY: DRG DATE: JUNE 2015
BRIDGE NO. A738I & B738I DRAWING NO. 58239

jeskinner 3/20/2016 3:36:00 PM
WORKSPACE: AHTD Projects
L:\2016\I00707 - I-540 Widening & Interchange Improvement\Drawings\I540-VASCHE-S2II-AB.dgn
REVISED DATE:

DATE REVISED	DATE FILMED	DATE REVISED	DATE FILMED	FED. ROAD DIST. NO.	STATE	FED. AID PROJ. NO.	SHEET NO.	TOTAL SHEETS
				6	ARK.			
				JOB NO.		BB0414	517	886
				(1)	A7381 & B7381	END BENT DETAILS		58240

BAR LIST - STAGE IA CONSTRUCTION

Mark	No. Req'd	Length	"A"	"B"	Pin Dia.
B401	20	36'-4"			Str.
B402	4	33'-5"			Str.
B403	4	32'-11"			Str.
B404	6	25'-9"			Str.
B405	6	8'-10"			Str.
B406	123	4'-8"	8"	2'-1"	2"
B501	76	15'-0"			2½"
B502	16	9'-7½"	4'-8"	2'-7"	2½"
B503	47	8'-6"	4'-8"	2'-0"	2½"
B504	134	11'-10"	1'-2"	5'-5"	2½"
B505	8	36'-11"			Str.
B509	2	6'-8"			Str.
B601	24	37'-7"			Str.

BAR LIST - STAGE 2 CONSTRUCTION

Mark	No. Req'd	Length	"A"	"B"	Pin Dia.
B406	204	4'-8"	8"	2'-1"	2"
B407	10	5'-0"			Str.
B408	28	25'-8"			Str.
B409	28	32'-1"			Str.
B501	128	15'-0"			2½"
B502	24	9'-7½"	4'-8"	2'-7"	2½"
B504	204	11'-10"	1'-2"	5'-5"	2½"
B506	12	13'-10"	8"	6'-8"	2½"
B507	4	48'-8"			Str.
B508	8	32'-4"			Str.
B509	1	6'-8"			Str.
B602	12	48'-8"			Str.
B603	24	32'-6"			Str.
B604	6	12'-0"			4½"
B605	6	8'-2"			4½"
F601	12	2'-8"			Str.
R401	24	14'-8"			Str.
R601	3	5'-0"			Str.
W401	3	14'-11"			2"
W402	3	12'-1"			2"
W501	14	9'-10"	6'-6"		3¾"
W502	14	9'-10"			Str.
W503 To W512	2 Each	9'-7" To 5'-8"	6'-3" To 2'-4"		3¾"
W513 To W522	2 Each	9'-7" To 5'-8"			Str.
W601	20	8'-0"			4½"
W701	16	14'-8"			Str.
W702 To W708	4 Each	10'-10" To 4'-11"			Str.
W709	4	14'-3"			5¼"

NOTE:
Number of bars in each bar list is for End Bent No. 2.

BAR BENDING DIAGRAMS

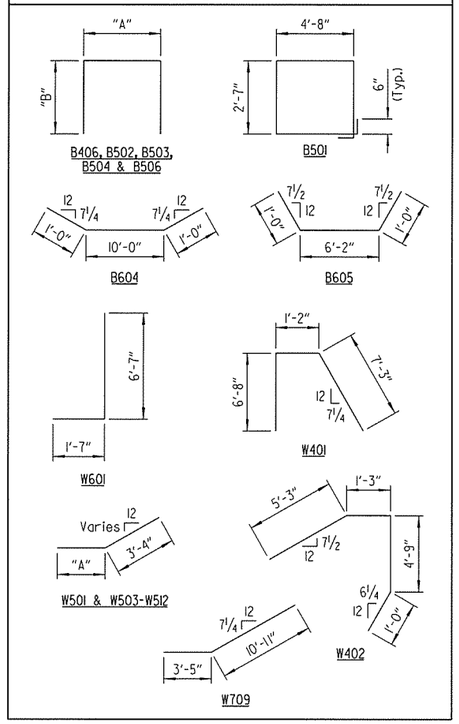

NOTE:
Dimensions of bars are out-to-out.

GENERAL NOTES

All concrete shall be Class "S" with a minimum 28 day compressive strength f'c = 3500 psi. Concrete shall be poured in the dry, and all exposed corners to be chamfered ¾" unless otherwise noted.

All reinforcing steel shall conform to AASHTO M31 or M322 Type A, Grade 60 (yield strength = 60,000 psi), with mill test reports.

All piles shall be HP14x73 (AASHTO M270, Gr. 50).

No portion of the backwall shall be poured before girders are in place. The portion of the backwall above the optional construction joint at the paving bracket shall not be placed until the deck pour has been made. Refer to "EXPANSION DEVICE INSTALLATION AT END BENTS" note on Dwg. No. 58253.

Finish top of backwall to match the bridge deck.

Structural steel in end bents shall be AASHTO M270, Gr. 50W and shall be paid for as "STRUCTURAL STEEL IN PLATE GIRDER SPANS (AASHTO M270, GR. 50W)".

Top reinforcing bars in cap shall be properly placed to avoid damage or interference with anchor bolts or sheet metal sleeves.

For additional information, see layout.

Class 2 Protective Surface Treatment shall be applied to the top of backwall and roadway face of concrete parapet. Class 3 Textured Coating Finish shall be applied in accordance with SP JOB NO. BB0414 "TEXTURED COATING FINISH" and in accordance with Subsection 802.19. Textured Coating Finish shall not be applied on surfaces where Class 2 Protective Surface Treatment is applied.

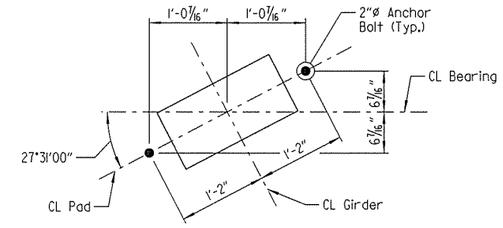

TYPICAL ANCHOR BOLT LAYOUT

Scale: 1" = 1'-0"

NOTE:
For details of elastomeric bearings, see Dwg. No. 58253.

STATE OF ARKANSAS
LICENSED PROFESSIONAL ENGINEER
No. 16667
DANIEL R. GOAD
BRIDGE ENGINEER

3/21/16

SHEET 6 OF 6
DETAILS OF END BENT NO. 2
I-49 OVER VAN ASCHE DRIVE
ROUTE SEC.
ARKANSAS STATE HIGHWAY COMMISSION
LITTLE ROCK, ARK.

DRAWN BY: CWT DATE: JUNE 2015 FILENAME: BBB0414M4_AI2.dgn
CHECKED BY: ABH DATE: SEPT. 2015 SCALE: AS SHOWN
DESIGNED BY: DRG DATE: JUNE 2015
BRIDGE NO. A7381 & B7381 DRAWING NO. 58240

Jeskinner 3/20/2016 3:36:00 PM
WORKSPACE: AHTD Bridge
L:\2011\I007107 - I-540 Widening & Interchange Improvement\Drawings\I540-VASCHE-S212-AB.dgn
REVISED DATE:

DATE REVISED	DATE FILMED	DATE REVISED	DATE FILMED	FED. ROAD DIST. NO.	STATE	FED. AID PROJ. NO.	SHEET NO.	TOTAL SHEETS
				6	ARK.			
				JOB NO.		BB0414	518	886

(1) A7381 118'-0" PL GIRDER SPAN 58241

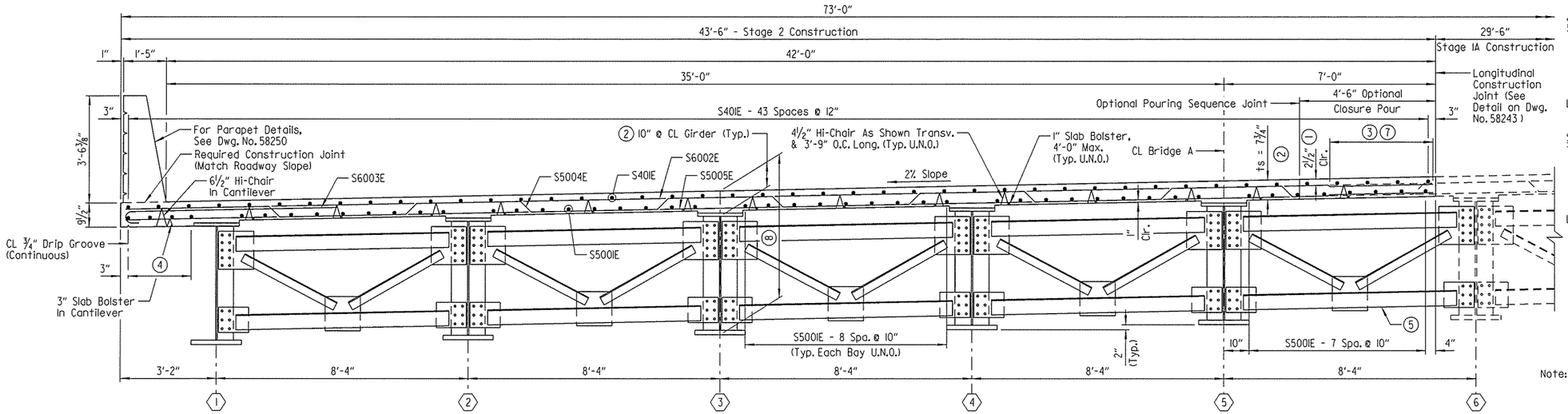

TYPICAL SECTION - STAGE 2

(Bridge A, Looking Ahead)
Scale: ½" = 1'-0"

(X) Girder Number

SLAB REINFORCING (STAGE IA):
Transverse: S5002E @ 12" O.C. Bent Up Over Girders
S6001E @ 12" O.C. In Top — Alternating
S5003E @ 12" O.C. In Bottom
S6003E Bundled with S5002E & S6001E In Top @ 6" O.C. At Gutterline
Longitudinal: S40IE (Placed As Shown In Top)
S500IE (Placed As Shown In Bottom)

SLAB REINFORCING (STAGE 2):
Transverse: S5004E @ 12" O.C. Bent Up Over Girders
S6002E @ 12" O.C. In Top — Alternating
S5005E @ 12" O.C. In Bottom
S6003E Bundled with S5004E & S6002E In Top @ 6" O.C. At Gutterline
Longitudinal: S40IE (Placed As Shown In Top)
S500IE (Placed As Shown In Bottom)

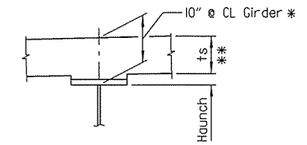

Note: t_S = Slab Thickness as shown on "TYPICAL SECTION".

* Measured to bottom of top flange

** Tolerance when removable deck forming is used is + ½", - ¼". Haunch forming is required and shall be adjusted to maintain slab thickness tolerance.

ADJUSTMENT FOR SLAB THICKNESS TOLERANCE WHEN REMOVABLE DECK FORMING IS USED

No Scale

Haunch dimension may vary within the following limits to maintain the grade and slab thickness tolerance: minimum - occurs when the top flange contacts the bottom reinforcing steel; maximum - top flange thickness plus 1¼". No increase in concrete and structural steel quantities will be made to maintain tolerances.

Tolerances shown are applicable only when removable deck forming is used, see Std. Dwg. No. 55005 for tolerances when permanent steel deck forms are used. Payment for concrete shall be based on removable deck forming.

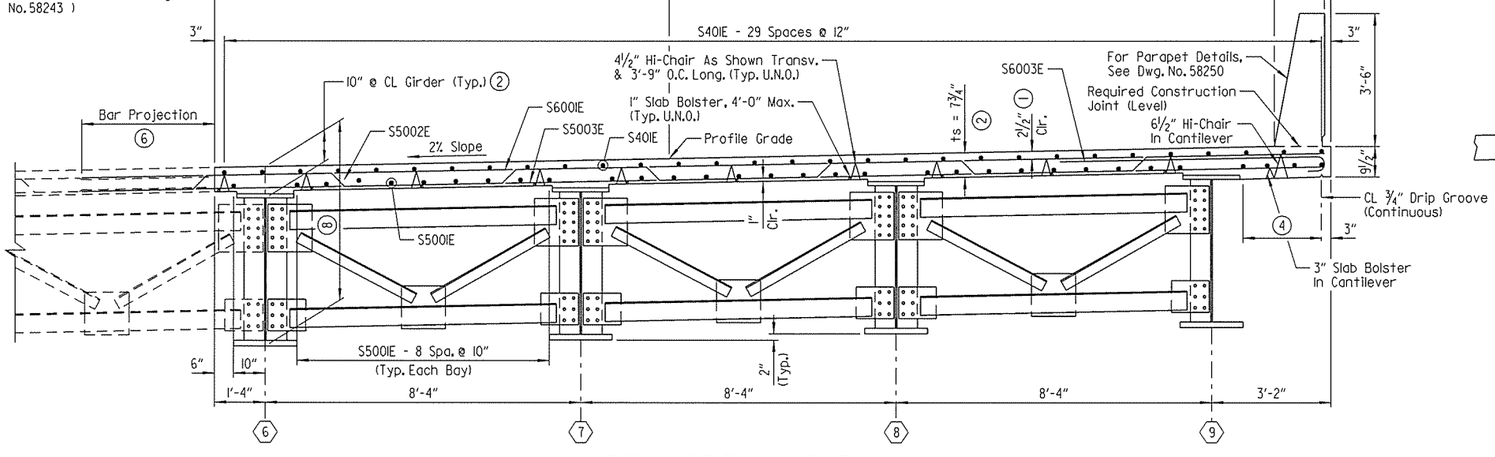

TYPICAL SECTION - STAGE IA

(Bridge A, Looking Ahead)
Scale: ½" = 1'-0"

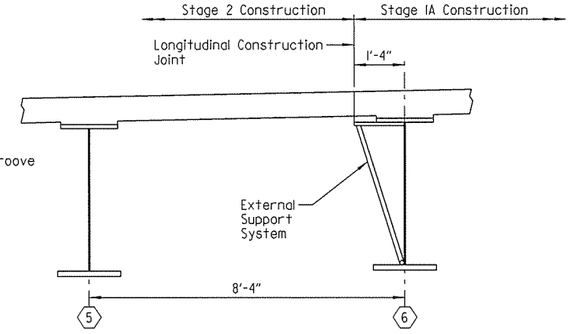

NOTE:
Stage IA external supports at Girder 6 shall remain in place until after completion of the Stage 2 deck pour. See Subsection 802.15 for additional information regarding the removal of the support system.

DECK SUPPORT AT LONGITUDINAL CONSTRUCTION JOINT

(Looking Ahead)
No Scale

LEGEND

U.N.O. = Unless Noted Otherwise

(1) TOLERANCE:
Minus = ¼"
Plus = Amount of slab thickening used to meet slab thickness tolerance - see "ADJUSTMENT FOR SLAB THICKNESS TOLERANCE WHEN REMOVABLE DECK FORMING IS USED".

(2) See "ADJUSTMENT FOR SLAB THICKNESS TOLERANCE WHEN REMOVABLE DECK FORMING IS USED".

(3) Stage 2 transverse reinforcing steel shall not be tied to Stage IA transverse reinforcing steel.

(4) S500IE - 3 spaces @ 8½" in cantilever

(5) K-Frames between girders 5 & 6 shall be installed with bolts loose when girders are erected in Stage 2. Bolts shall be fully tightened immediately after placing slab in Stage 2. Alternatively, the holes in the connection plate on one side of these K-frames may be field drilled after placing slab in Stage 2.

(6) Bar Projection:
4'-2" for S5002E
3'-4" for S5003E
3'-11" for S6001E

(7) 3'-10" min. lap for #6 top bars
3'-3" min. lap for #5 bottom bars

(8) 4'-7" + bottom flange thickness, measured @ CL Girder (Typ.)

NOTES:
At the Contractor's option, one epoxy coated #5 bar in the top and one epoxy coated #5 bar in the bottom may be substituted for each bar S5002E & S5004E. Payment will be based on the weight of bars S5002E & S5004E.

Class 2 Protective Surface Treatment shall be applied to the roadway surface and roadway face of concrete parapet. Class 3 Textured Coating Finish shall be applied to bridge surfaces as specified in SP JOB NO. BB0414 "TEXTURED COATING FINISH" and in accordance with Subsection 802.19. Textured Coating Finish shall not be applied on surfaces where Class 2 Protective Surface Treatment is applied.

For "BAR BENDING DIAGRAMS" & "BAR LIST - BRIDGE A", see Dwg. No. 58252.

For stage construction details, see Dwg. Nos. 58225 & 58226.

STATE OF ARKANSAS
LICENSED PROFESSIONAL ENGINEER
No. 16667
DANIEL R. GOAD
BRIDGE ENGINEER

SHEET 1 OF 12
DETAILS OF 118'-0" COMPOSITE PLATE GIRDER SPAN I-49 OVER VAN ASCHE DRIVE

ROUTE SEC.

ARKANSAS STATE HIGHWAY COMMISSION

LITTLE ROCK, ARK.

DRAWN BY: CWT DATE: MAY 2015 FILENAME: BBB0414A4_SI.dgn
CHECKED BY: ABH DATE: AUG. 2015 SCALE: AS SHOWN
DESIGNED BY: DRG DATE: MAY 2015

BRIDGE NO. A7381 DRAWING NO. 58241

jeskinner 3/20/2016 3:36:00 PM
REVISED DATE:
\\OLLIARCHIVE\Projects\LITProjects\201I\I001707 - I-540 Widening & Interchange Improvement\Drawings\I540-VASCHE-S30r-SX.dgn

DATE REVISED	DATE FILMED	DATE REVISED	DATE FILMED

FED. ROAD DIST. NO.	STATE	FED. AID PROJ. NO.	SHEET NO.	TOTAL SHEETS
6	ARK.			
JOB NO.		BB0414	519	886
(1) A7381	118'-0" PL GIRDER SPAN			58242

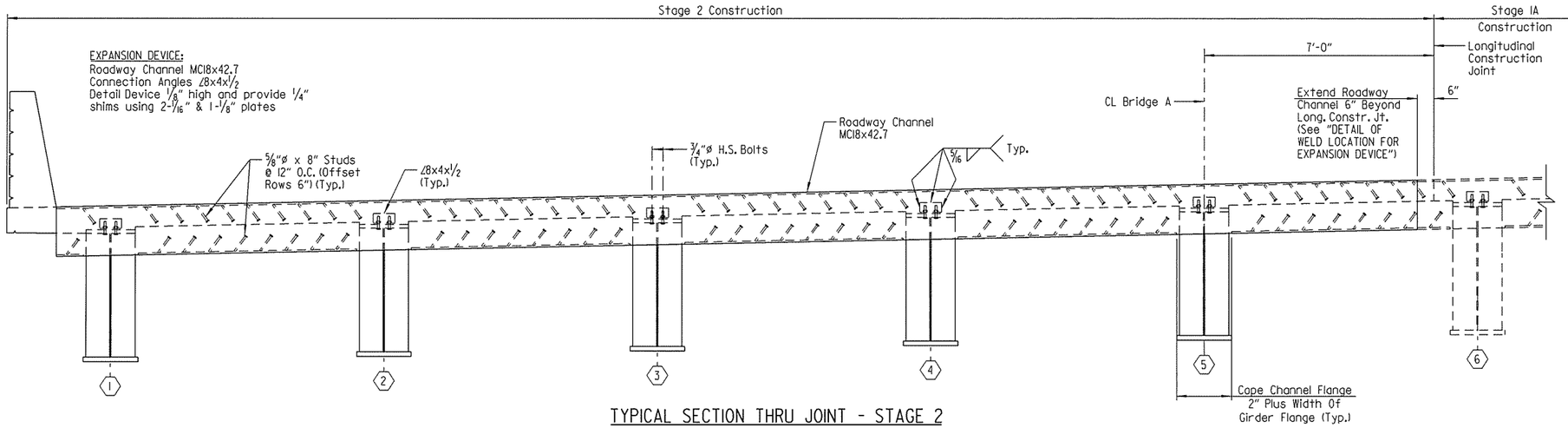

TYPICAL SECTION THRU JOINT - STAGE 2

(Bridge A, Looking Ahead)
Scale: 1/2" = 1'-0"

NOTE:
For details of poured silicone joint, see Dwg. No. 58251.

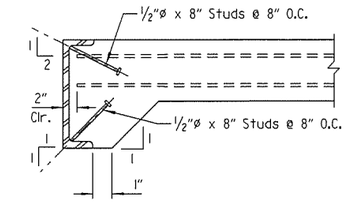

DETAIL OF ALTERNATE ANCHORS

No Scale

NOTE:
As an alternate to 5/8"ø studs, 1/2"ø x 8" studs spaced as shown may be used. Use weight of 5/8"ø stud as basis of measurement of structural steel.

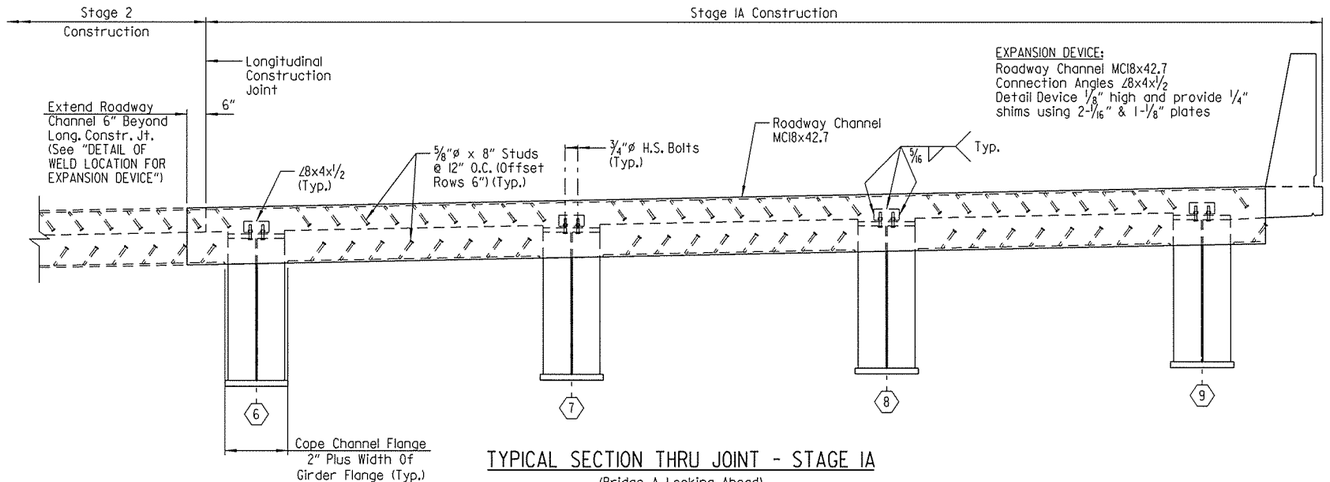

TYPICAL SECTION THRU JOINT - STAGE IA

(Bridge A, Looking Ahead)
Scale: 1/2" = 1'-0"

NOTE:
The profile of the Roadway Channel shall be established based on the vertical curve in conjunction with skew.

(X) Girder Number

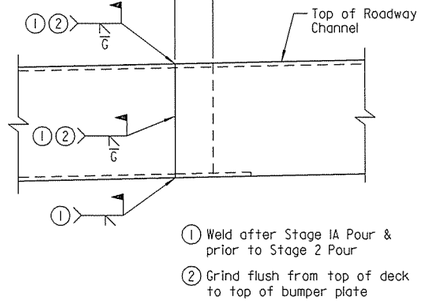

(1) Weld after Stage IA Pour & prior to Stage 2 Pour

(2) Grind flush from top of deck to top of bumper plate

DETAIL OF WELD LOCATION FOR EXPANSION DEVICE

(Looking Ahead)
No Scale

STATE OF ARKANSAS
LICENSED PROFESSIONAL ENGINEER
No.16667
DANIEL R. GOAD
BRIDGE ENGINEER

SHEET 2 OF 12
DETAILS OF 118'-0" COMPOSITE PLATE GIRDER SPAN I-49 OVER VAN ASCHE DRIVE

ROUTE SEC.

ARKANSAS STATE HIGHWAY COMMISSION
LITTLE ROCK, ARK.

DRAWN BY: CWT DATE: MAY 2015 FILENAME: BBB0414A4_S2.dgn
CHECKED BY: ABH DATE: AUG. 2015 SCALE: AS SHOWN
DESIGNED BY: DRG DATE: MAY 2015
BRIDGE NO. A7381 DRAWING NO. 58242

jeskinner 3/20/2016 3:36:01 PM
WORKSPACE: AHTD Bridge
\\CLITARCH\Projects\LITProjects\2011\1017707 - I-540 Widening & Interchange Improvement\Drawings\I540-VASCHE-S302-SX.dgn
REVISED DATE:

DATE REVISED	DATE FILMED	DATE REVISED	DATE FILMED	FED. ROAD DIST. NO.	STATE	FED. AID PROJ. NO.	SHEET NO.	TOTAL SHEETS
				6	ARK.			
				JOB NO.		BB0414	520	886
				(1) A7381		118'-0" PL GIRDER SPAN		58243

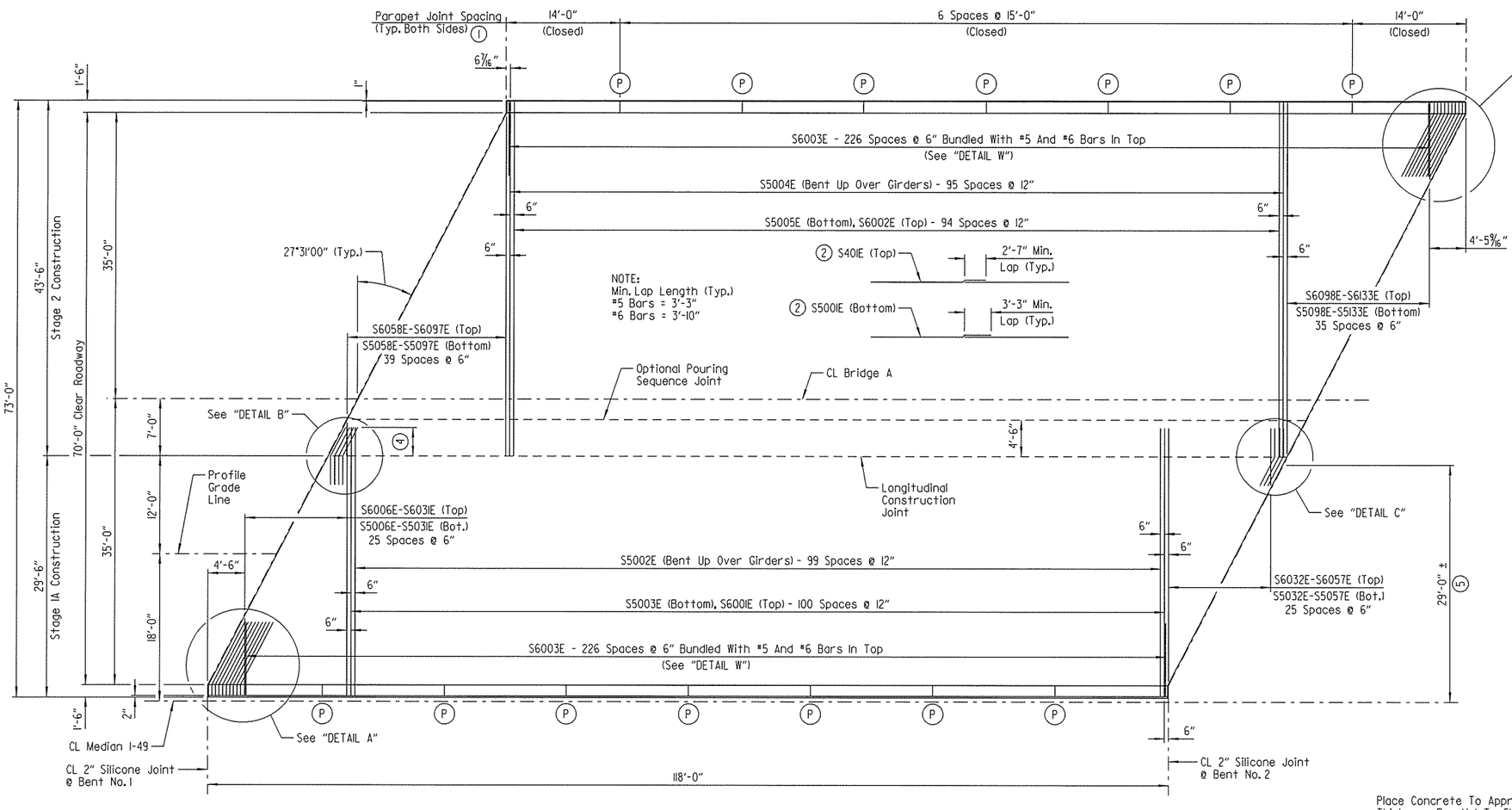

REINFORCING PLAN - BRIDGE A

Scale: 1/8" = 1'-0"

(1) Parapet joints designated with symbol (P) shall be partial depth joints stopped 1'-2" from top of slab.

NOTE:
The 1/2" x 1" poured joint sealer (Type 3 or 4) in slab shall conform to Subsections 501.02 (h) and 501.05 (j). Backer rod filler will not be required. Joint sealer shall be measured and paid for as "CLASS S(AE) CONCRETE-BRIDGE". This joint shall be formed. Seal must be Gray or other color similar to concrete.

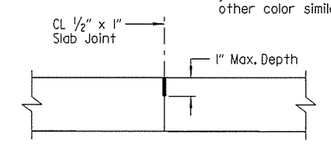

LONGITUDINAL CONSTRUCTION JOINT DETAIL

No Scale

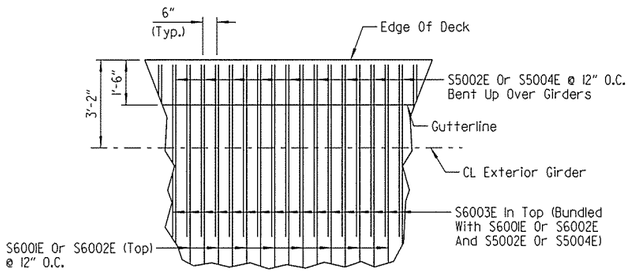

DETAIL W

No Scale

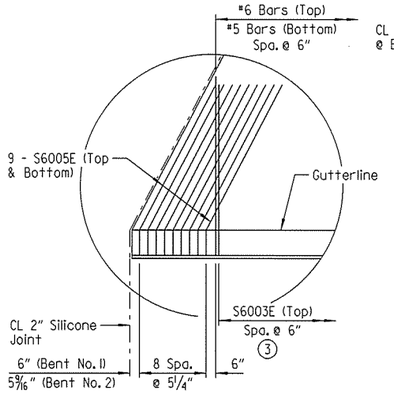

DETAIL A

Scale: 1/4" = 1'-0"

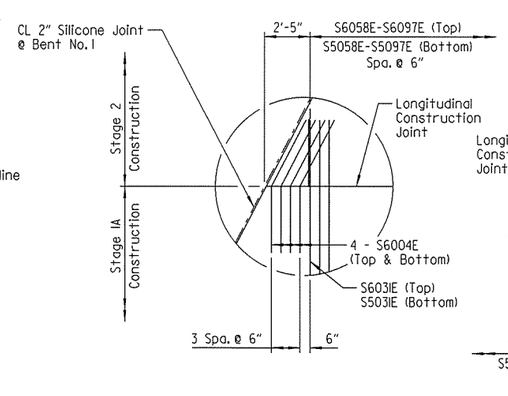

DETAIL B

Scale: 1/4" = 1'-0"

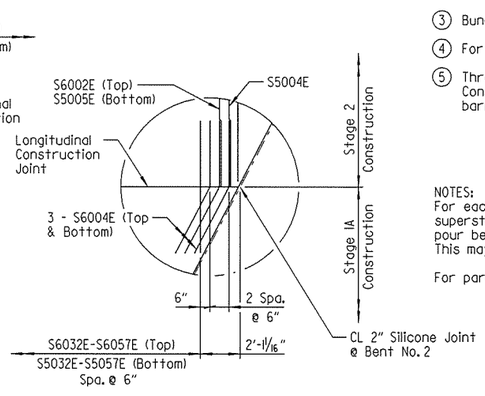

DETAIL C

Scale: 1/4" = 1'-0"

(2) Placed as shown on "TYPICAL SECTION - STAGE 1A" and "TYPICAL SECTION - STAGE 2" on Dwg. No. 58241.

(3) Bundled with #5 and #6 Bars in top

(4) For bar projection lengths, see Dwg. No. 58241.

(5) Threaded inserts shall be cast in place in Stage 1A Construction to accommodate the connection of temporary barrier. See Standard Drawing TC-4 for additional details.

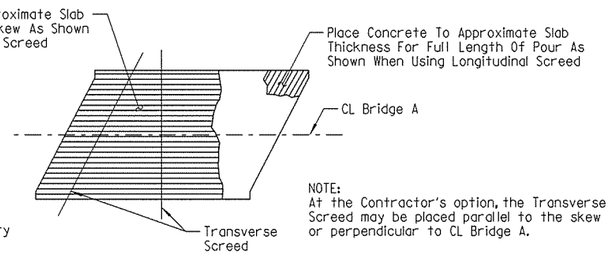

NOTE:
At the Contractor's option, the Transverse Screed may be placed parallel to the skew or perpendicular to CL Bridge A.

CONCRETE PLACEMENT PROCEDURE

No Scale

NOTES:
For each stage of construction, concrete in bridge superstructure shall be consolidated for the entire pour before any concrete has taken its initial set. This may require the use of a retarding agent.

For parapet reinforcing details, see Dwg. No. 58250.

STATE OF ARKANSAS LICENSED PROFESSIONAL ENGINEER No. 16667 DANIEL R. GOAD

BRIDGE ENGINEER

SHEET 3 OF 12
DETAILS OF 118'-0" COMPOSITE PLATE GIRDER SPAN
I-49 OVER VAN ASCHE DRIVE

ROUTE SEC.

ARKANSAS STATE HIGHWAY COMMISSION
LITTLE ROCK, ARK.

DRAWN BY: CWT DATE: MAY 2015 FILENAME: BBB0414A4_S3.dgn
CHECKED BY: ABH DATE: AUG. 2015 SCALE: AS SHOWN
DESIGNED BY: DRG DATE: MAY 2015
BRIDGE NO. A7381 DRAWING NO. 58243

jeskinner 3/20/2016 3:36:01 PM
WORKSPACE: AHTD BridgeStandards
\\GLITARCHDN\Projects\GLITProjects\2011\10177O7 - I-540 Widening & Interchange Improvement\Drawings\I540-VASCHE-S303-SB.dgn
REVISED DATE:

DATE REVISED	DATE FILMED	DATE REVISED	DATE FILMED	FED. ROAD DIST. NO.	STATE	FED. AID PROJ. NO.	SHEET NO.	TOTAL SHEETS
				6	ARK.			
				JOB NO.		BB0414	521	886
				(1) A7381		118'-0" PL GIRDER SPAN		58244

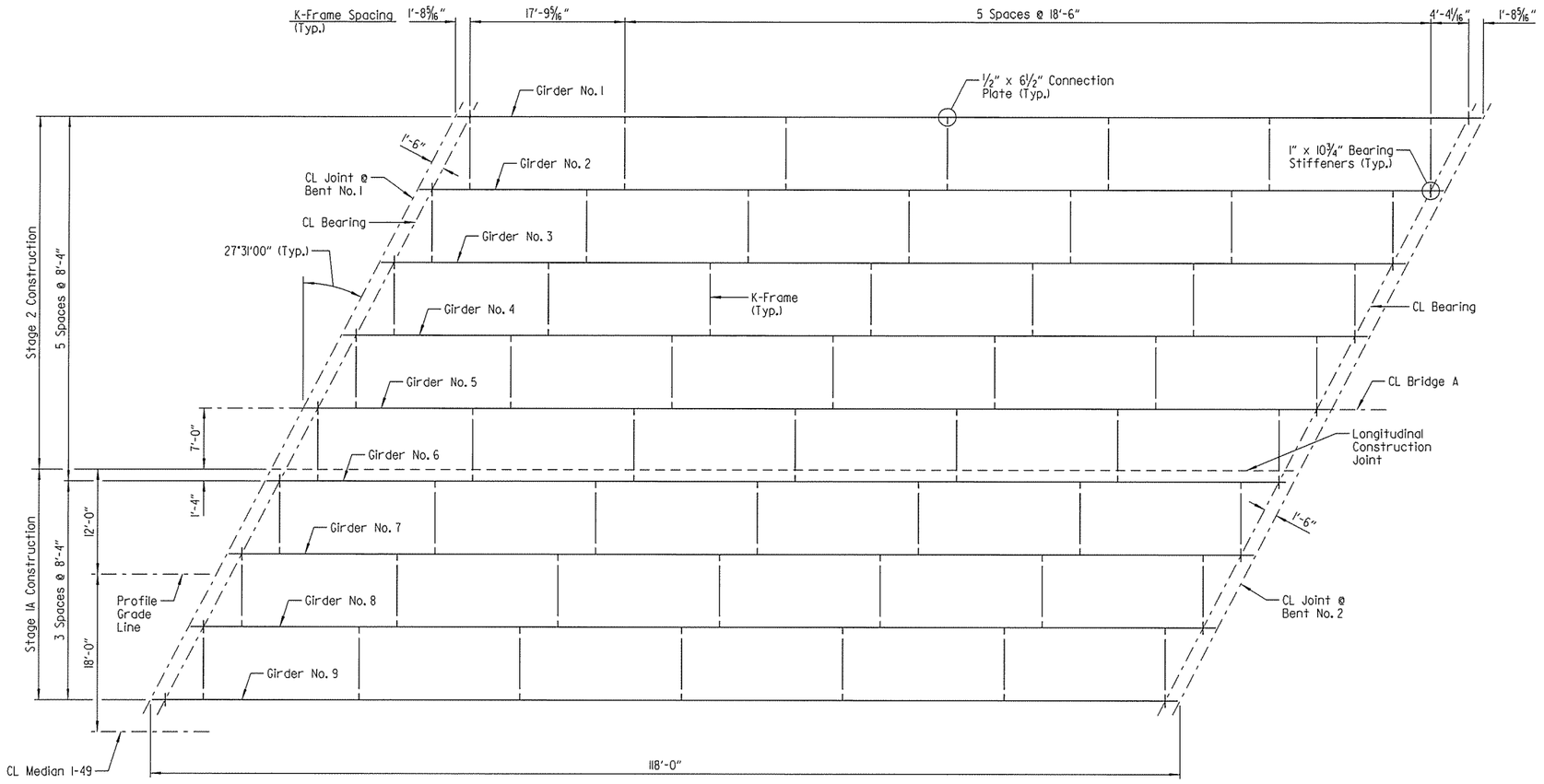

FRAMING PLAN - BRIDGE A

Scale: 1/8" = 1'-0"

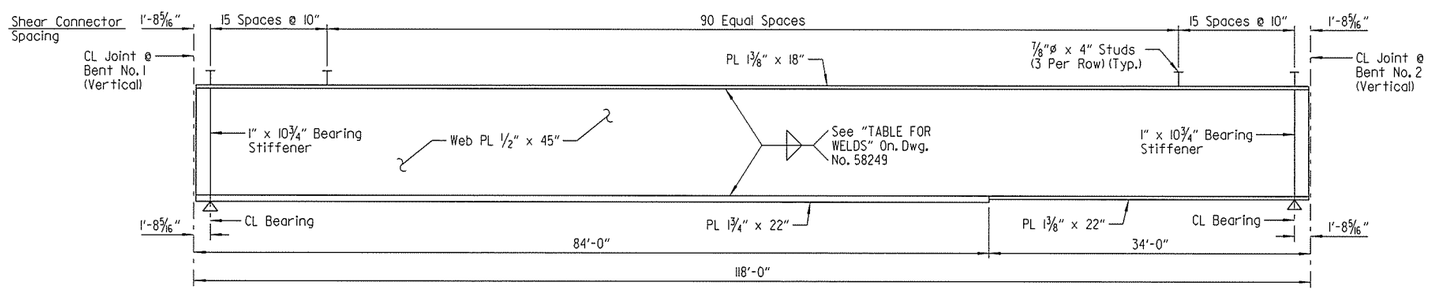

GIRDER ELEVATION - BRIDGE A

(Dimensions Measured Along CL Girder)
No Scale

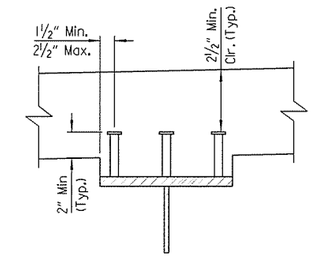

Stud shear connectors shown shall be 7/8"ø x 4" long, granular flux filled, solid fluxed or equal, and automatically end welded to the flange in accordance with the recommendations of the Manufacturer. 3/4"ø studs may be used in place of the 7/8"ø studs shown, at the ratio of 1.36 - 3/4"ø studs in place of one 7/8"ø stud. 7/8"ø studs will be used as basis for measurement of structural steel.

SHEAR CONNECTOR DETAIL

No Scale

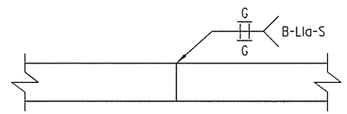

Equal Thickness (Web)

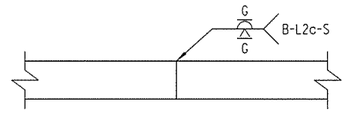

Equal Thickness (Flange)

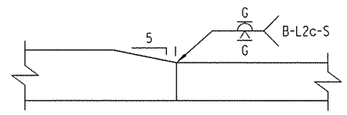

Unequal Thickness (Flange)

DETAILS OF WELDED SPLICES

No Scale

NOTES:
For "BEARING STIFFENER DETAIL", "CONNECTION PLATE DETAIL" and "K-FRAME DETAIL", see Dwg. No. 58249 .

For "GENERAL NOTES", see Dwg. No. 58252 .

STATE OF ARKANSAS
LICENSED PROFESSIONAL ENGINEER
No. 16667
DANIEL R. GOALD
BRIDGE ENGINEER

SHEET 4 OF 12
DETAILS OF 118'-0" COMPOSITE PLATE GIRDER SPAN
I-49 OVER VAN ASCHE DRIVE
ROUTE SEC.
ARKANSAS STATE HIGHWAY COMMISSION
LITTLE ROCK, ARK.

DRAWN BY: CWT DATE: MAY 2015 FILENAME: BBB0414A4_S4.dgn
CHECKED BY: ABH DATE: AUG. 2015 SCALE: AS SHOWN
DESIGNED BY: DRG DATE: MAY 2015
BRIDGE NO. A7381 DRAWING NO. 58244

jeskinner 3/20/2016 3:36:02 PM
W:\DESIGN\E_AHTD_Bridge\Projects\I-540 Widening & Interchange Improvement\Drawings\I540-VASCHE-S304-SF.dgn
V:\OLITARCHIVE\Projects\LITProjects\2011\11017707 - I-540 Widening & Interchange Improvement\Drawings\I540-VASCHE-S304-SF.dgn
REVISED DATE:

DATE REVISED	DATE FILMED	DATE REVISED	DATE FILMED	FED. ROAD DIST. NO.	STATE	FED. AID PROJ. NO.	SHEET NO.	TOTAL SHEETS
				6	ARK.			
				JOB NO.		BB0414	522	886
				①	B7381	118'-0" PL GIRDER SPAN		58245

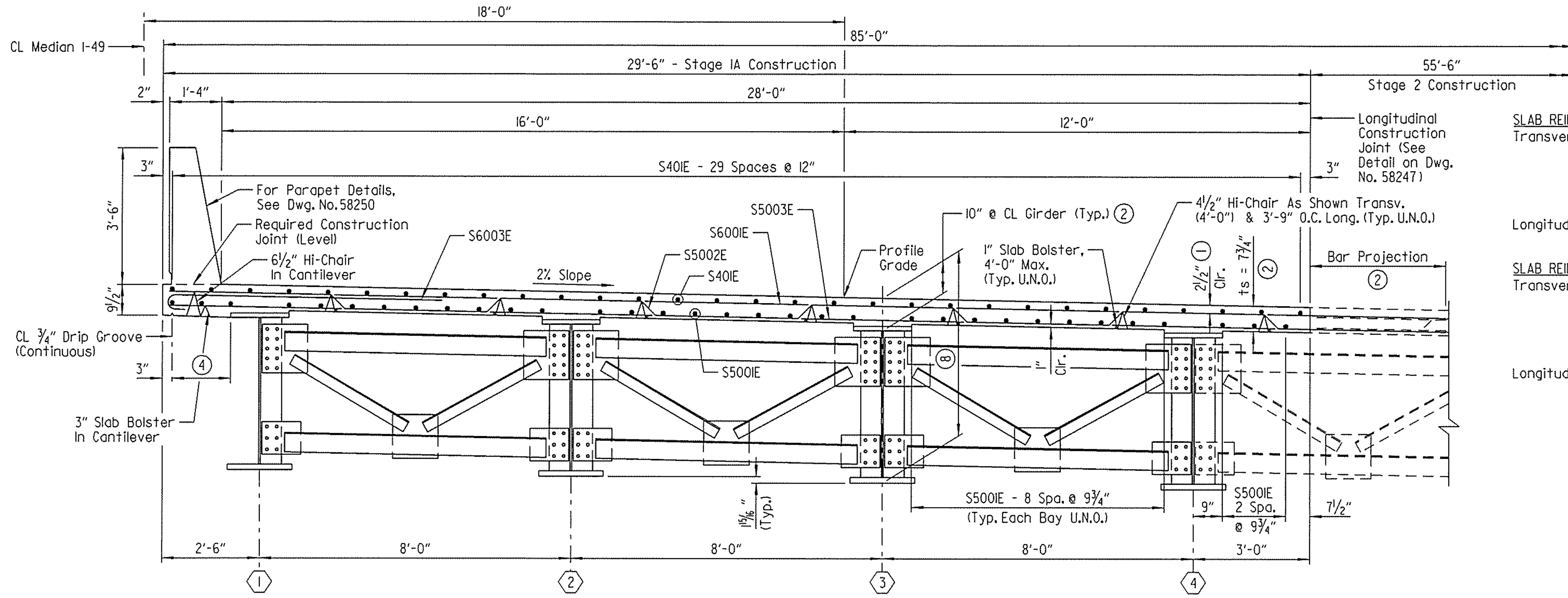

TYPICAL SECTION - STAGE IA

(Bridge B, Looking Ahead)
Scale: ½" = 1'-0"

SLAB REINFORCING (STAGE IA):

Transverse: S5002E @ 12" O.C. Bent Up Over Girders — Alternating
S6001E @ 12" O.C. In Top — Alternating
S5003E @ 12" O.C. In Bottom
S6003E Bundled with S5002E & S6001E In Top @ 6" O.C. At Gutterline

Longitudinal: S401E (Placed As Shown In Top)
S5001E (Placed As Shown In Bottom)

SLAB REINFORCING (STAGE 2):

Transverse: S5004E @ 12" O.C. Bent Up Over Girders — Alternating
S6002E @ 12" O.C. In Top — Alternating
S5005E @ 12" O.C. In Bottom
S6003E Bundled with S5004E & S6002E In Top @ 6" O.C. At Gutterline

Longitudinal: S401E (Placed As Shown In Top)
S5001E (Placed As Shown In Bottom)

LEGEND

U.N.O. = Unless Noted Otherwise

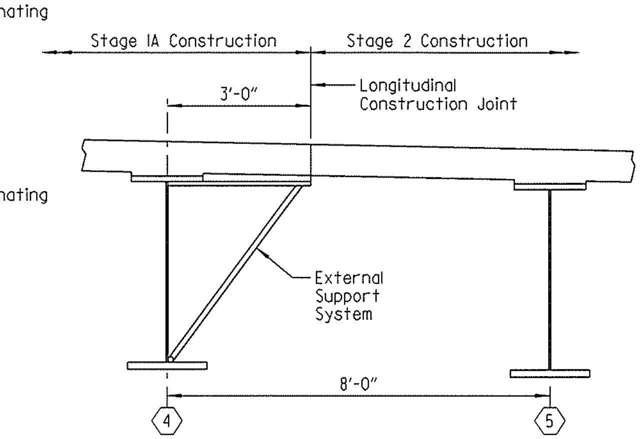

NOTE:
Stage IA external supports at Girder 4 shall remain in place until after completion of the Stage 2 deck pour. See Subsection 802.15 for additional information regarding the removal of the support system.

DECK SUPPORT AT LONGITUDINAL CONSTRUCTION JOINT

(Looking Ahead)
No Scale

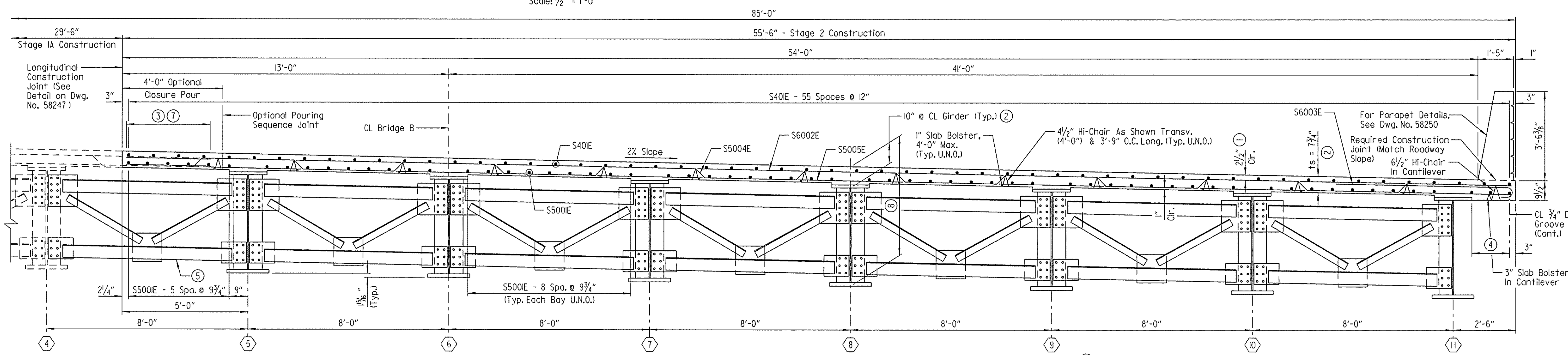

TYPICAL SECTION - STAGE 2

(Bridge B, Looking Ahead)
Scale: ½" = 1'-0"

⑥ Bar Projection:
3'-4" for S5002E and S5003E
3'-11" for S6001E

⑦ 3'-10" min. lap for #6 top bars
3'-3" min. lap for #5 bottom bars

⑧ 4'-7" + bottom flange thickness, measured @ CL Girder (Typ.)

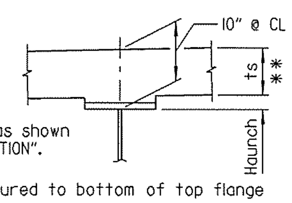

Note: t_s = Slab Thickness as shown on "TYPICAL SECTION".

* Measured to bottom of top flange

** Tolerance when removable deck forming is used is + ½", - ¼". Haunch forming is required and shall be adjusted to maintain slab thickness tolerance.

ADJUSTMENT FOR SLAB THICKNESS TOLERANCE WHEN REMOVABLE DECK FORMING IS USED

No Scale

Haunch dimension may vary within the following limits to maintain the grade and slab thickness tolerance: minimum - occurs when the top flange contacts the bottom reinforcing steel; maximum - top flange thickness plus 1¾". No increase in concrete and structural steel quantities will be made to maintain tolerances.

Tolerances shown are applicable only when removable deck forming is used. See Std. Dwg. No. 55005 for tolerances when permanent steel deck forms are used. Payment for concrete shall be based on removable deck forming.

NOTES:
At the Contractor's option, one epoxy coated #5 bar in the top and one epoxy coated #5 bar in the bottom may be substituted for each bar S5002E & S5004E. Payment will be based on the weight of bars S5002E & S5004E.

Class 2 Protective Surface Treatment shall be applied to the roadway surface and roadway face of concrete parapet. Class 3 Textured Coating Finish shall be applied to bridge surfaces as specified in SP JOB NO. BB0414 "TEXTURED COATING FINISH" and in accordance with Subsection 802.19. Textured Coating Finish shall not be applied on surfaces where Class 2 Protective Surface Treatment is applied.

For "BAR BENDING DIAGRAMS" & "BAR LIST - BRIDGE B", see Dwg. No. 58252.

For stage construction details, see Dwg. Nos. 58225 & 58226.

① TOLERANCE:
Minus = ¼"
Plus = Amount of slab thickening used to meet slab thickness tolerance - see "ADJUSTMENT FOR SLAB THICKNESS TOLERANCE WHEN REMOVABLE DECK FORMING IS USED".

② See "ADJUSTMENT FOR SLAB THICKNESS TOLERANCE WHEN REMOVABLE DECK FORMING IS USED".

③ Stage 2 transverse reinforcing steel shall not be tied to Stage IA transverse reinforcing steel.

④ S5001E - 2 spaces @ 9" in cantilever

⑤ K-Frames between girders 4 & 5 shall be installed with bolts loose when girders are erected in Stage 2. Bolts shall be fully tightened immediately after placing slab in Stage 2. Alternatively, the holes in the connection plate on one side of these K-frames may be field drilled after placing slab in Stage 2.

STATE OF ARKANSAS LICENSED PROFESSIONAL ENGINEER No. 16667 DANIEL R. GOAD

BRIDGE ENGINEER

SHEET 5 OF 12
DETAILS OF 118'-0" COMPOSITE PLATE GIRDER SPAN
I-49 OVER VAN ASCHE DRIVE

ROUTE SEC.

ARKANSAS STATE HIGHWAY COMMISSION
LITTLE ROCK, ARK.

DRAWN BY: CWT DATE: MAY 2015 FILENAME: BBB0414B4_S5.dgn
CHECKED BY: ABH DATE: AUG. 2015 SCALE: AS SHOWN
DESIGNED BY: DRG DATE: MAY 2015
BRIDGE NO. B7381 DRAWING NO. 58245

jesklnner 3/20/2016 3:36:02 PM
WORKSPACE: AHTD Bridge
\\GLITARCHON\Projects\LITProjects\2011\011707 - I-540 Widening & Interchange Improvement\Drawings\I540-VASCHE-S305-SX.dgn
REVISED DATE:

DATE REVISED	DATE FILMED	DATE REVISED	DATE FILMED	FED. ROAD DIST. NO.	STATE	FED. AID PROJ. NO.	SHEET NO.	TOTAL SHEETS
				6	ARK.			
				JOB NO.		BB0414	523	886
				(1) B7381		118'-0" PL GIRDER SPAN		58246

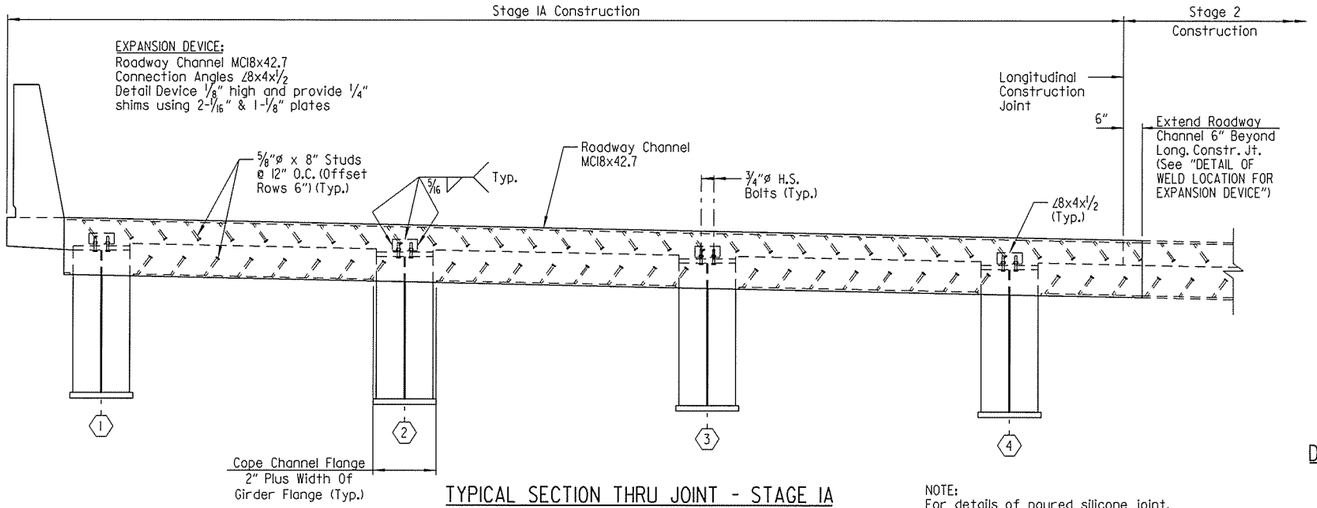

TYPICAL SECTION THRU JOINT - STAGE IA

(Bridge B, Looking Ahead)
Scale: 1/2" = 1'-0"

NOTE:
For details of poured silicone joint, see Dwg. No. 58251 .

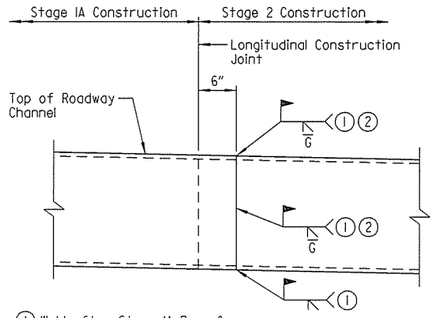

(1) Weld after Stage IA Pour & prior to Stage 2 Pour

(2) Grind flush from top of deck to top of bumper plate

DETAIL OF WELD LOCATION FOR EXPANSION DEVICE

(Looking Ahead)
No Scale

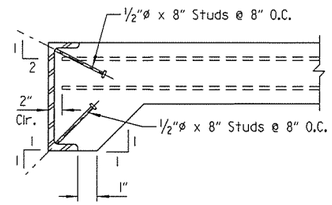

DETAIL OF ALTERNATE ANCHORS

No Scale

NOTE:
As an alternate to 5/8"ø studs, 1/2"ø x 8" studs spaced as shown may be used. Use weight of 3/8"ø stud as basis of measurement of structural steel.

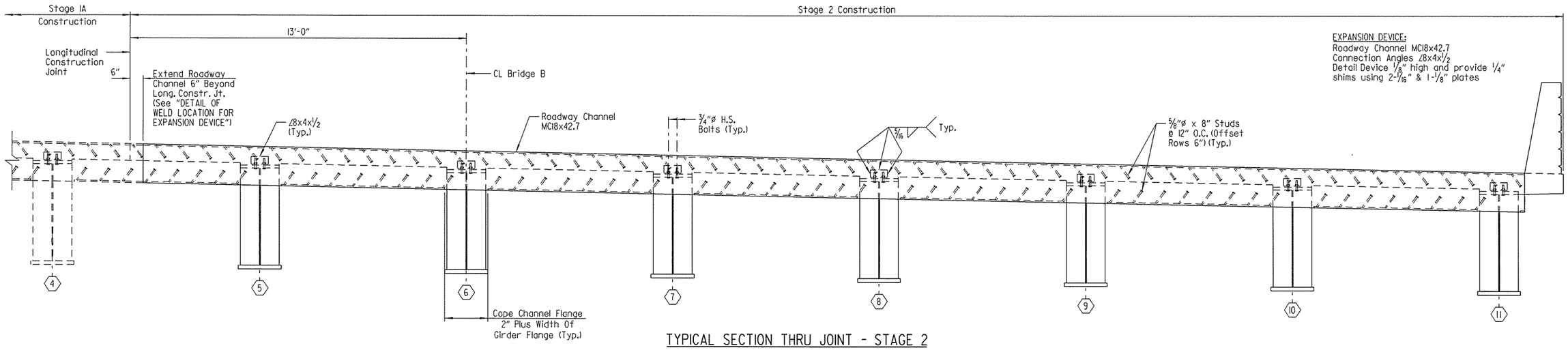

TYPICAL SECTION THRU JOINT - STAGE 2

(Bridge B, Looking Ahead)
Scale: 1/2" = 1'-0"

EXPANSION DEVICE:
Roadway Channel MC18x42.7
Connection Angles ∠8x4x1/2
Detail Device 1/8" high and provide 1/4" shims using 2-1/16" & 1-1/8" plates

NOTE:
The profile of the Roadway Channel shall be established based on the vertical curve in conjunction with skew.

STATE OF ARKANSAS
LICENSED PROFESSIONAL ENGINEER
No.16667
DANIEL R. GOAD
BRIDGE ENGINEER

SHEET 6 OF 12
DETAILS OF 118'-0" COMPOSITE PLATE GIRDER SPAN
I-49 OVER VAN ASCHE DRIVE

ROUTE SEC.

ARKANSAS STATE HIGHWAY COMMISSION
LITTLE ROCK, ARK.

DRAWN BY: CWT DATE: MAY 2015 FILENAME: BBB0414B4_S6.dgn
CHECKED BY: ABH DATE: AUG. 2015 SCALE: AS SHOWN
DESIGNED BY: DRG DATE: MAY 2015
BRIDGE NO. B7381 DRAWING NO. 58246

jeskinner 3/20/2016 3:36:03 PM
WORKGROUP: AHTD Bridge
V:\GLITARCH\Projects\LITProjects\20IN\I001707 - I-540 Widening & Interchange Improvement\Drawings\I540-VASCHE-S306-SX.dgn
REVISED DATE:

DATE REVISED	DATE FILMED	DATE REVISED	DATE FILMED	FED. ROAD DIST. NO.	STATE	FED. AID PROJ. NO.	SHEET NO.	TOTAL SHEETS
				6	ARK.			
				JOB NO.		BB0414	524	886
				(1) B7381	118'-0" PL GIRDER SPAN			58247

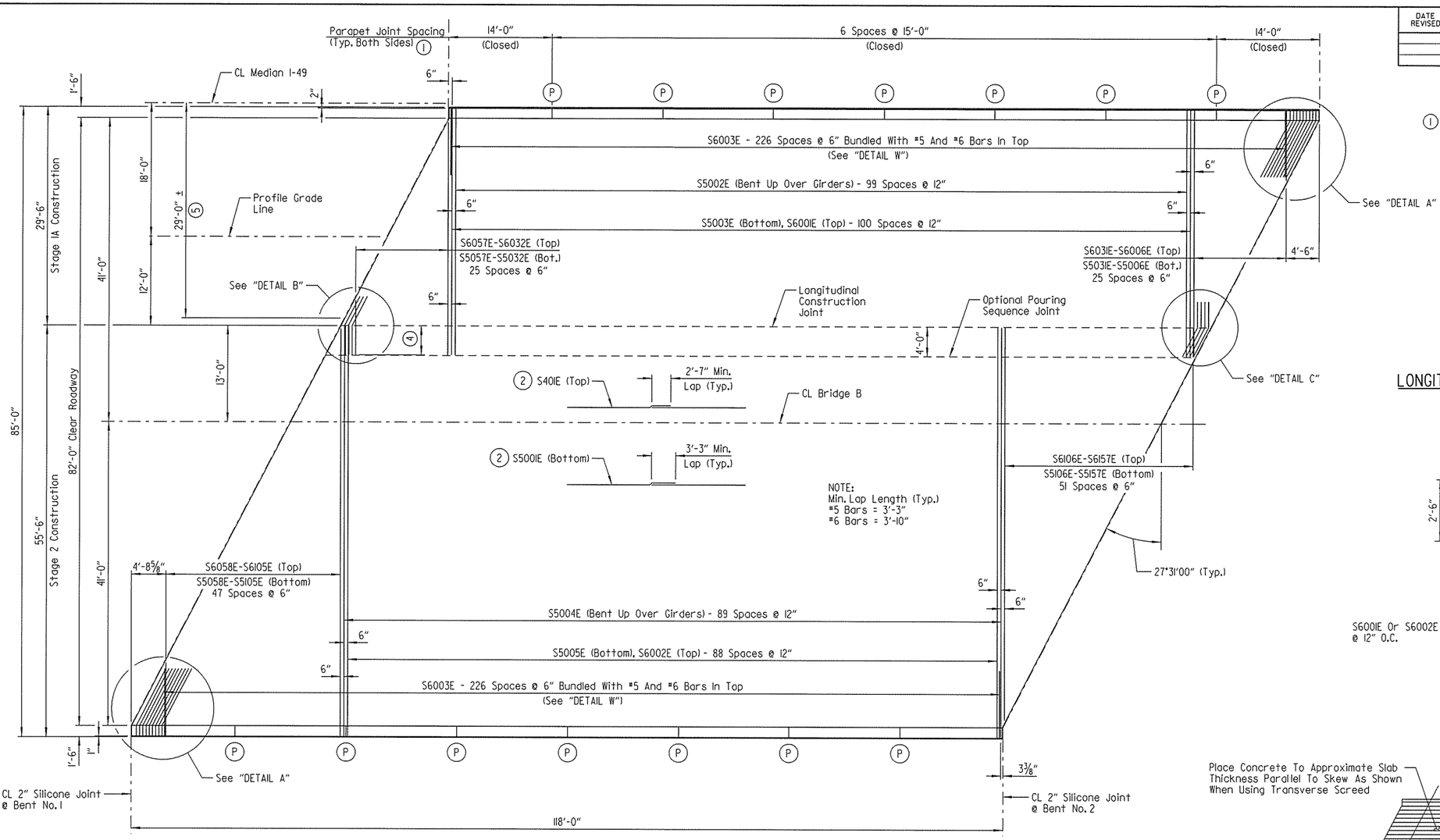

REINFORCING PLAN - BRIDGE B

Scale: 1/8" = 1'-0"

(1) Parapet joints designated with symbol (P) shall be partial depth joints stopped 1'-2" from top of slab.

NOTE:
The ½" x 1" poured joint sealer (Type 3 or 4) in slab shall conform to Subsections 501.02 (h) and 501.05 (j). Backer rod filler will not be required. Joint sealer shall be measured and paid for as "CLASS S(AE) CONCRETE-BRIDGE". This joint shall be formed. Seal must be Gray or other color similar to concrete.

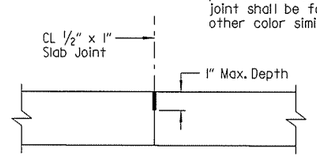

LONGITUDINAL CONSTRUCTION JOINT DETAIL

No Scale

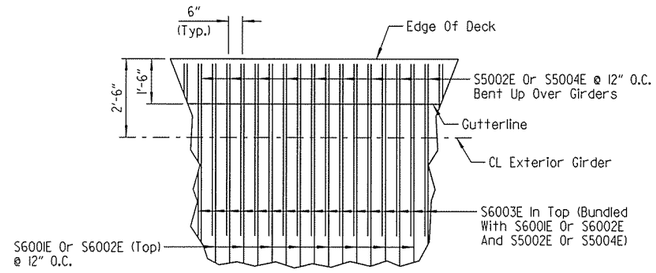

DETAIL W

No Scale

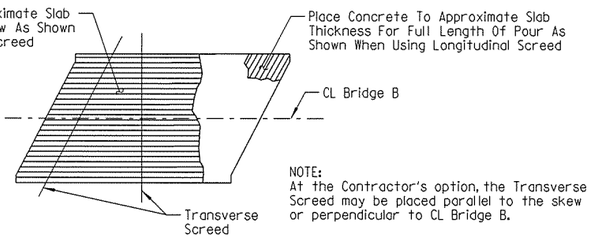

NOTE:
At the Contractor's option, the Transverse Screed may be placed parallel to the skew or perpendicular to CL Bridge B.

CONCRETE PLACEMENT PROCEDURE

No Scale

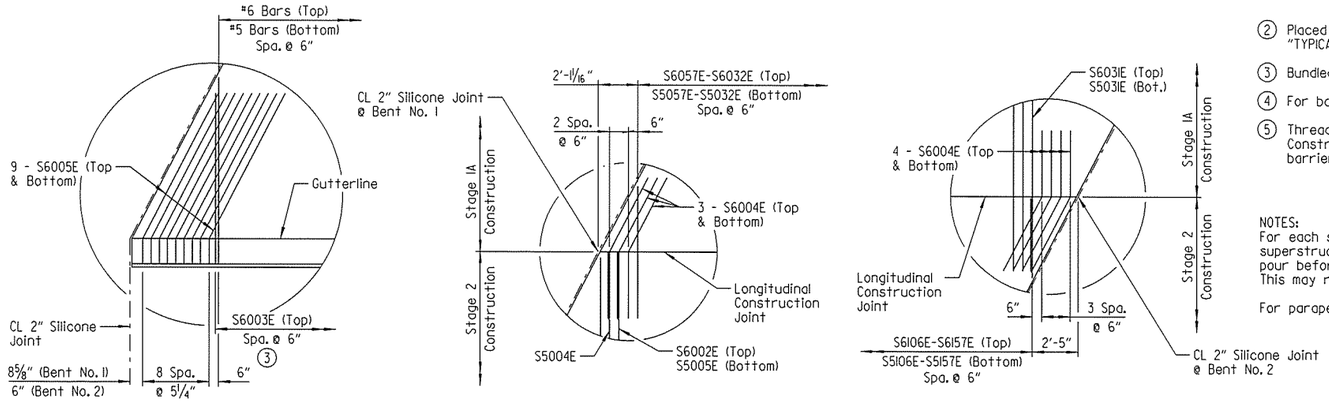

DETAIL A

Scale: 1/4" = 1'-0"

DETAIL B

Scale: 1/4" = 1'-0"

DETAIL C

Scale: 1/4" = 1'-0"

(2) Placed as shown on "TYPICAL SECTION - STAGE 1A" and "TYPICAL SECTION - STAGE 2" on Dwg. No. 58245.

(3) Bundled with #5 and #6 Bars in top

(4) For bar projection lengths, see Dwg. No. 58245.

(5) Threaded inserts shall be cast in place in Stage 1A Construction to accommodate the connection of temporary barrier. See Standard Drawing TC-4 for additional details.

NOTES:
For each stage of construction, concrete in bridge superstructure shall be consolidated for the entire pour before any concrete has taken its initial set. This may require the use of a retarding agent.

For parapet reinforcing details, see Dwg. No. 58250.

STATE OF ARKANSAS
LICENSED PROFESSIONAL ENGINEER
No. 16667
DANIEL R. GOAD
BRIDGE ENGINEER

SHEET 7 OF 12
DETAILS OF 118'-0" COMPOSITE PLATE GIRDER SPAN I-49 OVER VAN ASCHE DRIVE

ROUTE SEC.

ARKANSAS STATE HIGHWAY COMMISSION

LITTLE ROCK, ARK.

DRAWN BY: CWT DATE: MAY 2015 FILENAME: BBB0414B4_S7.dgn
CHECKED BY: ABH DATE: AUG. 2015 SCALE: AS SHOWN
DESIGNED BY: DRG DATE: MAY 2015

BRIDGE NO. B7381 DRAWING NO. 58247

jeskinner 3/20/2016 3:36:03 PM
WORKGROUP: AHTD Bridge
V:\GUITARCHON\Projects\GUITProjects\20111\101707 - I-540 Widening & Interchange Improvement\Drawings\I540-VASCHE-S307-SB.dgn
REVISED DATE:

DATE REVISED	DATE FILMED	DATE REVISED	DATE FILMED

FED. ROAD DIST. NO.	STATE	FED. AID PROJ. NO.	SHEET NO.	TOTAL SHEETS
6	ARK.			
JOB NO.		BB0414	525	886
(1) B7381	118'-0" PL GIRDER SPAN			58248

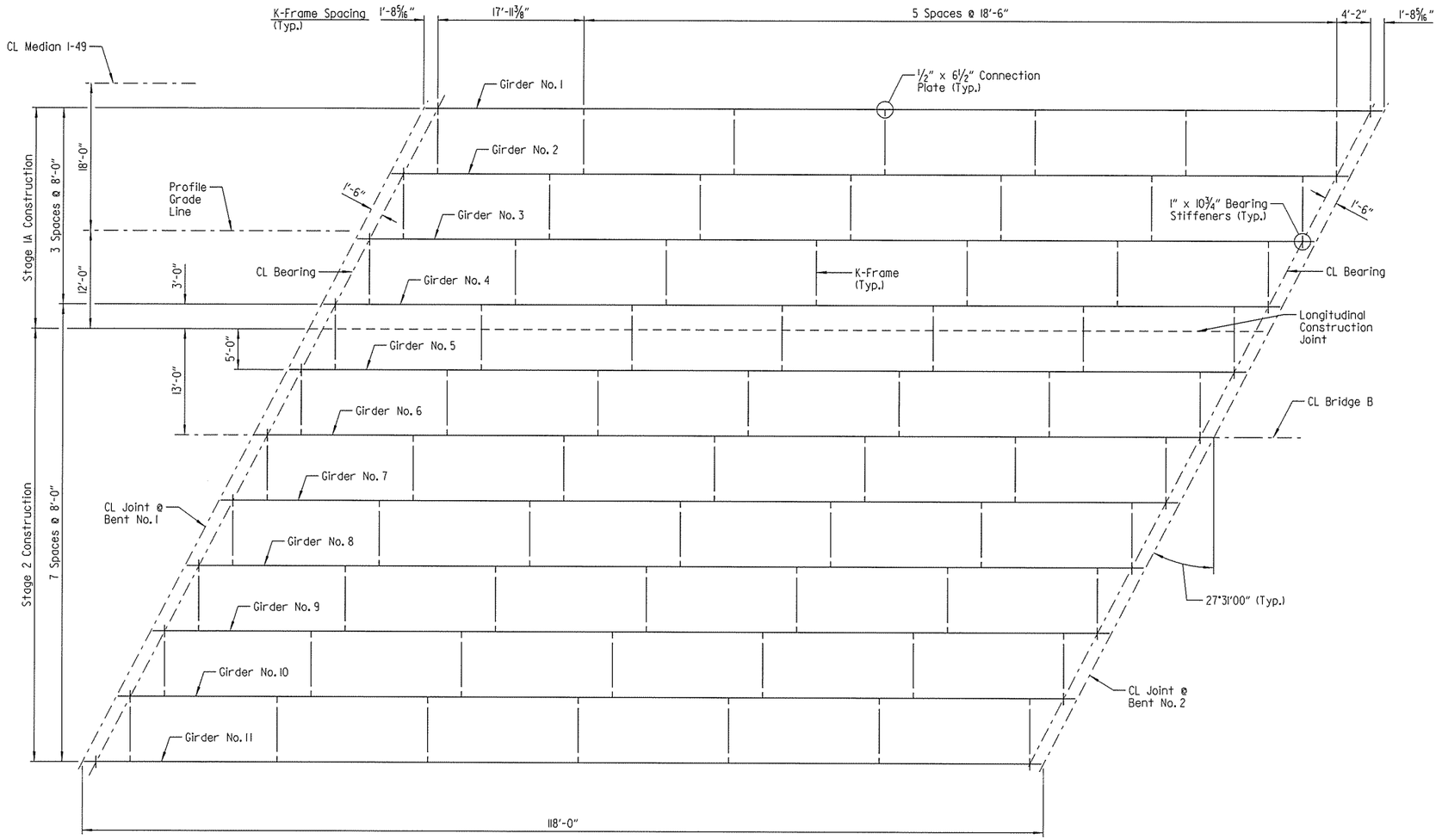

FRAMING PLAN - BRIDGE B

Scale: 1/8" = 1'-0"

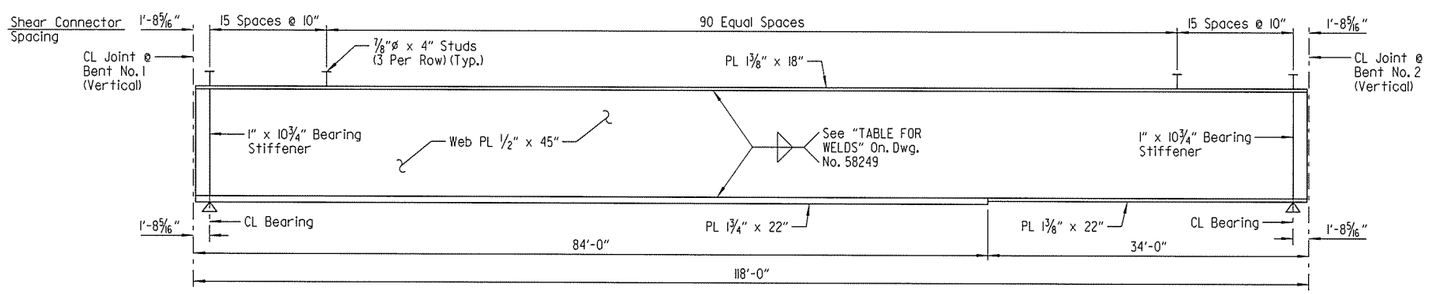

GIRDER ELEVATION - BRIDGE B

(Dimensions Measured Along CL Girder)
No Scale

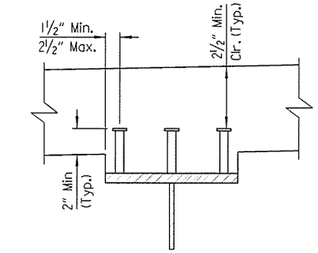

Stud shear connectors shown shall be 7/8"ø x 4" long, granular flux filled, solid fluxed or equal, and automatically end welded to the flange in accordance with the recommendations of the Manufacturer. 3/4"ø studs may be used in place of the 7/8"ø studs shown, at the ratio of 1.361 - 3/4"ø studs in place of one 7/8"ø stud. 7/8"ø studs will be used as basis for measurement of structural steel.

SHEAR CONNECTOR DETAIL

No Scale

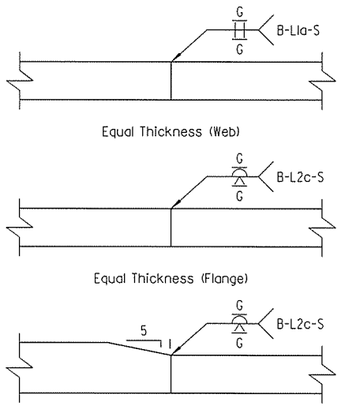

DETAILS OF WELDED SPLICES

No Scale

NOTES:
For "BEARING STIFFENER DETAIL", "CONNECTION PLATE DETAIL" and "K-FRAME DETAIL", see Dwg. No. 58249.

For "GENERAL NOTES", see Dwg. No. 58252.

STATE OF ARKANSAS
LICENSED
PROFESSIONAL ENGINEER
No. 16667
DANIEL R. GOAD
BRIDGE ENGINEER

SHEET 8 OF 12
DETAILS OF 118'-0" COMPOSITE PLATE GIRDER SPAN
I-49 OVER VAN ASCHE DRIVE
ROUTE SEC.
ARKANSAS STATE HIGHWAY COMMISSION
LITTLE ROCK, ARK.

DRAWN BY: CWT DATE: MAY 2015 FILENAME: BBB0414B4_S8.dgn
CHECKED BY: ABH DATE: AUG. 2015 SCALE: AS SHOWN
DESIGNED BY: DRG DATE: MAY 2015
BRIDGE NO. B7381 DRAWING NO. 58248

jeskinner 3/20/2016 3:36:03 PM
WORKSPACE: AHTD Workspace
\\CLITARCH01\Projects\CLITProjects\20111101707 - I-540 Widening & Interchange Improvement\Drawings\I540-VASCHE-S308-SF.dgn
REVISED DATE:

DATE REVISED	DATE FILMED	DATE REVISED	DATE FILMED	FED. ROAD DIST. NO.	STATE	FED. AID PROJ. NO.	SHEET NO.	TOTAL SHEETS
				6	ARK.			
				JOB NO.		BB0414	526	886
				(1) A738I & B738I 118'-0" PL GIRDER SPAN				58249

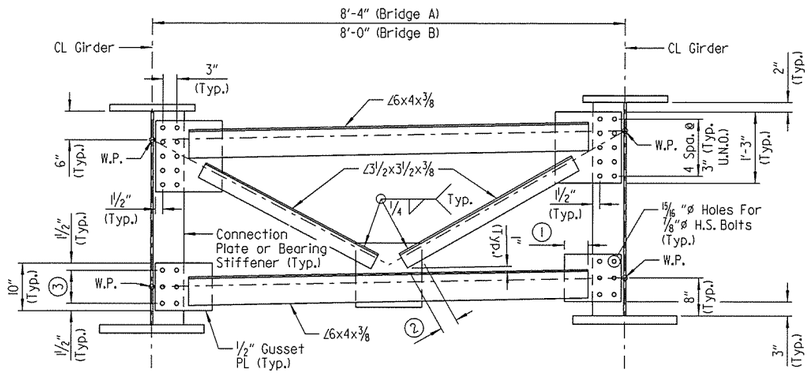

K-FRAME DETAIL
No Scale

TABLE FOR WELDS		
Material Thickness Of Thicker Part Joined (Inches)	Minimum Size Of Fillet Weld (Inches)	Single Pass Weld Must Be Used
To 3/4" Inclusive	1/4"	
Over 3/4"	5/16"	

NOTE:
When a fillet weld size, as shown on the plans, is larger than the minimum, the first pass shall be that specified for minimum size of fillet weld.

(1) 5" minimum weld length (Typ. - Top and Bottom Members)
(2) 3" minimum weld length (Typ. - Diagonal Members)
(3) 2 Spaces @ 3 1/2" (Typ. - Bottom Gusset Plates)

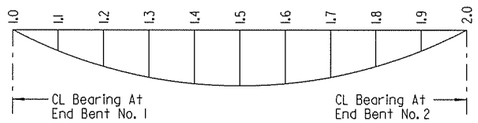

DEAD LOAD DEFLECTION DIAGRAM
No Scale

NOTE:
Camber for dead load deflection plus vertical curve +/- 1/4" tolerance. Deflections shown are from a chord from Centerline Bearing to Centerline Bearing. Vertical curve corrections are not included. Negative sign (-) indicates point above chord.

Dead load deflections shown are based on removable deck forms.

Revision to the deflection tables may be necessary upon review of the Contractor's submitted forming details.

TABLE OF DEAD LOAD DEFLECTIONS (INCHES) - BRIDGE A						
Point Of Deflection	Girders 1 & 9			Girders 2-8		
	Structural Steel	Structural Steel + Slab	Structural Steel + Slab + Parapet	Structural Steel	Structural Steel + Slab	Structural Steel + Slab + Parapet
1.0	0.000	0.000	0.000	0.000	0.000	0.000
1.1	0.359	1.269	1.427	0.380	1.322	1.392
1.2	0.678	2.398	2.701	0.718	2.501	2.632
1.3	0.930	3.288	3.708	0.983	3.424	3.603
1.4	1.090	3.856	4.354	1.152	4.016	4.225
1.5	1.146	4.055	4.583	1.212	4.226	4.445
1.6	1.090	3.856	4.354	1.152	4.016	4.225
1.7	0.930	3.288	3.708	0.983	3.424	3.603
1.8	0.678	2.398	2.701	0.718	2.501	2.632
1.9	0.359	1.269	1.427	0.380	1.322	1.392
2.0	0.000	0.000	0.000	0.000	0.000	0.000

TABLE OF DEAD LOAD DEFLECTIONS (INCHES) - BRIDGE B						
Point Of Deflection	Girders 1 & 11			Girders 2-10		
	Structural Steel	Structural Steel + Slab	Structural Steel + Slab + Parapet	Structural Steel	Structural Steel + Slab	Structural Steel + Slab + Parapet
1.0	0.000	0.000	0.000	0.000	0.000	0.000
1.1	0.359	1.172	1.325	0.379	1.283	1.339
1.2	0.678	2.213	2.509	0.717	2.427	2.533
1.3	0.929	3.034	3.445	0.981	3.322	3.466
1.4	1.089	3.560	4.048	1.151	3.897	4.065
1.5	1.145	3.744	4.263	1.210	4.100	4.277
1.6	1.089	3.560	4.048	1.151	3.897	4.065
1.7	0.929	3.034	3.445	0.981	3.322	3.466
1.8	0.678	2.213	2.509	0.717	2.427	2.533
1.9	0.359	1.172	1.325	0.379	1.283	1.339
2.0	0.000	0.000	0.000	0.000	0.000	0.000

(4) Clip with 1" Min. Radius

(4) If permanent steel deck forms are used, the Fabricator shall clip the plate as necessary to accomodate the deck form support.

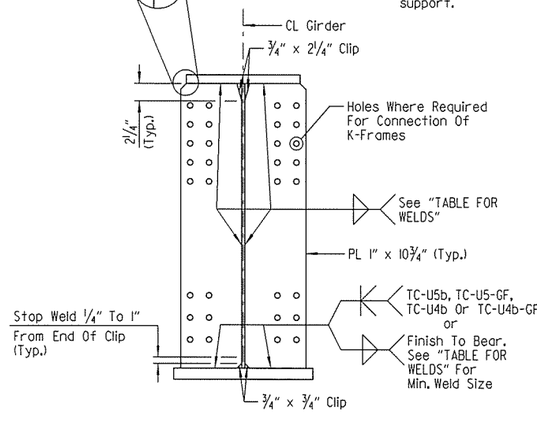

BEARING STIFFENER DETAIL
Scale: 1" = 1'-0"

NOTE:
Bearing Stiffeners to be fabricated so as to be vertical in their final position.

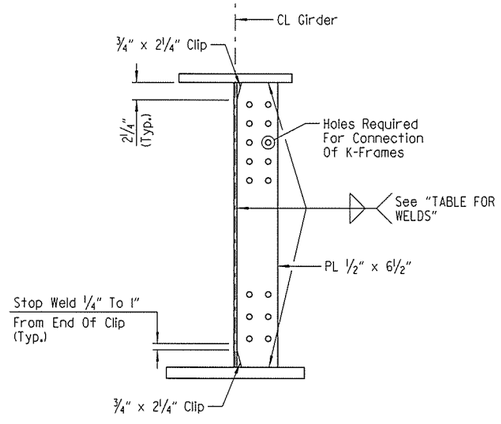

CONNECTION PLATE DETAIL
Scale: 1" = 1'-0"

LEGEND
U.N.O. = Unless Noted Otherwise

STATE OF ARKANSAS
LICENSED PROFESSIONAL ENGINEER
No.16667
DANIEL R. GOAD
BRIDGE ENGINEER

SHEET 9 OF 12
DETAILS OF 118'-0" COMPOSITE PLATE GIRDER SPAN
I-49 OVER VAN ASCHE DRIVE
ROUTE SEC.
ARKANSAS STATE HIGHWAY COMMISSION
LITTLE ROCK, ARK.

DRAWN BY: CWT DATE: JUNE 2015 FILENAME: BBB0414M4_S9.dgn
CHECKED BY: ABH DATE: AUG. 2015 SCALE: AS SHOWN
DESIGNED BY: DRG DATE: JUNE 2015
BRIDGE NO. A7381 & B7381 DRAWING NO. 58249

jeskinner 3/20/2016 3:36:04 PM
WORKSPACE: LRTD Bridge
\\CLITARCH\Projects\LITProjects\20IN\I017707 - I-540 Widening & Interchange Improvement\Drawings\I540-VASCHE-S309-SD.dgn
REVISED DATE:

DATE REVISED	DATE FILMED	DATE REVISED	DATE FILMED	FED. ROAD DIST. NO.	STATE	FED. AID PROJ. NO.	SHEET NO.	TOTAL SHEETS
				6	ARK.			
				JOB NO.		BB0414	527	886
				(1) A7381 & B7381 118'-0" PL GIRDER SPAN				58250

(P) CL Partial-Depth Parapet Joint (¼" to 1" Max.) as shown on "REINFORCING PLAN - BRIDGE A" & "REINFORCING PLAN - BRIDGE B" on Dwg. Nos. 58243 & 58247. Stop 1'-6" from top of slab.

NOTES:
All dimensions shown are measured along gutterline.

For bar lists and bar bending diagrams, see Dwg. No. 58252.

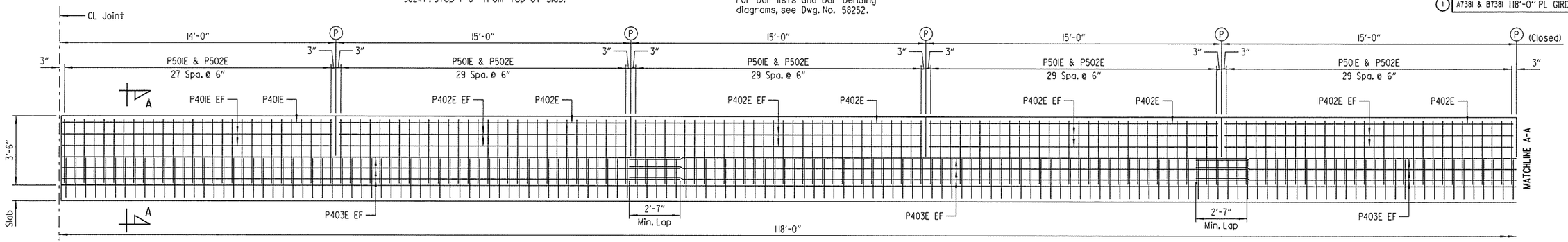

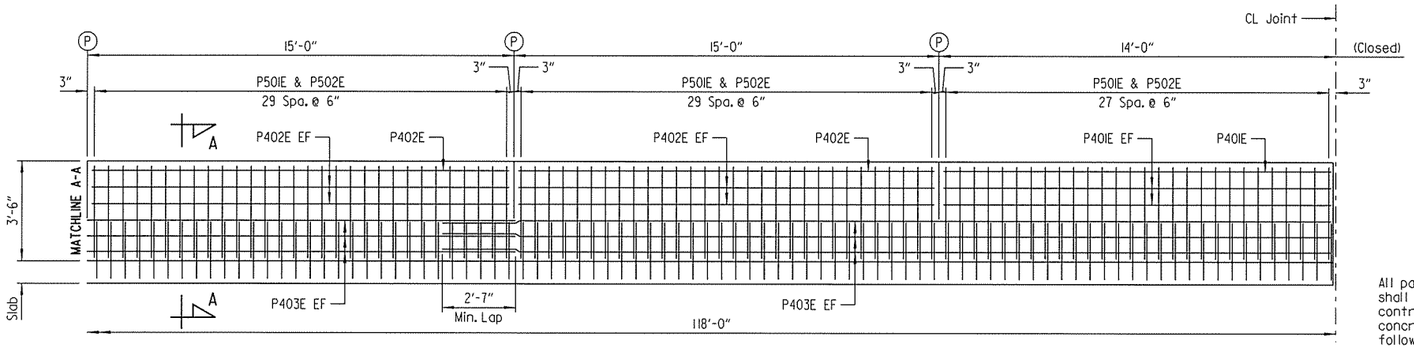

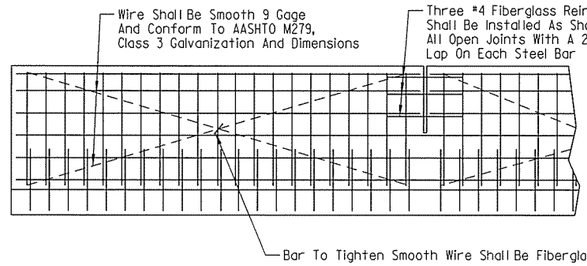

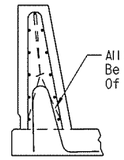

For actual placement of reinforcing steel, see parapet details.

All panels shall be braced as shown to prevent racking. All open joints shall be sawed as soon as practical to a minimum width of ¼". To control cracking before sawing, all joints must be grooved before the concrete is set. Sawing of the joints must be controlled so it will follow the grooved joint.

The extruded parapet shall conform to the horizontal and vertical lines shown on the plans or as directed by the Engineer and shall present a smooth, uniform appearance and texture.

DETAILS OF OPTIONAL SLIPFORMING OF CONCRETE PARAPET RAIL

No Scale

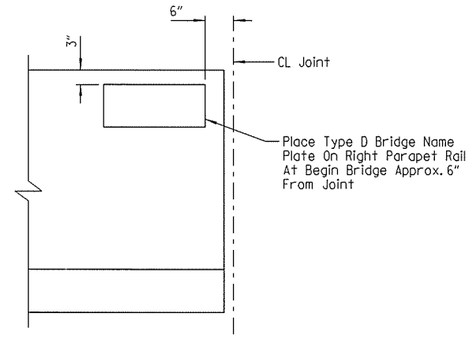

VIEW SHOWING LOCATION OF NAME PLATE

(Showing Inside Face Of Parapet)
No Scale

PARAPET - ELEVATION

(Looking At Inside Face Of Parapet Rail)
Scale: ⅜" = 1'-0"

NOTE:
Left and right parapets on Bridge A and Bridge B similar.

LEGEND

EF = Each Face

NOTE:
Form liner on back face of low side parapet shall be a max. depth of 2" to provide a min. clearance of 1½" to parapet reinforcing.

(1) Class 3 Textured Coating Finish (Color = Brown, Color Chip No. 33578)

(2) Class 3 Textured Coating Finish (Color = Brown, Color Chip No. 30219)

(3) "Ashlar Stone" Pattern

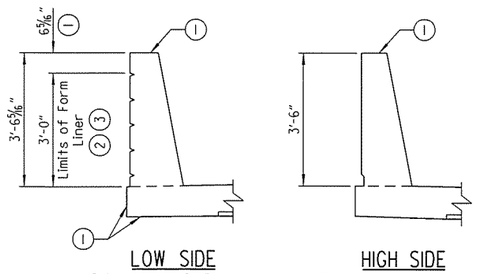

LOW SIDE
(Bridge A - Left Parapet, Bridge B - Right Parapet)

HIGH SIDE
(Bridge A - Right Parapet, Bridge B - Left Parapet)

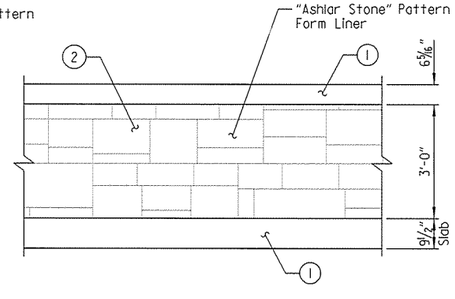

PARAPET ARCHITECTURAL FINISH ELEVATION

(Showing Outside Face Of Parapet)
(Left Side Bridge A And Right Side Bridge B Only)
Scale: ½" = 1'-0"

SECTION A-A

(Showing Architectural Finish)
Scale: ½" = 1'-0"

GENERAL NOTES

CONCRETE: All concrete shall be Class S(AE) with a minimum 28 day compressive strength f'c = 4000 psi.

REINFORCING STEEL: All reinforcing steel shall be Grade 60 conforming to AASHTO M31 or M322, Type A with mill test reports.

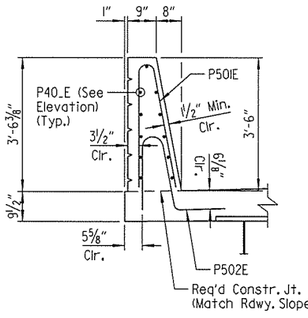

LOW SIDE
(Bridge A - Left Parapet, Bridge B - Right Parapet)

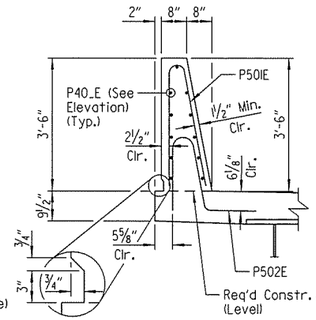

HIGH SIDE
(Bridge A - Right Parapet, Bridge B - Left Parapet)

SECTION A-A

(Showing Reinforcing Details)
Scale: ½" = 1'-0"

STATE OF ARKANSAS
LICENSED PROFESSIONAL ENGINEER
No. 16667
DANIEL R. GOAD
BRIDGE ENGINEER

SHEET 10 OF 12
DETAILS OF 118'-0" COMPOSITE PLATE GIRDER SPAN
I-49 OVER VAN ASCHE DRIVE
ROUTE SEC.

ARKANSAS STATE HIGHWAY COMMISSION
LITTLE ROCK, ARK.

DRAWN BY: CWT DATE: JUNE 2015 FILENAME: BBB0414M4_S10.dgn
CHECKED BY: ABH DATE: AUG. 2015 SCALE: AS SHOWN
DESIGNED BY: DRG DATE: JUNE 2015

BRIDGE NO. A7381 & B7381 DRAWING NO. 58250

jeskinner 3/20/2016 3:36:04 PM
\\GLITARCHDN\Projects\GLITProjects\20IN\I0017707 - I-540 Widening & Interchange Improvement\Drawings\I540-VASCHE-S310-MD.dgn
REVISED DATE:

DATE REVISED	DATE FILMED	DATE REVISED	DATE FILMED	FED. ROAD DIST. NO.	STATE	FED. AID PROJ. NO.	SHEET NO.	TOTAL SHEETS
				6	ARK.			
				JOB NO.		BB0414	528	886
				(1) A7381 & B7381 118'-0" PL GIRDER SPAN				58251

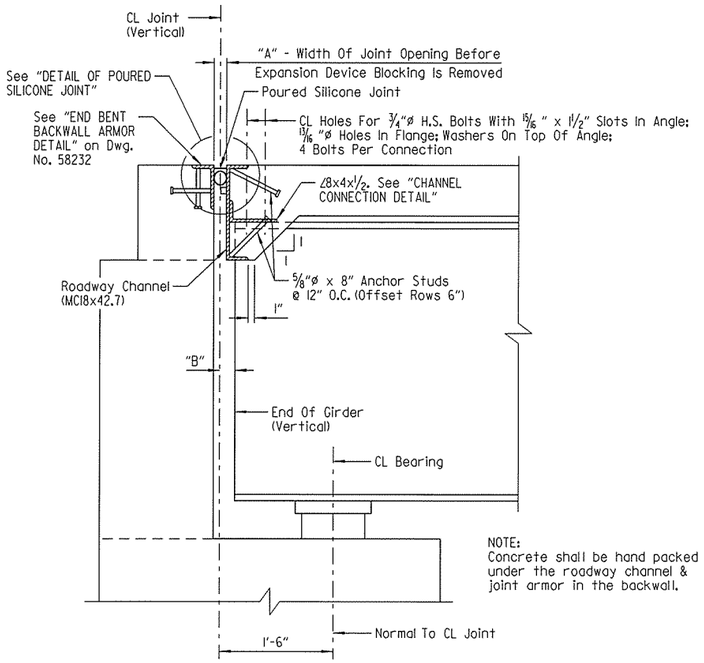

SECTION THRU SILICONE JOINT

(Section Taken Normal To CL Joint)
No Scale

SILICONE JOINT DATA						
Bent No.	"A" Width Perpendicular To Joint At 24 Hour Average Temperature (1) Of:			"B" Perpendicular To Joint At 60°F	"D"	Bumper Plate Size
	40°F	60°F	80°F			
1	2"	2"	2"	2 1/4" ±	4 1/2"	1" x 1" x 12"
2	2 3/16"	2"	1 13/16"	2 1/4" ±	4 1/2"	1" x 1" x 12"

(1) The temperature used to set the joint opening shall be the approximate average air temperature during the 24 hour period immediately before the bolts are tightened. The Engineer shall establish the temperature. Interpolation of the table may be necessary.

NOTES:
The temperature limitations recommended by the sealant Manufacturer shall be observed.

The sealant may be installed in skewed joints only when the average 24 hour air temperature is between 40° and 80°F.

(2) BACKER ROD NOTE:
Use an appropriately sized backer rod at the depth shown in the Manufacturer's literature based on the joint width at the time of sealing.

Except as noted, do not install more backer rod than can be sealed in the same day.

The Contractor shall verify separation of the backer rod from the joint material after the joint material has set.

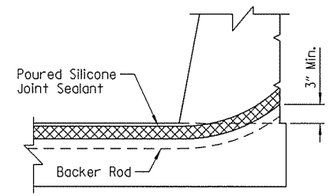

JOINT SEAL PLACEMENT AT CURB

No Scale

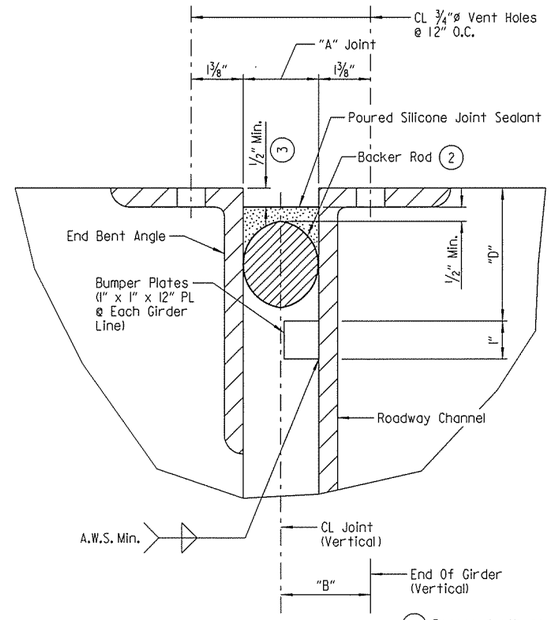

(3) Recess depth as recommended by the sealant Manufacturer

DETAIL OF POURED SILICONE JOINT

No Scale

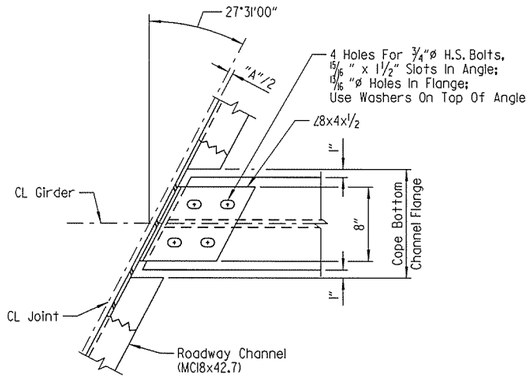

CHANNEL CONNECTION DETAIL

No Scale

One of two different blocking systems is required depending on the type of span finishing machine that is used.

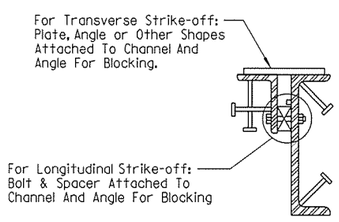

NOTE:
Each expansion joint device shall be blocked in the shop by the Fabricator to the dimension "A" shown for 60°F, and the blocking details shall be shown on the shop drawings. Blocking shall be placed within 2' of each end of the device and with a maximum spacing of 8'.

EXPANSION DEVICE INSTALLATION AT END BENTS:

The Contractor may elect to install the expansion device using one of the following two alternatives.

1) The concrete span pour adjacent to joint shall be placed before the end bent backwall is placed. After the end bent backwall forms are in place and the girders erected, the blocked expansion device shall be installed and adjusted for grade. All connection bolts shall be fully tightened prior to placing the deck concrete adjacent to the bent. Immediately prior to pouring the backwall concrete, the blocking shall be removed, the opening adjusted for temperature, and the backwall constructed.

2) The backwall shall be poured to the optional construction joint after girders are erected. The blocked expansion device shall be installed and adjusted for grade. All connection bolts shall be fully tightened prior to placing the deck concrete adjacent to the bent. Immediately prior to pouring the remainder of the backwall concrete, the blocking shall be removed and the opening adjusted for temperature. Backfill shall not be placed behind the backwall until the deck concrete on the adjacent span has been placed.

DETAILS FOR BLOCKING EXPANSION JOINT DEVICE

No Scale

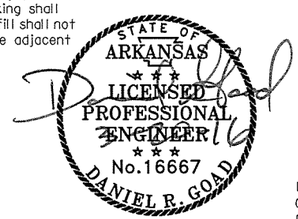

BRIDGE ENGINEER

SHEET 11 OF 12
DETAILS OF 118'-0" COMPOSITE PLATE GIRDER SPAN
I-49 OVER VAN ASCHE DRIVE
ROUTE SEC.
ARKANSAS STATE HIGHWAY COMMISSION
LITTLE ROCK, ARK.

DRAWN BY: CWT DATE: JUNE 2015 FILENAME: BBB0414M4_S11.dgn
CHECKED BY: ABH DATE: AUG. 2015 SCALE: AS SHOWN
DESIGNED BY: DRG DATE: JUNE 2015
BRIDGE NO. A7381 & B7381 DRAWING NO. 58251

jeskinner 3/20/2016 3:36:05 PM
WORKSPACE: AHTD Projects
\\GLITARCHIVE\Projects\LITProjects\200\100177.07 - I-540 Widening & Interchange Improvement\Drawings\I540-VASCHE-S3II-JN.dgn
REVISED DATE:

BAR BENDING DIAGRAMS - BRIDGE A

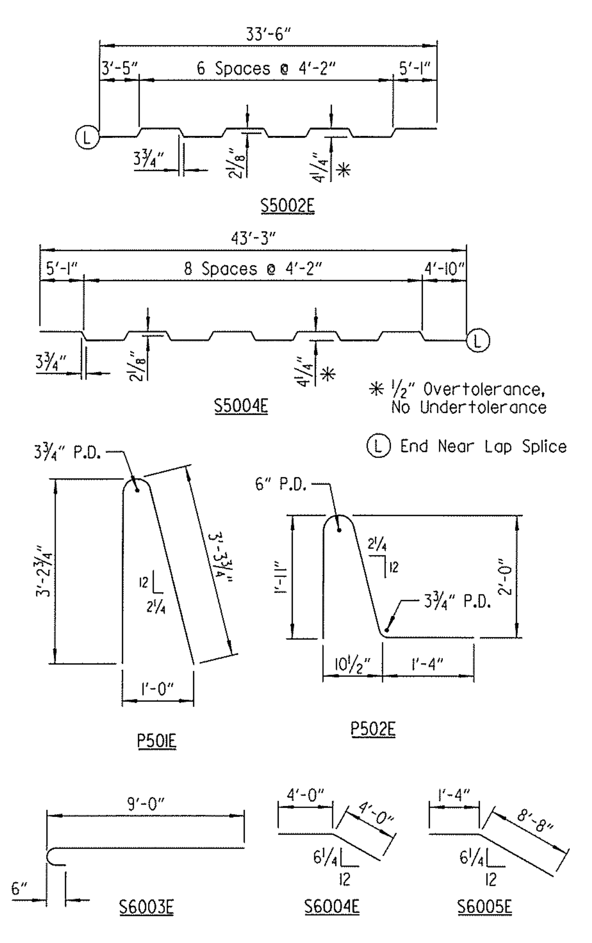

BAR LIST - BRIDGE A

Mark	No. Req'd.	Length	Pin. Dia.
S401E	296	31'-4"	STR.
S5001E	240	41'-4"	STR.
S5002E	100	34'-2"	3"
S5003E	101	32'-8"	STR.
S5004E	96	44'-2"	3"
S5005E	95	43'-3"	STR.
S5006E TO S5031E	1 Each	9'-5" TO 33'-5"	STR.
S5032E TO S5057E	1 Each	30'-10" TO 6'-10"	STR.
S5058E TO S5097E	1 Each	4'-0" TO 41'-5"	STR.
S5098E TO S5133E	1 Each	42'-11" TO 9'-4"	STR.
S6001E	101	33'-3"	STR.
S6002E	95	43'-3"	STR.
S6003E	454	9'-8"	4½"
S6004E	14	8'-0"	4½"
S6005E	36	10'-0"	4½"
S6006E TO S6031E	1 Each	9'-5" TO 33'-5"	STR.
S6032E TO S6057E	1 Each	31'-5" TO 7'-5"	STR.
S6058E TO S6097E	1 Each	4'-0" TO 41'-5"	STR.

BAR LIST - BRIDGE A

Mark	No. Req'd.	Length	Pin. Dia.
S6098E TO S6133E	1 Each	42'-11" TO 9'-4"	STR.
P401E	20	13'-7"	STR.
P402E	60	14'-8"	STR.
P403E	48	31'-4"	STR.
P501E	472	6'-8"	3¾"
P502E	472	5'-4"	3¾", 6"

BAR BENDING DIAGRAMS - BRIDGE B

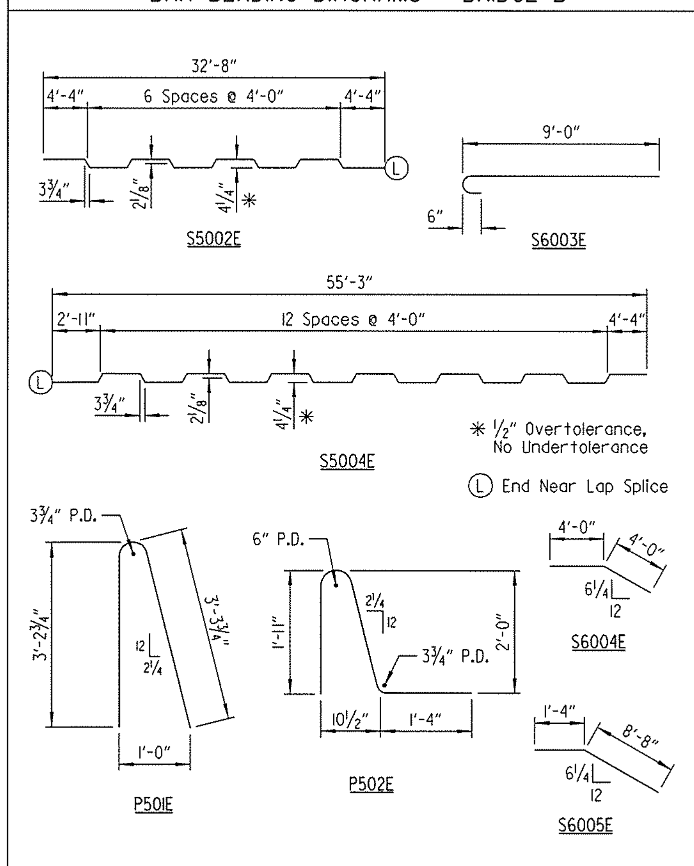

BAR LIST - BRIDGE B

Mark	No. Req'd.	Length	Pin. Dia.
S401E	344	31'-4"	STR.
S5001E	288	41'-4"	STR.
S5002E	100	33'-4"	3"
S5003E	101	32'-8"	STR.
S5004E	90	56'-7"	3"
S5005E	89	55'-3"	STR.
S5006E TO S5031E	1 Each	9'-5" TO 33'-5"	STR.
S5032E TO S5057E	1 Each	30'-10" TO 6'-10"	STR.
S5058E TO S5105E	1 Each	9'-10" TO 54'-11"	STR.
S5106E TO S5157E	1 Each	52'-11" TO 4'-0"	STR.
S6001E	101	33'-3"	STR.
S6002E	89	55'-3"	STR.
S6003E	454	9'-8"	4½"
S6004E	14	8'-0"	4½"
S6005E	36	10'-0"	4½"
S6006E TO S6031E	1 Each	9'-5" TO 33'-5"	STR.
S6032E TO S6057E	1 Each	31'-5" TO 7'-5"	STR.

BAR LIST - BRIDGE B

Mark	No. Req'd.	Length	Pin. Dia.
S6058E TO S6105E	1 Each	9'-10" TO 54'-11"	STR.
S6106E TO S6157E	1 Each	52'-11" TO 4'-0"	STR.
P401E	20	13'-7"	STR.
P402E	60	14'-8"	STR.
P403E	48	31'-4"	STR.
P501E	472	6'-8"	3¾"
P502E	472	5'-4"	3¾", 6"

NOTES:
1.) Dimensions of bars are out-to-out.
2.) Bar designations ending with "E" indicate epoxy coated bars.

GENERAL NOTES

CONCRETE:

Concrete shall be poured in the dry, and all exposed corners shall be chamfered ¾" unless otherwise noted. All concrete shall be Class S(AE) with a minimum 28 day compressive strength f'c = 4,000 psi.

The superstructure details shown are for use when removable deck forming is used and are the basis for measurements of Class S(AE) Concrete. See Standard Drawing No. 55005 for allowable modifications when permanent steel bridge deck forms are used.

Concrete in bridge superstructure shall be placed, consolidated and screeded off for the entire pour before any concrete has taken its initial set. This may require the use of a retarding agent.

The concrete deck shall be given a tine finish in accordance with Subsection 802.19 for Class 5 Tined Bridge Roadway Surface Finish. Movement of the finishing machine across new concrete shall be on planks placed on the surface and shall be prohibited for 72 hours after finishing the pour. Sufficient concrete must be placed ahead of the strike-off to fully load the girder. For each stage of construction, a minimum of 72 hours shall elapse between completion of the bridge deck slab and the pouring of the parapet railing. Any railing pours made before the entire slab has been placed and cured must be approved by the Engineer.

REINFORCING STEEL:

All reinforcing steel shall be Grade 60 (Yield Strength = 60,000 psi) conforming to AASHTO M31 or M322, Type A, with mill test reports. The reinforcing steel is to be accurately located in the forms and firmly held in place by steel wire supports, sufficient in number and size to prevent displacement during the course of construction. The wire supports will not be paid for directly but will be considered subsidiary to the item "EPOXY COATED REINFORCING STEEL (GRADE 60)".

STRUCTURAL STEEL:

All structural steel shall be AASHTO M270, Gr. 50W unless noted otherwise and shall be paid for at the unit price per pound bid for "STRUCTURAL STEEL IN PLATE GIRDER SPANS (M270, GR. 50W)". Grade 50W steel shall not be painted. All exposed surfaces shall be cleaned in accordance with Subsection 807.84(e) unless noted otherwise. Structural steel completely embedded in concrete may be AASHTO M270, Gr. 36 unless noted otherwise. See Drawing No. 58253 for cleaning requirements of external load plates on elastomeric bearings.

Requests for substitution of structural steel shapes shown with shapes of greater size must be submitted by the Contractor to the Engineer for approval. Steels of equal or greater strengths will be accepted only when shown on approved shop drawings. Shapes and materials shown in the plans will be the basis of payment, and no additional compensation will be made for any adjustments due to substitutions.

Drawings show general features of design only. Shop drawings shall be prepared in accordance with Subsection 807.04, submitted and approved before fabrication is begun.

Shop welded splices may be substituted with approval of the Engineer. Payment will be made on the basis of plan quantities.

All girder webs and flanges of plate girders are considered main load carrying members and shall meet the Longitudinal Charpy V-Notch Test specified in Subsection 807.05. This work and material will not be paid for directly but are considered as subsidiary to the item "STRUCTURAL STEEL IN PLATE GIRDER SPANS (M270, GR. 50W)".

Steel plates for main load carrying members shall be cut and fabricated so that the primary direction of rolling is parallel to the direction of the main tensile and/or compressive stresses.

Girder webs may be made by shop splicing with a minimum length of 25'-0" for sections. Flange plates longer than 50'-0" may be made by shop splicing with a minimum length of 25'-0" for sections. Material specifications and locations of shop-welded splices, if any, shall be shown on the shop drawings. No additional payment for these welded splices will be made.

All welding that is to be done during fabrication of structural steel, including temporary welds, shall be detailed on the shop drawings and submitted for approval. If additional welds are required, whether temporary or permanent, a formal request with detailed drawings shall be submitted to the Engineer for approval; however, additional welds used for attaching falsework support devices or screed rail supports to the structural steel that do not exceed the limitations of Subsection 802.13 will not require approval prior to construction. All welding shall conform to Subsection 807.26.

All girders shall be blocked in their true positions with webs horizontal in the shop as specified in Subsection 807.54 (b)(1). The camber, length of sections, distance between bearings and openings of joints shall be measured with the girders in their true positions, and this information shall become a part of the permanent records of this job. The component parts shall be match marked in this assembly, and these marks shall be shown on the erection diagram. All girder dimensions are based on a temperature of 60°F. A tolerance of +/- ¼" is allowed for camber.

Groove welds in flange and web plates shall be Quality Control (Q.C.) tested by nondestructive testing, as required by the Standard Specifications. Fillet welds at flange to web plate connections shall be Quality Control (Q.C.) tested by the magnetic particle method. All Quality Control (Q. C.) testing is at the Contractor's expense.

All connection plates and intermediate stiffeners shall be fabricated normal to the top flange and on the side of the girder web as indicated on the framing plan. No intermediate stiffeners are to be placed on the outside of the exterior girders except as noted. All bearing stiffeners shall be fabricated to be plumb in their final positions.

K-frames shall be installed as girders are erected unless noted otherwise. All bolts in k-frames shall be installed and tightened in accordance with Subsection 807.71 prior to pouring of the concrete deck unless noted otherwise.

Field connections shall be bolted with high-strength bolts and shall be ⅞"ø bolts conforming to AASHTO M164 unless otherwise noted. Open holes shall be 15/16"ø unless otherwise noted. Bolts shall be placed with heads on the outside face of the exterior girder webs and on the bottom of the girder flanges.

All stud shear connectors shall be granular flux filled, solid fluxed or equal and shall be automatically end welded in accordance with recommendations of the Manufacturer.

Anchor bolts shall be AASHTO designation M314 Gr. 55, including supplemental requirement S1, and shall be galvanized to conform to AASHTO M232, Class C or ASTM B695 Class 50. Anchor bolts will be paid for at the contract unit price bid for "STRUCTURAL STEEL IN PLATE GIRDER SPANS (M270, GR. 50W)".

STATE OF ARKANSAS ★★★ LICENSED PROFESSIONAL ENGINEER ★★★ No.16667 DANIEL R. GOAD

BRIDGE ENGINEER

SHEET 12 OF 12
DETAILS OF 118'-0" COMPOSITE PLATE GIRDER SPAN
I-49 OVER VAN ASCHE DRIVE

ROUTE SEC.

ARKANSAS STATE HIGHWAY COMMISSION
LITTLE ROCK, ARK.

DRAWN BY: RDM DATE: JUNE 2015 FILENAME: BBB0414M4_S12.dgn
CHECKED BY: ABH DATE: AUG. 2015 SCALE: AS SHOWN
DESIGNED BY: DRG DATE: JUNE 2015
BRIDGE NO. A7381 & B7381 DRAWING NO. 58252

jeskinner 3/20/2016 3:36:05 PM
WORKSPACE: AHTD Bridge
\\GLITARCHO1\Projects\LITProjects\2011\1017707 - I-540 Widening & Interchange Improvement\Drawings\I540-VASCHE-S312-MD.dgn
REVISED DATE:

DATE REVISED	DATE FILMED	DATE REVISED	DATE FILMED	FED. ROAD DST. NO.	STATE	FED. AID PROJ. NO.	SHEET NO.	TOTAL SHEETS
				6	ARK.			
				JOB NO.		BB0414	530	886
				(1) A7381 & B7381 ELASTOMERIC BEARINGS				58253

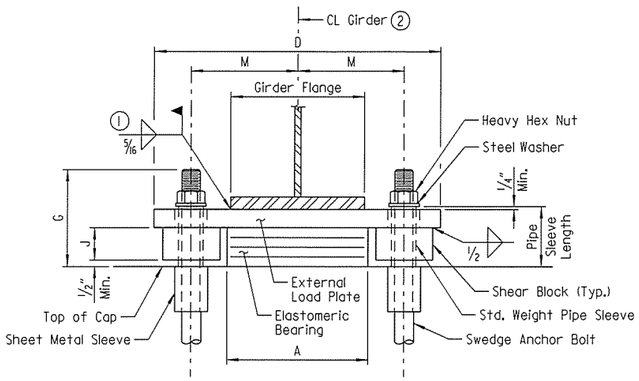

FRONT VIEW - AT BENT NO. 1

(1) Care shall be taken to ensure that the external load plate is in full and complete contact with the girder flange before welding begins.

(2) Centerline elastomeric pad shall be aligned with centerline girder.

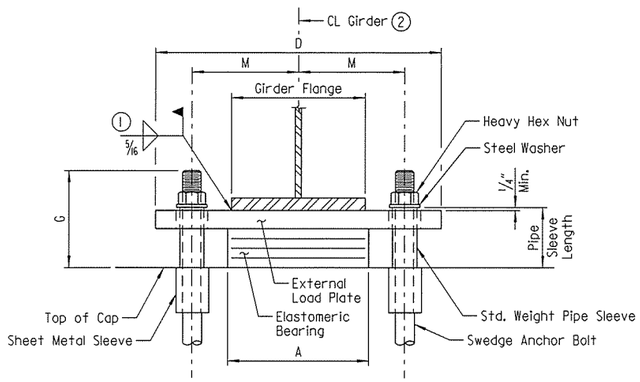

FRONT VIEW - AT BENT NO. 2

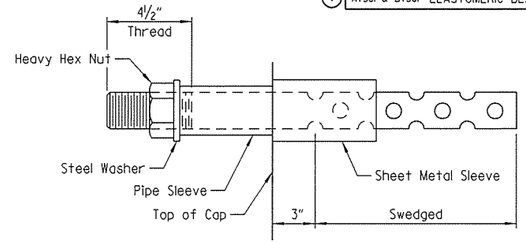

ANCHOR BOLT DETAIL

NOTE:
Anchor bolts may be cast in place or drilled and grouted into place. If anchor bolts are to be cast in place, the galvanized sheet metal sleeves will not be required.

If anchor bolts are to be drilled and grouted in place, the galvanized sheet metal sleeves shall be cast in place as shown. Sleeves shall be dry packed with styrofoam, urethane foam or approved equal prior to pouring of concrete. After pouring of the cap and prior to erection of structural steel, the dry pack shall be removed and holes for the anchor bolts shall be accurately drilled into the masonry. Bolts placed in drilled holes shall be accurately set and fixed using a QPL approved epoxy or non-shrink grout that completely fills the holes. Galvanized sheet metal sleeves will not be paid for directly but will be considered subsidiary to the item "STRUCTURAL STEEL IN PLATE GIRDER SPANS (M270, GR. 50W)".

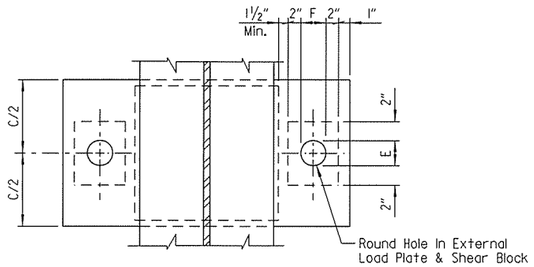

PLAN VIEW - AT BENT NO. 1

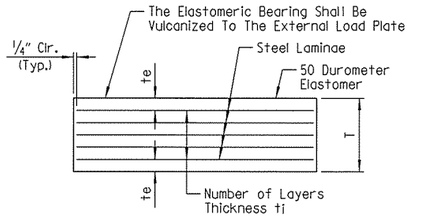

t_e = Thickness Of Elastomer Cover On Top And Bottom Of Pad
t_i = Thickness Of Elastomer Between Steel Laminae
N = Number Of Elastomer Layers Of Thickness t_i

ELASTOMERIC BEARING

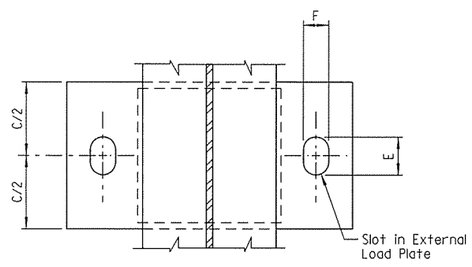

PLAN VIEW - AT BENT NO. 2

GENERAL NOTES

Elastomeric bearings shall conform to Section 808 and shall be paid for at the unit price bid for "ELASTOMERIC BEARINGS."

External load plates and shear blocks shall conform to AASHTO M270, Grade 50W. Pipe sleeves shall be ASTM A53, Grade B, and shall be galvanized to conform to AASHTO M232, Class C or ASTM B695, Class 50.

External load plates and shear blocks shall be completely fabricated (including bevel, bolt holes and all shop welding) and shall be cleaned before vulcanizing to the elastomeric bearing. The surfaces in contact with the elastomeric bearing shall be cleaned in accordance with Subsection 808.03. Other surfaces shall be blast cleaned in accordance with Subsection 807.84(e) for unpainted weathering steel.

Anchor bolts, washers and nuts shall conform to Subsection 807.07. The anchor bolt grade of steel shall be as specified in the "TABLE OF FABRICATOR VARIABLES". Indentations shall be circular with rounded bottoms and staggered as shown in the details.

Pipe sleeves, anchor bolts, washers and nuts shall be paid for at the unit price bid for "STRUCTURAL STEEL IN PLATE GIRDER SPANS (M270, GR. 50W)". External load plates and shear blocks will not be measured or paid for separately but will be included in the unit price bid for "ELASTOMERIC BEARINGS".

Bearings shall be seated in accordance with Subsection 808.08. This work and materials are considered subsidiary to the item "ELASTOMERIC BEARINGS" and will not be paid for directly.

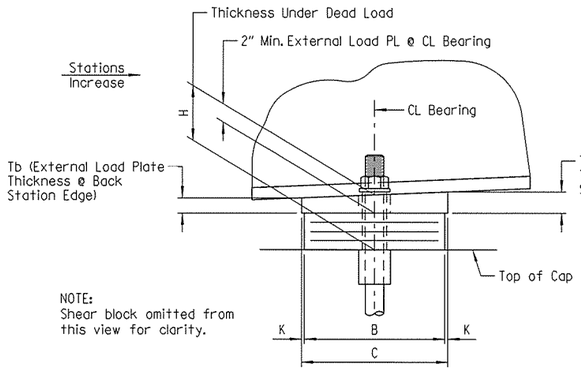

SIDE VIEW - AT BENT NO. 1

NOTES:
The direction of the bevel of the external load plate may not be accurately depicted with respect to Ta and Tb values shown in "TABLE OF FABRICATOR VARIABLES".

Unless otherwise approved by the Engineer, welding of the external load plate at expansion bearings to the girder will be allowed only when: 1) the approximate average air temperature during the 24 hour period immediately preceding welding is between 40°F and 80°F; and 2) the slots in the external load plate are positioned to center on the anchor bolts; and 3) no horizontal deformation of the elastomeric pad is evident. If welding at other temperatures is required, the Engineer will provide adjustment data.

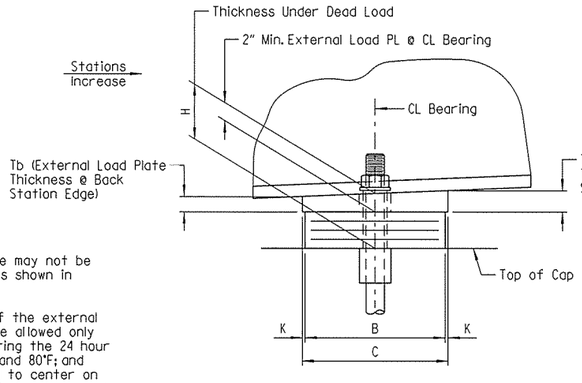

SIDE VIEW - AT BENT NO. 2

TABLE OF FABRICATOR VARIABLES

Bridge No.	Location: Bent No.	Location: Girder No.	Bearing Type	No. Of Bearings Each Bent	*Maximum Design Load (Kips)	G	H	Elastomeric Pad: A	B	N	t_i	t_e	No. & Thickness Of Steel Laminae	T	External Load Plate: C	D	E	F	J	K	M	T_a	T_b	Anchor Bolt: (Dia. x L)	Grade	Pipe Sleeve Size (Dia. x L)	Sheet Metal Sleeve Size (Dia. x L)	Steel Washer Size (O.D.)
A7381	1	All	Fixed	9	187	7 1/8"	4 3/8"	22"	10"	3	1/2"	1/4"	4 @ 12 Ga.	2 7/16"	11"	39 1/2"	2 1/4"	2 1/4"	2"	1/2"	15 5/8"	2.15"	1.85"	1 1/2" x 26"	55	1 1/2" x 4 5/8"	3" x 14"	3"
	2	All	Exp.	9	187	8 3/16"	4 5/8"	22"	10"	4	1/2"	1/4"	5 @ 12 Ga.	3"	11"	34 1/2"	5"	3 1/8"	-	1/2"	14"	2.11"	1.89"	2" x 32"	55	2 1/2" x 5 3/16"	4" x 14"	3 3/4"
B7381	1	All	Fixed	11	187	7 1/8"	4 3/8"	22"	10"	3	1/2"	1/4"	4 @ 12 Ga.	2 7/16"	11"	39 1/2"	2 1/4"	2 1/4"	2"	1/2"	15 5/8"	2.16"	1.84"	1 1/2" x 26"	55	1 1/2" x 4 5/8"	3" x 14"	3"
	2	All	Exp.	11	187	8 3/16"	4 5/8"	22"	10"	4	1/2"	1/4"	5 @ 12 Ga.	3"	11"	34 1/2"	5"	3 1/8"	-	1/2"	14"	2.12"	1.88"	2" x 32"	55	2 1/2" x 5 3/16"	4" x 14"	3 3/4"

* Maximum Design Load = LRFD Service I Limit State

STATE OF ARKANSAS
LICENSED PROFESSIONAL ENGINEER
No. 16667
DANIEL R. GOAD
BRIDGE ENGINEER

DETAILS OF ELASTOMERIC BEARINGS I-49 OVER VAN ASCHE DRIVE

ROUTE SEC.

ARKANSAS STATE HIGHWAY COMMISSION

LITTLE ROCK, ARK.

DRAWN BY: CWT DATE: JUNE 2015 FILENAME: BBB0414M4_El.dgn
CHECKED BY: ABH DATE: AUG. 2015 SCALE: AS SHOWN
DESIGNED BY: DRG DATE: JUNE 2015

BRIDGE NO. A7381 & B7381 DRAWING NO. 58253

jeskinner 3/20/2016 3:36:06 PM
WORKSPACE: AHTD Projects
\\GLITARCHIVE\Projects\LITProjects\20IN\I007707 - I-540 Widening & Interchange Improvement\Drawings\I540-VASCHE-S313-BB.dgn
REVISED DATE:

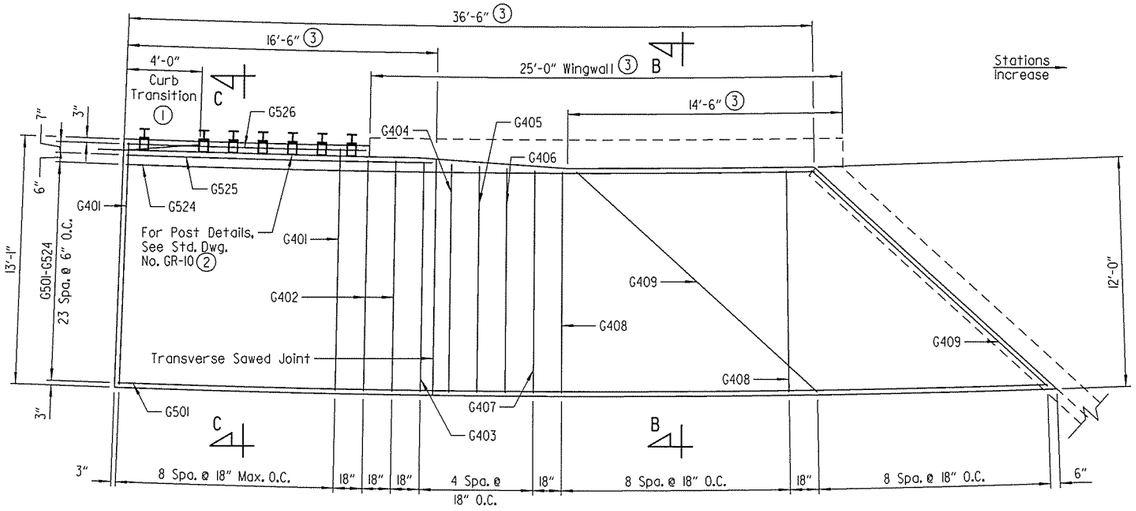

PLAN - TYPE SPECIAL 1 APPROACH GUTTER

(Begin Bridge No. 07379)
Scale: 1/4" = 1'-0"

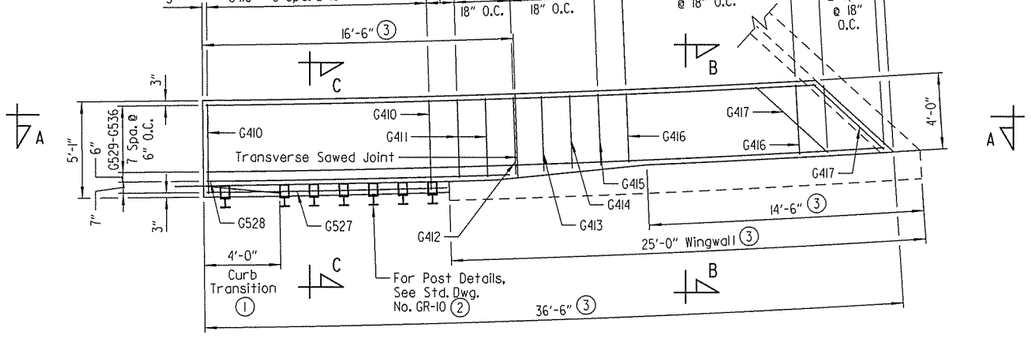

PLAN - TYPE SPECIAL 2 APPROACH GUTTER

(Begin Bridge No. 07379)
Scale: 1/4" = 1'-0"

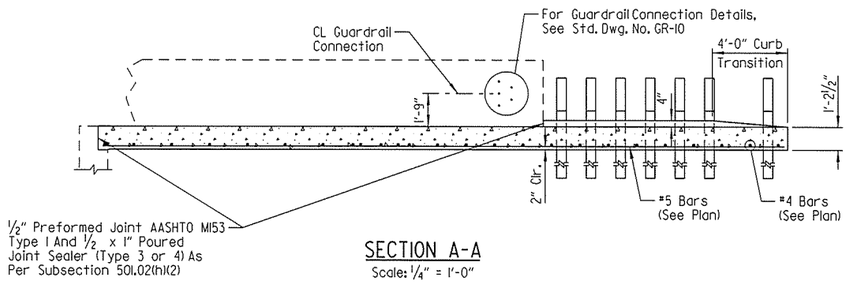

SECTION A-A

Scale: 1/4" = 1'-0"

DATE REVISED	DATE FILMED	DATE REVISED	DATE FILMED	FED. ROAD DIST. NO.	STATE	FED. AID PROJ. NO.	SHEET NO.	TOTAL SHEETS
				6	ARK.			
				JOB NO.		BB0414	531	886
				(1) 07379		APPROACH GUTTERS		58254

(1) Construct gutter curb with height-transition as shown if drop inlet is not placed at end of gutter.

Construct gutter curb full height (no height-transition) if drop inlet is placed at the end of gutter. Curb height transition placed on drop inlet. See drop inlet details.

For locations of drop inlets, see Bridge Layouts.

(2) See Bridge Layouts for locations of guardrails.

(3) Measured along gutterline.

Type	Class S(AE) Concrete	Reinforcing Steel (Gr. 60)
Type Special 1	23.98 Cu. Yds.	1404 lb.
Type Special 2	6.96 Cu. Yds.	383 lb.

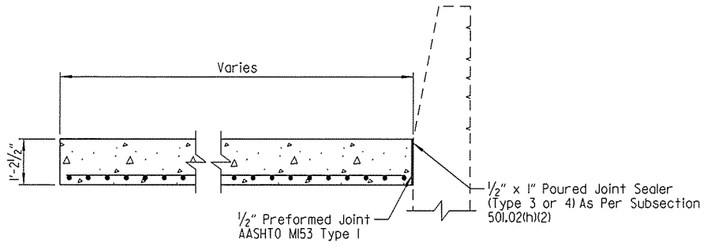

BAR LIST - TYPE SPECIAL 1 APPROACH GUTTER

MARK	NO. REQ'D	LENGTH	P.D.
G401	9	12'-9"	Str.
G402	2	12'-2"	Str.
G403 To G407	1 Ea.	12'-1" To 11'-8"	Str.
G408	9	11'-8"	Str.
G409	9	17'-2"	Str.
G501 To G524	1 Ea.	49'-1" To 36'-4"	Str.
G525	1	16'-1"	Str.
G526	1	12'-7"	Str.

BAR LIST - TYPE SPECIAL 2 APPROACH GUTTER

MARK	NO. REQ'D	LENGTH	P.D.
G410	9	4'-9"	Str.
G411	2	4'-2"	Str.
G412 To G415	1 Ea.	4'-0" To 3'-9"	Str.
G416	7	3'-8"	Str.
G417	3	5'-1"	Str.
G527	1	12'-8"	Str.
G528	1	16'-1"	Str.
G529 To G536	1 Ea.	35'-10" To 32'-3"	Str.

SECTION B-B

Scale: 1/2" = 1'-0"

SECTION C-C

Scale: 1/2" = 1'-0"

GENERAL NOTES

Concrete shall be Class S(AE) (f'c = 4,000 psi).

Reinforcing steel shall conform to AASHTO M31 or M322 Type A, Grade 60 (fy = 60,000 psi).

Approach gutters will be measured and paid for in accordance with Section 504 of the Standard Specifications.

All transverse reinforcing steel shall be placed on radial lines. Spacing is measured along right edge of slab in the direction of stationing shown.

Construct Approach Gutters on arcs concentric with CL Construction.

STATE OF ARKANSAS
LICENSED PROFESSIONAL ENGINEER
No.16667
DANIEL R. GOAD
BRIDGE ENGINEER

SHEET 1 OF 7
DETAILS OF TYPE SPECIAL APPROACH GUTTERS

ROUTE SEC.

ARKANSAS STATE HIGHWAY COMMISSION
LITTLE ROCK, ARK.

DRAWN BY: CJH DATE: JULY 2015 FILENAME: BBB0414_AGI.dgn
CHECKED BY: RLW DATE: JAN. 2016 SCALE: AS SHOWN
DESIGNED BY: DRG DATE: JUNE 2015

BRIDGE NO. 07379 DRAWING NO. 58254

jeskinner 3/20/2016 3:36:06 PM
WORKSPACE: AHTD By-Laws
L:\20IW\10017017 - I-540 Widening & Interchange Improvement\Drawings\I540-AG-S101-SB.dgn
REVISED DATE:

DATE REVISED	DATE FILMED	DATE REVISED	DATE FILMED	FED. ROAD DIST. NO.	STATE	FED. AID PROJ. NO.	SHEET NO.	TOTAL SHEETS
				6	ARK.			
				JOB NO.		BB0414	532	886
				(1) 07379		APPROACH GUTTERS		58255

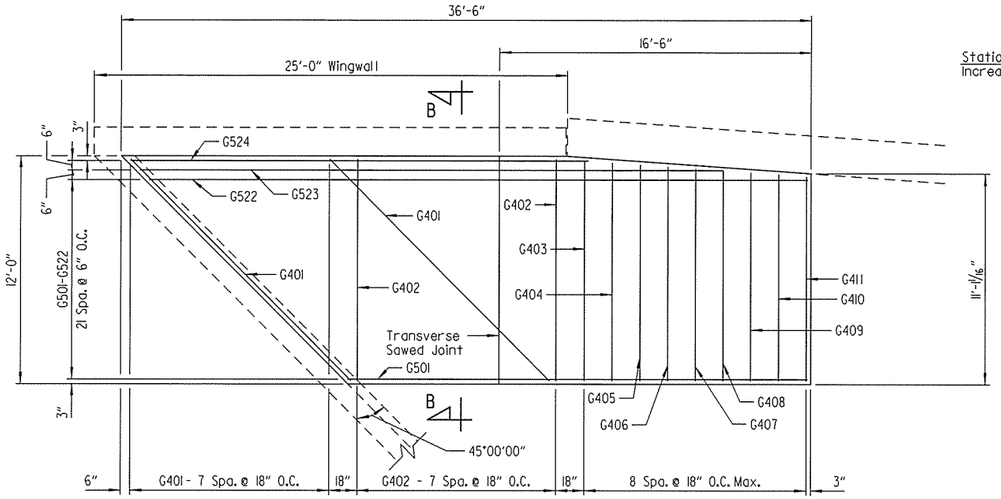

PLAN - TYPE SPECIAL 3 APPROACH GUTTER

(End Bridge No. 07379)
Scale: ¼" = 1'-0"

TYPE	Class S(AE) Concrete	Reinforcing Steel (Gr. 60)
Type Special 3	16.12 Cu. Yds.	954 lb.
Type Special 4	7.69 Cu. Yds.	431 lb.

BAR LIST - TYPE SPECIAL 3 APPROACH GUTTER

MARK	NO. REQ'D.	LENGTH	P.D.
G401	8	16'-5"	Str.
G402	8	11'-8"	Str.
G403 To G411	1 Ea.	11'-7" To 10'-9"	Str.
G501 To G522	1 Ea.	24'-4" To 34'-10"	Str.
G523	1	30'-9"	Str.
G524	1	24'-2"	Str.

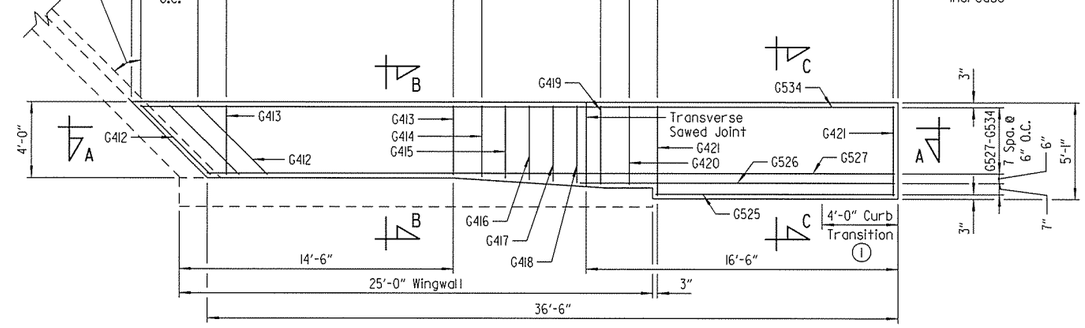

PLAN - TYPE SPECIAL 4 APPROACH GUTTER

(End Bridge No. 07379)
Scale: ¼" = 1'-0"

BAR LIST - TYPE SPECIAL 4 APPROACH GUTTER

MARK	NO. REQ'D.	LENGTH	P.D.
G412	3	5'-2"	Str.
G413	9	3'-8"	Str.
G414 To G419	1 Ea.	3'-9" To 4'-1"	Str.
G420	1	4'-2"	Str.
G421	10	4'-9"	Str.
G525	1	12'-7"	Str.
G526	1	16'-7"	Str.
G527 To G534	1 Ea.	36'-4" To 39'-10"	Str.

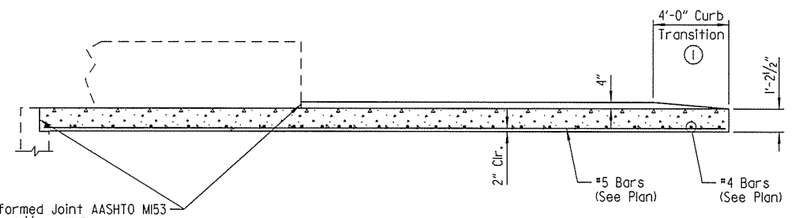

SECTION A-A

Scale: ¼" = 1'-0"

(1) Construct gutter curb with height-transition as shown if drop inlet is not placed at end of gutter.

Construct gutter curb full height (no height-transition) if drop inlet is placed at the end of gutter. Curb height transition placed on drop inlet. See drop inlet details.

For locations of drop inlets, see Bridge Layouts.

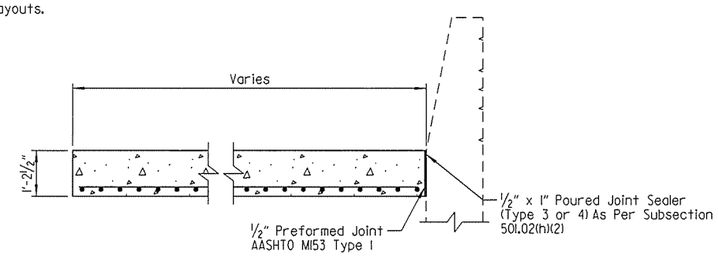

SECTION B-B

Scale: ½" = 1'-0"

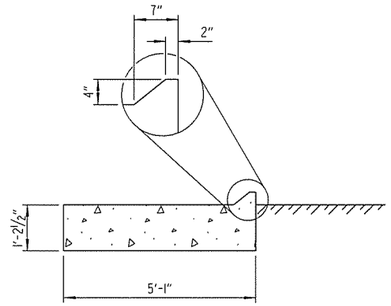

SECTION C-C

Scale: ½" = 1'-0"

GENERAL NOTES

Concrete shall be Class S(AE) (f'c = 4,000 psi).

Reinforcing steel shall conform to AASHTO M31 or M322 Type A, Grade 60 (fy = 60,000 psi).

Approach gutters will be measured and paid for in accordance with Section 504 of the Standard Specifications.

STATE OF ARKANSAS
LICENSED PROFESSIONAL ENGINEER
No. 16667
DANIEL R. GOAD
BRIDGE ENGINEER

SHEET 2 OF 7
DETAILS OF TYPE SPECIAL APPROACH GUTTERS
ROUTE SEC.
ARKANSAS STATE HIGHWAY COMMISSION
LITTLE ROCK, ARK.

DRAWN BY: CJH DATE: JULY 2015 FILENAME: BBB0414_AG2.dgn
CHECKED BY: RLW DATE: JAN. 2016 SCALE: AS SHOWN
DESIGNED BY: DRG DATE: JUNE 2015
BRIDGE NO. 07379 DRAWING NO. 58255

jeskinner 3/20/2016 3:36:06 PM
WORKSPACE: AHTD Bridge Office
L:\20\N1607707 - I-540 Widening & Interchange Improvement\Drawings\1540-AG-S102-SB.dgn
REVISED DATE:

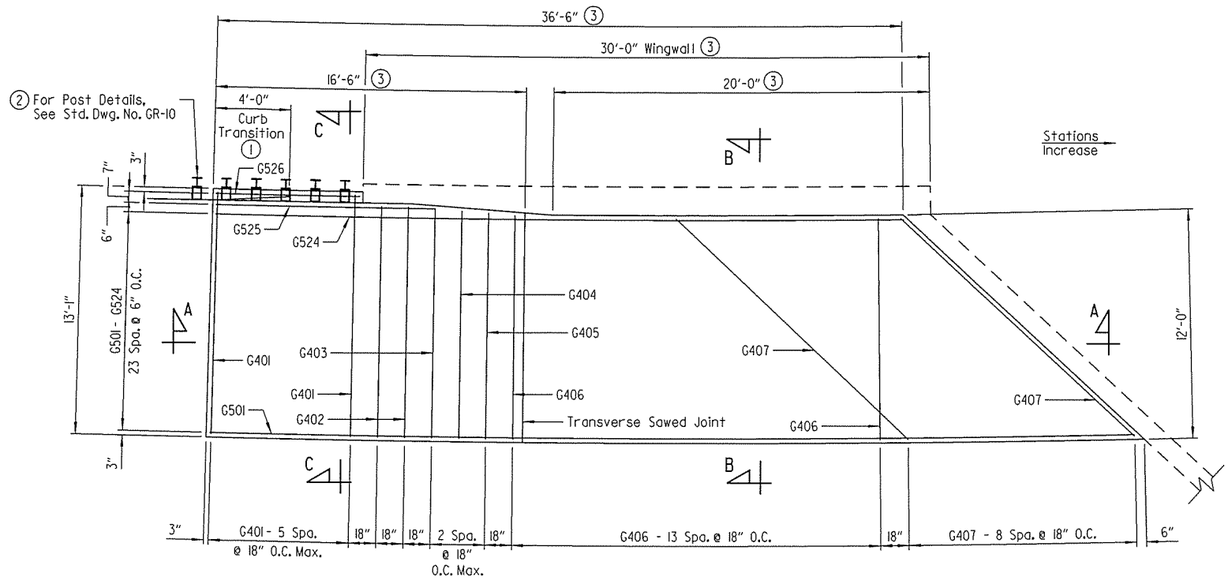

PLAN - TYPE SPECIAL 5 APPROACH GUTTER

(Begin Bridge No. A7380)
Scale: 1/4" = 1'-0"

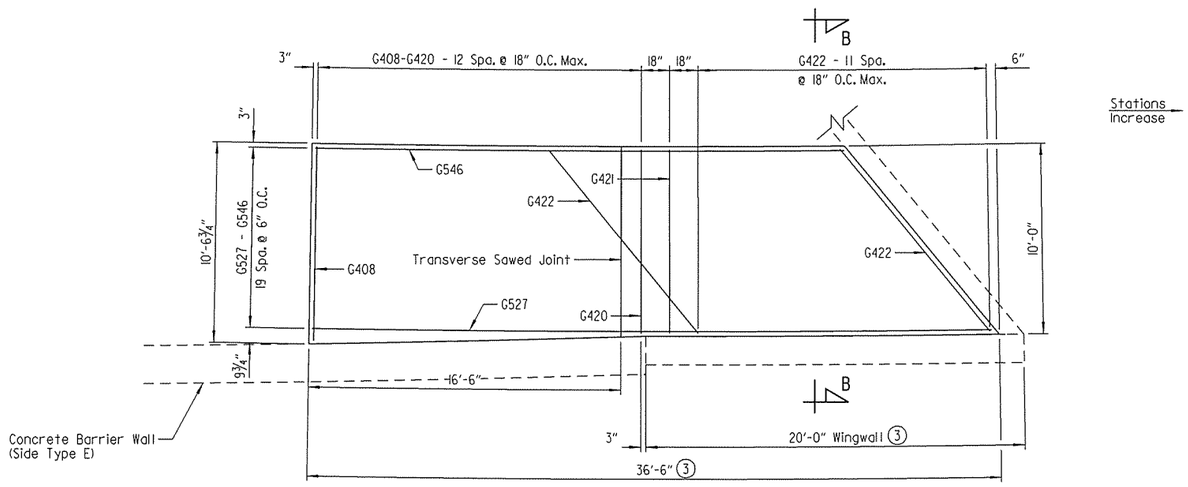

PLAN - TYPE SPECIAL 6 APPROACH GUTTER

(Begin Bridge No. B7380)
Scale: 1/4" = 1'-0"

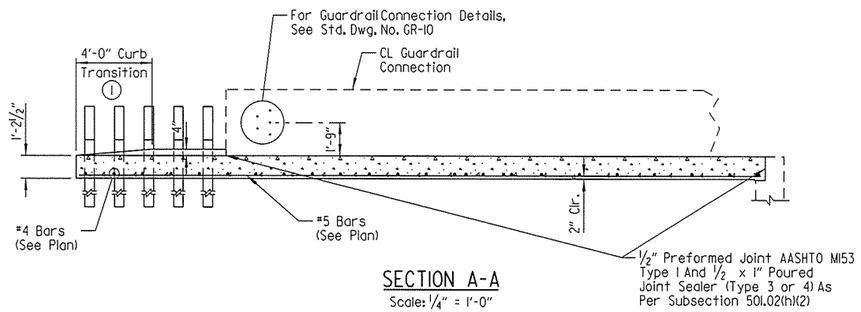

SECTION A-A

Scale: 1/4" = 1'-0"

(1) Construct gutter curb with height-transition as shown if drop inlet is not placed at end of gutter.

Construct gutter curb full height (no height-transition) if drop inlet is placed at the end of gutter. Curb height transition placed on drop inlet. See drop inlet details.

For locations of drop inlets, see Bridge Layouts.

(2) See bridge layouts for locations of guardrails.

(3) Measured along gutterline.

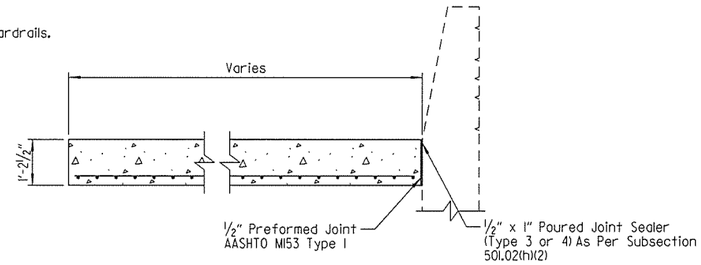

SECTION B-B

Scale: 1/2" = 1'-0"

TYPE	Class S(AE) Concrete	Reinforcing Steel (Gr. 60)
Type Special 5	23.64 Cu. Yds.	1,390 lbs.
Type Special 6	14.70 Cu. Yds.	858 lbs.

BAR LIST - TYPE SPECIAL 5 APPROACH GUTTER

MARK	NO. REQ'D.	LENGTH	P.D.
G401	6	12'-9"	Str.
G402	2	12'-2"	Str.
G403 To G405	1 Ea.	12'-1" To 11'-10"	Str.
G406	14	11'-8"	Str.
G407	9	16'-11"	Str.
G501 To G524	1 Ea.	48'-11" To 36'-4"	Str.
G525	1	11'-7"	Str.
G526	1	7'-6"	Str.

BAR LIST - TYPE SPECIAL 6 APPROACH GUTTER

MARK	NO. REQ'D.	LENGTH	P.D.
G408 To G420	1 Ea.	10'-2" To 9'-8"	Str.
G421	1	9'-8"	Str.
G422	12	12'-5"	Str.
G527 To G546	1 Ea.	35'-10" To 27'-11"	Str.

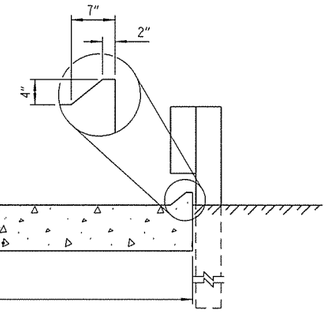

SECTION C-C

Scale: 1/2" = 1'-0"

GENERAL NOTES

Concrete shall be Class S(AE) (f'c = 4,000 psi).

Reinforcing steel shall conform to AASHTO M31 or M322 Type A, Grade 60 (fy = 60,000 psi).

Approach gutters will be measured and paid for in accordance with Section 504 of the Standard Specifications.

All transverse reinforcing steel shall be placed on radial lines. Spacing is measured along right edge of slab in the direction of stationing shown.

Construct Approach Gutters on arcs concentric with CL Median I-49.

STATE OF ARKANSAS
LICENSED PROFESSIONAL ENGINEER
No.16667
DANIEL R. GOAD
BRIDGE ENGINEER

DATE REVISED	DATE FILMED	DATE REVISED	DATE FILMED

FED. ROAD DIST. NO.	STATE	FED. AID PROJ. NO.	SHEET NO.	TOTAL SHEETS
6	ARK.			
JOB NO.		BB0414	533	886
(1) A7380 & B7380	APPROACH GUTTERS			58256

SHEET 3 OF 7
DETAILS OF TYPE SPECIAL APPROACH GUTTERS

ROUTE SEC.

ARKANSAS STATE HIGHWAY COMMISSION
LITTLE ROCK, ARK.

DRAWN BY: RDM DATE: JULY 2015 FILENAME: BBB0414_AG3.dgn
CHECKED BY: RLW DATE: JAN. 2016 SCALE: AS SHOWN
DESIGNED BY: DRG DATE: JUNE 2015

BRIDGE NO. A7380 & B7380 DRAWING NO. 58256

jeskinner 3/20/2016 3:36:07 PM
WORKSPACE: AHTD_B-Flow
L:\ROW\607\607 - I-540 Widening & Interchange Improvement\Drawings\540-AG-S03-SB.dgn
REVISED DATE:

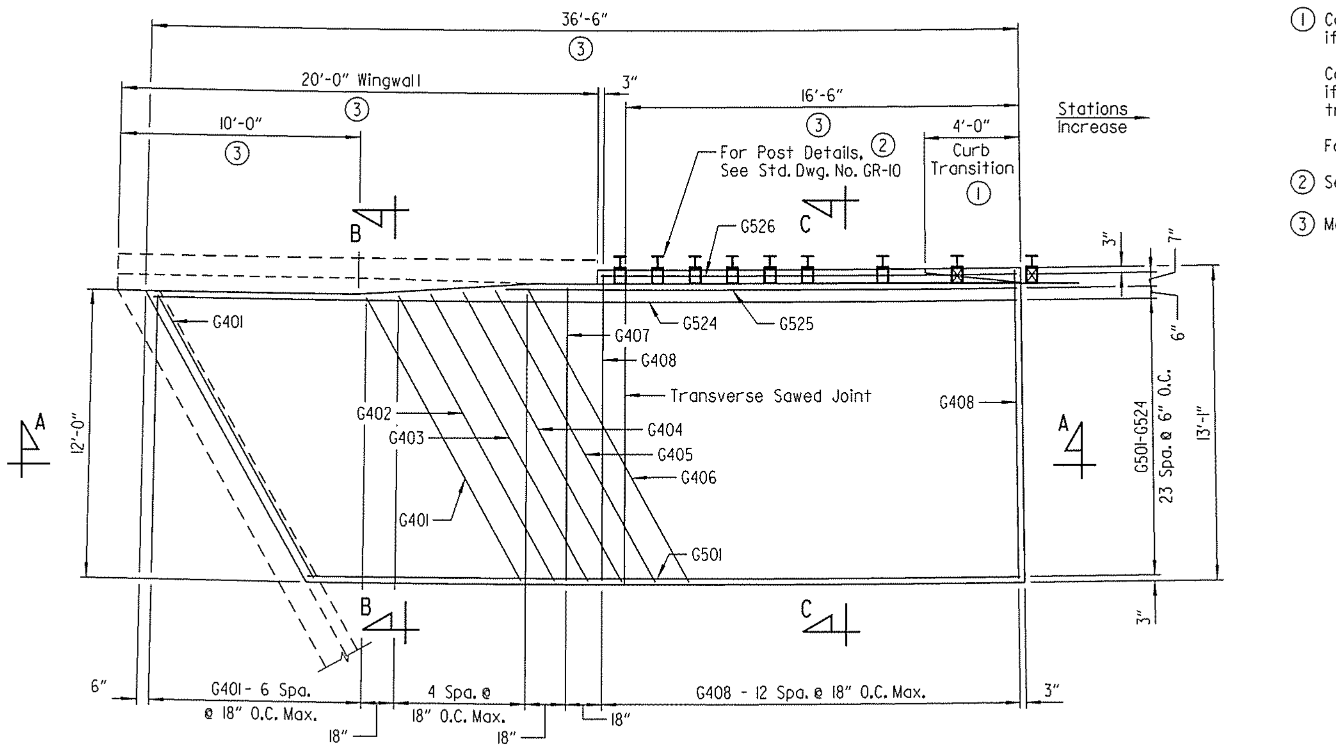

PLAN - TYPE SPECIAL 7 APPROACH GUTTER
(End Bridge No. A7380)
Scale: 1/4" = 1'-0"

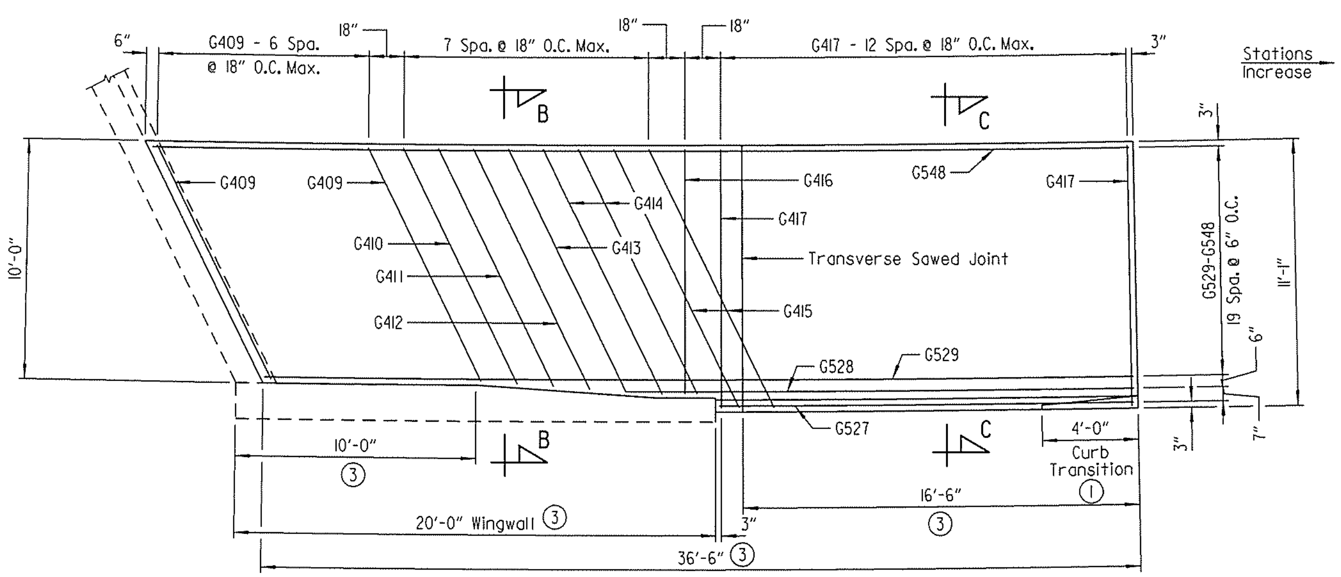

PLAN - TYPE SPECIAL 8 APPROACH GUTTER
(End Bridge No. B7380)
Scale: 1/4" = 1'-0"

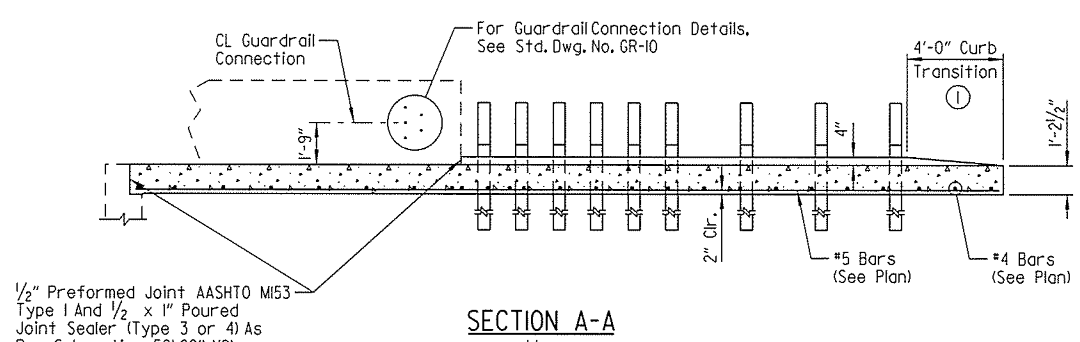

SECTION A-A
Scale: 1/4" = 1'-0"

(1) Construct gutter curb with height-transition as shown if drop inlet is not placed at end of gutter.

Construct gutter curb full height (no height-transition) if drop inlet is placed at the end of gutter. Curb height transition placed on drop inlet. See drop inlet details.

For locations of drop inlets, see Bridge Layouts.

(2) See bridge layouts for locations of guardrails.

(3) Measured along gutterline

TYPE	Class S(AE) Concrete	Reinforcing Steel (Gr. 60)
Type Special 7	18.79 Cu. Yds.	1091 lb.
Type Special 8	18.37 Cu. Yds.	1056 lb.

BAR LIST - TYPE SPECIAL 7 APPROACH GUTTER

MARK	NO. REQ'D.	LENGTH	P.D.
G401	7	13'-5"	Str.
G402 To G406	1 Ea.	13'-6" To 13'-11"	Str.
G407	1	12'-2"	Str.
G408	13	12'-9"	Str.
G501 To G524	1 Ea.	29'-9" To 36'-0"	Str.
G525	1	21'-2"	Str.
G526	1	17'-4"	Str.

BAR LIST - TYPE SPECIAL 8 APPROACH GUTTER

MARK	NO. REQ'D.	LENGTH	P.D.
G409	7	10'-10"	Str.
G410 To G413	1 Ea.	10'-10" To 11'-2"	Str.
G414	2	11'-4"	Str.
G415	2	11'-11"	Str.
G416	1	10'-2"	Str.
G417	13	10'-9"	Str.
G527	1	17'-3"	Str.
G528	1	21'-1"	Str.
G529 To G548	1 Ea.	36'-3" To 40'-9"	Str.

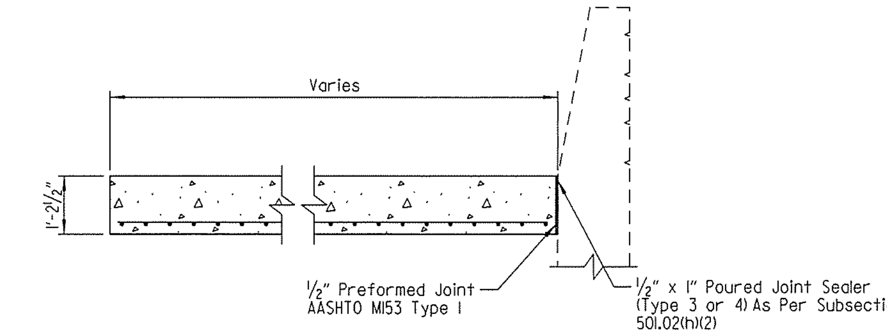

SECTION B-B
Scale: 1/2" = 1'-0"

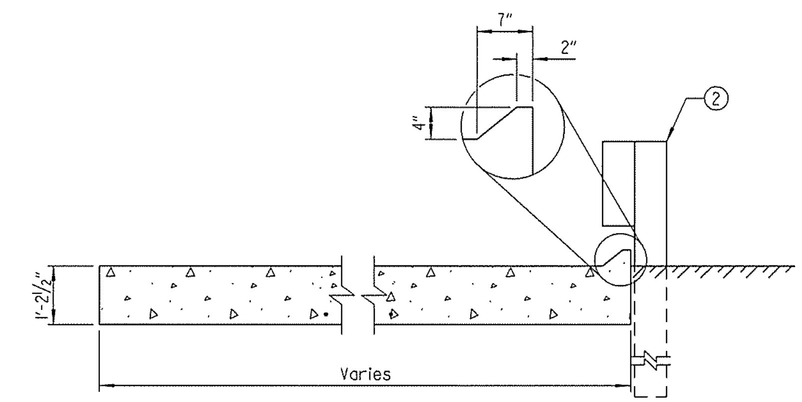

SECTION C-C
Scale: 1/2" = 1'-0"

GENERAL NOTES

Concrete shall be Class S(AE) (f'c = 4,000 psi).

Reinforcing steel shall conform to AASHTO M31 or M322 Type A, Grade 60 (fy = 60,000 psi).

Approach gutters will be measured and paid for in accordance with Section 504 of the Standard Specifications.

All transverse reinforcing steel shall be placed on radial lines. Spacing is measured along right edge of slab in the direction of stationing shown.

Construct Approach Gutters on arcs concentric with CL Median I-49.

STATE OF ARKANSAS
LICENSED PROFESSIONAL ENGINEER
No.16667
DANIEL R. GOAD

BRIDGE ENGINEER

SHEET 4 OF 7
DETAILS OF TYPE SPECIAL APPROACH GUTTERS

ROUTE SEC.

ARKANSAS STATE HIGHWAY COMMISSION
LITTLE ROCK, ARK.

DRAWN BY: RDM DATE: JULY 2015 FILENAME: BBB0414_AG4.dgn
CHECKED BY: RLW DATE: JAN. 2016 SCALE: AS SHOWN
DESIGNED BY: DRG DATE: JUNE 2015
BRIDGE NO. A7380 & B7380 DRAWING NO. 58257

jeskinner 3/20/2016 3:36:07 PM
WORKSPACE: AHTD Bridge
L:\20II\II01707 - I-540 Widening & Interchange Improvement\Drawings\540-AG-SI04-SB.dgn
REVISED DATE:

DATE REVISED	DATE FILMED	DATE REVISED	DATE FILMED	FED. ROAD DIST. NO.	STATE	FED. AID PROJ. NO.	SHEET NO.	TOTAL SHEETS
				6	ARK.			
				JOB NO.		BB0414	535	886
				① A7380 & B7380 APPROACH GUTTERS				58258

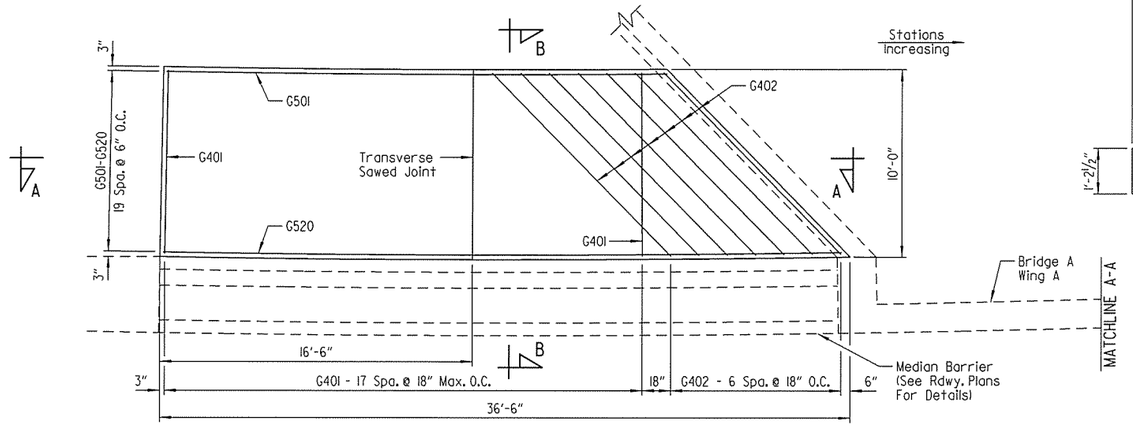

PLAN -TYPE SPECIAL 9 APPROACH GUTTER

(Begin Bridge No. A7380)
Scale: 1/4" = 1'-0"

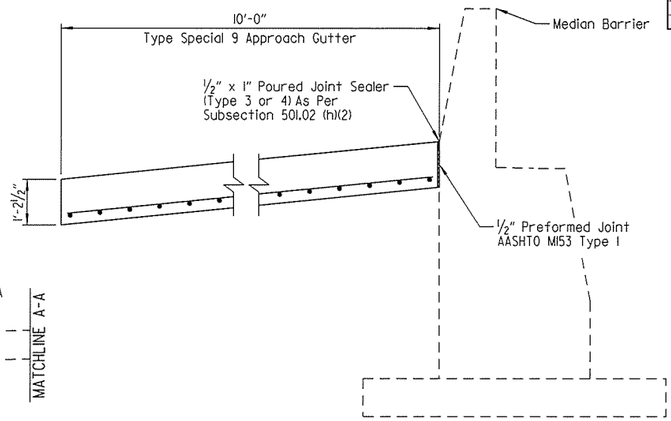

SECTION B-B

Scale: 1/2" = 1'-0"

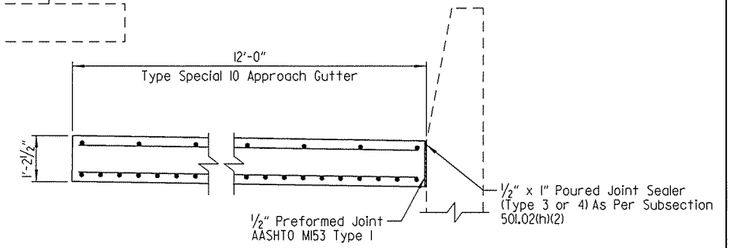

SECTION C-C

Scale: 1/2" = 1'-0"

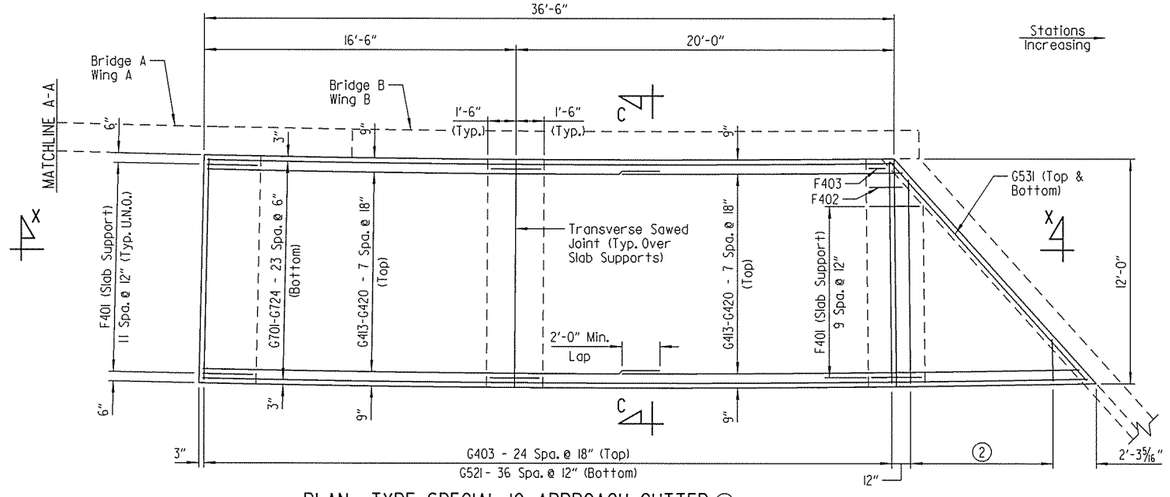

PLAN -TYPE SPECIAL 10 APPROACH GUTTER ①

(Begin Bridge No. B7380)
Scale: 1/4" = 1'-0"

TYPE	Class S(AE) Concrete	Reinforcing Steel (Gr. 60)
Type Special 9	14.12 Cu. Yds.	828 lb.
Type Special 10	29.54 Cu. Yds.	3,200 lb.

BAR LIST - TYPE SPECIAL 9 APPROACH GUTTER

MARK	NO. REQ'D.	LENGTH	P.D.
G401	18	9'-8"	Str.
G402	7	13'-4"	Str.
G501 To G520	1 Ea.	26'-5" To 35'-10"	Str.

BAR LIST - TYPE SPECIAL 10 APPROACH GUTTER

MARK	NO. REQ'D.	LENGTH	P.D.
G403	25	11'-8"	Str.
G404 To G412	1 Ea.	10'-8" To 2'-2"	Str.
G413 To G420	2 Ea.	24'-3" To 19'-5"	Str.
G521	37	11'-8"	Str.
G522 To G530	1 Ea.	10'-8" To 2'-2"	Str.
G531	2	15'-6"	Str.
G701 To G724	1 Ea.	36'-4" To 46'-9"	Str.
F401	34	2'-8"	Str.
F402	1	1'-9"	Str.
F403	1	10"	Str.
F404	9	11'-8"	Str.
F405	1	11'-3"	Str.
F406	1	10'-4"	Str.
F407	1	9'-3"	Str.

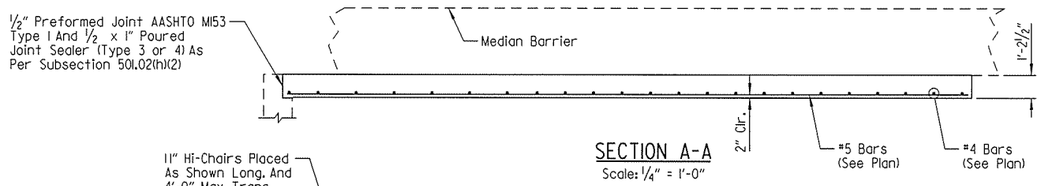

SECTION A-A

Scale: 1/4" = 1'-0"

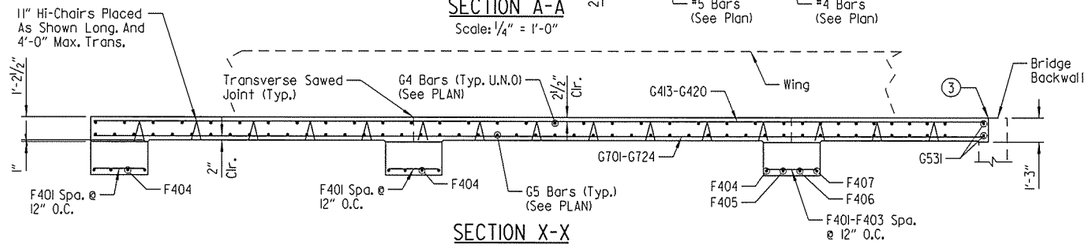

SECTION X-X

Scale: 1/4" = 1'-0"

① Approach gutter is reinforced as an approach slab due to traffic loads during Maintainance of Traffic Stages 2-2C.

② G404-G412 - 8 Spa. @ 12" Max. (Top)
G522-G530 - 8 Spa. @ 12" Max. (Bottom)

③ 1/2" Preformed Joint Filler (AASHTO M153, Type 1) and 1/2" x 1" Poured Joint Sealer (Type 3 or 4) as per Subsection 501.02(h)(2).

GENERAL NOTES

Concrete shall be Class S(AE) (f'c = 4,000 psi).

Reinforcing steel shall conform to AASHTO M31 or M322 Type A, Grade 60 (fy = 60,000 psi).

Approach gutters will be measured and paid for in accordance with Section 504 of the Standard Specifications.

All transverse reinforcing steel shall be placed on radial lines. Spacing is measured along right edge of slab in the direction of stationing shown.

Construct Approach Gutters on arcs concentric with CL Median I-49.

For details of slab supports, see Dwg. No. 58263.

LEGEND

U.N.O. = Unless Noted Otherwise

STATE OF ARKANSAS
LICENSED PROFESSIONAL ENGINEER
No.16667
DANIEL R. GOAD
BRIDGE ENGINEER

SHEET 5 OF 7
DETAILS OF TYPE SPECIAL APPROACH GUTTERS

ROUTE SEC.

ARKANSAS STATE HIGHWAY COMMISSION
LITTLE ROCK, ARK.

DRAWN BY: CWT DATE: SEPT. 2015 FILENAME: BBB0414_AG5.dgn
CHECKED BY: RLW DATE: JAN. 2016 SCALE: AS SHOWN
DESIGNED BY: DRG DATE: JUNE 2015

BRIDGE NO. A7380 & B7380 DRAWING NO. 58258

jeskinner 3/20/2016 3:36:08 PM
WORKGROUP: AHTD Bridge Group
L:\2014\14077\07 I-540 Widening & Interchange Improvement\Drawings\540-AG-SI05-SB.dgn
REVISED DATE:

DATE REVISED	DATE FILMED	DATE REVISED	DATE FILMED	FED. ROAD DIST. NO.	STATE	FED. AID PROJ. NO.	SHEET NO.	TOTAL SHEETS
				6	ARK.			
				JOB NO.		BB0414	536	886
				① A7380 & B7380 APPROACH GUTTERS				58259

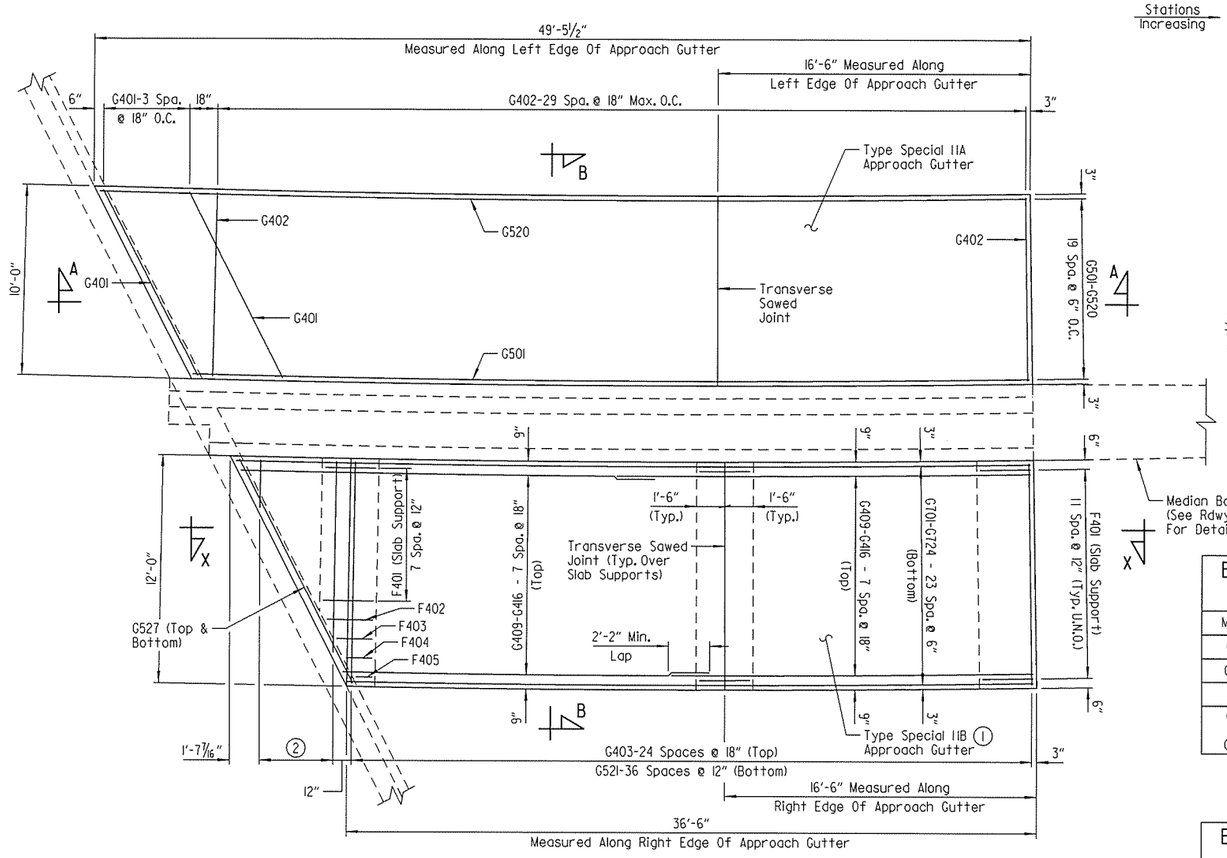

① Approach Gutter IIB is reinforced as an approach slab due to traffic loads during Maintainance of Traffic Stages 2-2C.

② G404-G408 - 4 Spa. @ 12" Max. (Top)
G522-G526 - 4 Spa. @ 12" Max. (Bottom)

③ ½" Preformed Joint Filler (AASHTO M153, Type II and ½" x 1" Poured Joint Sealer (Type 3 or 4) as per Subsection 501.02(h)(2).

PLAN - TYPE SPECIAL IIA & IIB APPROACH GUTTERS ①

(At End Bridge No. A7380 & B7380)
Scale: ¼" = 1'-0"

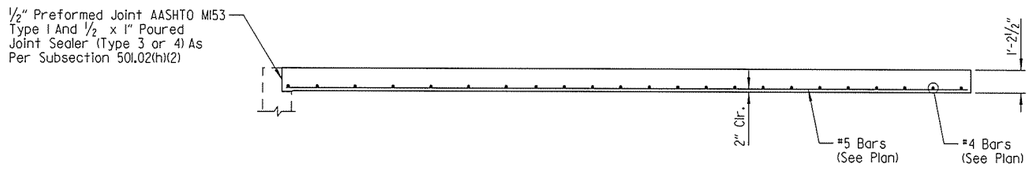

SECTION A-A

Scale: ¼" = 1'-0"

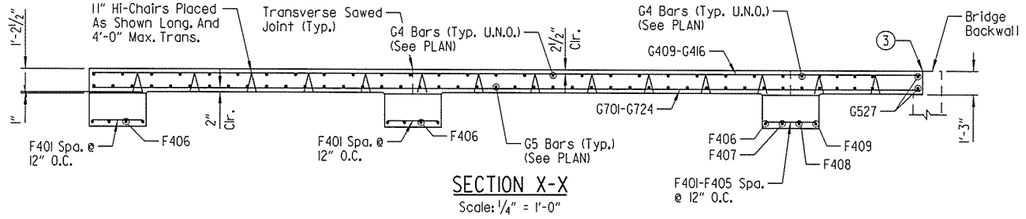

SECTION X-X

Scale: ¼" = 1'-0"

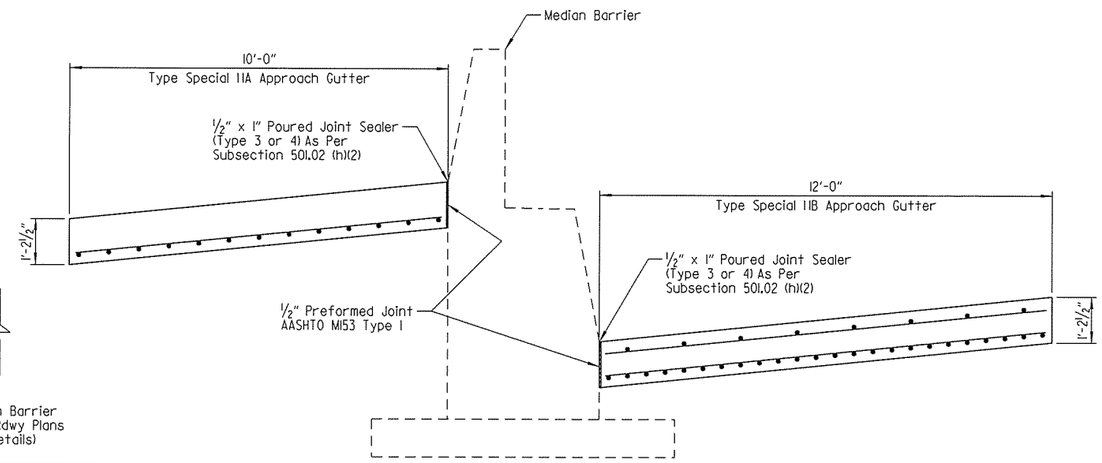

SECTION B-B

Scale: ½" = 1'-0"

BAR LIST - TYPE SPECIAL IIA APPROACH GUTTER

MARK	NO. REQ'D.	LENGTH	P.D.
G401	4	10'-11"	Str.
G402	30	9'-8"	Str.
G501 To G520	1 Ea.	44'-2" To 48'-11"	Str.

BAR LIST - TYPE SPECIAL IIB APPROACH GUTTER

MARK	NO. REQ'D.	LENGTH	P.D.
G403	25	11'-8"	Str.
G404 To G408	1 Ea.	10'-0" To 2'-6"	Str.
G409 To G416	2 Ea.	21'-11" To 19'-4"	Str.
G521	37	11'-8"	Str.
G522 To G526	1 Ea.	10'-0" To 2'-6"	Str.
G527	2	13'-2"	Str.
G701 To G724	1 Ea.	36'-3" To 42'-0"	Str.
F401	32	2'-8"	Str.
F402	1	2'-5"	Str.
F403	1	1'-10"	Str.
F404	1	1'-4"	Str.
F405	1	10"	Str.
F406	9	11'-8"	Str.
F407	1	11'-2"	Str.
F408	1	9'-7"	Str.
F409	1	8'-0"	Str.

TYPE	Class S(AE) Concrete	Reinforcing Steel (Gr. 60)
Type Special IIA	21.02 Cu. Yds.	1,194 lb.
Type Special IIB	28.30 Cu. Yds.	3,016 lb.

LEGEND

U.N.O. = Unless Noted Otherwise

GENERAL NOTES

Concrete shall be Class S(AE) (f'c = 4,000 psi).

Reinforcing steel shall conform to AASHTO M31 Or M322 Type A, Grade 60 (fy = 60,000 psi).

Approach gutters will be measured and paid for in accordance with Section 504 of the Standard Specifications.

All transverse reinforcing steel shall be placed on radial lines. Spacing is measured along left edge of slab in the direction of stationing shown.

Construct approach gutters on arcs concentric with CL Median I-49.

For details of slab supports, see Dwg. No. 58267.

STATE OF ARKANSAS
LICENSED PROFESSIONAL ENGINEER
No.16667
DANIEL R. GOAD
BRIDGE ENGINEER

SHEET 6 OF 7
DETAILS OF TYPE SPECIAL APPROACH GUTTERS

ROUTE SEC.

ARKANSAS STATE HIGHWAY COMMISSION

LITTLE ROCK, ARK.

DRAWN BY: CWT DATE: SEPT. 2015 FILENAME: BBB0414_AG6.dgn
CHECKED BY: RLW DATE: JAN. 2016 SCALE: AS SHOWN
DESIGNED BY: DRG DATE: JUNE 2015

BRIDGE NO. A7380 & B7380 DRAWING NO. 58259

jeskinner 3/20/2016 3:36:08 PM
WORKSPACE: AHTD 8x11 Std
L:\2011\1001707 - I-540 Widening & Interchange Improvement\Drawings\540-AG-S106-SB.dgn
REVISED DATE:

DATE REVISED	DATE FILMED	DATE REVISED	DATE FILMED	FED. ROAD DIST. NO.	STATE	FED. AID PROJ. NO.	SHEET NO.	TOTAL SHEETS
				6	ARK.			
				JOB NO.		BB0414	537	886
				(1) A7381 & B7381		APPROACH GUTTERS		58260

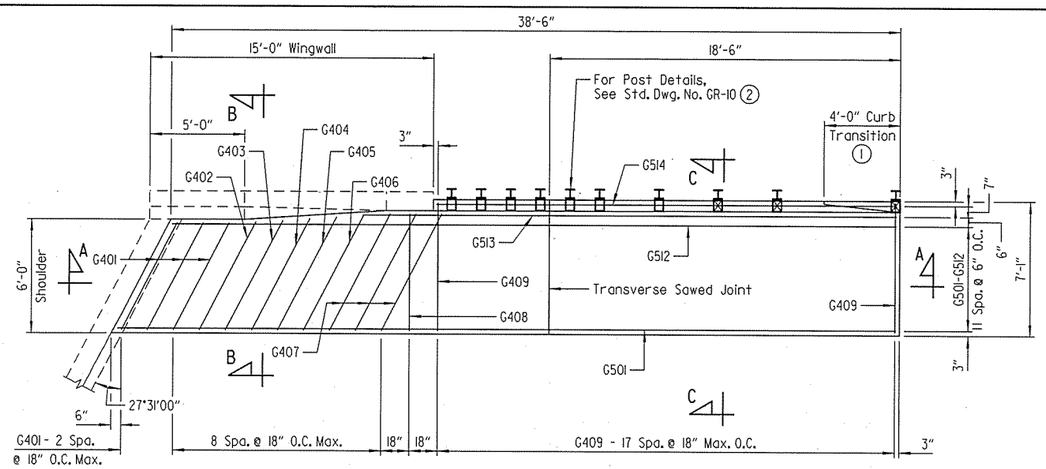

PLAN - TYPE SPECIAL 12 APPROACH GUTTER

(End Bridge No. A7381, Stage 2 Construction Shown;
Begin Bridge No. B7381, Stage 2 Construction Similar)
Scale: 1/4" = 1'-0"

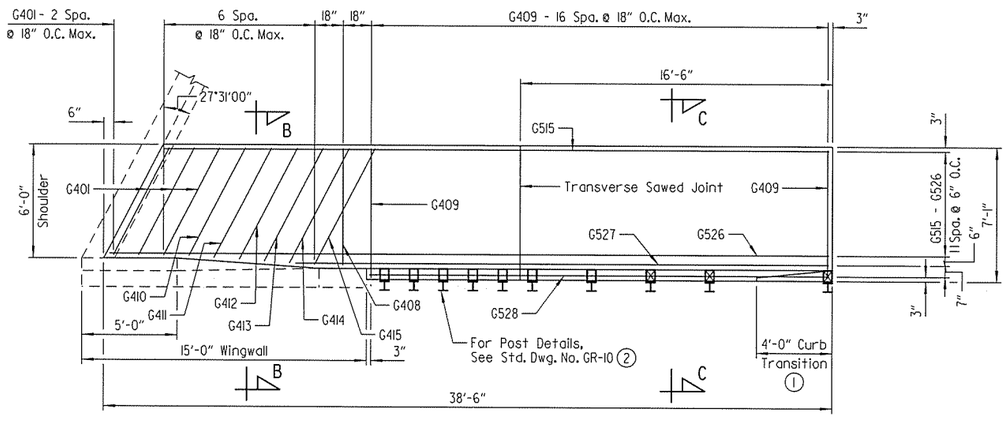

PLAN - TYPE SPECIAL 13 APPROACH GUTTER

(End Bridge No. B7381, Stage 2 Construction Shown;
Begin Bridge No. A7381, Stage 2 Construction Similar)
Scale: 1/4" = 1'-0"

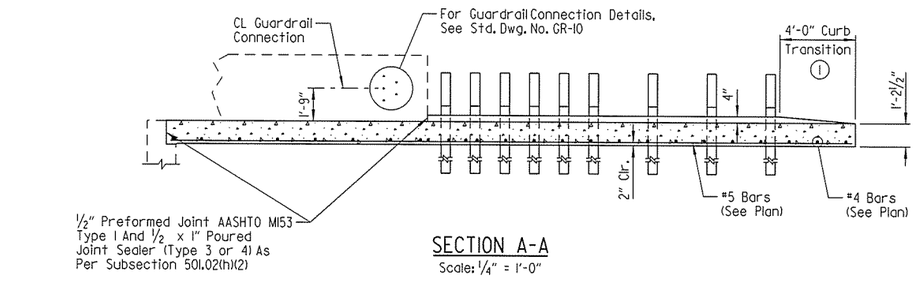

SECTION A-A

Scale: 1/4" = 1'-0"

(1) Construct gutter curb with height-transition as shown if drop inlet is not placed at end of gutter.

Construct gutter curb full height (no height-transition) if drop inlet is placed at the end of gutter. Curb height transition placed on drop inlet. See drop inlet details.

For locations of drop inlets, see Bridge Layouts.

(2) See Bridge Layouts for locations of guardrails.

TYPE	Class S(AE) Concrete	Reinforcing Steel (Gr. 60)
Type Special 12	12.19 Cu. Yds.	685 lb.
Type Special 13	11.25 Cu. Yds.	633 lb.

BAR LIST - TYPE SPECIAL 12 APPROACH GUTTER

MARK	NO. REQ'D.	LENGTH	P.D.
G401	3	6'-4"	Str.
G402 To G406	1 Ea.	6'-5" To 6'-10"	Str.
G407	3	6'-11"	Str.
G408	1	6'-2"	Str.
G409	18	6'-9"	Str.
G501 To G512	1 Ea.	41'-1" To 38'-3"	Str.
G513	1	28'-2"	Str.
G514	1	24'-3"	Str.

NOTES:
Bars shown are for Stage 2 Construction at End Bridge. Bars for Stage 2 Construction at Begin Bridge are similar.

BAR LIST - TYPE SPECIAL 13 APPROACH GUTTER

MARK	NO. REQ'D.	LENGTH	P.D.
G401	3	6'-4"	Str.
G408	1	6'-2"	Str.
G409	17	6'-9"	Str.
G410 To G415	1 Ea.	6'-5" To 6'-11"	Str.
G515 To G526	1 Ea.	35'-2" To 38'-0"	Str.
G527	1	28'-2"	Str.
G528	1	24'-3"	Str.

NOTES:
Bars shown are for Stage 2 Construction at End Bridge. Bars for Stage 2 Construction at Begin Bridge are similar.

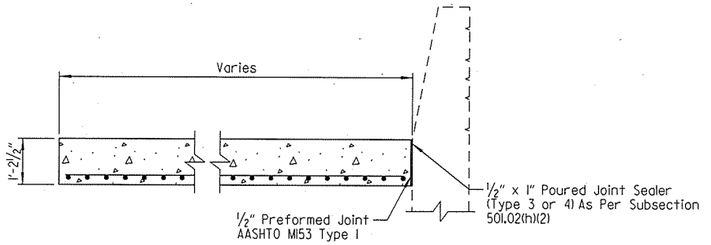

SECTION B-B

Scale: 1/2" = 1'-0"

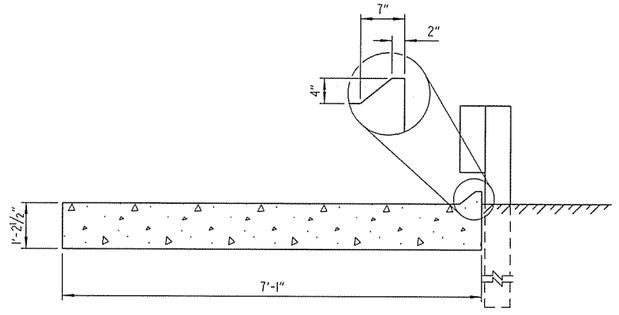

SECTION C-C

Scale: 1/2" = 1'-0"

GENERAL NOTES

Concrete shall be Class S(AE) (f'c = 4,000 psi).

Reinforcing steel shall conform to AASHTO M31 Or M322 Type A, Grade 60 (fy = 60,000 psi).

Approach gutters will be measured and paid for in accordance with Section 504 of the Standard Specifications.

STATE OF ARKANSAS
LICENSED PROFESSIONAL ENGINEER
No. 16667
DANIEL R. GOAD
BRIDGE ENGINEER

SHEET 7 OF 7
DETAILS OF TYPE SPECIAL APPROACH GUTTERS

ROUTE SEC.

ARKANSAS STATE HIGHWAY COMMISSION
LITTLE ROCK, ARK.

DRAWN BY: RDM DATE: JULY 2015 FILENAME: BBB0414_AG7.dgn
CHECKED BY: RLW DATE: AUG. 2015 SCALE: AS SHOWN
DESIGNED BY: DRG DATE: JUNE 2015

BRIDGE NO. A7381 & B7381 DRAWING NO. 58260

jesskinner 4/19/2016 2:48:44 PM
WORKSPACE: AHTD Bridge
L:\20II\II0I707 - I-540 Widening & Interchange Improvement\Drawings\I540-AG-S107-SB.dgn
REVISED DATE:

DATE REVISED	DATE FILMED	DATE REVISED	DATE FILMED	FED. ROAD DIST. NO.	STATE	FED. AID PROJ. NO.	SHEET NO.	TOTAL SHEETS
				6	ARK.			
				JOB NO.		BB0414	538	886
				(1) 05692		APPROACH SLABS		58261

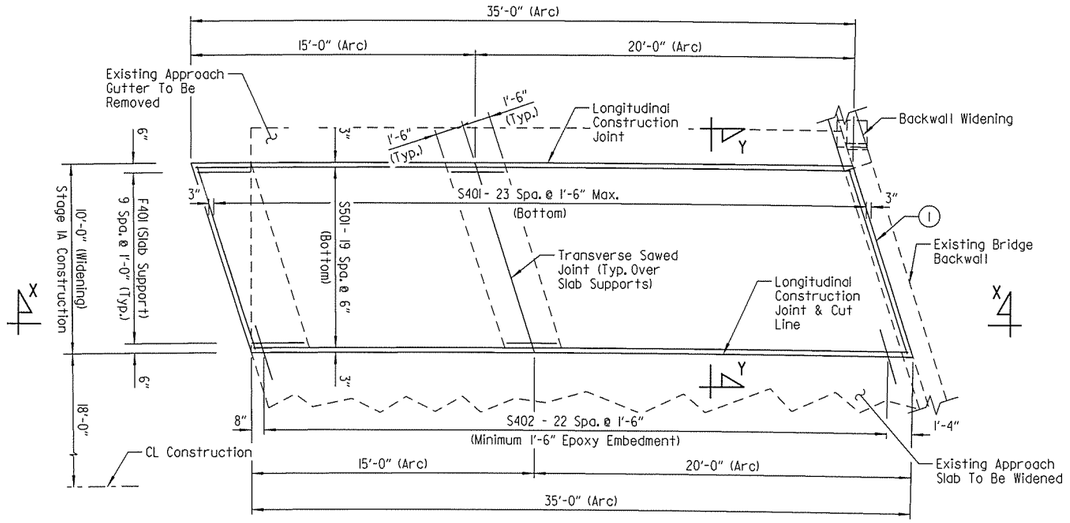

PLAN - TYPE SPECIAL 1 APPROACH SLAB

(Begin Bridge No. 05692)
Scale: 1/4" = 1'-0"

Stations Increase

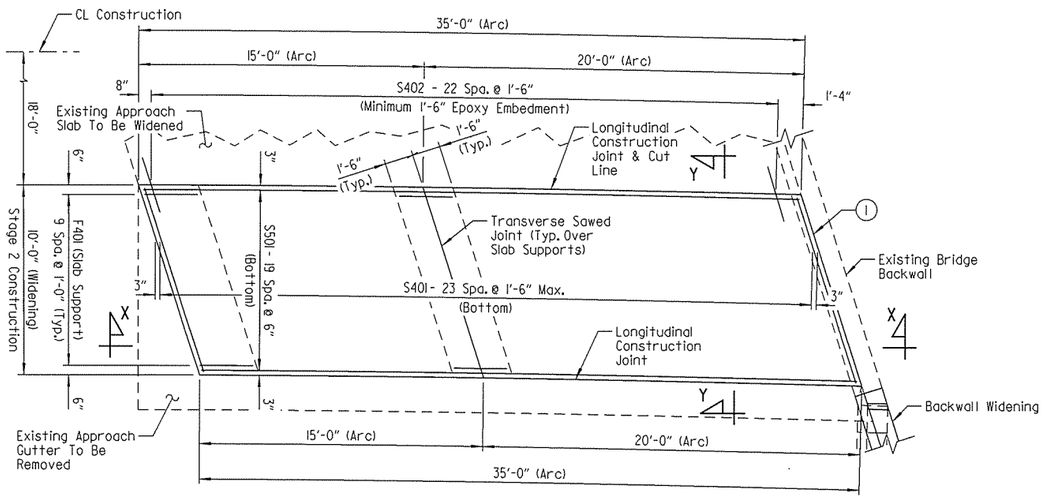

PLAN - TYPE SPECIAL 2 APPROACH SLAB

(Begin Bridge No. 05692)
Scale: 1/4" = 1'-0"

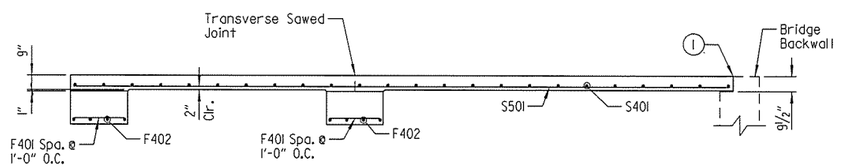

SECTION X-X

Scale: 1/4" = 1'-0"

(1) 1/2" Preformed Joint Filler (AASHTO M153, Type I) and 1/2" x 1" Poured Joint Sealer (Type 3 or 4) as per Subsection 501.02(h)(2).

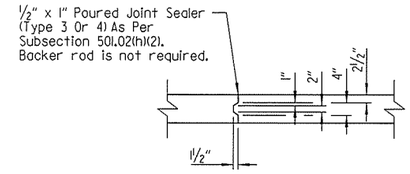

DETAILS OF LONGITUDINAL CONSTRUCTION JOINT

Scale: 1/2" = 1'-0"

TYPE	Class S(AE) Concrete	Reinforcing Steel (Gr. 60)
Type Special 1	14.01 Cu. Yds.	1022 lb.
Type Special 2	14.01 Cu. Yds.	1023 lb.

BAR LIST - TYPE SPECIAL 1 APPROACH SLAB

MARK	NO. REQ'D.	LENGTH	P.D.
S401	24	10'-2"	Str.
S402	23	3'-0"	Str.
S501	20	34'-7½"	Str.
F401	20	2'-9"	Str.
F402	8	10'-2"	Str.

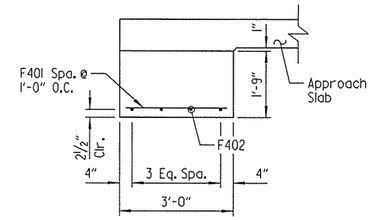

DETAILS OF SUPPORT AT END OF SLAB

Scale: 1/2" = 1'-0"

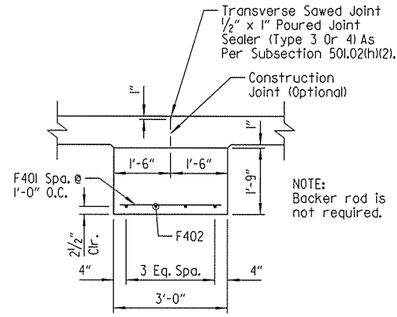

NOTE: Backer rod is not required.

DETAILS OF INTERIOR SUPPORT OF SLAB

Scale: 1/2" = 1'-0"

BAR LIST - TYPE SPECIAL 2 APPROACH SLAB

MARK	NO. REQ'D.	LENGTH	P.D.
S401	24	10'-2½"	Str.
S402	23	3'-0"	Str.
S501	20	34'-7½"	Str.
F401	20	2'-9½"	Str.
F402	8	10'-2½"	Str.

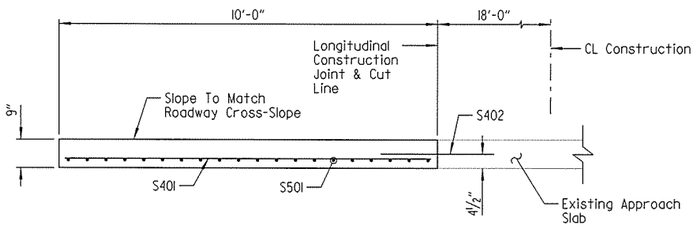

SECTION Y-Y

Scale: 1/2" = 1'-0"

GENERAL NOTES

Concrete shall be Class S(AE) (f'c = 4,000 psi).

Reinforcement steel shall conform to AASHTO M31 Or M322 Type A, Grade 60 (fy = 60,000 psi).

Approach Slabs will be measured and paid for in accordance with Section 504.

Construct approach slabs on arcs concentric to CL Construction.

Spacing of transverse reinforcing steel is measured along left edge of slab (left is defined by direction of stationing).

The surface finish for Approach Slabs shall match that used on the bridge deck.

STATE OF ARKANSAS
LICENSED PROFESSIONAL ENGINEER
No. 16667
DANIEL R. GOAD
BRIDGE ENGINEER

SHEET 1 OF 16
DETAILS OF TYPE SPECIAL APPROACH SLABS

ROUTE SEC.

ARKANSAS STATE HIGHWAY COMMISSION
LITTLE ROCK, ARK.

DRAWN BY: JES DATE: DEC. 2015 FILENAME: BBB0414_ASI.dgn
CHECKED BY: RLW DATE: JAN. 2016 SCALE: AS SHOWN
DESIGNED BY: JES DATE: DEC. 2015
BRIDGE NO. 05692 DRAWING NO. 58261

jeskinner 3/20/2016 3:36:09 PM
WORKSPACE: AHTD_Edge
L:\CON\MOT70\I-540 Widening & Interchange Improvement\Drawings\I540-AS-SI01-SB.dgn
REVISED DATE:

DATE REVISED	DATE FILMED	DATE REVISED	DATE FILMED	FED. ROAD DIST. NO.	STATE	FED. AID PROJ. NO.	SHEET NO.	TOTAL SHEETS
				6	ARK.			
				JOB NO.		BB0414	539	886
				(1) 05692		APPROACH SLABS		58262

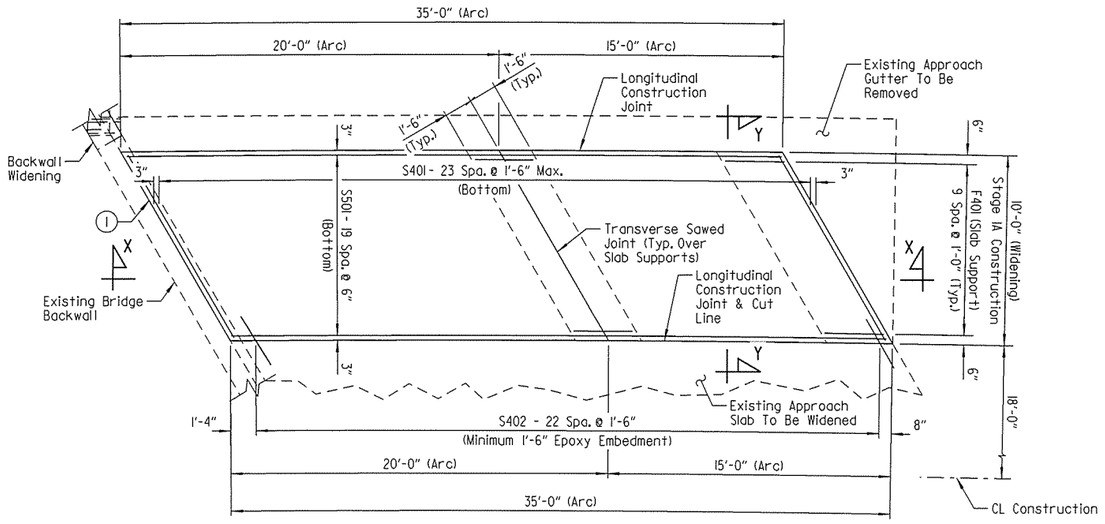

PLAN - TYPE SPECIAL 3 APPROACH SLAB

(End Bridge No. 05692)
Scale: 1/4" = 1'-0"

Stations Increase

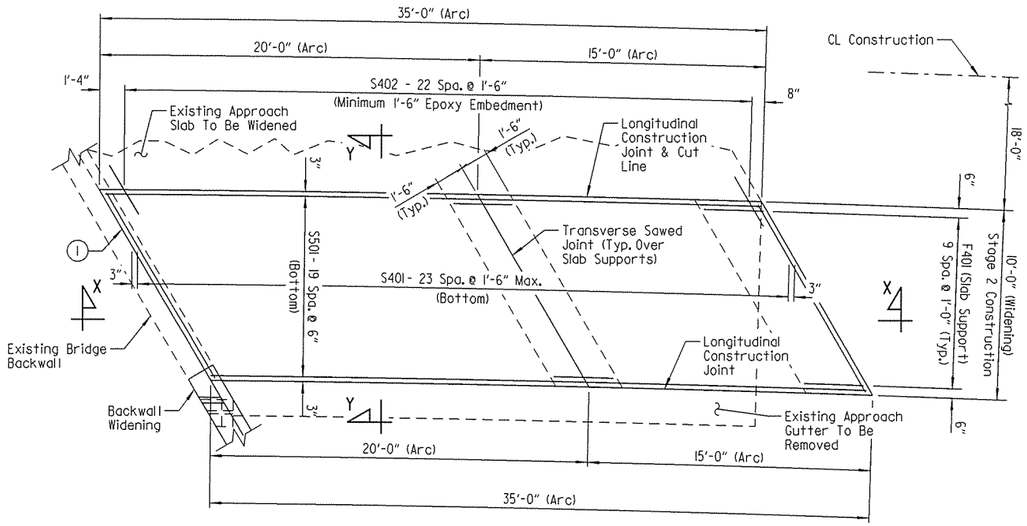

PLAN - TYPE SPECIAL 4 APPROACH SLAB

(End Bridge No. 05692)
Scale: 1/4" = 1'-0"

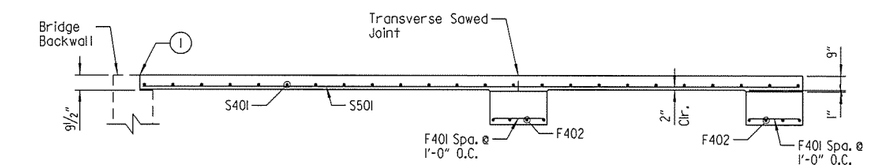

SECTION X-X

Scale: 1/4" = 1'-0"

(1) 1/2" Preformed Joint Filler (AASHTO M153, Type 1) and 1/2" x 1" Poured Joint Sealer (Type 3 or 4) as per Subsection 501.02(h)(2).

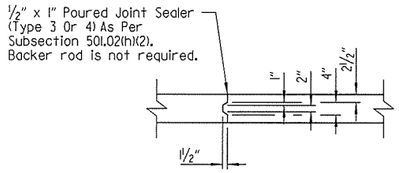

DETAILS OF LONGITUDINAL CONSTRUCTION JOINT

Scale: 1/2" = 1'-0"

TYPE	Class S(AE) Concrete	Reinforcing Steel (Gr. 60)
Type Special 3	14.47 Cu. Yds.	1049 lb.
Type Special 4	14.52 Cu. Yds.	1052 lb.

BAR LIST - TYPE SPECIAL 3 APPROACH SLAB

MARK	NO. REQ'D.	LENGTH	P.D.
S401	24	11'-2 1/2"	Str.
S402	23	3'-0"	Str.
S501	20	34'-7 1/2"	Str.
F401	20	3'-1"	Str.
F402	8	11'-2 1/2"	Str.

BAR LIST - TYPE SPECIAL 4 APPROACH SLAB

MARK	NO. REQ'D.	LENGTH	P.D.
S401	24	11'-4"	Str.
S402	23	3'-0"	Str.
S501	20	34'-7 1/2"	Str.
F401	20	3'-1 1/2"	Str.
F402	8	11'-4"	Str.

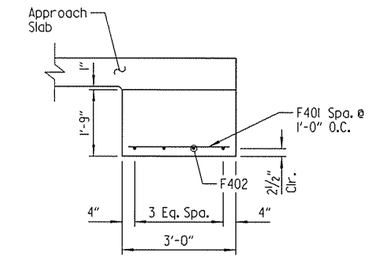

DETAILS OF SUPPORT AT END OF SLAB

Scale: 1/2" = 1'-0"

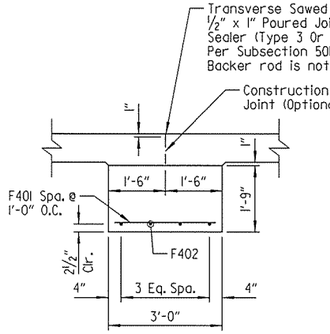

DETAILS OF INTERIOR SUPPORT OF SLAB

Scale: 1/2" = 1'-0"

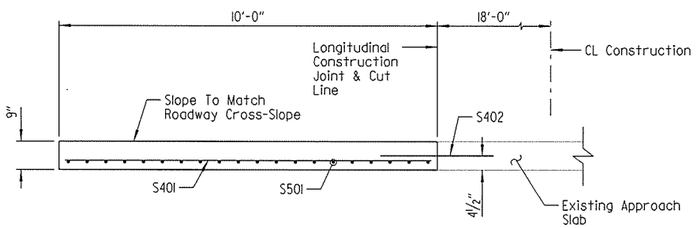

SECTION Y-Y

Scale: 1/2" = 1'-0"

GENERAL NOTES

Concrete shall be Class S(AE) (f'c = 4,000 psi).

Reinforcement steel shall conform to AASHTO M31 Or M322 Type A, Grade 60 (fy = 60,000 psi).

Approach Slabs will be measured and paid for in accordance with Section 504.

Construct approach slabs on arcs concentric to CL Construction.

Spacing of transverse reinforcing steel is measured along left edge of slab (left is defined by direction of stationing).

The surface finish for Approach Slabs shall match that used on the bridge deck.

STATE OF ARKANSAS
LICENSED PROFESSIONAL ENGINEER
No.16667
DANIEL R. GOAD
BRIDGE ENGINEER

SHEET 2 OF 16
DETAILS OF TYPE SPECIAL APPROACH SLABS

ROUTE SEC.

ARKANSAS STATE HIGHWAY COMMISSION
LITTLE ROCK, ARK.

DRAWN BY: JES DATE: DEC. 2015 FILENAME: BBB0414_AS2.dgn
CHECKED BY: RLW DATE: JAN. 2016 SCALE: AS SHOWN
DESIGNED BY: JES DATE: DEC. 2015
BRIDGE NO. 05692 DRAWING NO. 58262

jeskinner 3/20/2016 3:36:09 PM
WORKSPACE: AHTD_Bridge
L:\2016\16017 - I-540 Widening & Interchange Improvement\Drawings\540-AS-S102-SB.dgn
REVISED DATE:

DATE REVISED	DATE FILMED	DATE REVISED	DATE FILMED	FED. ROAD DIST. NO.	STATE	FED. AID PROJ. NO.	SHEET NO.	TOTAL SHEETS
				6	ARK.			
				JOB NO.		BB0414	540	886
				(1) 07379		APPROACH SLABS		58263

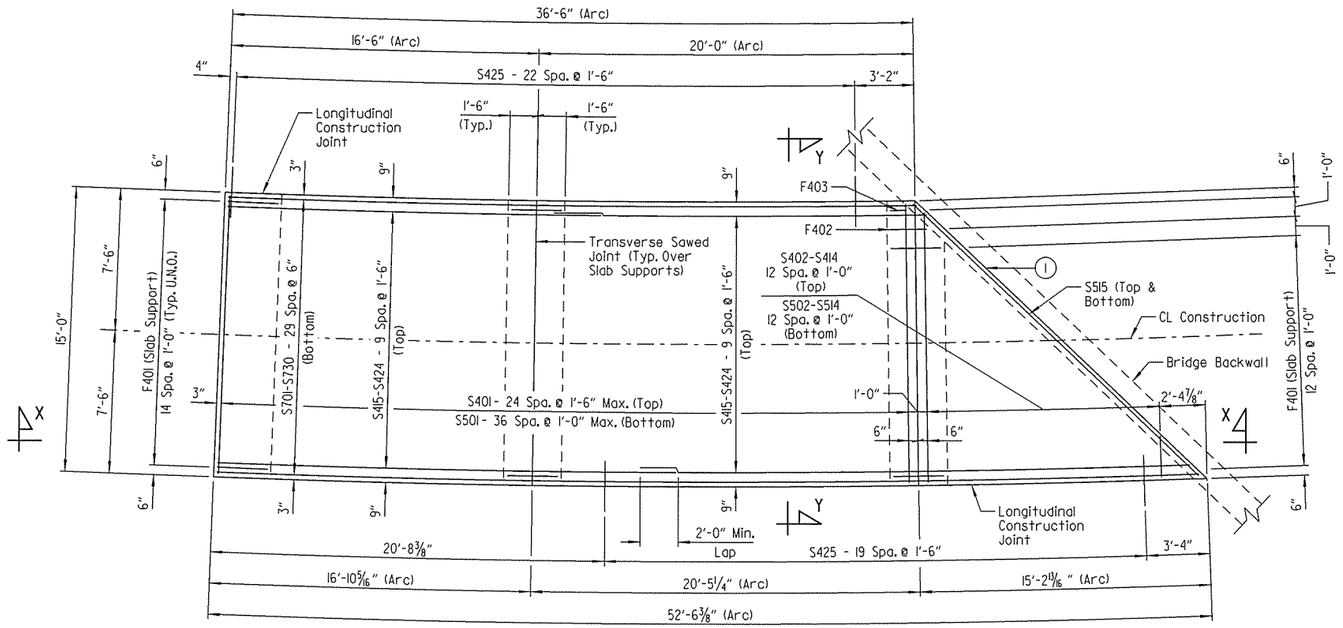

PLAN - TYPE SPECIAL 5 APPROACH SLAB

(Begin Bridge No. 07379)
Scale: ¼" = 1'-0"

Stations increase

(1) ½" Preformed Joint Filler (AASHTO M153, Type 1) and ½" x 1" Poured Joint Sealer (Type 3 or 4) as per Subsection 501.02(h)(2).

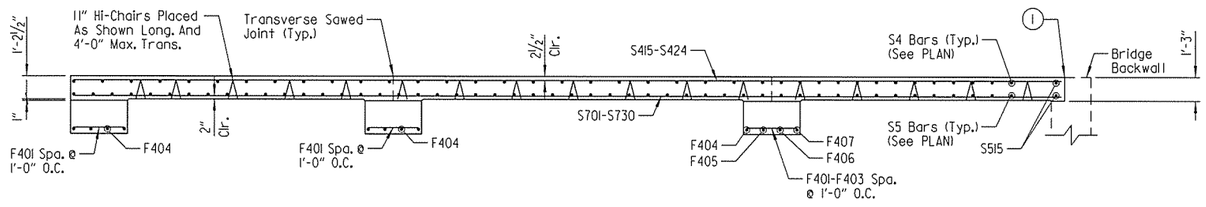

SECTION X-X

Scale: ¼" = 1'-0"

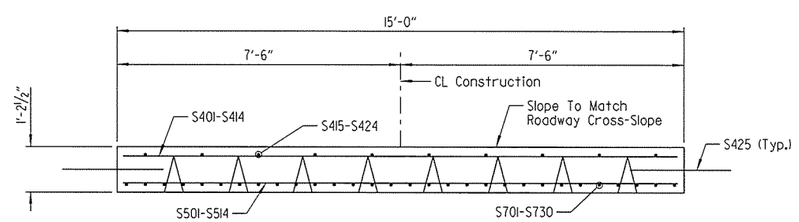

SECTION Y-Y

Scale: ½" = 1'-0"

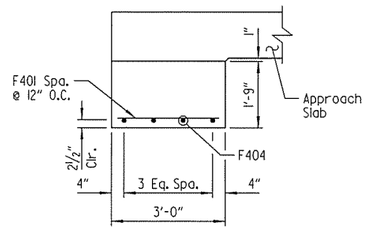

DETAILS OF SUPPORT AT END OF SLAB

Scale: ½" = 1'-0"

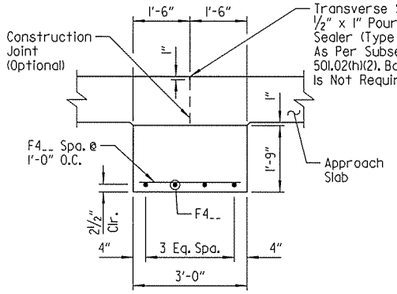

DETAILS OF INTERIOR SUPPORT OF SLAB

Scale: ½" = 1'-0"

TYPE	Class S(AE) Concrete	Reinforcing Steel (Gr. 60)
Type Special 5	38.65 Cu. Yds.	4,335 lb.

BAR LIST - TYPE SPECIAL 5 APPROACH SLAB

MARK	NO. REQ'D.	LENGTH	P.D.
S401	25	14'-8"	Str.
S402 To S414	1 Ea.	14'-2" To 2'-2"	Str.
S415 To S424	2 Ea.	19'-9" To 26'-10"	Str.
S425	43	3'-0"	Str.
S501	37	14'-8"	Str.
S502 To S514	1 Ea.	14'-2" To 2'-2"	Str.
S515	2	20'-9"	Str.
S701 To S730	1 Ea.	36'-5" To 51'-11"	Str.
F401	43	2'-8"	Str.
F402	1	1'-11"	Str.
F403	1	10"	Str.
F404	9	14'-8"	Str.
F405	1	14'-3"	Str.
F406	1	13'-6"	Str.
F407	1	12'-9"	Str.

GENERAL NOTES

Concrete shall be Class S(AE) (f'c = 4,000 psi).

Reinforcement steel shall conform to AASHTO M31 Or M322 Type A, Grade 60 (fy = 60,000 psi).

Approach slabs will be measured and paid for in accordance with Section 504.

Construct approach slab on arcs concentric to CL Construction.

All transverse reinforcing steel shall be placed on radial lines. Spacing is measured along left edge of slab (left is defined by direction of stationing).

The surface finish for the approach slabs shall match that used on bridge deck.

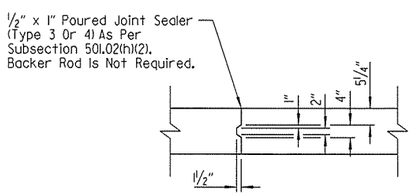

DETAILS OF LONGITUDINAL CONSTRUCTION JOINT

Scale: ½" = 1'-0"

LEGEND

U.N.O. = Unless Noted Otherwise

STATE OF ARKANSAS
LICENSED PROFESSIONAL ENGINEER
No.16667
DANIEL R. GOAD
BRIDGE ENGINEER

SHEET 3 OF 16
DETAILS OF TYPE SPECIAL APPROACH SLABS

ROUTE SEC.

ARKANSAS STATE HIGHWAY COMMISSION

LITTLE ROCK, ARK.

DRAWN BY: CJH DATE: OCT. 2015 FILENAME: BBB0414_AS3.dgn
CHECKED BY: RLW DATE: JAN. 2016 SCALE: AS SHOWN
DESIGNED BY: DRG DATE: OCT. 2015

BRIDGE NO. 07379 DRAWING NO. 58263

jeskinner 3/20/2016 3:36:10 PM
WORKSPACE: AHTD Projects
L:\x20\N007707 - I-540 Widening & Interchange Improvement\Drawings\1540-AS-S103-SB.dgn
REVISED DATE:

DATE REVISED	DATE FILMED	DATE REVISED	DATE FILMED	FED. ROAD DIST. NO.	STATE	FED. AID PROJ. NO.	SHEET NO.	TOTAL SHEETS
				6	ARK.			
				JOB NO.		BB0414	541	886
				(1) 07379		APPROACH SLABS		58264

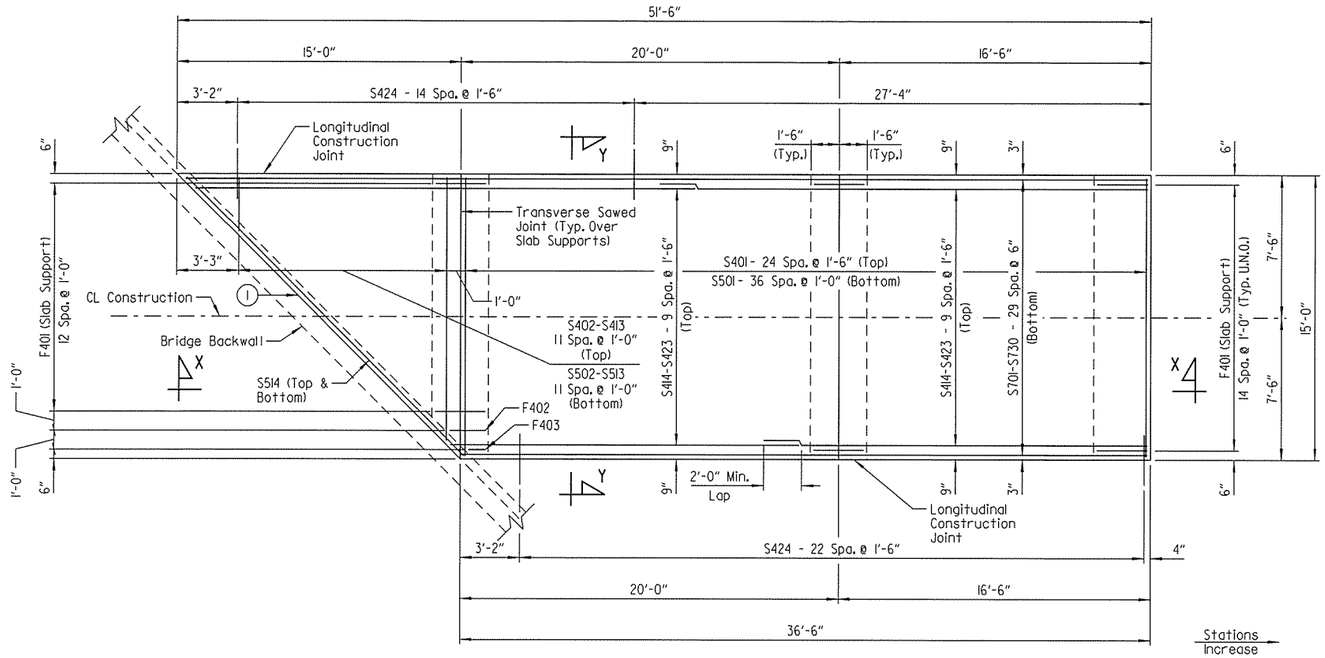

PLAN - TYPE SPECIAL 6 APPROACH SLAB

(End Bridge No. 07379)
Scale: 1/4" = 1'-0"

(1) 1/2" Preformed Joint Filler (AASHTO M153, Type 1) and 1/2" x 1" Poured Joint Sealer (Type 3 or 4) as per Subsection 501.02(h)(2).

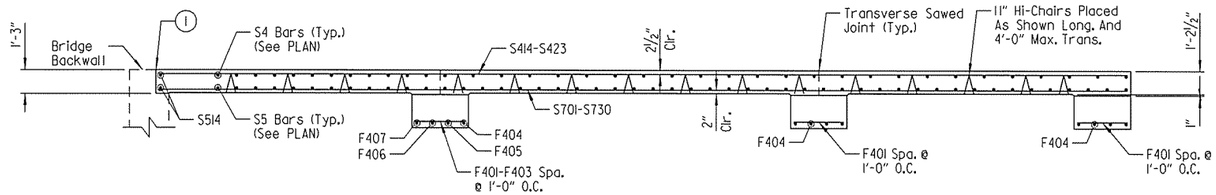

SECTION X-X

Scale: 1/4" = 1'-0"

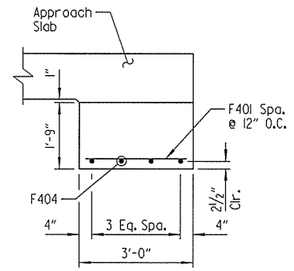

DETAILS OF SUPPORT AT END OF SLAB

Scale: 1/2" = 1'-0"

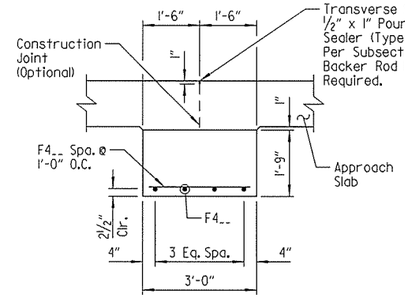

DETAILS OF INTERIOR SUPPORT OF SLAB

Scale: 1/2" = 1'-0"

TYPE	Class S(AE) Concrete	Reinforcing Steel (Gr. 60)
Type Special 6	38.29 Cu. Yds.	4,274 lb.

BAR LIST - TYPE SPECIAL 6 APPROACH SLAB

MARK	NO. REQ'D.	LENGTH	P.D.
S401	25	14'-8"	Str.
S402 To S413	1 Ea.	2'-10" To 13'-10"	Str.
S414 To S423	2 Ea.	19'-6" To 26'-5"	Str.
S424	38	3'-0"	Str.
S501	37	14'-8"	Str.
S502 To S513	1 Ea.	2'-10" To 13'-10"	Str.
S514	2	20'-9"	Str.
S701 To S730	1 Ea.	36'-4" To 50'-10"	Str.
F401	43	2'-8"	Str.
F402	1	1'-11"	Str.
F403	1	11"	Str.
F404	9	14'-8"	Str.
F405	1	14'-3"	Str.
F406	1	13'-5"	Str.
F407	1	12'-7"	Str.

GENERAL NOTES

Concrete shall be Class S(AE) (f'c = 4,000 psi).

Reinforcement Steel shall conform to AASHTO M31 Or M322 Type A, Grade 60 (fy = 60,000 psi).

Approach Slabs will be measured and paid for in accordance with Section 504.

The surface finish for the approach slabs shall match that used on bridge deck.

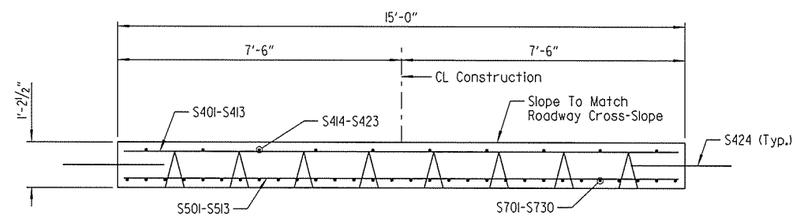

SECTION Y-Y

Scale: 1/2" = 1'-0"

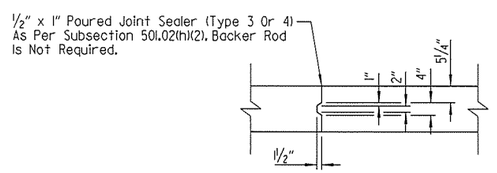

DETAILS OF LONGITUDINAL CONSTRUCTION JOINT

Scale: 1/2" = 1'-0"

LEGEND

U.N.O. = Unless Noted Otherwise

STATE OF ARKANSAS
LICENSED PROFESSIONAL ENGINEER
No.16667
DANIEL R. GOAD
BRIDGE ENGINEER

SHEET 4 OF 16
DETAILS OF TYPE SPECIAL APPROACH SLABS

ROUTE SEC.

ARKANSAS STATE HIGHWAY COMMISSION
LITTLE ROCK, ARK.

DRAWN BY: CJH DATE: OCT. 2015 FILENAME: BBB0414_AS4.dgn
CHECKED BY: RLW DATE: JAN. 2016 SCALE: AS SHOWN
DESIGNED BY: DRG DATE: OCT. 2015

BRIDGE NO. 07379 DRAWING NO. 58264

jeskinner 3/20/2016 3:36:10 PM
WORKSPACE: AHTD Bridge
L:\2011\11017707 - I-540 Widening & Interchange Improvement\Drawings\1540-AS-S104-SB.dgn
REVISED DATE:

DATE REVISED	DATE FILMED	DATE REVISED	DATE FILMED	FED. ROAD DIST. NO.	STATE	FED. AID PROJ. NO.	SHEET NO.	TOTAL SHEETS
				6	ARK.			
				JOB NO.		BB0414	542	886
				(1) A7380		APPROACH SLABS		58265

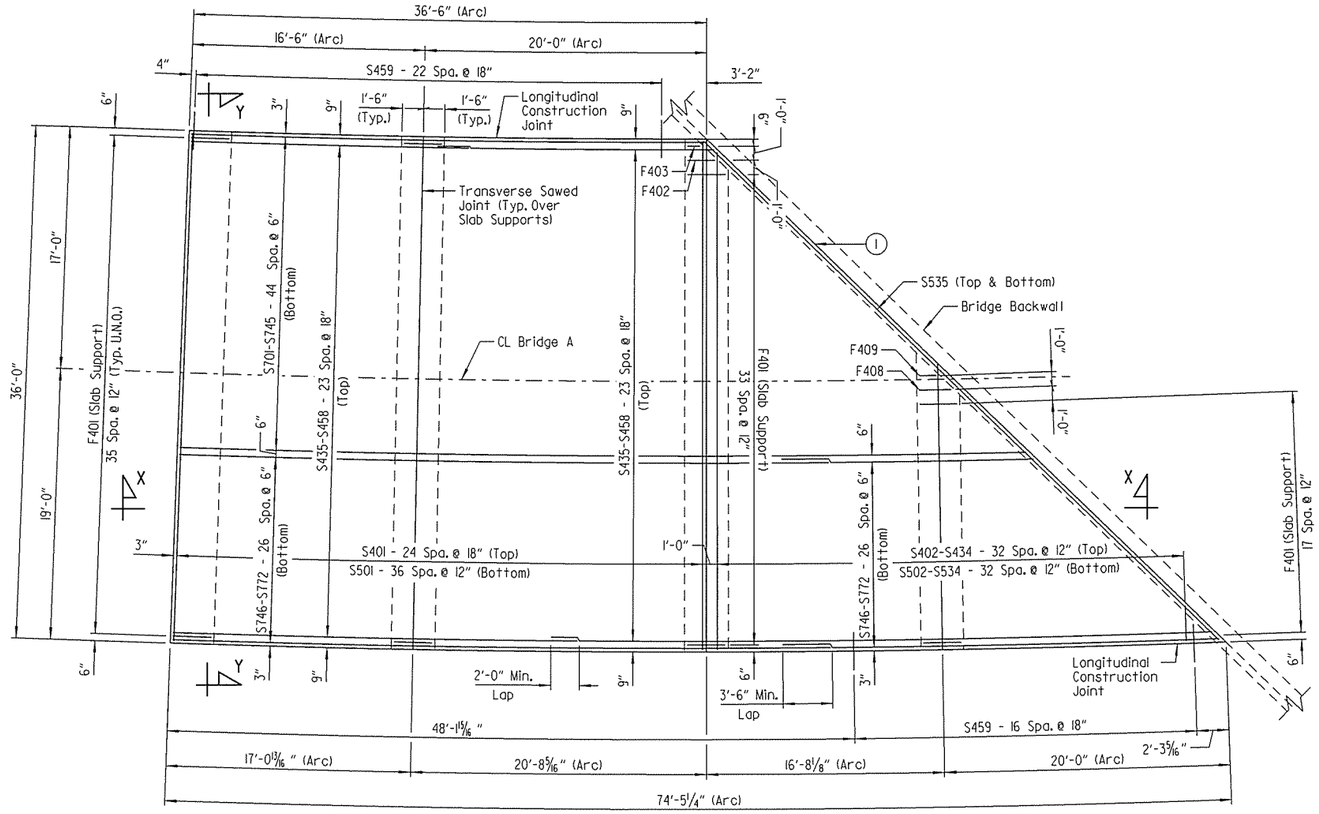

PLAN - TYPE SPECIAL 7 APPROACH SLAB

(Begin Bridge No. A7380)
Scale: 3/16" = 1'-0"

Stations Increase

(1) 1/2" Preformed Joint Filler (AASHTO M153, Type 1) and 1/2" x 1" Poured Joint Sealer (Type 3 or 4) as per Subsection 501.02(h)(2).

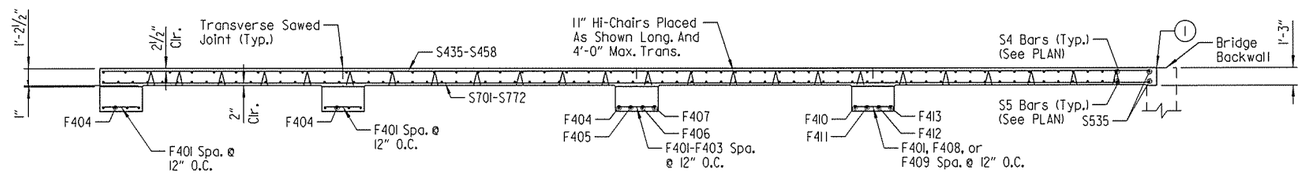

SECTION X-X

Scale: 3/16" = 1'-0"

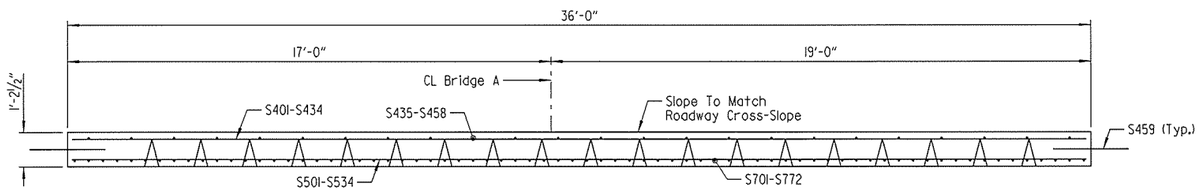

SECTION Y-Y

Scale: 3/8" = 1'-0"

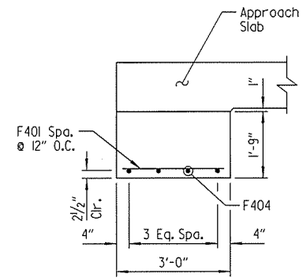

DETAILS OF SUPPORT AT END OF SLAB

Scale: 1/2" = 1'-0"

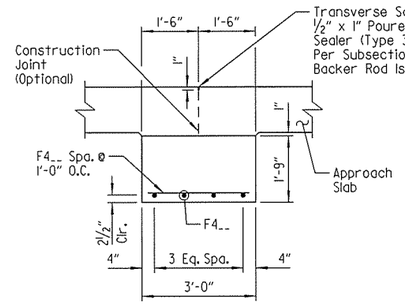

DETAILS OF INTERIOR SUPPORT OF SLAB

Scale: 1/2" = 1'-0"

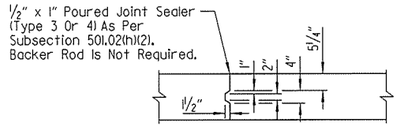

DETAILS OF LONGITUDINAL CONSTRUCTION JOINT

Scale: 1/2" = 1'-0"

TYPE	Class S(AE) Concrete	Reinforcing Steel (Gr. 60)
Type Special 7	115.50 Cu. Yds.	13,012 lb.

BAR LIST - TYPE SPECIAL 7 APPROACH SLAB

MARK	NO. REQ'D.	LENGTH	P.D.
S401	25	35'-8"	Str.
S402 To S434	1 Ea.	34'-10" To 2'-5"	Str.
S435 To S458	2 Ea.	19'-7" To 37'-9"	Str.
S459	40	3'-0"	Str.
S501	37	35'-8"	Str.
S502 To S534	1 Ea.	34'-10" To 2'-5"	Str.
S535	2	50'-6"	Str.
S701 To S745	1 Ea.	36'-4" To 59'-8"	Str.
S746 To S772	2 Ea.	32'-0" To 38'-10"	Str.
F401	124	2'-8"	Str.
F402	1	1'-11"	Str.
F403	1	10"	Str.
F404	9	35'-8"	Str.
F405	1	35'-4"	Str.
F406	1	34'-5"	Str.
F407	1	33'-9"	Str.
F408	1	2'-2"	Str.
F409	1	1'-2"	Str.
F410 To F413	1 Ea.	20'-1" To 17'-10"	Str.

GENERAL NOTES

Concrete shall be Class S(AE) (f'c = 4,000 psi).

Reinforcement Steel shall conform to AASHTO M31 Or M322 Type A, Grade 60 (fy = 60,000 psi).

Approach Slabs will be measured and paid for in accordance with Section 504.

Construct approach slab on arcs concentric to CL Bridge A.

All transverse reinforcing steel shall be placed on radial lines. Spacing is measured along left edge of slab (left is defined by direction of stationing).

The surface finish for the approach slabs shall match that used on bridge deck.

LEGEND

U.N.O. = Unless Noted Otherwise

STATE OF ARKANSAS
LICENSED PROFESSIONAL ENGINEER
No.16667
DANIEL R. GOAD
BRIDGE ENGINEER

SHEET 5 OF 16
DETAILS OF TYPE SPECIAL APPROACH SLABS

ROUTE SEC.

ARKANSAS STATE HIGHWAY COMMISSION
LITTLE ROCK, ARK.

DRAWN BY: CJH DATE: OCT. 2015 FILENAME: BBB0414_AS5.dgn
CHECKED BY: RLW DATE: JAN. 2016 SCALE: AS SHOWN
DESIGNED BY: DRG DATE: OCT. 2015
BRIDGE NO. A7380 DRAWING NO. 58265

jskinner 3/20/2016 3:36:11 PM
WORKSPACE: AHTD Projects
L:\20R\100707 - I-540 Widening & Interchange Improvement\Drawings\1540-AS-SI05-SB.dgn
REVISED DATE:

DATE REVISED	DATE FILMED	DATE REVISED	DATE FILMED	FED. ROAD DIST. NO.	STATE	FED. AID PROJ. NO.	SHEET NO.	TOTAL SHEETS
				6	ARK.			
				JOB NO.		BB0414	543	886
				(1) B7380		APPROACH SLABS		58266

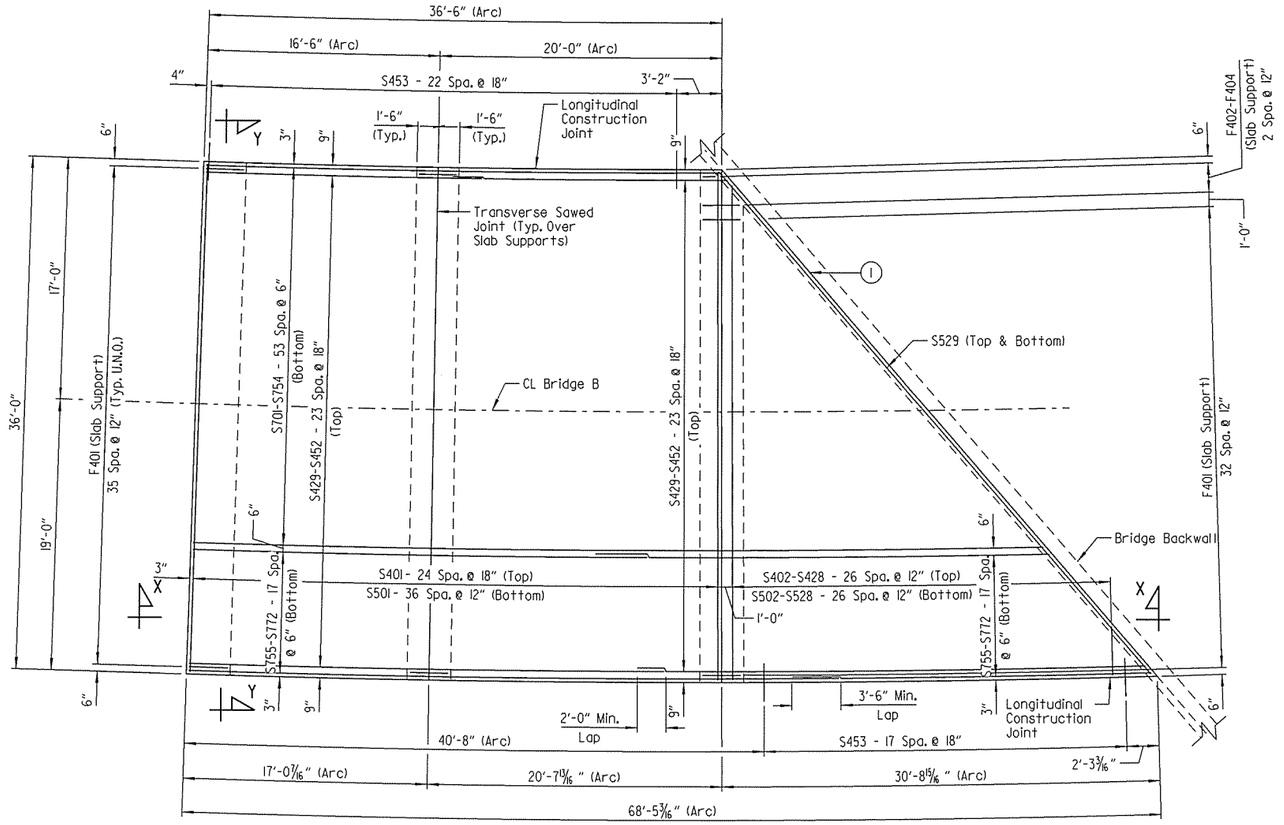

PLAN - TYPE SPECIAL 8 APPROACH SLAB
(Begin Bridge No. B7380)
Scale: 3/16" = 1'-0"

Stations Increase

(1) 1/4" Preformed Joint Filler (AASHTO M153, Type II) and 1/2" x 1" Poured Joint Sealer (Type 3 or 4) as per Subsection 501.02(h)(2).

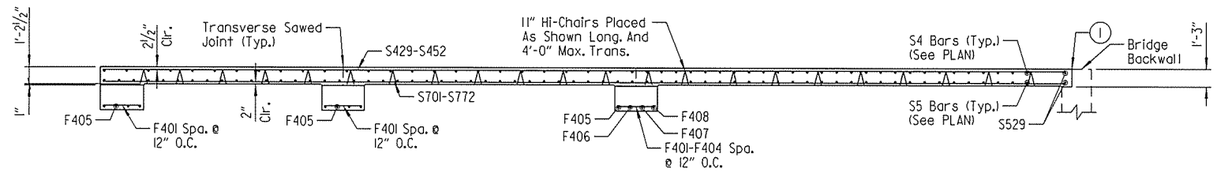

SECTION X-X
Scale: 3/16" = 1'-0"

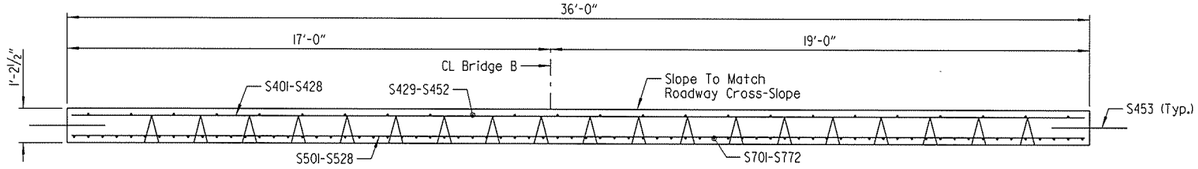

SECTION Y-Y
Scale: 3/8" = 1'-0"

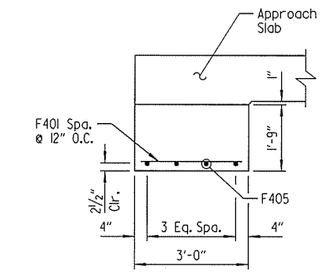

DETAILS OF SUPPORT AT END OF SLAB
Scale: 1/2" = 1'-0"

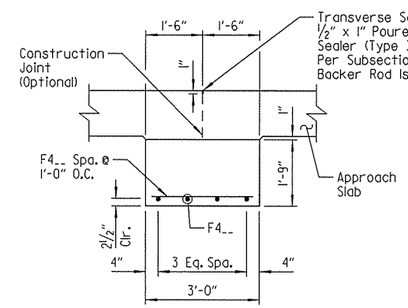

DETAILS OF INTERIOR SUPPORT OF SLAB
Scale: 1/2" = 1'-0"

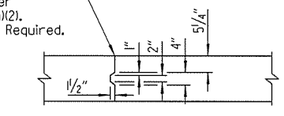

DETAILS OF LONGITUDINAL CONSTRUCTION JOINT
Scale: 1/2" = 1'-0"

TYPE	Class S(AE) Concrete	Reinforcing Steel (Gr. 60)
Type Special 8	105.62 Cu. Yds.	12,178 lb.

BAR LIST - TYPE SPECIAL 8 APPROACH SLAB

MARK	NO. REQ'D.	LENGTH	P.D.
S401	25	35'-8"	Str.
S402 To S428	1 Ea.	34'-8" To 3'-4"	Str.
S429 To S452	2 Ea.	19'-6" To 34'-9"	Str.
S453	41	3'-0"	Str.
S501	37	35'-8"	Str.
S502 To S528	1 Ea.	34'-8" To 3'-4"	Str.
S529	2	46'-7"	Str.
S701 To S754	1 Ea.	36'-4" To 59'-11"	Str.
S755 To S772	2 Ea.	32'-0" To 35'-9"	Str.
F401	105	2'-8"	Str.
F402	1	2'-7"	Str.
F403	1	1'-9"	Str.
F404	1	10"	Str.
F405	9	35'-8"	Str.
F406	1	35'-4"	Str.
F407	1	34'-2"	Str.
F408	1	33'-7"	Str.

GENERAL NOTES

Concrete shall be Class S(AE) (f'c = 4,000 psi).

Reinforcement Steel shall conform to AASHTO M31 Or M322 Type A, Grade 60 (fy = 60,000 psi).

Approach Slabs will be measured and paid for in accordance with Section 504.

Construct approach slab on arcs concentric to CL Bridge B.

All transverse reinforcing steel shall be placed on radial lines. Spacing is measured along left edge of slab (left is defined by direction of stationing).

The surface finish for the approach slabs shall match that used on bridge deck.

LEGEND

U.N.O. = Unless Noted Otherwise

STATE OF ARKANSAS
LICENSED PROFESSIONAL ENGINEER
No. 16667
DANIEL R. GOAD
BRIDGE ENGINEER

SHEET 6 OF 16
DETAILS OF TYPE SPECIAL APPROACH SLABS
ROUTE SEC.
ARKANSAS STATE HIGHWAY COMMISSION
LITTLE ROCK, ARK.

DRAWN BY: CJH DATE: OCT. 2015 FILENAME: BBB0414_AS6.dgn
CHECKED BY: RLW DATE: JAN. 2016 SCALE: AS SHOWN
DESIGNED BY: DRG DATE: OCT. 2015
BRIDGE NO. B7380 DRAWING NO. 58266

jeskinner 3/20/2016 3:36:11 PM
WORKSPACE: AHTD Roads
L:\2011\11007707 - I-540 Widening & Interchange Improvement\Drawings\1540-AS-S106-SB.dgn
REVISED DATE:

DATE REVISED	DATE FILMED	DATE REVISED	DATE FILMED	FED. ROAD DST. NO.	STATE	FED. AID PROJ. NO.	SHEET NO.	TOTAL SHEETS
				6	ARK.			
				JOB NO.		BB0414	544	886
				(1) A7380		APPROACH SLABS		58267

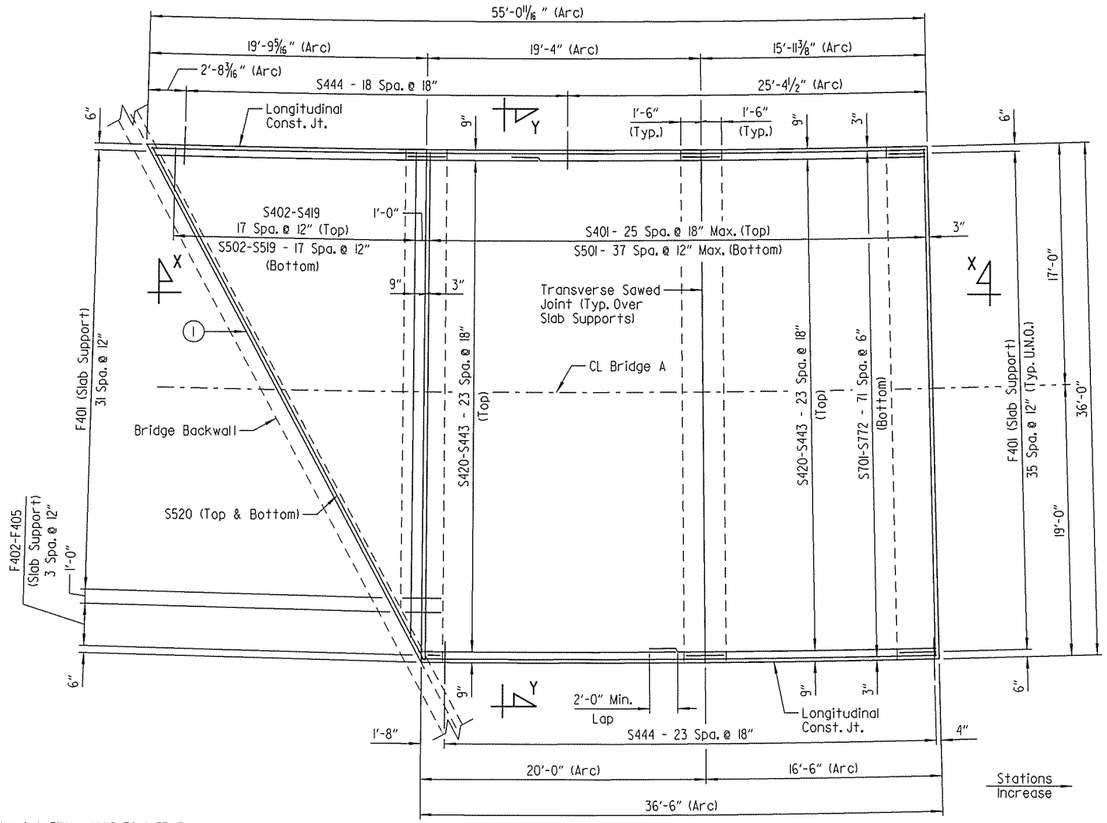

(1) 1/2" Preformed Joint Filler (AASHTO M153, Type I) and 1/2" x 1" Poured Joint Sealer (Type 3 or 4) as per Subsection 501.02(h)(2).

PLAN - TYPE SPECIAL 9 APPROACH SLAB

(End Bridge No. A7380)
Scale: 3/16" = 1'-0"

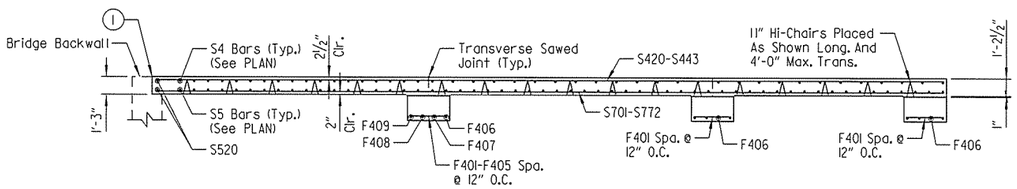

SECTION X-X

Scale: 3/16" = 1'-0"

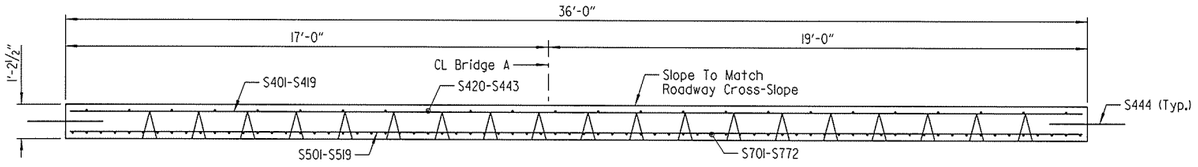

SECTION Y-Y

Scale: 3/8" = 1'-0"

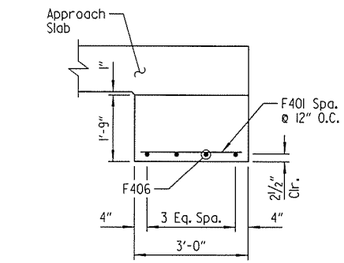

DETAILS OF SUPPORT AT END OF SLAB

Scale: 1/2" = 1'-0"

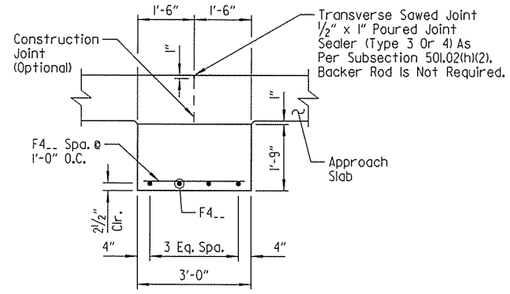

DETAILS OF INTERIOR SUPPORT OF SLAB

Scale: 1/2" = 1'-0"

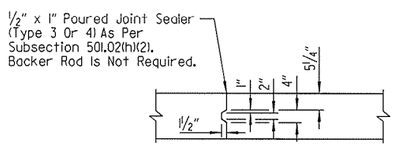

DETAILS OF LONGITUDINAL CONSTRUCTION JOINT

Scale: 1/2" = 1'-0"

TYPE	Class S(AE) Concrete	Reinforcing Steel (Gr. 60)
Type Special 9	94.72 Cu. Yds.	10,690 lb.

BAR LIST - TYPE SPECIAL 9 APPROACH SLAB

MARK	NO. REQ'D.	LENGTH	P.D.
S401	26	35'-8"	Str.
S402 To S419	1 Ea.	34'-1" To 3'-1"	Str.
S420 To S443	2 Ea.	28'-3" To 19'-4"	Str.
S444	43	3'-0"	Str.
S501	38	35'-8"	Str.
S502 To S519	1 Ea.	34'-1" To 3'-1"	Str.
S520	2	40'-10"	Str.
S701 To S772	1 Ea.	54'-6" To 36'-3"	Str.
F401	104	2'-8"	Str.
F402	1	2'-6"	Str.
F403	1	1'-11"	Str.
F404	1	1'-5"	Str.
F405	1	10"	Str.
F406	9	35'-8"	Str.
F407	1	35'-2"	Str.
F408	1	33'-8"	Str.
F409	1	32'-3"	Str.

GENERAL NOTES

Concrete shall be Class S(AE) (f'c = 4,000 psi).

Reinforcement Steel shall conform to AASHTO M31 Or M322 Type A, Grade 60 (fy = 60,000 psi).

Approach Slabs will be measured and paid for in accordance with Section 504.

Construct approach slab on arcs concentric to CL Bridge A.

All transverse reinforcing steel shall be placed on radial lines. Spacing is measured along left edge of slab (left is defined by direction of stationing).

The surface finish for the approach slabs shall match that used on bridge deck.

LEGEND

U.N.O. = Unless Noted Otherwise

STATE OF ARKANSAS
LICENSED PROFESSIONAL ENGINEER
No.16667
DANIEL R. GOAD
BRIDGE ENGINEER

SHEET 7 OF 16
DETAILS OF TYPE SPECIAL APPROACH SLABS

ROUTE SEC.

ARKANSAS STATE HIGHWAY COMMISSION
LITTLE ROCK, ARK.

DRAWN BY: CJH DATE: NOV. 2015 FILENAME: BBB0414_AS7.dgn
CHECKED BY: RLW DATE: JAN. 2016 SCALE: AS SHOWN
DESIGNED BY: DRG DATE: NOV. 2015

BRIDGE NO. A7380 DRAWING NO. 58267

jeskinner 3/20/2016 3:36:11 PM
WORKGROUP: AHTD - 40 Hr
L:\ROW\M017107 - I-540 Widening & Interchange Improvement\Drawings\I540-AS-S107-SB.dgn
REVISED DATE:

DATE REVISED	DATE FILMED	DATE REVISED	DATE FILMED	FED. ROAD DIST. NO.	STATE	FED. AID PROJ. NO.	SHEET NO.	TOTAL SHEETS
				6	ARK.			
				JOB NO.		BB0414	545	886
				(1) B7380		APPROACH SLABS		58268

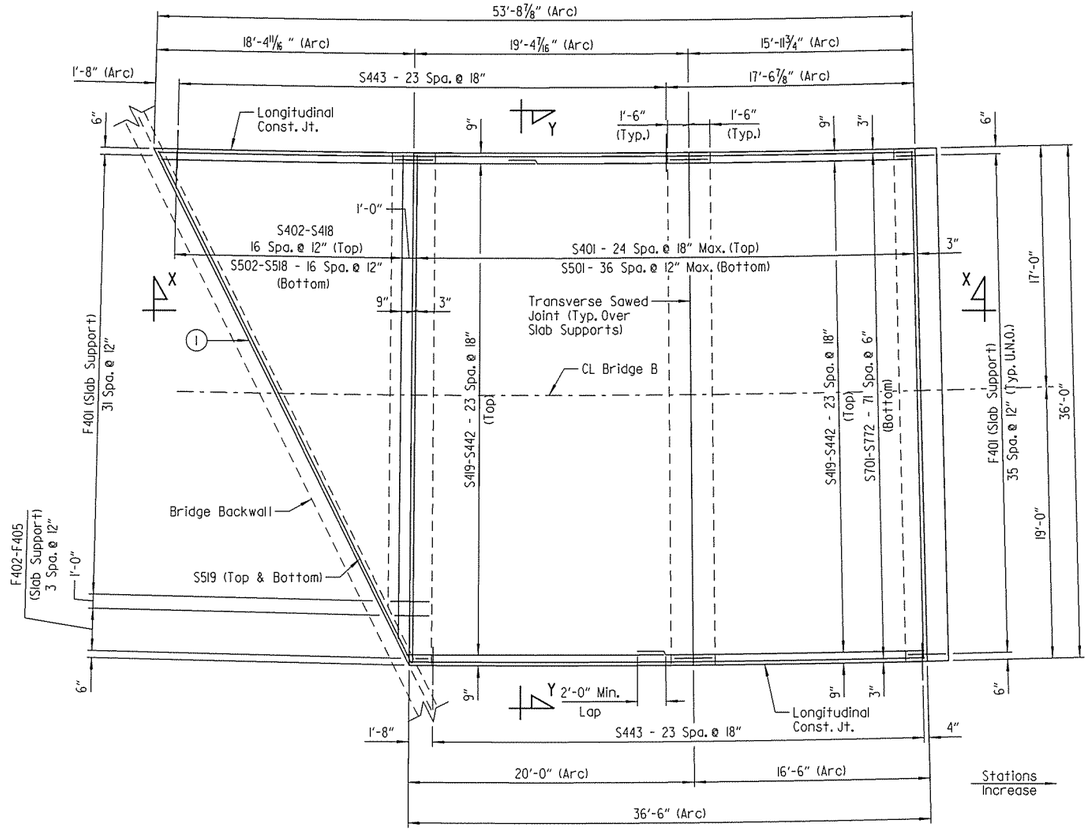

PLAN - TYPE SPECIAL 10 APPROACH SLAB
(End Bridge No. B7380)
Scale: 3/16" = 1'-0"

(1) 1/2" Preformed Joint Filler (AASHTO M153, Type 1) and 1/2" x 1" Poured Joint Sealer (Type 3 or 4) as per Subsection 501.02(h)(2).

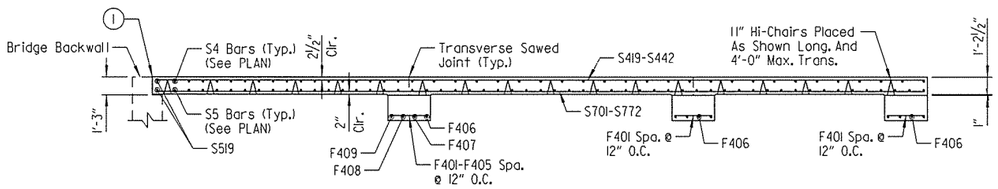

SECTION X-X
Scale: 3/16" = 1'-0"

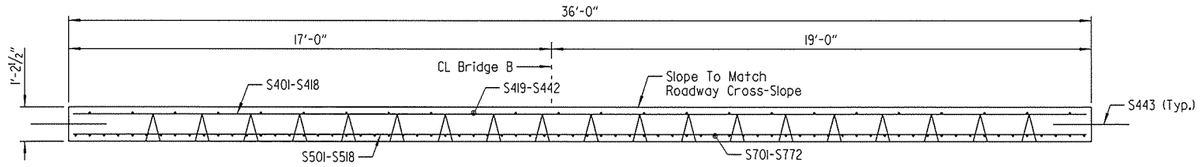

SECTION Y-Y
Scale: 3/8" = 1'-0"

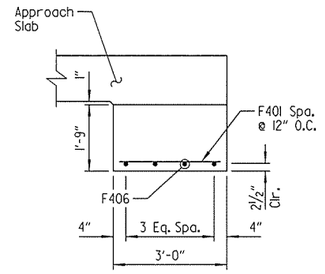

DETAILS OF SUPPORT AT END OF SLAB
Scale: 1/2" = 1'-0"

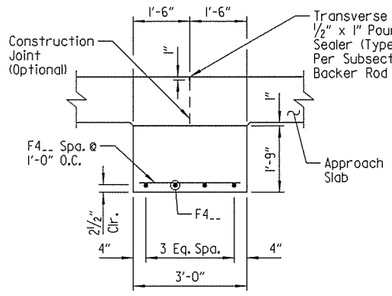

DETAILS OF INTERIOR SUPPORT OF SLAB
Scale: 1/2" = 1'-0"

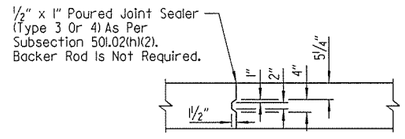

DETAILS OF LONGITUDINAL CONSTRUCTION JOINT
Scale: 1/2" = 1'-0"

TYPE	Class S(AE) Concrete	Reinforcing Steel (Gr. 60)
Type Special 10	93.67 Cu. Yds.	10,493 lb.

BAR LIST - TYPE SPECIAL 10 APPROACH SLAB

MARK	NO. REQ'D.	LENGTH	P.D.
S401	25	35'-8"	Str.
S402 To S418	1 Ea.	33'-11" To 2'-7"	Str.
S419 To S442	2 Ea.	27'-7" To 19'-4"	Str.
S443	48	3'-0"	Str.
S501	37	35'-8"	Str.
S502 To S518	1 Ea.	33'-11" To 2'-7"	Str.
S519	2	40'-2"	Str.
S701 To S772	1 Ea.	53'-3" To 36'-3"	Str.
F401	104	2'-8"	Str.
F402	1	2'-5"	Str.
F403	1	1'-11"	Str.
F404	1	1'-5"	Str.
F405	1	10"	Str.
F406	9	35'-8"	Str.
F407	1	35'-3"	Str.
F408	1	33'-8"	Str.
F409	1	32'-0"	Str.

GENERAL NOTES

Concrete shall be Class S(AE) (f'c = 4,000 psi).

Reinforcement Steel shall conform to AASHTO M31 Or M322 Type A, Grade 60 (fy = 60,000 psi).

Approach Slabs will be measured and paid for in accordance with Section 504.

Construct approach slab on arcs concentric to CL Bridge B.

All transverse reinforcing steel shall be placed on radial lines. Spacing is measured along left edge of slab (left is defined by direction of stationing).

The surface finish for the approach slabs shall match that used on bridge deck.

LEGEND

U.N.O. = Unless Noted Otherwise

STATE OF ARKANSAS
LICENSED PROFESSIONAL ENGINEER
No.16667
DANIEL R. GOAD
BRIDGE ENGINEER

SHEET 8 OF 16
DETAILS OF TYPE SPECIAL APPROACH SLABS
ROUTE SEC.
ARKANSAS STATE HIGHWAY COMMISSION
LITTLE ROCK, ARK.

DRAWN BY: CJH DATE: NOV. 2015 FILENAME: BB0414_AS8.dgn
CHECKED BY: RLW DATE: JAN. 2016 SCALE: AS SHOWN
DESIGNED BY: DRG DATE: NOV. 2015
BRIDGE NO. B7380 DRAWING NO. 58268

jeskinner 3/20/2016 3:36:11 PM
WORKGROUP: AHTD Usage
L:\20IN\I0177 - I-540 Widening & Interchange Improvement\Drawings\I540-AS-S108-SB.dgn
REVISED DATE:

DATE REVISED	DATE FILMED	DATE REVISED	DATE FILMED	FED. ROAD DST. NO.	STATE	FED. AID PROJ. NO.	SHEET NO.	TOTAL SHEETS
				6	ARK.			
				JOB NO.		BB0414	546	886
				① A738I & B738I		APPROACH SLABS		58269

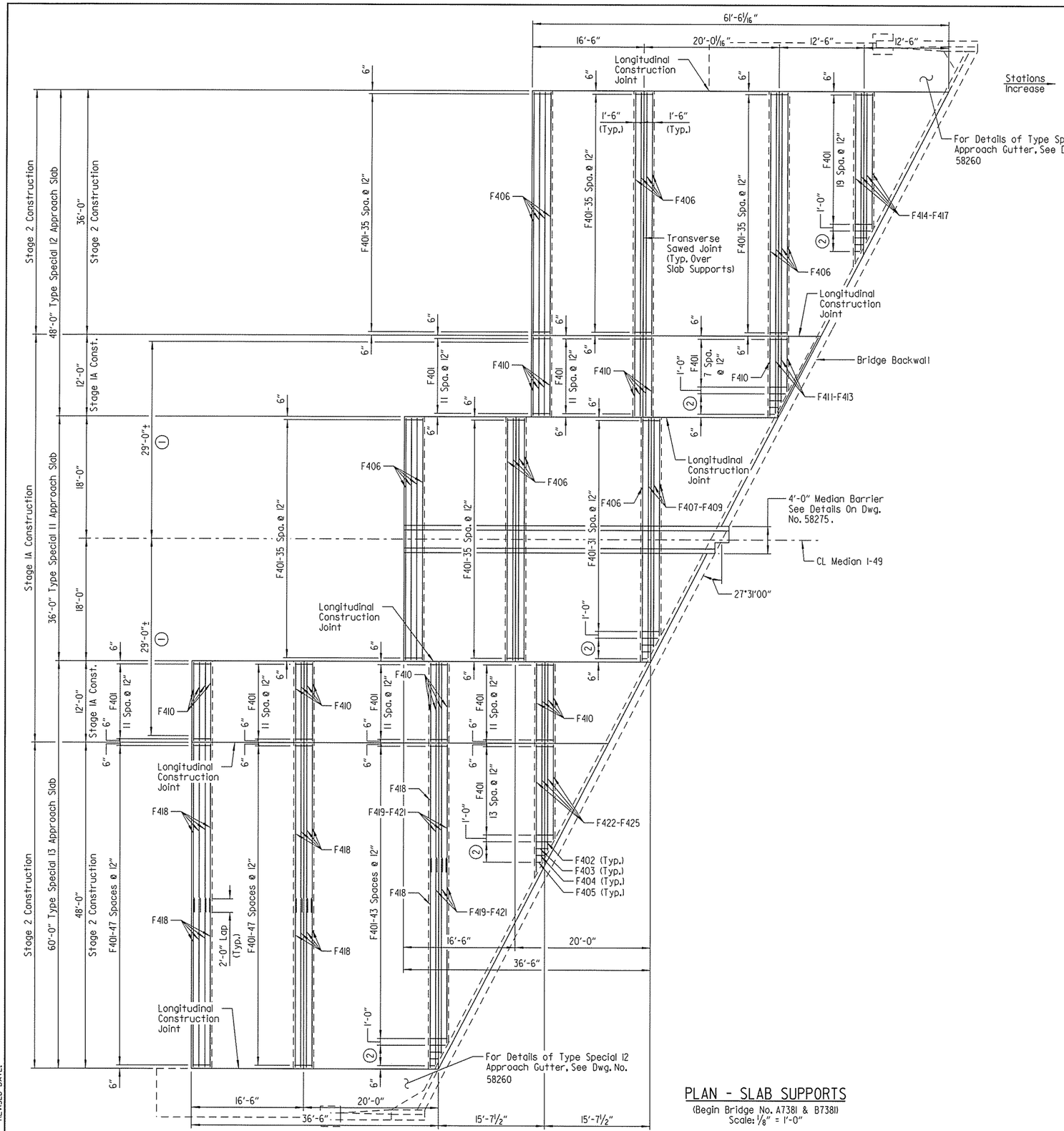

PLAN - SLAB SUPPORTS
(Begin Bridge No. A738I & B738I)
Scale: 1/8" = 1'-0"

① Threaded inserts shall be cast in place in Stage IA Approach Slab construction to accommodate the connection of temporary barrier. See Standard Drawing TC-4 for additional details.

② F402-F405 - 3 Spa. @ 12"

NOTE:
For "GENERAL NOTES" and bar lists, see Dwg. No. 58276

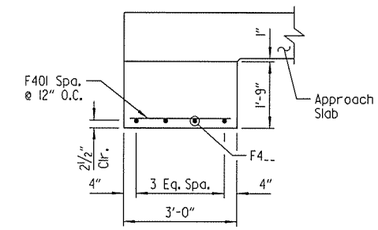

DETAILS OF SUPPORT AT END OF SLAB
Scale: 1/2" = 1'-0"

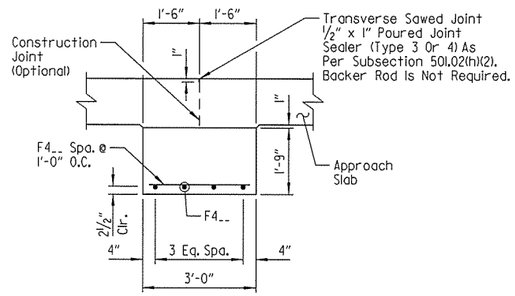

DETAILS OF INTERIOR SUPPORT OF SLAB
Scale: 1/2" = 1'-0"

STATE OF ARKANSAS
LICENSED PROFESSIONAL ENGINEER
No. 16667
DANIEL R. GOAD
3/20/16
BRIDGE ENGINEER

SHEET 9 OF 16
DETAILS OF TYPE SPECIAL APPROACH SLABS
ROUTE SEC.
ARKANSAS STATE HIGHWAY COMMISSION
LITTLE ROCK, ARK.

DRAWN BY: DRG DATE: NOV. 2015 FILENAME: BBB0414_AS9.dgn
CHECKED BY: RLW DATE: JAN. 2016 SCALE: AS SHOWN
DESIGNED BY: DRG DATE: NOV. 2015
BRIDGE NO. A738I & B738I DRAWING NO. 58269

jeskinner 3/20/2016 3:36:12 PM
WORKSPACE - MTD Projects
L:\2015\60177 - I-540 Widening & Interchange Improvement\Drawings\540-AS-S109-SB.dgn
REVISED DATE:

DATE REVISED	DATE FILMED	DATE REVISED	DATE FILMED	FED. ROAD DIST. NO.	STATE	FED. AID PROJ. NO.	SHEET NO.	TOTAL SHEETS
				6	ARK.			
				JOB NO.		BB0414	547	886
				(1) A738I & B738I		APPROACH SLABS		58270

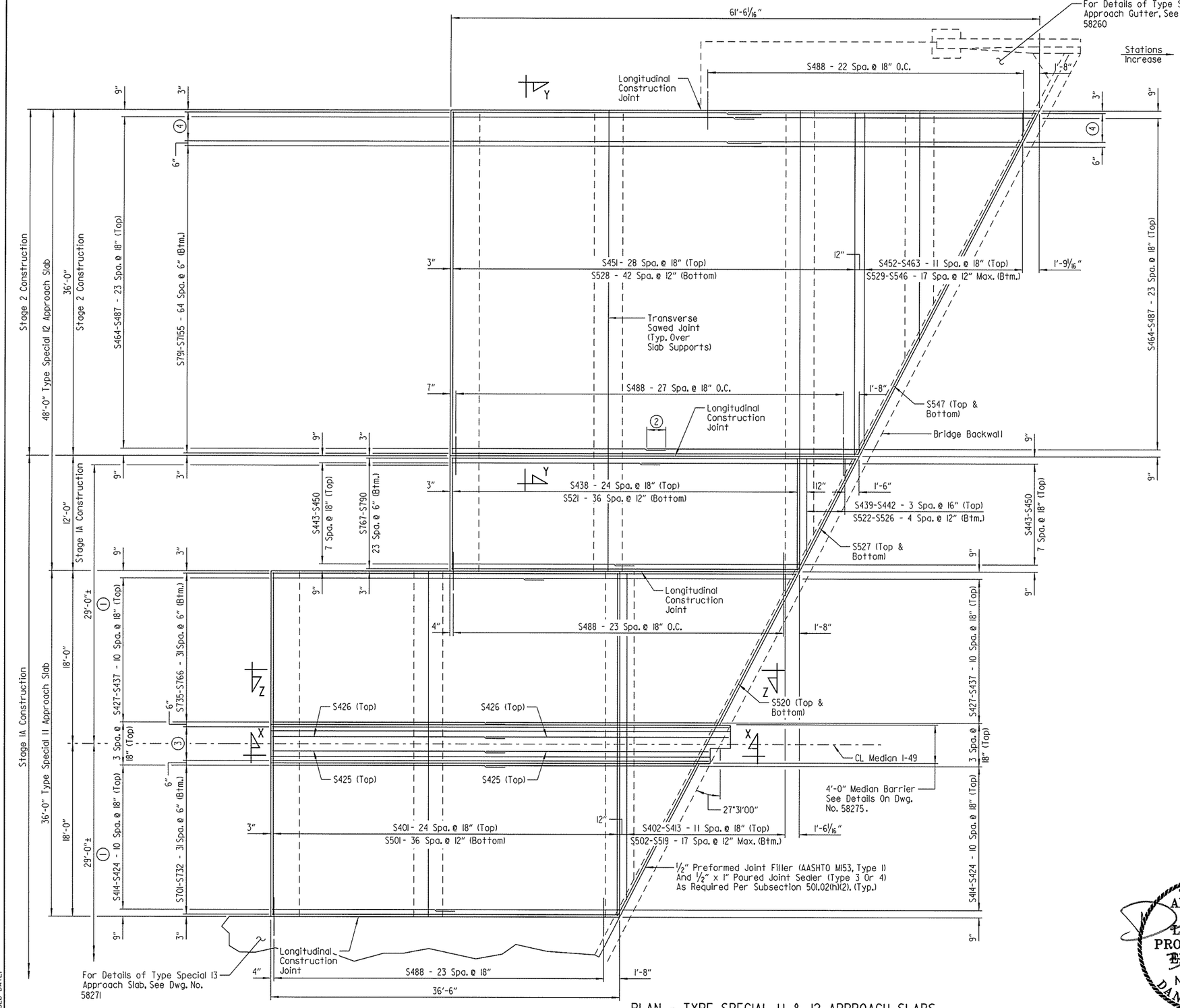

PLAN - TYPE SPECIAL II & I2 APPROACH SLABS

(Begin Bridge No. A738I & B738I)
Scale: 3/16" = 1'-0"

NOTES:

For details of slab supports, see Dwg. No. 58269.

For "SECTION X-X", "SECTION Y-Y" & "SECTION Z-Z", see Dwg. No. 58275.

For "GENERAL NOTES" and bar lists, see Dwg. No. 58276

(1) Threaded inserts shall be cast in place in Stage IA Approach Slab construction to accommodate the connection of temporary barrier. See Standard Drawing TC-4 for additional details.

(2) Lap for #4 bars = 2'-0"
Lap for #7 bars = 3'-6"

(3) S733 & S734 - 7 Spaces @ 6" (Bottom)

(4) S7156-S7162 - 6 Spaces @ 6" (Bottom)

STATE OF ARKANSAS
LICENSED PROFESSIONAL ENGINEER
No.16667
DANIEL R. GOAD
3/29/16
BRIDGE ENGINEER

SHEET 10 OF 16
DETAILS OF TYPE SPECIAL APPROACH SLABS
ROUTE SEC.
ARKANSAS STATE HIGHWAY COMMISSION
LITTLE ROCK, ARK.

DRAWN BY: DRG DATE: NOV. 2015 FILENAME: BBB0414_AS10.dgn
CHECKED BY: RLW DATE: JAN. 2016 SCALE: AS SHOWN
DESIGNED BY: DRG DATE: NOV. 2015
BRIDGE NO. A738I & B738I DRAWING NO. 58270

jeskinner 3/20/2016 3:36:12 PM
W:\Projects\I-540 Widening & Interchange Improvement\Drawings\I540-AS-S10-S8.dgn
REVISED DATE:

DATE REVISED	DATE FILMED	DATE REVISED	DATE FILMED	FED. ROAD DIST. NO.	STATE	FED. AID PROJ. NO.	SHEET NO.	TOTAL SHEETS
				6	ARK.			
				JOB NO.		BB0414	548	886
				(1) B7381		APPROACH SLABS		58271

NOTES:

For details of slab supports, see Dwg. No. 58269.

For "SECTION Y-Y" & "SECTION Z-Z", see Dwg. No. 58275.

For "GENERAL NOTES" and bar lists, see Dwg. No. 58276.

(1) Threaded inserts shall be cast in place in Stage IA Approach Slab construction to accommodate the connection of temporary barrier. See Standard Drawing TC-4 for additional details.

(2) Lap for #4 bars = 2'-0"
Lap for #7 bars = 3'-6"

(3) S490-S494 - 4 Spaces @ 18" (Top)

(4) Double S7255-S7258 - 3 Spaces @ 6" (Bottom)

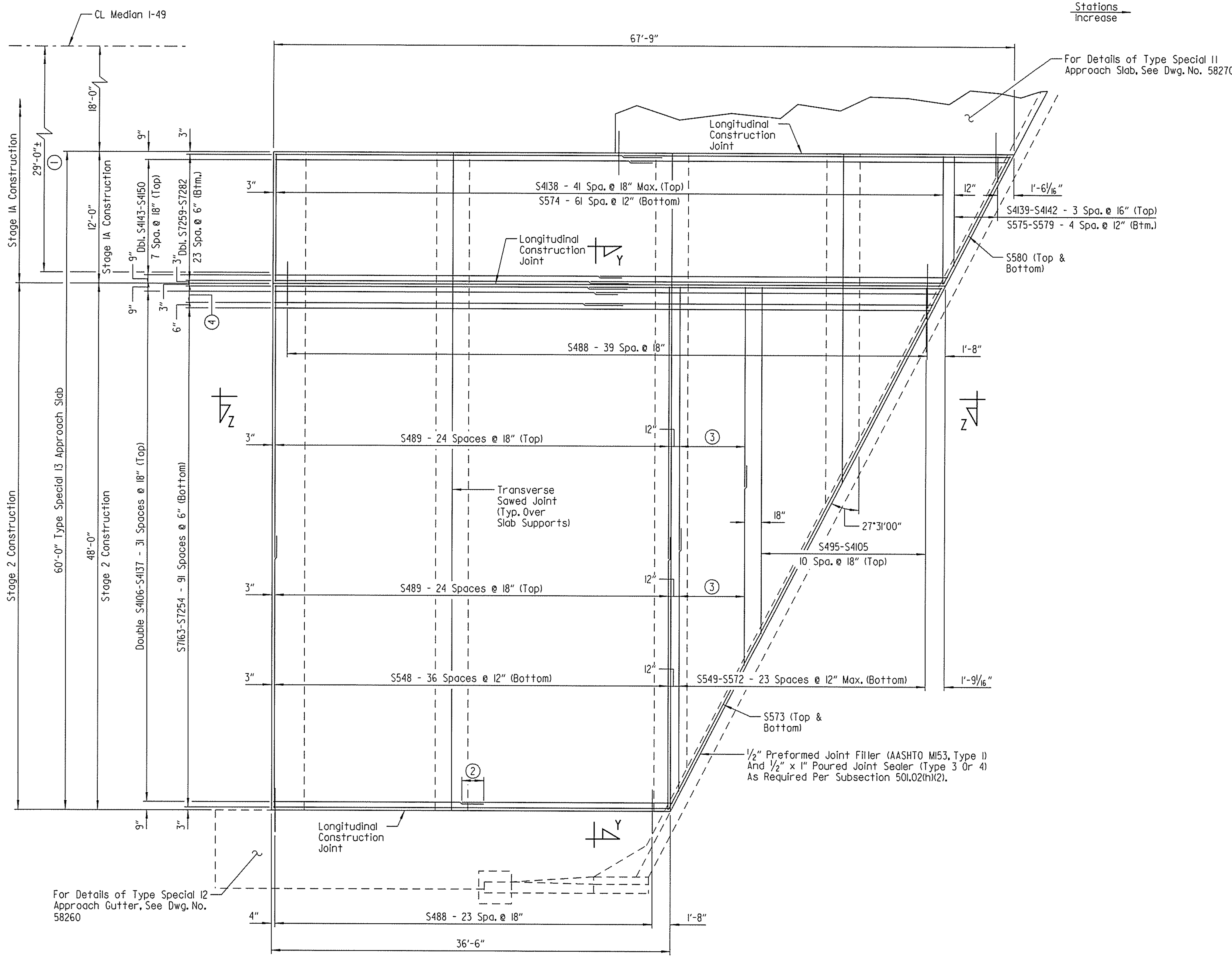

PLAN - TYPE SPECIAL 13 APPROACH SLAB

(Begin Bridge No. B7381)
Scale: 3/16" = 1'-0"

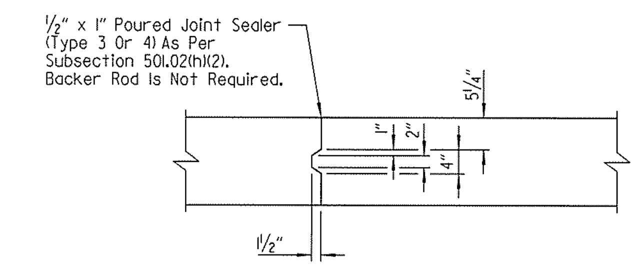

DETAILS OF LONGITUDINAL CONSTRUCTION JOINT

Scale: 3/4" = 1'-0"

STATE OF ARKANSAS LICENSED PROFESSIONAL ENGINEER No. 16667 DANIEL R. GOAD

BRIDGE ENGINEER

SHEET 11 OF 16
DETAILS OF TYPE SPECIAL APPROACH SLABS

ROUTE SEC.

ARKANSAS STATE HIGHWAY COMMISSION
LITTLE ROCK, ARK.

DRAWN BY: DRG DATE: NOV. 2015 FILENAME: BBB0414_AS11.dgn
CHECKED BY: RLW DATE: JAN. 2016 SCALE: AS SHOWN
DESIGNED BY: DRG DATE: NOV. 2015
BRIDGE NO. B7381 DRAWING NO. 58271

jesklnner 3/20/2016 3:36:12 PM
WORKSPACE: AHTD Bridge
L:\2011\1101707 - I-540 Widening & Interchange Improvement\Drawings\540-AS-S11-SB.dgn
REVISED DATE:

DATE REVISED	DATE FILMED	DATE REVISED	DATE FILMED	FED. ROAD DIST. NO.	STATE	FED. AID PROJ. NO.	SHEET NO.	TOTAL SHEETS
				6	ARK.			
				JOB NO.		BB0414	549	886
				(1) A7381 & B7381		APPROACH SLABS		58272

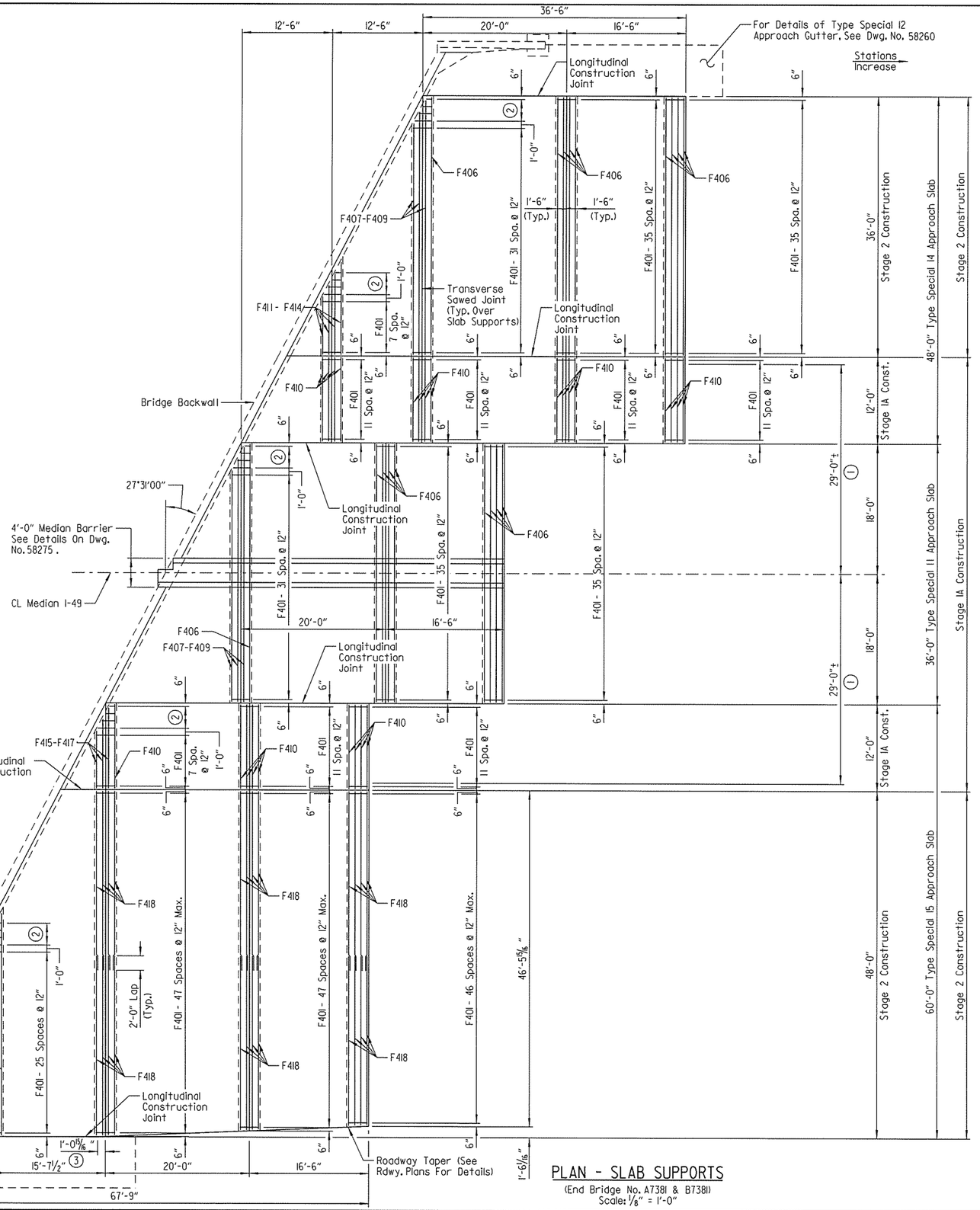

PLAN - SLAB SUPPORTS

(End Bridge No. A7381 & B7381)
Scale: 1/8" = 1'-0"

(1) Threaded inserts shall be cast in place in Stage 1A Approach Slab construction to accommodate the connection of temporary barrier. See Standard Drawing TC-4 for additional details.

(2) F402-F405 - 3 Spa. @ 12"

(3) Start of Roadway Taper

NOTE:
For "GENERAL NOTES" and bar lists, see Dwg. No. 58276

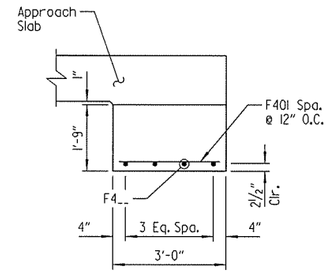

DETAILS OF SUPPORT AT END OF SLAB

Scale: ½" = 1'-0"

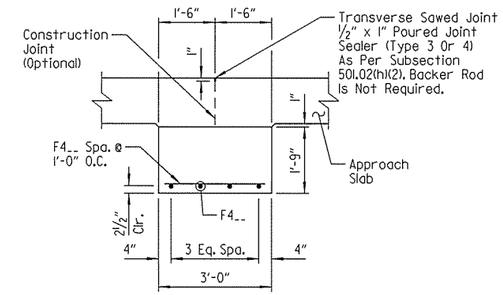

DETAILS OF INTERIOR SUPPORT OF SLAB

Scale: ½" = 1'-0"

STATE OF ARKANSAS
LICENSED PROFESSIONAL ENGINEER
No.16667
DANIEL R. GOAD

BRIDGE ENGINEER

SHEET 12 OF 16
DETAILS OF TYPE SPECIAL APPROACH SLABS

ROUTE SEC.

ARKANSAS STATE HIGHWAY COMMISSION
LITTLE ROCK, ARK.

DRAWN BY: DRG DATE: JAN. 2016 FILENAME: BBB0414_AS12.dgn
CHECKED BY: RLW DATE: JAN. 2016 SCALE: AS SHOWN
DESIGNED BY: DRG DATE: JAN. 2016
BRIDGE NO. A7381 & B7381 DRAWING NO. 58272

jeskinner 3/20/2016 3:36:13 PM
WORKSPACE, AHTD_Plot
L:\ROW\601707 - I-540 Widening & Interchange Improvement\Drawings\I540-AS-SI2-SB.dgn
REVISED DATE:

DATE REVISED	DATE FILMED	DATE REVISED	DATE FILMED	FED. ROAD DIST. NO.	STATE	FED. AID PROJ. NO.	SHEET NO.	TOTAL SHEETS
				6	ARK.			
				JOB NO.		BB0414	550	886
				(1) A738I & B738I		APPROACH SLABS		58273

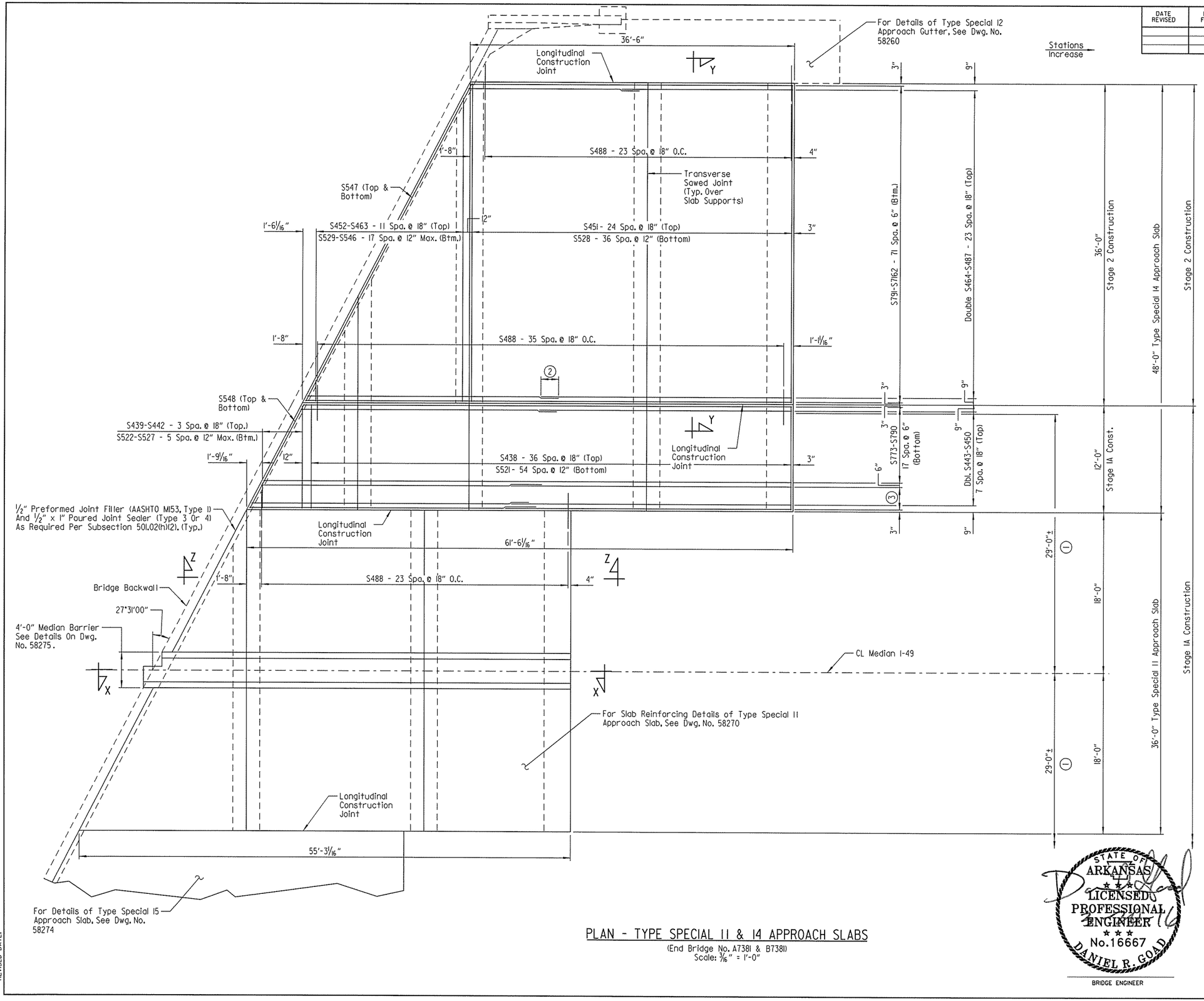

NOTES:

For details of slab supports, see Dwg. No. 58272.

For "SECTION X-X", "SECTION Y-Y" & "SECTION Z-Z", see Dwg. No. 58275.

For "GENERAL NOTES" and bar lists, see Dwg. No. 58276

(1) Threaded inserts shall be cast in place in Stage 1A Approach Slab construction to accommodate the connection of temporary barrier. See Standard Drawing TC-4 for additional details.

(2) Lap for #4 bars = 2'-0"
Lap for #7 bars = 3'-6"

(3) Double S767-S772 - 5 Spaces @ 6" (Bottom)

PLAN - TYPE SPECIAL 11 & 14 APPROACH SLABS

(End Bridge No. A738I & B738I)
Scale: 3/16" = 1'-0"

STATE OF ARKANSAS
LICENSED PROFESSIONAL ENGINEER
No. 16667
DANIEL R. GOAD
BRIDGE ENGINEER

SHEET 13 OF 16
DETAILS OF TYPE SPECIAL APPROACH SLABS
ROUTE SEC.
ARKANSAS STATE HIGHWAY COMMISSION
LITTLE ROCK, ARK.

DRAWN BY: DRG DATE: JAN. 2016 FILENAME: BBB0414_AS13.dgn
CHECKED BY: RLW DATE: JAN. 2016 SCALE: AS SHOWN
DESIGNED BY: DRG DATE: JAN. 2016
BRIDGE NO. A738I & B738I DRAWING NO. 58273

jeskinner 3/20/2016 3:36:13 PM
I:\2014\I007707 - I-540 Widening & Interchange Improvement\Drawings\1540-AS-SI13-SB.dgn
REVISED DATE:

DATE REVISED	DATE FILMED	DATE REVISED	DATE FILMED	FED. ROAD DIST. NO.	STATE	FED. AID PROJ. NO.	SHEET NO.	TOTAL SHEETS
				6	ARK.			
				JOB NO.		BB0414	551	886
				(1) B7381		APPROACH SLABS		58274

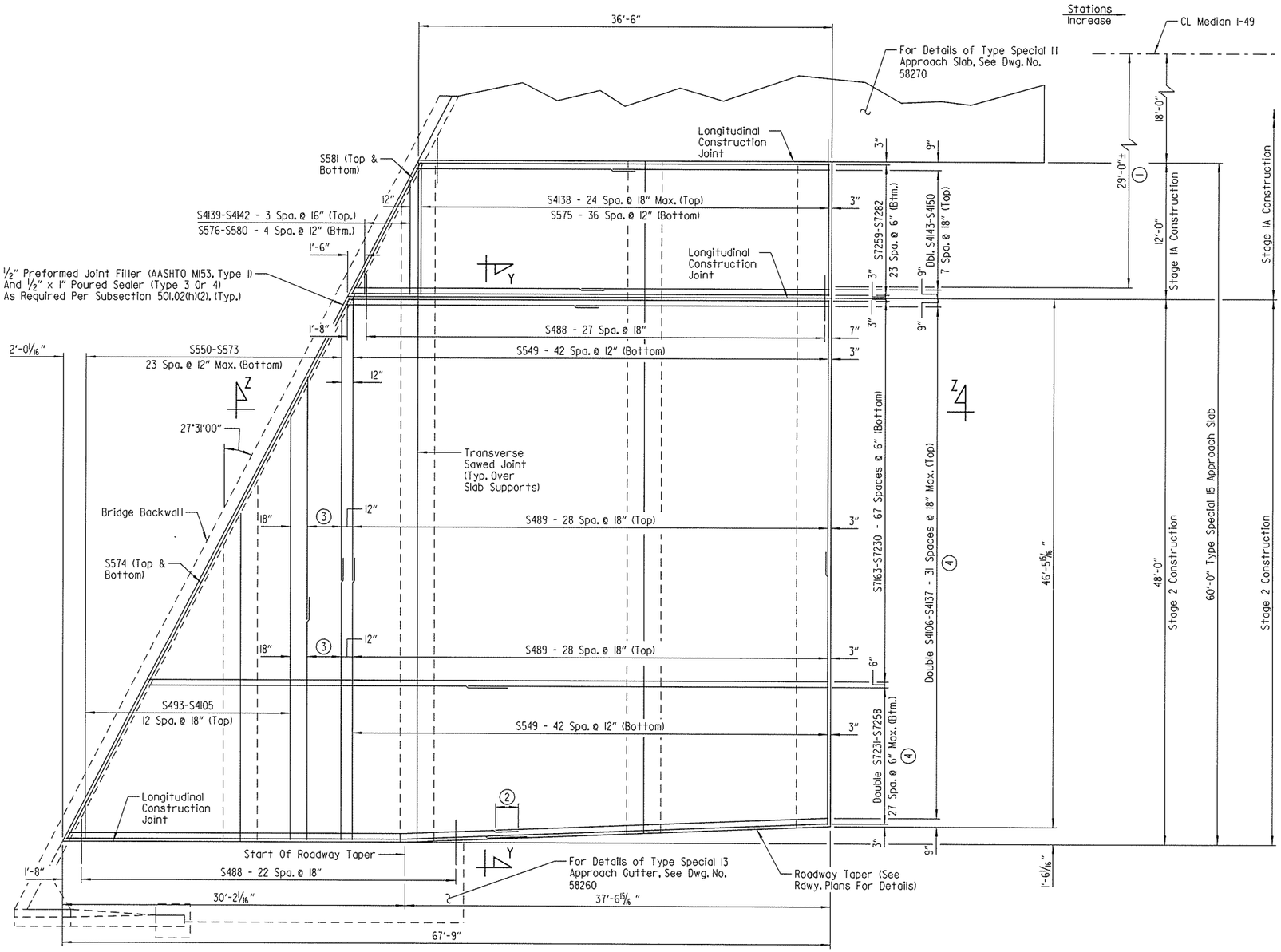

PLAN - TYPE SPECIAL 15 APPROACH SLAB

(End Bridge No. B7381)
Scale: 3/16" = 1'-0"

NOTES:

For details of slab supports, see Dwg. No. 58272.

For "SECTION Y-Y" & "SECTION Z-Z", see Dwg. No. 58275.

For "GENERAL NOTES" and bar lists, see Dwg. No. 58276.

(1) Threaded inserts shall be cast in place in Stage IA Approach Slab construction to accommodate the connection of temporary barrier. See Standard Drawing TC-4 for additional details.

(2) Lap for #4 bars = 2'-0"
Lap for #5 bars = 2'-6"
Lap for #7 bars = 3'-6"

(3) S490-S492 - 2 Spaces @ 18" (Top)

(4) Field bend as required near tapered edge of slab.

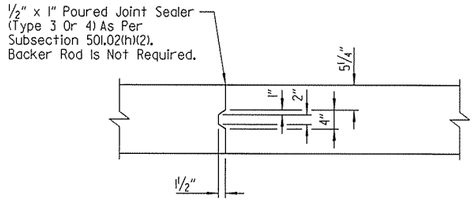

DETAILS OF LONGITUDINAL CONSTRUCTION JOINT

Scale: 3/4" = 1'-0"

STATE OF ARKANSAS
LICENSED PROFESSIONAL ENGINEER
No.16667
DANIEL R. GOAD
BRIDGE ENGINEER

SHEET 14 OF 16
DETAILS OF TYPE SPECIAL APPROACH SLABS

ROUTE SEC.

ARKANSAS STATE HIGHWAY COMMISSION
LITTLE ROCK, ARK.

DRAWN BY: DRG DATE: JAN. 2016 FILENAME: BBB0414_AS14.dgn
CHECKED BY: RLW DATE: JAN. 2016 SCALE: AS SHOWN
DESIGNED BY: DRG DATE: JAN. 2016
BRIDGE NO. B7381 DRAWING NO. 58274

jeskinner 3/20/2016 3:36:13 PM
WORKGROUP: AHTD BRIDGE
L:\2016\16077.07 - I-540 Widening & Interchange Improvement\Drawings\1540-AS-SI4-SB.dgn
REVISED DATE:

DATE REVISED	DATE FILMED	DATE REVISED	DATE FILMED	FED. ROAD DIST. NO.	STATE	FED. AID PROJ. NO.	SHEET NO.	TOTAL SHEETS
				6	ARK.			
				JOB NO.		BB0414	552	886
				(1) A7381 & B7381		APPROACH SLABS		58275

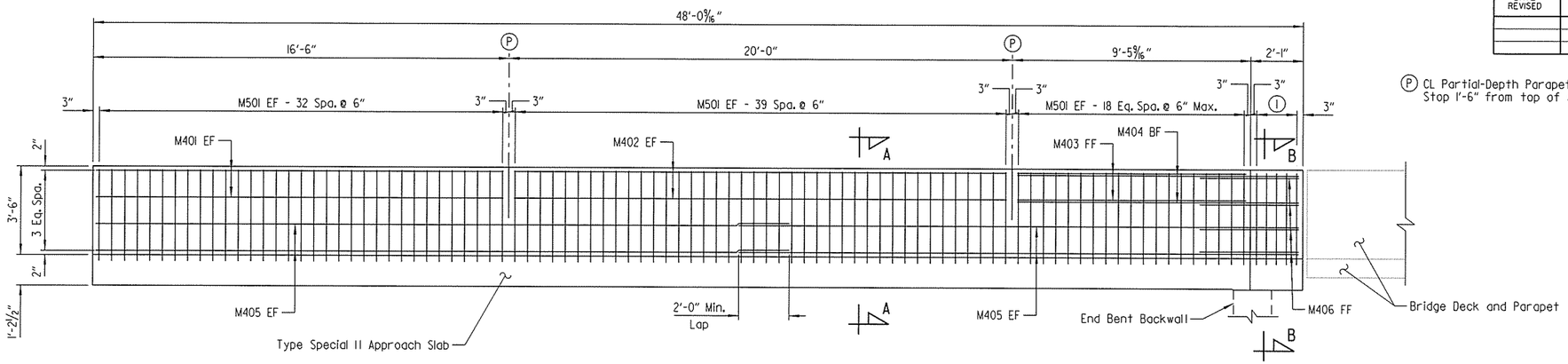

SECTION X-X
(Showing Median Barrier Reinforcement Only)
Scale: ⅜" = 1'-0"

(P) CL Partial-Depth Parapet Joint (1/4" to 1" max.). Stop 1'-6" from top of slab.

(1) M502 - 4 Eq. Spa. @ 6" Max.

(2) ½" Preformed Joint Filler (AASHTO M153, Type 1) and ½" x 1" Poured Joint Sealer (Type 3 or 4) as per Subsection 501.02(h)(2).

(3) See Approach Slab Plans for bar marks.

(4) See "SECTION X-X" for correct bar mark.

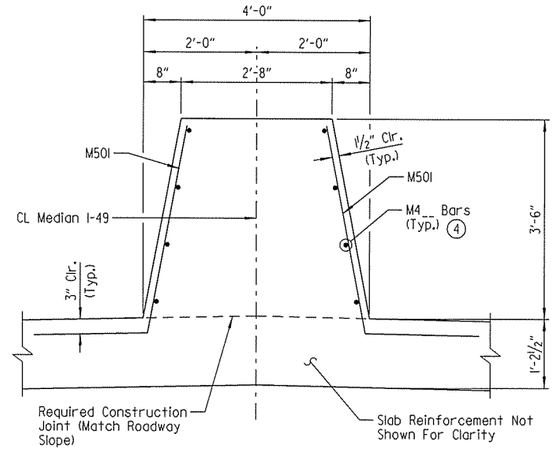

SECTION A-A
Scale: ¾" = 1'-0"

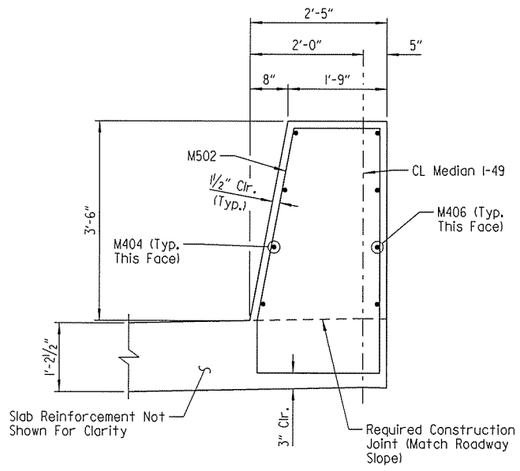

SECTION B-B
Scale: ¾" = 1'-0"

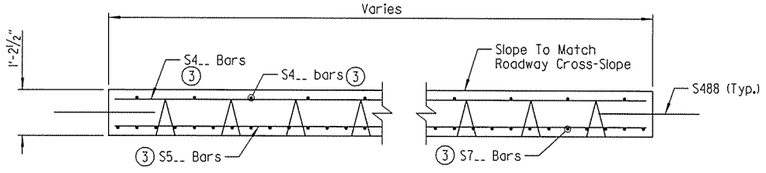

SECTION Y-Y
Scale: ½" = 1'-0"

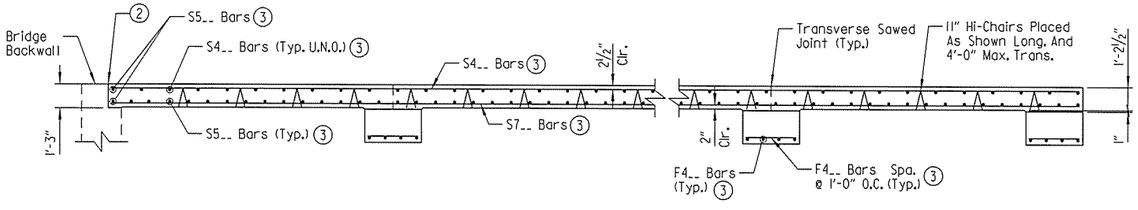

SECTION Z-Z
Scale: ¼" = 1'-0"

NOTE:
For "GENERAL NOTES" and bar lists, see Dwg. No. 58276.

LEGEND
U.N.O. = Unless Noted Otherwise
FF = Front Face
BF = Back Face
EF = Each Face

STATE OF ARKANSAS
LICENSED PROFESSIONAL ENGINEER
No.16667
DANIEL R. GOAD
BRIDGE ENGINEER

SHEET 15 OF 16
DETAILS OF TYPE SPECIAL APPROACH SLABS
ROUTE SEC.
ARKANSAS STATE HIGHWAY COMMISSION
LITTLE ROCK, ARK.

DRAWN BY: DRG DATE: JAN. 2016 FILENAME: BBB0414_AS15.dgn
CHECKED BY: RLW DATE: JAN. 2016 SCALE: AS SHOWN
DESIGNED BY: DRG DATE: JAN. 2016
BRIDGE NO. A7381 & B7381 DRAWING NO. 58275

jeskinner 3/20/2016 3:36:14 PM
WORKSPACE: AHTD B/C 64-bit
L:\20IN\I0I7707 - I-540 Widening & Interchange Improvement\Drawings\I540-AS-SI5-SB.dgn
REVISED DATE:

BAR LIST - TYPE SPECIAL 11 APPROACH SLAB

Mark	No. Req'd	Length	Pin Dia.
S401	25	35'-8"	Str.
S402 TO S413	1 Ea.	34'-0" TO 2'-4"	Str.
S414 TO S424	2 Ea.	19'-4" TO 23'-3"	Str.
S425	2	23'-10"	Str.
S426	2	24'-11"	Str.
S427 TO S437	2 Ea.	24'-5" TO 28'-4"	Str.
S488	48	3'-0"	Str.
S501	37	35'-8"	Str.
S502 TO S519	1 Ea.	34'-0" TO 2'-4"	Str.
S520	2	40'-2"	Str.
S701 TO S732	1 Ea.	36'-3" TO 44'-4"	Str.
S733	3	45'-7"	Str.
S734	5	47'-8"	Str.
S735 TO S766	1 Ea.	46'-8" TO 54'-9"	Str.
F401	104	2'-8"	Str.
F402 TO F405	1 Ea.	2'-4" TO 10"	Str.
F406	9	35'-8"	Str.
F407 TO F409	1 Ea.	35'-2" TO 32'-0"	Str.
M401	4	16'-2"	Str.
M402	4	19'-8"	Str.
M403	2	9'-1"	Str.
M404	2	11'-2"	Str.
M405	8	25'-0"	Str.
M406	4	4'-0"	Str.
M501	184	5'-7"	2½"
M502	5	12'-9"	2½"

NOTE:
Number of bars shown is for one Type Special 11 Approach Slab. Two Type Special 11 Approach Slabs are required.

BAR LIST - TYPE SPECIAL 12 APPROACH SLAB

Mark	No. Req'd	Length	Pin Dia.
S438	25	11'-8"	Str.
S439 TO S442	1 Ea.	10'-0" TO 2'-4"	Str.
S443 TO S450	2 Ea.	19'-4" TO 22'-0"	Str.
S451	29	35'-8"	Str.
S452 TO S463	1 Ea.	34'-6" TO 2'-10"	Str.
S464 TO S487	2 Ea.	22'-5" TO 31'-5"	Str.
S488	51	3'-0"	Str.
S521	37	11'-8"	Str.
S522 TO S526	1 Ea.	10'-0" TO 2'-4"	Str.
S527	2	13'-1"	Str.
S528	43	35'-8"	Str.
S529 TO S546	1 Ea.	34'-6" TO 2'-10"	Str.
S547	2	40'-2"	Str.
S767 TO S790	1 Ea.	36'-3" TO 42'-3"	Str.
S791 TO S7155	1 Ea.	42'-6" TO 59'-2"	Str.
S7156 TO S7162	2 Ea.	31'-6" TO 32'-4"	Str.
F401	160	2'-8"	Str.
F402 TO F405	2 Ea.	2'-4" TO 10"	Str.
F406	12	35'-8"	Str.
F410	9	11'-8"	Str.
F411 TO F413	1 Ea.	11'-2" TO 8'-0"	Str.
F414 TO F417	1 Ea.	24'-9" TO 20'-0"	Str.

BAR LIST - TYPE SPECIAL 13 APPROACH SLAB

Mark	No. Req'd	Length	Pin Dia.
S488	64	3'-0"	Str.
S489	50	24'-10"	Str.
S490 TO S494	2 Ea.	24'-0" TO 18'-3"	Str.
S495 TO S4105	1 Ea.	31'-7" TO 2'-10"	Str.
S4106 TO S4137	2 Ea.	19'-4" TO 31'-5"	Str.
S4138	42	11'-8"	Str.
S4139 TO S4142	1 Ea.	10'-0" TO 2'-4"	Str.
S4143 TO S4150	2 Ea.	31'-10" TO 34'-7"	Str.
S548	37	47'-8"	Str.
S549 TO S572	1 Ea.	46'-0" TO 2'-10"	Str.
S573	2	53'-8"	Str.
S574	62	11'-8"	Str.
S575 TO S579	1 Ea.	10'-0" TO 2'-4"	Str.
S580	2	13'-1"	Str.
S7163 TO S7254	1 Ea.	36'-3" TO 59'-11"	Str.
S7255 TO S7258	2 Ea.	31'-11" TO 32'-4"	Str.
S7259 TO S7282	2 Ea.	32'-5" TO 35'-5"	Str.
F401	202	2'-8"	Str.
F402 TO F405	2 Ea.	2'-4" TO 10"	Str.
F410	16	11'-8"	Str.
F418	18	24'-10"	Str.
F419 TO F421	2 Ea.	24'-8" TO 23'-0"	Str.
F422 TO F425	1 Ea.	18'-10" TO 14'-0"	Str.

BAR LIST - TYPE SPECIAL 14 APPROACH SLAB

Mark	No. Req'd	Length	Pin Dia.
S438	37	11'-8"	Str.
S439 TO S442	1 Ea.	11'-5" TO 2'-10"	Str.
S443 TO S450	2 Ea.	31'-5" TO 28'-8"	Str.
S451	25	35'-8"	Str.
S452 TO S463	1 Ea.	34'-0" TO 2'-4"	Str.
S464 TO S487	2 Ea.	28'-4" TO 19'-4"	Str.
S488	60	3'-0"	Str.
S521	55	11'-8"	Str.
S522 TO S527	1 Ea.	11'-5" TO 2'-10"	Str.
S528	37	35'-8"	Str.
S529 TO S546	1 Ea.	34'-0" TO 2'-4"	Str.
S547	2	40'-2"	Str.
S548	2	13'-1"	Str.
S767 TO S772	2 Ea.	32'-4" TO 31'-8"	Str.
S773 TO S790	1 Ea.	59'-5" TO 55'-0"	Str.
S791 TO S7162	1 Ea.	54'-9" TO 36'-4"	Str.
F401	160	2'-8"	Str.
F402 TO F405	2 Ea.	2'-4" TO 10"	Str.
F406	9	35'-8"	Str.
F407 TO F409	1 Ea.	35'-2" TO 32'-0"	Str.
F410	16	11'-8"	Str.
F411 TO F414	1 Ea.	12'-9" TO 8'-0"	Str.

BAR LIST - TYPE SPECIAL 15 APPROACH SLAB

Mark	No. Req'd	Length	Pin Dia.
S488	51	3'-0"	Str.
S489	58	24'-10"	Str.
S490 TO S492	2 Ea.	24'-4" TO 21'-5"	Str.
S493 TO S4105	1 Ea.	37'-10" TO 3'-4"	Str.
S4106 TO S4137	2 Ea.	34'-7" TO 22'-5"	Str.
S4138	25	11'-8"	Str.
S4139 TO S4142	1 Ea.	10'-0" TO 2'-4"	Str.
S4143 TO S4150	2 Ea.	22'-0" TO 19'-4"	Str.
S549	86	25'-1"	Str.
S550 TO S573	1 Ea.	46'-6" TO 3'-4"	Str.
S574	2	53'-8"	Str.
S575	37	11'-8"	Str.
S576 TO S580	1 Ea.	10'-0" TO 2'-4"	Str.
S581	2	13'-1"	Str.
S7163 TO S7230	1 Ea.	42'-6" TO 60'-0"	Str.
S7231 TO S7258	2 Ea.	31'-11" TO 35'-5"	Str.
S7259 TO S7282	1 Ea.	42'-3" TO 36'-3"	Str.
F401	201	2'-8"	Str.
F402 TO F405	2 Ea.	2'-4" TO 10"	Str.
F410	9	11'-8"	Str.
F415 TO F417	1 Ea.	8'-0" TO 11'-2"	Str.
F418	24	24'-10"	Str.
F419 TO F422	1 Ea.	30'-9" TO 26'-0"	Str.

NOTE:
Dimensions of bars are out-to-out.

DATE REVISED	DATE FILMED	DATE REVISED	DATE FILMED	FED. ROAD DIST. NO.	STATE	FED. AID PROJ. NO.	SHEET NO.	TOTAL SHEETS
				6	ARK.			
				JOB NO.		BB0414	553	886
				(1) A7381 & B7381		APPROACH SLABS		58276

	TYPE	Class S(AE) Concrete	Reinforcing Steel (Gr. 60)
(1)	Type Special 11	115.08 Cu. Yds.	12,029 lb.
	Type Special 12	137.93 Cu. Yds.	15,103 lb.
	Type Special 13	180.81 Cu. Yds.	20,212 lb.
(2)	Type Special 11	115.08 Cu. Yds.	12,029 lb.
	Type Special 14	137.93 Cu. Yds.	15,117 lb.
	Type Special 15	179.50 Cu. Yds.	20,312 lb.

(1) At Begin Bridge. Quantity includes median barrier.

(2) At End Bridge. Quantity includes median barrier.

GENERAL NOTES

Concrete shall be Class S(AE) (f'c = 4,000 psi).

Reinforcment Steel shall conform to AASHTO M31 Or M322 Type A, Grade 60 (fy = 60,000 psi).

Approach Slabs will be measured and paid for in accordance with Section 504.

The surface finish for Approach Slabs shall match that used on the bridge deck.

BAR BENDING DIAGRAMS

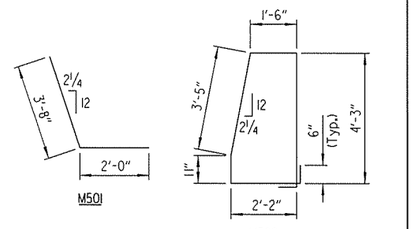

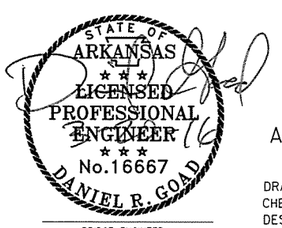

BRIDGE ENGINEER

SHEET 16 OF 16
DETAILS OF TYPE SPECIAL APPROACH SLABS

ROUTE SEC.

ARKANSAS STATE HIGHWAY COMMISSION
LITTLE ROCK, ARK.

DRAWN BY: DRG DATE: JAN. 2016 FILENAME: BBB0414_AS16.dgn
CHECKED BY: RLW DATE: JAN. 2016 SCALE: AS SHOWN
DESIGNED BY: DRG DATE: JAN. 2016
BRIDGE NO. A7381 & B7381 DRAWING NO. 58276

jeskinner 3/20/2016 3:36:14 PM
WORKSPACE: AHTD_Bridge
L:\2016\16077 - I-540 Widening & Interchange Improvement\Drawings\1540-AS-SI16-SB.dgn
REVISED DATE:

DATE REVISED	DATE FILMED	DATE REVISED	DATE FILMED
8-1-16			

FED. ROAD DIST. NO.	STATE	FED. AID PROJ. NO.	SHEET NO.	TO SHE
6	ARK.			
JOB NO.		BB0414	554	8
①	RETAINING WALL DETAILS			58

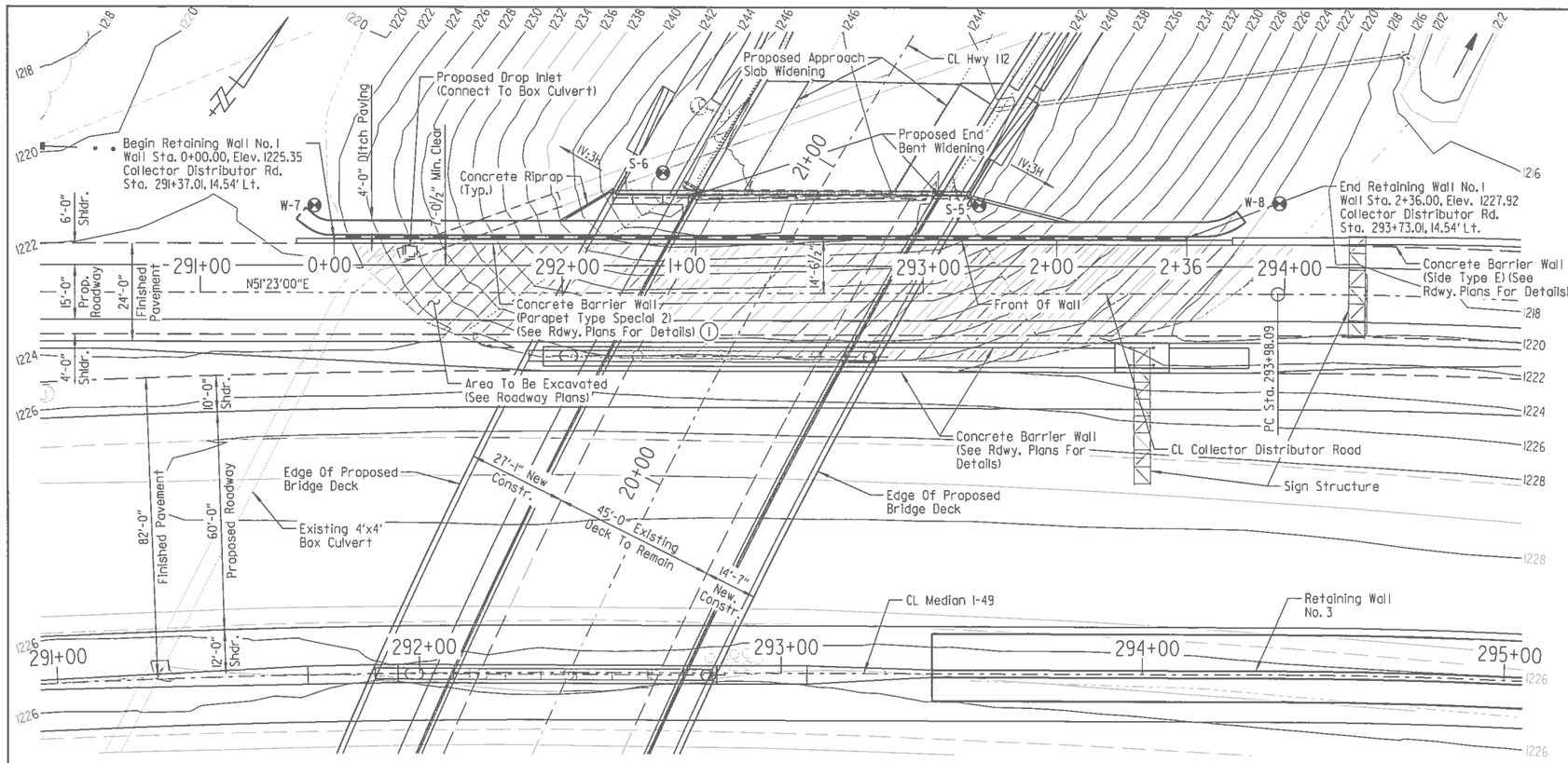

PLAN - RETAINING WALL NO. 1

NOTES:
For "SECTION A-A" & "SECTION B-B", see Dwg. No. 58287.

For "RETAINING WALL GENERAL NOTES", see Dwg. No. 58288.

For "BORING LEGEND" & "N VALUES", see Dwg. No. 58289.

For "FORM INSERT DETAILS", see Dwg. No. 58291.

Offset dimensions for Retaining Wall No. 1 are measured from CL Collector Distributor Road to Profile Grade Line at top of front face of coping.

Wall stationing, wall alignment, and elevations shown are at Profile Grade Line at top of front face of coping.

① Barrier height transitions from 4'-6" to 3'-6" at Collector Distributor Sta. 293+67.00 to 293+85.65.

FOR R/W DATA, SEE RDWY. PLANS

RETAINING WALL NO. 1 ELEVATIONS		
STATION ALONG WALL	PROFILE GRADE ELEV.	FINISHED GRADE @ INSIDE FACE OF BARRIER WALL
0+00.00	1225.35	1223.18
0+25.00	1233.24	1223.17
0+50.00	1241.14	1223.29
0+75.00	1244.37	1223.53
1+00.00	1243.11	1223.81
1+25.00	1241.85	1224.10
1+50.00	1240.59	1224.38
1+75.00	1239.33	1224.67
2+00.00	1238.07	1224.96
2+25.00	1231.37	1225.24
2+36.00	1227.92	1225.37

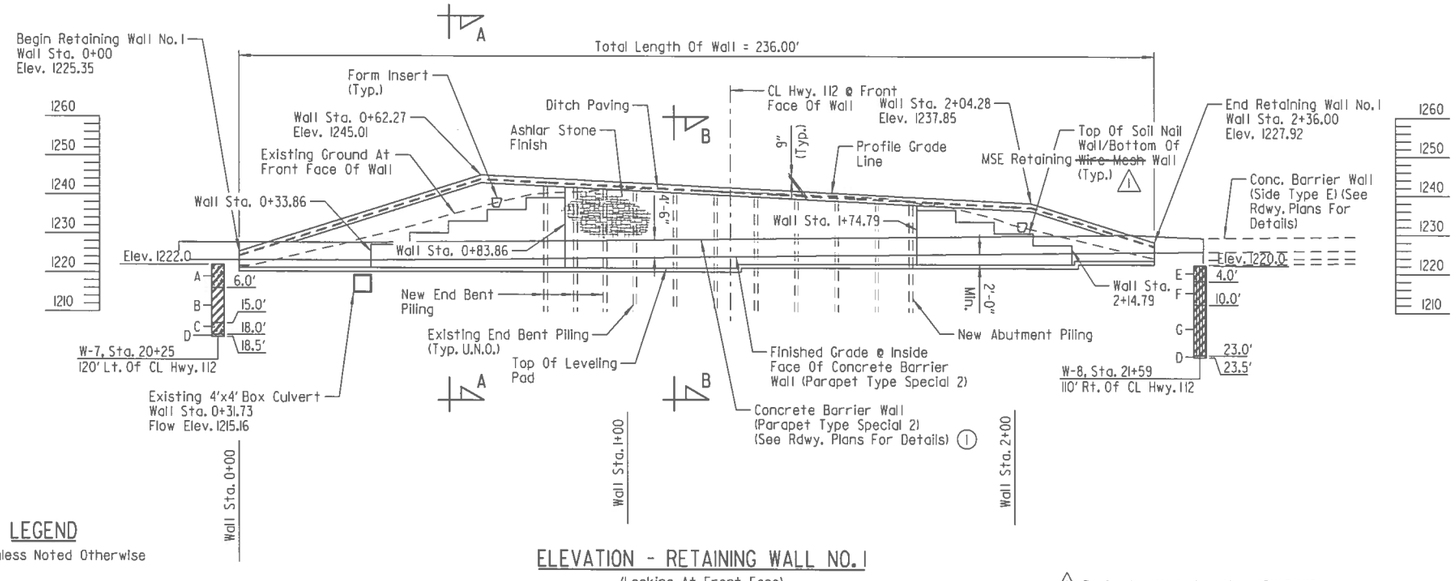

ELEVATION - RETAINING WALL NO. 1
(Looking At Front Face)

LEGEND
U.N.O. = Unless Noted Otherwise

⚠1 Revised wall designation, ABH 8-1-16

STATE OF ARKANSAS
LICENSED PROFESSIONAL ENGINEER
No. 16458
8-1-16
JOEL E. SKINNER
BRIDGE ENGINEER

SHEET 1 OF 15
RETAINING WALL DETAILS
ROUTE SEC.
ARKANSAS STATE HIGHWAY COMMISSION
LITTLE ROCK, ARK.

DRAWN BY: PCC DATE: MAR. 2014 FILENAME: BBB0414_RW1.dgn
CHECKED BY: RLW DATE: JAN. 2016 SCALE: 1" = 20'-0"
DESIGNED BY: PCC DATE: MAR. 2014
BRIDGE NO.
DRAWING NO. 58277

ABHall
7/29/2016 12:01:48 PM
WORKSPACE: AHTD Bridge
L:\ZOK\101707 - I-540 Widening & Interchange Improvement\Drawings\I540-RTWALL-SI01-L0.dgn
REVISED DATE:

DATE REVISED	DATE FILMED	DATE REVISED	DATE FILMED

FED. ROAD DIST. NO.	STATE	FED. AID PROJ. NO.	SHEET NO.	TOTAL SHEETS
6	ARK.			
JOB NO.		BB0414	555	886
RETAINING WALL DETAILS			58278	

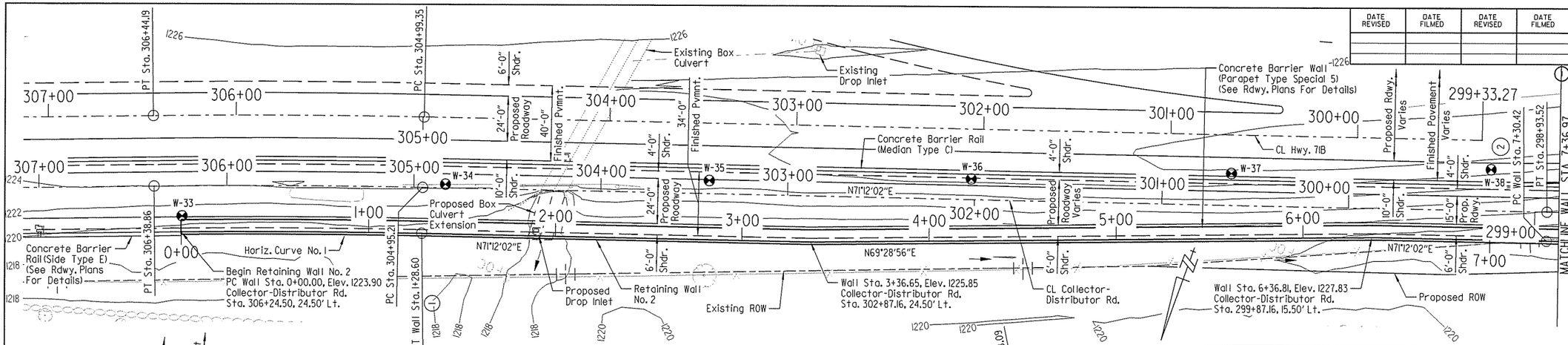

NOTES:
For "SECTION C-C", See Dwg. No. 58287.

For "RETAINING WALL GENERAL NOTES", See Dwg. No. 58288.

For "BORING LEGEND" & "N VALUES", see Dwg. No. 58289.

Offset dimensions for MSE Retaining Wall No. 2 are measured from CL Collector-Distributor Rd. to Profile Grade Line at gutteline of concrete barrier.

Wall stationing, wall alignment and elevations shown are at Profile Grade Line at gutteline of concrete barrier.

PLAN - RETAINING WALL NO. 2

(1) Collector Distributor Rd. Sta. 304+95.21, 24.50' Lt.

(2) Collector Distributor Rd. Sta. 298+93.52, 15.50' Lt.

(3) Collector Distributor Rd. Sta. 305+59.65, 24.04' Lt.

(4) Collector Distributor Rd. Sta. 297+03.89, 28.28' Lt.

FOR R/W DATA, SEE ROADWAY PLANS

HORIZONTAL CURVE DATA 1

Retaining Wall No. 2

(3) PI = 0+64.31
Δ = 1°37'36.74" Rt.
D = 1°16'01.71"
T = 64.20'
L = 128.38'
R = 4521.66'

HORIZONTAL CURVE DATA 2

Retaining Wall No. 2

(4) PI = 9+23.23
Δ = 15°10'17.20" Lt.
D = 3°57'27.37"
T = 192.80'
L = 383.35'
R = 1447.89'

RETAINING WALL NO. 2 ELEVATIONS

STATION ALONG WALL	PROFILE GRADE ELEV.	EXIST. GROUND ELEV.
0+00.00	1223.90	1218.96
0+25.00	1223.99	1218.74
0+50.00	1224.08	1218.75
0+75.00	1224.22	1218.81
1+00.00	1224.37	1219.00
1+25.00	1224.53	1218.72
1+50.00	1224.68	1218.92
1+75.00	1224.84	1218.92
2+00.00	1224.99	1217.41
2+25.00	1225.14	1219.21
2+50.00	1225.30	1218.78
2+75.00	1225.45	1218.48
3+00.00	1225.61	1218.46
3+25.00	1225.76	1218.70
3+50.00	1225.91	1218.61
3+75.00	1226.05	1218.58
4+00.00	1226.19	1218.47

RETAINING WALL NO. 2 ELEVATIONS

STATION ALONG WALL	PROFILE GRADE ELEV.	EXIST. GROUND ELEV.
4+25.00	1226.33	1218.23
4+50.00	1226.46	1218.29
4+75.00	1226.59	1218.48
5+00.00	1226.70	1218.50
5+25.00	1226.94	1218.61
5+50.00	1227.20	1218.60
5+75.00	1227.42	1218.45
6+00.00	1227.61	1218.23
6+25.00	1227.77	1217.85
6+50.00	1227.90	1217.47
6+75.00	1228.03	1217.43
7+00.00	1228.13	1217.61
7+25.00	1228.21	1217.49
7+50.00	1228.27	1217.40
7+75.00	1228.32	1217.20
8+00.00	1228.37	1217.30
8+25.00	1228.29	1216.95
8+50.00	1228.17	1216.18
8+75.00	1228.05	1215.91
9+00.00	1227.92	1215.62
9+25.00	1227.80	1215.39
9+50.00	1227.67	1215.29
9+75.00	1227.55	1215.53
10+00.00	1227.43	1214.22
10+25.00	1227.30	1213.95
10+50.00	1227.18	1214.67
10+75.00	1227.06	1215.15
11+00.00	1226.93	1215.53
11+13.79	1226.86	1215.75

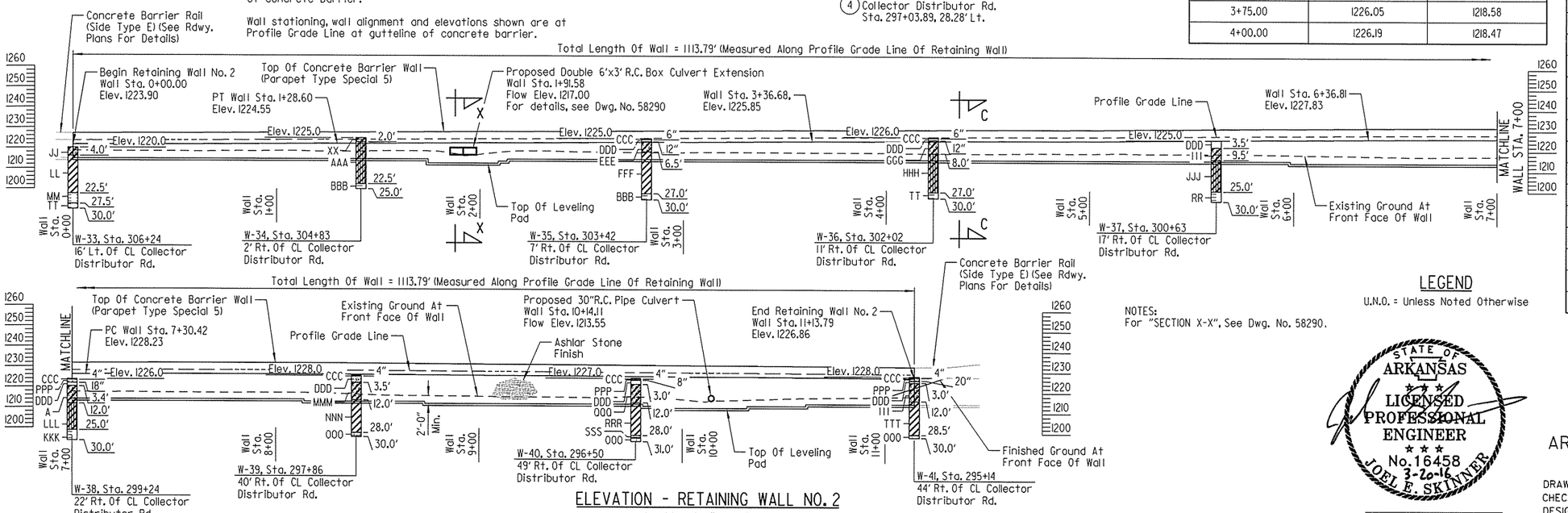

ELEVATION - RETAINING WALL NO. 2

(Looking At Front Face)

NOTES:
For "SECTION X-X", See Dwg. No. 58290.

LEGEND

U.N.O. = Unless Noted Otherwise

STATE OF ARKANSAS
LICENSED PROFESSIONAL ENGINEER
No. 16458
3-20-16
JOEL F. SKINNER
BRIDGE ENGINEER

SHEET 2 OF 15
RETAINING WALL DETAILS

ROUTE SEC.

ARKANSAS STATE HIGHWAY COMMISSION
LITTLE ROCK, ARK.

DRAWN BY: JES DATE: FEB. 2014 FILENAME: BBB0414_RW2.dgn
CHECKED BY: RLW DATE: JAN. 2016 SCALE: 1" = 30'-0"
DESIGNED BY: JES DATE: FEB. 2014
BRIDGE NO. DRAWING NO. 58278

jeskinner
3/20/2016 3:36:18 PM
V:\Roadway\Projects\LITProjects\2014\N017707 - I-540 Widening & Interchange Improvement\Drawings\I540-RTWALL-SH02-L0.dgn
REVISED DATE:

DATE REVISED	DATE FILMED	DATE REVISED	DATE FILMED

FED. ROAD DIST. NO.	STATE	FED. AID PROJ. NO.	SHEET NO.	TOTAL SHEETS
6	ARK.			
JOB NO.		BB0414	556	886
RETAINING WALL DETAILS				58279

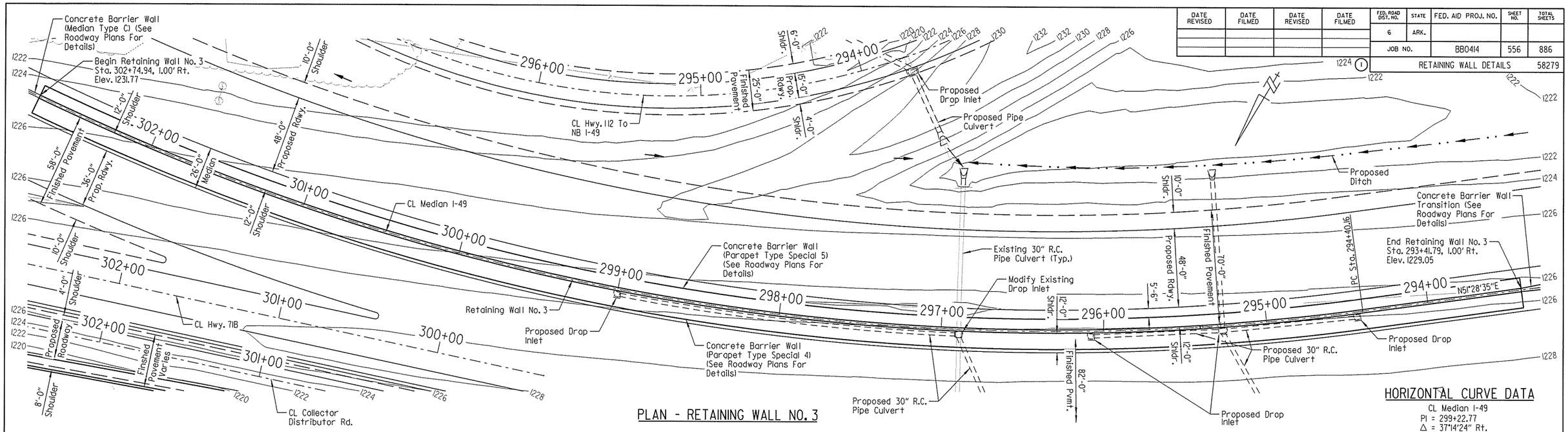

PLAN - RETAINING WALL NO. 3

HORIZONTAL CURVE DATA

CL Median I-49
PI = 299+22.77
Δ = 37°14'24" Rt.
D = 4°00'00"
T = 482.61'
L = 931.00'
e = 0.093 Ft./Ft.
R = 600.00'

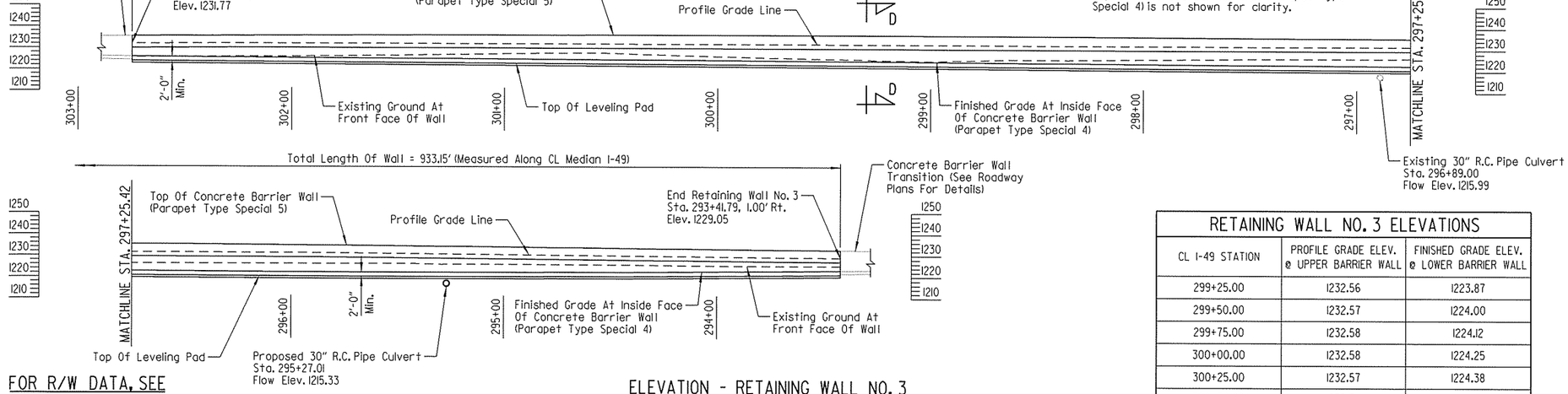

FOR R/W DATA, SEE ROADWAY PLANS

ELEVATION - RETAINING WALL NO. 3
(Looking At Front Face)

NOTES:
For "SECTION D-D", See Dwg. No. 58287.

For "RETAINING WALL GENERAL NOTES", See Dwg. No. 58288.

Borings were unable to be obtained at this location.

Offset dimensions for Retaining Wall No. 3 are measured from CL Median I-49 to Profile Grade Line at gutterline at front face of top concrete barrier wall.

Elevations shown are at Profile Grade Line at gutterline at front face of top concrete barrier wall.

Stations shown are along CL Median I-49.

RETAINING WALL NO. 3 ELEVATIONS

CL I-49 STATION	PROFILE GRADE ELEV. @ UPPER BARRIER WALL	FINISHED GRADE ELEV. @ LOWER BARRIER WALL
293+41.79	1229.05	1223.05
293+50.00	1229.10	1222.96
293+75.00	1229.29	1222.72
294+00.00	1229.50	1222.52
294+25.00	1229.74	1222.35
294+50.00	1229.99	1222.22
294+75.00	1230.23	1222.13
295+00.00	1230.48	1222.07

RETAINING WALL NO. 3 ELEVATIONS

CL I-49 STATION	PROFILE GRADE ELEV. @ UPPER BARRIER WALL	FINISHED GRADE ELEV. @ LOWER BARRIER WALL
295+25.00	1230.71	1222.05
295+50.00	1230.93	1222.07
295+75.00	1231.14	1222.12
296+00.00	1231.33	1222.21
296+25.00	1231.49	1222.34
296+50.00	1231.63	1222.47
296+75.00	1231.77	1222.59
297+00.00	1231.90	1222.72

RETAINING WALL NO. 3 ELEVATIONS

CL I-49 STATION	PROFILE GRADE ELEV. @ UPPER BARRIER WALL	FINISHED GRADE ELEV. @ LOWER BARRIER WALL
297+25.00	1232.01	1222.85
297+50.00	1232.12	1222.98
297+75.00	1232.21	1223.10
298+00.00	1232.30	1223.23
298+25.00	1232.37	1223.36
298+50.00	1232.43	1223.49
298+75.00	1232.48	1223.61
299+00.00	1232.52	1223.74

RETAINING WALL NO. 3 ELEVATIONS

CL I-49 STATION	PROFILE GRADE ELEV. @ UPPER BARRIER WALL	FINISHED GRADE ELEV. @ LOWER BARRIER WALL
299+25.00	1232.56	1223.87
299+50.00	1232.57	1224.00
299+75.00	1232.58	1224.12
300+00.00	1232.58	1224.25
300+25.00	1232.57	1224.38
300+50.00	1232.54	1224.51
300+75.00	1232.51	1224.63
301+00.00	1232.47	1224.76

RETAINING WALL NO. 3 ELEVATIONS

CL I-49 STATION	PROFILE GRADE ELEV. @ UPPER BARRIER WALL	FINISHED GRADE ELEV. @ LOWER BARRIER WALL
301+25.00	1232.41	1224.89
301+50.00	1232.34	1225.02
301+75.00	1232.27	1225.14
302+00.00	1232.18	1225.27
302+25.00	1232.08	1225.41
302+50.00	1231.93	1225.59
302+74.94	1231.77	1225.77

STATE OF ARKANSAS
LICENSED PROFESSIONAL ENGINEER
No. 16458
3-20-16
JOEL E. SKINNER
BRIDGE ENGINEER

SHEET 3 OF 15
RETAINING WALL DETAILS
ROUTE SEC.
ARKANSAS STATE HIGHWAY COMMISSION
LITTLE ROCK, ARK.

DRAWN BY: DRG DATE: AUG. 2014 FILENAME: BBB0414_RW3.dgn
CHECKED BY: RLW DATE: JAN. 2016 SCALE: 1" = 30'-0"
DESIGNED BY: DRG DATE: AUG. 2014
BRIDGE NO. DRAWING NO. 58279

REVISED DATE:
Jeskinner 3/20/2016 3:36:24 PM
WORKSPACE: AHTD Bridge
V:\Highrch\Projects\LITProjects\2011\11017707 - I-540 Widening & Interchange Improvement\Drawings\I540-RTWALL-S103-L0.dgn

DATE REVISED	DATE FILMED	DATE REVISED	DATE FILMED	FED. ROAD DIST. NO.	STATE	FED. AID PROJ. NO.	SHEET NO.	TOTAL SHEETS
				6	ARK.			
				JOB NO.		BB0414	557	886
				①	RETAINING WALL DETAILS			58280

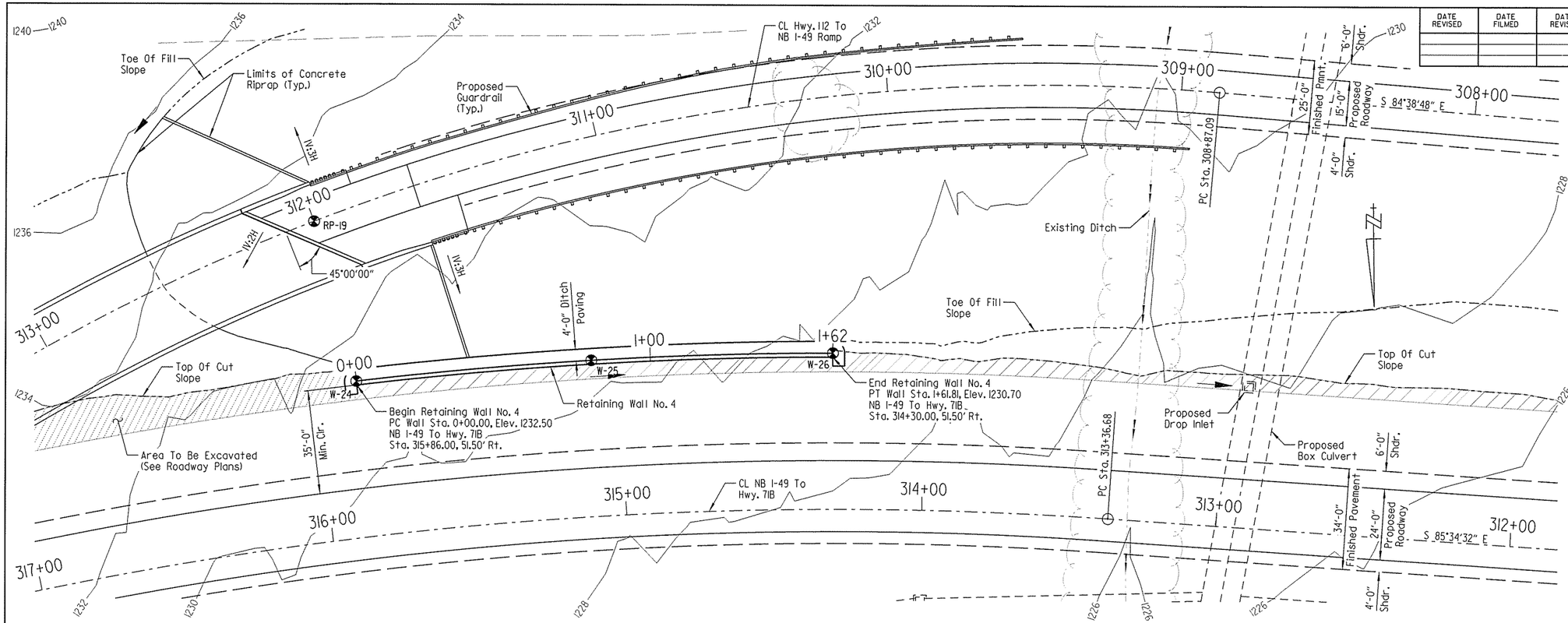

PLAN - RETAINING WALL NO. 4

FOR R/W DATA, SEE ROADWAY PLANS

HORIZONTAL CURVE DATA

Retaining Wall No. 4

① PI = 0+81.07
Δ = 6°37'48" Rt.
D = 4°05'87"
T = 81.07'
L = 161.81'
R = 1399.64'

① NB I-49 To Hwy. 71B
Sta. 315+07.81, 53.85 Rt.

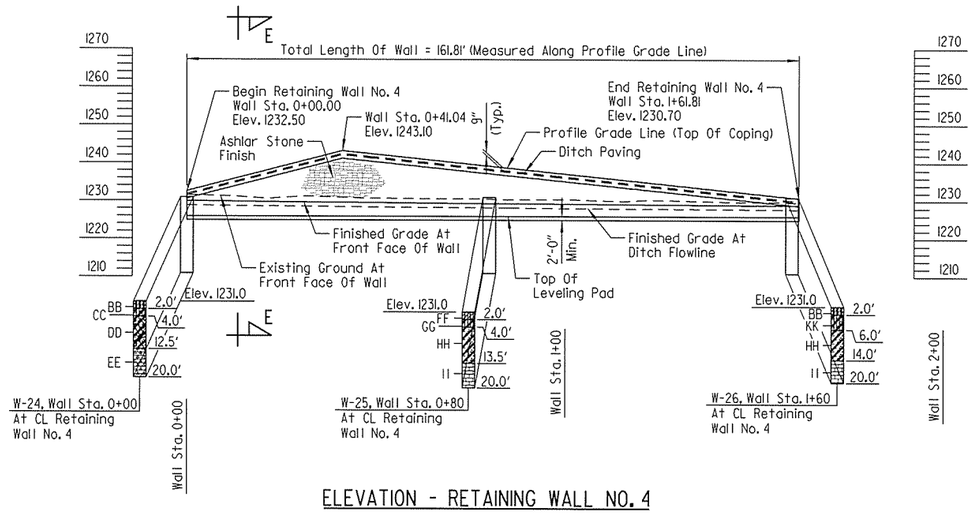

ELEVATION - RETAINING WALL NO. 4

(Looking At Front Face)

RETAINING WALL NO. 4 ELEVATIONS		
STATION ALONG WALL	PROFILE GRADE ELEV.	DITCH FLOWLINE ELEV. IN FRONT OF WALL
0+00.00	1232.50	1228.75
0+15.00	1236.38	1228.61
0+30.00	1240.26	1228.48
0+41.04	1243.10	1228.40
0+45.00	1242.69	1228.37
0+60.00	1241.15	1228.26
0+75.00	1239.61	1228.16
0+90.00	1238.07	1228.07
1+05.00	1236.53	1227.99
1+20.00	1234.99	1227.92
1+35.00	1233.45	1227.86
1+50.00	1231.91	1227.79
1+61.81	1230.70	1227.74

NOTES:
For "SECTION E-E", see Dwg. No. 58287.

For "RETAINING WALL GENERAL NOTES", see Dwg. No. 58288.

For "BORING LEGEND" & "N VALUES", see Dwg. No. 58289.

Offset dimensions for Retaining Wall No. 4 are measured from CL NB I-49 To Hwy. 71B Ramp to Profile Grade Line at top of front face of coping.

Wall stationing, wall alignment and evations shown are at Profile Grade Line at top of front face of coping.

STATE OF ARKANSAS
LICENSED PROFESSIONAL ENGINEER
No. 16458
3-20-16
JOEL E. SKINNER
BRIDGE ENGINEER

SHEET 4 OF 15
RETAINING WALL DETAILS
ROUTE SEC.
ARKANSAS STATE HIGHWAY COMMISSION
LITTLE ROCK, ARK.

DRAWN BY: CWT DATE: FEB. 2014 FILENAME: BBB0414_RW4.dgn
CHECKED BY: RLW DATE: JAN. 2016 SCALE: 1" = 20'-0"
DESIGNED BY: JES DATE: FEB. 2014
BRIDGE NO. DRAWING NO. 58280

jeskinner 3/20/2016 3:36:25 PM
WORKSPACE: AHTD Bridge
\\Igltarch01\Projects\LITProjects\20N\N017707 - I-540 Widening & Interchange Improvement\Drawings\I540-RTWALL-SI04-L0.dgn
REVISED DATE:

DATE REVISED	DATE FILMED	DATE REVISED	DATE FILMED	FED. ROAD DIST. NO.	STATE	FED. AID PROJ. NO.	SHEET NO.	TOTAL SHEETS
				6	ARK.			
				JOB NO.		BB0414	558	886
				①		RETAINING WALL DETAILS		58281

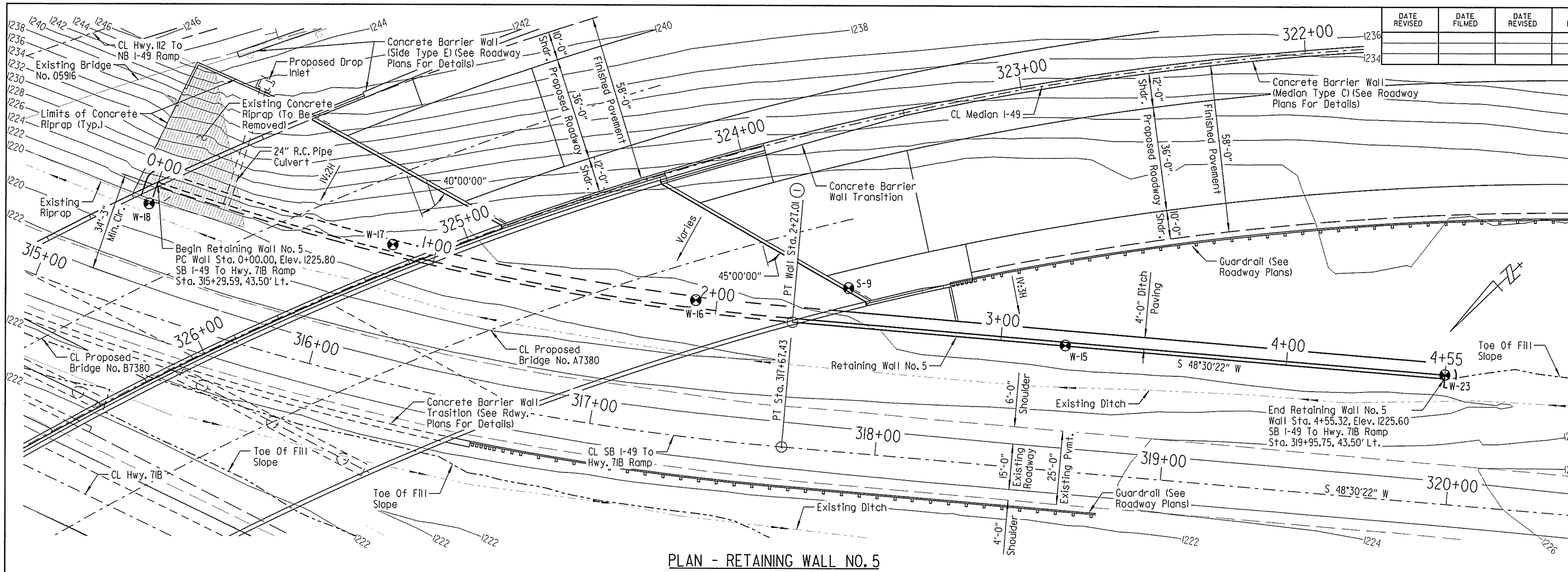

PLAN - RETAINING WALL NO. 5

① SB I-49 To Hwy. 71B Ramp
Sta. 317+67.43, 43.50' Lt.

② SB I-49 To Hwy. 71B Ramp
Sta. 316+48.51, 36.39' Lt.

FOR R/W DATA, SEE ROADWAY PLANS

HORIZONTAL CURVE DATA

Retaining Wall No. 5
② PI = 1+14.09
Δ = 14°16'14" Lt.
D = 6°17'11"
T = 114.09'
L = 227.01'
R = 911.43'

RETAINING WALL NO. 5 ELEV.		
STATION ALONG WALL	PROFILE GRADE ELEV.	EXISTING GROUND AT FRONT FACE OF WALL
0+00.00	1225.80	1222.32
0+25.00	1230.46	1222.25
0+50.00	1233.02	1222.15
0+75.00	1234.18	1221.20
1+00.00	1235.34	1221.26
1+25.00	1235.71	1221.25
1+50.00	1235.84	1221.22
1+75.00	1235.98	1221.41
2+00.00	1236.11	1221.62
2+25.00	1236.25	1221.80
2+50.00	1236.39	1221.94
2+75.00	1241.53	1222.28
3+00.00	1240.20	1222.31
3+25.00	1237.55	1222.46
3+50.00	1234.90	1222.55
3+75.00	1232.50	1223.16
4+00.00	1230.10	1223.27
4+25.00	1228.06	1223.12
4+50.00	1226.03	1223.12
4+55.32	1225.60	1222.79

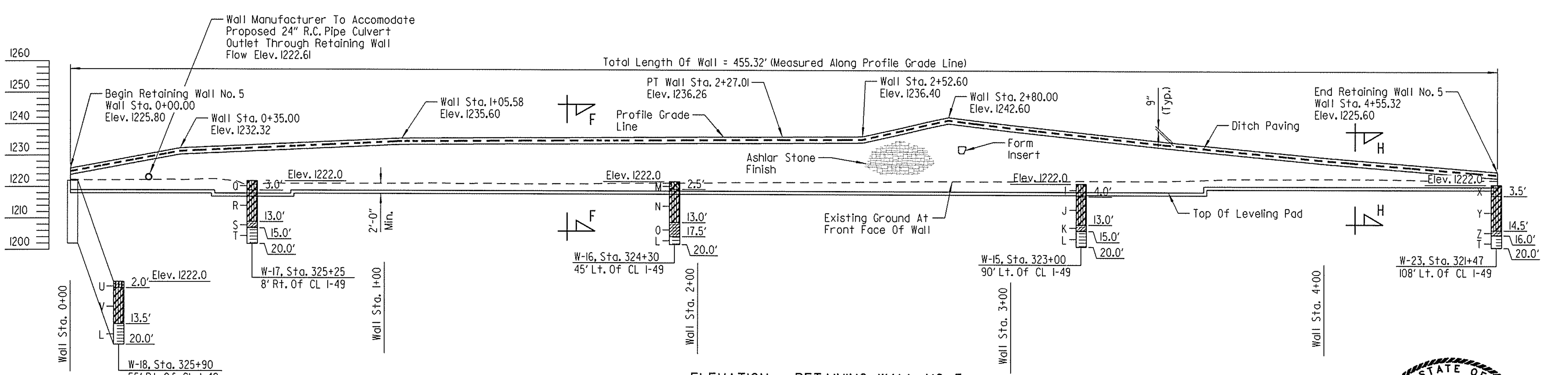

ELEVATION - RETAINING WALL NO. 5
(Looking At Front Face)

NOTE:
For "RETAINING WALL GENERAL NOTES", "SECTION F-F" & "SECTION H-H, See Dwg. No. 58288.

For "BORING LEGEND" & "N VALUES", see Dwg. No. 58289.

For "FORM INSERT DETAILS", see Dwg. No. 58291.

Offset dimensions for Retaining Wall No. 5 are measured from CL SB I-49 to Hwy. 71B Ramp to Profile Grade Line at top of front face of coping.

Wall stationing, wall alignment & elevations shown are at Profile Grade Line at top of front face of coping.

LEGEND
U.N.O. = Unless Noted Otherwise

STATE OF ARKANSAS LICENSED PROFESSIONAL ENGINEER No. 16458 JOEL E. SKINNER 3-20-16

BRIDGE ENGINEER

SHEET 5 OF 15
RETAINING WALL DETAILS
ROUTE SEC.
ARKANSAS STATE HIGHWAY COMMISSION
LITTLE ROCK, ARK.

DRAWN BY: JES DATE: FEB. 2014 FILENAME: BBB0414_RW5.dgn
CHECKED BY: RLW DATE: JAN. 2016 SCALE: 1" = 20'-0"
DESIGNED BY: JES DATE: FEB. 2014
BRIDGE NO. DRAWING NO. 58281

jeskinner 3/20/2016 3:36:26 PM
WORKSPACE: AHTD Bridge
\\gitorch01\Projects\LITProjects\2011\017707 - I-540 Widening & Interchange Improvement\Drawings\I540-RTWALL-S105-L0.dgn
REVISED DATE:

DATE REVISED	DATE FILMED	DATE REVISED	DATE FILMED	FED. ROAD DIST. NO.	STATE	FED. AID PROJ. NO.	SHEET NO.	TOTAL SHEETS
				6	ARK.			
				JOB NO.		BB0414	559	886
				1		RETAINING WALL DETAILS		58282

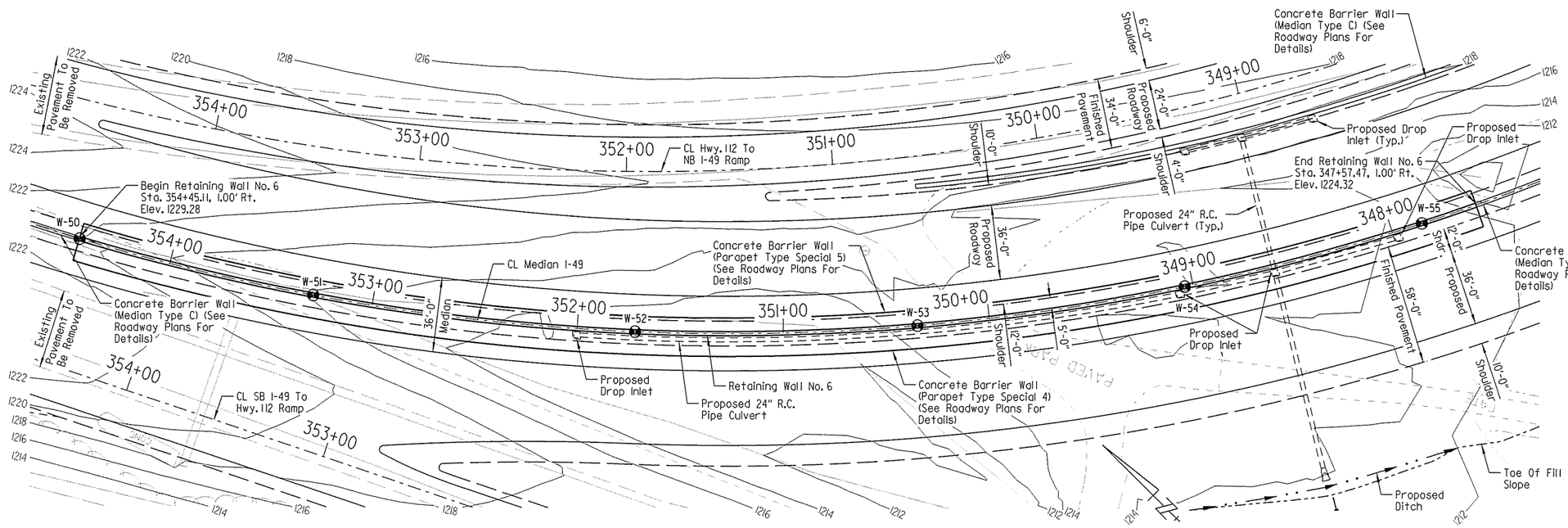

PLAN - RETAINING WALL NO. 6

FOR R/W DATA, SEE ROADWAY PLANS

HORIZONTAL CURVE DATA

CL Median I-49
PI = 351+12.16
Δ = 42°14'17" Rt.
D = 5°15'00"
T = 421.53'
L = 804.53'
e = 0.100 Ft./Ft.
R = 480.00'

NOTES:
For "SECTION D-D", See Dwg. No. 58287.

For "RETAINING WALL GENERAL NOTES", See Dwg. No. 58288.

For "BORING LEGEND" & "N VALUES", see Dwg. No. 58289.

Offset dimensions for Retaining Wall No. 6 are measured from CL Median I-49 to Profile Grade Line at gutterline at front face of top concrete barrier wall.

Elevations shown are at Profile Grade Line at gutterline at front face of top concrete barrier wall.

Stations shown are along CL Median I-49.

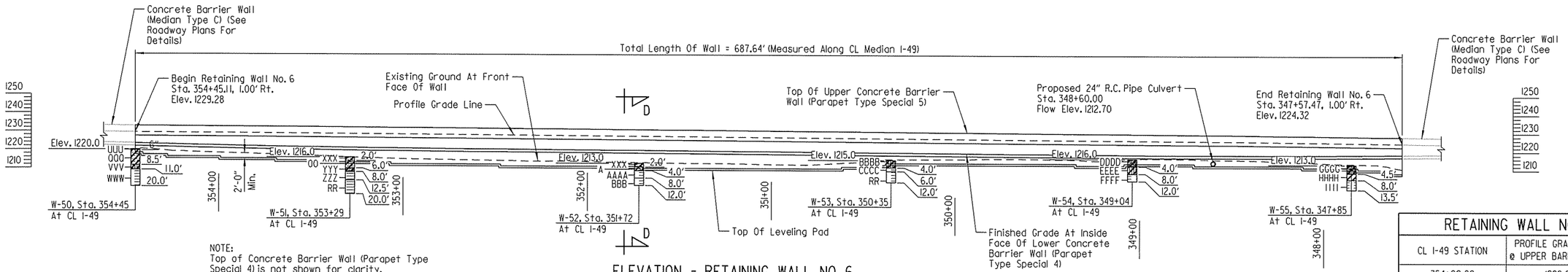

NOTE:
Top of Concrete Barrier Wall (Parapet Type Special 4) is not shown for clarity.

ELEVATION - RETAINING WALL NO. 6

(Looking At Front Face)

RETAINING WALL NO. 6 ELEVATIONS		
CL I-49 STATION	PROFILE GRADE ELEV. @ UPPER BARRIER WALL	EXIST. GROUND ELEV. @ LOWER BARRIER WALL
347+57.47	1224.32	1210.61
347+60.00	1224.35	1211.06
347+80.00	1224.57	1213.21
348+00.00	1224.79	1213.75
348+20.00	1225.01	1214.63
348+40.00	1225.23	1215.21
348+60.00	1225.45	1215.58
348+80.00	1225.59	1215.92
349+00.00	1225.73	1216.14
349+20.00	1225.87	1214.62
349+40.00	1226.00	1215.52

RETAINING WALL NO. 6 ELEVATIONS		
CL I-49 STATION	PROFILE GRADE ELEV. @ UPPER BARRIER WALL	EXIST. GROUND ELEV. @ LOWER BARRIER WALL
349+60.00	1226.14	1215.78
349+80.00	1226.27	1215.80
350+00.00	1226.41	1215.54
350+20.00	1226.55	1215.49
350+40.00	1226.68	1215.05
350+60.00	1226.82	1213.36
350+80.00	1226.95	1212.30
351+00.00	1227.09	1212.48
351+20.00	1227.23	1212.76
351+40.00	1227.36	1212.91
351+60.00	1227.50	1213.12

RETAINING WALL NO. 6 ELEVATIONS		
CL I-49 STATION	PROFILE GRADE ELEV. @ UPPER BARRIER WALL	EXIST. GROUND ELEV. @ LOWER BARRIER WALL
351+80.00	1227.63	1213.39
352+00.00	1227.77	1213.73
352+20.00	1227.91	1213.95
352+40.00	1228.04	1214.10
352+60.00	1228.18	1214.41
352+80.00	1228.31	1214.72
353+00.00	1228.45	1215.08
353+20.00	1228.59	1215.65
353+40.00	1228.72	1216.35
353+60.00	1228.86	1217.02
353+80.00	1228.98	1217.68

RETAINING WALL NO. 6 ELEVATIONS		
CL I-49 STATION	PROFILE GRADE ELEV. @ UPPER BARRIER WALL	EXIST. GROUND ELEV. @ LOWER BARRIER WALL
354+00.00	1229.06	1218.29
354+20.00	1229.14	1218.89
354+40.00	1229.25	1220.21
354+45.11	1229.28	1220.45

STATE OF ARKANSAS
LICENSED PROFESSIONAL ENGINEER
No. 16458
3-20-16
JOEL E. SKINNER
BRIDGE ENGINEER

SHEET 6 OF 15
RETAINING WALL DETAILS
ROUTE SEC.
ARKANSAS STATE HIGHWAY COMMISSION
LITTLE ROCK, ARK.

DRAWN BY: DRG DATE: AUG. 2014 FILENAME: BBB0414_RW6.dgn
CHECKED BY: RLW DATE: JAN. 2016 SCALE: 1" = 30'-0"
DESIGNED BY: DRG DATE: AUG. 2014
BRIDGE NO. DRAWING NO. 58282

jeskinner 3/20/2016 3:36:26 PM
WORKSPACE: MNTD Bridge
\\gitfarch01\Projects\LITProjects\201\NI07707 - I-540 Widening & Interchange Improvement\Drawings\540-RTWALL-5106-L0.dgn
REVISED DATE:

DATE REVISED	DATE FILMED	DATE REVISED	DATE FILMED	FED. ROAD DIST. NO.	STATE	FED. AID PROJ. NO.	SHEET NO.	TOTAL SHEETS
				6	ARK.			
				JOB NO.		BB0414	560	886
				①	RETAINING WALL DETAILS			58283

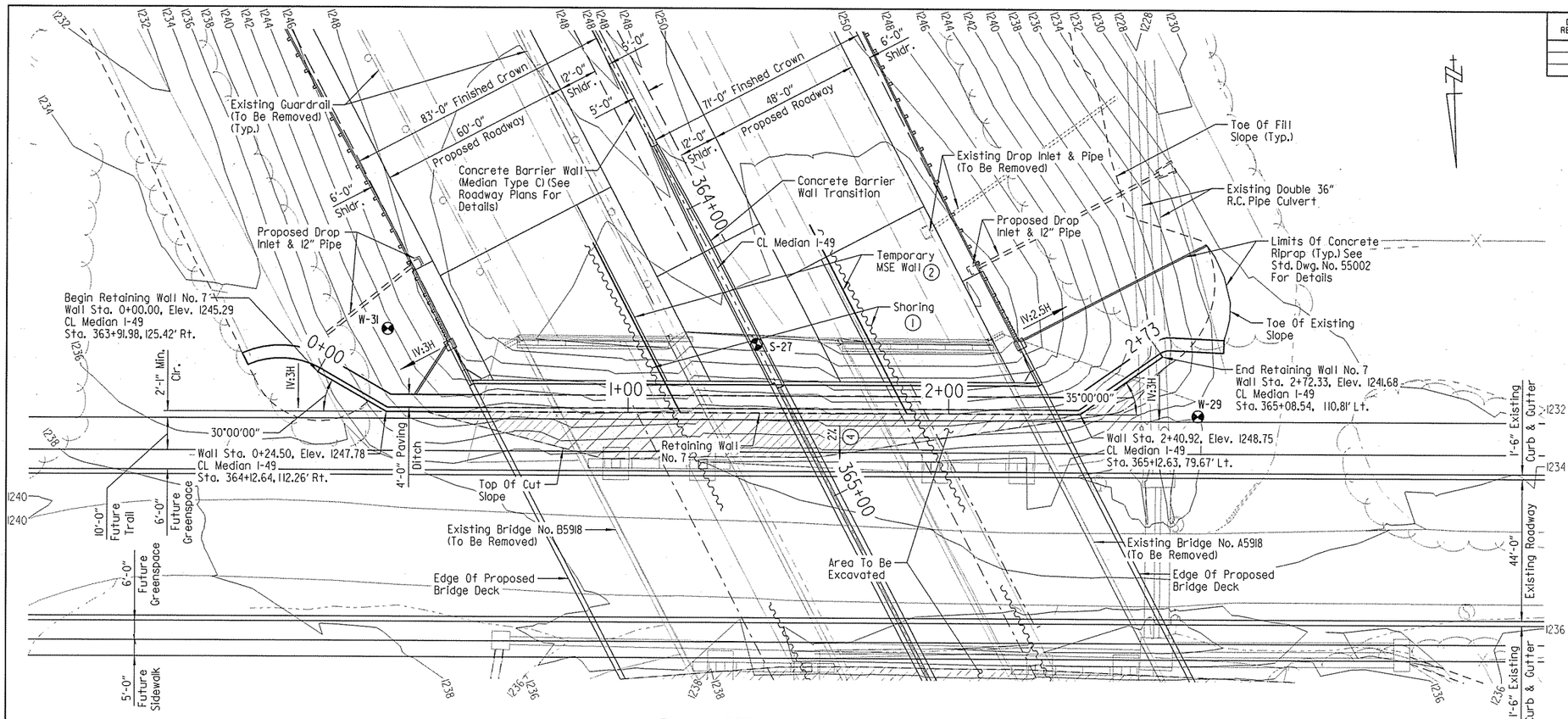

PLAN - RETAINING WALL NO. 7

FOR R/W DATA, SEE ROADWAY PLANS

NOTES:
For "SECTION F-F, SECTION H-H" & "RETAINING WALL GENERAL NOTES", see Dwg. No. 58288.

Offset dimensions for Retaining Wall No. 7 are measured from CL Median I-49 to Profile Grade Line at top of front face of coping.

Underdrain outlet to penetrate front face of MSE Retaining Wall. Contractor shall confirm low point in finished grade at front face.

For "BORING LEGEND" & "N VALUES", see Dwg. No. 58289 .

For "FORM INSERT DETAILS", see Dwg. No. 58291 .

Wall stationing, wall alignment and elevations shown are at Profile Grade Line at top of front face of coping.

① Shoring, As Needed, Will Be Required To Excavate Existing Embankment And Construct Retaining Wall Nos. 7 & 8 While Maintaining Traffic On I-49. See SP JOB NO. BB0414 "SHORING".

② Temporary MSE Wall Will Be Required To Remove Existing Bridge Nos. A5918 & B5918 And Existing Embankment. See SP JOB NO. BB0414 "TEMPORARY RETAINING WALL".

③ Van Asche Drive improvements were not complete during development of plans. The information and dimensions shown are based on information provided in the construction plans for improvements to Van Asche Drive provided by the City of Fayetteville. The Contractor is to adhere strictly to the requirements for verification of the existing geometry and its relationship to proposed work. The results of the verification process shall be submitted in writing to the Engineer and Bridge Engineer before the new construction is started. If the verification process reveals that adjustments are required, recommendations for such adjustments shall be included in the submittal for approval. This work will not be paid for directly but shall be considered subsidiary to other items.

④ Slope From Front Face Of Retaining Wall To Top Of Curb.

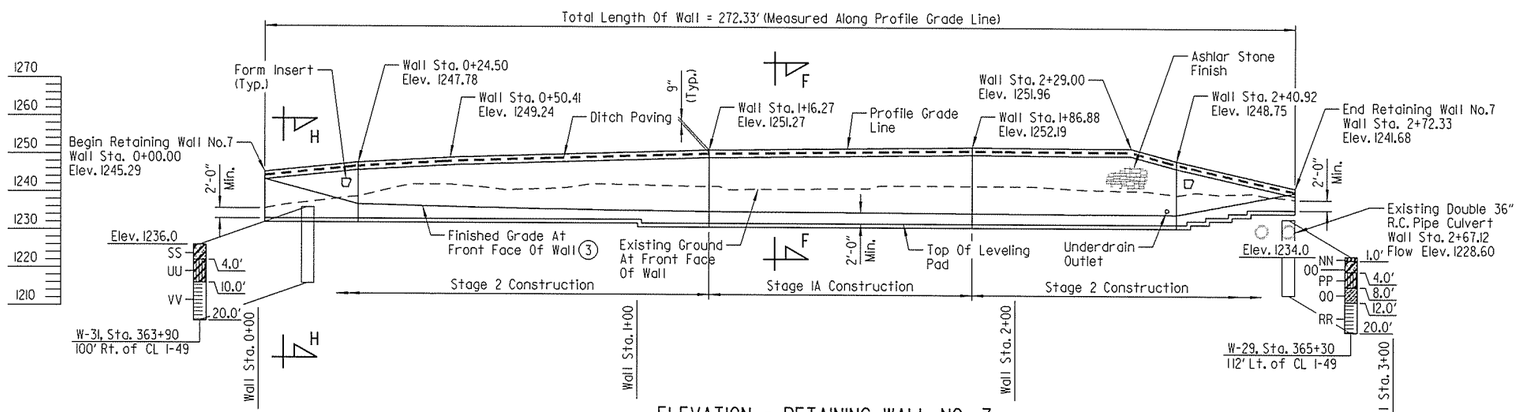

ELEVATION - RETAINING WALL NO. 7
(Looking At Front Face)

RETAINING WALL NO. 7 ELEVATIONS			
STATION ALONG WALL	PROFILE GRADE ELEV.	③ EXIST. GROUND ELEV.	③ FINISHED GRADE ELEV.
0+00.00	1245.29	1235.63	-
0+25.00	1247.81	-	1236.80
0+50.00	1249.27	-	1236.18
0+75.00	1250.02	-	1235.68
1+00.00	1250.76	-	1235.31
1+25.00	1251.37	-	1235.07
1+50.00	1251.70	-	1234.95
1+75.00	1252.03	-	1234.86
2+00.00	1252.12	-	1234.76
2+25.00	1251.97	-	1234.66
2+50.00	1246.93	-	1236.31
2+72.33	1241.68	1238.72	-

STATE OF ARKANSAS
LICENSED PROFESSIONAL ENGINEER
No. 16458
4-19-16
JOEL E. SKINNER
BRIDGE ENGINEER

SHEET 7 OF 15
RETAINING WALL DETAILS
ROUTE SEC.
ARKANSAS STATE HIGHWAY COMMISSION
LITTLE ROCK, ARK.

DRAWN BY: PCC DATE: AUG. 2014 FILENAME: BB0414_RW7.dgn
CHECKED BY: RLW DATE: JAN. 2016 SCALE: 1" = 20'-0"
DESIGNED BY: PCC DATE: AUG. 2014
BRIDGE NO. DRAWING NO. 58283

jeskinner 4/19/2016 1:41:27 PM
WORKSPACE: AHTD Bridge
\\gltarchdn\Projects\LITProjects\20IN\101707 - I-540 Widening & Interchange Improvement\Drawings\I540-RTWALL-S107-L0.dgn
REVISED DATE:

DATE REVISED	DATE FILMED	DATE REVISED	DATE FILMED	FED. ROAD DIST. NO.	STATE	FED. AID PROJ. NO.	SHEET NO.	TOTAL SHEETS
				6	ARK.			
				JOB NO.		BB0414	561	886
				(1)	RETAINING WALL DETAILS			58284

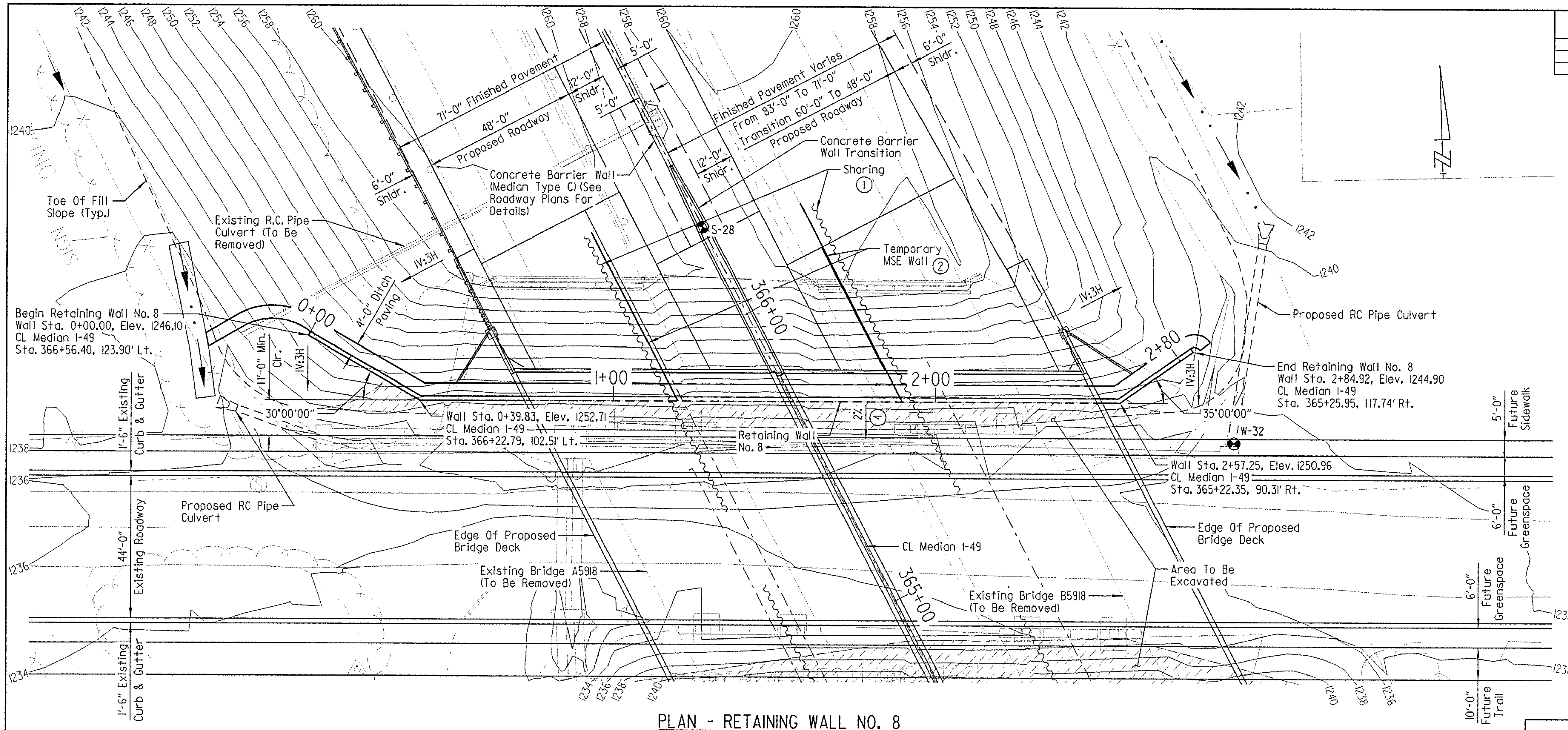

FOR R/W DATA, SEE ROADWAY PLANS

NOTES:
For "SECTION F-F", "SECTION H-H" & "RETAINING WALL GENERAL NOTES", see Dwg. No. 58288.

Offset dimensions for Retaining Wall No. 7 are measured from CL Median I-49 to Profile Grade Line at top of front face of coping.

Underdrain outlet to penetrate front face of MSE Retaining Wall. Contractor shall confirm low point in finished grade at front face.

For "BORING LEGEND" & "N VALUES", see Dwg. No. 58289.

For "FORM INSERT DETAILS", see Dwg. No. 58291.

Wall stationing, wall alignment and elevations shown are at Profile Grade Line at top of front face of coping.

(1) Shoring, As Needed, Will Be Required To Excavate Existing Embankment And Construct Retaining Wall Nos. 7 & 8 While Maintaining Traffic On I-49. See SP JOB NO. BB0414 "SHORING".

(2) Temporary MSE Wall Will Be Required To Remove Existing Bridge Nos. A5918 & B5918 And Existing Embankment. See SP JOB NO. BB0414 "TEMPORARY RETAINING WALL".

(3) Van Asche Drive improvements were not complete during development of plans. The information and dimensions shown are based on information provided in the construction plans for improvements to Van Asche Drive provided by the City of Fayetteville. The Contractor is to adhere strictly to the requirements for verification of the existing geometry and its relationship to proposed work. The results of the verification process shall be submitted in writing to the Engineer and Bridge Engineer before the new construction is started. If the verification process reveals that adjustments are required, recommendations for such adjustments shall be included in the submittal for approval. This work will not be paid for directly but shall be considered subsidiary to other items.

(4) Slope From Front Face Of Retaining Wall To Top Of Curb.

LEGEND
U.N.O. = Unless Noted Otherwise

RETAINING WALL NO. 8 ELEVATIONS

STATION ALONG WALL	PROFILE GRADE ELEV.	(3) EXIST. GROUND ELEV.	(3) FINISHED GRADE ELEV.
0+00.00	1246.10	1243.47	-
0+25.00	1250.24	-	1240.25
0+50.00	1253.33	-	1237.56
0+75.00	1254.49	-	1237.43
1+00.00	1254.67	-	1237.43
1+25.00	1254.76	-	1237.53
1+50.00	1254.44	-	1237.63
1+75.00	1254.13	-	1237.72
2+00.00	1253.64	-	1237.83
2+25.00	1252.92	-	1237.94
2+50.00	1251.90	-	1238.16
2+75.00	1247.07	1240.88	-
2+84.92	1244.90	1240.08	-

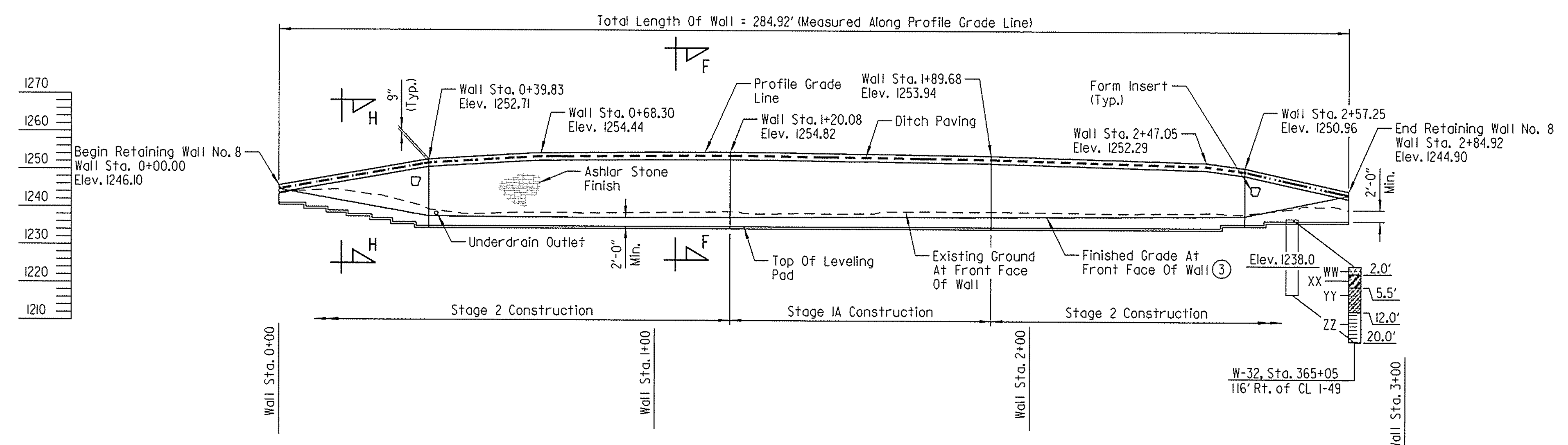

ELEVATION - RETAINING WALL NO. 8
(Looking At Front Face)

STATE OF ARKANSAS LICENSED PROFESSIONAL ENGINEER No. 16458 JOEL E. SKINNER 3-20-16

BRIDGE ENGINEER

SHEET 8 OF 15
RETAINING WALL DETAILS
ROUTE SEC.
ARKANSAS STATE HIGHWAY COMMISSION
LITTLE ROCK, ARK.

DRAWN BY: PCC DATE: AUG. 2014 FILENAME: BBB0414_RW8.dgn
CHECKED BY: RLW DATE: JAN. 2016 SCALE: 1" = 20'-0"
DESIGNED BY: PCC DATE: AUG. 2014
BRIDGE NO. DRAWING NO. 58284

jeskinner 3/20/2016 3:36:33 PM
WORKSPACE: AHTD Bridge
\\gitarch01\Projects\LITProjects\2011\10I707 - I-540 Widening & Interchange Improvement\Drawings\I540-RTWALL-S108-L0.dgn
REVISED DATE:

DATE REVISED	DATE FILMED	DATE REVISED	DATE FILMED	FED. ROAD DIST. NO.	STATE	FED. AID PROJ. NO.	SHEET NO.	TOTAL SHEETS
				6	ARK.			
				JOB NO.		BB0414	562	886
				①	RETAINING WALL DETAILS			58285

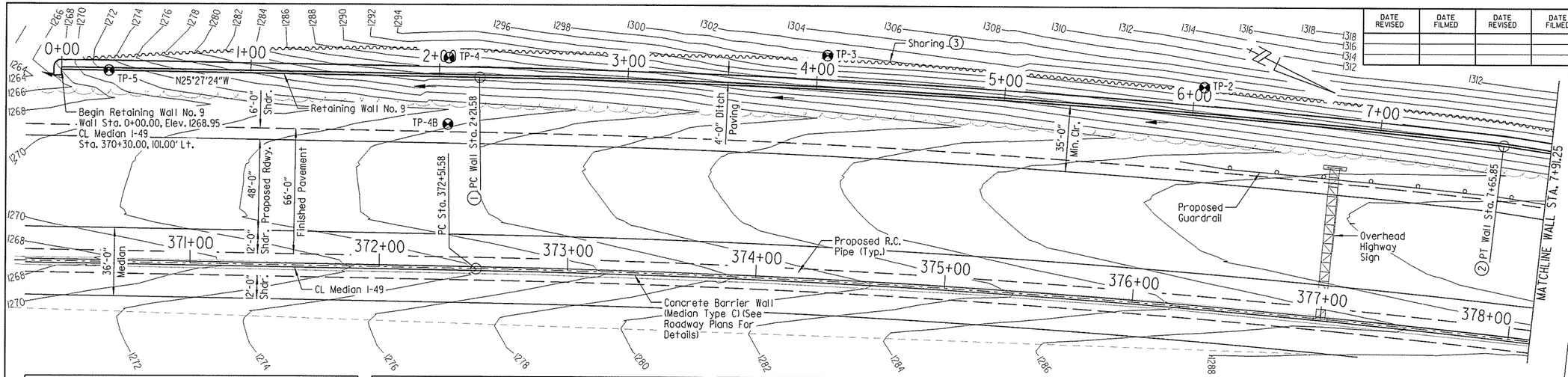

FOR R/W DATA, SEE ROADWAY PLANS

HORIZONTAL CURVE DATA

Retaining Wall No. 9

④ PI = 4+93.91
Δ = 5°20'54" Rt.
D = 0°58'58"
T = 272.33'
L = 544.27'
R = 5830.58'

RETAINING WALL NO. 9 ELEVATIONS		
STATION ALONG WALL	PROFILE GRADE ELEV.	DITCH FLOWLINE ELEV. IN FRONT OF WALL
0+00.00	1268.95	1266.71
0+25.00	1274.50	1267.55
0+50.00	1277.34	1268.40
0+75.00	1279.80	1269.27
1+00.00	1282.26	1270.16
1+25.00	1284.44	1271.08
1+50.00	1286.18	1271.99
1+75.00	1287.43	1272.87
2+00.00	1288.25	1273.83
2+25.00	1288.87	1274.76
2+50.00	1289.62	1275.65
2+75.00	1290.56	1276.54
3+00.00	1291.50	1277.33

RETAINING WALL NO. 9 ELEVATIONS		
STATION ALONG WALL	PROFILE GRADE ELEV.	DITCH FLOWLINE ELEV. IN FRONT OF WALL
3+25.00	1292.54	1278.05
3+50.00	1293.75	1278.74
3+75.00	1295.00	1279.50
4+00.00	1295.88	1280.20
4+25.00	1296.75	1280.92
4+50.00	1297.35	1281.65
4+75.00	1297.45	1282.31
5+00.00	1297.54	1282.91
5+25.00	1297.64	1283.49
5+50.00	1297.81	1284.08
5+75.00	1298.07	1284.63
6+00.00	1298.34	1285.18
6+25.00	1298.86	1285.63
6+50.00	1299.38	1286.01

RETAINING WALL NO. 9 ELEVATIONS		
STATION ALONG WALL	PROFILE GRADE ELEV.	DITCH FLOWLINE ELEV. IN FRONT OF WALL
6+75.00	1299.90	1286.47
7+00.00	1300.08	1286.91
7+25.00	1300.25	1287.34
7+50.00	1300.43	1287.77
7+75.00	1300.45	1288.11
8+00.00	1300.35	1288.39
8+25.00	1300.26	1288.63
8+50.00	1300.17	1288.89
8+75.00	1300.08	1289.11
9+00.00	1299.93	1289.29
9+25.00	1299.35	1289.46
9+50.00	1298.77	1289.64
9+75.00	1298.19	1289.79
10+00.00	1297.60	1290.10
10+25.00	1297.02	1290.40
10+44.00	1296.00	1290.60

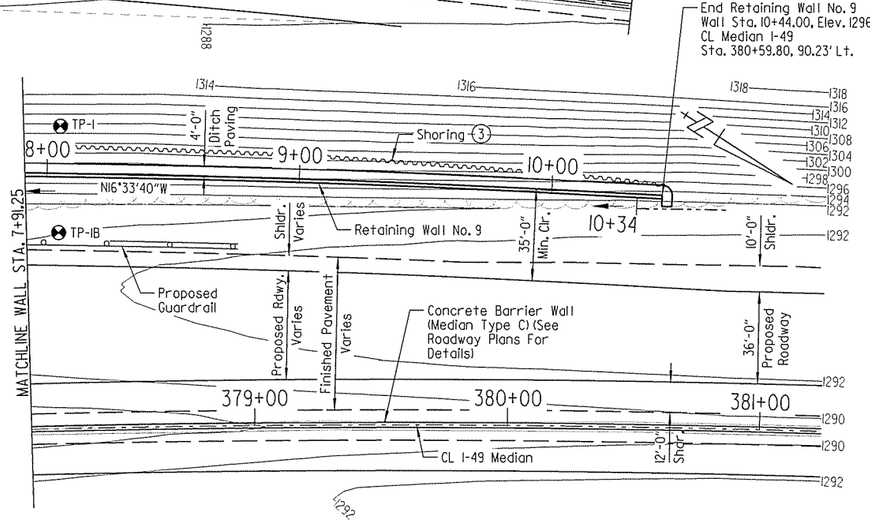

PLAN - RETAINING WALL NO. 9

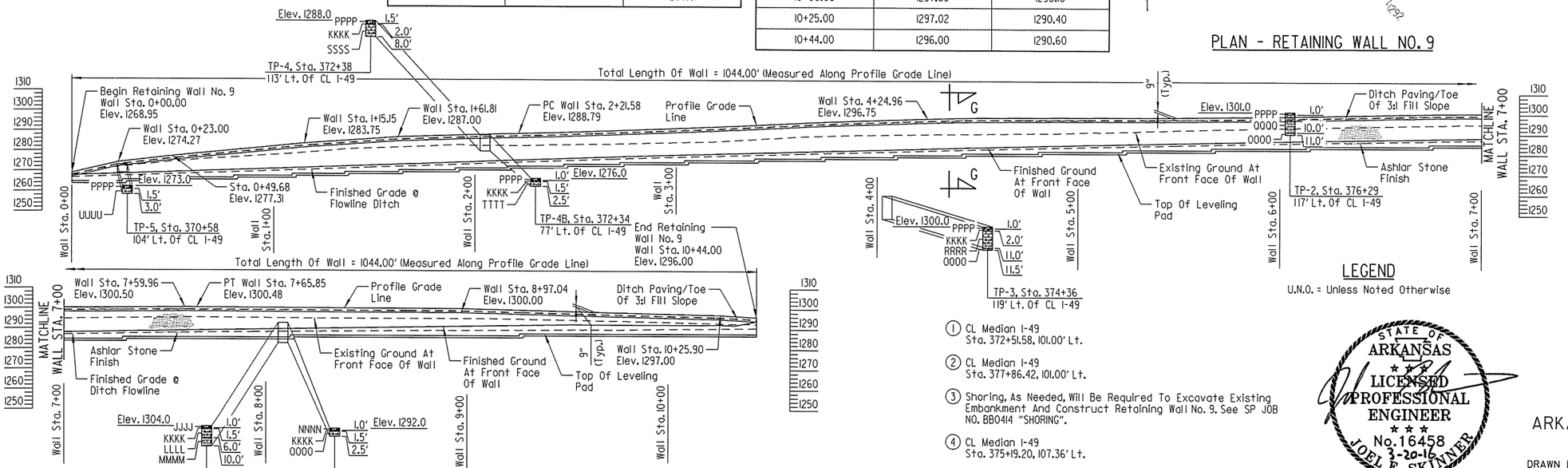

ELEVATION - RETAINING WALL NO. 9
(Looking At Front Face)

① CL Median I-49
Sta. 372+51.58, 101.00' Lt.

② CL Median I-49
Sta. 377+86.42, 101.00' Lt.

③ Shoring, As Needed, Will Be Required To Excavate Existing Embankment And Construct Retaining Wall No. 9. See SP JOB NO. BB0414 "SHORING".

④ CL Median I-49
Sta. 375+19.20, 107.36' Lt.

NOTES:
For "SECTION G-G" & "RETAINING WALL GENERAL NOTES", See Dwg. No. 58288.

For "BORING LEGEND" & "N VALUES", See Dwg. No. 58289.

Offset dimensions for Retaining Wall No. 9 are measured from CL Median I-49 to Profile Grade Line at top of front face of coping.

Wall stationing, wall alignment and elevations shown are at Profile Grade Line at top of front face of coping.

LEGEND
U.N.O. = Unless Noted Otherwise

STATE OF ARKANSAS
LICENSED PROFESSIONAL ENGINEER
No. 16458
3-20-16
JOEL E. SKINNER
BRIDGE ENGINEER

SHEET 9 OF 15
RETAINING WALL DETAILS
ROUTE SEC.
ARKANSAS STATE HIGHWAY COMMISSION
LITTLE ROCK, ARK.

DRAWN BY: JES DATE: AUG. 2014 FILENAME: BB0414_RW9.dgn
CHECKED BY: RLW DATE: JAN. 2016 SCALE: 1" = 30'-0"
DESIGNED BY: JES DATE: AUG. 2014
BRIDGE NO. DRAWING NO. 58285

jeskinner 3/20/2016 3:36:34 PM
WORKSPACE: AHTD Bridge
\\gltarch01\Projects\LITProjects\20II\II017707 - I-540 Widening & Interchange Improvement\Drawings\I540-RTWALL-SI09-L0.dgn
REVISED DATE:

DATE REVISED	DATE FILMED	DATE REVISED	DATE FILMED	FED. ROAD DIST. NO.	STATE	FED. AID PROJ. NO.	SHEET NO.	TOTAL SHEETS
				6	ARK.			
				JOB NO.		BB0414	563	886
				(1)	RETAINING WALL DETAILS			58286

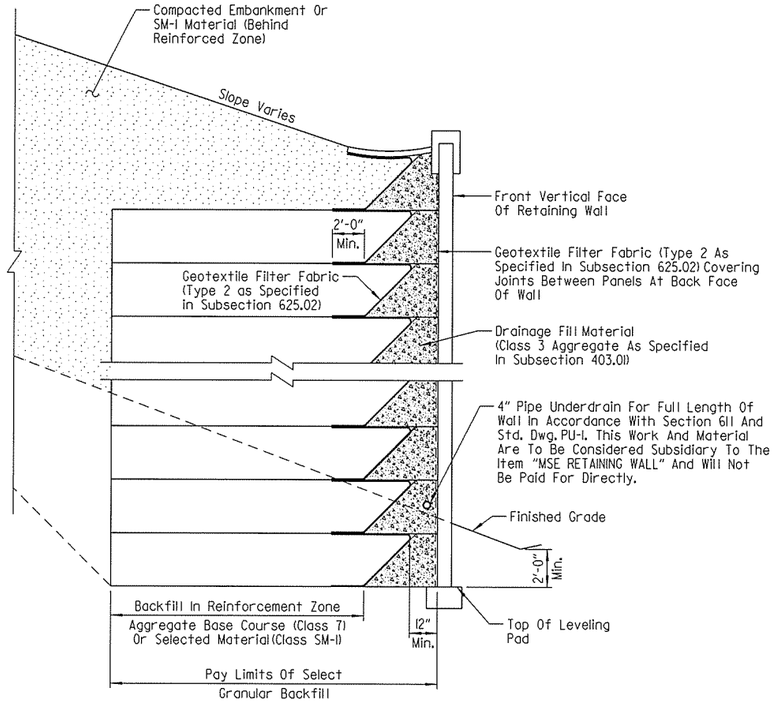

BACKFILL METHOD A

No Scale

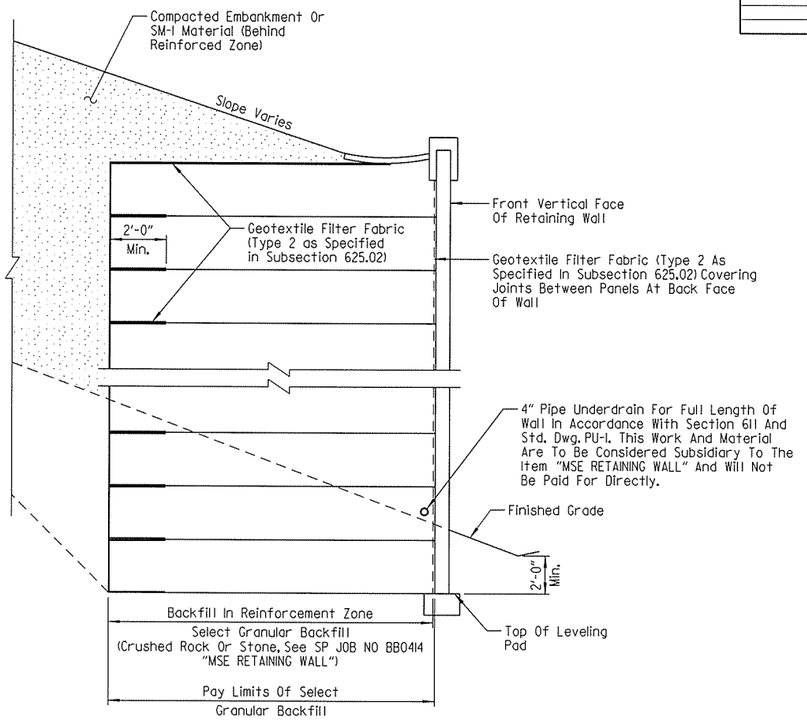

BACKFILL METHOD B

No Scale

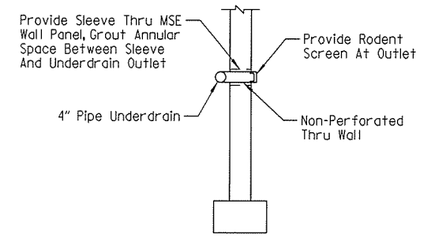

OUTLET DETAIL

No Scale

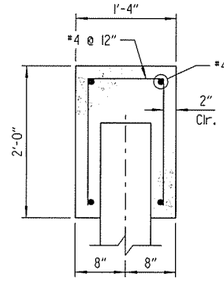

NOTES:
Precast concrete coping may be substituted for cast-in-place coping shown.

Reinforcing steel and concrete for concrete coping shall not be paid for directly but will be considered subsidiary to the item "MSE RETAINING WALL".

COPING DETAIL

No Scale

MSE RETAINING WALL BACKFILL ALTERNATIVES

NOTES:
All backfill and drainage fill material within the reinforcement zone shall be included in the price bid for "SELECT GRANULAR BACKFILL".

Select material (SM-1) required behind reinforced zone shall be included in the price bid for "COMPACTED EMBANKMENT". See SP JOB NO. BB0414 "EXCAVATION AND EMBANKMENT".

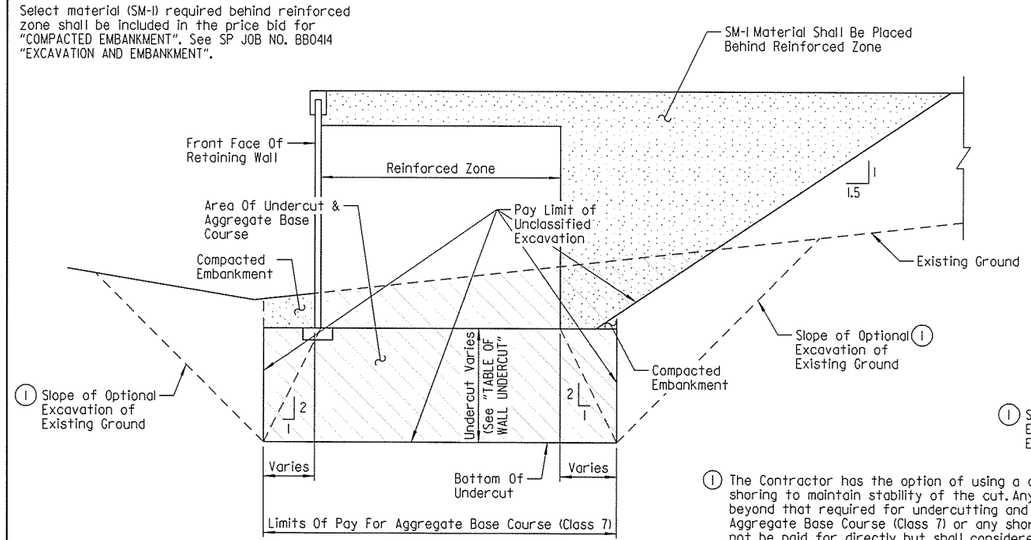

SM-1 MATERIAL REQUIRED BEHIND WALL

No Scale

NOTE:
SM-1 material shall be placed behind reinforced zone at Retaining Wall Nos. 5, 7 & 8.

(1) The Contractor has the option of using a cut slope or shoring to maintain stability of the cut. Any excavation beyond that required for undercutting and backfill with Aggregate Base Course (Class 7) or any shoring used will not be paid for directly, but shall considered incidental to the item "AGGREGATE BASE COURSE (CLASS 7)".

TYPICAL UNDERCUT & BACKFILL DETAIL

(2) Anticipated depth of undercut at Temporary MSE Retaining Walls at Retaining Wall Nos. 7 & 8 is mimimal.

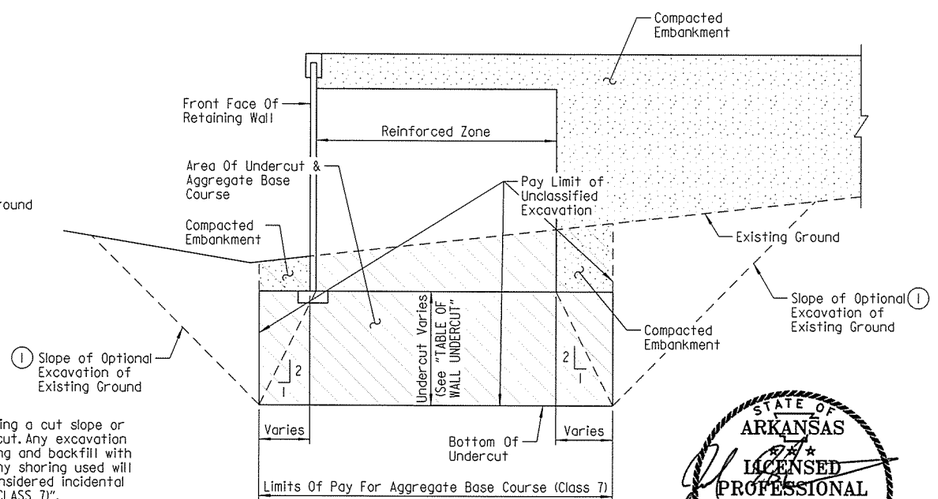

NO SM-1 MATERIAL REQUIRED BEHIND WALL

No Scale

NOTE:
SM-1 material is not required behind reinforced zone at Retaining Wall Nos. 1-4, 6 & 9.

TABLE OF WALL UNDERCUT	
LOCATION	ANTICIPATED MAXIMUM UNDERCUT
RETAINING WALL NO. 1	Minimal
RETAINING WALL NO. 2	6'
RETAINING WALL NO. 3	Minimal
RETAINING WALL NO. 4	Minimal
RETAINING WALL NO. 5	12'
RETAINING WALL NO. 6	5'
(2) RETAINING WALL NO. 7	5'
(2) RETAINING WALL NO. 8	5'
RETAINING WALL NO. 9	Minimal

STATE OF ARKANSAS
LICENSED PROFESSIONAL ENGINEER
No. 16458
3-20-16
JOEL E. SKINNER

BRIDGE ENGINEER

SHEET 10 OF 15
RETAINING WALL DETAILS

ROUTE SEC.

ARKANSAS STATE HIGHWAY COMMISSION
LITTLE ROCK, ARK.

DRAWN BY: CWT DATE: FEB. 2014 FILENAME: BBB0414_RW10.dgn
CHECKED BY: RLW DATE: JAN. 2016 SCALE: AS SHOWN
DESIGNED BY: JES DATE: FEB. 2014
BRIDGE NO. DRAWING NO. 58286

jeskinner 3/20/2016 3:36:35 PM
W:\ROADWAY\PROJECTS\BB0414_AHTD_BB0414_I-540 Widening & Interchange Improvement\Drawings\1540-RTWALL-S20I-SX.dgn
REVISED DATE:

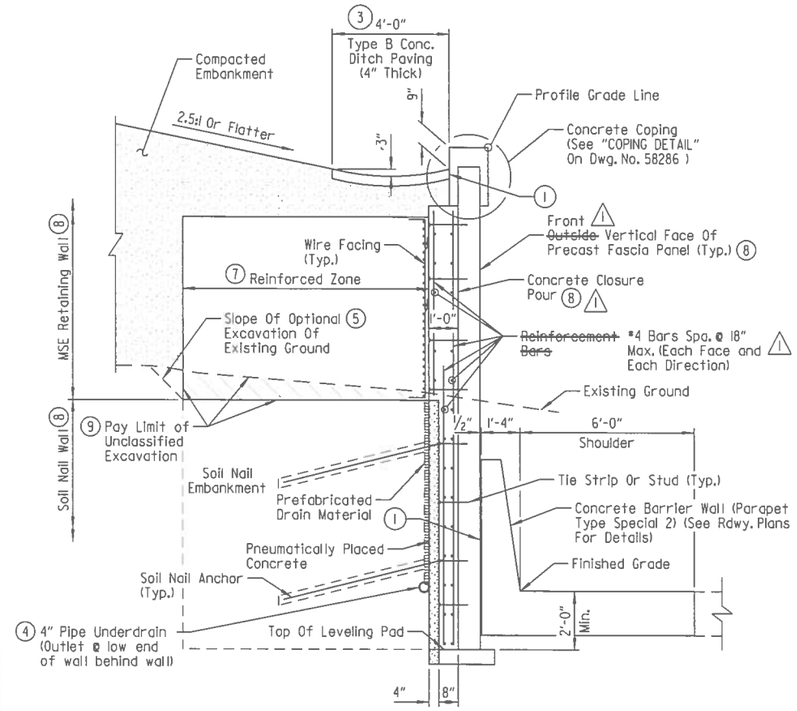

SECTION A-A
No Scale

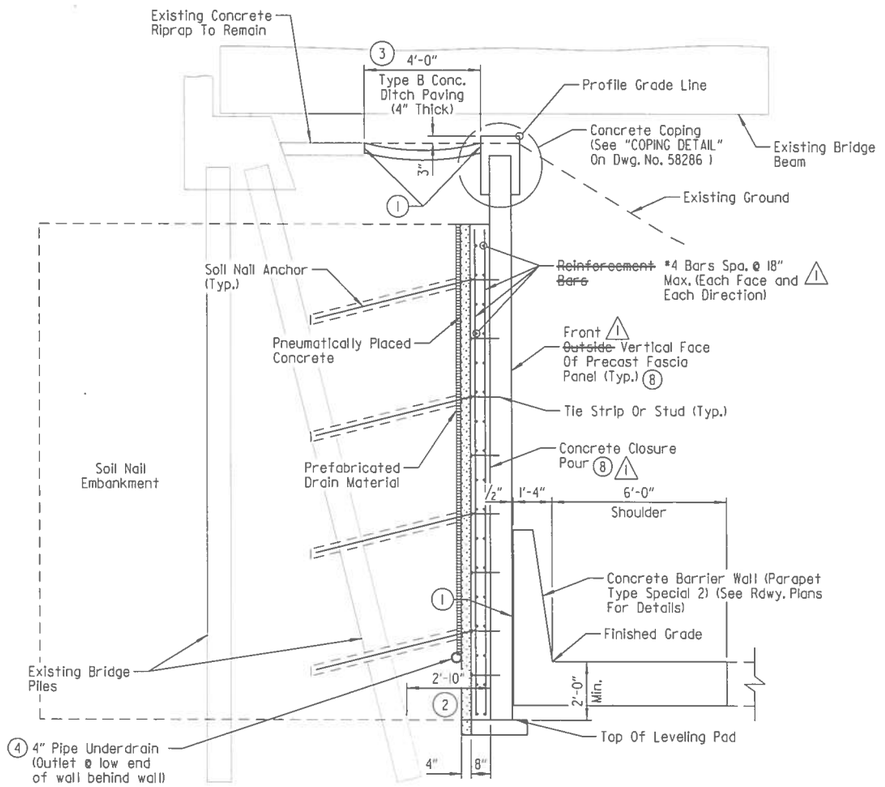

SECTION B-B
No Scale

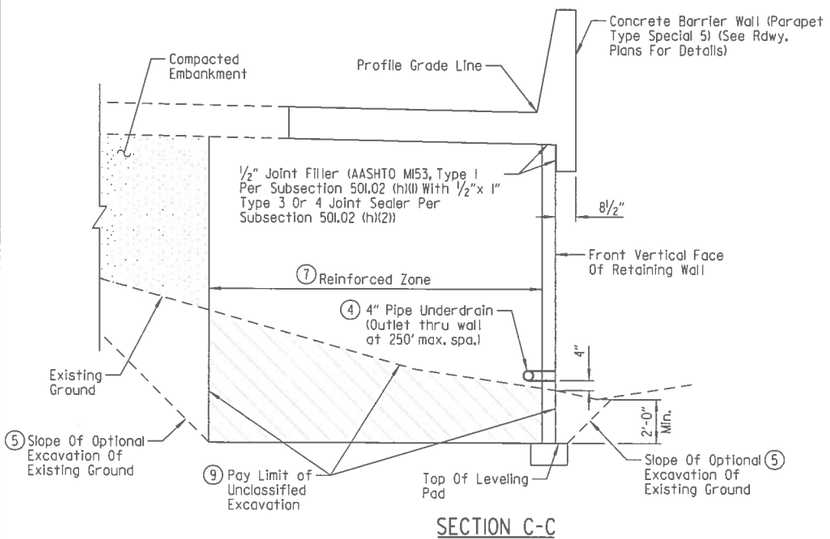

SECTION C-C
No Scale

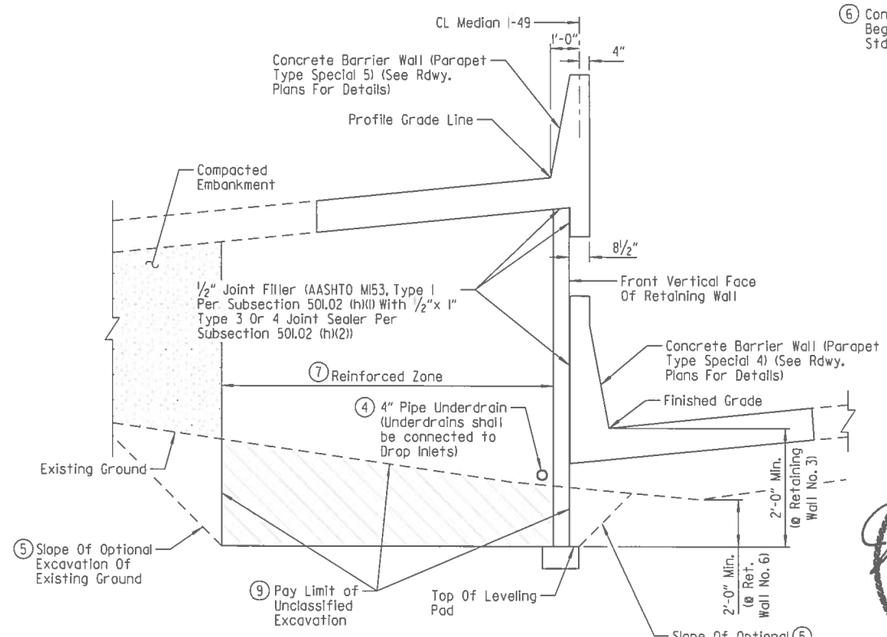

SECTION D-D
No Scale

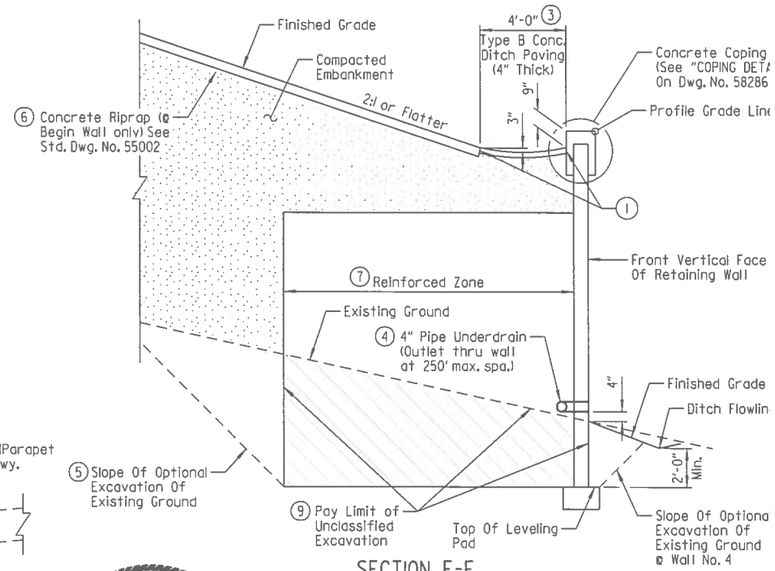

SECTION E-E
No Scale

DATE REVISED	DATE FILMED	DATE REVISED	DATE FILMED	FED. ROAD DIST. NO.	STATE	FED. AID PROJ. NO.	SHEET NO.	TO SHE
8-1-16				6	ARK.			
				JOB NO.		BB0414	564	8
				1		RETAINING WALL DETAILS		58

1. 1/2" Preformed joint filler (AASHTO M153 Type II per Subsection 501.02(h)(1) with 1/2" x 1" Type 3 or 4 joint sealer per Subsection 501.02(h)(2). Payment will not be made directly but will be considered subsidiary to other pay items.

2. Approximate minimum distance between existing bridge piling and proposed wall. Soil nails will be spaced to avoid possible interference with existing piles. The Contractor is to adhere strictly to the requirements for verification of the geometry of the existing bridge and its relationship to the proposed work to the existing structure. Payment for this work shall be considered subsidiary to the pay item "MODIFICATION OF EXISTING BRIDGE STRUCTURE (BR. NO. _)".

3. The 4'-0" concrete ditch paving shall be constructed without the 3" weep holes. See Standard Drawing CDP-1 for ditch paving details.

4. 4" Pipe Underdrain For Full Length Of Wall in Accordance With Section 611 And Standard Drawing PU-1. This Work And Material Are To Be Considered Subsidiary To The Item "MSE RETAINING WALL" And Will Not Be Paid For Directly.

5. Contractor has the option of using a cut slope or shoring to maintain stability of cut. Any excavation and replacement backfill beyond the limits of the Reinforcing Zone or any shoring used will not be paid for directly but will be considered subsidiary to various pay items. See SP JOB NO. BB0414 "MSE RETAINING WALLS".

6. Only applicable at beginning of Retaining Wall No. 4. See Dwg. No. 58280 for limits of Concrete Riprap.

7. For reinforced zone backfill and drainage details, see "MSE RETAINING WALL AND BACKFILL ALTERNATIVES" On Dwg. No. 58286.

8. The design, fabrication, and construction of the soil nail portion of Retaining Wall No. 1 shall meet the requirements of SP JOB NO. BB0414 "SOIL NAIL WALL". The design, fabrication, and construction of the MSE portion of Retaining Wall No. 1 shall meet the requirements of SP JOB NO. BB0414 "MSE RETAINING WALLS". The price bid for "SOIL NAIL WALL" shall include excavating in staged lifts in accordance with the approved Contractor's plan; detailing the drilling of the soil nail drillholes to the diameter and length required to develop the specified capacity; grouting the nails; providing and installing the specified drainage features; providing and installing bearing plates, washers, nuts, and other required miscellaneous materials; and constructing the Pneumatically Placed Concrete (Shotcrete) temporary facing. All other work required to complete the design, fabrication, and construction of Retaining Wall No. 1, including the entire Concrete Closure Pour and all Precast Fascia Panels to top of leveling pad, shall be included in the price bid for "MSE RETAINING WALL". 1

9. See "TYPICAL UNDERCUT AND BACKFILL DETAIL" on Dwg. No. 58286 for pay limits of unclassified excavation when undercut is required.

1 Revised wall call-outs and Note 8, ABH 8-1-16

STATE OF ARKANSAS
LICENSED PROFESSIONAL ENGINEER
No. 16458
8-1-16
JOEL E. SKINNER
BRIDGE ENGINEER

SHEET 11 OF 15
RETAINING WALL DETAILS

ROUTE SEC.

ARKANSAS STATE HIGHWAY COMMISSION
LITTLE ROCK, ARK.

DRAWN BY: CWT DATE: FEB. 2014 FILENAME: BBB0414_RW11.dgn
CHECKED BY: RLW DATE: JAN. 2016 SCALE: AS SHOWN
DESIGNED BY: JES DATE: FEB. 2014
BRIDGE NO. DRAWING NO. 58287

JESkinner 8/1/2016 11:18:44 AM
WORKSPACE: AHTD_Bridge
L:\2016\16017707 - I-540 Widening & Interchange Improvement\Drawings\I540-RTWALL-S202-SX.dgn
REVISED DATE:

DATE REVISED	DATE FILMED	DATE REVISED	DATE FILMED	FED. ROAD DIST. NO.	STATE	FED. AID PROJ. NO.	SHEET NO.	TOTAL SHEETS
				6	ARK.			
				JOB NO.		BB0414	565	886

(1) RETAINING WALL DETAILS 58288

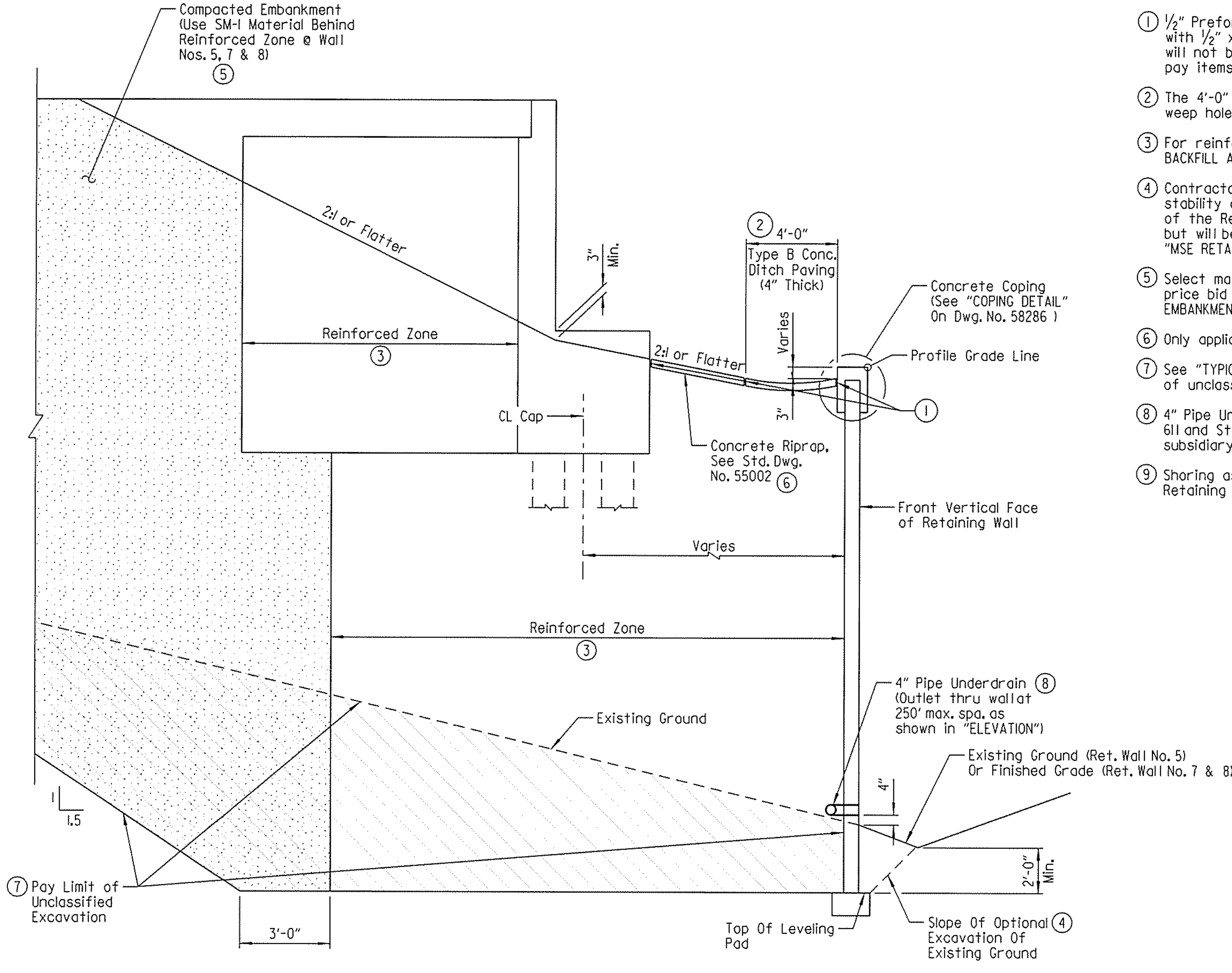

SECTION F-F
No Scale

1. ½" Preformed joint filler (AASHTO M153 Type I) per Subsection 501.02(h)(1) with ½" x 1" Type 3 or 4 joint sealer per Subsection 501.02(h)(2). Payment will not be made directly but will be considered subsidiary to other pay items.
2. The 4'-0" concrete ditch paving shall be constructed without the 3" weep holes. See Standard Drawing CDP-1 for ditch paving details.
3. For reinforced zone backfill and drainage details, see "MSE RETAINING WALL BACKFILL ALTERNATIVES" on Dwg. No. 58286.
4. Contractor has the option of using a cut slope or shoring to maintain stability of cut. Any excavation and replacement backfill beyond the limits of the Reinforcing Zone or any shoring used will not be paid for directly but will be considered subsidiary to various pay items. See SP JOB NO. BB0414 "MSE RETAINING WALLS".
5. Select material required behind reinforced zone shall be included in the price bid for "COMPACTED EMBANKMENT". See SP JOB BB0414 "EXCAVATION AND EMBANKMENT".
6. Only applicable on Retaining Wall No. 5
7. See "TYPICAL UNDERCUT AND BACKFILL DETAIL" on Dwg. No. 58286 for pay limits of unclassified excavation when undercut is required.
8. 4" Pipe Underdrain for full length of wall in accordance with Section 611 and Standard Drawing PU-1. This work and material are to be considered subsidiary to the item "MSE RETAINING WALL" and will not be paid for directly.
9. Shoring as needed, will be required to evacate existing slope and to construct Retaining Wall No. 9. See SP Job No. BB0414 "SHORING".

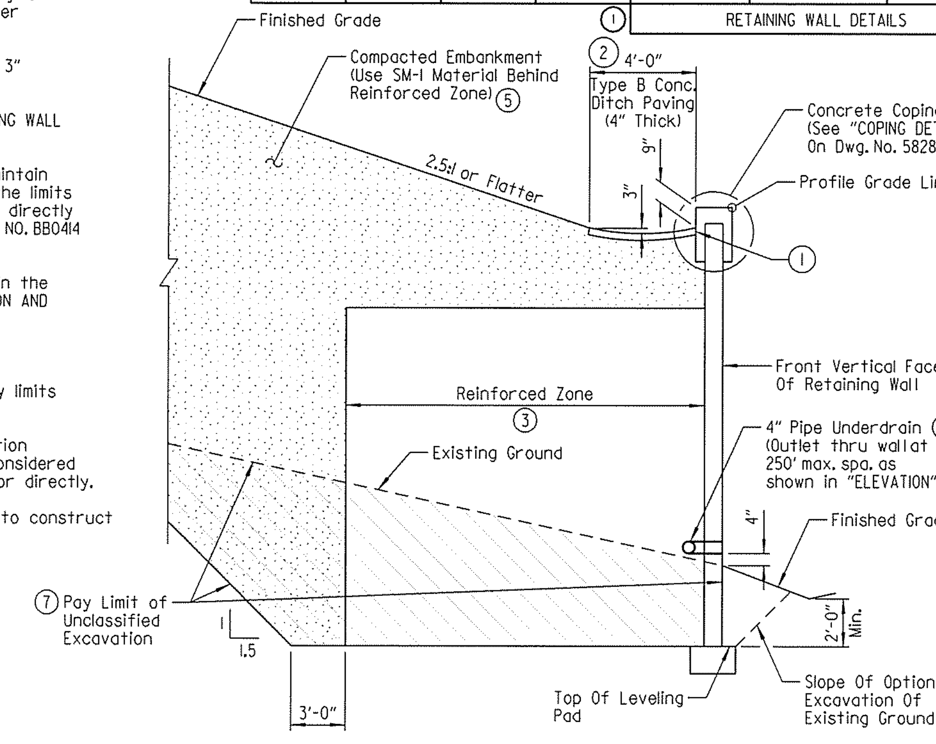

SECTION H-H
No Scale

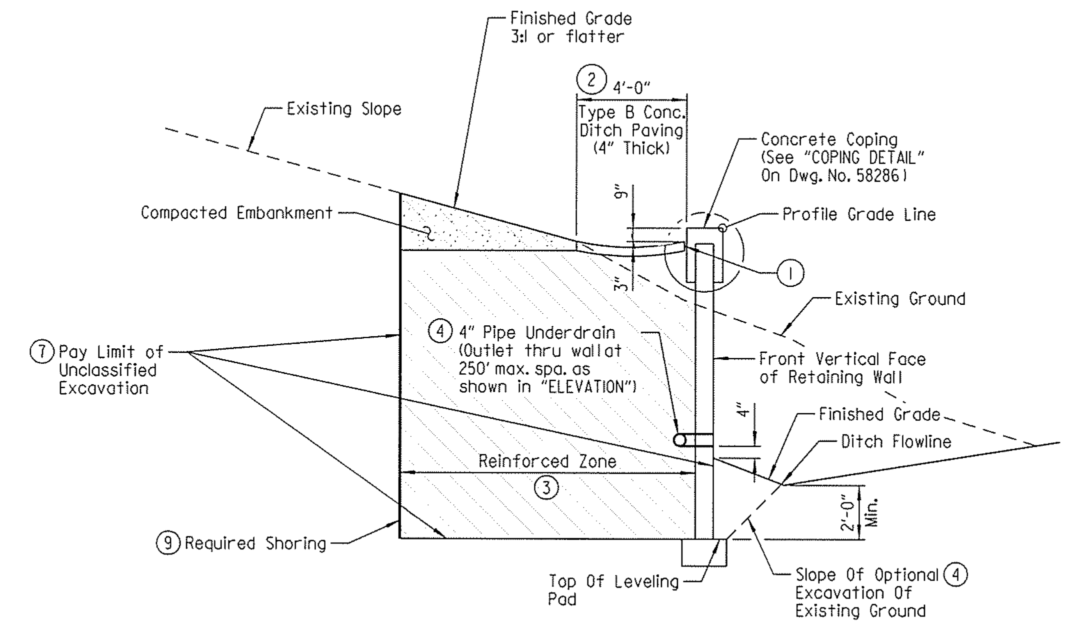

SECTION G-G
No Scale

RETAINING WALL GENERAL NOTES:

DESIGN SPECIFICATIONS: AASHTO LRFD Bridge Design Specifications 7th Edition (2014) for MSE Retaining Walls. Design of Soil Nail Wall shall meet the requirements of SP JOB BB0414 "SOIL NAIL WALL".

LIVE LOADING: HL93   METHOD OF DESIGN: LRFD

SEISMIC PERFORMANCE ZONE: 1   S1 = 0.052,   Fv = 1.70

BORING LOGS: Boring Logs, including laboratory results, may be obtained from the Construction Contract Procurement Section of the Program Management Division.

TEXTURED COATING FINISH: Class 3 Textured Coating Finish shall be applied to all areas as specified in SP JOB NO. BB0414 "TEXTURED COATING FINISH" and in accordance with Subsection 802.19.

ASHLAR STONE FINISH: The exposed front face of Retaining Wall Nos. 1, 2, 4, 5, 7-9 shall have an Ashlar Stone Finish.

PIPE UNDERDRAIN: 4" pipe underdrain shall maintain a minimum slope of ⅛" per foot toward nearest outlet.

REINFORCING STRAPS: Placement of reinforcing straps and soil nails for retaining walls may be affected by existing and proposed pile locations. See End Bent Details for pile locations and wingwall details.

FOUNDATION BEARING RESISTANCE

LOCATION	Factored Bearing Resistance (PSF)
RETAINING WALL NO. 1 (MSE)	4,060
RETAINING WALL NO. 1 (Soil Nail)	6,000
RETAINING WALL NO. 2	5,525
RETAINING WALL NO. 3	4,225
RETAINING WALL NO. 4	6,500
RETAINING WALL NO. 5	4,500
RETAINING WALL NO. 6	5,850
RETAINING WALL NO. 7	5,395
RETAINING WALL NO. 8	5,395
RETAINING WALL NO. 9	6,500

STATE OF ARKANSAS LICENSED PROFESSIONAL ENGINEER No. 16458 JOEL E. SKINNER 3-20-16

BRIDGE ENGINEER

SHEET 12 OF 15
RETAINING WALL DETAILS
ROUTE   SEC.
ARKANSAS STATE HIGHWAY COMMISSION
LITTLE ROCK, ARK.

DRAWN BY: CWT   DATE: FEB. 2014   FILENAME: BBB0414_RW12.dgn
CHECKED BY: RLW   DATE: JAN. 2016   SCALE: AS SHOWN
DESIGNED BY: JES   DATE: FEB. 2014
BRIDGE NO.   DRAWING NO. 58288

jeskinner 3/20/2016 3:36:36 PM
WORKSPACE: AHTD Bridge
L:\2011\011707 - I-540 Widening & Interchange Improvement\Drawings\I540-RTWALL-S203-SX.dgn
REVISED DATE:

DATE REVISED	DATE FILMED	DATE REVISED	DATE FILMED	FED. ROAD DIST. NO.	STATE	FED. AID PROJ. NO.	SHEET NO.	TOTAL SHEETS
				6	ARK.			
				JOB NO.		BB0414	566	886
				①		RETAINING WALL DETAILS		58289

BORING LEGEND

A - Very stiff reddish brown cherty clay (fill)
B - Firm gray and light brown clay
C - Stiff brown, gray and reddish brown cherty clay w/chert nodules
D - Hard gray limestone w/chert inclusions
E - Firm to stiff brown and reddish brown silty clay w/some chert fragments (fill)
F - Stiff gray silty clay, slightly sandy w/occasional clay seams and layers
G - Stiff tan and gray silty clay, slightly sandy w/chert nodules
I - Stiff brown silty clay w/occasional silt pockets and trace organics (fill)
J - Firm to stiff tan and gray silty clay w/ferrous stains and nodules and occasional silt pockets
K - Low hardness dark gray and brown weathered clayey shale, carbonaceous
L - Moderately hard reddish tan and dark gray weathered shale, carbonaceous
M - Stiff brown silty clay w/chert fragments (fill)
N - Very stiff tan and gray silty clay w/ferrous stains and nodules
O - Low hardness dark gray and brown weathered clayey shale
Q - Stiff brown silty clay w/trace chert fragments (fill)
R - Stiff tan and gray silty clay w/ferrous stains and nodules
S - Low hardness brown and dark gray weathered clayey shale, carbonaceous
T - Moderately hard tan and dark gray weathered shale, carbonaceous
U - Stiff brownish gray clayey silt with w/a little chert fragments (fill)
V - Stiff tan and gray silty clay w/ferrous stains and nodules and occasional silt pockets
X - Stiff brown silty clay w/trace chert fragments (fill)
Y - Firm tan and gray silty clay w/ferrous stains and nodules and occasional silt pockets
Z - Low hardness brown and gray weathered clayey shale
AA - Firm to stiff dark brown clayey silt
BB - Firm to stiff dark brown clayey silt, moist
CC - Very stiff tan and brown silty clay w/chert fragments and ferrous nodules and stains
DD - Hard reddish brown and tan cherty clay w.some chert cobbles
EE - Moderately hard to hard light gray cherty limestone
FF - Firm dark brown clayey silt, sandy w/occasional rootlets
GG - Stiff tan and brown silty clay w/ferrous nodules and stains
HH - Very stiff to hard reddish brown and tan cherty clay
II - Moderately hard to hard light gray and gray weathered limestone w/chert nodules and inclusions
JJ - Stiff brown and reddish tan cherty clay w/trace organics (fill)
KK - Firm to stiff tan and brown silty clay w/chert fragments and ferrous nodules and stains
LL - Stiff gray clay
MM - Low hardness gray, reddish tan and tan weathered shale w/silty clay seams and layers
NN - Very stiff dark brown silty clay (fill)
OO - Stiff reddish brown cherty clay (fill)
PP - Very soft gray and tan silty clay w/fine to coarse sand
QQ - Stiff gray clay w/some chert fragments
RR - Moderately hard tan, gray and dark gray weathered shale
SS - Stiff reddish brown and dark brown silty clay w/chert fragments (fill)
TT - Moderately hard to hard dark gray shale
UU - Stiff gray and brown silty clay w/occasional chert fragments
VV - Low hardness tan, gray and dark gray weathered shale
WW - Medium dense reddish tan and brown chert fragments w/fine sandy silt pockets (fill)
XX - Very stiff reddish brown cherty clay
YY - Very stiff tan and gray clay w/chert fragments
ZZ - Moderately hard brown and dark gray weathered shale w/ferrous stains in fractures
AAA - Stiff tan and brown silty clay
BBB - Moderately hard dark gray shale
CCC - Asphalt concrete
DDD - Crushed stone base
EEE - Stiff to very stiff reddish tan and brown cherty clay w/numerous chert fragments and cobbles (fill)
FFF - Stiff brown clay
GGG - Very stiff brown and reddish tan cherty clay w/chert fragments and cobbles (fill)
HHH - Stiff tan and gray silty clay w/some silt pockets and seams
III - Very stiff reddish brown cherty clay w/chert fragments and cobbles (fill)
JJJ - Stiff dark gray silty clay w/trace rootlets
KKK - Moderately hard tan and dark gray weathered shale
LLL - Stiff gray and tan silty clay
MMM - Stiff reddish brown cherty clay w/chert fragments and cobbles (fill)
NNN - Soft dark gray clay
OOO - Moderately hard to hard light gray limestone
PPP - Portland Cement Concrete
QQQ - Stiff reddish brown cherty clay w/chert fragments and cobbles (fill)
RRR - Firm dark gray clay
SSS - Moderately hard light gray weathered limestone
TTT - Very soft to soft gray clay
UUU - Soft brown silty clay w/organics (fill)
VVV - Stiff to very stiff tan and gray silty clay, slightly sandy
WWW - Low hardness dark gray weathered shale w/ferrous stains and concretions
XXX - Stiff reddish brown and brown fine sandy clay w/occasional chert fragments and trace organics (fill)
YYY - Soft brown and gray clay w/shale fragments
ZZZ - Low hardness tan and dark gray highly weathered shale w/interbedded silty clay seams and layers
AAAA - Low hardness tan, reddish tan and dark gray highly weathered shale w/silty clay seams and layers
BBBB - Stiff to very stiff dark brown silty clay w/chert fragments and occasional concrete debris (fill)
CCCC - Low hardness dark gray highly weathered shale w/clay seams and layers
DDDD - Very stiff brown and dark brown fine sandy clay w/chert and shale fragments (fill)
EEEE - Firm brown and gray silty clay
FFFF - Moderately hard tan, gray and dark gray weathered shale w/ferrous stains in fractures
GGGG - Firm to stiff dark brown and reddish brown clay w/shale fragments, trace organics and occasional wood debris (fill)
HHHH - Stiff gray and brown clay w/ferrous stains
IIII - Moderately hard tan, gray and dark gray weathered shale w/clay seams and layers
JJJJ - Stiff brownish gray silty clay w/chert and limestone fragments
KKKK - Very stiff reddish brown silty clay w/chert fragments (cherty clay)
LLLL - Low hardness light gray, dark gray and reddish brown highly weathered limestone w/weathered chert seams and layers
MMMM - Low hardness to moderately hard light gray and dark gray weathered limestone w/some weathered chert seams and occasional clay pockets and seams, moderately to highly fractured, undulating bedding with apparent dip = 60°
NNNN - Firm to stiff brownish gray silty clay w/some chert fragments and organics
OOOO - Moderately hard light gray and dark gray weathered limestone w/close chert seams
PPPP - Stiff brownish gray silty clay w/chert fragments and organics
QQQQ - Low hardness light gray, dark gray and reddish brown highly weathered limestone w/close weathered chert seams and layers and occasional silty clay seams
RRRR - Low hardness light gray, dark gray and reddish brown highly weathered limestone, fossiliferous w/occasional vugs and silty clay seams and layers
SSSS - Low hardness light gray, dark gray and reddish brown highly weathered limestone w/chert seams and layers, moderately fractured
TTTT - Low hardness to moderately hard light gray and dark gray weathered limestone w/occasional chert seams
UUUU - Low hardness light gray, dark gray and reddish brown highly weathered limestone w/weathered chert seams and layers

N VALUES

(Retaining Wall No. 1)

Sta. 20+25 Offset 120' Lt, Of CL Hwy. 112	Sta. 21+59 Offset 110' Rt, Of CL Hwy. 112
0.5-1.5, N=28	0.5-1.5, N=10
2.0-3.0, N=50/10"	2.5-3.5, N=18
4.5-5.5, N=10	4.5-5.5, N=16
6.5-7.5, N=9	6.5-7.5, N=10
9.0-10.0, N=10	9.0-10.0, N=9
14.0-15.0, N=22	14.0-15.0, N=18
17.5-18.0, N=25/0"	19.0-20.0, N=30
	22.5-23.0, N=25/0"

N VALUES

(Retaining Wall No. 2)

Sta. 306+24 Offset 16' Lt, Of CL C-D Rd,	Sta. 304+83 Offset 2' Rt, Of CL C-D Rd,	Sta. 303+42 Offset 7' Rt, Of CL C-D Rd,	Sta. 302+02 Offset 11' Rt, Of CL C-D Rd,
0.5-1.5, N=13	0.5-1.5, N=16	1.0-2.0, N=50/1"	1.0-2.0, N=50/1"
2.5-3.5, N=24	2.5-3.5, N=20	3.0-4.0, N=27	3.0-4.0, N=24
4.5-5.5, N=17	4.5-5.5, N=8	5.0-6.0, N=17	5.0-6.0, N=27
6.5-7.5, N=10	6.5-7.5, N=11	7.0-8.0, N=12	7.0-8.0, N=21
9.0-10.0, N=9	9.0-10.0, N=16	9.0-10.0, N=14	9.0-10.0, N=13
14.0-15.0, N=20	14.0-15.0, N=21	14.0-15.0, N=10	14.0-15.0, N=11
19.0-20.0, N=21	19.0-20.0, N=30	19.0-20.0, N=19	19.0-20.0, N=19
24.0-25.0, N=50	24.5-25.0, N=50/5"	24.0-25.0, N=50	24.0-25.0, N=36
29.5-30.0, N=50/3"		29.5-30.0, N=50/5"	29.5-30.0, N=50/2"

Sta. 300+63 Offset 17' Rt, Of CL C-D Rd,	Sta. 299+24 Offset 22' Rt, Of CL C-D Rd,	Sta. 297+86 Offset 40' Rt, Of CL C-D Rd,	Sta. 296+50 Offset 49' Rt, Of CL C-D Rd,	Sta. 295+14 Offset 44' Rt, Of CL C-D Rd,
0.5-1.5, N=50/8"	2.0-3.0, N=50/7"	1.0-2.0, N=50/7"	1.0-2.0, N=25/0"	2.0-3.0, N=25/0"
2.0-3.0, N=50/7"	4.5-5.5, N=35	2.0-3.0, N=50/6"	2.0-3.0, N=50/8"	4.5-5.5, N=36
4.5-5.5, N=26	6.5-7.5, N=16	4.5-5.5, N=16	4.5-5.5, N=21	6.5-7.5, N=28
6.5-7.5, N=27	9.0-10.0, N=18	6.5-7.5, N=15	6.5-7.5, N=22	9.0-10.0, N=25/0"
9.0-10.0, N=15	14.0-15.0, N=12	9.0-10.0, N=25/0"	9.0-10.0, N=25/0"	14.0-15.0, N=4
14.0-15.0, N=15	19.0-20.0, N=25	14.0-15.0, N=6	14.0-15.0, N=8	19.0-20.0, N=20
19.0-20.0, N=24	24.0-25.0, N=26	19.0-20.0, N=10	19.0-20.0, N=23	24.0-25.0, N=22
24.0-25.0, N=27	29.0-30.0, N=50/11"	24.0-25.0, N=22	24.0-25.0, N=24	29.0-30.0, N=25/0"
29.0-30.0, N=50/11"		29.0-30.0, N=25/0"	29.0-30.0, N=25/0"	

N VALUES

(Retaining Wall No. 4)

Sta. 0+00 At Wall CL	Sta. 0+80 At Wall CL	Sta. 1+60 At Wall CL
0.5-1.5, N=10	0.5-1.5, N=8	0.5-1.5, N=10
2.5-3.5, N=31	2.5-3.5, N=16	2.5-3.5, N=10
4.0-4.5, N=50/4"	4.5-5.5, N=40	4.5-5.5, N=22
6.0-6.5, N=50/5"	6.5-7.5, N=37	6.5-7.5, N=47
8.5-9.5, N=25/0"	8.5-9.0, N=50/6"	8.5-9.0, N=50/5"
13.5-14.5, N=25/0"	14.0-14.5, N=25/0"	13.5-14.0, N=4
19.0-20.0, N=25/0"	19.0-20.0, N=25/0"	14.0-15.0, N=25/0"
		18.5-20.0, N=25/0"

N VALUES

(Retaining Wall No. 5)

Sta. 323+00 Offset 90' Lt, Of CL I-49	Sta. 324+30 Offset 45' Lt, Of CL I-49	Sta. 325+25 Offset 58' Rt, Of CL I-49	Sta. 325+90 Offset 55' Rt, Of CL I-49	Sta. 321+47 Offset 108' Lt, Of CL I-49
0.5-1.5, N=14	0.5-1.5, N=22	0.5-1.5, N=16	0.5-1.5, N=18	0.5-1.5, N=14
2.5-3.5, N=10	2.5-3.5, N=25	2.5-3.5, N=18	2.5-3.5, N=13	2.5-3.5, N=13
4.5-5.5, N=10	4.5-5.5, N=10	4.5-5.5, N=13	4.5-5.5, N=11	4.5-5.5, N=9
6.5-7.5, N=11	6.5-7.5, N=8	6.5-7.5, N=11	6.5-7.5, N=11	6.5-7.5, N=10
9.0-10.0, N=14	9.0-10.0, N=8	9.0-10.0, N=12	9.0-10.0, N=24	9.0-10.0, N=13
14.0-15.0, N=38	14.0-15.0, N=31	14.0-15.0, N=37	14.0-15.0, N=50/9"	14.0-15.0, N=27
18.5-19.0, N=50/3"	19.0-20.0, N=50/8"	19.5-20.0, N=50/3"	19.5-20.0, N=50/2"	19.5-20.0, N=50/3"

N VALUES

(Retaining Wall No. 6)

Sta. 354+45 At CL I-49	Sta. 353+29 At CL I-49	Sta. 351+72 At CL I-49
0.5-1.5, N=22	0.5-1.5, N=12	0.5-1.5, N=18
2.5-3.5, N=50/9"	2.5-3.5, N=15	2.5-3.5, N=38
4.0-5.0, N=50/7"	4.5-5.5, N=9	4.5-5.5, N=24
6.5-7.5, N=22	6.5-7.5, N=4	6.5-7.5, N=50
9.0-10.0, N=24	9.0-10.0, N=50	9.0-10.0, N=50/4"
14.0-15.0, N=50/10"	14.0-15.0, N=50/2"	
19.5-20.0, N=50/6"		

Sta. 350+35 At CL I-49	Sta. 349+04 At CL I-49	Sta. 347+85 At CL I-49
0.5-1.5, N=32	0.5-1.5, N=28	0.5-1.5, N=10
2.5-3.5, N=34	2.5-3.5, N=15	2.5-3.5, N=11
4.5-5.5, N=38	4.5-5.5, N=10	4.5-5.5, N=17
6.0-7.0, N=50/6"	6.5-7.5, N=28	6.5-7.5, N=16
8.5-9.0, N=50/3"	8.5-9.5, N=50/9"	8.5-9.5, N=50/10"

N VALUES

(Retaining Wall Nos. 7 & 8)

Sta. 365+30 Offset 112' Lt, Of CL I-49	Sta. 363+90 Offset 100' Lt, Of CL I-49	Sta. 365+05 Offset 116' Rt, Of CL I-49
0.5-1.5, N=35	0.5-1.5, N=22	0.5-1.5, N=13
2.5-3.5, N=12	2.5-3.5, N=32	2.5-3.5, N=31
4.5-5.5, N=2	4.5-5.5, N=20	4.5-5.5, N=14
6.5-7.5, N=10	6.5-7.5, N=22	6.5-7.5, N=28
9.0-10.0, N=21	9.0-10.0, N=31	9.0-10.0, N=30
14.0-14.5, N=50/5"	14.0-14.5, N=50/4"	14.0-14.5, N=50/8"
19.5-20.0, N=50/2"	19.5-20.0, N=50/2"	19.5-20.0, N=50/3"

STATE OF ARKANSAS
LICENSED PROFESSIONAL ENGINEER
No. 16458
3-20-16
JOEL E. SKINNER

BRIDGE ENGINEER

SHEET 13 OF 15
RETAINING WALL DETAILS
ROUTE SEC.
ARKANSAS STATE HIGHWAY COMMISSION
LITTLE ROCK, ARK.

DRAWN BY: CWT DATE: APR. 2015 FILENAME: BBB0414_RW13.dgn
CHECKED BY: RLW DATE: JAN. 2016 SCALE: NO SCALE
DESIGNED BY: JES DATE: APR. 2015
BRIDGE NO. DRAWING NO. 58289

jskinner 3/20/2016 3:36:36 PM
WORKSPACE: ANTD Bridge
L:\20\NGI7707 - I-540 Widening & Interchange Improvement\Drawings\I540-RTWALL-S204-GN.dgn
REVISED DATE:

DATE REVISED	DATE FILMED	DATE REVISED	DATE FILMED	FED. ROAD DIST. NO.	STATE	FED. AID PROJ. NO.	SHEET NO.	TOTAL SHEETS
				6	ARK.			
				JOB NO.		BB0414	567	886
				①	RETAINING WALL DETAILS			58290

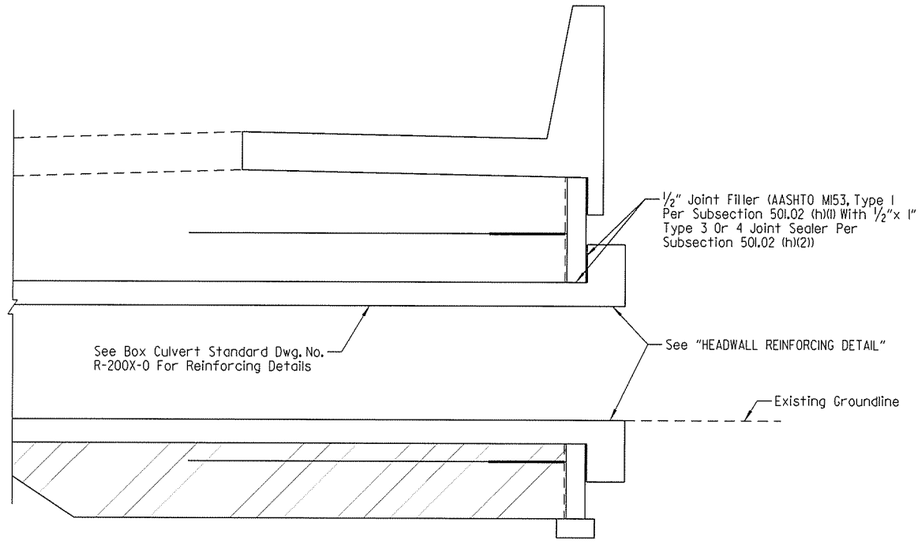

SECTION X-X - THRU BOX CULVERT

No Scale

NOTE:
Unless noted otherwise, stations are measured along Retaining Wall No. 2 alignment (at gutterline at front face of concrete barrier wall). Offsets to box culvert headwall are measured to outside face of wall panel.

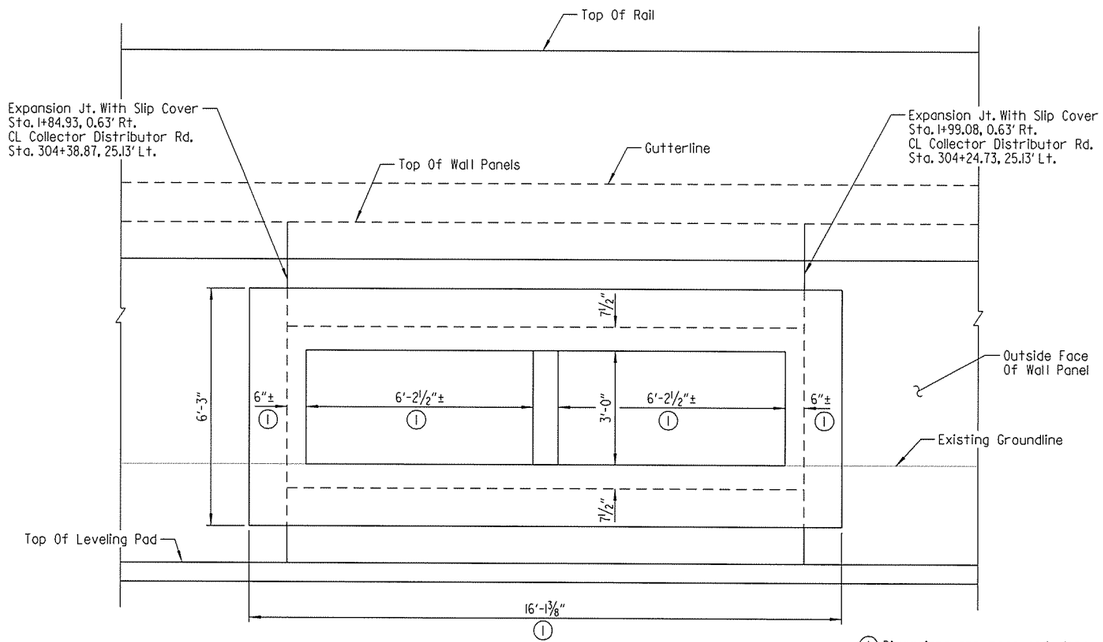

BOX CULVERT OUTLET AT STA. 1+92.01 - ELEVATION

No Scale

BAR LIST - HEADWALL				
MARK	NO. REQ'D	LENGTH	"A"	P.D.
H501	34	3'-10"	1'-3½"	2½"
H502	8	3'-7"	1'-2"	2½"
H601	12	15'-9"		Str.
H602	12	5'-11"		Str.

BAR BENDING DIAGRAM - HEADWALL

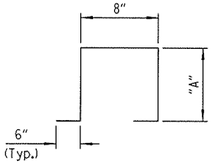

H501 & H502

NOTE:
Dimension of bars are out-to-out.

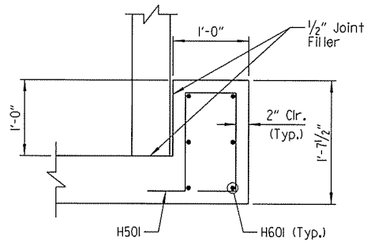

SECTION A-A

No Scale

NOTES:
Payment for work and materials to construct the box culvert headwall shall be considered subsidiary to the box culvert.

Concrete shall be Class S (f'c = 3,500 psi).

Reinforcing steel shall conform to AASHTO M31 or M322 Type A, Grade 60 (Fy = 60,000 psi).

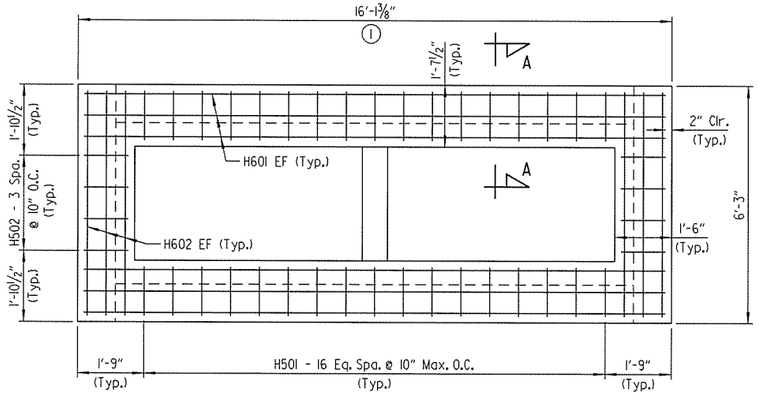

HEADWALL REINFORCING DETAIL

No Scale

STATE OF ARKANSAS
LICENSED PROFESSIONAL ENGINEER
No. 16458
3-20-16
JOEL E. SKINNER

BRIDGE ENGINEER

SHEET 14 OF 15
RETAINING WALL DETAILS

ROUTE SEC.

ARKANSAS STATE HIGHWAY COMMISSION
LITTLE ROCK, ARK.

DRAWN BY: CWT DATE: SEPT. 2015 FILENAME: BBB0414_RW14.dgn
CHECKED BY: PCC DATE: MAR. 2016 SCALE: AS SHOWN
DESIGNED BY: JES DATE: SEPT. 2015
BRIDGE NO. DRAWING NO. 58290

jeskinner 3/20/2016 3:36:37 PM
WORKGROUP: AHTD Standards
L:\20IN1607707 I-540 Widening & Interchange Improvement\Drawings\1540-RTWALL-S205-SX.dgn
REVISED DATE:

DATE REVISED	DATE FILMED	DATE REVISED	DATE FILMED	FED. ROAD DIST. NO.	STATE	FED. AID PROJ. NO.	SHEET NO.	TOTAL SHEETS
				6	ARK.			
				JOB NO.		BB0414	568	886
				(1)	RETAINING WALL DETAILS			58291

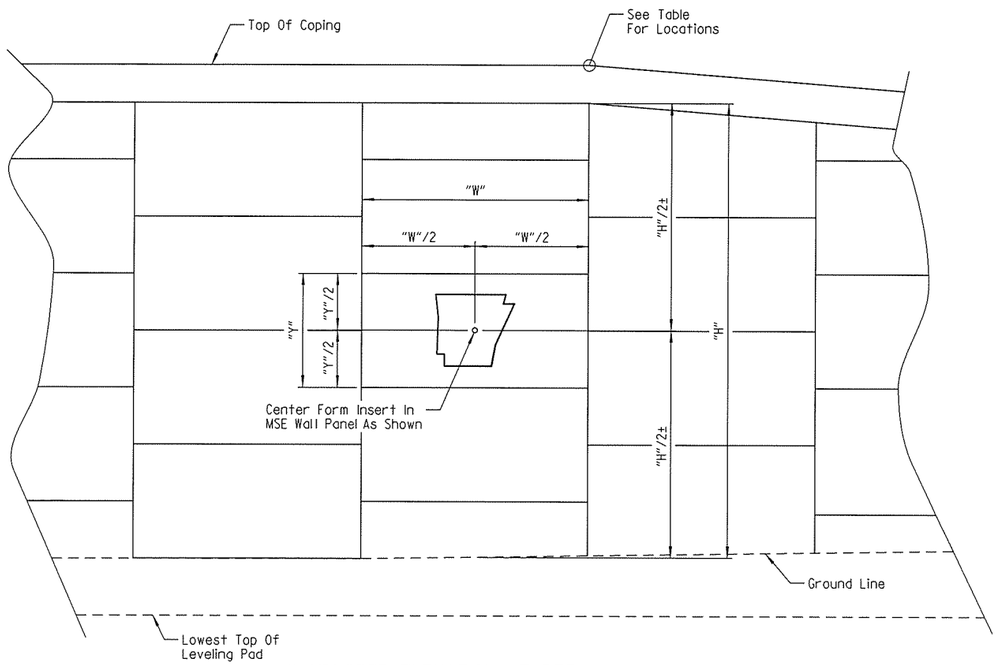

DEVELOPED ELEVATION AT RETAINING WALL NO. 1

No Scale

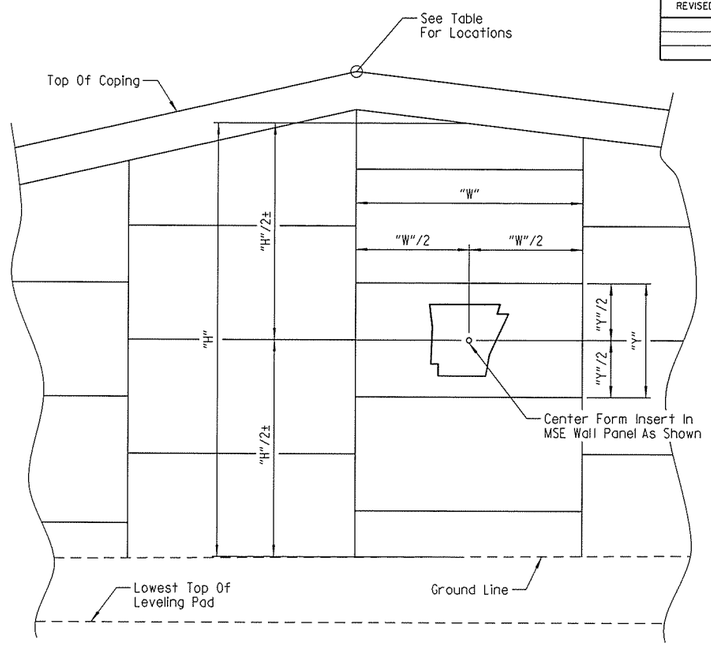

DEVELOPED ELEVATION AT RETAINING WALL NO. 5

No Scale

LOCATION OF FORM INSERT	
Location	Station (1)
Retaining Wall No. 1	0+62.27 And 2+04.28
Retaining Wall No. 5	2+80.00
Retaining Wall No. 7	0+24.50 And 2+40.92
Retaining Wall No. 8	0+39.83 And 2+57.25

(1) Stations shown are along retaining wall profile grade.

NOTES:
Fabricate form insert as a one piece unit, without the use of splices, joints or glue.

Wash and clean multi-use form inserts before each use.

All work and materials for form inserts shall be included in the unit price bid for the item "MSE RETAINING WALL".

Damaged or worn form inserts shall be replaced at the Contractor's expense.

The form insert shall be approved by the Engineer before its use.

Recessed image (including chamfers) of State of Arkansas insert shall be given a Class 3 Textured Coating Finish as specified in SP JOB NO. BB0414 "TEXTURED COATING FINISH."

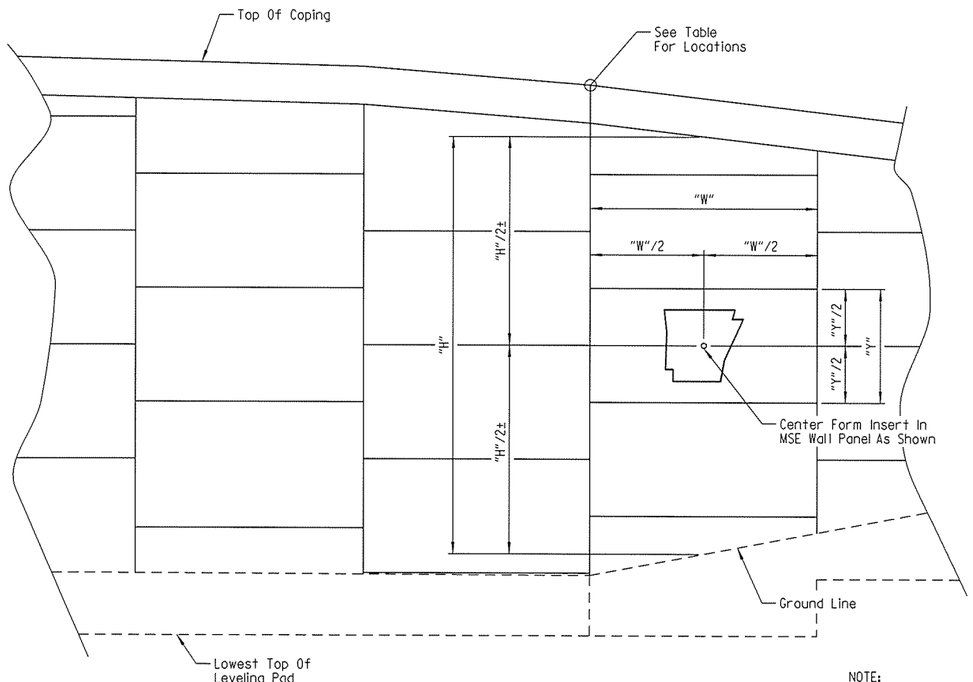

DEVELOPED ELEVATION AT RETAINING WALL NOS. 7 & 8

No Scale

NOTE:
Use form insert on designated walls as noted on Dwg. Nos. 58277, 58281, 58283 & 58284.

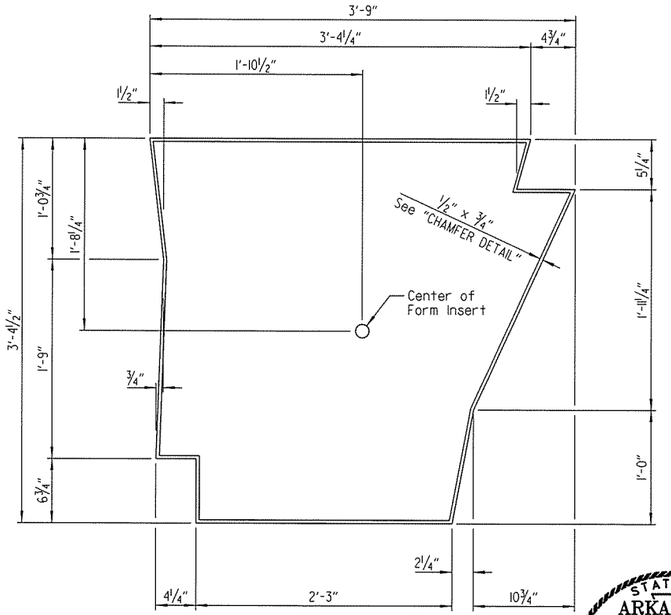

FORM INSERT DETAILS AT MSE WALL

Scale: 1½" = 1'-0"

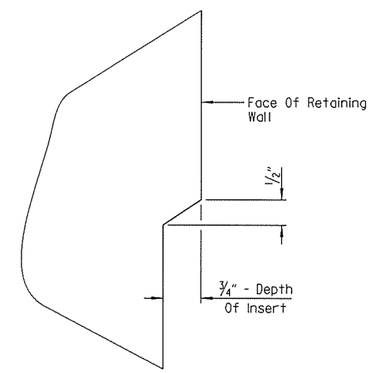

CHAMFER DETAIL

No Scale

STATE OF ARKANSAS
LICENSED PROFESSIONAL ENGINEER
No. 16458
3-20-16
JOEL E. SKINNER

BRIDGE ENGINEER

SHEET 15 OF 15
RETAINING WALL DETAILS

ROUTE SEC.

ARKANSAS STATE HIGHWAY COMMISSION

LITTLE ROCK, ARK.

DRAWN BY: CWT DATE: OCT. 2015 FILENAME: BBB0414_RW15.dgn
CHECKED BY: ABH DATE: JAN. 2016 SCALE: AS SHOWN
DESIGNED BY: JES DATE: OCT. 2015
BRIDGE NO. DRAWING NO. 58291

JesKinner 3/20/2016 3:36:37 PM
WORKSPACE: AHTD_Edge
L:\ROW\NORTH\ - I-540 Widening & Interchange Improvement\Drawings\I540-RTWALL-5206-MD.dgn
REVISED DATE:

DATE REVISED	DATE FILMED	DATE REVISED	DATE FILMED	FED. ROAD DIST. NO.	STATE	FED. AID PROJ. NO.	SHEET NO.	TOTAL SHEETS
				6	ARK.			
				JOB NO.		BB0414	569	886
				① OH-049-72-01, -02, -03, -07 OH-071-72-03, -04		SIGN STRUCTURE		58292

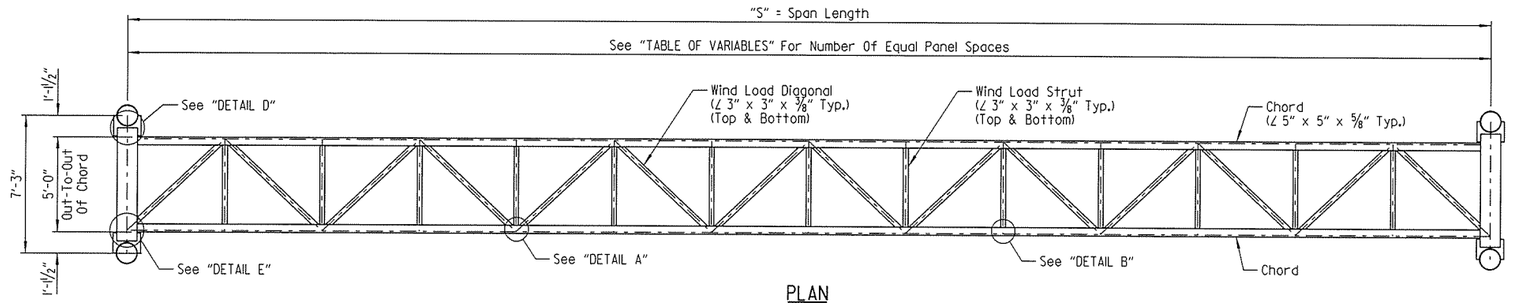

PLAN

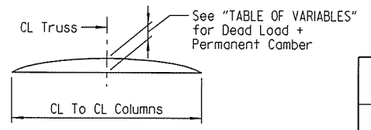

TRUSS CAMBER DIAGRAM

TABLE OF VARIABLES

Span (ft)	No. of Equal Panel Spaces	Dead Load + Permanent Camber
60' thru 65'	12	1"
66' thru 75'	14	1¼"
76' thru 85'	16	1½"

* Note:
The Contractor shall make field measurements to determine the Column heights "H1" and "H2" that are required to maintain the minimum vertical clearance with the centerline of the sign located at the centerline of the truss. These column heights shall be shown on the shop drawings with a note stating that the Contractor has made the required field measurements. If the structure height ("H1" or "H2") exceeds 30'-0", contact the Engineer. The Contractor shall also verify that the variable span length (60'-0" to 85'-0") is sufficient to meet the minimum clearances and to fit the new structure to the existing and/or proposed conditions.

SPAN LENGTH TABLE

Structure No.	"S"
OH-049-72-01	79'-0"
OH-049-72-02	79'-0"
OH-049-72-03	79'-0"
OH-049-72-07	80'-0"
OH-071-72-03	64'-0"
OH-071-72-04	65'-4"

LEGEND
NS = Near Side
FS = Far Side

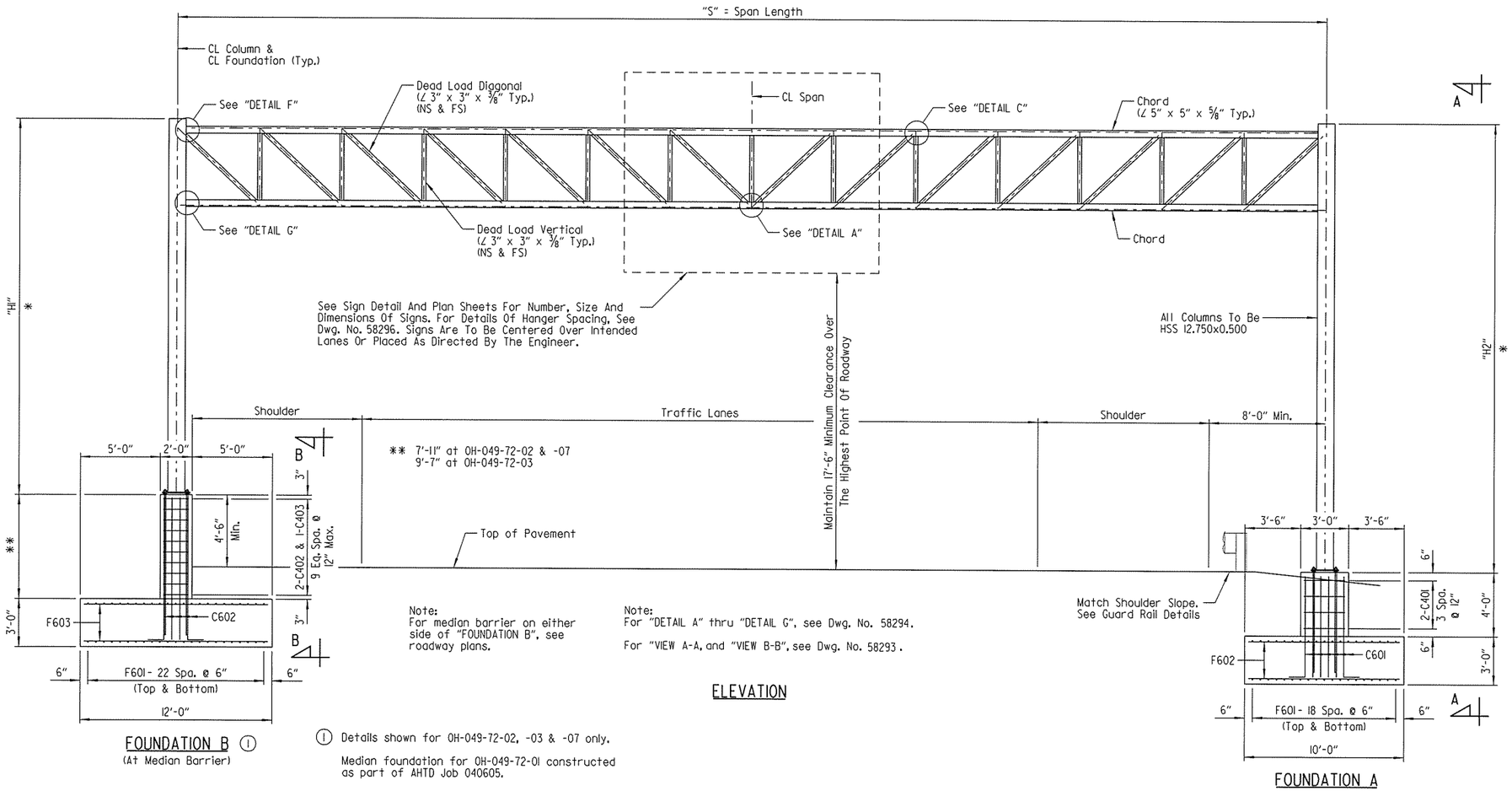

ELEVATION

FOUNDATION B ①
(At Median Barrier)

FOUNDATION A

Note:
For median barrier on either side of "FOUNDATION B", see roadway plans.

Note:
For "DETAIL A" thru "DETAIL G", see Dwg. No. 58294.

For "VIEW A-A, and "VIEW B-B", see Dwg. No. 58293.

Match Shoulder Slope. See Guard Rail Details

① Details shown for OH-049-72-02, -03 & -07 only.

Median foundation for OH-049-72-01 constructed as part of AHTD Job 040605.

*** APPROXIMATE QUANTITIES FOR FOUNDATION (FOR INFORMATION ONLY)

FOUNDATION	CLASS S CONCRETE (Cu. Yards)	REINFORCING STEEL (Lbs.)	EXCAVATION (Cu. Yards)
A	27.6	2946	78
B	38.4	4501	64

*** Bar List and Quantities for Foundation B based on 7'-11" pedestal height.

BAR LIST - FOUNDATION A

MARK	NO. REQ'D	LENGTH	P.D.
C401	8	20'-8"	2"
C601	56	7'-3"	4½"
F601	38	19'-6"	Str.
F602	78	9'-6"	Str.

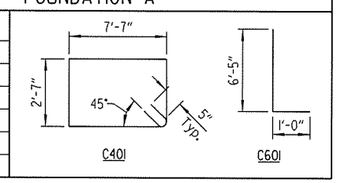

NOTE: Dimensions of bars are out-to-out. Number of bars shown for one Foundation A only.

***

BAR LIST - FOUNDATION B

MARK	NO. REQ'D	LENGTH	P.D.
C402	20	19'-2"	2"
C403	10	26'-2"	2"
C602	82	11'-2"	4½"
F601	46	19'-6"	Str.
F603	78	11'-6"	Str.

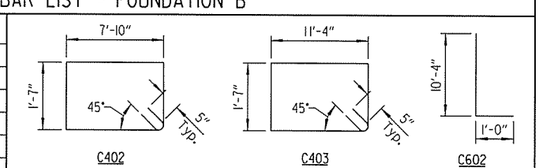

NOTE: Dimensions of bars are out-to-out. Number of bars shown for one Foundation B only.

STATE OF ARKANSAS
LICENSED PROFESSIONAL ENGINEER
No. 15902
6-20-16
PRESTON C. CAMPBELL
BRIDGE ENGINEER

SHEET 1 OF 5
DETAILS FOR 60' TO 85' STEEL OVERHEAD SIGN STRUCTURES WITH MEDIAN FOUNDATION

ROUTE SEC.

ARKANSAS STATE HIGHWAY COMMISSION
LITTLE ROCK, ARK.

DRAWN BY: PCC DATE: OCT. 2015 FILENAME: BBB0414_T1.dgn
CHECKED BY: ABH DATE: NOV. 2015 SCALE: NO SCALE
DESIGNED BY: PCC DATE: OCT. 2015
STR. NO. OH-049-72-01, -02, -03, -07 OH-071-72-03, -04 DRAWING NO. 58292

jeskinner 3/20/2016 3:36:37 PM
WORKSPACE: AHTD Bridge
L:\ROADWAY\701 I-540 Widening & Interchange Improvement\Drawings\I540-SS-S101-OH.dgn
REVISED DATE:

DATE REVISED	DATE FILMED	DATE REVISED	DATE FILMED	FED. ROAD DIST. NO.	STATE	FED. AID PROJ. NO.	SHEET NO.	TOTAL SHEETS
				6	ARK.			
				JOB NO.		BB0414	570	886
				(1) OH-049-72-01, -02, -03, -07 OH-071-72-03, -04		SIGN STRUCTURE		58293

(1) Bolts shall be 1" dia. and slotted hole in chord angle 1 1/16" x 2 1/2". Use plate washer on chord angle side, 1 1/16" dia. holes in 3/4" shim plate and beam flange.

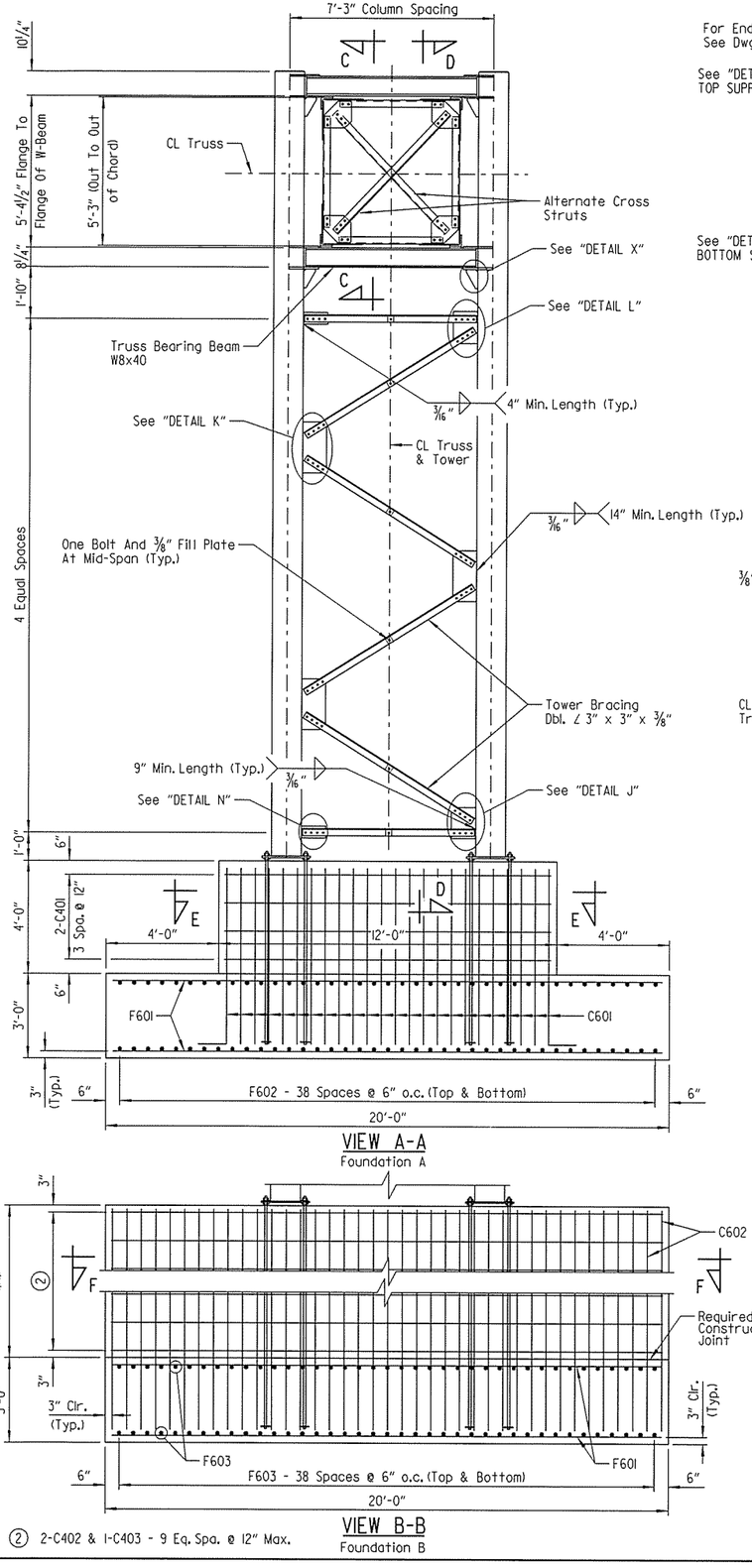

VIEW A-A
Foundation A

VIEW B-B
Foundation B

(2) 2-C402 & 1-C403 - 9 Eq. Spa. @ 12" Max.

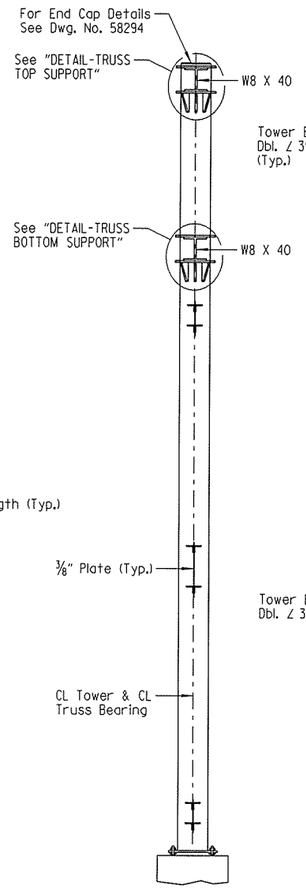

SECTION D-D

Note:
For "SECTION E-E" and "SECTION F-F", see Dwg. No. 58294.

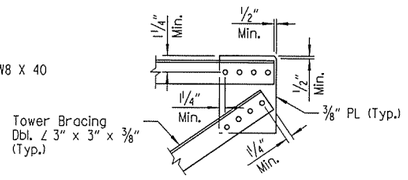

DETAIL L

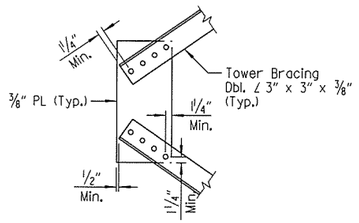

DETAIL K

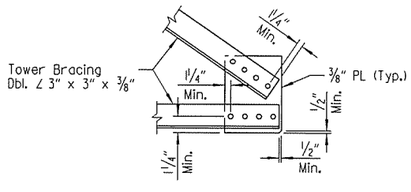

DETAIL J

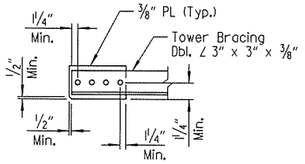

DETAIL N

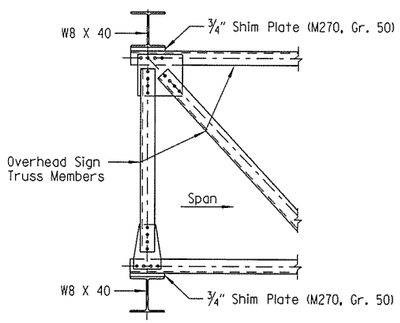

SECTION C-C

** 7'-11" at OH-049-72-02 & -07
9'-7" at OH-049-72-03

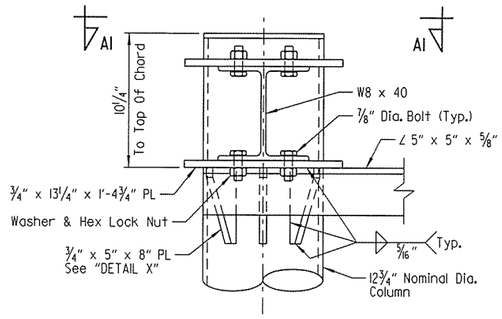

DETAIL - TRUSS TOP SUPPORT

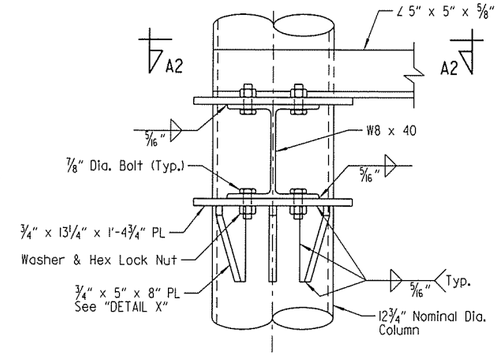

DETAIL - TRUSS BOTTOM SUPPORT

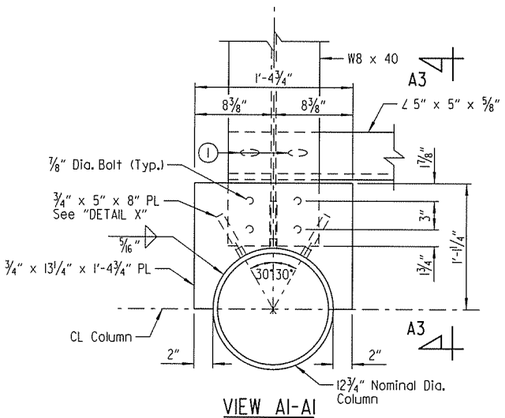

VIEW A1-A1

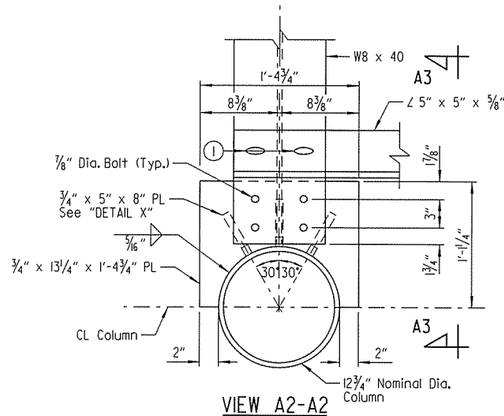

VIEW A2-A2

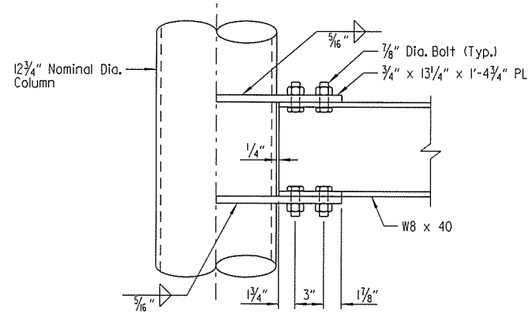

VIEW A3-A3
(3/4" x 5" x 8" Plates Not Shown For Clarity)

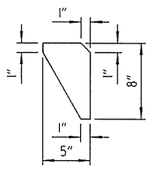

DETAIL X

STATE OF ARKANSAS
LICENSED PROFESSIONAL ENGINEER
No. 15902
3-20-16
PRESTON C. CAMPBELL
BRIDGE ENGINEER

SHEET 2 OF 5
DETAILS FOR 60' TO 85'
STEEL OVERHEAD SIGN STRUCTURES
WITH MEDIAN FOUNDATION

ROUTE SEC.

ARKANSAS STATE HIGHWAY COMMISSION
LITTLE ROCK, ARK.

DRAWN BY: PCC DATE: OCT. 2015 FILENAME: BBB0414_T2.dgn
CHECKED BY: ABH DATE: NOV. 2015 SCALE: NO SCALE
DESIGNED BY: PCC DATE: OCT. 2015
STR. NO. OH-049-72-01, -02, -03, -07 OH-071-72-03, -04 DRAWING NO. 58293

jeskinner 3/20/2016 3:36:38 PM
W:\Projects\HITD Projects\Hodge
I-540\I-540\I-540 Widening & Interchange Improvement\Drawings\I540-SS-S102-OH.dgn
REVISED DATE:

DATE REVISED	DATE FILMED	DATE REVISED	DATE FILMED	FED. ROAD DIST. NO.	STATE	FED. AID PROJ. NO.	SHEET NO.	TOTAL SHEETS
				6	ARK.			
				JOB NO.		BB0414	571	886
				(1) OH-049-72-01, -02, -03, -07 OH-071-72-03, -04		SIGN STRUCTURE		58294

(1) Bolts shall be 1" dia. and slotted holes in gusset plate and chord angle $1\frac{1}{16}$" x $2\frac{1}{2}$". Use plate washer on gusset plate side. $1\frac{1}{16}$" dia. holes in $\frac{3}{4}$" shim plate and beam flange.

NOTE:
Thickness of all gusset plates shall be $\frac{3}{8}$".

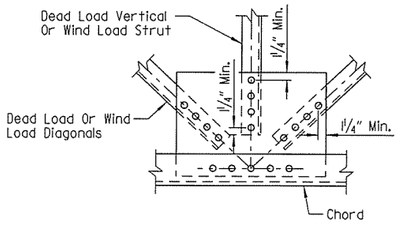

DETAIL A

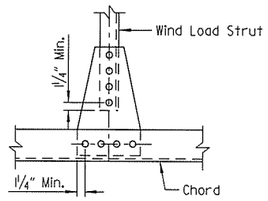

DETAIL B

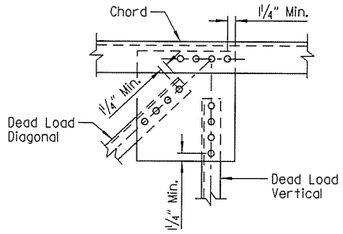

DETAIL C

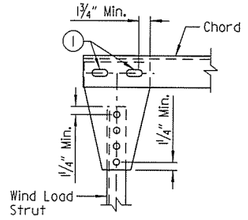

DETAIL D

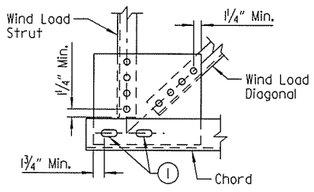

DETAIL E

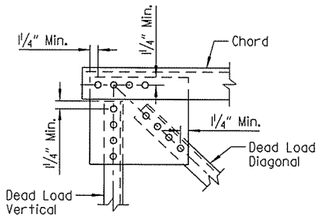

DETAIL F

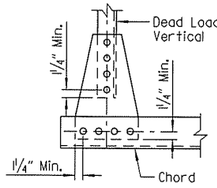

DETAIL G

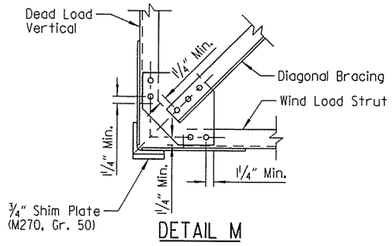

DETAIL M

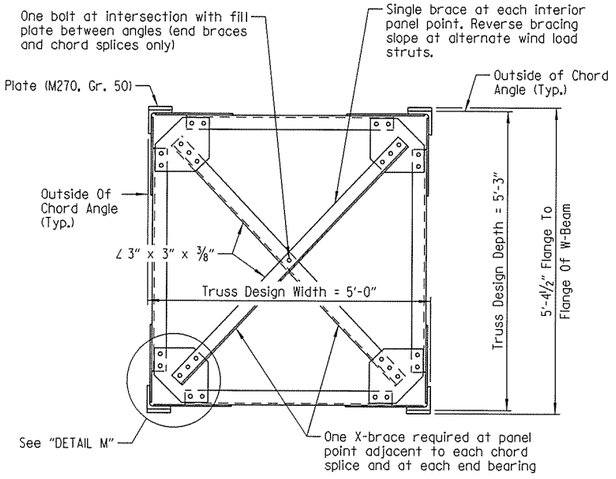

TRUSS SECTION

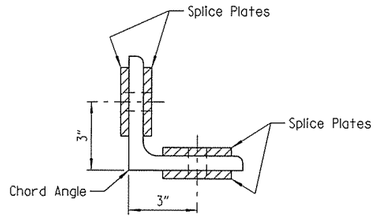

SECTION ON CL SPLICE

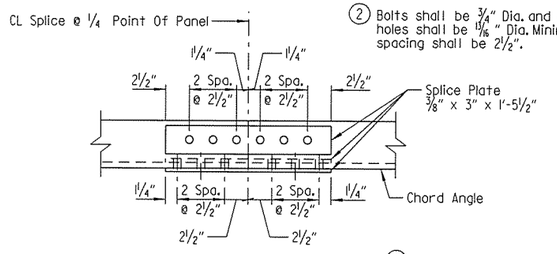

(2) Bolts shall be ¾" Dia. and open holes shall be $\frac{15}{16}$" Dia. Minimum spacing shall be $2\frac{1}{2}$".

CHORD SPLICE USING PLATE (2)

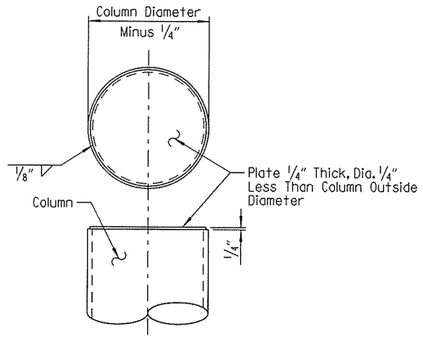

END CAP DETAILS

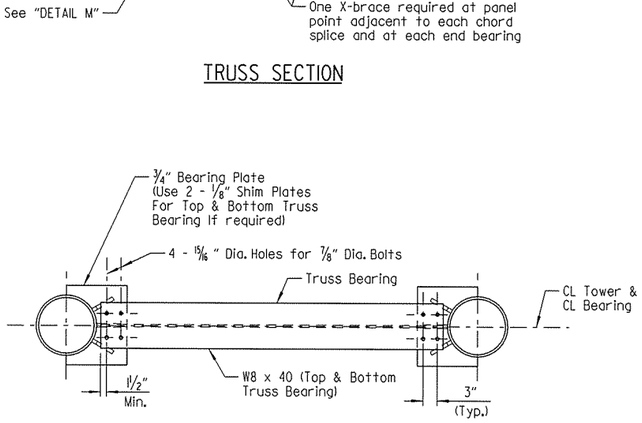

PLAN AT TRUSS BEARING

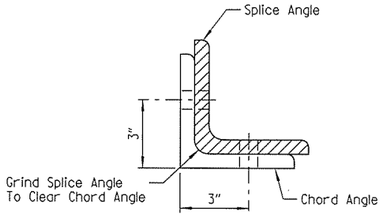

SECTION ON CL SPLICE

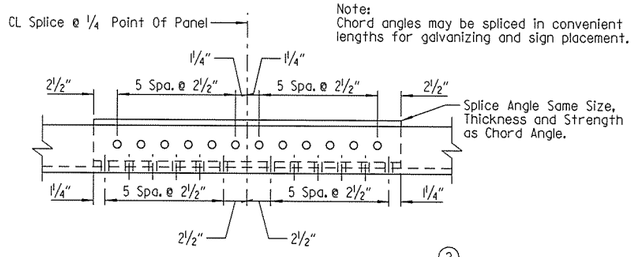

OPTIONAL CHORD SPLICE USING ANGLES (2)
Place Splice Angle on Inside of Truss

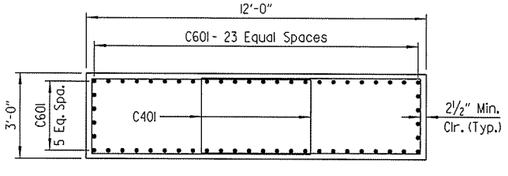

SECTION E-E
Foundation A

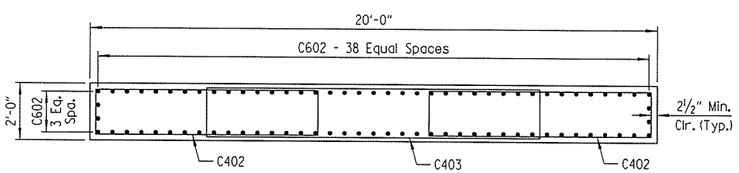

SECTION F-F
Foundation B

STATE OF ARKANSAS
LICENSED PROFESSIONAL ENGINEER
No. 15902
10-16
PRESTON C. CAMPBELL
BRIDGE ENGINEER

SHEET 3 OF 5
DETAILS FOR 60' TO 85'
STEEL OVERHEAD SIGN STRUCTURES
WITH MEDIAN FOUNDATION
ROUTE SEC.
ARKANSAS STATE HIGHWAY COMMISSION
LITTLE ROCK, ARK.

DRAWN BY: PCC DATE: OCT. 2015 FILENAME: BBB0414_T3.dgn
CHECKED BY: ABH DATE: NOV. 2015 SCALE: NO SCALE
DESIGNED BY: PCC DATE: OCT. 2015
STR. NO. OH-049-72-01, -02, -03, -07 OH-071-72-03, -04 DRAWING NO. 58294

jeskinner 3/20/2016 3:36:38 PM
WORKSPACE: AHTD_8-Dgn
L:\2015\I407107 - I-540 Widening & Interchange Improvement\Drawings\I540-SS-S103-OH.dgn
REVISED DATE:

DATE REVISED	DATE FILMED	DATE REVISED	DATE FILMED	FED. ROAD DIST. NO.	STATE	FED. AID PROJ. NO.	SHEET NO.	TOTAL SHEETS
				6	ARK.			
				JOB NO.		BB0414	572	886
				① OH-049-72-01, -02, -03, -07 OH-071-72-03, -04		SIGN STRUCTURE		58295

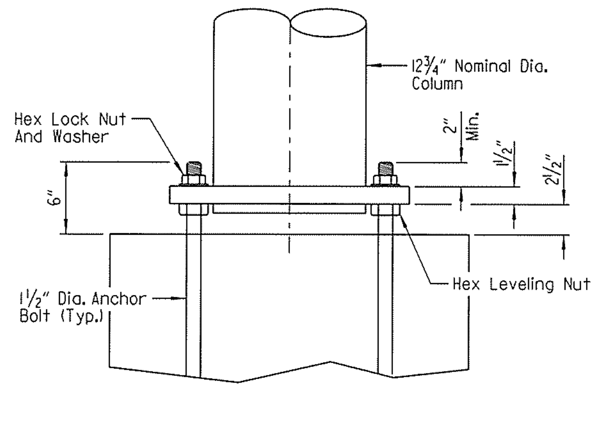

ELEVATION - COLUMN BASE

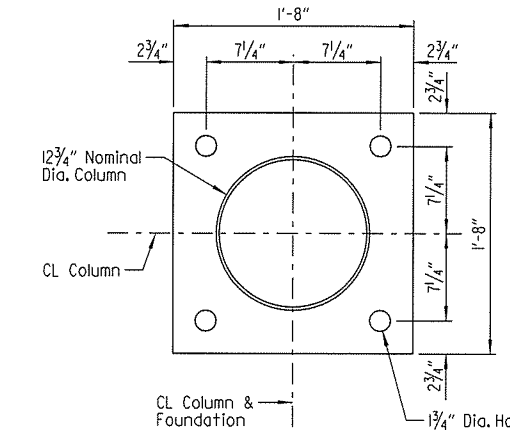

PLAN - COLUMN BASE WITH NEW FOUNDATION
(OH-049-72-02, -03 & -07)
(OH-071-72-03 & -04)
(OH-049-72-01 At Foundation A Only)

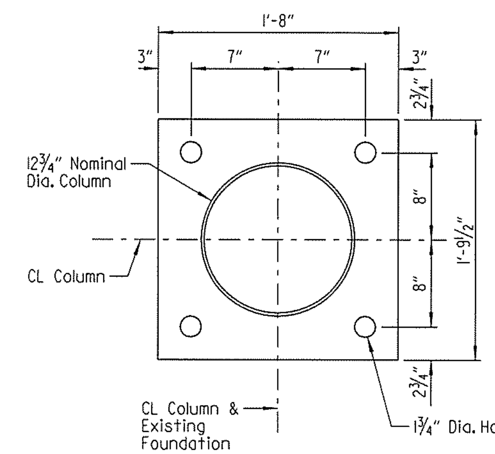

PLAN - COLUMN BASE WITH EXISTING MEDIAN FOUNDATION
(OH-049-72-01)

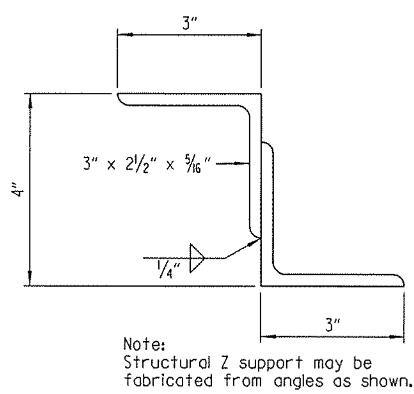

Note:
Structural Z support may be fabricated from angles as shown.

DETAILS OF ALTERNATE Z SUPPORT

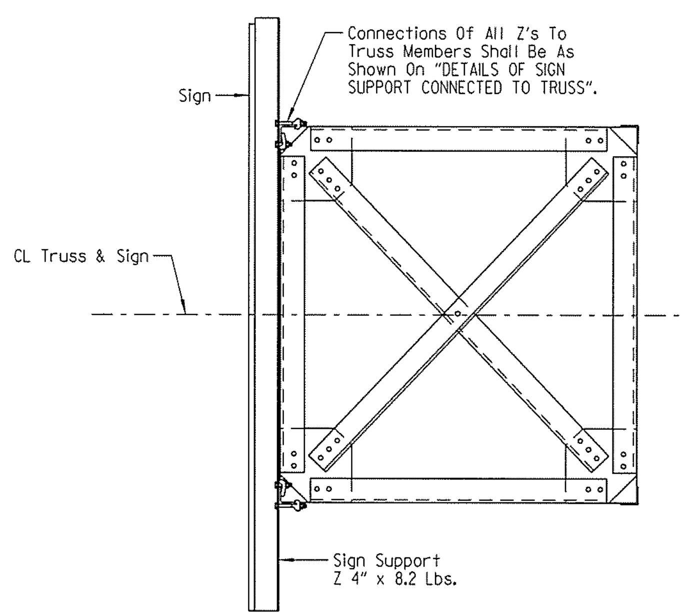

SECTION THRU TRUSS

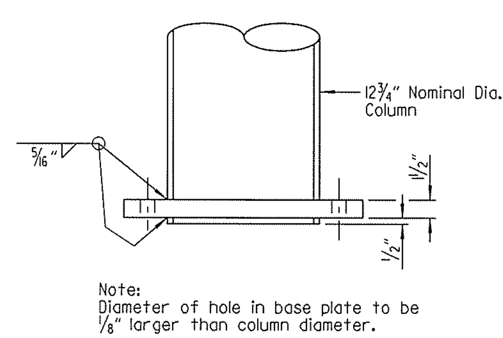

Note:
Diameter of hole in base plate to be ⅛" larger than column diameter.

DETAIL OF COLUMN CONNECTION TO BASE PLATE

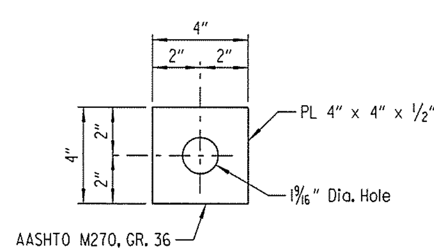

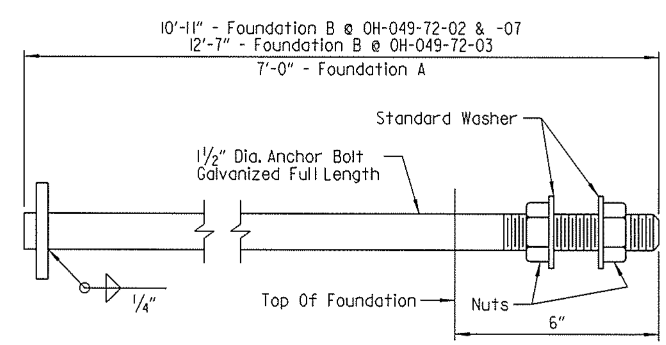

Anchor bolts shall comply with AASHTO M34, Grade 55 with Supplementary Requirement S1 and galvanized according to Section 807.07. Nuts for bolts shall be as specified in Section 807.07.

ANCHOR BOLT DETAIL

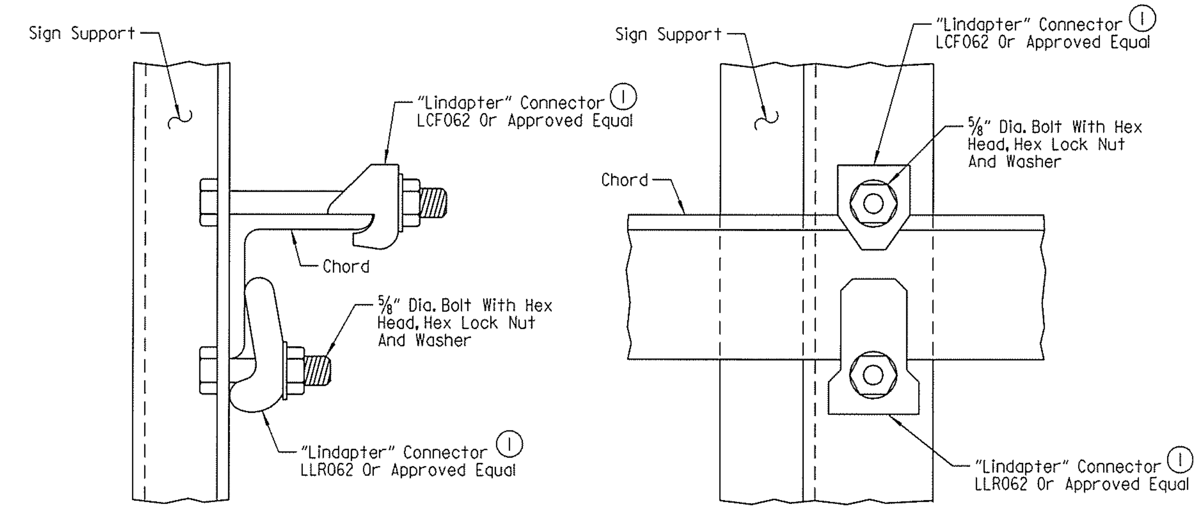

TOP CHORD

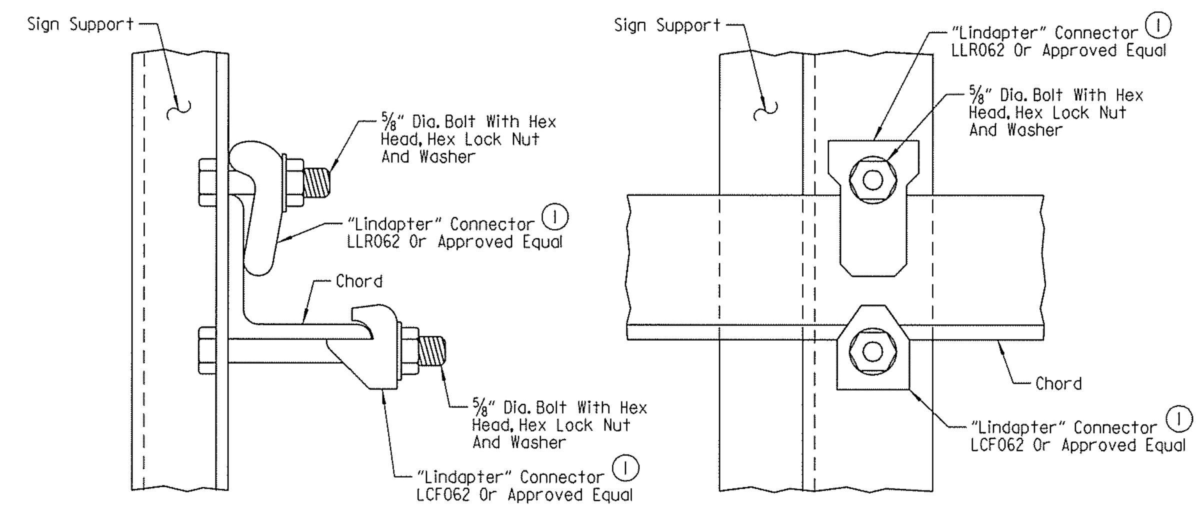

BOTTOM CHORD

① Note:
All "Lindapter" connectors or approved equal shall be installed according to Manufacturer's recommendations. All connectors, bolts, nuts and washers shall be galvanized.

Note:
Install all support connectors clear of the gusset plates and splice locations.

DETAILS OF SIGN SUPPORT CONNECTED TO TRUSS

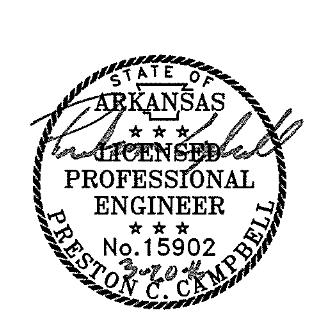

BRIDGE ENGINEER

SHEET 4 OF 5
DETAILS FOR 60' TO 85'
STEEL OVERHEAD SIGN STRUCTURES
WITH MEDIAN FOUNDATION

ROUTE SEC.

ARKANSAS STATE HIGHWAY COMMISSION
LITTLE ROCK, ARK.

DRAWN BY: PCC	DATE: OCT. 2015	FILENAME: BBB0414_T4.dgn	
CHECKED BY: ABH	DATE: NOV. 2015	SCALE: NO SCALE	
DESIGNED BY: PCC	DATE: OCT. 2015		
STR. NO. OH-049-72-01, -02, -03, -07 OH-071-72-03, -04		DRAWING NO. 58295	

jeskinner 3/20/2016 3:36:38 PM
WORKSPACE: AHTD Bridge
L:\2011\1101707 - I-540 Widening & Interchange Improvement\Drawings\540-SS-S104-OH.dgn
REVISED DATE:

DATE REVISED	DATE FILMED	DATE REVISED	DATE FILMED	FED. ROAD DIST. NO.	STATE	FED. AID PROJ. NO.	SHEET NO.	TOTAL SHEETS
				6	ARK.			
				JOB NO.		BB0414	573	886
				(1) OH-049-12-04, -02, -03, -07 OH-071-12-03, -04		SIGN STRUCTURE		58296

GENERAL NOTES:

CONSTRUCTION SPECIFICATIONS: Arkansas State Highway and Transportation Department Standard Specifications for Highway Construction, 2014 Edition, with applicable supplemental specifications and special provisions. Section and subsection refer to the Standard Construction Specifications unless otherwise noted in the plans.

DESIGN SPECIFICATIONS: AASHTO Standard Specifications for Structural Supports for Highway Signs, Luminaires and Traffic Signals, Sixth Edition, 2013, with current Interim Revisions.

Basic Wind Speed = 90 mph
Fatigue Category: I

This structure is approved for a maximum sign area equal to 75% of the span length times a sign height of 15 feet with a weight of 2.5 lbs. per sq. foot and an additional load of 1200 lbs. for a Variable Message Sign panel when required under this contract or for future installation. Use of additional sign area must be approved by the Engineer. If the structure height ("H1" or "H2") exceeds 30'-0", contact the Engineer.

FOUNDATION MATERIALS AND STRENGTHS:

Class S Concrete	f'c = 3,500 psi
Reinforcing Steel (Grade 60, AASHTO M 31 or M 322, Type A)	fy = 60,000 psi

Structural steel sign support members shall comply with the following specifications:

Angles:	AASHTO M 270, Grade 36 (Fy = 36,000 psi)
Plate, W-Section:	AASHTO M 270, Grade 50 (Fy = 50,000 psi)
(1) Pipe:	ASTM A 139, Gr. C, straight-seam welded (Fy = 42,000 psi)
	ASTM A 500, Gr. B (Fy = 42,000 psi)
	ASTM A 501, Gr. B (Fy = 50,000 psi)
	ASTM A 714, Class 2, Grade II, Type E or S (Fy = 50,000 psi)
All grades of pipe require Heat traceability back to the original melting mill.	
Z-Shapes:	AASHTO M 270, Grade 36 (Fy = 36,000 psi)
Shim Plates:	ASTM A 1011, SS, Grade 36, Type 2 or Grade 40
Bolts:	ASTM A 325, Type 1
Locknuts - Approved Type:	Meeting or exceeding AASHTO M 292
Washers:	ASTM F 436
Nuts:	ASTM A 563 or AASHTO M 292, Grade DH or Grade 2H (Grade 10S)

The Contractor shall make check measurements in the field and make any adjustments necessary to meet the required clearances and to fit the new structure to the existing conditions.

Drawings show general features of design only. Shop drawings shall be made in accordance with Subsection 807.04, submitted and approval secured before fabrication is begun.

Requests for substitution of structural steel shapes shown with shapes of greater size must be submitted by the Contractor to the Engineer for approval. Steels of equal or greater strengths will be accepted only when shown on the approved shop drawings. Shapes and materials shown in the plans will be the basis of payment and no additional compensation will be made for any adjustments due to substitutions.

All steel shall be galvanized according to Subsection 807.19. Steel completely encased in concrete may not be galvanized. Galvanized coating damaged during transport, handling or erection shall be field repaired in accordance with Subsection 807.18.

All main load carrying tension members greater than ½" in thickness shall conform to the requirements of the Longitudinal Charpy V-Notch test specified for Zone 1 minimum service temperature. This work and materials shall be paid for in accordance with SP JOB NO. BB0414 "STEEL SIGN STRUCTURES".

Field splices shall be located in order to avoid sign panel connections. There shall be a maximum of two field splices and they shall be spaced a minimum of 15' apart.

Truss field sections shall be shop assembled. Entire truss shall be fully assembled and lifted into place as one unit on to tower supports. All truss member connections shall be bolted connections.

All welding that is to be done during fabrication of structural steel, including temporary welds, shall be detailed on the shop drawings and submitted for approval. If additional welds are required, whether temporary or permanent, a formal request with detailed drawings shall be submitted to the Engineer for approval. All welding shall conform to Subsection 807.26.

No circumferential butt welds will be allowed in any pipe sections.

All fillet welds of critical members shall be tested according to AWS D1.1 Structural Welding Code - Steel using the magnetic particle method. Critical welds shall include: column to base plate and truss bottom support to column.

Connections shall be bolted with high-strength bolts. Unless otherwise noted, bolts shall be ¾" diameter and open holes shall be 13/16" diameter. Bolt spacing shall be 2½" for ¾" diameter bolts unless otherwise noted. Bolts shall be placed with heads on the outside face of all members.

All truss frame bolts shall comply with AASHTO M 164 Type 1, galvanized according to Subsection 807.06. Nuts and washers for AASHTO M 164 Type 1 bolts shall be furnished and galvanized in accordance with Subsection 807.06.

Lock nuts to be equipped with nylon locking inserts or other approved type locking system. Lock nuts to be installed according to Manufacturer's recommendations.

Anchor bolts shall comply with AASHTO M 314, Grade 55 including Supplementary Requirement S1, and galvanized according to Subsection 807.07. Nuts and washers for anchor bolts shall be furnished and galvanized in accordance with Subsection 807.07. Anchor bolts shall be pretensioned in accordance with SP JOB NO. BB0414 "STEEL SIGN STRUCTURES".

Shoring may be required to protect existing shoulders during excavation. Any shoring required shall not be paid for directly, but shall be considered incidental to the item "STEEL OVERHEAD SIGN STRUCTURE". The excavations for the footings shall be backfilled before the structure is attached to the foundations.

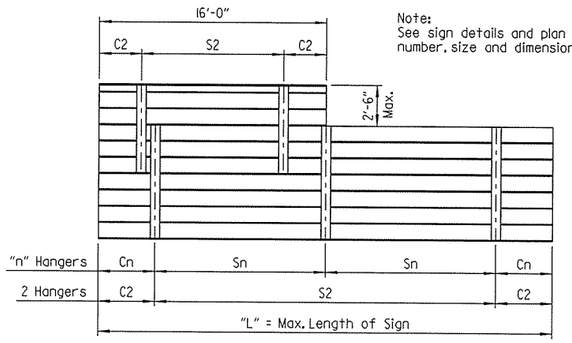

Note:
See sign details and plan sheets for number, size and dimensions of signs.

HANGER SPACING DETAILS FOR EXTRUDED PANEL SIGNS

(1) In addition to material requirements, all pipe used for welded applications shall have a maximum carbon equivalency (CE) of 0.4 using the following equation: CE = %C + %Mn/6 + %Cu/40 + %Ni/20 + %Cr/10 - %Mo/50 - %V/10

HANGER VARIABLES			
Max. Length of Sign = "L"	"n" Hangers	Cantilever Length "Cn"	Hanger Spacing "Sn"
15'-0"	2 Hangers	0.21 x "L"	0.58 x "L"
30'-0"	3 Hangers	0.145 x "L"	0.355 x "L"
45'-0"	4 Hangers	0.107 x "L"	0.262 x "L"

Hanger spacing and cantilever length shall be rounded to the nearest inch.

ISOMETRIC VIEW

STATE OF ARKANSAS
LICENSED PROFESSIONAL ENGINEER
No. 15902
3-20-16
PRESTON C. CAMPBELL
BRIDGE ENGINEER

SHEET 5 OF 5
DETAILS FOR 60' TO 85'
STEEL OVERHEAD SIGN STRUCTURES
WITH MEDIAN FOUNDATION
ROUTE SEC.
ARKANSAS STATE HIGHWAY COMMISSION
LITTLE ROCK, ARK.

DRAWN BY: PCC DATE: OCT. 2015 FILENAME: BB0414_T5.dgn
CHECKED BY: ABH DATE: NOV. 2015 SCALE: NO SCALE
DESIGNED BY: PCC DATE: OCT. 2015
STR. NO. OH-049-12-04, -02, -03, -07 OH-071-12-03, -04 DRAWING NO. 58296

Jeskinner 3/20/2016 3:36:39 PM
WORKSPACE: AHTD B-Size Wide
L:\2011\1007107 - I-540 Widening & Interchange Improvement\Drawings\1540-SS-S105-OH.dgn
REVISED DATE:

DATE REVISED	DATE FILMED	DATE REVISED	DATE FILMED	FED. ROAD DIST. NO.	STATE	FED. AID PROJ. NO.	SHEET NO.	TOTAL SHEETS
				6	ARK.			
				JOB NO.		BB0414	574	886
				(1) 0H-049-072-06 0H-049-072-09		SIGN STRUCTURE		58297

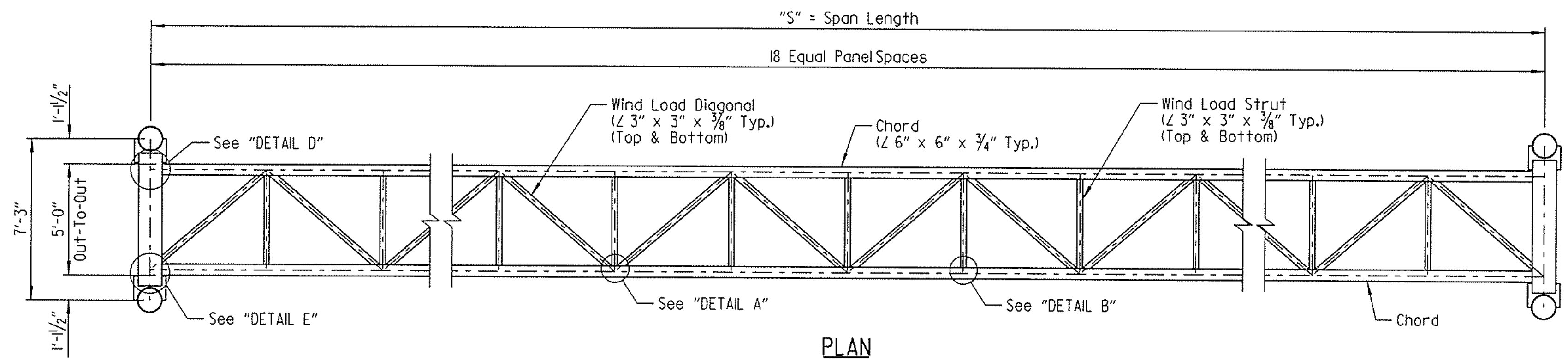

PLAN

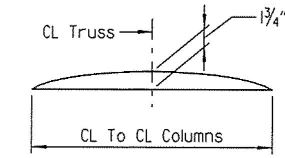

TRUSS CAMBER DIAGRAM

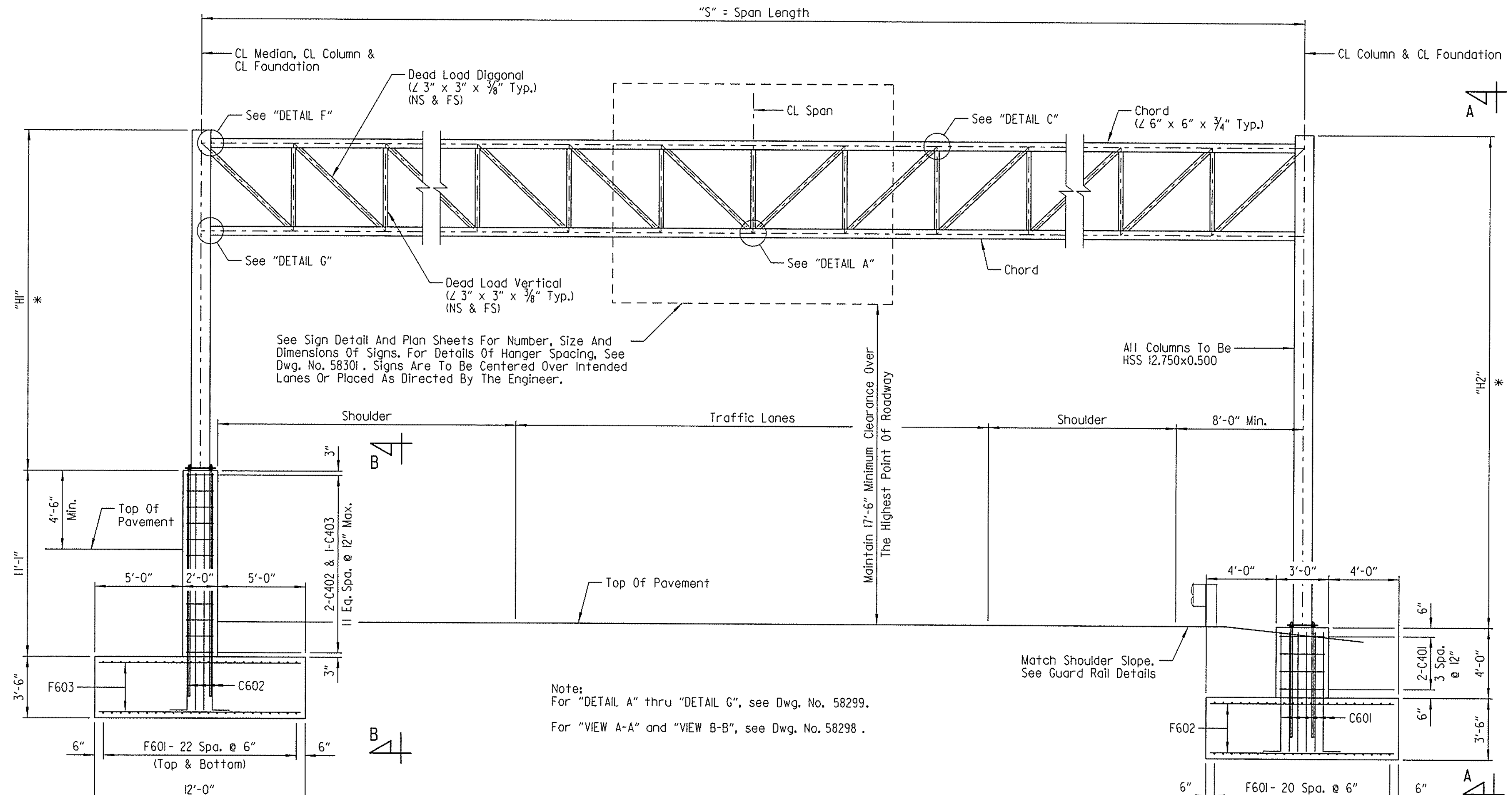

FOUNDATION B (1)
(At Median Barrier)

(1) Details shown for 0H-049-72-06 only.

Median foundation for 0H-049-72-09 constructed as part of AHTD Job CA0401.

Note:
For "DETAIL A" thru "DETAIL G", see Dwg. No. 58299.

For "VIEW A-A" and "VIEW B-B", see Dwg. No. 58298.

ELEVATION

FOUNDATION A

* Note:
The Contractor shall make field measurements to determine the Column heights "H1" and "H2" that are required to maintain the minimum vertical clearance with the centerline of the sign located at the centerline of the truss. These column heights shall be shown on the shop drawings with a note stating that the Contractor has made the required field measurements. If the structure height ("H1" or "H2") exceeds 30'-0", contact the Engineer. The Contractor shall also verify that the variable span length (86'-0" to 95'-0") is sufficient to meet the minimum clearances and to fit the new structure to the existing and/or proposed conditions.

SPAN LENGTH TABLE

Structure No.	"S"
0H-049-72-06	92'-0"
0H-049-72-09	87'-0"

LEGEND
NS = Near Side
FS = Far Side

APPROXIMATE QUANTITIES FOR FOUNDATION
(FOR INFORMATION ONLY)

FOUNDATION	CLASS S CONCRETE (Cu. Yards)	REINFORCING STEEL (Lbs.)	EXCAVATION (Cu. Yards)
A	33.9	3223	90
B	47.6	5039	103

BAR LIST - FOUNDATION A

MARK	NO. REQ'D	LENGTH	P.D.
C401	8	20'-8"	2"
C601	56	7'-9"	4½"
F601	42	19'-6"	Str.
F602	78	10'-6"	Str.

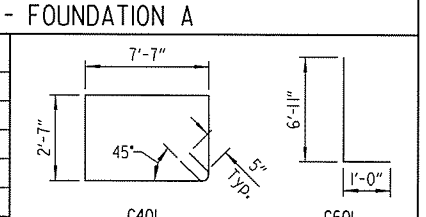

NOTE: Dimensions of bars are out-to-out.

BAR LIST - FOUNDATION B

MARK	NO. REQ'D	LENGTH	P.D.
C402	24	19'-2"	2"
C403	12	26'-2"	2"
C602	82	14'-10"	4½"
F601	46	19'-6"	Str.
F603	78	11'-6"	Str.

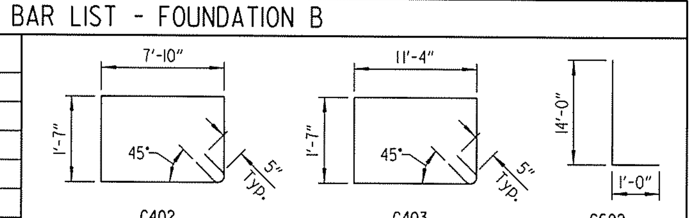

NOTE: Dimensions of bars are out-to-out.

STATE OF ARKANSAS LICENSED PROFESSIONAL ENGINEER No. 15902 PRESTON C. CAMPBELL
BRIDGE ENGINEER

SHEET 1 OF 5
DETAILS FOR 86' TO 95'
STEEL OVERHEAD SIGN STRUCTURES
WITH MEDIAN FOUNDATION
ROUTE SEC.
ARKANSAS STATE HIGHWAY COMMISSION
LITTLE ROCK, ARK.

DRAWN BY: PCC DATE: OCT. 2015 FILENAME: BBB0414_T6.dgn
CHECKED BY: ABH DATE: NOV. 2015 SCALE: NO SCALE
DESIGNED BY: PCC DATE: OCT. 2015
STR. NO. 0H-049-072-06 0H-049-072-09 DRAWING NO. 58297

jeskinner 3/20/2016 3:36:39 PM
WORKSPACE: AHTD Bridge
L:\2011\011707 - I-540 Widening & Interchange Improvement\Drawings\I540-SS-SI06-OH.dgn
REVISED DATE:

DATE REVISED	DATE FILMED	DATE REVISED	DATE FILMED	FED. ROAD DIST. NO.	STATE	FED. AID PROJ. NO.	SHEET NO.	TOTAL SHEETS
				6	ARK.			
				JOB NO.		BB0414	575	886
				(1) OH-049-072-06 OH-049-072-09		SIGN STRUCTURE		58298

(1) Bolts shall be 1" dia. and slotted hole in chord angle 1 1/16" x 2 1/2". Use plate washer on chord angle side. 1 1/16" dia. holes in 3/4" shim plate and beam flange.

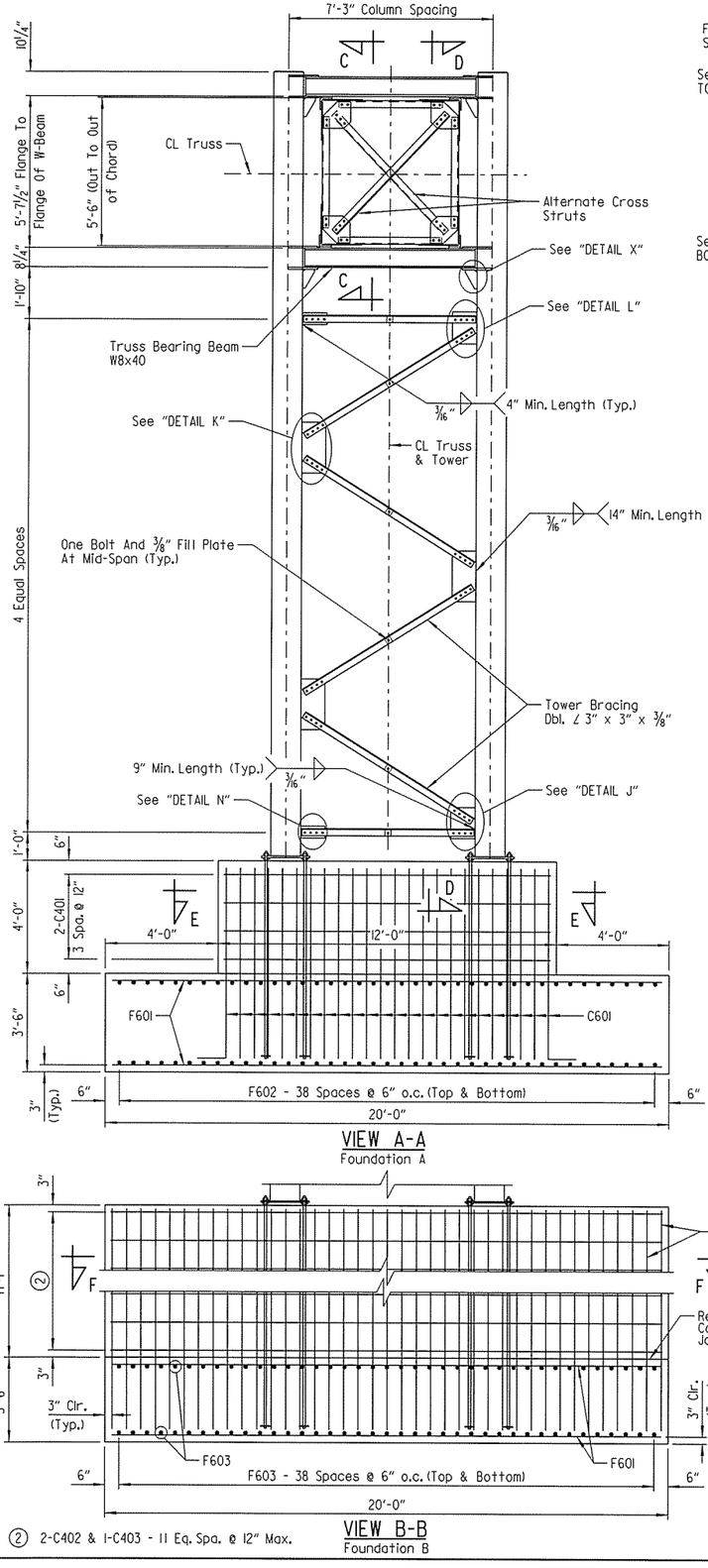

VIEW A-A
Foundation A

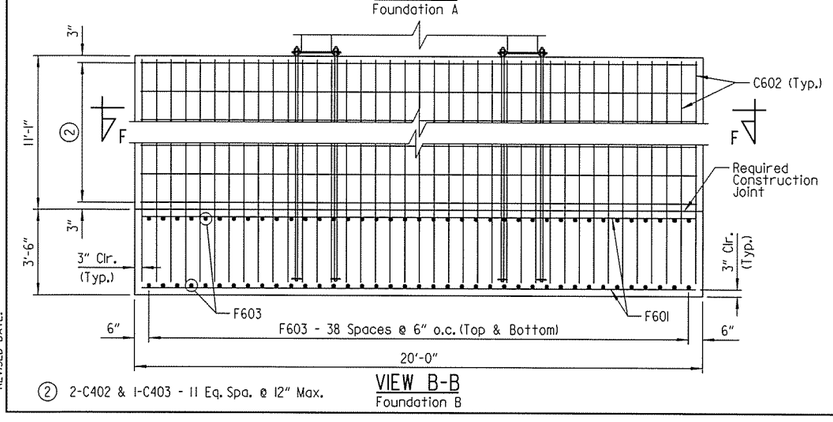

(2) 2-C402 & 1-C403 - 11 Eq. Spa. @ 12" Max.

VIEW B-B
Foundation B

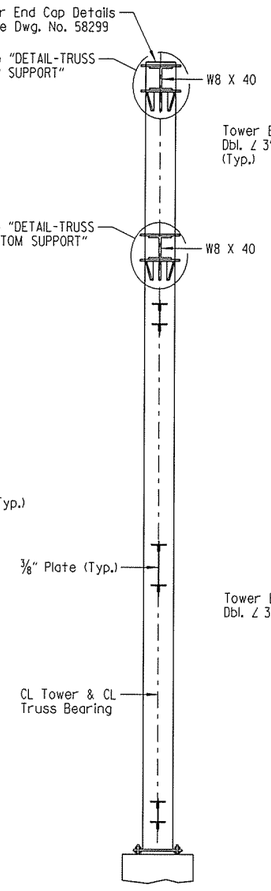

SECTION D-D

Note:
For "SECTION E-E" and "SECTION F-F", see Dwg. No. 58299.

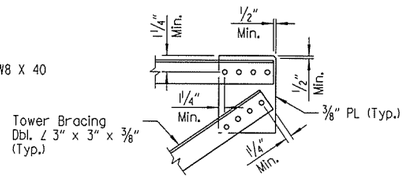

DETAIL L

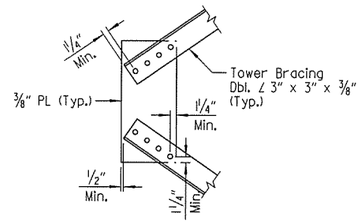

DETAIL K

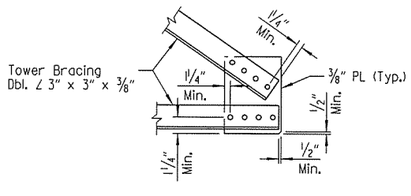

DETAIL J

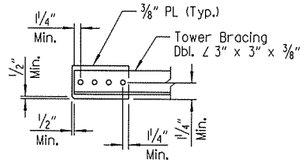

DETAIL N

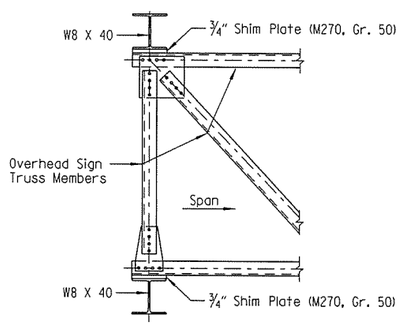

SECTION C-C

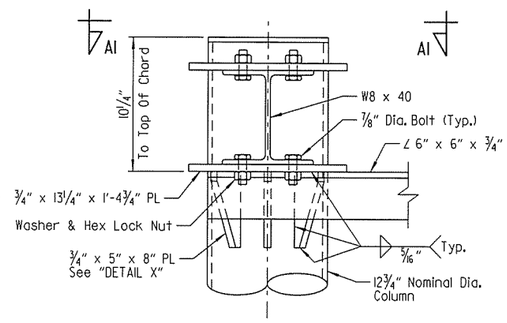

DETAIL - TRUSS TOP SUPPORT

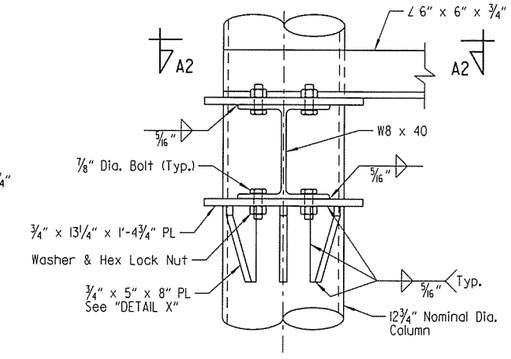

DETAIL - TRUSS BOTTOM SUPPORT

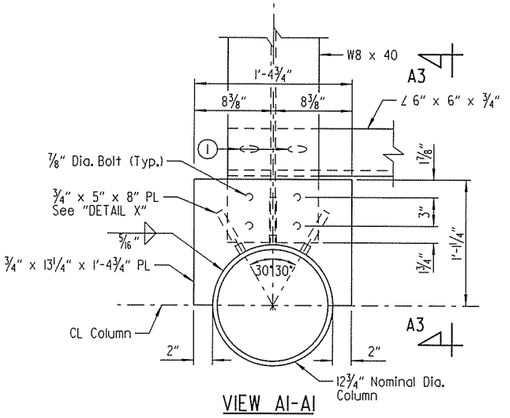

VIEW A1-A1

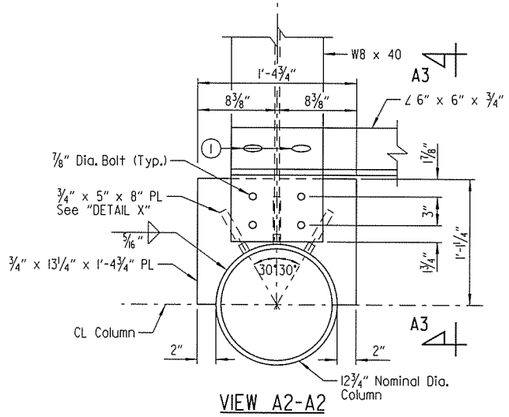

VIEW A2-A2

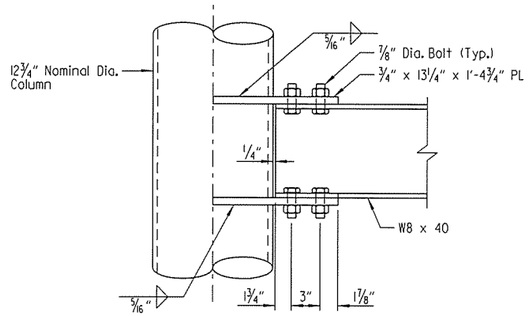

VIEW A3-A3
(3/4" x 5" x 8" Plates Not Shown For Clarity)

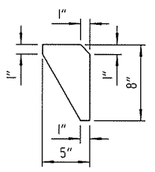

DETAIL X

STATE OF ARKANSAS
LICENSED PROFESSIONAL ENGINEER
No. 15902
PRESTON C. CAMPBELL
BRIDGE ENGINEER

SHEET 2 OF 5
DETAILS FOR 86' TO 95'
STEEL OVERHEAD SIGN STRUCTURES
WITH MEDIAN FOUNDATION

ROUTE SEC.

ARKANSAS STATE HIGHWAY COMMISSION
LITTLE ROCK, ARK.

DRAWN BY: PCC DATE: OCT. 2015 FILENAME: BBB0414_T7.dgn
CHECKED BY: ABH DATE: NOV. 2015 SCALE: NO SCALE
DESIGNED BY: PCC DATE: OCT. 2015
STR. NO. OH-049-072-06 OH-049-072-09 DRAWING NO. 58298

jeskinner
3/20/2016 3:36:39 PM
LR-I-540\W0177(07) - I-540 Widening & Interchange Improvement\Drawings\I540-SS-SI07-0H1.dgn
REVISED DATE:

DATE REVISED	DATE FILMED	DATE REVISED	DATE FILMED	FED. ROAD DIST. NO.	STATE	FED. AID PROJ. NO.	SHEET NO.	TOTAL SHEETS
				6	ARK.			
				JOB NO.		BB0414	576	886
				(1) OH-049-072-06 OH-049-072-09		SIGN STRUCTURE		58299

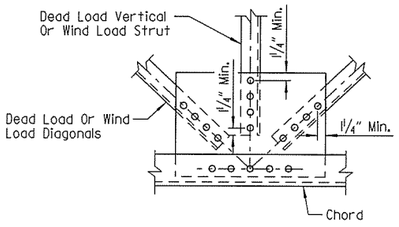

DETAIL A

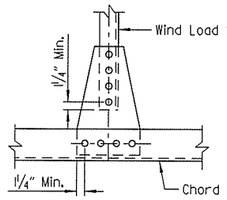

DETAIL B

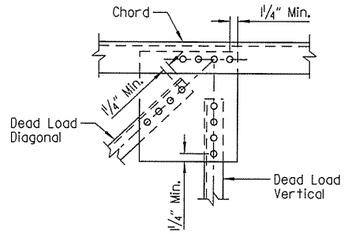

DETAIL C

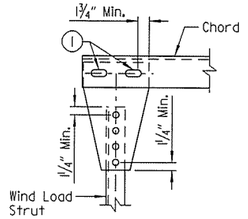

DETAIL D

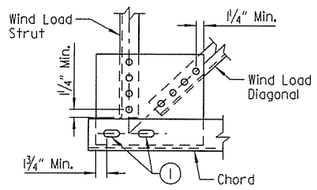

DETAIL E

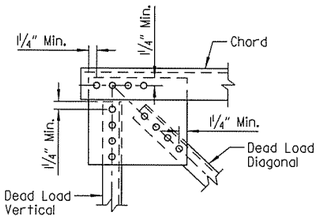

DETAIL F

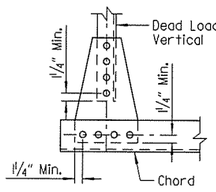

DETAIL G

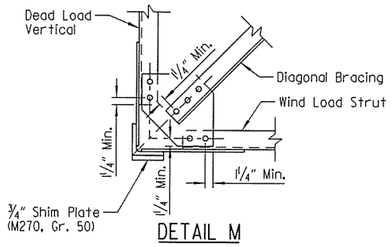

DETAIL M

(1) Bolts shall be 1" dia. and slotted holes in gusset plate and chord angle 1 1/16" x 2½". Use plate washer on gusset plate side. 1 1/16" dia. holes in ¾" shim plate and beam flange.

NOTE:
Thickness of all gusset plates shall be ⅜".

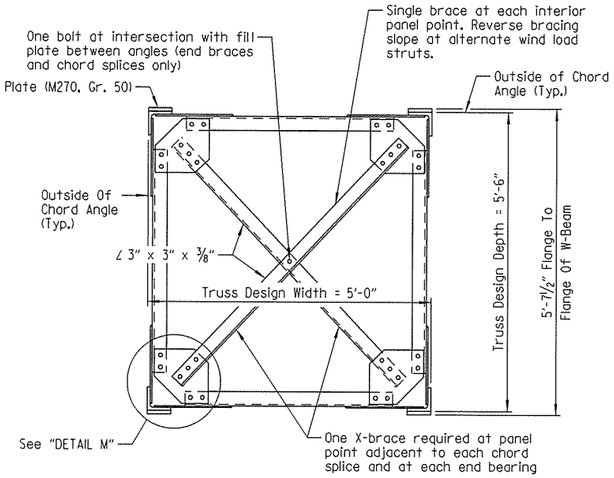

TRUSS SECTION

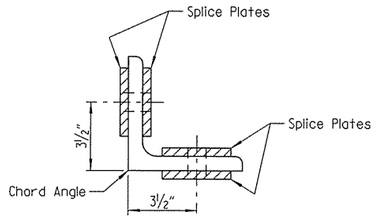

SECTION ON CL SPLICE

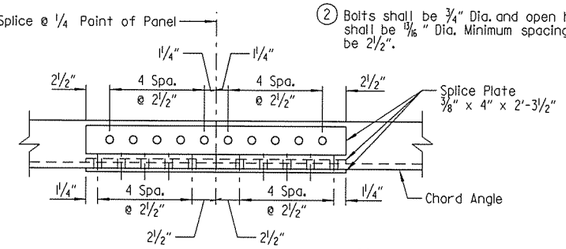

CHORD SPLICE USING PLATE (2)

(2) Bolts shall be ¾" Dia. and open holes shall be 15/16" Dia. Minimum spacing shall be 2½".

Note:
Chord angles may be spliced in convenient lengths for galvanizing and sign placement.

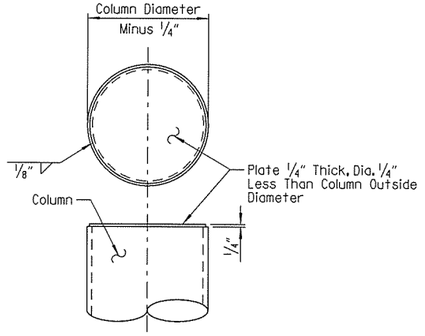

END CAP DETAILS

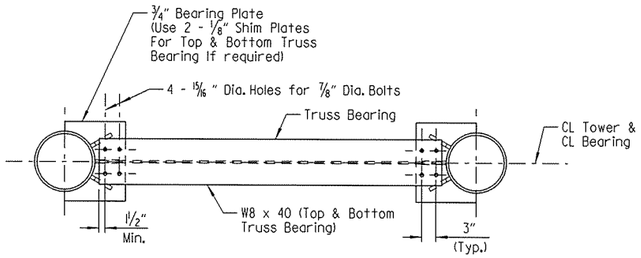

PLAN AT TRUSS BEARING

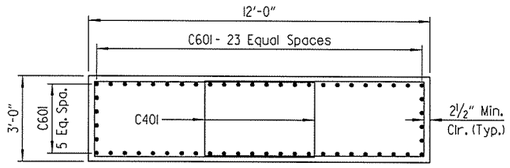

SECTION E-E
Foundation A

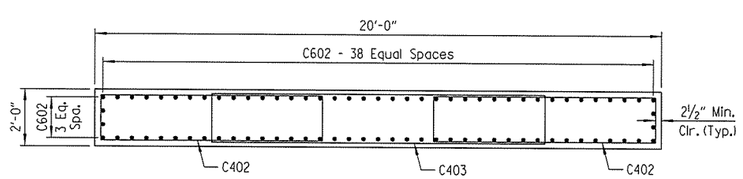

SECTION F-F
Foundation B

STATE OF ARKANSAS
LICENSED PROFESSIONAL ENGINEER
No. 15902
3-20-16
PRESTON C. CAMPBELL
BRIDGE ENGINEER

SHEET 3 OF 5
DETAILS FOR 86' TO 95'
STEEL OVERHEAD SIGN STRUCTURES
WITH MEDIAN FOUNDATION
ROUTE SEC.
ARKANSAS STATE HIGHWAY COMMISSION
LITTLE ROCK, ARK.

DRAWN BY: PCC DATE: OCT. 2015 FILENAME: BBB0414_T8.dgn
CHECKED BY: ABH DATE: NOV. 2015 SCALE: NO SCALE
DESIGNED BY: PCC DATE: OCT. 2015
STR. NO. OH-049-072-06 OH-049-072-09 DRAWING NO. 58299

jeskirner 3/20/2016 3:36:40 PM
projects\SSE, AHTD BB0414
L:\2015\15017107 - I-540 Widening & Interchange Improvement\Drawings\I540-SS-SIO8-OH.dgn
REVISED DATE:

DATE REVISED	DATE FILMED	DATE REVISED	DATE FILMED	FED. ROAD DIST. NO.	STATE	FED. AID PROJ. NO.	SHEET NO.	TOTAL SHEETS
				6	ARK.			
				JOB NO.		BB0414	577	886
				(1) OH-049-072-06 OH-049-072-09		SIGN STRUCTURE		58300

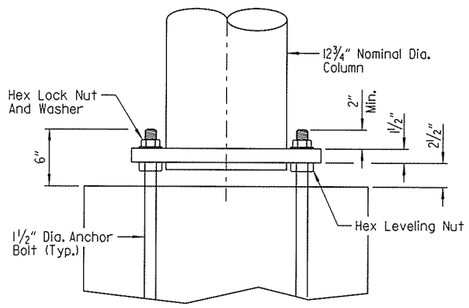

ELEVATION - COLUMN BASE

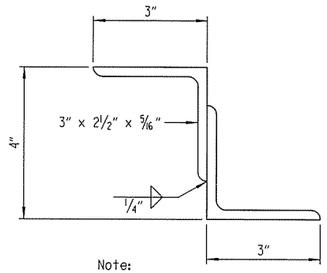

Note:
Structural Z support may be fabricated from angles as shown.

DETAILS OF ALTERNATE Z SUPPORT

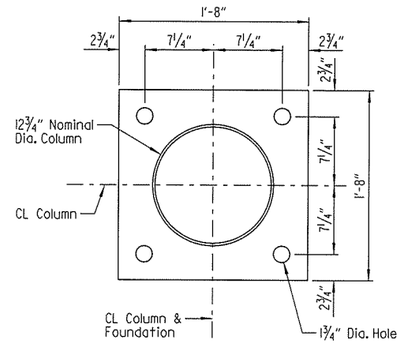

PLAN - COLUMN BASE WITH NEW FOUNDATION

(OH-049-72-06)
(OH-049-72-09 At Foundation A Only)

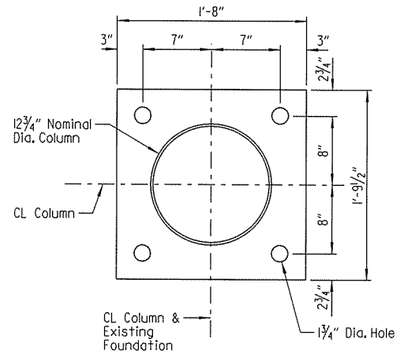

PLAN - COLUMN BASE WITH EXISTING MEDIAN FOUNDATION

(OH-049-72-09)

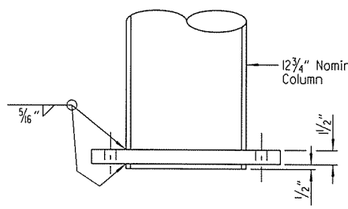

Note:
Diameter of hole in base plate to be ⅛" larger than column diameter.

DETAIL OF COLUMN CONNECTION TO BASE PLATE

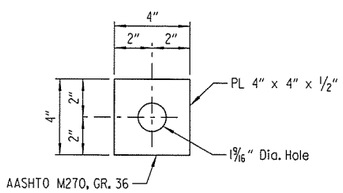

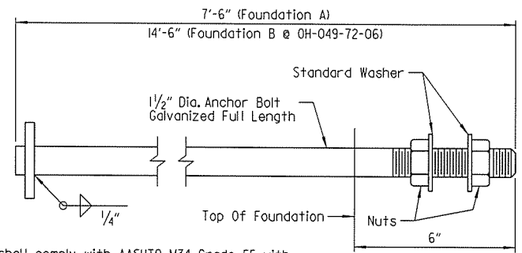

Anchor bolts shall comply with AASHTO M34, Grade 55 with Supplementary Requirement S1 and galvanized according to Section 807.07. Nuts for bolts shall be as specified in Section 807.07.

ANCHOR BOLT DETAIL

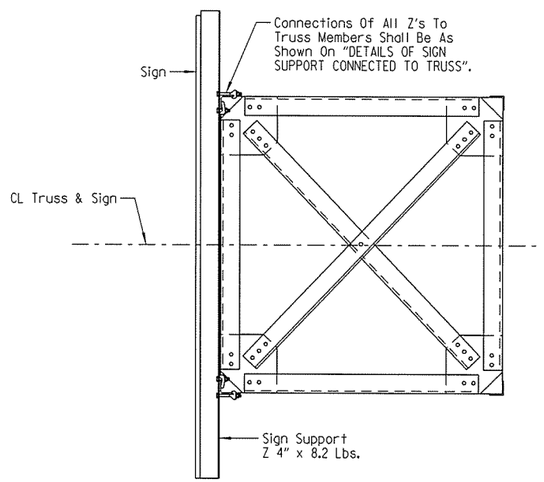

SECTION THRU TRUSS

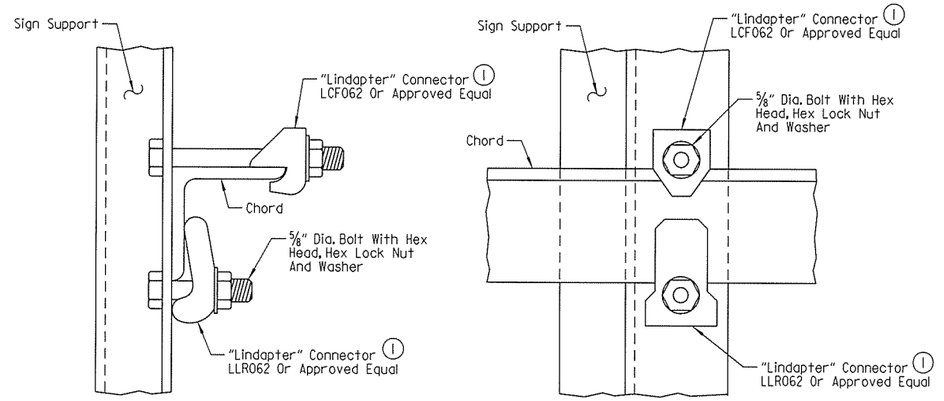

TOP CHORD

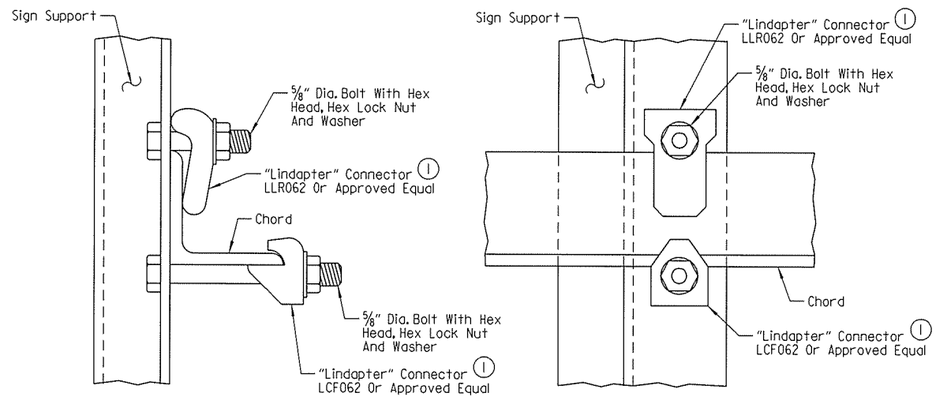

BOTTOM CHORD

(1) Note:
All "Lindapter" connectors or approved equal shall be installed according to Manufacturer's recommendations. All connectors, bolts, nuts and washers shall be galvanized.

Note:
Install all support connectors clear of the gusset plates and splice locations.

DETAILS OF SIGN SUPPORT CONNECTED TO TRUSS

STATE OF ARKANSAS
LICENSED PROFESSIONAL ENGINEER
No. 15902
3-20-16
PRESTON C. CAMPBELL
BRIDGE ENGINEER

SHEET 4 OF 5
DETAILS FOR 86' TO 95'
STEEL OVERHEAD SIGN STRUCTURES
WITH MEDIAN FOUNDATION

ROUTE SEC.

ARKANSAS STATE HIGHWAY COMMISSION
LITTLE ROCK, ARK.

DRAWN BY: PCC DATE: OCT. 2015 FILENAME: BBB0414_T9.dgn
CHECKED BY: ABH DATE: NOV. 2015 SCALE: NO SCALE
DESIGNED BY: PCC DATE: OCT. 2015
STR. NO. OH-049-072-06 OH-049-072-09 DRAWING NO. 58300

jeskinner 3/20/2016 3:36:40 PM
WORKSPACE: AHTD Bridge
L:\2011\1097107 - I-540 Widening & Interchange Improvement\Drawings\1540-SS-S103-OH.dgn
REVISED DATE:

DATE REVISED	DATE FILMED	DATE REVISED	DATE FILMED	FED. ROAD DIST. NO.	STATE	FED. AID PROJ. NO.	SHEET NO.	TOTAL SHEETS
				6	ARK.			
				JOB NO.		BB0414	578	886
				(1) OH-049-072-06 OH-049-072-09		SIGN STRUCTURE		58301

GENERAL NOTES:

CONSTRUCTION SPECIFICATIONS: Arkansas State Highway and Transportation Department Standard Specifications for Highway Construction, 2014 Edition, with applicable supplemental specifications and special provisions. Section and subsection refer to the Standard Construction Specifications unless otherwise noted in the plans.

DESIGN SPECIFICATIONS: AASHTO Standard Specifications for Structural Supports for Highway Signs, Luminaires and Traffic Signals, Sixth Edition, 2013, with current Interim Revisions.

Basic Wind Speed = 90 mph
Fatigue Category: I

This structure is approved for a maximum sign area equal to 75% of the span length times a sign height of 15 feet with a weight of 2.5 lbs. per sq. foot and an additional load of 1200 lbs. for a Variable Message Sign panel when required under this contract or for future installation. Use of additional sign area must be approved by the Engineer. If the structure height ("H1" or "H2") exceeds 30'-0", contact the Engineer.

FOUNDATION MATERIALS AND STRENGTHS:
Class S Concrete f'c = 3,500 psi
Reinforcing Steel (Grade 60, AASHTO M 31 or M 322, Type A) fy = 60,000 psi

Structural steel sign support members shall comply with the following specifications:

Angles:	AASHTO M 270, Grade 36 (Fy = 36,000 psi)
Plate, W-Section:	AASHTO M 270, Grade 50 (Fy = 50,000 psi)
(1) Pipe:	ASTM A 139, Gr. C, straight-seam welded (Fy = 42,000 psi)
	ASTM A 500, Gr. B (Fy = 42,000 psi)
	ASTM A 501, Gr. B (Fy = 50,000 psi)
	ASTM A 714, Class 2, Grade II, Type E or S (Fy = 50,000 psi)
All grades of pipe require Heat traceability back to the original melting mill.	
Z-Shapes:	AASHTO M 270, Grade 36 (Fy = 36,000 psi)
Shim Plates:	ASTM A 1011, SS, Grade 36, Type 2 or Grade 40
Bolts:	ASTM A 325, Type 1
Locknuts - Approved Type:	Meeting or exceeding AASHTO M 292
Washers:	ASTM F 436
Nuts:	ASTM A 563 or AASHTO M 292, Grade DH or Grade 2H (Grade 10S)

The Contractor shall make check measurements in the field and make any adjustments necessary to meet the required clearances and to fit the new structure to the existing conditions.

Drawings show general features of design only. Shop drawings shall be made in accordance with Subsection 807.04, submitted and approval secured before fabrication is begun.

Requests for substitution of structural steel shapes shown with shapes of greater size must be submitted by the Contractor to the Engineer for approval. Steels of equal or greater strengths will be accepted only when shown on the approved shop drawings. Shapes and materials shown in the plans will be the basis of payment and no additional compensation will be made for any adjustments due to substitutions.

All steel shall be galvanized according to Subsection 807.19. Steel completely encased in concrete may not be galvanized. Galvanized coating damaged during transport, handling or erection shall be field repaired in accordance with Subsection 807.88.

All main load carrying tension members greater than ½" in thickness shall conform to the requirements of the Longitudinal Charpy V-Notch test specified for Zone 1 minimum service temperature. This work and materials shall be paid for in accordance with SP JOB NO. BB0414 "STEEL SIGN STRUCTURES".

Field splices shall be located in order to avoid sign panel connections. There shall be a maximum of two field splices and they shall be spaced a minimum of 15' apart.

Truss field sections shall be shop assembled. Entire truss shall be fully assembled and lifted into place as one unit on to tower supports. All truss member connections shall be bolted connections.

All welding that is to be done during fabrication of structural steel, including temporary welds, shall be detailed on the shop drawings and submitted for approval. If additional welds are required, whether temporary or permanent, a formal request with detailed drawings shall be submitted to the Engineer for approval. All welding shall conform to Subsection 807.26.

No circumferential butt welds will be allowed in any pipe sections.

All fillet welds of critical members shall be tested according to AWS D1.1 Structural Welding Code - Steel using the magnetic particle method. Critical welds shall include: column to base plate and truss bottom support to column.

Connections shall be bolted with high-strength bolts. Unless otherwise noted, bolts shall be ¾" diameter and open holes shall be 13/16" diameter. Bolt spacing shall be 2½" for ¾" diameter bolts unless otherwise noted. Bolts shall be placed with heads on the outside face of all members.

All truss frame bolts shall comply with AASHTO M 164 Type 1, galvanized according to Subsection 807.06. Nuts and washers for AASHTO M 164 Type 1 bolts shall be furnished and galvanized in accordance with Subsection 807.06.

Lock nuts to be equipped with nylon locking inserts or other approved type locking system. Lock nuts to be installed according to Manufacturer's recommendations.

Anchor bolts shall comply with AASHTO M 314, Grade 55 including Supplementary Requirement S1, and galvanized according to Subsection 807.07. Nuts and washers for anchor bolts shall be furnished and galvanized in accordance with Subsection 807.07. Anchor bolts shall be pretensioned in accordance with SP JOB NO. BB0414 "STEEL SIGN STRUCTURES".

Shoring may be required to protect existing shoulders during excavation. Any shoring required shall not be paid for directly, but shall be considered incidental to the item "STEEL OVERHEAD SIGN STRUCTURE". The excavations for the footings shall be backfilled before the structure is attached to the foundations.

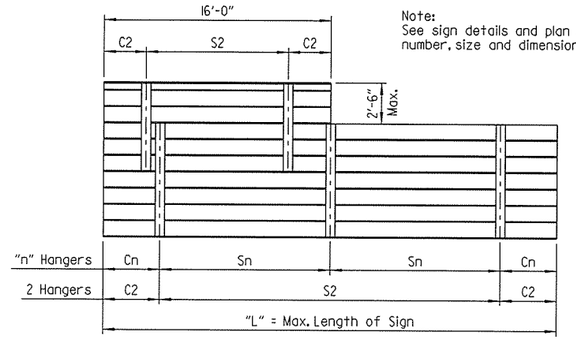

Note:
See sign details and plan sheets for number, size and dimensions of signs.

(1) In addition to material requirements, all pipe used for welded applications shall have a maximum carbon equivalency (CE) of 0.4 using the following equation: CE = %C + %Mn/6 + %Cu/40 + %Ni/20 + %Cr/10 - %Mo/50 - %V/10

HANGER VARIABLES

Max. Length of Sign = "L"	"n" Hangers	Cantilever Length "Cn"	Hanger Spacing "Sn"
15'-0"	2 Hangers	0.21 x "L"	0.58 x "L"
30'-0"	3 Hangers	0.145 x "L"	0.355 x "L"
45'-0"	4 Hangers	0.107 x "L"	0.262 x "L"

Hanger spacing and cantilever length shall be rounded to the nearest inch.

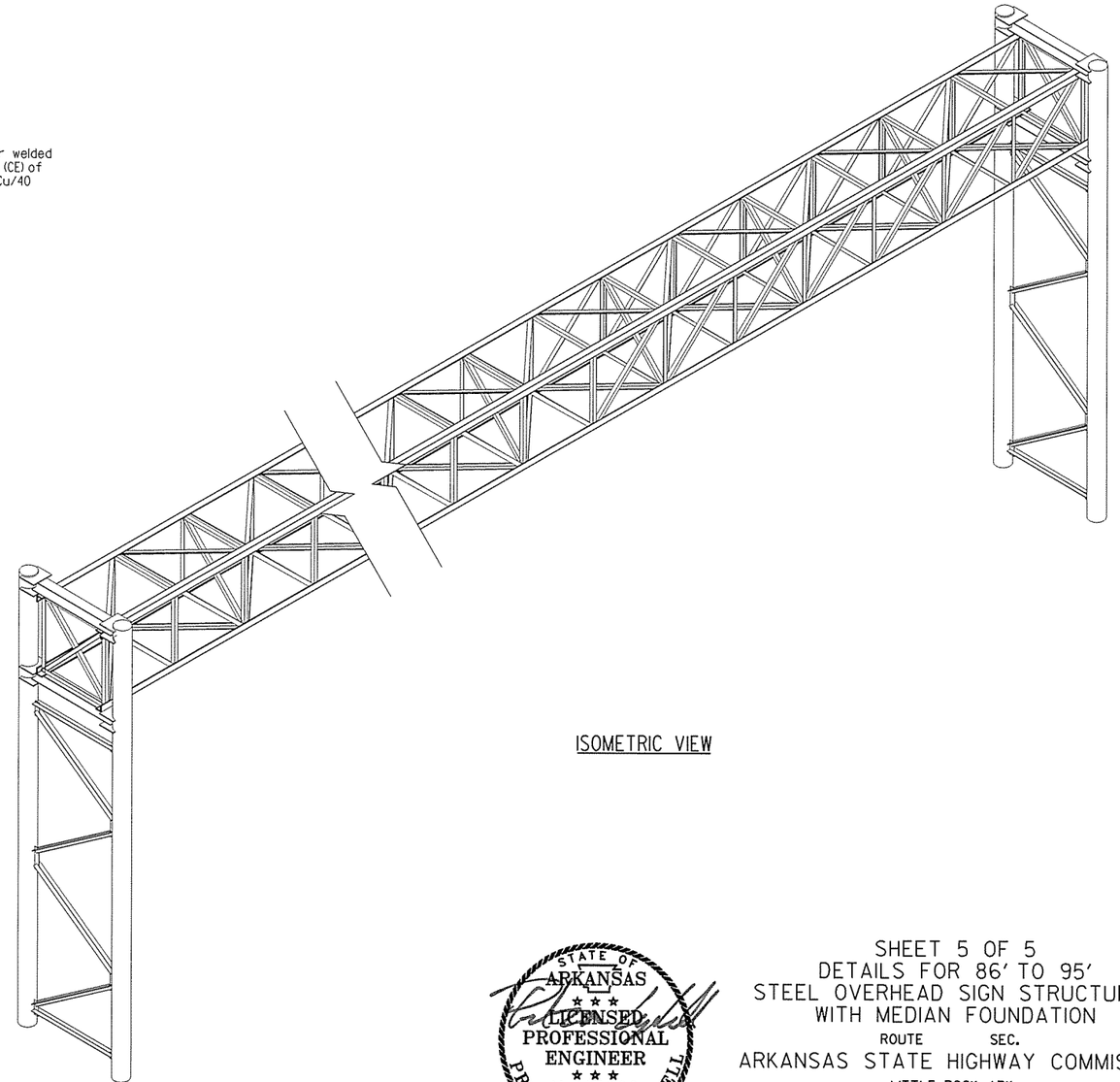

ISOMETRIC VIEW

STATE OF ARKANSAS
LICENSED PROFESSIONAL ENGINEER
No. 15902
3-20-16
PRESTON C. CAMPBELL
BRIDGE ENGINEER

SHEET 5 OF 5
DETAILS FOR 86' TO 95' STEEL OVERHEAD SIGN STRUCTURES WITH MEDIAN FOUNDATION

ROUTE SEC.

ARKANSAS STATE HIGHWAY COMMISSION
LITTLE ROCK, ARK.

DRAWN BY: PCC DATE: OCT. 2015 FILENAME: BB0414_T10.dgn
CHECKED BY: ABH DATE: NOV. 2015 SCALE: NO SCALE
DESIGNED BY: PCC DATE: OCT. 2015
STR. NO. OH-049-072-06 OH-049-072-09 DRAWING NO. 58301

jeskinner 3/20/2016 3:36:40 PM
WORKSPACE: AHTD BP-10.0
L:\2015\M007707 - I-540 Widening & Interchange Improvement\Drawings\1540-SS-SIG-OH.dgn
REVISED DATE:

DATE REVISED	DATE FILMED	DATE REVISED	DATE FILMED	FED. ROAD DIST. NO.	STATE	FED. AID PROJ. NO.	SHEET NO.	TOTAL SHEETS
				6	ARK.			
				JOB NO.		BB0414	579	886
				(1) CL-049-72-05, -08 SIGN STRUCTURE				58302

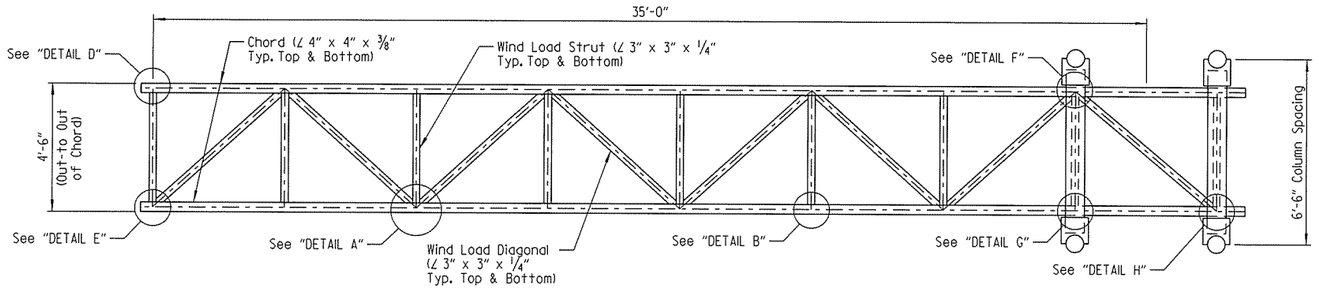

PLAN
Scale: 3/8" = 1'-0"

NOTE:
For "DETAIL A" thru "DETAIL H", see Dwg. No. 58304.

For "VIEW B-B" and "DETAIL J" thru "DETAIL M", see Dwg. No. 58303.

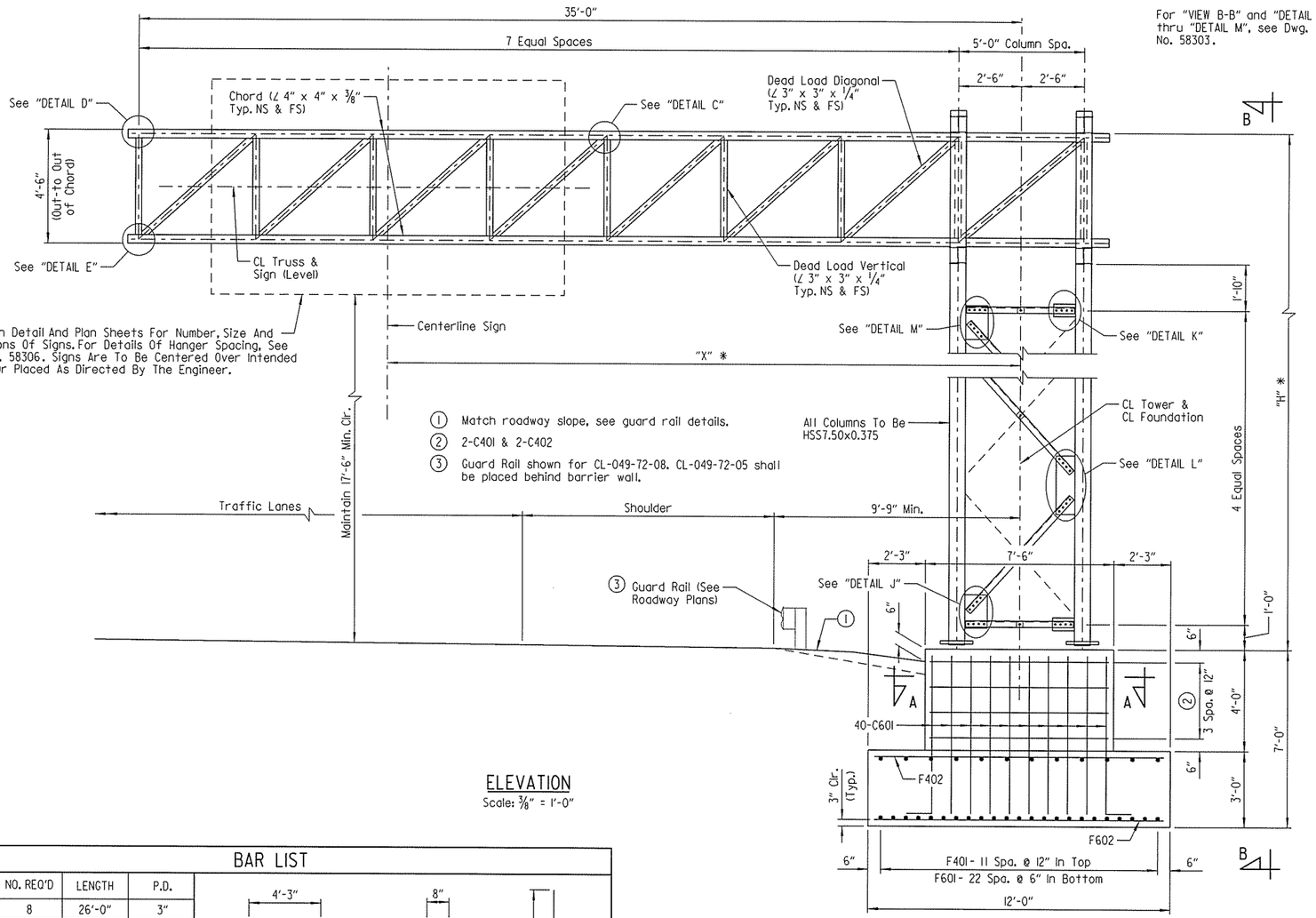

ELEVATION
Scale: 3/8" = 1'-0"

* NOTE:
The Contractor shall make field measurements to determine the following:

1.) To verify that dimension "X" is sufficient to center the sign over the intended lane while maintaining minimum horizontal clearances.

2.) To determine the column height "H" required to maintain the minimum vertical clearance with the centerline of the sign located at the CL of the truss. If the structure height "H" exceeds 30'-0", contact the Engineer.

These verifications and measurements are required prior to submittal of the shop drawings. The column height "H" shall be shown on the shop drawings with a note stating that the Contractor has made the required field measurements.

TABLE OF VARIABLES

STRUCTURE NUMBER	"X"
CL-049-72-05	23'-3"
CL-049-72-08	25'-9"

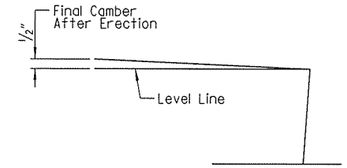

TRUSS CAMBER DIAGRAM
No Scale

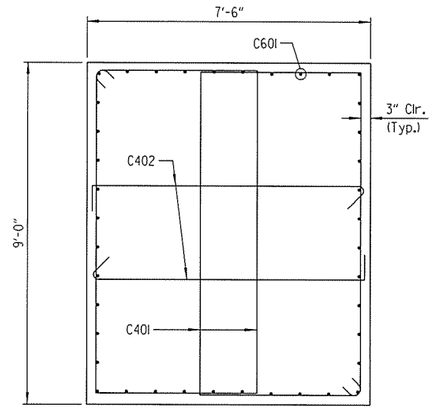

SECTION A-A
Scale: 1/2" = 1'-0"

BAR LIST

MARK	NO. REQ'D	LENGTH	P.D.
C401	8	26'-0"	3"
C402	8	8'-0"	3"
C601	40	7'-2"	4 1/2"
F401	12	14'-6"	Str.
F402	15	11'-6"	Str.
F601	23	14'-6"	Str.
F602	29	11'-6"	Str.

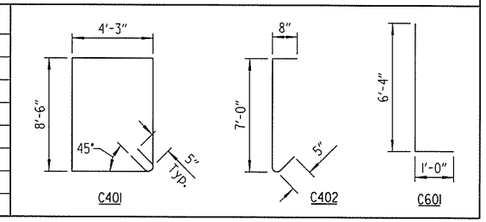

NOTE: Dimensions of bars are out-to-out.

APPROXIMATE QUANTITIES FOR FOUNDATION (FOR INFORMATION ONLY)

CLASS S CONCRETE (Cu. Yards)	REINFORCING STEEL (Lbs.)	EXCAVATION (Cu. Yards)
30.0	1846	61

STATE OF ARKANSAS
LICENSED PROFESSIONAL ENGINEER
No. 15902
PRESTON C. CAMPBELL
3-20-16
BRIDGE ENGINEER

SHEET 1 OF 5
DETAILS FOR 35' STEEL CANTILEVER SIGN STRUCTURE
ROUTE SEC.
ARKANSAS STATE HIGHWAY COMMISSION
LITTLE ROCK, ARK.

DRAWN BY: PCC DATE: OCT. 2015 FILENAME: BBB0414_T11.dgn
CHECKED BY: AJK DATE: MAR. 2016 SCALE: AS SHOWN
DESIGNED BY: PCC DATE: OCT. 2015
STR. NO. CL-049-72-05, -08 DRAWING NO. 58302

jeskinner 3/20/2016 3:36:41 PM
WORKSPACE: AHTD 9-2-99
L:\2016\16077.01 - I-540 Widening & Interchange Improvement\Drawings\I540-SS-SIII-CL.dgn
REVISED DATE:

DATE REVISED	DATE FILMED	DATE REVISED	DATE FILMED	FED. ROAD DIST. NO.	STATE	FED. AID PROJ. NO.	SHEET NO.	TOTAL SHEETS
				6	ARK.			
				JOB NO.		BB0414	580	886
				① CL-049-72-05, -08 SIGN STRUCTURE				58303

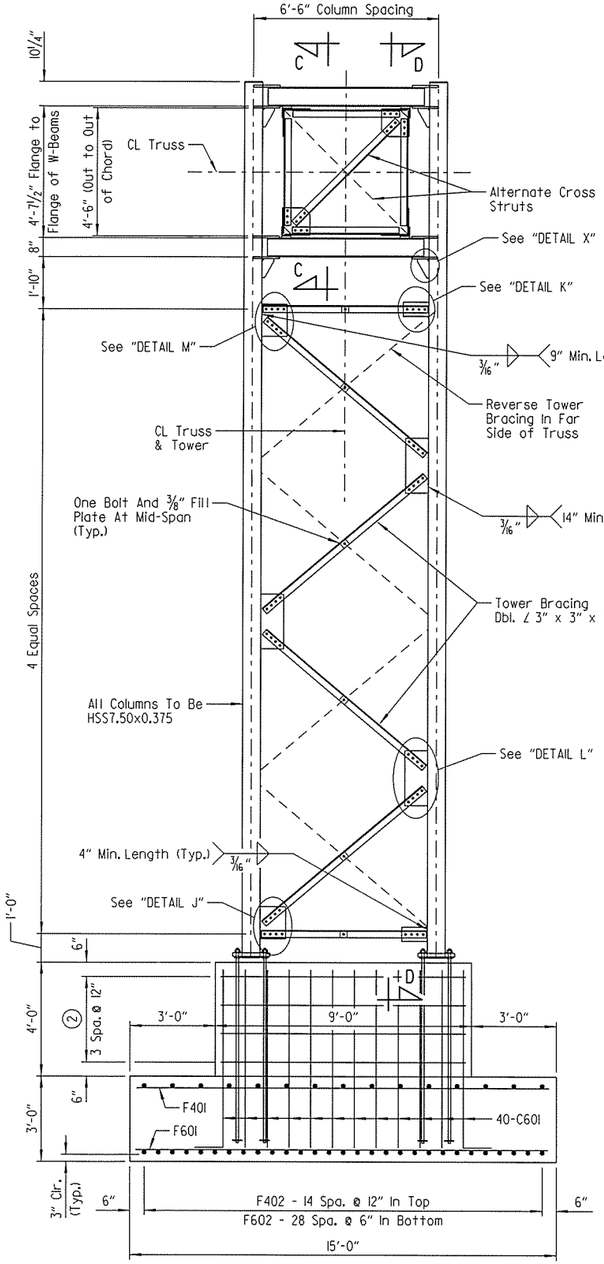

VIEW B-B
Scale: 3/8" = 1'-0"

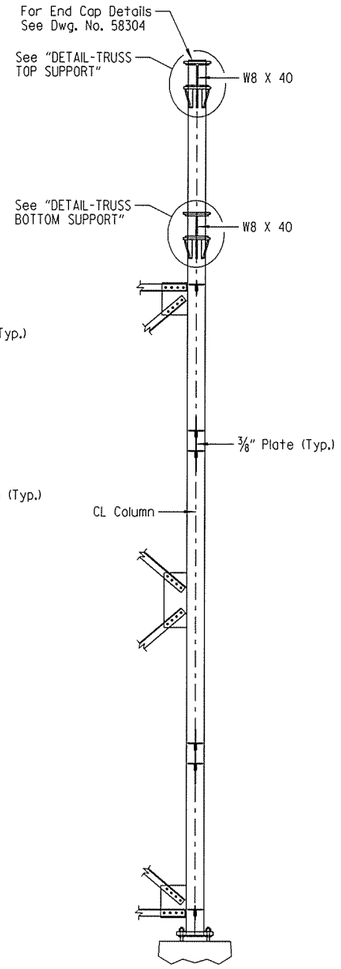

SECTION D-D
Scale: 3/8" = 1'-0"

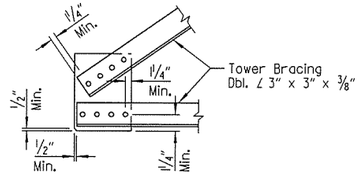

DETAIL J
Scale: 3/4" = 1'-0"

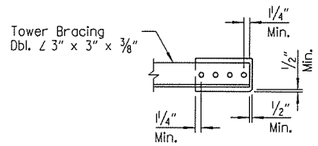

DETAIL K
Scale: 3/4" = 1'-0"

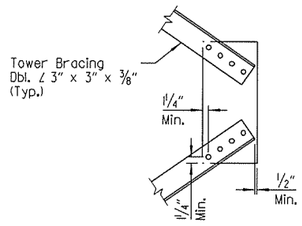

DETAIL L
Scale: 3/4" = 1'-0"

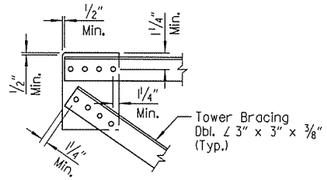

DETAIL M
Scale: 3/4" = 1'-0"

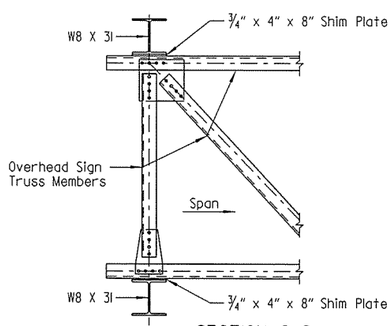

SECTION C-C
No Scale

① Bolts shall be 7/8"ø and holes in beam flange and 3/4" shim shall be 15/16 "ø.

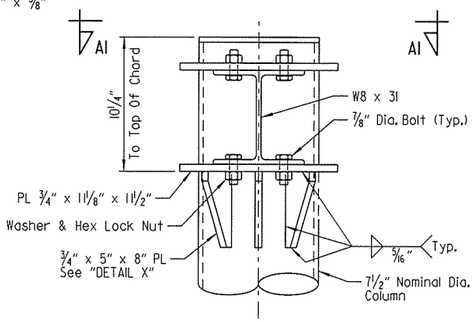

DETAIL - TRUSS TOP SUPPORT
No Scale

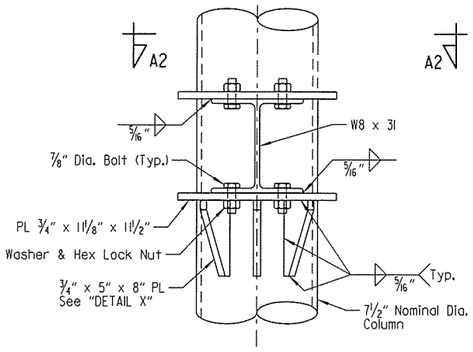

DETAIL - TRUSS BOTTOM SUPPORT
No Scale

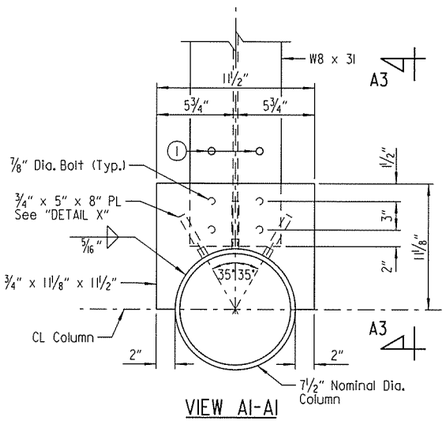

VIEW A1-A1
No Scale

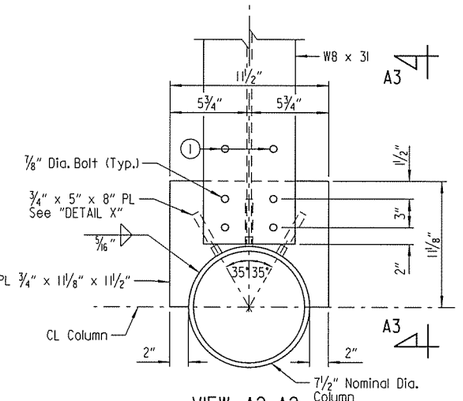

VIEW A2-A2
No Scale

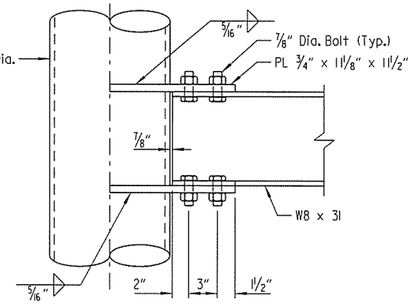

VIEW A3-A3
No Scale
(¾" x 5" x 8" Plates Not Shown For Clarity)

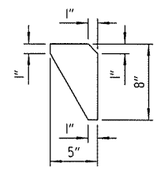

DETAIL X
No Scale

STATE OF ARKANSAS
LICENSED PROFESSIONAL ENGINEER
No.15902
PRESTON C. CAMPBELL
3-20-16
BRIDGE ENGINEER

SHEET 2 OF 5
DETAILS FOR 35' STEEL CANTILEVER SIGN STRUCTURE

ROUTE SEC.

ARKANSAS STATE HIGHWAY COMMISSION
LITTLE ROCK, ARK.

DRAWN BY: PCC DATE: OCT. 2015 FILENAME: BBB0414_T12.dgn
CHECKED BY: AJK DATE: MAR. 2016 SCALE: AS SHOWN
DESIGNED BY: PCC DATE: OCT. 2015

STR. NO. CL-049-72-05, -08 DRAWING NO. 58303

jeskinner 3/20/2016 3:36:41 PM
WORKSPACE: AHTD Projects
L:\2016\16077\07 I-540 Widening & Interchange Improvement\Drawings\I540-SS-SII2-CL.dgn
REVISED DATE:

DATE REVISED	DATE FILMED	DATE REVISED	DATE FILMED	FED. ROAD DST. NO.	STATE	FED. AID PROJ. NO.	SHEET NO.	TOTAL SHEETS
				6	ARK.			
				JOB NO.		BB0414	581	886
				(1) CL-049-72-05, -08 SIGN STRUCTURE				58304

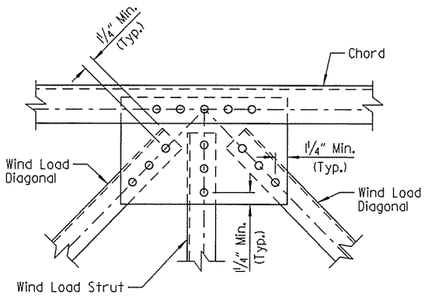

DETAIL A
Scale: 1½" = 1'-0"

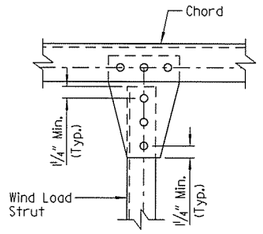

DETAIL B
Scale: 1½" = 1'-0"

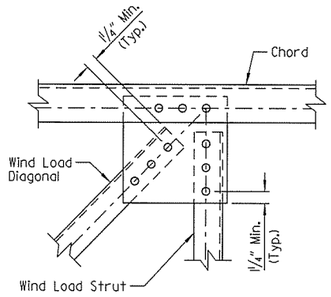

DETAIL C
Scale: 1½" = 1'-0"

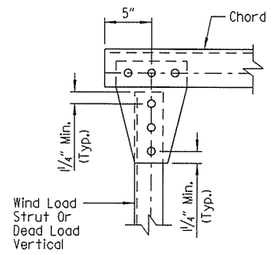

DETAIL D
Scale: 1½" = 1'-0"

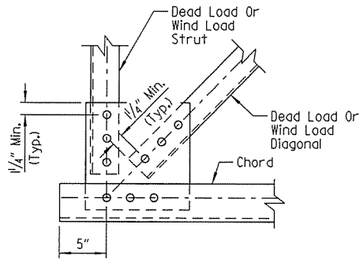

DETAIL E
Scale: 1½" = 1'-0"

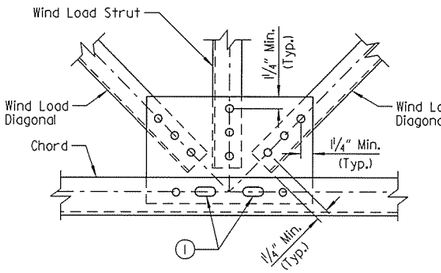

DETAIL F
Scale: 1½" = 1'-0"

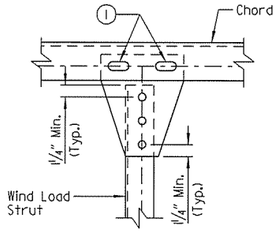

DETAIL G
Scale: 1½" = 1'-0"

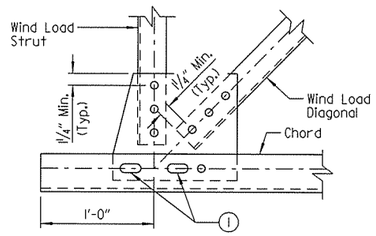

DETAIL H
Scale: 1½" = 1'-0"

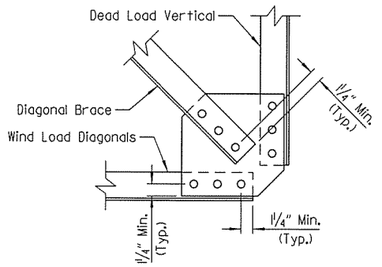

DETAIL I
Scale: 1½" = 1'-0"

NOTE:
Thickness of all gusset plates shall be ⅜".

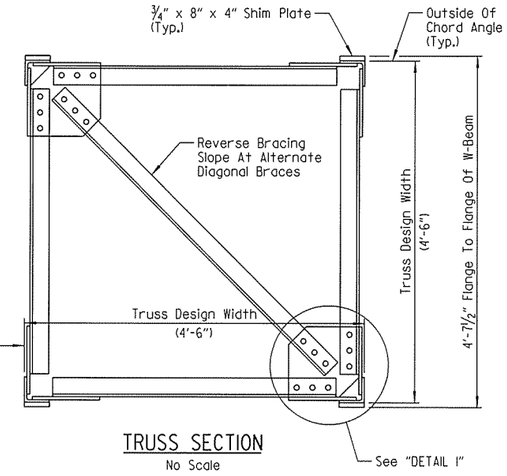

TRUSS SECTION
No Scale

(1) Bolts shall be ⅞"ø and slotted hole in chord angle shall be 15/16" x 2 3/16". Use plate washer on chord angle side. Holes shall be 15/16"ø in ¾" shim plate and beam flange.

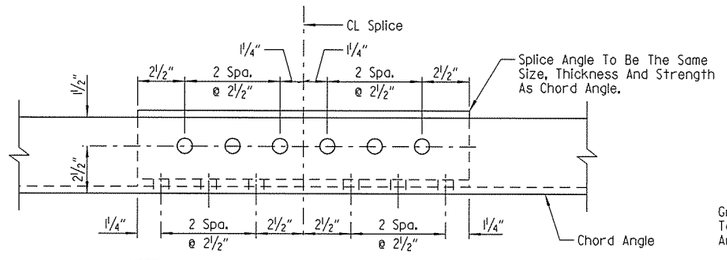

NOTE:
Place splice angles on inside of truss. Bolts shall be ¾"ø and open holes shall be 13/16 "ø.

OPTIONAL CHORD SPLICE USING ANGLES (1)

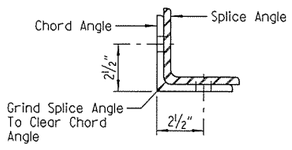

SECTION AT CL SPLICE

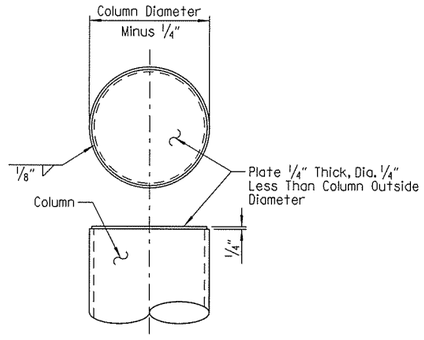

END CAP DETAILS
No Scale

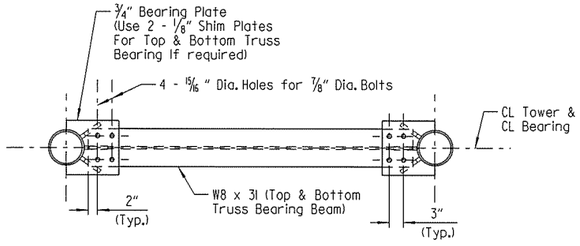

PLAN AT TRUSS BEARING
No Scale

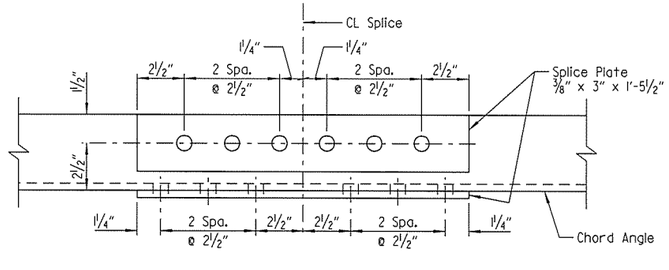

CHORD SPLICE USING PLATES (1)

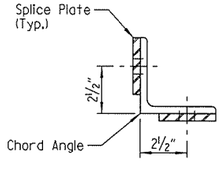

SECTION AT CL SPLICE

(1) Bolts shall be ¾" Dia. and open holes shall be 15/16 " Dia. Minimum spacing shall be 2½".

SPLICE DETAILS
No Scale

STATE OF ARKANSAS
LICENSED PROFESSIONAL ENGINEER
No. 15902
PRESTON C CAMPBELL
3-20-16
BRIDGE ENGINEER

SHEET 3 OF 5
DETAILS FOR 35' STEEL
CANTILEVER SIGN STRUCTURE
ROUTE SEC.
ARKANSAS STATE HIGHWAY COMMISSION
LITTLE ROCK, ARK.

DRAWN BY: PCC DATE: OCT. 2015 FILENAME: BBB0414_T13.dgn
CHECKED BY: AJK DATE: MAR. 2016 SCALE: AS SHOWN
DESIGNED BY: PCC DATE: OCT. 2015
STR. NO. CL-049-72-05, -08 DRAWING NO. 58304

JesKinner 3/20/2016 3:36:41 PM
WORKSPACE: AHTD_Bridge
L:\ROW\NOT\07 - I-540 Widening & Interchange Improvement\Drawings\540-SS-S13-CL.dgn
REVISED DATE:

DATE REVISED	DATE FILMED	DATE REVISED	DATE FILMED	FED. ROAD DIST. NO.	STATE	FED. AID PROJ. NO.	SHEET NO.	TOTAL SHEETS
				6	ARK.			
				JOB NO.		BB0414	582	886
				(1) CL-049-72-05, -08 SIGN STRUCTURE				58305

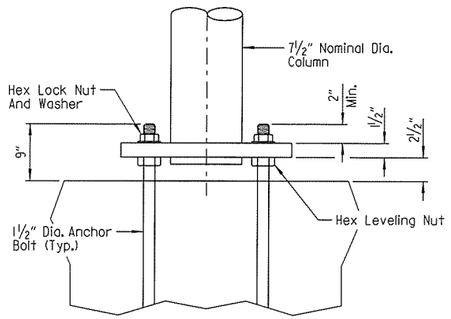

ELEVATION - COLUMN BASE

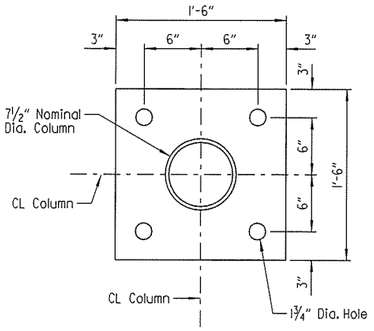

PLAN - COLUMN BASE

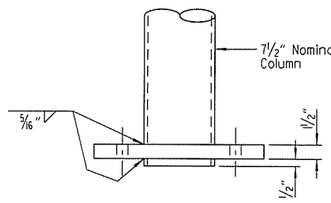

Note:
Diameter of hole in base plate to be 1/8" larger than column diameter.

DETAIL OF COLUMN CONNECTION TO BASE PLATE

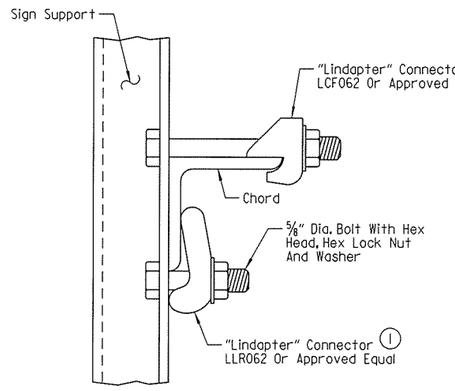

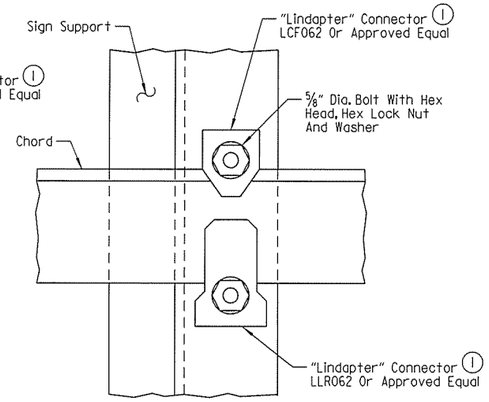

TOP CHORD

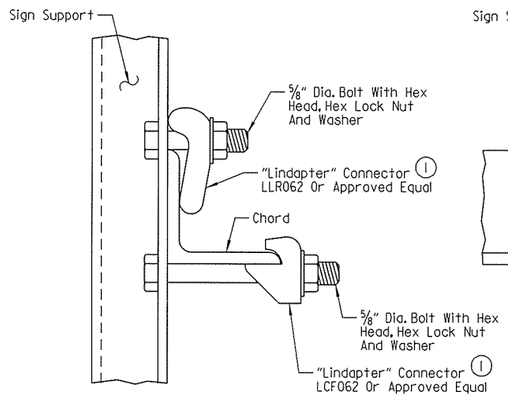

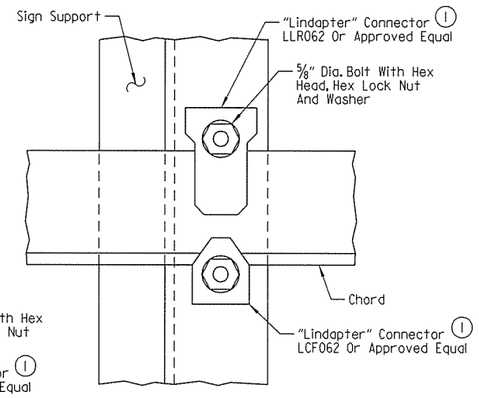

BOTTOM CHORD

(1) Note:
All "Lindapter" connectors or approved equal shall be installed according to Manufacturer's recommendations. All connectors, bolts, nuts and washers shall be galvanized.

Note:
Install all support connectors clear of the gusset plates and splice locations.

DETAILS OF SIGN SUPPORT CONNECTED TO TRUSS

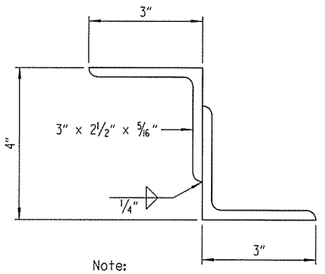

Note:
Structural Z support may be fabricated from angles as shown.

DETAILS OF ALTERNATE Z SUPPORT

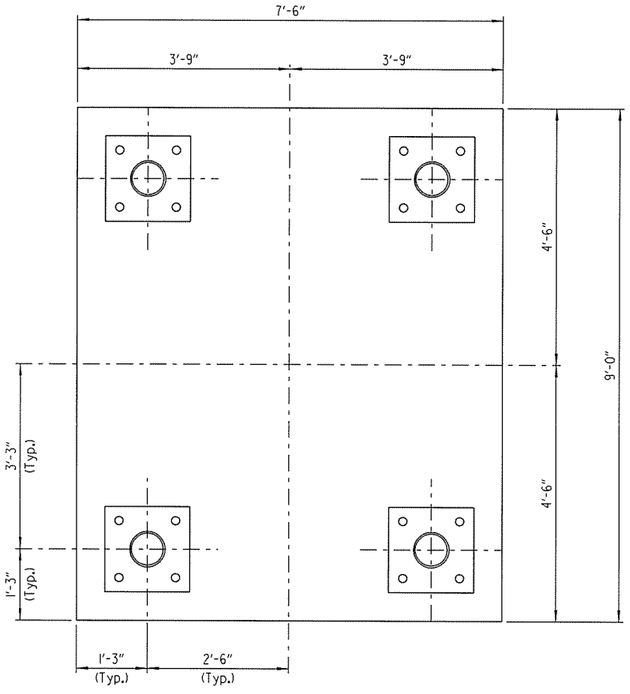

PLAN - TOWER BASE

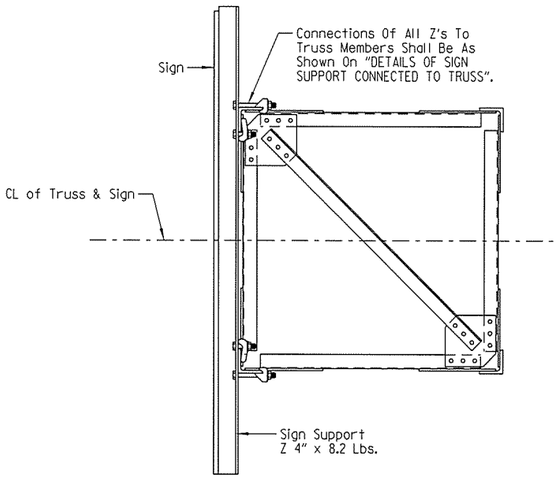

SECTION THRU TRUSS

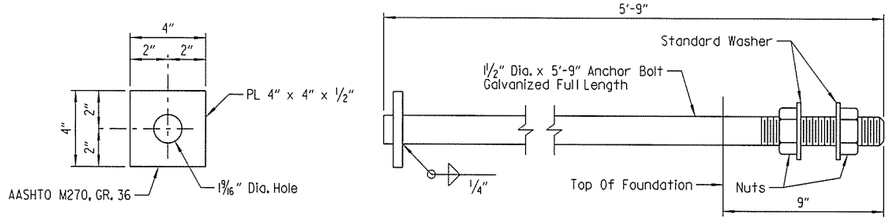

Anchor bolts shall comply with AASHTO M34, Grade 55 with Supplementary Requirement S1 and galvanized according to Section 807.07. Nuts for bolts shall be as specified in Section 807.07.

ANCHOR BOLT DETAIL

STATE OF ARKANSAS
LICENSED PROFESSIONAL ENGINEER
No. 15902
PRESTON C. CAMPBELL
BRIDGE ENGINEER

SHEET 4 OF 5
DETAILS FOR 35' STEEL CANTILEVER SIGN STRUCTURE

ROUTE SEC.

ARKANSAS STATE HIGHWAY COMMISSION
LITTLE ROCK, ARK.

DRAWN BY: PCC DATE: OCT. 2015 FILENAME: BBB0414_T14.dgn
CHECKED BY: AJK DATE: MAR. 2016 SCALE: NO SCALE
DESIGNED BY: PCC DATE: OCT. 2015

STR. NO. CL-049-72-05, -08 DRAWING NO. 58305

jeskinner 3/20/2016 3:36:42 PM
WORKSPACE...MHTD Bridge
L:\2014\140707 - I-540 Widening & Interchange Improvement\Drawings\1540-SS-SI4-CL.dgn
REVISED DATE:

DATE REVISED	DATE FILMED	DATE REVISED	DATE FILMED	FED. ROAD DIST. NO.	STATE	FED. AID PROJ. NO.	SHEET NO.	TOTAL SHEETS
				6	ARK.			
				JOB NO.		BB0414	583	886
				(1) CL-049-72-05, -08 SIGN STRUCTURE				58306

GENERAL NOTES:

CONSTRUCTION SPECIFICATIONS: Arkansas State Highway and Transportation Department Standard Specifications for Highway Construction, 2014 Edition, with applicable supplemental specifications and special provisions. Section and subsection refer to the Standard Construction Specifications unless otherwise noted in the plans.

DESIGN SPECIFICATIONS: AASHTO Standard Specifications for Structural Supports for Highway Signs, Luminaires and Traffic Signals, Sixth Edition, 2013, with current Interim Revisions.

Basic Wind Speed = 90 mph
Fatigue Category: I

This structure is approved for 235 square feet of sign area with a weight of 2.5 lbs. per sq. foot. Use of additional sign area must be approved by the Engineer. If the structure height ("H") exceeds 30'-0", contact the Engineer.

FOUNDATION MATERIALS AND STRENGTHS:
Class S Concrete f'c = 3,500 psi
Reinforcing Steel (Grade 60, AASHTO M 31 or M 322, Type A) fy = 60,000 psi

Structural steel sign support members shall comply with the following specifications:

Angles:	AASHTO M 270, Grade 36 (Fy = 36,000 psi)
Plate:	AASHTO M 270, Grade 50 (Fy = 50,000 psi)
(1) Pipe:	ASTM A 139, Gr. C (Fy = 42,000 psi)
	ASTM A 500, Gr. B (Fy = 42,000 psi)
	ASTM A 501, Gr. B (Fy = 50,000 psi)
	ASTM A 714, Class 2, Grade II, Type E or S (Fy = 50,000 psi)
All grades of pipe require Heat traceability back to the original melting mill.	
Z-Shapes:	AASHTO M 270, Grade 36 (Fy = 36,000 psi)
Shim Plates:	ASTM A 1011, SS, Grade 36, Type 2 or Grade 40
Bolts:	ASTM A 325, Type I
Locknuts - Approved Type:	Meeting or exceeding AASHTO M 292
Washers:	ASTM F 436
Nuts:	ASTM A 563 or AASHTO M 292, Grade DH or Grade 2H (Grade 10S)

All steel shall be galvanized according to Subsection 807.19. Steel completely encased in concrete may not be galvanized.

Drawings show general features of design only. Shop drawings shall be made in accordance with Subsection 807.04, submitted and approval secured before fabrication is begun.

Requests for substitution of structural steel shapes shown with shapes of greater size must be submitted by the Contractor to the Engineer for approval. Steels of equal or greater strengths will be accepted only when shown on the approved shop drawings. Shapes and materials shown in the plans will be the basis of payment and no additional compensation will be made for any adjustments due to substitutions.

Connections shall be bolted with high-strength bolts. Unless otherwise noted, bolts shall be ¾" diameter and open holes shall be 15/16" diameter. Bolt spacing shall be 2½" for ¾" diameter bolts unless otherwise noted. Bolts shall be placed with heads on the outside face of all members.

All welding that is to be done during fabrication of structural steel, including temporary welds, shall be detailed on the shop drawings and submitted for approval. If additional welds are required, whether temporary or permanent, a formal request with detailed drawings shall be submitted to the Engineer for approval. All welding shall conform to Subsection 807.26.

Anchor bolts shall comply with AASHTO M 314, Grade 55 including Supplementary Requirement S1, and galvanized according to Subsection 807.07. Nuts and washers for anchor bolts shall be furnished and galvanized in accordance with Subsection 807.07. Anchor bolts shall be pretensioned in accordance with SP JOB NO. BB0414 "STEEL SIGN STRUCTURES".

All truss frame bolts shall comply with ASTM A325 Type I, galvanized according to Subsection 807.06. Nuts and washers for ASTM A325 Type I bolts shall be furnished and galvanized in accordance with Subsection 807.06.

Field splices shall be located in order to avoid sign panel connections. Only one chord splice is permitted with a minimum section length of 15 feet.

All main load carrying tension members greater than ½" in thickness shall conform to the requirements of the Longitudinal Charpy V-Notch test specified for Zone 1 minimum service temperature. This work and materials shall be paid for in accordance with SP JOB NO. BB0414 "STEEL SIGN STRUCTURES".

All fillet welds of critical members shall be tested according to AWS D1.1 Structural Welding Code - Steel using the magnetic particle method. Critical welds shall include: column to truss connection plate welds.

All CJP groove welds shall be tested according to AWS D1.1 Structural Welding Code - Steel.

No circumferential butt welds will be allowed in any pipe sections.

Truss field sections shall be shop assembled. Entire truss shall be fully assembled and lifted into place as one unit on to support. All truss member connections shall be bolted connections.

Lock nuts to be equipped with nylon locking inserts or other approved type locking system. Lock nuts to be installed according to Manufacturer's recommendations.

Shoring may be required to protect existing shoulders during excavation. Any shoring required shall not be paid for directly, but shall be considered incidental to the item "STEEL CANTILEVER SIGN STRUCTURE". The excavations for the footings shall be backfilled before the structure is attached to the foundations.

Galvanized coating damaged during transport, handling or erection shall be field repaired in accordance with Subsection 807.88.

The Contractor shall make check measurements in the field and make any adjustments necessary to meet the required clearances and to fit new structures to the existing conditions.

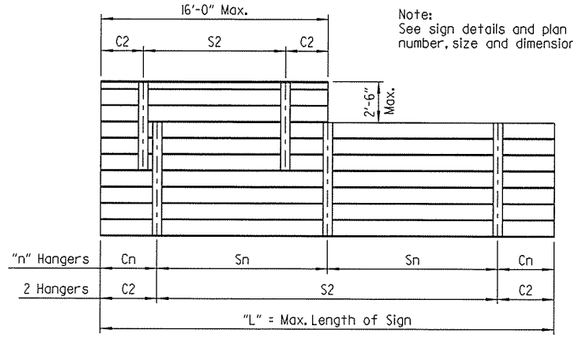

Note:
See sign details and plan sheets for number, size and dimensions of signs.

HANGER SPACING DETAILS FOR EXTRUDED PANEL SIGNS

HANGER VARIABLES

Max. Length of Sign = "L"	"n" Hangers	Cantilever Length "Cn"	Hanger Spacing "Sn"
15'-0"	2 Hangers	0.21 x "L"	0.58 x "L"
30'-0"	3 Hangers	0.145 x "L"	0.355 x "L"

Hanger spacing and cantilever length shall be rounded to the nearest inch.

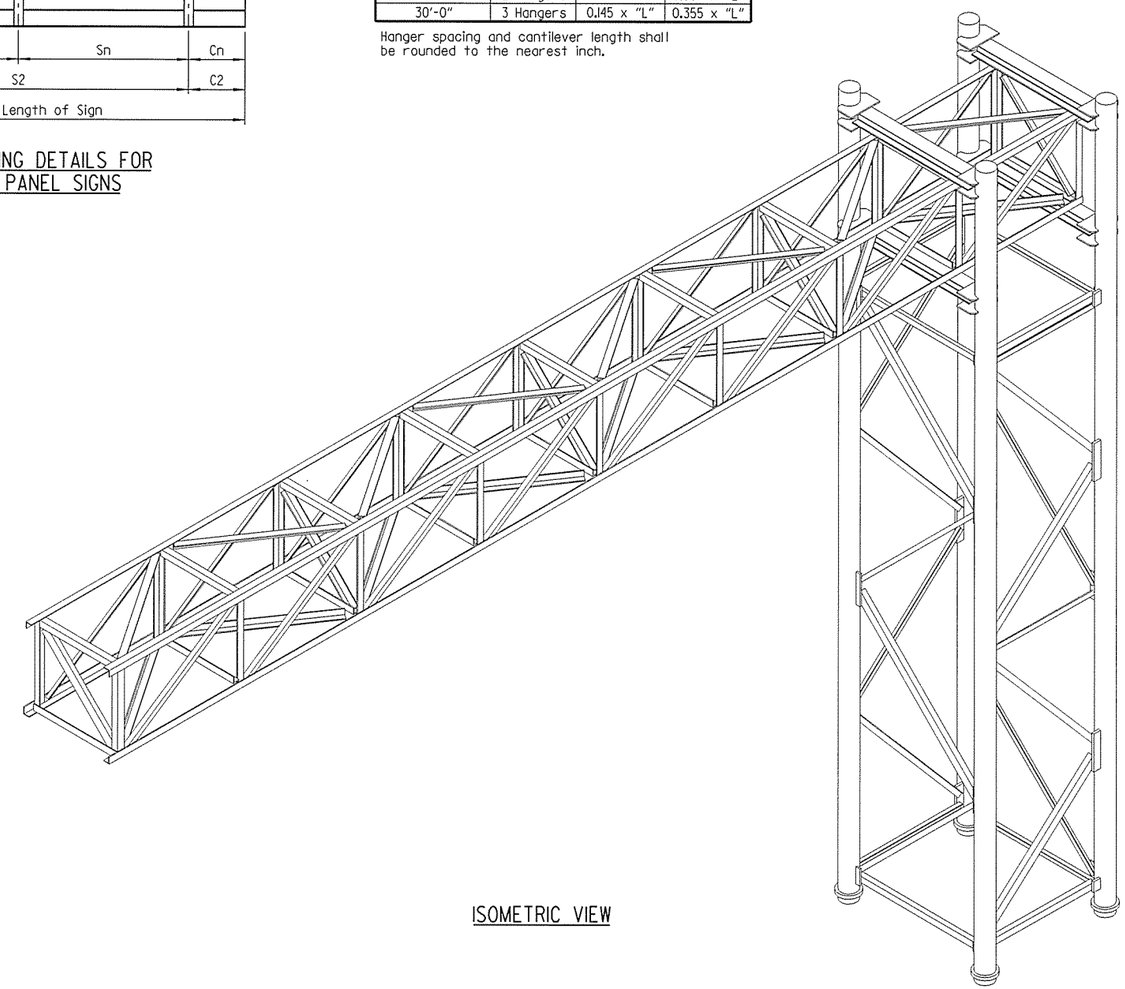

ISOMETRIC VIEW

(1) In addition to material requirements, all pipe used for welded applications shall have a maximum carbon equivalency (CE) of 0.4 using the following equation: CE = %C + %Mn/6 + %Cu/40 + %Ni/20 + %Cr/10 - %Mo/50 - %V/10

STATE OF ARKANSAS
LICENSED PROFESSIONAL ENGINEER
No. 15902
3-20-16
PRESTON C. CAMPBELL
BRIDGE ENGINEER

SHEET 5 OF 5
DETAILS FOR 35' STEEL CANTILEVER SIGN STRUCTURE

ROUTE SEC.

ARKANSAS STATE HIGHWAY COMMISSION
LITTLE ROCK, ARK.

DRAWN BY: PCC DATE: OCT. 2015 FILENAME: BBB0414_T15.dgn
CHECKED BY: AJK DATE: MAR. 2016 SCALE: NO SCALE
DESIGNED BY: PCC DATE: OCT. 2015

STR. NO. CL-049-72-05, -08 DRAWING NO. 58306

jeskinner 3/20/2016 3:36:42 PM
WORKSPACE: AHTD_Bridge
L:\ROW\NHT07 - I-540 Widening & Interchange Improvement\Drawings\I540-SS-SH5-CL.dgn
REVISED DATE:

DATE REVISED	DATE FILMED	DATE REVISED	DATE FILMED	FED. ROAD DIST. NO.	STATE	FED. AID PROJ. NO.	SHEET NO.	TOTAL SHEETS
				6	ARK.			
				JOB NO.		BB0414	584	886
				①	CL-049-72-04	SIGN STRUCTURE		58307

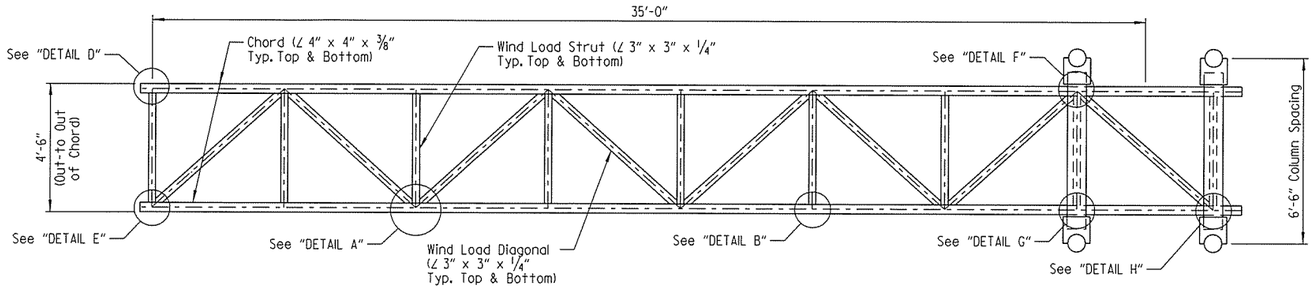

PLAN
Scale: 3/8" = 1'-0"

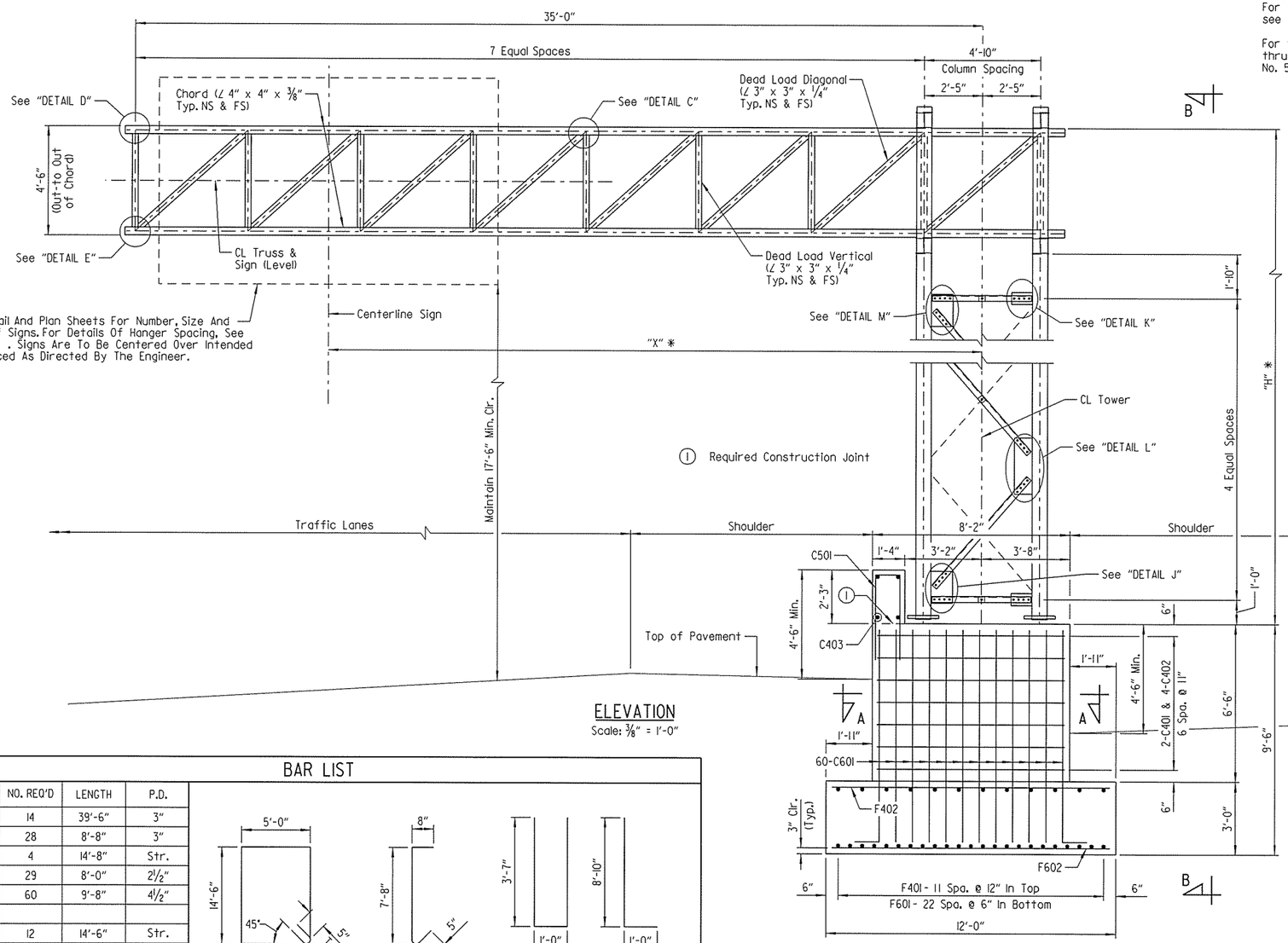

ELEVATION
Scale: 3/8" = 1'-0"

BAR LIST

MARK	NO. REQ'D	LENGTH	P.D.
C401	14	39'-6"	3"
C402	28	8'-8"	3"
C403	4	14'-8"	Str.
C501	29	8'-0"	2½"
C601	60	9'-8"	4½"
F401	12	14'-6"	Str.
F402	15	11'-6"	Str.
F601	23	14'-6"	Str.
F602	29	11'-6"	Str.

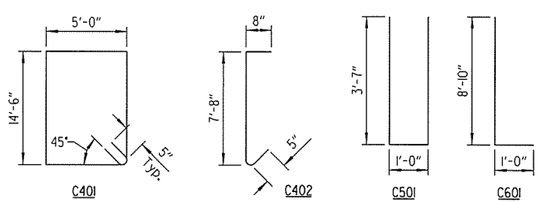

NOTE: Dimensions of bars are out-to-out.

* NOTE:
The Contractor shall make field measurements to determine the following:

1.) To verify that dimension "X" is sufficient to center the sign over the intended lane while maintaining minimum horizontal clearances.

2.) To determine the column height "H" required to maintain the minimum vertical clearance with the centerline of the sign located at the CL of the truss. If the structure height "H" exceeds 30'-0", contact the Engineer.

These verifications and measurements are required prior to submittal of the shop drawings. The column height "H" shall be shown on the shop drawings with a note stating that the Contractor has made the required field measurements.

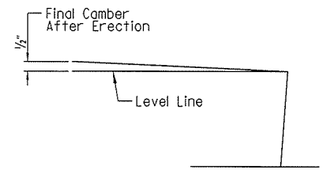

TRUSS CAMBER DIAGRAM
No Scale

NOTE:
For "DETAIL A" thru "DETAIL H", see Dwg. No. 58309.

For "VIEW B-B" and "DETAIL J" thru "DETAIL M", see Dwg. No. 58308.

TABLE OF VARIABLES

STRUCTURE NUMBER	"X"
CL-049-72-04	20'-9"

APPROXIMATE QUANTITIES (FOR INFORMATION ONLY)

CLASS S CONCRETE (Cu. Yards)	REINFORCING STEEL (Lbs.)	EXCAVATION (Cu. Yards)
51.2	2917	-

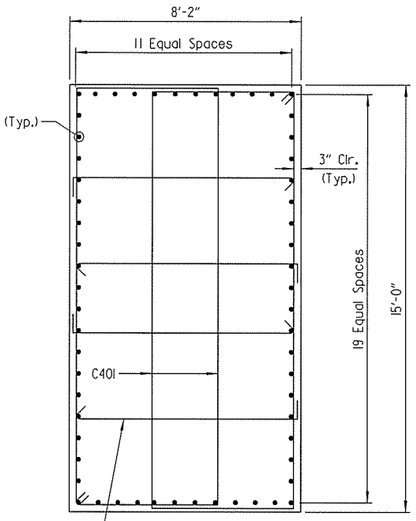

SECTION A-A
Scale: 3/8" = 1'-0"

BRIDGE ENGINEER

SHEET 1 OF 5
DETAILS FOR 35' STEEL CANTILEVER SIGN STRUCTURE WITH SPECIAL FOUNDATION

ROUTE SEC.

ARKANSAS STATE HIGHWAY COMMISSION
LITTLE ROCK, ARK.

DRAWN BY: PCC DATE: MAR. 2016 FILENAME: BBB0414_T16.dgn
CHECKED BY: AJK DATE: MAR. 2016 SCALE: AS SHOWN
DESIGNED BY: PCC DATE: MAR. 2016

STR. NO. CL-049-72-04 DRAWING NO. 58307

jeskinner 3/20/2016 3:36:42 PM
WORKSPACE: MTD 58-dgn
V:\Governor\Engineering\Local\gdot6\Projects\2011\N017707 - I-540 Widening & Interchange Improvement\Drawings\I540-SS-SIG-CL.dgn
REVISED DATE:

DATE REVISED	DATE FILMED	DATE REVISED	DATE FILMED	FED. ROAD DIST. NO.	STATE	FED. AID PROJ. NO.	SHEET NO.	TOTAL SHEETS
				6	ARK.			
				JOB NO.		BB0414	585	886
				(1) CL-049-72-04		SIGN STRUCTURE		58308

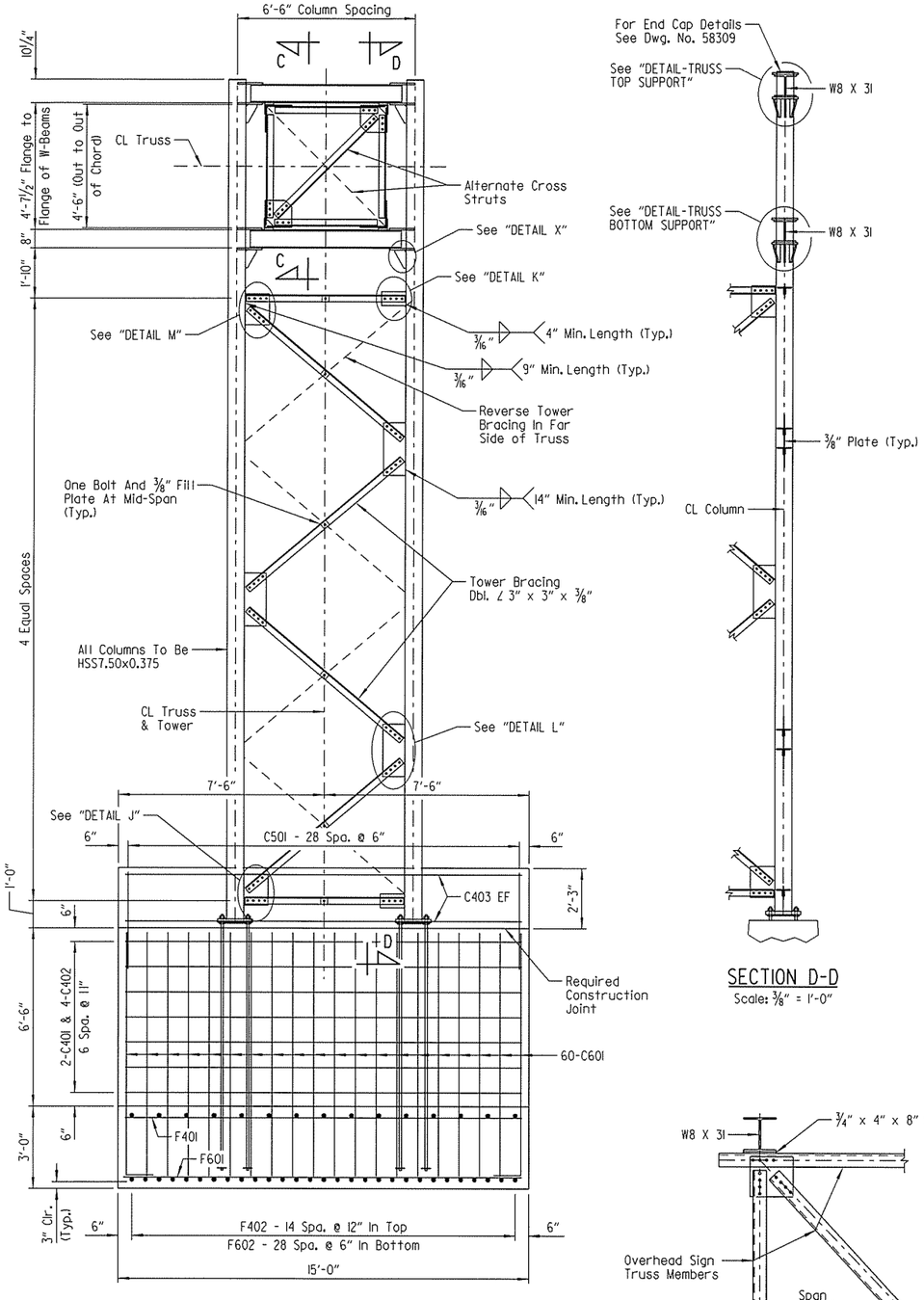

SECTION D-D
Scale: 3/8" = 1'-0"

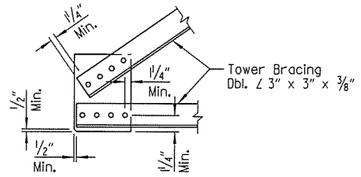

DETAIL J
Scale: 3/4" = 1'-0"

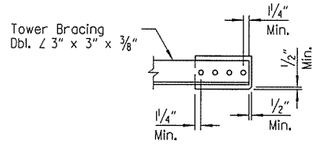

DETAIL K
Scale: 3/4" = 1'-0"

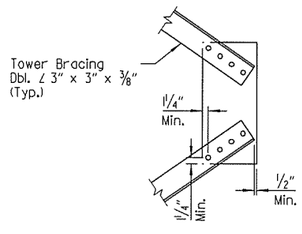

DETAIL L
Scale: 3/4" = 1'-0"

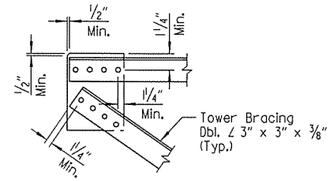

DETAIL M
Scale: 3/4" = 1'-0"

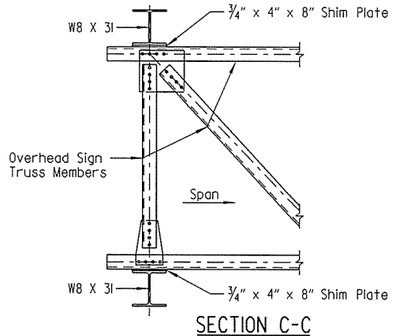

SECTION C-C
No Scale

(1) Bolts shall be 7/8"ø and holes in beam flange and 3/4" shim shall be 15/16 "ø.

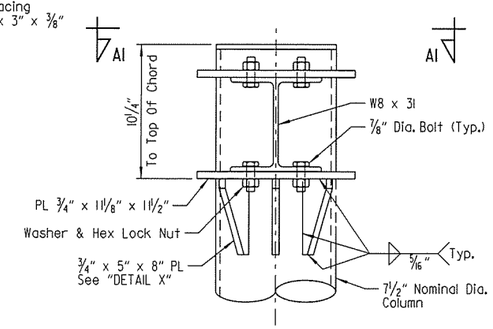

DETAIL - TRUSS TOP SUPPORT
No Scale

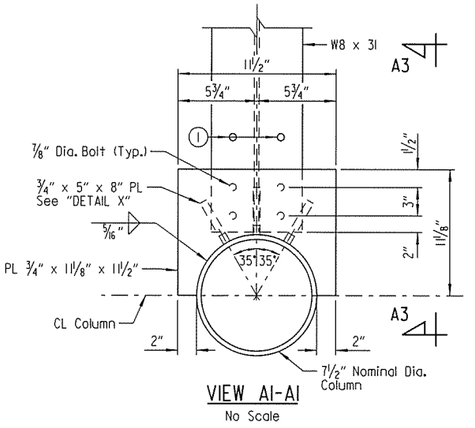

VIEW A1-A1
No Scale

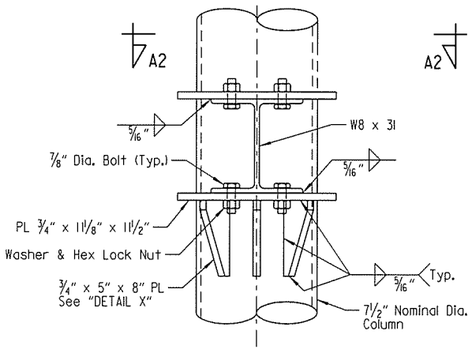

DETAIL - TRUSS BOTTOM SUPPORT
No Scale

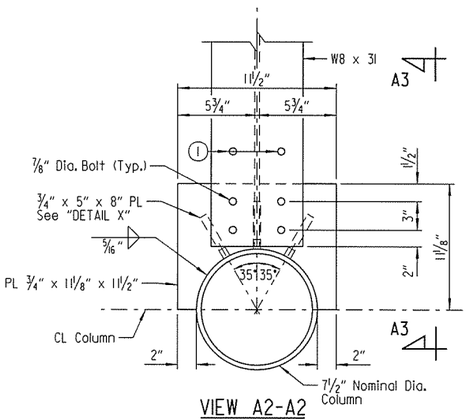

VIEW A2-A2
No Scale

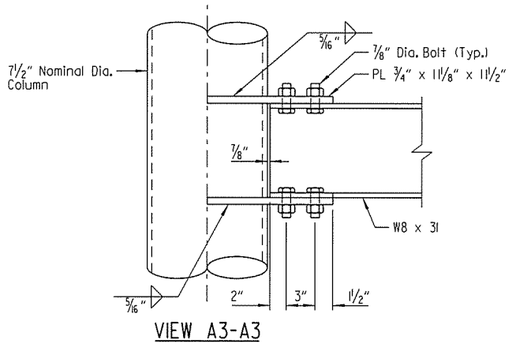

VIEW A3-A3
No Scale
(¾" x 5" x 8" Plates Not Shown For Clarity)

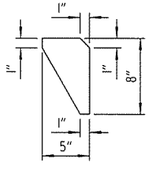

DETAIL X
No Scale

STATE OF ARKANSAS
LICENSED PROFESSIONAL ENGINEER
No.15902
3-20-16
PRESTON C. CAMPBELL
BRIDGE ENGINEER

SHEET 2 OF 5
DETAILS FOR 35' STEEL CANTILEVER SIGN STRUCTURE WITH SPECIAL FOUNDATION

ROUTE SEC.

ARKANSAS STATE HIGHWAY COMMISSION

LITTLE ROCK, ARK.

DRAWN BY: PCC DATE: MAR. 2016 FILENAME: BBB0414_T17.dgn
CHECKED BY: AJK DATE: MAR. 2016 SCALE: AS SHOWN
DESIGNED BY: PCC DATE: MAR. 2016

STR. NO. CL-049-72-04 DRAWING NO. 58308

jeskinner 3/20/2016 3:36:43 PM
Workspace: ANTD Bridge
V:\Corven Inc\Local\Vgdata\Projects\20INI007707 - I-540 Widening & Interchange Improvement\Drawings\I540-SS-SI17-CL.dgn
REVISED DATE:

DATE REVISED	DATE FILMED	DATE REVISED	DATE FILMED	FED. ROAD DIST. NO.	STATE	FED. AID PROJ. NO.	SHEET NO.	TOTAL SHEETS
				6	ARK.			
				JOB NO.		BB0414	586	886
				(1) CL-049-72-04		SIGN STRUCTURE		58309

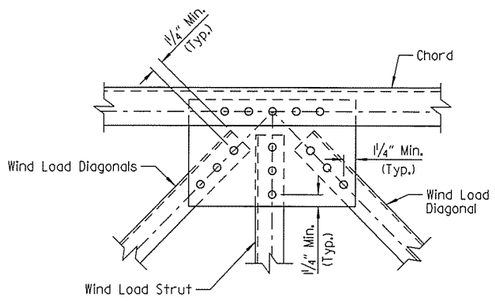

DETAIL A
Scale: 1½" = 1'-0"

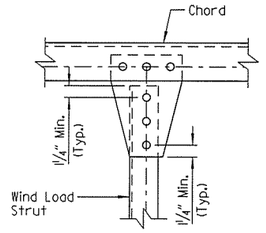

DETAIL B
Scale: 1½" = 1'-0"

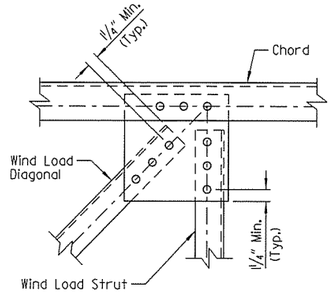

DETAIL C
Scale: 1½" = 1'-0"

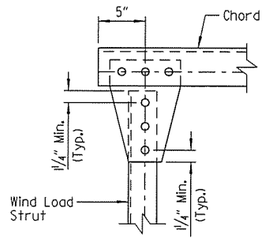

DETAIL D
Scale: 1½" = 1'-0"

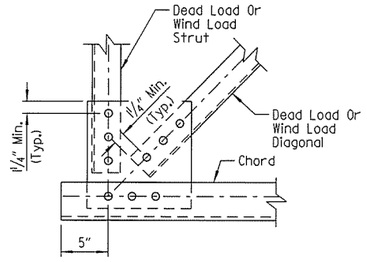

DETAIL E
Scale: 1½" = 1'-0"

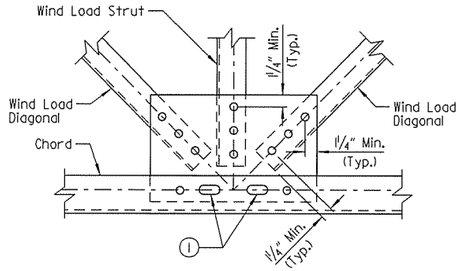

DETAIL F
Scale: 1½" = 1'-0"

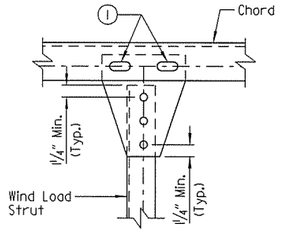

DETAIL G
Scale: 1½" = 1'-0"

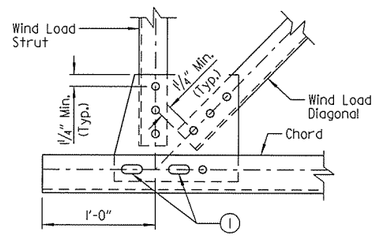

DETAIL H
Scale: 1½" = 1'-0"

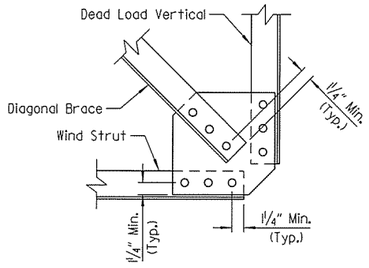

DETAIL I
Scale: 1½" = 1'-0"

NOTE:
Thickness of all gusset plates shall be ⅜".

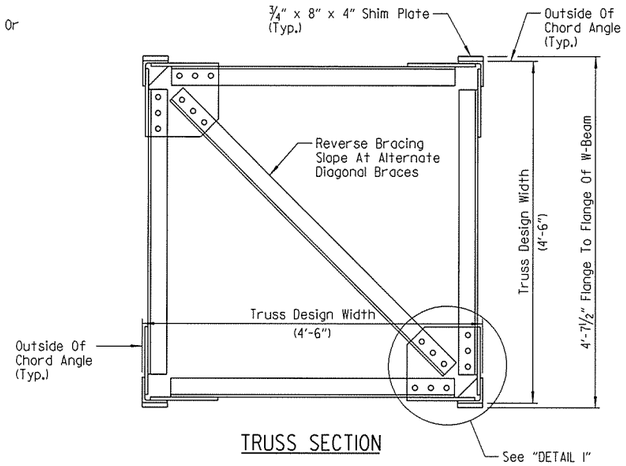

TRUSS SECTION

(1) Bolts shall be ⅞"ø and slotted hole in chord angle shall be 15/16" x 2 5/16". Use plate washer on chord angle side. Holes shall be 15/16"ø in ¾" shim plate and beam flange.

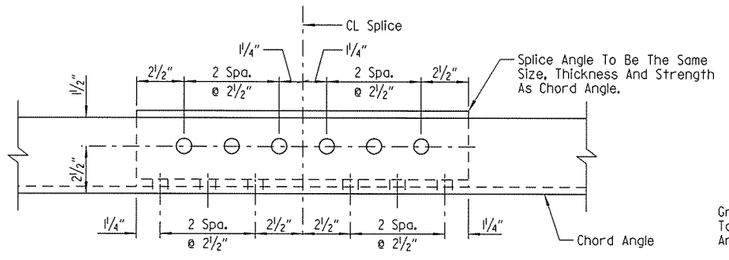

NOTE:
Place splice angles on inside of truss. Bolts shall be ¾"ø and open holes shall be 13/16"ø.

OPTIONAL CHORD SPLICE USING ANGLES (1)

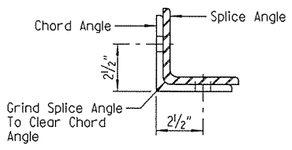

SECTION AT CL SPLICE

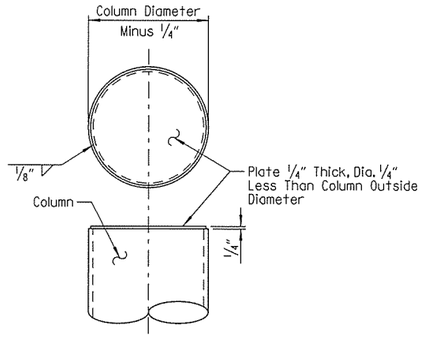

END CAP DETAILS
No Scale

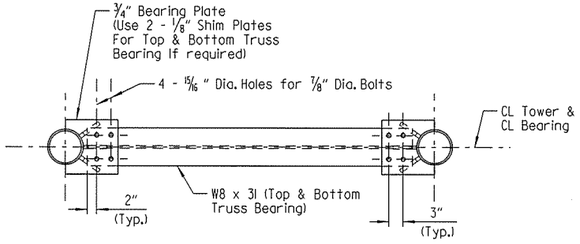

PLAN AT TRUSS BEARING
No Scale

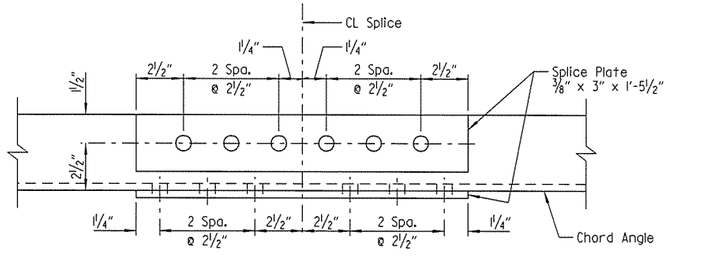

CHORD SPLICE USING PLATES (1)

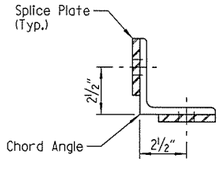

SECTION AT CL SPLICE

(1) Bolts shall be ¾" Dia. and open holes shall be 13/16" Dia. Minimum spacing shall be 2½".

SPLICE DETAILS
No Scale

STATE OF ARKANSAS
LICENSED PROFESSIONAL ENGINEER
No. 15902
3-20-16
PRESTON C. CAMPBELL
BRIDGE ENGINEER

SHEET 3 OF 5
DETAILS FOR 35' STEEL
CANTILEVER SIGN STRUCTURE
WITH SPECIAL FOUNDATION

ROUTE SEC.

ARKANSAS STATE HIGHWAY COMMISSION
LITTLE ROCK, ARK.

DRAWN BY: PCC DATE: MAR. 2016 FILENAME: BBB0414_T18.dgn
CHECKED BY: AJK DATE: MAR. 2016 SCALE: AS SHOWN
DESIGNED BY: PCC DATE: MAR. 2016
STR. NO. CL-049-72-04 DRAWING NO. 58309

Jeskinner 3/20/2016 3:36:43 PM
WORKSPACE: AHTD Bridge
V:\Bridge\Active\Projects\2011\11017707 - I-540 Widening & Interchange Improvement\Drawings\1540-SS-SIB-CL.dgn
REVISED DATE:

DATE REVISED	DATE FILMED	DATE REVISED	DATE FILMED	FED. ROAD DIST. NO.	STATE	FED. AID PROJ. NO.	SHEET NO.	TOTAL SHEETS
				6	ARK.			
				JOB NO.		BB0414	587	886
				(1) CL-049-72-04		SIGN STRUCTURE		58310

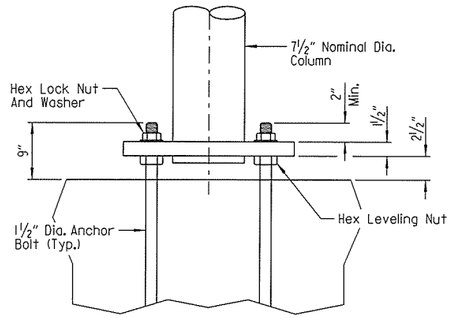

ELEVATION - COLUMN BASE

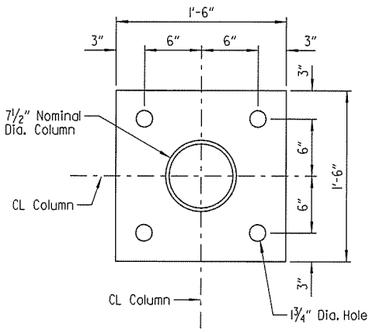

PLAN - COLUMN BASE

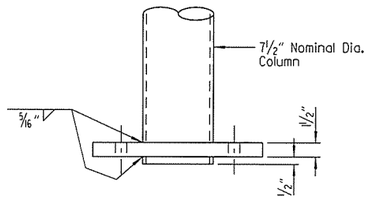

Note:
Diameter of hole in base plate to be 1/8" larger than column diameter.

DETAIL OF COLUMN CONNECTION TO BASE PLATE

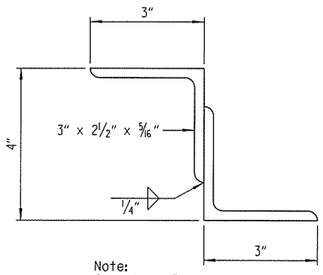

Note:
Structural Z support may be fabricated from angles as shown.

DETAILS OF ALTERNATE Z SUPPORT

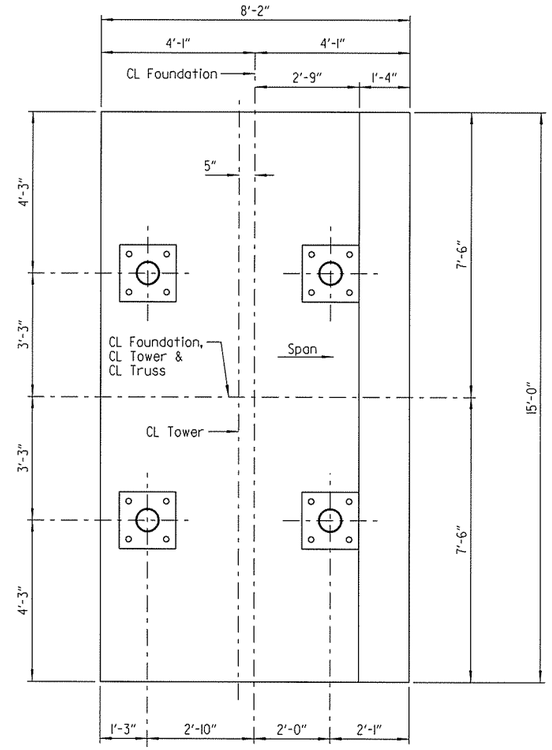

PLAN - TOWER BASE

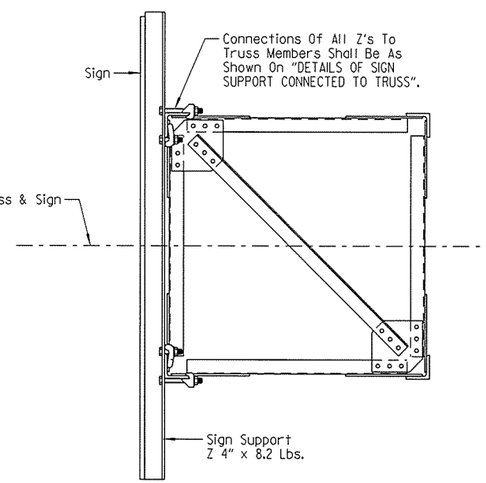

SECTION THRU TRUSS

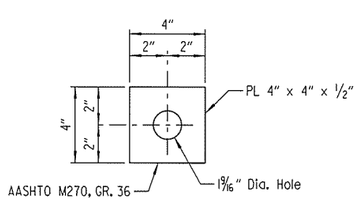

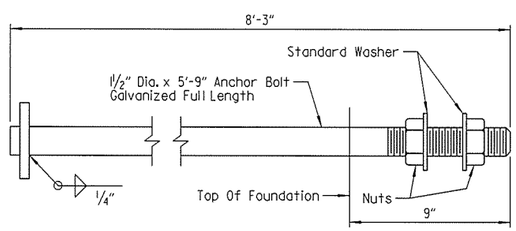

Anchor bolts shall comply with AASHTO M34, Grade 55 with Supplementary Requirement S1 and galvanized according to Section 807.07. Nuts for bolts shall be as specified in Section 807.07.

ANCHOR BOLT DETAIL

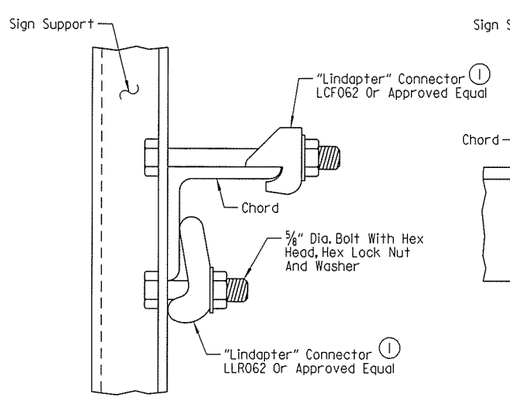

TOP CHORD

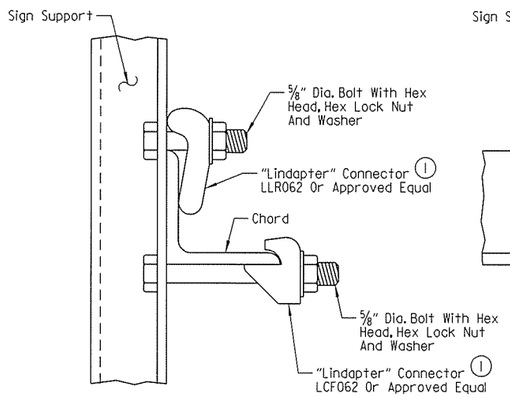

BOTTOM CHORD

(1) Note:
All "Lindapter" connectors or approved equal shall be installed according to Manufacturer's recommendations. All connectors, bolts, nuts and washers shall be galvanized.

Note:
Install all support connectors clear of the gusset plates and splice locations.

DETAILS OF SIGN SUPPORT CONNECTED TO TRUSS

STATE OF ARKANSAS
LICENSED PROFESSIONAL ENGINEER
No. 15902
PRESTON C. CAMPBELL
BRIDGE ENGINEER

SHEET 4 OF 5
DETAILS FOR 35' STEEL CANTILEVER SIGN STRUCTURE WITH SPECIAL FOUNDATION

ROUTE SEC.

ARKANSAS STATE HIGHWAY COMMISSION
LITTLE ROCK, ARK.

DRAWN BY: PCC DATE: MAR. 2016 FILENAME: BBB0414_T19.dgn
CHECKED BY: AJK DATE: MAR. 2016 SCALE: NO SCALE
DESIGNED BY: PCC DATE: MAR. 2016
STR. NO. CL-049-72-04 DRAWING NO. 58310

jeskinner 3/30/2016 3:36:43 PM
WORKSPACE: AHTD Bridge
\\Gpr-verfnc.local\gdd10\Projects\2011\I007707 - I-540 Widening & Interchange Improvement\Drawings\I540-SS-SI19-CL.dgn
REVISED DATE:

DATE REVISED	DATE FILMED	DATE REVISED	DATE FILMED	FED. ROAD DIST. NO.	STATE	FED. AID PROJ. NO.	SHEET NO.	TOTAL SHEETS
				6	ARK.			
				JOB NO.		BB0414	588	886
				(1) CL-049-72-04		SIGN STRUCTURE		5831I

GENERAL NOTES:

CONSTRUCTION SPECIFICATIONS: Arkansas State Highway and Transportation Department Standard Specifications for Highway Construction, 2014 Edition, with applicable supplemental specifications and special provisions. Section and subsection refer to the Standard Construction Specifications unless otherwise noted in the plans.

DESIGN SPECIFICATIONS: AASHTO Standard Specifications for Structural Supports for Highway Signs, Luminaires and Traffic Signals, Sixth Edition, 2013, with current Interim Revisions

Basic Wind Speed = 90 mph
Fatigue Category: I

This structure is approved for 235 square feet of sign area with a weight of 2.5 lbs. per sq. foot. Use of additional sign area must be approved by the Engineer. If the structure height ("H") exceeds 30'-0", contact the Engineer.

FOUNDATION MATERIALS AND STRENGTHS:

Class S Concrete	f'c = 3,500 psi
Reinforcing Steel (Grade 60, AASHTO M 31 or M 322, Type A)	fy = 60,000 psi

Structural steel sign support members shall comply with the following specifications:

Angles:	AASHTO M 270, Grade 36 (Fy = 36,000 psi)
Plate:	AASHTO M 270, Grade 50 (Fy = 50,000 psi)
(1) Pipe:	ASTM A 139, Gr. C (Fy = 42,000 psi)
	ASTM A 500, Gr. B (Fy = 42,000 psi)
	ASTM A 501, Gr. B (Fy = 50,000 psi)
	ASTM A 714, Class 2, Grade II, Type E or S (Fy = 50,000 psi)
All grades of pipe require Heat traceability back to the original melting mill.	
Z-Shapes:	AASHTO M 270, Grade 36 (Fy = 36,000 psi)
Shim Plates:	ASTM A 1011, SS, Grade 36, Type 2 or Grade 40
Bolts:	ASTM A 325, Type 1
Locknuts - Approved Type:	Meeting or exceeding AASHTO M 292
Washers:	ASTM F 436
Nuts:	ASTM A 563 or AASHTO M 292, Grade DH or Grade 2H (Grade 10S)

All steel shall be galvanized according to Subsection 807.19. Steel completely encased in concrete may not be galvanized.

Drawings show general features of design only. Shop drawings shall be made in accordance with Subsection 807.04, submitted and approval secured before fabrication is begun.

Requests for substitution of structural steel shapes shown with shapes of greater size must be submitted by the Contractor to the Engineer for approval. Steels of equal or greater strengths will be accepted only when shown on the approved shop drawings. Shapes and materials shown in the plans will be the basis of payment and no additional compensation will be made for any adjustments due to substitutions.

Connections shall be bolted with high-strength bolts. Unless otherwise noted, bolts shall be ¾" diameter and open holes shall be 15/16" diameter. Bolt spacing shall be 2½" for ¾" diameter bolts unless otherwise noted. Bolts shall be placed with heads on the outside face of all members.

All welding that is to be done during fabrication of structural steel, including temporary welds, shall be detailed on the shop drawings and submitted for approval. If additional welds are required, whether temporary or permanent, a formal request with detailed drawings shall be submitted to the Engineer for approval. All welding shall conform to Subsection 807.26.

Anchor bolts shall comply with AASHTO M 314, Grade 55 including Supplementary Requirement S1, and galvanized according to Subsection 807.07. Nuts and washers for anchor bolts shall be furnished and galvanized in accordance with Subsection 807.07. Anchor bolts shall be pretensioned in accordance with SP JOB NO. BB0414 "STEEL SIGN STRUCTURES".

All truss frame bolts shall comply with ASTM A325 Type 1, galvanized according to Subsection 807.06. Nuts and washers for ASTM A325 Type 1 bolts shall be furnished and galvanized in accordance with Subsection 807.06.

Field splices shall be located in order to avoid sign panel connections. Only one chord splice is permitted with a minimum section length of 15 feet.

All main load carrying tension members greater than ½" in thickness shall conform to the requirements of the Longitudinal Charpy V-Notch test specified for Zone 1 minimum service temperature. This work and materials shall be paid for in accordance with SP JOB NO. BB0414 "STEEL SIGN STRUCTURES".

All fillet welds of critical members shall be tested according to AWS D1.1 Structural Welding Code - Steel using the magnetic particle method. Critical welds shall include: column to truss connection plate welds.

All CJP groove welds shall be tested according to AWS D1.1 Structural Welding Code - Steel.

No circumferential butt welds will be allowed in any pipe sections.

Truss field sections shall be shop assembled. Entire truss shall be fully assembled and lifted into place as one unit on to support. All truss member connections shall be bolted connections.

Lock nuts to be equipped with nylon locking inserts or other approved type locking system. Lock nuts to be installed according to Manufacturer's recommendations.

Shoring may be required to protect existing shoulders during excavation. Any shoring required shall not be paid for directly, but shall be considered incidental to the item "STEEL CANTILEVER SIGN STRUCTURE". The excavations for the footings shall be backfilled before the structure is attached to the foundations.

Galvanized coating damaged during transport, handling or erection shall be field repaired in accordance with Subsection 807.88.

The Contractor shall make check measurements in the field and make any adjustments necessary to meet the required clearances and to fit new structures to the existing conditions.

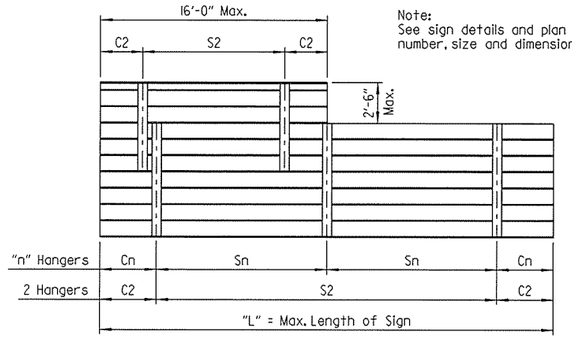

Note:
See sign details and plan sheets for number, size and dimensions of signs.

HANGER SPACING DETAILS FOR EXTRUDED PANEL SIGNS

HANGER VARIABLES			
Max. Length of Sign = "L"	"n" Hangers	Cantilever Length "Cn"	Hanger Spacing "Sn"
15'-0"	2 Hangers	0.21 x "L"	0.58 x "L"
30'-0"	3 Hangers	0.145 x "L"	0.355 x "L"

Hanger spacing and cantilever length shall be rounded to the nearest inch.

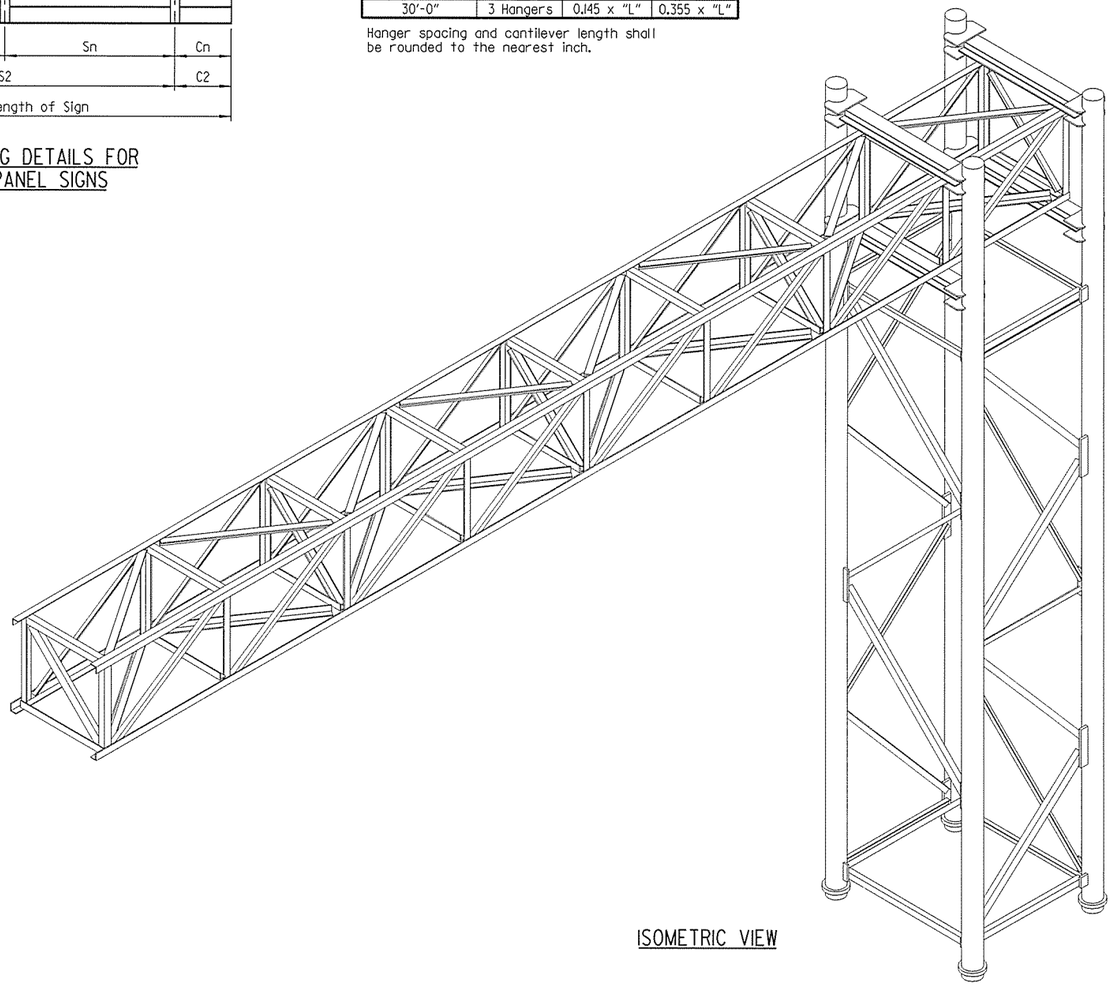

ISOMETRIC VIEW

(1) In addition to material requirements, all pipe used for welded applications shall have a maximum carbon equivalency (CE) of 0.4 using the following equation: CE = %C + %Mn/6 + %Cu/40 + %Ni/20 + %Cr/10 - %Mo/50 - %V/10

STATE OF ARKANSAS
LICENSED PROFESSIONAL ENGINEER
No. 15902
3-20-16
PRESTON C. CAMPBELL
BRIDGE ENGINEER

SHEET 5 OF 5
DETAILS FOR 35' STEEL CANTILEVER SIGN STRUCTURE WITH SPECIAL FOUNDATION

ROUTE SEC.

ARKANSAS STATE HIGHWAY COMMISSION
LITTLE ROCK, ARK.

DRAWN BY: PCC DATE: MAR. 2016 FILENAME: BBB0414_T20.dgn
CHECKED BY: AJK DATE: MAR. 2016 SCALE: NO SCALE
DESIGNED BY: PCC DATE: MAR. 2016

STR. NO. CL-049-72-04 DRAWING NO. 5831I

jeskinner 3/20/2016 3:36:44 PM
WORKSPACE: AHTD Bridge
\\garverfnc.local\gdata\Projects\2015\15077707 - I-540 Widening & Interchange Improvement\Drawings\I540-SS-S120-CL.dgn
REVISED DATE:

DATE REVISED	DATE FILMED	DATE REVISED	DATE FILMED	FED. ROAD DIST. NO.	STATE	FED. AID PROJ. NO.	SHEET NO.	TOTAL SHEETS
				6	ARK.			
				JOB NO.		BB0414	589	886
				(1) BM-049-72-01, -02 SIGN STRUCTURE				58312

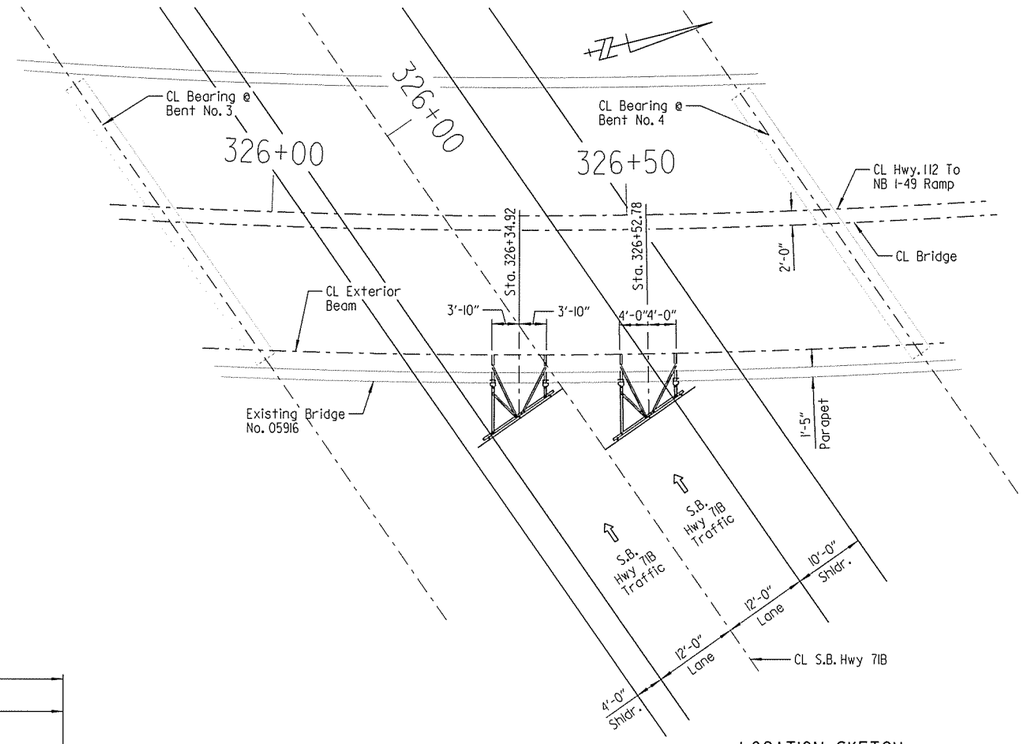

LOCATION SKETCH
(Existing Bridge No. 05916)
Scale: 1/32 " = 1'-0"

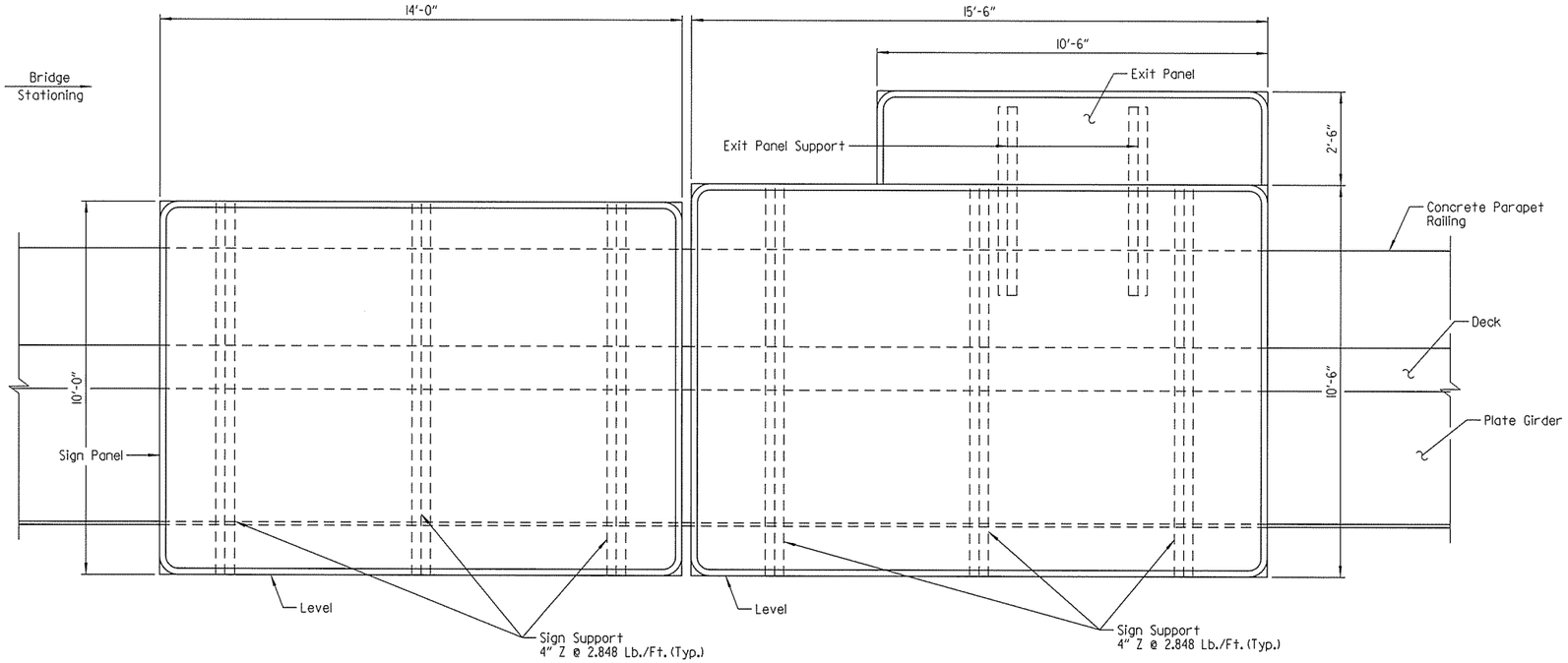

ELEVATION OF SIGNS
(Normal To Sign)
Scale: 1/2" = 1'-0"

STATE OF ARKANSAS
LICENSED PROFESSIONAL ENGINEER
No. 14498
3-20-16
ADAM B. HEIL
BRIDGE ENGINEER

SHEET 1 OF 3
DETAILS FOR BRIDGE MOUNTED SIGN STRUCTURE
ROUTE SEC.
ARKANSAS STATE HIGHWAY COMMISSION
LITTLE ROCK, ARK.

DRAWN BY: JLH DATE: JAN. 2016 FILENAME: BBB0414_T21.dgn
CHECKED BY: RLW DATE: JAN. 2016 SCALE: AS SHOWN
DESIGNED BY: JLH DATE: JAN. 2016

BRIDGE NO. BM-049-72-01, -02 DRAWING NO. 58312

jeskinner 3/20/2016 3:36:44 PM
WORKSPACE: AHTD Bridge
L:\2016\60701 - I-540 Widening & Interchange Improvement\Drawings\1540-SS-S201-BM.dgn
REVISED DATE:

DATE REVISED	DATE FILMED	DATE REVISED	DATE FILMED	FED. ROAD DIST. NO.	STATE	FED. AID PROJ. NO.	SHEET NO.	TOTAL SHEETS
				6	ARK.			
				JOB NO.		BB0414	590	886
				(1) BM-049-72-01, -02 SIGN STRUCTURE				58313

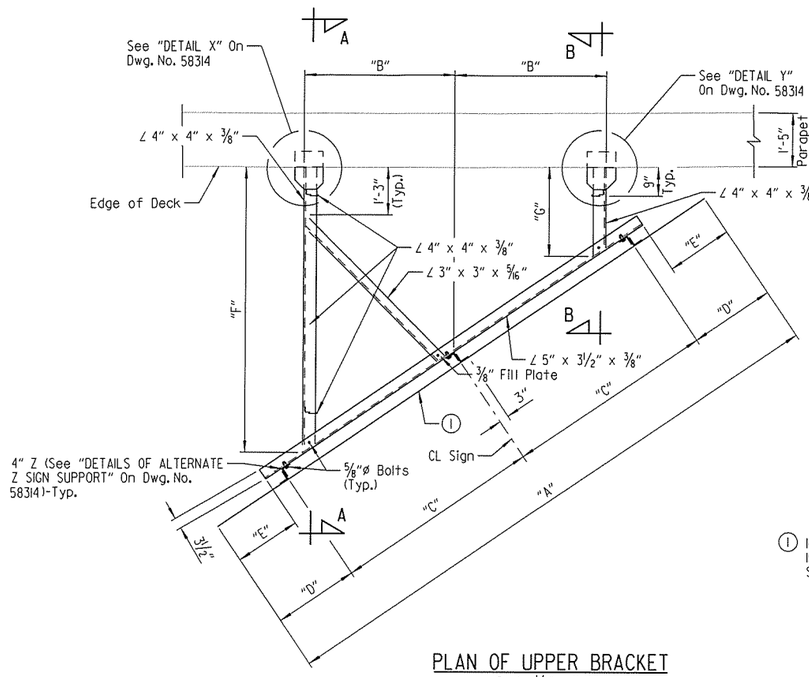

PLAN OF UPPER BRACKET
Scale: 1/2" = 1'-0"

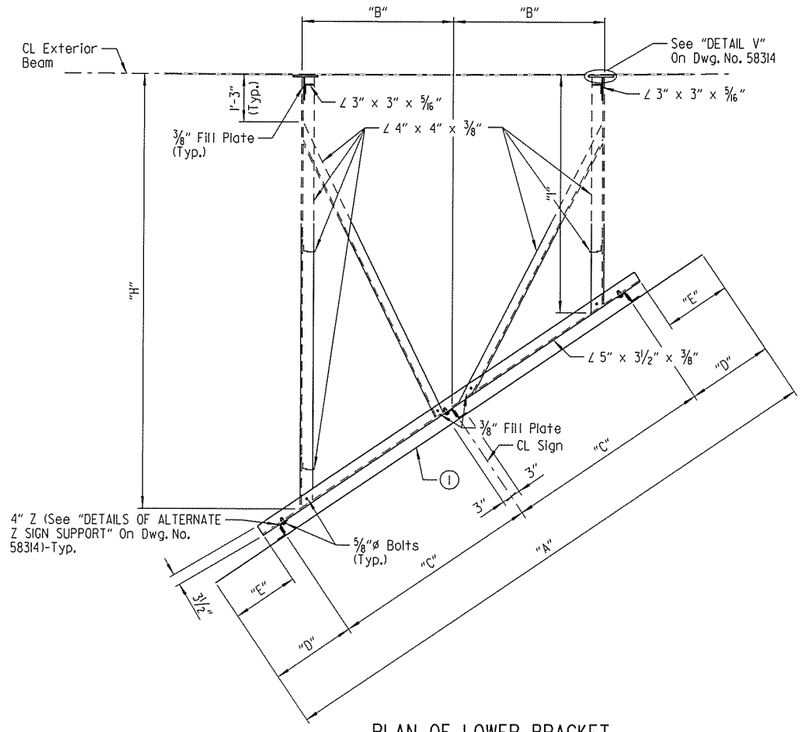

PLAN OF LOWER BRACKET
Scale: 1/2" = 1'-0"

(1) 14'-0" x 10'-0" or 15'-6" x 13'-0" Sign Panel

TABLE OF VARIABLES		
	14'-0" x 10'-0" Sign Structure	15'-6" x 13'-0" Sign Structure
"A"	14'-0"	15'-6"
"B"	3'-10"	4'-0"
"C"	5'-3"	5'-6"
"D"	1'-9"	2'-3"
"E"	1'-3"	1'-9"
"F"	7'-3 3/4"	7'-6 1/8"
"G"	2'-2 5/16"	2'-4 3/16"
"H"	11'-2 3/4"	11'-5 1/8"
"I"	6'-1 5/16"	6'-3 3/16"

GENERAL NOTES:

CONSTRUCTION SPECIFICATIONS: Arkansas State Highway and Transportation Department Standard Specifications For Highway Construction (2014 Edition) with Applicable Supplemental Specifications And SP Job No. CA0609 "STEEL SIGN STRUCTURES".

DESIGN SPECIFICATIONS: AASHTO Standard Specifications for Structural Supports for Highway Signs, Luminaires, and Traffic Signals, Fifth Edition 2009 (2011 Interim Revisions).

BASIC WIND SPEED: 90 m.p.h.

MATERIALS AND STRENGTHS:
Structural Steel (AASHTO M 270, GR. 36, Fy = 36,000 psi)
Bolts (ASTM A325, Type 1)
Nuts (ASTM A563 or AASHTO M 292, Grade 2H Or Grade DH)
Washers (ASTM F436)
Locknuts (Approved Type, meeting or exceeding AASHTO M 292)

Structral members of sign support shall be galvanized in accordance with Subsection 807.19.

Bolts, nuts and washers shall be galvanized in accordance with Subsection 807.06.

Locknuts to be equipped with nylon locking inserts or other approved locking system. Locknuts to be installed according to Manufacturers recommendations.

The Contractor shall make check measurements in the field and make any adjustments necessary to avoid any diaphragms, splice plates and joints in parapet on the bridge. This may include shifting the sign structure with approval from the Engineer.

The cost of all labor, materials and equipment required for the fabrication and installation of the bridge mounted sign structure shall be included in the item "STEEL SIGN STRUCTURES".

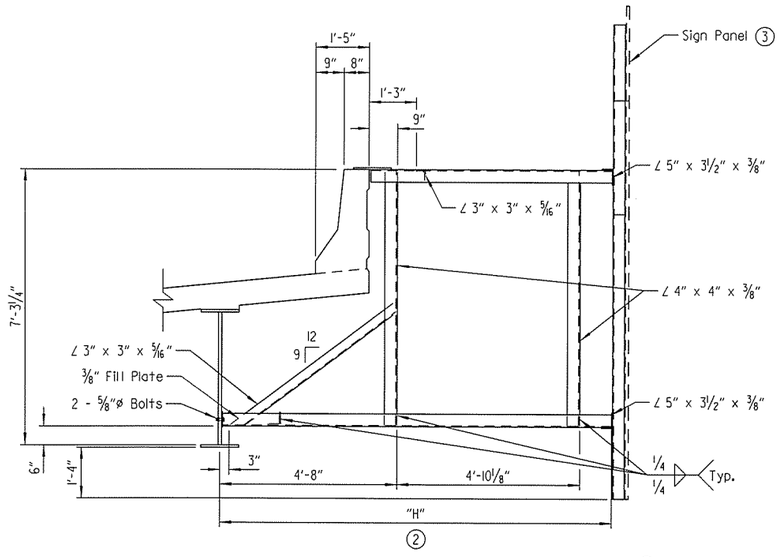

VIEW A-A
Scale: 1/2" = 1'-0"

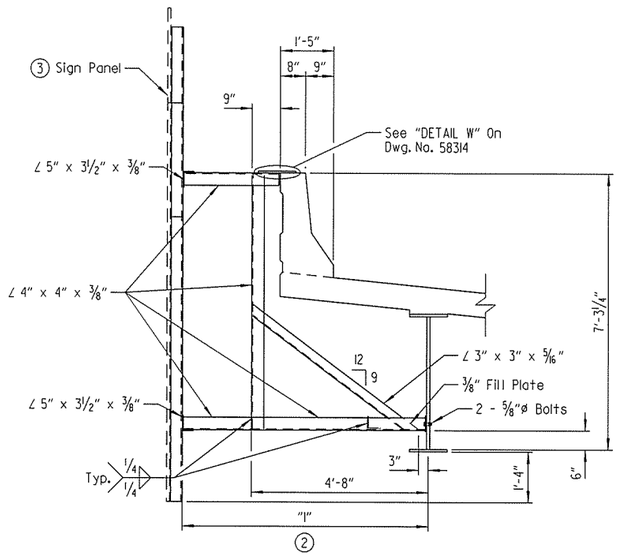

VIEW B-B
Scale: 1/2" = 1'-0"

(2) Measured along inside edge of angle
(3) Height shown for 15'-6" x 13'-0" sign panel

STATE OF ARKANSAS
LICENSED PROFESSIONAL ENGINEER
No. 14498
3-20-16
ADAM B. HALL
BRIDGE ENGINEER

SHEET 2 OF 3
DETAILS FOR BRIDGE MOUNTED SIGN STRUCTURE

ROUTE SEC.

ARKANSAS STATE HIGHWAY COMMISSION
LITTLE ROCK, ARK.

DRAWN BY: JLH DATE: JAN. 2016 FILENAME: BBB0414_T22.dgn
CHECKED BY: RLW DATE: JAN. 2016 SCALE: AS SHOWN
DESIGNED BY: JLH DATE: JAN. 2016

BRIDGE NO. BM-049-72-01, -02 DRAWING NO. 58313

jeskinner 3/20/2016 3:36:44 PM
WORKSPACE: AHTD_Bridge
L:\2016\16077 - I-540 Widening & Interchange Improvement\Drawings\I540-SS-S202-BM.dgn
REVISED DATE:

DATE REVISED	DATE FILMED	DATE REVISED	DATE FILMED	FED. ROAD DIST. NO.	STATE	FED. AID PROJ. NO.	SHEET NO.	TOTAL SHEETS
				6	ARK.			
				JOB NO.		BB0414	591	886
				(1) BM-049-72-01, -02 SIGN STRUCTURE				58314

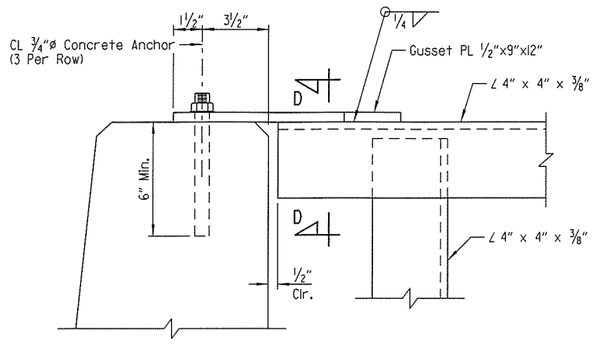

DETAIL W
Scale: 3" = 1'-0"

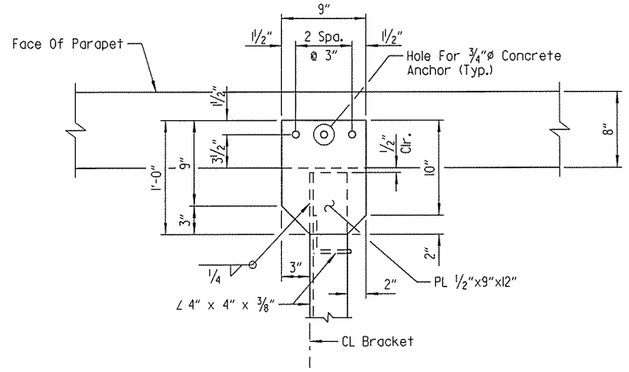

DETAIL X
Scale: 1½" = 1'-0"

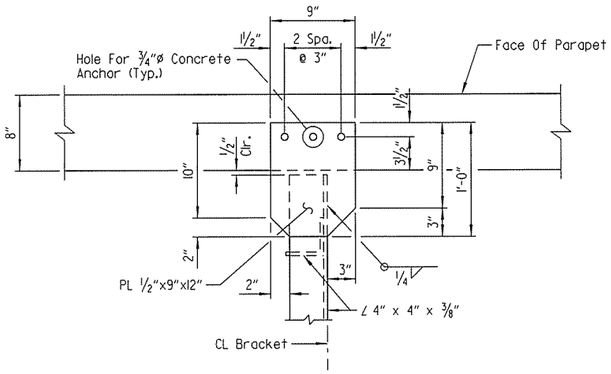

DETAIL Y
Scale: 1½" = 1'-0"

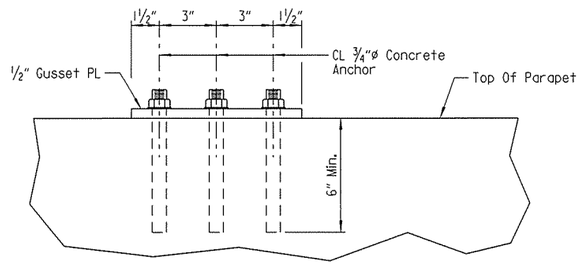

VIEW D-D
Scale: 3" = 1'-0"

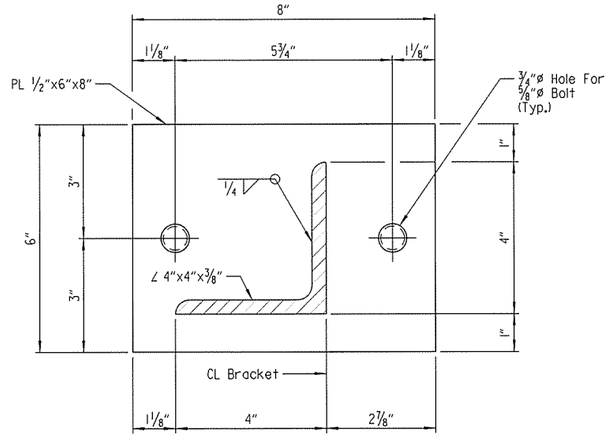

DETAIL V
Scale: 6" = 1'-0"

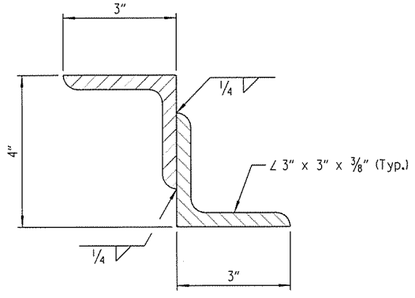

NOTE:
Structural Z Sign Support may be fabricated from angles as shown.

DETAILS OF ALTERNATE Z SIGN SUPPORT
Scale: 6" = 1'-0"

NOTE:
For "GENERAL NOTES", see Dwg. No. 58313.

STATE OF ARKANSAS
LICENSED PROFESSIONAL ENGINEER
No. 14498
2-20-16
ADAM B. HALL
BRIDGE ENGINEER

SHEET 3 OF 3
DETAILS FOR BRIDGE MOUNTED SIGN STRUCTURE
ROUTE SEC.
ARKANSAS STATE HIGHWAY COMMISSION
LITTLE ROCK, ARK.

DRAWN BY: JLH DATE: JAN. 2016 FILENAME: BBB0414_T23.dgn
CHECKED BY: RLW DATE: JAN. 2016 SCALE: AS SHOWN
DESIGNED BY: JLH DATE: JAN. 2016
BRIDGE NO. BM-049-72-01, -02 DRAWING NO. 58314

jeskinner 3/20/2016 3:36:45 PM
WORKSPACE: AHTD Bridge
L:\ROW\60707 I-540 Widening & Interchange Improvement\Drawings\540-SS-S203-BM.dgn
REVISED DATE:

DATE REVISED	DATE FILMED	DATE REVISED	DATE FILMED	FED. ROAD DIST. NO.	STATE	FED. AID PROJ. NO.	SHEET NO.	TOTAL SHEETS
				6	ARK.		592	
				JOB NO.				
				①	EMBANKMENT & BACKFILL		55000	

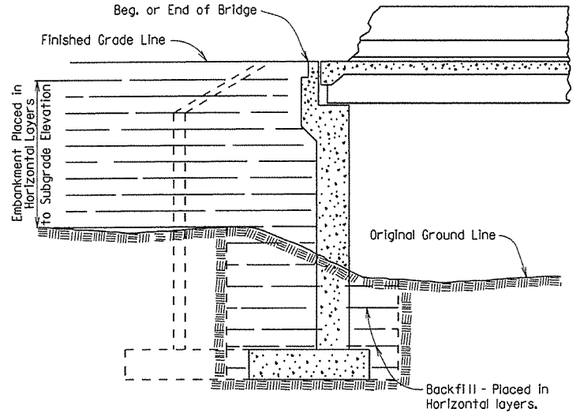

EMBANKMENT CONSTRUCTION AND FOOTING BACKFILL AT VERTICAL WALL ABUTMENTS

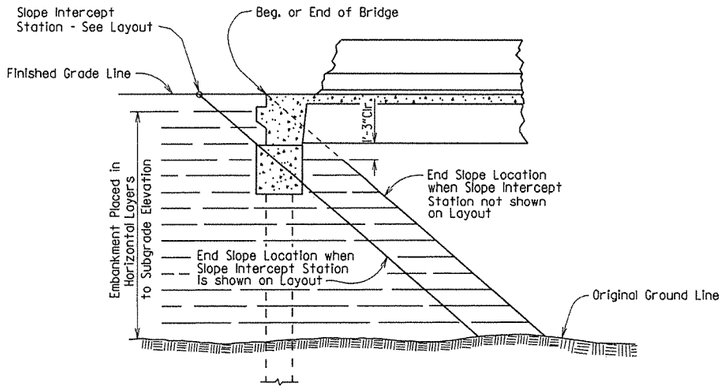

EMBANKMENT CONSTRUCTION AT SPILL-THROUGH PILE END BENTS

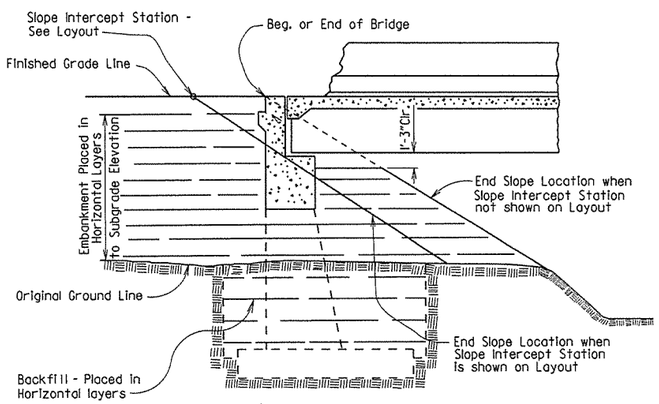

EMBANKMENT CONSTRUCTION AND FOOTING BACKFILL AT SPILL-THROUGH END BENTS

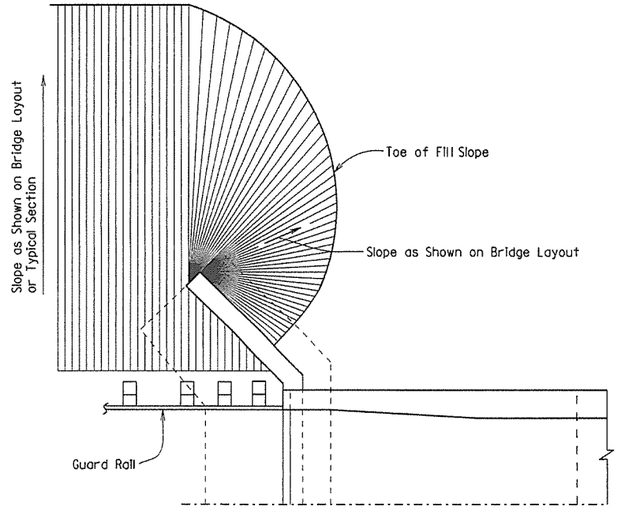

VERTICAL WALL ABUTMENTS

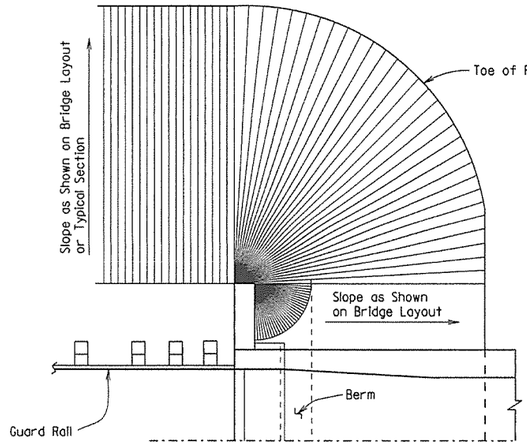

SPILL-THROUGH END BENTS WITH STUB WING

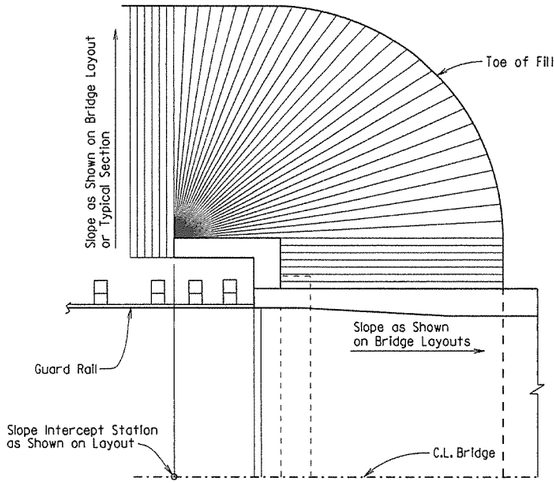

SPILL-THROUGH END BENTS WITH TURNBACK WING

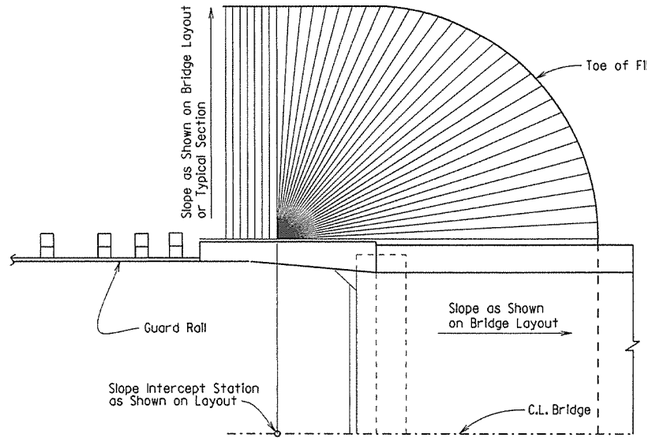

SPILL-THROUGH END BENTS WITH TRANSITION WING

METHOD OF DETERMINING FILL SLOPE LOCATION AT BRIDGE ENDS

GENERAL NOTES

The Bridge End Embankment shall be defined as a section of embankment, not less than 20 feet long adjacent to the bridge end, together with the side slopes and slopes under the bridge end including around the end of wingwalls. Embankment adjacent to structures shall be constructed in 6 inch horizontal layers (loose measure) and compacted by the use of mechanical equipment to the satisfaction of the Engineer. Refer to Subsections 210.09, 210.10 and 801.08 for construction requirements.

STANDARD DETAILS FOR EMBANKMENT CONSTRUCTION AND BACKFILL AT BRIDGE ENDS

ARKANSAS STATE HIGHWAY COMMISSION

LITTLE ROCK, ARK.

DRAWN BY: KDH DATE: 2-27-2014 FILENAME: b55000.dgn

CHECKED BY: BEF DATE: 2-27-2014 SCALE: NO SCALE

DESIGNED BY: STD. DATE: -

DRAWING NO. 55000

DATE REVISED	DATE FILMED	DATE REVISED	DATE FILMED	FED. ROAD DIST. NO.	STATE	FED. AID PROJ. NO.	SHEET NO.	TOTAL SHEETS
				6	ARK.		593	
				JOB NO.				
				① RIPRAP & EXCAV. 55001				

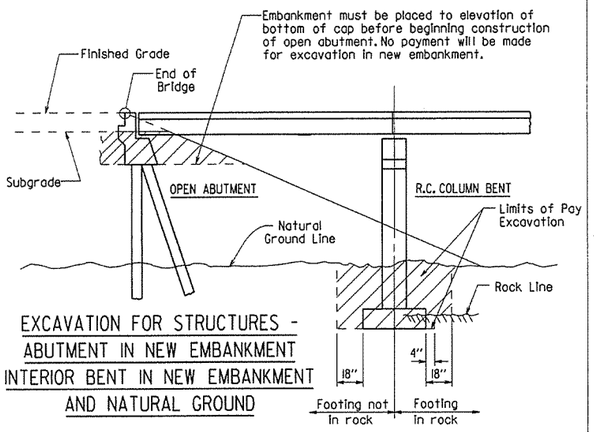

EXCAVATION FOR STRUCTURES - ABUTMENT IN NEW EMBANKMENT INTERIOR BENT IN NEW EMBANKMENT AND NATURAL GROUND

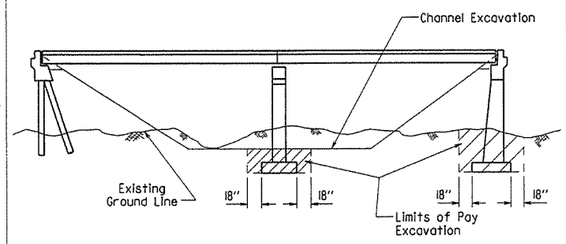

EXCAVATION FOR STRUCTURES - BRIDGE LOCATION WITH DESIGNATED CHANNEL CHANGE

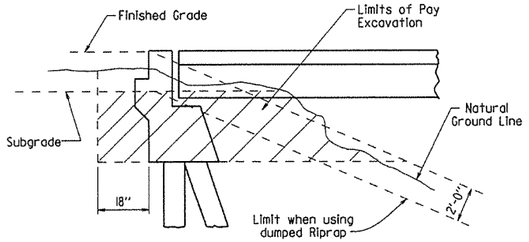

EXCAVATION FOR STRUCTURES - ABUTMENT IN NATURAL GROUND

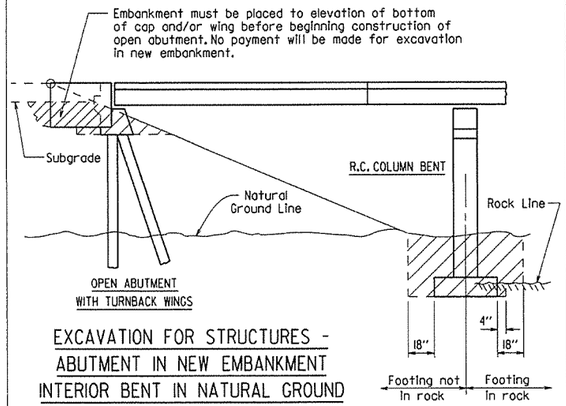

EXCAVATION FOR STRUCTURES - ABUTMENT IN NEW EMBANKMENT INTERIOR BENT IN NATURAL GROUND

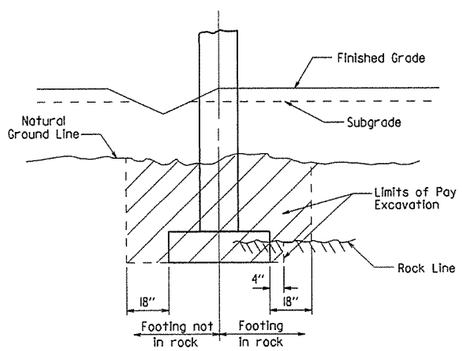

EXCAVATION FOR STRUCTURES - BENT IN ROADWAY FILL SECTION AND NATURAL GROUND

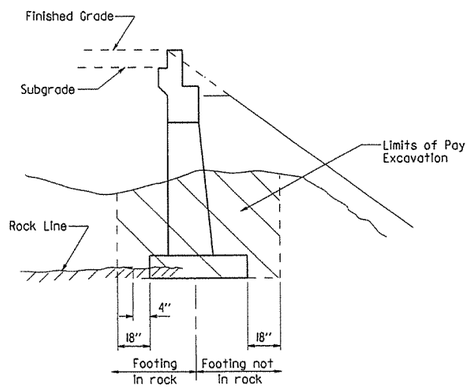

EXCAVATION FOR STRUCTURES - ABUTMENT IN NATURAL GROUND AND NEW EMBANKMENT

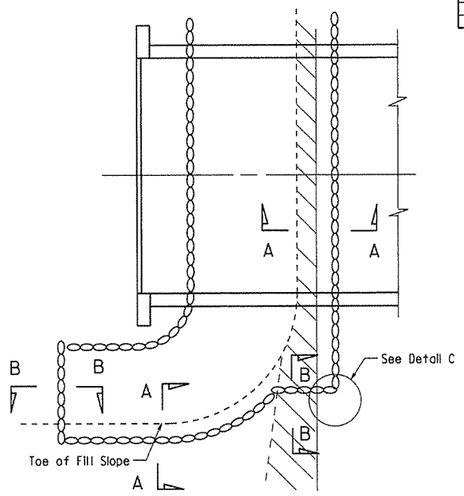

PLAN OF DUMPED RIPRAP

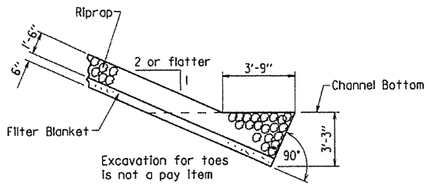

SECTION A-A

(Toe Excavation in Soil)

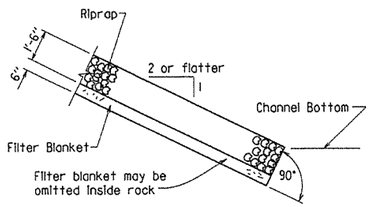

SECTION A-A

(Toe Excavation in Rock)

Note : Use this type of toe when rock is encountered which is in a stable condition.

Note : In lieu of an aggregate filter blanket, a synthetic fiber geotextile fabric complying with the requirements of Subsection 816.02(e) may be used.

Note : Details for computing excavation for structures are included for information as to how plan quantities were calculated and for use when adjusting quantities when changing footing elevation.

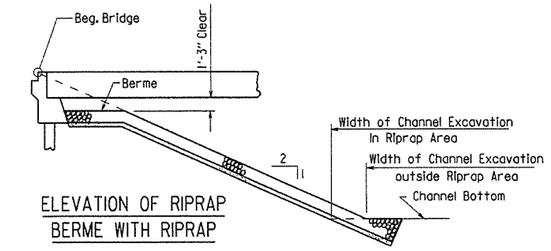

ELEVATION OF RIPRAP BERME WITH RIPRAP

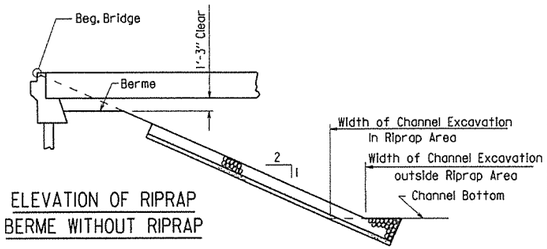

ELEVATION OF RIPRAP BERME WITHOUT RIPRAP

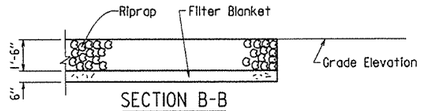

SECTION B-B

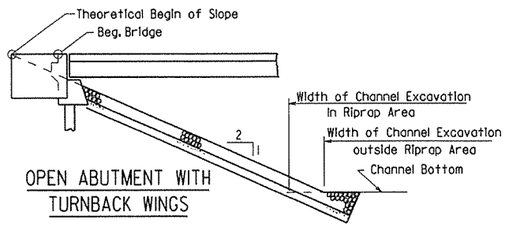

OPEN ABUTMENT WITH TURNBACK WINGS

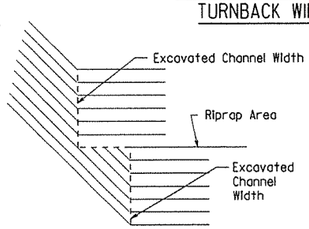

DETAIL C

STANDARD DETAILS FOR DUMPED RIPRAP AND FILTER BLANKET AND COMPUTING EXCAVATION FOR STRUCTURES

ARKANSAS STATE HIGHWAY COMMISSION

LITTLE ROCK, ARK.

DRAWN BY: KDH DATE: 2-27-2014 FILENAME: b55001.dgn

CHECKED BY: BEF DATE: 2-27-2014 SCALE: NO SCALE

DESIGNED BY: STD. DATE:

DRAWING NO. 55001

DATE REVISED	DATE FILMED	DATE REVISED	DATE FILMED	FED. ROAD DIST. NO.	STATE	FED. AID PROJ. NO.	SHEET NO.	TOTAL SHEETS
				6	ARK.		5of4	
				JOB NO.				
				①	CONCRETE RIPRAP 55002			

Note:
Sloped surfaces of concrete riprap to be marked off into blocks (construction joints optional) with an approved grooving tool, spacing the grooved lines about 5' apart.

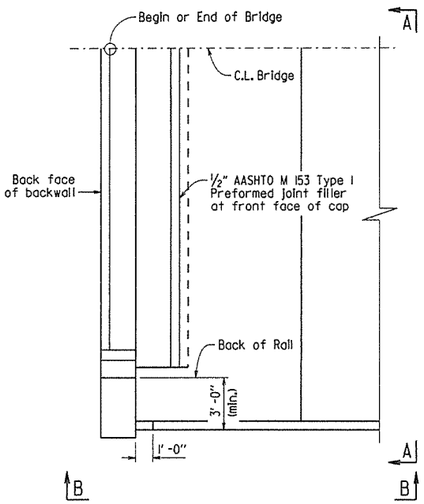

PLAN OF CONCRETE RIPRAP
PERPENDICULAR TO WING
¼" = 1'-0"

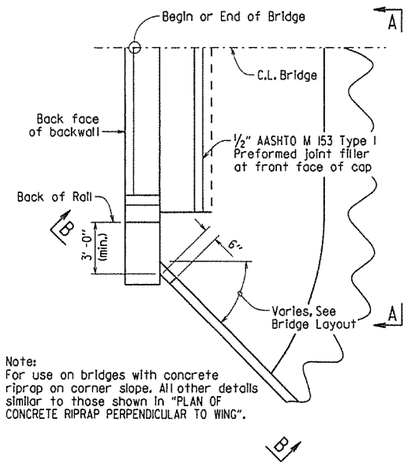

Note:
For use on bridges with concrete riprap on corner slope. All other details similar to those shown in "PLAN OF CONCRETE RIPRAP PERPENDICULAR TO WING".

PLAN OF CONCRETE RIPRAP
AT ANGLE TO WING
¼" = 1'-0"

Note:
For use on bridges with turned back wings. All other details similar to those shown in "PLAN OF CONCRETE RIPRAP PERPENDICULAR TO WING".

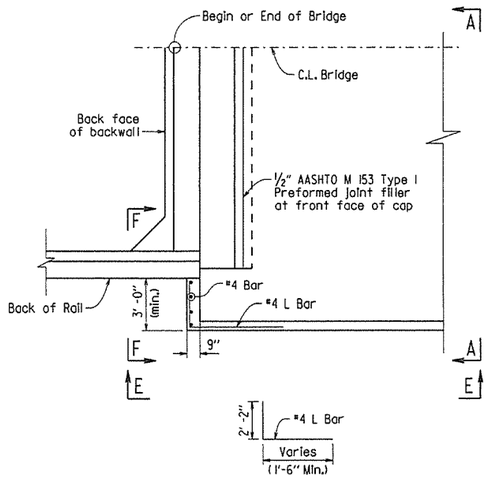

PLAN OF CONCRETE RIPRAP
PERPENDICULAR TO TURNED BACK WING
¼" = 1'-0"

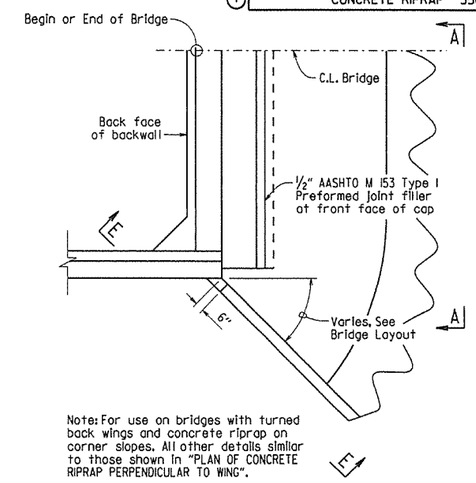

Note: For use on bridges with turned back wings and concrete riprap on corner slopes. All other details similar to those shown in "PLAN OF CONCRETE RIPRAP PERPENDICULAR TO WING".

PLAN OF CONCRETE RIPRAP
AT ANGLE FROM TURNED BACK WING
¼" = 1'-0"

Note:
Wing is shown perpendicular to concrete riprap. Details are similar when wing is at an angle to riprap.

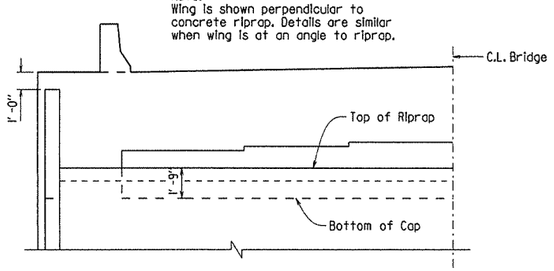

VIEW A-A
¼" = 1'-0"

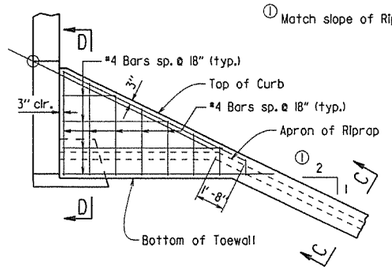

VIEW B-B
¼" = 1'-0"

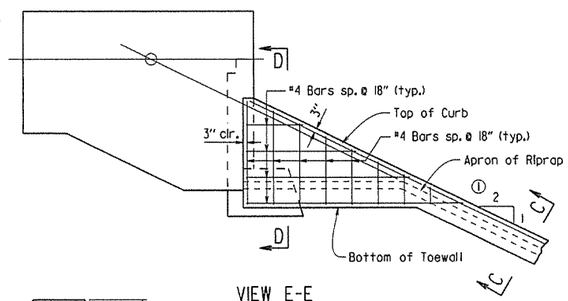

VIEW E-E
¼" = 1'-0"

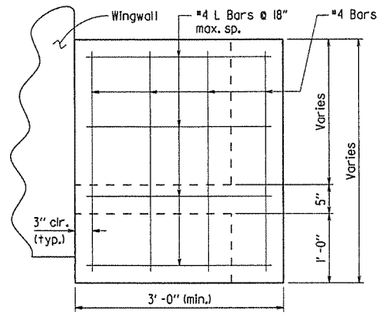

VIEW F-F
1" = 1'-0"

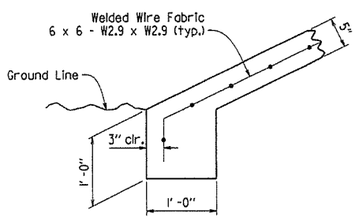

TOE OF CONCRETE RIPRAP
1" = 1'-0"

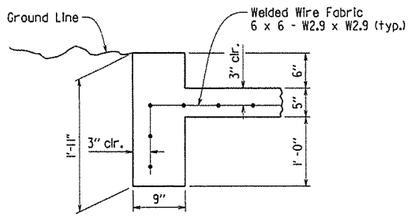

SECTION C-C
1" = 1'-0"

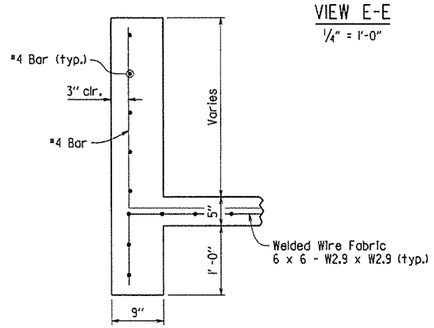

SECTION D-D
1" = 1'-0"

GENERAL NOTES

All concrete shall be Class A with a minimum compressive strength, f'c = 2,100 psi.

Welded wire fabric shall conform to AASHTO M55 or M221.

STANDARD DETAILS FOR CONCRETE RIPRAP

ARKANSAS STATE HIGHWAY COMMISSION

LITTLE ROCK, ARK.

DRAWN BY: ACP DATE: 2/27/2014 FILENAME: b55002.dgn
CHECKED BY: BEF DATE: 2/27/2014 SCALE: AS SHOWN
DESIGNED BY: Std. DATE: ---

DRAWING NO. 55002

DATE REVISED	DATE FILMED	DATE REVISED	DATE FILMED	FED. ROAD DIST. NO.	STATE	FED. AID PROJ. NO.	SHEET NO.	TOTAL SHEETS
3/24/16				6	ARK.		595	
				JOB NO.				
				①	BRIDGE DECK FORMS		55005	

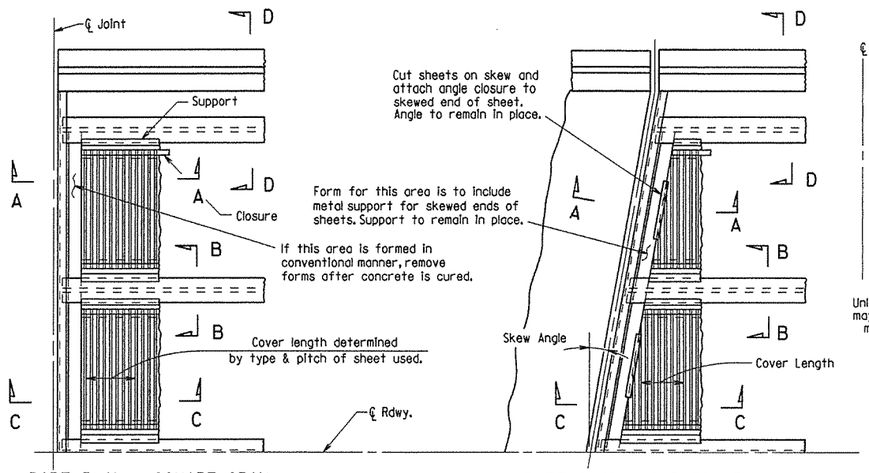

PART PLAN - SQUARE SPAN

⅜" = 1'-0"

PART PLAN - SKEWED SPAN

⅜" = 1'-0"

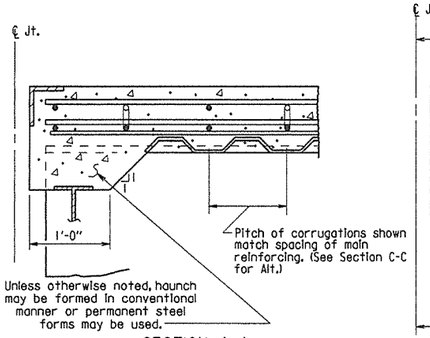

SECTION A-A

N.T.S.

(Angle at end of span)

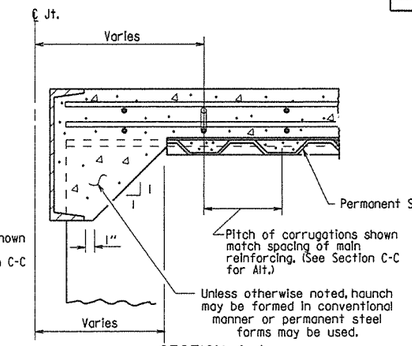

SECTION A-A

N.T.S.

(Channel at end of span)

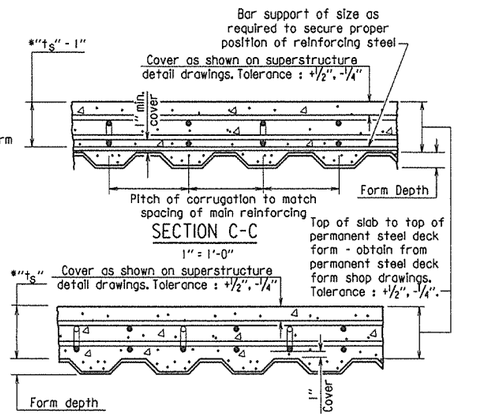

SECTION C-C

1" = 1'-0"

SECTION C-C - ALTERNATE

1" = 1'-0"

(Applicable when corrugations do not match spacing of main reinforcement)

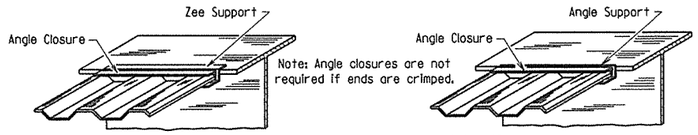

SKETCH OF PERMISSIBLE SUPPORTS

N.T.S.

*t_s = slab thickness as shown on superstructure detail drawings.

GENERAL NOTES

Permanent steel deck forms may be used at the Contractor's option and shall be at no additional cost to the Department. Such use may result in changes to the dead load deflection of the girder. Any cost for adjustments due to a change in the dead load deflection will be borne by the Contractor. Payment for deck concrete and structural steel will not be increased due to use of permanent steel deck forms.

Permanent steel deck forms shall conform to Subsection 802.14(b). Detailed plans, including detailed calculations and manufacturer's technical brochure, shall be submitted to and approved by the Engineer before work of forming the bridge deck is started.

Welding of form supports to the tension flange of steel girders will be permitted only in areas where shear connectors are used. When welding is not allowed, the method of fastening Z or ∠ supports to the flange must be approved by the Engineer.

Form sheets shall be fastened to supporting members and to each other with galvanized metal screws sufficient in size and number to provide a secure attachment. Alternate methods of attachment must be approved by the Engineer.

When the pitch of form corrugations match the reinforcing spacing, transversely align form sheets across the bridge to maintain the correct orientation of continuous reinforcing bars in the corrugations.

Bar support rods, when used, shall be sized and spaced to adequately support the bottom reinforcing mat at the required position.

High chairs shall be sized to support the top mat of reinforcing at the proper position. High chairs shall be placed at locations shown on the detail drawings.

Specifications: Arkansas State Highway and Transportation Department Standard Specifications for Highway Construction (2014 Edition), with applicable Supplemental Specifications and Special Provisions.

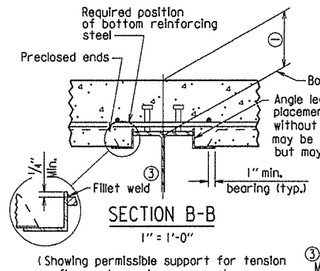

SECTION B-B

1" = 1'-0"

(Showing permissible support for tension flange where shear connectors are used, and for all compression flanges)

③ ⚠ Minimum weld: ⅛" x 1" ℄ 18". More weld may be required; maximum length per weld = 1½" (typ.)

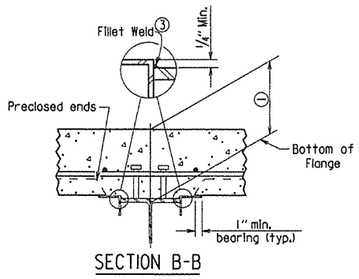

SECTION B-B

1" = 1'-0"

(Showing permissible support for tension flange where shear connectors are used and for all compression flanges)

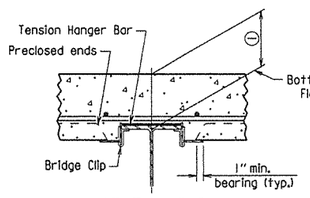

SECTION B-B

1" = 1'-0"

(Showing permissible support for tension flange where shear connectors are not used)

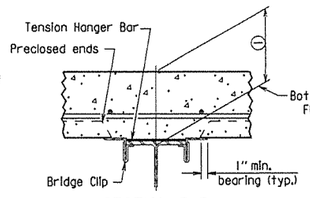

SECTION B-B

1" = 1'-0"

(Showing permissible support for tension flange where shear connectors are not used)

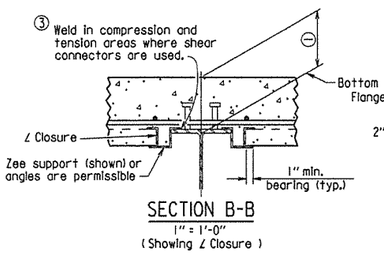

SECTION B-B

1" = 1'-0"

(Showing ∠ Closure)

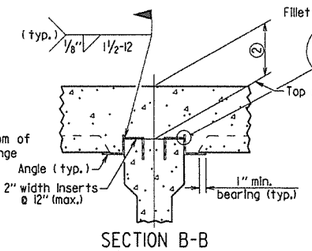

SECTION B-B

(FOR CONCRETE GIRDERS)

1" = 1'-0"

(Showing support by insert cast in girder)

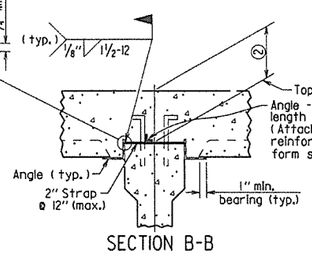

SECTION B-B

(FOR CONCRETE GIRDERS)

1" = 1'-0"

(Showing support by Strap)

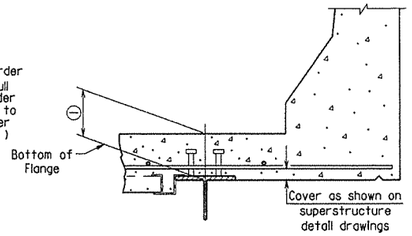

SECTION D-D

1" = 1'-0"

Note: Only Bottom Reinforcing is shown.

① Distance from top of slab to bottom of top flange as measured at centerline girder and as shown on superstructure detail drawings. This dimension may vary within the following limits to maintain the grade and slab thickness tolerances : Minimum - occurs when either the top flange or the support angle leg contacts the bottom reinforcing steel; Maximum = t_s + 1¾" + flange thickness. See Section C-C for slab thickness tolerance between adjacent girder flanges.

② Distance from top of slab to top of girder as measured at centerline girder and as shown on superstructure detail drawings. This dimension may vary within the following limits to maintain the grade and slab thickness tolerances : Minimum - occurs when either the top of girder or the support angle leg contacts the bottom reinforcing steel; Maximum - value shown on the superstructure detail drawings when removable forms are used. See Section C-C for slab thickness tolerance between adjacent girder flanges.

⚠ Revised weld dimension by KWY, Ck'd. by BEF, 3/24/16.

STANDARD DETAILS FOR PERMANENT STEEL BRIDGE DECK FORMS FOR STEEL & CONCRETE GIRDER SPANS

ARKANSAS STATE HIGHWAY COMMISSION

LITTLE ROCK, ARK.

DRAWN BY: KDH DATE: 2-27-2014 FILENAME: b55005.dgn

CHECKED BY: BEF DATE: 2-27-2014 SCALE: NONE

DESIGNED BY: STD. DATE: ---

DRAWING NO. 55005

DATE REVISED	DATE FILMED	DATE REVISED	DATE FILMED	FED. ROAD DIST. NO.	STATE	FED. AID PROJ. NO.	SHEET NO.	TOTAL SHEETS
12-1-14				6	ARK.		5416	
1-14-15				JOB NO.				

① TYPE D NAME PLATE 55010

The name of the bridge as shown on the plans shall be placed on Lines 1 - 3 using 1/8" raised letters and numerals 3/8" high.

	Example 1	Example 2	Example 3	Example 4
Line 1	Red River	Southern	Saline	
Line 2	Relief	Railroad	River	Highway 5
Line 3		Overpass	Relief	

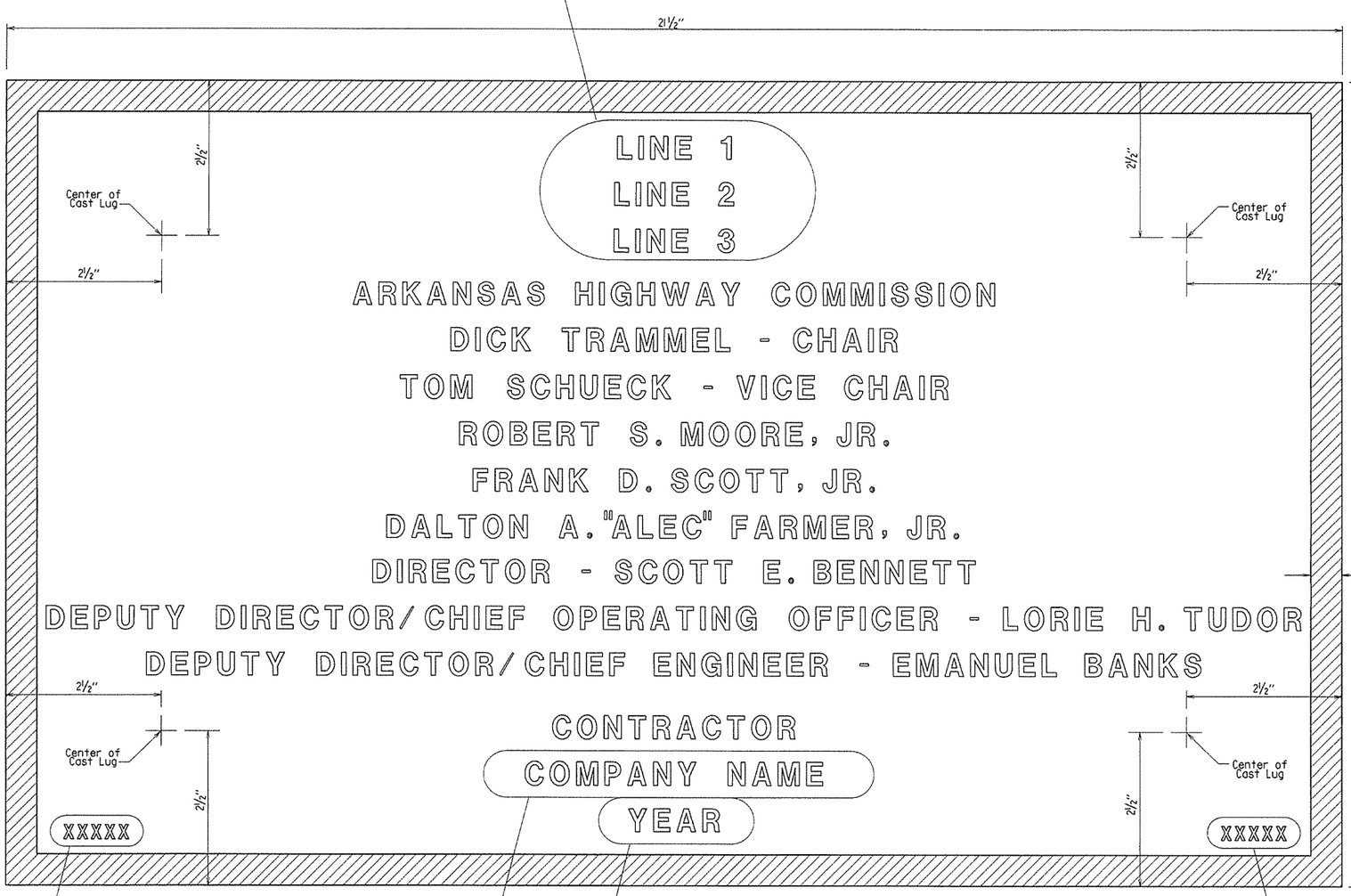

Place the design live loading here using 1/8" raised letters and numerals 1/4" high. Examples : HS 20
HL-93

Place the name of the company awarded the construction contract here using 1/8" raised letters and numerals 3/8" high. Example : ABCD CONSTRUCTION, INC.

Place the Year in which Contract was awarded here using 1/8" raised numerals 3/8" high. Example : 2001

Place the Bridge number here using 1/8" raised letters and numerals 1/4" high. Examples : A1234
05432

TYPICAL BRIDGE NAME PLATE

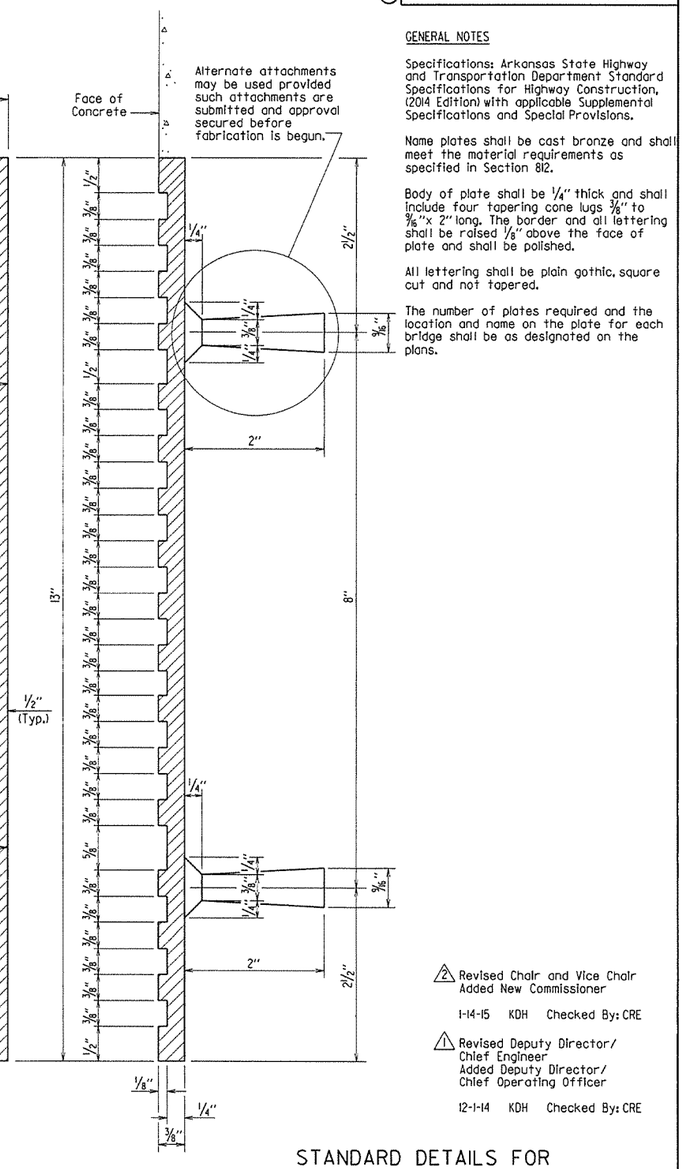

GENERAL NOTES

Specifications: Arkansas State Highway and Transportation Department Standard Specifications for Highway Construction, (2014 Edition) with applicable Supplemental Specifications and Special Provisions.

Name plates shall be cast bronze and shall meet the material requirements as specified in Section 812.

Body of plate shall be 1/4" thick and shall include four tapering cone lugs 3/8" to 9/16"x 2" long. The border and all lettering shall be raised 1/8" above the face of plate and shall be polished.

All lettering shall be plain gothic, square cut and not tapered.

The number of plates required and the location and name on the plate for each bridge shall be as designated on the plans.

2 Revised Chair and Vice Chair
Added New Commissioner
1-14-15 KDH Checked By: CRE

1 Revised Deputy Director/
Chief Engineer
Added Deputy Director/
Chief Operating Officer
12-1-14 KDH Checked By: CRE

STANDARD DETAILS FOR
TYPE D BRIDGE NAME PLATE

ARKANSAS STATE HIGHWAY COMMISSION
LITTLE ROCK, ARK.

DRAWN BY: KDH DATE: 2-27-2014 FILENAME: b55010.dgn
CHECKED BY: BEF DATE: 2-27-2014 SCALE: NO SCALE
DESIGNED BY: STD. DATE: —

DRAWING NO. 55010

DATE REVISED	DATE FILMED	DATE REVISED	DATE FILMED	FED. ROAD DIST. NO.	STATE	FED. AID PROJ. NO.	SHEET NO.	TOTAL SHEETS
3/24/16				6	ARK.		59	
				JOB NO.				

STEEL H-PILES 55020

GENERAL NOTES FOR STEEL H-PILES:

Steel H-Piles shall conform to AASHTO M 270, Grade 36 or greater.

See Bridge Layout and Bent Details for pile size, estimated length, spacing, pile anchorage (if required) and for driving information.

Steel H-Piles that extend above the ground and are not protected by pile encasement shall be painted in accordance with Subsection 805.02.

Brackets, lugs, cap plates, pile tips, driving points, pile painting, splicing and welding shall not be paid for directly, but shall be considered subsidiary to the item "Steel Piling".

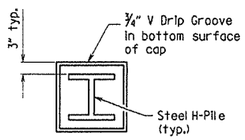

VIEW X-X

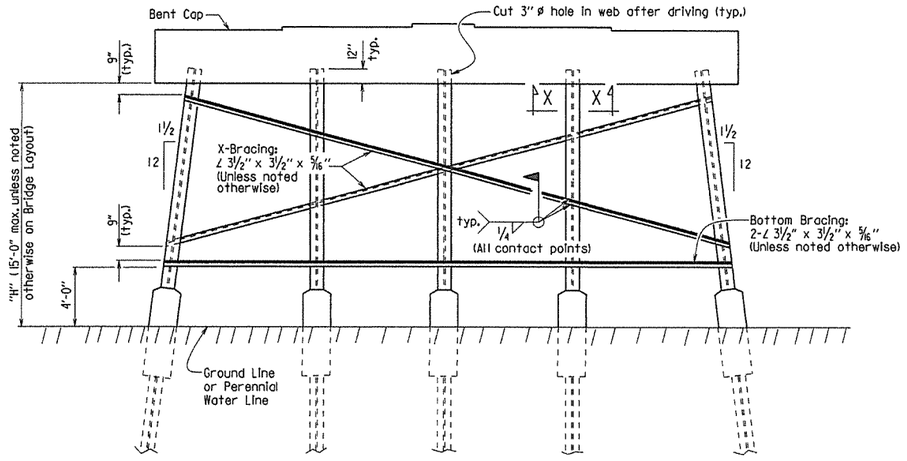

Notes:
All bracing shall be cut and welded in the field. Each brace shall be furnished in one piece. Payment shall be made under item 807.

Unless noted otherwise, omit X-Bracing when "H" is less than 8 feet.

Omit X-Bracing and Bottom Bracing when "H" is 5 feet or less.

When required on the Bridge Layout sheet, pile encasements shall be constructed. See Notes and Details for H-Pile Encasements.

Omit all bracing (and V-groove in cap) when pile encasement is extended to bottom of bent cap.

TYPICAL DETAILS OF H-PILE TRESTLE INTERMEDIATE BENT

(Shown with Partial Height Encasement)

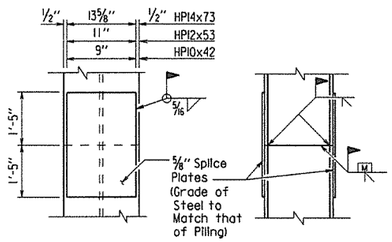

The Contractor may for his own convenience and at his own expense provide as many as three splices per pile. Minimum spacing between splices shall be 5 feet.

TYPICAL SPLICE DETAILS

⚠ H-pile splicers manufactured by Associated Pile and Fitting Corporation, LB Foster Piling, Skyline Steel or equivalent may be used in lieu of the "Typical Splice Details" shown. H-pile splicers shall match the same grade of steel specified for the piling and shall be welded to the pile with a 5/16" fillet weld around the entire perimeter of the splice. Flanges shall be welded with a complete penetration groove weld complying with AASHTO/AWS Joint Designation B-U4a or B-U4b. All welding shall conform to Subsection 807.26 of the AHTD Standard Specifications for Highway Construction (2014 Edition).

Notes:
Steel pile tip reinforcing not required when approved H-Pile driving points are used.

Steel pile tip reinforcing shall not be paid for directly, but shall be considered subsidiary to the item "Steel Piling".

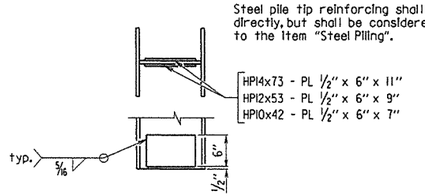

REINFORCING DETAIL FOR STEEL H-PILE TIP

GENERAL NOTES FOR H-PILE ENCASEMENTS:

⚠ See Bridge Layout for additional notes, any pile encasement restrictions and required location of pile encasements.

All concrete shall be Class S with a minimum 28-day compressive strength, f'c = 3,500 psi. If concrete cannot be placed in the dry, Seal Concrete may be used from top to bottom of encasement.

Reinforcing steel shall be Grade 60 conforming to AASHTO M 31 or M 322, Type A.

Welded Wire Fabric shall conform to AASHTO M 55 or M 221. Galvanized Corrugated Steel Pipe shall conform to AASHTO M 36 and M 218.

Concrete, welded wire fabric or reinforcing steel and galvanized pipe shall not be paid for directly, but shall be considered subsidiary to the item "Pile Encasement".

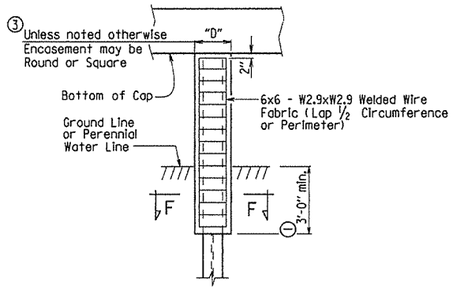

PILE ENCASEMENT DETAIL FOR STEEL H-PILES

④ (Shown with Encasement to Bottom of Cap)

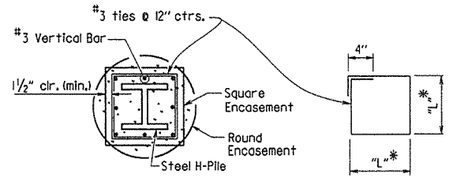

SECTION F-F

*Measured out-to-out of bar.

TABLE OF VARIABLES FOR PILE ENCASEMENT

Pile Size	"D" Square Encsmt.	"D" Round Encsmt.	"L"*
HPI0x42	1'-7"	2'-0"	1'-4"
HPI2x53	1'-8"	2'-2"	1'-5"
HPI4x73	1'-11"	2'-6"	1'-8"

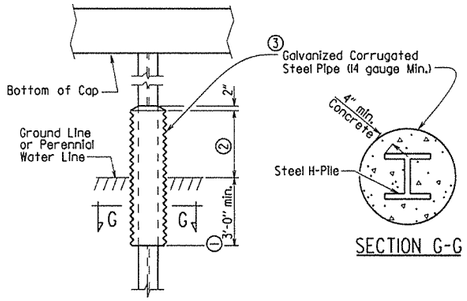

SECTION G-G

ALTERNATE PILE ENCASEMENT DETAIL FOR STEEL H-PILES

(Shown with Partial Height Encasement)

① Unless otherwise noted on Bridge Layout.

② 3'-0" minimum or as shown on Bridge Layout.

③ Encasement dimensions shall be sized to maintain a minimum concrete cover of 4" from the H-Pile. Reinforcement shall be sized to provide a minimum concrete cover of 1½" and a minimum clearance of 1¼" from the pile.

④ Alternate pile encasement, when not extended to bottom of cap, shall have 2" concrete taper for water runoff as shown in the Partial Height Encasement detail.

⚠ Added alternate method of splicing H-piles and revised pile encasement note.
3/24/2016 AMS

This document was originally issued and sealed by Charles R. Ellis, PE No. 9235, on March 24, 2016. This copy is not a signed and sealed document.

STATE OF ARKANSAS
REGISTERED PROFESSIONAL ENGINEER
No. 9235
CHARLES R. ELLIS

BRIDGE ENGINEER

STANDARD DETAILS FOR STEEL H-PILES AND PILE ENCASEMENTS

ARKANSAS STATE HIGHWAY COMMISSION
LITTLE ROCK, ARK.

DRAWN BY: A.M.S. DATE: 2/27/2014 FILENAME: b55020.dgn
CHECKED BY: B.E.F. DATE: 2/27/2014 SCALE: NO SCALE
DESIGNED BY: STD. DATE: —

DRAWING NO. 55020

REFER TO TABULATION OF QUANTITIES FOR 'W' & 'B' DIMENSIONS

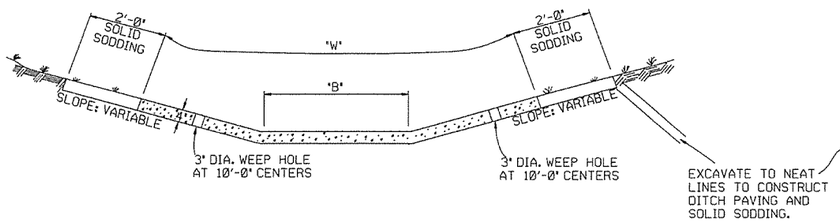

TYPE A

REFER TO TABULATION OF QUANTITIES FOR 'W' DIMENSIONS

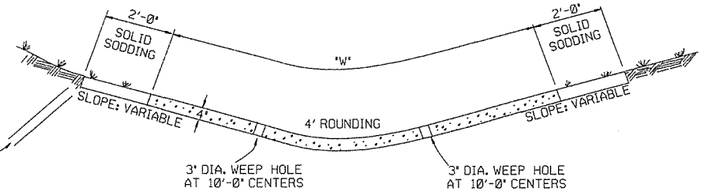

TYPE B

THE STEEL AND ADDITIONAL CONCRETE FOR THE WALLS SHALL NOT BE PAID FOR DIRECTLY, BUT SHALL BE CONSIDERED TO BE INCLUDED IN THE PRICE BID FOR 'CONCRETE DITCH PAVING.'

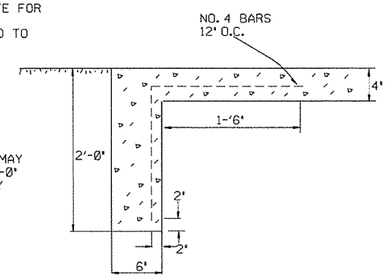

TOE WALL DEPTH MAY BE ALTERED TO 1'-0" WHEN DIRECTED BY THE ENGINEER IN ROCK EXCAVATION

TOE WALL DETAIL FOR CONCRETE DITCH PAVING

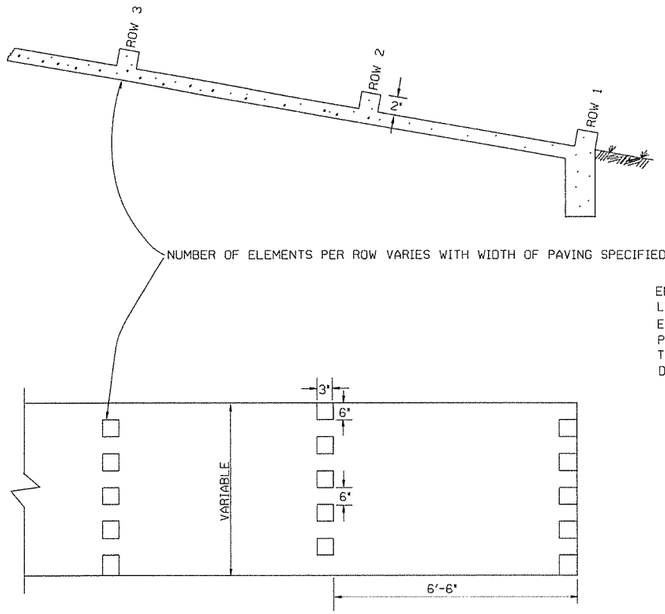

ENERGY DISSIPATORS
(NO SCALE)

ENERGY DISSIPATORS TO BE USED FOR THE ENTIRE LENGTH OF DITCH WHEN SLOPE OF DITCH PAVING EXCEEDS 7%. THE DISSIPATORS WILL NOT BE PAID FOR DIRECTLY. BUT SHALL BE CONSIDERED TO BE UNCLUDED IN THE PRICE BID FOR CONCRETE DITCH PAVING.

GENERAL NOTES:

THE FULL WIDTH OF EACH SECTION SHALL BE POURED MONOLITHICALLY.

TOE WALLS TO BE CONSTRUCTED FULL WIDTH AT EACH END OF DITCH PAVING, AND POURED MONOLITHICALLY.

SOLID SOD ALONG DITCH PAVING TO BE PLACED WITHIN 14 DAYS OF DITCH PAVING CONSTRUCTION.

1" WIDE TRANSVERSE EXPANSION JOINTS SHALL BE PLACED IN CONCRETE DITCH PAVING AT 45' INTERVALS. THE SPACE SHALL BE FILLED WITH APPROVED JOINT FILLER COMPLYING WITH AASHTO M213.

DATE	REVISION	DATE FILM'D
11-17-10	ADDED GENERAL NOTE	
6-2-94	ADDED GENERAL NOTE ABOUT SOLID SODDING	
11-30-8	ELIMINATED MIN. ROWS OF ELEMENTS	111-30-89
7-15-88	REVISED DISSIPATOR NOTE	653-7-15-88
4-3-87	REVISED ENERGY DISSIPATOR	671-4-3-87
1-9-87	MODIFIED NOTE ON ENERGY DISS.	532-1-9-87
11-3-86	ADDED NOTE TO ENERGY DISS.	599-12-1-86
11-1-84	ENERGY DISSIPATOR DETAILS ADDED	508-11-1-84
11-1-84	EXCAVATION DETAILS ADDED TYPED A & B	
10-2-72	REVISED AND REDRAWN	508-10-2-72

ARKANSAS STATE HIGHWAY COMMISSION

CONCRETE DITCH PAVING

STANDARD DRAWING CDP-1

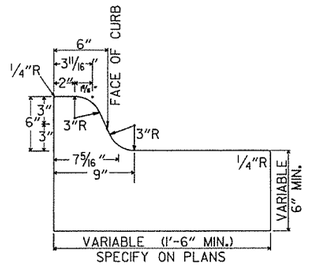

TYPE A

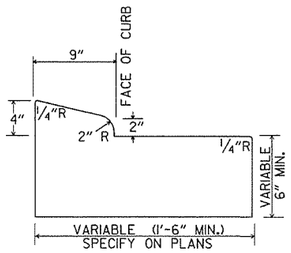

TYPE B-I

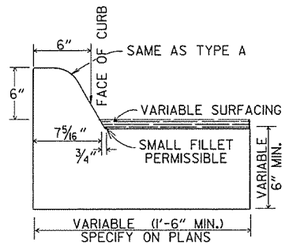

TYPE C

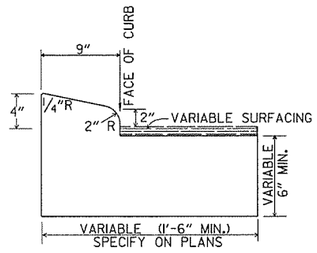

TYPE B-2

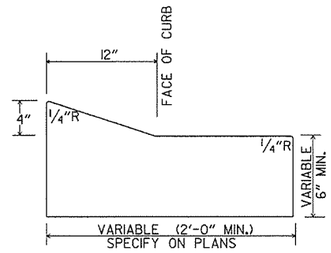

TYPE E-1

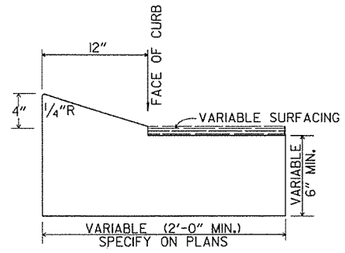

TYPE E-2

CONCRETE COMBINATION CURB AND GUTTER

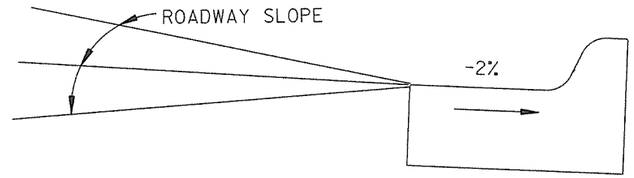

DETAIL OF GUTTER SLOPE

GUTTER SHALL BE CONSTRUCTED ON 2% SLOPE AWAY FROM ROADWAY, REGARDLESS OF ROADWAY SLOPE.

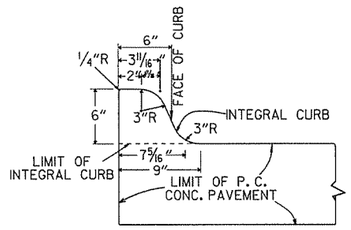

TYPE A

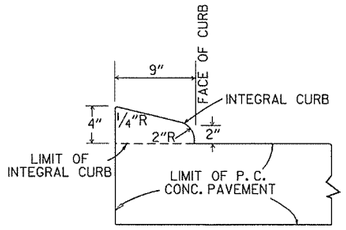

TYPE B

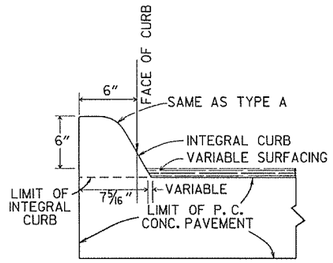

TYPE C

INTEGRAL CURB

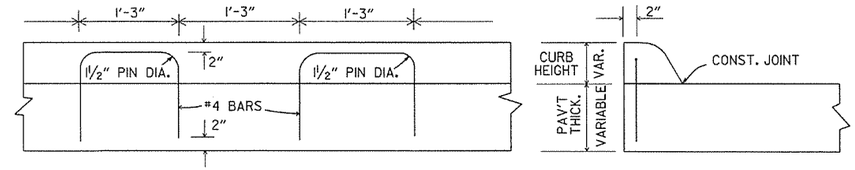

LONGITUDINAL SECTION

ELEVATION

ALTERNATE CONSTRUCTION METHOD FOR INTEGRAL CURB

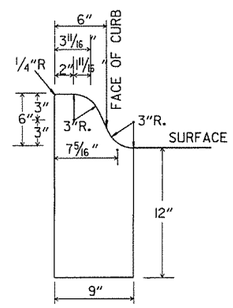

TYPE A

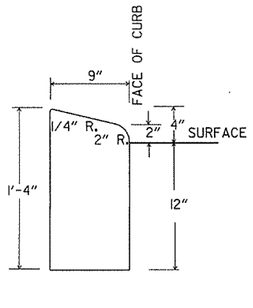

TYPE B

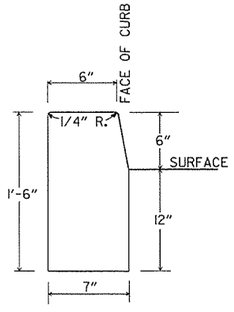

TYPE D

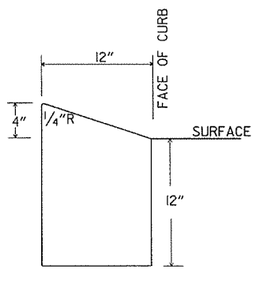

TYPE E

CONCRETE CURB

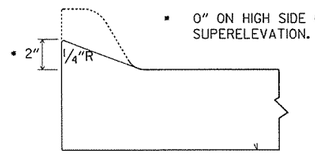

NOTE: USE MODIFIED CURB AS SPECIFIED ON STD. DR-1. COMPENSATION FOR MODIFIED CURB WILL BE CONSIDERED INCLUDED IN THE PRICE BID FOR THE TYPE OF CURB OR CURB AND GUTTER SPECIFIED.

DETAILS OF MODIFIED CURB

DATE	REVISION	DATE FILMED
11-29-07	REVISED GUTTER SLOPE & MODIFIED CURB DETAILS	
11-10-05	ADDED DETAILS OF TYPE E CURBS	
11-16-01	REVISED CONCRETE CURB TYPE B	
11-18-98	REVISED MODIFIED CURB	
6-2-94	ADDED NOTE TO SPECIAL MODIFIED CURB	
8-5-93	CORRECTED GUTTER SLOPE	8-5-93
10-1-92	ADDED DETAILS OF GUTTER SLOPE	10-1-92
5-24-90	ADDED DETAILS OF MODIFIED CURB	5-24-90
11-30-89	VARIBLE DEPTH TYPE A & B I	11-30-89
7-15-88	REVISED MODIFIED CURB	630-7-15-88
11-1-73	REVISED MODIFIED CURB	560-11-1-73
10-2-72	REVISED AND REDRAWN	512-10-2-72

ARKANSAS STATE HIGHWAY COMMISSION

CURBING DETAILS

STANDARD DRAWING CG-1

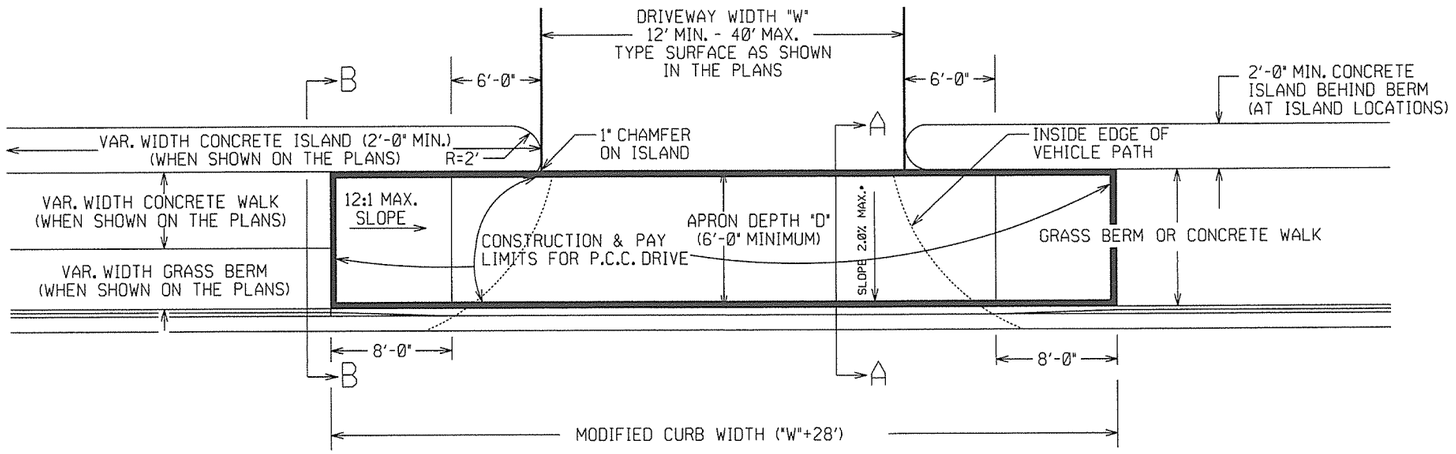

PLAN VIEW

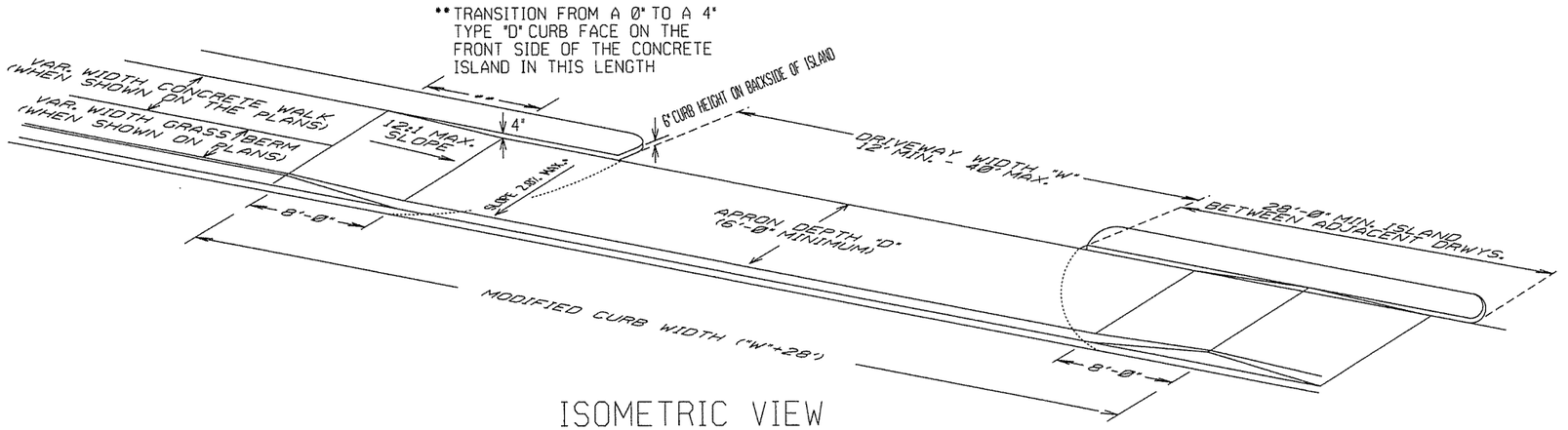

ISOMETRIC VIEW

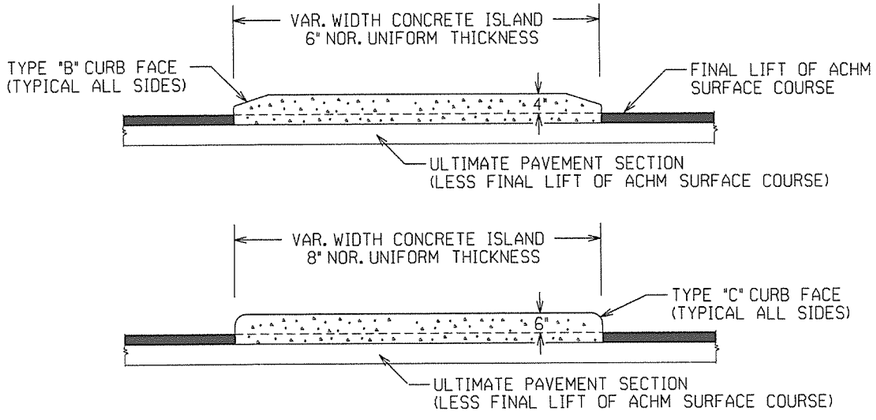

CURBED ISLANDS FOR CHANNELIZATION

REFER TO PLANS FOR TYPE OF CURB FACE TO BE USED. NO DIRECT PAYMENT WILL BE MADE FOR THE CURB FACES SHOWN ON THE ISLAND DETAILS. PAYMENT FOR THE CURB FACE WILL BE INCLUDED IN THE UNIT PRICE BID FOR THE ITEM "CONCRETE ISLAND".

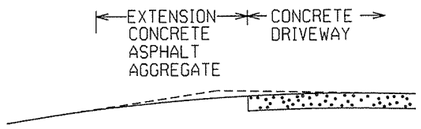

EXTENSION TYPICAL SECTIONS

1: CONCRETE - 6" P.C. CONCRETE DRIVEWAY

2: ASPHALT - 2" ACHM SURFACE COURSE (1/2")
4" ACHM BINDER COURSE.(1") OR
4" ACHM BASE COURSE (1-1/2")

3: ASPHALT - 2" ACHM SURFACE COURSE (1/2")
7" AGGREGATE BASE COURSE

4: AGGREGATE - 6" AGGREGATE BASE COURSE

THE TYPE OF EXTENSION SHALL BE AS SHOWN IN THE PLANS. THE CONTRACTOR MAY, WITH THE APPROVAL OF THE ENGINEER, SUBSTITUTE A LOWER NUMBERED TYPE OF EXTENSION IN LIEU OF THE TYPE SPECIFIED IN THE PLANS, BUT AT NO ADDITIONAL COST TO THE DEPARTMENT.

DRIVEWAY EXTENSION DETAILS

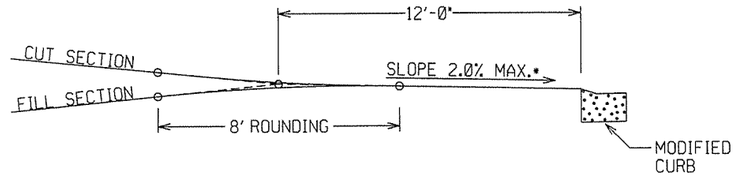

DRIVEWAY VERTICAL ALIGNMENT DETAILS

* NOTE: DRIVEWAYS MAY NOT BE SLOPED AWAY FROM THE ROADWAY UNLESS APPROVED BY THE ENGINEER.

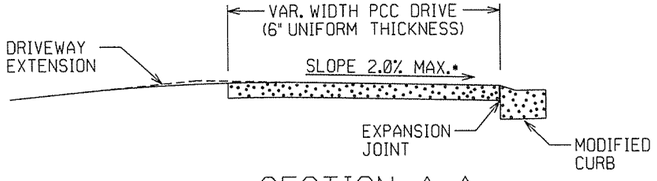

SECTION A-A

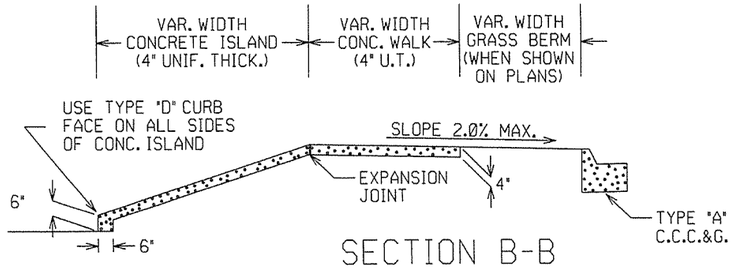

SECTION B-B
CURBED ISLAND BEHIND WALK

DATE REV	DATE FILMED	DESCRIPTION
2-27-14		REVISED PLAN & ISOMETRIC VIEW
11-29-07		ADDED CHANNELIZATION ISLAND WITH TYPE C CURB FACE & REVISED DRIVEWAY SLOPE NOTE & VERTICAL ALIGNMENT DETAIL
11-10-05		REV. APRON SLOPE & DEPTH OF AGG. BASE.
8-22-02		ADDED ISLAND DETAILS & NOTES
3-30-00		REV. MOD. CURB WIDTH & TRANS. NOTE
11-19-98		REVISED NOTES
11-18-98		REDRAWN AND REISSUED

ARKANSAS STATE HIGHWAY COMMISSION
DETAILS OF DRIVEWAYS & ISLANDS
STANDARD DRAWING DR-1

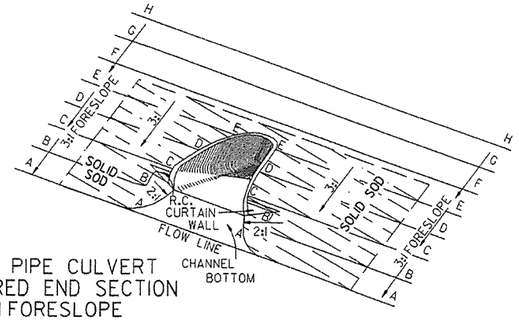

TYPICAL PIPE CULVERT
WITH FLARED END SECTION
& 3:1 FORESLOPE

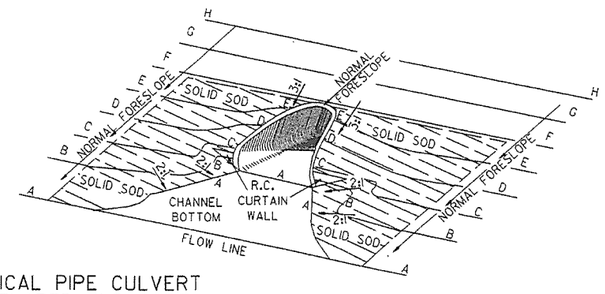

TYPICAL PIPE CULVERT
WITH FLARED END SECTION
& FLATTENED ADJACENT SLOPES

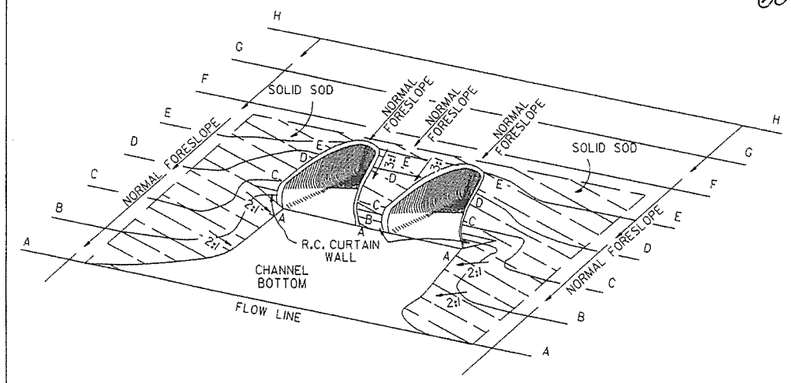

TYPICAL MULTIPLE PIPE CULVERT
WITH FLARED END SECTIONS
& FLATTENED ADJACENT SLOPES

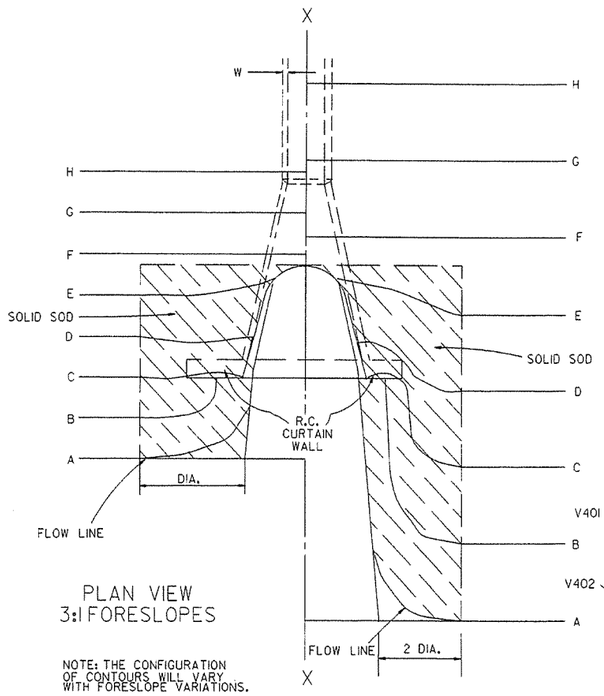

PLAN VIEW
3:1 FORESLOPES

NOTE: THE CONFIGURATION OF CONTOURS WILL VARY WITH FORESLOPE VARIATIONS.

PLAN VIEW
FLATTENED FORESLOPES

R.C. CURTAIN WALL
DIMENSIONS & QUANTITIES

PIPE DIA.	H_1	L_1	L	L (DBL.)/2	SINGLE R.C.P.C.		DOUBLE R.C.P.C.	
					CONC.	REINF. STEEL	CONC.	REINF. STEEL
					CU. YDS.	LBS.	CU. YDS.	LBS.
18"	11½"	3'-5"	8'-0"	6'-3"	0.31	27.7	0.45	39.5
24"	1'-0½"	4'-6"	9'-6"	7'-6"	0.37	33.4	0.53	48.0
30"	1'-3½"	5'-7"	11'-0"	9'-0"	0.45	39.0	0.67	59.0
36"	1'-7"	6'-8"	13'-0"	10'-6"	0.58	52.6	0.83	73.9
42"	2'-1½"	7'-3"	15'-6"	12'-0"	0.82	77.1	1.10	100.7
48"	2'-5"	7'-10"	17'-0"	13'-0"	0.98	94.9	1.27	120.4
54"	2'-9½"	8'-5"	18'-6"	14'-0"	1.16	115.8	1.47	143.7
60"	3'-4"	9'-0"	20'-6"	15'-6"	1.47	149.7	1.84	180.3
72"	4'-5"	10'-2"	25'-6"	18'-6"	2.31	232.6	2.73	271.0

NOTE: QUANTITIES SHOWN ARE FOR ONE (1) CURTAIN WALL.

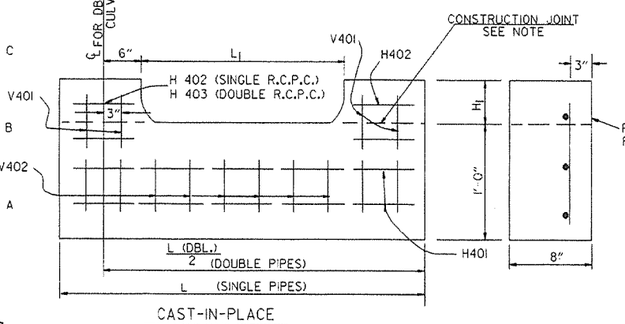

CAST-IN-PLACE

NOTE: THE PORTION OF THE R.C. CURTAIN WALL BENEATH THE FLARED END SECTION (LOWER 1'-0") SHALL BE PLACED MONOLITHICALLY. THE FLARED END SECTION SHALL THEN BE SET IN PLACE & THE REMAINING PORTIONS OF THE R.C. CURTAIN WALL PLACED.

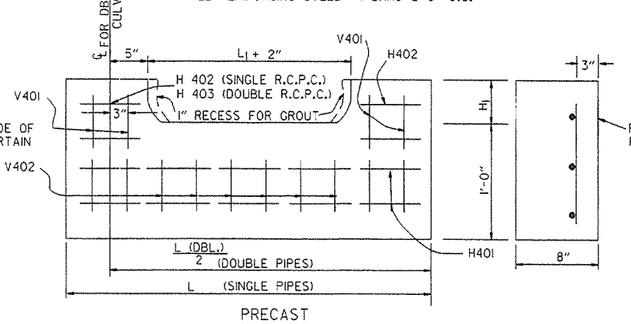

PRECAST

NOTE: THE PRECAST CURTAIN WALL WILL BE SET AND BACKFILLED WITH COMPACTED MATERIAL. THE FLARED END SECTION SHALL THEN BE SET IN PLACE AND THE 1" RECESS FILLED WITH GROUT. WHERE "L" EXCEEDS 11' THE CURTAIN WALL MAY BE CAST IN TWO (2) OR MORE SECTIONS. THE METHOD OF JOINING THE SECTIONS FOR INSTALLATION SHALL BE APPROVED BY THE ENGINEER.

REINFORCING STEEL SCHEDULE

PIPE DIA.	SINGLE R.C. PIPE CULVERT								DOUBLE R.C. PIPE CULVERT									
	H401		H402		V401		V402		H401		H402		H403		V401		V402	
	L	NO.	L	NO.	L	NO.	L	NO.	L	NO.	L	NO.	L	NO.	L	NO.	L	NO.
18"	7'-8"	2	1'-11½"	4	1'-7½"	8	8"	8	12'-2"	2	1'-11½"	4	8"	2	1'-7½"	10	8"	14
24"	9'-2"	2	2'-2"	4	1'-8½"	10	8"	9	14'-8"	2	2'-2"	4	8"	2	1'-8½"	12	8"	18
30"	10'-8"	2	2'-4½"	4	1'-11½"	10	8"	12	17'-8"	2	2'-4½"	4	8"	2	1'-11½"	14	8"	22
36"	12'-8"	2	2'-10"	6	2'-3"	12	8"	14	20'-8"	2	2'-10"	6	8"	3	2'-3"	14	8"	28
42"	15'-2"	2	3'-9½"	8	2'-9½"	16	8"	15	23'-8"	2	3'-9½"	8	8"	4	2'-9½"	18	8"	30
48"	16'-8"	2	4'-3"	10	3'-1"	18	8"	16	25'-8"	2	4'-3"	10	8"	5	3'-1"	20	8"	32
54"	18'-2"	2	4'-8½"	12	3'-5½"	20	8"	17	27'-8"	2	4'-9"	12	8"	6	3'-5½"	22	8"	34
60"	20'-2"	2	5'-5"	14	4'-0"	24	8"	18	30'-8"	2	5'-5"	14	8"	7	4'-0"	26	8"	36
72"	25'-2"	2	7'-4"	18	5'-1"	30	8"	20	36'-8"	2	7'-4"	18	8"	9	5'-1"	33	8"	40

ALL REINFORCING STEEL #4 BARS @ 6" O.C.

SOLID SODDING

PIPE DIA.	SINGLE R.C.P.C.			DOUBLE R.C.P.C.		
	3:1	4:1	6:1	3:1	4:1	6:1
	SQ. YDS.			SQ. YDS.		
18"	5	7	12	6	8	13
24"	8	12	19	9	13	20
30"	13	18	29	14	19	30
36"	17	26	41	18	28	43
42"	23	35	55	25	37	57
48"	29	46	68	31	48	70
54"	35	57	85	37	59	87
60"	45	62	104	48	65	107
72"	64	92	156	67	95	159

NOTE: QUANTITIES SHOWN ABOVE ARE FOR ONE (1) END OF F.E.S.

GENERAL NOTES

1. A CAST-IN-PLACE OR PRECAST CURTAIN WALL MAY BE USED. PAYMENT FOR THE CURTAIN WALL SHALL BE CONSIDERED TO BE INCLUDED IN THE UNIT PRICE BID EACH FOR FLARED END SECTIONS OF THE SEVERAL SIZES, WHICH PRICE SHALL BE FULL COMPENSATION FOR FURNISHING ALL MATERIALS INCLUDING REINFORCING STEEL AND CONCRETE; FOR FORMS, MIXING AND PLACING; FOR EXCAVATION AND BACKFILL, AND FOR ALL LABOR, TOOLS, EQUIPMENT AND INCIDENTALS NECESSARY TO COMPLETE THE WORK.
2. ALL EXPOSED EDGES SHALL BE CHAMFERED ¾".
3. CONCRETE FOR CURTAIN WALL SHALL MEET THE REQUIREMENTS FOR CLASS A OR S CONCRETE AS PROVIDED IN SECTION 802 OF THE STANDARD SPECIFICATIONS OR FOR PAVING CONCRETE AS PROVIDED IN SECTION 501 OF THE STANDARD SPECIFICATIONS.
4. WELDED WIRE MESH 3 × 3 W10 × W10 MAY BE USED IN LIEU OF REINFORCING BARS.

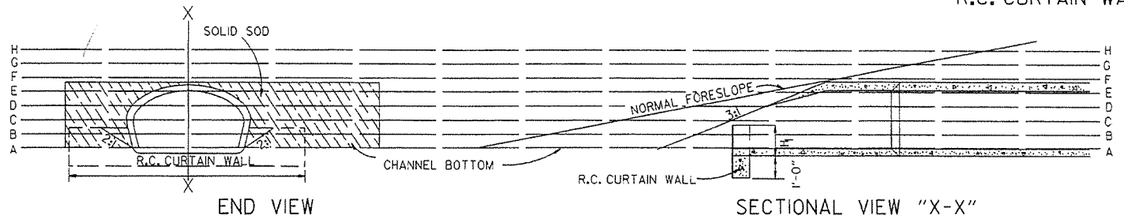

END VIEW

SECTIONAL VIEW "X-X"

R.C. CURTAIN WALL DETAILS

DATE	REVISION	FILMED
10-18-96	ADDED NOTE TO SOLID SODDING	10-18-96
10-12-95	CORRECTED SPELLING	
11- 3-94	ADDED GENERAL NOTE NO. 4	
8-15-91	REV. CURTAIN WALL QUANT. STEEL SCH. & SOLID SOD QUANT.	
3-2-81	ALLOW PRECAST IN 2 OR MORE PIECES CHAMFER EDGES	
5-15-80	ADDED PRECAST WALL & GENERAL NOTES	
10-2-72	REVISED AND REDRAWN	

ARKANSAS STATE HIGHWAY COMMISSION

FLARED END SECTION

STANDARD DRAWING FES-1

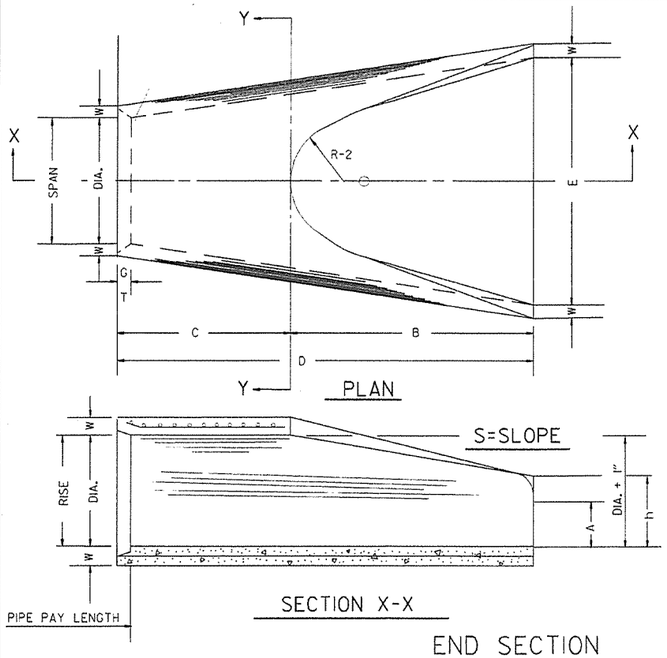

END SECTION FOR REINFORCED CONCRETE PIPE CULVERTS

TABLE OF DIMENSIONS

DIA.	WALL	A	B	C	D	E	S	DIA. ± 1"	P	R-1	R-2	G-T	WT.	h
18"	2½"	9"	2'-3"	3'-10"	6'-1"	3'-0"	3:1	19"	29"	15½"	12"	2"	1000	1'-0½"
24"	3"	9½"	3'-7½"	2'-6"	6'-11½"	4'-0"	3:1	25"	33⅜"	16¹¹⁄₁₆"	14"	2½"	1600	1'-1½"
30"	3½"	1'-0"	4'-6"	1'-7¾"	6'-1¾"	5'-0"	3:1	31"	37"	18½"	15"	3¼"	1940	1'-4⅝"
36"	4"	1'-3"	5'-3"	2'-10¾"	8'-1¾"	6'-0"	3:1	37"	47¹¹⁄₁₆"	24⁵⁄₁₆"	20"	3½"	4100	1'-8"
42"	4½"	1'-9"	5'-3"	2'-11"	8'-2"	6'-6"	3:1	43"	53⅛"	27½"	22"	3½"	5380	2'-2½"
48"	5"	2'-0"	6'-0"	2'-2"	8'-2"	7'-0"	3:1	49"	56½"	28½"	22"	3½"	6550	2'-6"
54"	5½"	2'-4"	6'-6"	1'-10"	8'-4"	7'-6"	3:1	55"	65½"	33⅜"	24"	4"	8750	2'-10½"
60"	6"	2'-10"	6'-6"	1'-10"	8'-4"	8'-0"	3:1	61"	72½"	36¹¹⁄₁₆"	24"	4"	9270	3'-5"
72"	7"	3'-10"	6'-6"	1'-10"	8'-4"	9'-0"	3:1	73"	77¹³⁄₁₆"	38¹¹⁄₁₆"	24"	5"	13250	4'-6"

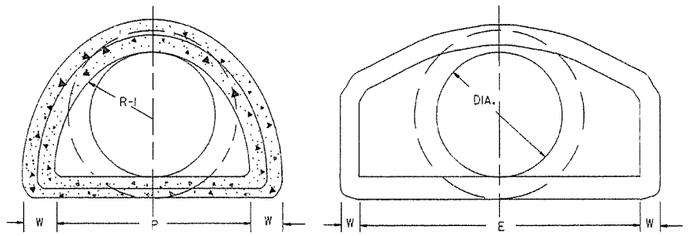

NOTE: TONGUE END ON UPSTREAM SECTION
GROOVE END ON DOWNSTREAM SECTION

ARCH PIPE

EQUIV. DIA.	• SPAN AASHTO M 206	• SPAN AHD NOMINAL	• RISE AASHTO M 206	• RISE AHD NOMINAL	W	A	B	C	D	E	P	R2	G-T	S
	INCHES													
15	18	18	11	11	2"	4"	2'-0"	4'-0"	6'-0"	3'-0"	29"	12"	1½"	2¹/₂:1
18	22	22	13½	14	2½"	5"	2'-0"	4'-1"	6'-1"	3'-6"	32⅛"	13"	2½"	2½:1
21	26	26	15½	16	2¾"	7"	2'-3"	3'-10"	6'-1"	4'-0"	34⅛"	14"	2½"	2½:1
24	28½	29	18	18	3"	9"	2'-3"	3'-10"	6'-1"	5'-0"	36¹³⁄₁₆"	15"	2½"	2½:1
30	36¼	36	22½	23	3½"	10"	3'-1"	3'-0½"	6'-1½"	6'-0"	47¹³⁄₁₆"	20"	3"	2½:1
36	43¾	44	26⅝	27	4"	10½"	4'-0"	2'-11½"	6'-1½"	6'-6"	54⁵⁄₁₆"	22"	3½"	2½:1
42	51⅛	51	31⁵⁄₁₆	31	4½"	11½"	4'-7"	1-10¼"	6'-5¼"	7'-2"	59½"	23"	3¾"	2½:1
48	58½	59	36	36	5"	1'-3"	5'-3"	2'-10¾"	8'-1¾"	7'-10"	70⅝"	24"	4¼"	2½:1
54	65	65	40	40	5½"	1'-7"	5'-3"	2'-11"	8'-2"	8'-6"	72¹⁄₁₆"	24"	4¾"	2¼:1
60	73	73	45	45	6"	1'-10"	5'-6"	2'-8"	8'-2"	9'-0"	77¹³⁄₁₆"	24"	5"	2¼:1

• THE MEASURED SPAN AND RISE SHALL NOT VARY MORE THAN ± 2 PER CENT FROM THE VALUES SPECIFIED BY AASHTO M 206.

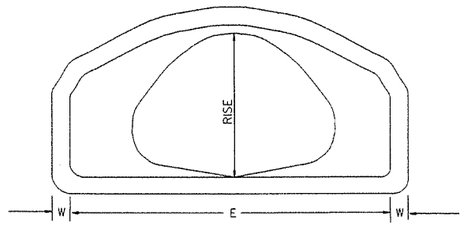

END VIEW
CONCRETE ARCH PIPE

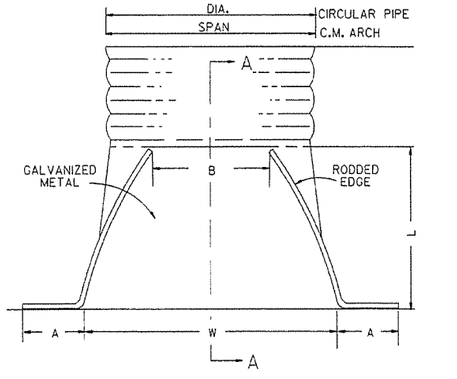

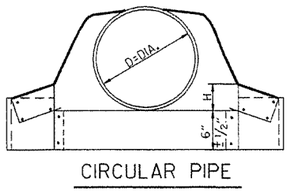

CIRCULAR PIPE

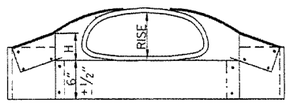

C.M. ARCH PIPE

CIRCULAR PIPE

D. DIA.	GAUGE	A 1" ±	B. MAX.	H 1" ±	L 1½" ±	W 2" ±	S
		INCHES					
12	16	6	6	6	21	24	2½:1
15	16	7	8	6	26	30	2½:1
18	16	8	10	6	31	36	2½:1
21	16	9	12	6	36	42	2½:1
24	16	10	13	6	41	48	2½:1
30	14	12	16	8	51	60	2½:1
36	14	14	19	9	60	72	2½:1
42	12	16	22	11	69	84	2½:1
48	12	18	27	12	78	90	2½:1
54	12	18	30	12	84	102	2:1
60	12	18	33	12	87	114	1¾:1
66	12	18	36	12	87	120	1½:1
72	12	18	39	12	87	126	1 1/3:1

C.M. ARCH PIPE

EQUIV. DIA.	SPAN	RISE	A 1" ±	B MAX.	H 1" ±	L 1½" ±	W 2" ±	S	GAUGE
	INCHES								
15"	17	13	7	9	6	19	30	2½:1	16
18"	21	15	7	10	6	23	36	2½:1	16
21"	24	18	8	12	6	28	42	2½:1	16
24"	28	20	9	14	6	32	48	2½:1	16
30"	35	24	10	16	6	39	60	2½:1	14
36"	42	29	12	18	8	46	75	2½:1	14
42"	49	33	13	21	9	53	85	2½:1	12
48"	57	38	18	26	12	63	90	2½:1	12
54"	64	43	18	30	12	70	102	2½:1	12
60"	71	47	18	33	12	77	114	2¼:1	12

NOTE: ALTERNATE CONNECTIONS TO THE PIPE CULVERTS, IN ACCORDANCE WITH MANUFACTURER'S STANDARD PRACTICES, MAY BE MADE SUBJECT TO THE APPROVAL OF THE ENGINEER.

END SECTIONS FOR CORRUGATED METAL PIPE CULVERTS

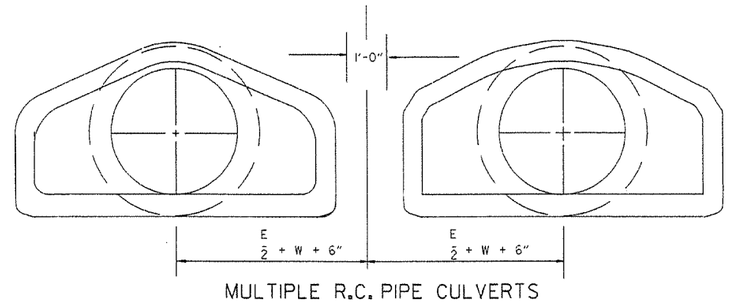

MULTIPLE R.C. PIPE CULVERTS

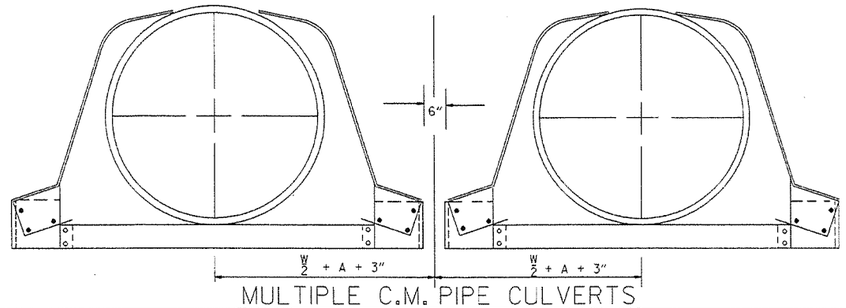

MULTIPLE C.M. PIPE CULVERTS

DATE	REVISION	FILMED
10-18-96	REVISED ASTM REF. TO AASHTO	10-18-96
5-15-80	REVISED DISTANCE BETWEEN MULTIPLE R.C.P. F.E.S.	664-5-15-80
7-14-78	C.M. ARCH SIZES TO CONFORM WITH AASHTO SIZES	752-7-14-78
8-22-75	ADDED MULTIPLE PIPE CULVERTS	517-8-22-75
12-5-74	REMOVED NOTE RE REINF. FOR R.C. F.E.S.	500-12-5-74
5-24-73	CMP END SECTION, SHOW PIPE PAY LENGTH	627-5-24-73
10-2-72	REVISED AND REDRAWN	760-10-2-72

ARKANSAS STATE HIGHWAY COMMISION

FLARED END SECTION

STANDARD DRAWING FES-2

stdfes2.dgn

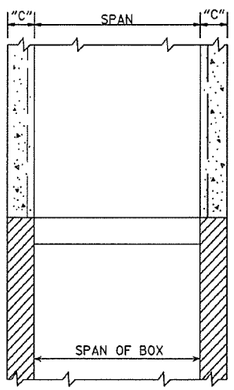

SECTION B-B

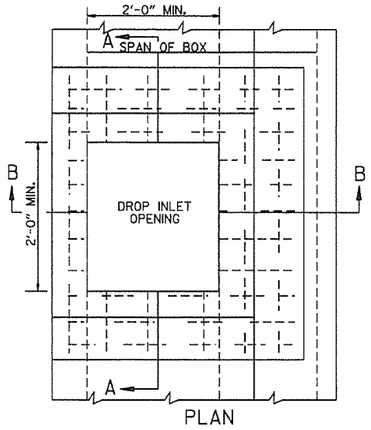

PLAN

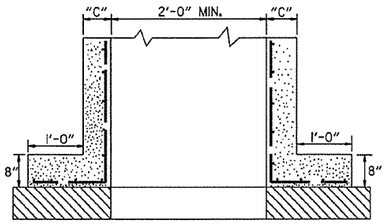

SECTION A-A

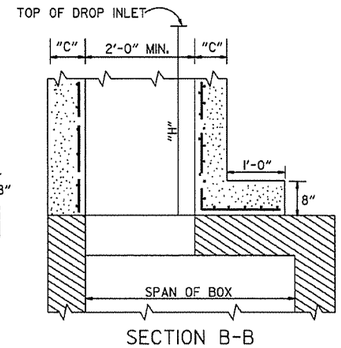

SECTION B-B

METHOD OF CONSTRUCTING DROP INLET ON EXISTING R.C. BOX CULVERT

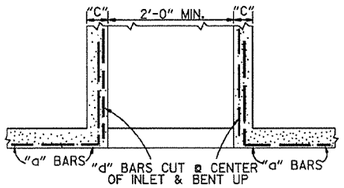

SECTION A-A

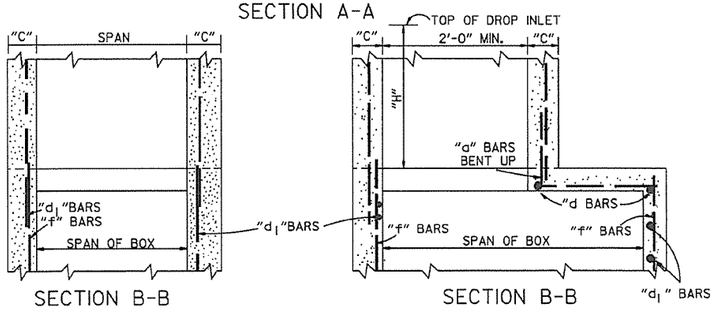

SECTION B-B SECTION B-B

METHOD OF CONSTRUCTING DROP INLET ON NEW R.C. BOX CULVERT

NOTE: "C" DIMENSIONS AND REINFORCING BAR SIZES, SHALL CONFORM TO THOSE SHOWN ON STANDARD DRAWING FOR DROP INLET.

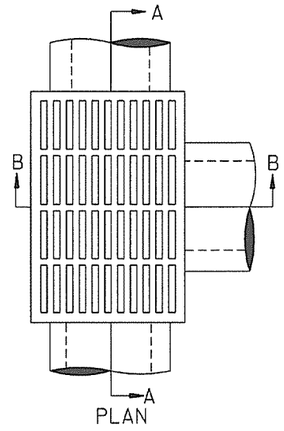

PLAN

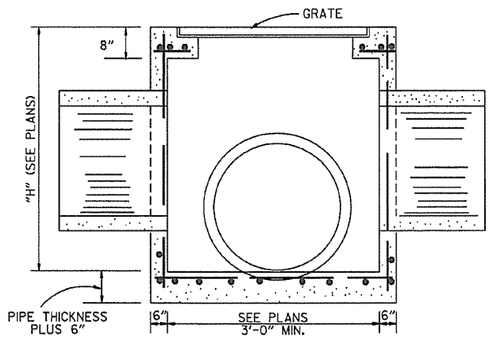

SECTION A-A

NOTE: REINF. BARS TO BE #4 BARS ON 6" CTRS. WITH 1½" MIN. COVER. THIS TYPE DROP INLET TO BE USED WHERE NOT SUBJECTED TO TRAFFIC.

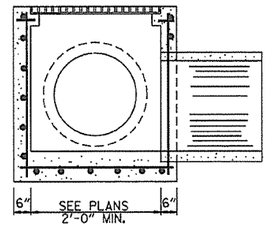

SECTION B-B

DROP INLET (TYPE E)

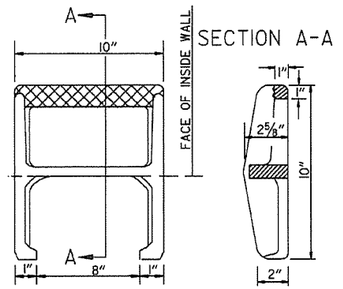

APPROX. WEIGHT = 11 LBS. (CAST IRON)

PLAN

NOTE: THIS DETAIL IS TYPICAL. OTHERS MAY BE USED WITH PRIOR APPROVAL OF THE ENGINEER.

DETAIL OF STEP FOR DROP INLET

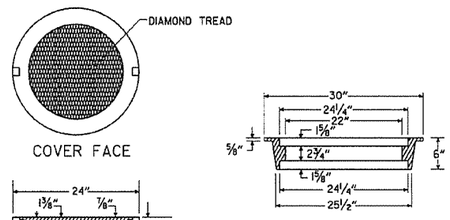

COVER SECTION RING SECTION

APPROXIMATE TOTAL WEIGHT = 333 LBS.

HEAVY DUTY RING & COVER

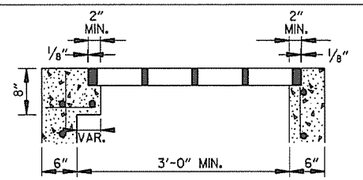

SECTION A-A

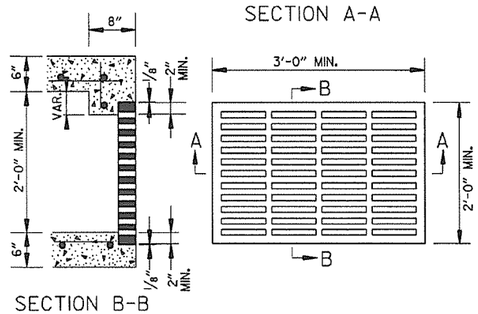

SECTION B-B

APPROXIMATE MINIMUM WATERWAY OPENING = 260 SQ. IN.

GRATE FOR TYPE E DROP INLET

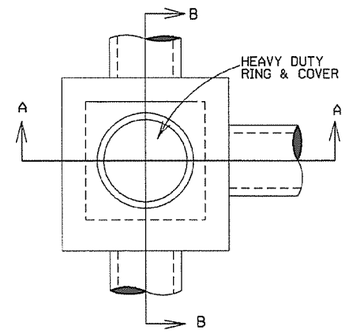

PLAN

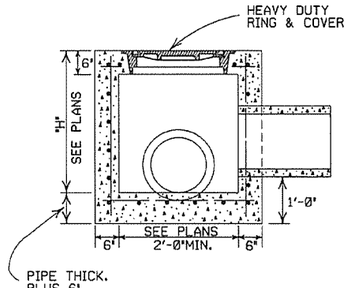

SECTION A-A

NOTE: REINF. BARS TO BE #4 BARS ON 6" CTRS. WITH 1½" MIN. COVER. THIS TYPE JUNCTION BOX TO BE USED WHERE NOT SUBJECTED TO TRAFFIC.

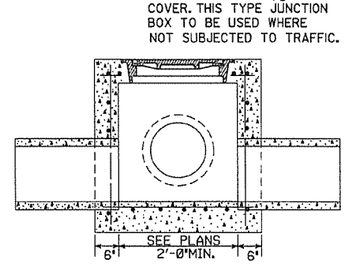

SECTION B-B

JUNCTION BOX (TYPE E)

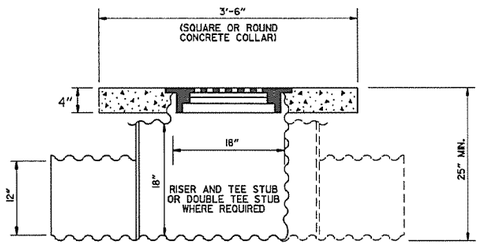

NOTE: CONCRETE COLLAR TO BE CAST IN PLACE. 12" PIPE CULVERTS TO BE MEASURED AND PAID FOR AS " 12" SIDE DRAIN ".

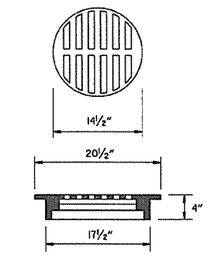

USE NEENAH R-5901-C OR EQUIVALENT BICYCLE SAFE FRAME AND GRATE

DETAIL OF YARD DRAIN

GENERAL NOTES:

1. ALL EXPOSED CORNERS SHALL BE ¾" CHAMFERED.
2. STEPS SHALL BE INSTALLED ON 16" CENTERS ON ALL INLETS 4'-0" HIGH OR OVER, OR AS APPROVED BY THE ENGINEER.
3. EXPANSION JOINT MATERIAL SHALL BE ¾" PREFORMED FIBER.
4. GRATE OR GRATE AND FRAME SHALL BE CONSTRUCTED OF CAST IRON AND SHALL CONFORM TO THE REQUIREMENTS OF THE STANDARD SPECIFICATIONS FOR GRAY IRON CASTINGS AASHTO M 105 CLASS 35B. GRATE MAY BE USED WITHOUT FRAME.
5. GRATE AND FRAME SHALL NOT BE PAINTED.
6. GRATE SHALL BE BICYCLE SAFE.
7. HEAVY DUTY RING SHALL ALWAYS BE INSTALLED WITH FLANGE ON TOP.
8. HEAVY DUTY RING AND COVER SHALL BE CONSTRUCTED OF CAST IRON AND SHALL CONFORM TO THE REQUIREMENTS OF THE STANDARD SPECIFICATIONS FOR GRAY IRON CASTINGS AASHTO M105 CLASS 35B & AASHTO M306.
9. HEAVY DUTY RING AND COVER SHALL NOT BE PAINTED.
10. DIMENSIONS SHOWN FOR RING AND COVER ARE TYPICAL. THE CONTRACTOR MAY SUBSTITUTE SIMILAR CASTINGS WITH THE APPROVAL OF THE ENGINEER. REQUESTING APPROVAL FOR CASTING DESIGNS MAY BE MADE BY REFERRING TO PREVIOUSLY APPROVED DRAWINGS.

DATE REV.	REVISION	DATE FILMED
11-16-01	ADDED NOTE 10	
1-12-00	REVISED HEAVY DUTY RING & COVER	
7-02-98	CHANGED GRATE DETAIL, DELETED DI(TYPE D), REPLACED RING & COVER W/HEAVY DUTY RING & COVER, ADDED JUNCTION BOX (TYPE E)	
6-26-97	ADDED DIMENSION TO TYPE IV-A	
10-18-96	ADDED DETAIL OF YARD DRAIN	
8-15-91	DELETE TYPE IV GRATE	
7-15-88	REVISED STEP DETAIL	
5-20-83	REVISED DETAILS OF GRATES (TYPE IV & IV-A)	
2-4-83	ADDED GENERAL NOTE NO. 4	
3-2-81	ADDED TYPE IV-A GRATE	
5-22-74	DELETED INLET (TYPE F) & GRATE (TYPE III)	
10-2-72	REVISED AND REDRAWN	

ARKANSAS STATE HIGHWAY COMMISSION

DETAILS OF DROP INLETS & JUNCTION BOXES

STANDARD DRAWING FPC-9

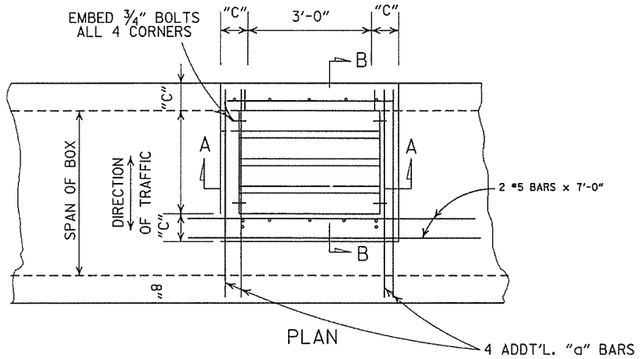

PLAN

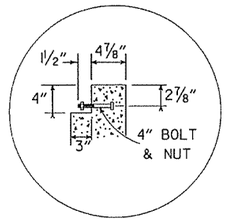

DETAIL A

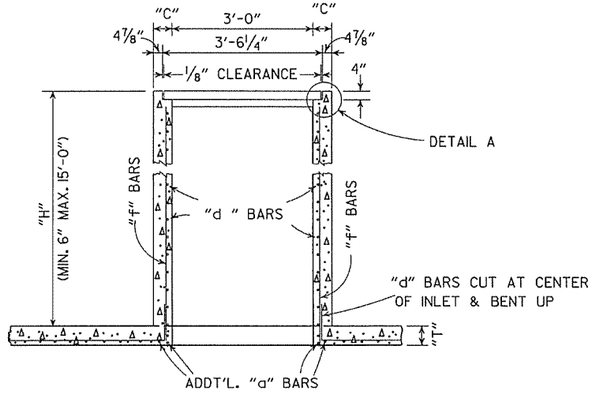

SECTION A-A

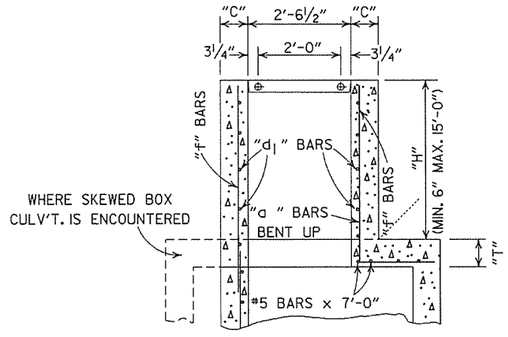

SECTION B-B

NOTE: ADDT'L.REINF. STEEL TO BE INCLUDED IN UNIT PRICE BID PER TYPE "TM" D.I.

DIMENSIONS & REINF. BARS FOR D.I. TO BE THE SAME AS THOSE SHOWN ON APPLICABLE STD. BARREL DRAWING FOR R.C. BOX CULVERTS.

DROP INLET TYPE "TM" FOR REINFORCED CONC. BOX CULVERTS

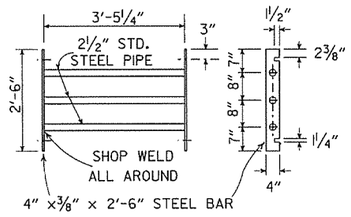

GRATE DETAIL

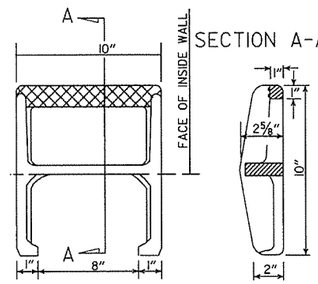

APPROX. WEIGHT = 11 LBS. (CAST IRON)

PLAN

NOTE: THIS DETAIL IS TYPICAL. OTHERS MAY BE USED WITH PRIOR APPROVAL OF THE ENGINEER.

DETAIL OF STEP FOR DROP INLET

GENERAL NOTES:

1. STEEL PIPE FOR GRATES AND BOLTS SHALL CONFORM TO THE REQUIREMENTS OF SECTION 807. BOLTS SHALL CONFORM TO ONE OF THE FOLLOWING: ASTM A193, GRADE B8 CLASS 1 OR 2, ASTM A307 OR AASHTO M 164.
2. STEEL PIPE FOR GRATES SHALL BE "STANDARD WEIGHT" PIPE CONFORMING TO ASTM A53 NATIONAL STANDARD PIPE.
3. BOLTS, NUTS, WASHERS SHALL BE GALVANIZED IN ACCORDANCE WITH AASHTO M 232 OR AASHTO M 298, CLASS 40 OR 50.
4. ALL EXPOSED CORNERS TO HAVE ¾" CHAMFER.
5. ALL #4 AND #5 REINFORCING BARS TO HAVE 1½" COVER. LARGER SIZES TO HAVE 2" COVER.
6. THE COMPLETE PIPE GRATE SHALL BE PAINTED IN ACCORDANCE WITH THE STANDARD SPECIFICATIONS.

TABLE OF "W" DIMENSIONS

604

I.D. PIPE	SKEW OF CROSS DRAIN		
	STRAIGHT	30°	45°
	"W"	"W"	"W"
24"	4'-0"	4'-0"	4'-0"
30"	4'-0"	4'-0"	4'-5"
36"	4'-0"	4'-3"	5'-3"
42"	4'-3"	4'-11"	6'-1"
48"	4'-10"	5'-7"	6'-11"

NOTE: DIMENSIONS SHOWN ABOVE ARE FOR PIPES INTERSECTING DROP INLET ON ONE SIDE ONLY. FOR SKEWED PIPES INTERSECTING BOTH SIDES OF DROP INLET, "W" WILL NEED TO BE INCREASED OR AXIS OF INTERSECTING PIPES WILL NEED TO BE SHIFTED.

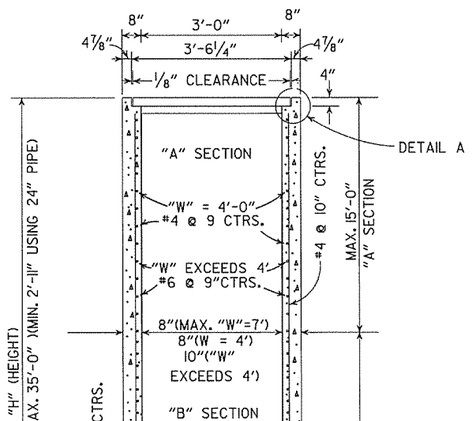

SECTION B-B

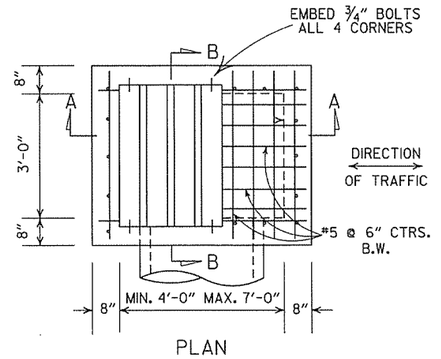

PLAN

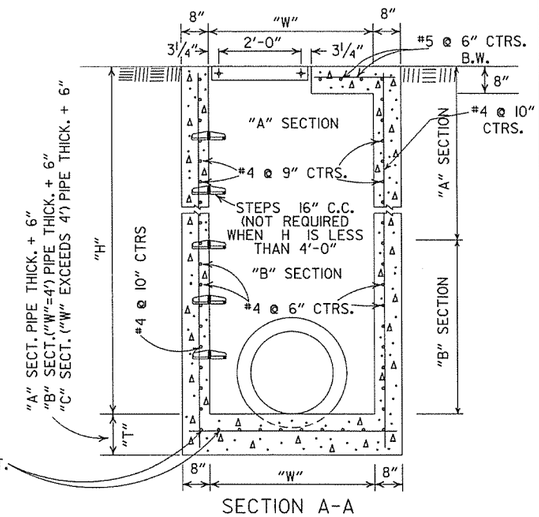

SECTION A-A

DROP INLET(TYPE RM)

8-22-02	ADDED & REVISED DIMENSION TO SECTION A-A	
1-12-00	CORRECTED DIMENSION ON SECTION B-B	
11-06-97	ADDED DIMENSION TO SECTION A-A	
10-18-96	REVISED ASTM REF. TO AASHTO AND ADDED NOTE TO TABLE OF "W" DIMENSIONS	
10-1-92	ADDED DIRECTION OF TRAFFIC	10-1-92
8-15-91	ADDED NOTE ABOUT PAINTING OF GRATE	8-15-91
11-30-89	ALTERED DETAIL A	11-30-89
7-15-88	REVISED STEP DETAIL,TM & RM D.I. & GRATE DETAIL	719-7-15-88
10-2-72	REVISED AND REDRAWN	542-10-2-72
REVISED		DATE FILMED

ARKANSAS STATE HIGHWAY COMMISSION

DETAILS OF DROP INLETS

STANDARD DRAWING FPC-9D

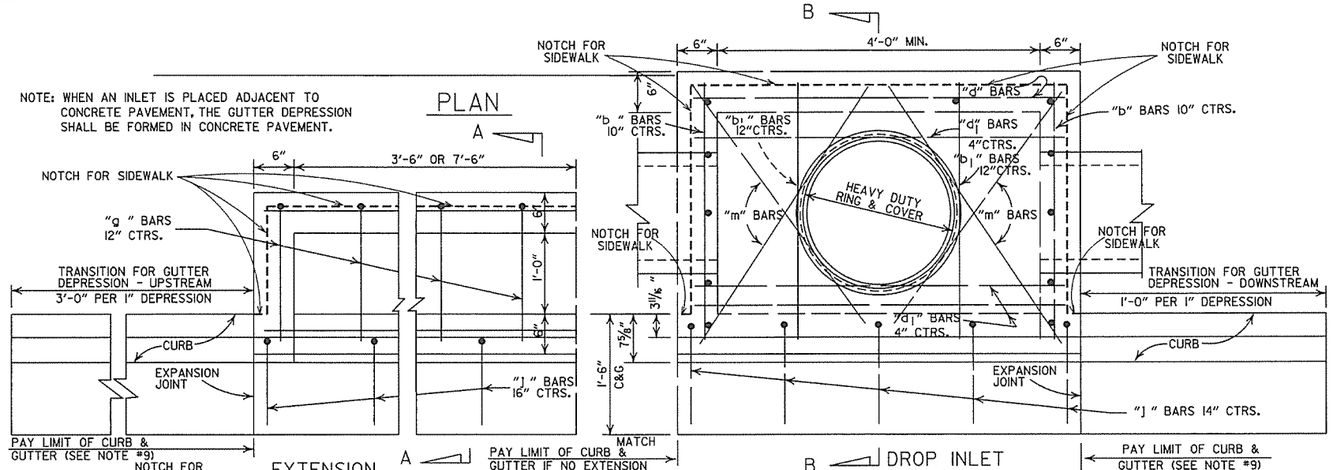

4'-0" LENGTH DROP INLET

PIPE SIZE	MIN. WIDTH	HEIGHT 5'-0" CLASS A CONC.	HEIGHT 5'-0" REINF. STEEL	PLUS OR MINUS PER LIN. FT. OF HEIGHT CLASS A CONC.	PLUS OR MINUS PER LIN. FT. OF HEIGHT REINF. STEEL
		CU. YDS.	POUNDS	CU. YDS.	POUNDS
18"	2'-6"	1.77	156	0.28	22
24"	2'-6"	1.79	156	0.28	22
30"	3'-2"	2.39	205	0.30	26
36"	3'-8"	2.63	236	0.32	28
42"	4'-4"	2.95	250	0.34	30
48"	4'-10"	3.21	265	0.36	32

NOTE: QUANTITIES ARE APPROXIMATE AND ARE SHOWN FOR BIDDER INFORMATION ONLY.

DROP INLET EXTENSION

4'-0" CLASS A CONC.	4'-0" REINF. STEEL	8'-0" CLASS A CONC.	8'-0" REINF. STEEL
CU. YDS.	POUNDS	CU. YDS.	POUNDS
0.58	38	0.87	72
DEDUCT FROM QUANTITY COMPUTED FOR EACH EXTENSION ADDED.			
0.04	3		

DEDUCT FROM QUANTITY COMPUTED FOR EACH PIPE ENTERING INLET		
INSIDE DIA. PIPE	CLASS A CONC.	REINF. STEEL
INCHES	CU. YDS.	POUNDS
18	0.05	2
24	0.09	3
30	0.13	4
42	0.24	8

BAR DIAMOND

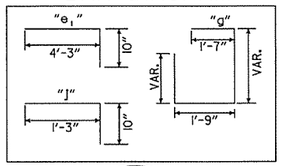

BACK OPENING

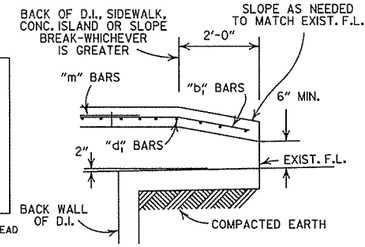

WHEN OPENING IN BACK IS CALLED FOR ON PLANS EXTEND OPENING AS SHOWN IN DETAIL. PAYMENT TO BE INCLUDED IN PRICE BID FOR DROP INLET (TYPE C).

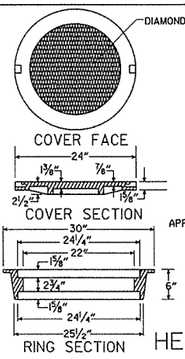

APPROXIMATE TOTAL WEIGHT = 333 LBS.

HEAVY DUTY RING & COVER

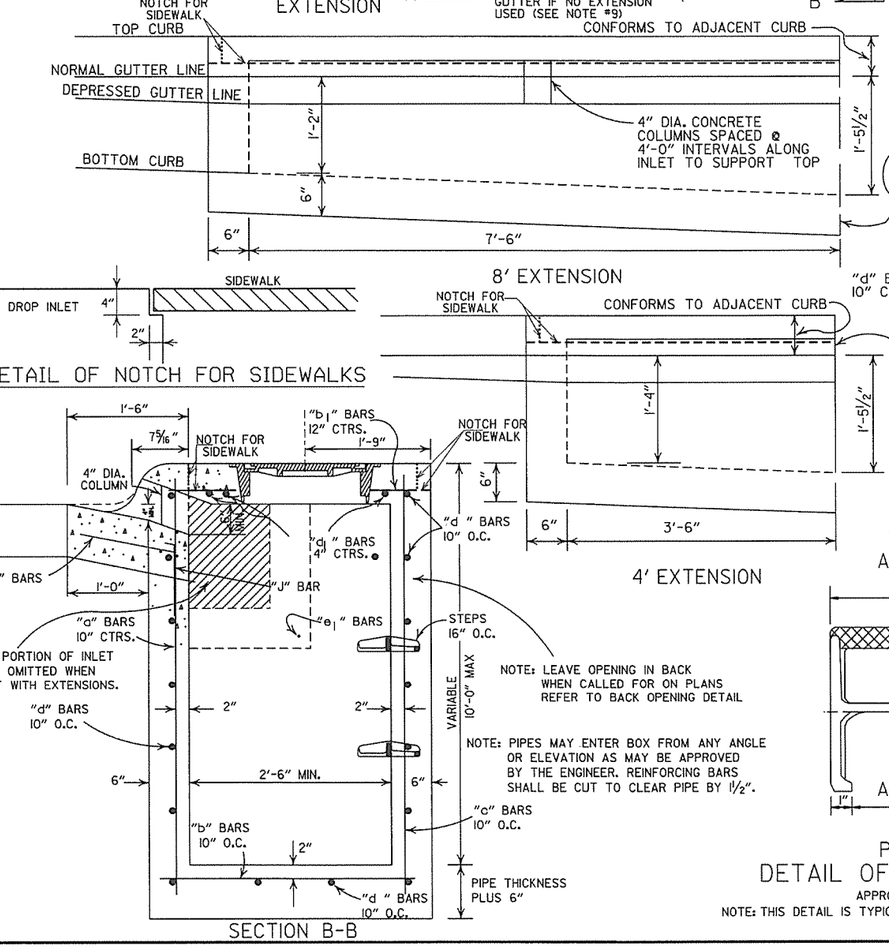

GENERAL NOTES:
1. ALL EXPOSED CORNERS TO HAVE 3/4" CHAMFER.
2. STEPS SHALL BE INSTALLED IN ALL INLETS 4'-0" HIGH AND OVER OF AS APPROVED BY THE ENGINEER.
3. ALL REINF. BARS SHALL BE #4 AND HAVE 1 1/2" COVER.
4. DROP INLETS AND EXTENSION ON CURVED SECTIONS SHALL CONFORM TO THE CURVATURE OF THE CURB.
5. THIS DROP INLET MAY BE CONSTRUCTED ON NEW OR EXISTING R.C. BOX CULVERT AS SHOWN ON F.P.C.-9.
6. WHEN PLANS CALL FOR DROP INLET OVER 10'-0" HIGH, FLOOR AND WALLS SHALL BE CONSTRUCTED AS SHOWN FOR TYPE "RM" DROP INLET (F.P.C.-9D).
7. HEAVY DUTY RING SHALL ALWAYS BE INSTALLED WITH FLANGE ON TOP.
8. DURING CONSTRUCTION OF THE ROADWAY THE CONTRACTOR SHALL MAINTAIN DRAINAGE INTO OR AROUND THE DROP INLET AS APPROVED BY THE ENGINEER.
9. PAYMENT FOR CURB AND/OR CURB AND GUTTER WITHIN THE LIMITS OF DROP INLETS AND DROP INLET EXTENSIONS SHALL BE CONSIDERED INCLUDED IN PAYMENT MADE FOR DROP INLETS AND/OR DROP INLET EXTENSIONS.
10. HEAVY DUTY RING AND COVER SHALL BE CONSTRUCTED OF CAST IRON AND SHALL CONFORM TO THE REQUIREMENTS OF THE STANDARD SPECIFICATIONS FOR GRAY IRON CASTINGS AASHTO M105 CLASS 35B & AASHTO M306.
11. HEAVY DUTY RING AND COVER SHALL NOT BE PAINTED.
12. 4"x2" NOTCH SHALL BE FORMED IN ALL DROP INLETS TO SUPPORT SIDEWALK CONSTRUCTION. REFER TO DETAIL OF NOTCH FOR SIDEWALKS.
13. DIMENSIONS SHOWN FOR RING AND COVER ARE TYPICAL. THE CONTRACTOR MAY SUBSTITUTE SIMILAR CASTINGS WITH THE APPROVAL OF THE ENGINEER. REQUESTING APPROVAL FOR CASTING DESIGNS MAY BE MADE BY REFERRING TO PREVIOUSLY APPROVED DRAWINGS.

DATE REV.	REVISION	DATE FILMED
8-22-02	ADDED PAY LIMIT CURB NOTES TO SECTIONS A-A & B-B	
11-16-01	ADDED NOTE 13; REVISED SECTION B-B	
1-12-00	CORRECTED DIMENSION ON SECTION B-B & REVISED RING & COVER	
5-13-99	ADDED DETAIL OF NOTCH FOR SIDEWALKS	
7-02-98	REPLACED RING & COVER W/HEAVY DUTY RING & COVER ADDED NOTES 9,10,&11	
10-18-96	CORRECTED SPELLING	
4-26-96	ADDED NOTE 8 & REVISED (4')(8') EXTENSION TITLES	10-18-96
4-1-93	REVISED BACK OPENING & NOTE	
8-15-91	DELETE TYPE IV GRATE	
7-15-88	REVISED STEP DETAIL	
5-20-83	REVISED DETAILS OF GRATES (TYPE IV & IV-A)	
2-4-83	ADDED GENERAL NOTE NO. 4	
3-2-81	ADDED TYPE IV-A GRATE	
5-22-74	DELETED INLET (TYPE F) & GRATE (TYPE III)	
10-2-72	REVISED AND REDRAWN	

ARKANSAS STATE HIGHWAY COMMISSION

DETAILS OF DROP INLETS

(TYPE C)

STANDARD DRAWING FPC-9E

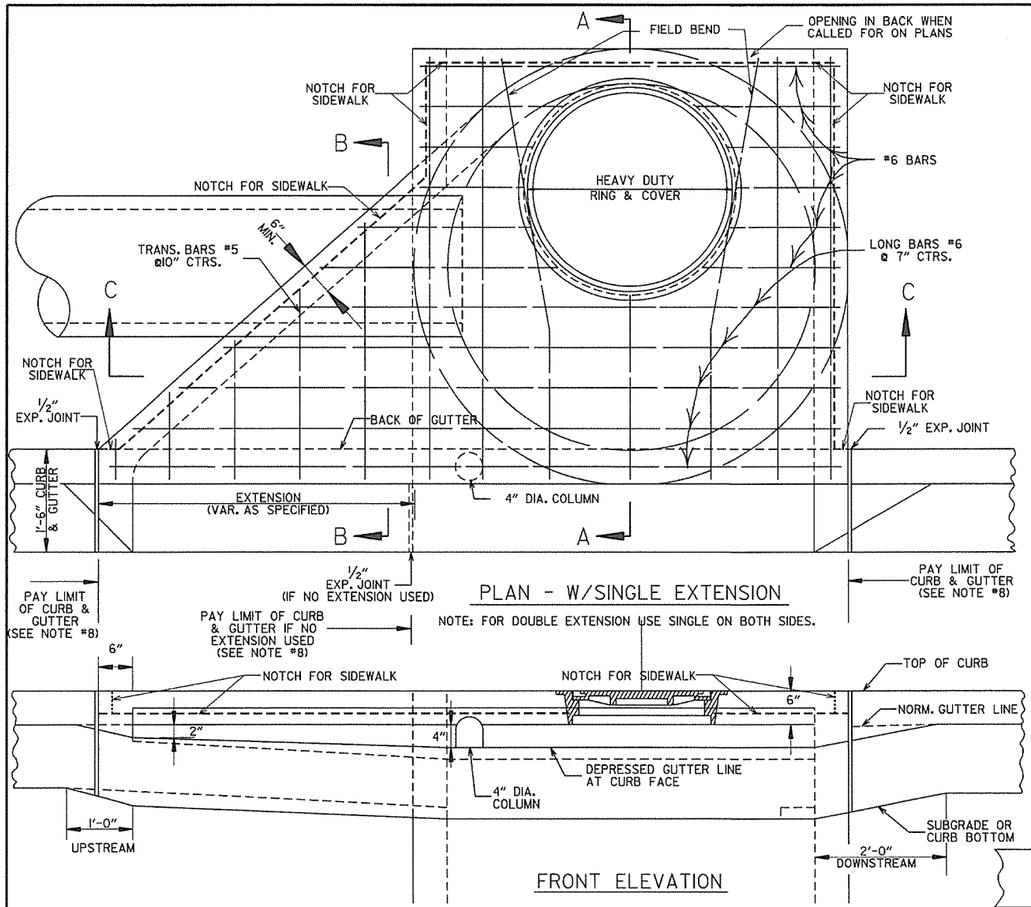

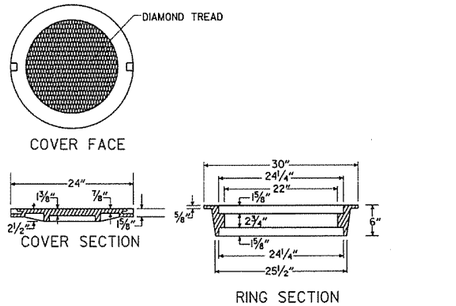

HEAVY DUTY RING & COVER

1. HEAVY DUTY RING AND COVER SHALL BE CONSTRUCTED OF CAST IRON AND SHALL CONFORM TO THE REQUIREMENTS OF THE STANDARD SPECIFICATIONS FOR GRAY IRON CASTINGS AASHTO M105 CLASS 35B & AASHTO M306.
2. HEAVY DUTY RING AND COVER SHALL NOT BE PAINTED.
3. HEAVY DUTY RING SHALL ALWAYS BE INSTALLED WITH FLANGE ON TOP.

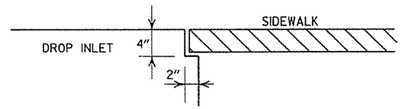

DETAIL OF NOTCH FOR SIDEWALKS

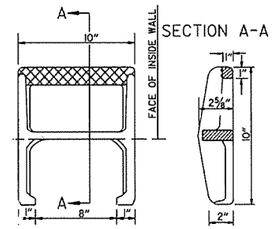

PLAN

NOTE: THIS DETAIL IS TYPICAL. OTHERS MAY BE USED WITH PRIOR APPROVAL OF THE ENGINEER.

DETAIL OF STEP FOR DROP INLET

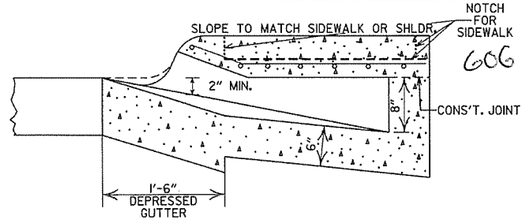

SECTION B-B

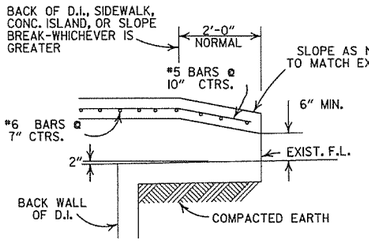

BACK OPENING

WHEN OPENING IN BACK IS CALLED FOR ON PLANS EXTEND OPENING AS SHOWN IN DETAIL. PAYMENT TO BE INCLUDED IN PRICE BID FOR DROP INLET (TYPE MO).

GENERAL NOTES:

1. ALL EXPOSED CORNERS TO HAVE 3/4" CHAMFER.
2. STEPS SHALL BE INSTALLED IN ALL INLETS 4'-0" HIGH AND OVER OR AS DIRECTED BY THE ENGINEER.
3. ALL REINFORCING BARS SHALL BE GRADE 60 AND HAVE MIN. 1 1/2" COVER.
4. DROP INLETS AND EXTENSION ON CURVED SECTIONS SHALL CONFORM TO THE CURVATURE OF THE CURB.
5. 4" DIA. COLUMNS SPACED AT MAX. 4'-0" INTERVALS SHALL BE INSTALLED ALONG INLET AND EXTENSION TO SUPPORT TOP.
6. BASE AND INLET WALLS SHALL BE CAST MONOLITHICALLY.
7. THE THROAT SHALL BE CAST INTEGRALLY WITH THE GUTTER.
8. PAYMENT FOR CURB AND/OR CURB AND GUTTER WITHIN THE LIMITS OF DROP INLETS AND DROP INLET EXTENSIONS SHALL BE CONSIDERED INCLUDED IN PAYMENT MADE FOR DROP INLETS AND/OR DROP INLET EXTENSIONS.
9. PIPES MAY ENTER DROP INLET FROM ANY ANGLE OR ELEVATION AS MAY BE APPROVED BY THE ENGINEER.
10. APPROPRIATE SIZE TYPE C DROP INLETS MAY BE SUBSTITUTED FOR TYPE MO DROP INLETS AS APPROVED BY THE ENGINEER. PAYMENT TO BE AS DROP INLET (TYPE MO).
11. DURING CONSTRUCTION OF THE ROADWAY THE CONTRACTOR SHALL MAINTAIN DRAINAGE INTO OR AROUND THE DROP INLET AS APPROVED BY THE ENGINEER.
12. 4"x2" NOTCH SHALL BE FORMED IN ALL DROP INLETS TO SUPPORT SIDEWALK CONSTRUCTION. REFER TO DETAIL OF NOTCH FOR SIDEWALKS.
13. DIMENSIONS SHOWN FOR RING AND COVER ARE TYPICAL. THE CONTRACTOR MAY SUBSTITUTE SIMILAR CASTINGS WITH THE APPROVAL OF THE ENGINEER. REQUESTING APPROVAL FOR CASTING DESIGNS MAY BE MADE BY REFERRING TO PREVIOUSLY APPROVED DRAWINGS.

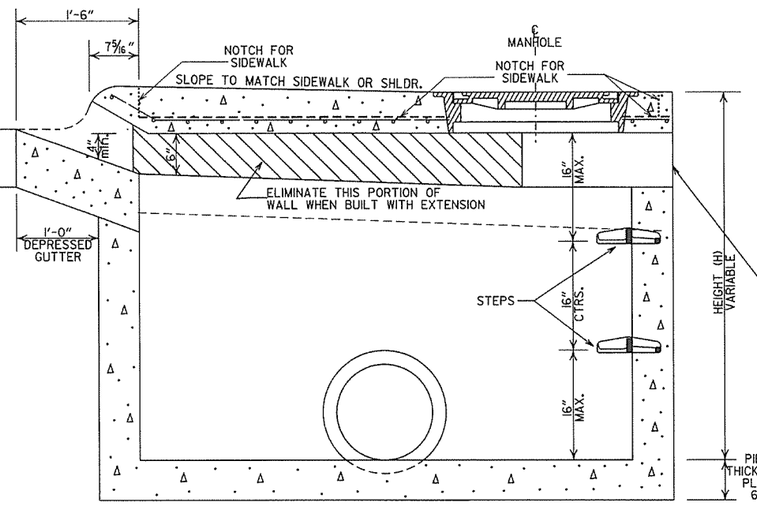

SECTION A-A

DIA. OF D.I.	DIA. OF OUTLET PIPE	MINIMUM WALL THICKNESS CAST IN PLACE	MINIMUM WALL THICKNESS PRECAST
4' I.D.	12" THRU 27"	6"	5"
5' I.D.	30" THRU 42"	8"	6"
6' I.D.	48" THRU 54"	8"	7"

DATE	REVISIONS	DATE FILMED
8-22-02	ADDED PAY LIMIT CURB NOTES TO SECTIONS A-A & B-B	
11-16-01	ADDED NOTE 13	
1-12-00	REVISED HEAVY DUTY RING & COVER	
5-13-99	ADDED NOTCH DETAIL FOR SIDEWALKS	
7-02-98	REP. NOTE 8, REM. PLAN DET., REV. PICTURE FOR NEW RING & COVER, ADDED HEAVY DUTY RING & COVER AND DETAIL OF STEP FOR DROP INLET	
4-28-96	ADDED NOTE 11; ADJ. OPENING DIMENSION	
10-12-95	CORRECTED #6 BAR SPACING	
7-20-95	CORRECTED DIAMETER OF D.I. IN BOX	
2-2-95	TYPE C TO MO (OPEN BACK DETAIL)	
11-3-94	REVISED GENERAL NOTES	11-3-94
4-1-93	REV. BACK OPEN. DETAIL & NOTE	4-1-93
8-15-91	REVISED NOTES 11,12 & ADDED 8K OPEN DETAIL	8-15-91
11-30-89	ADDED NOTE NO. 10	11-30-89
5-23-89	ADDED NOTE & MINIMUM WALL THICKNESS	513-5-23-89
7-15-88	ADDED EXTEND NOTE TO SECTION A-A	639-7-15-88
1-14-87	MODIFIED WALL THICKNESS	783-1-14-87
6-12-87	ISSUED	4-6-12-87

ARKANSAS STATE HIGHWAY COMMISSION

DETAILS OF DROP INLET (TYPE MO)

STANDARD DRAWING FPC-9M

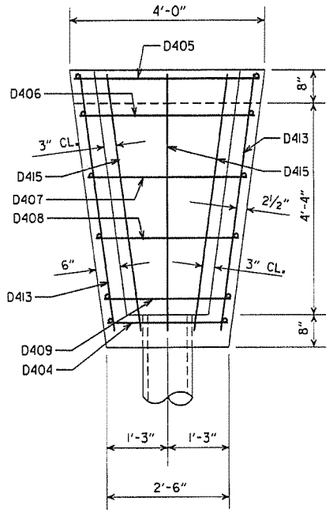

PLAN

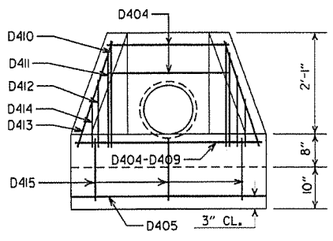

FRONT ELEVATION

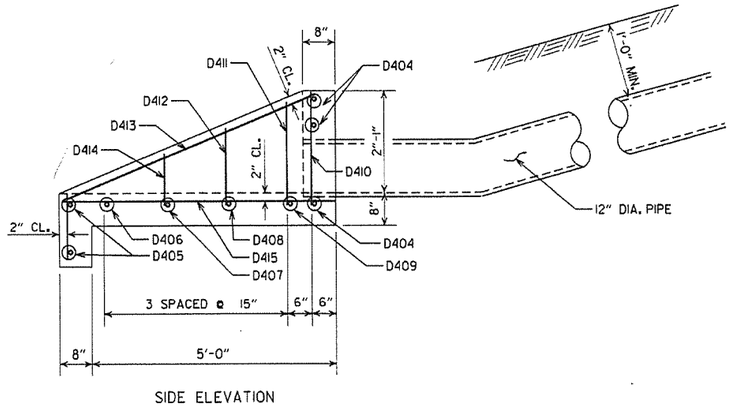

SIDE ELEVATION
CONCRETE SPILLWAY

BAR LIST (CONCRETE SPILLWAY)

MARK	NO. REQ'D.	LENGTH	BENDING DIAGRAM
D404	3	2'-2"	
D405	2	3'-8"	
D406	1	3'-5"	
D407	1	3'-1"	
D408	1	2'-9"	
D409	1	2'-5"	
D410	2	2'-5"	
D411	2	2'-2"	
D412	2	1'-9"	
D413	2	5'-6"	
D414	2	1'-2"	
D415	3	6'-5"	

DETAILS OF CONCRETE SPILLWAY (TYPE A)

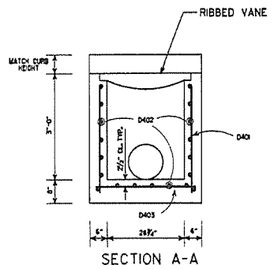

SECTION A-A

BAR LIST (DROP INLET)

MARK	TYPE N-1		TYPE N-2		TYPE N-3	
	NO. REQ'D.	LENGTH	NO. REQ'D.	LENGTH	NO. REQ'D.	LENGTH
D401	20	3'-0"	26	3'-0"	32	3'-0"
D402	19	2'-2"	19	3'-8"	19	5'-2"
D403	17	2'-11"	20	2'-11"	23	2'-11"

ALL BARS #4 @ 6" SPACING

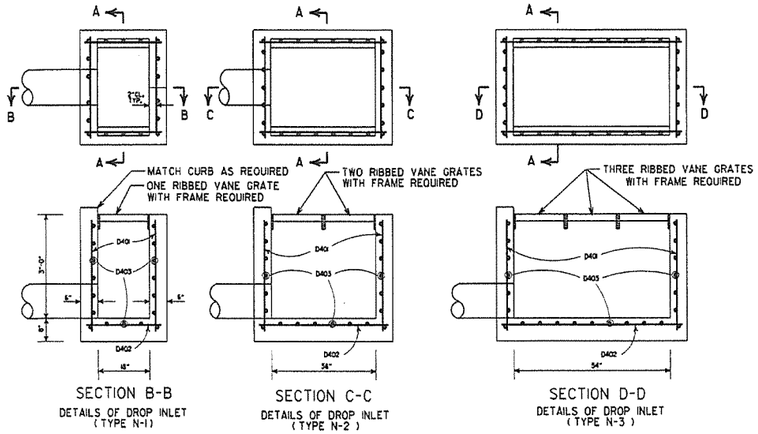

SECTION B-B
DETAILS OF DROP INLET
(TYPE N-1)

SECTION C-C
DETAILS OF DROP INLET
(TYPE N-2)

SECTION D-D
DETAILS OF DROP INLET
(TYPE N-3)

DETAILS OF DROP INLET

GENERAL NOTES (GRATE & FRAME)

1. RIBBED VANE GRATE AND FRAME SHALL BE CONSTRUCTED OF CAST IRON AND SHALL CONFORM TO THE REQUIREMENTS OF THE STANDARD SPECIFICATIONS FOR GRAY IRON CASTINGS AASHTO M 105 CLASS 35B & AASHTO M 306.
2. GRATE AND FRAME SHALL NOT BE PAINTED.
3. GRATE AND FRAME SHALL BE INSTALLED IN DROP INLET IN ASSEMBLED POSITION.
4. APPROXIMATE WEIGHT OF GRATE SHALL BE 170 LBS.

SECTION A-A

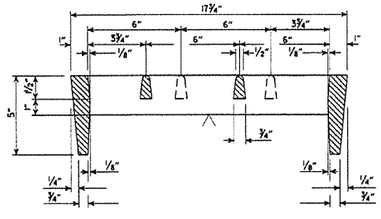

SECTION B-B

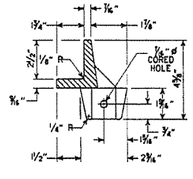

SECTION THRU FRAME

DETAILS OF RIBBED VANE GRATE AND FRAME

DATE REVISED	DATE FILMED	DESCRIPTION
7-02-98	7-2-98	REVISED SECT. A-A DETAIL OF DROP INLET & ADDED AASHTO REF. TO NOTE 1, REVISED GRATE
10-18-96		REVISED ASTM REF. TO AASHTO
8-15-91		ISSUED

ARKANSAS STATE HIGHWAY COMMISSION

DETAILS OF DROP INLETS AND SPILLWAY OUTLET

STANDARD DRAWING FPC-9N

STDfpc9N.DGN

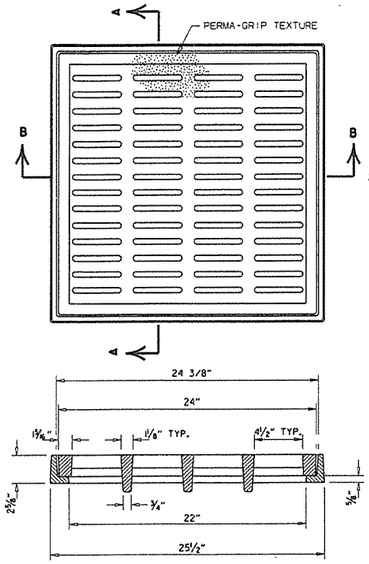

SECTION B-B

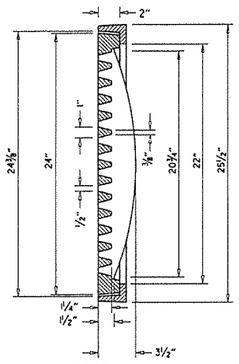

SECTION A-A

GENERAL NOTES (PEDESTRIAN GRATE & FRAME)

1. THE PEDESTRIAN GRATE SHALL BE ORIENTED IN THE TOP OF THE DROP INLET SO THAT THE ½" OPENINGS ARE PERPENDICULAR TO THE PATH OF PEDESTRIAN TRAVEL.
2. THE PEDESTRIAN GRATE AND FRAME SHALL BE CONSTRUCTED OF CAST IRON AND SHALL CONFORM TO THE REQUIREMENTS OF THE STANDARD SPECIFICATIONS FOR GRAY IRON CASTINGS AASHTO M 105, CLASS 35B. & AASHTO M 306.
3. THE GRATE AND FRAME SHALL NOT BE PAINTED.
4. THE GRATE AND FRAME SHALL BE INSTALLED IN THE DROP INLET IN THE ASSEMBLED POSITION.
5. THE APPROXIMATE WEIGHT OF THE GRATE AND FRAME SHALL BE 211 LBS.
6. THE MINIMUM WATERWAY OPENING SHALL BE 122 SQ. IN.

DETAILS OF PEDESTRIAN GRATE AND FRAME

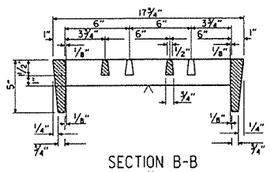

SECTION B-B

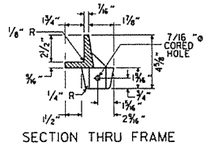

SECTION THRU FRAME

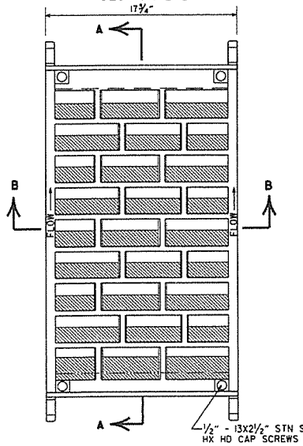

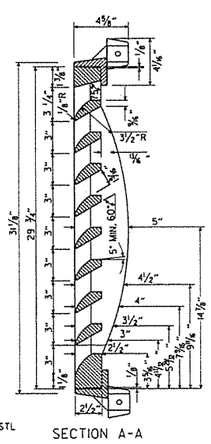

SECTION A-A

DETAILS OF RIBBED VANE GRATE AND FRAME

GENERAL NOTES (RIBBED VANE GRATE & FRAME)

1. RIBBED VANE GRATE AND FRAME SHALL BE CONSTRUCTED OF CAST IRON AND SHALL CONFORM TO THE REQUIREMENTS OF THE STANDARD SPECIFICATIONS FOR GRAY IRON CASTINGS AASHTO M 105, CLASS 35B, & AASHTO M 306.
2. GRATE AND FRAME SHALL NOT BE PAINTED.
3. GRATE AND FRAME SHALL BE INSTALLED IN DROP INLET IN ASSEMBLED POSITION.
4. APPROXIMATE WEIGHT OF GRATE SHALL BE 170 LBS.

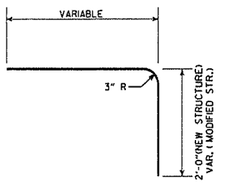

DETAIL OF BENT "b" BAR

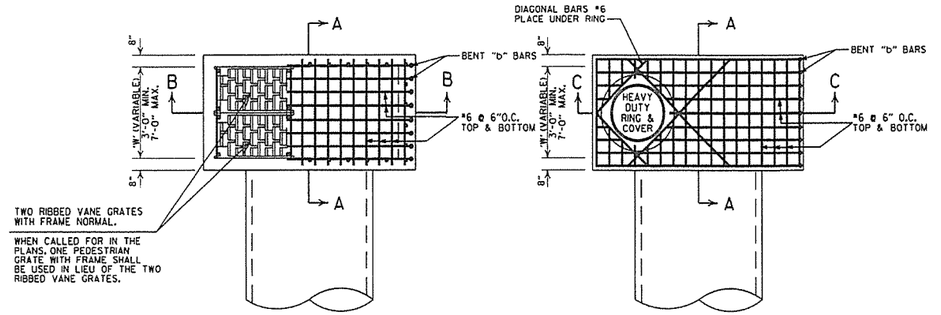

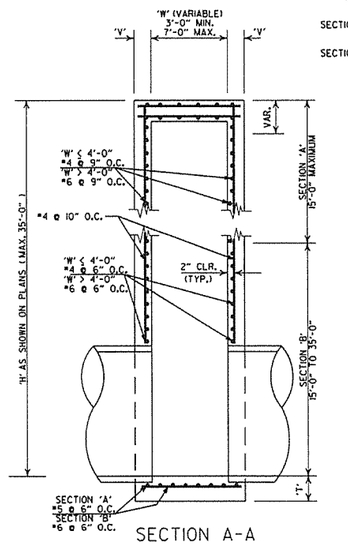

SECTION A-A

SECTION 'A' 'V' = 8"
SECTION 'B' (W≤4'-0") 'V' = 8"
SECTION 'B' (W>4'-0") 'V' = 10"

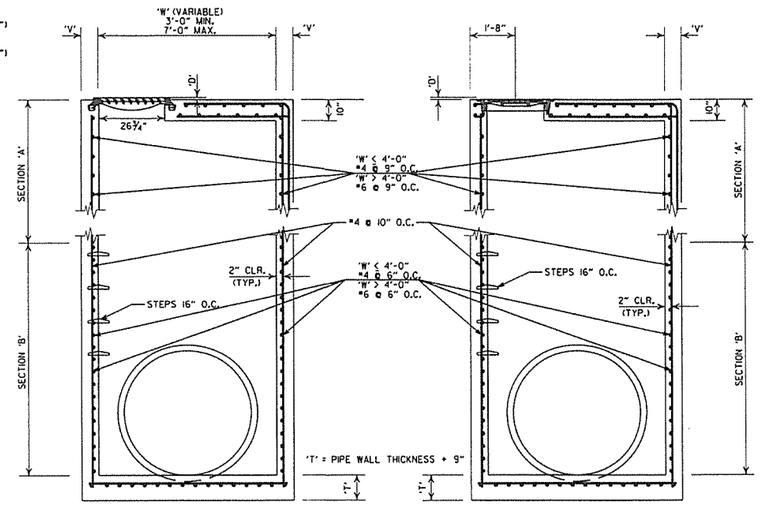

SECTION B-B

SECTION C-C

DETAILS OF DROP INLET (TYPE ST)

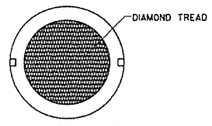

COVER FACE

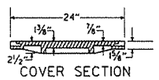

COVER SECTION

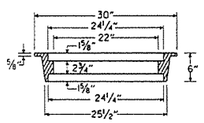

RING SECTION

HEAVY DUTY RING & COVER

APPROXIMATE TOTAL WEIGHT = 333 LBS.

GENERAL NOTES (TYPE ST DROP INLET & JUNCTION BOX)

1. THE 'D' DIMENSION SHALL MATCH THE FINAL LIFT OF ACHM SURFACE COURSE SHOWN IN THE PLANS WHEN ASPHALT PAVING SURROUNDS THE GRATE OR RING COVER, AND SHALL BE 0" AT OTHER INSTALLATIONS.
2. THE STEPS SHALL BE OMITTED WHERE 'H' IS LESS THAN 4'-0".
3. ALL EXPOSED CORNERS ARE TO HAVE A ¾" CHAMFER.

GENERAL NOTES (HEAVY DUTY RING & COVER):

1. HEAVY DUTY RING AND COVER SHALL BE CONSTRUCTED OF CAST IRON AND SHALL CONFORM TO THE REQUIREMENTS OF THE STANDARD SPECIFICATIONS FOR GRAY IRON CASTINGS AASHTO M 105, CLASS 35B, & AASHTO M 306.
2. HEAVY DUTY RING AND COVER SHALL NOT BE PAINTED.
3. HEAVY DUTY RING SHALL ALWAYS BE INSTALLED WITH FLANGE ON TOP.
4. DIMENSIONS SHOWN FOR RING AND COVER ARE TYPICAL. THE CONTRACTOR MAY SUBSTITUTE SIMILAR CASTINGS WITH THE APPROVAL OF THE ENGINEER. REQUESTING APPROVAL FOR CASTING DESIGNS MAY BE MADE BY REFERRING TO PREVIOUSLY APPROVED DRAWINGS.

DATE REVISED	DATE FILMED	DESCRIPTION
7-26-12		REMOVED NOTE 4, REVISED 'T', REVISED BOTTOM SLAB REBAR FOR SECTION 'A', SHOWED REBAR CLEARANCE IN SECTIONS
11-16-01		ADDED NOTE 4
1-12-00		REVISED HEAVY DUTY RING & COVER
5-13-99		ADDED PEDESTRIAN FRAME & GRATE
7-02-98		REMOVED NOTE 5, REV. DIMENSIONS, ADDED HEAVY DUTY RING & COVER ADDED AASHTO REF. REVISED GRATE
10-18-96		REVISED ASTM REF. TO AASHTO
10-1-92		REVISED & REISSUED
8-15-91	8-15-91	REVISED & REISSUED

ARKANSAS STATE HIGHWAY COMMISSION

DETAILS OF DROP INLET & JUNCTION BOX (TYPE ST)

STANDARD DRAWING FPC-9S

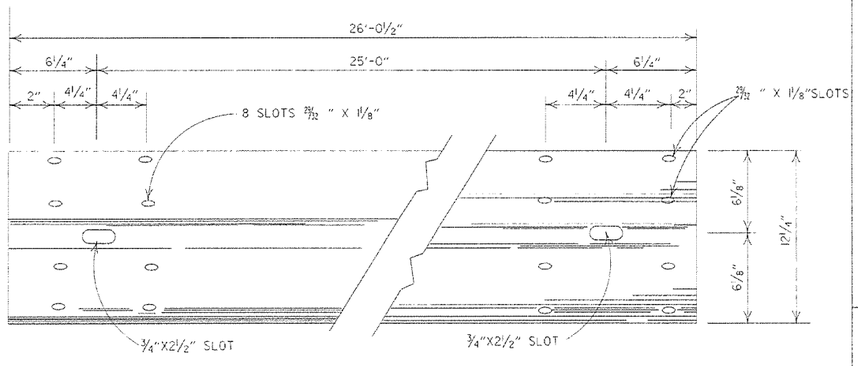

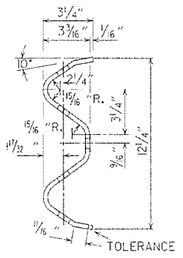

DETAILS OF
W-BEAM GUARD RAIL

RAIL SECTION OF CLOSELY SIMILAR DIMENSIONS AND COMPARABLE STRENGTH MAY BE SUBSTITUTED IF APPROVED BY THE ENGINEER.

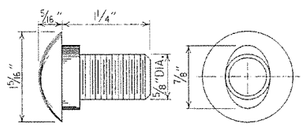

SPLICE BOLT
POST BOLT - SAME EXCEPT LENGTH

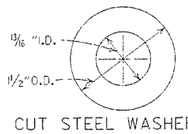

CUT STEEL WASHER

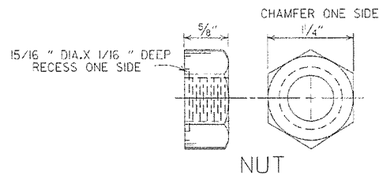

NUT

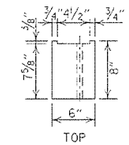

WOOD BLOCKOUT USED WITH WOOD POSTS SHALL BE 6"x8"x1'-2" WITH NO NOTCH REQUIRED.

TOP

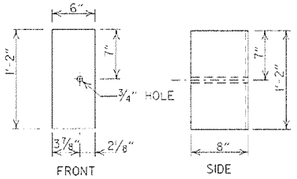

FRONT SIDE

WOOD BLOCKOUT
(W-BEAM)

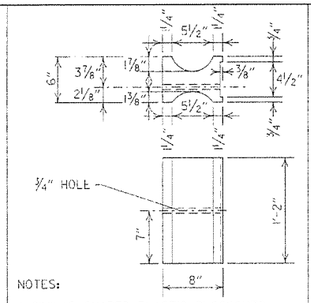

NOTES:
1. SIMILAR SHAPED PLASTIC BLOCKOUTS MAY BE USED AS LONG AS THEY MEET NCHRP-350 TEST LEVEL 3 SPECIFICATIONS OR REQUIREMENTS FOR MANUAL FOR ASSESSING SAFETY HARDWARE (MASH).
2. DIMENSIONS ARE SUBJECT TO MANUFACTURERS TOLERANCES.

PLASTIC BLOCKOUT
(W-BEAM)

HOLES IN POSTS AND BLOCKS TO BE ¾" DIA.

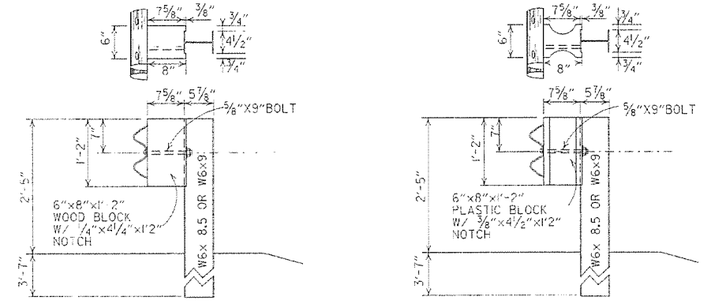

WOOD BLOCKOUT CONNECTIONS PLASTIC BLOCKOUT CONNECTIONS

DETAILS OF STEEL LINE POST CONNECTIONS
(W-BEAM)

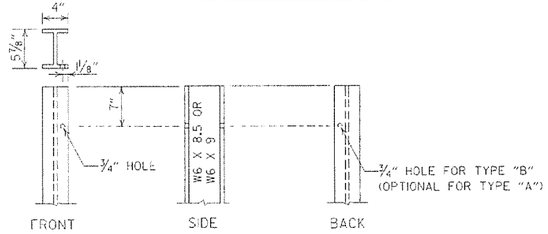

STEEL POST

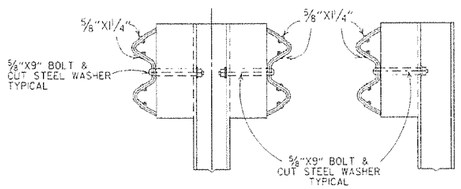

TYPE "B" TYPE "A"

DETAILS OF STEEL LINE POST CONNECTIONS
(W-BEAM)

HOLES IN POSTS AND BLOCKS TO BE ¾" DIA.

POSTS AND BLOCKS TO BE ROUGH SAWN 6"X8" WITH A TOLERANCE OF + OR - ¼".

WOOD BLOCKOUT CONNECTIONS PLASTIC BLOCKOUT CONNECTIONS

DETAILS OF WOOD LINE POST CONNECTIONS
(W-BEAM)

-GENERAL NOTES-

ALL BOLTS SHALL BE SUFFICIENT LENGTH TO EXTEND THROUGH THE FULL THICKNESS OF THE NUT AND NO MORE THAN ¾" BEYOND IT.

WHERE W-BEAM GUARD RAIL CONTINUES, THE INTERMEDIATE SECTIONS SHALL HAVE A POST SPACING OF 6'-3" UNLESS OTHERWISE NOTED.

W BEAM GUARD RAIL REPRESENTING INTERMEDIATE SECTIONS WILL BE MEASURED ALONG THE ROADWAY FACE FROM CENTERLINE OF POST TO CENTERLINE OF POST.

USE W-BEAM GUARD RAIL COMPONENTS OF SAME MATERIAL FOR ENTIRE JOB. FOR EXTENSIONS OR MODIFICATION OF EXISTING GUARD RAIL, W-BEAM GUARD RAIL COMPONENTS OF THE SAME TYPE AS THOSE EXISTING SHALL BE USED.

ANY BACKFILLING UNDER OR AROUND POST SHALL BE DAMP SAND THOROUGHLY TAMPED IN PLACE.

WOOD POSTS & WOOD BLOCKS SHALL BE EITHER DENSE NO.1 STRUCTURAL OR BETTER 9.7# (1400 f) OR NO.1 1350 f SOUTHERN PINE.

CONTRACTOR SHALL HAVE THE OPTION OF USING WOOD BLOCKOUTS FOR W-BEAM GUARD RAIL OR PLASTIC BLOCKOUTS, AS LONG AS BLOCKOUT USED MEETS NCHRP-350 TEST LEVEL 3 SPECIFICATIONS OR REQUIREMENTS FOR MANUAL FOR ASSESSING SAFETY HARDWARE (MASH) FOR W-BEAM GUARD RAIL.

DATE	REVISION	DATE FILM
7-14-10	RAISED HEIGHT OF GUARD RAIL 1"	
10-5-09	ADDED REFERENCE TO MASH	
4-10-03	REVISED GENERAL NOTES	
8-22-02	REVISED DIMENSION ON WOOD & PLASTIC BLOCKOUT CONNECTIONS & ON STEEL POST	
11-16-01	REVISED WOOD BLOCKOUT & DETAILS OF WOOD LINE POST CONNECTIONS	
3-30-00	REMOVED GUARD RAIL AT BRIDGE ENDS	
1-12-00	ADDED PLASTIC BLOCKOUT	
8-12-98	REV. BLOCKOUTS TO WOOD, DELETED CONC. POST & REV. GENERAL NOTE, DELETED DET. OF GUARD RAIL REPLACE. BEHIND CURB & DET. OF POST PLACE. IN SOLID ROCK, & ADDED DETAILS OF STEEL LINE POST CONN. REMOVED BACK-UP PLATE, REVISED HOLES IN STEEL POLES	
4-3-97	REMOVED "LAP IN DIRECTION OF TRAFFIC" NOTE & PLACED ARROWS ON WASHERS	
10-18-96	REVISED WOOD POST NOTE	
6-2-94	ADDED ALT. STEEL POST SIZE	
8-5-93	REVISED STEEL POST SIZE	8-5-93
10-1-92	REDRAWN & REVISED	10-1-92
8-15-91	REVISED WASHER NOTE	8-15-91
8-2-90	REV. GEN. NOTE & DEPHT OF ANC. POST IN ROCK	8-2-90
7-15-88	REVISED SECTION 3 & GENERAL NOTES	
3-4-88	REV. ANCHOR POST, E.V. NOTES & POST IN ROCK	780-3-4-88
10-30-87	REVISED WOOD LINE POST DETAIL	546-10-30-87
10-9-87	REDRAWN & REVISED	802-10-9-87

ARKANSAS STATE HIGHWAY COMMISSION

GUARD RAIL DETAILS

STANDARD DRAWING GR-8

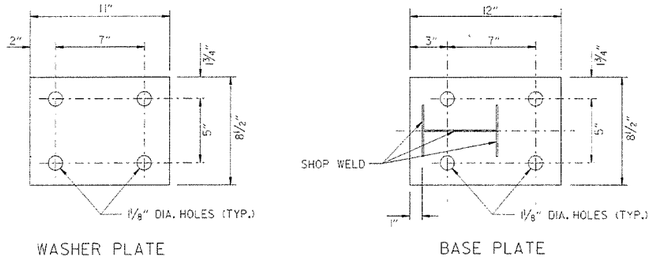

WASHER PLATE

BASE PLATE

Note: Bolts, nuts, washers and plates shall be galvanized in accordance with Section 807 of the Standard Specifications.

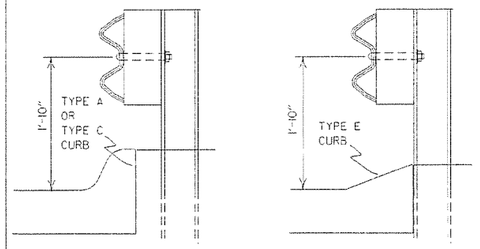

DETAIL OF GUARD RAIL PLACEMENT BEHIND CURB (W-BEAM)

FOR DESIGN SPEEDS OF 50 MPH OR LESS ALL CURB FACES, AS SHOWN ON STD. DRWG. CG-1, MAY BE USED. FOR DESIGN SPEEDS OF 55 MPH OR MORE TYPE "E" CURB FACE SHALL BE USED.

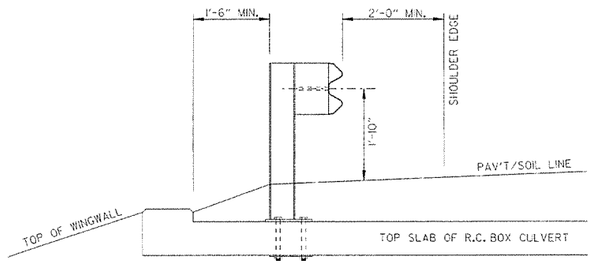

SECTION A-A

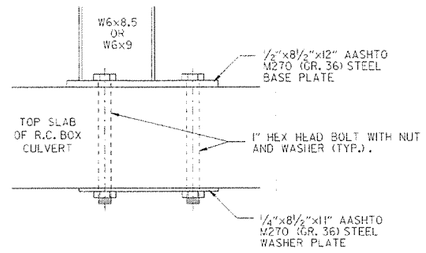

DETAIL OF CONNECTION

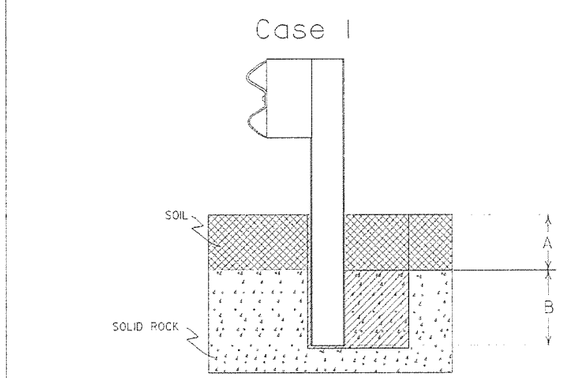

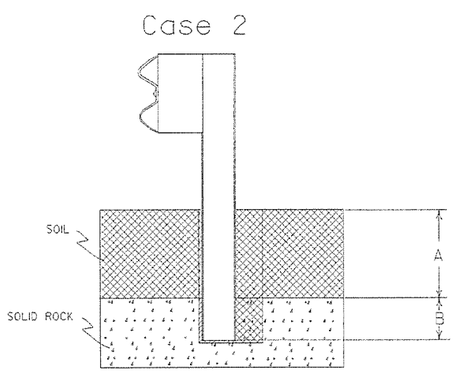

Plan View Steel Posts

Either hole configuration acceptable

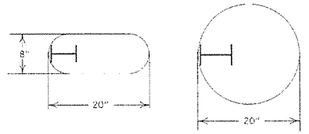

Plan View Wood Posts

Either hole configuration acceptable

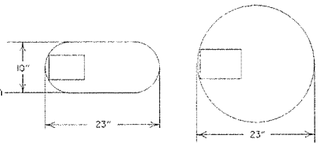

Notes: For overlying soil depths (A) ranging from 0 to 18", the depth of required drilling (B) is equal to 24".

Zone A:
Backfill according to Section 617.03(a).

Zone B:
Backfill hole in 6" lifts with material meeting the requirements of Section 802.02(c) - Alternate gradation. Compact to 95% maximum dry density per ASTM D-698.

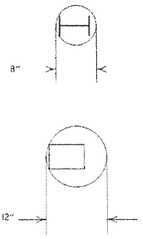

Notes: For overlying soil depths (A) ranging from 18" to 44", the depth of required drilling (B) is equal to either 12" or 44" minus the depth of soil whichever is less.

Zone A & B:
Backfill according to Section 617.03(a).

DETAIL OF POST PLACEMENT IN SOLID ROCK (W-BEAM)

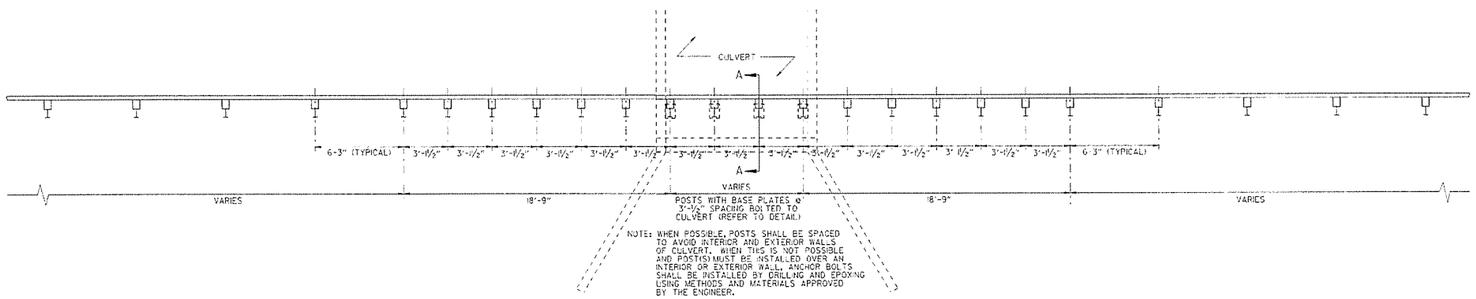

PLAN LAYOUT OF TYPE A GUARD RAIL AT LOW-FILL CULVERTS

NOTE: THIS DETAIL IS TO BE USED ONLY WHEN THE COVER OVER THE CULVERT DOES NOT PERMIT FULL EMBEDMENT OF GUARD RAIL POSTS AS SHOWN ON STD. DWG. GR-8.

DATE	REVISION	DATE FILM
7-14-10	RAISED HEIGHT OF GUARD RAIL 1"	
4-12-07	REVISED DETAIL OF GUARD RAIL PLACEMENT BEHIND CURB	
1-10-05	ADDED GUARD RAIL PLACEMENT BEHIND CURB; REVISED DETAIL OF CONNECTION	
1-18-04	REVISED POST PLACEMENT IN ROCK & CULVERT CONNECTION DETAILS. ADDED DETAIL FOR GUARD RAIL PLACEMENT AT LOW-FILL CULVERTS	
3-30-00	REMOVED CONCRETE INSERT ANCHOR	
8-12-98	CHANGED STEEL SPACER BLOCK TO WOOD BLOCKOUT, ADD. DET. OF GUARD RAIL CONNECTION TO R.C. BOX CULV'T. DELETED DET. OF STEEL LINE POST CONN.& ADDED DET. OF GUARD RAIL PLACE. BEHIND CURB & DET. OF POST PLACE. IN SOLID ROCK	
4-3-96	PLACED ARROWS AT CUT STEEL WASHERS	4-3-96
10-18-96	REV. ASTM REF. TO AASHTO	
11-22-95	ADDED OPTIONAL HOLES	
6-2-94	REVISED ALTERNATE POST SIZE	
8-5-93	REVISED STEEL POST SIZE	
10-1-92	REDRAWN & REVISED	10-1-92
8-2-90	DEL. WASHER ON ANCHOR ASSEMBLY	8-2-90
7-15-88	CONFORMED TO 1988 SPECS	
3-4-88	REVISED ANCHOR NOTE	
10-30-87	REVISED ANCHOR ASSEMBLY	712-10-30-87
10-30-87	REVISED PLACEMENT BEHIND CURB	547-10-30-87
10-9-87	REDRAWN & REVISED	803-10-9-87

ARKANSAS STATE HIGHWAY COMMISSION

GUARD RAIL DETAILS

STANDARD DRAWING GR-8A

NOTE: GUARD RAIL WITH GUARD RAIL TERMINAL (TYPE I) TO BE INSTALLED ONLY AT LOCATIONS SHOWN ON PLANS.

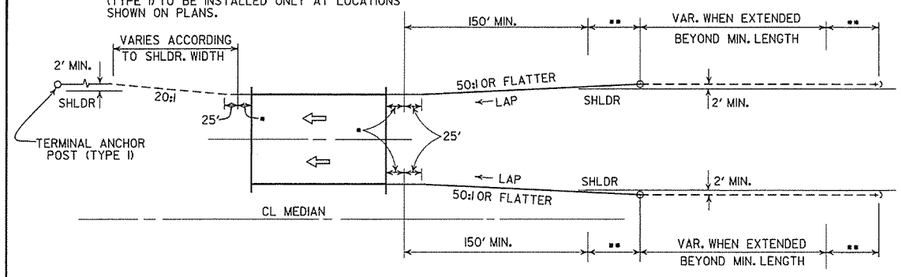

ONE-WAY TRAFFIC

••• LAP OF GUARD RAIL SHALL BE AS SHOWN FOR A DISTANCE OF UP TO 200', CHANGE TO LAP IN DIRECTION OF TRAVEL.

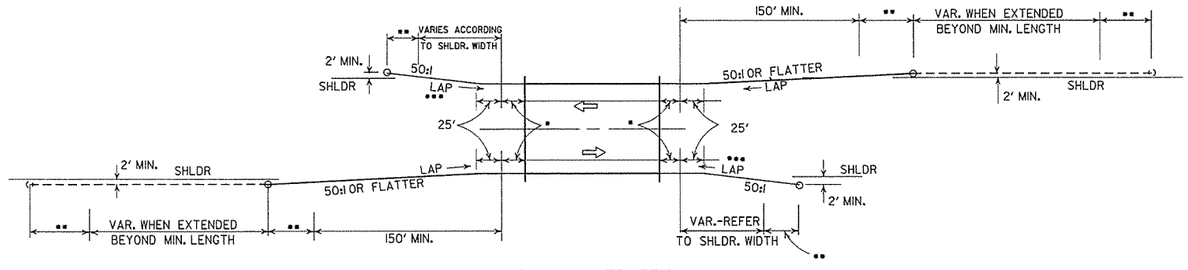

TWO-WAY TRAFFIC

METHODS OF INSTALLATION OF GUARD RAIL AT LESS THAN FULL SHOULDER WIDTH BRIDGES USING GUARD RAIL TERMINAL (TYPE 2)

••• LAP OF GUARD RAIL SHALL BE AS SHOWN FOR A DISTANCE OF UP TO 200', CHANGE TO LAP IN DIRECTION OF TRAVEL.

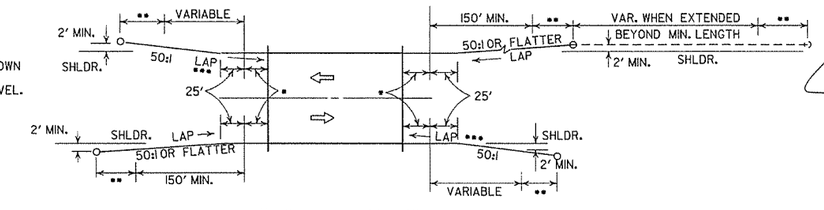

TWO-WAY TRAFFIC

NOTE: GUARD RAIL WITH GUARD RAIL TERMINAL (TYPE I) TO BE INSTALLED ONLY AT LOCATIONS SHOWN ON PLANS.

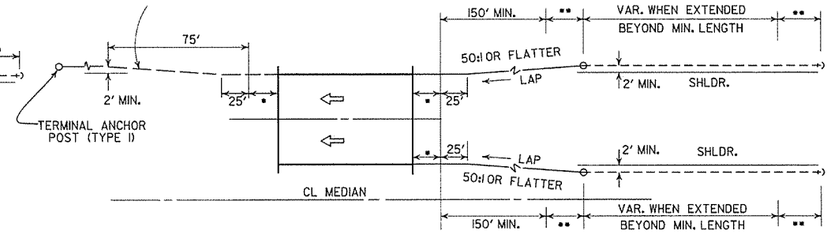

ONE-WAY TRAFFIC

METHOD OF INSTALLATION OF GUARD RAIL AT FULL SHOULDER WIDTH BRIDGES USING GUARD RAIL TERMINAL (TYPE 2)

••• LAP OF GUARD RAIL SHALL BE AS SHOWN FOR A DISTANCE OF UP TO 200', CHANGE TO LAP IN DIRECTION OF TRAVEL.

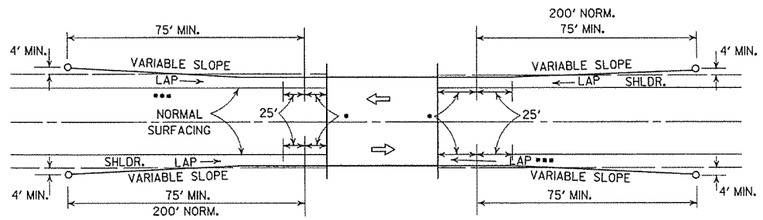

METHOD OF INSTALLATION OF GUARD RAIL USING GUARD RAIL TERMINAL (TYPE I) (FULL SHOULDER WIDTH OR LESS BRIDGES)

LEGEND

- • THRIE BEAM GUARD RAIL TERMINAL
- •• GUARD RAIL TERMINAL (TYPE 2)

DATE	REVISION	DATE FILM
4-17-08	REVISED LAYOUTS	
11-10-05	REMOVED GUARD RAIL NOTES AND DETAILS	
11-16-01	DELETED NOTE-METHOD OF INSTALLATION OF GUARD RAIL USING GUARD RAIL TERM. (TY. I)	
1-12-00	ADDED CONSTRUCTION NOTE	1-12-00
6-26-97	REVISED LAYOUT	
10-1-92	REDRAWN & REVISED	10-1-92
	ADDED NOTE	
10-9-87	REDRAWN & REVISED	

ARKANSAS STATE HIGHWAY COMMISSION

GUARD RAIL DETAILS

STANDARD DRAWING GR-9

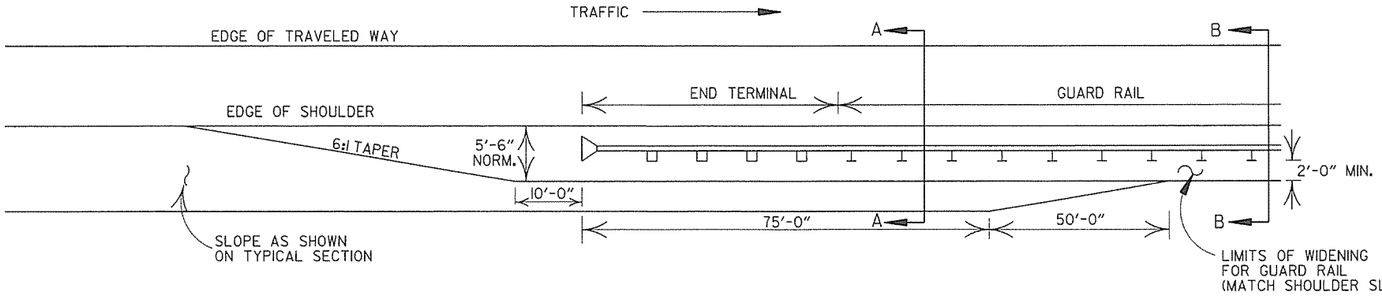

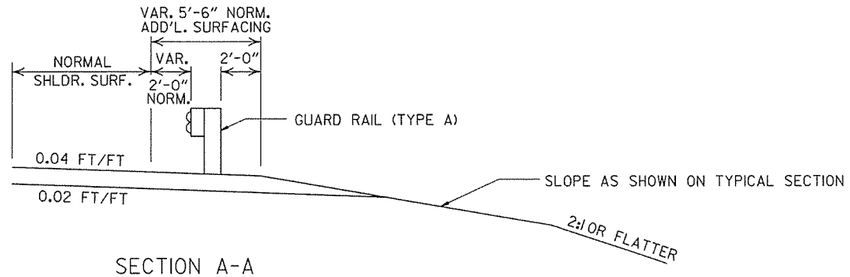

SECTION A-A

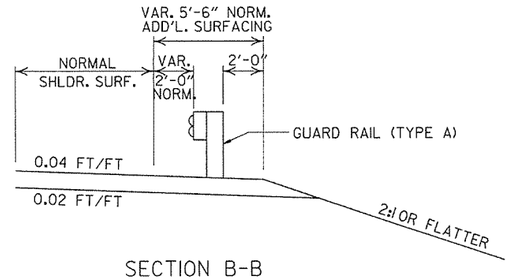

SECTION B-B

DETAILS OF WIDENING FOR GUARD RAIL

NOTE: NORMAL SECTION TO BE WIDENED APPROX. 5'-6" EACH SIDE TO SUPPORT GUARD RAIL.

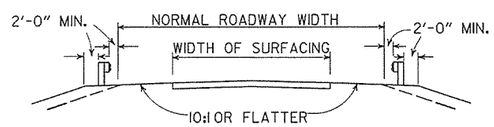

SECTION ON TANGENT

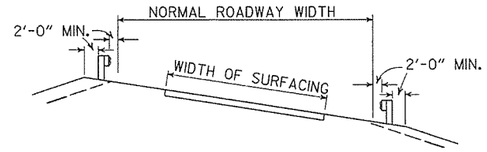

SECTION ON CURVE

DETAILS SHOWING POSITION OF GUARD RAIL ON HIGHWAY

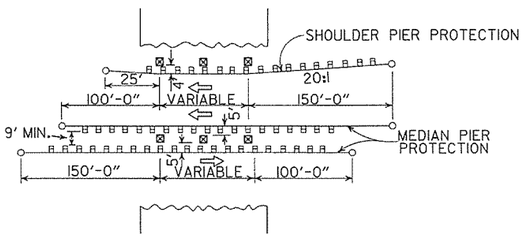

METHOD OF INSTALLATION OF GUARD RAIL AT FIXED OBSTACLE

DATE	REVISION	DATE FILM
4-17-08	MINOR REVISION	
11-10-05	DRAWN	

ARKANSAS STATE HIGHWAY COMMISSION

GUARD RAIL DETAILS

STANDARD DRAWING GR-9A

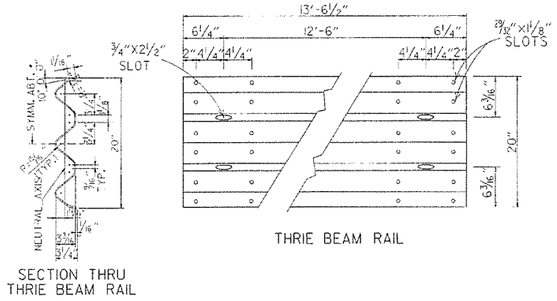

THRIE BEAM RAIL

SECTION THRU THRIE BEAM RAIL

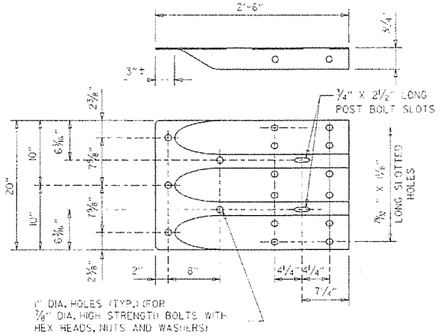

SPECIAL END SHOE

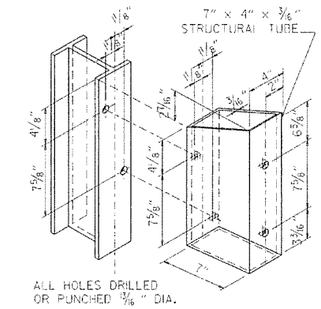

STRUCTURAL STEEL TUBING BLOCKOUT DETAIL

ATTACH BLOCKOUT TO POST USING ⅝" DIA. HEX HEAD BOLTS WITH 1½" O.D. CUT STEEL WASHERS AND NUT.

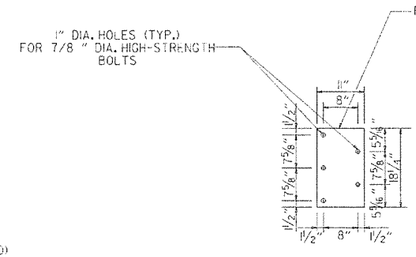

CONNECTOR PLATE

CONNECTOR PLATE SHALL BE AASHTO M270, GR. 36 AND SHALL BE GALVANIZED AFTER FABRICATION. GALVANIZING SHALL CONFORM TO SUBSECTION 807.19 OF THE STANDARD SPECIFICATIONS. CONNECTOR PLATE TO BE BOLTED TO SPECIAL END SHOE USING ⅞" DIA. HIGH STRENGTH BOLTS, WITH THE HEADS PLACED ON THE TRAFFIC FACE. WASHERS SHALL BE USED UNDER THE HEAD AND NUT. BOLTS, NUTS AND WASHERS SHALL BE GALVANIZED AND SHALL CONFORM TO SUBSECTION 807.06.

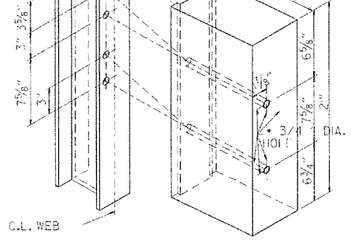

ALL HOLES ⅜" DIAMETER EXCEPT AS NOTED

HOLE PUNCHING DETAIL FOR STEEL POST & WOOD OR PLASTIC BLOCKOUTS

NOTE: BLOCKS SHALL BE THE SAME TYPE THROUGHOUT THE PROJECT LIMITS.

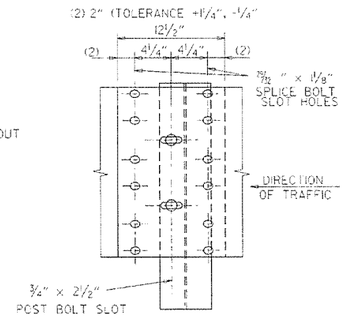

THRIE BEAM RAIL SPLICE AT POST

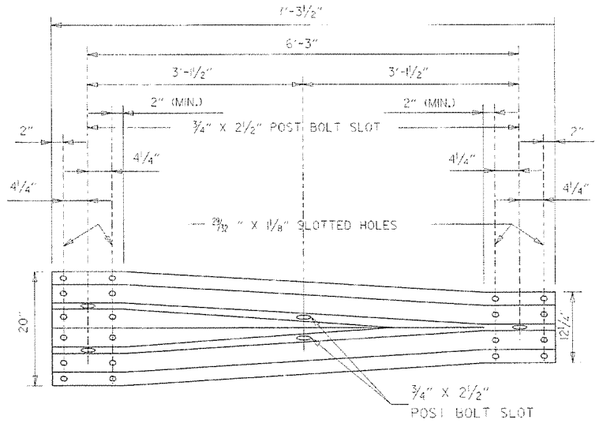

TRANSITION SECTION

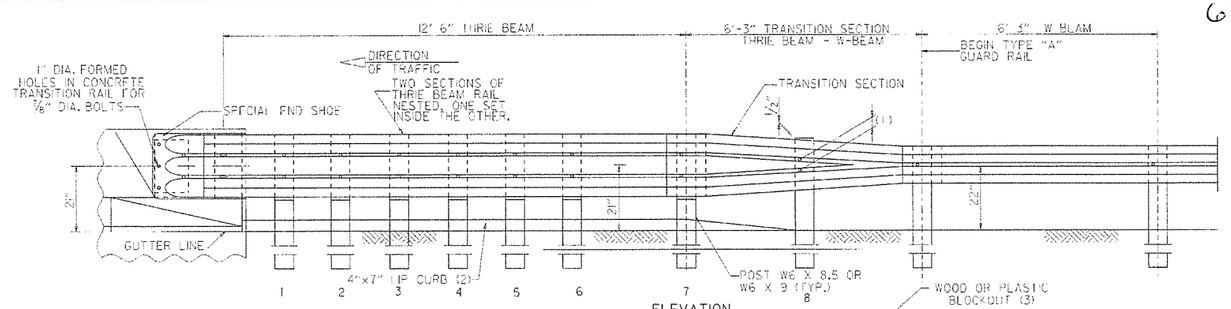

ELEVATION

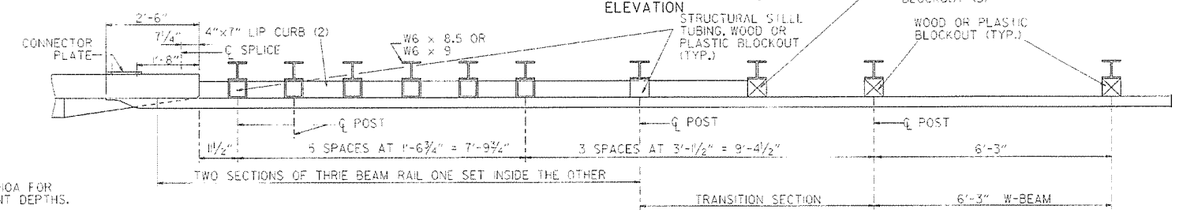

PLAN

NOTE:
SEE STANDARD DRAWING GR-10A FOR GUARD RAIL POST EMBEDMENT DEPTHS.

PLAN

(1) VERIFY BOLT SPACING FROM RAIL TRANSITION PRODUCER.
(2) REFER TO APPROACH GUTTER DETAILS.
(3) LENGTH OF BLOCKOUT ON POST 8 TO BE MODIFIED TO FIT RAIL WIDTH.

THRIE BEAM GUARD RAIL CONNECTION AT BRIDGE ENDS

GENERAL NOTES:

THE THRIE BEAM RAIL, SPECIAL END SHOE, AND THE TRANSITION SECTION SHALL BE MADE OF STEEL AND SHALL BE 12 GAGE. ZINC COATING SHALL BE TYPE I.

RAIL POSTS SHALL BE SET PERPENDICULAR TO THE ROADWAY PROFILE GRADE AND VERTICALLY IN CROSS SECTION.

ALL BOLTS SHALL BE SUFFICIENT LENGTH TO EXTEND THROUGH THE FULL THICKNESS OF THE NUT AND NO MORE THAN ¾" BEYOND IT.

ALL LAP SPLICES, INCLUDING SPECIAL END SHOES, SHALL BE MADE IN THE DIRECTION SHOWN ON STANDARD DRAWINGS GR-9 & GR-11.

WOOD POSTS & WOOD BLOCKS SHALL BE EITHER DENSE NO. 1 STRUCTURAL OR BETTER 9.7 f (1400 #) OR NO. 1 1350 f SOUTHERN PINE.

REFER TO STD. DRWG. GR-10A FOR POST DETAILS.

USE THRIE BEAM GUARD RAIL COMPONENTS OF SAME MATERIAL FOR ENTIRE JOB.

THRIE BEAM POSTS SHALL BE SAME MATERIAL AS W-BEAM POSTS FOR ENTIRE JOB.

DATE	REVISION	DATE FILM
7-14-10	RAISED HEIGHT OF W-BEAM 1"	
11-29-07	ADDED PLASTIC BLOCKOUTS	
11-10-05	ADDED NOTE FOR ATTACHING STEEL BLOCKOUT	
11-18-04	REVISED GENERAL NOTES	
10-9-03	REVISED GENERAL NOTES	
4-10-03	REVISED GENERAL NOTES	
8-22-02	REVISED NOTE (2)	
6-29-00	MOVED DIMENSION LINES	
5-18-00	ADDED NOTE	
3-30-00	DRAWN & ISSUED	

ARKANSAS STATE HIGHWAY COMMISSION

GUARD RAIL DETAILS

STANDARD DRAWING GR-10

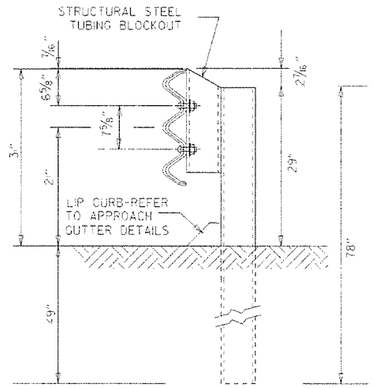

THRIE BEAM RAIL WITH STEEL TUBING BLOCKOUT
AND STEEL POST
POSTS 1-7

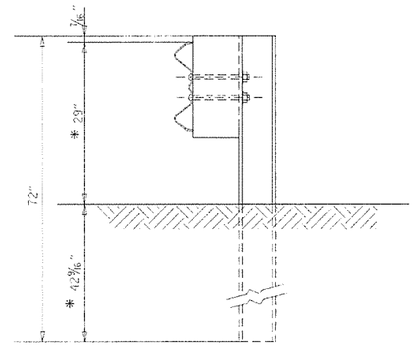

W-BEAM TO THRIE BEAM TRANSITION RAIL
WITH WOOD OR PLASTIC BLOCKOUT AND STEEL POST
POST 8

* NOTE:
THESE DIMENSIONS WILL NEED TO BE ADJUSTED IN THE FIELD TO MAKE THE TRANSITION FROM 21" MID POINT OF THRIE BEAM TO 22" MID POINT OF W-BEAM.

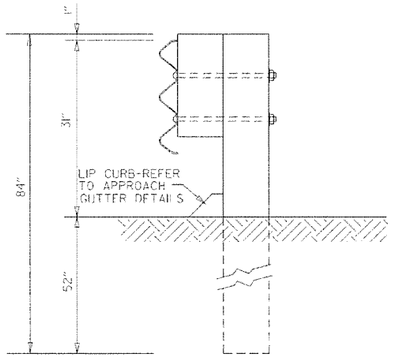

THRIE BEAM RAIL
WITH WOOD OR PLASTIC
BLOCKOUTS & WOOD POSTS
POSTS 1-6

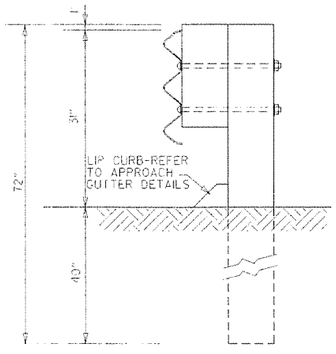

THRIE BEAM RAIL
WITH WOOD OR PLASTIC
BLOCKOUT & WOOD POST
POST 7

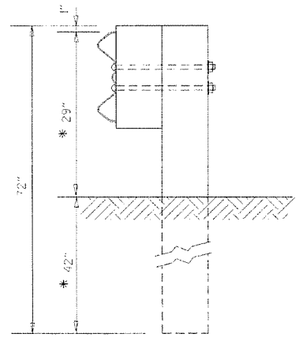

W-BEAM TO THRIE BEAM
TRANSITION RAIL WITH WOOD OR
PLASTIC BLOCKOUT & WOOD POST
POST 8

GENERAL NOTES:

RAIL POSTS SHALL BE SET PERPENDICULAR TO THE ROADWAY PROFILE GRADE AND VERTICALLY IN CROSS SECTION.

WOOD POSTS & WOOD BLOCKS SHALL BE EITHER DENSE NO. 1 STRUCTURAL OR BETTER 9.7# @400 #1 OR NO. 1 @350 # SOUTHERN PINE.

DATE	REVISION	DATE FILM
7-14-10	REVISED POST 8 DIMENSIONS	
11-29-07	ADDED PLASTIC BLOCKOUTS	
8-22-02	REVISED LIP CURB NOTE	
3-30-00	DRAWN & ISSUED	

ARKANSAS STATE HIGHWAY COMMISSION

GUARD RAIL DETAILS

STANDARD DRAWING GR-10A

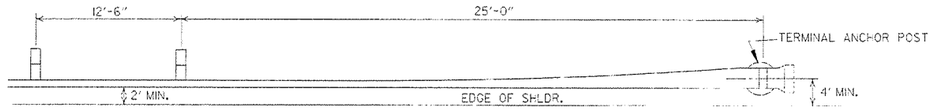

PLAN - GUARD RAIL TERMINAL (TYPE I)

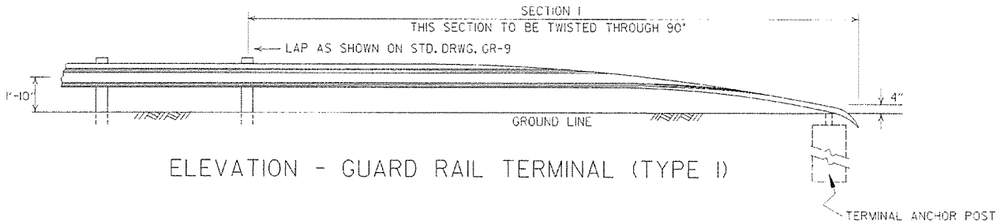

ELEVATION - GUARD RAIL TERMINAL (TYPE I)

NOTE:
SECTIONS 1 AND 2 OF GUARD RAIL TERMINAL SHALL BE PAID FOR AT THE PRICE BID PER LINEAR FOOT OF THE TYPE OF GUARD RAIL SPECIFIED.

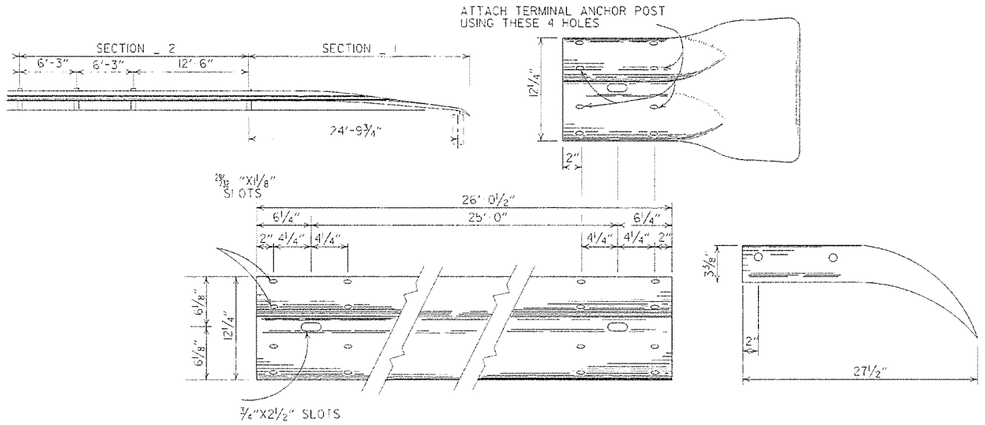

SECTION 1

TERMINAL SECTION

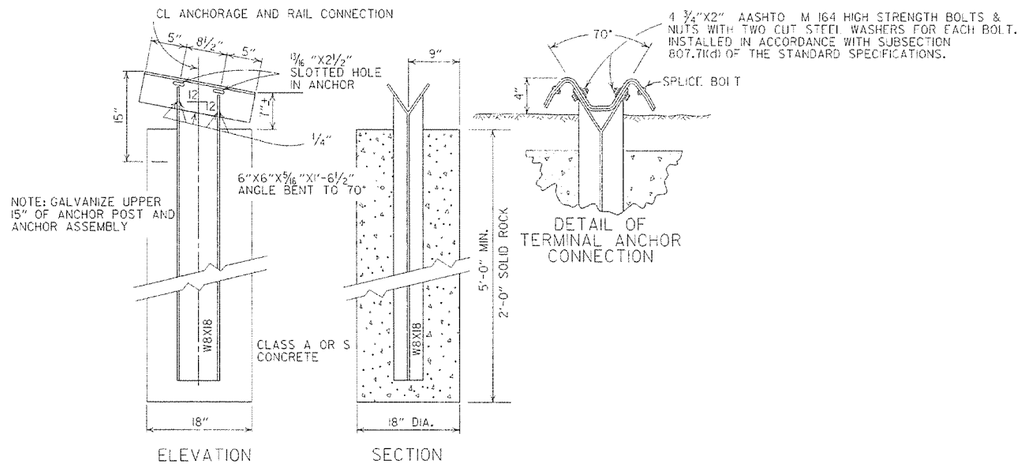

NOTE: RAIL MEMBERS MAY BE BOLTED TO ANGLE AT TERMINAL ANCHOR AND THE TWO ASSEMBLIES POSITIONED TO PROPER ALIGNMENT PRIOR TO PLACING CONCRETE AROUND 8 WF 17 POST IF CONTRACTOR SO DESIRES.

DETAIL OF TERMINAL ANCHOR POST (TYPE I)

DATE	REVISION	DATE FILM
7-14-10	RAISED HEIGHT OF GUARD RAIL 1"	
6-26-97	REVISED LAP NOTE	
10-18-96	REVISED ASTM REF. TO AASHTO	
11-3-94	DIMENSION TERMINAL DETAIL	
11-11-92	ADDED NOTE FOR PAYMENT	11-11-92
10-1-92	DRAWN & ISSUED	10-1-92

ARKANSAS STATE HIGHWAY COMMISSION

GUARD RAIL DETAILS

STANDARD DRAWING GR1-1

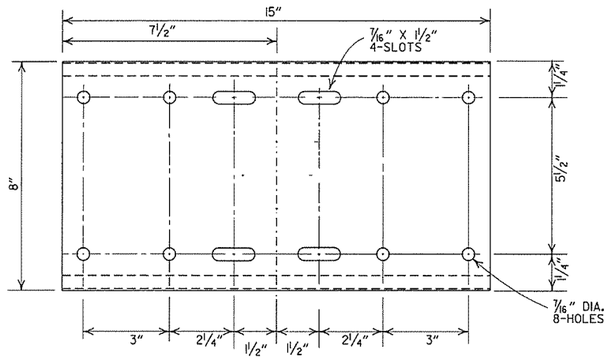

SHELF

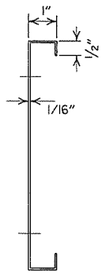

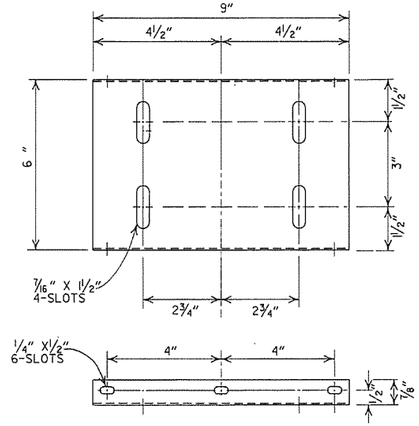

PLATFORM

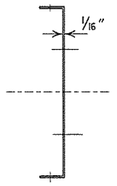

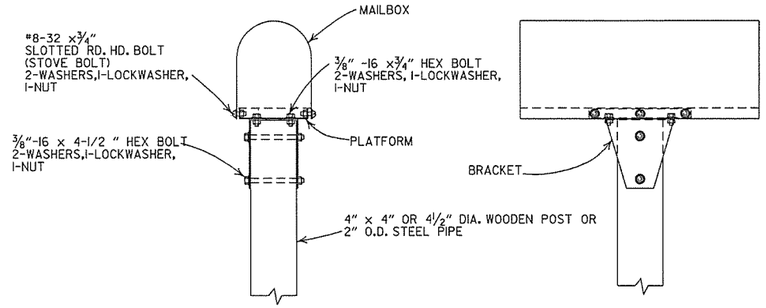

SINGLE INSTALLATION

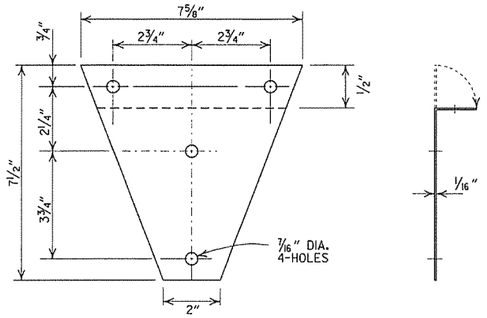

BRACKET

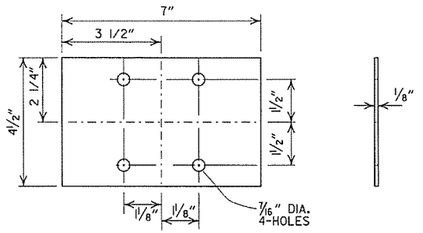

ANTI-TWIST PLATE

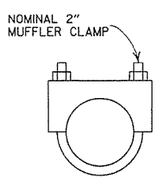

CLAMP

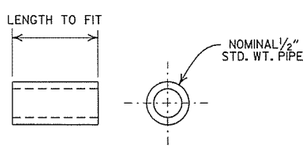

SPACER

GENERAL NOTES

1. MAILBOX POSTS MAY BE WOOD OR METAL. WOOD POSTS SHALL BE PRESSURE TREATED FOR GROUND CONTACT IN ACCORDANCE WITH SECTION 637.02 OF THE STANDARD SPECIFICATIONS.
2. ANTI-TWIST PLATES SHALL BE USED ONLY ON METAL POSTS.
3. MAILBOX SHELF, BRACKET & PLATFORM SHALL BE GALVANIZED OR PAINTED STEEL, HOWEVER TREATED WOOD MAY BE USED WITH WOODEN POSTS. THE WOODEN SHELF, BRACKET & PLATFORM SHALL BE A MINIMUM OF¾" THICK AND SHALL BE ASSEMBLED WITH BOLTS OF THE APPROPRIATE LENGTH WITH SIX 8 X¾" FLATHEAD WOOD SCREWS USED TO ATTACH THE MAILBOX TO THE PLATFORM.
4. THE MAILBOX SHELF AND PLATFORM THAT IS SHOWN IS FOR STANDARD SIZE MAILBOXES. THE SHELF AND PLATFORM SIZE SHALL BE MODIFIED TO FIT MAILBOXES OF A DIFFERENT SIZE.
5. METAL PIPE FOR MAILBOX SUPPORT SHALL BE 2" OUTSIDE DIAMETER STEEL WITH A WALL THICKNESS OF 0.145" AND A WEIGHT OF 2.72 LBS PER FT. OUTSIDE DIAMETER AND WEIGHT SHALL HAVE A TOLERANCE OF +/- 5% ACCORDING TO AASHTO M 181.
6. MAILBOX SUPPORT SYSTEM DIFFERING FROM THOSE SHOWN MAY BE USED, PROVIDED THEY ARE ON THE AHTD QUALIFIED PRODUCTS LIST FOR MAILBOX SUPPORTS.

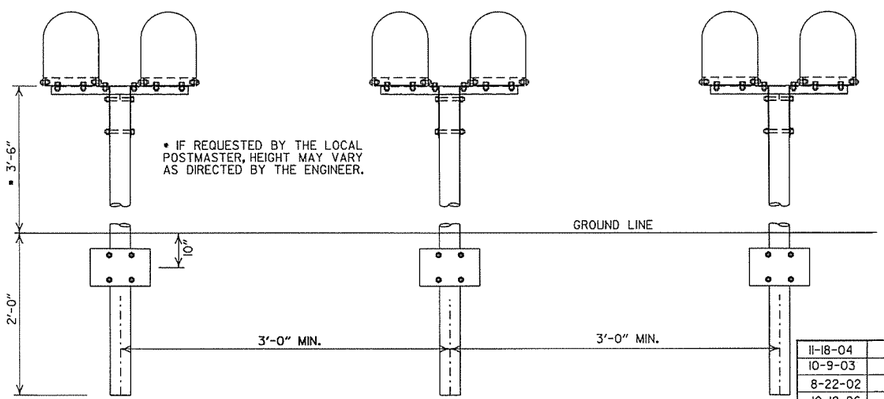

SPACING FOR MULTIPLE POST INSTALLATION

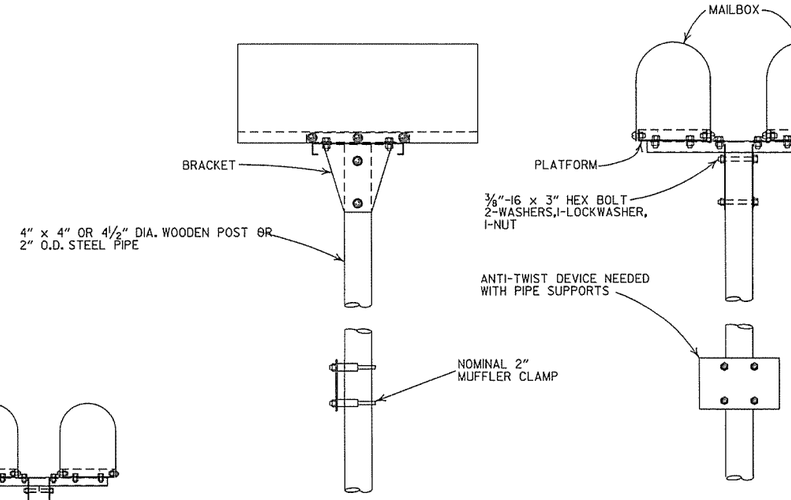

DOUBLE INSTALLATION

DATE	FILMED	REVISION
11-18-04		REVISED NOTES
10-9-03		REVISED NOTE 6
8-22-02		REVISED NOTE 6
10-18-96		CORRECTED AASHTO
10-1-92		CORRECTED SPELLING
9-26-91		NEW PHONE NUMBER
8-15-91		ADDED NOTE
11-30-89		ADJUSTED HEIGHT & ADDED NOTE
2-16-89		DELETED SLOTS FROM SHELF & PLTF
11-17-88	10-1-92	ADJUSTED DIMENSIONS OF STEEL POSTS
7-15-88	20-7-15-88	ISSUED

ARKANSAS STATE HIGHWAY COMMISSION

MAILBOX DETAILS

STANDARD DRAWING MB-1

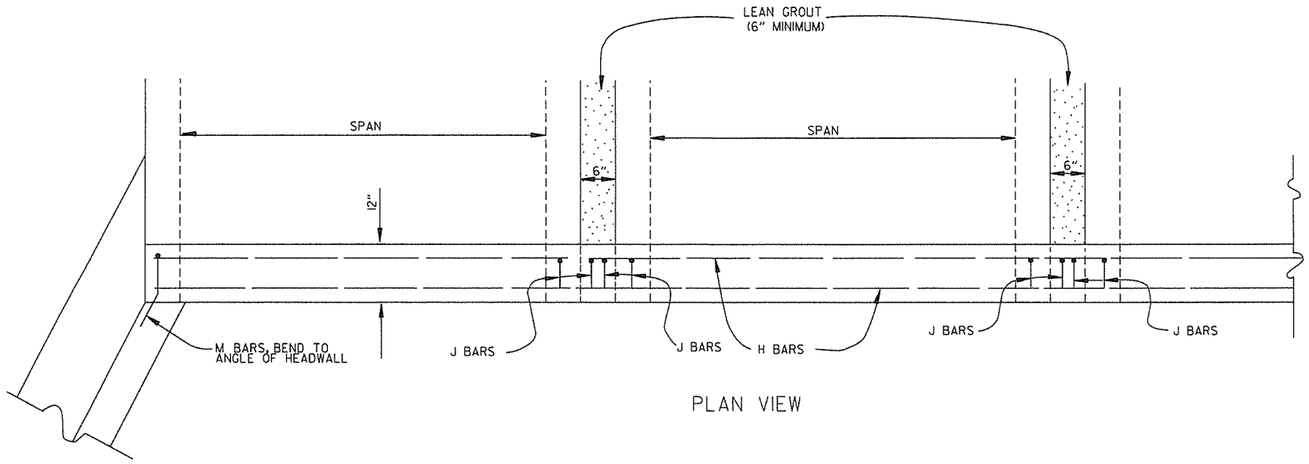

PLAN VIEW

BAR LIST

BAR	NO.	SIZE	LENGTH	BAR BENDING DIAGRAM
H	2	#4	•	
I	•	#4	•	
J	•	#4	1'-5"	
L	•	#4	3'-2"	
M	•	#4	1'-8"	

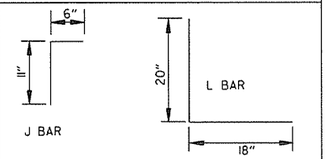

• NOTE: LENGTH AND NUMBER OF BARS VARIES WITH SIZE OF CULVERT

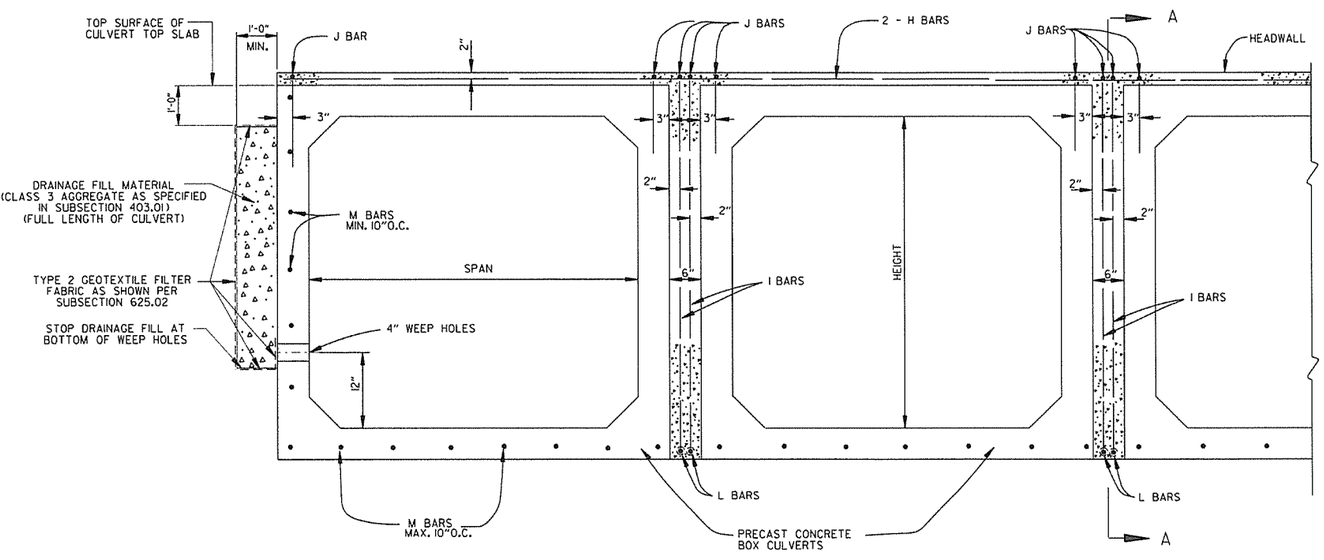

END VIEW

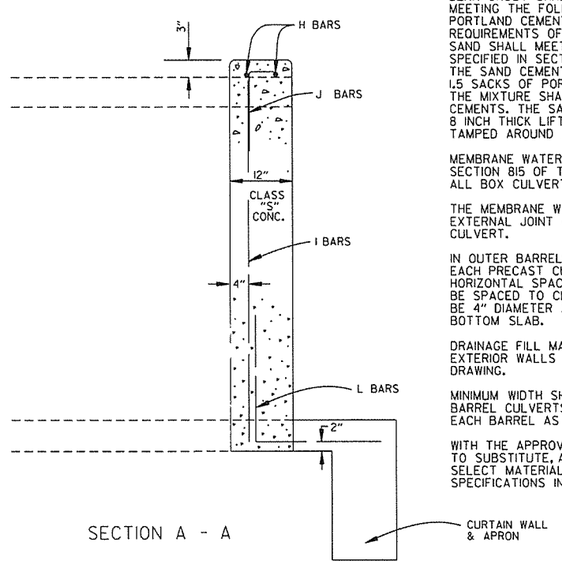

SECTION A - A

GENERAL NOTES

WINGS, CURTAIN WALLS AND APRONS SHALL BE TIED TO THE PRECAST CULVERT SECTION BY CASTING BARS IN CULVERT END SECTIONS AS SHOWN OR BY DOWELING AND GROUTING. J BARS AND M BARS SHALL BE EMBEDDED A MINIMUM OF 10" IN PRECAST BOX.

WINGS, FOOTINGS, APRONS AND CURTAIN WALLS SHALL BE CONSTRUCTED IN ACCORDANCE WITH THE APPLICABLE WING DRAWING, STEEL AND CONCRETE QUANTITIES WILL BE ADJUSTED TO FIT THE IN-PLACE WIDTH & HEIGHT OF THE PRECAST CONCRETE BOX CULVERTS.

ALL EXPOSED CORNERS TO HAVE ¾" CHAMFERS.

WINGWALLS AND FOOTINGS MAY BE ADJUSTED IN THE FIELD AS DIRECTED BY THE ENGINEER.

ALL CONCRETE, REINFORCING STEEL, LEAN GROUT, MEMBRANE WATERPROOFING, DRAINAGE FILL MATERIAL, GEOTEXTILE FILTER FABRIC, LABOR, MATERIALS AND EQUIPMENT REQUIRED FOR INSTALLING PRECAST BOX CULVERTS WILL NOT BE PAID FOR DIRECTLY BUT WILL BE CONSIDERED TO BE INCLUDED IN THE PRICE BID FOR THE ITEMS AS SPECIFIED IN SECTION 607 OF THE STANDARD SPECIFICATIONS.

LEAN GROUT SHALL CONSIST OF A SAND CEMENT MIXTURE MEETING THE FOLLOWING REQUIREMENTS:
PORTLAND CEMENT SHALL BE TYPE I AND SHALL MEET THE REQUIREMENTS OF AASHTO M 85.
SAND SHALL MEET THE REQUIREMENTS OF FINE AGGREGATE AS SPECIFIED IN SECTION 802.02 OF THE STANDARD SPECIFICATIONS.
THE SAND CEMENT MIXTURE SHALL CONSIST OF NOT LESS THAN 1.5 SACKS OF PORTLAND CEMENT PER TON OF MATERIAL MIXTURE.
THE MIXTURE SHALL CONTAIN SUFFICIENT WATER TO HYDRATE THE CEMENTS. THE SAND CEMENT MIXTURE SHALL BE PLACED IN MAXIMUM 8 INCH THICK LIFTS, LOOSE MEASURE, AND THOROUGHLY RODDED AND TAMPED AROUND BOX TO THOROUGHLY FILL ALL VOIDS.

MEMBRANE WATERPROOFING CONFORMING TO THE REQUIREMENTS OF SECTION 815 OF THE STANDARD SPECIFICATIONS SHALL BE APPLIED TO ALL BOX CULVERT JOINTS.

THE MEMBRANE WATERPROOFING WILL BE REQUIRED ON THE TOP EXTERNAL JOINT AND SHALL EXTEND 1 FOOT DOWN THE SIDES OF THE CULVERT.

IN OUTER BARRELS, ONE WEEP HOLE IS REQUIRED IN EXTERIOR WALLS OF EACH PRECAST CULVERT SECTION. WEEP HOLES SHALL HAVE A MAXIMUM HORIZONTAL SPACING OF 10'-0" IN THE ASSEMBLED CULVERT AND SHALL BE SPACED TO CLEAR ALL REINFORCING STEEL. THE DRAIN OPENING SHALL BE 4" DIAMETER AND SHALL BE PLACED 12" ABOVE THE TOP OF THE BOTTOM SLAB.

DRAINAGE FILL MATERIAL WITH GEOTEXTILE FABRIC IS REQUIRED AT THE EXTERIOR WALLS OF THE ASSEMBLED CULVERT, SEE DETAILS ON THIS DRAWING.

MINIMUM WIDTH SHALL BE 12" (6" ON EACH SIDE OF JOINT). ON MULTIPLE BARREL CULVERTS, MEMBRANE WATERPROOFING SHALL BE APPLIED TO EACH BARREL AS DESCRIBED ABOVE.

WITH THE APPROVAL OF THE ENGINEER, THE CONTRACTOR WILL BE ALLOWED TO SUBSTITUTE, AT NO ADDITIONAL COST TO THE DEPARTMENT, FLOWABLE SELECT MATERIAL CONFORMING TO SECTION 206 OF THE STANDARD SPECIFICATIONS IN LIEU OF LEAN GROUT.

DATE	REVISION	DATE FILMED
1-28-15	REVISED GEOTEXTILE FABRIC PLACEMENT	
12-15-11	ADDED NOTE & DTLS FOR WEEP HOLE AND DRAINAGE FILL	
10-15-09	ADDED GENERAL NOTE	
11-10-05	REVISED SPACING OF "M" BARS	
4-10-03	REVISED GENERAL NOTES	
10-18-96	CORRECTED AASHTO REF.	
10-1-92	ADDED NOTE FOR MEMBRANE WATERPROOFING	
8-15-91	ADDED NOTE FOR LEAN GROUT	
11- 8-90	REVISED FOR 1991 SPECS	
11-30-89	ISSUED; JABE	

ARKANSAS STATE HIGHWAY COMMISSION

PRECAST CONCRETE BOX CULVERTS

STANDARD DRAWING PBC-1

REINFORCED CONCRETE ARCH PIPE DIMENSIONS

EQUIV. DIA.	SPAN		RISE	
	AASHTO M 206	AHTD NOMINAL	AASHTO M 206	AHTD NOMINAL
INCHES	INCHES			
15	18	18	11	11
18	22	22	13½	14
21	26	26	15½	16
24	28½	29	18	18
30	36¼	36	22½	23
36	43⅜	44	26⅝	27
42	51⅛	51	31 5/16	31
48	58½	59	36	36
54	65	65	40	40
60	73	73	45	45
72	88	88	54	54
84	102	102	62	62
90	115	115	72	72
96	122	122	77½	77
108	138	138	87⅛	87
120	154	154	96⅞	97
132	168¾	169	106½	107

THE MEASURED SPAN AND RISE SHALL NOT VARY MORE THAN ± 2 PERCENT FROM THE VALUES SPECIFIED BY AASHTO M206.

REINFORCED CONCRETE HORIZONTAL ELLIPTICAL PIPE DIMENSIONS

EQUIV. DIA.	AASHTO M 207	
	SPAN	RISE
INCHES	INCHES	
18	23	14
24	30	19
27	34	22
30	38	24
33	42	27
36	45	29
39	49	32
42	53	34
48	60	38
54	68	43
60	76	48
66	83	53
72	91	58
78	98	63
84	106	68

THE MEASURED SPAN AND RISE SHALL NOT VARY MORE THAN ± 2 PERCENT FROM THE VALUES SPECIFIED BY AASHTO M207.

CONSTRUCTION SEQUENCE

1. PLACE STRUCTURAL BEDDING MATERIAL TO GRADE. DO NOT COMPACT.
2. INSTALL PIPE TO GRADE.
3. COMPACT STRUCTURAL BEDDING OUTSIDE THE MIDDLE THIRD OF THE PIPE.
4. PLACE AND COMPACT THE HAUNCH AREA UP TO THE MIDDLE OF THE PIPE.
5. COMPLETE BACKFILL ACCORDING TO SUBSECTION 606.03.(f)(1).

NOTE: HAUNCH AND STRUCTURAL BEDDING MATERIAL WILL NOT BE PAID FOR SEPARATELY, BUT COMPENSATION WILL BE CONSIDERED TO BE INCLUDED IN THE PRICE BID PER LINEAR FOOT OF CONCRETE PIPE.

- LEGEND -

D_1 = NORMAL INSIDE DIAMETER OF PIPE
D_o = OUTSIDE DIAMETER OF PIPE
H = FILL COVER HEIGHT OVER PIPE (FEET)
MIN. = MINIMUM
▨ = UNDISTURBED SOIL

INSTALLATION TYPE	MATERIAL REQUIREMENTS FOR HAUNCH AND STRUCTURAL BEDDING
TYPE 1	AGGREGATE BASE COURSE (CLASS 5 OR CLASS 7)
TYPE 2	SELECTED MATERIALS (CLASS SM-1, SM-2, OR SM-4) OR TYPE 1 INSTALLATION MATERIAL*
TYPE 3**	AASHTO CLASSIFICATION A-1 THRU A-6 SOIL OR TYPE 1 OR 2 INSTALLATION MATERIAL

* SM-3 WILL NOT BE ALLOWED.

** MATERIALS SHALL NOT INCLUDE ORGANIC MATERIALS OR STONES LARGER THAN 3 INCHES.

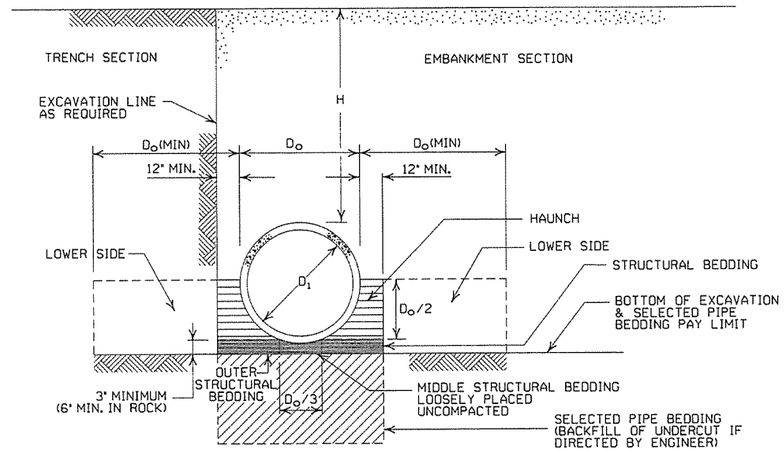

EMBANKMENT AND TRENCH INSTALLATIONS

1. MATERIAL IN THE HAUNCH AND OUTER STRUCTURAL BEDDING SHALL BE COMPACTED TO 95% OF THE MAXIMUM DENSITY ACCORDING TO THE TYPE OR CLASS OF MATERIAL USED.
2. FOR TRENCHES WITH WALLS OF NATURAL SOIL, THE DENSITY OF THE SOIL IN THE LOWER SIDE ZONE SHALL BE AS FIRM AS THE 95% DENSITY REQUIRED FOR THE HAUNCH. IF THE EXISTING SOIL DOES NOT MEET THIS CRITERIA, IT SHALL BE REMOVED AND RECOMPACTED TO 95% OF THE MAXIMUM DENSITY ACCORDING TO THE TYPE OF MATERIAL USED.
3. FOR EMBANKMENTS, THE MATERIAL IN THE LOWER SIDE ZONE SHALL BE COMPACTED TO 95% OF THE MAXIMUM DENSITY ACCORDING TO THE TYPE OR CLASS OF MATERIAL USED.

GENERAL NOTES

1. CONCRETE PIPE CULVERT CONSTRUCTION SHALL CONFORM TO ARKANSAS STATE HIGHWAY AND TRANSPORTATION DEPARTMENT STANDARD SPECIFICATIONS FOR HIGHWAY CONSTRUCTION (CURRENT EDITION), WITH APPLICABLE SUPPLEMENTAL SPECIFICATIONS AND SPECIAL PROVISIONS. UNLESS OTHERWISE NOTED IN THE PLANS, SECTION AND SUBSECTION REFER TO THE STANDARD CONSTRUCTION SPECIFICATIONS.
2. CONCRETE PIPE CULVERT DESIGN SHALL CONFORM TO AASHTO LRFD BRIDGE DESIGN SPECIFICATIONS, FIFTH EDITION (2010) WITH 2010 INTERIMS.
3. ALL PIPE SHALL CONFORM TO SECTION 606. CIRCULAR R.C. PIPE CULVERTS SHALL CONFORM TO AASHTO M170, R.C. ARCH PIPE CULVERTS SHALL CONFORM TO AASHTO M206 AND HORIZONTAL ELLIPTICAL PIPE CULVERTS SHALL CONFORM TO AASHTO M207.
4. ALL PIPE SHALL BE PROTECTED DURING CONSTRUCTION BY A COVER SUFFICIENT TO PREVENT DAMAGE FROM PASSAGE OF EQUIPMENT.
5. THE MINIMUM TRENCH WIDTH SHALL BE THE OUTSIDE DIAMETER OF THE PIPE PLUS 24 INCHES. THE MAXIMUM ALLOWABLE TRENCH WIDTH SHALL BE THE MINIMUM WIDTH PRACTICABLE FOR WORKING CONDITIONS.
6. MULTIPLE PIPE CULVERTS SHALL BE INSTALLED WITH A MINIMUM CLEARANCE OF 24 INCHES BETWEEN STRINGS OF PIPE. REFER TO STD. DWG. FES-2 FOR MINIMUM CLEARANCE WHERE FLARED END SECTIONS ARE USED.
7. IMPERVIOUS MATERIAL SHOULD BE PLACED AS DIRECTED BY THE ENGINEER AT THE ENDS OF THE CULVERT TO PREVENT LOSS OF STRUCTURAL BEDDING WHEN PERVIOUS MATERIAL IS USED FOR STRUCTURAL BEDDING AND/OR BACKFILL.
8. NOT MORE THAN ONE LIFTING HOLE MAY BE PROVIDED IN CONCRETE PIPE TO FACILITATE HANDLING. HOLE MAY BE CAST IN PLACE, CUT INTO THE FRESH CONCRETE AFTER FORMS ARE REMOVED, OR DRILLED. THE HOLE SHALL NOT BE MORE THAN TWO INCHES IN DIAMETER OR TWO INCHES SQUARE. CUTTING OR DISPLACEMENT OF REINFORCEMENT WILL NOT BE PERMITTED. SPALLED AREAS AROUND THE HOLE SHALL BE REPAIRED IN A WORKMANLIKE MANNER. LIFTING HOLE SHALL BE FILLED WITH MORTAR, CONCRETE, OR OTHER METHOD AS APPROVED BY THE ENGINEER.
9. WHEN DIRECTED BY THE ENGINEER, UNSUITABLE MATERIAL THAT IS ENCOUNTERED AT THE BOTTOM OF THE EXCAVATED TRENCH (BELOW THE AREA IDENTIFIED AS "STRUCTURAL BEDDING" ABOVE) WILL BE EXCAVATED AND REPLACED WITH SELECTED PIPE BEDDING. THE QUANTITY OF MATERIAL REQUIRED TO BACKFILL THE UNDERCUT AREA UP TO THE SELECTED PIPE BEDDING PAY LIMIT DESIGNATED ABOVE WILL BE MEASURED AND PAID FOR AS "SELECTED PIPE BEDDING."
10. WHEN THE EXISTING MATERIAL EXCAVATED FOR THE PIPE TRENCH IS DETERMINED BY THE ENGINEER TO BE UNSUITABLE FOR BACKFILLING THE PIPE (ABOVE THE AREA IDENTIFIED ABOVE AS THE HAUNCH), BORROW MATERIAL OR MATERIAL FROM THE ROADWAY EXCAVATION WILL BE USED TO BACKFILL THE PIPE. IF SUITABLE MATERIAL IS NOT AVAILABLE, THE ENGINEER MAY AUTHORIZE THE USE OF "SELECTED PIPE BACKFILL."

MINIMUM HEIGHT OF FILL "H" OVER CIRCULAR R.C. PIPE CULVERTS

	CLASS OF PIPE			
	CLASS III		CLASS IV	CLASS V
INSTALLATION TYPE	TYPE 1 OR 2	TYPE 3	ALL	ALL
PIPE ID (IN.)	FEET			
12-15	2	2.5	2	1
18-24	2.5	3	2	1
27-33	3	4	2	1
36-42	3.5	5	2	1
48	4.5	5.5	2	1
54-60	5	7	2	1
66-78	6	8	2	1
84-108	7.5	8	2	1

NOTE: FOR MINIMUM COVER VALUES, "H" SHALL INCLUDE A MINIMUM OF 12" OF PAVEMENT AND/OR BASE.

MAXIMUM HEIGHT OF FILL "H" OVER CIRCULAR R.C. PIPE CULVERTS

INSTALLATION TYPE	CLASS OF PIPE		
	CLASS III	CLASS IV	CLASS V
	FEET		
TYPE 1	21	32	50
TYPE 2	16	25	39
TYPE 3	12	20	30

NOTE: IF FILL HEIGHT EXCEEDS 50 FEET, A SPECIAL DESIGN CONCRETE PIPE WILL BE REQUIRED USING TYPE 1 INSTALLATION.

MINIMUM HEIGHT OF FILL "H" OVER R.C. ARCH & HORIZONTAL ELLIPTICAL PIPE CULVERTS

INSTALLATION TYPE	CLASS OF PIPE	
	CLASS III	CLASS IV
	FEET	
TYPE 2 OR TYPE 3	2.5	1.5

NOTE: TYPE 1 INSTALLATION WILL NOT BE ALLOWED FOR ARCH & HORIZONTAL ELLIPTICAL PIPE CULVERTS.

NOTE: FOR MINIMUM COVER VALUES, "H" SHALL INCLUDE A MINIMUM OF 12" OF PAVEMENT AND/OR BASE.

MAXIMUM HEIGHT OF FILL "H" OVER R.C. ARCH & HORIZONTAL ELLIPTICAL PIPE CULVERTS

INSTALLATION TYPE	CLASS OF PIPE	
	CLASS III	CLASS IV
	FEET	
TYPE 2	13	21
TYPE 3	10	16

NOTE: TYPE 1 INSTALLATION WILL NOT BE ALLOWED FOR ARCH & HORIZONTAL ELLIPTICAL PIPE CULVERTS.

DATE	REVISION	DATE FILMED
2-27-14	REVISED GENERAL NOTE 1.	
12-15-11	REVISED FOR LRFD DESIGN SPECIFICATIONS	
5-18-00	REVISED TYPE 3 BEDDING & ADDED NOTE	
3-30-00	REVISED INSTALLATIONS	
11-06-97	ISSUED	

ARKANSAS STATE HIGHWAY COMMISSION

CONCRETE PIPE CULVERT FILL HEIGHTS & BEDDING

STANDARD DRAWING PCC-1

CORRUGATED STEEL PIPE (ROUND)

PIPE DIAMETER (INCHES)	① MINUMUM COVER TOP OF PIPE TO TOP OF GROUND "H" (FEET)	MAX. FILL HEIGHT "H" ABOVE TOP OF PIPE (FEET)				
		METAL THICKNESS (INCHES)				
		0.064	0.079	0.109	0.138	0.168
2⅔ INCH BY ½ INCH CORRUGATION RIVETED, WELDED, OR HELICAL LOCK-SEAM						
12	1	84	91			
15	1	67	73			
18	1	56	61			
24	1	42	46	59		
30	2	34	36	47		
36	2		30	39	41	
42	2		43	67	70	73
48	2		37	58	61	64
② 3 INCH BY 1 INCH OR 5 INCH BY 1 INCH CORRUGATION RIVETED, WELDED, BOLTED, OR HELICAL LOCK-SEAM						
36	1	48	60	88	111	118
42	1	41	51	72	90	102
48	1	36	45	64	77	85
54	2	32	40	59	71	79
60	2	29	36	53	64	71
66	2	26	33	47	58	64
72	2	24	30	44	53	59
78	2		28	41	49	54
84	2		26	38	45	51
90	2		24	35	43	45
96	2		22	33	40	44
102	2			31	38	42
108	2			30	35	39
114	2			28	34	37
120	2			27	32	35

CORRUGATED ALUMINUM PIPE (ROUND)

PIPE DIAMETER (INCHES)	① MINUMUM COVER TOP OF PIPE TO TOP OF GROUND "H" (FEET)	MAX. FILL HEIGHT "H" ABOVE TOP OF PIPE (FEET)				
		METAL THICKNESS IN INCHES				
		0.060	0.075	0.105	0.135	0.164
		2 ⅔ INCH BY ½ INCH CORRUGATION RIVETED OR HELICAL LOCK-SEAM				
12	1	45	45			
18	2	30	30	52		
24	2	22	22	39	41	
30	2		18	31	32	34
36	2.5		15	26	27	28
42	2			43	43	44
48	2			40	41	43
54	2			35	37	38
60	2				33	34
66	2					31
72	2					29

CORRUGATED METAL PIPE ARCHES

EQUIV. DIA. (INCHES)	PIPE DIMENSION SPAN X RISE (INCHES)	MINUMUM CORNER RADIUS (INCHES)	STEEL			ALUMINUM		
			MIN. THICKNESS REQUIRED INCHES	① MIN. HEIGHT OF FILL, "H" (FT.) INSTALLATION TYPE 1	MAX. HEIGHT OF FILL, "H" (FT.) INSTALLATION TYPE 1	MIN. THICKNESS REQUIRED INCHES	① MIN. HEIGHT OF FILL, "H" (FT.) INSTALLATION TYPE 1	MAX. HEIGHT OF FILL, "H" (FT.) INSTALLATION TYPE 1
			2 ⅔ INCH BY ½ INCH CORRUGATION RIVETED, WELDED, OR HELICAL LOCK-SEAM			2 ⅔ INCH BY ½ INCH CORRUGATION RIVETED OR HELICAL LOCK-SEAM		
15	17x13	3	0.064	2	15	0.060	2	15
18	21x15	3	0.064	2	15	0.060	2	15
21	24x18	3	0.064	2.25	15	0.060	2.25	15
24	28x20	3	0.064	2.5	15	0.075	2.5	15
30	35x24	3	0.079	3	12	0.075	3	12
36	42x29	3½	0.079	3	12	0.105	3	12
42	49x33	4	0.079	3	12	0.105	3	12
48	57x38	5	0.109	3	13	0.135	3	13
54	64x43	6	0.109	3	14	0.135	3	14
60	71x47	7	0.138	3	15	0.164	3	15
66	77x52	8	0.168	3	15			
72	83x57	9	0.168	3	15			
			② 3 INCH BY 1 INCH OR 5 INCH BY 1 INCH CORRUGATION RIVETED, WELDED, OR HELICAL LOCK-SEAM					
				INSTALLATION TYPE 2	INSTALLATION TYPE 1		INSTALLATION TYPE 2	INSTALLATION TYPE 1
36	40x31	5	0.079	3	2		12	15
42	46x36	6	0.079	3	2		13	15
48	53x41	7	0.079	3	2		13	15
54	60x46	8	0.079	3	2		13	15
60	66x51	9	0.079	3	2		13	15
66	73x55	12	0.079	3	2		15	15
72	81x59	14	0.079	3	2		15	15
78	87x63	14	0.079	3	2		15	15
84	95x67	16	0.109	3	2		15	15
90	103x71	16	0.109	3	2		15	15
96	112x75	18	0.109	3	2		15	15
102	117x79	18	0.109	3	2		15	15
108	128x83	18	0.138	3	2		15	15

CONSTRUCTION SEQUENCE

1. PLACE STRUCTURAL BEDDING MATERIAL TO GRADE. DO NOT COMPACT.
2. INSTALL PIPE TO GRADE.
3. COMPACT STRUCTURAL BEDDING OUTSIDE THE MIDDLE THIRD OF THE PIPE.
4. COMPLETE STRUCTURAL BACKFILL OPERATION BY WORKING FROM SIDE TO SIDE OF THE PIPE. THE SIDE TO SIDE STRUCTURAL BACKFILL DIFFERENTIAL SHALL NOT EXCEED 24 INCHES OR 1/3 THE SIZE OF THE PIPE, WHICHEVER IS LESS.

NOTE: STRUCTURAL BACKFILL AND STRUCTURAL BEDDING MATERIAL WILL NOT BE PAID FOR SEPARATELY, BUT COMPENSATION WILL BE CONSIDERED TO BE INCLUDED IN THE PRICE BID PER LINEAR FOOT OF METAL PIPE.

INSTALLATION TYPE	MATERIAL REQUIREMENTS FOR STRUCTURAL BACKFILL AND STRUCTURAL BEDDING
TYPE 1	AGGREGATE BASE COURSE (CLASS 4, 5, 6, OR 7)
TYPE 2	SELECTED MATERIALS (CLASS SM-1, SM-2, OR SM-4) OR TYPE 1 INSTALLATION MATERIAL ③

③ SM-3 WILL NOT BE ALLOWED.

EQUIVALENT METAL THICKNESSES AND GAUGES

METAL THICKNESS IN INCHES			GAUGE NUMBER
STEEL			
ZINC COATED	UNCOATED	ALUMINUM	
0.064	0.0598	0.060	16
0.079	0.0747	0.075	14
0.109	0.1046	0.105	12
0.138	0.1345	0.135	10
0.168	0.1644	0.164	8

- LEGEND -

D_o = OUTSIDE DIAMETER OF PIPE
MAX. = MAXIMUM
MIN. = MINIMUM
= STRUCTURAL BACKFILL MATERIAL
= UNDISTURBED SOIL
EQUIV. DIA. = EQUIVALENT DIAMETER
H = FILL COVER HEIGHT OVER PIPE (FEET)

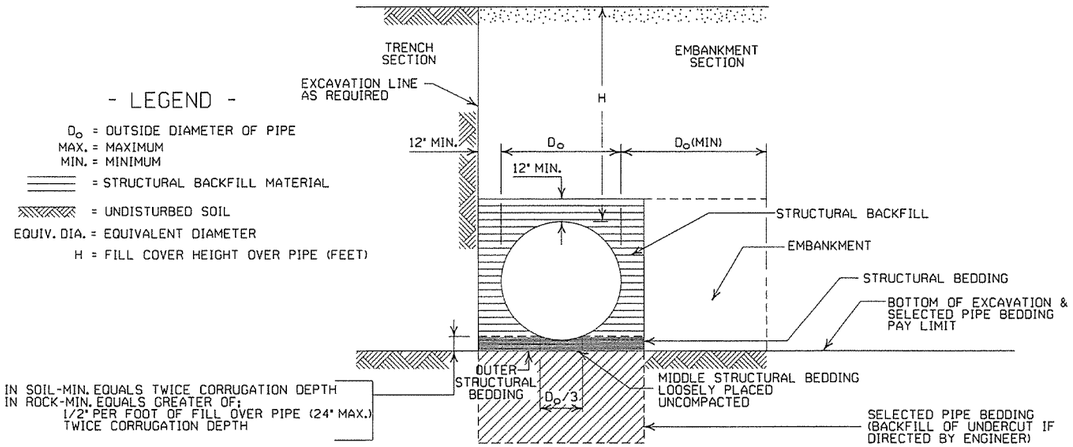

EMBANKMENT AND TRENCH INSTALLATIONS

1. STRUCTURAL BACKFILL, EMBANKMENT, AND OUTER STRUCTURAL BEDDING MATERIAL SHALL BE COMPACTED TO 95% OF THE MAXIMUM DENSITY ACCORDING TO THE TYPE OR CLASS OF MATERIAL USED.
2. INSTALLATION TYPE 1 OR 2 MAY BE USED FOR CORRUGATED STEEL OR ALUMINUM PIPE (ROUND).
3. INSTALALTION TYPE 1 SHALL BE USED FOR CORRUGATED STEEL OR ALUMINUM PIPE ARCHES WITH 2⅔" X ½" CORRUGATION.
4. INSTALLATION TYPE 1 OR 2 MAY BE USED FOR CORRUGATED STEEL OR ALUMINUM PIPE ARCHES WITH 3" X 1" OR 5" X 1" CORRUGATION.

GENERAL NOTES

1. METAL PIPE CULVERT CONSTRUCTION SHALL CONFORM TO ARKANSAS STATE HIGHWAY AND TRANSPORTATION DEPARTMENT STANDARD SPECIFICATIONS FOR HIGHWAY CONSTRUCTION (CURRENT EDITION), WITH APPLICABLE SUPPLEMENTAL SPECIFICATIONS AND SPECIAL PROVISIONS. UNLESS OTHERWISE NOTED IN THE PLANS, SECTION AND SUBSECTION REFER TO THE STANDARD CONSTRUCTION SPECIFICATIONS.
2. METAL PIPE CULVERT DESIGN SHALL CONFORM TO AASHTO LRFD BRIDGE DESIGN SPECIFICATIONS, FIFTH EDITION (2010) WITH 2010 INTERIMS.
3. METAL PIPE CULVERT MATERIALS AND INSTALLATIONS SHALL CONFORM TO SECTION 606 AND JOB SPECIAL PROVISION "METAL PIPE".
4. ALL PIPE SHALL BE PROTECTED DURING CONSTRUCTION BY A COVER SUFFICIENT TO PREVENT DAMAGE FROM PASSAGE OF EQUIPMENT.
5. THE MINIMUM TRENCH WIDTH SHALL BE THE OUTSIDE DIAMETER OF THE PIPE PLUS 24 INCHES. THE MAXIMUM ALLOWABLE TRENCH WIDTH SHALL BE THE MINIMUM WIDTH PRACTICABLE FOR WORKING CONDITIONS.
6. MULTIPLE PIPE CULVERTS SHALL BE INSTALLED WITH A MINIMUM CLEARANCE OF 24 INCHES BETWEEN STRINGS OF PIPE. REFER TO STD. DWG. FES-2 FOR MINIMUM CLEARANCE WHERE FLARED END SECTIONS ARE USED.
7. IMPERVIOUS MATERIAL SHOULD BE PLACED AS DIRECTED BY THE ENGINEER AT THE ENDS OF THE CULVERT TO PREVENT LOSS OF STRUCTURAL BEDDING WHEN PERVIOUS MATERIAL IS USED FOR STRUCTURAL BEDDING AND/OR BACKFILL.
8. WHEN DIRECTED BY THE ENGINEER, UNSUITABLE MATERIAL THAT IS ENCOUNTERED AT THE BOTTOM OF THE EXCAVATED TRENCH (BELOW THE AREA IDENTIFIED AS "STRUCTURAL BEDDING" ABOVE) WILL BE EXCAVATED AND REPLACED WITH SELECTED PIPE BEDDING. THE QUANTITY OF MATERIAL REQUIRED TO BACKFILL THE UNDERCUT AREA UP TO THE SELECTED PIPE BEDDING PAY LIMIT DESIGNATED ABOVE WILL BE MEASURED AND PAID FOR AS "SELECTED PIPE BEDDING."
9. WHEN THE EXISTING MATERIAL EXCAVATED FOR THE PIPE TRENCH IS DETERMINED BY THE ENGINEER TO BE UNSUITABLE FOR BACKFILLING THE PIPE (ABOVE THE AREA IDENTIFIED AS STRUCTURAL BACKFILL), BORROW MATERIAL OR MATERIAL FROM THE ROADWAY EXCAVATION WILL BE USED TO BACKFILL THE PIPE. IF SUITABLE MATERIAL IS NOT AVAILABLE, THE ENGINEER MAY AUTHORIZE THE USE OF "SELECTED PIPE BACKFILL."

① FOR MINIMUM COVER VALUES, "H" SHALL INCLUDE A MINIMUM 12" OF PAVEMENT AND/OR BASE.

② WHERE THE STANDARD 2 2/3"x ½" CORRUGATION AND GAUGE IS SPECIFIED FOR A GIVEN DIAMETER, A PIPE OF THE SAME DIAMETER WITH A 3" x 1" OR 5" x 1" CORRUGATION MAY BE SUBSTITUTED, PROVIDING IT IS GAUGED FOR A FILL HEIGHT CONDITION EQUAL TO OR GREATER THAN THE MAXIMUM FILL HEIGHT CONDITION FOR THE SPECIFIED GAUGE AND CORRUGATION.

DATE	REVISION	DATE FILMED
2-27-14	REVISED GENERAL NOTE 1.	
12-15-11	REVISED FOR LRFD DESIGN SPECS	
3-30-00	REVISED INSTALLATIONS	
11-06-97	ISSUED	

ARKANSAS STATE HIGHWAY COMMISSION

METAL PIPE CULVERT FILL HEIGHTS & BEDDING

STANDARD DRAWING PCM-1

NOTES:
1. REFER TO THE STRIPING DETAILS FOR PAVEMENT MARKING LINE WIDTHS.
2. THIS DRAWING SHALL BE USED IN CONJUNCTION WITH THE LATEST REVISED ADDITION OF THE "MANUAL ON UNIFORM TRAFFIC CONTROL DEVICES."
3. RAISED PAVEMENT MARKERS SHALL BE PLACED ON AN 80 FEET SPACING UNLESS OTHERWISE SHOWN IN THE PLANS.

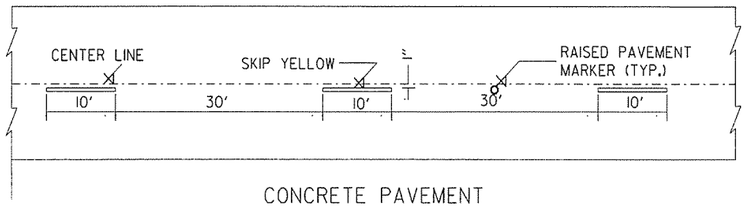

CONCRETE PAVEMENT

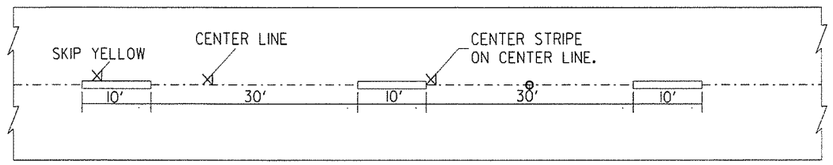

ASPHALT PAVEMENT

BROKEN LINE STRIPING

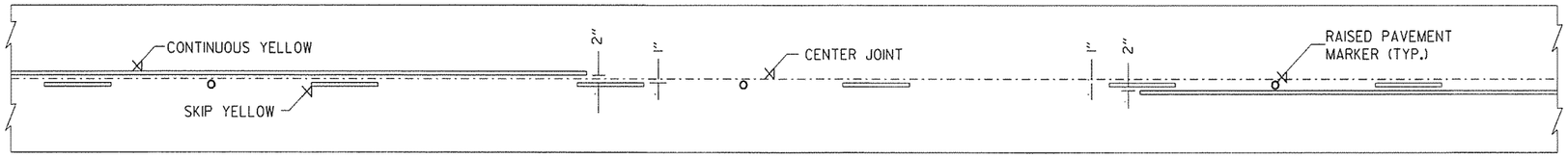

SOLID LINE STRIPING ON CONCRETE PAVEMENT

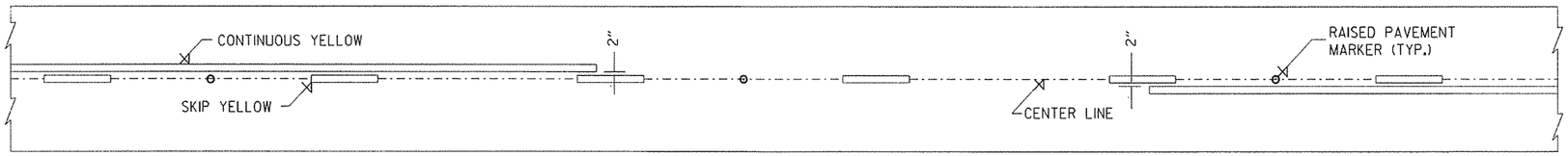

SOLID LINE STRIPING ON ASPHALT PAVEMENT

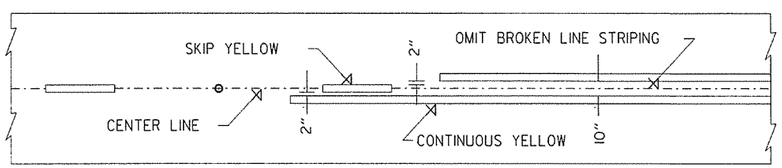

ASPHALT PAVEMENT

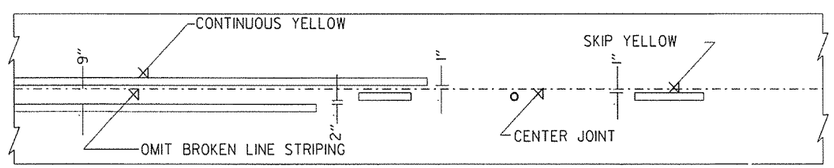

CONCRETE PAVEMENT

STRIPING AT ADJACENT NO PASSING LANES

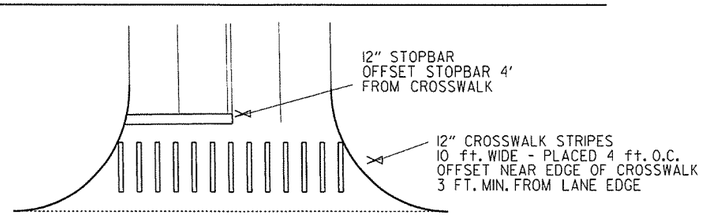

CROSSWALK AND STOPBAR DETAILS

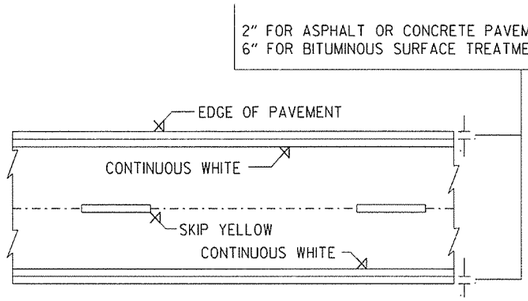

PAVEMENT EDGE LINE MARKING

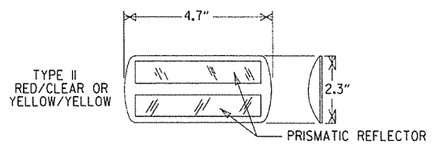

NOTE:
THE RED LENS OF THE TYPE II R.P.M. SHALL FACE THE INCORRECT TRAFFIC MOVEMENT.

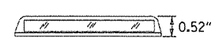

DETAIL OF STANDARD RAISED PAVEMENT MARKERS

NOTE:
DIMENSIONS SHOWN FOR RAISED PAVEMENT MARKERS ARE TYPICAL. THE CONTRACTOR MAY SUBSTITUTE SIMILAR MARKERS WITH THE APPROVAL OF THE ENGINEER. REQUESTING APPROVAL FOR SIMILAR MARKERS MAY BE MADE BY REFERRING TO THE AHTD QUALIFIED PRODUCTS LIST.

DATE	REVISION	FILMED
5-12-16	REVISED LINE WIDTHS, SPACING, & NOTES	
9-12-13	REVISED DETAIL OF STANDARD RAISED PAVEMENT MARKERS	
11-17-10	REVISED GENERAL NOTES & REMOVED PLOWABLE PVMT MRKRS	
11-18-04	REVISED NOTE 2 & GENERAL NOTES	
8-22-02	ADDED CROSSWALK & STOPBAR DTLS.	
7-02-98	ADDED DETAILS OF STD. RAISED PAV'T. MARKERS	
4-26-96	REV. NOTES 3&4; ADDED R.P.M.	
9-30-80	DRAWN	1-9-30-80

ARKANSAS STATE HIGHWAY COMMISSION

PAVEMENT MARKING DETAILS

STANDARD DRAWING PM-1

PAVEMENT MARKING QUANTITIES
(BASED ON 700' ACCEL. LANE + 300' TAPER)

ENTRANCE RAMP

8" WHITE = 228 LIN. FT.
RAISED PAVEMENT MARKERS TYPE II (WHITE/RED) = 38 EACH

EXIT RAMP

4" WHITE = 280 LIN. FT.
8" WHITE = 655 LIN. FT.
RAISED PAVEMENT MARKERS TYPE II (WHITE/RED) = 38 EACH
RAISED PAVEMENT MARKERS TYPE II (WHITE/RED) = 48 EACH
RAISED PAVEMENT MARKERS TYPE II (WHITE/RED) = 38 EACH

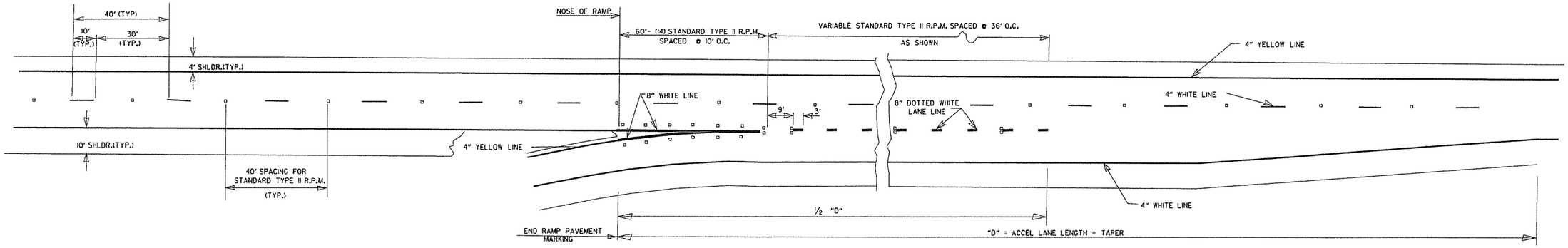

ENTRANCE RAMPS

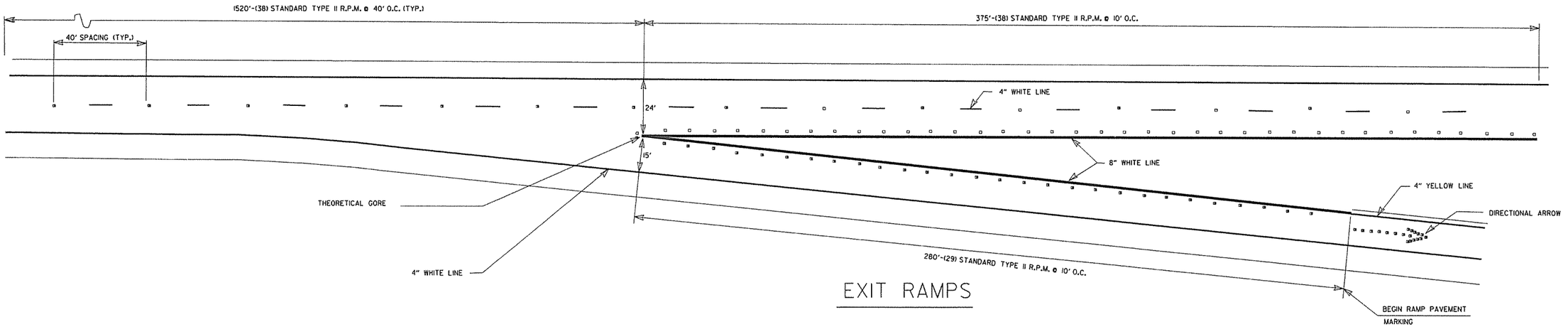

EXIT RAMPS

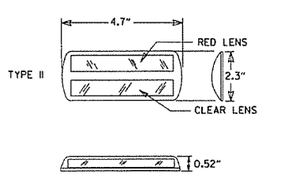

DETAIL OF
STANDARD
RAISED PAVEMENT MARKERS

NOTE:
THE RED LENS OF THE TYPE II R.P.M. SHALL FACE THE INCORRECT TRAFFIC MOVEMENT.

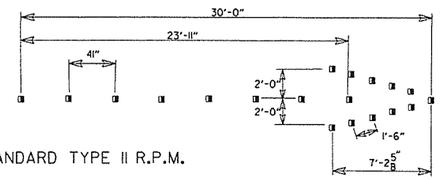

(19) STANDARD TYPE II R.P.M.

DIRECTIONAL ARROWS

GENERAL NOTES:

THIS DRAWING SHOULD BE CONSIDERED AS TYPICAL ONLY AND THE FINAL LOCATION OF THE STRIPING AND PAVEMENT MARKERS SHALL BE DETERMINED BY THE ENGINEER.

THIS DRAWING SHOULD BE USED IN CONJUNCTION WITH THE "MANUAL ON UNIFORM TRAFFIC CONTROL DEVICES", LATEST REVISION.

NOTE:
DIMENSIONS SHOWN FOR RAISED PAVEMENT MARKERS ARE TYPICAL. THE CONTRACTOR MAY SUBSTITUTE SIMILAR MARKERS WITH THE APPROVAL OF THE ENGINEER. REQUESTING APPROVAL FOR SIMILAR MARKERS MAY BE MADE BY REFERRING TO THE AHTD QUALIFIED PRODUCTS LIST.

DATE	REVISION	FILMED
9-12-13	REVISED DETAIL OF STANDARD RAISED PAVEMENT MARKERS	
7-26-12	REVISED RPM NOTATION	
12-15-11	REVISED RPMs ACCORDING TO LATEST POLICY	
11-17-10	REMOVED PLOWABLE PAVEMENT MARKERS	
6-3-10	REVISED PER 2009 MUTCD	
11-18-04	REVISED NOTES	
8-22-02	ADDED & REVISED NOTES; REV. ENTRANCE & EXIT RAMPS	
5-18-00	REMOVED HASHMARKS	
7-02-98	CHANGED TYPES TO ROMAN NUMERALS	
4-26-96	ADDED DIMENSIONS & QUANTITIES; REVISED LANE WIDTH ON EXIT RAMP	
2-2-95	PLACED IN USE	2-2-95

ARKANSAS STATE HIGHWAY COMMISSION

PERMANENT PAVEMENT MARKING ON ACCESS CONTROLLED ROADWAYS

STANDARD DRAWING PM-2

NOTE:
1. GRANULAR BACKFILL TO BE SUBSIDIARY TO PIPE UNDERDRAIN.

2. UNLESS OTHERWISE SPECIFIED ON THE PLANS, THE UNDERDRAIN COVER SHALL BE THOROUGHLY COMPACTED EARTH AND SHALL BE SUBSIDIARY TO PIPE UNDERDRAIN.

3. GRANULAR MATERIAL SHALL BE WRAPPED WITH GEOTEXTILE FABRIC. LAP FABRIC 12" OR THE WIDTH OF THE TRENCH AT THE TOP.

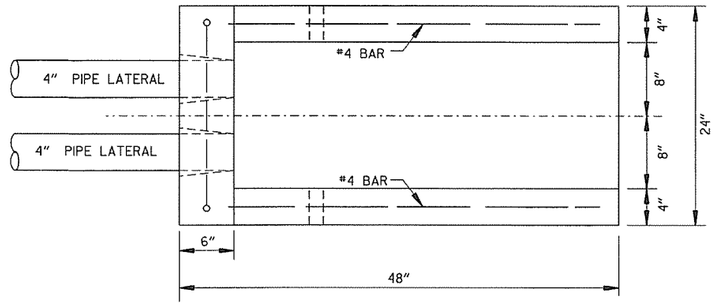

PLAN VIEW

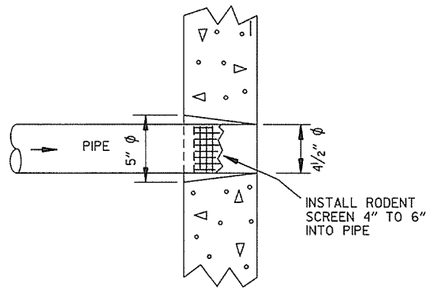

DETAIL OF HOLE FOR 4" PIPE

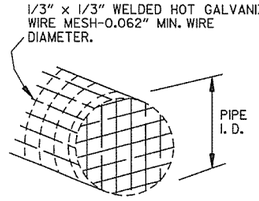

DETAIL OF RODENT SCREEN

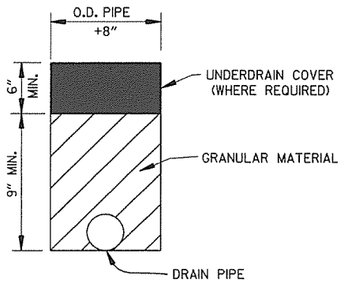

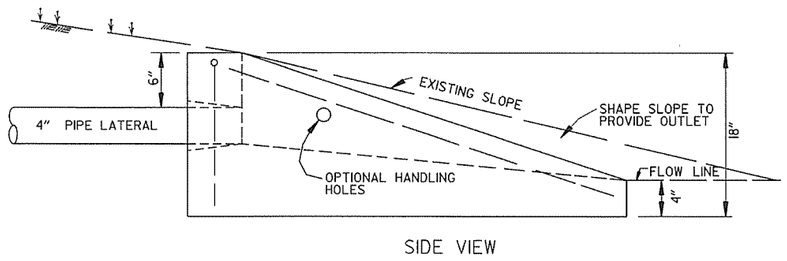

SIDE VIEW

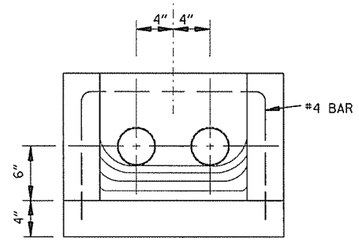

FRONT VIEW

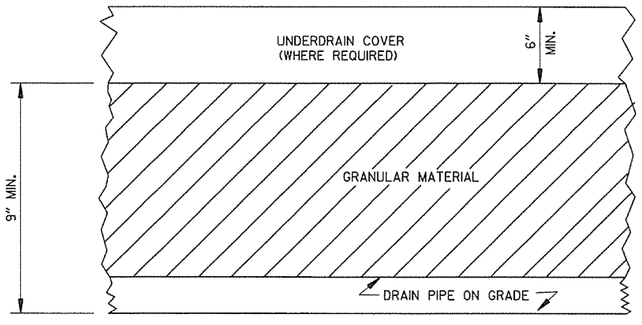

DETAILS OF PIPE UNDERDRAIN

UNDERDRAIN OUTLET PROTECTORS

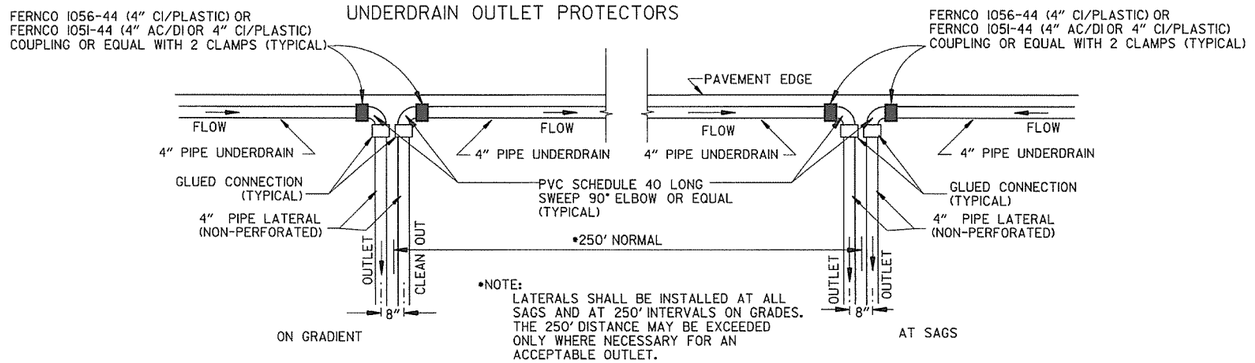

DETAIL OF PIPE UNDERDRAIN LATERALS WHEN PLACED ALONG PAVEMENT EDGE

NOTE: PVC PIPE FOR LATERALS SHALL MEET THE REQUIREMENTS OF ASTM D 1785 (LATEST REVISION) FOR SCHEDULE 40 PIPE.

DATE	REVISION	DATE FILMED
4-10-03	REVISED NOTE 3	
1-12-00	REVISED DETAIL OF UNDERDRAIN LATERALS	
11-18-98	REVISED NOTE	
10-18-96	REVISED MIN. DEPTH & GEOTEXTILE FABRIC	
4-26-96	ADDED LATERAL NOTE; 5½" TO 5"	
11-22-95	REVISED LATERALS	
7-20-95	REVISED LATERALS & ADDED NOTE	
11- 3-94	REVISED FOR DUAL LATERALS	11- 3-94
10- 1-92	SUBSTITUTED GEOTEXTILE	10- 1-92
8-15-91	ADDED POLYEDTHYLENE PIPE	8-15-91
11- 8-90	DELETED ALTERNATE NOTE	11- 8-90
1-25-90	ADDED 4" SNAP ADAPTER	1-25-90
11-30-89	DEL. (SUBGRADE); ADDED (WHERE REQUIRED)	11-30-89
7-15-88	ISSUED P.L.M.	647-7-15-88

ARKANSAS STATE HIGHWAY COMMISSION

DETAILS OF PIPE UNDERDRAIN

STANDARD DRAWING PU-1

7-20-95 INSTD.PUI

STEEL FABRICATION: REINFORCING STEEL FABRICATION SHALL CONFORM TO THE DIMENSIONS LISTED IN THE TABLE BELOW:

BAR SIZE	PIN DIAMETER	HOOK EXTENSION "K"
3	2¼"	4"
4	3 "	4½"
5	3¾"	5"
6	4½"	6"
7	5¼"	7"
8	6"	8"

IF THE OVERALL HEIGHT OF THE HOOK (SEE DIAGRAM BELOW) FOR A "b", "b1", "b2" or "b3" BENT BAR IS GREATER THAN THE CORRESPONDING TOP OR BOTTOM SLAB THICKNESS, LESS 2¾ INCHES, EACH BENT BAR SHALL BE REPLACED WITH ONE HOOKED BAR AND ONE STRAIGHT BAR, USING LENGTHS AS SHOWN IN THE TABLE BELOW. THE TWO BARS SHALL BE THE SAME DIAMETER AS, AND PLACED AT THE SAME SPACING AS, THE "b", "b1", "b2" OR "b3" BENT BARS THEY REPLACE.

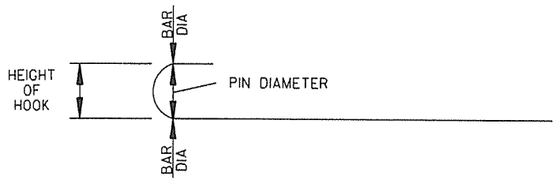

NOTE: DIMENSIONS OF BARS ARE MEASURED OUT TO OUT OF BARS.

OVERALL HEIGHT OF HOOKED BAR DIAGRAM

THE HOOKED BARS SHALL BE PLACED IN THE BOTTOM OF THE TOP SLAB AND THE TOP OF THE BOTTOM SLAB. THE STRAIGHT BARS SHALL BE PLACED IN THE TOP OF THE TOP SLAB AND THE BOTTOM OF THE BOTTOM SLAB. SEE TABLE BELOW FOR LENGTHS OF REPLACEMENT HOOKED AND STRAIGHT BARS.

FOR SKEWED CULVERTS, THE REPLACEMENT STRAIGHT BAR MAY HAVE TO BE CUT IN FIELD TO FIT.

REPLACEMENT BAR LENGTHS TABLE

BAR SIZE: "b", "b1", "b2" OR "b3"	LENGTH OF HOOKED BAR	LENGTH OF STRAIGHT BAR
#4	L + 1' - 0"	SEE "c" BAR LENGTH
#5	L + 1' - 2"	SEE "c" BAR LENGTH
#6	L + 1' - 4"	SEE "c" BAR LENGTH
#7	L + 1' - 8"	SEE "c" BAR LENGTH
#8	L + 1' - 10"	SEE "c" BAR LENGTH
#9	L + 2' - 6"	SEE "c" BAR LENGTH

L = "OW" - 3 INCHES

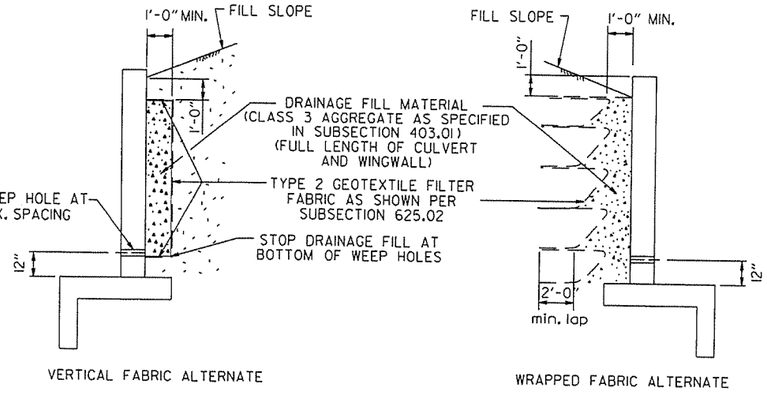

WINGWALL & CULVERT DRAINAGE DETAIL

REINFORCED CONCRETE BOX CULVERT GENERAL NOTES

CONCRETE SHALL BE CLASS S WITH A MINIMUM 28 DAY COMPRESSIVE STRENGTH OF 3500 PSI.

REINFORCING STEEL SHALL BE AASHTO M 31 OR M 53, GRADE 60.

CONSTRUCTION AND MATERIALS FOR WINGWALL & CULVERT DRAINAGE, INCLUDING WEEP HOLES AND GRANULAR MATERIAL, SHALL BE SUBSIDIARY TO THE BID ITEM, "CLASS S CONCRETE".

MEMBRANE WATERPROOFING SHALL CONFORM TO THE REQUIREMENTS OF SECTION 815 OF THE STANDARD SPECIFICATIONS.

MEMBRANE WATERPROOFING SHALL BE APPLIED TO ALL CONSTRUCTION JOINTS IN THE TOP SLAB AND THE SIDEWALLS OF R.C. BOX CULVERTS AS DIRECTED BY THE ENGINEER. NO PAYMENT SHALL BE MADE FOR THIS ITEM, BUT PAYMENT WILL BE CONSIDERED TO BE INCLUDED IN THE VARIOUS ITEMS BID FOR THE R.C. BOX CULVERT.

REINFORCING STEEL TOLERANCES: THE TOLERANCES FOR REINFORCING STEEL SHALL MEET THOSE LISTED IN "MANUAL OF STANDARD PRACTICE" PUBLISHED BY CONCRETE REINFORCING STEEL INSTITUTE (CRSI) EXCEPT THAT THE TOLERANCE FOR TRUSS BARS SUCH AS FIGURE 3 ON PAGE 7-4 OF THE CRSI MANUAL SHALL BE MINUS ZERO TO PLUS ½ INCH.

WEEP HOLES IN BOX CULVERT WALLS SHALL HAVE A MAXIMUM HORIZONTAL SPACING OF 10'-0" AND SHALL BE SPACED TO CLEAR ALL REINFORCING STEEL. THE DRAIN OPENING SHALL BE 4" DIAMETER AND SHALL BE PLACED 12" ABOVE THE TOP OF THE BOTTOM SLAB.

WEEP HOLES IN WINGWALLS SHALL HAVE A MAXIMUM HORIZONTAL SPACING OF 10'-0" AND SHALL BE SPACED TO CLEAR ALL REINFORCING STEEL. THERE SHALL BE A MINIMUM OF TWO (2) WEEP HOLES IN EACH WINGWALL. THE DRAIN OPENING SHALL BE 4" DIAMETER AND SHALL BE PLACED 12" ABOVE THE TOP OF THE WINGWALL FOOTING.

THE REQUIREMENTS SHOWN ON THIS DRAWING SHALL SUPERCEDE THE CORRESPONDING REQUIREMENTS ON ALL REINFORCED CONCRETE BOX CULVERT STANDARD DRAWINGS.

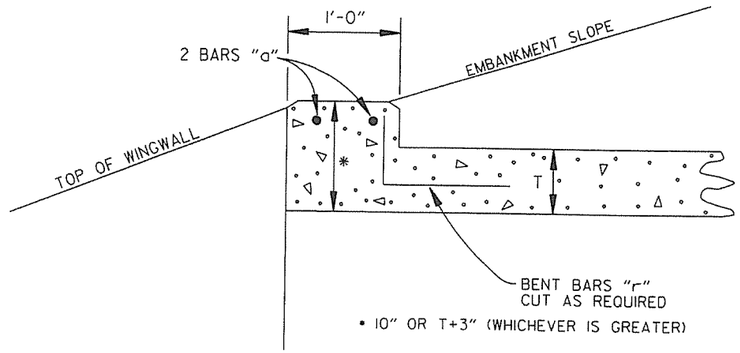

NOTE: FOR ALL SKEWED R.C. BOX CULVERTS THE LENGTH "K" OF THE MODIFIED HEADWALL SHALL BE EQUAL TO THE ROADWAY LENGTH "RL". THE ENDS OF THE HEADWALL SHALL BE CONSTRUCTED PARALLEL TO THE SKEW ANGLE OF THE BOX CULVERT.

R.C. BOX CULVERT HEADWALL MODIFICATIONS

DATE	REVISION	DATE FILMED
7/26/12	REV. DRAINAGE FILL MATERIAL & DETAIL	
12/15/11	REQUIRE WEEP HOLES IN BOX CULVERT WALLS	
5-25-06	REV. GEN. NOTES AND DETAILS FOR WEEP HOLES; BAR DIAGRAM	
11-16-01	ADDED WINGWALL DRAINAGE DETAIL/EDITED GEN. NOTES	
10-18-96	REV. ASTM REF. TO AASHTO & ADDED BAR DIAGRAM	
10-12-95	MOVED SOLID SODDING DETAIL TO RCB-2	
6-2-94	ADDED SOLID SODDING PLAN DETAIL	
8-5-93	REVISED PIN DIAMETER TO SPECS.	
8-15-91	DRAWN AND ISSUED	

ARKANSAS STATE HIGHWAY COMMISSION

REINFORCED CONCRETE BOX CULVERT DETAILS

STANDARD DRAWING RCB-1

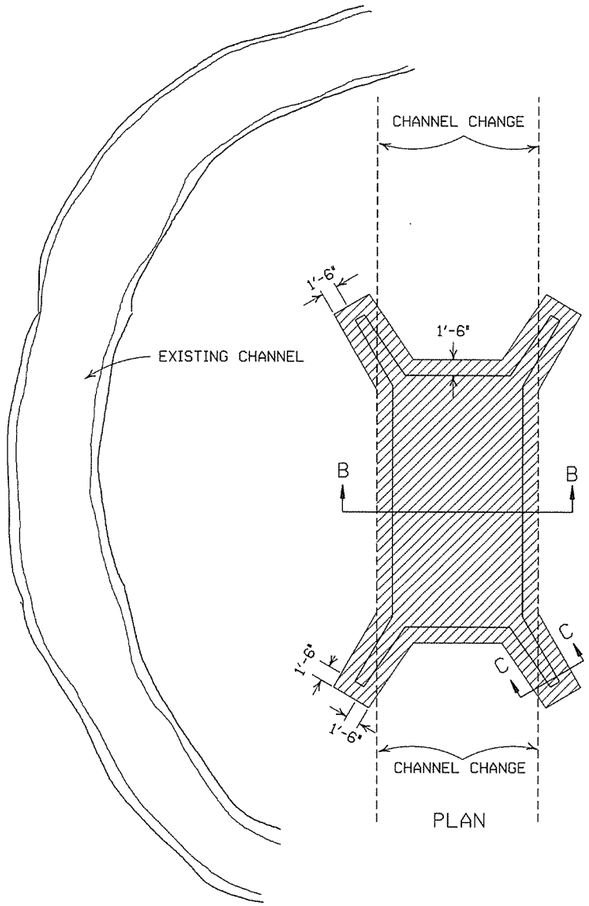

PLAN

SOLID SODDING

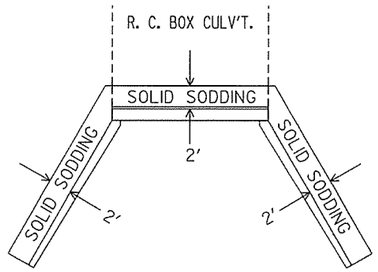

PLAN

PARTIAL SECTION SHOWING SOLID SODDING AT HEADWALLS AND WING WALLS

NOTE: LENGTH MEASURED ALONG THE CENTER OF 2' STRIP OF SOLID SODDING.

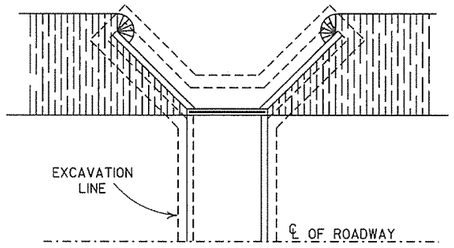

PLAN

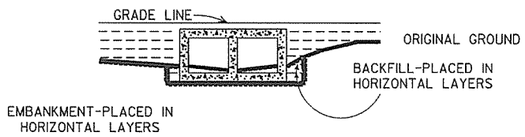

LONGITUDINAL SECTION

BACKFILL DETAILS FOR BOX CULVERT

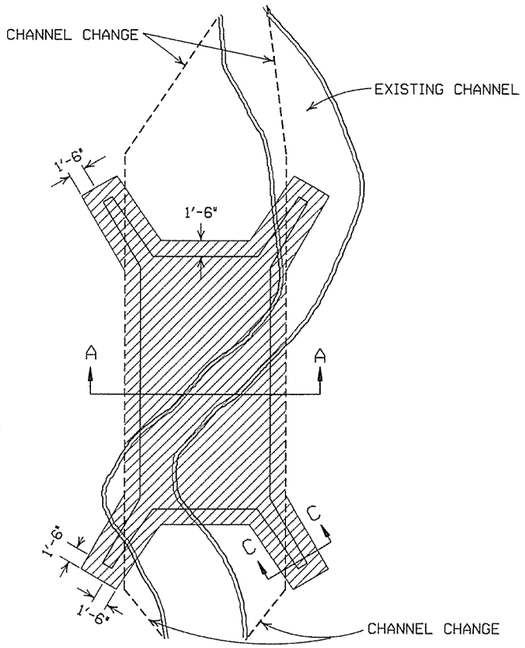

PLAN

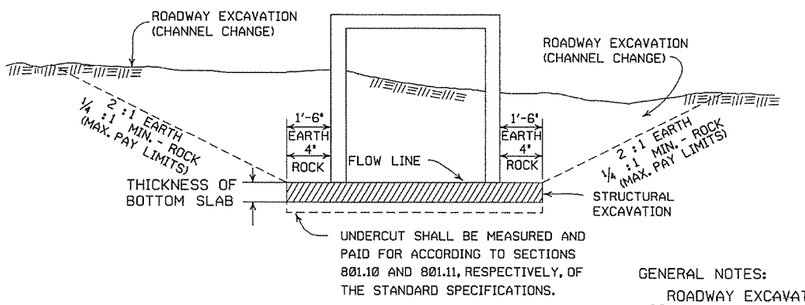

SECTION B-B

DETAILS FOR NEW CHANNELS

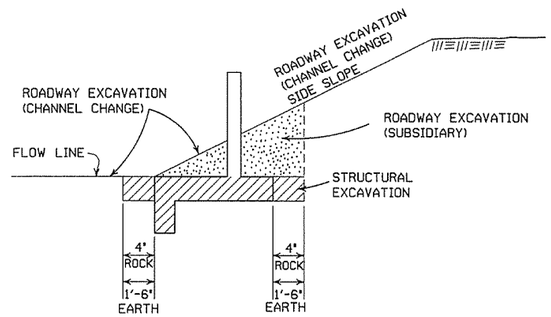

SECTION C-C

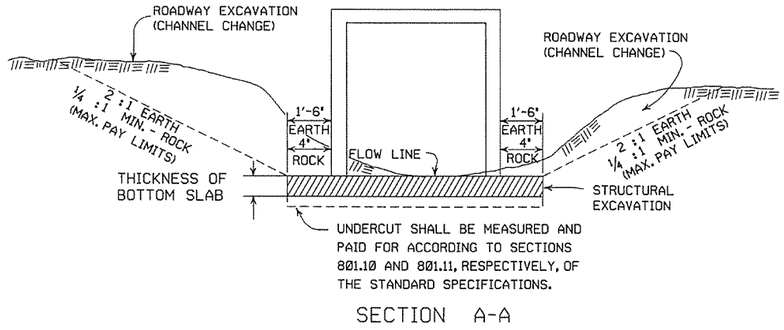

SECTION A-A

DETAILS THROUGH EXISTING CHANNELS

GENERAL NOTES:

ROADWAY EXCAVATION (CHANNEL CHANGE) WILL BE PAID FOR AT R.C. BOX CULVERT LOCATIONS. IT WILL BE PAID TO THE LIMITS ACTUALLY CUT AND WILL BE CONFINED TO THAT PORTION OF THE INDICATED AREA THAT IS ABOVE THE FLOW LINE. ROADWAY EXCAVATION (CHANNEL CHANGE) SHALL BE MEASURED BY CROSS SECTIONS AND VOLUMES COMPUTED BY AVERAGE END AREA METHOD. ALL CHANNEL CHANGES SHALL BE BROUGHT TO GRADE PRIOR TO MAKING ANY EXCAVATION FOR STRUCTURES.

EXCAVATION FOR STRUCTURES WILL BE PAID FOR AT ALL R.C. BOX CULVERT LOCATIONS. IT WILL BE PAID TO THE LIMITS SHOWN AND SHALL BE CONFINED TO THAT PORTION OF THE INDICATED AREA THAT IS BELOW THE CHANNEL FLOW LINE.

ROADWAY EXCAVATION SHOWN IN SECTION C-C ABOVE AS SUBSIDIARY WILL NOT BE MEASURED OR PAID FOR DIRECTLY, BUT PAYMENT WILL BE CONSIDERED TO BE INCLUDED IN THE VARIOUS ITEMS OF EXCAVATION.

DATE	REVISION	FILMED
11-20-03	REVISED SECTION A-A NOTE	
8-22-02	REVISED SECTION B-B NOTE	
10-12-95	COMBINED 1891B AND 1888A	
1-4-83	REVISED GENERAL NOTES	674-1-4-83
	AND ADDED MAXIMUM PAY	
	LIMIT NOTES.	
2-2-76	EXCAV. PAY LIMITS	917-2-2-76
10-2-72	REVISED AND REDRAWN	564-10-16-72

ARKANSAS STATE HIGHWAY COMMISSION

EXCAVATION PAY LIMITS, BACKFILL, & SOLID SODDING FOR BOX CULVERTS

STANDARD DRAWING RCB-2

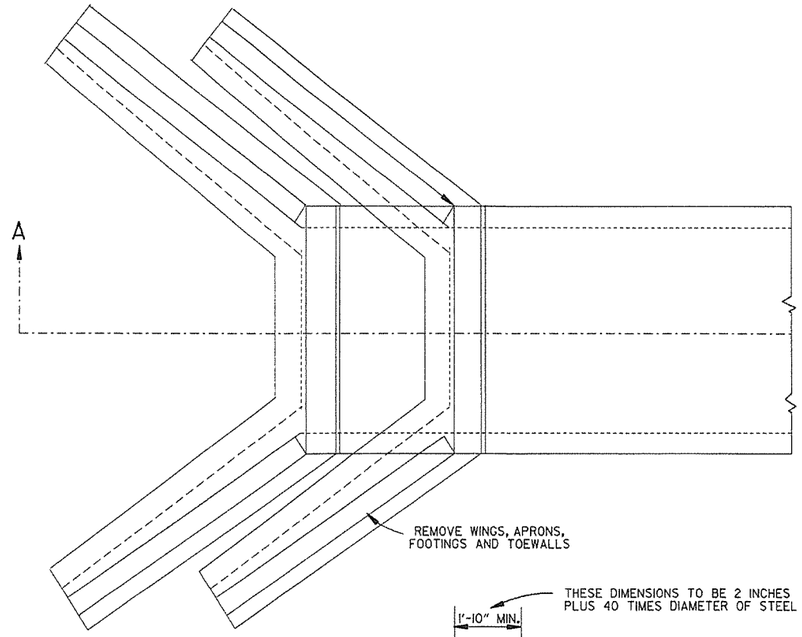

TOP VIEW
R.C. BOX CULVERT

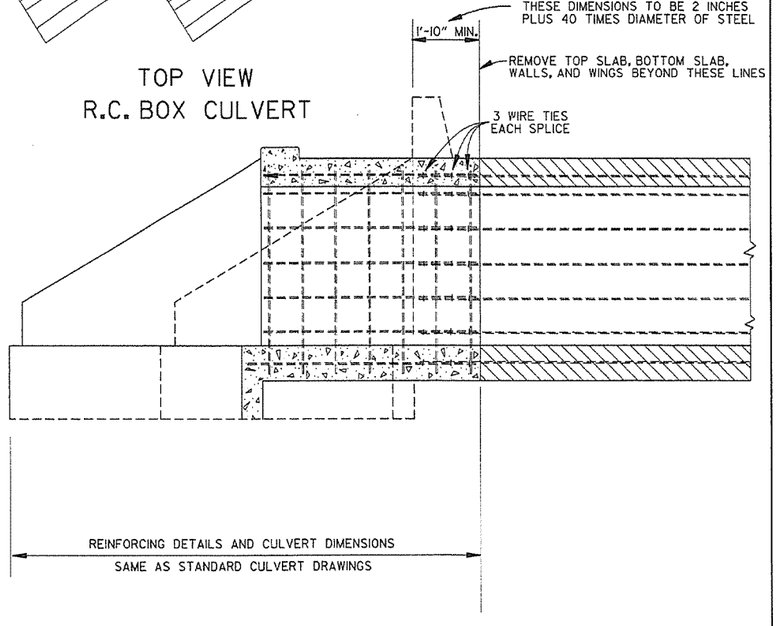

SECTION A-A

METHOD 1

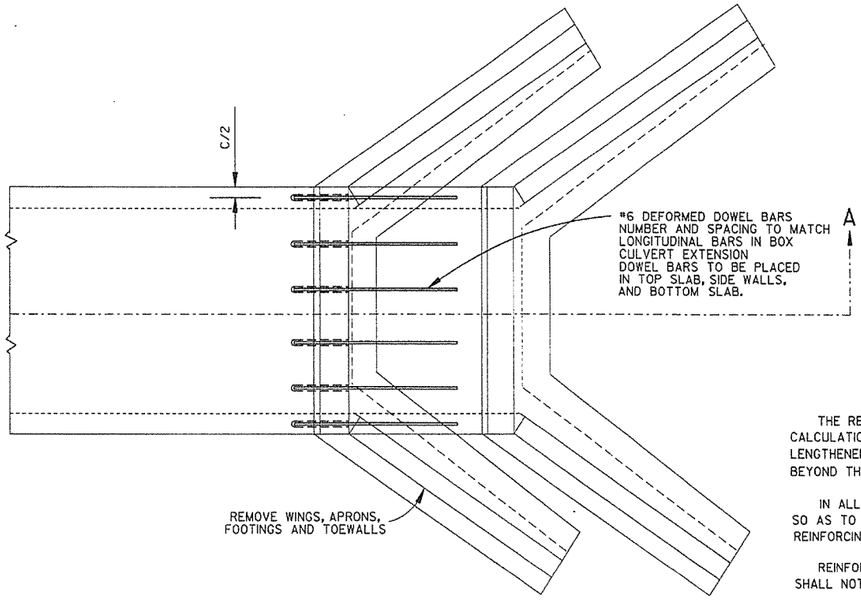

TOP VIEW
R.C. BOX CULVERT

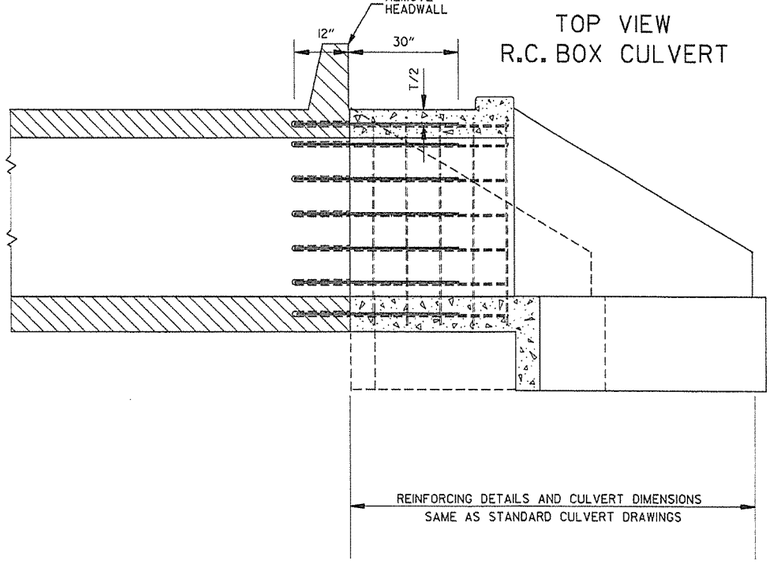

SECTION A-A

METHOD 2

GENERAL NOTES

	USE FOR METHOD
THE RESIDENT ENGINEER WILL MAKE INDIVIDUAL CALCULATIONS OF QUANTITIES FOR EACH STRUCTURE LENGTHENED, MAKING NO ALLOWANCE FOR OVERBREAKAGE BEYOND THE LINES INDICATED.	1
IN ALL INSTANCES CONCRETE SHALL BE REMOVED SO AS TO PERMIT FULL 40 DIAMETER SPLICE OF REINFORCING STEEL.	1
REINFORCING STEEL REMOVED FROM EXISTING STRUCTURE SHALL NOT BE REUSED IN CONSTRUCTING EXTENSION.	1&2
ON R.C. BOX CULVERTS THAT HAVE AN EXISTING CONCRETE APRON; THE CONCRETE APRON SHALL BE REMOVED WITH THE WINGS. THE COST OF REMOVING ALL OLD CONCRETE WILL BE INCLUDED IN THE PRICE BID PER CUBIC YARD FOR NEW CONCRETE OF THE CLASS SPECIFIED AND NO ADDITIONAL COMPENSATION WILL BE ALLOWED.	1&2
MATERIALS FOR SECURING DOWEL BARS SHALL MEET THE REQUIREMENTS OF SECTION 507.02 OF THE STANDARD SPECIFICATIONS.	2
DOWEL BARS SHALL BE INSTALLED AS FOLLOWS: THE DRILLING PROCEDURE SHALL BE APPROVED BY THE ENGINEER, THE FILLING SYSTEM SHALL BE APPROVED BY THE ENGINEER. AND SHALL BE AN INJECTION-TYPE SYSTEM WHICH WILL INSURE THAT SUFFICIENT MATERIAL IS INJECTED SO IT COMPLETELY SURROUNDS THE BARS AND FILLS THE HOLES.	2
THE CONTRACTOR SHALL HAVE THE OPTION OF USING EITHER METHOD 1 OR METHOD 2, REGARDLESS OF WHICH METHOD IS USED, PAY QUANTITIES WILL BE CALCULATED BASED ON METHOD 1.	1&2

NOTE:
NO PART OF THIS STANDARD IS TO BE USED FOR ANY DETAILS RELATIVE TO NEW CONSTRUCTION.

SEE STANDARD DRAWING LISTED IN TABULATION OF STRUCTURES FOR ALL NEW CONSTRUCTION DETAILS.

DATE	REVISION	DATE FILM
10-12-95	CHANGED DRAWING # FROM 144-A	
4-1-93	ADDED GENERAL NOTE	
10-1-92	ADDED ALT. METHOD OF EXTENSION	
11-30-89	REDRAWN	
1-4-83	ELIMINATED CONCRETE CLASS	
12-20-56	RETRACED	

ARKANSAS STATE HIGHWAY COMMISSION

METHOD OF EXTENDING
EXISTING R.C. BOX CULVERTS

STANDARD DRAWING RCB-3

LOOP DETECTOR INSTALLATION AND TESTING

NOTES:

1. LOOPS WITH A PERIMETER GREATER THAN 40' SHALL HAVE TWO TURNS. LOOPS WITH A PERIMETER LESS THAN OR EQUAL TO 40' SHALL HAVE THREE TURNS, UNLESS OTHERWISE NOTED ON THE PLANS. QUADRUPOLE LOOPS SHALL BE TWO TURNS (2-4-2 CONFIGURATION) UNLESS OTHERWISE NOTED.
2. LOOP AND FEEDER WIRE SHALL BE CONTINUOUS WITHOUT SPLICES EXCEPT AT THE LOOP/FEEDER WIRE SPLICE AS SHOWN. SPLICE SHALL BE ROSIN SOLDERED AND WATERPROOFED WITH AN ACCEPTED SPLICE KIT. DRAIN WIRE SHALL BE GROUNDED IN CABINET AND INSULATED AT LOOP TO FEEDER SPLICE.
3. THE LOOP TO FEEDER SPLICE, FEEDER JACKET AND JACKET OF LOOP WIRE IN DUCT SHALL BE COMPLETELY SEALED AND WATERPROOFED.
4. CONTRACTOR MAY MAKE CONNECTIONS TO SIGNAL CABLE AND LOOP TO FEEDER CONNECTION AT TERMINAL STRIPS MOUNTED TO POLE INSIDE HAND HOLD COVER AS SHOWN IN DETAIL. TERMINALS MUST BE EASILY ACCESSIBLE, BUT PROTECTED AGAINST ACCIDENTAL CONTACT. CONNECTION OF POWER CARRYING CIRCUITS MUST BE SEPARATED FROM LOOP OR LOGIC CIRCUITS. ALL CONNECTIONS TO TERMINAL STRIPS SHALL UTILIZE SPADE LUGS OR AS APPROVED BY THE ENGINEER.
5. EACH LOOP SHALL HAVE A SEPARATE "FEEDER WIRE" UNLESS OTHERWISE NOTED. ALL FEEDER WIRES SHALL BE LABELED AS TO LOOP NUMBER AS DESIGNATED ON THE PLANS.
6. ALL LOOP WIRE ENTERING PULL BOXES SHALL BE ENCLOSED IN CONDUIT. EACH LOOP WIRE SHALL ENTER PULL BOX OR POLE BASE THROUGH A SEPARATE PIECE OF ONE INCH (1"Ø) CONDUIT.
7. LOOP WIRE FROM LOOP TO CONDUIT IS NOT TWISTED. LOOP WIRE IN THE CONDUIT MUST BE TWISTED TWO TO FIVE TURNS PER FOOT.
8. WARRANTY PERIOD FOR LOOPS SHALL NOT COMMENCE UNTIL TESTED BY THE CONTRACTOR AND ACCEPTED BY THE ENGINEER. CONTRACTOR SHALL PERFORM TEST AND PROVIDE A RECORD TO THE ENGINEER AS LISTED IN THE DETECTOR LOOP TESTING PROCEDURE.
9. UNLESS OTHERWISE APPROVED BY THE ENGINEER, BACKER ROD SHALL BE INSTALLED IN SHORT SECTIONS SPACED NOT MORE THAN 18" APART AND WEDGED INTO SLOT TO HOLD CABLE IN PLACE. CABLE SHALL BE TOTALLY ENCAPSULATED IN SEALER.
10. "HOT POUR" SEALER SHALL NOT BE ALLOWED WITH 705-LOOP WIRING IN DUCT.
11. WHERE UNDERGROUND SPLICES OF SIGNAL CABLE ARE REQUIRED, CONNECTIONS SHALL BE SOLDERED AND COMPLETELY WATERPROOFED TO THE SATISFACTION OF THE ENGINEER. WATERPROOFING SHALL EXTEND A MINIMUM OF TWO INCHES PAST THE SIGNAL CABLE JACKET AND SHALL COMPLETELY COVER ALL INDIVIDUAL CONDUCTORS OF THE SIGNAL CABLE. WATERPROOFING DOES NOT APPLY TO CONNECTIONS MADE IN POLE BASES.
12. CONTRACTOR SHALL CONNECT A SEPARATE NEUTRAL FOR EACH LOAD SWITCH REPRESENTED ON EACH SIGNAL POLE. ONLY ONE NEUTRAL IS REQUIRED FOR PEDESTRIAN SIGNALS. A SEPARATE 5C (TYPICAL) IS PROVIDED FOR PEDESTRIAN PUSH BUTTONS.
13. TRAFFIC CONTROLLER CABINET AND LAYOUT SHALL BE SUCH THAT IT IS NOT NECESSARY TO SHUT DOWN POWER OR REMOVE LOAD SWITCHES IN ORDER TO EASILY TEST OR MODIFY DETECTOR INPUTS TO CONTROLLER. CONTROLLER CABINET SHALL BE WIRED SUCH POWER TO LOAD SWITCHES CANNOT BACKFEED TO LOAD SWITCH POWER BUSS DURING FLASH OPERATION.

TYPICAL PROCEDURE FOR DETECTOR LOOP TESTING

(1) DISCONNECT AND TEST CONTINUITY (< 10 OHMS) IF CONTINUITY IS BAD, GO TO TEST 3

(2) TEST INSULATION (@ 500 VOLT TEST > 10 MEG-OHM)

IF TESTS 1& 2 ARE GOOD, NO FURTHER TESTING IS NECESSARY. RECORDED RESULTS CONSIST OF TESTS 1& 2 FROM CONTROL CABINET WITH FEEDER WIRE CONNECTED TO LOOP.

(3) OPEN SPLICE (DO NOT BREAK CONNECTION) REPEAT TEST 1& 2 IF TEST 3 IS BAD, GO TO TEST 4

(4) BREAK SPLICE, INSTALL JUMPER IN CABINET, REPEAT TESTS 1& 2 SEPARATELY FOR FEEDER AND FOR LOOP

FAILURES TYPICALLY RESULT FROM BROKEN WIRE IN PAVEMENT, FAULTY INSULATION OF LOOP OR FEEDER WIRE, OR POORLY INSULATED SPLICE CONNECTION.

SERIES CONNECTED LOOPS

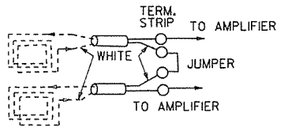

WIND LOOPS COUNTERCLOCKWISE: TAG WIRE EXITING SLOT AND TIE TO WHITE LEAD OF FEEDER WIRE; WHEN LOOPS ARE TIED TO SAME VEHICLE DETECTOR, SERIES CONNECT IN CABINET AS SHOWN.

HANDHOLE TERMINAL

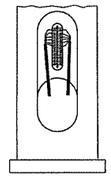

QUADRUPOLE LOOP

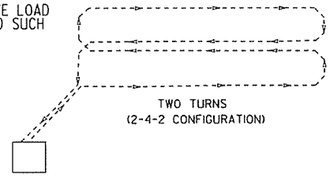

TRENCHING DETAIL

(FOR SAW CUT TRENCH IN ROADWAY)

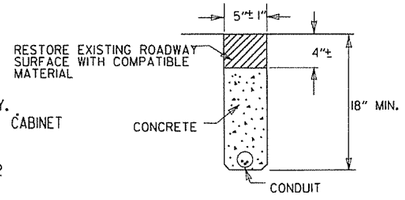

TRAFFIC SIGNAL PRE-EMPTION INTERFACE WIRING DIAGRAM

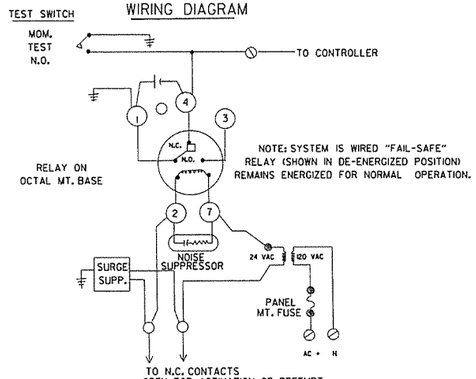

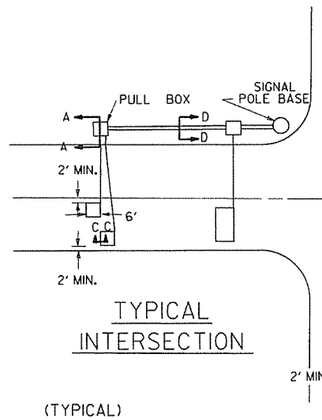

TYPICAL INTERSECTION

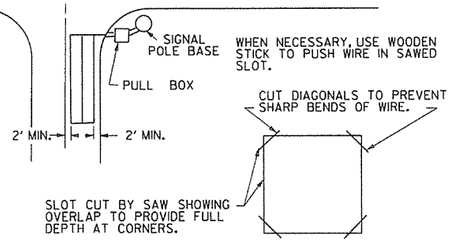

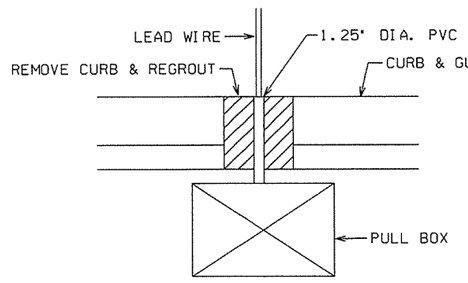

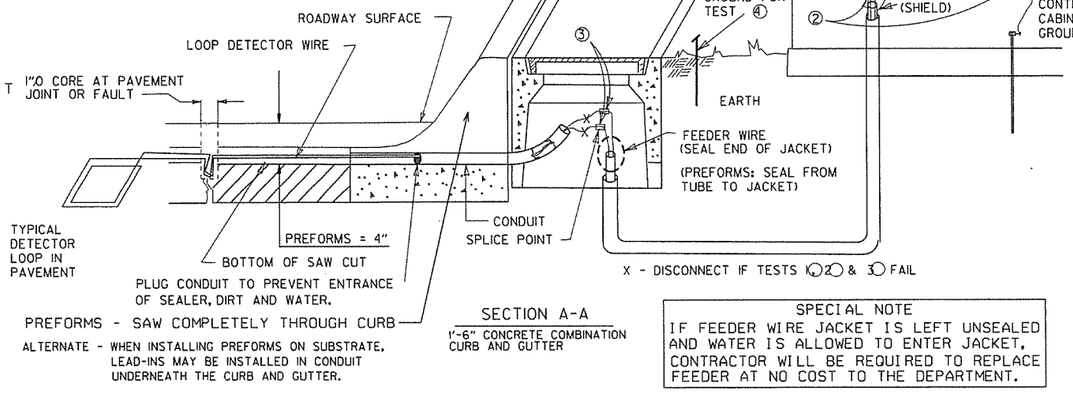

SECTION A-A

1'-6" CONCRETE COMBINATION CURB AND GUTTER

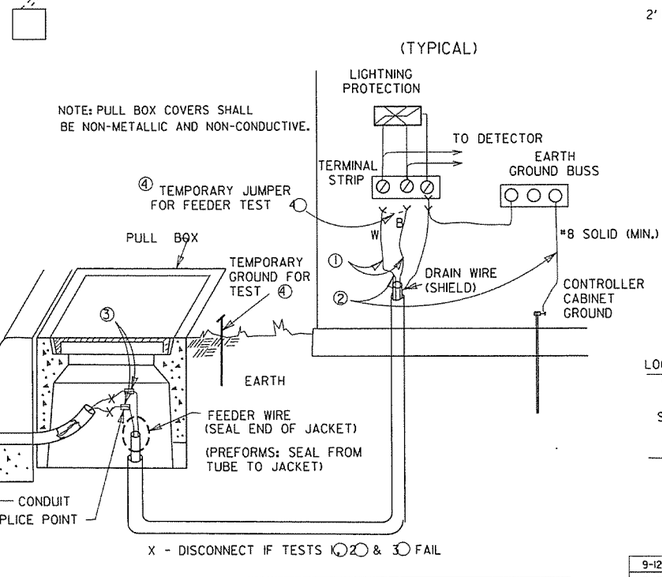

SPECIAL NOTE

IF FEEDER WIRE JACKET IS LEFT UNSEALED AND WATER IS ALLOWED TO ENTER JACKET, CONTRACTOR WILL BE REQUIRED TO REPLACE FEEDER AT NO COST TO THE DEPARTMENT.

TYPICAL SECTIONS FOR PULSE AND PRESENCE LOOP DETECTORS

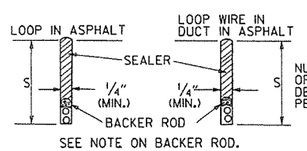

SECTION C-C

S=2 ½" IN ASPHALT
S=1½" IN CONCRETE

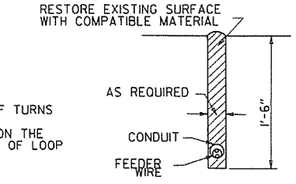

SECTION D-D

DATE	REVISION	DATE FILM
9-12-13	ISSUED AS STANDARD DRAWING	
5-17-01	REVISED	
4-11-01	REVISED	
2-4-00	REVISED PRE-EMPTION TEST SWITCH	
11-18-98	REVISED NOTES	
11-21-95	ISSUED	

ARKANSAS STATE HIGHWAY COMMISSION

LOOP DETECTOR INSTALLATION

STANDARD DRAWING SD-4

DRAWER PLAN VIEW

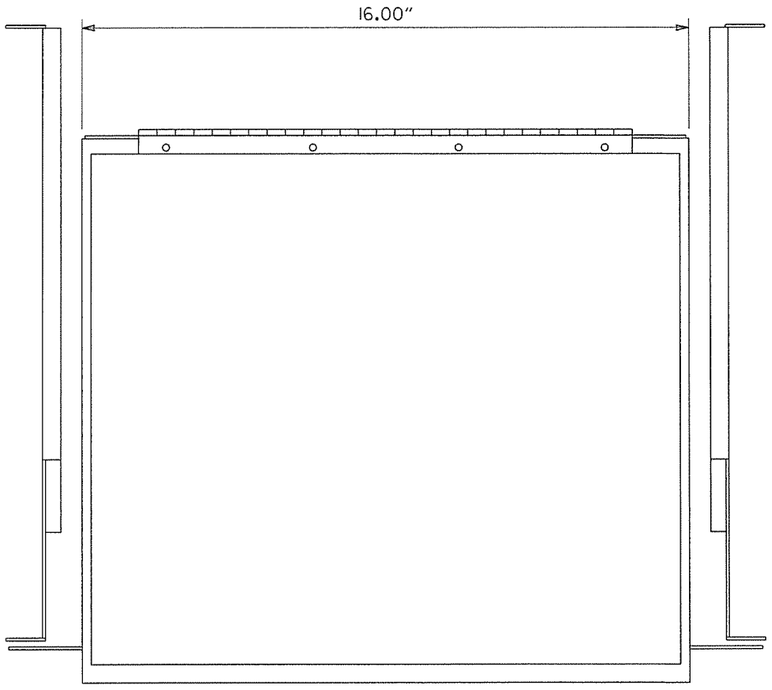

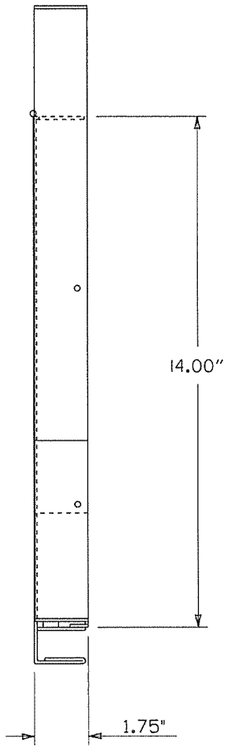

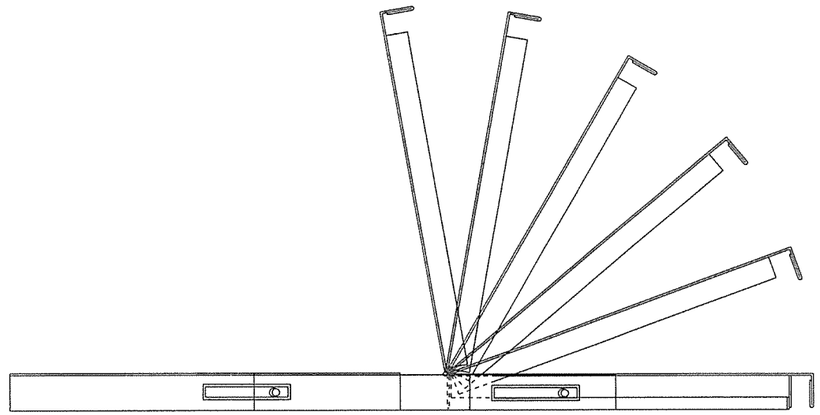

NOTES:
1. RIGHT HAND SLIDE SHOWN, LEFT SLIDE OPPOSITE.
2. GENERAL DEVICES (CC3002-99-0102) OR EQUAL AND CONTAINS (1) RIGHT HAND SLIDE ASSEMBLY, (1) LEFT HAND SLIDE ASSEMBLY.
3. ALL HARDWARE NECESSARY TO FASTEN SLIDE ASSEMBLY TO UNDERSIDE OF CONTROLLER SHELF SHALL BE INCLUDED.

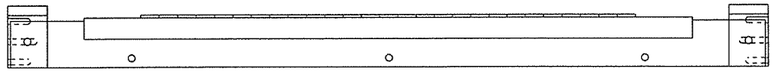

FRONT VIEW

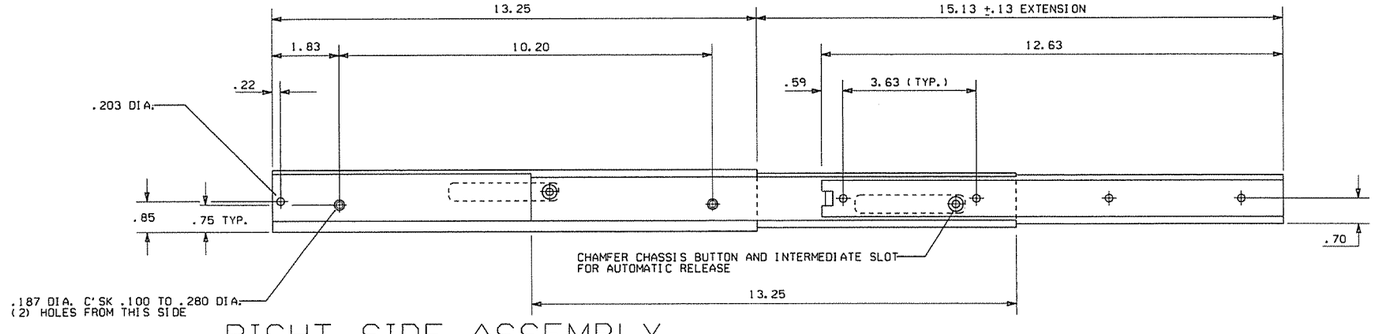

RIGHT SIDE ASSEMBLY

9-12-13	ISSUED AS STANDARD DRAWING	
6-15-05	ISSUED	
DATE	REVISION	DATE FILM

ARKANSAS STATE HIGHWAY COMMISSION

CONTROLLER CABINET
UTILITY DRAWER

STANDARD DRAWING SD-5

CONDUIT ENTRY TO EXISTING POLE BASE

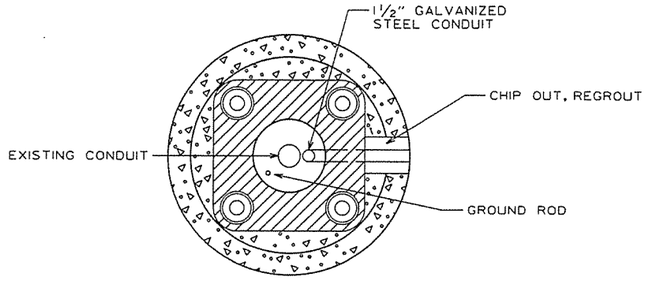

ANCHOR BASE

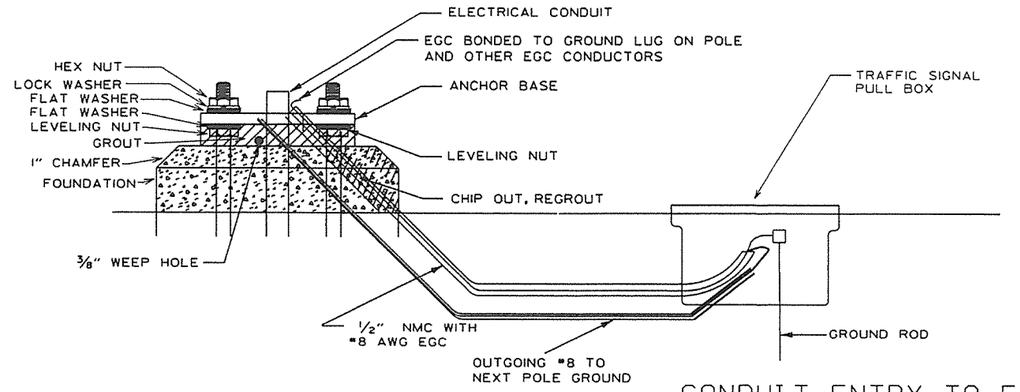

CONDUIT ENTRY TO EXISTING CONTROLLER CABINET

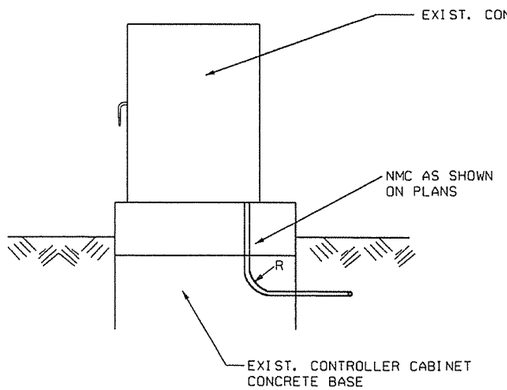

NOTE: ENTRY TO CABINET SHALL BE THROUGH A CUT IN THE BASE SUFFICIENT TO PROVIDE ADEQUATE CONDUIT RADIUS FOR ITEM.

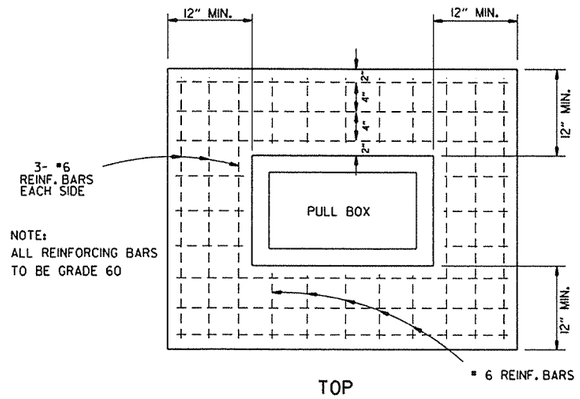

TOP

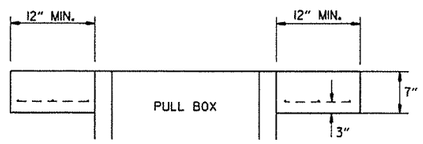

ELEVATION

TYPE "HD" CONCRETE PULL BOX DETAIL

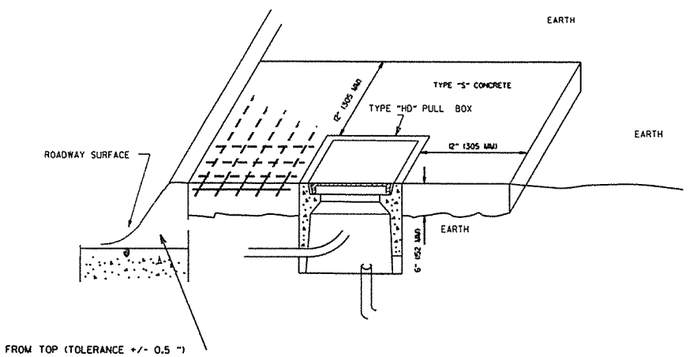

NOTE: ALL TYPE I AND TYPE 2 HD PULL BOXES ARE INSTALLED WITH AN APRON OF CONCRETE 12" (305 MM) WIDE AND 7" (178 MM) IN DEPTH. ALL PAYMENT SHALL BE INCLUDED IN THE PRICE OF THE TYPE HD PULL BOX. PULL BOX SHALL BE INSTALLED FLUSH TO SURROUNDING GRADE UNLESS OTHERWISE INSTRUCTED BY THE ENGINEER. THE CONCRETE SHALL BE CLASS "S." THREE #6 REINFORCING BARS IN THE APRON ON ALL SIDES OF THE PULL BOX IS REQUIRED IN CONCRETE.

DATE	REVISION	DATE FILM
9-2-15	REVISED PULL BOX DEPTH	
9-12-13	ISSUED AS STANDARD DRAWING	
5-21-09	REVISED GROUNDING	
7-31-08	ADDED & REVISED CONDUIT ENTRY	
6-23-04	REVISED CLEARANCE AT CURB ENTRY	
1-4-02	ADDED REINFORCING TO BOX APRON	
7-2-01	REVISED	
12-27-99	REVISED NOTES	
11-18-98	ISSUED	

ARKANSAS STATE HIGHWAY COMMISSION

HEAVY DUTY PULL BOX

STANDARD DRAWING SD-6

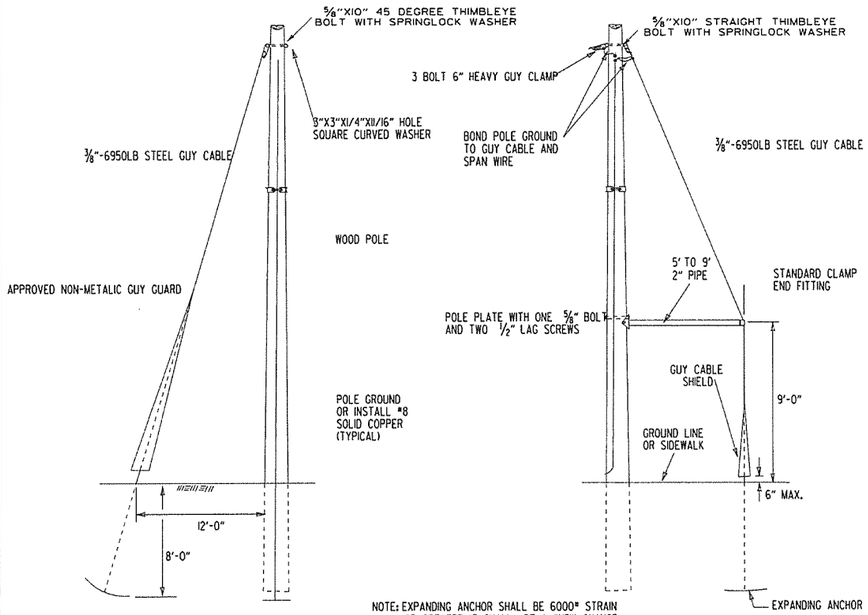

STANDARD GUY INSTALLATION

NOTE: EXPANDING ANCHOR SHALL BE 6000# STRAIN OR GREATER. IT SHALL BE A "NEW CHANCE 8-WAY EXPANDING ANCHOR", WITH A ⅝" MINIMUM GUY ROD.

SIDEWALK GUY INSTALLATION

NOTE: CONDUIT INSTALLATION MAY BE ADJUSTED BY THE ENGINEER TO MEET FIELD CONDITIONS.

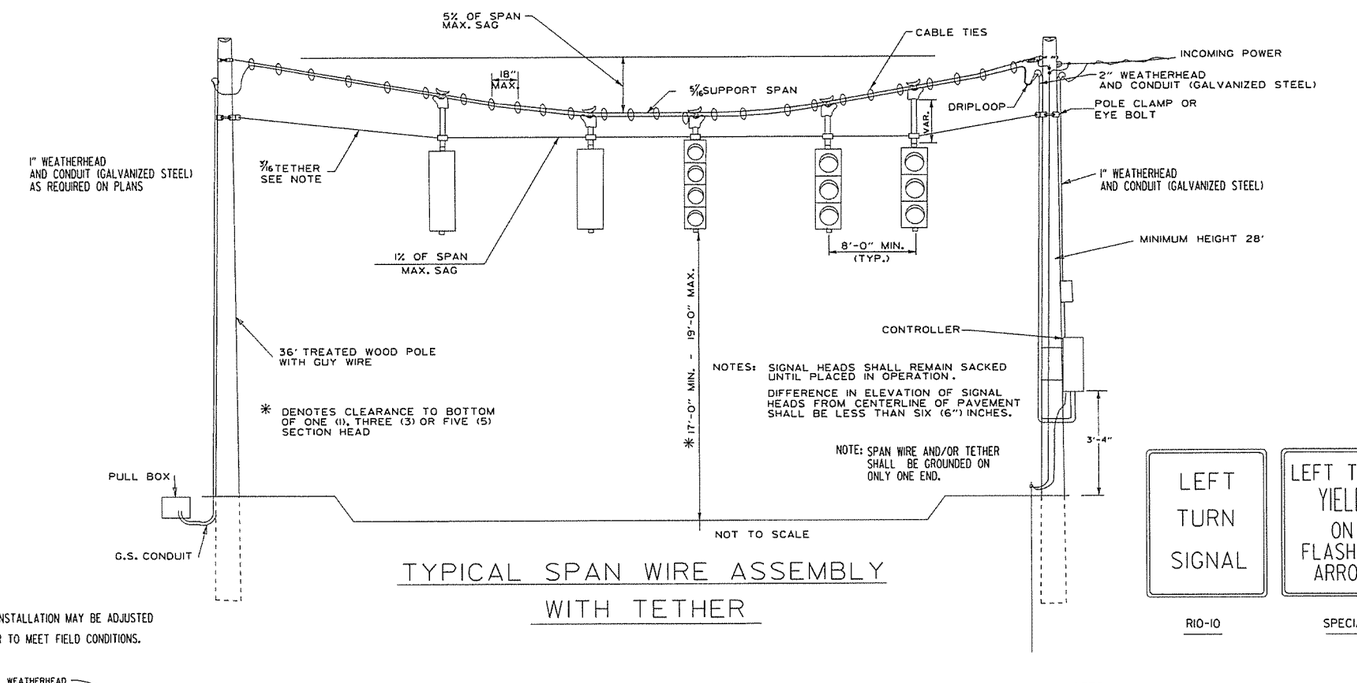

TYPICAL SPAN WIRE ASSEMBLY WITH TETHER

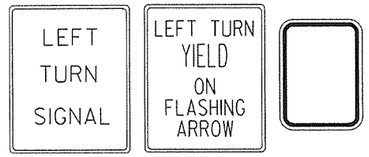

R10-10 SPECIAL R10-3E (SEE MUTCD)

NOTES: SPAN WIRE POLES SHALL BE MOUNTED A MINIMUM OF 4' BEHIND CURB OR SHOULDER.

SPAN WIRE ASSEMBLIES WILL REQUIRE TETHER UNLESS OTHERWISE NOTED ON PLAN SHEETS. CABLE TIES SHALL BE SUITABLE FOR OUTSIDE USE (BLACK).

THE CONTROLLER POWER SUPPLY GROUND BUSS SHALL BE BONDED TO THE GROUND ROD WITH A #8 AWG SOLID COPPER WIRE. ON EXISTING INSTALLATIONS WITH NO GROUND ROD, CONTRACTOR SHALL INSTALL A 10' X ⅝" COPPERWELD GROUND ROD.

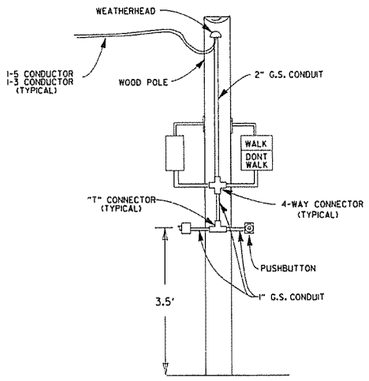

WOODEN POLE INSTALLATION OF PED HEADS

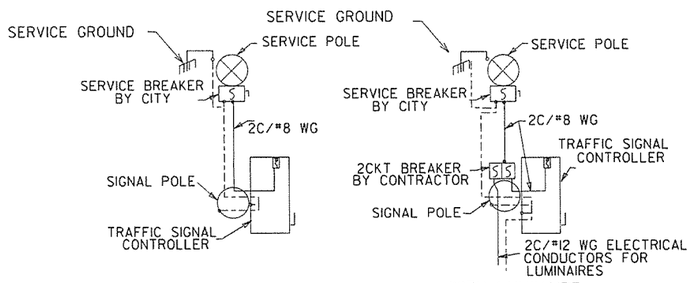

SERVICE DISCONNECT

NOTE: ELECTRICAL GROUND CONDUCTOR IS BONDED TO ALL METAL ENCLOSURES

NOTES:

EACH ITEM "TRAFFIC SIGNAL HEAD (4 SEC., 1-WAY)" SHALL INCLUDE A SPECIAL SIGN AS SHOWN, ATTACHED TO THE MAST ARM OR SPAN ASSEMBLY 12" TO THE RIGHT OF THE SIGNAL HEAD UNLESS REMOVED WITHIN SIGNAL PLAN NOTES.

SIGN BLANK SHALL BE CONSTRUCTED OF ALLUMINUM ALLOY (ASTM DESIGNATION B-209, ALLOY 5052-H38) WITH A THICKNESS OF 0.100 INCH.

SIGN FACE SHALL BE CONSTRUCTED OF HIGH INTENSITY SHEETING (TYPE III) WITH SILKSCREEN LEGEND AND BORDER.

EACH ITEM "TRAFFIC SIGNAL HEAD (3 SEC., 1-WAY)" TO BE USED AS A LEFT TURN INDICATION ONLY SHALL INCLUDE A SIGN (R10-10) AS SHOWN, ATTACHED TO THE MAST ARM OR SPAN ASSEMBLY 12" TO THE RIGHT OF THE SIGNAL HEAD.

SIGNAL OPERATION NOTES:

FLASHING OPERATION - PRIOR TO NORMAL OPERATION, SIGNAL SHALL BE FLASHED FOR A PERIOD OF 3 TO 5 WORKING DAYS. SIGNAL SHALL BE PLACED IN OPERATION ONLY ON A REGULAR WORK DAY, EXCEPT FRIDAY.

THE CONTRACTOR MAY BE REQUIRED TO ALTER THE FLASHING DISPLAY DURING THE TEMPORARY FLASH PERIOD. AT THE TIME THE INTERSECTION IS PLACED IN PERMANENT OPERATION, THE FLASH SEQUENCE SHALL THEN BE RETURNED TO THAT INDICATED ON THE PLAN SHEETS. NO ADDITIONAL COMPENSATION SHALL BE ALLOWED FOR THESE ALTERATIONS IN FLASH SEQUENCE.

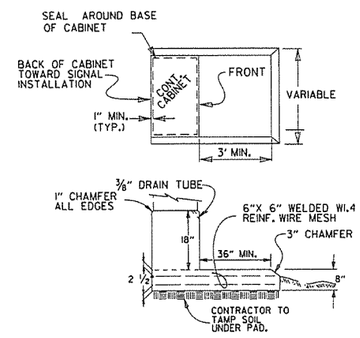

CONCRETE BASE MOUNTED CABINET DETAILS

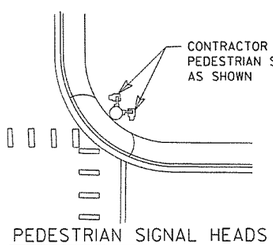

PEDESTRIAN SIGNAL HEADS

UNLESS OTHERWISE DIRECTED BY THE ENGINEER, CABINET ORIENTATION SHALL BE SUCH THAT THE BACK OF THE CABINET IS PARALLEL TO THE STREET AND POSITIONED TO ALLOW VISIBILITY OF THE SIGNAL DISPLAY WHILE OBSERVING THE CONTROLLER FRONT PANEL.

DESIGN SPECIFICATIONS: AASHTO STANDARD SPECIFICATIONS FOR STRUCTURAL SUPPORTS FOR HIGHWAY SIGNS, LUMINAIRES AND TRAFFIC SIGNALS, 4TH EDITION (2001) WITH 2003 AND 2006 INTERIMS.

CONSTRUCTION SPECIFICATIONS: ARKANSAS STATE HIGHWAY AND TRANSPORTATION DEPARTMENT STANDARD SPECIFICATIONS FOR HIGHWAY CONSTRUCTION (CURRENT EDITION) WITH APPLICABLE SUPPLEMENTAL SPECIFICATIONS AND SPECIAL PROVISIONS.

BASE WIND SPEED: 90 MPH

STEEL MEMBERS CONSIDERED MAIN LOAD CARRYING MEMBERS WITH THICKNESS GREATER THAN ½" SHALL MEET THE LONGITUDINAL CHARPY V-NOTCH TEST SPECIFIED IN SUBSECTION 807.05 OF THE STANDARD SPECIFICATIONS.

DATE	REVISION	DATE FILM
2-27-14	REVISED NOTES.	
9-12-13	ISSUED AS STANDARD DRAWING	
7-21-11	REVISED PED SIGN, CABINET GROUNDING	
4-17-08	REVISED TO 2001 AASHTO STANDARDS	
10-12-04	REV. CABINET ORIENT. & SIGNAL OPER.	
5-22-02	REV. TYP. SPAN WIRE ASSEMBLY	
12-27-99	REVISED	
11-18-98	REVISED NOTES	
11-21-95	ISSUED	

ARKANSAS STATE HIGHWAY COMMISSION

SPAN WIRE ASSEMBLY WOOD POLE

STANDARD DRAWING SD-7

(A)

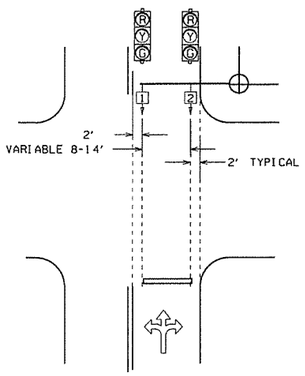

(B)

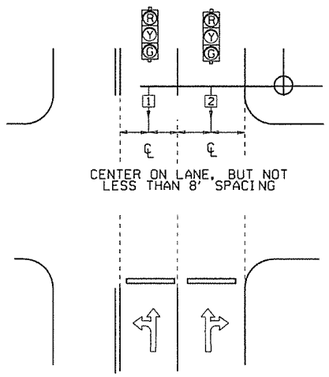

(C)

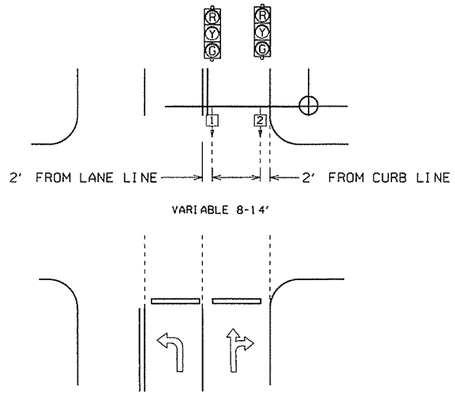

(C2)

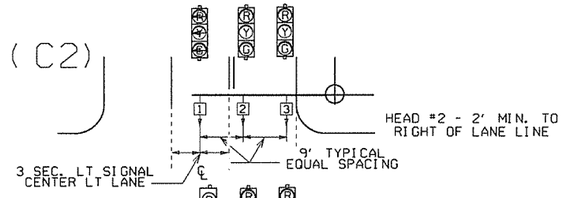

(C1)

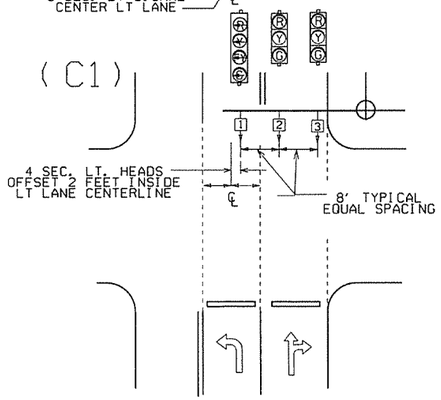

(C3)

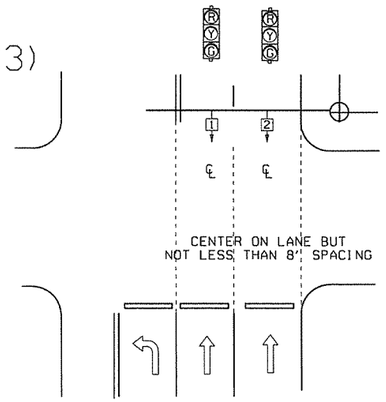

(D2)

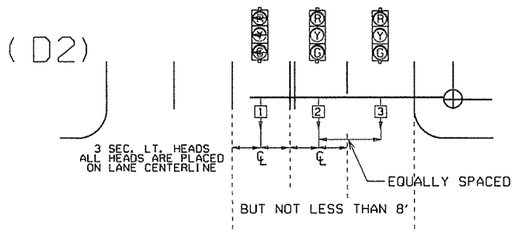

(D1)

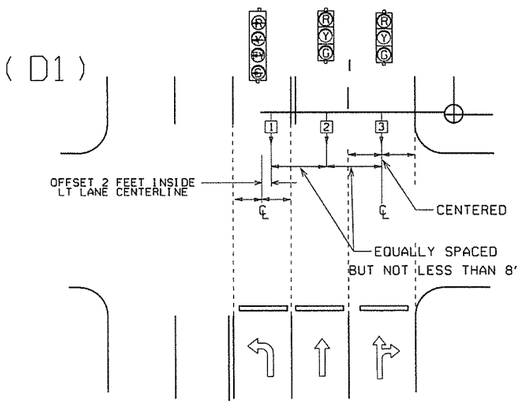

NOTE: WHERE LEFT TURN HEAD (HEAD 1 ON D1 AND D2) IS NOT CALLED FOR ON PLANS, MAST ARM LENGTH MAY STILL BE ALLOWED FOR FUTURE INSTALLATION. HEADS FOR THROUGH MOVEMENTS SHALL STILL BE ALIGNED WITH THROUGH LANES AS SHOWN ON DETAILS.

(E)

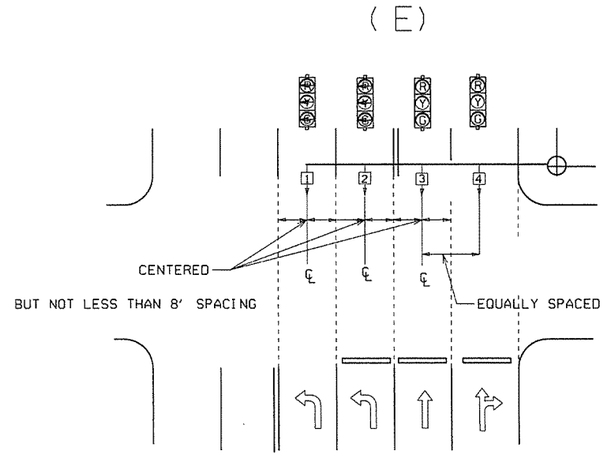

℄ = CENTER OF LANE FROM APPROACH SIDE

GENERAL NOTES:

1. FOUR SECTION 'PROTECTED/PERMISSIVE' LEFT TURN HEADS SHOULD BE PLACED A MINIMUM OF TWO (2') FEET TO THE RIGHT OF THE CENTERLINE OF THE APPROACHING LEFT TURN LANE.

2. THREE SECTION 'PROTECTED' LEFT TURN HEADS SHOULD BE PLACED ON THE CENTERLINE OF THE APPROACHING LEFT TURN LANE.

3. WHEN IT IS NECESSARY TO PLACE POLES OTHER THAN AS SHOWN ON PLAN SHEET(S) RESULTING IN MAST ARM EXTENDING MORE THAN TWO FEET PAST (TO THE LEFT OF) THE CENTERLINE OF THE APPROACHING LEFT TURN LANE, MAST ARM SHALL BE CUT TO APPROPRIATE LENGTH AS DETERMINED BY THE ENGINEER, AND A NEW END CAP PROVIDED. THE CONTRACTOR SHALL BE RESPONSIBLE FOR DETERMINING THIS PRIOR TO INSTALLING THE MAST ARM IF ADDITIONAL COMPENSATION IS REQUIRED.

4. SIGNAL HEAD SPACING SHALL, IN NO CASE, BE LESS THAN EIGHT (8') FEET BETWEEN HEADS ON CENTER, MEASURED HORIZONTALLY PERPENDICULAR TO THE APPROACH.

5. ALL SIGNAL HEADS SHOWN ON THIS DETAIL SHEET SHALL BE LOCATED ACCORDING TO THE DIMENSIONS SHOWN IN RELATION TO THE APPROACH SIDE OF THE INTERSECTION.

6. MAXIMUM MOUNTING HEIGHT OF SIGNAL FACES LOCATED BETWEEN 40 FEET AND 53 FEET FROM STOP BAR SHALL BE IN ACCORDANCE WITH FIGURE 4D-1 OF 2009 MUTCD.

9-12-13	ISSUED AS STANDARD DRAWING	
3-11-10	2009 MUTCD	
12-9-99	ISSUED	
DATE	REVISION	DATE FILM

ARKANSAS STATE HIGHWAY COMMISSION

SIGNAL HEAD PLACEMENT

STANDARD DRAWING SD-8

MAIN BREAKER NOT NEAR CONTROLLER CABINET SECONDARY REQUIRED

WITH POWER ISOLATION ASSEMBLY

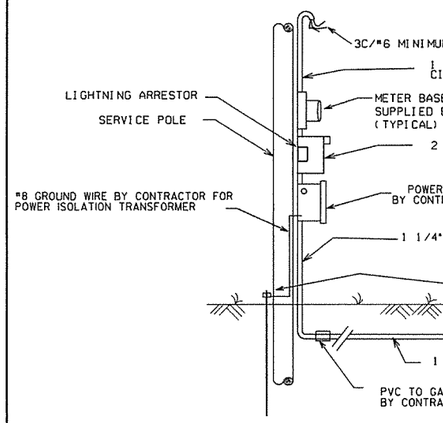

WITHOUT POWER ISOLATION ASSEMBLY

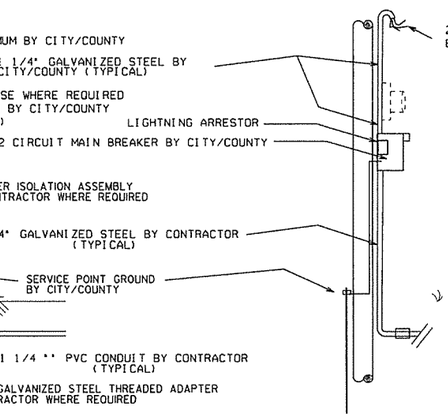

GROUND ROD-A 10' X ⅝" GROUND ROD SHALL BE INSTALLED IN THE PULL BOX FOR EACH POLE AND THE CONTROLLER. PAYMENT FOR THE GROUND ROD AND ½" NMC SHALL BE INCLUDED IN ITEM 701. THE PULL BOX AND CONDUCTOR BOX SHALL BE PAID FOR SEPARATELY.

SECONDARY BREAKER BY CONTRACTOR (SUBSIDIARY)

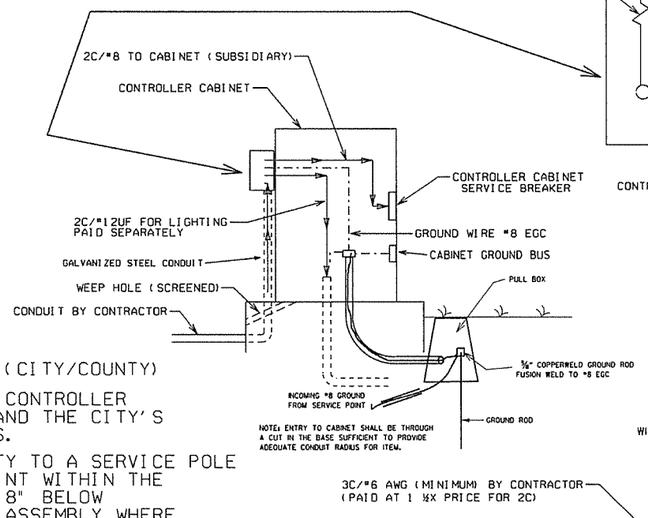

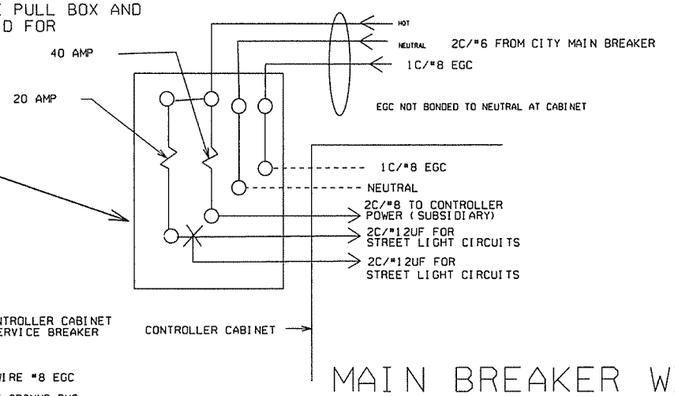

MAIN BREAKER WIRING (TYPICAL)

NOTES TO CONTRACTOR AND AGENCY RESPONSIBLE FOR MAINTENANCE OF THE INTERSECTION (CITY/COUNTY)

ELECTRICAL SERVICE TYPICALLY FALLS INTO TWO CATEGORIES: MAIN BREAKER NEAR CONTROLLER CABINET; AND MAIN BREAKER NOT NEAR CONTROLLER CABINET. THE CONTRACTOR'S AND THE CITY'S OR COUNTY'S RESPONSIBILITY VARIES ACCORDINGLY AS INDICATED ON THESE DETAILS.

1. ALL SITUATIONS: ELECTRICAL SERVICE SHALL BE PROVIDED BY THE CITY/COUNTY TO A SERVICE POLE WITH EXTERNAL RAINTIGHT BREAKER (MAIN BREAKER) AT A MUTUALLY ACCEPTABLE POINT WITHIN THE RIGHT-OF-WAY. SERVICE POINT INCLUDES GALVANIZED STEEL CONDUIT TO A POINT 18" BELOW GROUND LINE, TWO CIRCUIT MAIN BREAKER, LIGHTNING ARRESTOR, POWER ISOLATION ASSEMBLY WHERE REQUIRED, METER LOOP IF REQUIRED BY LOCAL UTILITY, ELECTRICAL CONDUCTORS AND WEATHERHEAD. WHERE STREET LIGHTING IS INCLUDED AS PART OF SIGNAL INSTALLATION, STREET LIGHTING CIRCUIT (2C/#12 AWG UF RATED, TYPICAL) SHALL BE KEPT SEPARATE FROM THE CIRCUIT SERVING TRAFFIC SIGNAL. SERVICE WIRE AND WIRING FROM THE CONTROLLER TO MAIN BREAKER IS PROVIDED BY THE CONTRACTOR AS A PART OF THIS CONTRACT. WIRE AND WIRING FROM MAIN BREAKER, AND CONNECTION TO THE UTILITY IS THE RESPONSIBILITY OF THE CITY/COUNTY.

2. MAIN BREAKER NOT NEAR CONTROLLER CABINET: THE MAIN BREAKER ASSEMBLY, GALVANIZED STEEL CONDUIT, WEATHERHEAD AND WIRE ABOVE MAIN BREAKER AND CONNECTION TO THE UTILITY SHALL BE PROVIDED BY CITY/COUNTY. CONTRACTOR SHALL PROVIDE AS PART OF CONTRACT SECONDARY BREAKER, CONDUIT, WIRE AND WIRING TO THE MAIN BREAKER.

3. MAIN BREAKER NEAR CONTROLLER CABINET: ALL COMPONENTS OF THE SERVICE POINT WITH THE EXCEPTION OF THE WIRE AND WIRING ABOVE THE MAIN BREAKER IS FURNISHED AND INSTALLED BY THE CONTRACTOR. WIRING FROM MAIN BREAKER INCLUDING CONNECTION TO THE UTILITY, IS THE RESPONSIBILITY OF THE CITY/COUNTY. IF METER LOOP IS REQUIRED, METER BASE AND HARDWARE IS PROVIDED BY THE CITY/COUNTY AND INSTALLED BY THE CONTRACTOR.

SERVICE GROUND IS TYPICALLY TIED TO NEUTRAL AT THE MAIN BREAKER. AS SUCH, CONTROLLER GROUND IS NOT TIED TO NEUTRAL AT SECONDARY BREAKER OR IN CONTROLLER CABINET.

WITH POWER ISOLATION ASSEMBLY
4 CIRCUIT MAIN BREAKER

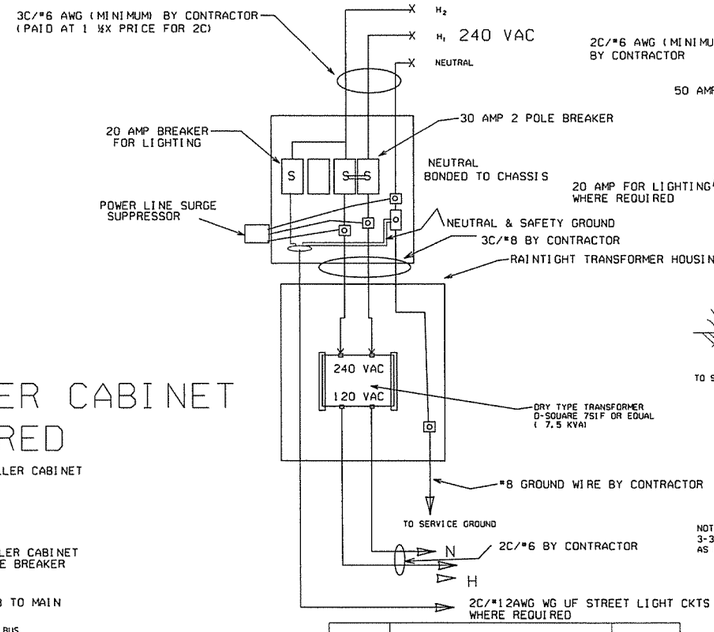

WITHOUT POWER ISOLATION ASSEMBLY
2 CIRCUIT MAIN BREAKER

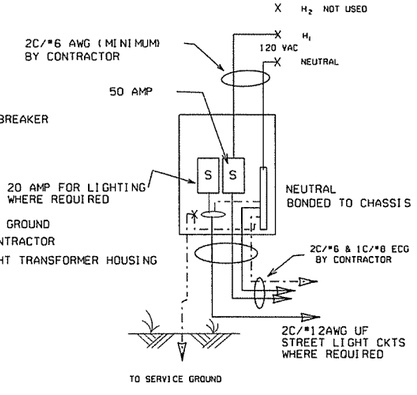

NOTE: ELECTRICAL GROUND CONDUCTOR (EGG) ADDED 3-3-2003. CONSISTING OF A 1C/#8AWG CU GREEN WIRE AS PER NATIONAL ELECT. CODES.

MAIN BREAKER NEAR CONTROLLER CABINET SECONDARY NOT REQUIRED

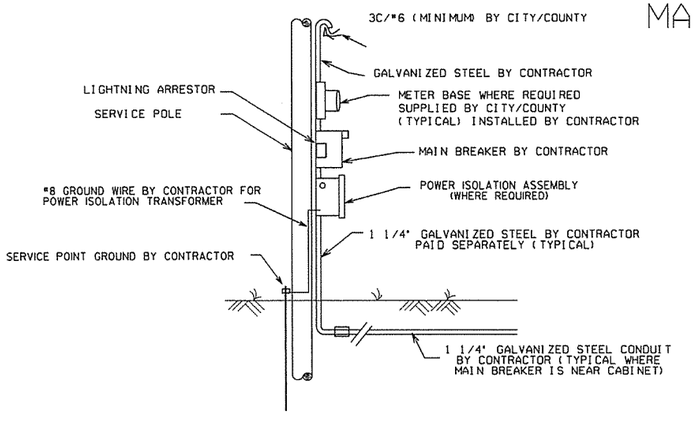

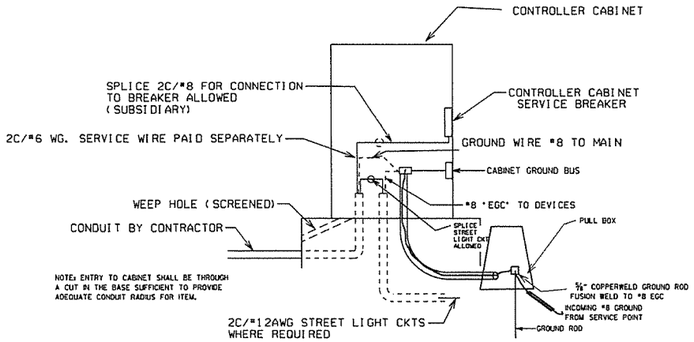

DATE	REVISION	DATE FILM
9-12-13	ISSUED AS STANDARD DRAWING	
4-18-13	ADDED LIGHTNING ARRESTOR	
5-21-09	REVISED GROUNDING	
7-31-08	REVISED GROUNDING	
3-3-03	ADDED EGC NOTE	
9-26-01	REVISED	
12-27-99	REVISED	
7-28-99	REVISED	
2-5-99	ISSUED	

ARKANSAS STATE HIGHWAY COMMISSION

SERVICE POINT

STANDARD DRAWING SD-9

NOTES, PED AND TRAFFIC SIGNAL HEAD SIGNS:
EACH ITEM "TRAFFIC SIGNAL HEAD (4 SEC., 1-WAY)" SHALL INCLUDE A SPECIAL SIGN AS SHOWN, ATTACHED TO THE MAST ARM OR SPAN ASSEMBLY 12" TO THE RIGHT OF THE SIGNAL HEAD UNLESS REMOVED WITHIN THE SIGNAL PLAN NOTES.

EACH ITEM "TRAFFIC SIGNAL HEAD (3 SEC., 1-WAY)" TO BE USED AS A LEFT TURN INDICATION ONLY SHALL INCLUDE A SIGN (R10-10) AS SHOWN, ATTACHED TO THE MAST ARM OR SPAN ASSEMBLY 12" TO THE RIGHT OF THE SIGNAL HEAD.

EACH PEDESTRIAN PUSHBUTTON SHALL HAVE ONE R10-3E SIGN ATTACHED TO THE POLE ABOVE THE BUTTON. ALL SIGN FACES SHALL BE CONSTRUCTED OF HIGH INTENSITY SHEETING (TYPE III) WITH SILKSCREEN LEGEND AND BORDER.

ALL SIGN BLANKS SHALL BE CONSTRUCTED OF ALUMINUM ALLOY (ASTM DESIGNATION B-209. ALLOY 5052-H38) WITH THICKNESS OF 0.100 INCH.

GENERAL NOTES:
1. MAST ARM POLES SHALL BE MOUNTED A MINIMUM OF 4 FT. BEHIND CURB OR SHOULDER.

2. OCTAGONAL POLES AND ARMS MEETING THE REQUIREMENTS OF THE PLANS AND SPECIFICATIONS CAN BE INSTALLED IN LIEU OF ROUND. ALL POLES AND ARMS IN A JOB MUST BE THE SAME SHAPE.

3. MINIMUM STRUCTURAL REQUIREMENTS:
DESIGN SPECIFICATIONS: AASHTO STANDARD SPECIFICATIONS FOR STRUCTURAL SUPPORTS FOR HIGHWAY SIGNS, LUMINAIRES AND TRAFFIC SIGNALS, 4TH EDITION (2001) WITH 2003 AND 2006 INTERIMS.

USE FATIGUE CATEGORY I FOR ALL STRUCTURES ON ROUTES WHERE THE SPEED LIMIT IS 65 MPH AND GREATER AT THE STRUCTURE LOCATION AND ON ROUTES WHERE SPEED LIMIT IS GREATER THAN 45 MPH WITH AN ARM 60' OR LONGER.

USE FATIGUE CATEGORY II FOR STRUCTURES ON ROUTES WITH A SPEED LIMIT LESS THAN 65 MPH AND GREATER THAN 45 MPH WITH ARMS LESS THAN 60' AND ROUTES WITH SPEED LIMITS OF 45 MPH AND LESS WITH AN ARM 60' OR LONGER.

USE FATIGUE CATEGORY III FOR ALL STRUCTURES WHERE SPEED LIMIT IS 45 MPH AND LESS AND ARMS LESS THAN 60'.

CONSTRUCTION SPECIFICATIONS: ARKANSAS STATE HIGHWAY AND TRANSPORTATION DEPARTMENT STANDARD SPECIFICATIONS FOR HIGHWAY CONSTRUCTION (CURRENT EDITION) WITH APPLICABLE SUPPLEMENTAL SPECIFICATIONS AND SPECIAL PROVISIONS.

BASE WIND SPEED: 90 MPH.

STEEL MEMBERS CONSIDERED MAIN LOAD CARRYING MEMBERS WITH A THICKNESS GREATER THAN 1/2" SHALL MEET THE LONGITUDINAL CHARPY V-NOTCH TEST SPECIFIED IN SUBSECTION 807.05 OF THE STANDARD SPECIFICATIONS.

DEAD LOAD: AS A MINIMUM, DESIGN SHALL BE BASED ON THE FIXED ATTACHMENTS SHOWN BELOW OR AS MODIFIED IN THE PLANS.

ALL SIGNAL HEADS TO BE ONE WAY, 12 INCH, AND HAVE 5 IN. BACK PLATES:

HEADS AT END OF ARM - ONE 4 SEC., 85 LB., 16.0 SQ. FT. ONE SIGN MOUNTED 3 FT. FROM SIGNAL = 2' X 0' X 2' = 6'; 20 LB. REMAINING HEADS SPACED A 8 FT. = 3 SEC., 56 LB., TWO 5 SEC):
14.4 SQ. FT. DESIGN TO ACCOMMODATE (INCLUDING
2 HEADS FOR ARMS 10 TO 16 FT.
2 HEADS FOR ARMS 10 TO 16 FT.; INCLUDING LB.
3 HEADS FOR 18 TO 24 FT. ARMS:
4 HEADS FOR OVER 26 FT. ARMS.

STREET NAME SIGN -- 72" X 18", 36 LB., MOUNTED SUCH THAT OUTSIDE EDGE IS NOT GREATER THAN 12 FT. FROM POLE. DEPENDING UPON POSITION OF SIGNAL HEAD ADJACENT TO POLE, SIGN MAY OVERLAP POLE SHAFT
ROADWAY LUMINAIRES (WHERE REQUIRED ON PLAN SHEET) = VARIABLE ARM LENGTH (MAX.), 3.3 SQ. FT., 75 LB. PED SIGNALS -- TWO 2 SEC. 12 INCH MOUNTED 8 FT. FROM BASE OF POLE.
POST MOUNTED 3 SEC. SIGNAL HEAD AT 10 FT. ON SIDE OF POLE.

4. POLE/MAST ARM CAP -- POLE AND MAST ARMS CAPS SHALL BE PROVIDED, FABRICATED OF EITHER STEEL OR CAST ALUMINUM.

5. HAND HOLE -- HAND HOLES SHALL BE 4 X 6 INCHES FOR STANDARD, AND 3 X 5 INCHES FOR PED POLES, MINIMUM PLACED APPROXIMATELY 12 INCHES FROM BASE, AND SHALL BE FIXED WITH A BOLT DOWN COVER. A VACUUM FORMED ABS COVER IS AN ACCEPTABLE ALTERNATE TO STEEL. POLES GREATER THAN 21 FT. IN HEIGHT (FOR ROADWAY LUMINAIRE ATTACHMENT) SHALL INCLUDE A HAND HOLD WITHIN 12 INCHES OF MAST ARM(S) ATTACHMENT(S).

6. POLE/MAST ARM TAPER AND SLOPE - AVERAGE TAPER OF SIGNAL ARMS AND POLE SHALL BE 0.125 TO 0.15 INCHES PER FT.

MAST ARM CENTERLINE ANGLE AT ATTACHMENT POINT WITH POLE SHALL MAINTAIN NOT LESS THAN 0.5 DEGREES OR MORE THAN 4 DEGREES POSITIVE SLOPE WITH A LINE PERPENDICULAR TO THE POLE CENTERLINE. THE ARM SHALL MAINTAIN A POSITIVE AFTER IT IS PLACED UNDER LOAD.

7. NUT COVERS - EACH POLE SHALL INCLUDE A BOLT DOWN NUT COVER FOR EACH ANCHOR BOLT.

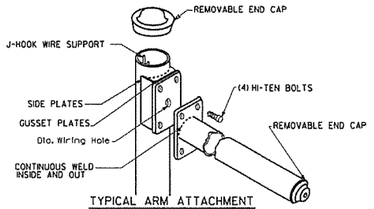

TYPICAL ARM ATTACHMENT

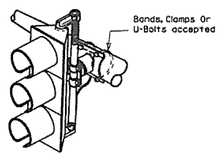

NOTE: THE SIGNAL SHALL BE CONNECTED TO THE MAST ARM BY BRACKETING AS DIRECTED BY THE ENGINEER.

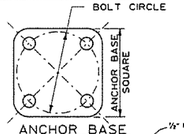

ANCHOR BASE

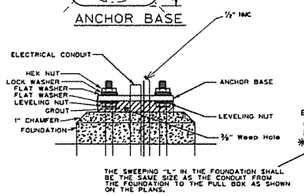

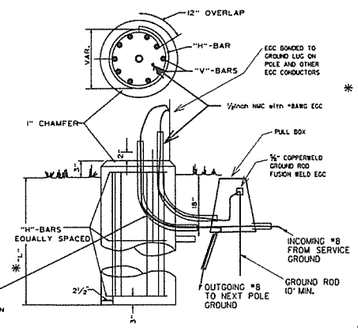

THE GROUND ROD SHALL BE FUSION WELDED TO A 10'-#8 A.W.G. SOLID COPPER GROUND WIRE. ATTACHMENT TO THE PRIMARY GROUND MAY BE BY AN APPROVED CLAMP. THE ROD IS TO BE LOCATED IN THE CONCRETE PULL BOX.

TYPICAL FOUNDATION DETAILS

POLE FOUNDATION MINIMUM DIMENSIONS AND STEEL REINFORCING. ALL REINFORCING STEEL SHALL BE GRADE 40 MIN.

ARM LENGTH	FDN. DIAMETER	DEPTH "L" *	STEEL VERT.	STEEL HORZ.	STEEL O/C.
PED	30"	7'-0"	12-#7 (6'-6")	10-#4	8.44"
2' to 12'	30"	10'-6"	12-#7 (10'-0")	15-#4	8.42"
over 12' to 20'	30"	11'-6"	12-#7 (11'-0")	16-#4	8.66"
over 20' to 35'	36"	12'-6"	13-#8 (12'-0")	17-#4	8.88"
over 35' to 50'	36"	13'-6"	13-#8 (13'-0")	19-#4	8.56"
over 50' to 72'	42"	14'-6"	18-#8 (14'-0")	20-#4	8.74"
Twins to 20'	30"	16'-0"	12-#6 (15'-6")	22-#4	8.76"
Twins over 20' to 44'	36"	16'-0"	13-#8 (15'-6")	22-#4	8.76"
Twins over 44' to 50'	42"	16'-0"	18-#8 (15'-6")	22-#4	8.76"
Twins over 50' to 72'	42"	16'-6"	18-#8 (16'-0")	23-#4	8.64"

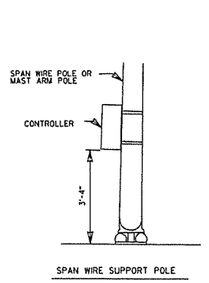

SPAN WIRE SUPPORT POLE AND MAST ARM POLE MOUNTED

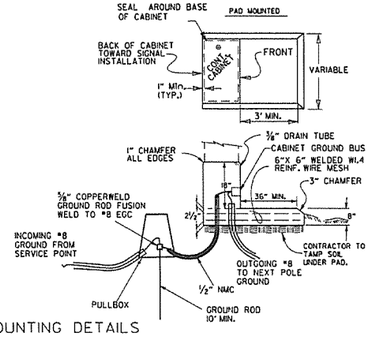

CONTROLLER CABINET MOUNTING DETAILS

UNLESS OTHERWISE DIRECTED BY THE ENGINEER, CABINET ORIENTATION SHALL BE SUCH THAT THE BACK OF THE CABINET IS PARALLEL TO THE STREET AND POSITIONED TO ALLOW VISIBILITY OF THE SIGNAL DISPLAY WHILE OBSERVING THE CONTROLLER FRONT PANEL.

8. GROUND ROD - A 10' X 5/8" GROUND ROD SHALL BE INSTALLED IN THE PULL BOX FOR EACH POLE AND THE CONTROLLER. PAYMENT FOR THE GROUND ROD AND 1/2" NMC SHALL BE INCLUDED IN ITEM 714 FOR SIGNAL POLES AND ITEM 701 FOR THE CONTROLLER. THE PULL BOX AND CONDUCTOR BOX SHALL BE PAID FOR SEPARATELY.

9. POLE BASE/FOUNDATION - ANCHOR BOLTS SHALL INCLUDE AS A MINIMUM, ONE LEVELING NUT, TWO FLAT WASHERS, ONE LOCK WASHER, AND ONE HEX. NUT. PERIMETER OF ANCHOR BASE SHALL BE GROUTED WITH A 1/4" WEEP HOLE. ALL CONCRETE SHALL BE CLASS "S" OR GREATER.

10. CONCRETE - ALL CONCRETE FOR CONTROLLER CABINET AND POLE FOUNDATIONS SHALL BE CLASS "S" OR GREATER.

11. PEDESTRIAN PHASES - PEDESTRIAN MOVEMENTS SHALL BE PUSH BUTTON ACTUATED AND CONCURRENTLY TIMED, UNLESS OTHERWISE INDICATED ON THE PLAN SHEET(S). FURNISHING AND INSTALLING PED PUSH SWITCH SHALL BE CONSIDERED SUBSIDIARY TO THE ITEM PEDESTRIAN SIGNAL HEAD.

SIGNAL OPERATION NOTES:

FLASHING OPERATION - PRIOR TO NORMAL OPERATION, SIGNAL SHALL BE FLASHED FOR A PERIOD OF 3 TO 5 WORK DAYS OR AS DIRECTED BY THE ENGINEER. SIGNAL SHALL BE PLACED IN OPERATION ONLY ON A REGULAR WORK DAY, EXCEPT FRIDAY.

THE CONTRACTOR MAY BE REQUIRED TO ALTER THE FLASHING DISPLAY DURING THE TEMPORARY FLASH PERIOD, AT THE TIME INTERSECTION IS PLACED IN PERMANENT OPERATION, THE FLASH SEQUENCE SHALL THEN BE RETURNED TO THAT INDICATED ON THE PLAN SHEETS. NO ADDITIONAL COMPENSATION SHALL BE ALLOWED FOR THESE ALTERATIONS IN FLASH SEQUENCE.

SPECIAL NOTE: 90 MPH WIND ZONE DESIGN, SEE NOTE 3. MINIMUM STRUCTURAL REQUIREMENTS.

* WHEN THE GROUND ELEVATION AT THE POLE IS LOWER THAN THE ROADWAY ELEVATION, THE LENGTH OF FOUNDATION ABOVE THE GROUND MAY BE INCREASED TO PROVIDE THE REQUIRED SIGNAL HEAD CLEARANCE ABOVE THE ROADWAY. WHEN THE REQUIRED LENGTH OF FOUNDATION ABOVE THE GROUND IS 18" OR LESS, NO INCREASE IN DEPTH "L" WILL BE REQUIRED. WHEN THE REQUIRED LENGTH OF FOUNDATION ABOVE THE GROUND IS 5'-6" OR LESS, INCREASE DEPTH "L" BY 1'-0". FOR LENGTHS GREATER THAN 5'-6", DEPTH "L" SHALL BE ADJUSTED AS DIRECTED BY THE ENGINEER. LONGITUDINAL REINFORCING, AS SHOWN IN THE TABLE, SHALL BE PROVIDED FOR THE LENGTH OF THE EXTENDED SHAFT AND #4 TIES SHALL BE PROVIDED AT A SPACING NOT TO EXCEED 9" ON CENTERS. PAYMENT WILL BE IN ACCORDANCE WITH SECTION 714 OF THE STANDARD SPECIFICATIONS.

** IN LIEU OF DESIGNING THE STRUCTURE TO RESIST PERIODIC GALLOPING, A VIBRATORY MITIGATION DEVICE MAY BE PROVIDED BY THE POLE MANUFACTURER. THE VIBRATORY MITIGATION DEVICE SHALL BE AN ANTI-GALLOPING PANEL CONSISTING OF A 60"X16"X0.125" SIGN BLANK MOUNTED NEAR THE END OF THE MAST ARM NOT TO EXCEED ONE QUARTER OF THE LENGTH OF THE MAST ARM FROM THE END OF THE MAST ARM WITH THE LONG AXIS OF THE PANEL COLLINEAR WITH THE LONG AXIS OF THE MAST ARM. THE PANEL SHOULD BE MOUNTED AT SUCH A HEIGHT AS TO PROVIDE AT LEAST 6" CLEAR FROM THE TOP OF ANY SIGNAL ASSEMBLY OR SIGN PANEL LOCATED ON THE MAST ARM WITHIN THE LENGTH OF THE ANTI-GALLOPING PANEL.

TRUCK-INDUCED GUST LOADS SHALL BE EXCLUDED FOR FATIGUE DESIGN FOR ALL STRUCTURES EXCEPT MAST ARMS MOUNTED OVER FACILITIES WITH POSTED SPEEDS OF 65 MPH OR GREATER AT THE LOCATION OF THE STRUCTURE.

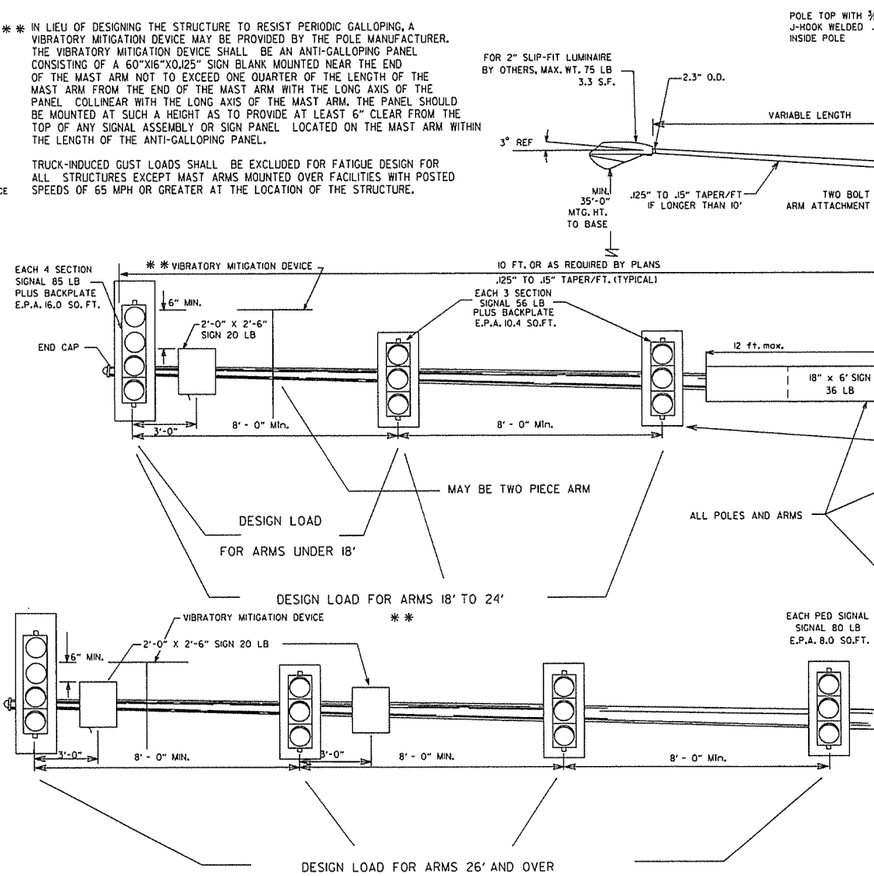

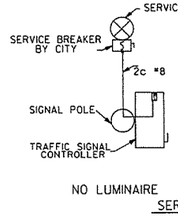

NO LUMINAIRE

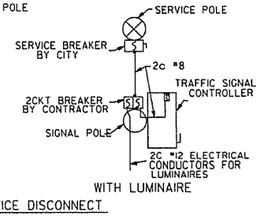

WITH LUMINAIRE

SERVICE DISCONNECT

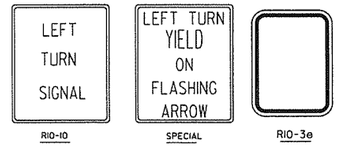

R10-10 SPECIAL R10-3e

DATE	REVISION	DATE FILM
2-27-14	REVISED NOTES.	
9-12-13	ISSUED AS STANDARD DRAWING	
7-21-11	REVISED VMD, SIGNAL HEADS	
5-21-09	REVISED GROUNDING	
1-31-08	REVISED GROUNDING	
4-25-08	ADDED VIBRATORY MITIGATION DEVICE & NOTES	
4-18-08	REVISED AASHTO NOTES	
4-17-08	REVISED TO 2001 AASHTO STANDARDS	
10-12-04	REVISED CABINET ORIENTATION	
6-23-04	REVISED	
5-4-04	REV. NOTE 3/AASHTO REQUIREMENTS	
6-8-01	REV. NOTES & POLE MAST ARM SLOPE	
4-11-01	REVISED POLE TAPERS	
4-25-00	REV. NOTES & SIGNAL HEAD PLACEMENT	
8-22-99	REVISED FOUNDATION DETAILS	
11-17-98	REVISED DETAILS AND NOTES	
8-21-95	ISSUED	

ARKANSAS STATE HIGHWAY COMMISSION

STEEL POLE WITH MAST ARM

STANDARD DRAWING SD-11

SUPERELEVATION TABLE FOR ONE - WAY TRAFFIC

DEGREE OF CURVE	30 MPH e	30 MPH Ls (FT) MINIMUM	30 MPH Ls (FT) DESIRABLE	40 MPH e	40 MPH Ls (FT) MINIMUM	40 MPH Ls (FT) DESIRABLE	50 MPH e	50 MPH Ls (FT) MINIMUM	50 MPH Ls (FT) DESIRABLE	55 MPH e	55 MPH Ls (FT) MINIMUM	55 MPH Ls (FT) DESIRABLE	60 MPH e	60 MPH Ls (FT) MINIMUM	60 MPH Ls (FT) DESIRABLE	65 MPH e	65 MPH Ls (FT) MINIMUM	65 MPH Ls (FT) DESIRABLE	70 MPH e	70 MPH Ls (FT) MINIMUM	70 MPH Ls (FT) DESIRABLE
0° 15′	N. C.			N. C.			N. C.			N. C.			N. C.			N. C.			N. C.		
0° 30′	N. C.			N. C.			N. C.			N. C.			N. C.			N. C.			N. C.		
0° 45′	N. C.			N. C.			R. C.			0.022			0.023			0.025			0.028		
1° 00′	N. C.			N. C.			0.021			0.026			0.030			0.033	250		0.037	275	
1° 15′	N. C.			R. C.			0.026	200		0.032			0.037	250		0.041		350	0.046		350
1° 30′	N. C.			0.021			0.031			0.037	225		0.043			0.048			0.054		
1° 45′	N. C.			0.025	175		0.036			0.043		350	0.049		350	0.055			0.062		
2° 00′	R. C.			0.028			0.040			0.048			0.055			0.062			0.070		
2° 15′	R. C.			0.031			0.045		300	0.053			0.061			0.069	265		0.078	300	
2° 30′	0.021			0.034			0.049			0.058			0.067			0.075	280		0.085	315	400
2° 45′	0.023			0.037			0.053			0.063			0.072			0.081	300		0.091	335	
3° 00′	0.025			0.040		250	0.057			0.067	230		0.077	260		0.087	315		0.096	350	
3° 15′	0.027	150		0.043			0.061			0.072	245		0.082	275		0.090	325	400	0.098	360	450
3° 30′	0.029			0.046			0.065	205		0.076	255		0.086	285		0.095	340		0.100	360	
3° 45′	0.031			0.049			0.069	215		0.080	265		0.090	295	400	0.097	345				
4° 00′	0.033			0.051			0.072	225		0.083	270		0.093	305		0.099	350				
4° 30′	0.037			0.056			0.078	240		0.087	280		0.096	315							
5° 00′	0.040			0.061			0.083	250		0.091	295	400	0.098	320							
5° 30′	0.043			0.066	185		0.088	260		0.094	300										
6° 00′	0.046			0.070	190		0.092	270		0.096	305										
6° 30′	0.050			0.074	200		0.095	280	350	0.100	315										
7° 00′	0.053			0.078	210		0.098	285													
7° 30′	0.056			0.081	215		0.099	290													
8° 00′	0.059			0.084	220	300	0.100	290													
8° 30′	0.061			0.087	225																
9° 00′	0.063			0.089	230																
10° 00′	0.068	160		0.094	235																
11° 00′	0.072	170		0.097	250																
12° 00′	0.076	175		0.099	250																
13° 00′	0.080	180		0.100	250																
14° 00′	0.083	190																			
15° 00′	0.086	195																			
16° 00′	0.089	200																			
17° 00′	0.091	200																			
18° 00′	0.093	205																			
19° 00′	0.095	210																			
20° 00′	0.097	215	300																		
21° 00′	0.098	215																			
22° 00′	0.099	215																			
23° 00′	0.099	215																			
24° 00′	0.100	220																			

D MAX = 24° 45′ | D MAX = 13° 15′ | D MAX = 8° 15′ | D MAX = 6° 30′ | D MAX = 5° 15′ | D MAX = 4° 15′ | D MAX = 3° 30′

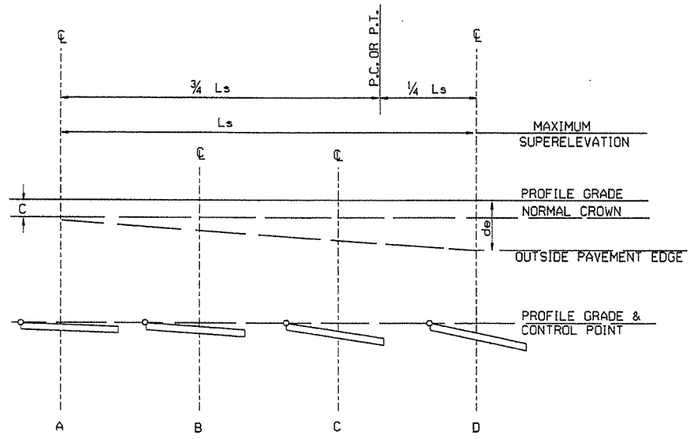

ONE-WAY TRAFFIC
INSIDE LANE

SUPERELEVATION FORMULA = $S = -\frac{L(de-C)}{Ls} - C$

ABBREVIATIONS

NC - NORMAL CROWN
RC - REVERSE CROWN, SUPERELEVATION AT NORMAL CROWN SLOPE
S - SUPERELEVATION
L - DISTANCE FROM BEGINNING OF SUPERELEVATION TRANSITION TO ANY POINT (FT.)
d - WIDTH OF PAVEMENT
e - MAXIMUM RATE OF SUPERELEVATION (FT. PER FT.)
Ls - LENGTH OF SUPERELEVATION TRANSITION (FT.)
C - NORMAL CROWN (FT.)

GENERAL NOTES

1. ON PAVEMENT WITH ONE-WAY TRAFFIC, THE SUPERELEVATION SHALL BE REVOLVED ON THE PROFILE GRADE POINT.
2. SUPERELEVATION VALUES SHOWN ON THE CROSS SECTIONS ARE VALUES (+) OR (-) TO BE ADDED OR SUBTRACTED FROM THE POINT OF CONTROL.
3. LENGTHS FOR Ls MAY BE ROUNDED IN MULTIPLES OF 25 FT. OR 50 FT. TO PERMIT SIMPLER CALCULATIONS.
4. MINIMUM Ls VALUES MAY BE USED FOR RAMPS; DESIRABLE VALUES SHALL APPLY TO MAIN LANES.
5. DIVIDED PAVEMENTS WIDER THAN 4 LANES SHALL HAVE ADDITIONAL TRANSITION LENGTHS AS FOLOWS:

6 LANE DIVIDED---------+20%
8 LANE DIVIDED---------+50%

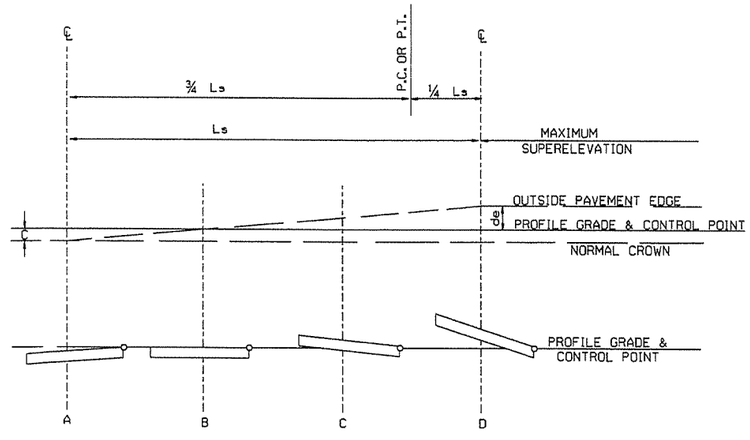

ONE-WAY TRAFFIC
OUTSIDE LANE

SUPERELEVATION FORMULA = $S = +\frac{L(de+C)}{Ls} - C$

DATE	REVISION	DATE FILMED
01-09-87	ISSUED	578-1-15-87

ARKANSAS STATE HIGHWAY COMMISSION

TABLES AND METHOD OF SUPERELEVATION FOR ONE-WAY TRAFFIC

STANDARD DRAWING SE-1

SUPERELEVATION TABLE FOR TWO - WAY TRAFFIC

DEGREE OF CURVE	30 MPH e	30 MPH Ls (FT) MINIMUM	30 MPH Ls (FT) DESIRABLE	40 MPH e	40 MPH Ls (FT) MINIMUM	40 MPH Ls (FT) DESIRABLE	50 MPH e	50 MPH Ls (FT) MINIMUM	50 MPH Ls (FT) DESIRABLE	55 MPH e	55 MPH Ls (FT) MINIMUM	55 MPH Ls (FT) DESIRABLE	60 MPH e	60 MPH Ls (FT) MINIMUM	60 MPH Ls (FT) DESIRABLE	70 MPH e	70 MPH Ls (FT) MINIMUM	70 MPH Ls (FT) DESIRABLE
0° 15′	N.C.			N.C.			N.C.			N.C.			N.C.			N.C.		
0° 30′	N.C.			N.C.			N.C.			N.C.			N.C.			N.C.		
0° 45′	N.C.			N.C.			R.C.			0.022			0.023			0.028		
1° 00′	N.C.			N.C.			0.021			0.026			0.030			0.037	275	300
1° 15′	N.C.			R.C.			0.026			0.032			0.037			0.046		
1° 30′	N.C.			0.021			0.031	200		0.037	225		0.043	250		0.054		
1° 45′	N.C.			0.025	175		0.036			0.043		300	0.049		300	0.062		
2° 00′	R.C.			0.028			0.040			0.048			0.055			0.070		
2° 15′	R.C.			0.031			0.045		250	0.053			0.061			0.078	300	350
2° 30′	0.021			0.034			0.049			0.058			0.067			0.085	315	
2° 45′	0.023			0.037		200	0.053			0.063			0.072			0.091	335	
3° 00′	0.025			0.040			0.057			0.067	230		0.077	260		0.096	350	
3° 15′	0.027	150		0.043			0.061			0.072	245		0.082	275		0.098	360	400
3° 30′	0.029			0.046			0.065	205		0.076	255		0.086	285		0.100	360	
3° 45′	0.031		200	0.049			0.069	215		0.080	265		0.090	295	350			
4° 00′	0.033			0.051			0.072	225		0.083	270		0.093	305				
4° 30′	0.037			0.056			0.078	240		0.087	280		0.096	315				
5° 00′	0.040			0.061			0.083	250		0.091	295	350	0.098	320				
5° 30′	0.043			0.066	185		0.088	260		0.094	300							
6° 00′	0.046			0.070	190		0.092	270	300	0.096	305							
6° 30′	0.050			0.074	200		0.095	280		0.100	315							
7° 00′	0.053			0.078	210		0.098	285										
7° 30′	0.056			0.081	215		0.099	290										
8° 00′	0.058			0.084	220	250	0.100	290										
8° 30′	0.061			0.087	225													
9° 00′	0.063			0.089	230													
10° 00′	0.068	160		0.094	235													
11° 00′	0.072	170		0.097	250													
12° 00′	0.076	175		0.099	250													
13° 00′	0.080	180		0.100	250													
14° 00′	0.083	190																
15° 00′	0.086	195																
16° 00′	0.089	200																
17° 00′	0.091	200																
18° 00′	0.093	205																
19° 00′	0.095	210																
20° 00′	0.097	215	250															
21° 00′	0.098	215																
22° 00′	0.099	215																
23° 00′	0.099	215																
24° 00′	0.100	220																

D MAX = 24° 45′ | D MAX = 13° 15′ | D MAX = 8° 15′ | D MAX = 6° 30′ | D MAX = 5° 15′ | D MAX = 3° 30′

ABBREVIATIONS

NC - NORMAL CROWN
RC - REVERSE CROWN, SUPERELEVATION AT NORMAL CROWN SLOPE
e - RATE OF SUPERELEVATION (FT. PER FT.)
Ls - LENGTH OF SUPERELEVATION TRANSITION (FT.)
L - DISTANCE FROM BEGINNING OF SUPERELEVATION TRANSITION TO ANY POINT (FT.)
d - WIDTH OF PAVEMENT (FT.) OR WIDTH OF SUBGRADE (FT.)
C - NORMAL CROWN (FT.)

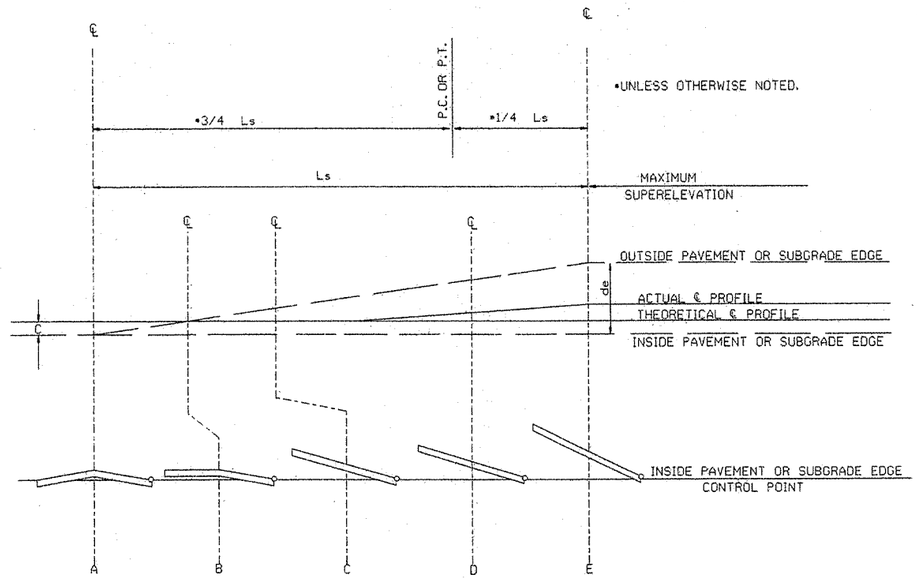

•UNLESS OTHERWISE NOTED.

STANDARD METHOD WHEN SUPERELEVATION REVOLVES AROUND INNER SUBGRADE POINT OR INNER PAVEMENT EDGE

NOTE: MAINTAIN NORMAL CROWN ON INSIDE UNTIL SUPERELEVATION EXCEEDS 2C.

GENERAL NOTES

1. ON PAVEMENT WITH TWO-WAY TRAFFIC, THE SUPERELEVATION SHALL BE REVOLVED ON THE INSIDE PAVEMENT EDGE UNLESS OTHERWISE NOTED ON THE PLANS
2. SUPERELEVATION VALUES SHOWN ON THE CROSS SECTIONS ARE VALUES (+) OR (-) TO BE ADDED TO OR SUBTRACTED FROM THE POINT OF CONTROL.
3. LENGTHS FOR L MAY BE ROUNDED IN MULTIPLES OF 25 FT. OR 50 FT. TO PERMIT SIMPLER CALCULATIONS.
4. PAVEMENTS WIDER THAN 2 LANES SHALL HAVE ADDITIONAL TRANSITION LENGTHS AS FOLLOWS:

   3 LANE UNDIVIDED - - - - - +20%
   4 LANE UNDIVIDED - - - - - +50%
   5 LANE UNDIVIDED - - - - - +80%
   6 LANE UNDIVIDED - - - - - +100%

NOTE: MAINTAIN NORMAL CROWN ON INSIDE UNTIL SUPERELEVATION EXCEEDS 2C.

RATE OF SUPERELEVATION SHALL BE COMPUTED ON STRAIGHT LINE METHOD USING APPLICABLE Ls.

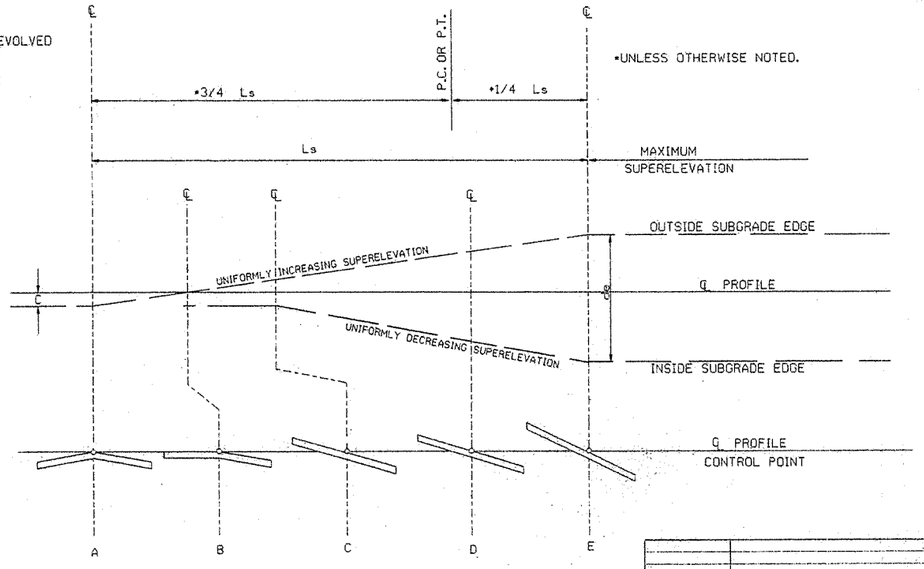

•UNLESS OTHERWISE NOTED.

STANDARD METHOD WHEN SUPERELEVATION REVOLVES AROUND CENTER LINE

SUPERELEVATION FORMULA = $\frac{Lde}{Ls}$

DATE	REVISION	DATE FILMED
10-18-96	ADDED FORMULA	10-18-96
01-09-87	ISSUED	534-1-9-87

ARKANSAS STATE HIGHWAY COMMISSION

TABLES AND METHOD OF SUPERELEVATION FOR TWO-WAY TRAFFIC

STANDARD DRAWING SE-2

FILE STDSE2.DGN

R1-1
30"X30"

W1-3
30"X30"
(LT. OR RT.)

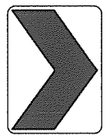

W1-8
18"X24"

W2-5
30"X30"

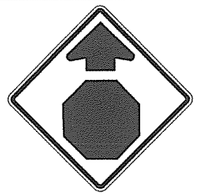

W3-1
36"X36"

W5-1
36"X36"

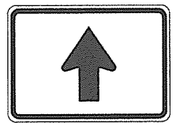

M6-3
21"X15"

R1-2
36"X36"X36"

W1-4
30"X30"
(LT. or RT.)

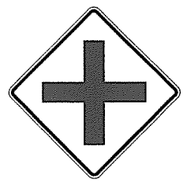

W2-1
30"X30"

S1-1
36"X36"

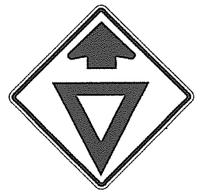

W3-2
36"X36"

County
Route Marker
M1-6
24"X24"

NOTE: REFLECTORIZED YELLOW LEGEND (COUNTY NAME, ROUTE LETTER & NUMBER) & BORDER ON A BLUE BACKGROUND.

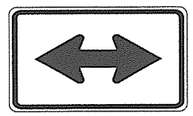

M6-4
21"X15"

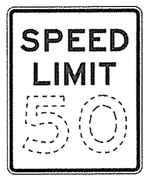

R2-1
24"X30"

W1-5
30"X30"
(LT. or RT.)

W2-2
30"X30"

W5-2
36"X36"

W8-3
36"X36"

R1-3P
18"X6"

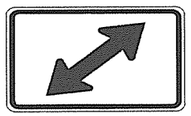

M6-5
21"X15"

W1-1
30"X30"
(LT. or RT.)

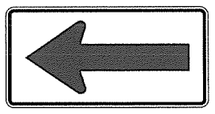

W1-6
48"X24"

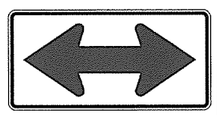

W1-7
48"X24"

W2-3
30"X30"
(LT. or RT.)

W5-3
36"X36"

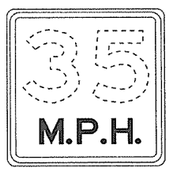

W13-1P
18"X18"

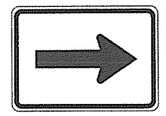

M6-1
21"X15"

NOTE: ALL M6 SIGNS TO BE MADE WITH REFLECTORIZED YELLOW ARROW & BORDER WITH BLUE BACKGROUND.

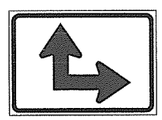

M6-6
21"X15"

W1-2
30"X30"
(LT. or RT.)

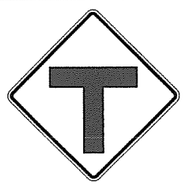

W2-4
30"X30"

W10-1
36" DIAMETER

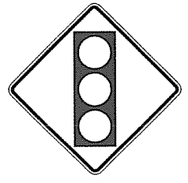

W3-3
36"X36"

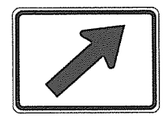

M6-2
21"X15"

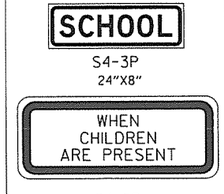

S4-3P
24"X8"

S4-2P
24"X10"

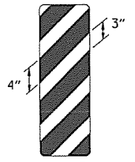

OM-3
12"X36"
(LT. or RT.)

MINIMUM DIMENSIONS SHOWN

SUPPORT SECTION

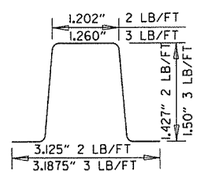

(U-CHANNEL)
STANDARD SUPPORT
ASSEMBLIES

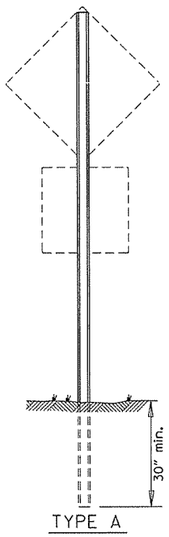

TYPE A

NOTE: LENGTH OF SIGN POSTS SHALL BE DETERMINED SO AS TO PROVIDE FOR MINIMUM VERTICAL CLEARANCES AS CALLED FOR IN THE SPECIFICATIONS PLUS A MINIMUM VERTICAL PENETRATION OF 30" IN THE SOIL.

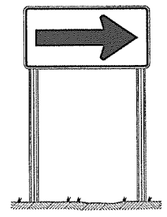

TYPE B

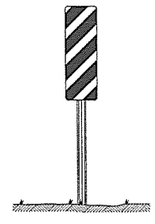

TYPE C

MINIMUM WEIGHT

TYPE A & B = 3 LBS./FT.
TYPE C = 2 LBS./FT.

STANDARD HIGHWAY SIGNS

DATE	REVISION	DATE FILMED
9-12-13	DELETED JOB NO. BLOCK; REVISED RI-3 TO RI-3P	
4-17-08	REVISED SIGN DESIGNATION - W3-1& W3-2	
4-10-03	REVISED W5-2, W8-3, OM-3; ADDED WI-8	
1-5-81	REDRAWN	960-1-15-81
9-15-78	ADDED W14-3	877-9-15-78
9-2-76	POST WT.	623-9-3-76
5-3-76	STEEL POST WT. FROM 2*-3*; ADDED S4-2 & S4-3	504-5-3-76
8-12-74	REV. HT. TYPE "C" ASSEMBLY	500-8-21-74
12-21-72	ADDED M6-2,3,4,5,6	500-12-21-72
12-1-72	ISSUED	562-12-1-72

SUPPORT ASSEMBLIES

ARKANSAS STATE HIGHWAY COMMISSION

STANDARD HIGHWAY SIGNS
AND SUPPORT ASSEMBLIES
STANDARD DRAWING SHS-1

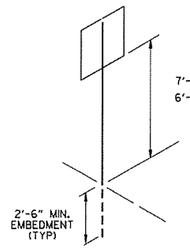

U-1

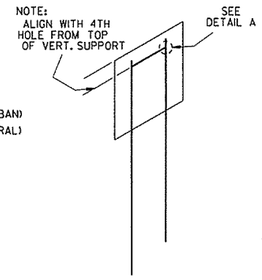

U-2

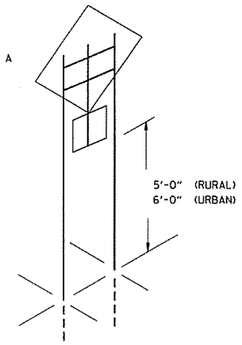

U-2 (A)

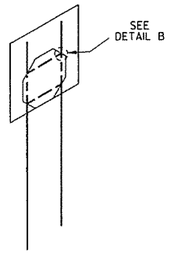

U-2 (B)

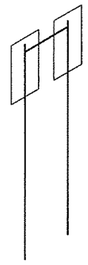

U-2 (I)

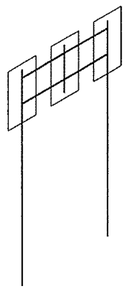

U-2 (2)

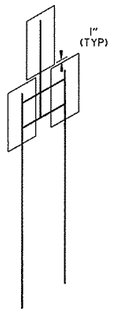

U-2 (3)

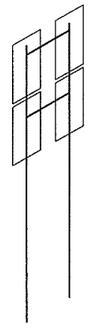

U-2 (4)

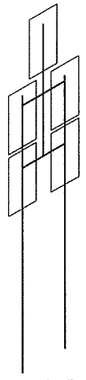

U-2 (5)

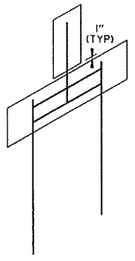

U-2 (6)

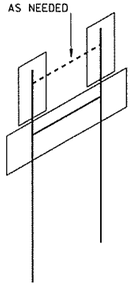

U-2 (7)

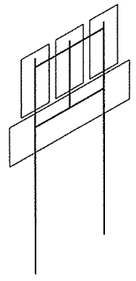

U-2 (8)

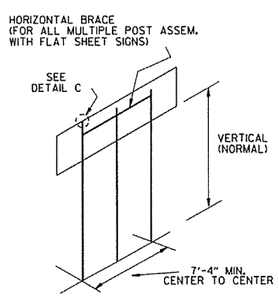

U-3

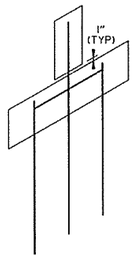

U-3 (I)

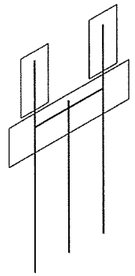

U-3 (2)

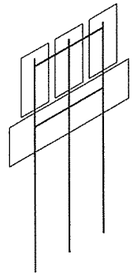

U-3 (3)

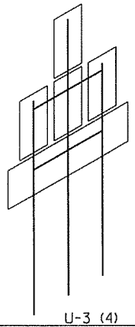

U-3 (4)

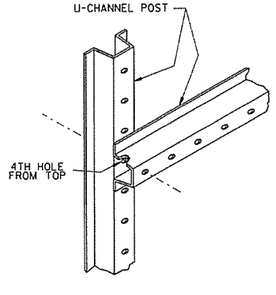

DETAIL A

SHOWING HORIZONTAL BRACE

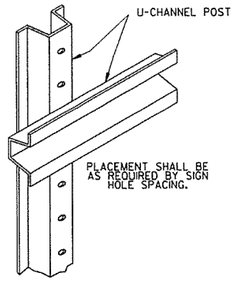

DETAIL B

SHOWING BACK-TO-BACK INSTALLATION

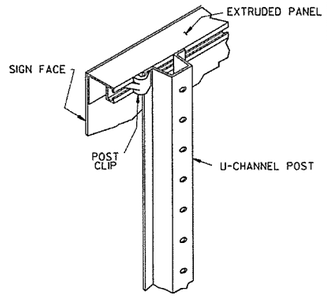

DETAIL C

SHOWING GUIDE SIGN MOUNTING WITH EXTRUDED PANELS

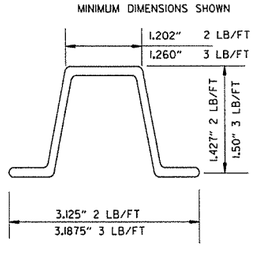

DETAIL C

U-CHANNEL POST

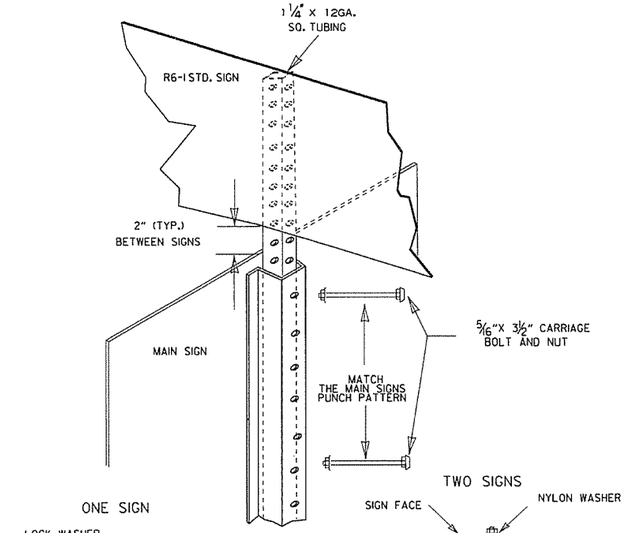

DETAIL E

R6-1 EXTENSION FOR U-CHANNEL POST

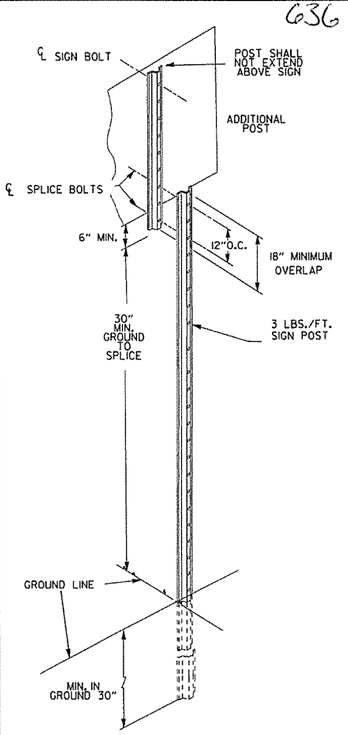

DETAIL F

DETAIL OF SPLICES

NOTES:

SIGNS AT LEAST 8' IN LENGTH MAY BE INSTALLED ON THREE 3 LB. POST. IN NO CASE SHALL THERE BE MORE THAN TWO 3 LB. POSTS WITHIN A 7' PATH.

SPLICES NECESSARY TO ATTAIN PROPER MOUNTING HEIGHT SHALL BE AS SHOWN IN DETAIL (F).

NORMAL INSTALLATIONS WILL REQUIRE 5/16 " DIA. CARRIAGE BOLTS TO MOUNT SIGNS TO POST AND TO ASSEMBLE THE VARIOUS POST SUPPORTS.

ALL SIGN POSTS SHALL BE PLUMB.

THE POST FOR "TYPE U" SUPPORTS SHALL BE HOT DIP GALVANIZED.

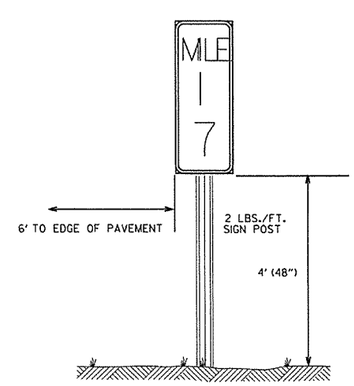

TYPICAL MILE MARKER INSTALLATION

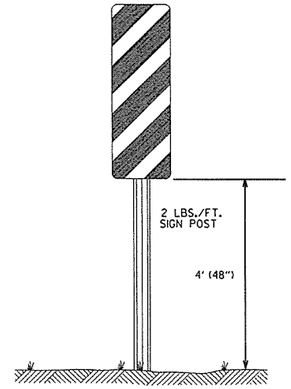

TYPICAL OM-3 INSTALLATION AT EDGE OF OBSTRUCTION

DATE	REVISION	FILMED
9-12-13	REVISED U-2(3), U-2(6), U-3(1), DETAIL D; ADDED DETAILS E & F; ADDED TYPICAL MARKERS	
10-9-03	REMOVED ROUND POST & REVISED SPACING	
10-12-95	MOVED UPPER SPLICE	
6-8-95	REVISED SPLICE DETAIL	6-8-95
2-2-95	REDRAWN	2-2-95

ARKANSAS STATE HIGHWAY COMMISSION

U-CHANNEL POST ASSEMBLIES

STANDARD DRAWING SHS-2

POST SIZE	BASE CONNECTION DATA											FUSE PLATE DATA									WT. OF EACH FUSE PLATE LBS.
	BOLT SIZE	BOLT TORQUE (INCH/LBS)	A	B	C	D	E	t_1	t_2	W	R	F	G		J	K	M	d_1	d_2	t_3	BOLT SIZE	
W 6X9	$\frac{5}{8}$" x 2¾"	450"-680"	5'	2"	1¼"	2¾"	1⅛"	¾"	½"	¼"	11/32"	4¼"	2"		4"	2¼"	1"	9/16"	¾"	¼"	½" x 1½"	1.01
W 6X12												5"	2½"		6"	3½"	1½"	11/16"	1¼"	⅜"	⅝" x 2¼"	2.51
W 6X15												5"	2½"		5¼"	2¾"	1¼"	13/16"	1¼"	⅜"	¾" x 2¼"	2.26
W 8X18												5½"	2½"		5¼"	2¾"	1¼"	13/16"	1"	½"	¾" x 2¼"	3.35
W 8X21	¾" x 3½"	750"-1050"	6"	2¼"	1⅜"	3½"	1¼"	1"	¾"	5/16"	13/32"	6"	3"		5¾"	2¾"	1⅜"	13/16"	1⅛"	½"	¾" x 2¼"	4.03
W 10X22																						
W 10X26												6"	3"		6½"	3½"	1⅝"	13/16"	1⅜"	½"	¾" x 2¼"	4.47
W 12X26																						

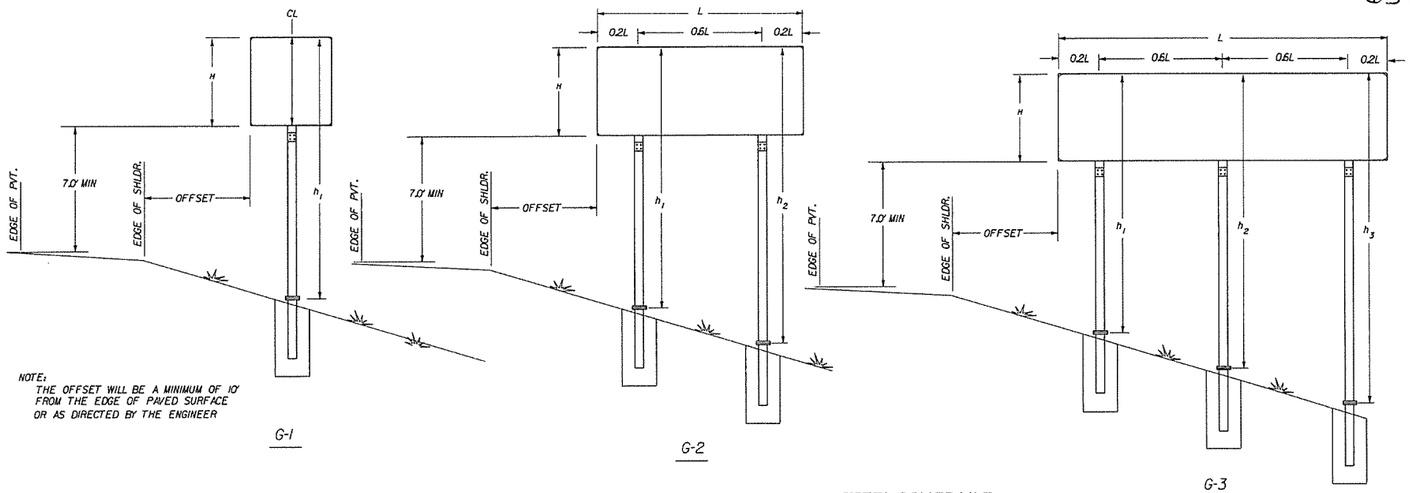

NOTE:
THE OFFSET WILL BE A MINIMUM OF 10' FROM THE EDGE OF PAVED SURFACE OR AS DIRECTED BY THE ENGINEER

G-1 G-2 G-3

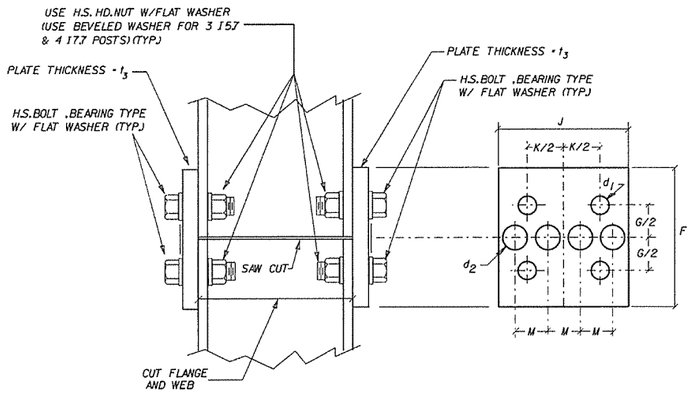

NOTE: USE H.S. HEX HEAD BOLTS, HEX HEAD NUTS AND BEVEL OR FLAT WASHERS (WHERE REQ.) UNDER NUTS. ALL HOLES SHALL BE DRILLED. ALL PLATE CUTS SHALL PREFERABLY BE SAW CUTS. HOWEVER FLAME CUTTING WILL BE PERMITTED PROVIDED ALL EDGES ARE GROUND. METAL PROJECTING BEYOND THE PLANE OF THE PLATE FACE WILL NOT BE PERMITTED. STEEL FUSE PLATES SHALL CONFORM TO THE REQUIREMENTS OF ASTM-A36, ASTM-A441, ASTM-572 GRADE 50, OR ASTM-A588 MAY BE SUBSTITUTED FOR A36 AT THE OPTION OF THE FABRICATOR. STEEL USED SHALL HAVE AN ULTIMATE TENSILE STRENGTH NOT TO EXCEED 80 KSI.

NOTE: SECTIONS SHOWN ARE FOR INSTALLATION ON THE RIGHT SHOULDER AND IN THE GORE. BOLT HOLES IN BASE PLATE ARE SLOTTED AND BEVELED AS SHOWN. USE H.S. BOLTS WITH HEX HD., HEX NUT AND THREE FLAT WASHERS FOR EACH BOLT. SEE TABLE FOR BOLT DIA. AND TORQUE.
NOTE: ASSEMBLE SIGN POST TO STUB POST USING THE BOLTS SPEC. IN THE TABLE AND AS SHOWN IN THE ELEVATION DETAILS. THERE SHALL BE THREE FLAT WASHERS ON EACH BOLT LOCATED AS SHOWN IN THE ELEVATIONS. USE A SHIM TO PLUMB THE SIGN POST, THEN TIGHTEN THE BOLTS USING A 12" TO 15" WRENCH UNTIL THE WASHERS AND SHIMS ARE SEATED AND THE BOLT THREADS ARE CLEAR, THEN LOOSEN EACH BOLT IN TURN AND RETIGHTEN IN A SYSTEMATIC ORDER TO THE PRESCRIBED TORQUE (SEE TABLE), THE BURR THREADS ADJACENT TO THE BACK SIDE OF THE NUT TO PREVENT LOOSENING.

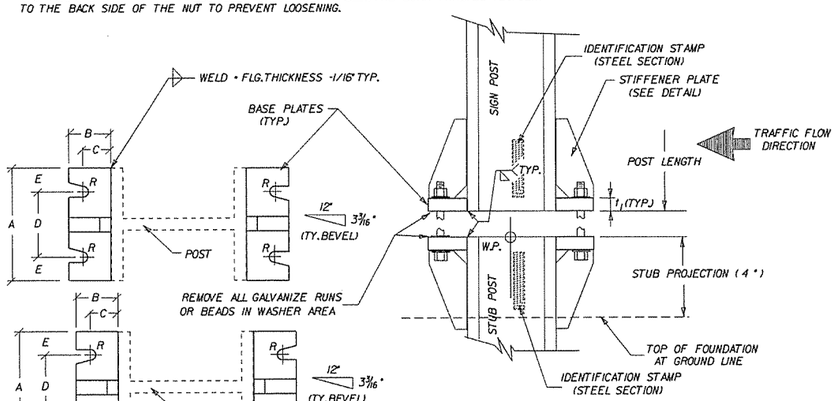

NOTE: BOLT HOLES, USED IN THE MOUNTING OF STANDARD SIGNS SHALL BE LOCATED IN THE FLANGE ADJACENT TO THE NEAR EDGE OF PAVEMENT FOR SINGLE POST ASSEMBLIES AND IN THE OUTSIDE FLANGES FOR MULTIPLE POST ASSEMBLIES.

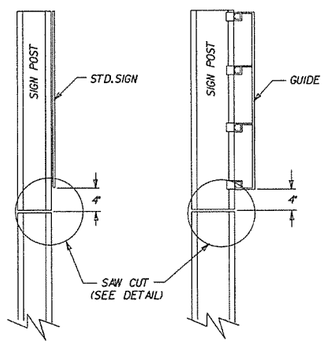

NOTE: POST SHALL BE SAW CUT AFTER GALVANIZING AND THE CUT SURFACE TREATED, AFTER PLATE IS INSTALLED AND ALL BOLTS FULLY TIGHTENED, WITH AN APPROVED ZINC SOLDER MEETING THE FEDERAL SPEC. O-G-93 (STICK ONLY).

STANDARD SIGNS GUIDE SIGNS

FUSE PLATE DETAILS

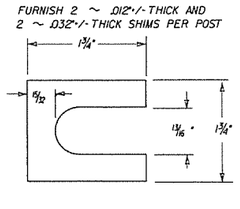

SHIM DETAIL

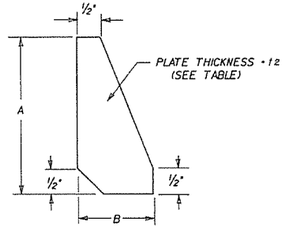

STIFFENER PLATE DETAIL

STEEL SCHEDULE

FOOTING DIAMETER	#3 TIE BARS		
	DIAMETER	BAR LENGTH	POUNDS
INCHES	INCHES	FEET	
18	12	4.39	1.65
24	18	5.96	2.24
30	24	7.53	2.83
36	30	9.1	3.42

FOOTINIG DEPTH	#6 STRAIGHT BARS		
	BAR LENGTH	NUMBER REQ'D.	POUNDS
FEET	FEET		
2.50	2.00	8	24.03
3.00	2.50	8	30.04
3.50	3.00	8	36.05
4.00	3.50	8	42.06
4.50	4.00	8	48.06
5.00	4.50	8	54.07
5.50	5.00	8	60.08
6.00	5.50	8	66.09
6.50	6.00	8	72.10
7.00	6.50	8	78.10
7.50	7.00	8	84.11
8.00	7.50	8	90.12

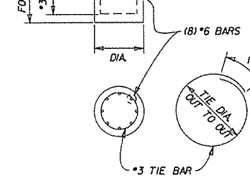

FOOTING QUANTITIES

FOOTINIG DEPTH	NUMBER TIE BARS REQ'D	18" DIAMETER		24" DIAMETER		30" DIAMETER		36" DIAMETER	
		CLASS S CONCRETE	REINF STEEL	CLASS S CONCRETE	REINF STEEL	CLASS S CONCRETE	REINF STEEL	CLASS S CONCRETE	REINF STEEL
FEET		CU. YD.	(GRADE 60)	CU. YD.	(GRADE 60)	CU. YD.	(GRADE 60)	CU. YD.	(GRADE 60)
2.50	4	0.16	31						
3.00	4	0.20	37						
3.50	5	0.23	44						
4.00	6	0.26	52	0.47	56				
4.50	6	0.29	58	0.52	62				
5.00	7	0.33	66	0.58	70	0.91	74		
5.50	8			0.64	78	1.00	83		
6.00	8			0.70	84	1.09	89	1.57	93
6.50	9					1.18	98	1.70	103
7.00	10					1.27	106	1.83	112
7.50	10							1.96	118
8.00	11							2.09	128

GENERAL NOTES

TIGHTEN THE HIGH STRENGTH BOLTS IN THE BASE CONNECTION ONLY TO THE TORQUE SHOWN. DO NOT OVERTIGHTEN.

BASE PLATES AND STIFFENER PLATES SHALL BE OF THE SAME MATERIAL AS THE PRIMARY SUPPORT POSTS WHICH THEY ARE WELDED.

REFER TO THE PLANS FOR FOOTING DIMENSIONS.

EACH STUB POST AND SIGN POST SHALL HAVE A PERMANENT IDENTIFYING STAMP WHICH SPECIFIES THE STEEL SECTION USED. IF THE CONTRACTOR ELECTS TO SHIP THE STUB POST SEPARATE FROM THE SIGN POST A MATCH MARK SYSTEM WILL BE REQUIRED.

SIGN POST AND STUB POST

DATE	REVISION	FILMED
9-12-13	ISSUED	

ARKANSAS STATE HIGHWAY COMMISSION

DETAIL OF BREAKAWAY SIGN SUPPORTS FOR GUIDE SIGNS

STANDARD DRAWING SHS-3

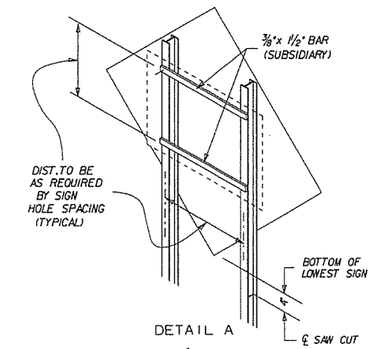

DETAIL A

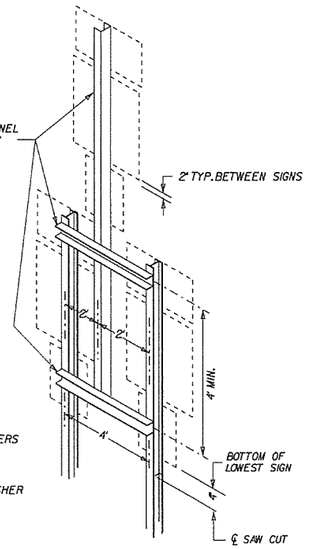

DETAIL D

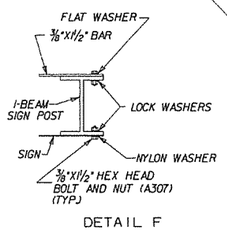

DETAIL F

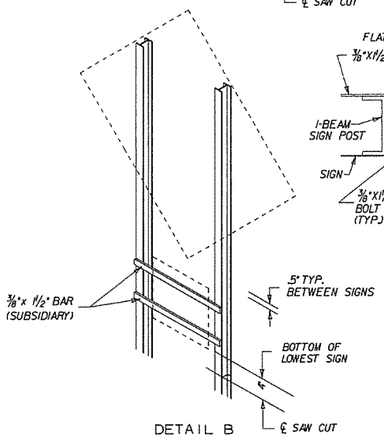

DETAIL B

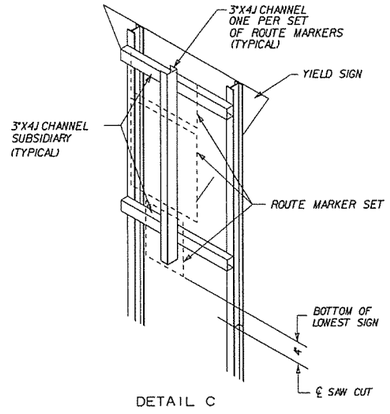

DETAIL C

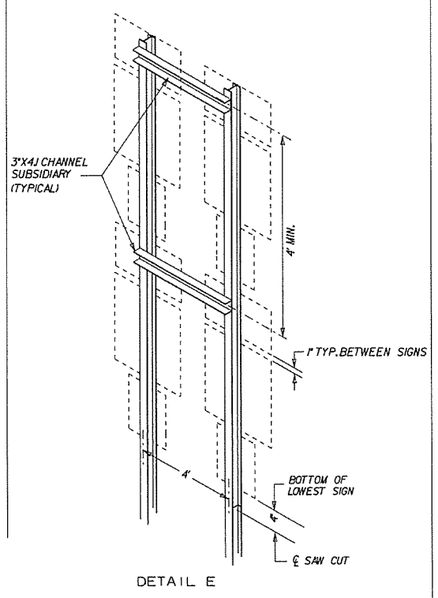

DETAIL E

NOTE

ALL ADDITIONAL MOUNTING HARDWARE, BOLTS, NUTS, CHANNELS AND BAR STRAPS REQUIRED TO MOUNT SECONDARY SIGNS WILL BE CONSIDERED TO BE SUPPLEMENTAL TO THE MAIN SIGN SUPPORT SPECIFIED. PAYMENT WILL BE CONSIDERED SUBSIDIARY TO THE MAIN SUPPORT.

THE GALVANIZED STEEL CHANNEL AND BAR SUPPORTS MAY BE ASTM A-36.

REFER TO THE P.C. RUTLEDGE FORMULA ON PAGE 58 OF THE AASHTO PUBLICATION "STANDARD SPECIFICATIONS FOR STRUCTURAL SUPPORTS FOR HIGHWAY SIGNS, LUMINAIRES, AND TRAFFIC SIGNALS.

ALL BOLT HOLES SHALL BE 1/8" DIA. UNLESS OTHERWISE SHOWN.

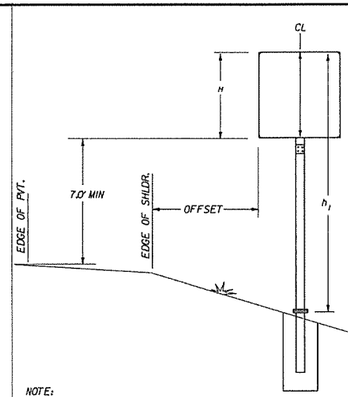

NOTE:
THE OFFSET WILL BE A MINIMUM OF 10' FROM THE EDGE OF PAVED SURFACE OR AS DIRECTED BY THE ENGINEER.

G-1

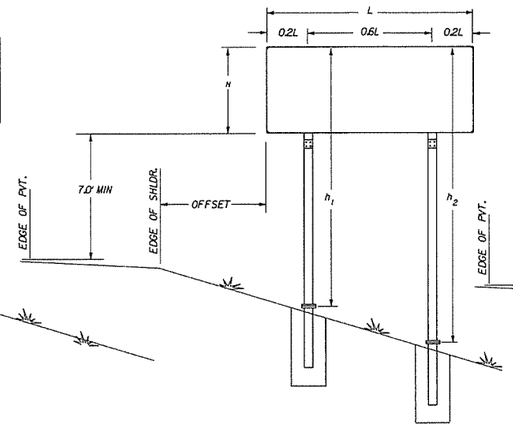

G-2

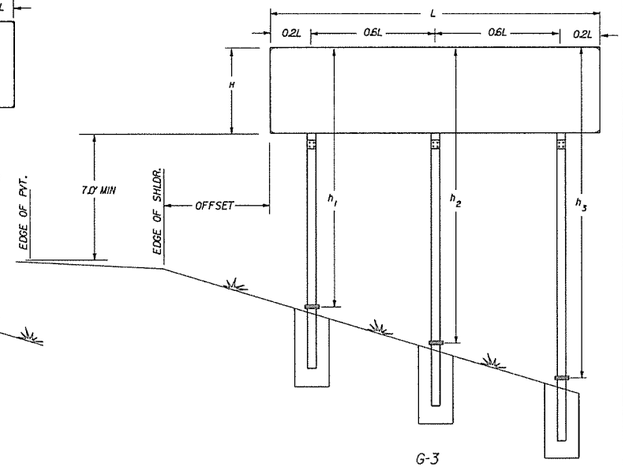

G-3

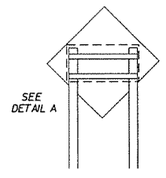

G2-1

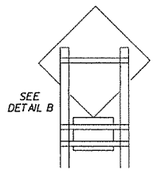

G2-2

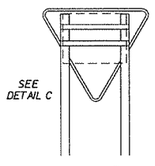

G2-3

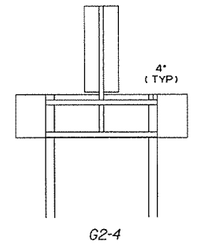

G2-4

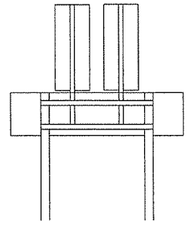

G2-5

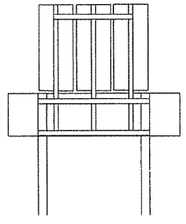

G2-6

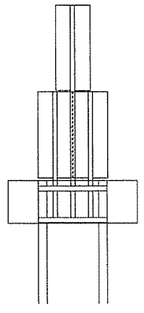

G2-7

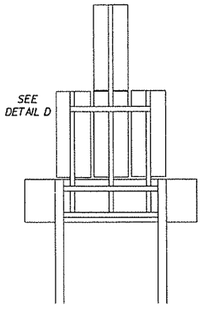

G2-8

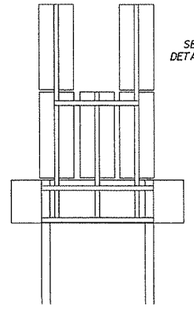

G2-9

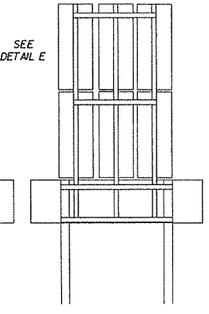

G2-10

			ARKANSAS STATE HIGHWAY COMMISSION
			DETAIL OF BREAKAWAY SIGN SUPPORTS FOR STANDARD SIGNS
9-12-13	ISSUED		STANDARD DRAWING SHS-4
DATE	REVISION	FILMED	

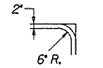

TYPICAL DETAIL

TYPE A

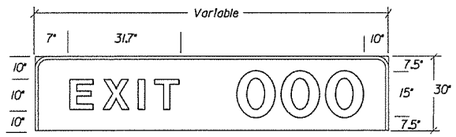

EXIT WITH 1 DIGIT 84"X30"=17.50 SF
EXIT WITH 2 DIGITS 96"X30"=20.0 SF
EXIT WITH 3 DIGITS 114"X30"=23.57 SF

TYPE B

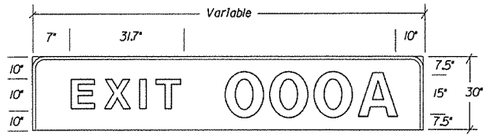

EXIT WITH 1 DIGIT PLUS "A"OR"B" 96"X30"=20.0 SF
EXIT WITH 2 DIGITS PLUS "A"OR"B" 114"X30"=23.57 SF
EXIT WITH 3 DIGITS PLUS "A"OR"B" 126"X30"=26.25 SF

TYPE C

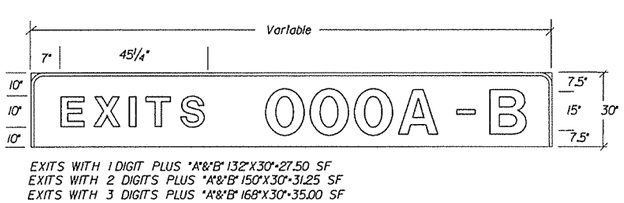

EXITS WITH 1 DIGIT PLUS "A"&"B" 132"X30"=27.50 SF
EXITS WITH 2 DIGITS PLUS "A"&"B" 150"X30"=31.25 SF
EXITS WITH 3 DIGITS PLUS "A"&"B" 168"X30"=35.00 SF

TYPE D

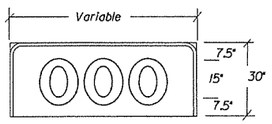

1 DIGIT 24"X30"=5.0 SF
2 DIGITS 42"X30"=8.75 SF
3 DIGITS 60"X30"=12.50 SF

TYPE E

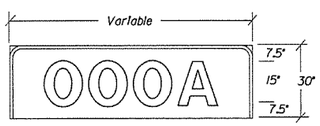

1 DIGIT PLUS "A"OR"B" 42"X30"=8.75 SF
2 DIGITS PLUS "A"OR"B" 60"X30"=12.50 SF
3 DIGITS PLUS "A"OR"B" 78"X30"=16.25 SF

EXIT PANEL DETAILS

NOTE: EXIT NUMBER PANELS SHALL HAVE WHITE LEGENDS AND BORDERS. THE BACK GROUND COLOR WILL BE AS USE SPECIFIES. SHEETING TYPE WILL BE THE SAME AS THE GUIDE SIGN WHICH THE EXIT PANEL IS ATTACHED OR AS SPECIFIED IN THE PLANS. PAYMENT FOR ALL POST CLIPS, BOLTS, AND ANGLES SHALL BE SUBSIDIARY TO THE ITEM "EXIT NUMBER PANEL".

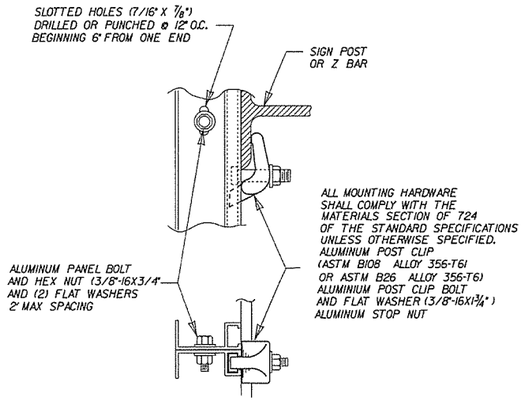

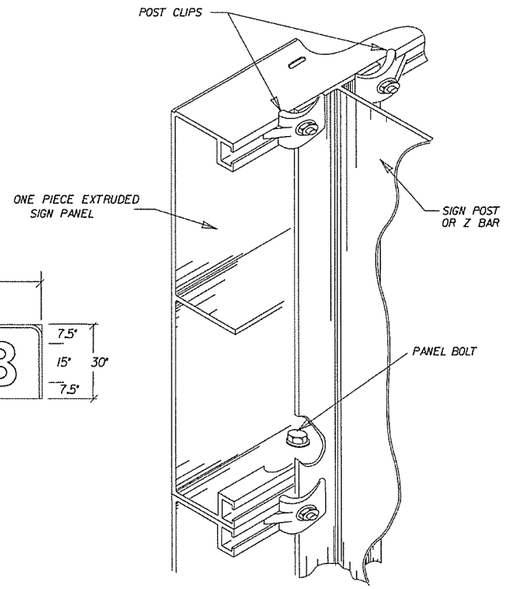

MOUNTING HARDWARE

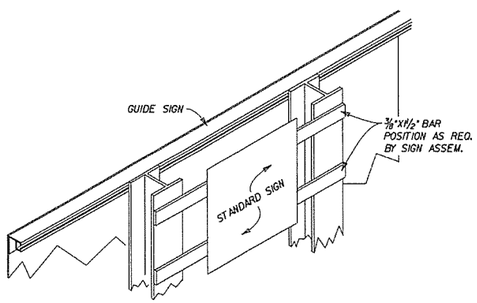

SECONDARY SIGN INSTALLATION
ON BACKSIDE OF GUIDE SIGN

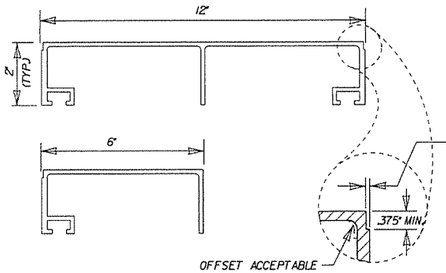

ONE PIECE EXTRUDED
SIGN PANELS

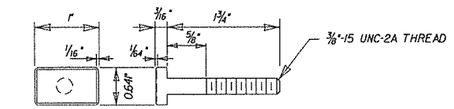

POST CLIP BOLT

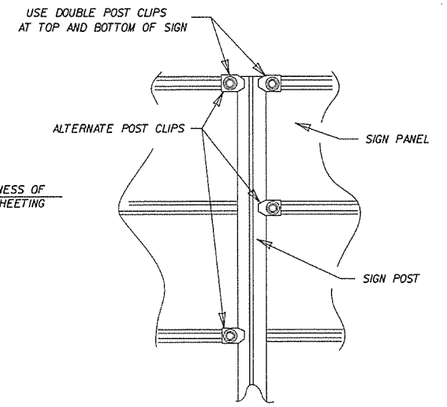

POST CLIP PLACEMENT

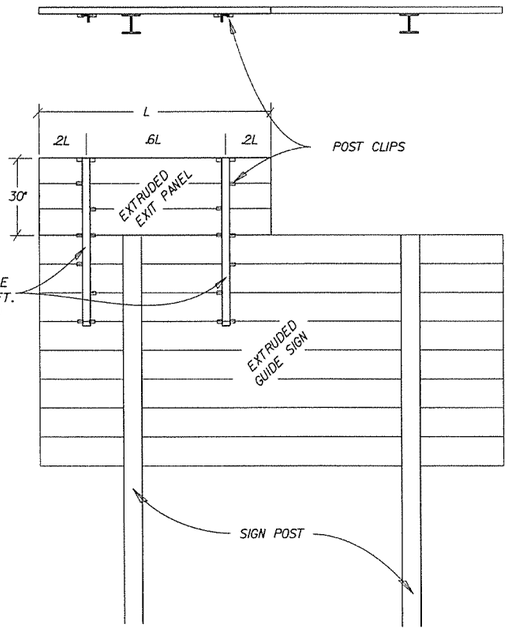

			ARKANSAS STATE HIGHWAY COMMISSION
			DETAILS OF GUIDE SIGN PANELS
9-12-13	ISSUED		STANDARD DRAWING SHS-5
DATE	REVISION	FILMED	

THE CONTRACTOR SHALL DRILL AND POP-RIVET LEGEND, SHIELDS, ARROWS, OR OTHER COPY AS SHOWN.

MOUNTING DETAILS FOR DEMOUNTABLE LEGEND ON GUIDE SIGNS

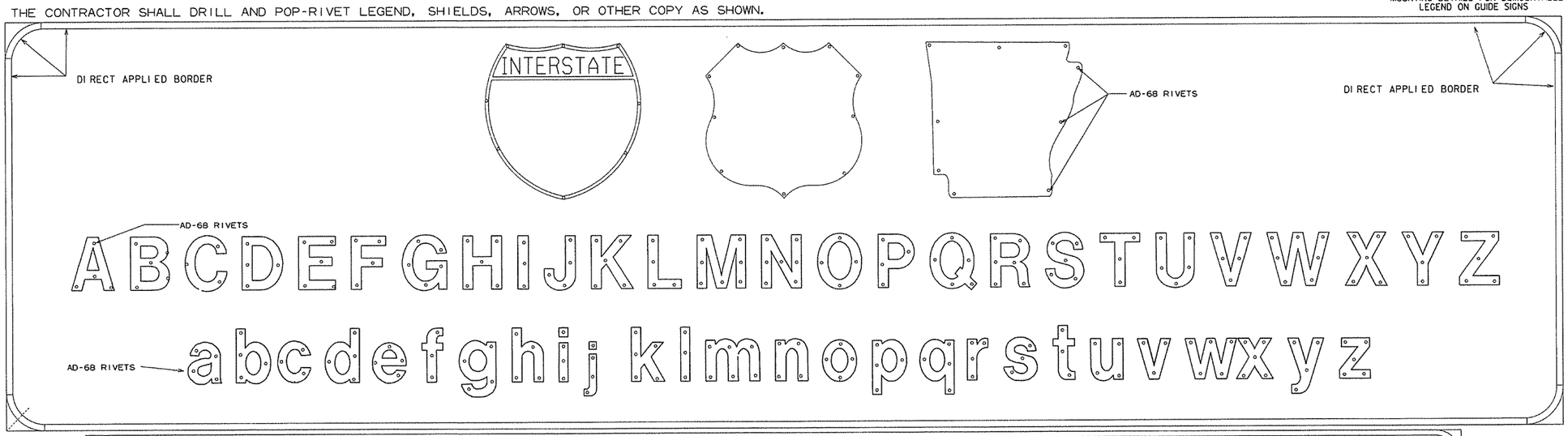

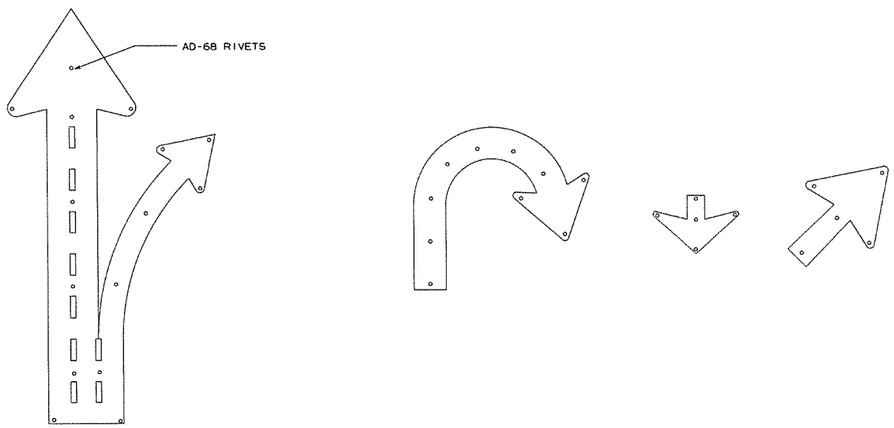

NOTES:

LEGEND ON GUIDE SIGNS ON THE MAIN LANES SHALL BE DEMOUNTABLE LEGEND.
LEGEND ON GUIDE SIGNS ON CROSS ROADS AND RAMPS SHALL BE DIRECT APPLIED.
THE DEMOUNTABLE AND DIRECT APPLIED LEGENDS SHALL BE TYPE IX SHEETING.

THE BACKGROUND ON ALL GUIDE SIGNS AND STANDARD SIGNS SHALL BE CONSTRUCTED USING TYPE III SHEETING.

TYPE IX SHEETING FOR BORDER, LEGEND, SHIELDS, ARROWS, OR OTHER COPY SHALL BE ORIENTED VERTICALLY AS PER MANUFACTURERS' DATUM MARKS, ORIENTATION MARKS, OR OTHER RECOMMENDATIONS.

SIGN LEGEND, SHIELDS, ARROWS OR OTHER COPY SHALL BE APPLIED WITH RIVETS ONLY.

NO OTHER METHOD OF APPLYING CHARACTERS IS ALLOWED.

			ARKANSAS STATE HIGHWAY COMMISSION
			MOUNTING DETAILS FOR DEMOUNTABLE LEGEND ON GUIDE SIGNS
9-12-13	ISSUED		STANDARD DRAWING SHS-6
DATE	REVISION	FILMED	

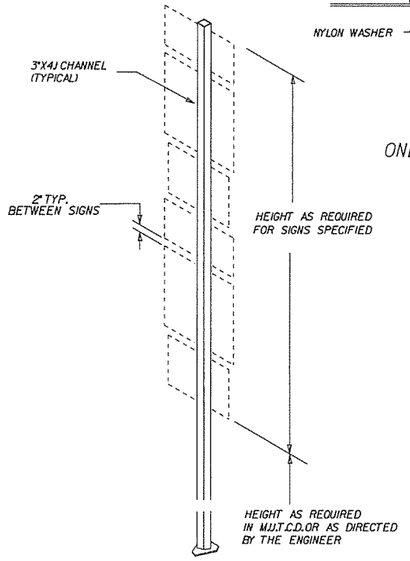

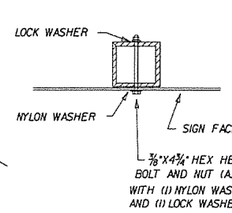

ONE SIGN

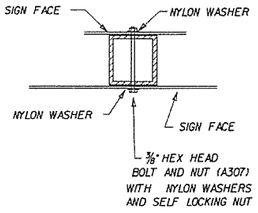

TWO SIGNS

CHANNEL SHALL BE FULL LENGTH OF RECTANGULAR AND SQUARE SIGNS AND SHALL EXTEND 1/2" BEYOND BOLT HOLES ON DIAMOND OR IRREGULAR SHAPED SIGNS.

MOUNTING HARDWARE

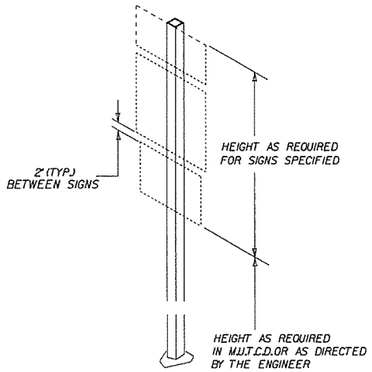

TYPE-I

BASIS OF ESTIMATE
APPROX. 100 lbs STEEL

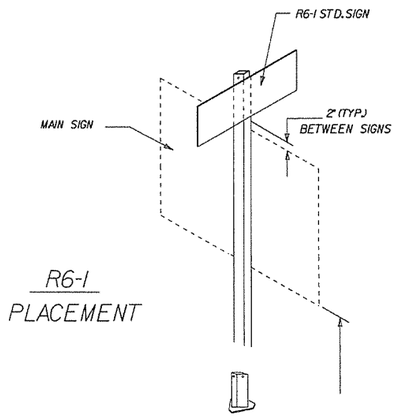

R6-1 PLACEMENT

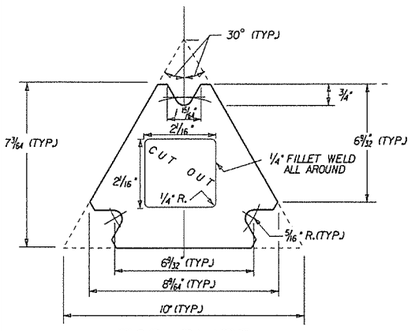

TOP PLATE

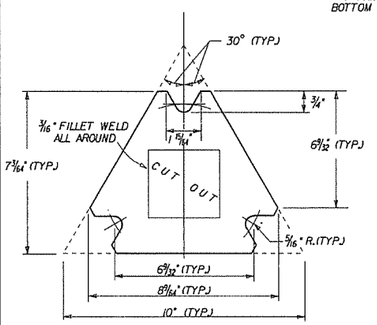

BOTTOM PLATE

GENERAL NOTES:

THE TOP PLATE OF TRIANGULAR SUP BASES SHALL HAVE THE SAME EXTERIOR DIMENSIONS AS THE BOTTOM PLATE.

INSIDE DIAMETER OF THE SIGN POST SHALL BE CUT THROUGH THE CENTER OF THE TOP PLATE WITH THE HOLE EDGE BEVELED AS SHOWN. THE BEVEL END SHALL BE TANGENT TO THE BOLT HOLE . ANY MISALIGNMENT SHALL BE REMOVED BY GRINDING . FACE OF BEVEL SHALL BE FINISHED TO A MINIMUM SMOOTHNESS OF 1-500 .

OTHER MASH COMPLIANT BREAKAWAY SIGN SUPPORTS THAT HAVE THE SAME TOP PLATE DIMENSIONS AND SUPPORT 2¼" X 2¼" SQUARE TUBE SIGN POSTS MAY BE SUBSTITUTED AS APPROVED BY THE ENGINEER.

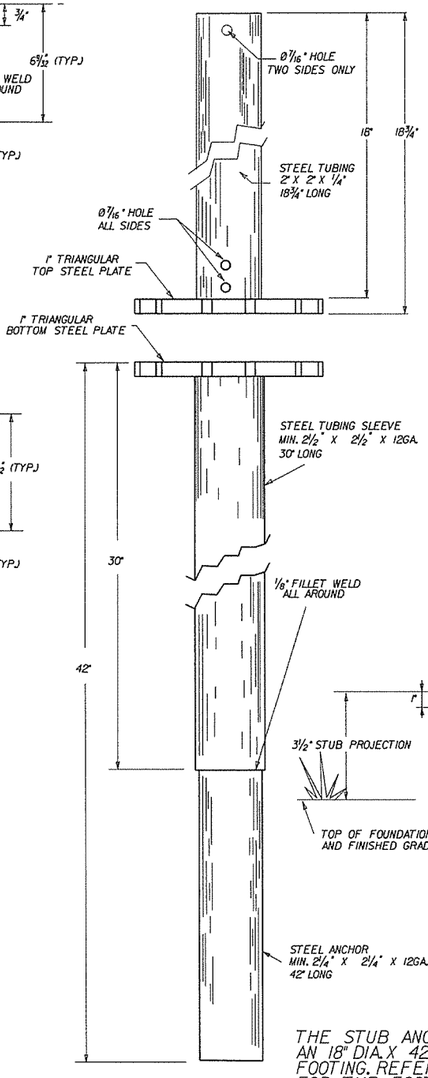

THE STUB ANCHOR SHALL BE SET IN AN 18" DIA. X 42" DEEP CONCRETE FOOTING. REFER TO STD. DRWG. SHS-3 FOR THE FOOTING DETAILS.

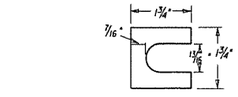

FURNISH (2) .012" THICK AND (2) .032" THICK SHIMS PER POST

SHIM DETAIL

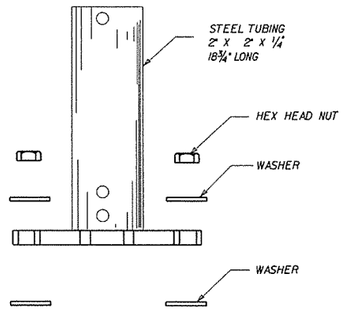

			ARKANSAS STATE HIGHWAY COMMISSION
			DETAIL OF OMNI-DIRECTIONAL BREAKAWAY SIGN SUPPORTS
9-12-13 DATE	ISSUED REVISION	FILMED	STANDARD DRAWING SHS-7

642

LEGEND
DIRECTION OF TRAVEL
DELINEATOR

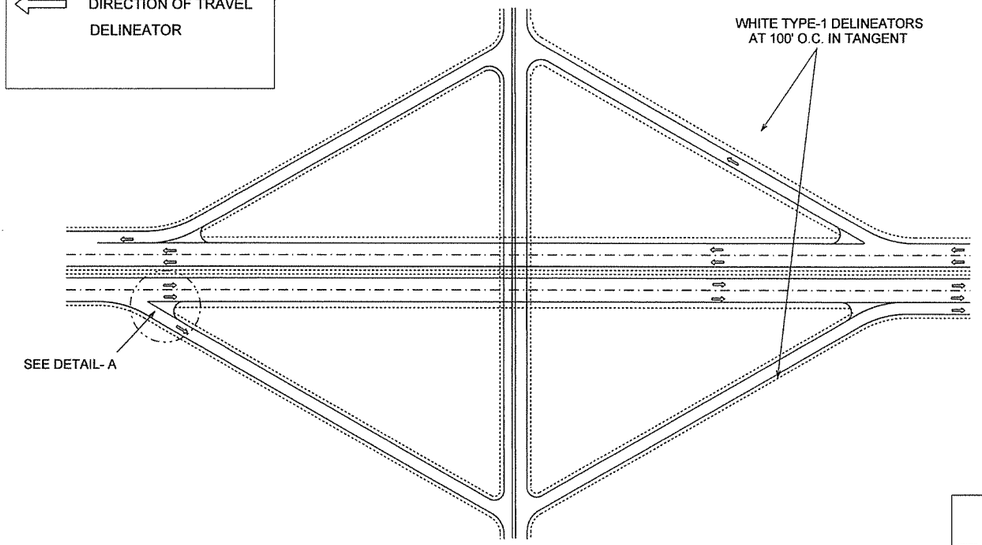

TYPICAL DIAMOND INTERCHANGE
(ALL RAMPS)

DELINEATORS PLACEMENT DETAIL

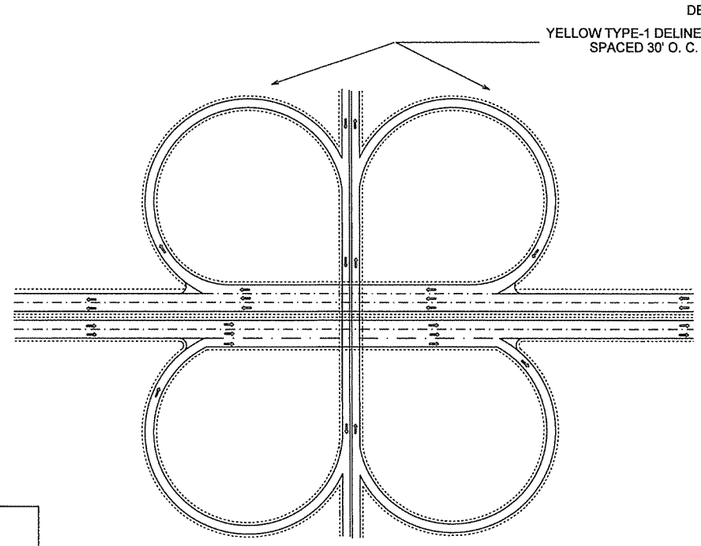

TYPICAL CLOVERLEAF INTERCHANGE
(ALL RAMPS)

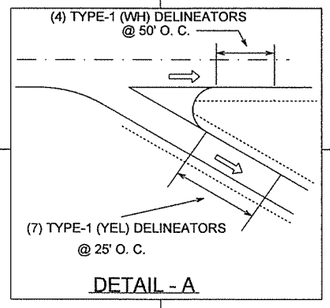

DETAIL - A

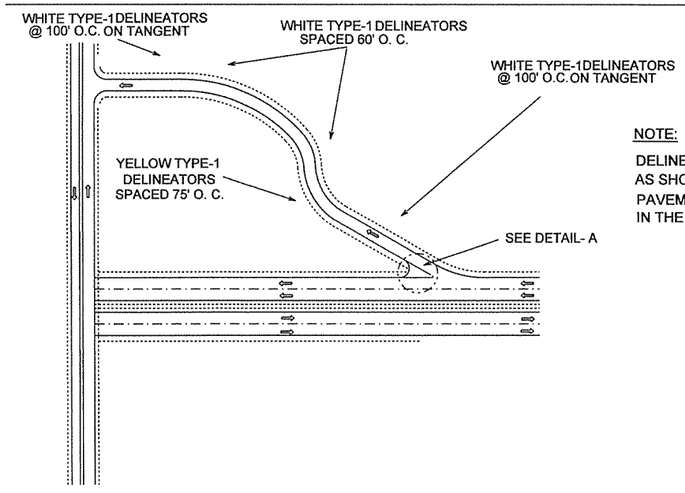

MODIFIED DIAMOND INTERCHANGE

NOTE:

DELINEATORS SHALL ONLY BE INSTALLED AS SHOWN IN DETAIL-A IF RAISED PAVEMENT MARKERS ARE NOT PRESENT IN THE GORE OF THE OFF RAMPS.

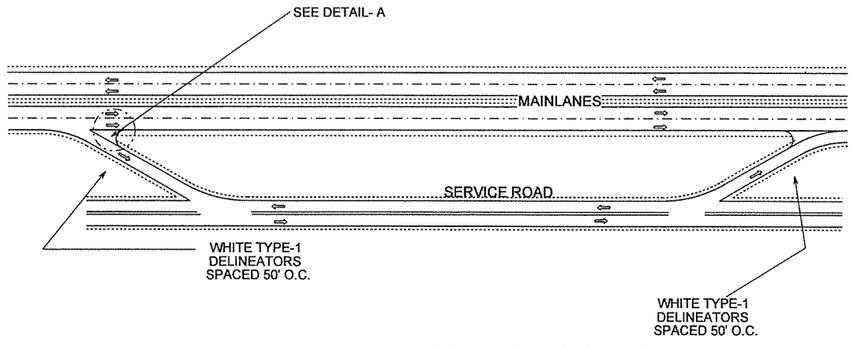

TYPICAL SLIP RAMP

GUIDANCE:

DELINEATORS SHOULD BE MOUNTED ON SUITABLE SUPPORTS SO THAT THE TOP OF THE HIGHEST RETROREFLECTOR IS 1.2 M (4 FT) ABOVE THE NEAR ROADWAY EDGE. THEY SHOULD BE PLACED 0.6 TO 2.4 M (2 TO 8 FT) OUTSIDE THE OUTER EDGE OF THE SHOULDER, OR IF APPROPRIATE, IN LINE WITH THE ROADSIDE BARRIER THAT IS 2.4 M (8 FT) OR LESS OUTSIDE THE OUTER EDGE OF THE SHOULDER.

			ARKANSAS STATE HIGHWAY COMMISSION
			TYPICAL DELINEATOR PLACEMENT ALONG THE INTERSTATE SYSTEM
9-12-13	ISSUED		STANDARD DRAWING SHS-8
DATE	REVISION	FILMED	

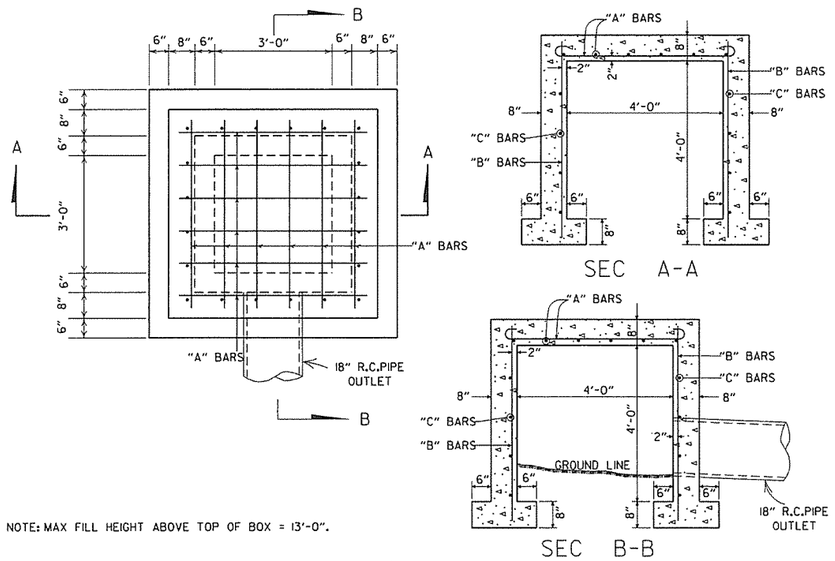

NOTE: MAX FILL HEIGHT ABOVE TOP OF BOX = 13'-0".

STEEL SCHEDULE

BARS	NUMBER	LENGTH	SPACING
"A"	12	6'-0"	10"
"B"	20	5'-0"	10 ½"
"C"	16	5'-0"	12"

ALL STEEL TO BE #4 BARS

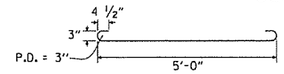

QUANTITIES

CONCRETE 3.31 CU. YDS.
REINFORCING STEEL 168 LB.

GENERAL NOTE:
THE PAY ITEMS FOR REINFORCED CONCRETE SPRING BOXES SHALL BE FOR THE QUANTITTIES OF CONCRETE OF THE CLASS SPECIFIED, REINFORCING STEEL, EXCAVATION FOR STRUCTURES AND 18" R.C. PIPE CULVERT.

REINFORCED CONCRETE SPRING BOX

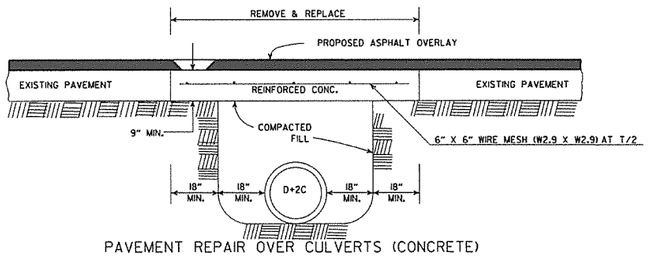

PAVEMENT REPAIR OVER CULVERTS (CONCRETE)

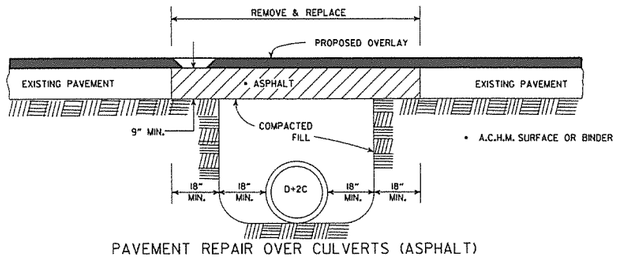

PAVEMENT REPAIR OVER CULVERTS (ASPHALT)

DETAIL SHOWING REPAIR OF EXISTING PAVEMENT AT CULVERT INSTALLATIONS

• A 2" MIN. HIGH CURB IS REQUIRED WHEN CONCRETE WALK IS ADJACENT TO THE HAND RAILING. PAYMENT FOR CURB SHALL BE CONSIDERED INCLUDED IN THE PRICE BID FOR CONCRETE WALKS.

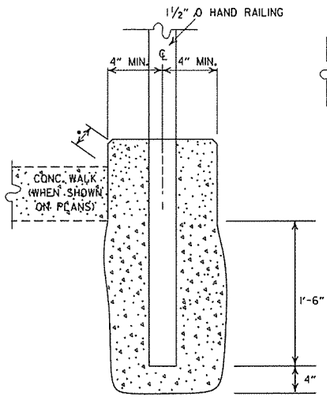

DETAIL OF HAND RAILING SET IN CONCRETE

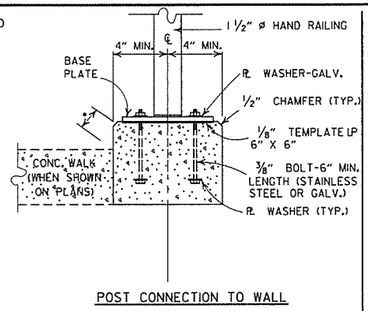

POST CONNECTION TO WALL

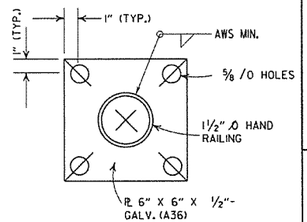

BASE PLATE

POST CONNECTION DETAILS

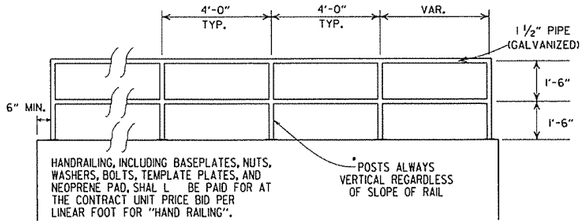

HAND RAILING SHALL CONFORM TO SECTION 633.

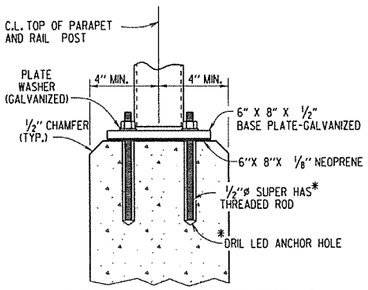

*HILTI HIT RE 500 EPOXY ADHESIVE ANCHOR SYSTEM WITH 4 ½" EMBEDMENT OR APPROVED EQUAL.

THE ADHESIVE ANCHOR SYSTEM SHALL BE INSTALLED IN ACCORDANCE WITH MANUFACTURER'S RECOMMENDATIONS.

POST CONNECTION TO WALL

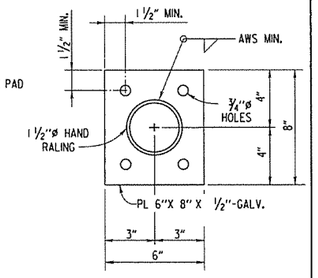

BASE PLATE

DETAILS OF ALTERNATE POST ANCHOR SYSTEM
(EPOXY ADHESIVE ANCHORS)

HAND RAILING DETAILS

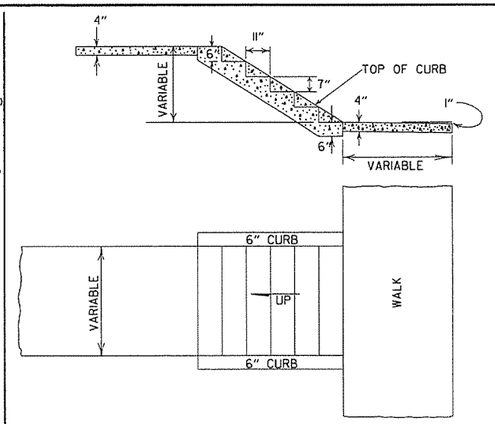

GENERAL NOTES

1. RISE AND TREAD DIMENSIONS OF STEPS MAY BE VARIED AS DIRECTED BY THE ENGINEER, HOWEVER, TREAD WIDTHS SHALL BE 11" MIN. ALL STEPS IN A FLIGHT SHALL HAVE CONSISTENT TREAD & RISER DIMENSIONS.
2. 1" TRANSVERSE EXPANSION JOINTS SHALL BE PLACED IN CONCRETE WALKS AT 45' INTERVALS.

DETAILS OF CONCRETE STEPS & WALKS

9-12-13	REVISED REINFORCED CONCRETE SPRING BOX	
7-26-12	REMOVED RETAINING WALL DETAILS & REVISED HAND RAILING DETAILS	
4-17-08	REV. JOINT & FOOTING STEP DETAILS	
11-29-07	REVISED RETAINING WALL DRAINAGE	
5-25-06	REVISED PVMT REPAIR OVER CULVERTS (CONC); REVISED REINFORCED CONC SPRING BOX	
10-9-03	REVISED PIPE RAILING DETAILS TO HAND RAILING DETAILS	
4-10-03	REVISED RETAINING WALL DRAWING	
8-22-02	ADDED HAND RAILING DETAIL	
11-16-01	REVISED PVMT REPAIR OVER CULVERTS (CONC); CORRECTED SPELLING IN GENERAL NOTES	
11-18-98	ADDED GENERAL NOTES TO CONCRETE STEPS & WALKS	
7-02-98	ENLARGED PIPE	
4-03-97	ADDED NOTE TO STEEL BAR SCHED.	
10-18-96	CORRECTED SPELLING	
4-26-96	ADD WEEP HOLE;REV. JOINT SPACING IN RET. WALL	
6-2-94	CHANGED CONST. TO CONTRACTION JOINT	
10-1-92	CHANGED MESH FABRIC TO WIRE MESH	10-1-92
8-15-91	DELETED HDWL MODIFICATION DETAIL	8-15-91
11-8-90	DELETED COLD MIX FROM CULV'T. REPAIR	11-8-90
11-30-89	REV. RETAINING WALL STEEL SCHEDULE	11-30-89
11-17-88	V. BARS BEHIND ARROW	665-11-17-88
7-15-88	REV. PAVEMENT REPAIR ADDED HDWL. MODS. DEL. PIPE UNDERDRAINS	649-7-15-88
11-1-84	REV. TRENCH FOR PIPE UNDERDRAIN	510-11-1-84
1-4-83	ELIMINATED CONC. CLASS & ADDED CHAMFER NOTE	682-1-4-83
3-2-81	SPELLING OF "UNDERDRAIN"	721-3-2-81
4-20-79	REV. UNDERDRAIN DET& PAVEMENT REPAIR	674-4-20-79
2-2-76	12"MIN. GRAN. MAT'L. OVER PIPE	919-2-2-76
4-10-75	REM. SPECS. FOR GRAN. MAT'L.	568-4-10-75-853
5-22-74	GRANULAR MAT'L. TO BE SB-3	567-5-22-74-740
10-2-72	REVISED AND REDRAWN	564-10-16-72
DATE	REVISION	DATE FILMED

ARKANSAS STATE HIGHWAY COMMISSION

DETAILS OF SPECIAL ITEMS

STANDARD DRAWING SI-1

R1-1

STANDARD 30"X30"
EXPRESSWAY 36"X36"
SPECIAL 48"X48"

R1-2

STD. 36"X36"X36"
EXPWY. 48"X48"X48"
FWY. 60"X60"X60"

R2-1

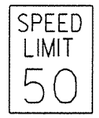

STD. 24"X30"
EXPWY. 36"X48"
FWY. 48"X60"

W3-5

STD. 36"X36"
EXPWY. 48"X48"
FWY. 48"X48"

W3-5a

STD. 36"X36"
EXPWY. 48"X48"
FWY. 48"X48"

R4-1

STD. 24"X30"
EXPWY. 36"X48"
FWY. 48"X60"

R4-2

STD. 24"X30"
EXPWY. 36"X48"
FWY. 48"X60"

R5-1

STD. 30"X30"
EXPWY. 36"X36"
SPECIAL 48"X48"

RII-2

48"X30"

RII-3A

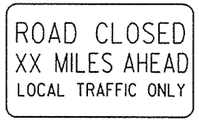

60"X30"

RII-4

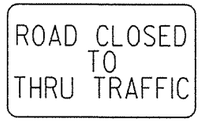

60"X30"

RSP-1

48"X30"

WI-1

STD. 36"X36"
FWY. 48"X48"

WI-2

STD. 36"X36"
FWY. 48"X48"

WI-3

STD. 48"X48"

WI-4

STD. 48"X48"

WI-6

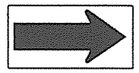

STD. 48"X24"
SPECIAL 60"X30"

WI-8

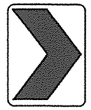

STD. 18"X24"
SPECIAL 24"X30"
EXPWY. 30"X36"
FWY. 36"X48"

W3-1

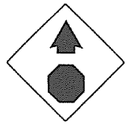

STD. 36"X36"
SPECIAL 48"X48"

W3-2

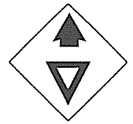

STD. 36"X36"
SPECIAL 48"X48"

W4-2

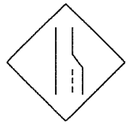

STD. 36"X36"
FWY. 48"X48"

W5-1

STD. 36"X36"
SPECIAL 48"X48"

W6-3

EXPWY. 36"X36"
SPECIAL 48"X48"

W8-7

EXPWY. 36"X36"
FWY. 48"X48"

W9-2

STD. 36"X36"
FWY. 48"X48"

WI3-1

STD. 24"X24"

W20-1

STD. 48"X48"

W20-2

STD. 48"X48"

W20-3

STD. 48"X48"

W20-4

STD. 48"X48"

W20-5

STD. 48"X48"

W20-7a

STD. 36"X36"
FWY. 48"X48"

W21-2

STD. 30"X30"
SPECIAL 36"X36"

W21-5

STD. 30"X30"
SPECIAL 36"X36"

W24-1

STD. 36"X36"

WI-4b

STD. 48"X48"

R56-1

STD. 18"X18"

W8-11

STD. 36"X36"
FWY. 48"X48"

W8-9

STD. 36"X36"
FWY. 48"X48"

G20-1

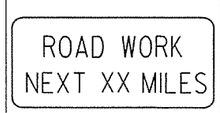

60"X24"

G20-2

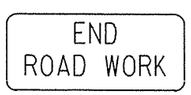

48"X24"

OM-3L OM-3R

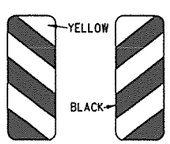

12"X36"

M4-9

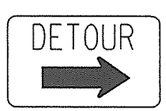

STD. 30"X24"
SPECIAL 48"X36"
SPECIAL 60"X48"

M4-10

48"X18"

R55-1

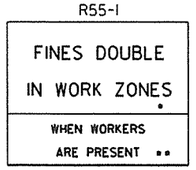

36"X60"
• USE 6" C LETTERS
•• USE 4" D LETTERS

ADVANCE DISTANCES
(XXXX)

500 FT	½ MILE
1000 FT	¾ MILE
1500 FT	1 MILE AHEAD

GENERAL NOTES:

1. ALL TRAFFIC CONTROL DEVICES USED ON ROAD CONSTRUCTION SHALL CONFORM TO THE MANUAL ON UNIFORM TRAFFIC CONTROL DEVICES, LATEST EDITION, AND TO THE STANDARD HIGHWAY SIGNS, LATEST EDITION, OR AS APPROVED BY THE FEDERAL HIGHWAY ADMINISTRATION.
2. TRAFFIC CONTROL DEVICES SHALL BE SET UP JUST BEFORE THE START OF CONSTRUCTION OPERATIONS AND SHALL BE PROPERLY MAINTAINED DURING THE TIME SUCH CONDITIONS EXIST. THEY SHALL REMAIN IN PLACE ONLY AS LONG AS NEEDED AND REMOVED THEREAFTER.
3. EXISTING SIGNS AND CONSTRUCTION SIGNS SHALL BE KEPT IN PROPER POSITION, AND BE CLEAN AND LEGIBLE AT ALL TIMES. SIGNS THAT DO NOT APPLY TO EXISTING CONDITIONS SHALL BE REMOVED. SIGNS THAT ARE DAMAGED, DEFACED, OR THAT ACCUMULATE DIRT DURING CONSTRUCTION SHALL BE CLEANED, REPAIRED, OR REPLACED.
- 4. SIGNS ARE USUALLY MOUNTED ON A SINGLE POST, ALTHOUGH THOSE WIDER THAN 36" OR LARGER THAN 10 SQ. FT. SHALL BE MOUNTED ON TWO POSTS OR ABOVE A TYPE III BARRICADE.
- 5. SIGN POSTS DIRECT BURIED IN SOIL SHALL BE 2 LB. MINIMUM CHANNEL POST OR 4"x4" WOOD POSTS. CHANNEL POSTS SHALL BE PAINTED GREEN. WOOD POSTS SHALL BE PAINTED WHITE. ALL POSTS SHALL BE NEATLY CONSTRUCTED, AND SHALL BE REPLUMBED, CLEANED, OR REPAIRED AS NEEDED FOR THE DURATION OF THE JOB. THERE SHALL NOT BE MORE THAN 2 POSTS IN A 7' PATH FOR WOOD OR CHANNEL POSTS. ANY CHANNEL POST SPLICE SHALL BE IN ACCORDANCE WITH STANDARD DRAWING TC-3.
6. POST MOUNTED SIGNS IN RURAL AREAS SHALL BE CONSTRUCTED WITH THE NEAR EDGE OF THE SIGN FROM 6 TO 12 FEET FROM THE PAVEMENT EDGE. SIGNS IN URBAN AREAS AND BARRICADE MOUNTED SIGNS SHALL BE MOUNTED A MINIMUM OF 2 FEET FROM THE PAVEMENT EDGE.
7. ALL POST AND BARRICADE MOUNTED SIGNS MOUNTED IN URBAN AREAS SHALL BE MOUNTED A MINIMUM DISTANCE OF 7' FROM THE BOTTOM OF THE SIGN TO THE ROADWAY SURFACE. ALL POST AND BARRICADE MOUNTED SIGNS MOUNTED IN RURAL AREAS SHALL BE MOUNTED A MINIMUM DISTANCE OF 7' FROM THE BOTTOM OF THE SIGN TO THE ROADWAY SURFACE, EXCEPT A MINIMUM OF 6' SHALL BE USED WHEN MOUNTING AN ADVISORY SIGN BELOW A WARNING SIGN. TEMPORARY SIGNS MAY BE MOUNTED ON PORTABLE SUPPORTS FOR INTERMEDIATE TERM STATIONARY WORK CONDITIONS. THE SIGNS MINIMUM MOUNTING HEIGHT SHALL BE 5'. RETROREFLECTIVE DEVICES SHALL BE USED. TEMPORARY SIGNS MAY BE MOUNTED ON PORTABLE SUPPORTS FOR SHORT-TERM, SHORT DURATION, AND MOBILE CONDITIONS. THEY SHALL BE NO LESS THAN ONE (1) FOOT ABOVE THE TRAVELED WAY. LONG-TERM STATIONARY SIGNS SHALL BE DIRECT BURIED IN SOIL, UNLESS CONDITIONS NECESSITATE THE USE OF PORTABLE SIGNS, OR AS APPROVED BY THE ENGINEER. CONCRETE PADS, CONCRETE OR ROCK BALLAST, OR OTHER SOLID MATERIALS SHALL NOT BE UTILIZED WITH PORTABLE SIGN SUPPORTS.
8. FLAGGERS SHALL USE REFLECTORIZED STOP-SLOW PADDLES. FLAGS MAY BE USED ONLY FOR EMERGENCY SITUATIONS.
9. MOST OF THE SIGNS SHOWN ARE ORIENTED TO THE RIGHT. HOWEVER, THIS DOES NOT PRECLUDE THE USE OF MIRROR IMAGES OF THESE SIGNS WHERE THE REVERSE ORIENTATION MIGHT BETTER CONVEY TO MOTORISTS THE PROPER DIRECTION OF MOVEMENT.
10. R55-1 SIGNS SHALL BE PLACED AT LEAST 1500' BUT NOT MORE THAN 1 MILE IN ADVANCE OF THE WORK ZONE. IF A SPEED LIMIT REDUCTION IS IN EFFECT, THE SIGN SHALL BE PLACED A MINIMUM OF 500' IN ADVANCE OF THE "REDUCED SPEED AHEAD" SIGN.

• NOTE: SUPPORTS FOR SIGNS, BARRICADES, AND VERTICAL PANELS THAT ARE DIFFERENT FROM THE REQUIREMENTS SHOWN IN NOTES 4 & 5, BUT MEET THE REQUIREMENTS OF NCHRP-350 OR MANUAL FOR ASSESSING SAFETY HARDWARE (MASH), WILL BE ACCEPTED. COMPLIANCE WITH THE REQUIREMENTS OF NCHRP-350 OR MANUAL FOR ASSESSING SAFETY HARDWARE (MASH) IS REQUIRED FOR ALL PROJECTS.

DATE	REVISION	FILMED
9-2-15	REVISED REDUCED SPEED LIMIT AHEAD SIGNS REVISED ROAD WORK NEXT XX MILES	
12-15-11	REVISED W24-1	
1-17-10	DELETED W8-9a & ADDED W8-9	
10-15-09	ADDED REFERENCE TO MASH & ADDED SIGN W24-1	
4-17-08	REVISED SIGN DESIGNATIONS	
11-18-04	REVISED NOTES	
10-9-03	REVISED NOTE 1	
1-16-01	REVISED NOTE 7	
9-28-00	REVISED NOTE	
1-18-98	ADDED NOTE	
6-26-97	REVISED NOTE 5	
4-03-97	REVISED NOTE 5	
10-18-96	ADDED CONTROLLED ACCESS HWY. SIGN & TO NOTE 7	
10-12-95	ADDED R55-1	
6-8-95	REVISED TO CORRECT SIGN ILLUSTRATIONS	6-8-95
2-2-95	REVISED PER PART VI, MUTCD SEPT. 3, 1993	
8-15-91	DRAWN AND PLACED IN USE	

ARKANSAS STATE HIGHWAY COMMISSION

STANDARD TRAFFIC CONTROLS FOR HIGHWAY CONSTRUCTION

STANDARD DRAWING TC-1

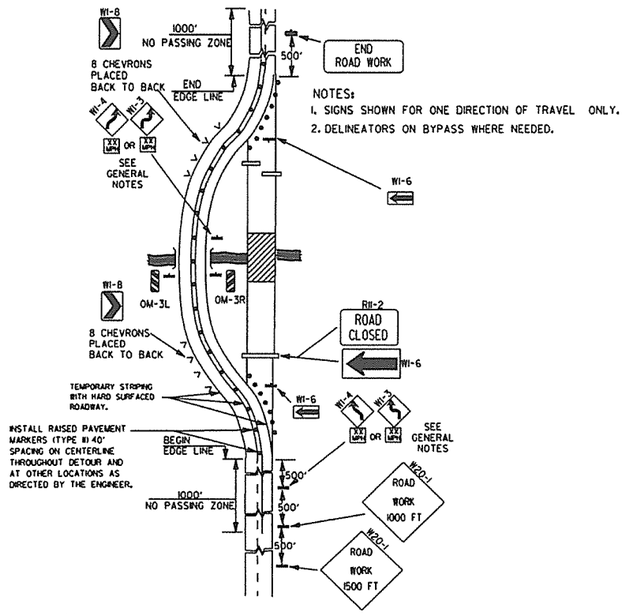

(A) TYPICAL APPLICATION OF TRAFFIC CONTROL DEVICES ON A 2-LANE HIGHWAY WHERE THE ENTIRE ROADWAY IS CLOSED AND A BYPASS DETOUR IS PROVIDED.

NOTES:
1. SIGNS SHOWN FOR ONE DIRECTION OF TRAVEL ONLY.
2. DELINEATORS ON BYPASS WHERE NEEDED.

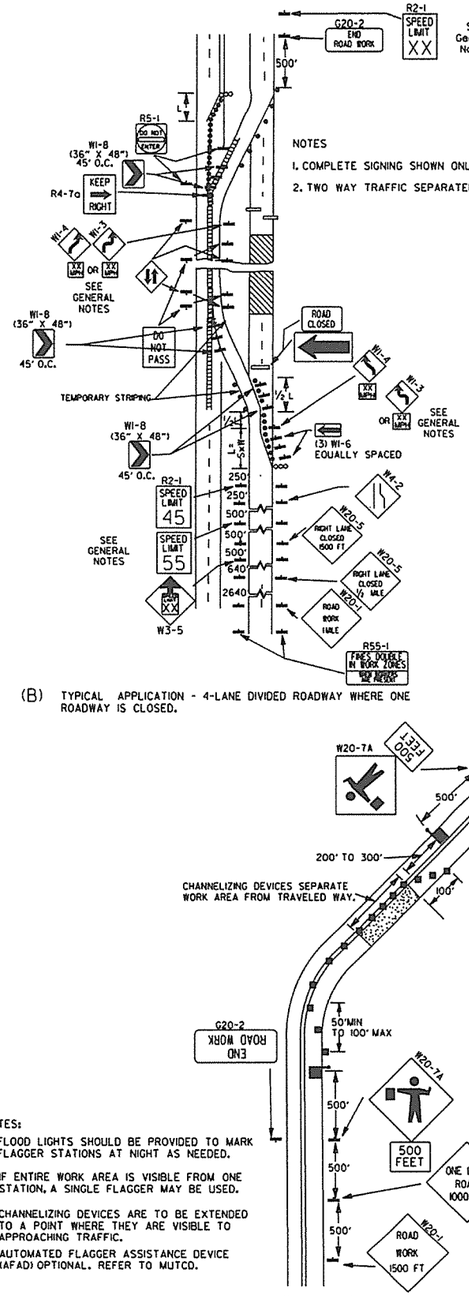

NOTES
1. COMPLETE SIGNING SHOWN ONLY IN CROSSOVER DIRECTION.
2. TWO WAY TRAFFIC SEPARATED WITH POSITIVE BARRIER.

(B) TYPICAL APPLICATION - 4-LANE DIVIDED ROADWAY WHERE ONE ROADWAY IS CLOSED.

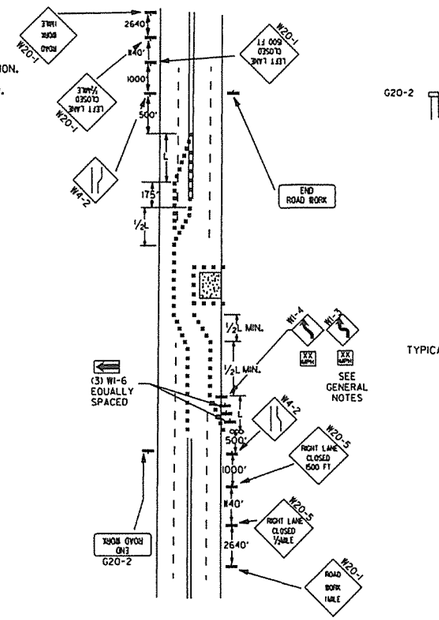

(C) TYPICAL APPLICATION - 4-LANE UNDIVIDED ROADWAY WHERE HALF OF THE ROADWAY IS CLOSED.

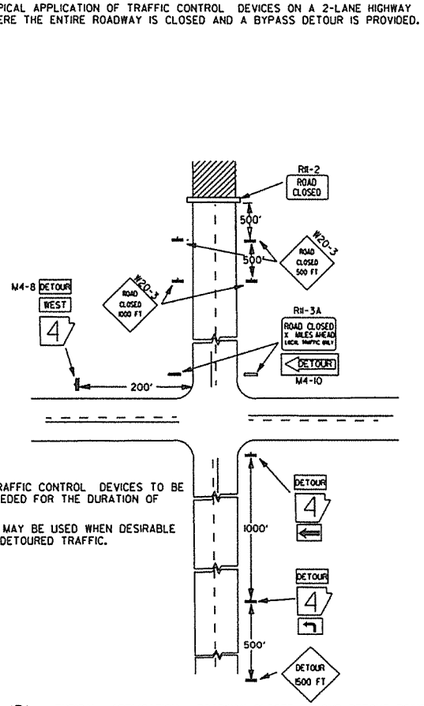

NOTES:
1. REGULATORY TRAFFIC CONTROL DEVICES TO BE MODIFIED AS NEEDED FOR THE DURATION OF THE DETOUR.
2. STREET NAMES MAY BE USED WHEN DESIRABLE FOR DIRECTING DETOURED TRAFFIC.

(D) TYPICAL APPLICATION - ROADWAY CLOSED BEYOND DETOUR POINT.

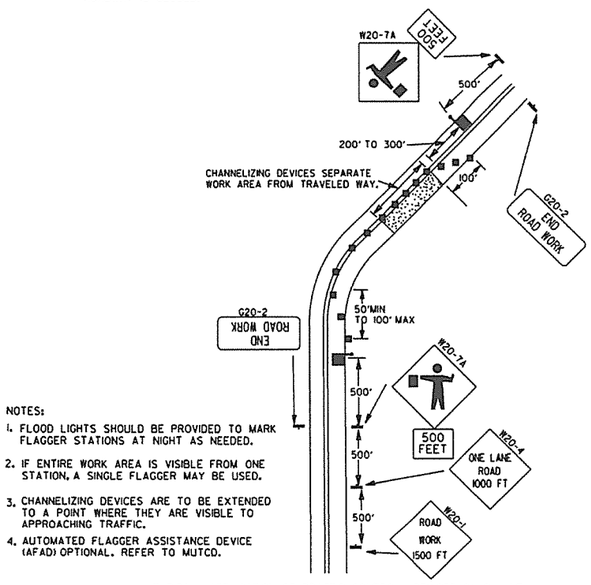

NOTES:
1. FLOOD LIGHTS SHOULD BE PROVIDED TO MARK FLAGGER STATIONS AT NIGHT AS NEEDED.
2. IF ENTIRE WORK AREA IS VISIBLE FROM ONE STATION, A SINGLE FLAGGER MAY BE USED.
3. CHANNELIZING DEVICES ARE TO BE EXTENDED TO A POINT WHERE THEY ARE VISIBLE TO APPROACHING TRAFFIC.
4. AUTOMATED FLAGGER ASSISTANCE DEVICE (AFAD) OPTIONAL. REFER TO MUTCD.

(E) TYPICAL APPLICATION OF TRAFFIC CONTROL DEVICES ON 2-LANE HIGHWAY WHERE ONE LANE IS CLOSED AND FLAGGING IS PROVIDED.

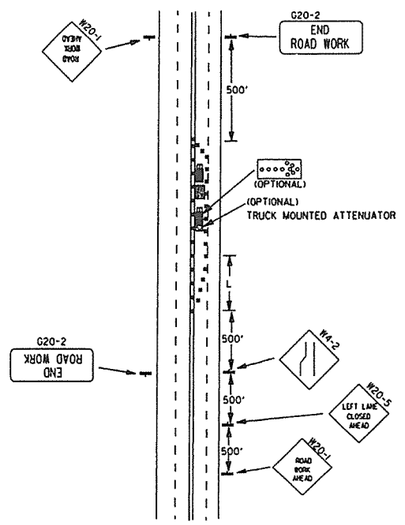

(F) TYPICAL APPLICATION - 4-LANE UNDIVIDED ROADWAY WITH INSIDE LANE CLOSED.

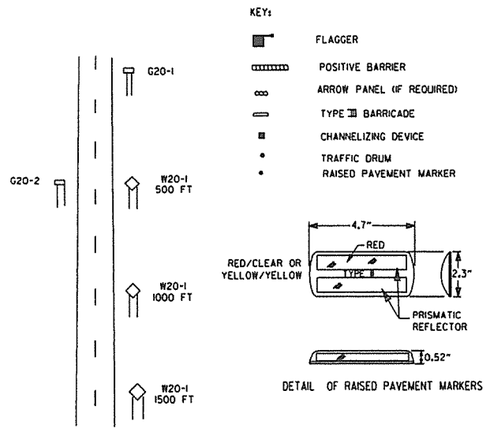

DETAIL OF RAISED PAVEMENT MARKERS

TYPICAL ADVANCE WARNING SIGN PLACEMENT

TAPER FORMULAE:

L=SXW FOR SPEEDS OF 45MPH OR MORE.

$L = \frac{WS^2}{60}$ FOR SPEEDS OF 40MPH OR LESS.

WHERE:
L= MINIMUM LENGTH OF TAPER.
S= NUMERICAL VALUE OF POSTED SPEED LIMIT PRIOR TO WORK OR 85TH PERCENTILE SPEED.
W= WIDTH OF OFFSET.

GENERAL NOTES:

1. ADVISORY SPEED POSTED ON W1-3 OR W1-4 CURVE WARNING SIGNS TO BE DETERMINED AT SITE. USE W1-4 WHEN SPEED IS GREATER THAN 30MPH AND W1-3 WHEN 30MPH OR LESS.
2. WHEN THE EXISTING SPEED LIMIT IS 55MPH AND THE PLANS REQUIRE A SPEED LIMIT OF 45MPH, THE R2-1(55) SHALL BE OMITTED AND THE W3-5 SHALL BE INSTALLED AT THAT LOCATION. ADDITIONAL R2-1 45MPH SPEED LIMIT SIGNS SHALL BE INSTALLED AT A MAXIMUM OF 1MILE INTERVALS. AT THE END OF THE WORK AREA A R2-1(XX) SHALL BE INSTALLED TO MATCH ORIGINAL SPEED LIMIT.
3. WHEN THE EXISTING SPEED LIMIT IS 65MPH AND THE PLANS REQUIRE A SPEED LIMIT OF 55MPH, THE R2-1(45) SHALL BE OMITTED. ADDITIONAL R2-1 55MPH SPEED LIMIT SIGNS SHALL BE INSTALLED AT A MAXIMUM OF 1MILE INTERVALS. AT THE END OF THE WORK AREA A R2-1(XX) SHALL BE INSTALLED TO MATCH ORIGINAL SPEED LIMIT.
4. THE MAXIMUM SPACING BETWEEN CHANNELIZING DEVICES IN A TAPER SHOULD BE APPROXIMATELY EQUAL IN FEET TO THE SPEED LIMIT. BEYOND THE TAPER, MAXIMUM SPACING SHALL BE TWO TIMES THE SPEED LIMIT, OR AS DIRECTED BY THE ENGINEER.
5. WARNING LIGHTS AND/OR FLAGS MAY BE MOUNTED TO SIGNS OR CHANNELIZING DEVICES AT NIGHT AS NEEDED.
6. PAVEMENT MARKINGS NO LONGER APPLICABLE WHICH MIGHT CREATE CONFUSION IN THE MINDS OF VEHICLE OPERATORS SHALL BE REMOVED OR OBLITERATED AS SOON AS PRACTICABLE.
7. TRAILER MOUNTED DEVICES SUCH AS ARROW PANELS AND PORTABLE CHANGEABLE MESSAGE SIGNS SHALL BE DELINEATED BY AFFIXING CONSPICUITY MATERIAL IN A CONTINUOUS LINE ON THE FACE OF THE TRAILER. WHEN PLACED ON OR ADJACENT TO THE SHOULDER AND NOT BEHIND A POSITIVE BARRIER, THESE DEVICES SHALL BE DELINEATED BY PLACING FIVE (5) TRAFFIC DRUMS, EQUALLY SPACED ALONG THE TRAFFIC SIDE OF THE DEVICE.
8. DIMENSIONS SHOWN FOR RAISED PAVEMENT MARKERS ARE TYPICAL. THE CONTRACTOR MAY SUBSTITUTE SIMILAR MARKERS WITH THE APPROVAL OF THE ENGINEER. REQUESTING APPROVAL FOR SIMILAR MARKERS MAY BE MADE BY REFERRING TO THE AHTO QUALIFIED PRODUCTS LIST.

DATE	REVISION	FILMED
9-2-15	REVISED NOTE 2, ADDED NOTE 8, REVISED DRAWING (A) & REPLACED R2-5A WITH W3-5	
9-12-13	REVISED DETAIL OF RAISED PAVEMENT MARKERS	
3-8-10	ADDED (AFAD)	
11-20-08	REVISED SIGN DESIGNATIONS	
11-18-04	ADDED GENERAL NOTE	
10-18-96	ADDED R55-1	
4-26-96	CORRECTED (G) BEHIND G20-2	
6-8-95	CORRECTED SIGN IDENT. ON W1-4A	6-8-95
2-2-95	REVISED PER PART VI, MUTCD, SEPT. 3, 1993	
8-15-91	DRAWN AND PLACED IN USE	

ARKANSAS STATE HIGHWAY COMMISSION

STANDARD TRAFFIC CONTROLS FOR HIGHWAY CONSTRUCTION

STANDARD DRAWING TC-2

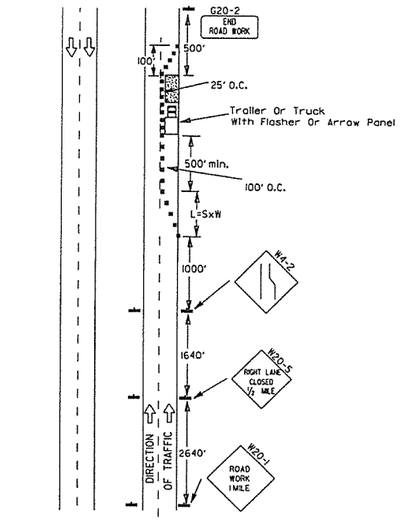

(A) Typical application - daytime maintenance operations of short duration on a 4-lane divided roadway where half of the roadway is closed.

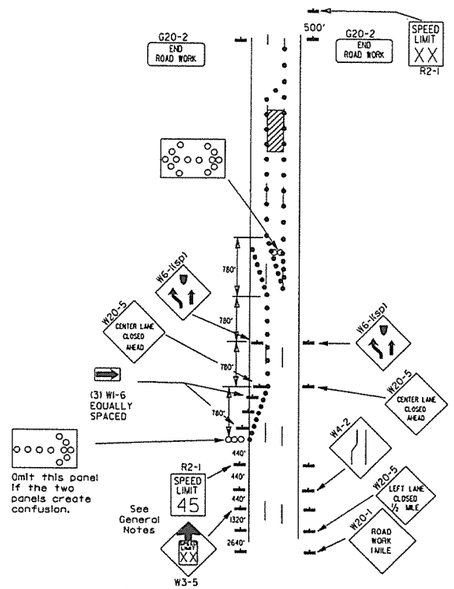

(B) Typical application - 3-lane oneway roadway where center lane is closed.

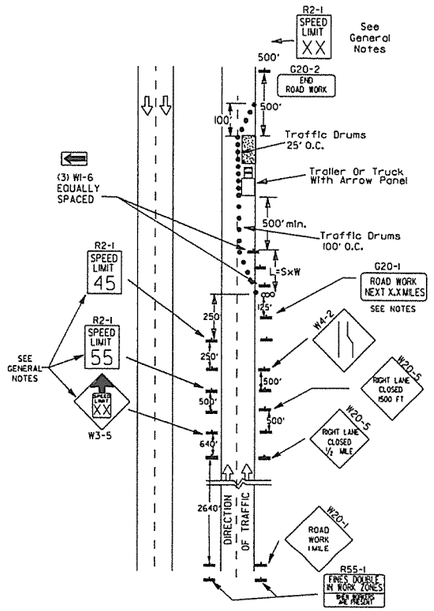

(C) Typical application - construction operations of intermediate to long term duration on a 4-lane divided roadway where half of the roadway is closed.

KEY:

- ○○○ Arrow Panel (If Required)
- ■ Channelizing Device
- ● Traffic drum

GENERAL NOTES:

1. A speed limit reduction may be implemented ONLY when designated in the plan or when recommended by the Roadway Design Division.
2. When the existing speed limit is 55mph and the plans require a speed limit of 45mph, the R2-1(55) shall be omitted and the W3-5 shall be installed at that location. Additional R2-1 45mph speed limit signs shall be installed at a maximum of 1 mile intervals. At the end of the work area a R2-1(XX) shall be installed to match original speed limit.
3. When the existing speed limit is 65mph and the plans require a speed limit of 55mph, the R2-1(45) shall be omitted. Additional R2-1 55mph speed limit signs shall be installed at a maximum of 1 mile intervals. At the end of the work area a R2-1(XX) shall be installed to match original speed limit.
4. The maximum spacing between channelizing devices in a taper should be approximately equal in feet to the speed limit. Beyond the taper, maximum spacing shall be two times the speed limit or as directed by the Engineer.
5. Warning lights and/or flags may be mounted to signs or channelizing devices at night as needed.
6. Pavement markings no longer applicable which might create confusion in the minds of vehicle operators shall be removed or obliterated as soon as practicable.
7. The G20-1 sign will be required on jobs of over two miles in length. When the lane closure is not at the beginning of the project, the G20-1 sign shall be erected 125' in advance of the job limit. Additional W20-1 (1 MILE) signs are not required in advance of lane closures that begin inside the project limits.
8. Flaggers shall use STOP/SLOW paddles for controlling traffic through work zones. Flags may be used only for emergency situations.
9. All plastic drums and cones shall meet the requirements of NCHRP-350 or Manual For Assessing Safety Hardware (MASH).
10. Trailer mounted devices such as arrow panels and portable changeable message signs shall be delineated by affixing conspicuity material in a continuous line on the face of the trailer. When placed on or adjacent to the shoulder and not behind a positive barrier, these devices shall be delineated by placing five (5) traffic drums, equally spaced along the traffic side of the device.

Channelizing devices

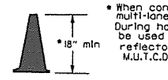

* When cones are used on freeways and multi-lane highways, they shall be 28" min. During hours of darkness, 28" cones shall be used on all roadways, and shall be reflectorized in accordance with the M.U.T.C.D.

CONES

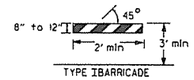

TYPE I BARRICADE

PLASTIC DRUM

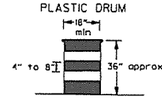

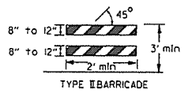

TYPE II BARRICADE

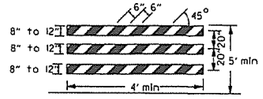

TYPE III BARRICADE

NOTE:
For all road closures, the Type III barricades shall be of sufficient length to extend across entire roadway.

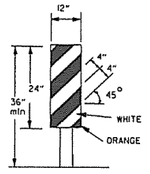

VERTICAL PANEL
VP-1R

VERTICAL PANEL PLACEMENT

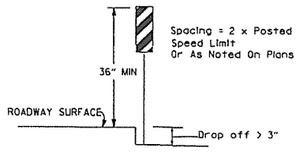

TRAFFIC CONTROL DEVICES
FOR
VERTICAL PAVEMENT DIFFERENTIALS

VERTICAL DIFFERENTIAL	LOCATIONS	TRAFFIC CONTROL
1" to 3"	Centerline, lane lines	W8-11
1" to 3"	Edge of shoulder	W8-9
Greater than 3"	Lane lines	Standard lane closure required
Greater than 3"	Edge of traveled lane	*RSP-1 and vertical panels, drums or concrete barrier
Greater than 3"	Edge of shoulder	*Vertical panels, drums or concrete barrier

* When shown on the plans concrete barrier will be used.

When the shoulder area is used as part of the traveled lane and there is insufficient width to place drums on the remaining shoulder width, then vertical panels shall be used.

FLAG

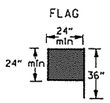

Flag shall be of good grade red material

STOP SLOW PADDLE

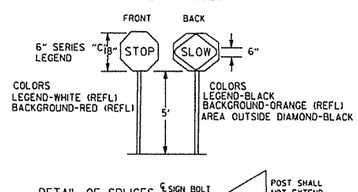

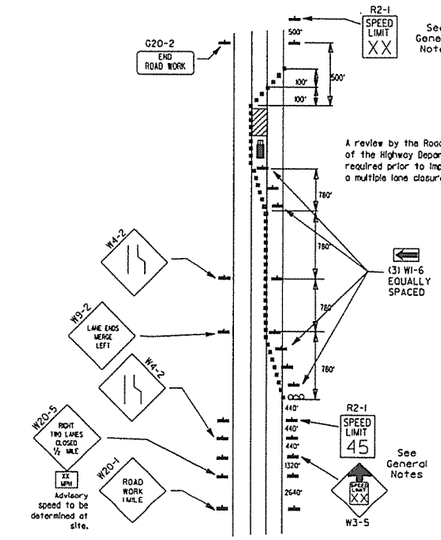

(D) Typical application - closing multiple lanes of a multilane highway.

DETAIL OF SPLICES

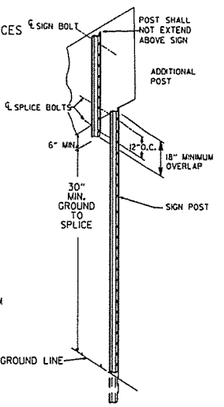

NOTES: USE SPLICES ONLY WHEN NECESSARY FOR INSTALLATION. TYPICAL INSTALLATION SHOULD HAVE NO SPLICES (SEE STD. DRAWING NO. SHS-21)

NORMAL INSTALLATIONS WILL REQUIRE 1/4" DIA. BOLTS TO MOUNT SIGNS TO POST AND 5/16" DIA. BOLTS TO ASSEMBLE THE VARIOUS POST SUPPORTS. EACH OF THESE BOLTS SHALL BE CARRIAGE BOLTS.

SIGN POSTS SHALL BE PAINTED GREEN; SIGNS SHALL NOT BE PAINTED, AND ALL SIGN POSTS SHALL BE PLUMB.

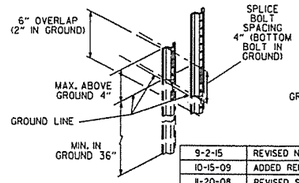

DATE	REVISION	FILMED
9-2-15	REVISED NOTE 2 & REPLACED R2-5A WITH W3-5	
10-15-09	ADDED REFERENCE TO MASH	
11-20-08	REVISED SIGN DESIGNATIONS	
11-18-04	ADDED NOTE	
10-1-98	ADDED NOTE	
4-03-97	ADDED (SP) TO W6-1 & REVISED TRAFFIC CONTROL DEVICES NOTE	
10-18-96	ADDED R55-1	
10-12-95	MOVED UPPER SPLICE	
6-8-95	REVISED SPLICE DETAIL, TEXT	6-8-95
2-2-95	REVISED PER PART VI, MUTCD, SEPT. 3, 1993	
8-15-91	DRAWN AND PLACED IN USE	

ARKANSAS STATE HIGHWAY COMMISSION

STANDARD TRAFFIC CONTROLS FOR HIGHWAY CONSTRUCTION

STANDARD DRAWING TC-3

REINFORCING BAR TABLE PER BARRIER UNIT

MARK	LOCATION	BAR SIZE	(NO. BARS)	SKETCH
H-1	HORIZONTAL IN BARRIER TIED INSIDE V-1 BARS	#5	(6)	19'-3"
H-2	CENTERED ABOVE DRAIN SLOTS LONG. & TRANSVERSELY	#5	(6)	6'-6"
H-3	TIED ABOVE H-1 BARS TO SUPPORT H-2, TIED TO V-1	#4	(2)	1'-6"
S-1	OVER LIFT HOLES	#4	(2)	2'-5", LIFTING HOLE, 90°, 3 3/8" R
S-2	HORIZ. AROUND SLOTS BETWEEN V-1'S & DRAIN SLOTS	#4	(2)	1 1/2" R, SLOTS, 7", 1" MIN. CLEAR TO BAR, 1'-6", 5'-1" BAR W/(4) 1 1/2" R BENDS & MIN. 1'-0" OVERLAP
V-1	VERTICAL IN BARRIER(3) EACH END & (2) AT EACH DRAIN SLOTS	#5	(16)	TOTAL LENGTH 4'-9", 2 3/16" R, 12°, 1 1/2", 9", 4 3/8", 2'-1 3/8"

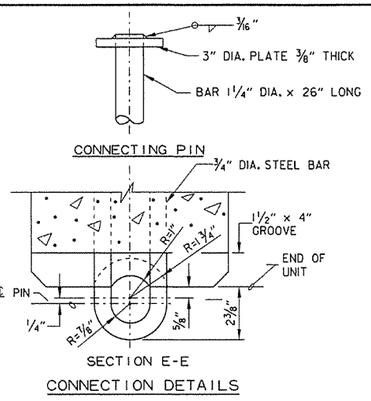

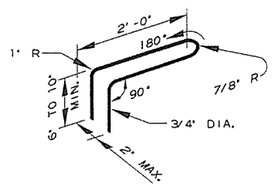

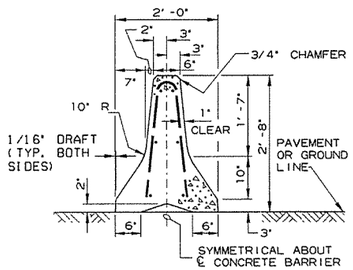

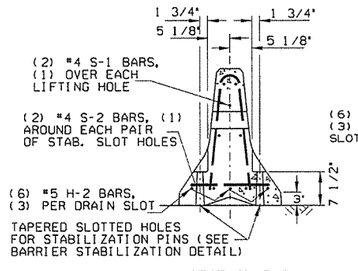

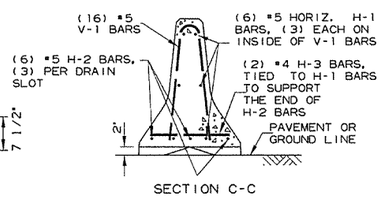

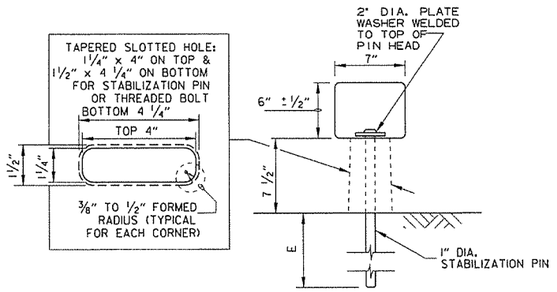

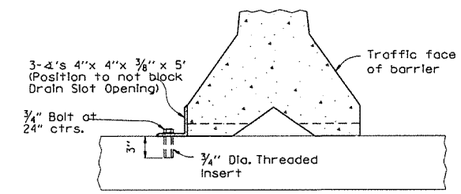

NOTE: 3/4" Threaded Inserts shall be cast in place for all new bridge decks and drilled and grouted for existing bridge decks. Inserts shall have a minimum ultimate load capacity of 8000 lbs. in tension. After removal of barrier, bolts, and angles, the inserts shall be filled with approved non-shrink epoxy.

BARRIER STABILIZATION DETAIL
BRIDGE DECKS

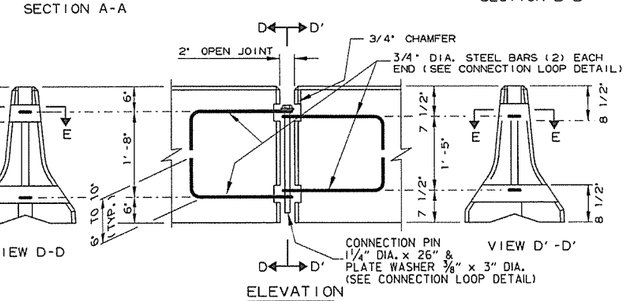

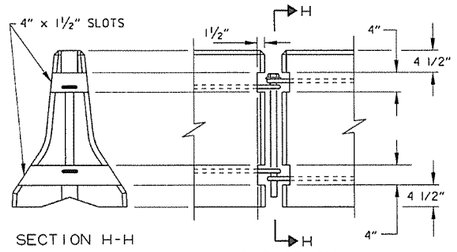

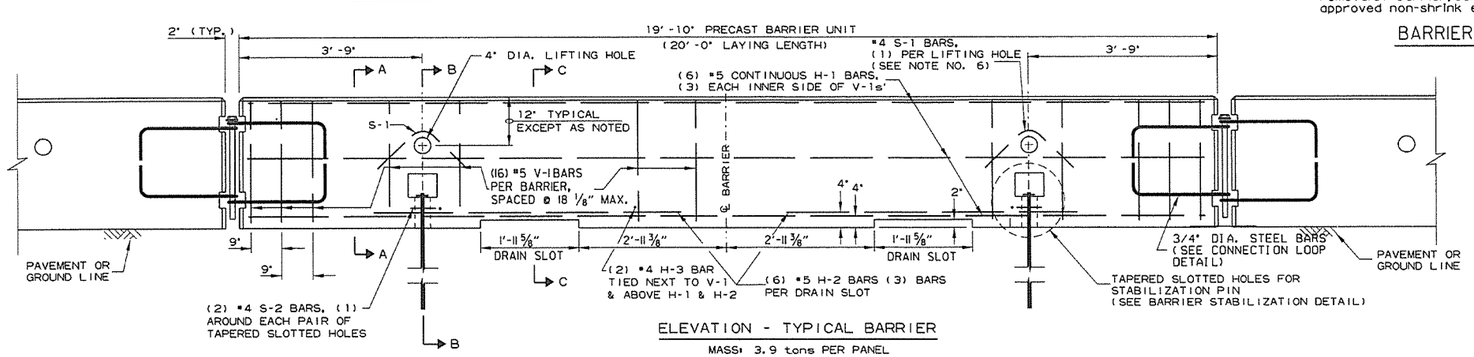

ELEVATION - TYPICAL BARRIER

MASS: 3.9 tons PER PANEL

General Notes

1. The contractor shall furnish the Precast Concrete Barrier Units and shall be responsible for the manufacture, shipment, storage, placement and removal. At the completion of the project, the precast units will remain the property of the contractor.

2. Materials shall meet the following minimum requirements:
   Concrete: 2500 psi compressive strength at 28 days.
   Reinforcing Steel: AASHTO M 31 or M 53, Grade 60
   Structural Steel: AASHTO-M270 Grade 36 shall be used for the Connection Pin, Connection Loops, and Stabilization Pins. A One Piece Pin with a 3" rounded top may be used in place of the detailed Connection Pin.
   Delineators: Delineators shall be mounted at 10' spacing on top of precast barrier.

   In applications where barrier wall is within 6 feet of a traffic lane, additional delineators shall be placed on the barrier at 10' spacing approximately one (1) foot from the top of the barrier. Delineators shall be on the AHTD Qualified Products List for Construction Concrete Barrier Markers.
   Delineator color shall be in accordance with the Manual on Uniform Traffic Control Devices.
   Payment for delineators shall be considered included in the price bid per Lin. Ft. for "Furnishing and Installing Precast Concrete Barrier". The contractor shall certify to the Engineer that the material and the design used in the precast barrier units meets the requirements as shown on this standard drawing.

3. Other Precast Concrete Barriers that have been crash tested and approved by the Federal Highway Administration to meet the requirements of NCHRP-350 test level 3 or Manual For Assessing Safety Hardware (MASH) will be accepted in lieu of the barrier shown. Drain slots shall be provided as needed or as directed by the Engineer. The Contractor shall furnish a certification of NCHRP Report 350 or Manual For Assessing Safety Hardware (MASH) compliance for any other types of precast barrier to be used. The certification shall state that the precast concrete barrier meets the requirements of NCHRP Report 350 or Manual For Assessing Safety Hardware (MASH) and include a copy of the Federal Highway Administration's (FHWA) approval letter with all attachments. Precast concrete barrier units shall be fabricated and installed in accordance with crash testing and documentation provided in the FHWA approval letter. Mixing of shapes will not be allowed in a continuous line of units.

4. Dowel holes in pavement or bridge slabs that are to remain in place shall be filled. Holes in concrete pavement and bridge slabs shall be filled with an approved non-shrink epoxy grout. Holes in asphalt pavement shall be filled with an approved asphalt joint filler. Payment for drilling and filling holes to be included in the price for various barrier items.

5. Attach Units To Roadway Surface with Stabilization Pins and to Deck Slabs using bolts when required.

6. A 4" White PVC Sleeve may be used to form the Lifting Hole and if used the Sleeve is to be left in place.

DATE	REVISION	FILMED
2-27-14	REVISED BARRIER STABILIZATION DETAIL	
10-15-09	ADDED REFERENCE TO MASH	
8-5-09	REV. NOTE 3 CONCERNING DRAIN SLOTS	
11-29-07	REVISED NOTE 3	
5-25-06	DELETED GENERAL NOTE 7	
11-18-04	REVISED BARRIER STABILIZATION DETAIL BRIDGE DECKS	
4-10-03	REVISED GENERAL NOTE 2	
8-22-02	ISSUED NEW DRAWING	

ARKANSAS STATE HIGHWAY COMMISSION

STANDARD TRAFFIC CONTROLS FOR HIGHWAY CONSTRUCTION - TEMPORARY PRECAST BARRIER

STANDARD DRAWING TC-4

Ⓐ 4 feet or greater preferred. If less than 4 feet, Precast Units shall be connected to slab (SEE BARRIER STABILIZATION DETAIL-BRIDGE DECKS STD. DRWG. TC-4)

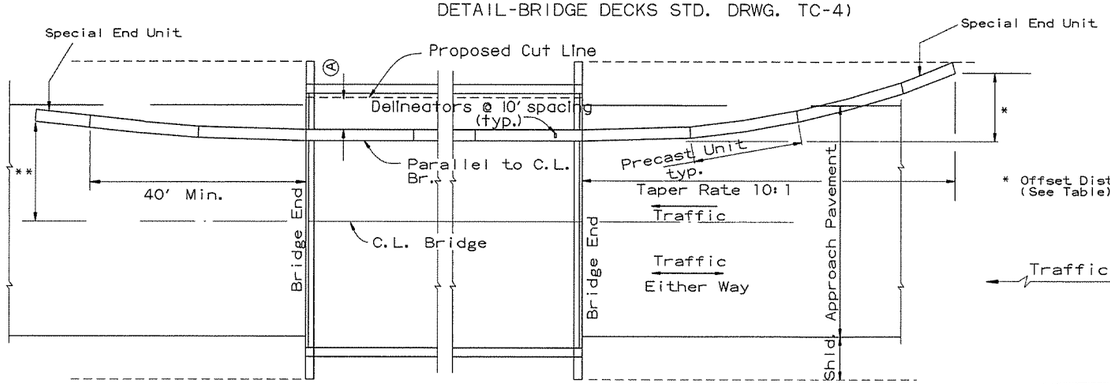

BARRIER PLACEMENT ALONG BRIDGE WITH OFFSET

No Scale

* Offset Distance (See Table)

** Offset Distance for Two Way Traffic Only

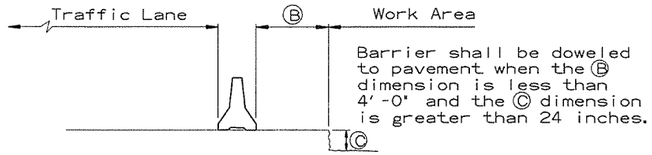

Barrier shall be doweled to pavement when the Ⓑ dimension is less than 4'-0" and the Ⓒ dimension is greater than 24 inches.

SECTION J-J

No Scale

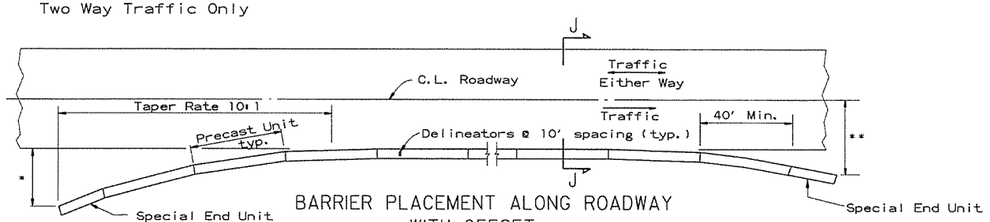

BARRIER PLACEMENT ALONG ROADWAY WITH OFFSET

No Scale

* Offset Distance (See Table)

** Offset Distance For Two Way Traffic Only

Offset Distance Table

Speed (MPH)	Offset Distance (FT.)
≤ 45	12
> 45	18

If offset distance is not attainable, then see 'Barrier Placement With Attenuator' Detail shown below.

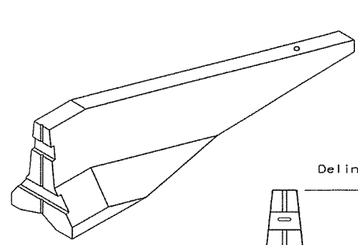

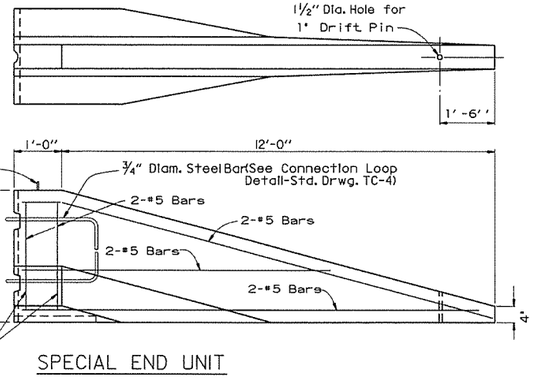

SPECIAL END UNIT

No Scale

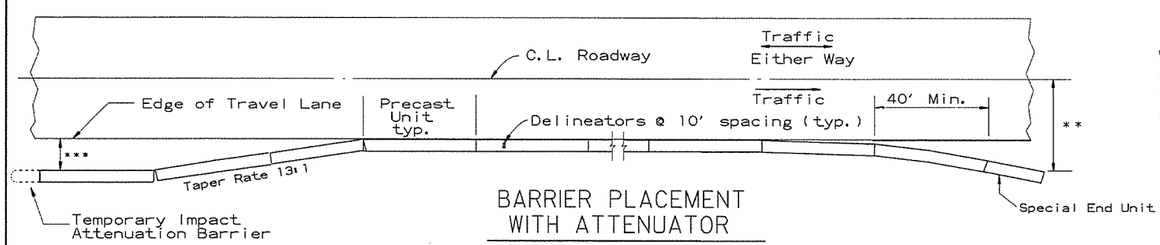

BARRIER PLACEMENT WITH ATTENUATOR

No Scale

*** Min. 3'-0" From Edge of Travel Lane to Nearest Edge of Attenuator

** Offset Distance For Two Way Traffic Only

General Notes

When shown on the Plans, the ends of the Temporary Precast Concrete Barrier shall be protected with an NCHRP-350 or Manual For Assessing Safety Hardware (MASH) approved Crash Cushion. Payment for Crash Cushions shall be made under the item of "Temporary Impact Attenuation Barrier."

DATE	REVISION	FILMED
10-15-09	ADDED REFERENCE TO MASH	
5-25-06	REVISED BARRIER PLACEMENT	
8-22-02	ISSUED NEW DRAWING	

ARKANSAS STATE HIGHWAY COMMISSION

STANDARD TRAFFIC CONTROLS FOR HIGHWAY CONSTRUCTION - TEMPORARY PRECAST BARRIER

STANDARD DRAWING TC-5

GENERAL NOTES

INSTALL A MINIMUM OF 2 UPSLOPE STAKES AND 4 DOWNSLOPE STAKES AT AN ANGLE TO WEDGE WATTLE TO BOTTOM OF DITCH.

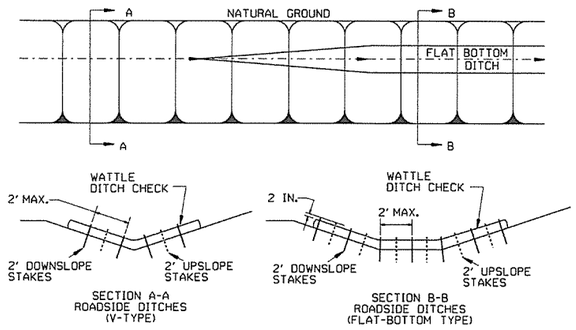

WATTLE DITCH CHECK (E-1)

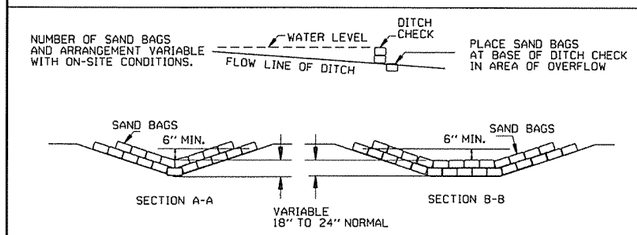

SAND BAG DITCH CHECK (E-5)

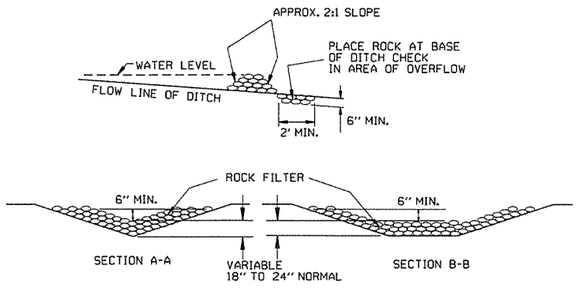

ROCK DITCH CHECK (E-6)

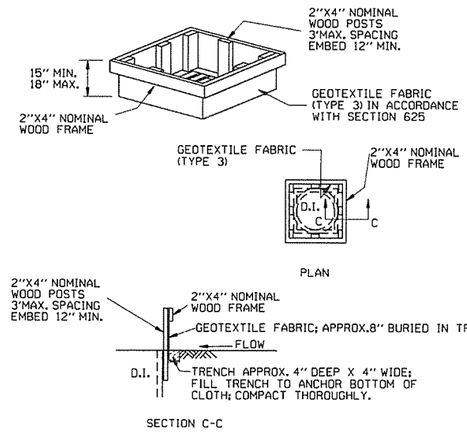

DROP INLET SILT FENCE (E-7)

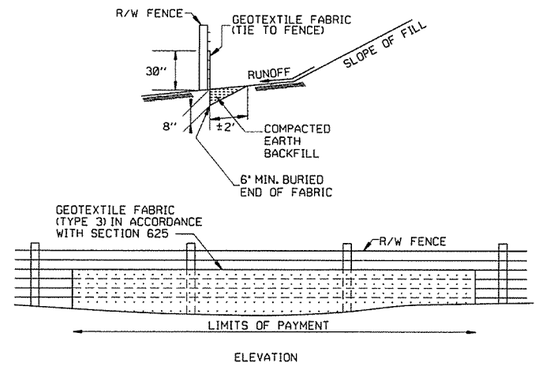

SILT FENCE ON R/W FENCE (E-4)

GENERAL NOTES

GEOTEXTILE FABRIC SHALL BE SPLICED TOGETHER WITH A SEWN SEAM ONLY AT A SUPPORT POST, OR TWO SECTIONS OF FENCE MAY BE OVERLAPPED INSTEAD. PAYMENT OF ADDITIONAL MATERIAL FOR OVERLAP WILL NOT BE MADE.

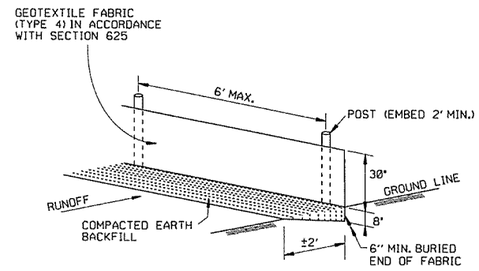

SILT FENCE (E-11)

GENERAL NOTES

GEOTEXTILE FABRIC SHALL BE SPLICED TOGETHER WITH A SEWN SEAM ONLY AT A SUPPORT POST OR TWO SECTIONS OF FENCE MAY BE OVERLAPPED INSTEAD. PAYMENT OF ADDITIONAL MATERIAL FOR OVERLAP WILL NOT BE MADE.

GENERAL NOTES

1. STRAW BALES SHALL BE INSTALLED SO THAT THE BINDINGS ARE ORIENTED AROUND THE SIDES RATHER THAN ALONG THE TOPS AND BOTTOMS OF THE BALES. THE BALES SHALL BE A MINIMUM OF 30 INCHES IN LENGTH.

2. NO GAPS SHALL BE LEFT BETWEEN BALES.

3. BALED STRAW FILTER BARRIERS COMPLETED AND ACCEPTED WILL BE MEASURED BY THE BALE IN PLACE AS AUTHORIZED BY THE ENGINEER AND WILL BE PAID FOR AT THE CONTRACT UNIT PRICE BID PER BALE FOR BALED STRAW DITCH CHECKS.

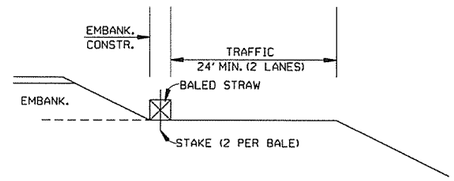

BALED STRAW FILTER BARRIER (E-2)

DATE	REVISION	FILMED
12-15-11	DELETED BALED STRAW DITCH CHECK & ADDED WATTLE DITCH CHECK	
11-18-98	ADDED NOTES	
7-02-98	ADDED BALED STRAW FILTER BARRIER (E-2)	
7-20-95	REVISED SILT FENCE E-4 AND E-11	7-20-95
7-15-94	REV. E-4 & E-11 MIN. 13" BURIED END OF FABRIC	
6-2-94	REVISED E-1,4,7 & 11; DELETED E-2 & 3	6-2-94
4-1-93	REDRAWN	
10-1-92	REDRAWN	
8-2-76	ISSUED R.D.M.	298-7-28-76

ARKANSAS STATE HIGHWAY COMMISSION

TEMPORARY EROSION CONTROL DEVICES

STANDARD DRAWING TEC-1

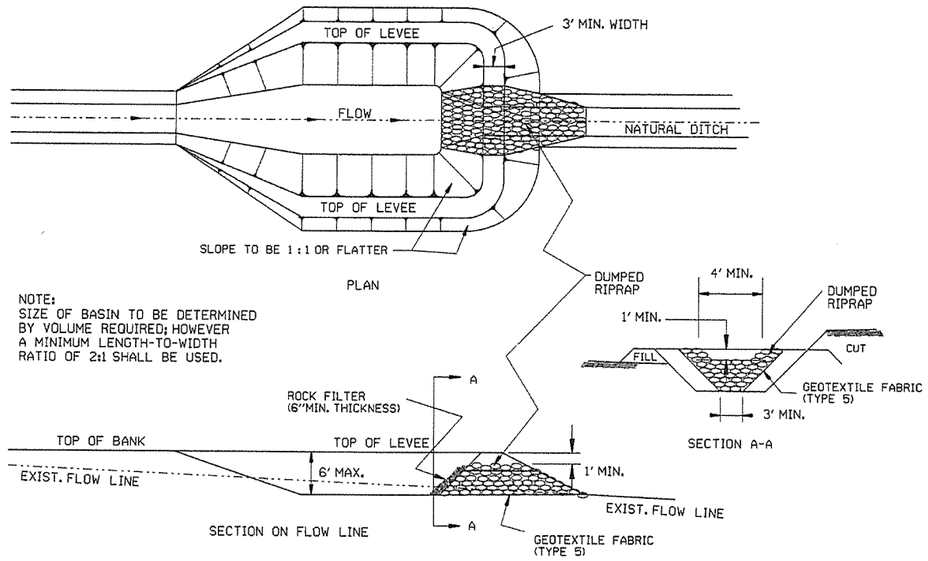

SEDIMENT BASIN WITH RIPRAP OUTLET (E-9)

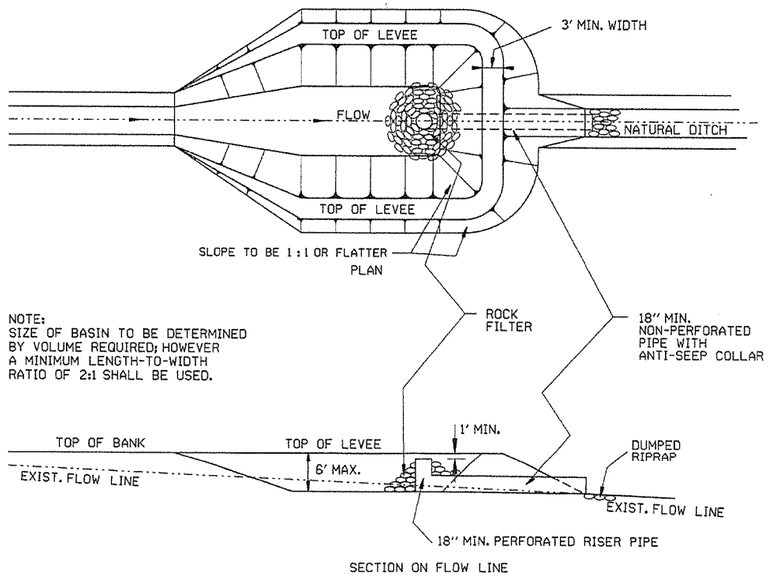

SEDIMENT BASIN WITH PIPE OUTLET (E-10)

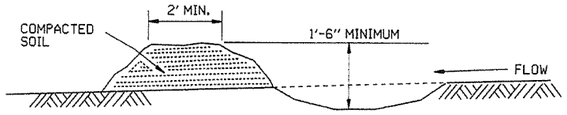

DIVERSION DITCH (E-8)

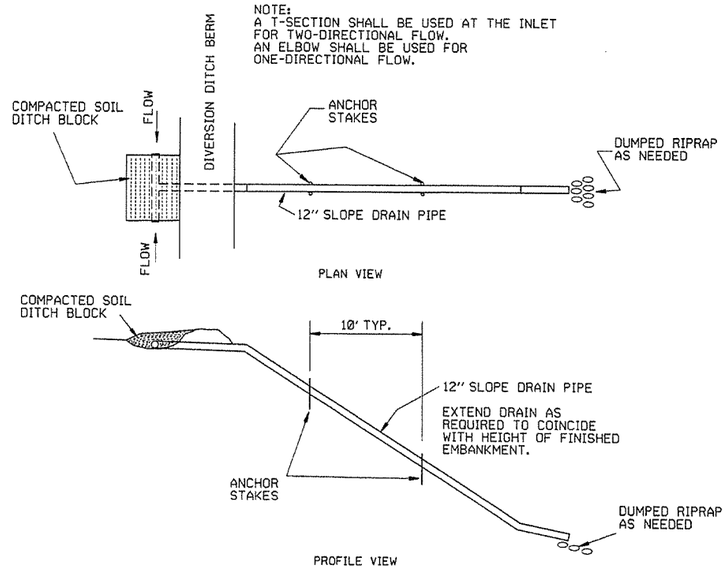

SLOPE DRAIN (E-12)

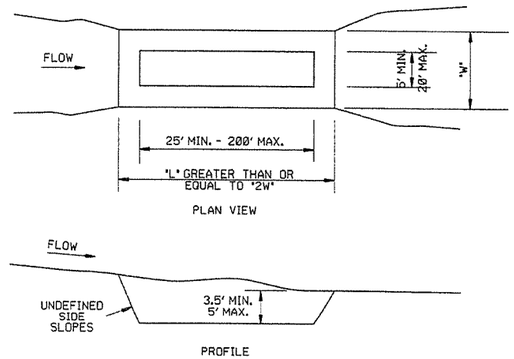

SEDIMENT BASIN (E-14)

DATE	REVISION	FILMED
6-2-94	Revised E-8 & E-12; Added E-14 & Deleted E-13	
4-1-93	ISSUED	

ARKANSAS STATE HIGHWAY COMMISSION

TEMPORARY EROSION CONTROL DEVICES

STANDARD DRAWING TEC-2

651

CLEARING AND GRUBBING

CONSTRUCTION SEQUENCE

1. PLACE PERIMETER CONTROLS (I.E. SILT FENCES , DIVERSION DITCHES, SEDIMENT BASINS, ETC.)
2. PERFORM CLEARING AND GRUBBING OPERATION.

EXCAVATION

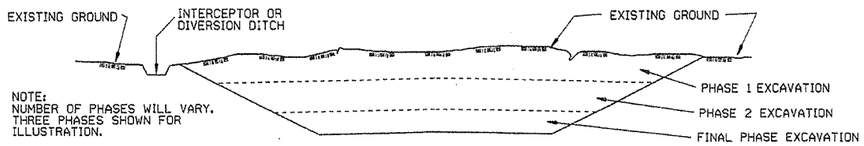

GENERAL NOTE

ALL CUT SLOPES SHALL BE DRESSED, PREPARED, SEEDED, AND MULCHED AS THE WORK PROGRESSES. SLOPES SHALL BE EXCAVATED AND STABILIZED IN EQUAL INCREMENTS NOT TO EXCEED 25 FEET, MEASURED VERTICALLY.

CONSTRUCTION SEQUENCE

1. EXCAVATE AND STABILIZE INTERCEPTOR AND/OR DIVERSION DITCHES.
2. PERFORM PHASE 1 EXCAVATION. PLACE PERMANENT OR TEMPORARY SEEDING.
3. PERFORM PHASE 2 EXCAVATION. PLACE PERMANENT OR TEMPORARY SEEDING.
4. PERFORM FINAL PHASE OF EXCAVATION. PLACE PERMANENT OR TEMPORARY SEEDING. STABILIZE DITCHES. CONSTRUCT DITCH CHECKS, DIVERSION DITCHES, SEDIMENT BASINS, OR OTHER EROSION CONTROL DEVICES AS REQUIRED.

EMBANKMENT

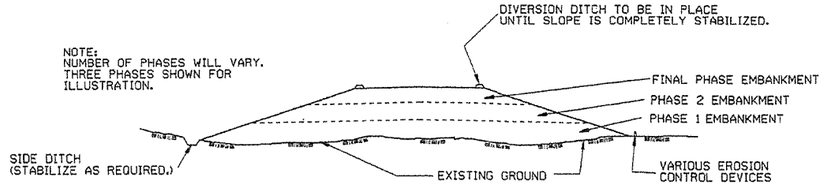

GENERAL NOTE

ALL EMBANKMENT SLOPES SHALL BE DRESSED, PREPARED, SEEDED, AND MULCHED AS THE WORK PROGRESSES. SLOPES SHALL BE CONSTRUCTED AND STABILIZED IN EQUAL INCREMENTS NOT TO EXCEED 25 FEET, MEASURED VERTICALLY.

CONSTRUCTION SEQUENCE

1. CONSTRUCT DIVERSION DITCHES, DITCH CHECKS, SEDIMENT BASINS, SILT FENCES, OR OTHER EROSION CONTROL DEVICES AS SPECIFIED.
2. PLACE PHASE 1 EMBANKMENT WITH PERMANENT OR TEMPORARY SEEDING. PROVIDE DIVERSION DITCHES AND SLOPE DRAINS IF EMBANKMENT CONSTRUCTION IS TO BE TEMPORARILY ABANDONED FOR A PERIOD OF GREATER THAN 21 DAYS.
3. PLACE PHASE 2 EMBANKMENT WITH PERMANENT OR TEMPORARY SEEDING. PROVIDE DIVERSION DITCHES AND SLOPE DRAINS IF EMBANKMENT CONSTRUCTION IS TO BE TEMPORARILY ABANDONED FOR A PERIOD OF GREATER THAN 21 DAYS.
4. PLACE FINAL PHASE OF EMBANKMENT WITH PERMANENT OR TEMPORARY SEEDING. PLACE DIVERSION DITCHES AND SLOPE DRAINS AND MAINTAIN UNTIL ENTIRE SLOPE IS STABILIZED.

DATE	REVISION	FILMED
11-03-94	CORRECTED SPELLING	
6-2-94	Drawn & Issued	6-2-94

ARKANSAS STATE HIGHWAY COMMISSION

TEMPORARY EROSION CONTROL DEVICES

STANDARD DRAWING TEC-3

stdtec3.dgn

652

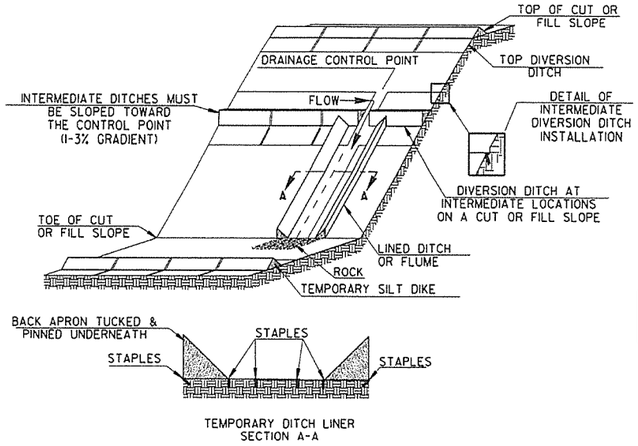

TRIANGULAR SILT DIKE INSTALLATION
FOR
DIVERSION DITCH AND/OR DITCH LINER

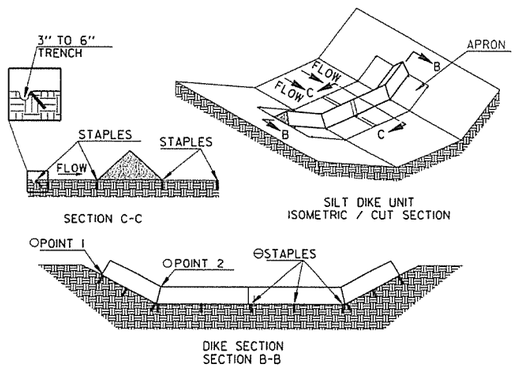

TRIANGULAR SILT DIKE INSTALLATION
FOR
ROADWAY DITCH OR DRAINAGE DITCH

○ POINT "1" MUST BE HIGHER THAN POINT "2" TO ENSURE THAT WATER FLOWS OVER THE DIKE AND NOT AROUND THE ENDS.

⊖ STAPLES SHALL BE PLACED WHERE THE UNITS OVERLAP AND IN THE CENTER OF THE UNIT AS SHOWN ON THE DIAGRAM.

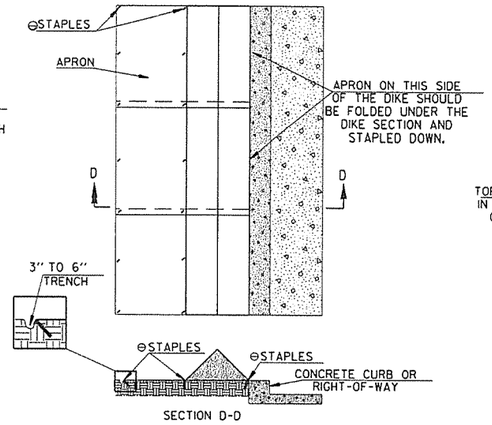

TRIANGULAR SILT DIKE INSTALLATION
FOR
CONTINUOUS BARRIER

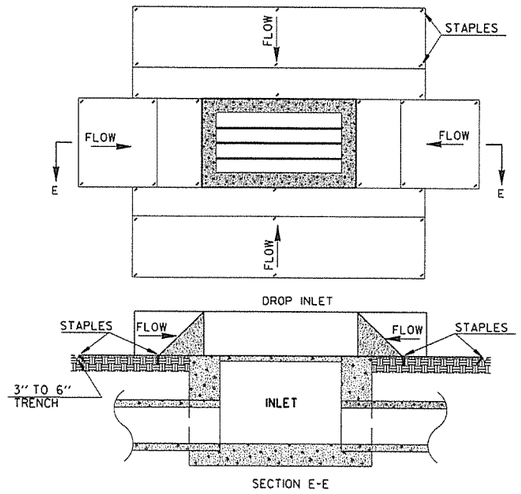

TRIANGULAR SILT DIKE INSTALLATION
FOR
DROP INLETS

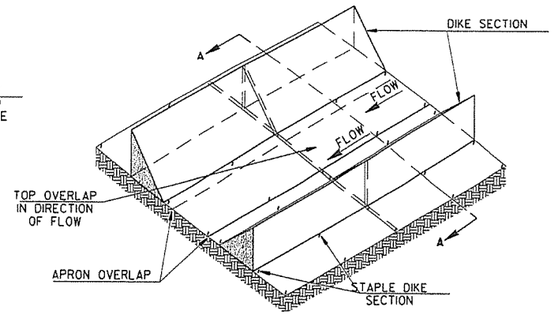

TRIANGULAR SILT DIKE INSTALLATION
FOR
TEMPORARY DITCH LINER

SYMBOLOGY

SYMBOL TO BE USED TO DENOTE DEVICE ON PLANS

NOTE: SILT DIKE SHOULD ONLY BE USED FOR DROP INLETS IN SUMP LOCATIONS.

GENERAL NOTES

1. THIS WORK SHALL CONSIST OF FURNISHING, INSTALLING, AND MAINTAINING THE TRIANGULAR SILT DIKE. THE DIKES SHALL BE USED AS A CONTINUOUS LINE BARRIER AT THE TOE OF SLOPE OR ACROSS THE ROADWAY DITCH TO CONTAIN SEDIMENT AND MINIMIZE EROSION, OR AS DIRECTED BY THE ENGINEER. THESE DIKES SHALL BE INSTALLED AND LOCATED AS SOON AS CONSTRUCTION WILL ALLOW OR AS DIRECTED BY THE ENGINEER.

2. TRIANGULAR SILT DIKE SHALL BE TRIANGULAR SHAPED HAVING A HEIGHT OF AT LEAST 8" TO 10" IN THE CENTER WITH EQUAL SIDES AND A 16" TO 20" BASE. THE TRIANGULAR SHAPED INNER MATERIAL SHALL BE URETHANE FOAM. THE OUTER COVER SHALL BE A WOVEN GEOTEXTILE FABRIC PLACED AROUND THE INNER MATERIAL & ALLOWED TO EXTEND BEYOND BOTH SIDES OF THE TRIANGLE 24" TO 36". THIS FABRIC SHOULD BE MILDEW RESISTANT, ROT-PROOF AND RESISTANT TO HEAT AND ULTRAVIOLET RADIATION MEETING REQUIREMENTS FOR SEDIMENT CONTROL IN AASHTO M288. THE DIKES SHALL BE ATTACHED TO THE GROUND WITH WIRE STAPLES. THE STAPLES SHALL BE NO. 11 GAUGE WIRE AND BE AT LEAST 6" TO 8" LONG. STAPLES SHALL BE PLACED AS SHOWN ON THESE DETAILS.

   THE CONTRACTOR SHALL INSPECT ALL DIKES AFTER EACH RAINFALL EVENT OF AT LEAST 0.5" OR GREATER. ANY DEFICIENCIES OR DAMAGE SHALL BE REPAIRED BY THE CONTRACTOR. ACCUMULATED SILT OR DEBRIS SHALL BE REMOVED AND RELOCATED AS DIRECTED BY THE ENGINEER. IF THE DIKES ARE DAMAGED OR INADVERTENTLY MOVED DURING THE SILT REMOVAL PROCESS, THE CONTRACTOR SHALL IMMEDIATELY REPLACE AFTER DAMAGE OCCURS.

3. ACCEPTED TRIANGULAR SILT DIKE, MEASURED AS PROVIDED ABOVE, WILL BE PAID FOR AT THE CONTRACT UNIT PRICE BID FOR TRIANGULAR SILT DIKE. PRICE BID WILL INCLUDE THE COST OF FURNISHING THE DIKES, INSTALLING, MAINTAINING AND REMOVAL WHEN DIRECTED BY THE ENGINEER.

DATE	REVISION	FILMED
7-26-12	REVISED GENERAL NOTE 2.	
12-15-11	ISSUED	

ARKANSAS STATE HIGHWAY COMMISSION

TEMPORARY EROSION CONTROL DEVICES

STANDARD DRAWING TEC-4

653

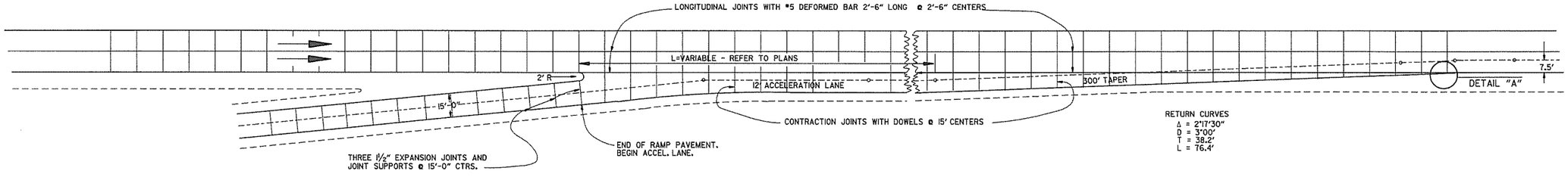

ENTRANCE RAMP

NOTE: JOINT SPACING ON THE MAIN LANES SHALL BE ADJUSTED AS NECESSARY TO CONFORM TO THESE JOINT LAYOUTS. THE MAIN LANE JOINT SPACING MAY BE REDUCED TO A 12' MINIMUM.

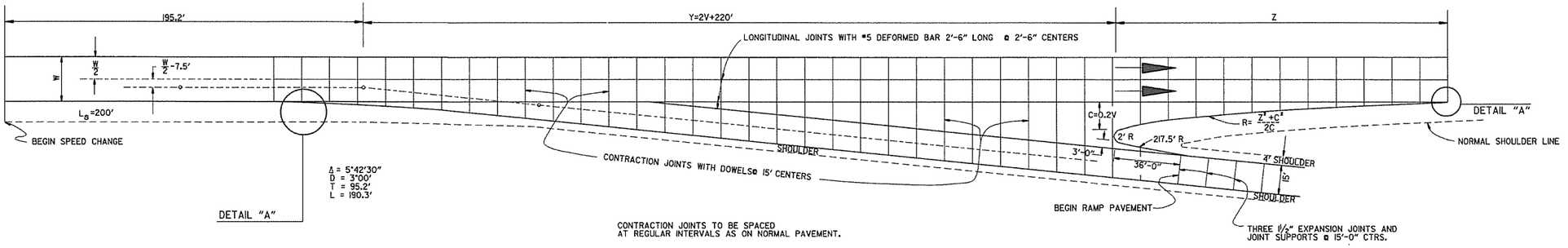

EXIT RAMP

EXIT RAMP

DESIGN SPEED V	Y	NOSE OFFSET C	LENGTH NOSE TAPER Z	RETURN RADIUS R	ADDITIONAL SURFACING SQ. YDS.
40	300.0	8.0	96.0	580.0	602.43
50	320.0	10.0	120.0	725.0	687.29
60	340.0	12.0	168.0	1182.0	790.55
70	360.0	14.0	210.0	1582.0	902.27

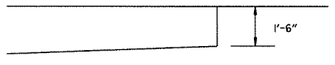

DETAIL "A"

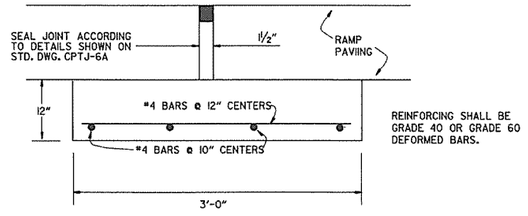

DETAIL OF EXPANSION JOINT & JOINT SUPPORT

NOTE: THE EXPANSION JOINTS SHALL BE MEASURED AND PAID FOR AS P.C.C. PAVEMENT (RAMP THICKNESS). WHEN RAMP PAVING IS ASPHALT, EXPANSION JOINT IS NOT REQUIRED.
THE JOINT SUPPORT MAY BE CONSTRUCTED WITH CLASS "A", "S", OR PAVING CONCRETE. PAYMENT FOR THE JOINT SUPPORT SHALL BE FOR THE CONTRACT UNIT PRICE BID FOR THE CLASS OF CONCRETE USED. ALL OTHER WORK AND MATERIALS REQUIRED FOR THE CONSTRUCTION OF THE JOINT SUPPORT SHALL BE INCLUDED IN THE PRICE BID FOR THE ABOVE ITEMS.

DATE	REVISION	DATE FILM'D
8-22-02	DELETED NOTE	
11-16-01	CORRECTED SPELLING ON ENTRANCE RAMP NOTE	
5-13-99	ADDED, EDITED AND DELETED NOTES	
11-03-94	ADDED NOTE RE: REINF. BARS	
10-1-92	ADDED DETAIL A & OTHER MINOR CHANGES	10-1-92
1-25-90	REVISED EXPANSION JOINT	1-25-90
7-15-88	CONFORM'D TO 1988 SPECIFICATIONS	65C-7-15-88
3-2-81	ISSUED	511-10-2-72

ARKANSAS STATE HIGHWAY COMMISSION

DETAILS OF STANDARD TURNOUT FOR ENTRANCE & EXIT RAMPS (NON-REINFORCED)

STANDARD DRAWING TR-1A

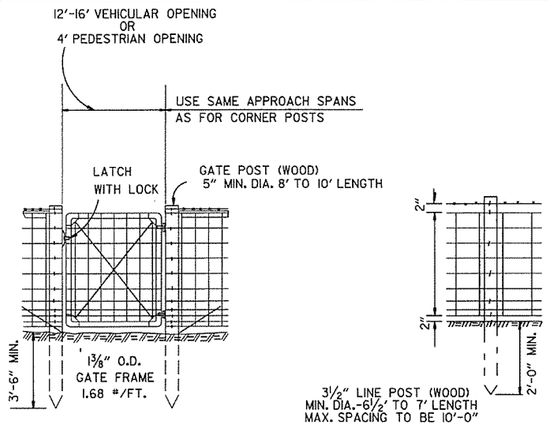

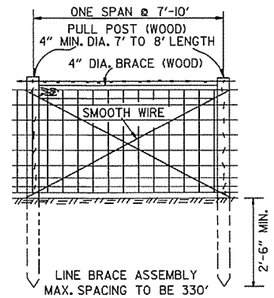

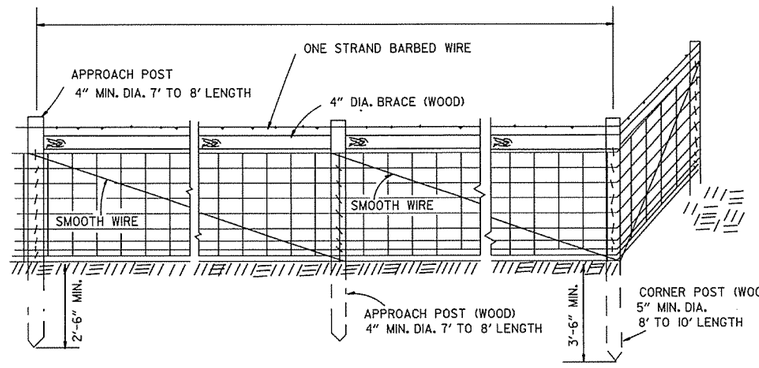

NOTE: STAPLE AT LEAST TOP, BOTTOM AND ALTERNATE WIRES OF WOVEN FABRIC FOR WOOD LINE POSTS.

TYPE A FENCE (WOOD POSTS)

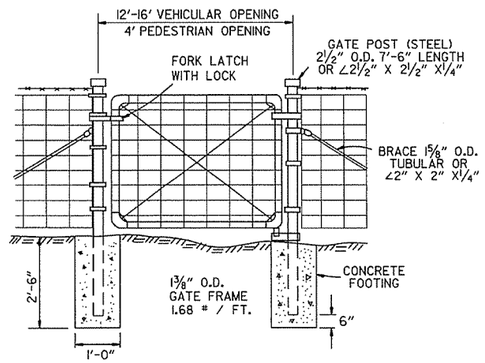

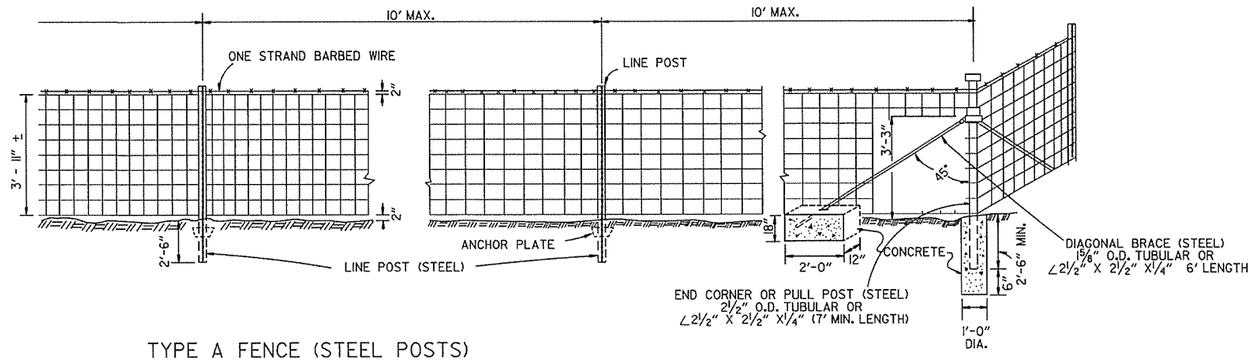

TYPE A FENCE (STEEL POSTS)

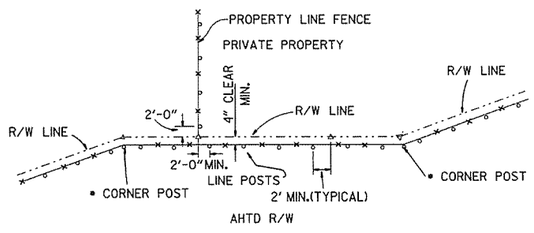

•NOTE: RIGHT-OF-WAY MONUMENTS SHALL NOT BE DISTURBED BY FENCE CONSTRUCTION. CORNER POSTS SHALL BE CONSTRUCTED 2' FROM THE RIGHT-OF-WAY MONUMENT OR AS DIRECTED BY THE ENGINEER.

△ - R/W MONUMENTS
○ - FENCE POSTS

RIGHT-OF-WAY FENCE LOCATION

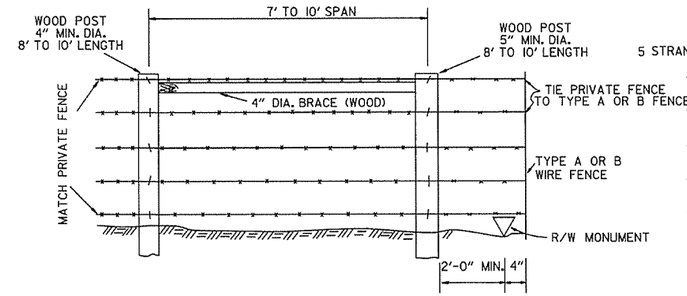

WHERE EXISTING PRIVATE FENCE CONSISTS OF STEEL POSTS, USE END POST ASSEMBLY AS SHOWN WITH TYPE A FENCE OR OTHER END POST ASSEMBLY AS APPROVED BY THE ENGINEER.

PRIVATE FENCE TERMINAL INSTALLATION

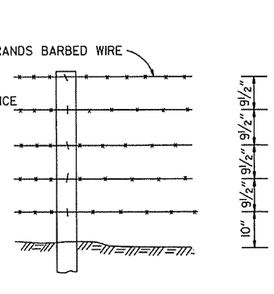

SPACING AND SIZE OF POSTS FOR TYPE B FENCE SHALL BE THE SAME AS TYPE A FENCE.

TYPE B FENCE

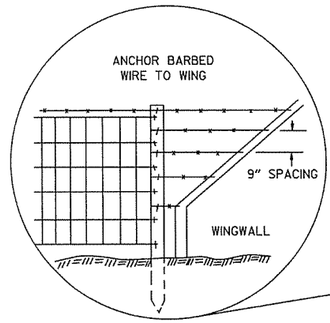

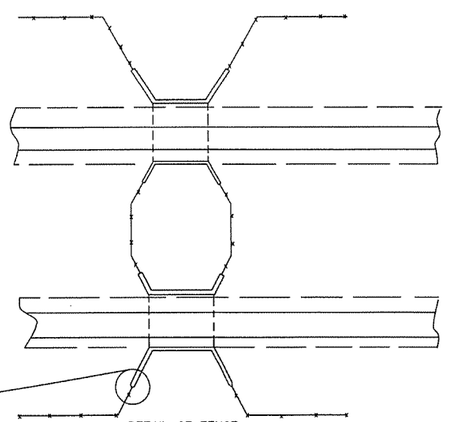

DETAIL OF FENCE CONSTRUCTION AT LARGE CULVERTS (5' IN HEIGHT AND OVER)

GENERAL NOTES:

STEEL LINE POSTS SHALL BE GALVANIZED, 7 FT. IN LENGTH.

TUBULAR END, CORNER, PULL, OR DIAGONAL BRACES MUST CONFORM TO THE DIMENSIONS AND WEIGHTS SPECIFIED ON STANDARD DRAWING WF-3 (CHAIN LINK).

THE CONTRACTOR SHALL FURNISH AT LEAST 25% OF WOOD LINE POSTS OF 7' LENGTHS IN ORDER TO PROVIDE SUFFICIENT SET IN SOFT GROUND OR SMALL DEPRESSIONS.

GATE HINGES AND LATCHES WITH LOCKS TO BE OF A TYPE APPROVED BY THE ENGINEER. DRIVEWAY GATES, EITHER SINGLE 12' OR 16' OR DOUBLE 6' TO 8' OPENINGS OF THE SAME TYPE AS THE PEDESTRIAN GATE, SHALL BE INSTALLED ON THE RIGHT SIDE OF EACH THROUGH LANE ROAD AT LARGE CULVERTS OR BRIDGE CROSS FENCE FOR USE BY MAINTENANCE EQUIPMENT. LOCATION OF GATES TO BE SHOWN ON THE PLANS OR AS DESIGNATED BY THE ENGINEER.

AT STREAM CROSSINGS THE FENCE SHALL NOT BE CONSTRUCTED ACROSS LARGE STREAMS. WHERE CLEARANCE IS SUFFICIENT FROM THE TOP OF BANK TO THE BRIDGE STRUCTURE, A CROSS CONNECTION SHALL BE CONSTRUCTED BETWEEN THE FENCE ON EACH SIDE OF THE ROAD. WHERE THE CLEARANCE IS NOT SUFFIEICNT, THE FENCE SHALL BE TERMINATED WITH CROSS CONNECTIONS AND END POSTS ADJACENT TO THE BRIDGE ABUTMENTS OR CULVERT WINGWALLS.

SPLICE FOR WOVEN WIRE BETWEEN PULL POST SHALL BE BY THE "WESTERN UNION METHOD" AS DESCRIBED AS FOLLOWS: THE VERTICAL WIRES FOR EACH END OF THE FENCE FABRIC SHALL BE PLACED SIDE BY SIDE AND THE PROJECTING HORIZONTAL WIRES SHALL BE WRAPPED A MINIMUM OF 4 TIMES AROUND THE HORIZONTAL WIRES OF THE FIRST WEB.

SPLICE FOR BARBED WIRE BETWEEN PULL POST ASSEMBLY SHALL BE BY THE "EYE METHOD": AS DESCRIBED AS FOLLOWS: THE ENDS OF THE BARBED WIRE SHALL BE BENT TO FORM A LOOP. THE LOOPS SHALL BE CONNECTED. AFTER THE LOOPS ARE CONNECTED THE ENDS OF THE WIRE SHALL BE WRAPPED AROUND THE PROJECTING WIRE A MINIMUM OF 4 TIMES FOR EACH WIRE LOOP.

DATE	REVISION	DATE FILMED
8-22-02	REVISED GENERAL NOTES	
10-18-96	REVISED ASTM REF. TO AASHTO	
11-22-95	REVISED R-O-W LOCATION DETAIL	
6-2-94	ADDED CORNER POST NOTE	6-2-94
8-5-93	REVISED R-O-W LOCATION DETAIL	8-5-93
10-1-92	ADDED STAPLE NOTE	
8-2-90	REV'D PULL POST LENGTH	
11-30-89	DELETED CLASS CONC.	
7-15-88	ADDED SPLICE NOTES	
7-15-88	ADDED HEIGHT DIMENSION	
4-3-87	REVISED VARIOUS NOTES	
	AND GENERAL NOTES	
11-1-84	MAX. POST SPACING	
1-4-83	MIN. DIA. LINE POST	
10-2-72	REVISED & REDRAWN	

ARKANSAS STATE HIGHWAY COMMISSION

WIRE FENCE
TYPE A AND B

STANDARD DRAWING WF-1

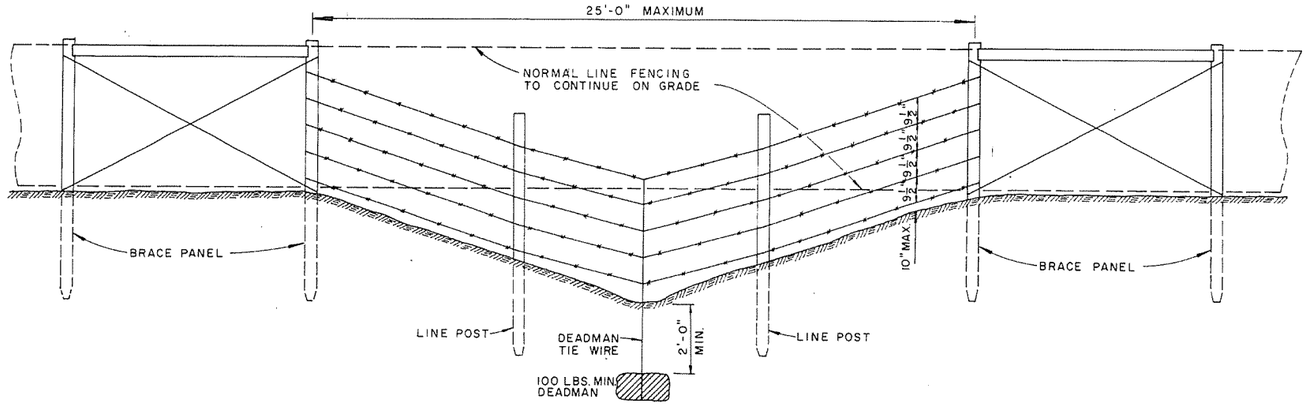

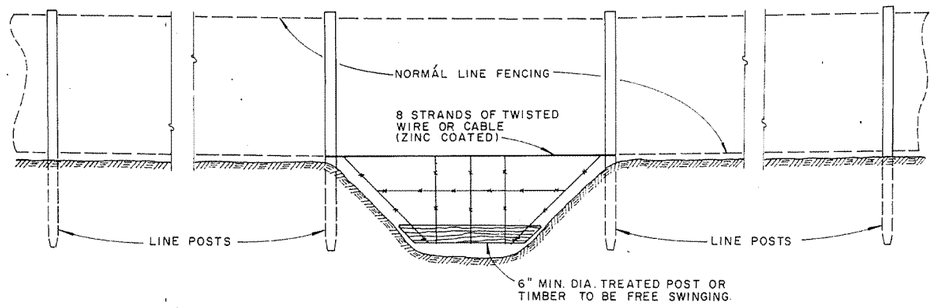

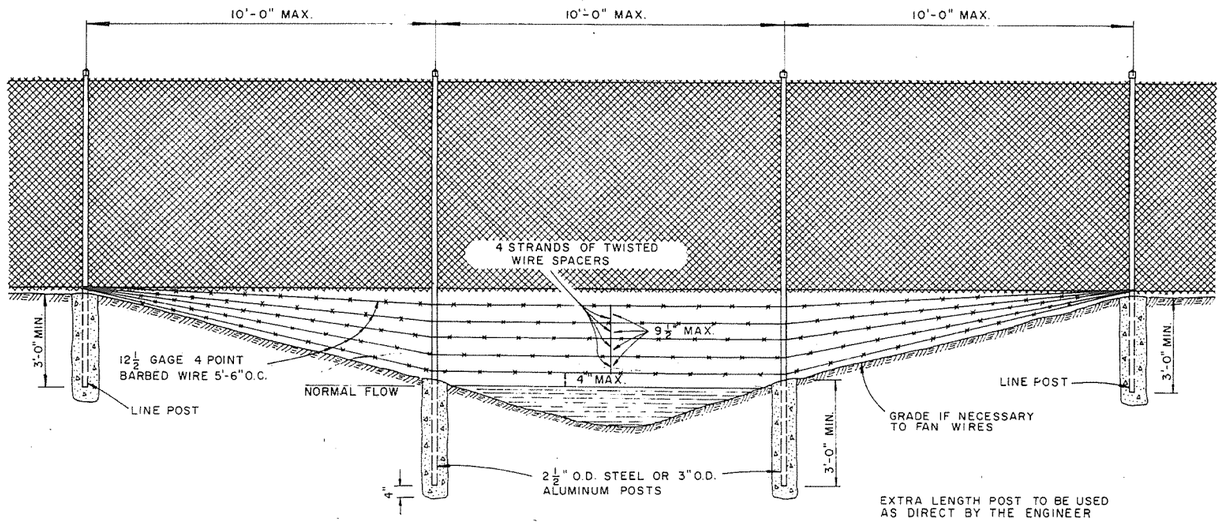

GENERAL NOTES:

THESE INSTALLATIONS TO BE USED WHERE NORMAL FENCING INSTALLATION WOULD CAUSE THE COLLECTING OF DRIFT IN THE CHANNEL OR THE DEPRESSION WILL NOT PERMIT NORMAL INSTALLATION. INSTALLATIONS WILL BE MADE ONLY WHERE DIRECTED BY THE ENGINEER.

WHEN A FENCE LINE APPROACHES A DITCH, GULLY OR DEPRESSION, THE LAST POST ON LEVEL GROUND SHALL BE PLACED CLOSE ENOUGH TO THE EDGE OF THE DROP OFF THAT THE FENCE MAY BE STRUNG TO THE POST IN THE DEPRESSION WITHOUT TOUCHING THE GROUND.

IN TERRAIN OF SUCH EXTREME IRREGULARITY THAT MINOR GRADING WILL NOT BE FEASIBLE, THE NORMAL FENCE SHALL CONTINUE ON GRADE AND THE GULLIES OR DEPRESSIONS TREATED BY AUXILIARY FENCES AS SHOWN.

PAYMENT FOR THE TYPE INSTALLATION USED WILL NOT BE MADE DIRECTLY BUT WILL BE INCLUDED IN THE CONTRACT UNIT PRICE BID FOR WIRE FENCE OR CHAIN LINK FENCE.

DATE	REVISION	DATE FILM'D.
4-20-79	REVISED TOP RAIL & TENSION WIRE	696-4-20-79
10-2-72	REVISED & REDRAWN	529 10-2-72

ARKANSAS STATE HIGHWAY COMMISSION

WIRE FENCE WATER GAPS

STANDARD DRAWING

WF-2

1M—11-71—67001—PPASC

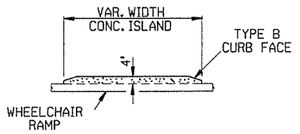

CONCRETE ISLAND DETAIL

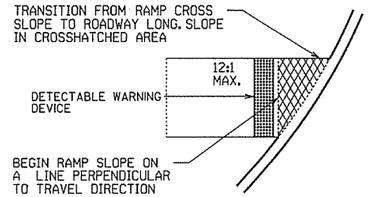

SLOPE TRANSITION DETAILS

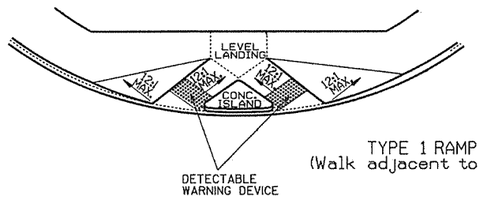

TYPE 1 RAMP
(Walk adjacent to curb)

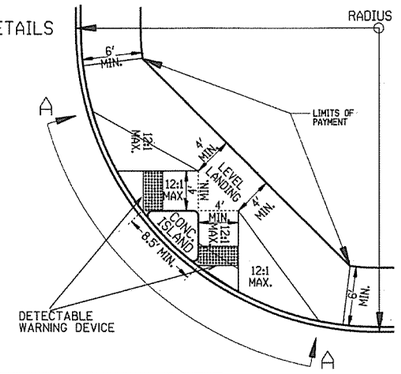

SECTION A-A

TYPE 1 RAMP DIMENSIONS AND QUANTITIES

RADIUS 'R' FEET	DISTANCE 'X' FEET	DISTANCE 'Y' FEET	LENGTH 'L' FEET	RAMP AREA 'A' SQ. YD.
15	11.67	18.82	32.18	26.21
20	11.52	22.28	35.46	30.07
25	11.43	26.60	38.77	33.80
30	11.37	30.26	40.93	36.90
35	11.33	33.51	43.11	39.77
40	11.30	36.45	45.26	42.45
45	11.27	39.16	47.34	44.97
50	11.25	41.69	49.36	47.35
55	11.24	44.07	51.31	49.63
60	11.22	46.33	53.21	51.80

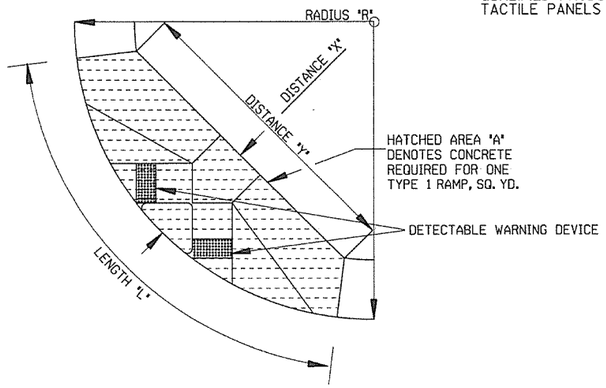

NOTE:
THE CROSS SLOPE OF THE RAMPS, LEVEL LANDINGS, AND SIDEWALKS SHALL NOT EXCEED 2.0% UNLESS REQUIRED TO MATCH STREET LONGTITUDINAL GRADE.

GENERAL NOTES FOR DETECTABLE WARNING DEVICES

THE DETECTABLE WARNING DEVICE SHALL BE LOCATED SO THAT THE NEAREST EDGE OF THE DEVICE IS 6 TO 8 INCHES FROM THE FACE OF THE CURB.
TRUNCATED DOMES IN THE DETECTABLE WARNING SURFACE SHALL MEET THE REQUIREMENTS OF THE GEOMETRIC CONFIGURATION SHOWN.
DOMES SHALL BE ALIGNED ON A SQUARE GRID IN THE PREDOMINANT DIRECTION OF TRAVEL TO PERMIT WHEELS TO ROLL BETWEEN DOMES.
DETECTABLE WARNING DEVICE SHALL BE 24 INCHES IN THE DIRECTION OF TRAVEL AND EXTEND THE FULL WIDTH OF THE CURB RAMP OR FLUSH SURFACE.
DETECTABLE WARNING DEVICE SHALL BE ON THE AHTD QUALIFIED PRODUCTS LIST FOR CAST-IN-PLACE TACTILE PANELS (ADA DETECTABLE WARNING).

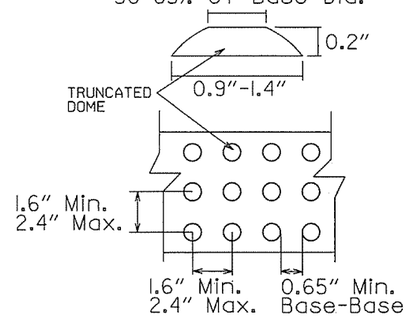

DETECTABLE WARNING DEVICE DETAIL

GENERAL NOTES:

IN NEW CONSTRUCTION, UNLESS OTHERWISE INDICATED ON THE PLANS, WHEELCHAIR RAMPS ARE TO BE PROVIDED AT ALL CORNERS OF CURBED STREET INTERSECTIONS AND MID-BLOCK CROSSWALK LOCATIONS.
IN ALTERATIONS WHEELCHAIR RAMPS ARE TO BE PROVIDED AT CURBED STREET INTERSECTIONS WITH PEDESTRIAN TRAFFIC AND MID-BLOCK CROSSWALK LOCATIONS.
THE LENGTH OF THE RAMP SHALL BE SUCH THAT THE SLOPE DOES NOT EXCEED 12:1. THE SURFACE TEXTURE OF THE RAMP SHALL CONFORM TO A CLASS 6 FINISH ACCORDING TO SECTION 802.19.
THE NORMAL GUTTER GRADE SHALL BE MAINTAINED THROUGH THE AREA OF THE RAMP.
ALL PAVEMENT MARKINGS SHALL BE IN ACCORDANCE WITH THE LATEST EDITION OF THE MANUAL OF UNIFORM TRAFFIC CONTROL DEVICES PUBLISHED BY THE FEDERAL HIGHWAY ADMINISTRATION.
THE MINIMUM THICKNESS OF THE RAMP, WALK, & LANDING SHALL BE 4".
THE MINIMUM WIDTH OF THE RAMPS SHALL BE THE WALK WIDTH OR 36", WHICHEVER IS GREATER.
RAMPS SHALL BE MODIFIED AS NECESSARY TO INSURE THAT THEY ARE PARALLEL TO A LINE DRAWN FROM THE CENTER OF ONE RAMP TO THE CENTER OF THE RAMP ON THE OPPOSITE SIDE OF THE INTERSECTION.
THE DIMENSIONS AND QUANTITIES SHOWN ON THIS DRAWING ARE FOR A 90° INTERSECTION ONLY. DIMENSIONS AND QUANTITIES FOR SKEWED INTERSECTIONS WILL VARY, AND ARE TO BE DETERMINED BY THE ENGINEER.

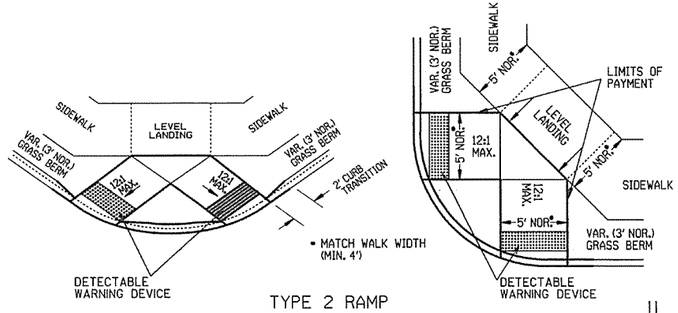

TYPE 2 RAMP

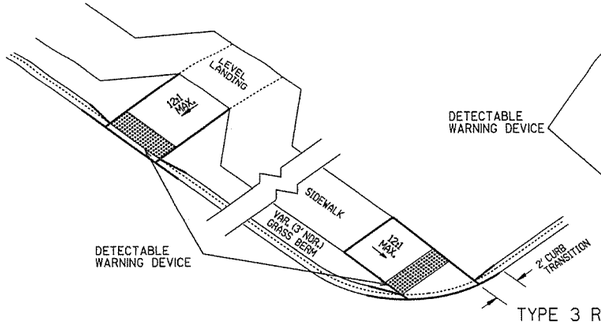

TYPE 3 RAMP

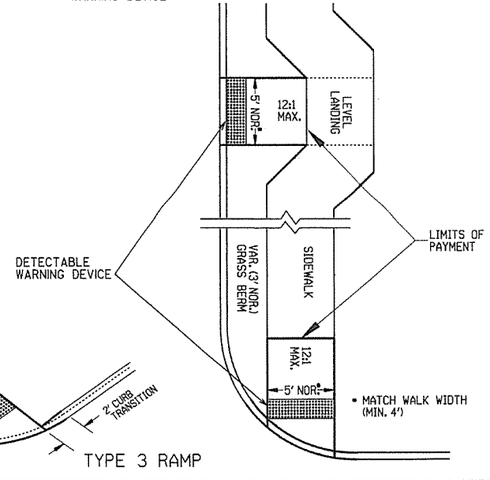

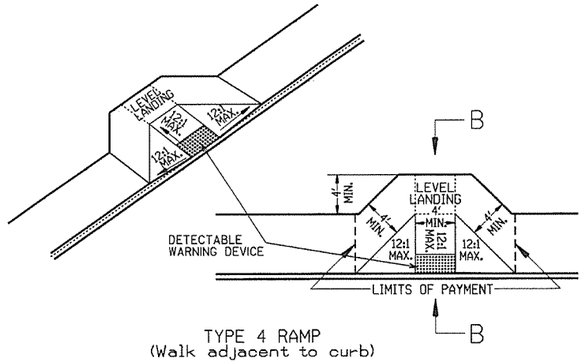

TYPE 4 RAMP
(Walk adjacent to curb)

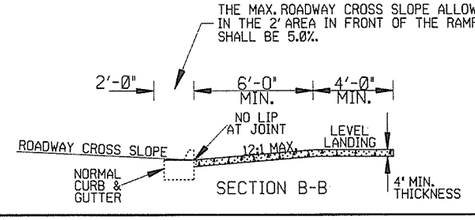

SECTION B-B

RAMP SELECTION CRITERIA

FIRST CHOICE	TYPE 1	CORNER LOCATIONS WITH THE WALK ADJACENT TO THE CURB (BOTH NEW CONSTRUCTION AND ALTERATIONS).
	TYPE 2	CORNER LOCATIONS WITH THE WALK OFFSET FROM THE CURB A DISTANCE INSUFFICIENT TO ALLOW THE REQUIRED RAMP SLOPE (BOTH NEW CONSTRUCTION AND ALTERATIONS).
	TYPE 3	CORNER LOCATIONS WITH THE WALK OFFSET FROM THE CURB A DISTANCE SUFFICIENT TO ALLOW THE REQUIRED RAMP SLOPE (BOTH NEW CONSTRUCTION AND ALTERATIONS).
	TYPE 4	TANGENT LOCATIONS (BOTH NEW CONSTRUCTION AND ALTERATIONS).
SECOND CHOICE	TYPE 5	TANGENT LOCATIONS (ALTERATIONS ONLY).
THIRD CHOICE	TYPE 6	CORNER LOCATIONS (ALTERATIONS ONLY). THIS RAMP MAY BE USED ONLY IF THE TYPE 5 RAMPS CANNOT BE PLACED AT THE ENDS OF THE RADIUS.
FOURTH CHOICE		IF SITE CONSTRAINTS PREVENT THE CONSTRUCTION OF ANY OF THE TYPES LISTED, THEN AND ONLY THEN CAN THE 12:1 MAX. SLOPE ON THE RAMP BE EXCEEDED TO PROVIDE ACCESS TO THE STREET LEVEL (ALTERATIONS ONLY). THE SLOPE CAN BE STEEPENED TO A 10:1 MAX. FOR A MAX. LENGTH OF 5' OR A 8:1 MAX. FOR A MAX. LENGTH OF 2'. SLOPES STEEPER THAN 8:1 ARE NOT ALLOWED UNDER ANY CIRCUMSTANCES.

NOTE: IN ALTERATIONS, THE SELECTION OF THE TYPE OF WHEELCHAIR RAMP TO BE CONSTRUCTED SHALL BE BASED ON THE AMOUNT OF RIGHT-OF-WAY AVAILABLE, AND ON THE PRESENCE OF OTHER SITE CONSTRAINTS (UTILITIES, BUILDINGS, ETC.). THE TABLE ABOVE LISTS THE ORDER IN WHICH THE RAMPS ARE TO BE CONSIDERED.

AN ALTERATION IS DEFINED AS A PROJECT THAT CHANGES OR AFFECTS THE USE OF A PEDESTRIAN PATHWAY (OVERLAYS, SIGNALIZATION PROJECTS, ETC.) BUT DOES NOT REQUIRE THE PURCHASE OF ADDITIONAL RIGHT-OF-WAY. ALL PROJECTS THAT REQUIRE THE PURCHASE OF ADDITIONAL RIGHT-OF-WAY WILL USUALLY BE CONSIDERED NEW CONSTRUCTION FOR THE PURPOSES OF THE CHART ABOVE.

DATE	REVISION	DATE FILM
11-10-05	REVISED TO NEW SIDEWALK POLICY	
10-9-03	REVISED GEN. NOTES & ADDED NOTE	
4-10-03	REV. DETECTABLE WARNING DEVICES	
8-22-02	ADD DETECTABLE WARNING DEVICES	
3-30-00	ADD.SLOPE TRANS. & REV. ISL. DIMS.	
11-18-98	REVISED NOTES	
8-12-98	REVISED TEXTURE	
7-02-98	REDRAWN & REISSUED	10-18-96
10-18-96	CORRECTED DIMENSIONS	5-24-90
5-24-90	FROM@1TO2%MAX.SLOPES	652-7-15-88
7-15-88	ADJUSTED MAX. SLOPE	-------
7-14-88	INCLUD."CONC. ISLD."IN PAY ITEM	299-7-28-76
6-02-76	ISSUED-P.H.D.	

ARKANSAS STATE HIGHWAY COMMISSION

WHEELCHAIR RAMPS
NEW CONSTRUCTION
AND ALTERATIONS

STANDARD DRAWING WR-1

FED. ROAD No.	STATE	FED. AID PROJECT	SHEET NO.	TOTAL SHEETS
			657	
JOB No.				

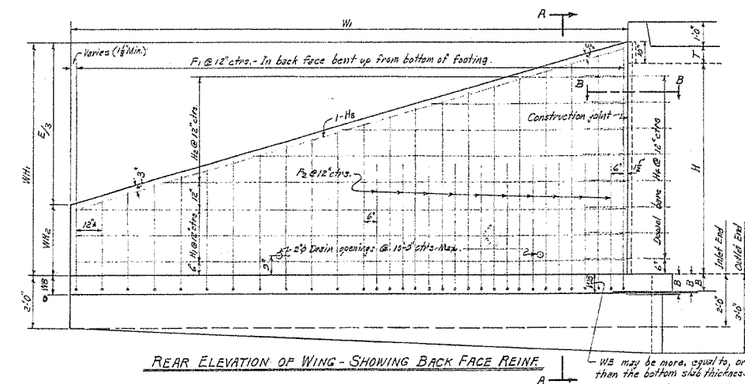

REAR ELEVATION OF WING - SHOWING BACK FACE REINF.

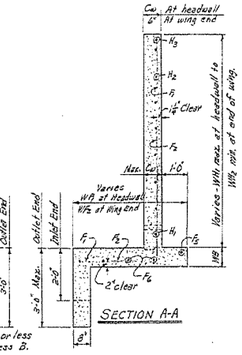

SECTION A-A

W18 may be more, equal to, or less than the bottom slab thickness B.

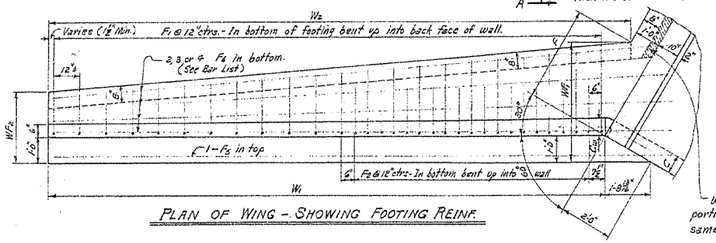

PLAN OF WING - SHOWING FOOTING REINF.

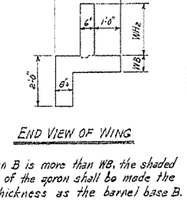

END VIEW OF WING

When B is more than W18, the shaded portion of the apron shall be made the same thickness as the barrel base B.

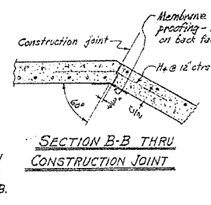

SECTION B-B THRU CONSTRUCTION JOINT

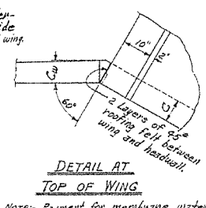

DETAIL AT TOP OF WING

Note:- Payment for membrane waterproofing and roofing felt to be included in the price bid for Class S Concrete.

WING DIMENSIONS

CLEAR HEIGHT OF BOX	THICKNESS OF WING FOOTING	THICKNESS OF WING AT HEADWALL = C	WINGWALL HEIGHTS AT HEADWALL	WINGWALL HEIGHTS AT END OF WING	WIDTHS OF WING FOOTINGS AT HEADWALL	WIDTHS OF WING FOOTINGS AT END OF WING	PERPENDICULAR FOOTING DIMENSION F	PERPENDICULAR DIST. FROM HAUL TO END OF WING E	LENGTH OF WING WALLS	INSIDE FOOTING DIMENSION	* QUANTITY PER WING CLASS S CONCRETE INLET END	* QUANTITY PER WING CLASS S CONCRETE OUTLET END
H	WB	Cw	WH1	WH2	WF1	WF2	F	E	W1	W2	CU.YD.	CU.YD.
2'	7"	6"	2'-10"	2'-8"	2'-4"	2'-0"	0'-11⅞"	6'-6"	7'-6"	7'-1½"	0.869	0.986
3'	7"	6"	3'-10"	3'-8"	2'-8"	2'-4"	1'-4⅜"	8'-6"	9'-9⅜"	9'-3½"	1.338	1.968
4'	7"	6"	4'-10"	4'-8"	3'-0"	2'-8"	1'-8"	10'-6"	12'-1⅝"	12'-1⅝"	1.868	2.027
5'	7"	6"	5'-10"	5'-8"	3'-4"	2'-10½"	2'-1⅜"	12'-6"	14'-5½"	14'-7⅛"	2.578	2.668
		7"	5'-10"	5'-8"	3'-6"	2'-11½"	2'-1⅜"	12'-6"	14'-5⅝"	14'-7⅛"	2.582	2.772
6'	8"	7"	6'-10"	6'-8"	3'-8"	3'-2"	2'-2½"	14'-6"	16'-9"	17'-1⅝"	3.940	3.661
		7½"	6'-10"	6'-8"	3'-8"	3'-2"	2'-2½"	14'-6"	16'-9"	17'-1½"	3.611	3.732
		8"	6'-10"	6'-8"	3'-8"	3'-2"	2'-2½"	14'-6"	16'-9"	17'-1½"	3.582	3.803
7'	8½"	7½"	7'-10"	7'-8"	4'-2"	3'-6"	2'-5½"	16'-6"	19'-0½"	19'-3½"	4.505	4.758
		8"	7'-10"	7'-8"	4'-2"	3'-6"	2'-5½"	16'-6"	19'-0⅝"	19'-3⅝"	4.597	4.851
8'	9"	8"	8'-10"	8'-8"	4'-8"	3'-10"	2'-8½"	18'-6"	21'-4⅝"	22'-0"	5.761	6.049

* Quantity per wing does not include headwall or that portion of apron or toewall for the length W3.

APRON DIMENSION W3

W3 = (OW - 2F)

CLEAR SPAN	CLEAR HEIGHT	FOOTING DIMENSION	SINGLE BARREL CULVERT		DOUBLE BARREL CULVERT		TRIPLE BARREL CULVERT		QUADRUPLE BARREL CULVERT		QUINTUPLE BARREL CULVERT	
S	H	2 F	OW	W3	OW	W3	OW	W3	OW	W3	OW	W3
4'	2'	1'-11½"	5'-0"	3'-0⅛"	9'-8"	7'-8⅛"	14'-4"	12'-8⅛"	19'-0"	17'-0⅛"	23'-8"	21'-8⅛"
	3'	2'-6⅝"	5'-0"	2'-3⅜"	9'-8"	6'-11⅛"	14'-4"	11'-7⅛"	19'-0"	16'-3⅛"	23'-8"	20'-11⅛"
	4'	3'-6"	5'-0"	1'-6"	9'-8"	6'-2"	14'-4"	10'-10"	19'-0"	15'-6"	23'-8"	20'-2"
	5'	4'-5⅜"	5'-0"	0'-8⅛"	9'-8"	5'-4⅛"	14'-4"	10'-0⅛"	19'-0"	14'-8⅛"	23'-8"	19'-9⅛"
	6'	5'-0½"	5'-2"	0'-11½"	9'-11"	4'-10⅝"	14'-8"	9'-7⅛"	19'-5"	14'-3⅛"	24'-2"	19'-1⅝"
5'	3'	2'-8⅜"	6'-0"	3'-3⅝"	11'-8"	8'-11⅛"	17'-4"	14'-7⅛"	23'-0"	20'-3⅛"	28'-8"	25'-11⅛"
	4'	3'-6"	6'-0"	2'-6"	11'-8"	8'-2"	17'-4"	13'-10"	23'-0"	19'-6"	28'-8"	25'-2"
	5'	4'-5⅜"	6'-0"	1'-8⅜"	11'-8"	7'-4⅛"	17'-4"	13'-0⅛"	23'-0"	18'-8⅛"	28'-8"	24'-4⅛"
	6'	5'-0½"	6'-2"	1'-1½"	11'-11"	6'-10⅝"	17'-8"	12'-7⅛"	23'-5"	18'-0⅝"	29'-2"	24'-1⅛"
	7'	6'-2⅝"	6'-3"	0'-0½"	12'-1"	5'-10⅝"	17'-11"	11'-8⅛"	23'-9"	17'-1⅛"	29'-7"	23'-4⅛"
6'	3'	2'-8⅜"	7'-0"	4'-3⅝"	13'-8"	10'-11⅛"	20'-4"	17'-7⅛"	27'-0"	24'-3⅛"	33'-8"	30'-11⅛"
	4'	3'-6"	7'-0"	3'-6"	13'-8"	10'-2"	20'-4"	16'-10"	27'-0"	23'-6"	33'-8"	30'-2"
	5'	4'-5⅜"	7'-0"	2'-8⅜"	13'-8"	9'-4⅛"	20'-4"	16'-0⅛"	27'-0"	22'-8⅛"	33'-8"	29'-4⅛"
	6'	5'-0½"	7'-2"	2'-1½"	13'-11"	8'-10⅝"	20'-8"	15'-7⅛"	27'-5"	22'-1⅛"	34'-2"	28'-11⅛"
	7'	6'-2⅝"	7'-3"	1'-0½"	14'-1"	7'-10⅝"	20'-11"	14'-8⅛"	27'-9"	21'-2⅛"	34'-7"	28'-0⅛"
	8'	7'-1"	7'-5"	0'-0"	14'-2"	6'-10"	21'-0"	13'-8"	27'-10"	20'-3"	34'-8"	27'-0"
8'	4'	3'-6"	9'-0"	5'-6"	17'-8"	14'-2"	26'-4"	22'-10"	35'-6"	31'-6"	43'-8"	40'-2"
	5'	4'-5⅜"	9'-2"	4'-10⅜"	17'-11"	13'-7⅛"	26'-8"	22'-0⅛"	35'-5"	31'-1⅛"	44'-2"	39'-10⅛"
	6'	5'-0½"	9'-2"	4'-1½"	17'-11"	12'-10⅝"	26'-8"	21'-2⅝"	35'-5"	30'-4⅛"	44'-2"	39'-1⅛"
	7'	6'-2⅝"	9'-3"	3'-0½"	18'-1"	11'-10⅝"	26'-11"	20'-3⅛"	35'-9"	29'-4⅛"	44'-7"	38'-4⅛"
	8'	7'-1"	9'-4"	2'-0"	18'-2"	10'-10"	27'-0"	19'-3"	35'-10"	28'-1"	44'-8"	37'-0"
9'	5'	4'-5⅜"	10'-2"	5'-10⅜"	19'-11"	15'-7⅛"	29'-8"	25'-0⅛"	39'-5"	35'-1⅛"	49'-2"	44'-10⅛"
	6'	5'-0½"	10'-3"	5'-1½"	20'-1"	15'-0⅝"	29'-11"	24'-1⅝"	39'-9"	34'-0⅝"	49'-7"	44'-1⅛"
	7'	6'-2⅝"	10'-3"	4'-0½"	20'-1"	13'-10⅝"	29'-11"	23'-0⅝"	39'-9"	33'-0⅝"	49'-7"	43'-0⅛"
	8'	7'-1"	10'-4"	3'-0"	20'-2"	12'-10"	30'-0"	22'-0"	39'-10"	32'-0"	49'-8"	42'-0"
10'	5'	4'-5⅜"	11'-2"	6'-10⅜"	21'-11"	17'-7⅛"	32'-8"	28'-0⅛"	43'-5"	39'-1⅛"	54'-2"	49'-10⅛"
	6'	5'-0½"	11'-3"	6'-2½"	22'-1"	17'-0⅝"	32'-11"	27'-1⅝"	43'-9"	38'-0⅝"	54'-7"	49'-1⅛"
	7'	6'-2⅝"	11'-3"	5'-0½"	22'-1"	15'-10⅝"	32'-11"	26'-0⅝"	43'-9"	37'-0⅝"	54'-7"	48'-0⅛"
	8'	7'-1"	11'-4"	4'-0"	22'-2"	14'-10"	33'-0"	25'-0"	43'-10"	36'-0"	54'-8"	47'-0"
11'	6'	5'-0½"	12'-4"	7'-3½"	24'-2"	19'-1⅝"	36'-0"	30'-1⅛"	47'-10"	42'-9⅛"		
	7'	6'-2⅝"	12'-4"	6'-1½"	24'-2"	17'-11⅝"	36'-0"	29'-0⅝"	47'-10"	41'-7⅝"		
	8'	7'-1"	12'-5"	5'-0"	24'-3"	16'-10"	36'-0"	28'-0"	47'-10"	40'-6"		
12'	6'	5'-0½"	13'-6"	8'-3½"	26'-5"	21'-1⅝"	39'-0"	33'-1⅛"	51'-10"	46'-9⅛"		
	7'	6'-2⅝"	13'-6"	7'-1½"	26'-5"	19'-11⅝"	39'-0"	32'-0⅝"	51'-10"	45'-7⅝"		
	8'	7'-1"	13'-6"	6'-0"	26'-6"	18'-10"	39'-0"	31'-0"	51'-10"	44'-6"		

QUANTITIES

CLEAR SPAN	CLEAR HEIGHT	THICKNESS OF WING AT HEADWALL	THICKNESS OF WING FOOTING	REINFORCING STEEL FOR 4 WINGS ①	CLASS S CONCRETE - 4 WINGS HEADWALLS, WINGWALLS, FOOTINGS, TOEWALLS AND APRONS					
					SINGLE BARREL CULVERT	DOUBLE BARREL CULVERT	TRIPLE BARREL CULVERT	QUADRUPLE BARREL CULVERT	QUINTUPLE BARREL CULVERT	
S	H	Cw	WB	LB.	CU.YD.	CU.YD.	CU.YD.	CU.YD.	CU.YD.	
4'	2'	6"	7"	108.0	4.50	5.46	6.42	7.38	8.34	
	3'	6"	7"	164.6	6.26	7.21	8.17	9.13	10.09	
	4'	6"	7"	234.6	8.33	9.28	10.24	11.20	12.16	
	5'	6"	7"	357.8	10.72	11.68	12.67	13.60	14.56	
	6'	7"	8"	583.1	14.55	15.53	16.52	17.51	18.49	
5'	3'	6"	7"	164.9	6.97	7.63	8.79	9.96	11.12	
	4'	6"	7"	234.6	8.54	3.70	10.87	10.03	13.20	
	5'	6"	7"	357.8	10.94	12.15	13.26	14.43	15.53	
	6'	7"	8"	583.1	14.77	15.96	17.15	18.34	19.54	
	7'	7½"	8½"	1134.6	18.94	20.15	21.37	22.59	23.80	
6'	3'	6"	7"	164.9	6.68	8.06	9.42	10.80	12.18	
	4'	6"	7"	234.6	8.75	10.14	11.49	12.87	14.25	
	5'	6"	7"	357.8	11.15	12.53	13.89	15.27	16.65	
	6'	7"	8"	583.1	14.98	16.39	17.78	19.18	20.59	
	7'	7½"	8½"	1134.6	19.15	20.58	22.00	23.43	24.86	
	8'	8"	9"	1925.6	24.09	25.53	26.96	28.39	29.83	
7'	4'	6"	7"	234.6	8.97	10.58	12.15	13.76	15.35	
	5'	6"	7"	357.8	11.36	12.97	14.59	16.15	17.75	
	6'	7"	8"	583.1	15.20	16.82	18.42	20.04	21.66	
	7'	7½"	8½"	1134.6	19.38	21.02	22.69	24.28	25.92	
	8'	8"	9"	1925.6	24.32	25.97	27.60	29.25	30.89	
8'	4'	6"	7"	234.6	9.19	11.03	12.82	14.65	16.45	
	5'	7"	7"	357.8	12.03	13.89	15.70	17.55	19.36	
	6'	7"	8"	583.1	15.92	17.27	19.09	20.93	22.75	
	7'	7½"	8½"	1134.6	19.59	21.46	23.30	25.16	26.99	
	8'	8"	9"	1925.6	24.58	26.91	28.29	30.11	31.96	
9'	5'	7"	7"	357.8	12.26	13.99	16.87	18.93	20.47	
	6'	7½"	8"	583.1	15.94	18.04	20.09	22.19	24.23	
	7'	7½"	8½"	1134.6	19.81	21.91	23.96	26.06	28.10	
	8'	8"	9"	1925.6	24.76	26.86	28.91	31.00	33.05	
10'	5'	7"	7"	357.8	12.49	14.80	17.05	19.26	21.52	
	6'	7½"	8"	583.1	16.17	18.50	20.77	22.99	25.28	
	7'	7½"	8½"	1134.6	20.04	22.37	24.69	26.87	29.15	
	8'	8"	9"	1925.6	24.98	27.31	29.58	31.81	34.10	
11'	6'	8"	8"	583.1	16.69	19.27	21.76	24.23		
	7'	8"	8½"	1134.6	20.64	23.22	25.71	28.18		
	8'	8"	9"	1925.6	25.19	27.77	30.27	32.74		
12'	6'	8"	8"	583.1	16.92	19.75	22.45	25.18		
	7'	8"	8½"	1134.6	20.87	23.69	26.40	29.13		
	8'	8"	9"	1925.6	25.42	28.25	30.96	33.69		

① For reinforcing steel in Headwalls and Aprons, See Details of Standard Barrel Sections for R.C. Box Culverts for the desired Span and Height.

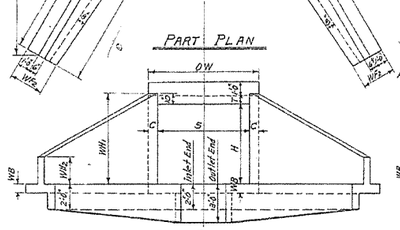

PART PLAN

END ELEVATION

SINGLE BARREL CULVERT

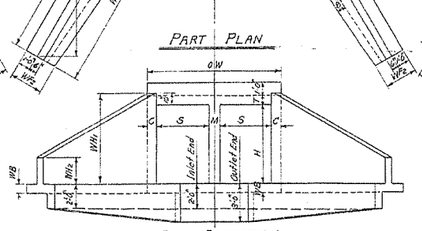

PART PLAN

END ELEVATION

DOUBLE BARREL CULVERT

NOTE:- Plans and Elevations are not to scale.

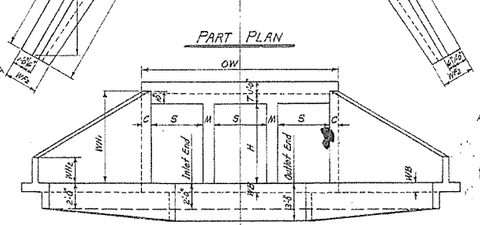

PART PLAN

END ELEVATION

TRIPLE BARREL CULVERT

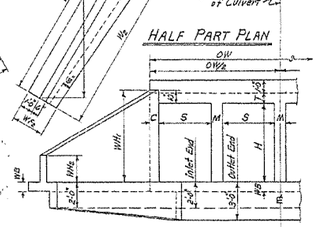

HALF PART PLAN

HALF END ELEVATION

QUADRUPLE BARREL CULVERT

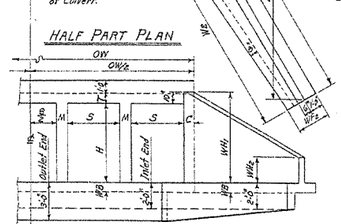

HALF PART PLAN

HALF END ELEVATION

QUINTUPLE BARREL CULVERT

MEMBRANE:- A membrane waterproofing 12" wide, consisting of three moppings of waterproofing asphalt and two alternate layers of treated cotton fabric shall be applied to the back face of wing to cover the construction joints in wings.

GENERAL NOTES:-

CONCRETE:- All concrete to be Class S, and shall be poured in the dry. All exposed corners to have ¾" chamfers.

REINFORCING STEEL:- Reinforcing steel to be deformed bars of intermediate or hard grade.

CONSTRUCTION JOINTS:- Construction joints between wingwall, footings and sidewalls shall be only where shown on plans.

SPECIFICATIONS:- Arkansas State Highway Commission Standard Specifications for Highway Construction and applicable Special Provisions.

UNIT STRESSES:-

Class S Concrete (n=10) 1200 #/□"

Reinforcing Steel 20,000 #/□"

NOTE:- This drawing to be used in conjunction with Standard Barrel Sections, Drawing Nos. as listed below.

SINGLES	DOUBLES	TRIPLES	QUADRUPLES	QUINTUPLES
R-100X-0	R-200X-0	R-300X-0	R-400X-0	R-500X-0
R-100X-X1	R-200X-X1	R-300X-X1	R-400X-X1	R-500X-X1
R-100X-X2	R-200X-X2	R-300X-X2	R-400X-X2	
	R-200X-X3	R-300X-X3		

CLASS S CONCRETE

BAR LIST FOR ONE WING - 4 REQUIRED

CLEAR HEIGHT H	F1 BENT In bottom of footing, bent up into back face of wing. One bar of each length. SIZE	SPACING	NO. REQD	LENGTHS VARY MIN.	LENGTHS VARY MAX.	X	Y	F2 BENT In bottom of footing, bent up into back face of wing. Alt. with F1 bars. SIZE	SPACING	NO. REQD	LENGTH	X	Y	F5 STRAIGHT Longitudinal in top of wing footing heel. SIZE	NO. REQD	LENGTH	F4 STRAIGHT Longitudinal in bottom of wing footing toe. SIZE	NO. REQD	LENGTH	H1 STRAIGHT Horizontal in back face of wing. SIZE	SPACING	NO. REQD	LENGTH	He STRAIGHT Horizontal in back face of wing. One bar of each length. SIZE	SPACING	NO. REQD	LENGTHS VARY MAX.	LENGTHS VARY MIN.	H3 STRAIGHT In back face of wing at top-on slope. SIZE	NO. REQD	LENGTH	H4 BENT Dowels thru construction joint at headwall. SIZE	SPACING	NO. REQD	LENGTH.	X	QUANTITY REINFORCING STEEL PER WING LB.
2'	#3	12"	8	1'-6"	3'-10"	0'-8"	1'-0"	#3	—	—	—	—	—	#3	1	9'-8"	#3	2	8'-6"	#3	12"	1	7'-2"	#3	12"	1	—	4'-0"	#3	1	7'-8"	#3	12"	2	2'-8"	1'-2"	27.0
3'	#3	12"	10	2'-2"	5'-2"	0'-10"	1'-3"	#3	—	—	—	—	—	#3	1	12'-0"	#3	2	11'-0"	#3	12"	1	9'-6"	#3	12"	2	7'-6"	4'-0"	#6	1	9'-9"	#3	12"	3	2'-8"	1'-8"	41.1
4'	#3	12"	13	2'-9"	6'-6"	0'-11"	1'-7"	#3	—	—	—	—	—	#3	1	14'-8"	#3	3	13'-6"	#3	12"	1	11'-10"	#3	12"	3	10'-11"	4'-0"	#3	1	12'-2"	#3	12"	4	2'-8"	1'-9"	63.7
5'	#3	12"	15	2'-11"	7'-10"	1'-1"	1'-11"	#3	12"	4	3'-6"	1'-1"	2'-6"	#3	1	16'-8"	#3	3	16'-6"	#3	12"	2	14'-2"	#3	12"	3	10'-11"	4'-0"	#3	1	14'-7"	#3	12"	5	2'-8"	1'-9"	89.5
6'	#4	12"	17	3'-6"	9'-3"	1'-2"	2'-3"	#3	12"	4	4'-6"	1'-4"	3'-3"	#3	1	18'-0"	#3	3	18'-6"	#3	12"	2	16'-6"	#3	12"	4	14'-6"	4'-0"	#3	1	17'-0"	#3	12"	6	2'-8"	1'-8"	145.8
7'	#4	12"	20	3'-9"	10'-9"	1'-3"	2'-9"	#3	12"	7	5'-6"	1'-7"	4'-0"	#4	1	21'-6"	#4	4	21'-0"	#4	12"	2	18'-9"	#4	12"	5	17'-9"	4'-0"	#4	1	19'-5"	#4	12"	7	3'-6"	1'-9"	283.7
8'	#4	12"	22	4'-6"	12'-3"	1'-5"	3'-2"	#4	12"	10	6'-6"	1'-10"	4'-9"	#4	1	23'-8"	#4	9	23'-6"	#4	12"	3	21'-0"	#4	12"	5	17'-9"	4'-0"	#4	1	21'-10"	#4	12"	8	3'-6"	1'-9"	356.4

BAR BENDING DIAGRAMS

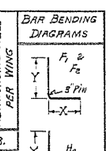

NOTE:- Dimensions are to bar centers.

REVISIONS:- Membrane added. 5-10-66 W.C.H.

Designed By:- W.C.H. 6-20-62. Checked By:- RHS - 1-9-63
Drawn By:- W.C.H. 12-4-62. Checked By:- RHS - 1-31-63
Quantities By:- W.C.H. 12-14-62. Checked By:- RHS - 3-20-63

ARKANSAS STATE HIGHWAY COMMISSION

DETAILS OF STANDARD WINGS FOR REINFORCED CONCRETE BOX CULVERTS

4', 5', 6', 7', 8', 9', 10', 11' & 12' SPANS — 3:1 SLOPES

SINGLES, DOUBLES, TRIPLES, QUADRUPLES & QUINTUPLES. — ALL DEPTHS OF COVER FOR H = 8'-0" OR LESS

STANDARD DRAWING NO. W-X003-1

MVL 8R. (3)

FED. ROAD No.	STATE	FED. AID PROJECT	FISCAL YEAR	SHEET No.	TOTAL SHEETS
6	ARK.			658	
JOB No.					

BAR LIST FOR VARIOUS SECTIONS OF BARREL

"a" bars: STRAIGHT – In Top and Bottom Slabs of Barrel. 2 Add'l in Apron and Headwall–Each.
"b" bars: BENT – See Diagram at Right. In Top and Bottom Slabs of Barrel. Alternate with "a" bars.
"d" bars: STRAIGHT – Longitudinal in Top Slab of Barrel. "d1" bars: Longitudinal in Sidewalls. "e" bars: Longitudinal in Bottom Slab of Barrel.
"f" bars: STRAIGHT – Verticals in Sidewalls.

Section & Bar Group	Length of Sections	Depth of Cover D	Clear Span S	Clear Height H	"a" Size	"a" Spacing	"a" No. Req'd 3:1	"a" No. Req'd 4:1	"a" Length	"b" Size	"b" Spacing	"b" No. Req'd 3:1	"b" No. Req'd 4:1	"b" Length	"b" X	"d" Size	"d" Spacing	"d" No. Req'd	"d" Length	"d1" Size	"d1" Spacing	"d1" No. Req'd	"d1" Length	"e" Size	"e" Spacing	"e" No. Req'd	"e" Length	"f" Size	"f" Spacing	"f" No. Req'd 3:1	"f" No. Req'd 4:1	"f" Length
Section "A" & Bar Group "A"	4:1 = 32'-0"	0' to 10'-0"	1 @ 4'	3'	#4	12"	48	68	4'-9"	#4	12"	44	64	5'-7"	4'-8½"	#4	12"	5	33'-3" for 32'-0" Section	#4	12"	6	33'-3" for 32'-0" Section	#4	12"	5	34'-3" for 32'-0" Section	#4	12"	44	64	3'-10"
				4'			48	68	4'-9"			44	64	5'-7"	4'-8½"			5				8				5				44	64	4'-10"
				5'			48	68	4'-9"			44	64	5'-7"	4'-8½"			5				10				5				44	64	5'-10"
				6'			48	68	4'-11"			44	64	5'-9"	4'-10½"			5				12				5				44	64	6'-10"
			1 @ 5'	3'	#5	12"	48	68	5'-9"	#5	12"	44	64	6'-8"	5'-8½"	#4	12"	6		#4	12"	6		#4	12"	6		#4	12"	44	64	3'-11"
				4'			48	68	5'-9"			44	64	6'-8"	5'-8½"			6				8				6				44	64	4'-11"
				5'			48	68	5'-9"			44	64	6'-8"	5'-8½"			6				10				6				44	64	5'-11"
				6'			48	68	5'-11"			44	64	6'-10"	5'-10½"			6				12				6				44	64	6'-11"
				7'			48	68	6'-0"			44	64	6'-11"	5'-11½"			6				14				6			10"	54	78	7'-11"
	3:1 = 22'-0"		1 @ 6'	4'	#5	12"	48	68	6'-9"	#6	12"	44	64	7'-10"	6'-8"	#4	12"	7		#4	12"	8		#4	12"	7		#4	12"	44	64	5'-0"
				5'			48	68	6'-9"			44	64	7'-10"	6'-8"			7				10				7				44	64	6'-0"
				6'			48	68	6'-11"			44	64	8'-0"	6'-10"			7				12				7				44	64	7'-0"
				7'			48	68	7'-0"			44	64	8'-1"	6'-11"			7				14				7			10"	54	78	8'-0"
				8'			48	68	7'-1"			44	64	8'-2"	7'-0"			7				16				7		#5	11"	48	70	9'-0"
Section "B" & Bar Group "B"	4:1 = 16'-0"	10'-0" to 15'-0"	1 @ 4'	3'	#4	12"	22	32	4'-9"	#5	12"	22	32	5'-8"	4'-8½"	#4	12"	5	34'-3" for 33'-0" Length Section	#4	12"	6	34'-3" for 33'-0" Length Section	#4	12"	5	34'-3" for 33'-0" Length Section.	#4	12"	22	32	3'-10"
				4'			22	32	4'-9"			22	32	5'-8"	4'-8½"			5				8				5				22	32	4'-10"
				5'			22	32	4'-9"			22	32	5'-8"	4'-8½"			5				10				5				22	32	5'-10"
				6'			22	32	4'-11"			22	32	5'-10"	4'-10½"			5				12				5			10"	28	40	6'-10"
			1 @ 5'	3'	#5	12"	22	32	5'-9"	#6	12"	22	32	6'-10"	5'-8"	#4	12"	6		#4	12"	6		#4	12"	6		#4	12"	22	32	3'-11"
				4'			22	32	5'-9"			22	32	6'-10"	5'-8"			6				8				6				22	32	4'-11"
				5'			22	32	5'-9"			22	32	6'-10"	5'-8"			6				10				6				22	32	5'-11"
				6'			22	32	5'-11"			22	32	7'-0"	5'-10"			6				12				6			11"	24	36	6'-11"
				7'			22	32	6'-0"			22	32	7'-1"	5'-11"			6				14				6		#5	12"	22	32	7'-11"
	3:1 = 11'-0"		1 @ 6'	4'	#6	12"	22	32	6'-9"	#6	12"	22	32	7'-10"	6'-8"	#4	12"	7		#4	12"	8		#4	12"	7		#4	12"	22	32	5'-1"
				5'			22	32	6'-9"			22	32	7'-10"	6'-8"			7				10				7				22	32	6'-1"
				6'			22	32	6'-11"			22	32	8'-0"	6'-10"			7				12				7			10"	28	40	7'-1"
				7'			22	32	7'-0"			22	32	8'-1"	6'-11"			7				14				7		#5	11"	24	34	8'-1"
				8'			22	32	7'-1"			22	32	8'-2"	7'-0"			7				16				7		#6	12"	22	32	9'-1"
Section "C" & Bar Group "C"	4:1 = 16'-0"	15'-0" to 20'-0"	1 @ 4'	3'	#5	12"	22	32	4'-9"	#6	12"	22	32	5'-8"	4'-8½"	#4	12"	5		#4	12"	6		#4	12"	5		#4	12"	22	32	3'-10"
				4'			22	32	4'-9"			22	32	5'-8"	4'-8½"			5				8				5				22	32	4'-10"
				5'			22	32	4'-9"			22	32	5'-8"	4'-8½"			5				10				5			10"	28	40	5'-10"
				6'			22	32	4'-11"			22	32	5'-10"	4'-10½"			5				12				5		#5	12"	22	32	6'-10"
			1 @ 5'	3'	#5	11"	24	36	5'-9"	#6	11"	24	34	6'-10"	5'-8"	#4	12"	6		#4	12"	6		#4	12"	6		#4	12"	22	32	4'-0"
				4'			24	36	5'-9"			24	34	6'-10"	5'-8"			6				8				6				22	32	5'-0"
				5'			24	36	5'-9"			24	34	6'-10"	5'-8"			6				10				6			11"	24	36	6'-0"
				6'			24	36	5'-11"			24	34	7'-0"	5'-10"			6				12				6		#5	12"	22	32	7'-0"
				7'			24	36	6'-0"			24	34	7'-1"	5'-11"			6				14				6		#6	12"	22	32	8'-0"
	3:1 = 11'-0"		1 @ 6'	4'	#6	11"	24	36	6'-9"	#6	11"	24	34	7'-10"	6'-8"	#4	12"	7		#4	12"	8		#4	12"	7		#4	12"	22	32	5'-2"
				5'			24	36	6'-9"			24	34	7'-10"	6'-8"			7				10				7				22	32	6'-2"
				6'			24	36	6'-11"			24	34	8'-0"	6'-10"			7				12				7		#5	12"	22	32	7'-2"
				7'			24	36	7'-0"			24	34	8'-1"	6'-11"			7				14				7		#6	12"	22	32	8'-2"
				8'			24	36	7'-1"			24	34	8'-2"	7'-0"			7				16				7			10"	26	38	9'-2"
Section "D" & Bar Group "D"	4:1 = 16'-0"	20'-0" to 25'-0"	1 @ 4'	3'	#5	11"	24	36	4'-9"	#5	11"	24	34	5'-8"	4'-8½"	#4	12"	5		#4	12"	6		#4	12"	5		#4	12"	22	32	3'-11"
				4'			24	36	4'-9"			24	34	5'-8"	4'-8½"			5				8				5				22	32	4'-11"
				5'			24	36	4'-9"			24	34	5'-8"	4'-8½"			5				10				5		#5	12"	22	32	5'-11"
				6'			24	36	4'-11"			24	34	5'-10"	4'-10½"			5				12				5			10"	26	38	6'-11"
			1 @ 5'	3'	#6	12"	22	32	5'-9"	#6	12"	22	32	6'-10"	5'-8"	#4	12"	6		#4	12"	6		#4	12"	6		#4	12"	22	32	4'-1"
				4'			22	32	5'-9"			22	32	6'-10"	5'-8"			6				8				6				22	32	5'-1"
				5'			22	32	5'-9"			22	32	6'-11"	5'-9"			6				10				6			11"	24	34	6'-1"
				6'			22	32	5'-11"			22	32	7'-1"	5'-11"			6				12				6		#5	11"	24	34	7'-1"
				7'			22	32	6'-1"			22	32	7'-2"	6'-0"			6				14				6		#6	12"	22	32	8'-1"
	3:1 = 11'-0"		1 @ 6'	4'	#7	12"	22	32	6'-9"	#6	12"	22	32	7'-10"	6'-8"	#4	12"	7		#4	12"	8		#4	12"	7		#4	12"	22	32	5'-4"
				5'			22	32	6'-10"			22	32	7'-11"	6'-9"			7				10				7				22	32	6'-4"
				6'			22	32	6'-11"			22	32	8'-1"	6'-11"			7				12				7		#5	12"	22	32	7'-4"
				7'			22	32	7'-1"			22	32	8'-2"	7'-0"			7				14				7		#6	12"	22	32	8'-4"
				8'			22	32	7'-2"			22	32	8'-4"	7'-2"			7				16				7			10"	26	40	9'-4"
Section "E" & Bar Group "E"	4:1 = 16'-0"	25'-0" to 30'-0"	1 @ 4'	3'	#6	12"	22	32	4'-9"	#5	12"	22	32	5'-8"	4'-8½"	#4	12"	5		#4	12"	6		#4	12"	5		#4	12"	22	32	4'-0"
				4'			22	32	4'-9"			22	32	5'-8"	4'-8½"			5				8				5				22	32	5'-0"
				5'			22	32	4'-10"			22	32	5'-9"	4'-9½"			5				10				5		#5	12"	22	32	6'-0"
				6'			22	32	5'-0"			22	32	5'-11"	4'-11½"			5				12				5		#6	12"	22	32	7'-0"
			1 @ 5'	3'	#6	11"	24	34	5'-9"	#6	11"	24	36	6'-10"	5'-8"	#4	12"	6		#4	12"	6		#4	12"	6		#4	12"	22	32	4'-3"
				4'			24	34	5'-9"			24	36	6'-10"	5'-8"			6				8				6				22	32	5'-3"
				5'			24	34	5'-10"			24	36	7'-0"	5'-10"			6				10				6			10"	28	40	6'-3"
				6'			24	34	6'-0"			24	36	7'-2"	6'-0"			6				12				6		#5	11"	24	36	7'-3"
				7'			24	34	6'-2"			24	36	7'-8"	6'-1"			6				14				6		#6	11"	24	34	8'-3"
	3:1 = 11'-0"		1 @ 6'	4'	#7	11"	24	34	6'-9"	#6	11"	24	36	7'-10"	6'-8"	#4	11"	8		#4	12"	8		#4	11"	8		#4	12"	22	32	5'-5"
				5'			24	34	6'-11"			24	36	8'-0"	6'-10"			8				10				8			11"	24	36	6'-5"
				6'			24	34	7'-1"			24	36	8'-2"	7'-0"			8				12				8		#5	12"	22	32	7'-5"
				7'			24	34	7'-2"			24	36	8'-4"	7'-2"			8				14				8		#6	12"	22	32	8'-5"
				8'			24	34	7'-4"			24	36	8'-5"	7'-3"			8				16				8			10"	26	38	9'-5"
Section "F" & Bar Group "F"	4:1 = 16'-0"	30'-0" to 35'-0"	1 @ 4'	3'	#6	13"	20	30	4'-9"	#6	13"	20	30	5'-10"	4'-8"	#4	12	5		#4	12"	6		#4	12"	5		#4	12"	22	32	4'-1"
				4'			20	30	4'-9"			20	30	5'-10"	4'-8"			5				8				5				22	32	5'-1"
				5'			20	30	4'-11"			20	30	6'-0"	4'-10"			5				10				5		#5	12"	22	32	6'-1"
				6'			20	30	5'-1"			20	30	6'-2"	5'-0"			5				12				5		#6	12"	22	32	7'-1"
	3:1 = 11'-0"		1 @ 5'	3'	#7	12"	22	32	5'-9"	#6	12"	22	32	6'-10"	5'-8"	#4	10½"	7		#4	12"	6		#4	10½"	7		#4	12"	22	32	4'-4"
				4'			22	32	5'-9"			22	32	6'-11"	5'-9"			7				8				7				22	32	5'-4"
				5'			22	32	5'-11"			22	32	7'-1"	5'-11"			7				10				7			10"	26	36	6'-4"
				6'			22	32	6'-1"			22	32	7'-3"	6'-1"			7				12				7		#5	11"	24	34	7'-4"
				7'			22	32	6'-3"			22	32	7'-4"	6'-2"			7				14				7		#6	11"	24	36	8'-4"
	Varies with Length of Barrel	30'-0"	1 @ 6'	4'	#7	12"	Varies with Length of Barrel	Varies with Length of Barrel	6'-10"	#7	12"	Varies with Length of Barrel	Varies with Length of Barrel	8'-1"	6'-9"	#4	9½"	9	Varies with Length of Barrel	#4	12"	8	Varies with Length of Barrel	#4	9½"	9	Varies with Length of Barrel	#4	12"	Varies with Length of Barrel	Varies with Length of Barrel	5'-7"
				5'					7'-0"					8'-3"	6'-11"			9				10				9			10"			6'-7"
				6'					7'-2"					8'-5"	7'-1"			9				12				9		#5	12"			7'-7"
				7'					7'-4"					8'-7"	7'-3"			9				14				9		#6	12"			8'-7"
				8'					7'-5"					8'-8"	7'-4"			9				16				9			10"			9'-7"
Section "G" & Bar Group "G"		35'-0" to 40'-0"	1 @ 4'	3'	#6	12"			4'-9"	#6	12"			5'-10"	4'-8"	#4	10½"	6		#4	12"	6		#4	10½"	6		#4	12"			4'-2"
				4'					4'-10"					5'-11"	4'-9"			6				8				6						5'-2"
				5'					5'-0"					6'-1"	4'-11"			6				10				6		#5	12"			6'-2"
				6'					5'-2"					6'-3"	5'-1"			6				12				6		#6	12"			7'-2"
			1 @ 5'	3'	#7	11"			5'-9"	#6	11"			6'-10"	5'-8"	#4	10½"	7		#4	12"	6		#4	10½"	7		#4	12"			4'-5"
				4'					5'-10"					7'-0"	5'-10"			7				8				7						5'-5"
				5'					6'-0"					7'-2"	6'-0"			7				10				7			10"			6'-5"
				6'					6'-2"					7'-4"	6'-2"			7				12				7		#5	11"			7'-5"
				7'					6'-4"					7'-5"	6'-3"			7				14				7		#6	11"			8'-5"

NOTE:- Bars for each Section to be marked with the Section Letter, thus for Section B, the bars should be marked Ba, Bb, Bd, Bd1, Be and Bf.

DIMENSIONS — QUANTITIES

Max. Design Depth of Cover D	Clear Span S	Clear Height H	Sq. Ft. Opening A	Overall Width OW	Thickness of Top Slab T	Thickness of Sidewalls C	Thickness of Bottom Slab B	Overall Height OH	Class S Conc. per Lin. Ft. of Barrel (Cu. Yd.)	Reinforcing Steel per Lin. Ft. of Barrel (Lb.)	Additional per Lap (Lb.)	Additional Two Headwalls & Aprons (Lb.)
Section "A" – 10'-0"	1 @ 4'	3'	12	5'-0"	6½"	6"	6½"	4'-1"	0.312	29.62	13.36	51.44
		4'	16	5'-0"		6"		5'-1"	0.349	32.29	15.03	51.44
		5'	20	5'-0"		6"		6'-1"	0.386	34.96	16.70	51.44
		6'	24	5'-2"		7"		7'-1"	0.467	38.08	18.37	52.33
	1 @ 5'	3'	15	6'-0"	7"	6"	7"	4'-2"	0.370	43.16	15.03	79.37
		4'	20	6'-0"		6"		5'-2"	0.907	45.83	16.70	79.37
		5'	25	6'-0"		6"		6'-2"	0.444	48.50	18.37	79.37
		6'	30	6'-2"		7"		7'-2"	0.526	51.87	20.04	80.77
		7'	35	6'-3"		7½"		8'-2"	0.594	57.00	21.71	81.46
	1 @ 6'	4'	24	7'-0"	7½"	6"	7½"	5'-3"	0.472	58.99	18.37	93.29
		5'	30	7'-0"		6"		6'-3"	0.509	61.66	20.04	93.29
		6'	36	7'-2"		7"		7'-3"	0.591	65.18	21.71	94.68
		7'	42	7'-3"		7½"		8'-3"	0.660	70.41	23.38	95.37
		8'	48	7'-4"		8"		9'-3"	0.735	79.83	25.05	96.07
Section "B" – 15'-0"	1 @ 4'	3'	12	5'-0"	6½"	6"	6½"	4'-1"	0.312	33.98	13.36	
		4'	16	5'-0"		6"		5'-1"	0.349	36.65	15.03	
		5'	20	5'-0"		6"		6'-1"	0.386	39.32	16.70	
		6'	24	5'-2"		7"		7'-1"	0.467	44.39	18.37	
	1 @ 5'	3'	15	6'-0"	7"	6"	7"	4'-2"	0.370	49.78	15.03	
		4'	20	6'-0"		6"		5'-2"	0.407	52.45	16.70	
		5'	25	6'-0"		6"		6'-2"	0.444	55.12	18.37	
		6'	30	6'-2"		7"		7'-2"	0.526	59.48	20.04	
		7'	35	6'-3"		7½"		8'-2"	0.594	67.68	21.71	
	1 @ 6'	4'	24	7'-0"	8"	6"	8½"	5'-4½"	0.499	65.30	18.37	
		5'	30	7'-0"		6"		6'-4½"	0.536	66.63	20.04	
		6'	36	7'-2"		7"		7'-4½"	0.619	73.53	21.71	
		7'	42	7'-3"		7½"		8'-4½"	0.688	82.41	23.38	
		8'	48	7'-4"		8"		9'-4½"	0.763	93.14	25.05	
Section "C" – 20'-0"	1 @ 4'	3'	12	5'-0"	6½"	6"	6¾"	4'-1¼"	0.316	37.54	13.36	
		4'	16	5'-0"		6"		5'-1¼"	0.353	40.21	15.03	
		5'	20	5'-0"		6"		6'-1¼"	0.390	49.44	16.70	
		6'	24	5'-2"		7"		7'-1¼"	0.471	51.38	18.37	
	1 @ 5'	3'	15	6'-0"	7½"	6"	7¾"	4'-3¼"	0.394	52.85	15.03	
		4'	20	6'-0"		6"		5'-3¼"	0.431	55.52	16.70	
		5'	25	6'-0"		6"		6'-3¼"	0.468	58.92	18.37	
		6'	30	6'-2"		7"		7'-3¼"	0.550	67.04	20.04	
		7'	35	6'-3"		7½"		8'-3¼"	0.618	78.27	21.71	
	1 @ 6'	4'	24	7'-0"	8½"	6"	9"	5'-5½"	0.526	69.39	18.37	
		5'	30	7'-0"		6"		6'-5½"	0.563	72.06	20.04	
		6'	36	7'-2"		7"		7'-5½"	0.646	81.20	21.71	
		7'	42	7'-3"		7½"		8'-5½"	0.716	92.67	23.38	
		8'	48	7'-4"		8"		9'-5½"	0.791	105.06	25.05	
Section "D" – 25'-0"	1 @ 4'	3'	12	5'-0"	6¾"	6"	7¼"	4'-2"	0.327	39.63	13.36	
		4'	16	5'-0"		6"		5'-2"	0.364	42.30	15.03	
		5'	20	5'-0"		6"		6'-2"	0.401	49.41	16.70	
		6'	24	5'-2"		7"		7'-2"	0.483	55.14	18.37	
	1 @ 5'	3'	15	6'-0"	8"	6"	8½"	4'-4½"	0.417	55.28	15.03	
		4'	20	6'-0"		6"		5'-4½"	0.454	57.95	16.70	
		5'	25	6'-0½"		6¼"		6'-4½"	0.501	61.61	18.37	
		6'	30	6'-2½"		7¼"		7'-4½"	0.585	71.20	20.04	
		7'	35	6'-4"		8"		8'-4½"	0.668	81.45	21.71	
	1 @ 6'	4'	24	7'-0"	9¼"	6"	9¾"	5'-7"	0.559	72.95	18.37	
		5'	30	7'-1"		6½"		6'-7"	0.616	76.21	20.04	
		6'	36	7'-2½"		7¼"		7'-7"	0.691	85.22	21.71	
		7'	42	7'-4"		8"		8'-7"	0.776	97.23	23.38	
		8'	48	7'-5½"		8¾"		9'-7"	0.869	108.02	25.05	
Section "E" – 30'-0"	1 @ 4'	3'	12	5'-0"	7¼"	6"	7¾"	4'-3"	0.343	42.12	13.36	
		4'	16	5'-0"		6"		5'-3"	0.380	44.79	15.03	
		5'	20	5'-1"		6½"		6'-3"	0.436	52.39	16.70	
		6'	24	5'-3"		7½"		7'-3"	0.521	63.09	18.37	
	1 @ 5'	3'	15	6'-0"	8¾"	6"	9¼"	4'-6"	0.444	58.94	15.03	
		4'	20	6'-0"		6"		5'-6"	0.481	61.61	16.70	
		5'	25	6'-1½"		6¾"		6'-6"	0.549	66.77	18.37	
		6'	30	6'-3½"		7¾"		7'-6"	0.637	75.68	20.04	
		7'	35	6'-5"		8½"		8'-6"	0.724	88.37	21.71	
	1 @ 6'	4'	24	7'-0"	10"	6"	10½"	5'-8½"	0.591	79.04	20.04	
		5'	30	7'-2"		7"		6'-8½"	0.669	83.78	21.71	
		6'	36	7'-4"		8"		7'-8½"	0.760	92.53	23.38	
		7'	42	7'-5½"		8¾"		8'-8½"	0.850	104.59	25.05	
		8'	48	7'-7"		9½"		9'-8½"	0.949	115.61	26.72	
Section "F" – 35'-0"	1 @ 4'	3'	12	5'-0"	7¾"	6"	8¼"	4'-4"	0.358	45.49	13.36	
		4'	16	5'-0"		6"		5'-4"	0.395	48.16	15.03	
		5'	20	5'-2"		7"		6'-4"	0.471	56.32	16.70	
		6'	24	5'-4"		8"		7'-4"	0.560	67.17	18.37	
	1 @ 5'	3'	15	6'-0"	9¼"	6"	9¾"	4'-7"	0.463	63.18	16.70	
		4'	20	6'-0½"		6¼"		5'-7"	0.509	66.11	18.37	
		5'	25	6'-2½"		7¼"		6'-7"	0.588	71.65	20.04	
		6'	30	6'-4½"		8¼"		7'-7"	0.679	80.70	21.71	
		7'	35	6'-6"		9"		8'-7"	0.770	93.59	23.38	
	1 @ 6'	4'	24	7'-1"	10¾"	6½"	11¼"	5'-10"	0.641	85.81	21.71	
		5'	30	7'-3"		7½"		6'-10"	0.724	91.60	23.38	
		6'	36	7'-5"		8½"		7'-10"	0.818	99.56	25.05	
		7'	42	7'-7"		9½"		8'-10"	0.925	112.23	26.72	
		8'	48	7'-8½"		10¼"		9'-10"	1.030	123.01	28.39	
Section "G" – 40'-0"	1 @ 4'	3'	12	5'-0"	8¼"	6"	8¾"	4'-5"	0.373	49.38	15.03	
		4'	16	5'-1"		6½"		5'-5"	0.427	52.56	16.70	
		5'	20	5'-3"		7½"		6'-5"	0.507	60.85	18.37	
		6'	24	5'-5"		8½"		7'-5"	0.599	71.86	20.04	
	1 @ 5'	3'	15	6'-0"	9¾"	6"	10¼"	4'-8"	0.481	67.30	16.70	
		4'	20	6'-1½"		6¾"		5'-8"	0.595	70.89	18.37	
		5'	25	6'-3½"		7¾"		6'-8"	0.628	76.56	20.04	
		6'	30	6'-5½"		8¾"		7'-8"	0.723	85.78	21.71	
		7'	35	6'-7"		9½"		8'-8"	0.817	93.84	23.38	

NOTE:- For details of wings and bar lists, see Drawing Nos. W-X002-1, W-X003-1, and W-X004-1.

Bar Size	Pin Diam.	K	Add for 2 Hooks
#4	2"	4"	0'-10½"
#5	2½"	4¾"	0'-11½"
#6	3"	5"	1'-2"
#7	3½"	5¾"	1'-4"

Bars "b"

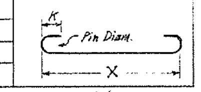

NOTE:- Dimensions are to centers of bars.

DOWEL BARS FOR TWO HEADWALLS

Span	Size	Spacing	No. Req'd	Length	X
4'	#4	11"	12	2'-5"	1'-2½"
5'	#4	11½"	14	2'-6"	1'-3"
6'	#4	12"	16	2'-7"	1'-3½"

Bars "r" Dowel bars in Headwalls

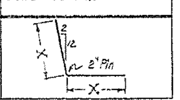

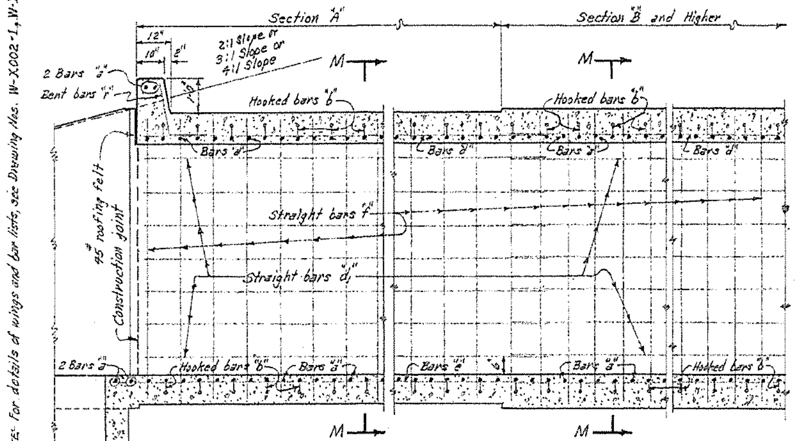

PART LONGITUDINAL SECTION

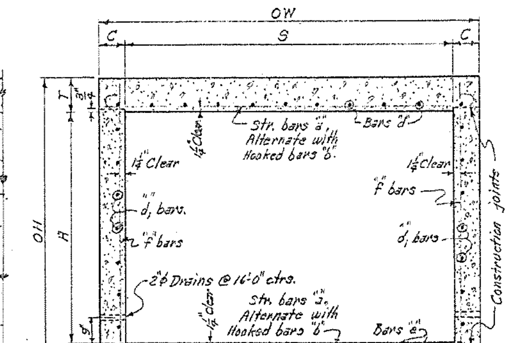

TYPICAL SECTION M-M

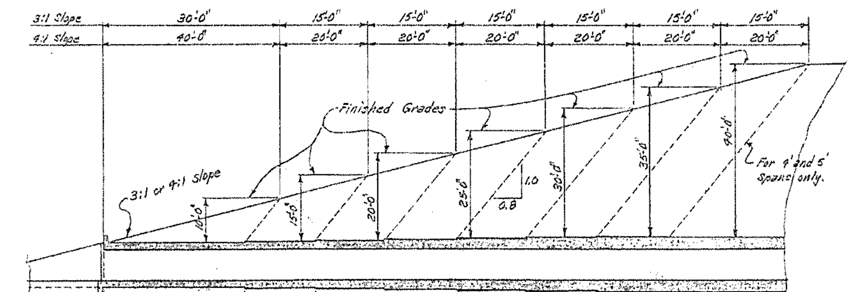

3:1 Slope =	Sections	A = 22'-0"	B = 11'-0"	C = 11'-0"	D = 11'-0"	E = 11'-0"	F = 11'-0"	Mid-Section G-Varies
	Bar Group	A	B	C	D	E	F	G
4:1 Slope =	Sections	A = 32'-0"	B = 16'-0"	C = 16'-0"	D = 16'-0"	E = 16'-0"	F = 16'-0"	Mid-Section G-Varies
	Bar Group	A	B	C	D	E	F	G

TYPICAL LONGITUDINAL SECTION-SHOWING SECTIONS AND BAR GROUPS FOR VARIOUS DEPTHS OF COVER

NOTE:- Lengths of Sections, with Bar Groups to be shown on Cross Section Sheets.

SECTIONS AND BAR GROUPS TO BE USED FOR VARIOUS DEPTHS OF COVER

Depths of Cover	Sections & Bar Groups for End Sections: A	B	C	D	E	F	Mid-Section and Bar Group
5.0' to 9.5'	✓						A
10.0' to 14.5'	✓						B
15.0' to 19.5'	✓	✓					C
20.0' to 24.5'	✓	✓	✓				D
25.0' to 29.5'	✓	✓	✓	✓			E
30.0' to 34.5'	✓	✓	✓	✓	✓		F
35.0' to 40.0'	✓	✓	✓	✓	✓	✓	G

LENGTH OF SECTIONS FOR SKEWED CULVERTS

Skew Angle	Sec. of Skew Angle	3:1 Slopes Sections A	3:1 Slopes Sections B,C,D,E & F	4:1 Slopes Sections A	4:1 Slopes Sections B,C,D,E & F
0°	1.0	22.0'	11.0'	32.0'	16.0'
15°	1.0353	22.776'	11.388'	33.129'	16.564'
30°	1.1547	25.403'	12.702'	36.950	18.475'
45°	1.4142	31.113'	15.556'	45.255'	22.627'

GENERAL NOTES:-

CONCRETE:- All concrete to be Class S, and shall be poured in the dry. All exposed corners to have ¾" chamfers.

REINFORCING STEEL:- Reinforcing to be deformed bars of intermediate or hard grade.

BAR LAP:- In computing the quantities of steel from the tables add one lap for each additional 33'-0" length of barrel over 32'-0". Lap longitudinal bars 30 diameters.

CONSTRUCTION JOINTS:- Construction joints between wingwalls, sidewalls and slabs shall be only where shown on plans.

SPECIFICATIONS:- Arkansas State Highway Commission Standard Specifications for Highway Construction and applicable Special Provisions.

NOTE:- This drawing to be used in conjunction with Standard Drawing Nos. W-X002-1, W-X003-1 and W-X004-1.

DESIGN LIVE LOAD

H20-S16 LOADING A.A.S.H.O. 1961

AND

SPECIAL MILITARY LOADING

Two 24,000 Lb. Axles @ 4'-0" ctrs.

UNIT STRESSES:-

Class S Concrete (n=10) 1200 #/□"

Reinforcing Steel 20,000 #/□"

CLASS S CONCRETE

ARKANSAS STATE HIGHWAY COMMISSION

DETAILS OF STANDARD BARREL SECTIONS FOR REINFORCED CONCRETE BOX CULVERTS

4', 5' & 6' SPANS SINGLES — 3:1 OR 4:1 SLOPES OVER 5'-0" COVER

STANDARD DRAWING NO. R-100X-X1

Designed By:- W.C.H. 9-5-62 — Checked By:- RAS 11-8-62

Drawn By:- W.C.H. 10-10-62 — Checked By:- J.E.M. 11-12-62

Quantities By:- W.C.H. 11-7-62 — Checked By:- J.E.M. 11-16-62

FED. ROAD No.	STATE	FED. AID PROJECT	FISCAL YEAR	SHEET No.	TOTAL SHEETS
6	ARK.			659	
JOB No.					

BAR LIST FOR BARREL SECTION 60'-0" IN LENGTH

D (Depth of Cover): 0'-0" TO 5'-0" MAXIMUM.

"a" bars — STRAIGHT — In Top and Bottom Slab of Barrel. 2 Add'l in Apron and Headwall - Each.

S (Clear Span)	H (Clear Height)	Size	Spacing	Number Req'd 3:1	Number Req'd 4:1	Length
2 @ 4'	2'	#5	12"	128	128	9'-5"
	3'			128	128	9'-5"
	4'			128	128	9'-5"
	5'			128	128	9'-5"
	6'			128	128	9'-8"
2 @ 5'	3'	#6	12"	128	128	11'-5"
	4'			128	128	11'-5"
	5'			128	128	11'-5"
	6'			128	128	11'-8"
	7'			128	128	11'-10"
2 @ 6'	3'	#6	11"	140	140	13'-5"
	4'			140	140	13'-5"
	5'			140	140	13'-5"
	6'			140	140	13'-8"
	7'			140	140	13'-10"
	8'			140	140	13'-11"
2 @ 7'	4'	#6	12"	128	128	15'-5"
	5'			128	128	15'-5"
	6'			128	128	15'-8"
	7'			128	128	15'-10"
	8'			128	128	15'-11"
	9'			128	128	16'-2"
2 @ 8'	4'	#6	11"	140	140	17'-5"
	5'			140	140	17'-8"
	6'			140	140	17'-8"
	7'			140	140	17'-10"
	8'			140	140	17'-11"
	9'			140	140	18'-2"
	10'			140	140	18'-5"
2 @ 9'	5'	#6	11"	140	140	19'-8"
	6'			140	140	19'-10"
	7'			140	140	19'-10"
	8'			140	140	19'-11"
	9'			140	140	20'-2"
	10'			140	140	20'-5"
	11'			140	140	20'-7"
2 @ 10'	5'	#7	12"	128	128	21'-8"
	6'			128	128	21'-10"
	7'			128	128	21'-10"
	8'			128	128	21'-11"
	9'			128	128	22'-2"
	10'			128	128	22'-5"
	11'			128	128	22'-7"
	12'			128	128	22'-9"
2 @ 11'	6'	#7	12"	128	128	23'-11"
	7'			128	128	23'-11"
	8'			128	128	23'-11"
	9'			128	128	24'-2"
	10'			128	128	24'-5"
	11'			128	128	24'-7"
	12'			128	128	24'-9"
2 @ 12'	6'	#7	11"	140	140	25'-11"
	7'			140	140	25'-11"
	8'			140	140	25'-11"
	9'			140	140	26'-2"
	10'			140	140	26'-5"
	11'			140	140	26'-7"
	12			140	140	26'-9"

"b" bars — BENT - See Diagram below. — In Bottom of Top Slab bent up over Division Wall - hooked. Alternate with "a" and "c" bars.

S	H	Size	Spacing	Number Req'd 3:1	Number Req'd 4:1	Length	X	Y	Z
2 @ 4'	2'	#5	12"	59	59	10'-6"	0'-3"	2'-2½"	3'-4"
	3'			59	59	10'-6"	0'-3"	2'-2½"	3'-4"
	4'			59	59	10'-6"	0'-3"	2'-2½"	3'-4"
	5'			59	59	10'-6"	0'-3"	2'-2½"	3'-4"
	6'			59	59	10'-9"	0'-3"	2'-3½"	3'-5"
2 @ 5'	3'	#5	12"	59	59	12'-7"	0'-3½"	2'-7½"	4'-1"
	4'			59	59	12'-7"	0'-3½"	2'-7½"	4'-1"
	5'			59	59	12'-7"	0'-3½"	2'-7½"	4'-1"
	6'			59	59	12'-10"	0'-3½"	2'-8½"	4'-2"
	7'			59	59	13'-0"	0'-3½"	2'-9½"	4'-2½"
2 @ 6'	3'	#5	11"	65	65	14'-7"	0'-4"	3'-0½"	4'-10"
	4'			65	65	14'-7"	0'-4"	3'-0½"	4'-10"
	5'			65	65	14'-7"	0'-4"	3'-0½"	4'-10"
	6'			65	65	14'-10"	0'-4"	3'-1½"	4'-11"
	7'			65	65	15'-0"	0'-4"	3'-2½"	4'-11½"
	8'			65	65	15'-1"	0'-4"	3'-2½"	5'-0"
2 @ 7'	4'	#6	12"	59	59	16'-9"	0'-4½"	3'-5"	5'-7"
	5'			59	59	16'-9"	0'-4½"	3'-5"	5'-7"
	6'			59	59	17'-0"	0'-4½"	3'-6"	5'-8"
	7'			59	59	17'-2"	0'-4½"	3'-7"	5'-8½"
	8'			59	59	17'-3"	0'-4½"	3'-7"	5'-9"
	9'			59	59	17'-6"	0'-4½"	3'-8"	5'-10"
2 @ 8'	4'	#6	11"	65	65	18'-10"	0'-5"	3'-10"	6'-4"
	5'			65	65	19'-1"	0'-5"	3'-11"	6'-5"
	6'			65	65	19'-1"	0'-5"	3'-11"	6'-5"
	7'			65	65	19'-3"	0'-5"	4'-0"	6'-5½"
	8'			65	65	19'-4"	0'-5"	4'-0"	6'-6"
	9'			65	65	19'-7"	0'-5"	4'-1"	6'-7"
	10'			65	65	19'-10"	0'-5"	4'-2"	6'-8"
2 @ 9'	5'	#6	11"	65	65	21'-1"	0'-5½"	4'-4"	7'-2"
	6'			65	65	21'-3"	0'-5½"	4'-5"	7'-2½"
	7'			65	65	21'-3"	0'-5½"	4'-5"	7'-2½"
	8'			65	65	21'-4"	0'-5½"	4'-5"	7'-3"
	9'			65	65	21'-7"	0'-5½"	4'-6"	7'-4"
	10'			65	65	21'-10"	0'-5½"	4'-7"	7'-5"
	11'			65	65	22'-0"	0'-5½"	4'-7"	7'-6"
2 @ 10'	5'	#6	12"	59	59	23'-2"	0'-6"	4'-9"	7'-11"
	6'			59	59	23'-4"	0'-6"	4'-10"	7'-11½"
	7'			59	59	23'-4"	0'-6"	4'-10"	7'-11½"
	8'			59	59	23'-5"	0'-6"	4'-10"	8'-0"
	9'			59	59	23'-8"	0'-6"	4'-11"	8'-1"
	10'			59	59	23'-11"	0'-6"	5'-0"	8'-2"
	11'			59	59	24'-1"	0'-6"	5'-0"	8'-3"
	12'			59	59	24'-3"	0'-6"	5'-0"	8'-4"
2 @ 11'	6'	#6	12"	59	59	25'-5"	0'-6½"	5'-3"	8'-9"
	7'			59	59	25'-5"	0'-6½"	5'-3"	8'-9"
	8'			59	59	25'-5"	0'-6½"	5'-3"	8'-9"
	9'			59	59	25'-8"	0'-6½"	5'-4"	8'-10"
	10'			59	59	25'-11"	0'-6½"	5'-5"	8'-11"
	11'			59	59	26'-1"	0'-6½"	5'-5"	9'-0"
	12'			59	59	26'-3"	0'-6½"	5'-5"	9'-1"
2 @ 12'	6'	#6	11"	65	65	27'-5"	0'-7"	5'-8"	9'-6"
	7'			65	65	27'-5"	0'-7"	5'-8"	9'-6"
	8'			65	65	27'-5"	0'-7"	5'-8"	9'-6"
	9'			65	65	27'-8"	0'-7"	5'-9"	9'-7"
	10'			65	65	27'-11"	0'-7"	5'-10"	9'-8"
	11'			65	65	28'-1"	0'-7"	5'-10"	9'-9"
	12			65	65	28'-3"	0'-7"	5'-10"	9'-10"

"b2" bars — BENT - See Diagram below. — In Top of Bottom Slab bent down under Division Wall - hooked. Alternate with "a" and "c" bars.

S	H	Size	Spacing	Number Req'd 3:1	Number Req'd 4:1	Length	X	Y	Z
2 @ 4'	2'	#5	12"	59	59	10'-6"	0'-2½"	2'-3½"	3'-4"
	3'			59	59	10'-6"	0'-2½"	2'-3½"	3'-4"
	4'			59	59	10'-6"	0'-2½"	2'-3½"	3'-4"
	5'			59	59	10'-6"	0'-2½"	2'-3½"	3'-4"
	6'			59	59	10'-9"	0'-2½"	2'-4½"	3'-5"
2 @ 5'	3'	#5	12"	59	59	12'-6"	0'-3"	2'-8½"	4'-1"
	4'			59	59	12'-6"	0'-3"	2'-8½"	4'-1"
	5'			59	59	12'-6"	0'-3"	2'-8½"	4'-1"
	6'			59	59	12'-9"	0'-3"	2'-9½"	4'-2"
	7'			59	59	12'-11"	0'-3"	2'-10½"	4'-2½"
2 @ 6'	3'	#5	11"	65	65	14'-7"	0'-4"	3'-0½"	4'-10"
	4'			65	65	14'-7"	0'-4"	3'-0½"	4'-10"
	5'			65	65	14'-7"	0'-4"	3'-0½"	4'-10"
	6'			65	65	14'-10"	0'-4"	3'-1½"	4'-11"
	7'			65	65	15'-0"	0'-4"	3'-2½"	4'-11½"
	8'			65	65	15'-1"	0'-4"	3'-2½"	5'-0"
2 @ 7'	4'	#6	12"	59	59	16'-9"	0'-4½"	3'-5"	5'-7"
	5'			59	59	16'-9"	0'-4½"	3'-5"	5'-7"
	6'			59	59	17'-0"	0'-4½"	3'-6"	5'-8"
	7'			59	59	17'-2"	0'-4½"	3'-7"	5'-8½"
	8'			59	59	17'-3"	0'-4½"	3'-7"	5'-9"
	9'			59	59	17'-6"	0'-4½"	3'-8"	5'-10"
2 @ 8'	4'	#6	11"	65	65	18'-10"	0'-5"	3'-10"	6'-4"
	5'			65	65	19'-1"	0'-5"	3'-11"	6'-5"
	6'			65	65	19'-1"	0'-5"	3'-11"	6'-5"
	7'			65	65	19'-3"	0'-5"	4'-0"	6'-5½"
	8'			65	65	19'-4"	0'-5"	4'-0"	6'-6"
	9'			65	65	19'-7"	0'-5"	4'-1"	6'-7"
	10'			65	65	19'-10"	0'-5"	4'-2"	6'-8"
2 @ 9'	5'	#6	11"	65	65	21'-1"	0'-5½"	4'-3½"	7'-2"
	6'			65	65	21'-3"	0'-5¾"	4'-4½"	7'-2½"
	7'			65	65	21'-3"	0'-5¾"	4'-4½"	7'-2½"
	8'			65	65	21'-4"	0'-5¾"	4'-4½"	7'-3"
	9'			65	65	21'-7"	0'-5¾"	4'-5½"	7'-4"
	10'			65	65	21'-10"	0'-5¾"	4'-6½"	7'-5"
	11'			65	65	22'-0"	0'-5¾"	4'-6½"	7'-6"
2 @ 10'	5'	#6	12"	59	59	23'-2"	0'-6½"	4'-8"	7'-11"
	6'			59	59	23'-4"	0'-6½"	4'-9"	7'-11½"
	7'			59	59	23'-4"	0'-6½"	4'-9"	7'-11½"
	8'			59	59	23'-5"	0'-6½"	4'-9"	8'-0"
	9'			59	59	23'-8"	0'-6½"	4'-10"	8'-1"
	10'			59	59	23'-11"	0'-6½"	4'-11"	8'-2"
	11'			59	59	24'-1"	0'-6½"	4'-11"	8'-3"
	12'			59	59	24'-3"	0'-6½"	4'-11"	8'-4"
2 @ 11'	6'	#6	12"	59	59	25'-6"	0'-7½"	5'-1"	8'-9"
	7'			59	59	25'-6"	0'-7½"	5'-1"	8'-9"
	8'			59	59	25'-6"	0'-7½"	5'-1"	8'-9"
	9'			59	59	25'-9"	0'-7½"	5'-2"	8'-10"
	10'			59	59	26'-0"	0'-7½"	5'-3"	8'-11"
	11'			59	59	26'-2"	0'-7½"	5'-3"	9'-0"
	12'			59	59	26'-4"	0'-7½"	5'-3"	9'-1"
2 @ 12'	6'	#6	11"	65	65	27'-7"	0'-8½"	5'-5"	9'-6"
	7'			65	65	27'-7"	0'-8½"	5'-5"	9'-6"
	8'			65	65	27'-7"	0'-8½"	5'-5"	9'-6"
	9'			65	65	27'-10"	0'-8½"	5'-6"	9'-7"
	10'			65	65	28'-1"	0'-8½"	5'-7"	9'-8"
	11'			65	65	28'-3"	0'-8½"	5'-7"	9'-9"
	12			65	65	28'-5"	0'-8½"	5'-7"	9'-10"

"c" bars — STRAIGHT — In Top and Bottom Slab of Barrel. Alternate with "b" and "b2" bars.

S	H	Size	Spacing	Number Req'd 3:1	Number Req'd 4:1	Length
2 @ 4'	2'	#5	12"	120	120	4'-8"
	3'			120	120	4'-8"
	4'			120	120	4'-8"
	5'			120	120	4'-8"
	6'			120	120	4'-9"
2 @ 5'	3'	#6	12"	120	120	5'-8"
	4'			120	120	5'-8"
	5'			120	120	5'-8"
	6'			120	120	5'-9"
	7'			120	120	5'-10"
2 @ 6'	3'	#6	11"	132	132	6'-8"
	4'			132	132	6'-8"
	5'			132	132	6'-8"
	6'			132	132	6'-9"
	7'			132	132	6'-10"
	8'			132	132	6'-10"
2 @ 7'	4'	#6	12"	120	120	7'-8"
	5'			120	120	7'-8"
	6'			120	120	7'-9"
	7'			120	120	7'-10"
	8'			120	120	7'-10"
	9'			120	120	7'-11"
2 @ 8'	4'	#6	11"	132	132	8'-8"
	5'			132	132	8'-9"
	6'			132	132	8'-9"
	7'			132	132	8'-10"
	8'			132	132	8'-10"
	9'			132	132	8'-11"
	10'			132	132	9'-0"
2 @ 9'	5'	#6	11"	132	132	9'-9"
	6'			132	132	9'-10"
	7'			132	132	9'-10"
	8'			132	132	9'-10"
	9'			132	132	9'-11"
	10'			132	132	10'-0"
	11'			132	132	10'-0"
2 @ 10'	5'	#7	12"	120	120	10'-9"
	6'			120	120	10'-10"
	7'			120	120	10'-10"
	8'			120	120	10'-10"
	9'			120	120	10'-11"
	10'			120	120	11'-0"
	11'			120	120	11'-0"
	12'			120	120	11'-0"
2 @ 11'	6'	#7	12"	120	120	11'-10"
	7'			120	120	11'-10"
	8'			120	120	11'-10"
	9'			120	120	11'-11"
	10'			120	120	12'-0"
	11'			120	120	12'-0"
	12'			120	120	12'-0"
2 @ 12'	6'	#7	11"	132	132	12'-10"
	7'			132	132	12'-10"
	8'			132	132	12'-10"
	9'			132	132	12'-11"
	10'			132	132	13'-0"
	11'			132	132	13'-0"
	12			132	132	13'-0"

"d" bars — STRAIGHT — Longitudinal in Top Slab of Barrel. "d1" bars — STRAIGHT — Longitudinal in Sidewalls and Division Walls. "e" bars — STRAIGHT — Longitudinal in Bottom Slab of Barrel.

S	H	d Size	d Spacing	d No. Req'd	d1 Size	d1 Spacing	d1 No. Req'd	e Size	e Spacing	e No. Req'd
2 @ 4'	2'	#5	12"	14	#4	12"	8	#4	12"	14
	3'			14			12			14
	4'			14			16			14
	5'			14			20			14
	6'			14			24			14
2 @ 5'	3'	#5	11½"	16	#4	12"	12	#4	12"	16
	4'			16			16			16
	5'			16			20			16
	6'			16			24			16
	7'			16			28			16
2 @ 6'	3'	#5	11½"	18	#4	12"	12	#4	12"	18
	4'			18			16			18
	5'			18			20			18
	6'			18			24			18
	7'			18			28			18
	8'			18			32			18
2 @ 7'	4'	#5	11½"	20	#4	12"	16	#4	12"	20
	5'			20			20			20
	6'			20			24			20
	7'			20			28			20
	8'			20			32			20
	9'			20			36			20
2 @ 8'	4'	#5	11½"	23	#4	12"	16	#4	12"	22
	5'			23			20			22
	6'			23			24			22
	7'			23			28			22
	8'			23			32			22
	9'			23			36			22
	10'			23			40			22
2 @ 9'	5'	#5	11½"	26	#4	12"	20	#4	12"	25
	6'			26			24			25
	7'			26			28			25
	8'			26			32			25
	9'			26			36			25
	10'			26			40			25
	11'			26			44			25
2 @ 10'	5'	#5	11½"	28	#4	12"	20	#4	12"	27
	6'			28			24			27
	7'			28			28			27
	8'			28			32			27
	9'			28			36			27
	10'			28			40			27
	11'			28			44			27
	12'			28			48			27
2 @ 11'	6'	#5	11½"	30	#4	12"	24	#4	12"	29
	7'			30			28			29
	8'			30			32			29
	9'			30			36			29
	10'			30			40			29
	11'			30			44			29
	12'			30			48			29
2 @ 12'	6'	#5	11½"	32	#4	12"	24	#4	12"	31
	7'			32			28			31
	8'			32			32			31
	9'			32			36			31
	10'			32			40			31
	11'			32			44			31
	12			32			48			31

Length, "d" bars: 2 @ 30'-8" for 60'-0" Length Barrel (1'-3" Lap)
Length, "d1" bars: 2 @ 30'-6" for 60'-0" Length Barrel (1'-3" Lap)
Length, "e" bars: 2 @ 31'-6" for 60'-0" Length Barrel (1'-3" Lap)

"f" bars — STRAIGHT — Vertical in Sidewalls and Division Walls.

S	H	Size	Spacing	Number Req'd 3:1	Number Req'd 4:1	Length
2 @ 4'	2'	#4	12"	240	240	2'-10"
	3'			240	240	3'-10"
	4'			240	240	4'-10"
	5'			240	240	5'-10"
	6'			240	240	6'-10"
2 @ 5'	3'	#4	12"	240	240	3'-11"
	4'			240	240	4'-11"
	5'			240	240	5'-11"
	6'			240	240	6'-11"
	7'			240	240	7'-11"
2 @ 6'	3'	#4	12"	240	240	4'-0"
	4'			240	240	5'-0"
	5'			240	240	6'-0"
	6'			240	240	7'-0"
	7'			240	240	8'-0"
	8'		10"	288	288	9'-0"
2 @ 7'	4'	#4	12"	240	240	5'-1"
	5'			240	240	6'-1"
	6'			240	240	7'-1"
	7'			240	240	8'-1"
	8'		10"	288	288	9'-1"
	9'	#5	12"	240	240	10'-1"
2 @ 8'	4'	#4	12"	240	240	5'-2"
	5'			240	240	6'-2"
	6'			240	240	7'-2"
	7'			240	240	8'-2"
	8'		10"	288	288	9'-2"
	9'	#5	12"	240	240	10'-2"
	10'		11"	264	264	11'-2"
2 @ 9'	5'	#4	12"	240	240	6'-3"
	6'			240	240	7'-3"
	7'			240	240	8'-3"
	8'		10"	288	288	9'-3"
	9'	#5	12"	240	240	10'-3"
	10'		11"	264	264	11'-3"
	11'		10"	288	288	12'-3"
2 @ 10'	5'	#4	12"	240	240	6'-4"
	6'			240	240	7'-4"
	7'			240	240	8'-4"
	8'		10"	288	288	9'-4"
	9'	#5	12"	240	240	10'-4"
	10'		11"	264	264	11'-4"
	11'		10"	288	288	12'-4"
	12'	#6	12"	240	240	13'-4"
2 @ 11'	6'	#4	12"	240	240	7'-6"
	7'			240	240	8'-6"
	8'		10"	288	288	9'-6"
	9'	#5	12"	240	240	10'-6"
	10'		11"	264	264	11'-6"
	11'		10"	288	288	12'-6"
	12'	#6	12"	240	240	13'-6"
2 @ 12'	6'	#4	12"	240	240	7'-7"
	7'			240	240	8'-7"
	8'		10"	288	288	9'-7"
	9'	#5	12"	240	240	10'-7"
	10'		11"	264	264	11'-7"
	11'		10"	288	288	12'-7"
	12	#6	12"	240	240	13'-7"

DIMENSIONS / QUANTITIES

D (Max. Design Depth of Cover): 5'-0"

S (Clear Spans)	H (Clear Height)	A (Sq. Ft. Opening)	OW (Overall Width)	T (Thickness of Top Slab)	C (Thickness of Sidewalls)	M (Thickness of Division Wall)	B (Thickness of Bottom Slab)	OH (Overall Height)	Class S Conc. per Lin. Ft. of Barrel (Cu.Yd.)	Reinforcing Steel per Lin. Ft. of Barrel (Lb.)	Additional per Lap (Lb.)	Additional Two Headwalls & Aprons (Lb.)
2 @ 4'	2'	16	9'-8"	6½"	6"	8"	6"	3'-0½"	0.496	88.15	42.71	129.56
	3'	24	9'-8"		6"	8"		4'-0½"	0.558	93.49	46.05	129.56
	4'	32	9'-8"		6"	8"		5'-0½"	0.620	98.84	49.39	129.56
	5'	40	9'-8"		6"	8"		6'-0½"	0.682	104.18	52.73	129.56
	6'	48	9'-11"		7"	9"		7'-0½"	0.809	110.74	56.07	131.65
2 @ 5'	3'	30	11'-8"	7"	6"	8"	6½"	4'-1½"	0.671	123.34	51.19	198.64
	4'	40	11'-8"		6"	8"		5'-1½"	0.733	128.68	54.53	198.64
	5'	50	11'-8"		6"	8"		6'-1½"	0.795	134.03	57.87	198.64
	6'	60	11'-11"		7"	9"		7'-1½"	0.922	140.89	61.21	201.64
	7'	70	12'-1"		7½"	10"		8'-1½"	1.049	147.34	64.55	203.65
2 @ 6'	3'	36	13'-8"	7½"	6"	8"	7½"	4'-3"	0.818	148.50	56.34	233.58
	4'	48	13'-8"		6"	8"		5'-3"	0.880	153.85	59.68	233.58
	5'	60	13'-8"		6"	8"		6'-3"	0.941	159.19	63.02	233.58
	6'	72	13'-11"		7"	9"		7'-3"	1.070	166.20	66.36	236.59
	7'	84	14'-1"		7½"	10"		8'-3"	1.192	172.74	69.70	238.59
	8'	96	14'-2"		8"	10"		9'-3"	1.298	183.36	73.04	239.59
2 @ 7'	4'	56	15'-8"	8"	6"	8"	8"	5'-4"	1.021	178.15	64.83	268.97
	5'	70	15'-8"		6"	8"		6'-4"	1.082	183.49	68.17	268.97
	6'	84	15'-11"		7"	9"		7'-4"	1.212	190.59	71.51	271.97
	7'	98	16'-1"		7½"	10"		8'-4"	1.334	197.19	74.85	273.98
	8'	112	16'-2"		8"	10"		9'-4"	1.440	207.89	78.19	274.98
	9'	126	16'-5"		9"	11"		10'-4"	1.616	225.25	81.53	277.98
2 @ 8'	4'	64	17'-8"	8½"	6"	8"	8½"	5'-5"	1.174	210.37	71.71	304.80
	5'	80	17'-11"		7"	9"		6'-5"	1.295	217.63	75.05	307.81
	6'	96	17'-11"		7"	9"		7'-5"	1.366	222.97	78.39	307.81
	7'	112	18'-1"		7½"	10"		8'-5"	1.489	229.68	81.73	309.81
	8'	128	18'-2"		8"	10"		9'-5"	1.595	240.97	85.07	310.81
	9'	144	18'-5"		9"	11"		10'-5"	1.772	258.08	88.41	313.82
	10'	160	18'-8"		10"	12"		11'-5"	1.967	271.07	91.75	316.82
2 @ 9'	5'	90	19'-11"	9"	7"	9"	9½"	6'-6½"	1.477	239.37	82.77	345.42
	6'	108	20'-1"		7½"	10"		7'-6½"	1.594	246.03	86.11	347.43
	7'	126	20'-1"		7½"	10"		8'-6½"	1.671	251.43	89.45	347.43
	8'	144	20'-2"		8"	10"		9'-6½"	1.778	262.26	92.79	348.43
	9'	162	20'-5"		9"	11"		10'-6½"	1.956	279.95	96.13	351.43
	10'	180	20'-8"		10"	12"		11'-6½"	2.152	292.97	99.47	354.43
	11'	198	20'-10"		11"	12"		12'-6½"	2.328	306.86	102.81	356.44
2 @ 10'	5'	100	21'-11"	9½"	7"	9"	10"	6'-7½"	1.674	279.64	87.92	479.99
	6'	120	22'-1"		7½"	10"		7'-7½"	1.792	286.50	91.26	482.71
	7'	140	22'-1"		7½"	10"		8'-7½"	1.869	291.85	94.60	482.71
	8'	160	22'-2"		8"	10"		9'-7½"	1.976	302.77	97.94	484.08
	9'	180	22'-5"		9"	11"		10'-7½"	2.155	320.74	101.28	488.16
	10'	200	22'-8"		10"	12"		11'-7½"	2.352	333.99	104.62	492.25
	11'	220	22'-10"		11"	12"		12'-7½"	2.529	348.01	107.96	494.98
	12'	240	23'-0"		12"	12"		13'-7½"	2.718	370.23	111.30	497.70
2 @ 11'	6'	132	24'-2"	10"	8"	10"	11"	7'-9"	2.048	309.36	96.41	530.03
	7'	154	24'-2"		8"	10"		8'-9"	2.128	314.70	99.75	530.03
	8'	176	24'-2"		8"	10"		9'-9"	2.208	325.12	103.09	530.03
	9'	198	24'-5"		9"	11"		10'-9"	2.398	343.25	106.43	534.12
	10'	220	24'-8"		10"	12"		11'-9"	2.586	356.57	109.77	538.21
	11'	242	24'-10"		11"	12"		12'-9"	2.764	370.67	113.11	540.93
	12'	264	25'-0"		12"	12"		13'-9"	2.954	393.05	116.45	543.66
2 @ 12'	6'	144	26'-2"	10½"	8"	10"	12"	7'-10½"	2.299	353.31	101.55	576.93
	7'	168	26'-2"		8"	10"		8'-10½"	2.379	362.65	104.89	576.93
	8'	192	26'-2"		8"	10"		9'-10½"	2.459	369.12	108.23	576.93
	9'	216	26'-5"		9"	11"		10'-10½"	2.690	387.52	111.57	580.52
	10'	240	26'-8"		10"	12"		11'-10½"	2.840	401.07	114.91	584.60
	11'	264	26'-10"		11"	12"		12'-10½"	3.018	415.31	118.25	587.33
	12'	288	27'-0"		12"	12"		13'-10½"	3.208	437.88	121.59	590.05

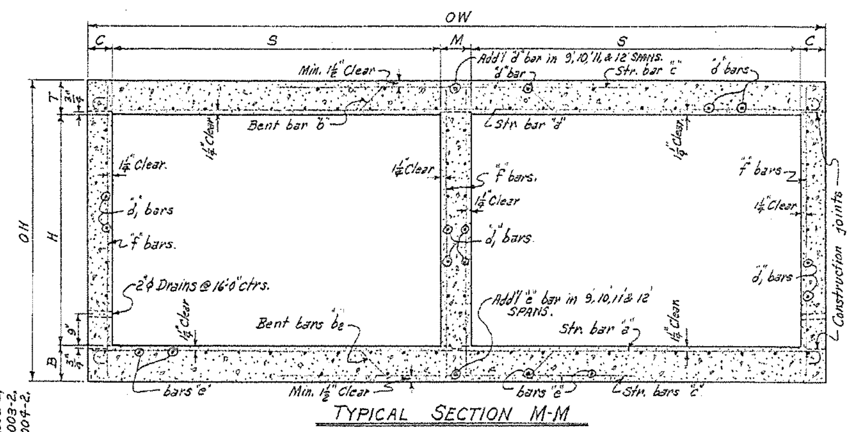

TYPICAL SECTION M-M

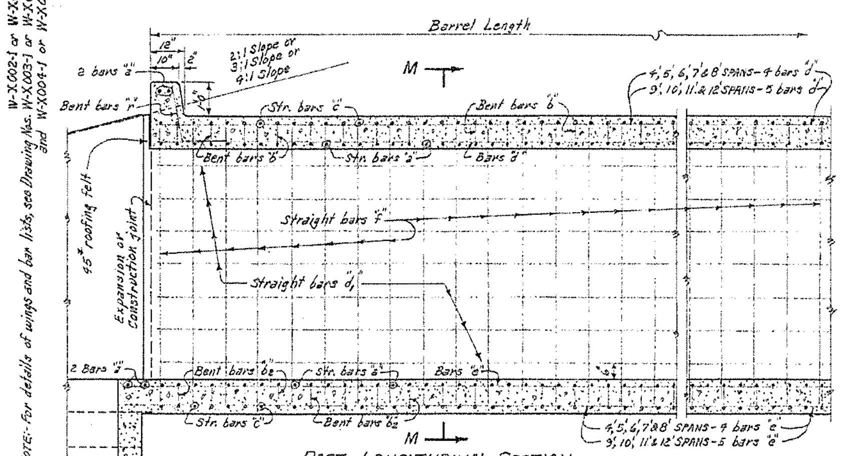

PART LONGITUDINAL SECTION

NOTE:- For details of wings and bar lists, see Drawing Nos. W-X002-1 or W-X002-2, W-X003-1 or W-X003-2, and W-X004-1 or W-X004-2.

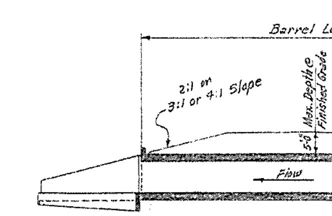

LONGITUDINAL SECTION

BAR SIZE	PIN DIAM.	K	ADD FOR 2 HOOKS	BENDING DIAGRAM FOR Bars "b" and "b2"
#5	2½"	4¼"	0'-11½"	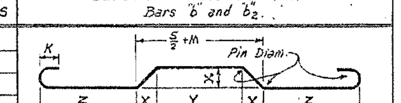
#6	3"	5"	1'-2"	

NOTE:- Dimensions are to centers of bars. (Bars "b" and "b2")

DOWEL BARS FOR TWO HEADWALLS

2 SPANS @	SIZE	SPACING	NO. REQ'D	LENGTH	X	Bars "r" Dowel bars in Headwalls.
4'	#4	12"±	20	2'-5"	1'-2½"	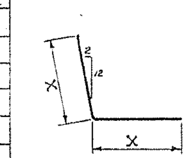
5'	#4	12"±	24	2'-6"	1'-3"	
6'	#4	12"±	28	2'-7"	1'-3½"	
7'	#4	12"±	32	2'-8"	1'-4"	
8'	#4	12"±	36	2'-9"	1'-4½"	
9'	#4	12"±	40	2'-10"	1'-5"	
10'	#4	12"±	46	2'-11"	1'-5½"	
11'	#4	12"±	50	3'-0"	1'-6"	
12'	#4	12"±	54	3'-1"	1'-6½"	

GENERAL NOTES:-

CONCRETE:- All concrete to be Class S, and shall be poured in the dry. All exposed corners to have ¾" chamfers.

REINFORCING STEEL:- Reinforcing to be deformed bars of intermediate or hard grade.

BAR LAP:- In computing the quantities of steel from the tables add one lap for each additional 33'-0" length of barrel over 32'-0". Lap longitudinal bars 30 diameters.

CONSTRUCTION JOINTS:- Construction joints between wingwalls, sidewalls, division walls and slabs shall be only where shown on plans.

SPECIFICATIONS:- Arkansas State Highway Commission Standard Specifications for Highway Construction and applicable Special Provisions.

DESIGN LIVE LOAD

H20-S16 LOADING A.A.S.H.O. 1961

AND

SPECIAL MILITARY LOADING

Two 24,000 Lb. Axles @ 4'-0" ctrs.

UNIT STRESSES:-

Class S Concrete (n=10) 1200#/□"
Reinforcing Steel 20,000#/□"

NOTE:- This drawing to be used in conjunction with Standard Wing Drawing Nos. W-X003-1 or W-X003-2 and W-X004-1 or W-X004-2. Also Drawing Nos. W-X002-1 or W-X002-2.

CLASS S CONCRETE

ARKANSAS STATE HIGHWAY COMMISSION

DETAILS OF STANDARD BARREL SECTIONS FOR REINFORCED CONCRETE BOX CULVERTS

4,5,6,7,8,9,10,11 & 12 SPANS — 3:1 OR 4:1 SLOPES

DOUBLES — UNDER 5'-0" COVER

STANDARD DRAWING NO. R-200X-0.

Designed by:- W.C.H. 1-17-63. Checked by:- T.H.S. 5-14-63
Drawn by:- W.C.H. 2-15-63. Checked by:- T.H.S. 5-24-63
Quantities by:- W.C.H. 2-19-63. Checked by:- T.H.S. 5-24-63

FED. ROAD No.	STATE	FED. AID PROJECT	FISCAL YEAR	SHEET No.	TOTAL SHEETS
6	ARK.			660	
JOB No.					

BAR LIST FOR VARIOUS SECTIONS OF BARREL

Note:- Bars for each Section to be marked with the Section letter, thus for Section B, the bars should be marked Ba, Bb, Bb2, Bc, Bd, Bd1, Be and Bf.

"a" bars – STRAIGHT – In Top and Bottom Slabs of Barrel. 2 Add'l in Apron and Headwall - Each.

Section & Bar Group	Length of Section	Depth of Cover D	Clear Span S	Clear Height H	Size	Spacing	No. Req'd 2:1	3:1	4:1	Length
"A"	2:1=12'-0", 3:1=22'-0" & 4:1=32'-0"	0' to 10'-0"	2@ 4'	2'	#4	13"	26	46	64	9'-5"
			6'	3'	#4	12"	28	48	68	13'-5"
			7'	4'	#4	12"	28	48	68	15'-5"
			8'	4'	#5	13"	26	46	64	17'-5"
			9'	5'	#5	11"	30	52	74	19'-8"
			10'	5'	#5	12"	28	48	68	21'-8"
"B"	2:1=6'-0", 3:1=11'-0" & 4:1=16'-0"	10'-0" to 15'-0"	4'	2'	#4	11"	14	24	34	9'-5"
			6'	3'	#4	11"	14	24	36	13'-5"
			7'	4'	#5	13"	12	20	30	15'-5"
			8'	4'	#5	12"	12	22	32	17'-5"
			9'	5'	#5	13"	12	20	30	19'-8"
			10'	5'	#5	12"	12	22	32	21'-8"
"C"	2:1=6'-0", 3:1=11'-0" & 4:1=16'-0"	15'-0" to 20'-0"	4'	2'	#4	10"	14	26	40	9'-5"
			6'	3'	#5	13"	10	20	30	13'-5"
			7'	4'	#5	12"	12	22	32	15'-5"
			8'	4'	#5	12"	12	22	32	17'-5"
			9'	5'	#6	12"	12	22	32	19'-8"
			10'	5'	#6	13"	12	20	30	21'-8"
"D"	2:1=6'-0", 3:1=11'-0" & 4:1=16'-0"	20'-0" to 25'-0"	4'	2'	#4	13"	12	26	28	9'-5"
			6'	3'	#5	12"	12	22	32	13'-5"
			7'	4'	#5	11"	12	26	36	15'-5"
			8'	4'	#5	11"	14	24	34	17'-5"
			9'	5'	#6	11"	12	24	34	19'-8"
			10'	5'	#6	12"	12	22	32	21'-8"
"E"	2:1=6'-0", 3:1=11'-0", & 4:1=16'-0"	25'-0" to 30'-0"	4'	2'	#4	12"	12	22	32	9'-5"
			6'	3'	#5	11"	14	26	34	13'-5"
			7'	4'	#5	10"	16	26	38	15'-5"
			8'	4'	#5	11"	14	24	36	17'-5"
				5'			"	"	"	17'-8"
				6'			"	"	"	17'-10"
				7'			"	"	"	18'-1"
				8'			"	"	"	18'-2"
				9'			"	"	"	18'-5"
				10'			14	24	36	18'-8"
			9'	5'	#6	10"	16	28	40	19'-8"
				6'			"	"	"	19'-11"
				7'			"	"	"	20'-1"
				8'			"	"	"	20'-3"
				9'			"	"	"	20'-6"
				10'			"	"	"	20'-9"
				11'			16	28	40	20'-11"
	Varies		10'	5'	#6	11"	Varies with Length of Barrel.			21'-9"
				6'						21'-11"
				7'						22'-1"
				8'						22'-3"
				9'						22'-6"
				10'						22'-9"
"F"	2:1=6'-0", 3:1=11'-0" & 4:1=16'-0"	30'-0" to 35'-0"	4'	2'	#4	11"	12	24	36	9'-5"
			6'	3'	#5	10"	14	26	38	13'-5"
			7'	4'	#5	12"	12	22	32	15'-6"
				5'			"	"	"	15'-8"
				6'			"	"	"	15'-10"
				7'			"	"	"	16'-1"
				8'			"	"	"	16'-3"
				9'			12	22	32	16'-6"
			8'	4'	#5	10"	14	26	38	17'-6"
				5'			"	"	"	17'-9"
				6'			"	"	"	17'-11"
				7'			"	"	"	18'-2"
				8'			"	"	"	18'-4"
				9'			"	"	"	18'-7"
				10'			14	26	38	18'-10"
	Varies		9'	5'	#6	10"				19'-9"
				6'						20'-0"
				7'						20'-2"
				8'						20'-4"
				9'						20'-7"
"G"	Varies with Length of Barrel	35'-0" to 40'-0"	4'	2'	#4	10"	Varies with Length of Barrel.	Varies with Length of Barrel.	Varies with Length of Barrel.	9'-5"
			6'	3'	#5	11"				13'-5"
				4'						13'-6"
				5'						13'-8"
				6'						13'-11"
				7'						14'-2"
				8'						14'-4"
			7'	4'	#6	11"				15'-7"
				5'						15'-9"
				6'						16'-0"
				7'						16'-3"
				8'						16'-5"
				9'						16'-8"
			8'	4'	#6	12"				17'-8"
				5'						17'-11"
				6'						18'-1"
				7'						18'-4"
				8'						18'-6"
				9'						18'-9"
				10'						19'-0"

"b" bars – BENT - See Diagram at Right. In Bottom of Top Slab bent up over Division Wall - hooked. Alternate with "a" and "c" bars.
"b2" bars – BENT - See Diagram at Right. In Top of Bottom Slab bent down under Division Wall - hooked. Alternate with "a" and "c" bars.

Sect.	S	H	b Size	Spacing	No. 2:1	3:1	4:1	Length	X	Y	Z	b2 Size	Spacing	No. 2:1	3:1	4:1	Length	X	Y	Z
A	4'	2'	#4	13"	11	20	29	10'-5"	0'-2¾"	2'-1"	3'-5"	#4	13"	11	20	29	10'-5"	0'-2¾"	2'-1"	3'-5"
	6'	3'	#5	12"	12	22	32	14'-7"	0'-3¾"	2'-11"	4'-11"	#5	12"	12	22	32	14'-7"	0'-4½"	2'-10"	4'-11"
	7'	4'	#6	12"	12	22	32	16'-10"	0'-4¾"	3'-4½"	5'-7"	#6	12"	12	22	32	16'-10"	0'-5¼"	3'-3½"	5'-7"
	8'	4'	#6	13"	11	20	29	18'-11"	0'-5¾"	3'-6½"	6'-5"	#6	13"	11	20	29	18'-11"	0'-6½"	3'-5½"	6'-5"
	9'	5'	#6	11"	13	24	35	21'-2"	0'-6½"	4'-2"	7'-2"	#6	11"	13	24	35	21'-3"	0'-7½"	4'-0½"	7'-2"
	10'	5'	#6	12"	12	22	32	23'-3"	0'-7½"	4'-6½"	7'-11"	#6	12"	12	22	32	23'-3"	0'-8"	4'-5"	7'-11"
B	4'	2'	#4	11"	7	12	18	10'-5"	0'-2¾"	2'-1"	3'-5"	#4	11"	7	12	18	10'-5"	0'-3¼"	2'-0"	3'-5"
	6'	3'	#5	11"	6	12	17	14'-7"	0'-4½"	2'-9½"	4'-11"	#5	11"	6	12	17	14'-8"	0'-5"	2'-8½"	4'-11"
	7'	4'	#6	13"	5	10	15	16'-10"	0'-5¾"	3'-2½"	5'-7"	#6	13"	5	10	15	16'-11"	0'-6¼"	3'-1½"	5'-7"
	8'	4'	#6	12"	6	11	16	18'-11"	0'-6¾"	3'-4½"	6'-5"	#6	12"	6	11	16	19'-0"	0'-7½"	3'-3½"	6'-5"
	9'	5'	#7	13"	5	10	14	21'-5"	0'-7½"	4'-0"	7'-2"	#7	13"	5	10	14	21'-5"	0'-8½"	3'-10½"	7'-2"
	10'	5'	#7	12"	6	11	16	23'-5"	0'-8½"	4'-4½"	7'-11"	#7	12"	6	11	16	23'-6"	0'-9½"	4'-2½"	7'-11"
C	4'	2'	#4	10"	7	14	19	10'-5"	0'-3½"	2'-0"	3'-5"	#4	10"	7	14	19	10'-6"	0'-3¾"	1'-11"	3'-5"
	6'	3'	#6	13"	6	10	15	14'-10"	0'-5½"	2'-7½"	4'-11"	#6	13"	6	10	15	14'-10"	0'-5¾"	2'-6½"	4'-11"
	7'	4'	#6	12"	6	11	16	16'-11"	0'-6¼"	3'-1"	5'-7"	#6	12"	6	11	16	17'-0"	0'-7¼"	2'-11"	5'-7"
	8'	4'	#6	12"	6	11	16	19'-0"	0'-7¾"	3'-2½"	6'-5"	#6	12"	6	11	16	19'-1"	0'-8½"	3'-1½"	6'-5"
	9'	5'	#7	12"	6	11	16	21'-6"	0'-8¾"	3'-9½"	7'-2"	#7	12"	6	11	16	21'-6"	0'-9½"	3'-8½"	7'-2"
	10'	5'	#8	13"	5	10	15	23'-8"	0'-9¾"	4'-1½"	7'-11"	#8	13"	5	10	15	23'-9"	0'-10½"	4'-0"	7'-11"
D	4'	2'	#5	13"	5	10	15	10'-7"	0'-3½"	1'-11½"	3'-5"	#5	13"	5	10	15	10'-7"	0'-4"	1'-10½"	3'-5"
	6'	3'	#6	12"	6	11	16	14'-11"	0'-6"	2'-6"	4'-11"	#6	12"	6	11	16	14'-11"	0'-6½"	2'-5"	4'-11"
	7'	4'	#6	11"	7	12	17	17'-0"	0'-7½"	2'-11"	5'-7"	#6	11"	7	12	17	17'-1"	0'-8½"	2'-9"	5'-7"
	8'	4'	#6	11"	7	12	18	19'-1"	0'-8¾"	3'-0½"	6'-5"	#6	11"	7	12	18	19'-1"	0'-9¾"	2'-11½"	6'-5"
	9'	5'	#7	11"	7	12	18	21'-7"	0'-9¾"	3'-7½"	7'-2"	#7	11"	7	12	18	21'-7"	0'-10¼"	3'-6½"	7'-2"
	10'	5'	#8	12"	6	11	16	23'-9"	0'-10½"	3'-11½"	7'-11"	#8	12"	6	11	16	23'-10"	0'-11½"	3'-10"	7'-11"
E	4'	2'	#5	12"	6	11	16	10'-7"	0'-4"	1'-10½"	3'-5"	#5	12"	6	11	16	10'-7"	0'-4½"	1'-9½"	3'-5"
	6'	3'	#6	11"	6	12	17	14'-11"	0'-6¾"	2'-4½"	4'-11"	#6	11"	6	12	17	15'-0"	0'-7¼"	2'-3½"	4'-11"
	7'	4'	#6	10"	7	13	19	17'-1"	0'-8½"	2'-9½"	5'-7"	#6	10"	7	13	19	17'-1"	0'-9½"	2'-7½"	5'-7"
	8'	4'	#7	11"	6	12	17	19'-3"	0'-9½"	2'-11"	6'-5"	#7	11"	6	12	17	19'-4"	0'-10"	2'-10"	6'-5"
		5'			"	"	"	19'-6"	"	3'-0"	6'-6"			"	"	"	19'-7"	"	2'-11"	6'-6"
		6'			"	"	"	19'-8"	"	3'-0"	6'-7"			"	"	"	19'-9"	"	2'-11"	6'-7"
		7'			"	"	"	19'-11"	"	3'-1"	6'-8"			"	"	"	20'-0"	"	3'-0"	6'-8"
		8'			"	"	"	20'-0"	"	3'-1"	6'-8½"			"	"	"	20'-1"	"	3'-0"	6'-8½"
		9'			"	"	"	20'-3"	"	3'-2"	6'-9½"			"	"	"	20'-4"	"	3'-1"	6'-9½"
		10'			6	12	17	20'-6"	0'-9½"	3'-3"	6'-10½"			6	12	17	20'-7"	0'-10"	3'-2"	6'-10½"
	9'	5'	#7	10"	7	13	19	21'-8"	0'-10½"	3'-5½"	7'-2"	#7	10"	7	13	19	21'-8"	0'-11½"	3'-4"	7'-2"
		6'			"	"	"	21'-11"	"	3'-6½"	7'-3"			"	"	"	21'-11"	"	3'-5"	7'-3"
		7'			"	"	"	22'-1"	"	"	7'-4"			"	"	"	22'-1"	"	"	7'-4"
		8'			"	"	"	22'-3"	"	"	7'-5"			"	"	"	22'-3"	"	"	7'-5"
		9'			"	"	"	22'-6"	"	3'-7½"	7'-6"			"	"	"	22'-6"	"	3'-6"	7'-6"
		10'			"	"	"	22'-9"	"	3'-8½"	7'-7"			"	"	"	22'-9"	"	3'-7"	7'-7"
		11'			7	13	19	22'-11"	0'-10¾"	3'-8½"	7'-8"			7	13	19	22'-11"	0'-11½"	3'-7"	7'-8"
	10'	5'	#8	11"	Varies with Length of Barrel.			23'-11"	1'-0"	3'-9"	7'-11½"	#8	11"	Varies with Length of Barrel.			24'-0"	1'-0¾"	3'-7½"	7'-11½"
		6'						24'-1"	"	3'-10"	8'-0"						24'-2"	"	3'-8½"	8'-0"
		7'						24'-3"	"	"	8'-1"						24'-4"	"	"	8'-1"
		8'						24'-5"	"	"	8'-2"						24'-6"	"	"	8'-2"
		9'						24'-8"	"	3'-11"	8'-3"						24'-9"	"	3'-9½"	8'-3"
		10'						24'-11"	1'-0"	4'-0"	8'-4"						25'-0"	1'-0¾"	3'-10½"	8'-4"
F	4'	2'	#5	11"	7	12	17	10'-7"	0'-4½"	1'-9½"	3'-5"	#5	11"	7	12	17	10'-8"	0'-5"	1'-8½"	3'-5"
	6'	3'	#6	10"	8	13	20	15'-0"	0'-7½"	2'-3"	4'-11"	#6	10"	8	13	20	15'-0"	0'-8"	2'-2"	4'-11"
	7'	4'	#7	12"	6	11	16	17'-4"	0'-9"	2'-8"	5'-7½"	#7	12"	6	11	16	17'-5"	0'-9½"	2'-7"	5'-7½"
		5'			"	"	"	17'-6"	"	2'-8"	5'-8½"			6	11	16	17'-7"	"	2'-7"	5'-8½"
		6'			"	"	"	17'-8"	"	2'-9"	5'-9½"			6	11	16	17'-9"	"	2'-8"	5'-9½"
		7'			"	"	"	17'-11"	"	2'-10"	5'-10½"			6	11	16	18'-0"	"	2'-9"	5'-10½"
		8'			"	"	"	18'-1"	"	2'-10"	5'-11½"			6	11	16	18'-2"	"	2'-9"	5'-11½"
		9'			6	11	16	18'-4"	0'-9"	2'-11"	6'-0½"			6	11	16	18'-5"	0'-9½"	2'-10"	6'-0½"
	8'	4'	#7	10"	7	14	19	19'-5"	0'-10½"	2'-10½"	6'-5"	#7	10"	7	14	19	19'-6"	0'-10¾"	2'-9½"	6'-5"
		5'			"	"	"	19'-8"	"	2'-11½"	6'-6"			"	"	"	19'-9"	"	2'-10½"	6'-6"
		6'			"	"	"	19'-10"	"	"	6'-7"			"	"	"	19'-11"	"	"	6'-7"
		7'			"	"	"	20'-1"	"	3'-0½"	6'-8"			"	"	"	20'-2"	"	2'-11½"	6'-8"
		8'			"	"	"	20'-3"	"	"	6'-9"			"	"	"	20'-4"	"	"	6'-9"
		9'			"	"	"	20'-6"	"	3'-1½"	6'-10"			"	"	"	20'-7"	"	3'-0½"	6'-10"
		10'			7	14	19	20'-9"	0'-10½"	3'-2½"	6'-11"			7	14	19	20'-10"	0'-10¾"	3'-1½"	6'-11"
	9'	5'	#8	10"				21'-11"	0'-11¾"	3'-3½"	7'-2½"	#8	10"				22'-0"	1'-0½"	3'-2"	7'-2½"
		6'						22'-2"	"	3'-4½"	7'-3½"						22'-3"	"	3'-3"	7'-3½"
		7'						22'-4"	"	"	7'-4½"						22'-5"	"	"	7'-4½"
		8'						22'-6"	"	"	7'-5½"						22'-7"	"	"	7'-5½"
		9'						22'-9"	0'-11¾"	3'-5½"	7'-6½"						22'-10"	1'-0½"	3'-4"	7'-6½"
G	4'	2'	#5	10"	Varies with Length of Barrel.	Varies with Length of Barrel.	Varies with Length of Barrel.	10'-8"	0'-5"	1'-8½"	3'-5"	#5	10"	Varies with Length of Barrel.	Varies with Length of Barrel.	Varies with Length of Barrel.	10'-8"	0'-5½"	1'-7½"	3'-5"
	6'	3'	#7	11"				15'-2"	0'-8"	2'-2"	4'-11"	#7	11"				15'-3"	0'-8½"	2'-1"	4'-11"
		4'						15'-3"	"	"	4'-11½"						15'-4"	"	"	4'-11½"
		5'						15'-5"	"	"	5'-0½"						15'-6"	"	"	5'-0½"
		6'						15'-8"	"	2'-3"	5'-1½"						15'-9"	"	2'-2"	5'-1½"
		7'						15'-11"	"	2'-4"	5'-2½"						16'-0"	"	2'-3"	5'-2½"
		8'						16'-1"	0'-8"	2'-4"	5'-3½"						16'-2"	0'-8½"	2'-3"	5'-3½"
	7'	4'	#7	11"				17'-6"	0'-9¾"	2'-6½"	5'-8"	#7	11"				17'-6"	0'-10½"	2'-5½"	5'-8"
		5'						17'-8"	"	"	5'-9"						17'-8"	"	"	5'-9"
		6'						17'-11"	"	2'-7½"	5'-10"						17'-11"	"	2'-6½"	5'-10"
		7'						18'-2"	"	2'-8½"	5'-11"						18'-2"	"	2'-7½"	5'-11"
		8'						18'-4"	"	"	6'-0"						18'-4"	"	"	6'-0"
		9'						18'-7"	0'-9¾"	2'-9½"	6'-1"						18'-7"	0'-10½"	2'-8½"	6'-1"
	8'	4'	#8	12"				19'-10"	0'-11½"	2'-8½"	6'-6"	#8	12"				19'-10"	0'-11¾"	2'-7½"	6'-6"
		5'						20'-1"	"	2'-9½"	6'-7"						20'-1"	"	2'-8½"	6'-7"
		6'						20'-3"	"	"	6'-8"						20'-3"	"	"	6'-8"
		7'						20'-6"	"	2'-10½"	6'-9"						20'-6"	"	2'-9½"	6'-9"
		8'						20'-8"	"	"	6'-10"						20'-8"	"	"	6'-10"
		9'						20'-11"	"	2'-11½"	6'-11"						20'-11"	"	2'-10½"	6'-11"
		10'						21'-2"	0'-11½"	3'-0½"	7'-0"						21'-2"	0'-11¾"	2'-11½"	7'-0"

"c" bars – STRAIGHT – In Top and Bottom Slabs of Barrel. Alternate with "b" and "b2" bars.
"d" bars – STRAIGHT – Longitudinal in Top Slab of Barrel. "d1" bars – Longitudinal in Sidewalls and Division Wall. "e" bars – Longitudinal in Bottom Slab of Barrel.
"f" bars – STRAIGHT – Vertical in Sidewalls and Division Wall.

Lengths of "d", "d1" and "e" bars: Section A – d: 33'-3" for 32'-0" Sect.; d1: 33'-3" for 32'-0" Sect.; e: 34'-3" for 32'-0" Sect. Sections B to F – d: 34'-3" for 33'-0" Length Section; d1: 34'-3" for 33'-0" Length Section; e: 34'-3" for 33'-0" Length Section. Section G – Varies with Length of Barrel.

Sect.	S	H	c Size	Spacing	No. 2:1	3:1	4:1	Length	d Size	Spacing	No. Req'd	d1 Size	Spacing	No. Req'd	e Size	Spacing	No. Req'd	f Size	Spacing	No. 2:1	3:1	4:1	Length
A	4'	2'	#5	13"	22	42	60	4'-8"	#4	12"	14	#4	12"	8	#4	12"	14	#4	12"	48	88	128	2'-9"
	6'	3'	#6	12"	24	44	64	6'-8"	#4	12"	18	#4	12"	12	#4	12"	18	#4	12"	"	"	"	4'-0"
	7'	4'	#6	12"	24	44	64	7'-8"	#4	12"	21	#4	12"	16	#4	12"	21	#4	12"	"	"	"	5'-2"
	8'	4'	#7	13"	22	42	60	8'-8"	#4	12"	23	#4	12"	16	#4	12"	23	#4	12"	"	"	"	5'-4"
	9'	5'	#7	11"	26	48	70	9'-9"	#4	12"	25	#4	12"	20	#4	12"	25	#4	12"	"	"	"	6'-5"
	10'	5'	#8	12"	24	44	64	10'-9"	#4	12"	27	#4	12"	20	#4	12"	27	#4	12"	48	88	128	6'-7"
B	4'	2'	#5	11"	14	24	34	4'-8"	#4	12"	14	#4	12"	8	#4	12"	14	#4	12"	24	44	64	2'-9"
	6'	3'	#6	11"	14	24	36	6'-8"	#4	12"	18	#4	12"	12	#4	12"	18	#4	12"	"	"	"	4'-1"
	7'	4'	#7	13"	12	20	30	7'-8"	#4	12"	21	#4	12"	16	#4	12"	21	#4	12"	"	"	"	5'-4"
	8'	4'	#7	12"	12	22	32	8'-8"	#4	12"	23	#4	12"	16	#4	12"	23	#4	12"	"	"	"	5'-6"
	9'	5'	#8	13"	12	20	30	9'-9"	#4	12"	25	#4	12"	20	#4	12"	25	#4	12"	"	"	"	6'-8"
	10'	5'	#8	12"	12	22	32	10'-9"	#4	12"	27	#4	12"	20	#4	12"	27	#4	12"	24	44	64	6'-10"
C	4'	2'	#5	10"	14	26	40	4'-8"	#4	12"	14	#4	12"	8	#4	12"	14	#4	12"	24	44	64	2'-10"
	6'	3'	#7	13"	10	20	30	6'-8"	#4	12"	18	#4	12"	12	#4	12"	18	#4	12"	"	"	"	4'-3"
	7'	4'	#7	12"	12	22	32	7'-8"	#4	12"	21	#4	12"	16	#4	12"	21	#4	12"	"	"	"	5'-6"
	8'	4'	#8	12"	12	22	32	8'-8"	#4	12"	23	#4	12"	16	#4	12"	23	#4	12"	"	"	"	5'-8"
	9'	5'	#8	12"	12	22	32	9'-9"	#4	12"	25	#4	12"	20	#4	12"	25	#4	12"	"	"	"	6'-10"
	10'	5'	#9	13"	12	20	30	10'-9"	#4	12"	27	#4	12"	20	#4	12"	27	#4	12"	24	44	64	7'-0"
D	4'	2'	#6	13"	12	20	28	4'-8"	#4	12"	14	#4	12"	8	#4	12"	14	#4	12"	24	44	64	2'-11"
	6'	3'	#7	12"	12	22	32	6'-8"	#4	12"	18	#4	12"	12	#4	12"	18	#4	12"	"	"	"	4'-4"
	7'	4'	#7	11"	12	26	36	7'-8"	#4	12"	21	#4	12"	16	#4	12"	21	#4	12"	"	"	"	5'-8"
	8'	4'	#8	11"	14	24	34	8'-8"	#4	12"	23	#4	12"	16	#4	12"	23	#4	12"	"	"	"	5'-10"
	9'	5'	#8	11"	12	24	34	9'-9"	#4	12"	25	#4	12"	20	#4	12"	25	#4	12"	"	"	"	7'-0"
	10'	5'	#9	12"	12	22	32	10'-9"	#4	12"	27	#4	12"	20	#4	12"	27	#4	12"	24	44	64	7'-2"
E	4'	2'	#6	12"	12	22	32	4'-8"	#4	12"	14	#4	12"	8	#4	12"	14	#4	12"	24	44	64	3'-0"
	6'	3'	#7	11"	14	26	34	6'-8"	#4	12"	18	#4	12"	12	#4	12"	18	#4	12"	"	"	"	4'-6"
	7'	4'	#7	10"	16	26	38	7'-8"	#4	12"	21	#4	12"	16	#4	12"	21	#4	12"	"	"	"	5'-9"
	8'	4'	#8	11"	14	24	36	8'-8"	#4	12"	23	#4	12"	16	#4	12"	23	#4	12"	24	44	64	6'-0"
		5'			14	24	36	8'-9"			"			20			"		10"	32	56	80	7'-0"
		6'			14	24	36	8'-9"			"			24			"	#5	12"	24	44	64	8'-0"
		7'			14	24	36	8'-10"			"			28			"	#6	12"	24	44	64	9'-0"
		8'			14	24	36	8'-10"			"			32			"		10"	32	56	80	10'-0"
		9'			14	24	36	8'-11"			"			36			"	#7	11"	28	48	72	11'-0"
		10'			14	24	36	9'-0"			23			40			23		10"	32	56	80	12'-0"
	9'	5'	#8	10"	16	28	40	9'-9"	#4	11"	27	#4	12"	20	#4	11"	27	#4	11"	24	48	72	7'-2"
		6'			16	28	40	9'-10"			"			24			"	#5	12"	24	44	64	8'-2"
		7'			16	28	40	9'-10"			"			28			"		11"	24	48	72	9'-2"
		8'			16	28	40	9'-10"			"			32			"	#6	11"	24	48	72	10'-2"
		9'			16	28	40	9'-11"			"			36			"	#7	12"	24	44	64	11'-2"
		10'			16	28	40	10'-0"			"			40			"		10"	28	56	80	12'-2"
		11'			16	28	40	10'-0"			27			44			27	#8	12"	24	44	64	13'-2"
	10'	5'	#9	11"	Varies with Length of Barrel.			10'-9"	#4	11"	29	#4	12"	20	#4	11"	29	#4	12"	Varies with Length of Barrel.			7'-5"
		6'						10'-10"			"			24			"		10"				8'-5"
		7'						10'-10"			"			28			"	#5	11"				9'-5"
		8'						10'-10"			"			32			"	#6	12"				10'-5"
		9'						10'-11"			"			36			"		10"				11'-5"
		10'						11'-0"			29			40			29	#7	11"				12'-5"
F	4'	2'	#6	11"	12	24	36	4'-8"	#4	12"	14	#4	12"	8	#4	12"	14	#4	12"	24	44	64	3'-1"
	6'	3'	#7	10"	14	26	38	6'-8"	#4	12"	18	#4	12"	12	#4	12"	18	#4	12"	24	44	64	4'-7"
	7'	4'	#8	12"	12	22	32	7'-8"	#4	12"	21	#4	12"	16	#4	12"	21	#4	11"	24	48	72	5'-11"
		5'			12	22	32	7'-8"			"			20			"		10"	32	56	80	6'-11"
		6'			12	22	32	7'-9"			"			24			"	#5	11"	24	48	72	7'-11"
		7'			12	22	32	7'-10"			"			28			"	#6	12"	24	44	64	8'-11"
		8'			12	22	32	7'-10"			"			32			"		9"	32	56	84	9'-11"
		9'			12	22	32	7'-11"			21			36			21	#7	10"	28	52	80	10'-11"
	8'	4'	#8	10"	14	26	38	8'-8"	#4	12"	23	#4	12"	16	#4	12"	23	#4	12"	24	44	64	6'-1"
		5'			14	26	38	8'-9"			"			20			"		10"	28	56	80	7'-1"
		6'			14	26	38	8'-9"			"			24			"	#5	12"	24	44	64	8'-1"
		7'			14	26	38	8'-10"			"			28			"	#6	12"	24	44	64	9'-1"
		8'			14	26	38	8'-10"			"			32			"		10"	32	56	80	10'-1"
		9'			14	26	38	8'-11"			"			36			"	#7	11"	24	48	72	11'-1"
		10'			14	26	38	9'-0"			23			40			23	#8	12"	24	44	64	12'-1"
	9'	5'	#8	10"	Varies with Length of Barrel.			9'-9"	#4	10"	29	#4	12"	20	#4	10"	29	#4	10"	Varies with Length of Barrel.			7'-4"
		6'						9'-10"			"			24			"	#5	12"				8'-4"
		7'						9'-10"			"			28			"		10"				9'-4"
		8'						9'-10"			"			32			"	#6	11"				10'-4"
		9'						9'-11"			29			36			29	#7	12"				11'-4"
G	4'	2'	#6	10"	Varies with Length of Barrel.	Varies with Length of Barrel.	Varies with Length of Barrel.	4'-8"	#4	12"	14	#4	12"	8	#4	12"	14	#4	12"	Varies with Length of Barrel.	Varies with Length of Barrel.	Varies with Length of Barrel.	3'-2"
	6'	3'	#7	11"				6'-8"	#4	12"	18	#4	12"	12	#4	12"	18	#4	12"				4'-9"
		4'						6'-8"			"			16			"		11"				5'-9"
		5'						6'-8"			"			20			"		10"				6'-9"
		6'						6'-9"			"			24			"	#5	10"				7'-9"
		7'						6'-10"			"			28			"	#6	11"				8'-9"
		8'						6'-10"			18			32			18	#7	12"				9'-9"
	7'	4'	#8	11"				7'-8"	#4	12"	21	#4	12"	16	#4	12"	21	#4	11"				6'-0"
		5'						7'-8"			"			20			"		10"				7'-0"
		6'						7'-9"			"			24			"	#5	11"				8'-0"
		7'						7'-10"			"			28			"	#6	12"				9'-0"
		8'						7'-10"			"			32			"		9"				10'-0"
		9'						7'-11"			21			36			21	#7	10"				11'-0"
	8'	4'	#9	12"				8'-8"	#4	11"	25	#4	12"	16	#4	11"	25	#4	12"				6'-3"
		5'						8'-9"			"			20			"		10"				7'-3"
		6'						8'-9"			"			24			"	#5	12"				8'-3"
		7'						8'-10"			"			28			"	#6	12"				9'-3"
		8'						8'-10"			"			32			"		10"				10'-3"
		9'						8'-11"			"			36			"	#7	11"				11'-3"
		10'						9'-0"			25			40			25	#8	12"				12'-3"

DIMENSIONS / QUANTITIES

Max. Design Depth of Cover D	Clear Span S	Clear Height H	Sq. Ft. Opening A	Overall Width OW	Thickness of Top Slab T	Thickness of Sidewalls C	Thickness of Division Wall M	Thickness of Bottom Slab B	Overall Height OH	Class S Conc. per Lin. Ft. of Barrel Cu.Yd.	Reinf. Steel per Lin. Ft. of Barrel Lb.	Additional per Lap Lb.	Additional Two Headwalls & Aprons Lb.
Sect. "A" = 10'-0"	2@ 4'	2'	16	9'-8"	6"	6"	8"	6"	3'-0"	0.481	69.84	30.06	100.20
	6'	3'	36	13'-8"	7¼"	6"	8"	7¾"	4'-3"	0.818	111.13	40.08	142.51
	7'	4'	56	16'-8"	8¼"	6"	8"	8¾"	5'-5"	1.069	146.69	48.43	169.23
	8'	4'	64	17'-8"	9¼"	6"	8"	9¾"	5'-7"	1.283	174.36	51.77	249.20
	9'	5'	90	19'-11"	10"	7"	9"	10¾"	6'-8¾"	1.630	222.02	58.45	279.89
	10'	5'	100	21'-11"	10¾"	7"	9"	11½"	6'-10½"	1.860	239.47	61.79	309.93
Sect. "B" = 15'-0"	4'	2'	16	9'-8"	6"	6"	8"	6½"	3'-0½"	0.496	70.92	30.06	100.20
	6'	3'	36	13'-8"	8"	6"	8"	8½"	4'-4½"	0.881	117.56	40.08	142.51
	7'	4'	56	15'-8"	9¼"	6"	8"	9¾"	5'-7"	1.166	158.40	48.43	215.48
	8'	4'	64	17'-8"	10¼"	6"	8"	10¾"	5'-9"	1.392	189.82	51.77	248.20
	9'	5'	90	19'-11"	11½"	7"	9"	12"	6'-11½"	1.784	231.32	58.45	279.89
	10'	5'	100	21'-11"	12"	7"	9"	13"	7'-1"	2.046	266.19	61.79	309.93
Sect. "C" = 20'-0"	4'	2'	16	9'-8"	6½"	6"	8"	7"	3'-1½"	0.526	75.16	30.06	
	6'	3'	36	13'-8"	8¾"	6"	8"	9½"	4'-6"	0.944	135.54	40.08	
	7'	4'	56	15'-8"	10"	6"	8"	11"	5'-9"	1.262	167.88	48.43	
	8'	4'	64	17'-8"	11½"	6"	8"	11¾"	5'-11"	1.501	185.52	51.77	
	9'	5'	90	19'-11"	12½"	7"	9"	13"	7'-1½"	1.922	269.06	58.45	
	10'	5'	100	21'-11"	13½"	7"	9"	14½"	7'-3½"	2.232	312.56	61.79	
Sect. "D" = 25'-0"	4'	2'	16	9'-8"	7"	6"	8"	7½"	3'-2½"	0.556	76.77	30.06	
	6'	3'	36	13'-8"	9½"	6"	8"	10"	4'-7½"	1.008	143.69	40.08	
	7'	4'	56	15'-8"	11"	6"	8"	12"	5'-11"	1.359	179.01	48.43	
	8'	4'	64	17'-8"	12¼"	6"	8"	12¾"	6'-1"	1.610	207.78	51.77	
	9'	5'	90	19'-11"	13½"	7"	9"	14"	7'-3½"	2.095	282.97	58.45	
	10'	5'	100	21'-11"	14½"	7"	9"	15½"	7'-5¾"	2.367	332.82	61.79	
Section "E" = 30'-0"	4'	2'	16	9'-8"	7¼"	6"	8"	8"	3'-3¼"	0.586	80.74	30.06	
	6'	3'	36	13'-8"	10¼"	6"	8"	10¾"	4'-9"	1.071	153.37	40.08	
	7'	4'	56	15'-8"	11¾"	6"	8"	12¾"	6'-0½"	1.432	194.56	48.43	
	8'	4'	64	17'-8"	13¾"	6"	8"	13¾"	6'-3"	1.719	213.16	51.77	
		5'	80	17'-11"		7"	9"		7'-3"	1.898	249.86	55.11	
		6'	96	18'-1"		8"	9"		8'-3"	1.970	259.58	58.45	
		7'	112	18'-4"		9"	10"		9'-3"	2.133	285.12	61.79	
		8'	128	18'-5½"		9¾"	10"		10'-3"	2.267	306.38	65.13	
		9'	144	18'-8½"		10¾"	11"		11'-3"	2.462	311.22	68.47	
		10'	160	18'-11½"		11¾"	12"		12'-3"	2.676	330.48	71.81	
	9'	5'	90	19'-11½"	14½"	7¼"	9"	15¼"	7'-5¾"	2.195	309.98	61.79	
		6'	108	20'-2½"		8¼"	10"		8'-5¾"	2.346	328.50	65.13	
		7'	126	20'-4"		9"	10"		9'-5¾"	2.472	340.24	68.47	
		8'	144	20'-6"		10"	10"		10'-5¾"	2.623	369.24	71.81	
		9'	162	20'-9"		11"	11"		11'-5¾"	2.822	399.24	75.15	
		10'	180	21'-0"		12"	12"		12'-5¾"	3.039	432.67	78.49	
		11'	198	21'-2"		13"	12"		13'-5¾"	3.234	457.98	81.83	
	10'	5'	100	22'-0"	15¾"	7½"	9"	16½"	7'-8¼"	2.560	362.51	65.13	
		6'	120	22'-2½"		8¼"	10"		8'-8¼"	2.701	374.49	68.47	
		7'	140	22'-4½"		9¼"	10"		9'-8¼"	2.843	397.55	71.81	
		8'	160	22'-6"		10"	10"		10'-8¼"	2.980	418.46	75.15	
		9'	180	22'-9"		11"	11"		11'-8¼"	3.181	443.76	78.49	
		10'	200	23'-0"		12"	12"		12'-8¼"	3.400	477.76	81.83	
Section "F" = 35'-0"	4'	2'	16	9'-8"	8"	6"	8"	8½"	3'-4½"	0.616	85.48	30.06	
	6'	3'	36	13'-8"	11"	6"	8"	11½"	4'-10½"	1.134	169.67	40.08	
	7'	4'	56	15'-9"	12¾"	6½"	8"	13¼"	6'-2"	1.523	200.29	48.43	
		5'	70	15'-11"		7½"	8"		7'-2"	1.632	208.93	51.77	
		6'	84	16'-1½"		8½"	9"		8'-2"	1.766	226.92	55.11	
		7'	98	16'-4½"		9½"	10"		9'-2"	1.930	249.13	58.45	
		8'	112	16'-6½"		10½"	10"		10'-2"	2.081	278.69	61.79	
		9'	126	16'-9½"		11½"	11"		11'-2"	2.278	326.17	65.13	
	8'	4'	64	17'-9"	14"	6½"	8"	14½"	6'-4½"	1.821	252.47	51.77	
		5'	80	18'-0"		7½"	9"		7'-4½"	1.954	263.98	55.11	
		6'	96	18'-2"		8½"	9"		8'-4½"	2.079	278.90	58.45	
		7'	112	18'-5"		9½"	10"		9'-4½"	2.247	304.81	61.79	
		8'	128	18'-7"		10½"	10"		10'-4½"	2.400	326.87	65.13	
		9'	144	18'-10"		11½"	11"		11'-4½"	2.601	358.06	68.47	
		10'	160	19'-1"		12½"	12"		12'-4½"	2.821	393.31	71.81	
	9'	5'	90	20'-0½"	15½"	7¾"	9"	16¼"	7'-7¾"	2.342	350.00	65.13	
		6'	108	20'-3½"		8¾"	10"		8'-7¾"	2.499	366.96	68.47	
		7'	126	20'-5½"		9¾"	10"		9'-7¾"	2.642	383.26	71.81	
		8'	144	20'-7½"		10¾"	10"		10'-7¾"	2.799	408.60	75.15	
		9'	162	20'-10½"		11¾"	11"		11'-7¾"	3.004	439.25	78.49	
Section "G" = 40'-0"	4'	2'	16	9'-8"	8½"	6"	8"	9"	3'-5½"	0.646	91.13	30.06	
	6'	3'	36	13'-8"	11¾"	6"	8"	12¼"	5'-0"	1.198	172.84	40.08	
		4'	48	13'-9½"		6¾"	8"		6'-0"	1.287	180.14	43.42	
		5'	60	13'-11½"		7¾"	8"		7'-0"	1.397	188.82	46.76	
		6'	72	14'-2½"		8¾"	9"		8'-0"	1.543	210.71	50.10	
		7'	84	14'-5½"		9¾"	10"		9'-0"	1.708	233.98	53.44	
		8'	96	14'-7½"		10¾"	10"		10'-0"	1.861	260.14	56.78	
	7'	4'	56	15'-10"	13½"	7"	8"	14"	6'-3½"	1.615	230.01	48.43	
		5'	70	16'-0"		8"	8"		7'-3½"	1.728	238.92	51.77	
		6'	84	16'-3"		9"	9"		8'-3½"	1.879	257.98	55.11	
		7'	98	16'-6"		10"	10"		9'-3½"	2.049	280.74	58.45	
		8'	112	16'-8"		11"	10"		10'-3½"	2.205	310.73	61.79	
		9'	126	16'-11"		12"	11"		11'-3½"	2.408	343.64	65.13	
	8'	4'	64	17'-11"	15"	7½"	8"	15½"	6'-6½"	1.971	278.70	55.11	
		5'	80	18'-2"		8½"	9"		7'-6½"	2.111	290.57	58.45	
		6'	96	18'-4"		9½"	9"		8'-6½"	2.244	305.81	61.79	
		7'	112	18'-7"		10½"	10"		9'-6½"	2.419	332.29	65.13	
		8'	128	18'-9"		11½"	10"		10'-6½"	2.580	359.68	68.47	
		9'	144	19'-0"		12½"	11"		11'-6½"	2.789	386.44	71.81	
		10'	160	19'-3"		13½"	12"		12'-6½"	3.016	422.26	75.15	

DOWEL BARS FOR TWO HEADWALLS

Span	Size	Spacing	No. Req'd	Length	X
4'	#4	12"	20	2'-4"	1'-2"
6'	#4	12"	28	2'-6"	1'-3"
7'	#4	12"	32	2'-9"	1'-4½"
8'	#4	12"	36	3'-0"	1'-6"
9'	#4	12"	40	3'-1"	1'-6½"
10'	#4	12"	44	3'-2"	1'-7"

Bars "r" Dowel bars in Headwalls

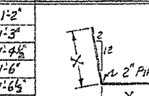

Bar Size	Pin Diam.	K	Add for 2 Hooks
#4	2	4"	0'-10½"
#5	2½"	4½"	0'-11½"
#6	3"	5"	1'-2"
#7	3½"	5¾"	1'-4"
#8	4"	6½"	1'-6"

BENDING DIAGRAM FOR BARS "b" and "b2".

NOTE:- Dimensions are to centers of bars (b & b2).

LENGTH OF SECTIONS FOR SKEWED CULVERTS

Skew Angle	Sec. of Skew Angle	2:1 Slopes Sections A	2:1 B,C,D,E or F	3:1 Slopes Sections A	3:1 B,C,D,E or F	4:1 Slopes Sections A	4:1 B,C,D,E or F
0°	1.0	12.0'	6.0'	22.0'	11.0'	32.0'	16.0'
15°	1.0353	12.424'	6.212'	22.776'	11.388'	33.129'	16.564'
30°	1.1547	13.856'	6.928'	25.403'	12.702'	36.950'	18.475'
45°	1.4142	16.970'	8.485'	31.113'	15.556'	45.255'	22.627'

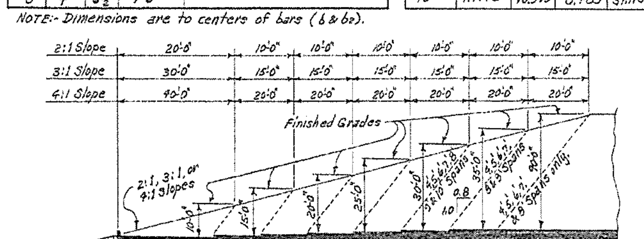

	Sections / Bar Group						
2:1 Slope = Sections	A=12'-0"	B=6'-0"	C=6'-0"	D=6'-0"	E=6'-0"	F=6'-0"	Mid-Section G-Varies
Bar Group	A	B	C	D	E	F	G
3:1 Slope = Sections	A=22'-0"	B=11'-0"	C=11'-0"	D=11'-0"	E=11'-0"	F=11'-0"	Mid-Section G-Varies
Bar Group	A	B	C	D	E	F	G
4:1 Slope = Sections	A=32'-0"	B=16'-0"	C=16'-0"	D=16'-0"	E=16'-0"	F=16'-0"	Mid-Section G-Varies
Bar Group	A	B	C	D	E	F	G

TYPICAL LONGITUDINAL SECTION-SHOWING SECTIONS AND BAR GROUPS FOR VARIOUS DEPTHS OF COVER

NOTE:- Lengths of Sections and Bar Groups are to be shown on Cross Section Sheets or on Special Culvert Layout Sheet.

SECTIONS AND BAR GROUPS TO BE USED FOR VARIOUS DEPTHS OF COVER

Depths of Cover	A	B	C	D	E	F	Mid-Section and Bar Group
5.0' to 9.5'	A						A
10.0' to 14.5'	A						B
15.0' to 19.5'	A	B					C
20.0' to 24.5'	A	B	C				D
25.0' to 29.5'	A	B	C	D			E
30.0' to 34.5'	A	B	C	D	E		F
35.0' to 40.0'	A	B	C	D	E	F	G

OR ALT.

Depths of Cover	A	B	C	D	E	F	Mid-Section and Bar Group
5.0' to 9.5'	A						A
10.0' to 14.5'	A						B
15.0' to 19.5'	A	B					C
20.0' to 24.5'	A	2@C					D
25.0' to 29.5'	A	B	2@D				E
30.0' to 34.5'	A	2@C		2@E			F
35.0' to 40.0'	A	B	2@D		2@F		G

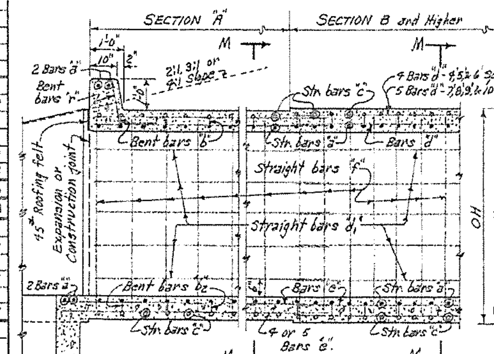

PART LONGITUDINAL SECTION

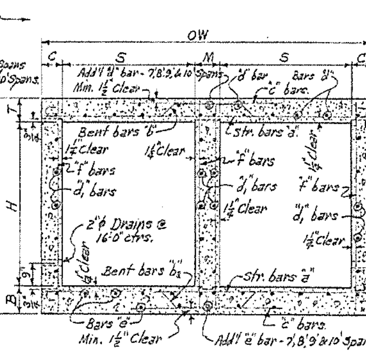

TYPICAL SECTION M-M

DESIGN LIVE LOAD

H20-S16 LOADING A.A.S.H.O. 1961
AND
SPECIAL MILITARY LOADING
Two 24,000 Lb. Axles @ 4'-0" ctrs.

UNIT STRESSES:-
Class S Concrete (n=10) 1200#/□"
Reinforcing Steel 20000#/□"

NOTE:-
This drawing to be used in conjunction with Std. Wing Drawing Nos. W-X002-1 or W-X002-2, W-X003-1 or W-X003-2, & W-X004-1 or W-X004-2.

GENERAL NOTES

CONCRETE:- All concrete to be Class S, and shall be poured in the dry. All exposed corners to have ¾" chamfers.
REINFORCING STEEL:- Reinforcing to be deformed bars of intermediate or hard grade.
BAR LAP:- In computing the quantities of steel from the tables add one lap for each additional 33'-0" length of barrel over 32'-0". Lap longitudinal bars 30 diam. min.
CONSTRUCTION JOINTS:- Construction joints between wingwalls, sidewalls, division wall and slabs shall be only where shown on plans.
SPECIFICATIONS:- Arkansas State Highway Commission Standard Specifications for Highway Construction and applicable Special Provisions.

CLASS S CONCRETE

ARKANSAS STATE HIGHWAY COMMISSION
DETAILS OF STANDARD BARREL SECTIONS
FOR
REINFORCED CONCRETE BOX CULVERTS
ADD'L 4,6,7,8,9 & 10 SPANS — 2:1, 3:1 OR 4:1 SLOPES
DOUBLES — OVER 5'-0" COVER
STANDARD DRAWING NO. R-200X-X4

Designed by:- W.C.H. 12-31-64. Checked by:-
Drawn by:- W.C.H. 1-8-65. Checked by:-
Quantities by:- W.C.H. 1-19-65. Checked by:-

FED. ROAD No.	STATE	FED. AID PROJECT	FISCAL YEAR	SHEET No.	TOTAL SHEETS
6	ARK.			661	
JOB No.					

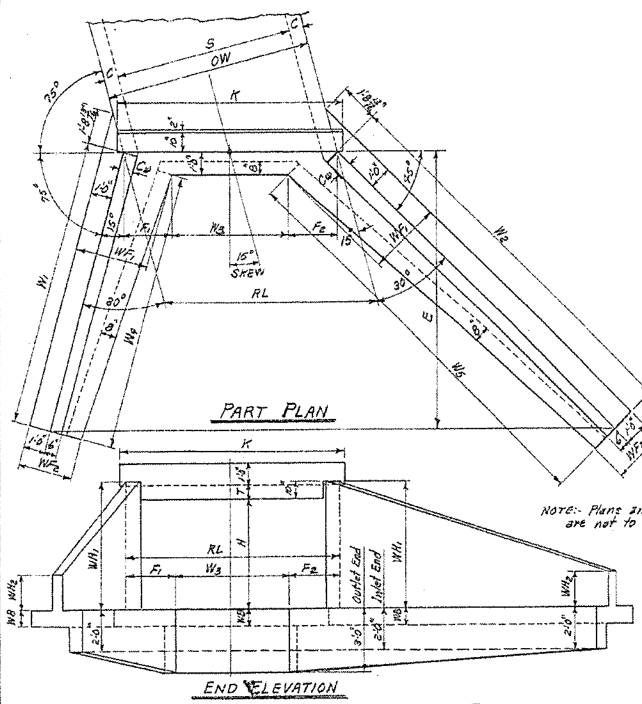

PART PLAN

END ELEVATION

NOTE:- Plans and Elevations are not to scale.

SINGLE BARREL CULVERT - 15° SKEW RIGHT FORWARD

Details of Culvert with 15° Skew Left Forward is reversed, see Layout below.

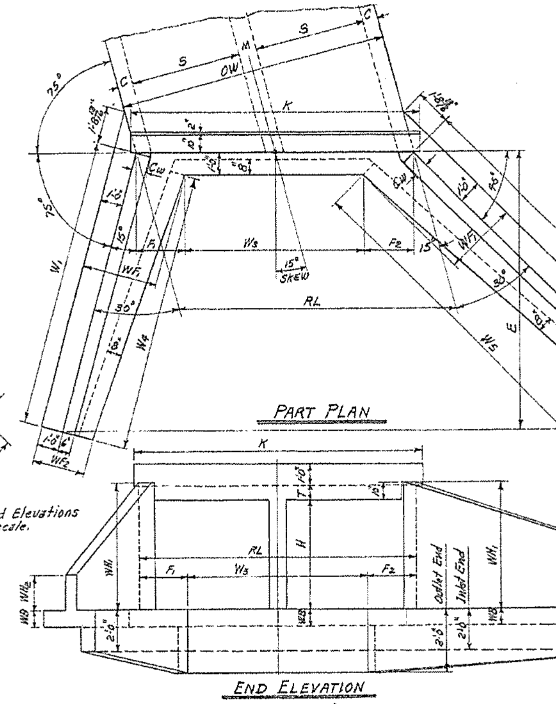

PART PLAN

END ELEVATION

DOUBLE BARREL CULVERT - 15° SKEW RIGHT FORWARD

Details of Culvert with 15° Skew Left Forward is reversed, see Layout below.

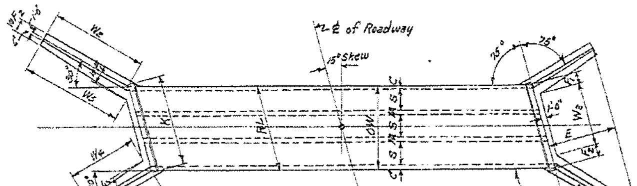

LAYOUT OF TRIPLE BARREL CULVERT - 15° SKEW LEFT FORWARD

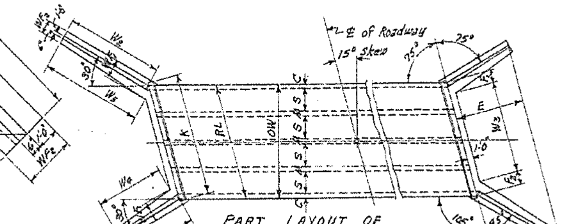

PART LAYOUT OF QUADRUPLE BARREL CULVERT - 15° SKEW LEFT FORWARD

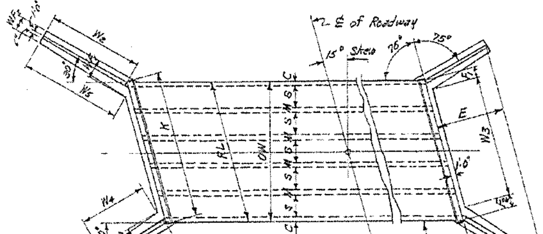

PART LAYOUT OF QUINTUPLE BARREL CULVERT - 15° SKEW LEFT FORWARD

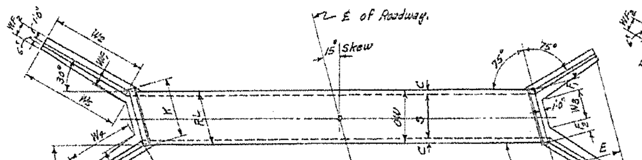

LAYOUT OF SINGLE BARREL CULVERT - 15° SKEW LEFT FORWARD

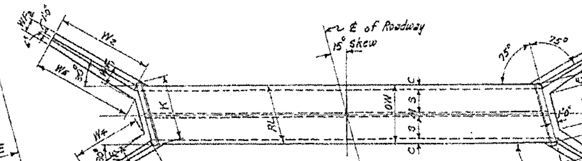

LAYOUT OF DOUBLE BARREL CULVERT - 15° SKEW LEFT FORWARD

NOTE:- The length of the wings for the Plans, Elevations, and Layouts, as drawn, are proportioned for 3:1 slopes. For 2:1 slopes the wings are proportionally shorter, while for 4:1 slopes they are longer.

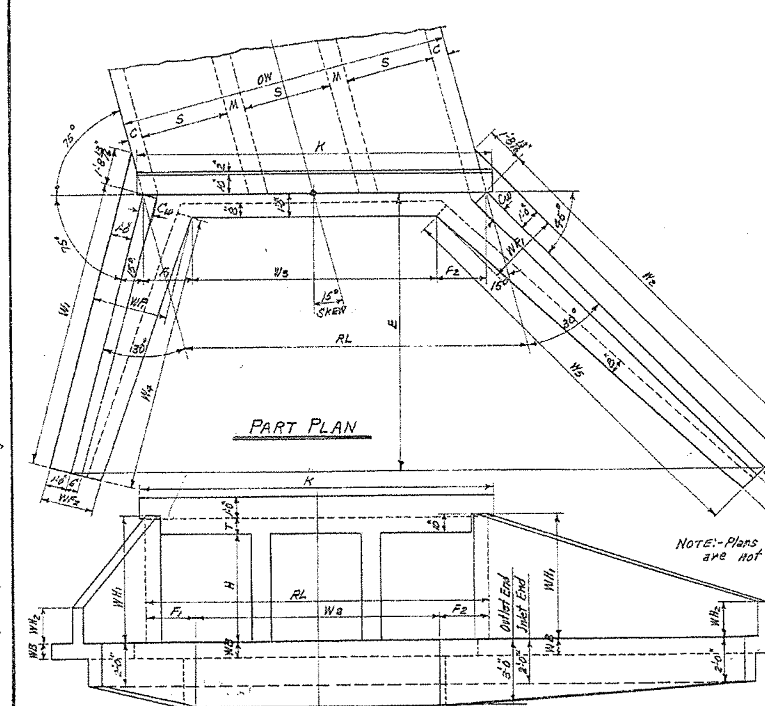

PART PLAN

END ELEVATION

NOTE:- Plans and Elevations are not to scale.

TRIPLE BARREL CULVERT - 15° SKEW RIGHT FORWARD

Details of Culvert with 15° Skew Left Forward is reversed, see Layout at top center of sheet.

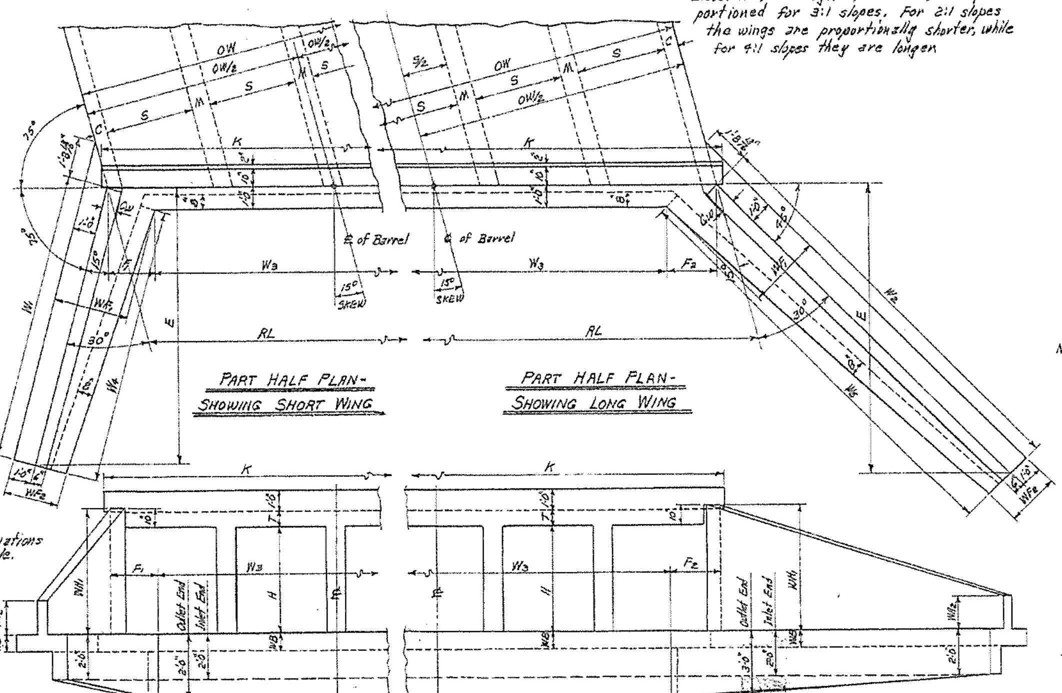

PART HALF PLAN - SHOWING SHORT WING

PART HALF PLAN - SHOWING LONG WING

PART END ELEVATION

QUADRUPLE BARREL CULVERT - 15° SKEW RT. FWD.

Details of Culvert with 15° Skew Left Forward is reversed, see Layout at above center.

PART END ELEVATION

QUINTUPLE BARREL CULVERT - 15° SKEW RT. FWD.

Details of Culvert with 15° Skew Left Forward is reversed, see Layout above.

ROADWAY LENGTH RL — HEADWALL LENGTH K — APRON DIMENSION W_3

RL = OW x 1.035276 — K = RL + (6½") — $W_3 = RL - (F_1 + F_2)$

USE WITH DRAWING No.	CLEAR SPAN	CLEAR HEIGHT	SUM OF FOOTING DIMENSIONS	SINGLE BARREL CULVERT				DOUBLE BARREL CULVERT				TRIPLE BARREL CULVERT				QUADRUPLE BARREL CULVERT				QUINTUPLE BARREL CULVERT			
	S	H	F_1 & F_2	OW	RL	K	W_3	OW	RL	K	W_3	OW	RL	K	W_3	OW	RL	K	W_3	OW	RL	K	W_3
W-X152-1, W-X153-1 or W-X154-1. (FOR H = 8'-0" OR LESS)	4'	2'	2'-0"	5'-0"	5'-2 1/8"	5'-8 5/8"	3'-2 1/8"	9'-8"	10'-0"	10'-6 1/2"	8'-0"	14'-4"	14'-10"	15'-4 1/2"	12'-10"	19'-0"	19'-8"	20'-2 1/2"	17'-8"	23'-8"	24'-6"	25'-0 1/2"	22'-6"
		3'	2'-9 3/4"	5'-0"	"	"	2'-4 3/8"	9'-8"	"	"	7'-2 1/2"	14'-4"	"	"	12'-0 1/2"	19'-0"	"	"	16'-10 1/2"	23'-8"	"	"	21'-8 1/4"
		4'	3'-7 5/8"	5'-0"	"	"	1'-6 1/2"	9'-8"	"	"	6'-4 1/2"	14'-4"	"	"	11'-2 1/2"	19'-0"	"	"	16'-0 1/2"	23'-8"	"	"	20'-10 1/2"
		5'	4'-5 3/8"	5'-0"	"	"	0'-8 3/4"	9'-8"	"	"	5'-6 3/4"	14'-4"	"	"	10'-4 3/4"	19'-0"	"	"	15'-2 3/4"	23'-8"	"	"	20'-0 3/4"
		6'	5'-3 1/8"	5'-2"	5'-4 5/8"	5'-10 5/8"	0'-1"	9'-11"	10'-3 1/4"	10'-9 3/4"	5'-0"	14'-8"	15'-2 1/4"	15'-8 3/4"	9'-11"	19'-5"	20'-1 1/4"	20'-7 3/4"	14'-10"	24'-2"	25'-0 1/4"	25'-6 3/4"	19'-9"
	5'	3'	2'-9 3/4"	6'-0"	6'-2 1/2"	6'-9"	3'-4 3/4"	11'-8"	12'-1"	12'-7 1/2"	9'-3 1/4"	17'-4"	17'-11 3/8"	18'-5 3/4"	15'-1 1/2"	23'-0"	23'-9 3/4"	24'-4 1/4"	21'-0"	28'-8"	29'-8 3/8"	30'-2 1/8"	26'-10 1/4"
		4'	3'-7 5/8"	6'-0"	"	"	2'-7"	11'-8"	"	"	8'-5 3/8"	17'-4"	"	"	14'-3 3/4"	23'-0"	"	"	20'-2 1/4"	28'-8"	"	"	26'-0 1/8"
		5'	4'-5 3/8"	6'-0"	"	"	1'-9 1/2"	11'-8"	"	"	7'-7 5/8"	17'-4"	"	"	13'-6"	23'-0"	"	"	19'-4 1/2"	28'-8"	"	"	25'-2 3/4"
		6'	5'-3 1/8"	6'-2"	6'-4 5/8"	6'-11 1/8"	1'-1 1/8"	11'-11"	12'-4"	12'-10 1/2"	7'-0 3/8"	17'-8"	18'-3 1/2"	18'-10"	13'-0 1/2"	23'-5"	24'-2 7/8"	24'-9 1/2"	18'-11 3/4"	29'-2"	30'-2 3/8"	30'-8 3/4"	24'-11 1/4"
		7'	6'-5 3/8"	6'-3"	6'-5 3/8"	7'-0 1/8"	Ⓐ 0"	12'-1"	12'-6 3/8"	13'-0 1/2"	6'-0 1/8"	17'-11"	18'-6 3/8"	19'-1"	12'-0 3/4"	23'-9"	24'-7"	25'-1 1/2"	18'-1 1/8"	29'-7"	30'-7 1/2"	31'-2"	24'-1 1/8"
	6'	3'	2'-9 3/4"	7'-0"	7'-3"	7'-9 1/2"	4'-5 1/4"	13'-8"	14'-1 3/8"	14'-8 1/4"	11'-4"	20'-4"	21'-0 3/8"	21'-7"	18'-2 3/4"	27'-0"	27'-11 3/8"	28'-5 3/4"	25'-1 3/4"	33'-8"	34'-10 1/4"	35'-4 3/4"	32'-0 1/4"
		4'	3'-7 5/8"	7'-0"	"	"	3'-7 3/4"	13'-8"	"	"	10'-6 1/4"	20'-4"	"	"	17'-5"	27'-0"	"	"	24'-3 3/4"	33'-8"	"	"	31'-2 1/4"
		5'	4'-5 3/8"	7'-0"	"	"	2'-9 3/4"	13'-8"	"	"	9'-8 3/8"	20'-4"	"	"	16'-7 1/4"	27'-0"	"	"	23'-6"	33'-8"	"	"	30'-4 3/8"
		6'	5'-3 1/8"	7'-2"	7'-5"	7'-11 1/2"	2'-1 3/8"	13'-11"	14'-5"	14'-11 1/2"	9'-1 3/8"	20'-8"	21'-4 3/4"	21'-11 1/4"	16'-1 1/2"	27'-5"	28'-4 5/8"	28'-11"	23'-1 1/2"	34'-2"	35'-4 1/2"	35'-11"	30'-1 1/2"
		7'	6'-5 3/8"	7'-3"	7'-6"	8'-0 1/2"	1'-0 1/8"	14'-1"	14'-7"	15'-1 1/2"	8'-1 1/8"	20'-11"	21'-7 3/8"	22'-2 1/4"	15'-2"	27'-9"	28'-8 3/4"	29'-3 1/4"	22'-3"	34'-7"	35'-9 3/8"	36'-4"	29'-3 3/4"
		8'	7'-8 5/8"	7'-4"	7'-7 1/8"	8'-1 5/8"	Ⓐ 0"	14'-2"	14'-8"	15'-2 1/2"	6'-11 3/8"	21'-0"	21'-8 7/8"	22'-3 1/4"	14'-0 1/4"	27'-10"	28'-9 3/4"	29'-4 1/4"	21'-1 1/4"	34'-8"	35'-10 5/8"	36'-5"	28'-2"
	7'	4'	3'-7 5/8"	8'-0"	8'-3 3/8"	8'-9 7/8"	4'-7 3/4"	15'-8"	16'-2 5/8"	16'-9"	12'-7"	23'-4"	24'-1 3/8"	24'-8 1/4"	20'-6 1/4"	31'-0"	32'-1 1/8"	32'-7 1/2"	28'-5 1/8"	38'-8"	40'-0 3/8"	40'-6 3/4"	36'-4 3/8"
		5'	4'-5 3/8"	8'-0"	"	"	3'-10"	15'-8"	"	"	11'-9 1/2"	23'-4"	"	"	19'-8 1/2"	31'-0"	"	"	27'-7 3/8"	38'-8"	"	"	35'-7"
		6'	5'-3 1/8"	8'-2"	8'-5 1/2"	9'-0"	3'-2 1/4"	15'-11"	16'-5 3/4"	17'-0 1/4"	11'-2 1/2"	23'-8"	24'-6"	25'-0 1/8"	19'-2 3/4"	31'-5"	32'-6 1/4"	33'-0 3/4"	27'-3"	39'-2"	40'-6 5/8"	41'-1"	35'-3 1/2"
		7'	6'-5 3/8"	8'-3"	8'-6 1/2"	9'-1"	2'-0 3/8"	16'-1"	16'-7 3/4"	17'-2 1/4"	10'-2"	23'-11"	24'-9 3/8"	25'-3 1/2"	18'-3 1/4"	31'-9"	32'-10 1/2"	33'-5"	26'-4 1/2"	39'-7"	40'-11 3/4"	41'-6 1/4"	34'-6"
		8'	7'-8 5/8"	8'-4"	8'-7 1/2"	9'-2"	0'-11"	16'-2"	16'-8 3/4"	17'-3 1/4"	9'-0 1/2"	24'-0"	24'-10 1/8"	25'-4 1/2"	17'-1 1/2"	31'-10"	32'-11 1/2"	33'-6"	25'-3"	39'-8"	41'-0 3/4"	41'-7 1/4"	33'-4 1/2"
	8'	4'	3'-7 5/8"	9'-0"	9'-3 3/4"	9'-10 1/4"	5'-8 1/8"	17'-8"	18'-3 1/2"	18'-10"	14'-8"	26'-4"	27'-3 1/8"	27'-9 1/2"	23'-7 1/8"	35'-0"	36'-2 7/8"	36'-9 1/4"	32'-7 1/4"	43'-8"	45'-2 1/2"	45'-9"	41'-7"
		5'	4'-5 3/8"	9'-2"	9'-5 3/4"	10'-0 1/4"	5'-0 1/4"	17'-11"	18'-6 3/8"	19'-1"	14'-1 1/2"	26'-8"	27'-7 1/4"	28'-1 3/4"	23'-2"	35'-5"	36'-8"	27'-2 1/2"	32'-2 3/4"	44'-2"	45'-8 3/4"	46'-3 1/4"	41'-3 1/4"
		6'	5'-3 1/8"	9'-2"	"	"	4'-2 3/4"	17'-11"	"	"	13'-3 1/2"	26'-8"	"	"	22'-4"	35'-5"	"	"	31'-4 3/4"	44'-2"	"	"	40'-5 1/2"
		7'	6'-5 3/8"	9'-3"	9'-6 7/8"	10'-1 1/4"	3'-1"	18'-1"	18'-8 5/8"	19'-3"	12'-2 3/4"	26'-11"	27'-10 3/8"	28'-4 3/4"	21'-4 1/2"	35'-9"	37'-0 1/8"	37'-6 1/2"	30'-6 1/8"	44'-7"	46'-1 7/8"	46'-8 1/2"	39'-8"
		8'	7'-8 5/8"	9'-4"	9'-8"	10'-2 1/2"	1'-11 1/8"	18'-2"	18'-9 3/4"	19'-4 1/4"	11'-1 1/2"	27'-0"	27'-11 5/8"	28'-5 3/4"	20'-2 1/8"	35'-10"	37'-1 1/8"	37'-7 1/2"	29'-4 5/8"	44'-8"	46'-2 7/8"	46'-9 1/4"	38'-6 1/4"
	9'	5'	4'-5 3/8"	10'-2"	10'-6 1/4"	11'-0 3/4"	6'-1"	19'-11"	20'-7 1/2"	21'-2"	16'-2"	29'-8"	30'-8 1/2"	31'-3"	26'-3 1/4"	39'-5"	40'-9 3/4"	41'-4 1/4"	36'-4 1/2"	49'-2"	50'-10 3/4"	51'-5 1/4"	46'-5 1/2"
		6'	5'-3 1/8"	10'-3"	10'-7 3/8"	11'-1 7/8"	5'-4 1/8"	20'-1"	20'-9 1/2"	21'-4"	15'-6 1/2"	29'-11"	30'-11 5/8"	31'-6"	25'-8 1/2"	39'-9"	41'-1 3/4"	41'-8 1/4"	35'-10 3/4"	49'-7"	51'-4"	51'-10 1/2"	46'-0 3/4"
		7'	6'-5 3/8"	10'-3"	"	"	4'-1 1/2"	20'-1"	"	"	14'-3 3/4"	29'-11"	"	"	24'-5 3/4"	39'-9"	"	"	34'-8"	49'-7"	"	"	44'-10"
		8'	7'-8 5/8"	10'-4"	10'-8 3/8"	11'-2 3/4"	2'-11 3/4"	20'-2"	20'-10 1/8"	21'-5"	13'-2"	30'-0"	31'-0 3/4"	31'-7 1/4"	23'-4 5/8"	39'-10"	41'-2 3/4"	41'-9 1/4"	33'-6 1/4"	49'-8"	51'-5"	51'-11 1/2"	43'-8 1/2"
	10'	5'	4'-5 3/8"	11'-2"	11'-6 3/4"	12'-1 1/4"	7'-1 3/8"	21'-11"	22'-8 1/4"	23'-2 3/4"	18'-3"	32'-8"	33'-9 3/4"	34'-4 1/4"	29'-4 1/2"	43'-5"	44'-11 1/8"	45'-6"	40'-6"	54'-2"	56'-1"	56'-7 1/2"	51'-7 1/8"
		6'	5'-3 1/8"	11'-3"	11'-7 3/4"	12'-2 1/4"	6'-4 5/8"	22'-1"	22'-10 3/8"	23'-4 3/4"	17'-7 1/4"	32'-11"	34'-1"	34'-7 1/2"	28'-9 3/4"	43'-9"	45'-3 1/2"	45'-10"	40'-0 1/4"	54'-7"	56'-6"	57'-0 1/2"	51'-3"
		7'	6'-5 3/8"	11'-3"	"	"	5'-1 7/8"	22'-1"	"	"	16'-4 1/2"	32'-11"	"	"	27'-7"	43'-9"	"	"	38'-9 3/4"	54'-7"	"	"	50'-0 1/4"
		8'	7'-8 5/8"	11'-4"	11'-8 3/4"	12'-3 1/4"	4'-0 1/4"	22'-2"	22'-11 3/8"	23'-5 3/4"	15'-2 3/4"	33'-0"	34'-2"	34'-8 1/2"	26'-5 1/2"	43'-10"	45'-4 1/2"	45'-11"	37'-8"	54'-8"	56'-7 1/8"	57'-1 1/2"	48'-10 1/2"
	11'	6'	5'-3 1/8"	12'-4"	12'-9 1/4"	13'-3 3/4"	7'-6"	24'-2"	25'-0 1/4"	25'-6 3/4"	19'-9"	36'-0"	37'-3 1/4"	37'-9 3/4"	32'-0"	47'-10"	49'-6 1/4"	50'-0 3/4"	44'-3"	—	—	—	—
		7'	6'-5 3/8"	12'-4"	"	"	6'-3 3/4"	24'-2"	"	"	18'-6 1/4"	36'-0"	"	"	30'-9 1/4"	47'-10"	"	"	43'-0 1/2"	—	—	—	—
		8'	7'-8 5/8"	12'-4"	"	"	5'-0 5/8"	24'-2"	"	"	17'-3 3/4"	36'-0"	"	"	29'-6 3/4"	47'-10"	"	"	41'-9 3/4"	—	—	—	—
	12'	6'	5'-3 1/8"	13'-4"	13'-9 5/8"	14'-4"	8'-6 1/8"	26'-2"	27'-1"	27'-7 1/2"	21'-10"	39'-0"	40'-4 1/2"	40'-11"	35'-1 1/4"	51'-10"	53'-8"	54'-2 1/2"	48'-4 3/4"	—	—	—	—
		7'	6'-5 7/8"	13'-4"	"	"	7'-3 3/4"	26'-2"	"	"	20'-7 1/4"	39'-0"	"	"	33'-10 3/4"	51'-10"	"	"	47'-2"	—	—	—	—
		8'	7'-8 5/8"	13'-4"	"	"	6'-1"	26'-2"	"	"	19'-4 1/2"	39'-0"	"	"	32'-8"	51'-10"	"	"	45'-11 1/2"	—	—	—	—
W-X152-2, W-X153-2 or W-X154-2. (FOR H = 9'-0" & OVER)	7'																						
		9'	8'-11 1/4"	8'-6"	8'-9 3/8"	9'-4"	Ⓐ 0"	16'-5"	17'-0"	17'-6 1/2"	8'-0 3/4"	24'-4"	25'-2 1/4"	25'-8 3/4"	16'-3"	32'-3"	33'-4 3/8"	33'-11"	24'-5 1/4"	40'-2"	41'-7"	42'-1 1/2"	32'-7 3/4"
	8'	9'	8'-11 1/4"	9'-6"	9'-10"	10'-4 1/2"	0'-10 3/4"	18'-5"	19'-0 3/4"	19'-7 1/4"	10'-1 1/2"	27'-4"	28'-3 3/8"	28'-10"	19'-4 1/2"	36'-3"	37'-6 3/8"	38'-0 3/4"	28'-7"	45'-2"	46'-9 3/8"	47'-3 1/8"	37'-9 3/4"
		10'	10'-2"	9'-8"	10'-0 1/8"	10'-6 1/2"	Ⓐ 0"	18'-8"	19'-3 3/4"	19'-10 1/2"	9'-2"	27'-8"	28'-7 3/4"	29'-2 1/4"	18'-5 3/4"	36'-8"	37'-11 1/2"	38'-6"	27'-9 1/2"	45'-8"	47'-3 3/8"	47'-9 3/4"	37'-1 1/2"
	9'	9'	8'-11 1/4"	10'-6"	10'-10 1/2"	11'-5"	1'-11 1/4"	20'-5"	21'-1 3/8"	21'-8 1/4"	12'-2 1/4"	30'-4"	31'-4 3/8"	31'-11 1/4"	22'-5 1/2"	40'-3"	41'-8"	42'-2 1/4"	32'-8 3/4"	50'-2"	51'-11 1/4"	52'-5 3/4"	43'-0"
		10'	10'-2"	10'-8"	11'-0 1/2"	11'-7"	0'-10 1/2"	20'-8"	21'-4 3/4"	21'-11 1/4"	11'-2 3/4"	30'-8"	31'-9"	32'-3 1/4"	21'-7"	40'-8"	42'-1 1/4"	42'-7 3/4"	31'-11 1/4"	50'-8"	52'-5 1/4"	53'-0"	42'-3 1/2"
		11'	11'-4 5/8"	10'-10"	11'-2 5/8"	11'-9"	Ⓐ 0"	20'-10"	21'-6 3/8"	22'-1 1/2"	10'-2 3/8"	30'-10"	31'-11"	32'-5 1/2"	20'-6 1/2"	40'-10"	42'-3 1/8"	42'-9 3/4"	30'-10 3/4"	50'-10"	52'-7 1/4"	53'-2"	41'-2 3/4"
	10'	9'	8'-11 1/4"	11'-6"	11'-10 7/8"	12'-5 1/4"	2'-11 3/8"	22'-5"	23'-2 1/4"	23'-9"	14'-3 1/4"	33'-4"	34'-6 1/8"	35'-0 1/2"	25'-6 3/4"	44'-3"	45'-9 3/4"	46'-4 1/4"	36'-10 1/2"	55'-2"	57'-1 3/8"	57'-7 3/4"	48'-2"
		10'	10'-2"	11'-8"	12'-1"	12'-7 1/2"	1'-11"	22'-8"	23'-5 3/8"	24'-0"	13'-3 3/4"	33'-8"	34'-10 1/8"	35'-4 3/4"	24'-8 1/4"	44'-8"	46'-2 7/8"	46'-9 1/2"	36'-1"	55'-8"	57'-7 3/8"	58'-2"	47'-5 1/4"
		11'	11'-4 5/8"	11'-10"	12'-3"	12'-9 1/2"	0'-10 3/8"	22'-10"	23'-7 3/8"	24'-2"	12'-3"	33'-10"	35'-0 3/8"	35'-6 3/4"	23'-7 3/4"	44'-10"	46'-5"	46'-11 1/2"	35'-0 1/4"	55'-10"	57'-9 3/8"	58'-4"	46'-5"
		12'	12'-7 3/4"	12'-0"	12'-5 1/8"	12'-11 1/2"	Ⓐ 0"	23'-0"	23'-9 3/4"	24'-4 1/4"	11'-2 1/2"	34'-0"	35'-2 3/8"	35'-8 3/4"	22'-7"	45'-0"	46'-7"	47'-1 1/2"	33'-11 3/4"	56'-0"	57'-11 5/8"	58'-6"	45'-4 1/2"
	11'	9'	8'-11 1/4"	12'-6"	12'-11 1/2"	13'-5 3/4"	4'-0"	24'-5"	25'-3 3/8"	25'-9 3/4"	16'-4"	36'-4"	37'-7 3/8"	38'-1 3/4"	28'-8"	48'-3"	49'-11 3/4"	50'-5 3/4"	41'-0 1/4"	—	—	—	—
		10'	10'-2"	12'-8"	13'-1 3/8"	13'-7 3/4"	2'-11 3/8"	24'-8"	25'-6 1/4"	26'-1"	15'-4 1/2"	36'-8"	37'-11 1/2"	38'-6"	27'-9 1/2"	48'-8"	50'-4 5/8"	50'-11"	40'-2 3/8"	—	—	—	—
		11'	11'-4 5/8"	12'-10"	13'-3 3/8"	13'-10"	1'-10 3/8"	24'-10"	25'-8 1/4"	26'-3"	14'-3 3/4"	36'-10"	38'-1 5/8"	38'-8"	26'-9"	48'-10"	50'-6 5/8"	51'-1"	39'-2"	—	—	—	—
		12'	12'-7 3/4"	13'-0"	13'-5 1/2"	14'-0"	0'-10 1/4"	25'-0"	25'-10 5/8"	26'-5"	13'-3 1/4"	37'-0"	38'-3 5/8"	38'-10"	25'-8 1/2"	49'-0"	50'-8 3/4"	51'-3 1/2"	38'-1 1/2"	—	—	—	—
	12'	9'	8'-11 1/4"	13'-6"	13'-11 3/4"	14'-6 1/4"	5'-0 1/2"	26'-5"	27'-4 1/8"	27'-10 1/2"	18'-5"	39'-4"	40'-8 5/8"	41'-3"	31'-9 1/2"	52'-3"	54'-1 1/8"	54'-7 1/2"	45'-1 1/2"	—	—	—	—
		10'	10'-2"	13'-8"	14'-1 3/4"	14'-8 1/4"	3'-11 3/4"	26'-8"	27'-7 1/8"	28'-1 3/4"	17'-5 1/4"	39'-8"	41'-0 3/4"	41'-7 1/4"	30'-10 3/4"	52'-8"	54'-6 1/4"	55'-0 3/4"	44'-4 1/2"	—	—	—	—
		11'	11'-4 5/8"	13'-10"	14'-3 7/8"	14'-10 1/4"	2'-11 1/4"	26'-10"	27'-9 3/4"	28'-3 3/8"	16'-4 3/4"	39'-10"	41'-2 3/4"	41'-9 1/4"	29'-10 1/4"	52'-10"	54'-8 3/8"	55'-2 3/4"	43'-3 3/4"	—	—	—	—
		12'	12'-7 3/4"	14'-0"	14'-5 7/8"	15'-0 1/2"	1'-10 1/2"	27'-0"	27'-11 3/8"	28'-6"	15'-4"	40'-0"	41'-4 7/8"	41'-11 1/4"	28'-9 1/2"	53'-0"	54'-10 3/8"	55'-4 3/4"	42'-3"	—	—	—	—

Ⓐ Special case for these boxes, See Detail "A" and Table "A" for revised values of F_1, F_2, W_4 and W_5, when apron width is more than 1'-0" and W_3 = 0. For Detail "A" and Tables "A" for each slope, see Drawing Nos. W-X152-1, W-X152-2, or W-X153-1, W-X153-2, or W-X154-1, W-X154-2.

NOTE:- This drawing to be used in conjunction with Standard Wing Drawings for 15° Skews for each slope as listed below.

2:1 Slopes	3:1 Slopes	4:1 Slopes
W-X152-1 or W-X152-2	W-X153-1 or W-X153-2	W-X154-1 or W-X154-2.

This drawing to be used in conjunction with Std. Barrel Sections, Drawing Nos.

SINGLES	DOUBLES	TRIPLES	QUADRUPLES	QUINTUPLES
R-115X-0	R-215X-0	R-315X-0	R-415X-0	R-515X-0
R-115X-1	R-215X-1	R-315X-1	R-415X-1	R-515X-1
	R-215X-2	R-315X-2		

CLASS S CONCRETE

ARKANSAS STATE HIGHWAY COMMISSION

DETAILS OF STANDARD WINGS FOR REINFORCED CONCRETE BOX CULVERTS 15° SKEW

4', 5', 6', 7', 8', 9', 10', 11' & 12' SPANS — 2:1, 3:1 & 4:1 SLOPES

SINGLES, DOUBLES, TRIPLES, QUADRUPLES & QUINTUPLES. — ALL DEPTHS OF COVER H = 2', 3', 4', 5', 6', 7', 8', 9', 10', 11' & 12'.

STANDARD DRAWING NO. W-X15

Designed by:- W.C.H. 5-22-63. Checked by:-
Traced by:- W.C.H. 6-13-63 Checked by:- J.E.M. 6-20-63
Quantities by:- Checked by:-

RESHOT 3-8-93

175 3

FED. ROAD No.	STATE	FED. AID PROJECT	FISCAL YEAR	SHEET NO.	TOTAL SHEETS
6	ARK.			602	
JOB No.					

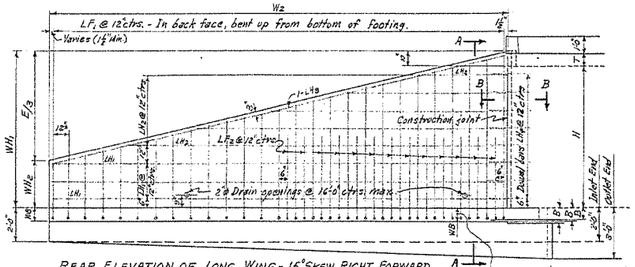

REAR ELEVATION OF LONG WING - 15° SKEW RIGHT FORWARD
SHOWING BACK FACE REINFORCING

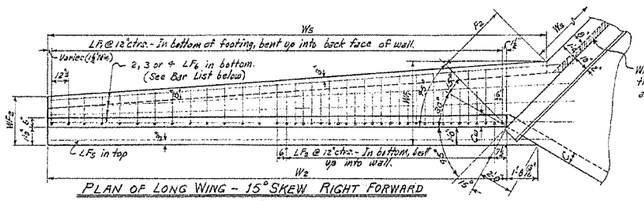

PLAN OF LONG WING - 15° SKEW RIGHT FORWARD
SHOWING FOOTING REINFORCING.

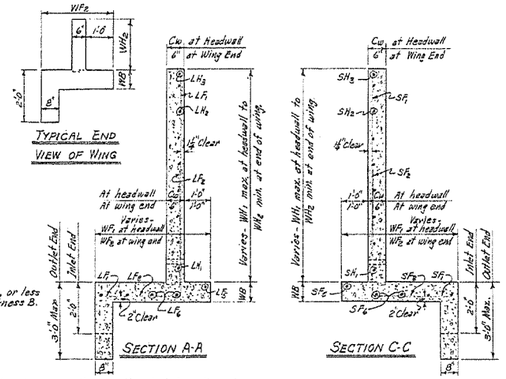

When B is more than WB, the shaded portion of the apron shall be made the same thickness as the bottom slab B.

Note:- Payment for membrane waterproofing and roofing felt to be included in the price bid for Class S Concrete.

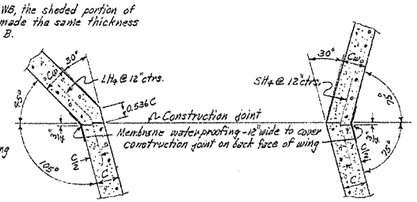

SECTIONS THRU CONSTRUCTION JOINTS

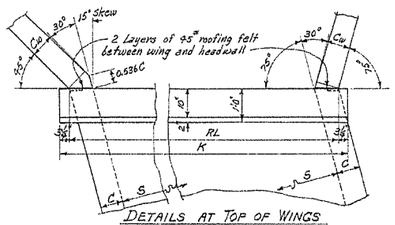

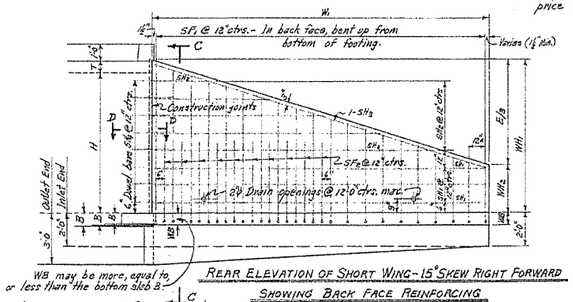

REAR ELEVATION OF SHORT WING - 15° SKEW RIGHT FORWARD
SHOWING BACK FACE REINFORCING

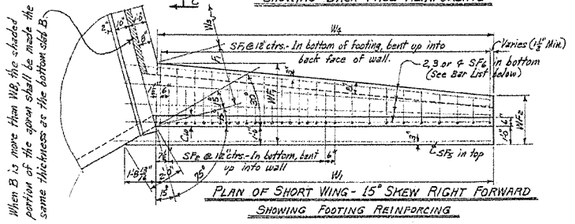

PLAN OF SHORT WING - 15° SKEW RIGHT FORWARD
SHOWING FOOTING REINFORCING

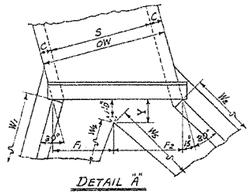

TABLE "A" - DIMENSIONS FOR DETAIL "A"

S	H	F1	F2	W4	W5	W3	Y
5'	7'	3'-0"	3'-5⅝"	16'-10⅝"	25'-0⅜"	0"	1'-0⅝"
6'	8'	3'-6"	4'-1⅞"	19'-0⅛"	28'-3½"	0"	1'-1"

REGULAR WING DIMENSIONS - 3:1 SLOPES

CLEAR HEIGHT OF BOX	THICKNESS OF WING FOOTING	THICKNESS OF WINGWALL HEADWALL & C	WINGWALL HEIGHTS: AT HEADWALL	WINGWALL HEIGHTS: AT END OF WING	WIDTHS OF WING FOOTINGS: AT HEADWALL	WIDTHS OF WING FOOTINGS: AT END OF WING	FOOTING DIMENSIONS-PARALLEL WITH HEADWALL: SHORT WINGS	FOOTING DIMENSIONS-PARALLEL WITH HEADWALL: LONG WINGS	PERPENDICULAR DIST. TO END OF WING	LENGTHS OF WINGWALLS: SHORT WING	LENGTHS OF WINGWALLS: LONG WING	INSIDE FOOTING DIMENSIONS: SHORT WING	INSIDE FOOTING DIMENSIONS: LONG WING	* QUANTITY PER WING - CLASS S CONCRETE: INLET END: SHORT WING	INLET END: LONG WING	OUTLET END: SHORT WING	OUTLET END: LONG WING
H	WB	Cw	WH1	WH2	WF1	WF2	F1	F2	E	W1	W2	W6	W5	Cu.Yd.	Cu.Yd.	Cu.Yd.	Cu.Yd.
2'	7"	6"	2'-10"	0'-8"	2'-4"	2'-0"	1'-1⅜"	0'-10⅝"	6'-6"	6'-8½"	9'-2⅝"	6'-0⅝"	9'-1⅝"	0.783	1.094	0.876	1.212
3'	7"	6"	3'-10"	1'-0"	2'-8"	2'-1½"	1'-5⅜"	1'-1⅝"	8'-6"	8'-9½"	12'-0⅝"	8'-2⅝"	12'-3½"	1.186	1.650	1.300	1.808
4'	7"	6"	4'-10"	1'-4"	3'-0"	2'-3"	1'-9⅝"	1'-1"	10'-6"	10'-10⅝"	14'-10⅝"	10'-4½"	15'-5½"	1.656	2.305	1.797	2.502
5'	7"	6"	5'-10"	1'-8"	3'-4"	2'-6½"	2'-1⅞"	2'-3⅝"	12'-6"	12'-11⅛"	17'-8⅝"	12'-6½"	18'-7½"	2.196	3.059	2.363	3.295
		7"	5'-10"	1'-8"	3'-4"	2'-6½"	2'-1⅞"	2'-3⅝"	12'-6"	12'-11⅛"	17'-8⅝"	12'-6½"	18'-7½"	2.287	3.188	2.955	3.429
6'	8"	7"	6'-10"	2'-0"	3'-8"	2'-6"	2'-5⅜"	2'-9⅛"	14'-6"	15'-0⅝"	20'-6"	14'-8½"	21'-9"	3.052	4.252	3.296	4.517
		7½"	6'-10"	2'-0"	3'-8"	2'-6"	2'-5⅜"	2'-9⅛"	14'-6"	15'-0⅝"	20'-6"	14'-8½"	21'-9"	3.114	4.329	3.309	4.605
		8"	6'-10"	2'-0"	3'-8"	2'-6"	2'-5⅜"	2'-9⅛"	14'-6"	15'-0⅝"	20'-6"	14'-8½"	21'-9"	3.177	4.417	3.371	4.693
7'	8½"	7½"	7'-10"	2'-9"	4'-2"	2'-11½"	3'-0⅞"	3'-5⅝"	16'-6"	17'-1"	23'-4"	16'-10⅝"	25'-1"	3.998	5.560	4.220	5.877
		8"	7'-10"	2'-9"	4'-2"	2'-11½"	3'-0⅞"	3'-5⅝"	16'-6"	17'-1"	23'-4"	16'-10⅝"	25'-1"	4.079	5.675	4.301	5.991
8'	9"	8"	8'-10"	2'-8"	4'-8"	2'-9"	3'-6⅝"	4'-2⅛"	18'-6"	19'-1⅞"	26'-2"	19'-1½"	28'-5"	5.111	7.111	5.366	7.470

* Quantity per wing does not include headwall or that portion of apron or footwall for the length W5.
@ See Table "A" for special values of F1 & F2 and W4 & W5 for Single 5'x5' and 6'x6' Box Culverts.

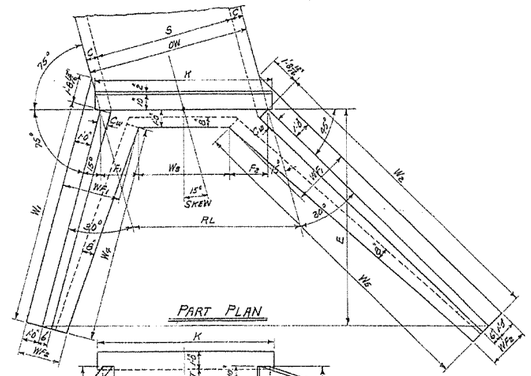

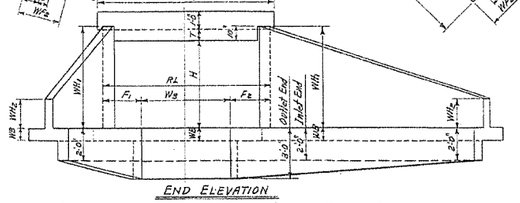

SINGLE BARREL CULVERT - 15° SKEW RIGHT FORWARD
Details of Culvert with 15° Skew Left Forward is reversed, see Dwg. No. W-X.15

TYPICAL WING DETAILS

Note:- For remainder of General Plans and Elevations of Single, Double, Triple, Quadruple and Quintuple Span Culverts, see Std. Drawing No. W-X.15. For values of H, W, and W5 for each box, see the above Std. also.

MEMBRANE:- A membrane waterproofing 12" wide, consisting of three moppings of waterproofing asphalt and two alternate layers of treated cotton fabric shall be applied to the back face of wing to cover the construction joints in wings.

QUANTITIES

CLEAR SPAN	CLEAR HEIGHT	THICKNESS OF WING AT HEADWALL	THICKNESS OF WING AT OUTER END	REINFORCING @ STEEL - FOR 4 WINGS	CLASS S CONCRETE - 4 WINGS: HEADWALLS, WINGWALLS, FOOTINGS, TOEWALLS AND APRONS: SINGLE BARREL CULVERT	DOUBLE BARREL CULVERT	TRIPLE BARREL CULVERT	QUADRUPLE BARREL CULVERT	QUINTUPLE BARREL CULVERT
S	H	Cw	WB	LB.	Cu.Yd.	Cu.Yd.	Cu.Yd.	Cu.Yd.	Cu.Yd.
4'	2'	6"	7"	117	4.79	5.78	6.77	7.77	8.76
	3'	6"	7"	176	6.65	7.64	8.63	9.63	10.62
	4'	6"	7"	267	8.85	9.84	10.84	11.83	12.82
	5'	6"	7"	379	11.40	12.38	13.38	14.37	15.36
	6'	7"	8"	626	15.45	16.46	17.48	18.51	19.53
5'	3'	6"	7"	176	6.87	8.07	9.25	10.48	11.69
	4'	6"	7"	267	9.08	10.28	11.49	12.69	13.90
	5'	6"	7"	379	11.61	12.81	14.02	15.23	16.44
	6'	7"	8"	626	15.67	16.90	18.14	19.38	20.61
	7'	7⅞"	8½"	1210	20.11	21.34	22.62	23.88	25.15
6'	3'	6"	7"	176	7.09	8.52	9.92	11.34	12.78
	4'	6"	7"	267	9.29	10.73	12.13	13.54	14.98
	5'	6"	7"	379	11.83	13.26	14.67	16.10	17.53
	6'	7"	8"	626	15.89	17.35	18.79	20.25	21.70
	7'	7⅞"	8½"	1210	20.33	21.81	23.28	24.76	26.24
	8'	8"	9"	1533	25.56	27.05	28.53	30.02	31.50
7'	4'	6"	7"	267	9.52	11.18	12.81	14.47	16.09
	5'	6"	7"	379	12.05	13.72	15.35	17.01	18.63
	6'	7"	8"	626	16.12	17.80	19.45	21.13	22.78
	7'	7⅞"	8½"	1210	20.56	22.24	23.94	25.64	27.33
	8'	8"	9"	1533	25.80	27.50	29.20	30.90	32.60
8'	4'	6"	7"	267	9.75	11.65	13.51	15.41	17.23
	5'	7"	7"	379	12.74	14.68	16.55	18.47	20.31
	6'	7"	8"	626	16.34	18.26	20.14	22.06	23.90
	7'	7⅞"	8½"	1210	20.78	22.72	24.62	26.55	28.42
	8'	8"	9"	1533	26.03	27.94	29.86	31.80	33.71
9'	5'	7"	7"	379	12.99	15.15	17.25	19.40	21.95
	6'	7⅞"	8"	626	16.89	19.07	21.19	23.34	25.92
	7'	7⅞"	8½"	1210	21.01	23.19	25.31	27.48	29.58
	8'	8"	9"	1533	26.25	28.42	30.55	32.72	34.78
10'	5'	7"	7"	379	13.25	15.62	17.95	20.24	22.59
	6'	7⅞"	8"	626	17.19	19.54	21.89	24.20	26.56
	7'	7⅞"	8½"	1210	21.44	23.66	26.01	28.32	30.68
	8'	8"	9"	1533	26.48	28.89	31.25	33.56	35.92
11'	6	8"	8"	626	17.67	20.31	22.92	25.48	——
	7'	8"	8½"	1210	21.88	24.55	27.13	29.69	——
	8'	8"	9"	1533	26.70	29.37	31.96	34.52	——
12'	6'	8"	8"	626	17.91	20.86	23.64	26.46	——
	7'	8"	8½"	1210	22.11	25.04	27.85	30.67	——
	8'	8"	9"	1533	26.93	29.86	32.67	35.49	——

@ For reinforcing steel in Headwalls and Aprons, see Drawings listed below.

GENERAL NOTES:-
CONCRETE:- All concrete to be Class S, and shall be poured in the dry. All exposed corners to have ¾ chamfers.
REINFORCING STEEL:- Reinforcing steel to be deformed bars of intermediate or hard grade.
CONSTRUCTION JOINTS:- Construction joints between wingwall, footings and sidewalls shall be only where shown on plans.
SPECIFICATIONS:- Arkansas State Highway Commission Standard Specifications for Highway Construction and applicable Special Provisions.
UNIT STRESSES:-
Class S Concrete (n=10) 1200#/in²
Reinforcing Steel 20000#/in²

NOTE:-
This drawing to be used in conjunction with Std. Barrel Sections, Drawing Nos.

SINGLES	DOUBLES	TRIPLES	QUADRUPLES	QUINTUPLES
R-115X-0	R-215X-0	R-315X-0	R-415X-0	R-515X-0
R-115X-1	R-215X-1	R-315X-1	R-415X-1	R-515X-1
	R-215X-2	R-315X-2		

BAR LIST FOR ONE SHORT AND ONE LONG WING - 2 EACH REQUIRED

CLEAR HEIGHT	WING LOCATION	SF1 & LF1 BENT: In bottom of footing, bent up into back face of wing. One bar of each length. SIZE	SPACING	NO. REQD	LENGTHS VARY MIN.	LENGTHS VARY MAX.	X MIN.	X MAX.	Y MIN.	Y MAX.
H	Short or Long									
2'	Short	#3	12"	7	1'-7"	3'-11"	0'-8"	1'-0"	3'-0"	
	Long	#3	12"	10	1'-7"	3'-11"	0'-8"	1'-0"	0'-10"	3'-0"
3'	Short	#3	12"	9	2'-2"	5'-3"	0'-10"	1'-4"	4'-0"	
	Long	#3	12"	13	1'-11"	5'-2"	0'-10"	1'-3"	1'-2"	4'-0"
4'	Short	#3	12"	11	2'-7"	6'-7"	0'-11"	1'-8"	5'-0"	
	Long	#3	12"	15	2'-6"	6'-6"	0'-11"	1'-7"	1'-8"	5'-0"
5'	Short	#3	12"	13	3'-1"	7'-11"	1'-1"	2'-0"	2'-1"	6'-0"
	Long	#3	12"	18	3'-0"	7'-10"	1'-1"	1'-11"	2'-0"	6'-0"
6'	Short	#3	12"	16	3'-6"	9'-2"	1'-2"	2'-4"	2'-9"	7'-0"
	Long	#4	12"	21	3'-5"	9'-2"	1'-2"	2'-3"	2'-0"	7'-0"
7'	Short	#3	12"	18	3'-9"	10'-10"	1'-3"	2'-10"	3'-2"	8'-1"
	Long	#4	12"	24	3'-10"	10'-8"	1'-3"	2'-8"	2'-8"	8'-1"
8'	Short	#4	12"	20	4'-6"	12'-5"	1'-5"	3'-4"	3'-10"	9'-2"
	Long	#4	12"	27	4'-5"	12'-2"	1'-5"	3'-3"	3'-0"	9'-2"

CLEAR HEIGHT	WING LOCATION	SF2 & LF2 BENT: In bottom of footing, bent up into back face of wing. Alt. with F1 bars. SIZE	SPACING	NO. REQD	LENGTH	X	Y
H	Short or Long						
2'	Short	#3	12"	1	6'-5"	1'-6"	
	Long	#3	12"	1	8'-11"		
3'	Short	#3	12"	2	8'-6"	1'-6"	
	Long	#3	12"	2	10'-10"		
4'	Short	#3	12"	2	11'-3"	1'-6"	
	Long	#3	12"	2	13'-7"		
5'	Short	#3	12"	3	13'-6"	1'-6"	
	Long	#3	12"	3	16'-4"		
6'	Short	#3	12"	3	16'-3"	1'-6"	
	Long	#4	12"	3	19'-1"		
7'	Short	#3	12"	4	18'-11"	1'-6"	
	Long	#4	12"	4	22'-0"		
8'	Short	#3	12"	4	21'-8"	1'-6"	
	Long	#4	12"	4	25'-11"		

CLEAR HEIGHT	WING LOCATION	SF3 & LF3 STRAIGHT: Longitudinal in Top of wing footing heel. SIZE	NO. REQD	LENGTH	SF4 & LF4 STRAIGHT: Longitudinal in bottom of wing footing toe. SIZE	NO. REQD	LENGTH
H	Short or Long						
2'	Short	#3	1	9'-2"	#3	2	7'-10"
	Long	#3	1	11'-8"	#3	2	10'-10"
3'	Short	#3	1	11'-8"	#3	2	10'-0"
	Long	#3	1	13'-6"	#3	2	13'-0"
4'	Short	#3	1	13'-6"	#3	3	12'-2"
	Long	#3	1	17'-5"	#3	3	17'-2"
5'	Short	#3	1	15'-5"	#3	3	14'-4"
	Long	#3	1	20'-5"	#3	3	20'-4"
6'	Short	#3	1	17'-5"	#3	3	16'-6"
	Long	#3	1	23'-0"	#3	3	23'-6"
7'	Short	#4	1	19'-7"	#4	4	18'-8"
	Long	#4	1	25'-10"	#4	4	26'-0"
8'	Short	#4	1	21'-8"	#4	4	21'-0"
	Long	#4	1	28'-5"	#4	4	30'-3"

CLEAR HEIGHT	WING LOCATION	SH1 & LH1 Horizontal in back face of wing: SIZE	SPACING	NO. REQD	LENGTH	SH2 & LH2 Horizontal in back face of wing. One bar of each length. SIZE	SPACING	NO. REQD	LENGTHS VARY MAX.	LENGTHS VARY MIN.
H	Short or Long									
2'	Short	#3	12"	1	6'-5"	#5	12"	1	—	3'-6"
	Long	#3	12"	1	8'-11"	#9	12"	1	—	4'-9"
3'	Short	#3	12"	1	8'-6"	#9	12"	2	6'-7"	3'-6"
	Long	#3	12"	1	11'-9"	#9	12"	2	8'-11"	4'-6"
4'	Short	#3	12"	1	10'-7"	#9	12"	3	9'-9"	3'-6"
	Long	#3	12"	1	14'-1"	#9	12"	3	12'-2"	4'-8"
5'	Short	#3	12"	2	12'-8"	#9	12"	3	9'-8"	3'-6"
	Long	#3	12"	2	17'-6"	#9	12"	3	13'-2"	4'-8"
6'	Short	#3	12"	2	14'-9"	#9	12"	4	12'-9"	3'-6"
	Long	#3	12"	2	20'-3"	#9	12"	4	17'-5"	4'-8"
7'	Short	#3	12"	3	17'-0"	#9	12"	4	12'-9"	3'-6"
	Long	#3	12"	3	23'-4"	#9	12"	4	17'-5"	4'-8"
8'	Short	#4	12"	2	19'-3"	#6	12"	5	15'-10"	3'-6"
	Long	#4	12"	2	26'-0"	#6	12"	5	21'-8"	4'-8"

CLEAR HEIGHT	WING LOCATION	SH3 & LH3 In back face of wing at Top - on slope. SIZE	NO. REQD	LENGTH	SH4 & LH4 Dowels thru construction joint at headwall BENT: SIZE	SPACING	NO. REQD	LENGTH	X
H	Short or Long								
2'	Short	#3	1	6'-10"	#3	12"	2	2'-8"	1'-9"
	Long	#3	1	9'-1"	#3	12"	2	"	"
3'	Short	#3	1	9'-0"	#3	12"	3	"	"
	Long	#3	1	12'-0"	#3	12"	3	"	"
4'	Short	#3	1	11'-2"	#3	12"	4	"	"
	Long	#3	1	14'-1"	#3	12"	4	"	"
5'	Short	#3	1	13'-0"	#3	12"	5	"	"
	Long	#3	1	17'-0"	#3	12"	5	"	"
6'	Short	#3	1	15'-1"	#3	12"	6	"	"
	Long	#3	1	20'-9"	#3	12"	6	2'-8"	1'-9"
7'	Short	#3	1	20'-9"	#3	12"	6	2'-8"	1'-9"
	Long	#3	1	23'-8"	#4	12"	7	3'-6"	1'-9"
8'	Short	#4	1	19'-10"	#4	12"	8	"	"
	Long	#4	1	24'-9"	#4	12"	8	3'-6"	1'-9"

BAR BENDING DIAGRAM

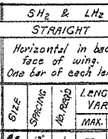

QUANTITY: REINFORCING STEEL PER WING - LBS.	SHORT WING	LONG WING
	24.9	33.4
	37.7	50.3
	57.3	76.4
	81.1	108.4
	134.8	178.1
	259.5	345.2
	328.0	438.3

Note:- Bars for short wing shall be marked with prefix letter 'S', while those for long wing shall be marked with letter 'L'.

Designed By:- W.C.H. 5-13-63 Checked By:- BHS - 8-7-63
Drawn By:- W.C.H. 6-20-63 Checked By:-
Quantities By:- W.C.H. 9-23-63 Checked By:-

REVISIONS:- Membrane Added. 5-10-66 W.C.H.

CLASS S CONCRETE

ARKANSAS STATE HIGHWAY COMMISSION
DETAILS OF STANDARD WINGS
FOR
REINFORCED CONCRETE BOX CULVERTS
15° SKEW

4', 5', 6', 7', 8', 9', 10', 11' & 12' SPANS — 3:1 SLOPES
SINGLES, DOUBLES, TRIPLES, QUADRUPLES & QUINTUPLES — ALL DEPTHS OF COVER FOR H = 8'-0" OR LESS

STANDARD DRAWING NO. W-X153-1

34

BAR LIST FOR BARREL SECTION 60'-0" IN LENGTH

DEPTH OF COVER	CLEAR SPAN	CLEAR HEIGHT	"a" bars STRAIGHT (In Top and Bottom Slab of Barrel) Size	Spacing	No. Req'd	Length	"b" bars BENT - See Diagram below. (In Bottom of Top Slab bent up over Division Wall - hooked. Alternate with "a" and "c" bars.) Size	Spacing	No. Req'd	Length	X	Y	Z	"b2" bars BENT - See Diagram below (In Top of Bottom Slab bent down under Division Wall - hooked. Alternate with "a" and "c" bars.) Size	Spacing	No. Req'd	Length	X	Y	Z	"c" bars STRAIGHT (In Top and Bottom Slab of Barrel. Alt. with "b" and "b2" bars.) Size	Spacing	No. Req'd	Length	"d" bars STRAIGHT (Longitudinal in Top Slab of Barrel) Size	Spacing	No. Req'd	Length	"d1" bars STRAIGHT (Longitudinal in Sidewalls and Division Wall) Size	Spacing	No. Req'd	Length	"e" bars STRAIGHT (Longitudinal in Bottom Slab of Barrel) Size	Spacing	No. Req'd	Length	"f" bars STRAIGHT (Verticals in Sidewalls and Division Wall) Size	Spacing	No. Req'd	Length	"k" bars STRAIGHT (2 in Top of Headwalls and Aprons - Each.) Size	No. Req'd	Length
D	S	H									X	Y	Z					X	Y	Z																							
0'-0" TO 5'-0" MAXIMUM	2 @ 4'	2'	#5	12"	120	9'-9"	#5	12"	59	10'-10"	0'-3"	2'-3½"	3'-5½"	#5	12"	59	10'-10"	0'-2½"	2'-4½"	3'-5½"	#5	12"	120	4'-10"	#5	12"	14	2 @ 30'-8" for 60'-0" Length Barrel (1'-8" Lap)	#4	12"	8	2 @ 30'-6" for 60'-0" Length Barrel (1'-3" Lap)	#4	12"	14	2 @ 31'-6" for 60'-0" Length Barrel (1'-3" Lap)	#4	12"	240	2'-10"	#5	8	10'-3"
		3'			120	9'-9"			59	10'-10"	"	2'-3½"	3'-5½"			59	10'-10"	"	2'-4½"	3'-5½"			120	4'-10"			14				12				14				240	3'-10"		8	"
		4'			120	9'-9"			59	10'-10"	"	2'-3½"	3'-5½"			59	10'-10"	"	2'-4½"	3'-5½"			120	4'-10"			14				16				14				240	4'-10"		8	"
		5'			120	9'-9"			59	10'-10"	"	2'-3½"	3'-5½"			59	10'-10"	"	2'-4½"	3'-5½"			120	4'-10"			14				20				14				240	5'-10"		8	"
		6'			120	10'-0"			59	11'-1"	0'-3"	2'-4½"	3'-6½"			59	11'-1"	0'-2½"	2'-5½"	3'-6½"			120	4'-11"			14				24				14				240	6'-10"		8	10'-6"
	2 @ 5'	3'	#6	12"	120	11'-10"	#5	12"	59	12'-11"	0'-3½"	2'-8"	4'-3"	#5	12"	59	12'-11"	0'-3"	2'-9"	4'-3"	#6	12"	120	5'-10"	#5	11½"	16		#4	12"	12		#4	12"	16		#4	12"	240	3'-11"	#6	8	12'-4"
		4'			120	11'-10"			59	12'-11"	"	2'-8"	4'-3"			59	12'-11"	"	2'-9"	4'-3"			120	5'-10"			16				16				16				240	4'-11"		8	"
		5'			120	11'-10"			59	12'-11"	"	2'-8"	4'-3"			59	12'-11"	"	2'-9"	4'-3"			120	5'-10"			16				20				16				240	5'-11"		8	"
		6'			120	12'-1"			59	13'-2"	"	2'-9"	4'-4"			59	13'-2"	"	2'-10"	4'-4"			120	5'-11"			16				24				16				240	6'-11"		8	12'-7"
		7'			120	12'-3"			59	13'-4"	0'-3½"	2'-10"	4'-4½"			59	13'-4"	0'-3"	2'-11"	4'-4½"			120	6'-0"			16				28				16				240	7'-11"		8	12'-9"
	2 @ 6'	3'	#6	11"	132	13'-11"	#5	11"	65	15'-0"	0'-4"	3'-2"	5'-0"	#5	11"	65	15'-0"	0'-4"	3'-2"	5'-0"	#6	11"	132	6'-11"	#5	11½"	18		#4	12"	12		#4	12"	18		#4	12"	240	4'-0"	#6	8	14'-5"
		4'			132	13'-11"			65	15'-0"	"	3'-2"	5'-0"			65	15'-0"	"	3'-2"	5'-0"			132	6'-11"			18				16				18				240	5'-0"		8	"
		5'			132	13'-11"			65	15'-0"	"	3'-2"	5'-0"			65	15'-0"	"	3'-2"	5'-0"			132	6'-11"			18				20				18				240	6'-0"		8	"
		6'			132	14'-2"			65	15'-3"	"	3'-3"	5'-1"			65	15'-3"	"	3'-3"	5'-1"			132	7'-0"			18				24				18				240	7'-0"		8	14'-8"
		7'			132	14'-4"			65	15'-5"	"	3'-4"	5'-1½"			65	15'-5"	"	3'-4"	5'-1½"			132	7'-1"			18				28				18				240	8'-0"		8	14'-10"
		8'			132	14'-5"			65	15'-6"	0'-4"	3'-4"	5'-2"			65	15'-6"	0'-4"	3'-4"	5'-2"			132	7'-1"			18				32				18			10"	288	9'-0"		8	14'-11"
	2 @ 7'	4'	#6	12"	120	15'-11"	#6	12"	59	17'-3"	0'-4½"	3'-7"	5'-9"	#6	12"	59	17'-3"	0'-4½"	3'-7"	5'-9"	#6	12"	120	7'-11"	#5	11½"	20		#4	12"	16		#4	12"	20		#4	12"	240	5'-1"	#6	8	16'-6"
		5'			120	15'-11"			59	17'-3"	"	3'-7"	5'-9"			59	17'-3"	"	3'-7"	5'-9"			120	7'-11"			20				20				20				240	6'-1"		8	"
		6'			120	16'-2"			59	17'-6"	"	3'-8"	5'-10"			59	17'-6"	"	3'-8"	5'-10"			120	8'-0"			20				24				20				240	7'-1"		8	16'-9"
		7'			120	16'-4"			59	17'-8"	"	3'-9"	5'-10½"			59	17'-8"	"	3'-9"	5'-10½"			120	8'-1"			20				28				20				240	8'-1"		8	16'-11"
		8'			120	16'-5"			59	17'-9"	"	3'-9"	5'-11"			59	17'-9"	"	3'-9"	5'-11"			120	8'-1"			20				32				20			10"	288	9'-1"		8	17'-0"
		9'			120	16'-8"			59	18'-0"	0'-4½"	3'-10"	6'-0"			59	18'-0"	0'-4½"	3'-10"	6'-0"			120	8'-2"			20				36				20		#5	12"	240	10'-1"		8	17'-3"
	2 @ 8'	4'	#6	11"	132	18'-0"	#6	11"	65	19'-5"	0'-5"	4'-0"	6'-6½"	#6	11"	65	19'-5"	0'-5"	4'-0"	6'-6½"	#6	11"	132	9'-0"	#5	11½"	23		#4	12"	16		#4	12"	22		#4	12"	240	5'-2"	#6	8	18'-7"
		5'			132	18'-3"			65	19'-8"	"	4'-1"	6'-7½"			65	19'-8"	"	4'-1"	6'-7½"			132	9'-0"			23				20				22				240	6'-2"		8	18'-10"
		6'			132	18'-3"			65	19'-8"	"	4'-1"	6'-7½"			65	19'-8"	"	4'-1"	6'-7½"			132	9'-0"			23				24				22				240	7'-2"		8	"
		7'			132	18'-5"			65	19'-10"	"	4'-2"	6'-8"			65	19'-10"	"	4'-2"	6'-8"			132	9'-2"			23				28				22				240	8'-2"		8	19'-0"
		8'			132	18'-6"			65	19'-11"	"	4'-2"	6'-8½"			65	19'-11"	"	4'-2"	6'-8½"			132	9'-2"			23				32				22			10"	288	9'-2"		8	19'-1"
		9'			132	18'-9"			65	20'-2"	"	4'-3"	6'-9½"			65	20'-2"	"	4'-3"	6'-9½"			132	9'-3"			23				36				22		#5	12"	240	10'-2"		8	19'-4"
		10'			132	19'-0"			65	20'-5"	0'-5"	4'-4"	6'-10½"			65	20'-5"	0'-5"	4'-4"	6'-10½"			132	9'-4"			23				40				22			11"	264	11'-2"		8	19'-7"
	2 @ 9'	5'	#6	11"	132	20'-4"	#6	11"	65	21'-9"	0'-5½"	4'-6"	7'-5"	#6	11"	65	21'-9"	0'-5¾"	4'-5½"	7'-5"	#6	11"	132	10'-1"	#5	11½"	26		#4	12"	20		#4	12"	25		#4	12"	240	6'-3"	#6	8	20'-11"
		6'			132	20'-6"			65	21'-11"	"	4'-7"	7'-5½"			65	21'-11"	"	4'-6½"	7'-5½"			132	10'-2"			26				24				25				240	7'-3"		8	21'-1"
		7'			132	20'-6"			65	21'-11"	"	4'-7"	7'-5½"			65	21'-11"	"	4'-6½"	7'-5½"			132	10'-2"			26				28				25				240	8'-3"		8	"
		8'			132	20'-7"			65	22'-0"	"	4'-7"	7'-6"			65	22'-0"	"	4'-6½"	7'-6"			132	10'-2"			26				32				25			10"	288	9'-3"		8	21'-2"
		9'			132	20'-10"			65	22'-3"	"	4'-8"	7'-7"			65	22'-3"	"	4'-7½"	7'-7"			132	10'-3"			26				36				25		#5	12"	240	10'-3"		8	21'-5"
		10'			132	21'-1"			65	22'-6"	"	4'-9"	7'-8"			65	22'-6"	"	4'-8½"	7'-8"			132	10'-4"			26				40				25			11"	264	11'-3"		8	21'-8"
		11'			132	21'-3"			65	22'-8"	0'-5½"	4'-9"	7'-9"			65	22'-8"	0'-5¾"	4'-8½"	7'-9"			132	10'-4"			26				44				25			10"	288	12'-3"		8	21'-10"
	2 @ 10'	5'	#7	12"	120	22'-5"	#6	12"	59	23'-11"	0'-6"	5'-0"	8'-2"	#6	12"	59	23'-11"	0'-6½"	4'-11"	8'-2"	#7	12"	120	11'-2"	#5	11½"	28		#4	12"	20		#4	12"	27		#4	12"	240	6'-4"	#7	8	22'-11"
		6'			120	22'-7"			59	24'-1"	"	5'-1"	8'-2½"			59	24'-1"	"	5'-0"	8'-2½"			120	11'-3"			28				24				27				240	7'-4"		8	23'-1"
		7'			120	22'-7"			59	24'-1"	"	5'-1"	8'-2½"			59	24'-1"	"	5'-0"	8'-2½"			120	11'-3"			28				28				27				240	8'-4"		8	"
		8'			120	22'-8"			59	24'-2"	"	5'-1"	8'-3"			59	24'-2"	"	5'-0"	8'-3"			120	11'-3"			28				32				27			10"	288	9'-4"		8	23'-2"
		9'			120	22'-11"			59	24'-5"	"	5'-2"	8'-4"			59	24'-5"	"	5'-1"	8'-4"			120	11'-4"			28				36				27		#5	12"	240	10'-4"		8	23'-6"
		10'			120	23'-2"			59	24'-8"	"	5'-3"	8'-5"			59	24'-8"	"	5'-2"	8'-5"			120	11'-5"			28				40				27			11"	264	11'-4"		8	23'-9"
		11'			120	23'-4"			59	24'-10"	"	5'-3"	8'-6"			59	24'-10"	"	5'-2"	8'-6"			120	11'-5"			28				44				27			10"	288	12'-4"		8	23'-11"
		12'			120	23'-6"			59	25'-0"	0'-6"	6'-3"	8'-7"			59	25'-0"	0'-6½"	5'-2"	8'-7"			120	11'-5"			28				48				27		#6	12"	240	13'-4"		8	24'-1"
	2 @ 11'	6'	#7	12"	120	24'-9"	#6	12"	59	26'-3"	0'-6½"	5'-5"	9'-1"	#6	12"	59	26'-4"	0'-7½"	5'-3"	9'-1"	#7	12"	120	12'-3"	#5	11½"	30		#4	12"	24		#4	12"	29		#4	12"	240	7'-6"	#7	8	25'-3"
		7'			120	24'-9"			59	26'-3"	"	5'-5"	9'-1"			59	26'-4"	"	5'-3"	9'-1"			120	12'-3"			30				28				29				240	8'-6"		8	"
		8'			120	24'-9"			59	26'-3"	"	5'-5"	9'-1"			59	26'-4"	"	5'-3"	9'-1"			120	12'-3"			30				32				29			10"	288	9'-6"		8	"
		9'			120	25'-0"			59	26'-6"	"	5'-6"	9'-2"			59	26'-7"	"	5'-4"	9'-2"			120	12'-4"			30				36				29		#5	12"	240	10'-6"		8	25'-6"
		10'			120	25'-3"			59	26'-9"	"	5'-7"	9'-3"			59	26'-10"	"	5'-5"	9'-3"			120	12'-5"			30				40				29			11"	264	11'-6"		8	25'-10"
		11'			120	25'-5"			59	26'-11"	"	5'-7"	9'-4"			59	27'-0"	"	5'-5"	9'-4"			120	12'-5"			30				44				29			10"	288	12'-6"		8	26'-0"
		12'			120	25'-7"			59	27'-1"	0'-6½"	5'-7"	9'-5"			59	27'-2"	0'-7½"	5'-5"	9'-5"			120	12'-5"			30				48				29		#6	12"	240	13'-6"		8	26'-2"
	2 @ 12'	6'	#7	11"	132	26'-10"	#6	11"	65	28'-4"	0'-7"	5'-11"	9'-10"	#6	11"	65	28'-6"	0'-8½"	5'-8"	9'-10"	#7	11"	132	13'-3"	#5	11½"	32		#4	12"	24		#4	12"	31		#4	12"	240	7'-7"	#7	8	27'-4"
		7'			132	26'-10"			65	28'-4"	"	5'-11"	9'-10"			65	28'-6"	"	5'-8"	9'-10"			132	13'-3"			32				28				31				240	8'-7"		8	"
		8'			132	26'-10"			65	28'-4"	"	5'-11"	9'-10"			65	28'-6"	"	5'-8"	9'-10"			132	13'-3"			32				32				31			10"	288	9'-7"		8	"
		9'			132	27'-1"			65	28'-7"	"	6'-0"	9'-11"			65	28'-9"	"	5'-9"	9'-11"			132	13'-4"			32				36				31		#5	12"	240	10'-7"		8	27'-7"
		10'			132	27'-4"			65	28'-10"	"	6'-1"	10'-0"			65	29'-0"	"	5'-10"	10'-0"			132	13'-6"			32				40				31			11"	264	11'-7"		8	27'-10"
		11'			132	27'-6"			65	29'-0"	"	6'-1"	10'-1"			65	29'-2"	"	5'-10"	10'-1"			132	13'-6"			32				44				31			10"	288	12'-7"		8	28'-0"
		12'			132	27'-8"			65	29'-2"	0'-7"	6'-1"	10'-2"			65	29'-4"	0'-8½"	5'-10"	10'-2"			132	13'-6"			32				48				31		#6	12	240	13'-7"		8	28'-3"

NOTE:- The "a", "b", "b2", and "c" bars are to be placed parallel with the headwalls, spacing to be parallel with barrel.

DIMENSIONS / QUANTITIES

MAX. DESIGN DEPTH OF COVER	CLEAR SPAN	CLEAR HEIGHT	SQ. FT. OPENING	OVERALL WIDTH	THICKNESS OF TOP SLAB	THICKNESS OF SIDEWALLS	THICKNESS OF DIVISION WALL	THICKNESS OF BOTTOM SLAB	OVERALL HEIGHT	ROADWAY LENGTH	LENGTH OF HEADWALL	CLASS S CONC. PER LIN. FT. OF BARREL	REINFORCING STEEL PER LIN. FT. OF BARREL	ADDITIONAL PER LAP	ADDITIONAL TWO HEADWALLS & APRONS
D	S	H	A	OW	T	C	M	B	OH	RL	K	CU. YD.	LB.	LB.	LB.
5'-0"	2 @ 4'	2'	16	9'-8"	6½"	6"	8"	6"	3'-0½"	10'-0"	10'-6½"	0.496	89.89	42.71	136.52
		3'	24	9'-8"		6"	8"		4'-0½"	"	"	0.558	95.23	46.05	136.52
		4'	32	9'-8"		6"	8"		5'-0½"	"	"	0.620	100.58	49.39	136.52
		5'	40	9'-8"		6"	8"		6'-0½"	"	"	0.682	105.92	52.73	136.52
		6'	48	9'-11"		7"	9"		7'-0½"	10'-3⅛"	10'-9⅝"	0.809	112.48	56.07	138.60
	2 @ 5'	3'	30	11'-8"	7"	6"	8"	6½"	4'-1½"	12'-1"	12'-7½"	0.671	125.87	51.19	209.65
		4'	40	11'-8"		6"	8"		5'-1½"	"	"	0.733	131.22	54.53	209.65
		5'	50	11'-8"		6"	8"		6'-1½"	"	"	0.795	136.56	57.87	209.65
		6'	60	11'-11"		7"	9"		7'-1½"	12'-4"	12'-10⅝"	0.922	143.43	61.21	212.66
		7'	70	12'-1"		7½"	10"		8'-1½"	12'-6⅛"	13'-0⅝"	1.044	149.87	64.55	214.66
	2 @ 6'	3'	36	13'-8"	7½"	6"	8"	7½"	4'-3"	14'-1⅜"	14'-8⅞"	0.818	151.91	56.34	245.60
		4'	48	13'-8"		6"	8"		5'-3"	"	"	0.880	157.25	59.68	245.60
		5'	60	13'-8"		6"	8"		6'-3"	"	"	0.941	162.60	63.02	245.60
		6'	72	13'-11"		7"	9"		7'-3"	14'-5"	14'-11⅛"	1.070	169.60	66.36	248.60
		7'	84	14'-1"		7½"	10"		8'-3"	14'-7"	15'-1⅛"	1.192	176.15	69.70	250.61
		8'	96	14'-2"		8"	10"		9'-3"	14'-8"	15'-2⅛"	1.298	186.76	73.04	251.61
	2 @ 7'	4'	56	15'-8"	8"	6"	8"	8"	5'-4"	16'-2⅜"	16'-9"	1.021	181.91	64.83	281.99
		5'	70	15'-8"		6"	8"		6'-4"	"	"	1.082	187.25	68.17	281.99
		6'	84	15'-11"		7"	9"		7'-4"	16'-5⅜"	17'-0⅛"	1.212	194.35	71.51	284.99
		7'	98	16'-1"		7½"	10"		8'-4"	16'-7⅜"	17'-2⅛"	1.334	200.94	74.85	286.99
		8'	112	16'-2"		8"	10"		9'-4"	16'-8⅜"	17'-3⅛"	1.440	211.64	78.19	288.00
		9'	126	16'-5"		9"	11"		10'-4"	17'-0"	17'-6⅛"	1.616	229.01	81.53	291.00
	2 @ 8'	4'	64	17'-8"	8½"	6"	8"	8½"	5'-5"	18'-3⅛"	18'-10"	1.174	215.29	71.71	322.50
		5'	80	17'-11"		7"	9"		6'-5"	18'-6⅜"	19'-1"	1.295	222.27	75.05	325.50
		6'	96	17'-11"		7"	9"		7'-5"	"	"	1.366	227.62	78.39	325.50
		7'	112	18'-1"		7½"	10"		8'-5"	18'-8⅜"	19'-3"	1.489	234.60	81.73	327.50
		8'	128	18'-2"		8"	10"		9'-5"	18'-9⅜"	19'-4⅛"	1.595	245.39	85.07	328.50
		9'	144	18'-5"		9"	11"		10'-5"	19'-0⅜"	19'-7⅛"	1.772	268.00	88.41	331.51
		10'	160	18'-8"		10"	12"		11'-5"	19'-3⅜"	19'-10⅛"	1.967	275.99	91.75	334.51
	2 @ 9'	5'	90	19'-11"	9"	7"	9"	9¼"	6'-6¼"	20'-7⅛"	21'-2"	1.477	244.83	82.77	364.23
		6'	108	20'-1"		7½"	10"		7'-6¼"	20'-9⅛"	21'-4"	1.594	251.54	86.11	366.23
		7'	126	20'-1"		7½"	10"		8'-6¼"	"	"	1.671	256.89	89.45	366.23
		8'	144	20'-2"		8"	10"		9'-6¼"	20'-10⅛"	21'-5"	1.778	267.72	92.79	367.23
		9'	162	20'-5"		9"	11"		10'-6¼"	21'-1⅛"	21'-8⅛"	1.956	285.41	96.13	370.24
		10'	180	20'-8"		10"	12"		11'-6¼"	21'-4⅛"	21'-11⅛"	2.152	298.43	99.47	373.24
		11'	198	20'-10"		11"	12"		12'-6¼"	21'-6⅞"	22'-1⅛"	2.328	312.32	102.81	375.24
	2 @ 10'	5'	100	21'-11"	9½"	7"	9"	10"	6'-7½"	22'-8⅛"	23'-2¾"	1.674	286.66	87.92	500.43
		6'	120	22'-1"		7½"	10"		7'-7½"	22'-10⅛"	23'-4⅞"	1.792	293.52	91.26	503.15
		7'	140	22'-1"		7½"	10"		8'-7½"	"	"	1.869	298.87	94.60	503.15
		8'	160	22'-2"		8"	10"		9'-7½"	22'-11⅜"	23'-5¾"	1.976	309.79	97.94	504.52
		9'	180	22'-5"		9"	11"		10'-7½"	23'-2⅛"	23'-9"	2.155	327.76	101.28	509.97
		10'	200	22'-8"		10"	12"		11'-7½"	23'-5⅛"	24'-0"	2.352	341.02	104.62	514.06
		11'	220	22'-10"		11"	12"		12'-7½"	23'-7⅜"	24'-2"	2.529	356.04	107.96	516.78
		12'	240	23'-0"		12"	12"		13'-7½"	23'-9⅞"	24'-4⅛"	2.718	877.25	111.30	519.51
	2 @ 11'	6'	132	24'-2"	10"	8"	10"	11"	7'-9"	25'-0⅛"	25'-6¾"	2.048	316.97	96.41	551.83
		7'	154	24'-2"		8"	10"		8'-9"	"	"	2.128	322.31	99.75	551.83
		8'	176	24'-2"		8"	10"		9'-9"	"	"	2.208	332.74	103.09	551.83
		9'	198	24'-5"		9"	11"		10'-9"	25'-3⅜"	25'-9⅞"	2.388	350.87	106.43	555.92
		10'	220	24'-8"		10"	12"		11'-9"	25'-6⅛"	26'-1"	2.586	364.19	109.77	561.37
		11'	242	24'-10"		11"	12"		12'-9"	25'-8⅛"	26'-3"	2.764	378.28	113.11	564.10
		12'	264	25'-0"		12"	12"		13'-9"	25'-10⅞"	26'-5"	2.954	400.66	116.45	566.82
	2 @ 12'	6'	144	26'-2"	10½"	8"	10"	12"	7'-10½"	27'-1"	27'-7⅛"	2.299	362.26	101.55	599.59
		7'	168	26'-2"		8"	10"		8'-10½"	"	"	2.379	367.60	104.89	599.59
		8'	192	26'-2"		8"	10"		9'-10½"	"	"	2.459	378.07	108.23	599.59
		9'	216	26'-5"		9"	11"		10'-10½"	27'-4⅛"	27'-10⅜"	2.690	396.47	111.57	603.68
		10'	240	26'-8"		10"	12"		11'-10½"	27'-7⅛"	28'-1¾"	2.840	410.39	114.91	607.77
		11'	264	26'-10"		11"	12"		12'-10½"	27'-9⅜"	28'-3⅜"	3.018	424.63	118.25	610.49
		12'	288	27'-0"		12"	12"		13'-10½"	27'-11⅜"	28'-6"	3.208	497.20	121.59	614.58

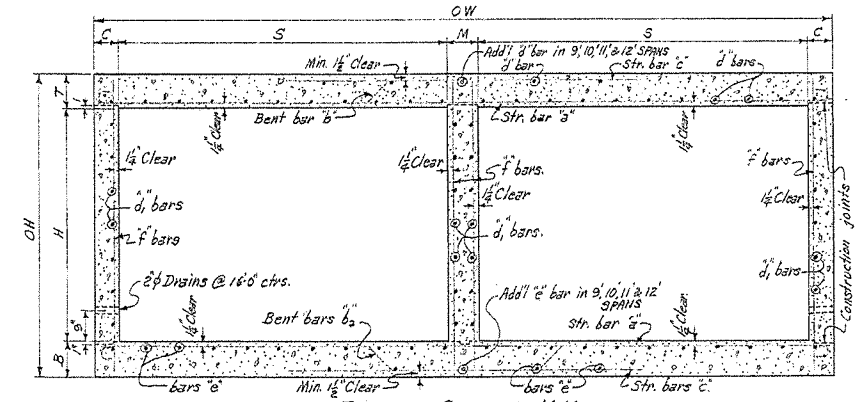

TYPICAL SECTION M-M

NOTE:- For details of wings and bar lists, see Drawing Nos. W-X152-1 or W-X152-2 ; W-X153-1 or W-X153-2 and W-X154-1 or W-X154-2. Also W-X15.

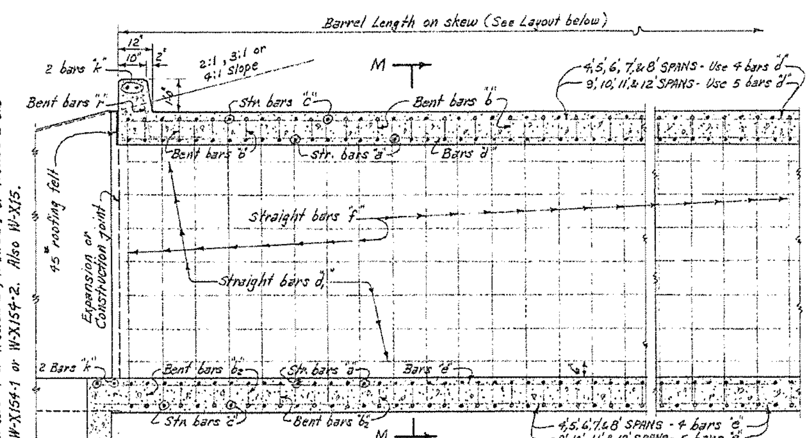

PART LONGITUDINAL SECTION N-N

GENERAL NOTES:-

CONCRETE:- All concrete to be Class S, and shall be poured in the dry. All exposed corners to have ¾" chamfers.

REINFORCING STEEL:- Reinforcing to be deformed bars of intermediate or hard grade.

BAR LAP:- In computing the quantities of steel from the tables add one lap for each additional 33'-0" length of barrel over 32'-0". Lap longitudinal bars 30 diameters.

CONSTRUCTION JOINTS:- Construction joints between wingwalls, side walls, division walls and slabs shall be only where shown on plans.

SPECIFICATIONS:- Arkansas State Highway Commission Standard Specifications for Highway Construction and applicable Special Provisions.

BAR SIZE	PIN DIAM.	K	ADD FOR 2 HOOKS	BENDING DIAGRAM FOR BARS "b" and "b2"
#5	2½"	4½"	0'-11½"	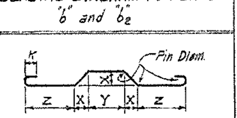
#6	3"	5"	1'-2"	

NOTE:- Dimensions are to centers of bars.

DOWEL BARS FOR TWO HEADWALLS

2 SPANS @	SIZE	SPACING	No. REQ'D	LENGTH	X	Bars "r" Dowel bars in Headwalls
4'	#4	12"±	20	2'-5"	1'-2½"	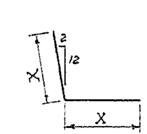
5'	#4	12"±	24	2'-6"	1'-3"	
6'	#4	12"±	28	2'-7"	1'-3½"	
7'	#4	12"±	32	2'-8"	1'-4"	
8'	#4	12"±	38	2'-9"	1'-4½"	
9'	#4	12"±	42	2'-10"	1'-5"	
10'	#4	12"±	46	2'-11"	1'-5½"	
11'	#4	12"±	50	3'-0"	1'-6"	
12'	#4	12"±	54	3'-1"	1'-6½"	

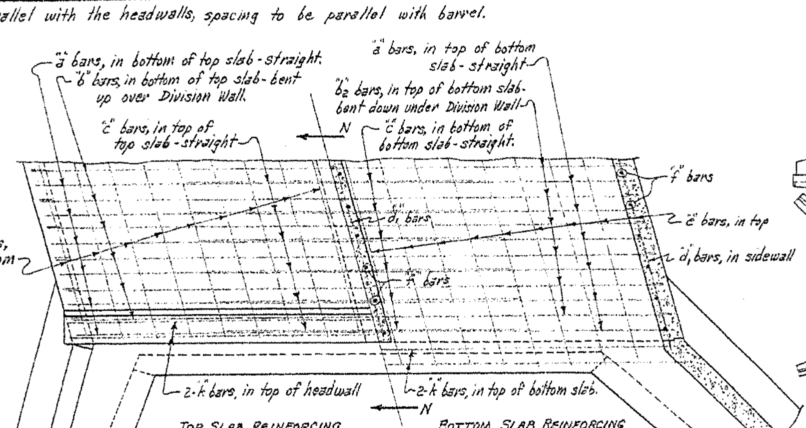

TOP SLAB REINFORCING — BOTTOM SLAB REINFORCING

PART PLAN AT END OF CULVERT

NOTE:- The "a", "b", "b2" and "c" bars are placed parallel with the headwall. The "d" bars in top of top slab and "e" bars in bottom of bottom slab are not shown.

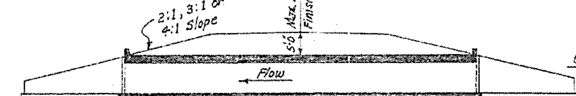

LONGITUDINAL SECTION N-N

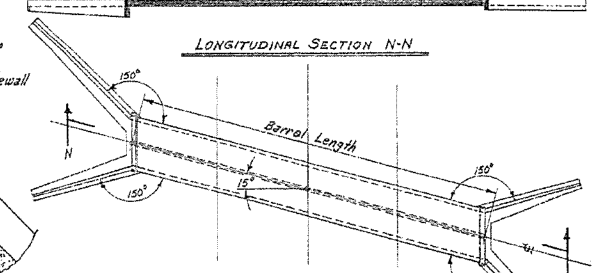

LAYOUT OF DOUBLE BARREL CULVERT

15° SKEW LEFT FORWARD

15° Skew Right Forward is reversed.

DESIGN LIVE LOAD

H20-S16 LOADING A.A.S.H.O. 1961

AND

SPECIAL MILITARY LOADING

Two 24000 Lb. Axles @ 4'-0" ctrs.

UNIT STRESSES:-

Class S Concrete (n=10) 1200#/□"

Reinforcing Steel 20,000#/□"

NOTE:- This drawing to be used in conjunction with Standard Wing Drawing Nos. W-X152-1 or W-X152-2, W-X153-1 or W-X153-2, and W-X154-1 or W-X154-2. Also W-X15.

CLASS S CONCRETE

ARKANSAS STATE HIGHWAY COMMISSION

DETAILS OF STANDARD BARREL SECTIONS FOR REINFORCED CONCRETE BOX CULVERTS

15° SKEW

4', 5', 6', 7', 8', 9', 10', 11' & 12' SPANS — 2:1, 3:1 OR 4:1 SLOPES

DOUBLES — UNDER 5'-0" COVER

STANDARD DRAWING NO. R-215X-0

Designed by:- W.C.H. 1-17-63. Checked by:- R.H.S - 5-14-63

Drawn by:- W.C.H. 8-23-63. Checked by:- RHS - 10-7-63

Quantities by:- W.C.H. 8-26-63. Checked by:- R.G. - 12-16-63

Beshot 3-8-93

191

FED. ROAD No.	STATE	FED. AID PROJECT	FISCAL YEAR	SHEET No.	TOTAL SHEETS
6	ARK.			64	
JOB No.					

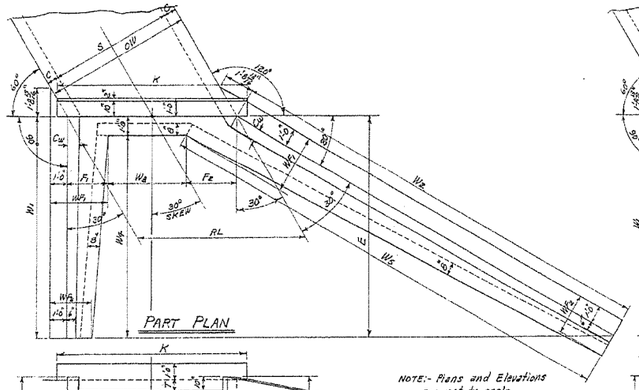

SINGLE BARREL CULVERT-30° SKEW RIGHT FORWARD

Details of Culvert with 30° Skew Left Forward is reversed, see Layout below.

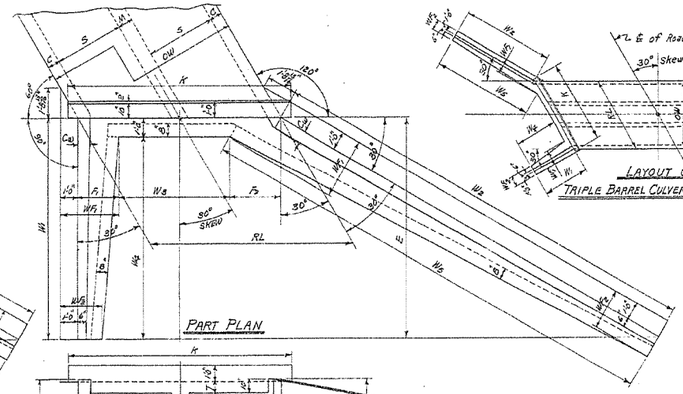

DOUBLE BARREL CULVERT-30° SKEW RIGHT FORWARD

Details of Culvert with 30° Skew Left Forward is reversed, see Layout below.

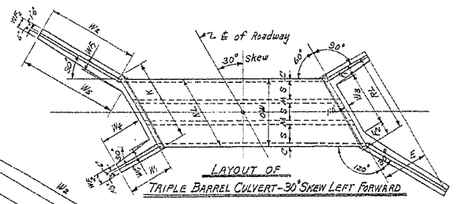

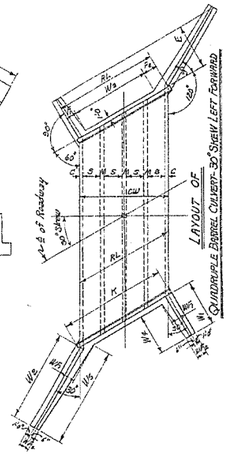

NOTE:- The length of the wings for the Plans, Elevations, and Layouts, as drawn, are proportioned for 3:1 slopes. For 2:1 slopes the wings are proportionally shorter, while for 4:1 slopes they are longer.

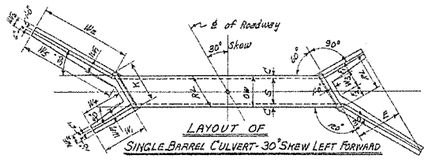

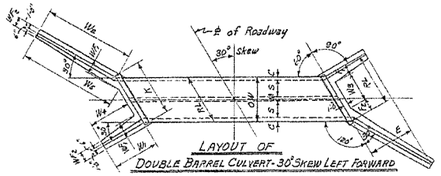

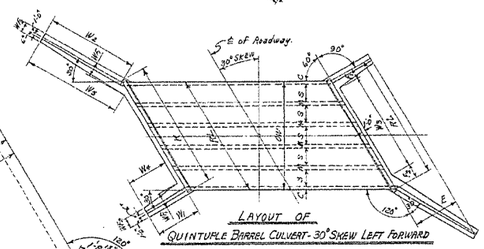

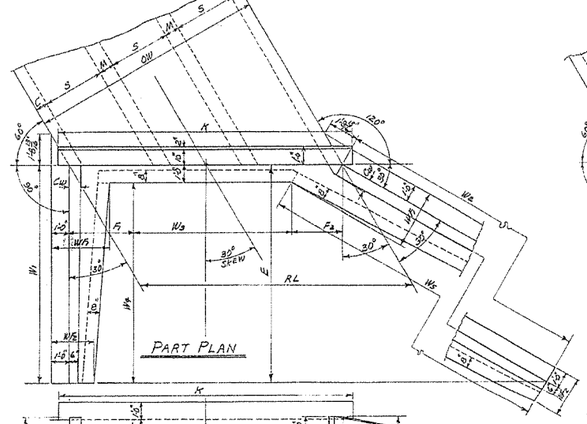

TRIPLE BARREL CULVERT-30° SKEW RIGHT FORWARD

Details of Culvert with 30° Skew Left Forward is reversed, see Layout at top center of sheet.

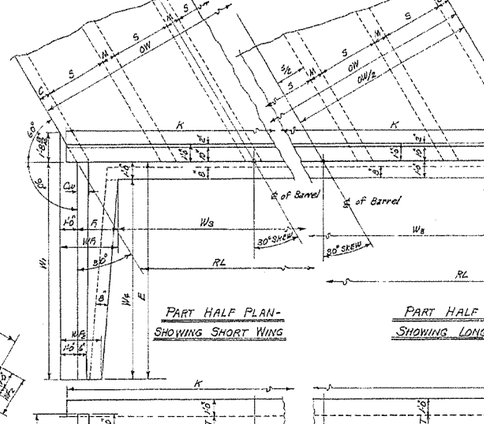

QUADRUPLE BARREL CULVERT-30° SKEW RT. FWD.

Details of Culvert with 30° Skew Left Forward is reversed, see Layout at above center.

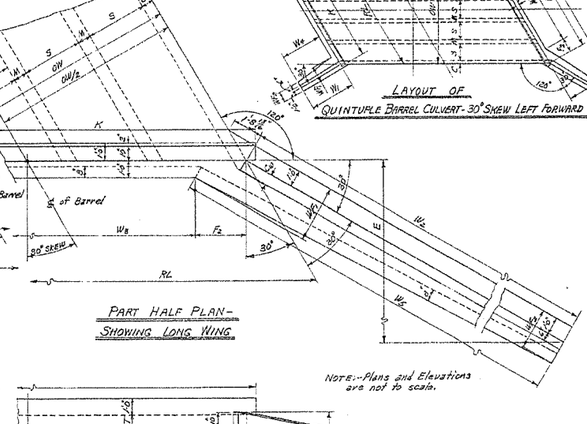

QUINTUPLE BARREL CULVERT-30° SKEW RT. FWD.

Details of Culvert with 30° Skew Left Forward is reversed, see Layout above.

NOTE:-Plans and Elevations are not to scale.

Designed by:- W.C.H. 5-16-63 Checked by:- TRHS - 8-21-63
Drawn by:- W.C.H. 7-15-63 Checked by:-
Quantities by:- Checked by:-

ROADWAY LENGTH RL — HEADWALL LENGTH K — APRON DIMENSION W_3

RL = OW x 1.1547 — K = RL + (1 - $\frac{F_1+F_2}{2}$) — W_3 = RL - (F_1 + F_2)

USE WITH DRAWING NO.	CLEAR SPAN	CLEAR HEIGHT	SUM OF ROOFING AND FLOOR THICKNESS	SINGLE BARREL CULVERT				DOUBLE BARREL CULVERT				TRIPLE BARREL CULVERT				QUADRUPLE BARREL CULVERT				QUINTUPLE BARREL CULVERT			
	S	H	F_1 & F_2	OW	RL	K	W_3	OW	RL	K	W_3	OW	RL	K	W_3	OW	RL	K	W_3	OW	RL	K	W_3
W-X302-1, W-X303-1 or W-X304-1. (FOR H=8'0" OR LESS)	4'	2'-3⅜"	5'-0"	5'-3½"	6'-11⅝"	3'-1⅝"		9'-8"	11'-2"	12'-3⅜"	8'-10⅝"	14'-4"	16'-6⅝"	17'-9½"	14'-3⅝"	19'-0"	21'-11⅝"	23'-1"	19'-3⅝"	23'-8"	27'-4"	28'-5⅝"	25'-0⅝"
		3'-8⅜"	5'-0"	"	"	2'-6"		9'-8"	"	"	7'-10⅝"	14'-9"	"	"	13'-3⅜"	19'-0"	"	"	18'-8"	23'-8"	"	"	29'-10⅝"
		4'-1⅜"	5'-0"	"	"	1'-6"		9'-8"	"	"	6'-10⅝"	14'-9"	"	"	12'-3⅜"	19'-0"	"	"	17'-8"	23'-8"	"	"	23'-10⅝"
	5'	5'-3⅜"	5'-0"	5'-3½"	6'-11⅝"	0'-4"		9'-8"	11'-2"	12'-3⅜"	5'-10⅝"	14'-4"	16'-6⅝"	17'-8⅝"	11'-3⅜"	19'-0"	21'-11⅝"	23'-1"	16'-8"	23'-8"	27'-4"	28'-5⅝"	22'-0⅝"
		6'-3⅜"	5'-2"	5'-5⅛"	7'-1⅝"	Ⓐ 0"		9'-11"	11'-5⅛"	12'-7⅝"	5'-2⅝"	14'-8"	16'-11⅛"	18'-1"	10'-2"	19'-5"	22'-5"	23'-7"	16'-7⅝"	24'-2"	27'-10⅝"	29'-0⅝"	21'-7⅝"
	5'	3'-3⅜"	6'-0"	6'-1⅛"	8'-1"	3'-1⅝"		11'-8"	13'-5⅝"	14'-7½"	10'-2⅝"	17'-4"	20'-0⅛"	21'-2"	16'-7⅝"	23'-0"	26'-6⅝"	27'-8½"	23'-3½"	28'-8"	33'-1⅛"	34'-3"	29'-10"
		4'-3⅜"	6'-0"	"	"	2'-7⅝"		11'-8"	"	"	9'-8½"	17'-4"	"	"	15'-10"	23'-0"	"	"	22'-3½"	28'-8"	"	"	28'-10"
	5'	5'-3⅜"	6'-0"	6'-1⅛"	8'-1"	1'-7⅝"		11'-8"	13'-5⅝"	14'-7½"	8'-2⅝"	17'-4"	20'-0⅛"	21'-2"	14'-10"	23'-0"	26'-6⅝"	27'-8½"	21'-1⅜"	28'-8"	33'-1⅛"	34'-3"	27'-10"
		6'-3⅜"	6'-2"	7'-1⅝"	8'-3⅝"	0'-10⅝"		11'-11"	13'-11⅝"	15'-1⅛"	7'-5⅞"	17'-8"	20'-4⅝"	21'-6⅝"	14'-1⅛"	23'-5"	27'-0⅝"	28'-2⅛"	20'-9⅜"	29'-2"	33'-6⅛"	34'-10"	27'-5"
	7'	7'-3⅜"	6'-3"	7'-2⅝"	8'-4⅛"	Ⓐ 0"		12'-1"	13'-11⅛"	15'-1⅛"	6'-2⅝"	17'-11"	20'-10⅛"	21'-10"	12'-11"	23'-8"	27'-2⅝"	28'-2"	19'-8"	29'-7"	34'-2"	35'-5⅝"	26'-9⅝"
	3'	3'-3⅜"	7'-0"	8'-1"	9'-2⅞"	4'-3⅝"		13'-8"	15'-9⅜"	16'-11⅛"	12'-6⅜"	20'-4"	23'-5⅝"	24'-7⅝"	20'-2⅝"	27'-0"	31'-2½"	32'-4"	27'-11"	33'-8"	38'-11⅝"	40'-0⅛"	33'-7⅝"
	4'	4'-3⅜"	7'-0"	"	"	3'-3⅝"		13'-8"	"	"	11'-6⅝"	20'-4"	"	"	15'-2⅝"	27'-0"	"	"	26'-11"	33'-8"	"	"	34'-7⅝"
	5'	5'-3⅜"	7'-0"	8'-1"	9'-2⅞"	2'-3⅝"		13'-8"	15'-9⅜"	16'-11⅛"	10'-6⅝"	20'-4"	23'-5⅝"	24'-7⅝"	18'-2⅝"	27'-0"	31'-2½"	32'-4"	25'-11"	33'-8"	38'-11⅝"	40'-0⅛"	33'-7⅝"
	6'	6'-3⅜"	7'-2"	8'-3⅝"	9'-5⅜"	2'-0"		13'-11"	16'-0⅜"	17'-2⅝"	9'-3⅜"	20'-8"	23'-10⅛"	25'-0⅛"	17'-7⅛"	27'-5"	31'-7⅛"	32'-9⅝"	24'-5⅜"	34'-2"	39'-5⅝"	40'-7⅝"	33'-2⅛"
	7'	7'-3⅜"	7'-3"	8'-4⅝"	9'-6⅞"	0'-2⅝"		14'-1"	16'-3⅝"	17'-5"	8'-1"	20'-11"	24'-1⅛"	25'-3⅜"	16'-4⅝"	27'-9"	31'-11⅝"	33'-2⅛"	23'-10"	34'-7"	39'-11"	41'-1"	32'-1"
	8'	8'-3⅜"	7'-4"	8'-5⅞"	9'-7⅞"	Ⓐ 0"		14'-2"	16'-4⅝"	17'-6⅝"	7'-1"	21'-1"	24'-3"	25'-5⅝"	15'-3⅛"	28'-0"	32'-2⅛"	33'-3⅝"	22'-10⅝"	34'-10"	40'-0⅜"	41'-2⅝"	30'-12⅝"
	4'	4'-3⅜"	8'-0"	9'-2⅝"	10'-6⅜"	5'-1⅜"		15'-8"	18'-1⅛"	19'-3"	13'-3⅜"	22'-4"	26'-0⅞"	27'-3"	20'-7⅜"	29'-8"	34'-2⅝"	35'-4⅛"	28'-4⅜"	36'-6"	42'-1⅛"	43'-3⅜"	36'-2⅜"
	5'	5'-3⅜"	8'-0"	9'-2⅝"	10'-6⅜"	3'-1⅜"		15'-8"	18'-1⅛"	19'-3"	12'-3⅜"	23'-4"	26'-11⅝"	28'-1"	19'-7⅜"	29'-8"	34'-2⅝"	35'-4⅛"	26'-11"	36'-6"	42'-1⅛"	43'-3⅜"	35'-2⅜"
	6'	6'-3⅜"	8'-2"	9'-5⅝"	10'-9"	2'-1⅜"		15'-11"	18'-4½"	19'-6⅝"	11'-1⅝"	23'-8"	27'-3⅝"	28'-5⅝"	18'-7⅝"	30'-1"	34'-7⅝"	35'-9⅝"	25'-5⅜"	36'-11"	42'-6⅝"	43'-8⅝"	34'-2⅝"
	7'	7'-3⅜"	8'-3"	9'-6⅝"	10'-10½"	1'-3"		16'-1"	18'-6⅛"	19'-8⅝"	10'-3⅜"	23'-11"	27'-6⅜"	28'-8⅝"	19'-10⅛"	30'-3"	34'-10"	35'-11⅝"	25'-10⅜"	37'-3"	42'-10⅝"	44'-0⅛"	34'-7⅜"
	8'	8'-3⅜"	8'-5"	9'-9½"	10'-13⅜"	0'-5⅛"		16'-2"	18'-8"	19'-10⅜"	9'-4⅞"	24'-0"	27'-8⅝"	28'-10⅝"	18'-5⅜"	30'-5"	35'-0⅜"	36'-1⅝"	24'-3⅜"	37'-7"	43'-2⅛"	44'-4⅛"	34'-6⅛"
	4'	4'-3⅜"	9'-0"	10'-4⅜"	11'-8½"	6'-1½"		17'-5"	20'-0⅝"	21'-4⅛"	16'-1⅝"	26'-4"	30'-1⅜"	31'-4⅝"	24'-1⅜"	35'-0"	40'-5"	41'-6⅜"	36'-1⅝"	43'-8"	50'-5⅜"	51'-7"	46'-1⅜"
	5'	5'-3⅜"	9'-2"	10'-7"	11'-10⅝"	5'-3⅜"		17'-11"	20'-10⅝"	21'-10"	15'-5"	26'-8"	30'-5⅜"	31'-11⅜"	23'-5⅝"	35'-5"	40'-10⅝"	42'-0⅛"	34'-7⅝"	44'-2"	51'-0"	52'-1⅜"	45'-8⅜"
	6'	6'-3⅜"	9'-2"	10'-7"	11'-10⅝"	4'-3⅜"		17'-11"	20'-8⅜"	21'-10"	14'-5"	26'-5"	30'-2⅝"	31'-11⅜"	24'-1⅝"	35'-5"	41'-0⅝"	42'-0⅛"	34'-7⅝"	44'-2"	51'-0"	52'-1⅜"	45'-8⅜"
	7'	7'-3⅜"	9'-3"	10'-8⅜"	11'-11⅝"	3'-3⅜"		18'-1"	20'-10⅝"	22'-0⅛"	13'-1⅝"	26'-11"	31'-1"	32'-2⅜"	24'-3⅜"	35'-8"	41'-3⅜"	42'-3⅞"	34'-10⅝"	44'-5"	51'-3⅜"	52'-4⅞"	45'-11⅜"
	8'	8'-3⅜"	9'-4"	10'-9⅜"	11'-11⅝"	1'-6⅝"		18'-2"	20'-11⅞"	22'-1⅛"	11'-8⅛"	27'-0"	31'-2⅝"	32'-4"	21'-11"	35'-10"	41'-6⅛"	42'-6⅝"	32'-11⅝"	44'-8"	51'-7"	52'-8⅝"	42'-3⅝"
	5'	5'-3⅜"	10'-2"	11'-8⅜"	12'-10⅜"	6'-5⅜"		19'-11"	23'-0"	24'-1⅝"	17'-0⅝"	29'-8"	34'-3⅜"	35'-5"	28'-1⅜"	39'-5"	45'-5"	46'-6"	40'-3"	49'-3"	56'-9"	57'-11"	51'-6"
	6'	6'-3⅜"	10'-3"	11'-10"	13'-0"	5'-6⅜"		20'-1"	23'-2⅝"	24'-4⅝"	16'-1⅝"	29'-11"	34'-6⅝"	35'-8⅝"	28'-3⅝"	39'-8"	45'-8⅝"	46'-9⅛"	40'-3"	49'-6"	57'-0"	58'-2"	51'-8"
	7'	7'-3⅜"	10'-3"	11'-10"	13'-0"	4'-3⅜"		20'-1"	23'-2⅝"	24'-4⅝"	15'-2⅝"	29'-11"	34'-6⅝"	35'-8⅝"	28'-3⅝"	39'-8"	45'-8⅝"	46'-9⅛"	40'-3"	49'-6"	57'-0"	58'-2"	51'-8"
	8'	8'-3⅜"	10'-4"	11'-11⅝"	13'-1"	2'-3"		20'-2"	23'-3⅝"	24'-5⅝"	14'-3⅜"	30'-0"	34'-7⅝"	35'-9⅝"	25'-4⅜"	39'-10"	44'-0"	45'-1⅛"	36'-5⅜"	49'-8"	57'-2⅛"	58'-4"	49'-1"
	5'	5'-3⅜"	11'-2"	12'-10⅝"	14'-0⅛"	7'-7⅛"		21'-11"	25'-3⅜"	26'-5⅝"	20'-0⅝"	32'-8"	37'-6⅝"	38'-10⅛"	32'-5⅝"	43'-5"	50'-1⅞"	51'-3⅜"	44'-10⅝"	54'-2"	62'-4"	63'-6⅛"	57'-3⅜"
	6'	6'-3⅜"	11'-3"	12'-11⅜"	14'-1⅝"	6'-6⅜"		22'-1"	25'-4"	26'-7⅜"	19'-2⅜"	32'-11"	38'-0⅜"	39'-3"	31'-0"	43'-9"	50'-4⅝"	51'-6"	44'-1⅜"	54'-5"	62'-7⅝"	63'-9⅝"	56'-7"
	7'	7'-3⅜"	11'-3"	12'-11⅜"	14'-1⅝"	5'-5⅜"		22'-1"	25'-4"	26'-7⅜"	17'-8⅜"	32'-11"	38'-0⅜"	39'-3"	30'-3"	43'-9"	50'-4⅝"	51'-6"	42'-7"	54'-5"	62'-7⅝"	63'-9⅝"	55'-8"
	8'	8'-3⅜"	11'-4"	13'-1"	14'-3"	3'-3⅝"		22'-2"	25'-5⅞"	26'-9"	16'-4"	33'-0"	38'-1⅛"	39'-3"	28'-10"	43'-10"	50'-7⅜"	51'-9⅝"	41'-0⅝"	54'-6"	62'-9"	63'-11"	53'-10⅝"
	6'	6'-3⅜"	12'-6"	14'-2⅜"	15'-6⅛"	7'-11⅜"		24'-2"	27'-10⅛"	29'-0⅝"	21'-7⅜"	36'-0"	41'-6⅜"	42'-8⅝"	35'-3⅜"	47'-10"	55'-2⅛"	56'-4⅝"	48'-11⅜"	----	----	----	----
	7'	7'-3⅜"	12'-5"	"	"	6'-5⅜"		24'-2"	"	"	20'-1⅝"	36'-0"	"	"	33'-8½"	47'-10"	"	"	46'-11⅜"	----	----	----	----
	8'	8'-3⅜"	12'-5"	"	"	4'-11⅜"		24'-2"	"	"	18'-7⅜"	36'-0"	"	"	32'-3⅜"	47'-10"	"	"	45'-11⅜"	----	----	----	----
	6'	6'-3⅜"	13'-4"	15'-0⅝"	16'-4½"	9'-1⅜"		26'-2"	30'-2⅝"	31'-6⅛"	23'-11⅜"	39'-0"	45'-0⅜"	46'-2⅝"	38'-9⅜"	51'-10"	59'-10⅛"	61'-0"	53'-7"	----	----	----	----
	7'	7'-3⅜"	13'-5"	"	"	7'-7½"		26'-2"	"	"	22'-5⅝"	39'-0"	"	"	37'-2⅝"	51'-10"	"	"	50'-7"	----	----	----	----
	8'	8'-3⅜"	13'-6"	"	"	6'-1½"		26'-2"	"	"	20'-11⅜"	39'-0"	"	"	35'-10⅝"	51'-10"	"	"	50'-7"	----	----	----	----
W-X302-2, W-X303-2 OR W-X304-2. (FOR H=9'0" & OVER)	7'	9'	10'-3⅜"	9'-6¼"	9'-10⅜"	10'-11⅝"	Ⓐ 0"	16'-5"	18'-11⅛"	20'-1⅛"	8'-2⅜"	22'-10"	26'-3⅛"	27'-5⅝"	17'-9"	32'-3"	37'-2⅜"	38'-4⅝"	26'-5⅛"	40'-2"	46'-3⅛"	47'-6⅛"	36'-7⅛"
	8'	9'	10'-3⅜"	9'-6"	10'-11⅝"	12'-1⅛"	0'-2⅜"	18'-5"	21'-3⅝"	22'-5"	10'-6"	27'-9"	31'-11⅜"	33'-1⅛"	20'-9⅜"	36'-8"	41'-10⅝"	43'-0⅛"	31'-1"	45'-2"	52'-1⅝"	53'-3⅝"	41'-6⅝"
		10'	12'-3⅜"	9'-8"	11'-2"	12'-3⅜"	Ⓐ 0"	18'-8"	21'-6⅛"	22'-8½"	9'-3⅜"	27'-8"	31'-11⅜"	33'-1⅛"	19'-8⅜"	36'-8"	42'-0⅝"	43'-1"	30'-10⅜"	45'-8"	52'-8⅜"	53'-10⅜"	40'-5⅜"
	9'	9'	10'-3⅜"	10'-6"	12'-1⅝"	13'-3⅜"	1'-4⅜"	20'-5"	23'-6⅜"	24'-10⅝"	12'-3⅜"	30'-4"	35'-0⅝"	36'-2⅝"	23'-1⅜"	40'-5"	46'-5⅛"	47'-7⅝"	35'-8⅛"	50'-2"	57'-11⅝"	59'-1"	47'-2"
	9'	10'	12'-3⅜"	10'-8"	12'-3⅜"	13'-5⅝"	0'-0⅝"	20'-6"	23'-10⅛"	25'-0⅛"	11'-7⅛"	30'-8"	35'-4⅝"	36'-6⅝"	23'-1⅝"	40'-8"	46'-11⅛"	48'-1⅛"	34'-8⅜"	50'-8"	58'-6"	59'-8"	46'-2⅝"
		11'	13'-3⅜"	10'-10"	12'-6⅜"	13'-8"	Ⓐ 0"	20'-10"	24'-0⅝"	25'-2⅝"	10'-3⅜"	30'-10"	35'-7⅜"	36'-9"	21'-10"	40'-10"	47'-1⅜"	48'-3⅜"	33'-5⅛"	50'-10"	58'-9⅝"	59'-11⅝"	44'-11⅛"
	9'	10'-3⅜"	11'-6"	13'-3⅜"	14'-5⅝"	2'-1⅜"		22'-5"	25'-10⅜"	27'-0⅝"	15'-3⅜"	33'-4"	38'-5⅝"	39'-7⅞"	27'-8⅜"	44'-3"	51'-1⅞"	52'-3"	40'-1"	55'-2"	63'-8⅝"	64'-10⅛"	52'-11⅛"
	10'	12'-3⅜"	11'-8"	13'-5⅝"	14'-7⅞"	1'-2⅜"		22'-8"	26'-2⅛"	27'-4"	13'-10⅜"	33'-8"	38'-10⅛"	40'-0⅝"	26'-7⅛"	44'-8"	51'-7"	52'-8⅜"	39'-3⅜"	55'-8"	64'-3⅜"	65'-5½"	52'-10"
	11'	13'-3⅜"	11'-10"	13'-8"	14'-10⅜"	Ⓐ 0"		22'-10"	26'-4⅜"	27'-6⅜"	12'-7⅛"	33'-10"	39'-0⅜"	40'-2⅜"	25'-3⅜"	44'-10"	51'-9⅜"	52'-11"	38'-5"	55'-10"	64'-5⅜"	65'-7½"	50'-8½"
	12'	15'-3⅜"	12'-0"	13'-10⅛"	15'-0⅝"	Ⓐ 0"		23'-0"	26'-6⅝"	27'-8⅝"	11'-3⅝"	34'-0"	39'-2⅝"	40'-5"	24'-0"	45'-0"	51'-11⅝"	53'-1"	36'-8½"	56'-0"	64'-8"	65'-9⅞"	49'-3"
	9'	10'-3⅜"	12'-6"	14'-5⅝"	15'-7"	3'-8"		24'-5"	28'-2⅝"	29'-4⅝"	17'-5"	36'-2"	41'-4⅛"	42'-6⅝"	31'-2⅝"	48'-3"	55'-0⅝"	56'-2⅝"	44'-1⅛"	----	----	----	----
	10'	12'-3⅜"	12'-8"	14'-7⅝"	15'-9⅞"	2'-4⅜"		24'-8"	28'-5⅛"	29'-7⅜"	16'-2⅛"	36'-8"	42'-0⅛"	43'-2⅝"	30'-1⅝"	48'-8"	55'-6⅛"	56'-8⅝"	43'-1⅛"	----	----	----	----
	11'	13'-3⅜"	12'-10"	14'-9⅝"	15'-11⅞"	1'-0⅝"		24'-10"	28'-8⅛"	29'-10⅜"	14'-11"	36'-10"	42'-2⅛"	43'-4⅝"	28'-10⅝"	48'-10"	55'-8⅛"	56'-10⅝"	42'-1⅛"	----	----	----	----
	12'	15'-3⅜"	13'-0"	14'-11⅝"	16'-2"	Ⓐ 0"		25'-0"	28'-10⅜"	30'-0⅝"	13'-7⅝"	37'-0"	42'-3⅝"	43'-6"	27'-5"	49'-0"	55'-10⅛"	57'-0⅝"	41'-3⅝"	----	----	----	----
	9'	10'-3⅜"	13'-6"	15'-2⅞"	16'-5⅛"	4'-3⅜"		26'-5"	30'-1"	31'-3"	19'-0⅝"	39'-4"	45'-5"	46'-7"	34'-7⅝"	52'-3"	60'-1"	61'-2⅝"	47'-10⅝"	----	----	----	----
	10'	12'-3⅜"	13'-8"	15'-5⅜"	16'-11⅝"	3'-4⅜"		26'-8"	30'-3⅝"	31'-11⅛"	18'-6⅝"	39'-8"	45'-9⅜"	46'-11⅝"	33'-6⅝"	52'-8"	60'-6⅜"	61'-7⅞"	46'-7⅝"	----	----	----	----
	11'	13'-3⅜"	13'-10"	15'-11⅛"	17'-1⅝"	2'-2⅝"		26'-10"	30'-5⅛"	32'-1⅝"	17'-2⅜"	39'-10"	46'-0"	47'-1⅝"	32'-2⅝"	52'-10"	61'-0⅛"	62'-2"	47'-2⅜"	----	----	----	----
	12'	15'-3⅜"	14'-0"	16'-2"	17'-3⅝"	0'-10⅝"		27'-0"	31'-0⅝"	32'-4"	15'-11"	40'-0"	46'-2⅝"	47'-4"	30'-11"	53'-0"	61'-2⅝"	62'-4⅝"	45'-11"	----	----	----	----

Ⓐ *Special case for these boxes, See Detail 'A' and Table 'A' for revised values of F_1, F_2, W_2 and W_3, when apron width is more then 1'-0" and W_3=0'. For Details 'A' and Tables 'A' for each slope, see Drawing Nos. W-X302-1, W-X302-2, or W-X303-1, W-X303-2, or W-X304-1, W-X304-2.*

NOTE:- *This drawing to be used in conjunction with Standard Wing Drawings for 30° Skews for each slope as listed below.*

2:1 Slopes	3:1 Slopes	4:1 Slopes
W-X302-1 or W-X302-2	W-X303-1 or W-X303-2	W-X304-1 or W-X304-2.

NOTE:- *This drawing to be used in conjunction with Standard Barrel Sections, Drawing Nos.--*

SINGLES	DOUBLES	TRIPLES	QUADRUPLES	QUINTUPLES
R-130X-0	R-230X-01	R-330X-01	R-430X-01	R-530X-01
	R-230X-02	R-330X-02	R-430X-02	R-530X-02
R-130X-1	R-230X-1	R-330X-1	R-430X-1	R-530X-1
	R-230X-2	R-330X-2		

CLASS S CONCRETE

ARKANSAS STATE HIGHWAY COMMISSION

DETAILS OF STANDARD WINGS FOR REINFORCED CONCRETE BOX CULVERTS 30° SKEW

4', 5', 6', 7', 8', 9', 10', 11' & 12' SPANS — 2:1, 3:1 & 4:1 SLOPES

SINGLES, DOUBLES, TRIPLES, QUADRUPLES & QUINTUPLES — ALL DEPTHS OF COVER H=2', 3', 4', 5', 6', 7', 8', 9', 10', 11' & 12'.

STANDARD DRAWING NO. W-X30

Reshot 3-8-93

FED. ROAD No.	STATE	FED. AID PROJECT	FISCAL YEAR	SHEET No.	TOTAL SHEETS
6	ARK.			665	
JOB No.					

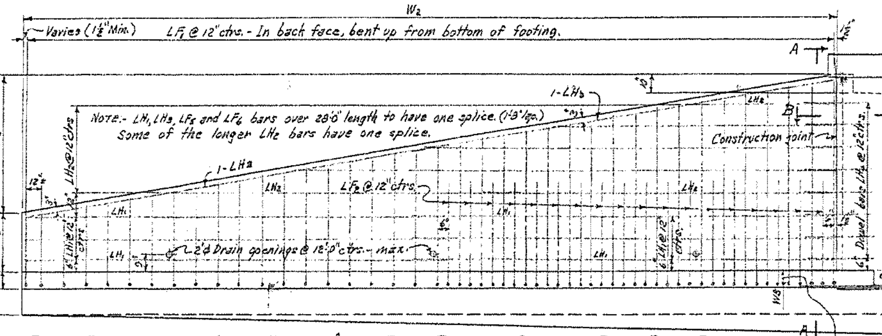

REAR ELEVATION OF LONG WING - 30° SKEW RIGHT FORWARD - SHOWING BACK FACE REINFORCING

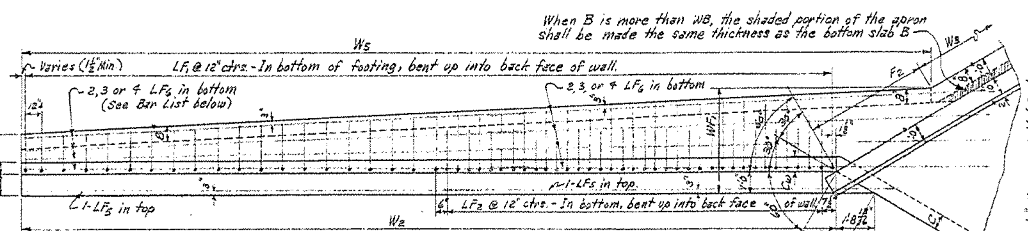

PLAN OF LONG WING - 30° SKEW RIGHT FORWARD - SHOWING FOOTING REINFORCING

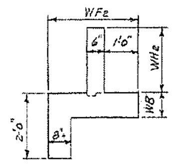

TYPICAL END VIEW OF WING

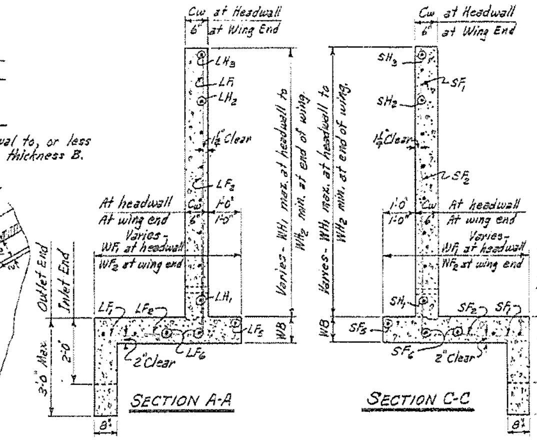

SECTION A-A

SECTION C-C

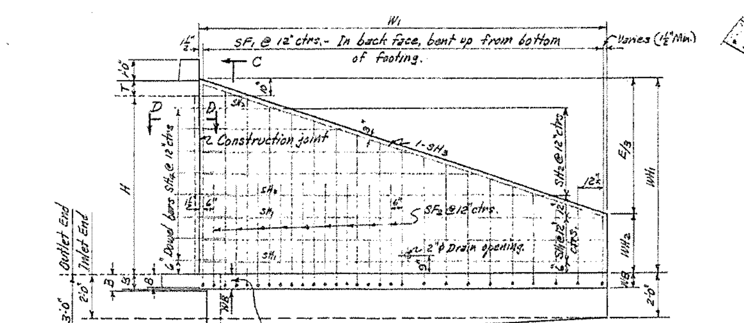

REAR ELEVATION OF SHORT WING - 30° SKEW RIGHT FORWARD

SHOWING BACK FACE REINFORCING

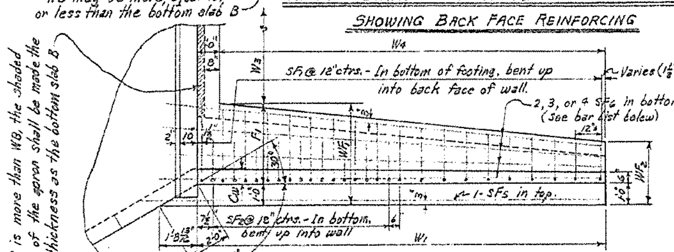

PLAN OF SHORT WING - 30° SKEW RIGHT FORWARD

SHOWING FOOTING REINFORCING

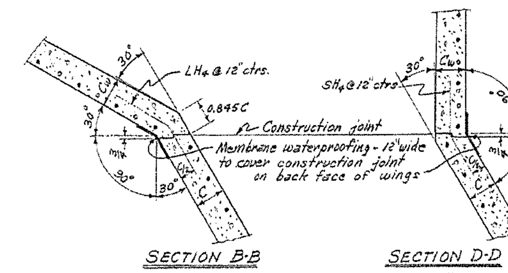

SECTION B-B

SECTION D-D

SECTIONS THRU CONSTRUCTION JOINTS

NOTE:- Payment for membrane waterproofing and roofing felt to be included in the price bid for Class S Concrete.

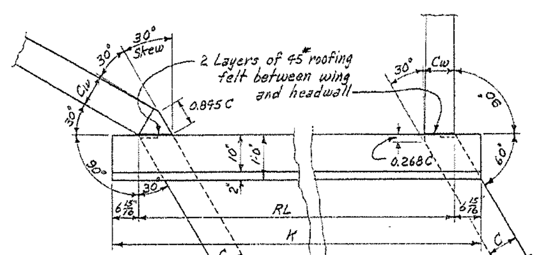

DETAILS AT TOP OF WINGS - 30° SKEW RIGHT FORWARD

REGULAR WING DIMENSIONS - 3:1 SLOPES

CLEAR HEIGHT OF BOX	THICKNESS OF WING FOOTING	THICKNESS OF WING AT HDWL = C	WINGWALL HEIGHTS: AT HEADWALL	WINGWALL HEIGHTS: AT END OF WING	WIDTHS OF WING FOOTINGS: AT HEADWALL	WIDTHS OF WING FOOTINGS: AT END OF WING	FOOTING DIMENSION PARALLEL WITH HEADWALL: SHORT WING	FOOTING DIMENSION PARALLEL WITH HEADWALL: LONG WING	PERPENDICULAR DIST. FROM HDWL TO END OF WING	LENGTHS OF WINGWALLS: SHORT WING	LENGTHS OF WINGWALLS: LONG WING	INSIDE FOOTING DIMENSION: SHORT WING	INSIDE FOOTING DIMENSION: LONG WING	* QUANTITY PER WING, CLASS S CONCRETE, INLET END: SHORT WING	INLET END: LONG WING	OUTLET END: SHORT WING	OUTLET END: LONG WING
H	WB	Cw	WH1	WH2	WF1	WF2	F1	F2	E	W1	W2	W4	W5	CU.YD.	CU.YD.	CU.YD.	CU.YD.
2'	7"	6"	2'-10"	0'-8"	2'-4"	2'-0"	1'-4"	0'-11¼"	6'-6"	6'-6"	13'-0"	5'-6"	13'-3¾"	0.752	1.549	0.836	1.717
3'	7"	6"	3'-10"	1'-0"	2'-8"	2'-1½"	1'-8"	1'-7¼"	8'-6"	8'-6"	17'-0"	7'-6"	17'-10¾"	1.130	2.340	1.239	2.565
4'	7"	6"	4'-10"	1'-4"	3'-0"	2'-3"	2'-0"	2'-3¼"	10'-6"	10'-5"	21'-0"	9'-6"	22'-5½"	1.577	3.270	1.711	3.552
5'	7"	6"	5'-10"	1'-8"	3'-4"	2'-4½"	2'-4"	2'-11¼"	12'-6"	12'-6"	25'-0"	11'-6"	27'-0½"	2.093	4.341	2.252	4.680
		7"	5'-10"	1'-8"	3'-4"	2'-4½"	2'-4"	2'-11¼"	12'-6"	12'-6"	25'-0"	11'-6"	27'-0½"	2.179	4.524	2.337	4.862
°6'	8"	7"	6'-10"	2'-0"	3'-8"	2'-6"	2'-8"	3'-7¼"	14'-6"	14'-6"	29'-0"	13'-6"	31'-7½"	2.908	6.024	3.092	6.419
		7½"	6'-10"	2'-0"	3'-8"	2'-6"	2'-8"	3'-7¼"	14'-6"	14'-6"	29'-0"	13'-6"	31'-7½"	2.966	6.147	3.150	6.543
		8"	6'-10"	2'-0"	3'-8"	2'-6"	2'-8"	3'-7¼"	14'-6"	14'-6"	29'-0"	13'-6"	31'-7½"	3.025	6.272	3.208	6.667
°7'	8½"	7½"	7'-10"	2'-4"	4'-2"	2'-7½"	3'-2"	4'-7¼"	16'-6"	16'-6"	33'-0"	15'-6"	36'-5¾"	3.811	7.895	4.019	8.350
		8"	7'-10"	2'-4"	4'-2"	2'-7½"	3'-2"	4'-7¼"	16'-6"	16'-6"	33'-0"	15'-6"	36'-5¾"	3.887	8.057	4.095	8.512
°8'	9"	8"	8'-10"	2'-8"	4'-8"	2'-9"	3'-8"	5'-7¼"	18'-6"	18'-6"	37'-0"	17'-6"	41'-4¼"	4.874	10.097	5.107	10.612

* Quantity per wing does not include headwall or that portion of apron or toewall for the length W3.
° See Table "A" for special values of F1 & F2 and W4 & W5 for Single 4x6', 5x7' and 6x8' Box Culverts.

TABLE "A" - DIMENSIONS FOR DETAIL "A"

S	H	F1	F2	W3	Y	W4	W5
4'	6'	2'-7⅞"	3'-3¾"	0"	1'-1⅝"	13'-4¼"	31'-3½"
5'	7'	3'-1⅝"	4'-1"	0"	1'-3¾"	15'-2¾"	35'-10¾"
6'	8'	3'-7½"	4'-10⅞"	0"	1'-4¾"	17'-1½"	40'-6"

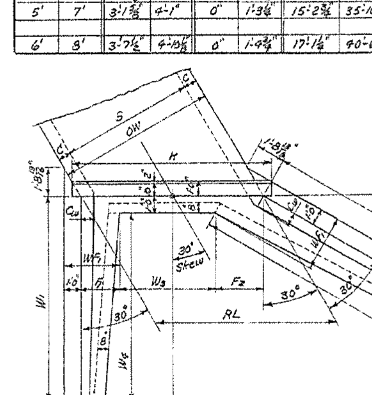

PART PLAN

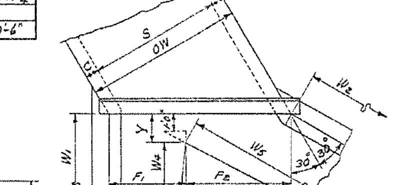

DETAIL "A"

NOTE:- Plan and Elevation are not to scale.

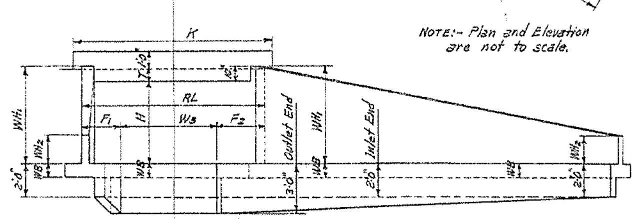

END ELEVATION

SINGLE BARREL CULVERT - 30° SKEW RIGHT FORWARD

Details of Culvert with 30° Skew Left Forward is reversed, see Drawing No. W-X30.

TYPICAL WING DETAILS

NOTE:-
For remainder of General Plans and Elevations of Single, Double, Triple, Quadruple and Quintuple Span Culverts, see Std. Drawing No. W-X30.
For values of RL, K and W3 for each box, see above Std. also.

MEMBRANE:- A membrane waterproofing 12" wide, consisting of three moppings of waterproofing asphalt and two alternate layers of treated cotton fabric shall be applied to the back face of wing to cover the construction joints of wings.

QUANTITIES

CLEAR SPAN	CLEAR HEIGHT	THICKNESS OF WING AT HEADWALL	THICKNESS OF WING FOOTING	REINFORCING STEEL ⊕ - FOR 4 WINGS	CLASS S CONCRETE - 4 WINGS (HEADWALLS, WINGWALLS, FOOTINGS, TOEWALLS AND APRONS): SINGLE BARREL CULVERT	DOUBLE BARREL CULVERT	TRIPLE BARREL CULVERT	QUADRUPLE BARREL CULVERT	QUINTUPLE BARREL CULVERT
S	H	Cw	WB	LB.	CU.YD.	CU.YD.	CU.YD.	CU.YD.	CU.YD.
4'	2'	6"	7"	141	5.80	6.90	8.01	9.12	10.23
	3'	6"	7"	213	8.08	9.18	10.29	11.40	12.51
	4'	6"	7"	327	10.78	11.88	12.99	14.10	15.21
	5'	6"	7"	460	13.90	15.00	16.11	17.22	18.32
	6'	7"	8"	762	18.85	19.99	21.13	22.27	23.41
5'	3'	6"	7"	213	8.33	9.67	11.01	12.36	13.70
	4'	6"	7"	327	11.03	12.36	13.71	15.06	16.40
	5'	6"	7"	460	14.14	15.48	16.83	18.17	19.52
	6'	7"	8"	762	19.11	20.48	21.86	23.24	24.62
	7'	7½"	8½"	1474	24.51	25.94	27.35	28.75	30.16
6'	3'	6"	7"	213	8.57	10.17	11.73	13.33	14.92
	4'	6"	7"	327	11.27	12.86	14.43	16.03	17.62
	5'	6"	7"	460	14.38	15.98	17.55	19.15	20.73
	6'	7"	8"	762	19.35	20.98	22.59	24.21	25.83
	7'	7½"	8½"	1474	24.79	26.44	28.08	29.73	31.38
	8'	8"	9"	1870	31.15	32.87	34.51	36.17	37.83
7'	4'	6"	7"	327	11.52	13.37	15.19	17.05	18.85
	5'	6"	7"	460	14.63	16.49	18.31	20.16	21.97
	6'	7"	8"	762	19.61	21.48	23.32	25.20	27.04
	7'	7½"	8½"	1474	25.05	26.94	28.82	30.71	32.59
	8'	8"	9"	1870	31.47	33.37	35.25	37.16	39.05
8'	4'	6"	7"	327	11.77	13.89	15.97	18.09	20.12
	5'	7"	7"	460	15.46	17.60	19.70	21.83	23.89
	6'	7"	8"	762	19.86	21.98	24.05	26.17	28.20
	7'	7½"	8½"	1474	25.30	27.46	29.58	31.73	33.81
	8'	8"	9"	1870	31.72	33.88	36.00	38.16	40.27
9'	5'	7"	7"	460	15.72	18.13	20.47	22.87	25.15
	6'	7½"	8"	762	20.50	22.93	25.29	27.71	30.01
	7'	7½"	8½"	1474	25.55	27.98	30.34	32.76	35.07
	8'	8"	9"	1870	31.97	34.39	36.76	39.18	41.49
10'	5'	7"	7"	460	15.98	18.65	21.25	23.80	26.42
	6'	7½"	8"	762	20.76	23.45	26.07	28.69	31.28
	7'	7½"	8½"	1474	25.81	28.50	31.12	33.70	36.34
	8'	8"	9"	1870	32.22	34.91	37.54	40.12	42.76
11'	6'	8"	8"	762	21.39	24.38	27.25	30.11	——
	7'	8"	8½"	1474	26.55	29.53	32.41	35.27	——
	8'	8"	9"	1870	32.47	35.45	38.33	41.19	——
12'	6'	8"	8"	762	21.66	24.93	28.05	31.20	——
	7'	8"	8½"	1474	26.81	30.08	33.21	36.36	——
	8'	8"	9"	1870	32.75	35.99	39.13	42.28	——

⊕ For reinforcing steel in Headwalls and Aprons, see Drawing Nos. of Barrel Sections listed below.

GENERAL NOTES:-
CONCRETE:- All concrete to be Class S, and shall be poured in the dry. All exposed corners to have ¾" chamfers.
REINFORCING STEEL:- Reinforcing steel to be deformed bars of intermediate or hard grade.
CONSTRUCTION JOINTS:- Construction joints between wingwall, footings and sidewalls shall be only where shown on plans.
SPECIFICATIONS:- Arkansas State Highway Commission Standard Specifications for Highway Construction and applicable Special Provisions.

UNIT STRESSES:-
Class S Concrete (n=10) 1200#/□"
Reinforcing Steel 20,000#/□"

NOTE:-
This drawing to be used in conjunction with Standard Barrel Sections, Drawing Nos.-

SINGLES	DOUBLES	TRIPLES	QUADRUPLES	QUINTUPLES
R-130X-0	R-230X-01	R-330X-01	R-430X-01	R-530X-01
	R-230X-02	R-330X-02	R-430X-02	R-530X-02
R-130X-1	R-230X-1	R-330X-1	R-430X-1	R-530X-1
	R-230X-2	R-330X-2		

BAR LIST FOR ONE SHORT AND ONE LONG WING - 2 EACH REQUIRED

SF1 & LF1 — BENT — In bottom of footing, bent up into back face of wing. One bar (or two bars) of each length

CLEAR HEIGHT H	WING LOCATION SHORT OR LONG	SIZE	SPACING	NO. REQ'D	LENGTHS VARY MIN.	LENGTHS VARY MAX.	X MIN.	X MAX.	Y MIN.	Y MAX.
2'	Short	#3	12"	7	1'-7"	3'-11"	0'-8"	1'-0"	1'-0"	3'-0"
	Long	#3	12"	14	1'-5"	3'-11"	0'-8"	1'-0"	0'-10"	3'-0"
3'	Short	#3	12"	9	2'-1"	5'-3"	0'-10"	1'-4"	1'-4"	4'-0"
	Long	#3	12"	18	1'-11"	5'-3"	0'-10"	1'-4"	1'-2"	4'-0"
4'	Short	#3	12"	11	2'-6"	6'-7"	0'-11"	1'-5"	1'-8"	5'-0"
	Long	#3	12"	22	2'-4"	6'-6"	0'-11"	1'-7"	1'-6"	5'-0"
5'	Short	#3	12"	13	2'-11"	7'-11"	1'-0"	2'-0"	2'-0"	6'-0"
	Long	#3	12"	26	2'-9"	7'-10"	1'-0"	1'-11"	1'-10"	6'-0"
6'	Short	#4	12"	15	3'-6"	9'-4"	1'-2"	2'-4"	2'-5"	7'-1"
	Long	#4	12"	30	3'-4"	9'-3"	1'-2"	2'-3"	2'-3"	7'-1"
7'	Short	#4	12"	17	3'-11"	10'-10"	1'-3"	2'-10"	2'-9"	8'-1"
	Long	#4	12"	34	3'-9"	10'-8"	1'-3"	2'-8"	2'-7"	8'-1"
8'	Short	#4	12"	19	4'-6"	12'-5"	1'-5"	3'-4"	3'-2"	9'-2"
	Long	#4	12"	38	4'-4"	12'-3"	1'-5"	3'-2"	3'-0"	9'-2"

SF2 & LF2 — BENT — In bottom of footing, bent up into back face of wing. Alt. with F1 bars. SF5 & LF5 — STRAIGHT — Longitudinal in top of wing footing heel. SF6 & LF6 — STRAIGHT — Longitudinal in bottom of wing footing toe.

H	SHORT OR LONG	SF2 & LF2 SIZE	SPACING	NO. REQ'D	LENGTH	X	Y	SF5 & LF5 SIZE	NO. REQ'D	LENGTH	SF6 & LF6 SIZE	NO. REQ'D	LENGTH
2'	Short	—	—	—	—	—	—	#3	1	9'-0"	#3	2	8'-6"
	Long	—	—	—	—	—	—	#3	1	15'-6"	#3	2	15'-6"
3'	Short	—	—	—	—	—	—	#3	1	11'-0"	#3	2	10'-6"
	Long	—	—	—	—	—	—	#3	1	19'-6"	#3	2	20'-2"
4'	Short	—	—	—	—	—	—	#3	1	13'-0"	#3	3	12'-0"
	Long	—	—	—	—	—	—	#3	1	23'-6"	#3	3	24'-6"
5'	Short	#3	12"	3	3'-6"	1'-1"	2'-6"	#3	1	15'-0"	#3	3	14'-0"
	Long	#3	12"	6	3'-6"	1'-1"	2'-6"	#3	1	27'-6"	#3	6	15'-7"
6'	Short	#3	12"	3	4'-6"	1'-4"	3'-3"	#3	1	17'-0"	#3	3	16'-0"
	Long	#3	12"	6	4'-6"	1'-4"	3'-3"	#3	2	16'-8"	#3	6	18'-0"
7'	Short	#4	12"	6	5'-6"	1'-7"	4'-0"	#4	1	19'-0"	#4	4	18'-0"
	Long	#4	12"	12	5'-6"	1'-7"	4'-0"	#4	2	18'-8"	#4	8	20'-4"
8'	Short	#4	12"	9	6'-6"	1'-10"	4'-9"	#4	1	21'-0"	#4	4	20'-0"
	Long	#4	12"	18	6'-6"	1'-10"	4'-9"	#4	2	20'-8"	#4	8	22'-9"

SH1 & LH1 — STRAIGHT — Horizontal in back face of wing. SH2 & LH2 — STRAIGHT — Horizontal in back face of wing. One bar of each length.* SH3 & LH3 — In back face of wing at top - on slope. SH4 & LH4 — BENT — Dowels thru construction joint at headwall. QUANTITY — REINFORCING STEEL PER WING - LBS.

H	SHORT OR LONG	SH1 & LH1 SIZE	SPACING	NO. REQ'D	LENGTH	SH2 & LH2 SIZE	SPACING	NO. REQ'D	LENGTHS VARY MAX.	LENGTHS VARY MIN.	SH3 & LH3 SIZE	NO. REQ'D	LENGTH	SH4 & LH4 SIZE	SPACING	NO. REQ'D	LENGTH	X	SHORT WING	LONG WING
2'	Short	#3	12"	1	6'-3"	#3	12"	1	—	3'-3"	#3	1	6'-7"	#3	12"	2	2'-8"	1'-4"	29.7	45.6
	Long	#3	12"	1	12'-8"	#3	12"	1	—	6'-6"	#3	1	12'-11"	#3	12"	2	"	"		
3'	Short	#3	12"	1	8'-3"	#3	12"	2	6'-3"	3'-3"	#3	1	8'-6"	#3	12"	3	"	"	37.0	69.5
	Long	#3	12"	1	16'-8"	#3	12"	2	12'-6"	6'-6"	#3	1	16'-11"	#3	12"	3	"	"		
4'	Short	#3	12"	1	10'-3"	#3	12"	3	9'-3"	3'-3"	#3	1	10'-9"	#3	12"	4	"	"	56.2	107.2
	Long	#3	12"	1	20'-8"	#3	12"	3	18'-6"	6'-6"	#3	1	21'-6"	#3	12"	4	"	"		
5'	Short	#3	12"	2	12'-3"	#3	12"	3	9'-3"	3'-3"	#3	1	12'-11"	#3	12"	5	"	"	78.0	152.2
	Long	#3	12"	2	24'-8"	#3	12"	3	18'-6"	6'-6"	#3	1	25'-1"	#3	12"	5	"	"		
6'	Short	#3	12"	2	14'-3"	#3	12"	4	12'-3"	3'-5"	#3	1	15'-0"	#3	12"	6	"	"	127.8	253.1
	Long	#3	12"	4	15'-2"	#3	12"	4	24'-6"	6'-6"	#3	2	15'-5"	#3	12"	6	2'-8"	1'-4"		
7'	Short	#4	12"	2	16'-3"	#4	12"	5	15'-3"	3'-3"	#4	1	17'-1"	#4	12"	7	3'-6"	1'-9"	267.0	489.8
	Long	#4	12"	4	17'-2"	#4	12"	5	*30'-6"	6'-6"	#4	2	17'-5"	#4	12"	7	"	"		
8'	Short	#4	12"	3	18'-3"	#4	12"	5	15'-3"	3'-3"	#4	1	19'-3"	#4	12"	8	"	"	312.9	622.3
	Long	#4	12"	6	19'-2"	#4	12"	5	*30'-6"	6'-6"	#4	2	19'-6"	#4	12"	8	3'-6"	1'-9"		

BAR BENDING DIAGRAM: SF1 & SF2, LF1 & LF2 (Y, X, 3" Pin); SH4 & LH4 (X, 7/12, X)

NOTE:- Dimensions are to bar centers.

NOTE:- Bars for short wing shall be marked with prefix letter "S", while those for long wing shall be marked with letter "L".

* Length without splice. Bars over 28'-0" length may be spliced. (1'-8" lap.)

REVISIONS:- Membrane Added. 5-10-66 W.C.H.

Designed By:- W.C.H. 5-13-63 Checked By:-
Drawn By:- W.C.H. 7-26-63 Checked By:- BAS 8-19-63
Quantities By:- W.C.H. 1-7-64 Checked By:- DMT 7-15-64

CLASS S CONCRETE

ARKANSAS STATE HIGHWAY COMMISSION
DETAILS OF STANDARD WINGS
FOR
REINFORCED CONCRETE BOX CULVERTS
30° SKEW

4', 5', 6', 7', 8', 9', 10', 11' & 12' SPANS — 3:1 SLOPES.
SINGLES, DOUBLES, TRIPLES, — ALL DEPTHS OF COVER
QUADRUPLES & QUINTUPLES. — FOR H = 8'-0" OR LESS

STANDARD DRAWING No. W-X303-1

FED. ROAD No.	STATE	FED. AID PROJECT	FISCAL YEAR	SHEET No.	TOTAL SHEETS
6	ARK.			666	
JOB No.					

BAR LIST FOR BARREL SECTION 60'-0" IN LENGTH - TWO 30° SKEWED ENDS.

"a" bars: STRAIGHT — In Top and Bottom Slabs of Barrel. "a₁" bars: STRAIGHT — In Top and Bottom Slab of Barrel- (Four of each Length). "b" bars: BENT - See Diagrams below — In Top and Bottom Slabs of Barrel- hooked. Alternate with "a" bars.

D (Depth of Cover)	S (Clear Span)	H (Clear Height)	"a" Size	"a" Spacing	"a" No. Req'd	"a" Length	"a₁" Size	"a₁" Spacing	"a₁" No. Req'd	"a₁" Length Max.	"a₁" Length Min.	"b" Size	"b" Spacing	"b" No. Req'd	"b" Length	"b" X
0'-0" TO 5'-0" MAXIMUM	1 @ 4'	2'	#5	13"	108	4'-9"	#5	13"	4	2'-11"	—	#6	13"	108	5'-10"	4'-8"
		3'			108	4'-9"			4	"	—			108	5'-10"	"
		4'			108	4'-9"			4	"	—			108	5'-10"	"
		5'			108	4'-9"			4	"	—			108	5'-10"	"
		6'			108	4'-11"			4	3'-1"	—			108	6'-0"	4'-10"
	1 @ 5'	3'	#6	13"	108	5'-9"	#6	13"	4	3'-11"	—	#6	13"	106	6'-10"	5'-8"
		4'			108	5'-9"			4	"	—			106	6'-10"	"
		5'			108	5'-9"			4	"	—			106	6'-10"	"
		6'			108	5'-11"			4	4'-1"	—			106	7'-0"	5'-10"
		7'			108	6'-0"			4	4'-2"	—			106	7'-1"	5'-11"
	1 @ 6'	3'	#6	12"	114	6'-9"	#6	12"	8	5'-0"	3'-3"	#6	12"	114	7'-10"	6'-8"
		4'			114	6'-9"			8	"	"			114	7'-10"	"
		5'			114	6'-9"			8	"	"			114	7'-10"	"
		6'			114	6'-11"			8	5'-2"	3'-5"			114	8'-0"	6'-10"
		7'			114	7'-0"			8	5'-3"	3'-6"			114	8'-1"	6'-11"
		8'			114	7'-1"			8	5'-4"	3'-7"			114	8'-2"	7'-0"
	1 @ 7'	4'	#6	11"	124	7'-9"	#6	11"	12	6'-2"	3'-0"	#6	11"	122	8'-10"	7'-8"
		5'			124	7'-9"			12	"	"			122	8'-10"	"
		6'			124	7'-11"			12	6'-4"	3'-2"			122	9'-0"	7'-10"
		7'			124	8'-0"			12	6'-5"	3'-3"			122	9'-1"	7'-11"
		8'			124	8'-1"			12	6'-6"	3'-4"			122	9'-2"	8'-0"
		9'			124	8'-3"			12	6'-8"	3'-6"			122	9'-4"	8'-2"
	1 @ 8'	4'	#7	12"	112	8'-9"	#7	12"	12	7'-0"	3'-6"	#6	12"	112	9'-10"	8'-8"
		5'			112	8'-11"			12	7'-2"	3'-8"			112	10'-0"	8'-10"
		6'			112	8'-11"			12	"	"			112	10'-0"	"
		7'			112	9'-0"			12	7'-3"	3'-9"			112	10'-1"	8'-11"
		8'			112	9'-1"			12	7'-4"	3'-10"			112	10'-2"	9'-0"
		9'			112	9'-3"			12	7'-6"	4'-0"			112	10'-4"	9'-2"
		10'			112	9'-5"			16	7'-8"	2'-5"			110	10'-6"	9'-4"
	1 @ 9'	5'	#7	11"	122	9'-11"	#7	11"	16	8'-4"	3'-7"	#6	11"	120	11'-0"	9'-10"
		6'			122	10'-0"			16	9'-5"	3'-8"			120	11'-1"	9'-11"
		7'			122	10'-0"			16	"	"			120	11'-1"	9'-11"
		8'			122	10'-1"			16	8'-6"	3'-9"			120	11'-2"	10'-0"
		9'			120	10'-3"			20	8'-8"	2'-4"			120	11'-4"	10'-2"
		10'			120	10'-5"			20	8'-10"	2'-6"			120	11'-6"	10'-4"
		11'			120	10'-7"			20	9'-0"	2'-8"			120	11'-8"	10'-6"
	1 @ 10'	5'	#7	12"	110	10'-11"	#7	12"	16	9'-2"	3'-11"	#7	12"	110	12'-2"	10'-10"
		6'			110	11'-0"			16	9'-3"	4'-0"			110	12'-3"	10'-11"
		7'			110	11'-0"			16	"	"			110	12'-3"	"
		8'			110	11'-1"			20	9'-4"	2'-4"			110	12'-4"	11'-0"
		9'			110	11'-3"			20	9'-6"	2'-6"			108	12'-6"	11'-2"
		10'			110	11'-5"			20	9'-8"	2'-8"			108	12'-8"	11'-4"
		11'			110	11'-7"			20	9'-10"	2'-10"			108	12'-10"	11'-6"
		12'			110	11'-9"			20	10'-0"	3'-0"			108	13'-0"	11'-8"
	1 @ 11'	6'	#7	11"	118	12'-1"	#7	11"	24	10'-6"	2'-7"	#7	11"	118	13'-4"	12'-0"
		7'			118	12'-1"			24	"	"			118	13'-4"	"
		8'			118	12'-1"			24	"	"			118	13'-4"	"
		9'			118	12'-3"			24	10'-8"	2'-9"			118	13'-6"	12'-2"
		10'			118	12'-5"			24	10'-10"	2'-11"			116	13'-8"	12'-4"
		11'			118	12'-7"			24	11'-0"	3'-1"			116	13'-10"	12'-6"
		12'			118	12'-9"			24	11'-2"	3'-3"			116	14'-0"	12'-8"
	1 @ 12'	6'	#8	12"	108	13'-1"	#8	12"	24	11'-4"	2'-7"	#7	12"	106	14'-4"	13'-0"
		7'			108	13'-1"			24	"	"			106	14'-4"	"
		8'			108	13'-1"			24	"	"			106	14'-4"	"
		9'			108	13'-3"			24	11'-6"	2'-9"			106	14'-6"	13'-2"
		10'			108	13'-5"			24	11'-8"	2'-11"			106	14'-8"	13'-4"
		11'			108	13'-7"			24	11'-10"	3'-1"			106	14'-10"	13'-6"
		12'			106	13'-9"			24	12'-0"	3'-3"			106	15'-0"	13'-8"

"b₁" bars: BENT — In Top and Bottom Slabs of Barrel-one end hooked. (Four of each Length) Alternate with "a₁" bars. "d" bars: STRAIGHT — Longitudinal in Top Slab of Barrel.

S	H	"b₁" Size	"b₁" Spacing	"b₁" No. Req'd	"b₁" Length Max.	"b₁" Length Min.	"b₁" X Max.	"b₁" X Min.	"d" Size	"d" Spacing	"d" No. Req'd	"d" Length
1 @ 4'	2'	#6	13"	4	4'-5"	—	3'-10"	—	#5	10½"	6	2 @ 30'-8" for 60'-0" Length Barrel. (1'-8" Lap)
	3'			4	"	—	"	—			6	
	4'			4	"	—	"	—			6	
	5'			4	"	—	"	—			6	
	6'			8	4'-8"	2'-8"	4'-0"	2'-1"			6	
1 @ 5'	3'	#6	13"	8	5'-5"	3'-6"	4'-10"	2'-11"	#5	10½"	7	
	4'			8	"	"	"	"			7	
	5'			8	"	"	"	"			7	
	6'			8	5'-7"	3'-8"	5'-0"	3'-1"			7	
	7'			8	5'-8"	3'-9"	5'-1"	3'-2"			7	
1 @ 6'	3'	#6	12"	12	6'-5"	2'-11"	5'-10"	2'-4"	#5	10½"	8	
	4'			12	"	"	"	"			8	
	5'			12	"		"	"			8	
	6'			12	6'-7"	3'-1"	6'-0"	2'-6"			8	
	7'			12	6'-8"	3'-2"	6'-1"	2'-7"			8	
	8'			12	6'-9"	3'-3"	6'-2"	2'-8"			8	
1 @ 7'	4'	#6	11"	12	7'-6"	4'-4"	6'-11"	3'-9"	#5	10½"	9	
	5'			12	"	"	"	"			9	
	6'			16	7'-8"	2'-11"	7'-1"	2'-4"			9	
	7'			16	7'-9"	3'-0"	7'-2"	2'-5"			9	
	8'			16	7'-10"	3'-1"	7'-3"	2'-6"			9	
	9'			16	8'-0"	3'-3"	7'-5"	2'-8"			9	
1 @ 8'	4'	#6	12"	16	8'-5"	3'-2"	7'-10"	2'-7"	#5	10"	11	
	5'			16	8'-7"	3'-4"	8'-0"	2'-9"			11	
	6'			16	"	"	"	"			11	
	7'			16	8'-8"	3'-5"	8'-1"	2'-10"			11	
	8'			16	8'-9"	3'-6"	8'-2"	2'-11"			11	
	9'			16	8'-11"	3'-8"	8'-4"	3'-1"			11	
	10'			16	9'-1"	3'-10"	8'-6"	3'-3"			11	
1 @ 9'	5'	#6	11"	20	9'-8"	3'-4"	9'-1"	2'-9"	#5	10"	12	
	6'			20	9'-9"	3'-5"	9'-2"	2'-10"			12	
	7'			20	"	"	"	"			12	
	8'			20	9'-10"	3'-6"	9'-3"	2'-11"			12	
	9'			20	10'-0"	3'-8"	9'-5"	3'-1"			12	
	10'			20	10'-2"	3'-10"	9'-7"	3'-3"			12	
	11'			20	10'-4"	4'-0"	9'-9"	3'-5"			12	
1 @ 10'	5'	#7	12"	20	10'-8"	3'-8"	10'-0"	3'-0"	#5	10"	13	
	6'			20	10'-9"	3'-9"	10'-1"	3'-1"			13	
	7'			20	"	"	"	"			13	
	8'			20	10'-10"	3'-10"	10'-2"	3'-2"			13	
	9'			20	11'-0"	4'-0"	10'-4"	3'-4"			13	
	10'			20	11'-2"	4'-2"	10'-6"	3'-6"			13	
	11'			20	11'-4"	4'-4"	10'-8"	3'-8"			13	
	12'			20	11'-6"	4'-6"	10'-10"	3'-10"			13	
1 @ 11'	6'	#7	11"	24	11'-11"	4'-0"	11'-3"	3'-4"	#5	9½"	15	
	7'			24	"	"	"	"			15	
	8'			24	"	"	"	"			15	
	9'			24	12'-1"	4'-2"	11'-5"	3'-6"			15	
	10'			24	12'-3"	4'-4"	11'-7"	3'-8"			15	
	11'			24	12'-5"	4'-6"	11'-9"	3'-10"			15	
	12'			24	12'-7"	4'-8"	11'-11"	4'-0"			15	
1 @ 12'	6'	#7	12"	24	12'-10"	4'-1"	12'-2"	3'-5"	#5	9½"	16	
	7'			24	"	"	"	"			16	
	8'			24	"	"	"	"			16	
	9'			24	13'-0"	4'-3"	12'-4"	3'-7"			16	
	10'			24	13'-2"	4'-5"	12'-6"	3'-9"			16	
	11'			24	13'-4"	4'-7"	12'-8"	3'-11"			16	
	12'			24	13'-6"	4'-9"	12'-10"	4'-1"			16	

"d₁" bars: STRAIGHT — Longitudinal in Sidewalls. "e" bars: STRAIGHT — Longitudinal in Bottom Slab of Barrel. "f" bars: STRAIGHT — Verticals in Sidewalls. "k₁" bars: STRAIGHT — In Bottom of Headwall. "k₂" bars: STRAIGHT — In Top of Headwall and Apron (2 Each).

S	H	"d₁" Size	"d₁" Spacing	"d₁" No. Req'd	"d₁" Length	"e" Size	"e" Spacing	"e" No. Req'd	"e" Length	"f" Size	"f" Spacing	"f" No. Req'd	"f" Length	"k₁" Size	"k₁" No. Req'd	"k₁" Length	"k₂" Size	"k₂" No. Req'd	"k₂" Length
1 @ 4'	2'	#4	12"	4	2 @ 30'-6" for 60'-0" Length Barrel. (1'-3" Lap)	#4	12"	5	2 @ 31'-8" for 60'-0" Length Barrel. (1'-3" Lap)	#4	12"	120	2'-11"	#5	6	5'-6"	#5	8	6'-8"
	3'			6				5				120	3'-11"		6	"		8	"
	4'			8				5				120	4'-11"		6	"		8	"
	5'			10				5				120	5'-11"		6	"		8	"
	6'			12				5				120	6'-11"		6	5'-8"		8	6'-10"
1 @ 5'	3'	#4	12"	6		#4	12"	6		#4	12"	120	4'-0"	#6	6	6'-8"	#6	8	7'-10"
	4'			8				6				120	5'-0"		6	"		8	"
	5'			10				6				120	6'-0"		6	"		8	"
	6'			12				6				120	7'-0"		6	6'-10"		8	8'-0"
	7'			14				6				120	8'-0"		6	6'-11"		8	8'-1"
1 @ 6'	3'	#4	12"	6		#4	12"	7		#4	12"	120	4'-1"	#6	6	7'-10"	#6	8	9'-0"
	4'			8				7				120	5'-1"		6	"		8	"
	5'			10				7				120	6'-1"		6	"		8	"
	6'			12				7				120	7'-1"		6	8'-0"		8	9'-2"
	7'			14				7				120	8'-1"		6	8'-1"		8	9'-3"
	8'			16				7		#5	12"	120	9'-1"		6	8'-2"		8	9'-4"
1 @ 7'	4'	#4	12"	8		#4	12"	8		#4	12"	120	5'-2"	#6	6	9'-0"	#6	8	10'-2"
	5'			10				8				120	6'-2"		6	"		8	"
	6'			12				8				120	7'-2"		6	9'-2"		8	10'-4"
	7'			14				8				120	8'-2"		6	9'-3"		8	10'-5"
	8'			16				8			10"	144	9'-2"		6	9'-4"		8	10'-6"
	9'			18				8		#5	12"	120	10'-2"		6	9'-6"		8	10'-8"
1 @ 8'	4'	#4	12"	8		#4	12"	9		#4	12"	120	5'-4"	#7	6	10'-1"	#7	8	11'-3"
	5'			10				9				120	6'-4"		6	10'-4"		8	11'-6"
	6'			12				9				120	7'-4"		6	"		8	"
	7'			14				9				120	8'-4"		6	10'-5"		8	11'-7"
	8'			16				9			10"	144	9'-4"		6	10'-6"		8	11'-8"
	9'			18				9		#5	12"	120	10'-4"		6	10'-8"		8	11'-10"
	10'			20				9			11"	132	11'-4"		6	10'-11"		8	12'-0"
1 @ 9'	5'	#4	12"	10		#4	12"	10		#4	12"	120	6'-5"	#7	6	11'-5"	#7	8	12'-7"
	6'			12				10				120	7'-5"		6	11'-7"		8	12'-9"
	7'			14				10				120	8'-5"		6	"		8	"
	8'			16				10			10"	144	9'-5"		6	11'-8"		8	12'-10"
	9'			18				10		#5	12"	120	10'-5"		6	11'-10"		8	13'-0"
	10'			20				10			11"	132	11'-5"		6	12'-1"		8	13'-2"
	11'			22				10			10"	144	12'-5"		6	12'-3"		8	13'-5"
1 @ 10'	5'	#4	12"	10		#4	12"	11		#4	12"	120	6'-6"	#7	6	12'-7"	#7	8	13'-9"
	6'			12				11				120	7'-6"		6	12'-8"		8	13'-10"
	7'			14				11				120	8'-6"		6	"		8	"
	8'			16				11			10"	144	9'-6"		6	12'-10"		8	14'-0"
	9'			18				11		#5	12"	120	10'-6"		6	13'-0"		8	14'-2"
	10'			20				11			11"	132	11'-6"		6	13'-2"		8	14'-4"
	11'			22				11			10"	144	12'-6"		6	13'-5"		8	14'-6"
	12'			24				11		#6	12"	120	13'-6"		6	13'-7"		8	14'-9"
1 @ 11'	6'	#4	12"	12		#4	12"	12		#4	12"	120	7'-7"	#7	6	14'-0"	#7	8	15'-1"
	7'			14				12				120	8'-7"		6	"		8	"
	8'			16				12			10"	144	9'-7"		6	"		8	"
	9'			18				12		#5	12"	120	10'-7"		6	14'-2"		8	15'-4"
	10'			20				12			11"	132	11'-7"		6	14'-4"		8	15'-6"
	11'			22				12			10"	144	12'-7"		6	14'-7"		8	15'-8"
	12'			24				12		#6	12"	120	13'-7"		6	14'-9"		8	15'-11"
1 @ 12'	6'	#4	12"	12		#4	12"	13		#4	12"	120	7'-9"	#8	6	15'-1"	#8	8	16'-3"
	7'			14				13				120	8'-9"		6	"		8	"
	8'			16				13			10"	144	9'-9"		6	"		8	"
	9'			18				13		#5	12"	120	10'-9"		6	15'-4"		8	16'-6"
	10'			20				13			11"	132	11'-9"		6	15'-6"		8	16'-8"
	11'			22				15			10"	144	12'-9"		6	15'-8"		8	16'-10"
	12'			24				13		#6	12"	120	13'-9"		6	15'-11"		8	17'-0"

These bars are in the skewed portion of barrel only. The length of "a₁" bars and overall length X of "b₁" bars vary by 1'-11" for 13" spacing, 1'-9" for 12" spacing and 1'-7" for 11" spacing.

BAR SIZE	PIN DIAM.	K	ADD FOR HOOKS	BENDING DIAGRAMS FOR BARS "b" & "b₁"
#6	3"	5"	1'-2"	2 Hooks — "b" bars (K, Pin diam, X)
#7	3½"	5¾"	1'-4"	
#6	3"	5"	0'-7"	1 Hook — "b₁" bars (K, Pin diam., X)
#7	3½"	5¾"	0'-8"	

NOTE:- Dimensions are to centers of bars. ("b" and "b₁")

DOWEL BARS FOR TWO HEADWALLS

SPAN	SIZE	SPACING	NO. REQ'D	LENGTH	X	Dowel bars "r" in Two Headwalls.
4'	#4	12"±	12	2'-6"	1'-3"	
5'	#4	12"±	16	2'-7"	1'-3½"	
6'	#4	12"±	18	2'-8"	1'-4"	
7'	#4	12"±	20	2'-9"	1'-4½"	
8'	#4	12"±	22	2'-11"	1'-5½"	
9'	#4	12"±	26	3'-0"	1'-6"	
10'	#4	12"±	28	3'-1"	1'-6½"	
11'	#4	12"±	30	3'-2"	1'-7"	
12'	#4	12"±	32	3'-3"	1'-7½"	

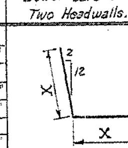

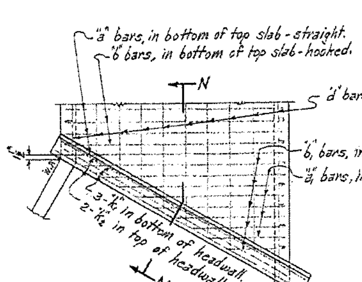

TOP SLAB REINFORCING
PART PLAN AT END OF CULVERT

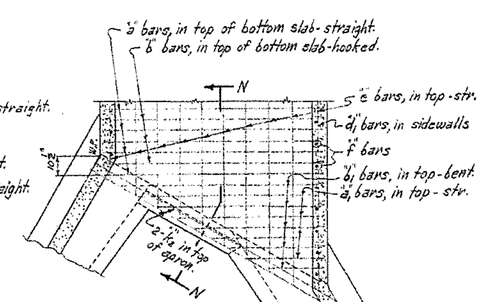

BOTTOM SLAB REINFORCING
PART PLAN AT END OF CULVERT

NOTE:- For Details of Standard Wings and bar lists, see Drawing No. W-X302-1 or W-X302-2; W-X303-1 or W-X303-2, and W-X304-1 or W-X304-2. Also W-X30.

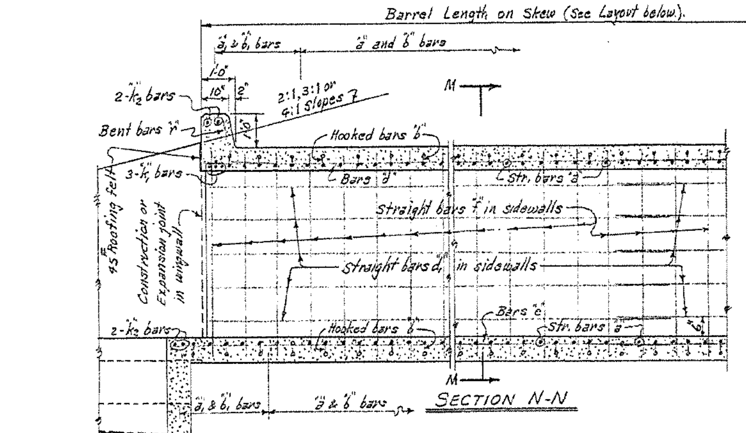

SECTION N-N

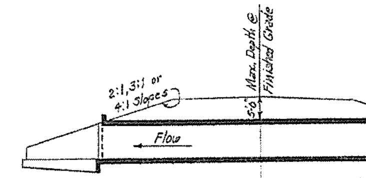

LONGITUDINAL SECTION N-N'

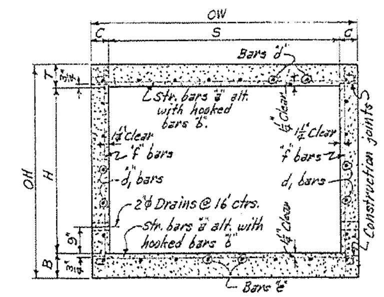

TYPICAL SECTION M-M

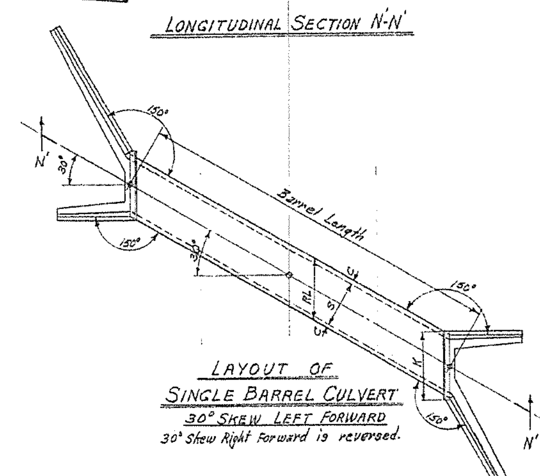

LAYOUT OF SINGLE BARREL CULVERT
30° SKEW LEFT FORWARD
30° Skew Right Forward is reversed.

DESIGN LIVE LOAD

H20-S16 LOADING A.A.S.H.O. 1961
AND
SPECIAL MILITARY LOADING
Two 24,000 Lb. Axles @ 4'-0" ctrs

UNIT STRESSES:-
Class S Concrete (n=10) 1200#/□"
Reinforcing Steel 20,000#/□"

NOTE:- This drawing to be used in conjunction with Standard Wing Drawing Nos. W-X302-1 or W-X302-2, W-X303-1 or W-X303-2, and W-X304-1 or W-X304-2. Also W-X30.

GENERAL NOTES

CONCRETE:- All concrete to be Class S, and shall be poured in the dry. All exposed corners to have ¾" chamfers.
REINFORCING STEEL:- Reinforcing to be deformed bars of intermediate or hard grade.
BAR LAP:- In computing the quantities of steel from the tables add one lap for each additional 33'-0" length of barrel over 32'-0". Lap longitudinal bars 30 diameters min.
CONSTRUCTION JOINTS:- Construction joints between wingwalls, sidewalls and slabs shall be only where shown on plans.
SPECIFICATIONS:- Arkansas State Highway Commission Standard Specifications for Highway Construction and applicable Special Provisions.

BARREL DIMENSIONS / * QUANTITIES

D (Max. Design Depth of Cover)	S (Clear Spans)	H (Clear Height)	A (Sq. Ft. Opening)	OW (Overall Width)	T (Thickness of Top Slab)	C (Thickness of Sidewalls)	B (Thickness of Bottom Slab)	OH (Overall Height)	RL (Roadway Length)	K (Length of Headwalls)	Class S Conc. per Lin. Ft. of Barrel (Cu.Yd.)	Reinforcing Steel: Total for 60'-0" Length of Barrel (Lb.)	Per Lin. Ft. of Barrel (Lb.)	Additional per Lap (Lb.)
5'-0"	1 @ 4'	2'	8	5'-0"	7"	6"	6½"	3'-1½"	5'-9¼"	6'-11⅝"	0.282	2 622	41.99	17.95
		3'	12	5'-0"		6"		4'-1½"	"	"	0.319	2784	44.16	19.62
		4'	16	5'-0"		6"		5'-1½"	"	"	0.356	2946	46.83	21.29
		5'	20	5'-0"		6"		6'-1½"	"	"	0.394	3107	49.50	22.96
		6'	24	5'-2"		7"		7'-1½"	5'-11⅜"	7'-1½"	0.474	3335	52.96	24.63
	1 @ 5'	3'	15	6'-0"	7½"	6"	7"	4'-2½"	6'-11⅛"	8'-1"	0.380	3541	55.55	22.19
		4'	20	6'-0"		6"		5'-2½"	"	"	0.417	3703	58.23	23.86
		5'	25	6'-0"		6"		6'-2½"	"	"	0.454	3865	60.90	25.53
		6'	30	6'-2"		7"		7'-2½"	7'-1⅛"	8'-3⅝"	0.535	4091	64.49	27.20
		7'	35	6'-3"		7½"		8'-2½"	7'-2⅝"	8'-4⅝"	0.604	4283	67.63	28.87
	1 @ 6'	3'	18	7'-0"	8"	6"	7½"	4'-3½"	8'-1"	9'-2⅞"	0.446	4221	66.29	24.76
		4'	24	7'-0"		6"		5'-3½"	"	"	0.483	4383	68.96	26.43
		5'	30	7'-0"		6"		6'-3½"	"	"	0.520	4545	71.64	28.10
		6'	36	7'-2"		7"		7'-3½"	8'-3⅝"	9'-5⅛"	0.602	4772	75.31	29.77
		7'	42	7'-3"		7½"		8'-3½"	8'-4⅝"	9'-6⅜"	0.671	4966	78.48	31.44
		8'	48	7'-4"		8"		9'-3½"	8'-5⅝"	9'-7⅛"	0.746	5570	88.47	33.11
	1 @ 7'	4'	28	8'-0"	8½"	6"	8½"	5'-5"	9'-2⅝"	10'-9¾"	0.568	5146	81.32	29.01
		5'	35	8'-0"		6"		6'-5"	"	"	0.605	5307	84.00	30.68
		6'	42	8'-2"		7"		7'-5"	9'-5½"	10'-7"	0.688	5558	87.76	32.35
		7'	49	8'-3"		7½"		8'-5"	9'-6½"	10'-8⅛"	0.757	5755	90.98	34.02
		8'	56	8'-4"		8"		9'-5"	9'-7½"	10'-9⅜"	0.832	6100	96.65	35.69
		9'	63	8'-6"		9"		10'-5"	9'-9¾"	10'-11⅜"	0.946	6644	105.59	37.36
	1 @ 8'	4'	32	9'-0"	9½"	6"	9½"	5'-7"	10'-4¾"	11'-6⅛"	0.676	6114	95.26	33.32
		5'	40	9'-2"		7"		6'-7"	10'-7"	11'-8⅞"	0.754	6357	99.12	34.99
		6'	48	9'-2"		7"		7'-7"	"	"	0.797	6518	101.79	36.66
		7'	56	9'-3"		7½"		8'-7"	10'-8⅛"	11'-10"	0.867	6720	105.05	38.33
		8'	64	9'-4"		8"		9'-7"	10'-9⅜"	11'-11½"	0.942	7070	110.81	40.00
		9'	72	9'-6"		9"		10'-7"	10'-11⅜"	12'-1½"	1.057	7627	119.92	41.67
		10'	80	9'-8"		10"		11'-7"	11'-2"	12'-3¾"	1.184	8043	126.67	43.34
	1 @ 9'	5'	45	10'-2"	10"	7"	10"	6'-8"	11'-8⅞"	12'-10⅜"	0.844	7356	114.72	37.56
		6'	54	10'-3"		7½"		7'-8"	11'-10"	13'-0"	0.910	7564	118.04	39.23
		7'	63	10'-3"		7½"		8'-8"	"	"	0.957	7725	120.71	40.90
		8'	72	10'-4"		8"		9'-8"	11'-11⅛"	13'-1"	1.033	8081	126.54	42.57
		9'	81	10'-6"		9"		10'-8"	12'-1⅛"	13'-3⅛"	1.148	8625	135.80	44.24
		10'	90	10'-8"		10"		11'-8"	12'-3⅞"	13'-5¾"	1.276	9063	142.68	45.91
		11'	99	10'-10"		11"		12'-8"	12'-6⅛"	13'-8"	1.416	9526	150.40	47.58
	1 @ 10'	5'	50	11'-2"	10½"	7"	11"	6'-9½"	12'-10⅜"	14'-0⅜"	0.957	8359	130.64	40.13
		6'	60	11'-3"		7½"		7'-9½"	12'-11⅞"	14'-1⅜"	1.024	8567	133.99	41.80
		7'	70	11'-3"		7½"		8'-9½"	"	"	1.071	8729	136.66	43.47
		8'	80	11'-4"		8"		9'-9½"	13'-1"	14'-3"	1.147	9110	142.55	45.14
		9'	90	11'-6"		9"		10'-9½"	13'-3⅜"	14'-5⅛"	1.263	9634	151.92	46.81
		10'	100	11'-8"		10"		11'-9½"	13'-5⅜"	14'-7⅛"	1.391	10,019	158.89	48.48
		11'	110	11'-10"		11"		12'-9½"	13'-8"	14'-9¾"	1.532	10,547	166.71	50.15
		12'	120	12'-0"		12"		13'-9½"	13'-10⅜"	15'-0⅛"	1.685	11,278	178.67	51.82
	1 @ 11	6'	66	12'-4"	11"	8"	11½"	7'-10½"	14'-2⅞"	15'-4⅜"	1.153	9888	155.16	46.12
		7'	77	12'-4"		8"		8'-10½"	"	"	1.202	10,099	157.83	47.79
		8'	88	12'-4"		8"		9'-10½"	"	"	1.252	10,364	163.06	49.46
		9'	99	12'-6"		9"		10'-10½"	14'-5⅛"	15'-7"	1.368	10,952	172.60	51.13
		10'	110	12'-8"		10"		11'-10½"	14'-7⅛"	15'-9⅛"	1.497	11,399	179.70	52.80
		11'	121	12'-10"		11"		12'-10½"	14'-9⅞"	15'-11⅜"	1.633	11,927	187.67	54.47
		12'	132	13'-0"		12"		13'-10½"	15'-0⅛"	16'-2"	1.792	12,569	199.79	56.14
	1 @ 12	6'	72	13'-4"	11¾"	8"	12¼"	8'-0"	15'-4¾"	16'-6⅝"	1.284	11,081	172.20	48.69
		7'	84	13'-4"		8"		9'-0"	"	"	1.333	11,243	174.87	50.36
		8'	96	13'-4"		8"		10'-0"	"	"	1.383	11,561	180.15	52.03
		9'	108	13'-6"		9"		11'-0"	15'-7⅛"	16'-9"	1.500	12,162	189.85	53.70
		10'	120	13'-8"		10"		12'-0"	15'-9⅜"	16'-11⅛"	1.630	12,625	197.07	55.37
		11'	132	13'-10"		11"		13'-0"	15'-11⅝"	17'-1½"	1.772	13,113	205.16	57.04
		12'	144	14'-0"		12"		14'-0"	16'-2"	17'-3⅝"	1.926	13,795	217.45	58.71

* For remainder of quantities see Std. Wing Drawings listed at left. Total steel quantities listed above include one lap of longitudinal bars.

CLASS S CONCRETE

ARKANSAS STATE HIGHWAY COMMISSION

DETAILS OF STANDARD BARREL SECTIONS
FOR
REINFORCED CONCRETE BOX CULVERTS
30° SKEW

4',5',6',7',8',9',10',11' & 12' SPANS — 2:1, 3:1 OR 4:1 SLOPES
SINGLES — UNDER 5'-0" COVER

STANDARD DRAWING No. R-130X-0

Designed by:- W.C.H. 1-23-63. Checked by:- R.H.S. 5-8-63
Drawn by:- W.C.H. 2-24-64. Checked by:-
Quantities by:- W.C.H. 4-2-64 Checked by:-

FED. ROAD No.	STATE	FED. AID PROJECT	FISCAL YEAR	SHEET No.	TOTAL SHEETS
6	ARK.			667	
JOB No.					

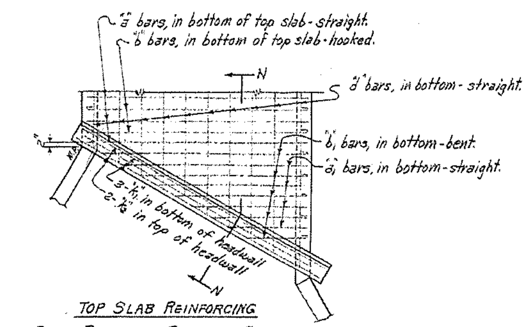

TOP SLAB REINFORCING

PART PLAN AT END OF CULVERT

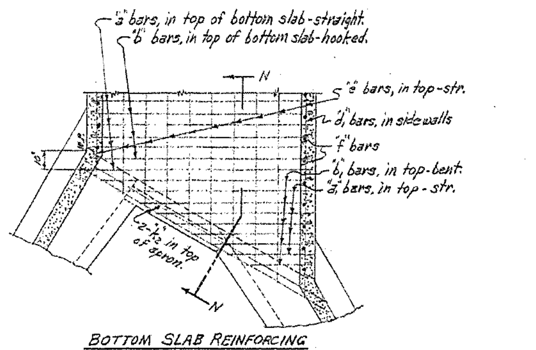

BOTTOM SLAB REINFORCING

PART PLAN AT END OF CULVERT

NOTE:- The "d", "d1" and "e" bars vary in length. They should extend 1'-9" min. into SECTION "B".

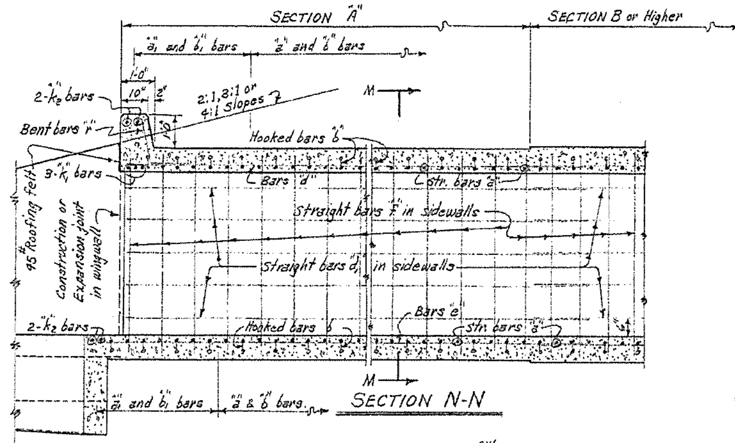

SECTION N-N

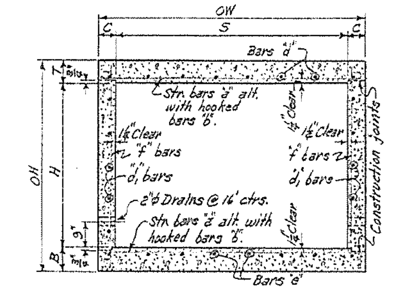

TYPICAL SECTION M-M

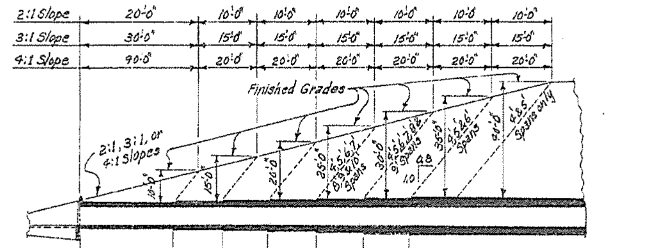

	20'-0"	10'-0"	10'-0"	10'-0"	10'-0"	10'-0"	10'-0"
2:1 Slope	20'-0"	10'-0"	10'-0"	10'-0"	10'-0"	10'-0"	10'-0"
3:1 Slope	30'-0"	15'-0"	15'-0"	15'-0"	15'-0"	15'-0"	15'-0"
4:1 Slope	40'-0"	20'-0"	20'-0"	20'-0"	20'-0"	20'-0"	20'-0"

2:1 Slope =	SECTIONS	A=12'-0"	B=6'-0"	C=6'-0"	D=6'-0"	E=6'-0"	F=6'-0"	MID-SECTION G-Varies
	Bar Group	A	B	C	D	E	F	G
3:1 Slope =	SECTIONS	A=22'-0"	B=11'-0"	C=11'-0"	D=11'-0"	E=11'-0"	F=11'-0"	MID-SECTION G-Varies
	Bar Group	A	B	C	D	E	F	G
4:1 Slope =	SECTIONS	A=32'-0"	B=16'-0"	C=16'-0"	D=16'-0"	E=16'-0"	F=16'-0"	MID-SECTION G-Varies
	Bar Group	A	B	C	D	E	F	G

These lengths are perpendicular to ℄ of roadway. See Table of Skew Lengths below.

TYPICAL LONGITUDINAL SECTION - SHOWING SECTIONS AND BAR GROUPS FOR VARIOUS DEPTHS OF COVER

NOTE:- Lengths of Sections and Bar Groups are to be shown on Cross Section Sheets or on Special Culvert Layout Sheet.

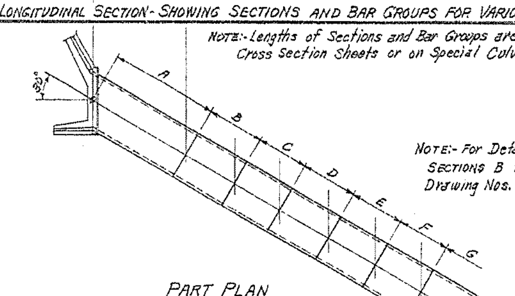

PART PLAN

NOTE:- For Details and Bar Lists for SECTIONS B thru G, see Barrel Drawing Nos. R-100X-X1 or R-100X-X2.

LENGTH OF SECTIONS ON 30° SKEW

SLOPE	2:1		3:1		4:1	
SECTIONS	A	B, C, D, E & F	A	B, C, D, E & F	A	B, C, D, E & F
LENGTHS	13'-10¾"	6'-11⅛"	25'-4¾"	12'-8⅝"	36'-11⅛"	18'-5¾"

NOTE:- Minimum ℄ Length of SECTION "A" on 30° Skew = (0.288675 OW + 2").

SECTIONS AND BAR GROUPS TO BE USED FOR VARIOUS DEPTHS OF COVER

DEPTHS OF COVER	A	B	C	D	E	F	MID-SECTION AND BAR GROUP
5.0' to 9.5'	A						A
10.0' to 14.5'	A						B
15.0' to 19.5'	A	B					C
20.0' to 24.5'	A	B	C				D
25.0' to 29.5'	A	B	C	D			E
30.0' to 34.5'	A	B	C	D	E		F
35.0' to 40.0'	A	B	C	D	E	F	G

OR ALT.

DEPTHS OF COVER	A	B	C	D	E	F	MID-SECTION AND BAR GROUP
5.0' to 9.5'	A						A
10.0' to 14.5'	A						B
15.0' to 19.5'	A	B					C
20.0' to 24.5'	A	2@C					D
25.0' to 29.5'	A	B	2@D				E
30.0' to 34.5'	A	2@C		2@E			F
35.0' to 40.0'	A	B	2@D		2@F		G

BAR SIZE	PIN DIAM.	K	ADD FOR 2 HOOKS	BENDING DIAGRAM FOR BARS "b"
#4	2"	4"	0'-10½"	
#5	2½"	4¼"	0'-11½"	
#6	3"	5"	1'-2"	
#7	3½"	5¾"	1'-4"	

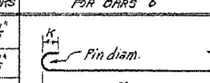

BAR SIZE	PIN DIAM.	K	ADD FOR 1 HOOK	BENDING DIAGRAM FOR BARS "b1"
#4	2"	4"	0'-5¼"	
#5	2½"	4¼"	0'-5¾"	
#6	3"	5"	0'-7"	
#7	3½"	5¾"	0'-8"	

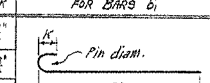

NOTE:- Dimensions are to centers of bars. ("b" and "b1")

DOWEL BARS FOR ONE HEADWALL

SPAN	SIZE	SPACING	No. REQ'D	LENGTH	X
4'	#4	12"±	6	2'-5"	1'-2½"
5'	#4	12"±	8	2'-6"	1'-3"
6'	#4	12"±	9	2'-7"	1'-3½"
7'	#4	12"±	10	2'-8"	1'-4"
8'	#4	12"±	11	2'-10"	1'-5"
9'	#4	12"±	13	3'-0"	1'-6"
10'	#4	12"±	14	3'-2"	1'-7"

Dowel bars "r" in One Headwall

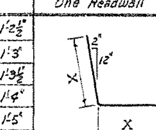

DESIGN LIVE LOAD

H20-S16 LOADING A.A.S.H.O. 1961

AND

SPECIAL MILITARY LOADING

Two 24,000 Lb. Axles @ 4'-0" ctrs.

UNIT STRESSES:-

Class S Concrete (n=10) 1200#/□"
Reinforcing Steel 20,000#/□"

BAR LIST FOR SECTION "A" ON 30° SKEW – ONE END ONLY.

SECTION "A" & BAR GROUP "A". LENGTH OF SECTION: 2:1 = 13'-10¾", 3:1 = 25'-4¾", 4:1 = 36'-11⅛". DEPTH OF COVER (D): 0'-0" TO 10'-0" MAXIMUM.

"a" bars – STRAIGHT – In Top and Bottom Slabs of Barrel. "a1" bars ◤ – STRAIGHT – In Top and Bottom Slab of Barrel – (Two of each Length.)

S (Clear Span)	H (Clear Height)	"a" Size	"a" Spacing	"a" No. Req'd 2:1	3:1	4:1	"a" Length	"a1" Size	"a1" Spacing	"a1" No. Req'd	"a1" Length Max.	"a1" Length Min.
1 @ 4'	2'	#4	12"	27	49	73	4'-9"	#4	12"	2	3'-0"	—
	3'			27	49	73	"			2	"	—
	4'			27	49	73	"			2	"	—
	5'			27	49	73	"			2	"	—
	6'			27	49	73	4'-11"			2	3'-2"	—
1 @ 5'	3'	#5	12"	25	49	73	5'-9"	#5	12"	4	4'-0"	2'-3"
	4'			25	49	73	"			4	"	"
	5'			25	49	73	"			4	"	"
	6'			25	49	73	5'-11"			4	4'-2"	2'-5"
	7'			25	49	73	6'-0"			4	4'-3"	2'-6"
1 @ 6'	3'	#5	12"	25	49	71	6'-9"	#5	12"	4	5'-0"	3'-3"
	4'			25	49	71	"			4	"	"
	5'			25	49	71	"			4	"	"
	6'			25	49	71	6'-11"			4	5'-2"	3'-5"
	7'			25	49	71	7'-0"			4	5'-3"	3'-6"
	8'			25	49	71	7'-1"			4	5'-4"	3'-7"
1 @ 7'	4'	#5	12"	25	47	71	7'-9"	#5	12"	6	6'-0"	2'-6"
	5'			25	47	71	"			6	"	"
	6'			25	47	71	7'-11"			6	6'-2"	2'-8"
	7'			25	47	71	8'-0"			6	6'-3"	2'-9"
	8'			25	47	71	8'-1"			6	6'-4"	2'-10"
	9'			25	47	71	8'-3"			6	6'-6"	3'-0"
1 @ 8'	4'	#6	12"	25	47	71	8'-9"	#6	12"	6	7'-0"	3'-6"
	5'			25	47	71	8'-11"			6	7'-2"	3'-8"
	6'			25	47	71	"			6	"	"
	7'			25	47	71	9'-0"			6	7'-3"	3'-9"
	8'			25	47	71	9'-1"			6	7'-4"	3'-10"
	9'			25	47	71	9'-3"			6	7'-6"	4'-0"
	10'			25	47	71	9'-5"			6	7'-8"	4'-2"
1 @ 9'	5'	#6	11"	25	51	75	9'-11"	#6	11"	8	8'-4"	3'-7"
	6'			25	51	75	10'-0"			8	8'-5"	3'-8"
	7'			25	51	75	"			8	"	"
	8'			25	51	75	10'-1"			8	8'-6"	3'-9"
	9'			25	51	75	10'-3"			8	8'-8"	3'-11"
	10'			25	51	75	10'-5"			8	8'-10"	4'-1"
	11'			25	51	75	10'-7"			8	9'-0"	4'-3"
1 @ 10'	5'	#7	12"	23	45	69	10'-11"	#7	12"	10	9'-2"	2'-2"
	6'			23	45	69	11'-0"			10	9'-3"	2'-3"
	7'			23	45	69	"			10	"	"
	8'			23	45	69	11'-1"			10	9'-4"	2'-4"
	9'			23	45	69	11'-3"			10	9'-6"	2'-6"
	10'			23	45	69	11'-5"			10	9'-8"	2'-8"
	11'			23	45	69	11'-7"			10	9'-10"	2'-10"
	12'			23	45	69	11'-9"			10	10'-0"	3'-0"

"b" bars – BENT - See Diagrams at Right. In Top and Bottom Slabs of Barrel - hooked. Alternate with "a" bars. "b1" bars ◤ – In Top and Bottom Slabs of Barrel - one end hooked. (Two of each Length) Alternate with "a1" bars.

S	H	"b" Size	"b" Spacing	"b" No. Req'd 2:1	3:1	4:1	"b" Length	"b" X	"b1" Size	"b1" Spacing	"b1" No. Req'd	"b1" Length Max.	"b1" Length Min.	"b1" X Max.	"b1" X Min.
1 @ 4'	2'	#4	12"	25	49	71	5'-7"	4'-8½"	#4	12"	4	4'-3"	2'-6"	3'-10"	2'-1"
	3'			25	49	71	"	"			4	"	"	"	"
	4'			25	49	71	"	"			4	"	"	"	"
	5'			25	49	71	"	"			4	"	"	"	"
	6'			25	49	71	5'-9"	4'-10½"			4	4'-5"	2'-8"	4'-0"	2'-3"
1 @ 5'	3'	#5	12"	25	47	71	6'-8"	5'-8½"	#5	12"	4	5'-4"	3'-7"	4'-10"	3'-1"
	4'			25	47	71	"	"			4	"	"	"	"
	5'			25	47	71	"	"			4	"	"	"	"
	6'			25	47	71	6'-10"	5'-10½"			4	5'-6"	3'-9"	5'-0"	3'-3"
	7'			25	47	71	6'-11"	5'-11½"			4	5'-7"	3'-10"	5'-1"	3'-4"
1 @ 6'	3'	#6	12"	25	47	71	7'-10"	6'-8"	#6	12"	6	6'-5"	2'-11"	5'-10"	2'-4"
	4'			25	47	71	"	"			6	"	"	"	"
	5'			25	47	71	"	"			6	"	"	"	"
	6'			25	47	71	8'-0"	6'-10"			6	6'-7"	3'-1"	6'-0"	2'-6"
	7'			25	47	71	8'-1"	6'-11"			6	6'-8"	3'-2"	6'-1"	2'-7"
	8'			25	47	71	8'-2"	7'-0"			6	6'-9"	3'-3"	6'-2"	2'-8"
1 @ 7'	4'	#6	12"	23	47	69	8'-10"	7'-8"	#6	12"	6	7'-5"	3'-11"	6'-10"	3'-4"
	5'			23	47	69	"	"			6	"	"	"	"
	6'			23	47	69	9'-0"	7'-10"			6	7'-7"	4'-1"	7'-0"	3'-6"
	7'			23	47	69	9'-1"	7'-11"			6	7'-8"	4'-2"	7'-1"	3'-7"
	8'			23	47	69	9'-2"	8'-0"			6	7'-9"	4'-3"	7'-2"	3'-8"
	9'			23	47	69	9'-4"	8'-2"			6	7'-11"	4'-5"	7'-4"	3'-10"
1 @ 8'	4'	#6	12"	23	47	69	9'-10"	8'-8"	#6	12"	8	8'-5"	3'-2"	7'-10"	2'-7"
	5'			23	47	69	10'-0"	8'-10"			8	8'-7"	3'-4"	8'-0"	2'-9"
	6'			23	47	69	"	"			8	"	"	"	"
	7'			23	47	69	10'-1"	8'-11"			8	8'-8"	3'-5"	8'-1"	2'-10"
	8'			23	47	69	10'-2"	9'-0"			8	8'-9"	3'-6"	8'-2"	2'-11"
	9'			23	47	69	10'-4"	9'-2"			8	8'-11"	3'-8"	8'-4"	3'-1"
	10'			23	47	69	10'-6"	9'-4"			8	9'-1"	3'-10"	8'-6"	3'-3"
1 @ 9'	5'	#7	11"	25	49	75	11'-2"	9'-10"	#7	11"	10	9'-9"	3'-5"	9'-1"	2'-9"
	6'			25	49	75	11'-3"	9'-11"			10	9'-10"	3'-6"	9'-2"	2'-10"
	7'			25	49	75	"	"			10	"	"	"	"
	8'			25	49	75	11'-4"	10'-0"			10	9'-11"	3'-7"	9'-3"	2'-11"
	9'			25	49	75	11'-6"	10'-2"			10	10'-1"	3'-9"	9'-5"	3'-1"
	10'			25	49	75	11'-8"	10'-4"			10	10'-3"	3'-11"	9'-7"	3'-3"
	11'			25	49	75	11'-10"	10'-6"			10	10'-5"	4'-1"	9'-9"	3'-5"
1 @ 10'	5'	#7	12"	21	45	69	12'-2"	10'-10"	#7	12"	10	10'-9"	3'-8"	10'-0"	3'-0"
	6'			21	45	69	12'-3"	10'-11"			10	10'-9"	3'-9"	10'-1"	3'-1"
	7'			21	45	69	"	"			10	"	"	"	"
	8'			21	45	69	12'-4"	11'-0"			10	10'-10"	3'-10"	10'-2"	3'-2"
	9'			21	45	67	12'-6"	11'-2"			10	11'-0"	4'-0"	10'-4"	3'-4"
	10'			21	45	67	12'-8"	11'-4"			10	11'-2"	4'-2"	10'-6"	3'-6"
	11'			21	45	67	12'-10"	11'-6"			10	11'-4"	4'-4"	10'-8"	3'-8"
	12'			21	45	67	13'-0"	11'-8"			10	11'-6"	4'-6"	10'-10"	3'-10"

"d" bars – STRAIGHT – Longitudinal in Top Slab of Barrel. "d1" bars – STRAIGHT – Longitudinal in Sidewalls. "e" bars – STRAIGHT – Longitudinal in Bottom Slab of Barrel.

S	H	"d" Size	"d" Spacing	"d" No. Req'd	"d1" Size	"d1" Spacing	"d1" No. Req'd	"e" Size	"e" Spacing	"e" No. Req'd
1 @ 4'	2'	#4	12"	5	#4	12"	4	#4	12"	5
	3'			5			6			5
	4'			5			8			5
	5'			5			10			5
	6'			5			12			5
1 @ 5'	3'	#4	12"	6	#4	12"	6	#4	12"	6
	4'			6			8			6
	5'			6			10			6
	6'			6			12			6
	7'			6			14			6
1 @ 6'	3'	#4	12"	7	#4	12"	6	#4	12"	7
	4'			7			8			7
	5'			7			10			7
	6'			7			12			7
	7'			7			14			7
	8'			7			16			7
1 @ 7'	4'	#4	12"	8	#4	12"	8	#4	12"	8
	5'			8			10			8
	6'			8			12			8
	7'			8			14			8
	8'			8			16			8
	9'			8			18			8
1 @ 8'	4'	#4	12"	9	#4	12"	8	#4	12"	9
	5'			9			10			9
	6'			9			12			9
	7'			9			14			9
	8'			9			16			9
	9'			9			18			9
	10'			9			20			9
1 @ 9'	5'	#4	12"	10	#4	12"	10	#4	12"	10
	6'			10			12			10
	7'			10			14			10
	8'			10			16			10
	9'			10			18			10
	10'			10			20			10
	11'			10			22			10
1 @ 10'	5'	#4	12"	11	#4	12"	10	#4	12"	11
	6'			11			12			11
	7'			11			14			11
	8'			11			16			11
	9'			11			18			11
	10'			11			20			11
	11'			11			22			11
	12'			11			24			11

"d" bars Length: Lengths Vary - Average Length; 2:1 = 15'-6", 3:1 = 27'-1", 4:1 = 38'-8".
"d1" bars Length: Lengths Vary - Average Length; 2:1 = 15'-6", 3:1 = 27'-1", 4:1 = 38'-8".
"e" bars Length: Lengths Vary - Average Length; 2:1 = 16'-8", 3:1 = 28'-3", 4:1 = 39'-10".

"f" bars – STRAIGHT – Verticals in Sidewalls. "k1" bars ◤ – STRAIGHT – In Bottom of Headwall. "k2" bars ◤ – In Top of Headwall and Apron. (2 Each)

S	H	"f" Size	"f" Spacing	"f" No. Req'd 2:1	3:1	4:1	"f" Length	"k1" Size	"k1" No. Req'd	"k1" Length	"k2" Size	"k2" No. Req'd	"k2" Length
1 @ 4'	2'	#4	12"	28	51	74	2'-10"	#5	3	5'-6"	#5	4	6'-8"
	3'			28	51	74	3'-10"		3	"		4	"
	4'			28	51	74	4'-10"		3	"		4	"
	5'			28	51	74	5'-10"		3	"		4	"
	6'			28	51	74	6'-10"		3	5'-8"		4	6'-10"
1 @ 5'	3'	#4	12"	28	51	74	3'-11"	#5	3	6'-8"	#5	4	7'-10"
	4'			28	51	74	4'-11"		3	"		4	"
	5'			28	51	74	5'-11"		3	"		4	"
	6'			28	51	74	6'-11"		3	6'-10"		4	8'-0"
	7'		10"	34	61	89	7'-11"		3	6'-11"		4	8'-1"
1 @ 6'	3'	#4	12"	28	51	74	4'-0"	#5	3	7'-10"	#5	4	9'-0"
	4'			28	51	74	5'-0"		3	"		4	"
	5'			28	51	74	6'-0"		3	"		4	"
	6'			28	51	74	7'-0"		3	8'-0"		4	9'-2"
	7'		10"	34	61	89	8'-0"		3	8'-1"		4	9'-3"
	8'	#5	11"	31	56	81	9'-0"		3	8'-2"		4	9'-4"
1 @ 7'	4'	#4	12"	28	51	74	5'-1"	#6	3	9'-0"	#6	4	10'-2"
	5'			28	51	74	6'-1"		3	"		4	"
	6'			28	51	74	7'-1"		3	9'-2"		4	10'-4"
	7'		11"	31	56	81	8'-1"		3	9'-3"		4	10'-5"
	8'	#5	12"	28	51	74	9'-1"		3	9'-4"		4	10'-6"
	9'		11"	31	56	81	10'-1"		3	9'-6"		4	10'-8"
1 @ 8'	4'	#4	12"	28	51	74	5'-3"	#6	3	10'-1"	#6	4	11'-3"
	5'			28	51	74	6'-3"		3	10'-4"		4	11'-6"
	6'			28	51	74	7'-3"		3	"		4	"
	7'			28	51	74	8'-3"		3	10'-5"		4	11'-7"
	8'	#5	12"	28	51	74	9'-3"		3	10'-6"		4	11'-8"
	9'		11"	31	56	81	10'-3"		3	10'-8"		4	11'-10"
	10'		10"	34	61	89	11'-3"		3	10'-11"		4	12'-0"
1 @ 9'	5'	#4	12"	28	51	74	6'-5"	#6	3	11'-5"	#6	4	12'-7"
	6'			28	51	74	7'-5"		3	11'-7"		4	12'-9"
	7'			28	51	74	8'-5"		3	"		4	"
	8'	#5	12"	28	51	74	9'-5"		3	11'-8"		4	12'-10"
	9'		11"	31	56	81	10'-5"		3	11'-10"		4	13'-0"
	10'		10"	34	61	89	11'-5"		3	12'-1"		4	13'-2"
	11'	#6	12"	28	51	74	12'-5"		3	12'-3"		4	13'-5"
1 @ 10'	5'	#4	12"	28	51	74	6'-7"	#7	3	12'-7"	#7	4	13'-9"
	6'			28	51	74	7'-7"		3	12'-8"		4	13'-10"
	7'		11"	31	56	81	8'-7"		3	"		4	"
	8'	#5	12"	28	51	74	9'-7"		3	12'-10"		4	14'-0"
	9'			28	51	74	10'-7"		3	13'-0"		4	14'-2"
	10'		10"	34	61	89	11'-7"		3	13'-2"		4	14'-4"
	11'	#6	12"	28	51	74	12'-7"		3	13'-5"		4	14'-6"
	12'		11"	31	56	81	13'-7"		3	13'-7"		4	14'-9"

◤ These bars are in the skewed portion of barrel only. The length of "a1" bars and overall length X of "b1" bars vary by 1'-9" for 12" spacing and 1'-7" for 11" spacing.

GENERAL NOTES

CONCRETE:- All concrete to be Class S, and shall be poured in the dry. All exposed corners to have ¾" chamfers.

REINFORCING STEEL:- Reinforcing to be deformed bars of intermediate or hard grade.

CONSTRUCTION JOINTS:- Construction joints between wingwalls, sidewalls and slabs shall be only where shown on plans.

SPECIFICATIONS:- Arkansas State Highway Commission Standard Specifications for Highway Construction and applicable Special Provisions.

BARREL DIMENSIONS / * QUANTITIES - ONE SECTION "A" (CLASS S CONCRETE – BARREL ONLY; REINFORCING STEEL – BARREL, APRON AND HEADWALL). MAX. DESIGN DEPTH OF COVER (D): SECTION "A" = 10'-0".

S (Clear Spans)	H (Clear Height)	A (Sq.Ft. Opening)	OW (Overall Width)	T (Thickness of Top Slab)	C (Thickness of Sidewalls)	B (Thickness of Bottom Slab)	OH (Overall Height)	RL (Roadway Length)	K (Length of Headwall)	Concrete 2:1 Cu.Yd.	3:1 Cu.Yd.	4:1 Cu.Yd.	Steel 2:1 Lb.	3:1 Lb.	4:1 Lb.
1 @ 4'	2'	8	5'-0"	6½"	6"	6½"	3'-1"	5'-9¾"	6'-11⅝"	3.81	6.98	10.16	453	764	1074
	3'	12	5'-0"		6"		4'-1"	"	"	4.32	7.92	11.53	492	834	1175
	4'	16	5'-0"		6"		5'-1"	"	"	4.84	8.86	12.89	531	904	1276
	5'	20	5'-0"		6"		6'-1"	"	"	5.35	9.80	14.26	571	975	1377
	6'	24	5'-2"		7"		7'-1"	5'-11⅝"	7'-1½"	6.47	11.86	17.25	614	1053	1492
1 @ 5'	3'	15	6'-0"	7"	6"	7"	4'-2"	6'-11⅝"	8'-1"	5.13	9.40	13.67	687	1183	1693
	4'	20	6'-0"		6"		5'-2"	"	"	5.64	10.34	15.03	726	1253	1794
	5'	25	6'-0"		6"		6'-2"	"	"	6.15	11.28	16.40	765	1323	1895
	6'	30	6'-2"		7"		7'-2"	7'-1½"	8'-3½"	7.29	13.36	19.43	816	1413	2024
	7'	35	6'-3"		7½"		8'-2"	7'-2⅜"	8'-4½"	8.23	15.09	21.94	893	1525	2171
1 @ 6'	3'	18	7'-0"	7½"	6"	7½"	4'-3"	8'-1"	9'-2⅞"	6.03	11.05	16.07	894	1538	2192
	4'	24	7'-0"		6"		5'-3"	"	"	6.54	11.99	17.44	934	1609	2293
	5'	30	7'-0"		6"		6'-3"	"	"	7.05	12.93	18.80	973	1679	2394
	6'	36	7'-2"		7"		7'-3"	8'-3½"	9'-5⅛"	8.19	15.01	21.83	1027	1773	2529
	7'	42	7'-3"		7½"		8'-3"	8'-4½"	9'-6⅜"	9.14	16.76	24.38	1105	1908	2727
	8'	48	7'-4"		8"		9'-3"	8'-5⅝"	9'-7½"	10.18	18.67	27.15	1242	2156	3080
1 @ 7'	4'	28	8'-0"	8"	6"	8½"	5'-4½"	9'-2⅞"	10'-4¾"	7.70	14.12	20.54	1057	1815	2565
	5'	35	8'-0"		6"		6'-4½"	"	"	8.22	15.06	21.90	1094	1885	2666
	6'	42	8'-2"		7"		7'-4½"	9'-5⅛"	10'-7"	9.35	17.14	24.93	1147	1979	2800
	7'	49	8'-3"		7½"		8'-4½"	9'-6⅜"	10'-8⅛"	10.31	18.89	27.48	1210	2088	2956
	8'	56	8'-4"		8"		9'-4½"	9'-7½"	10'-9⅜"	11.35	20.80	30.25	1282	2263	3234
	9'	63	8'-6"		9"		10'-4½"	9'-9¾"	10'-11⅝"	12.93	23.69	34.46	1432	2484	3525
1 @ 8'	4'	32	9'-0"	8½"	6"	9½"	5'-6"	10'-4⅞"	11'-6⅜"	8.98	16.46	23.94	1293	2219	3141
	5'	40	9'-2"		7"		6'-6"	10'-7"	11'-8⅝"	10.04	18.41	26.78	1362	2329	3294
	6'	48	9'-2"		7"		7'-6"	"	"	10.65	19.53	28.41	1401	2400	3395
	7'	56	9'-3"		7½"		8'-6"	10'-8⅛"	11'-10"	11.61	21.28	30.95	1438	2474	3506
	8'	64	9'-4"		8"		9'-6"	10'-9⅜"	11'-11⅛"	12.66	23.21	33.76	1587	2735	3884
	9'	72	9'-6"		9"		10'-6"	10'-11⅝"	12'-1½"	14.24	26.11	37.97	1683	2907	4128
	10'	80	9'-8"		10"		11'-6"	11'-2"	12'-3¾"	15.99	29.31	42.63	1789	3089	4398
1 @ 9'	5'	45	10'-2"	9½"	7"	10½"	6'-8"	11'-8⅝"	12'-10⅝"	11.69	21.43	31.18	1674	2840	4221
	6'	54	10'-3"		7½"		7'-8"	11'-10"	13'-0"	12.61	23.11	33.61	1792	3096	4416
	7'	63	10'-3"		7½"		8'-8"	"	"	13.26	24.30	35.35	1831	3166	4517
	8'	72	10'-4"		8"		9'-8"	11'-11⅛"	13'-1"	14.31	26.23	38.16	1981	3435	4905
	9'	81	10'-6"		9"		10'-8"	12'-1½"	13'-3⅛"	15.91	29.15	42.40	2085	3615	5161
	10'	90	10'-8"		10"		11'-8"	12'-3⅜"	13'-5⅝"	17.68	32.41	47.13	2196	3806	5445
	11'	99	10'-10"		11"		12'-8"	12'-6⅛"	13'-8"	19.62	35.96	52.30	2357	4104	5869
1 @ 10'	5'	50	11'-2"	10½"	7"	11½"	6'-10"	12'-10¾"	14'-0⅛"	13.49	24.74	35.98	1980	3417	4898
	6'	60	11'-3"		7½"		7'-10"	12'-11⅞"	14'-1⅜"	14.44	26.46	38.49	2047	3522	5042
	7'	70	11'-3"		7½"		8'-10"	"	"	15.07	27.63	40.19	2103	3621	5183
	8'	80	11'-4"		8"		9'-10"	13'-1"	14'-3"	16.14	29.59	43.03	2224	3852	5524
	9'	90	11'-6"		9"		10'-10"	13'-3⅜"	14'-5½"	17.75	32.53	47.32	2298	3981	5658
	10'	100	11'-8"		10"		11'-10"	13'-5¾"	14'-7⅞"	19.52	35.78	52.05	2445	4231	6024
	11'	110	11'-10"		11"		12'-10"	13'-8"	14'-9¾"	21.47	39.36	57.25	2609	4534	6455
	12'	120	12'-0"		12"		13'-10"	13'-10⅛"	15'-0⅛"	23.61	43.27	62.94	2758	4790	6817

* For remainder of quantities see Std. Wing and Barrel Drawings listed below. Total steel quantities listed above include one lap of longitudinal bars.

NOTE:- This drawing to be used in conjunction with Standard Wing Drawing Nos. W-X302-1 or W-X302-2, W-X303-1 or W-X303-2, and W-X304-1 or W-X304-2. Also W-X30.
For Barrels of 4', 5' & 6' Spans, See Drawing No. R-100X-X1.
For Barrels of 7', 8', 9' & 10' Spans, See Drawing No. R-100X-X2.

CLASS S CONCRETE

ARKANSAS STATE HIGHWAY COMMISSION

DETAILS OF STANDARD BARREL SECTIONS FOR REINFORCED CONCRETE BOX CULVERTS

30° SKEW – SECTIONS "A" ONLY

4', 5', 6', 7', 8', 9' & 10' SPANS SINGLES

2:1, 3:1 OR 4:1 SLOPES OVER 5'-0" COVER

STANDARD DRAWING No. R-130X-1

Designed by:- W.C.H. 9-5-62 Checked by:- R.H.S. 11-8-62
Drawn by:- W.C.H. 1-24-64 Checked by:-
Quantities by:- W.C.H. 4-21-64 Checked by:-

Reshot 3-8-93

21

FED. ROAD No.	STATE	FED. AID PROJECT	FISCAL YEAR	SHEET No.	TOTAL SHEETS
6	ARK.			68	
JOB No.					

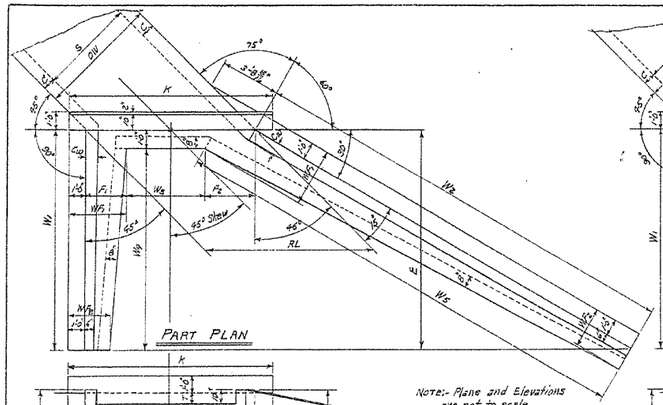

SINGLE BARREL CULVERT - 45° SKEW RIGHT FORWARD.
Details of Culvert with 45° Skew Left Forward is reversed, see Layout below.

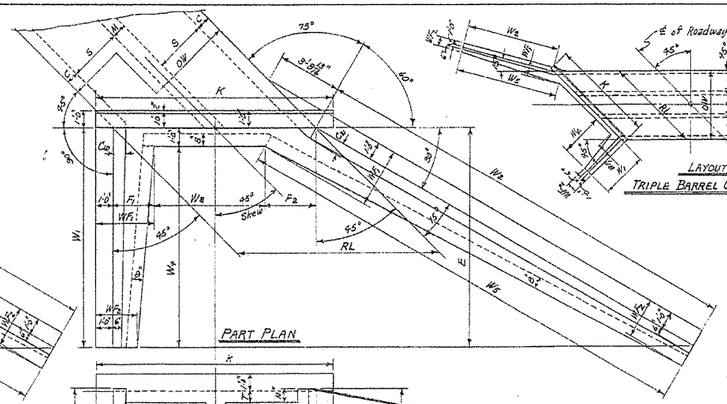

DOUBLE BARREL CULVERT - 45° SKEW RIGHT FORWARD
Details of Culvert with 45° Skew Left Forward is reversed, see Layout below.

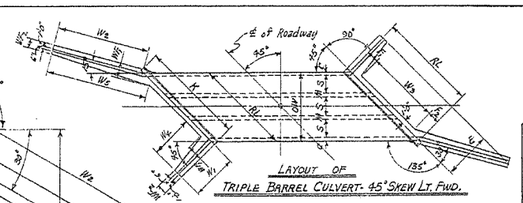

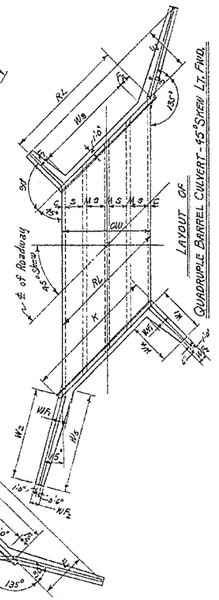

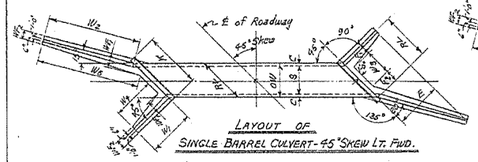

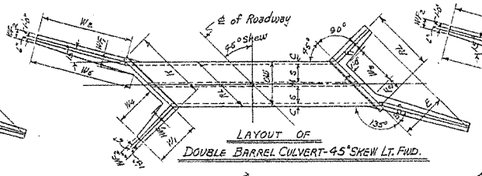

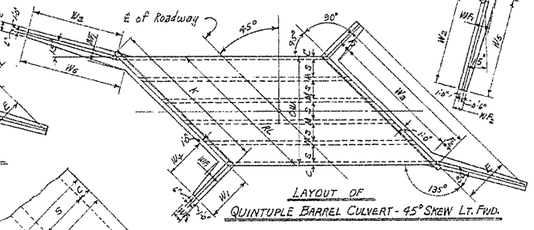

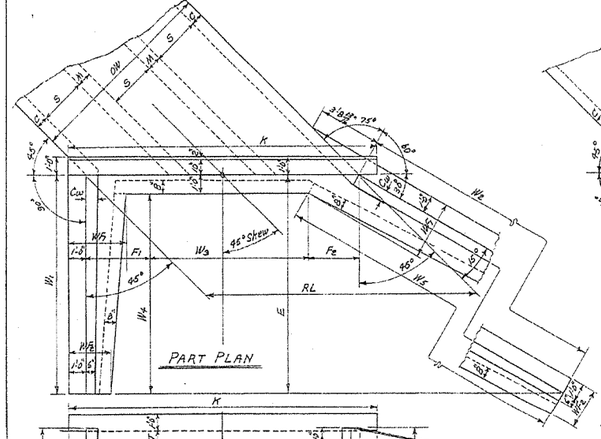

TRIPLE BARREL CULVERT - 45° SKEW RIGHT FORWARD
Details of Culvert with 45° Skew Left Forward is reversed, see Layout at top center of sheet.

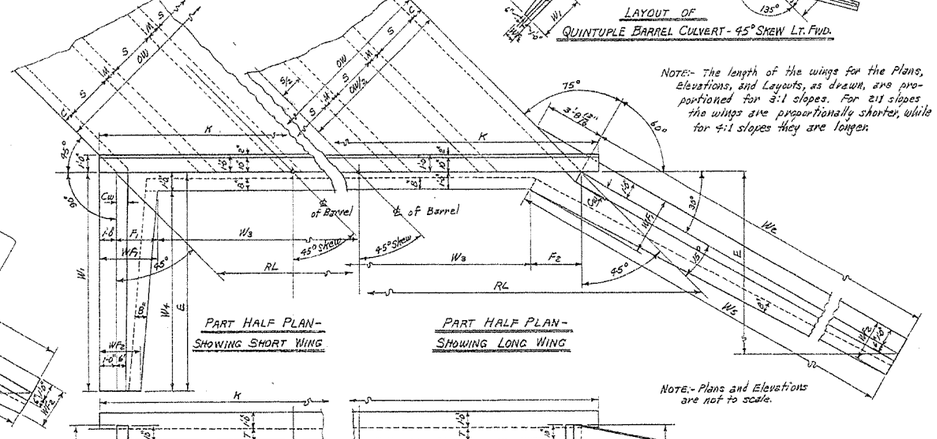

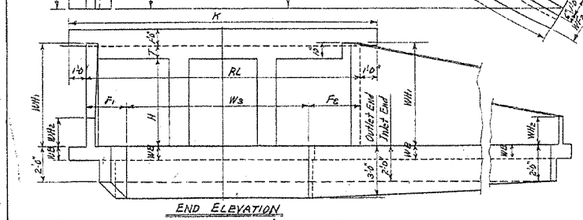

QUADRUPLE BARREL CULVERT - 45° SKEW RT. FWD.
Details of Culvert with 45° Skew Left Forward is reversed, see Layout at above center.

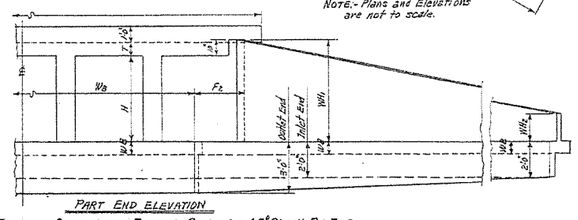

QUINTUPLE BARREL CULVERT - 45° SKEW RT. FWD.
Details of Culvert with 45° Skew Left Forward is reversed, see Layout above.

	ROADWAY LENGTH RL	HEADWALL LENGTH K	APRON DIMENSION W_3
	RL = OW x 1.41421	K = RL + (2'-0")	W_3 = RL - (F_1 + F_2)

USE WITH DRAWING NO.	CLEAR SPAN	CLEAR HEIGHT	SIZE OF FOOTING DIMENSIONS	SINGLE BARREL CULVERT				DOUBLE BARREL CULVERT				TRIPLE BARREL CULVERT				QUADRUPLE BARREL CULVERT				QUINTUPLE BARREL CULVERT			
	S	H	F_1 & F_2	OW	RL	K	W_3	OW	RL	K	W_3	OW	RL	K	W_3	OW	RL	K	W_3	OW	RL	K	W_3
W-X452-1, W-X453-1 OR W-X454-1. (FOR H=8'-0" OR LESS)	4'	2'-3⅝"	5'-1"	7'-0⅜"	9'-10⅜"	4'-1⅜"	9'-1⅜"	13'-8"	15'-5"	11'-4⅝"	19'-1⅛"	20'-3⅝"	22'-11½"	18'-1⅝"	31'-2⅝"	26'-10⅝"	29'-10⅛"	24'-7⅛"	42'-7⅛"	33'-5⅝"	37'-9½"	31'-2⅝"	53'-8⅜"
		3'-3⅝"	5'-0"	"	"	3'-3⅝"	9'-1⅜"	"	"	10'-4⅝"	19'-1⅛"	"	"	17'-0"	"	"	"	23'-7⅛"	42'-7⅛"	"	"	32'-2⅝"	53'-8⅜"
		4'-3⅝"	5'-0"	"	"	2'-3⅝"	9'-1⅜"	"	"	9'-4⅝"	19'-1⅛"	"	"	16'-0"	"	"	"	22'-7⅛"	42'-7⅛"	"	"	29'-2⅝"	53'-8⅜"
		5'-3⅝"	5'-0"	7'-0⅜"	9'-10⅜"	1'-3⅝"	9'-1⅜"	13'-8"	15'-5"	9'-4⅝"	19'-1⅛"	20'-3⅝"	22'-11½"	15'-0"	31'-2⅝"	26'-10⅝"	29'-10⅛"	23'-8"	42'-7⅛"	33'-5⅝"	37'-9½"	28'-2⅝"	53'-8⅜"
		6'-3⅝"	5'-2"	7'-3⅝"	9'-3⅜"	1'-0⅝"	9'-1⅜"	14'-0"	16'-0⅛"	7'-9⅜"	19'-1⅛"	20'-8"	22'-9"	14'-5⅜"	31'-2⅝"	27'-5⅝"	29'-1⅝"	23'-2"	42'-7⅛"	34'-2⅝"	36'-12"	27'-10⅜"	53'-8⅜"
	5'	3'-3⅝"	6'-0"	8'-5⅜"	10'-5⅝"	5'-2⅝"	11'-5⅜"	16'-4"	18'-6"	13'-2⅝"	21'-3"	23'-0"	25'-4½"	20'-3"	34'-6⅝"	29'-10⅝"	32'-4⅜"	25'-3"	46'-11⅝"	36'-5⅝"	40'-6⅝"	32'-3⅜"	59'-3⅛"
		4'-3⅝"	6'-0"	"	"	4'-2⅝"	11'-5⅜"	"	"	12'-1⅝"	"	20'-8"	"	18'-3"	"	"	"	28'-3"	"	"	"	36'-3⅝"	"
		5'-3⅝"	6'-0"	8'-5⅜"	10'-5⅝"	3'-2⅝"	11'-5⅜"	16'-4"	18'-6"	11'-2⅝"	"	23'-0"	25'-4½"	19'-3"	"	29'-10⅝"	32'-4⅜"	27'-3"	"	39'-5⅝"	42'-6⅝"	35'-3⅜"	"
		6'-3⅝"	6'-8"	8'-5⅜"	10'-5⅝"	2'-5⅝"	11'-5⅜"	16'-4"	18'-6"	10'-7"	"	23'-0"	25'-4½"	18'-0⅝"	"	29'-10⅝"	32'-4⅜"	26'-0"	"	39'-5⅝"	42'-6⅝"	34'-10⅜"	"
		7'-3⅝"	6'-8"	8'-10⅜"	10'-10⅝"	1'-10⅝"	11'-5⅜"	16'-8"	18'-7"	9'-13⅛"	"	23'-10"	26'-0⅝"	17'-11"	"	30'-4⅝"	32'-11⅛"	24'-8⅝"	"	40'-0⅝"	43'-1⅛"	34'-10⅜"	"
	6'	3'-3⅝"	7'-0"	9'-10⅜"	11'-10⅝"	6'-7⅝"	13'-8"	18'-8⅝"	21'-4"	16'-0⅜"	24'-1⅝"	26'-4"	28'-8⅝"	23'-9"	37'-10⅝"	32'-6"	35'-1⅛"	27'-10"	50'-3⅝"	39'-8"	43'-7⅛"	34'-10⅜"	59'-10⅞"
		4'-3⅝"	7'-0"	"	"	5'-7⅝"	13'-8"	"	"	15'-0⅜"	"	26'-4"	"	22'-3"	"	32'-6"	"	33'-1"	"	47'-3⅝"	"	33'-6"	"
		5'-3⅝"	7'-0"	9'-10⅜"	11'-10⅝"	4'-7⅝"	13'-8"	18'-8⅝"	21'-4"	14'-0⅜"	"	26'-4"	28'-8⅝"	20'-9"	"	32'-6"	35'-1⅛"	27'-0"	"	38'-8⅝"	42'-6⅝"	32'-11"	"
		6'-3⅝"	7'-2"	10'-1⅜"	12'-1⅝"	3'-10⅜"	13'-11"	19'-0⅝"	21'-10⅝"	13'-5"	"	26'-8"	29'-2⅝"	21'-6"	"	32'-10"	35'-5⅝"	27'-5"	"	39'-2⅝"	42'-10⅛"	34'-2"	"
		7'-3⅝"	7'-3"	10'-3"	12'-3⅜"	2'-10⅝"	14'-1"	19'-1"	21'-11"	12'-11"	"	26'-11"	29'-7"	21'-7"	"	33'-1"	35'-10⅝"	27'-7"	"	39'-5⅝"	43'-1⅛"	34'-5"	"
		8'-3⅝"	7'-4"	10'-4⅝"	12'-4⅝"	1'-1⅝"	14'-2"	19'-2⅝"	22'-0⅝"	10'-9⅝"	"	27'-1"	29'-8⅝"	20'-10"	"	33'-3"	36'-0⅝"	27'-8"	"	39'-8⅝"	43'-3⅛"	34'-8"	"
	7'	4'-3⅝"	8'-0"	11'-3⅝"	13'-3⅜"	7'-0⅛"	15'-8"	22'-1⅛"	24'-1⅜"	17'-10⅝"	28'-1"	28'-4"	33'-0"	25'-6"	43'-10⅝"	35'-0"	38'-6⅝"	29'-11"	58'-0⅝"	42'-8"	47'-3⅛"	37'-6"	64'-9"
		5'-3⅝"	8'-0"	11'-5⅜"	13'-5⅝"	6'-0⅛"	15'-8"	22'-1⅛"	24'-1⅜"	16'-10⅝"	"	28'-4"	33'-0"	25'-0"	43'-10⅝"	35'-0"	38'-6⅝"	29'-6"	58'-0⅝"	42'-8"	47'-3⅛"	37'-6"	64'-9"
		6'-3⅝"	8'-2"	11'-5⅜"	13'-5⅝"	5'-3⅝"	15'-11"	22'-3⅝"	24'-3⅛"	16'-2⅝"	"	28'-6"	33'-2⅝"	25'-1⅝"	44'-2⅝"	35'-2"	38'-8⅝"	29'-7"	58'-3⅝"	42'-10"	47'-5⅛"	37'-8"	65'-0"
		7'-3⅝"	8'-3"	11'-7⅜"	13'-7⅝"	4'-5⅝"	16'-1"	22'-5⅛"	24'-5⅛"	15'-7"	"	28'-8"	33'-4⅝"	25'-3"	44'-5⅝"	35'-3"	38'-10⅝"	29'-8"	58'-6⅝"	43'-0"	47'-7⅛"	37'-10"	65'-3"
		8'-3⅝"	8'-4"	11'-9⅜"	13'-9⅝"	3'-6⅝"	16'-2"	22'-7⅛"	24'-7⅛"	14'-7"	"	28'-10"	33'-7"	25'-5"	44'-8⅝"	35'-5"	39'-0⅝"	29'-9"	58'-9⅝"	43'-1"	47'-8⅝"	37'-11"	65'-6"
	8'	4'-3⅝"	9'-0"	12'-9⅜"	14'-10⅝"	8'-5⅝"	17'-8"	24'-11⅝"	26'-11⅝"	20'-0⅝"	31'-2⅝"	30'-4"	37'-2⅝"	29'-3"	49'-2⅝"	39'-5"	43'-3⅛"	33'-5"	65'-3⅝"	47'-9"	52'-6⅜"	41'-5"	72'-10⅝"
		5'-3⅝"	9'-2"	12'-11⅜"	14'-11⅝"	7'-8⅝"	17'-11"	25'-1⅝"	27'-1⅝"	19'-10⅝"	"	30'-8"	37'-6⅝"	29'-6"	49'-8⅝"	39'-8"	43'-7⅛"	33'-7"	65'-9⅝"	48'-1⅛"	52'-8⅜"	41'-7"	73'-2⅝"
		6'-3⅝"	9'-2"	12'-11⅜"	14'-11⅝"	6'-8⅝"	17'-11"	25'-1⅝"	27'-1⅝"	19'-0⅝"	"	30'-8"	37'-6⅝"	29'-6"	49'-8⅝"	39'-8"	43'-7⅛"	33'-7"	65'-9⅝"	48'-1⅛"	52'-8⅜"	41'-7"	73'-2⅝"
		7'-3⅝"	9'-3"	13'-1"	15'-1"	5'-3⅜"	18'-1"	25'-4⅞"	27'-7"	17'-9⅝"	"	30'-11"	38'-0⅝"	29'-10"	50'-3⅝"	40'-0"	44'-0⅛"	34'-0"	66'-6⅜"	48'-5"	53'-0⅝"	41'-10"	73'-8⅝"
		8'-3⅝"	9'-4"	13'-2⅝"	15'-2⅝"	3'-11⅜"	18'-2"	25'-6⅝"	27'-10⅝"	16'-5"	"	31'-1"	38'-2⅝"	30'-0⅝"	50'-5⅝"	40'-2"	44'-2⅜"	34'-2"	66'-9⅝"	48'-7"	53'-2⅝"	42'-0"	74'-0⅝"
	9'	5'-3⅝"	10'-2"	14'-3⅜"	16'-4⅝"	9'-1⅜"	19'-4"	26'-8"	28'-10⅝"	20'-2"	33'-2⅝"	32'-8"	40'-2⅝"	31'-9"	53'-8⅝"	43'-1"	47'-3⅛"	36'-5"	71'-4⅝"	52'-0"	57'-0⅝"	45'-0"	79'-2⅝"
		6'-3⅝"	10'-3"	14'-6"	16'-6"	8'-1⅜"	20'-1"	26'-10⅝"	29'-0⅝"	20'-3"	33'-5⅝"	32'-11"	40'-5⅝"	32'-0"	54'-0⅝"	43'-4"	47'-6⅛"	36'-8"	71'-8⅝"	52'-3"	57'-3⅝"	45'-3"	79'-7⅝"
		7'-3⅝"	10'-3"	14'-6"	16'-6"	6'-8⅜"	20'-1"	26'-10⅝"	29'-0⅝"	20'-3"	33'-5⅝"	32'-11"	40'-5⅝"	32'-0"	54'-0⅝"	43'-4"	47'-6⅛"	36'-8"	71'-8⅝"	52'-3"	57'-3⅝"	45'-3"	79'-7⅝"
		8'-3⅝"	10'-4"	14'-7⅝"	16'-7⅝"	5'-5⅜"	20'-2"	26'-11⅝"	29'-1⅝"	19'-3"	33'-6⅝"	33'-1"	40'-6⅝"	32'-1"	54'-1⅝"	43'-5"	47'-7⅛"	36'-9"	71'-9⅝"	52'-4"	57'-4⅝"	45'-4"	79'-8⅝"
	10'	5'-3⅝"	11'-2"	15'-9⅜"	17'-10⅝"	10'-6⅜"	21'-11"	29'-2⅝"	31'-3⅝"	23'-5⅝"	36'-5⅝"	35'-8"	43'-11⅝"	34'-8"	58'-6⅝"	46'-10"	51'-0⅜"	39'-4"	76'-11⅝"	56'-3"	61'-6⅝"	48'-6"	85'-5⅝"
		6'-3⅝"	11'-3"	15'-10⅝"	17'-11⅝"	9'-3⅜"	22'-1"	29'-3⅝"	31'-5⅝"	23'-4"	36'-6⅝"	35'-10"	44'-1⅝"	34'-9"	58'-8⅝"	47'-0"	51'-2⅜"	39'-5"	77'-1⅝"	56'-4"	61'-7⅝"	48'-7"	85'-7⅝"
		7'-3⅝"	11'-3"	15'-10⅝"	17'-11"	8'-1⅜"	22'-1"	29'-3⅝"	31'-5⅝"	23'-5⅝"	36'-6⅝"	35'-10"	44'-1⅝"	34'-9"	58'-8⅝"	47'-0"	51'-2⅜"	39'-5"	77'-1⅝"	56'-4"	61'-7⅝"	48'-7"	85'-7⅝"
		8'-3⅝"	11'-4"	16'-0⅜"	18'-0⅝"	6'-9⅜"	22'-2"	29'-4⅝"	31'-6⅝"	23'-6⅝"	36'-7⅝"	36'-0"	44'-3⅝"	34'-10"	58'-10⅝"	47'-1"	51'-3⅜"	39'-6"	77'-3⅝"	56'-5"	61'-8⅝"	48'-8"	85'-9⅝"
	11'	5'-3⅝"	12'-0"	17'-0⅝"	19'-1⅝"	11'-2⅝"	24'-2"	31'-7⅝"	33'-8⅝"	26'-0"	39'-0⅝"	38'-4"	47'-0⅝"	37'-3"	62'-8⅝"	50'-2"	54'-5⅜"	42'-1"	82'-3⅝"	60'-1"	65'-8⅝"	51'-10"	91'-7⅝"
		6'-3⅝"	12'-0"	"	"	10'-0⅜"	24'-2"	"	"	25'-10⅝"	"	38'-4"	"	37'-3"	"	"	"	42'-1"	"	"	"	51'-10"	"
		7'-3⅝"	12'-0"	"	"	9'-0⅜"	24'-2"	"	"	26'-1⅝"	"	38'-6"	"	37'-4"	"	"	"	42'-2"	"	"	"	51'-11"	"
		8'-3⅝"	12'-0"	"	"	8'-2⅜"	24'-2"	"	"	26'-11"	"	38'-6"	"	37'-4"	"	"	"	42'-2"	"	"	"	51'-11"	"
	12'	5'-3⅝"	13'-1"	18'-6⅛"	20'-7⅝"	12'-7⅛"	26'-2"	33'-11⅝"	36'-0"	27'-11"	41'-10⅝"	41'-4"	50'-0⅝"	40'-3"	67'-6⅝"	54'-0"	58'-3⅜"	45'-1"	88'-7⅝"	64'-7"	70'-1⅝"	55'-8"	98'-1⅝"
		6'-3⅝"	13'-1"	"	"	11'-1⅝"	26'-2"	"	"	29'-1⅝"	"	41'-6"	"	40'-3"	"	"	"	45'-2"	"	"	"	55'-8"	"
		7'-3⅝"	13'-1"	"	"	10'-1⅝"	26'-2"	"	"	29'-2⅝"	"	41'-6"	"	40'-3"	"	"	"	45'-2"	"	"	"	55'-8"	"
		8'-3⅝"	13'-1"	"	"	9'-2⅝"	26'-2"	"	"	27'-10⅝"	"	39'-6"	"	38'-3"	"	"	"	43'-2"	"	"	"	53'-8"	"

NOTE:- This drawing to be used in conjunction with Standard Wing Drawings for 45° Skews for each slope as listed below.

2:1 Slopes	3:1 Slopes	4:1 Slopes
W-X452-1 or W-X452-2	W-X453-1 or W-X453-2	W-X454-1 or W-X454-2.

NOTE:-
This drawing to be used in conjunction with Standard Barrel Sections, Drawing Nos.-

SINGLES	DOUBLES	TRIPLES	QUADRUPLES	QUINTUPLES
R-145X-0	R-245X-01	R-345X-01	R-445X-01	R-545X-01
	R-245X-02	R-345X-02	R-445X-02	R-545X-02
R-145X-1	R-245X-1	R-345X-1	R-445X-1	
	R-245X-2	R-345X-2		

CLASS S CONCRETE

ARKANSAS STATE HIGHWAY COMMISSION
DETAILS OF STANDARD WINGS FOR REINFORCED CONCRETE BOX CULVERTS 45° SKEW

4', 5', 6', 7', 8', 9', 10', 11' & 12' SPANS — 2:1, 3:1 & 4:1 SLOPES
SINGLES, DOUBLES, TRIPLES, QUADRUPLES & QUINTUPLES — ALL DEPTHS OF COVER H= 2, 3, 4, 5, 6, 7, 8, 9, 10, 11 & 12'

STANDARD DRAWING No. W-X45

Designed by:- W.C.H. 5-16-63 Checked by:-
Drawn by:- W.C.H. 6-15-64 Checked by:-
Quantities by:- Checked by:- JEM. 6-23-64

FED. ROAD No.	STATE	FED. AID PROJECT	FISCAL YEAR	SHEET No.	TOTAL SHEETS
6	ARK.			669	
JOB No.					

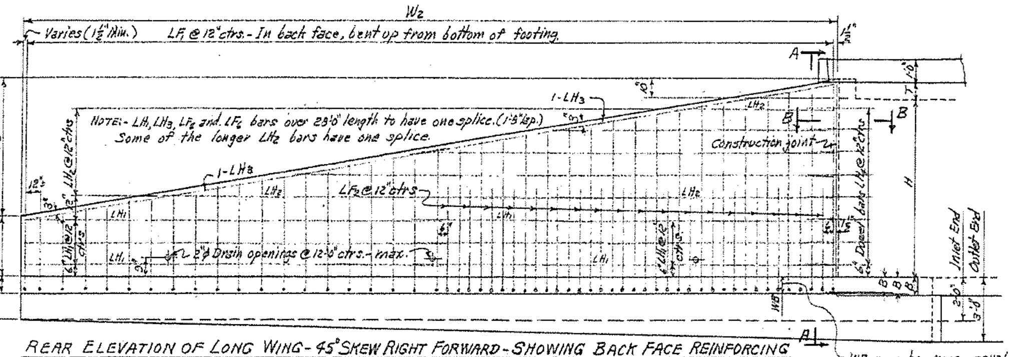

REAR ELEVATION OF LONG WING - 45° SKEW RIGHT FORWARD - SHOWING BACK FACE REINFORCING

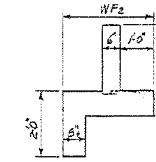

TYPICAL END VIEW OF WING

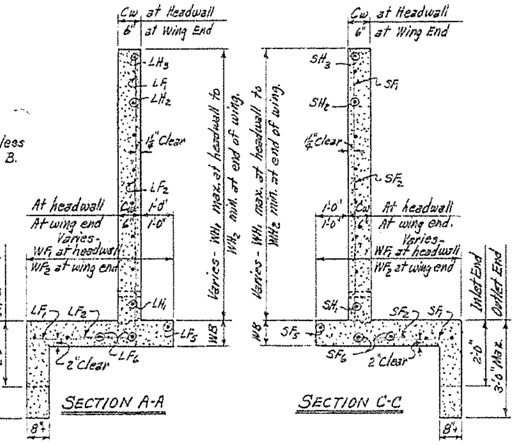

SECTION A-A

SECTION C-C

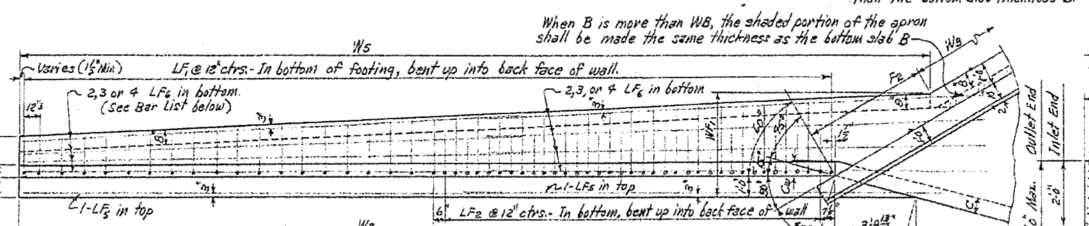

PLAN OF LONG WING - 45° SKEW RIGHT FORWARD - SHOWING FOOTING REINFORCING

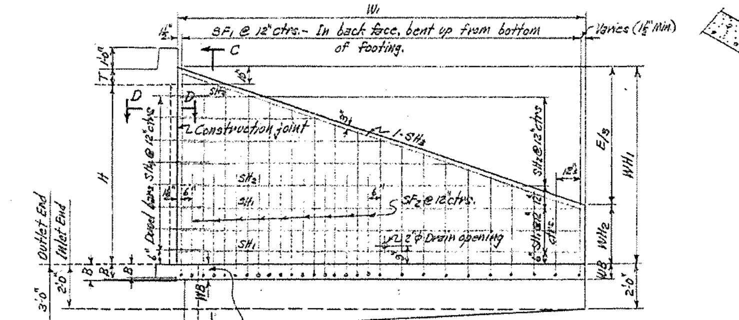

REAR ELEVATION OF SHORT WING - 45° SKEW RIGHT FORWARD - SHOWING BACK FACE REINFORCING

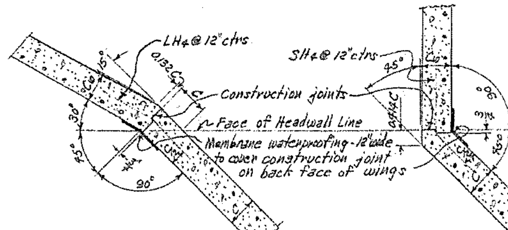

SECTION B-B SECTION D-D

SECTIONS THRU CONSTRUCTION JOINTS

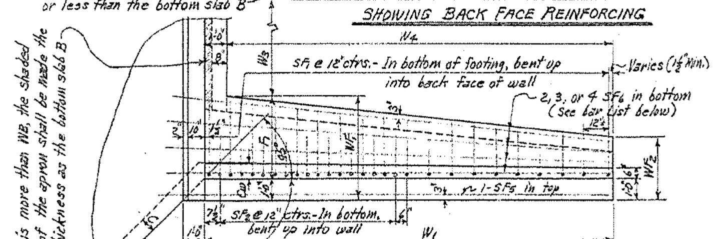

PLAN OF SHORT WING - 45° SKEW RIGHT FORWARD SHOWING FOOTING REINFORCING

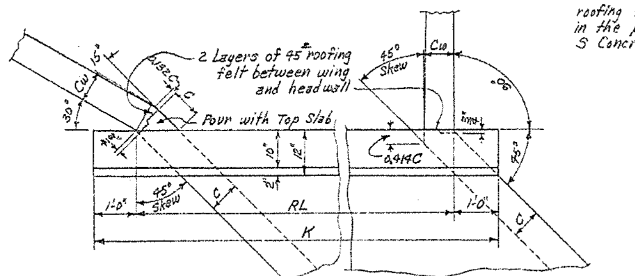

DETAILS AT TOP OF WINGS - 45° SKEW RIGHT FORWARD

NOTE:- Payment for the membrane waterproofing and roofing felt to be included in the price bid for Class S Concrete.

REGULAR WING DIMENSIONS - 3:1 SLOPES

Clear Height of Box	Thickness of Wing Footing	Thickness of Wing at Hdwl. = C	Wingwall Heights: At Headwall	Wingwall Heights: At End of Wing	Widths of Wing Footings: At Headwall	Widths of Wing Footings: At End of Wing	Footing Dimension Parallel with Headwall: Short Wing	Footing Dimension Parallel with Headwall: Long Wing	Perpendicular Dist. from Hdwl. to End of Wing	Lengths of Wingwalls: Short Wing	Lengths of Wingwalls: Long Wing	Inside Footing Dimension: Short Wing	Inside Footing Dimension: Long Wing	* Quantity per Wing, Class S Concrete, Inlet End: Short Wing	Inlet End: Long Wing	Outlet End: Short Wing	Outlet End: Long Wing
H	WB	Cw	WH1	WH2	WF1	WF2	F1	F2	E	W1	W2	W4	W5	Cu.Yd.	Cu.Yd.	Cu.Yd.	Cu.Yd.
2'	7"	6"	2'-10"	0'-8"	2'-4"	2'-0"	1'-4"	0'-11⅝"	6'-6"	6'-6"	13'-0"	5'-6"	13'-3¾"	0.743	1.572	0.827	1.741
3'	7"	6"	3'-10"	1'-0"	2'-8"	2'-1½"	1'-8"	1'-7⅞"	8'-6"	8'-6"	17'-0"	7'-6"	17'-10⅜"	1.120	2.364	1.229	2.590
4'	7"	6"	4'-10"	1'-4"	3'-0"	2'-3"	2'-0"	2'-3½"	10'-6"	10'-6"	21'-0"	9'-6"	22'-5½"	1.567	3.295	1.700	3.577
5'	7"	6"	5'-10"	1'-8"	3'-4"	2'-4½"	2'-4"	2'-11⅝"	12'-6"	12'-6"	25'-0"	11'-6"	27'-0½"	2.082	4.367	2.291	4.705
		7"	5'-10"	1'-8"	3'-4"	2'-4½"	2'-4"	2'-11⅝"	12'-6"	12'-6"	25'-0"	11'-6"	27'-0½"	2.166	4.551	2.325	4.889
6'	8"	7"	6'-10"	2'-0"	3'-8"	2'-6"	2'-8"	3'-7¼"	14'-6"	14'-6"	29'-0"	13'-6"	31'-7½"	2.894	6.055	3.078	6.450
		7½"	6'-10"	2'-0"	3'-8"	2'-6"	2'-8"	3'-7¼"	14'-6"	14'-6"	29'-0"	13'-6"	31'-7½"	2.952	6.180	3.135	6.575
		8"	6'-10"	2'-0"	3'-8"	2'-6"	2'-8"	3'-7¼"	14'-6"	14'-6"	29'-0"	13'-6"	31'-7½"	3.009	6.305	3.192	6.700
7'	8½"	7½"	7'-10"	2'-4"	4'-2"	2'-7½"	3'-2"	4'-7½"	16'-6"	16'-6"	33'-0"	15'-6"	36'-5¾"	3.794	7.930	4.003	8.385
		8"	7'-10"	2'-4"	4'-2"	2'-7½"	3'-2"	4'-7½"	16'-6"	16'-6"	33'-0"	15'-6"	36'-5¾"	3.870	8.093	4.078	8.598
8'	9"	8"	8'-10"	2'-8"	4'-8"	2'-9"	3'-8"	5'-7¼"	18'-6"	18'-6"	37'-0"	17'-6"	41'-4½"	4.855	10.136	5.088	10.651

* Quantity per wing does not include headwall or that portion of apron or toewall for the length W_3.

QUANTITIES

Clear Span	Clear Height	Thickness of Wing at Headwall	Thickness of Wing Footing	⊕ Reinforcing Steel - for 4 Wings	Class S Concrete - 4 Wings (Headwalls, Wingwalls, Footings, Toewalls and Aprons): Single Barrel Culvert	Double Barrel Culvert	Triple Barrel Culvert	Quadruple Barrel Culvert	Quintuple Barrel Culvert
S	H	Cw	WB	LB.	Cu.Yd.	Cu.Yd.	Cu.Yd.	Cu.Yd.	Cu.Yd.
4'	2'	6"	7"	142	6.15	7.50	8.86	10.22	11.58
	3'	6"	7"	214	8.44	9.79	11.14	12.50	13.86
	4'	6"	7"	328	11.13	12.48	13.84	15.20	16.56
	5'	6"	7"	463	14.25	15.60	16.96	18.32	19.68
	6'	7"	8"	763	19.23	20.62	22.02	23.41	24.81
5'	3'	6"	7"	214	8.74	10.38	12.03	13.67	15.32
	4'	6"	7"	328	11.43	13.07	14.72	16.37	18.02
	5'	6"	7"	463	14.55	16.19	17.84	19.49	21.14
	6'	7"	8"	763	19.53	21.21	22.90	24.59	26.28
	7'	7½"	8½"	1475	24.98	26.69	28.41	30.14	31.86
6'	3'	6"	7"	214	9.03	10.99	12.91	14.86	16.79
	4'	6"	7"	328	11.73	13.69	15.60	17.56	19.48
	5'	6"	7"	463	14.85	16.80	18.72	20.68	22.60
	6'	7"	8"	763	19.83	21.82	23.79	25.78	27.76
	7'	7½"	8½"	1475	25.28	27.30	29.31	31.33	33.35
	8'	8"	9"	1872	31.70	33.74	35.75	37.79	39.81
7'	4'	6"	7"	328	12.04	14.31	16.54	18.81	21.02
	5'	6"	7"	463	15.15	17.43	19.65	21.93	24.13
	6'	7"	8"	763	20.14	22.44	24.69	26.99	29.24
	7'	7½"	8½"	1475	25.59	27.91	30.21	32.53	34.83
	8'	8"	9"	1872	32.02	34.35	36.66	38.99	41.31
8'	4'	6"	7"	328	12.35	14.95	17.49	20.09	22.57
	5'	7"	7"	463	16.05	18.67	21.24	23.86	26.37
	6'	7"	8"	763	20.45	23.07	25.64	28.26	30.77
	7'	7½"	8½"	1475	25.90	28.54	31.13	33.78	36.32
	8'	8"	9"	1872	32.33	34.97	37.56	40.21	42.80
9'	5'	7"	7"	463	16.37	19.32	22.18	25.02	27.91
	6'	7½"	8"	763	21.16	24.13	27.02	29.89	32.81
	7'	7½"	8½"	1475	26.21	29.18	32.08	34.94	37.86
	8'	8"	9"	1872	32.63	35.61	38.51	41.37	44.29
10'	5'	7"	7"	463	16.69	19.96	23.14	26.27	29.47
	6'	7½"	8"	763	21.48	24.77	27.99	31.13	34.36
	7'	7½"	8½"	1475	26.53	29.82	33.04	36.19	39.42
	8'	8"	9"	1872	32.95	36.25	39.46	42.62	45.85
11'	6'	8"	8"	763	22.18	25.83	29.35	32.84	—
	7'	8"	8½"	1475	27.39	30.99	34.51	38.01	—
	8'	8"	9"	1872	33.26	36.91	40.48	43.93	—
12'	6'	8"	8"	763	22.50	26.51	30.33	34.19	—
	7'	8"	8½"	1475	27.66	31.66	35.49	39.35	—
	8'	8"	9"	1872	33.58	37.58	41.41	45.27	—

⊕ For reinforcing steel in Headwalls and Aprons, see Drawing Nos. of Barrel Sections listed below.

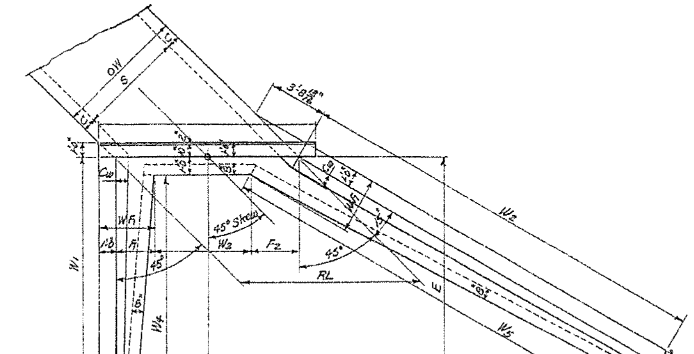

PART PLAN

NOTE:- Plan and Elevation are not to scale.

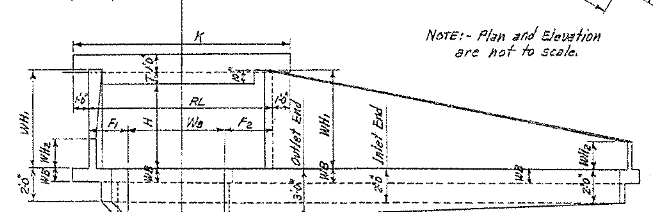

END ELEVATION

SINGLE BARREL CULVERT - 45° SKEW RIGHT FORWARD

Details of Culvert with 45° Skew Left Forward is reversed, see Drawing No. W-X45.

TYPICAL WING DETAILS

NOTE:-
For remainder of General Plans and Elevations of Single, Double, Triple, Quadruple and Quintuple Span Culverts, see Std. Drawing No. W-X45. For values of RL, K and W_3 for each box, see above Std. also.

MEMBRANE:- A membrane waterproofing 12" wide, consisting of three moppings of waterproofing asphalt and two alternate layers of treated cotton fabric shall be applied to the back face of wing to cover the construction joints in wings.

REVISIONS:- Membrane Added. 5-10-66 W.C.H.

GENERAL NOTES:-

CONCRETE:- All concrete to be Class S, and shall be poured in the dry. All exposed corners to have ¾" chamfers.

REINFORCING STEEL:- Reinforcing steel to be deformed bars of intermediate or hard grade.

CONSTRUCTION JOINTS:- Construction joints between wingwall, footings and sidewalls shall be only where shown on plans.

SPECIFICATIONS:- Arkansas State Highway Commission Standard Specifications for Highway Construction and applicable Special Provisions.

UNIT STRESSES:-
Class S Concrete (n=10) 1200 #/□"
Reinforcing Steel 20,000 #/□"

NOTE:-
This drawing to be used in conjunction with Standard Barrel Sections, Drawing Nos.-

Singles	Doubles	Triples	Quadruples	Quintuples
R-145X-0	R-245X-01	R-345X-01	R-445X-01	R-545X-01
	R-245X-02	R-345X-02	R-445X-02	R-545X-02
R-145X-1	R-245X-1	R-345X-1	R-445X-1	
	R-245X-2	R-345X-2		

BAR LIST FOR ONE SHORT AND ONE LONG WING - 2 EACH REQUIRED

SF1 & LF1: Bent - In bottom of footing, bent up into back face of wing. One bar (or two bars) of each length.
SF2 & LF2: Bent - In bottom of footing, bent up into back face of wing. Alt. with F1 bars.
SF5 & LF5: Straight - Longitudinal in top of wing footing heel.
SF6 & LF6: Straight - Longitudinal in bottom of wing footing toe.
SH1 & LH1: Straight - Horizontal in back face of wing.
SH2 & LH2: Straight - Horizontal in back face of wing. One bar of each length. *
SH3 & LH3: Straight - In back face of wing at top-on slope.
SH4 & LH4: Bent - Dowels thru construction joint at headwall.

Clear Height H	Wing Location (Short or Long)	SF1&LF1 Size	Spacing	No. Req'd	Lengths Vary Min.	Lengths Vary Max.	X Min.	X Max.	Y Min.	Y Max.	SF2&LF2 Size	Spacing	No. Req'd	Length	X	Y	SF5&LF5 Size	No. Req'd	Length	SF6&LF6 Size	No. Req'd	Length	SH1&LH1 Size	Spacing	No. Req'd	Length	SH2&LH2 Size	Spacing	No. Req'd	Lengths Vary Max.	Lengths Vary Min.	SH3&LH3 Size	No. Req'd	Length	SH4&LH4 Size	Spacing	No. Req'd	Length	X	Quantity Reinforcing Steel per Wing - Lbs. Short Wing	Long Wing
2'	Short	#3	12"	7	1'-7"	3'-11"	0'-8"	1'-0"	1'-0"	3'-0"	—	—	—	—	—	—	#3	1	8'-4"	#3	2	8'-0"	#3	12"	1	6'-3"	#3	12"	1	—	3'-3"	#3	1	6'-7"	#3	12"	2	2'-8"	1'-9"	29.4	46.3
	Long	#3	12"	14	1'-5"	3'-11"	0'-8"	1'-0"	0'-10"	3'-0"	—	—	—	—	—	—	#3	1	17'-6"	#3	2	15'-6"	#3	12"	1	12'-8"	#3	12"	1	—	6'-6"	#3	1	12'-11"	#3	12"	2	"	"		
3'	Short	#3	12"	9	2'-1"	5'-3"	0'-10"	1'-4"	1'-4"	4'-0"	—	—	—	—	—	—	#3	1	10'-4"	#3	2	10'-0"	#3	12"	1	8'-3"	#3	12"	2	6'-3"	3'-3"	#3	1	8'-8"	#3	12"	3	"	"	36.8	70.3
	Long	#3	12"	18	1'-11"	5'-3"	0'-10"	1'-4"	1'-2"	4'-0"	—	—	—	—	—	—	#3	1	21'-6"	#3	2	20'-2"	#3	12"	1	16'-8"	#3	12"	2	12'-6"	6'-6"	#3	1	16'-11"	#3	12"	3	"	"		
4'	Short	#3	12"	11	2'-6"	6'-7"	0'-11"	1'-8"	1'-8"	5'-0"	—	—	—	—	—	—	#3	1	12'-4"	#3	3	12'-0"	#3	12"	1	10'-3"	#3	12"	3	9'-3"	3'-3"	#3	1	10'-5"	#3	12"	4	"	"	55.9	107.9
	Long	#3	12"	22	2'-4"	6'-6"	0'-11"	1'-7"	1'-6"	5'-0"	—	—	—	—	—	—	#3	1	25'-6"	#3	3	24'-8"	#3	12"	1	20'-8"	#3	12"	3	18'-6"	6'-6"	#3	1	21'-0"	#3	12"	4	"	"		
5'	Short	#3	12"	13	2'-11"	7'-11"	1'-0"	2'-0"	2'-0"	6'-0"	#3	12"	3	3'-6"	1'-1"	2'-6"	#3	1	14'-4"	#3	3	14'-0"	#3	12"	2	12'-3"	#3	12"	3	9'-3"	3'-3"	#3	1	12'-11"	#3	12"	5	"	"	77.7	153.7
	Long	#3	12"	26	2'-9"	7'-10"	1'-0"	1'-11"	1'-10"	6'-0"	#3	12"	6	3'-6"	1'-1"	2'-6"	#3	2	15'-8"	#3	6	15'-7"	#3	12"	2	24'-8"	#3	12"	3	18'-6"	6'-6"	#3	1	25'-1"	#3	12"	5	"	"		
6'	Short	#4	12"	15	3'-6"	9'-4"	1'-2"	2'-4"	2'-5"	7'-1"	#3	12"	3	4'-6"	1'-4"	3'-3"	#3	1	16'-4"	#3	3	16'-0"	#3	12"	2	14'-3"	#3	12"	4	12'-3"	3'-3"	#3	1	15'-0"	#3	12"	6	"	"	127.6	253.9
	Long	#4	12"	30	3'-4"	9'-3"	1'-2"	2'-3"	2'-3"	7'-1"	#3	12"	6	4'-6"	1'-4"	3'-3"	#3	2	17'-8"	#3	6	13'-0"	#3	12"	4	15'-2"	#3	12"	4	24'-6"	6'-6"	#3	2	15'-5"	#3	12"	6	2'-8"	1'-4"		
7'	Short	#4	12"	17	3'-11"	10'-10"	1'-3"	2'-10"	2'-9"	8'-1"	#4	12"	6	5'-6"	1'-7"	4'-0"	#4	1	18'-4"	#4	4	18'-0"	#4	12"	2	16'-3"	#4	12"	5	15'-3"	3'-3"	#4	1	17'-1"	#4	12"	7	3'-6"	1'-9"	246.5	491.1
	Long	#4	12"	34	3'-9"	10'-8"	1'-3"	2'-9"	2'-7"	8'-1"	#4	12"	12	5'-6"	1'-7"	4'-0"	#4	2	19'-8"	#4	8	20'-4"	#4	12"	4	17'-2"	#4	12"	5	*30'-6"	6'-6"	#4	2	17'-5"	#4	12"	7	"	"		
8'	Short	#4	12"	19	4'-6"	12'-5"	1'-5"	3'-4"	3'-2"	9'-2"	#4	12"	9	6'-6"	1'-10"	4'-9"	#4	1	20'-4"	#4	4	20'-0"	#4	12"	3	19'-3"	#4	12"	5	15'-3"	3'-3"	#4	1	19'-3"	#4	12"	8	"	"	312.5	623.6
	Long	#4	12"	38	4'-4"	12'-3"	1'-5"	3'-2"	3'-0"	9'-2"	#4	12"	18	6'-6"	1'-10"	4'-9"	#4	2	21'-8"	#4	8	22'-9"	#4	12"	6	19'-2"	#4	12"	5	*30'-6"	6'-6"	#4	2	19'-6"	#4	12"	8	3'-6"	1'-5"		

Bar Bending Diagram: SF1 & SF2, LF1 & LF2 (Y, X, 3" Pin); SH4 (X, 12/12); LH4 (X, 3½/12). NOTE:- Dimensions are to bar centers.

NOTE:- Bars for short wing shall be marked with prefix letter "S", while those for long wing shall be marked with letter "L".

* Length without splice. Bars over 28'-0" length may be spliced. (1'-8" lap)

Designed By:- W.C.H. 5-13-63 Checked By:-
Drawn By:- W.C.H. 6-5-64 Checked By:- J.E.M. 7-21-64
Quantities By:- W.C.H. 7-2-64 Checked By:- J.E.M. 7-21-64

CLASS S CONCRETE

ARKANSAS STATE HIGHWAY COMMISSION

DETAILS OF STANDARD WINGS

FOR

REINFORCED CONCRETE BOX CULVERTS

45° SKEW

4', 5', 6', 7', 8', 9', 10', 11' & 12' SPANS — 3:1 SLOPES

SINGLES, DOUBLES, TRIPLES, — ALL DEPTHS OF COVER

QUADRUPLES & QUINTUPLES — FOR H = 8'-0" OR LESS

STANDARD DRAWING No. W-X453-1

DATE REVISED	DATE FILMED	DATE REVISED	DATE FILMED

FED.RD. DIST.NO.	STATE	FED.AID PROJ.NO.	SHEET NO.	TOTAL SHEETS
6	ARK.			
JOB NO.		BB0414	670	886

(2) CROSS SECTIONS

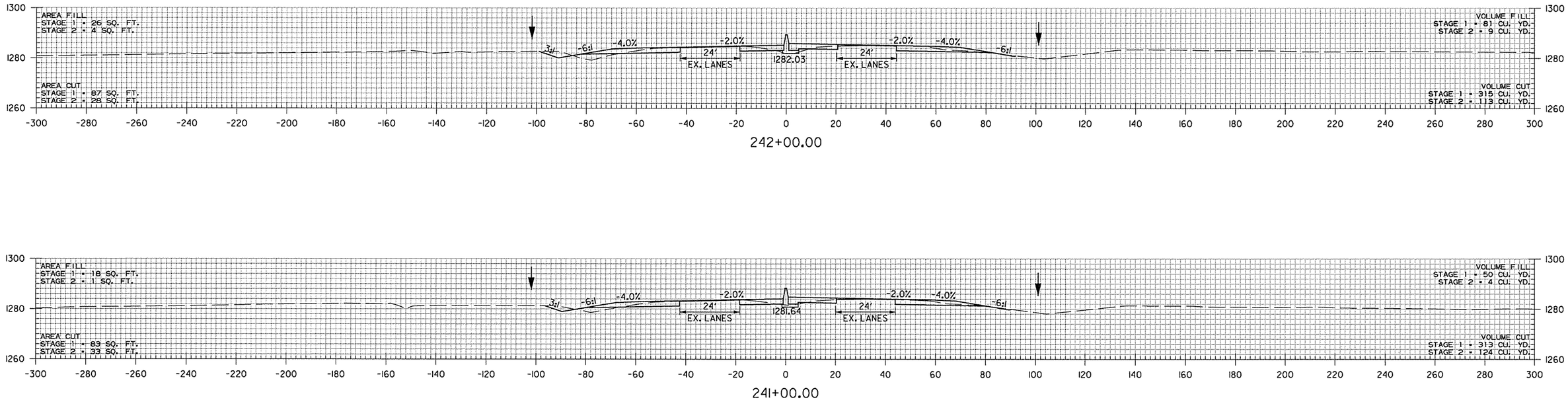

242+00.00

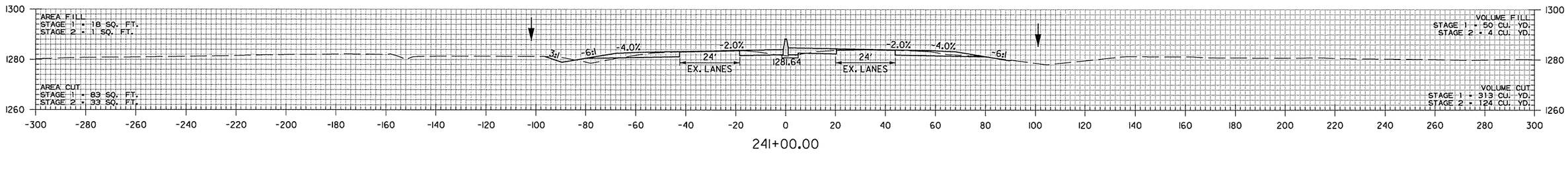

241+00.00

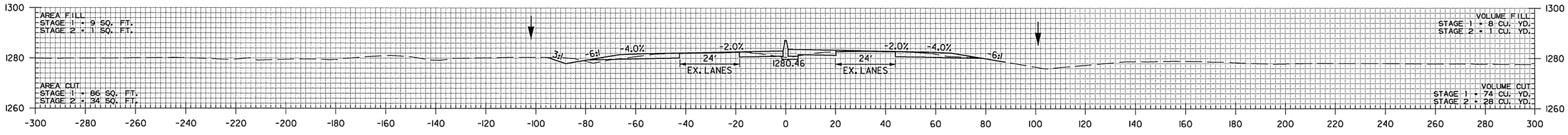

240+00.00

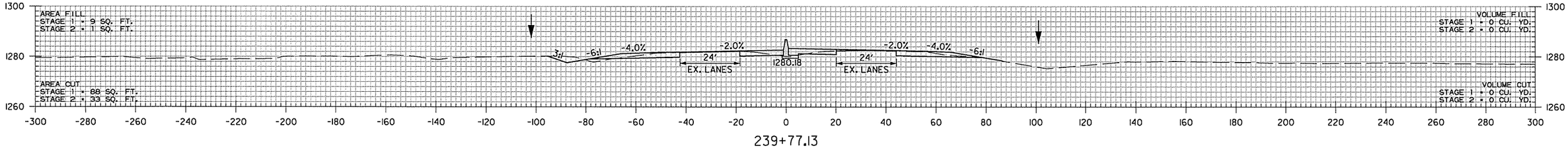

239+77.13

STA. 239+77.13 BEGIN JOB BB0414

AEWlerclark 3/20/2016 11:57:42 AM
WORKSPACE: AHTD
L:\20IN\10I7707 - I-540 Widening & Interchange Improvement\Drawings\rBB0414_CX_I-49..dgn
REVISED DATE:

DATE REVISED	DATE FILMED	DATE REVISED	DATE FILMED	FED.RD. DIST.NO.	STATE	FED.AID PROJ.NO.	SHEET NO.	TOTAL SHEETS
				6	ARK.			
				JOB NO.		BB0414	671	886
				(2)	CROSS SECTIONS			

STA. 247+45.00
BEGIN SP. DITCH RT. -2.66%
ELEV. 1287.01

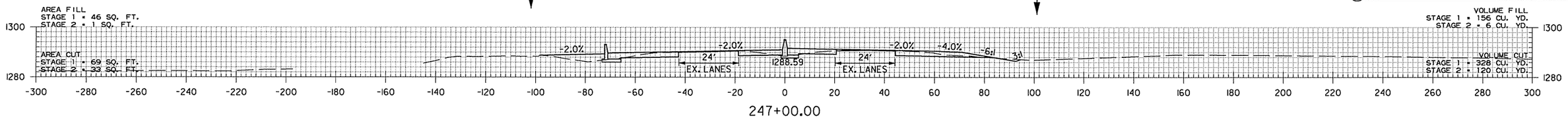

247+00.00

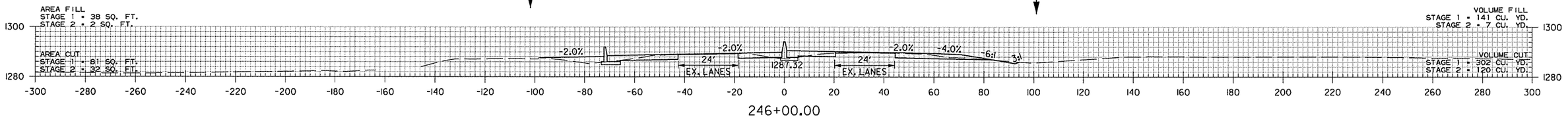

246+00.00

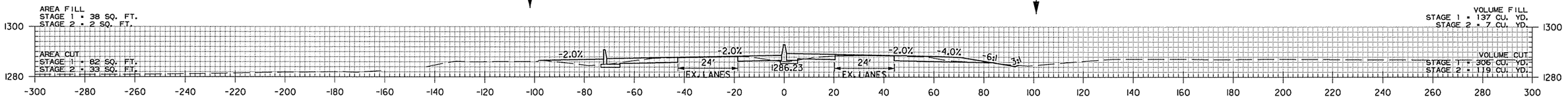

245+00.00

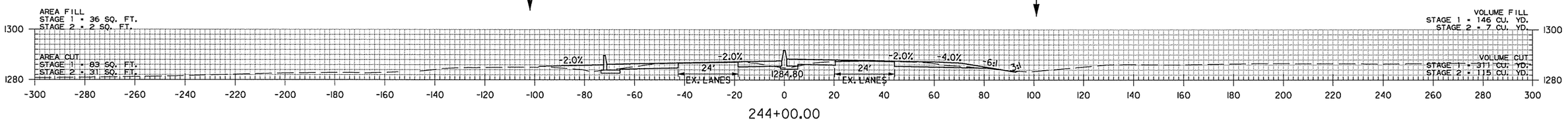

244+00.00

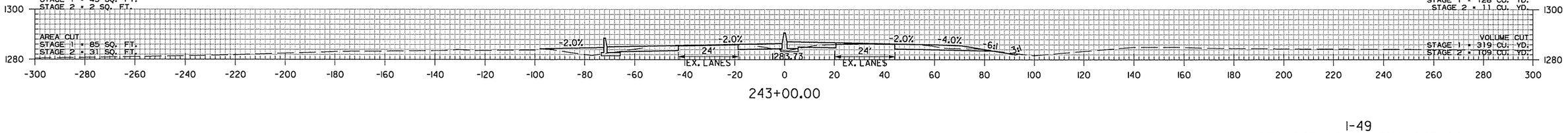

243+00.00

I-49
STA. 243+00 TO STA. 247+00

AEWierzlok 3/20/2016 11:57:43 AM
WORKSPACE: AHTD
L:\201\101707 - I-540 Widening & Interchange Improvement\Drawings\rBB0414_CX_I-49..dgn
REVISED DATE:

DATE REVISED	DATE FILMED	DATE REVISED	DATE FILMED	FED.RD. DIST.NO.	STATE	FED.AID PROJ.NO.	SHEET NO.	TOTAL SHEETS
				6	ARK.			
				JOB NO.		BB0414	672	886
				(2)	CROSS SECTIONS			

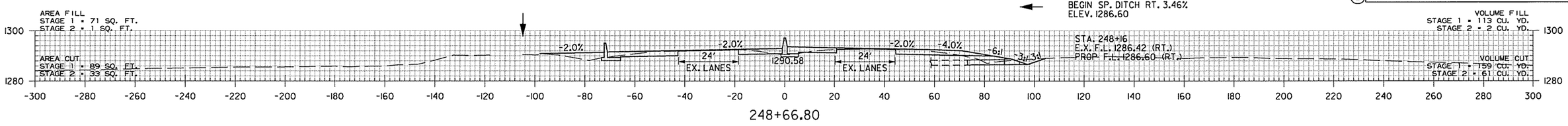

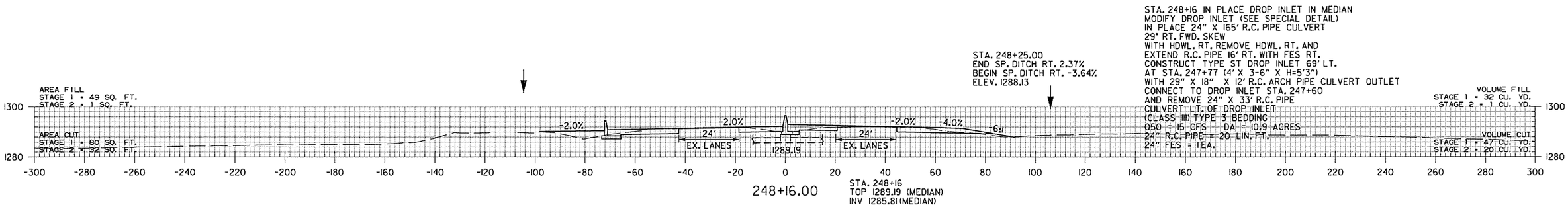

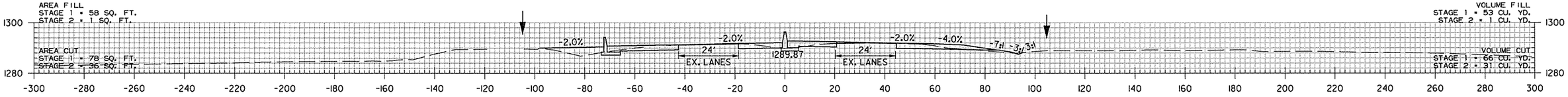

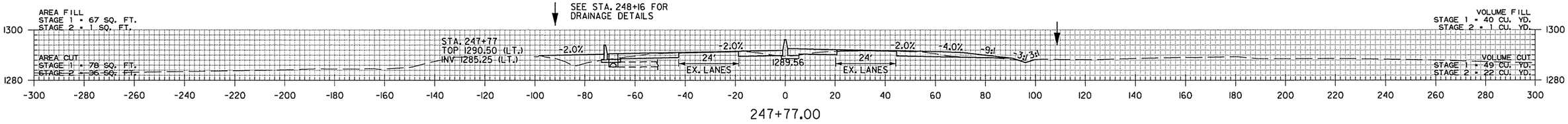

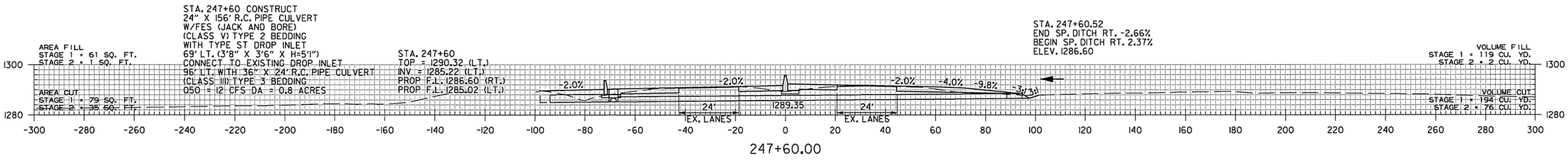

AEWierciak 3/20/2016 11:57:43 AM
WORKSPACE: AHTD
L:\2014\101707 - I-540 Widening & Interchange Improvement\Drawings\rBB0414_CX_I-49..dgn
REVISED DATE:

DATE REVISED	DATE FILMED	DATE REVISED	DATE FILMED	FED.RD. DIST.NO.	STATE	FED.AID PROJ.NO.	SHEET NO.	TOTAL SHEETS
				6	ARK.			
				JOB NO.		BB0414	673	886
				(2)		CROSS SECTIONS		

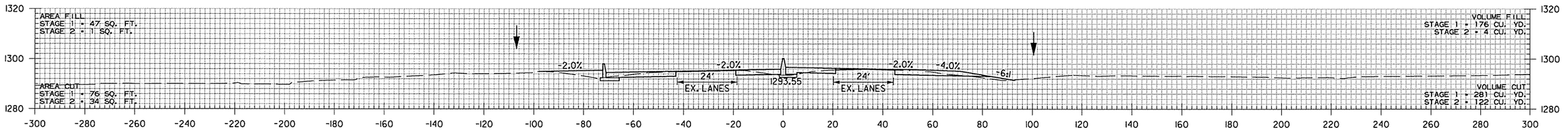

252+00.00

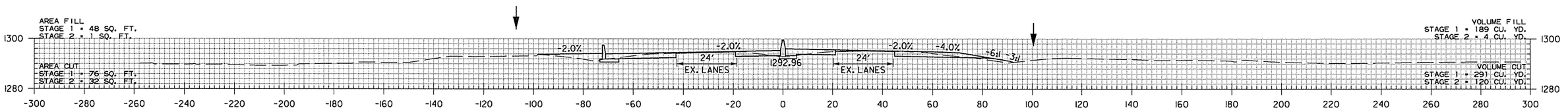

251+00.00

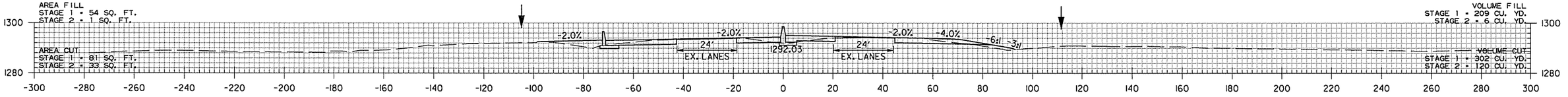

250+00.00

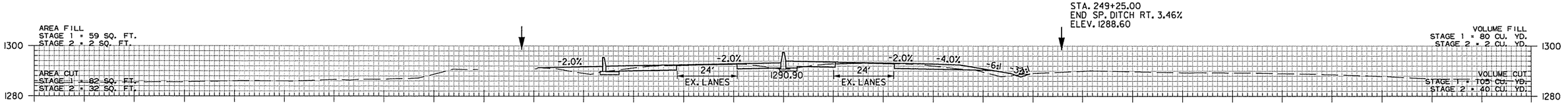

249+00.00

I-49
STA. 249+00 TO STA. 252+00

AEWarclok 3/20/2016 11:57:43 AM
WORKSPACE: AHTD
L:\208\100707 - I-540 Widening & Interchange Improvement\Drawings\rBB0414_CX_I-49..dgn
REVISED DATE:

DATE REVISED	DATE FILMED	DATE REVISED	DATE FILMED	FED.RD. DIST.NO.	STATE	FED.AID PROJ.NO.	SHEET NO.	TOTAL SHEETS
				6	ARK.			
				JOB NO.		BB0414	674	886
				(2)	CROSS SECTIONS			

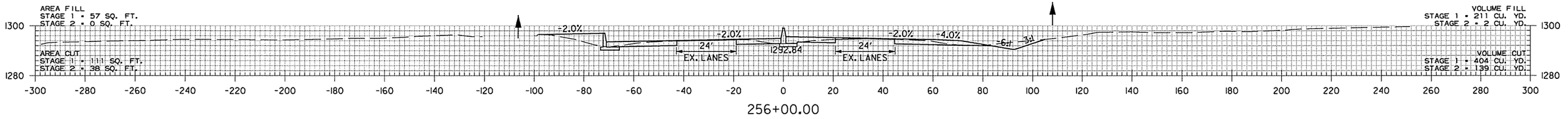

256+00.00

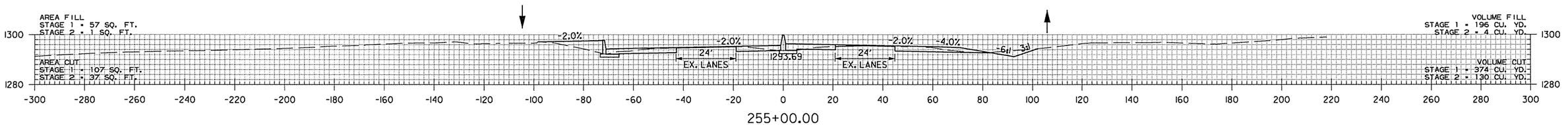

255+00.00

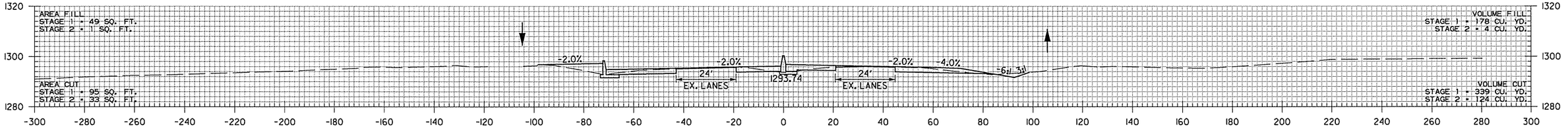

254+00.00

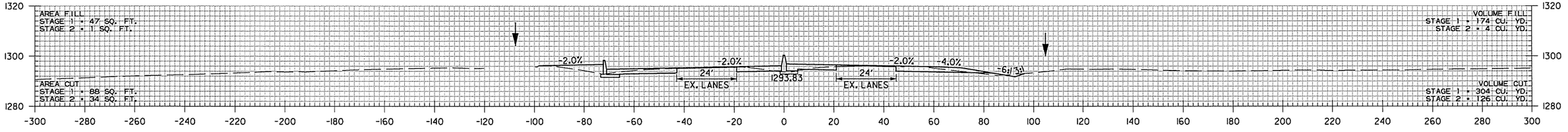

253+00.00

I-49
STA. 253+00 TO STA. 256+00

AEWerclok 3/20/2016 11:57:43 AM
WORKSPACE: AHTD
L:\20IN\10I7107 - I-540 Widening & Interchange Improvement\Drawings\rBB0414_CX_I-49_.dgn
REVISED DATE:

DATE REVISED	DATE FILMED	DATE REVISED	DATE FILMED	FED.RD. DIST.NO.	STATE	FED.AID PROJ.NO.	SHEET NO.	TOTAL SHEETS
				6	ARK.			
				JOB NO.		BB0414	675	886
				(2)		CROSS SECTIONS		

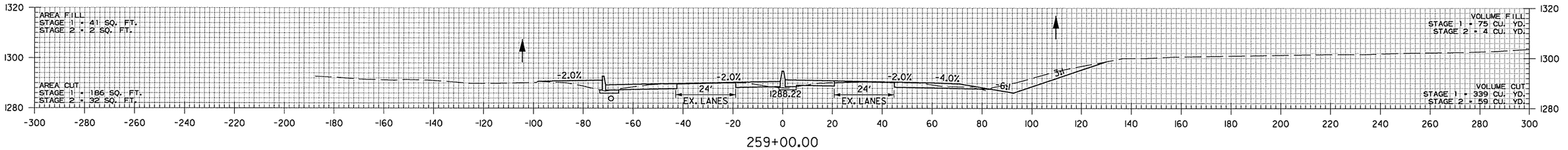

259+00.00

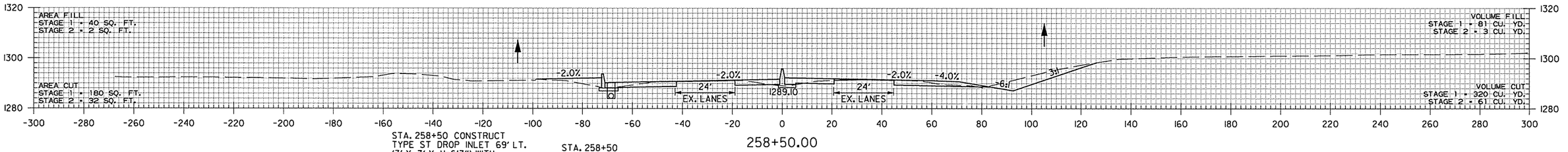

258+50.00

STA. 258+50 CONSTRUCT
TYPE ST DROP INLET 69' LT.
(3' X 3' X H=6'3") WITH
24" X 247' R.C. PIPE CULVERT
CONNECT TO DROP INLET
AT STA. 261+00
(CLASS III) TYPE 3 BEDDING

STA. 258+50
TOP = 1290.30 (LT.)
INV = 1284.05 (LT.)

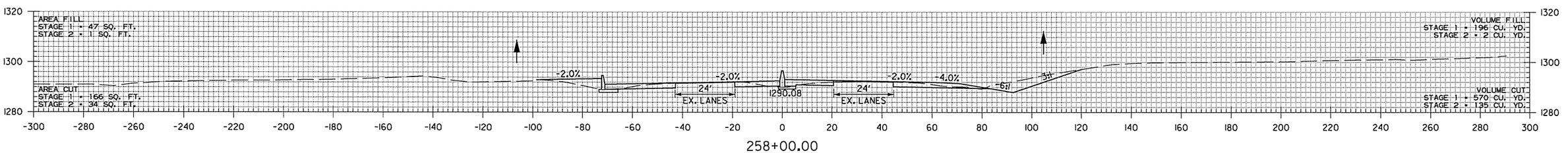

258+00.00

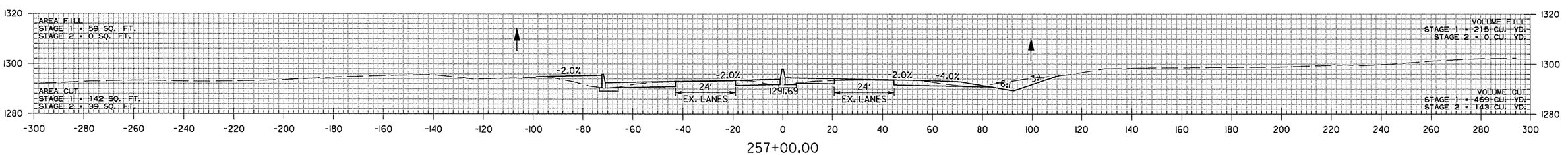

257+00.00

AEWierclok 3/20/2016 11:57:44 AM
WORKSPACE: AHTD
L:\20\NIO\TO7 - I-540 Widening & Interchange Improvement\Drawings\r-BB0414_CX_I-49_.dgn
REVISED DATE:

DATE REVISED	DATE FILMED	DATE REVISED	DATE FILMED	FED.RD. DIST.NO.	STATE	FED.AID PROJ.NO.	SHEET NO.	TOTAL SHEETS
				6	ARK.			
				JOB NO.		BB0414	676	886

(2) CROSS SECTIONS

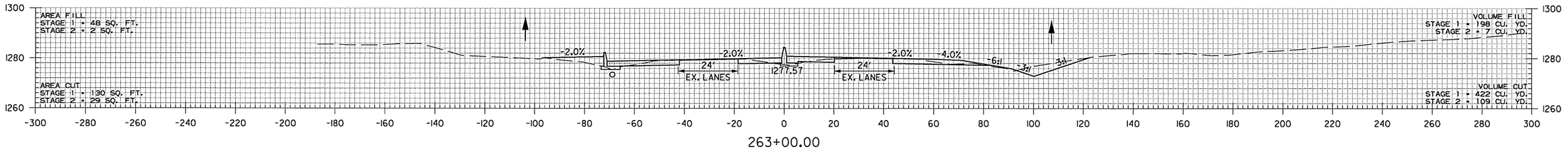

263+00.00

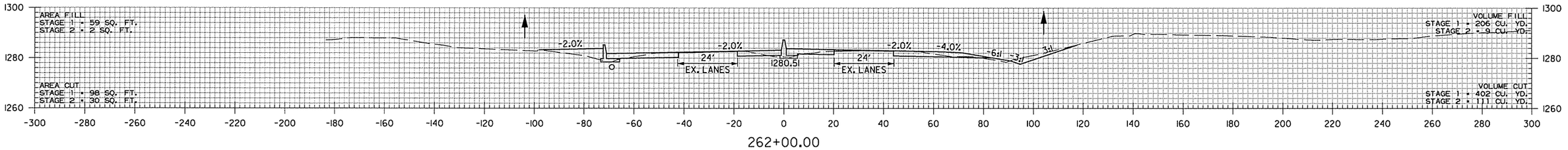

262+00.00

STA. 261+00 CONSTRUCT
TYPE ST DROP INLET
(3'0" X 3'0" X H=6'3") 69' LT.
WITH 24" X 297' R.C. PIPE CULVERT
CONNECT TO DROP INLET
AT STA. 264+00
(CLASS III) TYPE 3 BEDDING

STA. 261+50.00
BEGIN SP. DITCH RT. -4.75%
ELEV. 1280.04

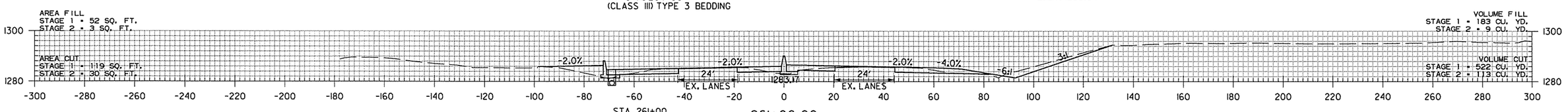

STA. 261+00
TOP = 1284.65 (LT.)
INV = 1278.40 (LT.)

261+00.00

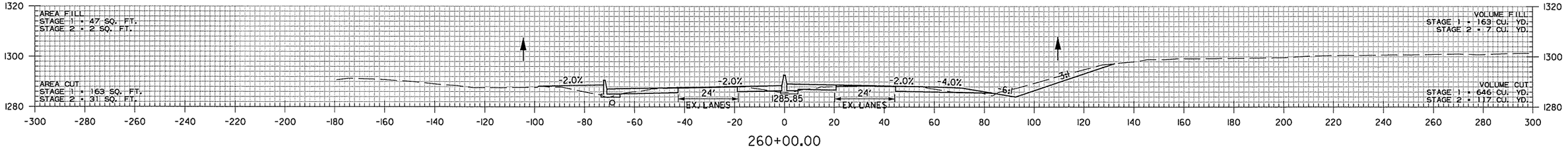

260+00.00

AEWierdak 3/20/2016 11:57:44 AM
WORKSPACE: AHTD
L:\20II\0II707 - I-540 Widening & Interchange Improvement\Drawings\rBB0414_CX_I-49..dgn
REVISED DATE:

DATE REVISED	DATE FILMED	DATE REVISED	DATE FILMED	FED.RD. DIST.NO.	STATE	FED.AID PROJ.NO.	SHEET NO.	TOTAL SHEETS
				6	ARK.			
				JOB NO.		BB0414	677	886

(2) CROSS SECTIONS

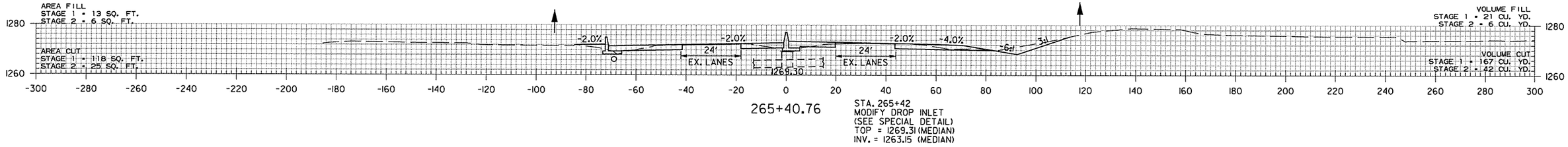

265+40.76

STA. 265+42
MODIFY DROP INLET
(SEE SPECIAL DETAIL)
TOP = 1269.31 (MEDIAN)
INV. = 1263.15 (MEDIAN)

STA. 265+05.00
END SP. DITCH RT. 4.66%
ELEV. 1269.43

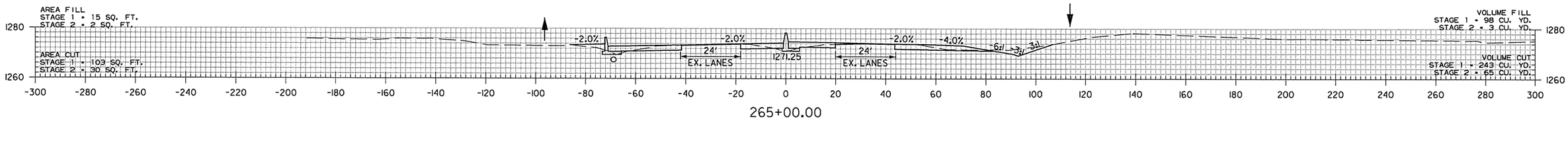

265+00.00

STA. 265+42 IN PLACE
36" X 215' R.C. PIPE CULVERT WITH HDWL. RT.
REMOVE HDWL. RT. AND EXTEND R.C. PIPE 30' RT.
REMOVE 12" PIPE LT. AND CONSTRUCT TYPE ST
DROP INLET (6' X 4' X H=8'5") STA. 266+09.50 69' LT.
WITH 36" X 8' R.C. PIPE OUTLET
CONNECT TO DROP INLET AT STA. 266+22 LT.
(CLASS III) TYPE 3 BEDDING WITH FES RT.
IN PLACE DROP INLET IN MEDIAN
MODIFY DROP INLET (SEE SPECIAL DETAIL)
Q50 = 25 CFS DA = 6.2 ACRES
36" R.C. PIPE = 42 LIN. FT.
36" FES = 1 EA.

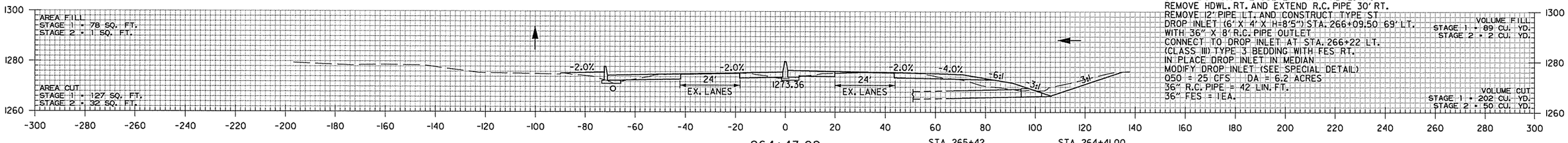

264+43.02

STA. 265+42
EX. F.L. = 1265.51 (RT.)
PROP. F.L. = 1266.44 (RT.)

STA. 264+41.00
BEGIN SP. DITCH RT. 4.66%
ELEV. 1266.44

STA. 264+00 CONSTRUCT
TYPE ST DROP INLET
(3'0" X 3'0" X H=6'3") 69' LT.
WITH 24" X 205' R.C. PIPE CULVERT
CONNECT TO DROP INLET
AT STA. 266+09
(CLASS III) TYPE 3 BEDDING

STA. 264+36.00
END SP. DITCH RT. -4.75%
ELEV. 1266.44

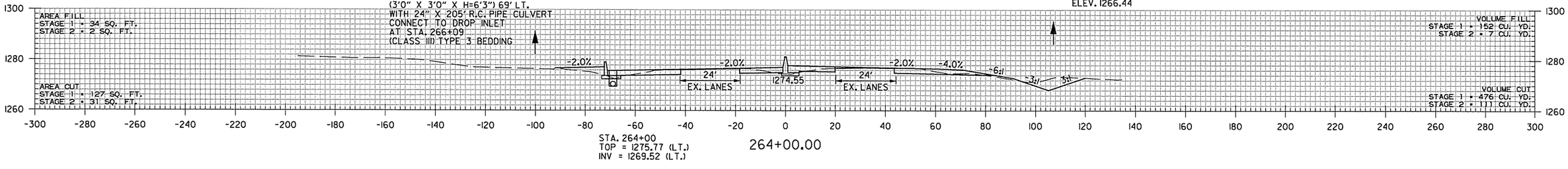

STA. 264+00
TOP = 1275.77 (LT.)
INV = 1269.52 (LT.)

264+00.00

I-49
STA. 264+00 TO STA. 265+41

AEWierdak 3/20/2016 11:57:44 AM
WORKSPACE: AHTD
L:\20IN\I0I770T - I-540 Widening & Interchange Improvement\Drawings\rBB0414_CX_I-49..dgn
REVISED DATE:

DATE REVISED	DATE FILMED	DATE REVISED	DATE FILMED	FED.RD. DIST.NO.	STATE	FED.AID PROJ.NO.	SHEET NO.	TOTAL SHEETS
				6	ARK.			
				JOB NO.		BB0414	678	886
				(2)		CROSS SECTIONS		

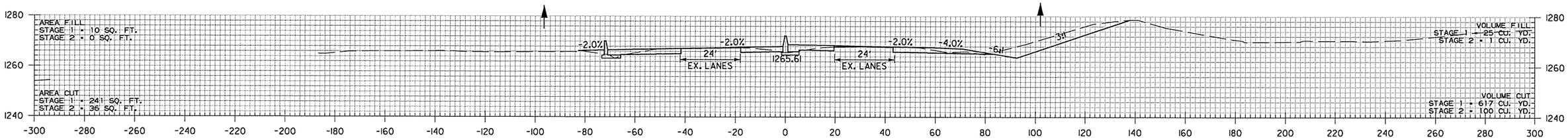

267+00.00

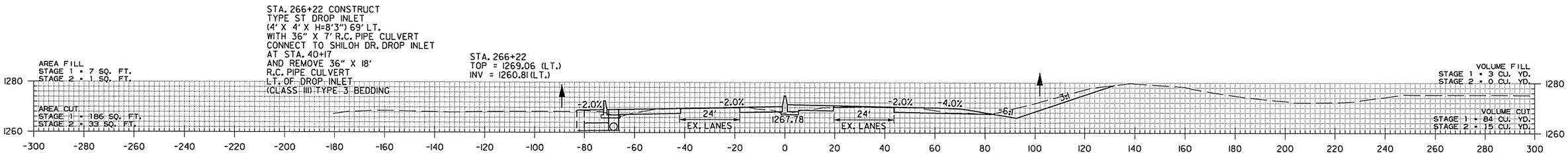

266+22.00

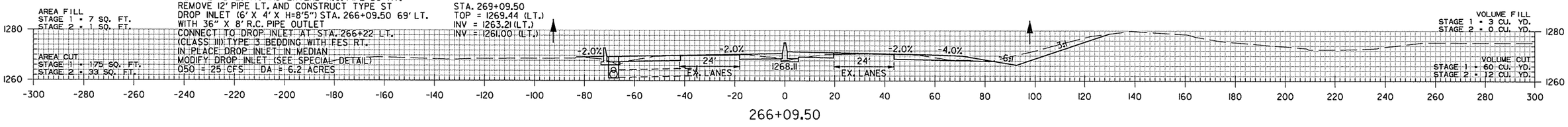

266+09.50

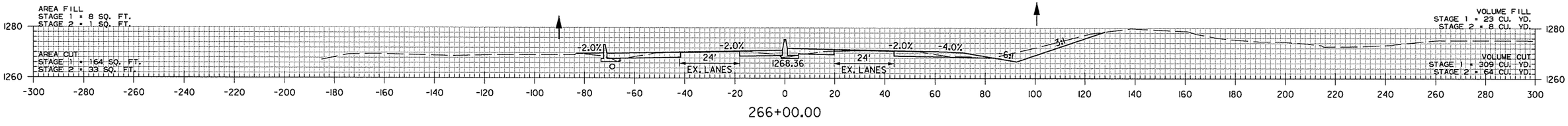

266+00.00

I-49
STA. 266+00 TO STA. 267+00

AEWierzlak 3/20/2016 11:57:44 AM
WORKSPACE: AHTD
L:\2016\16017OT - I-540 Widening & Interchange Improvement\Drawings\rBB0414_CX_I-49..dgn
REVISED DATE:

DATE REVISED	DATE FILMED	DATE REVISED	DATE FILMED	FED.RD. DIST.NO.	STATE	FED.AID PROJ.NO.	SHEET NO.	TOTAL SHEETS
				6	ARK.			
				JOB NO.		BB0414	679	886
				(2)	CROSS SECTIONS			

STA. 270+20.84 LT.
BEGIN 300' TAPER

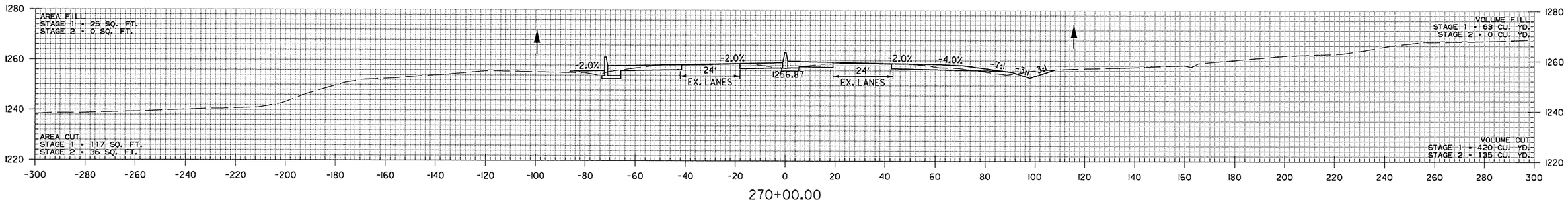

270+00.00

STA. 269+00.00
BEGIN SP. DITCH RT. -4.42%
ELEV. 1257.56

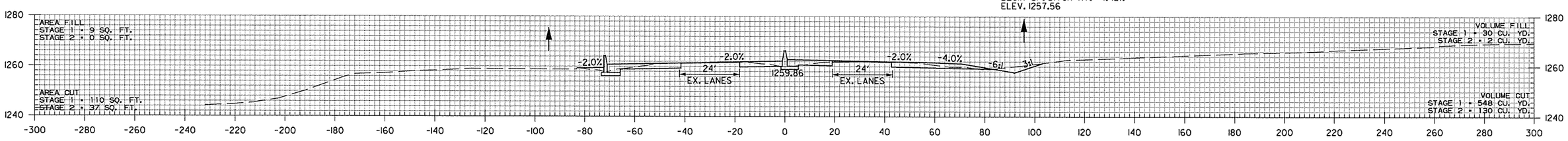

269+00.00

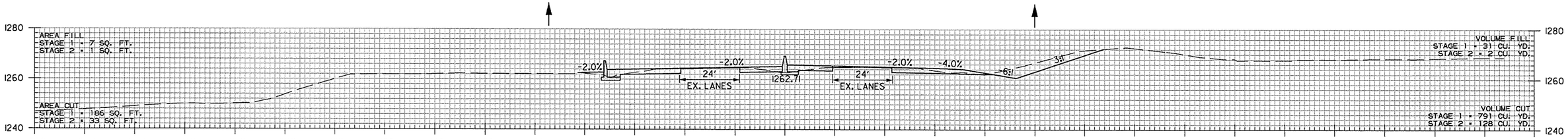

268+00.00

I-49
STA. 268+00 TO STA. 270+00

AEWierciak 3/20/2016 11:57:44 AM
WORKSPACE: AHTD
L:\20\1\10\7707 - I-540 Widening & Interchange Improvement\Drawings\rBB0414_CX_I-49_.dgn
REVISED DATE:

DATE REVISED	DATE FILMED	DATE REVISED	DATE FILMED	FED.RD. DIST.NO.	STATE	FED.AID PROJ.NO.	SHEET NO.	TOTAL SHEETS
				6	ARK.			
				JOB NO.		BB0414	680	886
				(2)	CROSS SECTIONS			

STA. 271+77 CONSTRUCT
TYPE ST DROP INLET
(3'0" X 3'0" X H=6'3") 71' LT.
WITH 24" X 12' R.C. PIPE CULVERT
CONNECT TO SHILOH DR. DROP INLET
AT STA. 45+71
(CLASS III) TYPE 3 BEDDING

STA. 271+77
TOP = 1252.36
INV = 1246.11

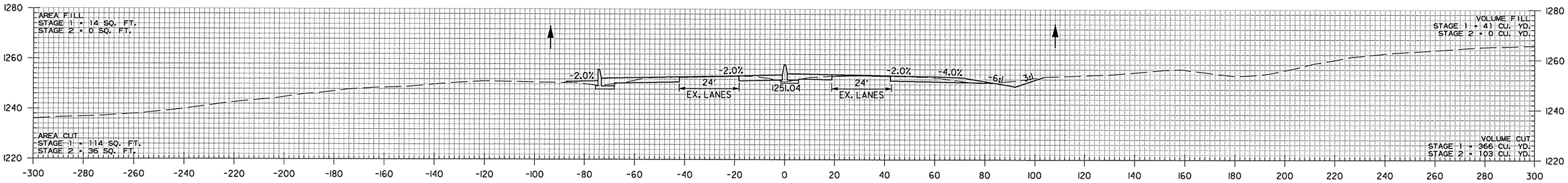

271+77.00

STA. 271+75.00
BEGIN SP. DITCH RT. -4.33%
ELEV. 1249.21

STA. 270+50.00
END SP. DITCH RT. 4.27%
ELEV. 1253.01

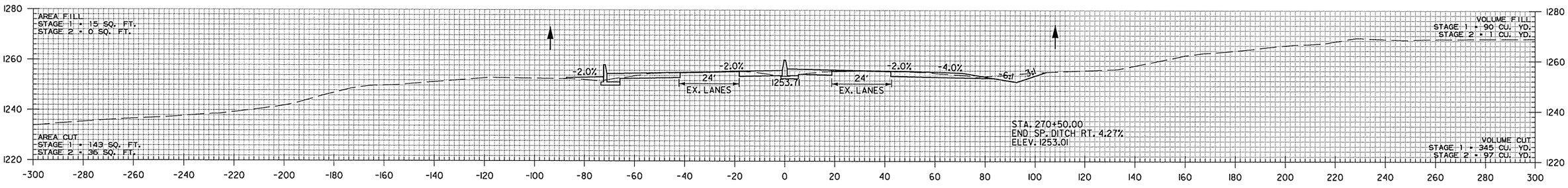

271+00.00

STA. 270+26.00
END SP. DITCH RT. -4.42%
BEGIN SP. DITCH RT. 4.27%
ELEV. 1251.99

STA. 270+26 IN PLACE
36" X 184' R.C. PIPE CULVERT
WITH HDWL. RT. REMOVE HDWL. RT. AND
EXTEND R.C. PIPE 15' RT.
CONSTRUCT TYPE ST DROP INLET
(4' X 3' X H=11'2") 69' LT.
(CLASS III) TYPE 3 BEDDING WITH FES RT.
IN PLACE DROP INLET IN MEDIAN
MODIFY DROP INLET (SEE SPECIAL DETAIL)
Q50 = 38 CFS DA = 13.4 ACRES
36" R.C. PIPE = 19 LIN. FT.
36" FES = 1 EA.

STA. 270+26 LT.
TOP = 1256.92
INV = 1245.78

STA. 270+26 RT.
EX. F.L. = 1251.15 (RT.)
PROP F.L. = 1251.98 (RT.)

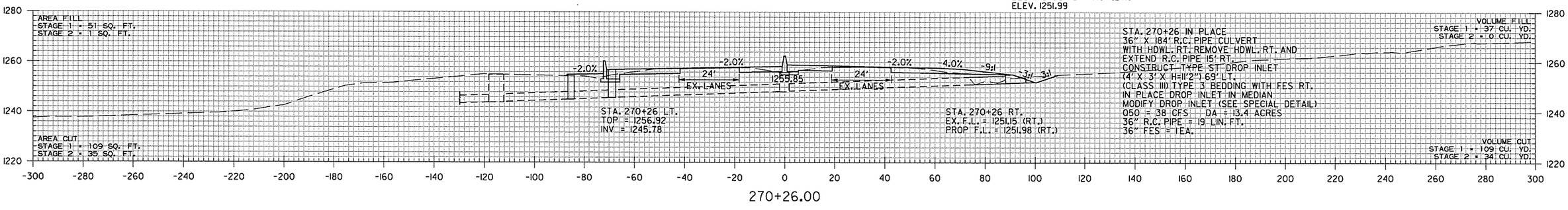

270+26.00

AEWierciak 3/20/2016 11:57:44 AM
WORKSPACE: AHTD
L:\2011\101707 - I-540 Widening & Interchange Improvement\Drawings\RBB0414_CX_I-49_.dgn
REVISED DATE:

DATE REVISED	DATE FILMED	DATE REVISED	DATE FILMED	FED.RD. DIST.NO.	STATE	FED.AID PROJ.NO.	SHEET NO.	TOTAL SHEETS
				6	ARK.			
				JOB NO.		BB0414	681	886
				(2)		CROSS SECTIONS		

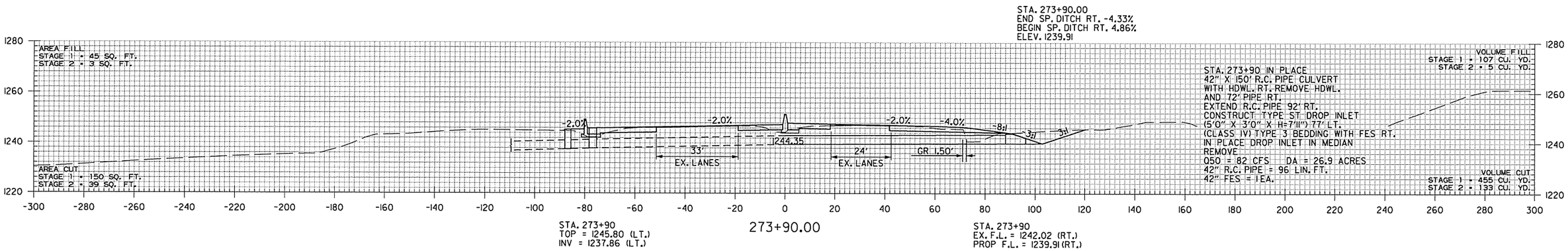

STA. 273+20.84 LT.
END 300' TAPER

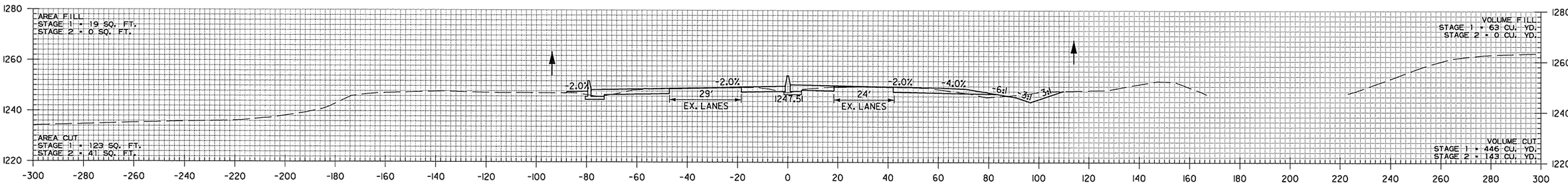

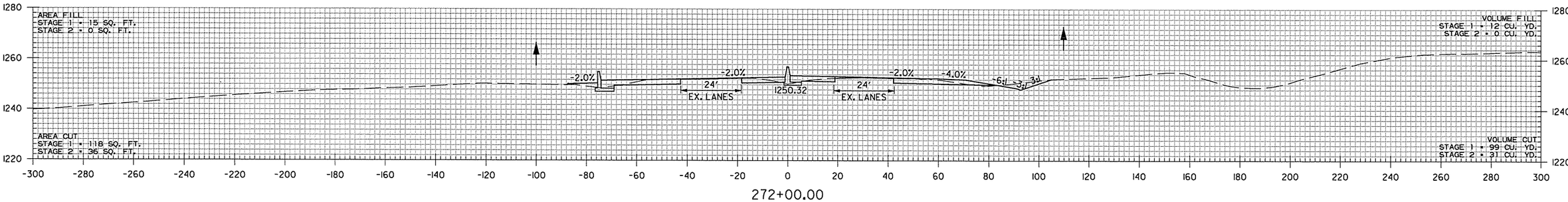

I-49
STA. 272+00 TO STA. 273+90

AEWierclak 3/20/2016 11:57:45 AM
WORKSPACE: AHTD
L:\201\100177.07 - I-540 Widening & Interchange Improvement\Drawings\rBB0414_CX_I-49_.dgn
REVISED DATE:

DATE REVISED	DATE FILMED	DATE REVISED	DATE FILMED	FED.RD. DIST.NO.	STATE	FED.AID PROJ.NO.	SHEET NO.	TOTAL SHEETS
				6	ARK.			
				JOB NO.		BB0414	682	886
				(2)	CROSS SECTIONS			

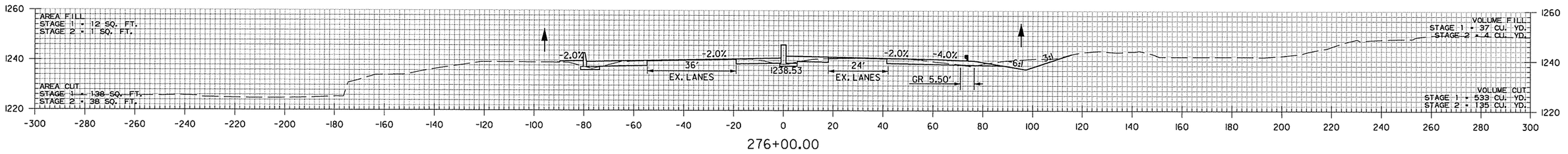

276+00.00

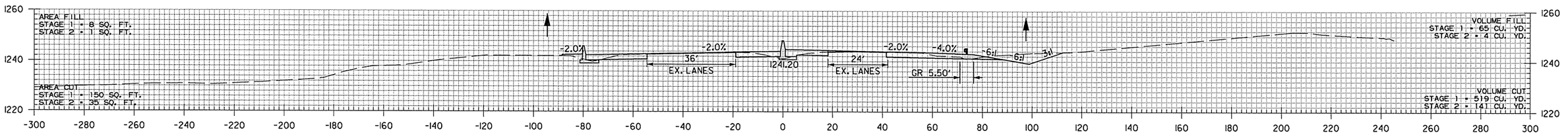

275+00.00

STA. 274+25.00
END SP. DITCH RT. 4.86%
ELEV. 1241.61

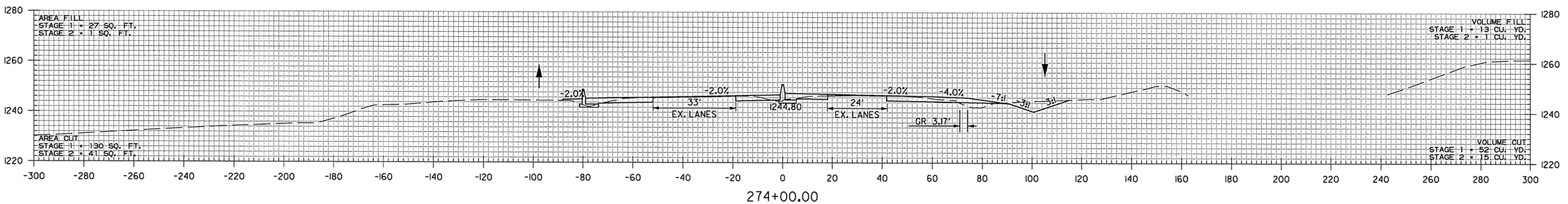

274+00.00

I-49
STA. 274+00 TO STA. 276+00

AEWerclok 3/20/2016 11:57:45 AM
WORKSPACE: AHTD
L:\2011\107707 - I-540 Widening & Interchange Improvement\Drawings\rBB0414_CX_I-49_.dgn
REVISED DATE:

DATE REVISED	DATE FILMED	DATE REVISED	DATE FILMED	FED.RD. DIST.NO.	STATE	FED.AID PROJ.NO.	SHEET NO.	TOTAL SHEETS
				6	ARK.			
				JOB NO.		BB0414	683	886

(2) CROSS SECTIONS

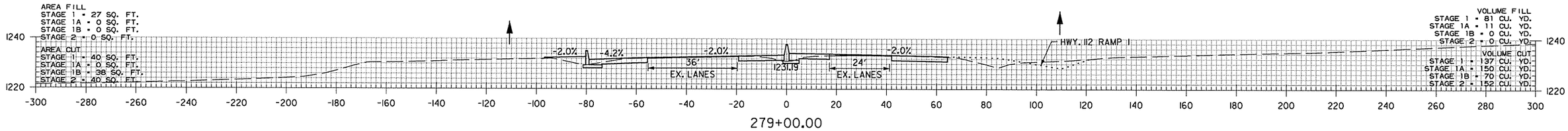

279+00.00

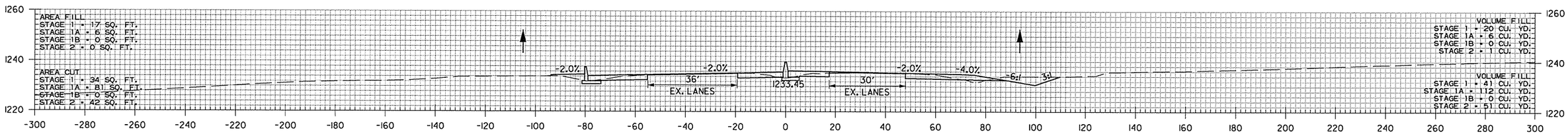

278+00.00

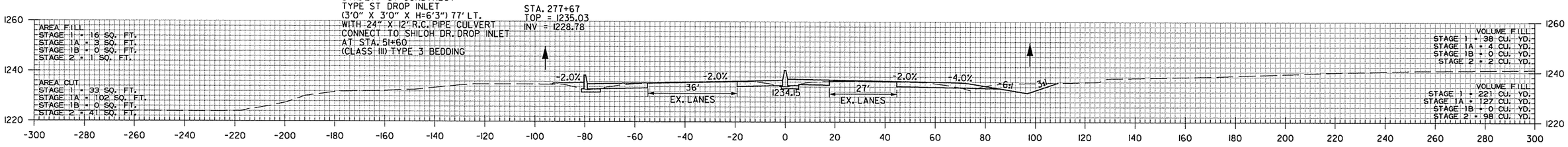

277+67.00

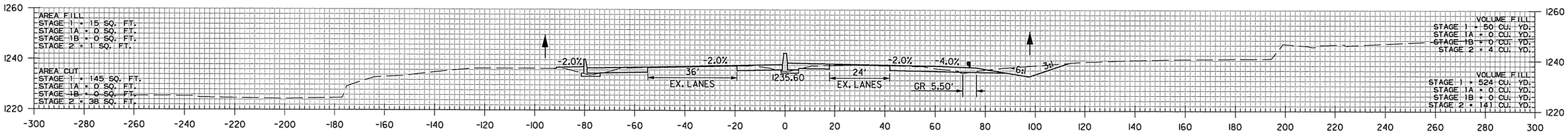

277+00.00

AEWierclok 3/20/2016 11:57:45 AM
WORKSPACE: AHTD
L:\2016\160707 - I-540 Widening & Interchange Improvement\Drawings\r-BB0414_CX_I-49_.dgn
REVISED DATE:

DATE REVISED	DATE FILMED	DATE REVISED	DATE FILMED	FED.RD. DIST.NO.	STATE	FED.AID PROJ.NO.	SHEET NO.	TOTAL SHEETS
				6	ARK.			
				JOB NO.		BB0414	684	886
				(2)		CROSS SECTIONS		

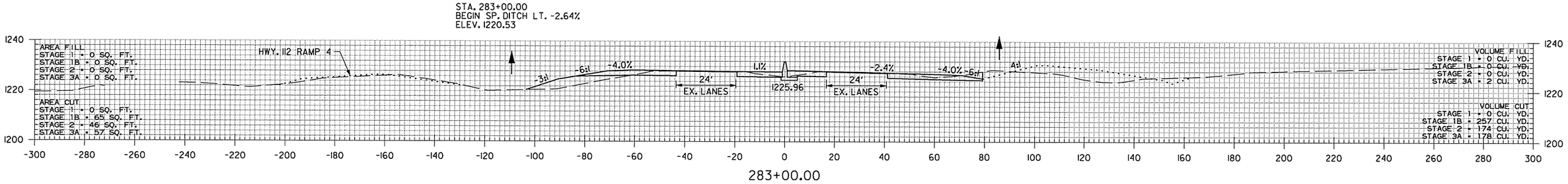

283+00.00

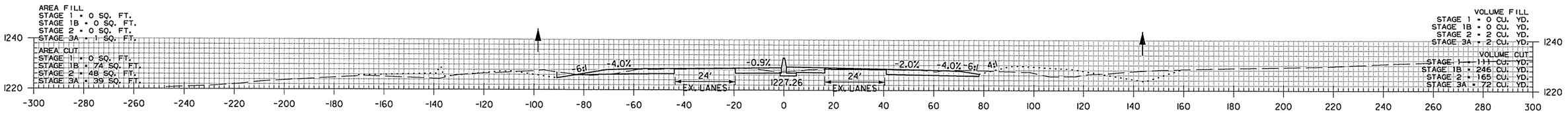

282+00.00

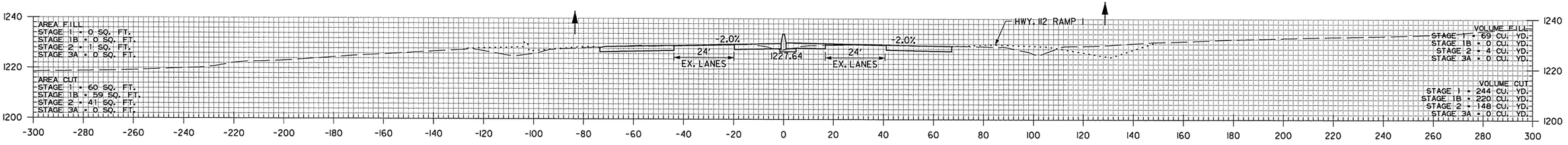

281+00.00

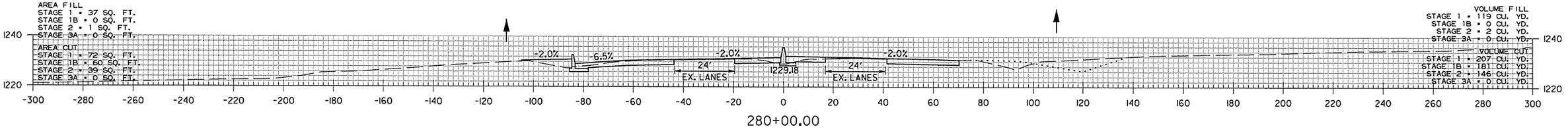

280+00.00

I-49
STA. 280+00 TO STA. 283+00

AEWierzbicki 3/20/2016 11:57:45 AM
WORKSPACE: AHTD
L:\2016\16017107 - I-540 Widening & Interchange Improvement\Drawings\rBB0414_CX_I-49..dgn
REVISED DATE:

DATE REVISED	DATE FILMED	DATE REVISED	DATE FILMED	FED.RD. DIST.NO.	STATE	FED.AID PROJ.NO.	SHEET NO.	TOTAL SHEETS
				6	ARK.			
				JOB NO.		BB0414	685	886

(2) CROSS SECTIONS

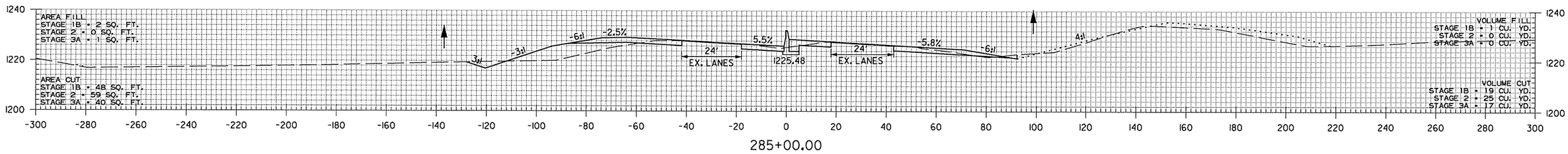

285+00.00

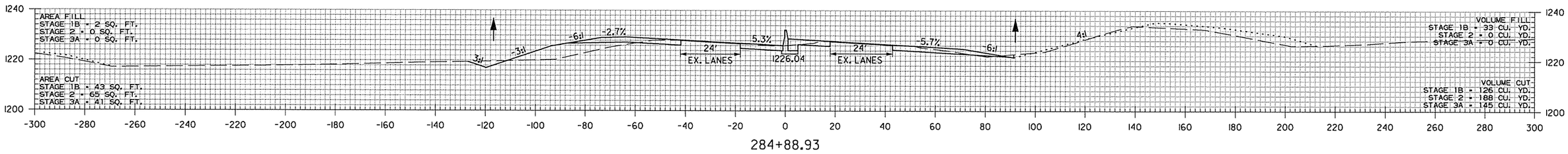

284+88.93

STA. 284+05.00
END SP. DITCH LT. -2.64%
BEGIN SP. DITCH LT. -0.86%
ELEV. 1217.76

STA. 284+05
TOP = 1226.57 (MEDIAN)
INV = 1218.31 (MEDIAN)
PROP F.L. = 1217.76 (LT.)
PROP F.L. = 1218.79 (RT.)

284+05.00

STA. 284+05 CONSTRUCT
42" X 192' R.C. PIPE CULVERT
(CLASS IV) TYPE 3 BEDDING WITH
TYPE ST DROP INLET 3' LT.
(4'6" X 3' X H=8'3") AND FES LT.
CONNECT TO JUNCTION BOX AT
RAMP 1STA. 283+99 RT.

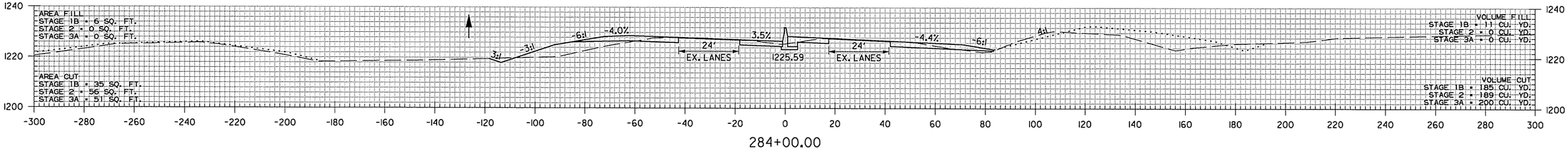

284+00.00

I-49
STA. 284+00 TO STA. 285+00

AEWier-clark 3/20/2016 11:57:45 AM
WORKSPACE: AHTD
L:\20II\II0I707 - I-540 Widening & Interchange Improvement\Drawings\rBB04I4_CX_I-49..dgn
REVISED DATE:

DATE REVISED	DATE FILMED	DATE REVISED	DATE FILMED	FED.RD. DIST.NO.	STATE	FED.AID PROJ.NO.	SHEET NO.	TOTAL SHEETS
				6	ARK.			
				JOB NO.		BB0414	686	886
				(2)	CROSS SECTIONS			

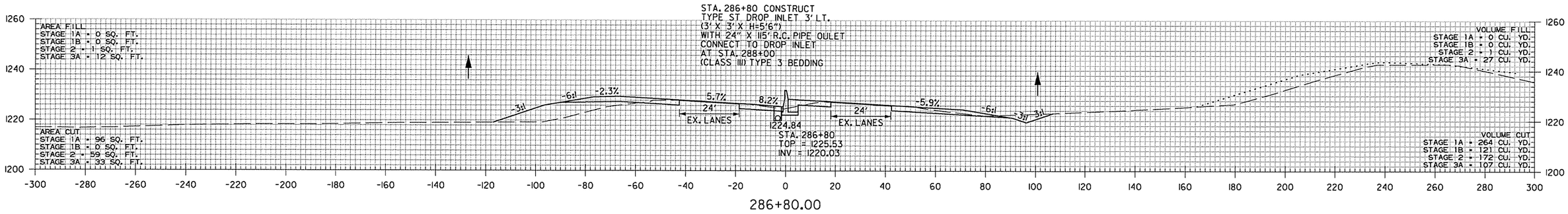

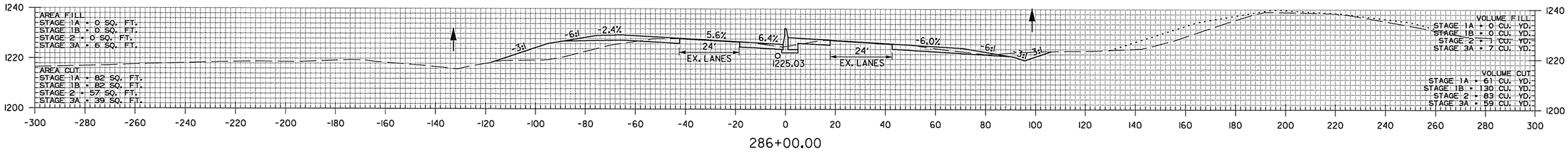

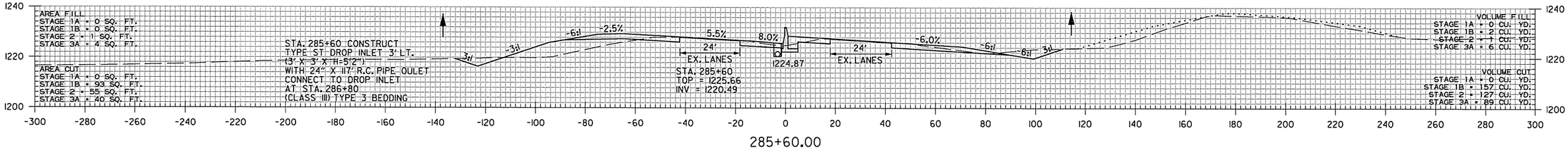

I-49
STA. 285+60 TO STA. 286+80

AEWlarcisk 3/20/2016 11:57:45 AM
WORKSPACE: AHTD
L:\20\1\01770T - I-540 Widening & Interchange Improvement\Drawings\rBB0414_CX_I-49_.dgn
REVISED DATE:

DATE REVISED	DATE FILMED	DATE REVISED	DATE FILMED	FED.RD. DIST.NO.	STATE	FED.AID PROJ.NO.	SHEET NO.	TOTAL SHEETS
				6	ARK.			
				JOB NO.		BB0414	687	886
				(2)	CROSS SECTIONS			

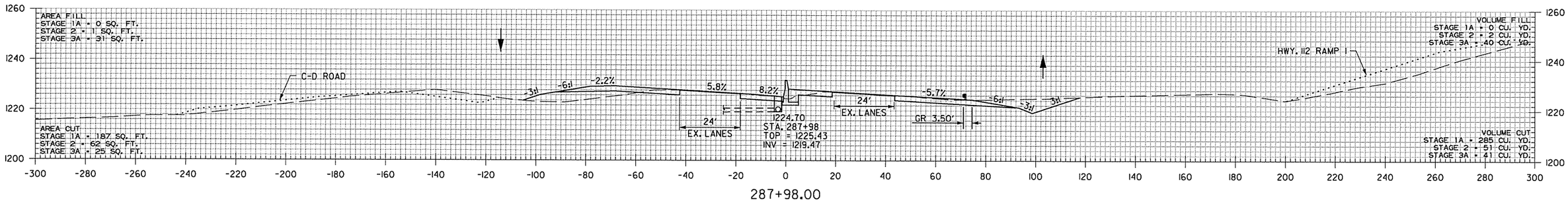

287+98.00

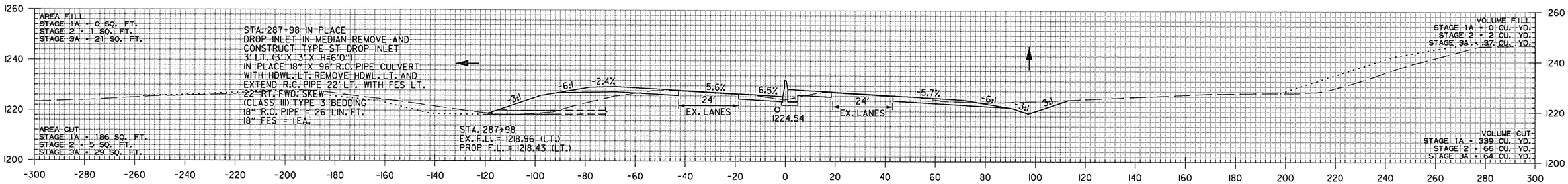

287+56.75

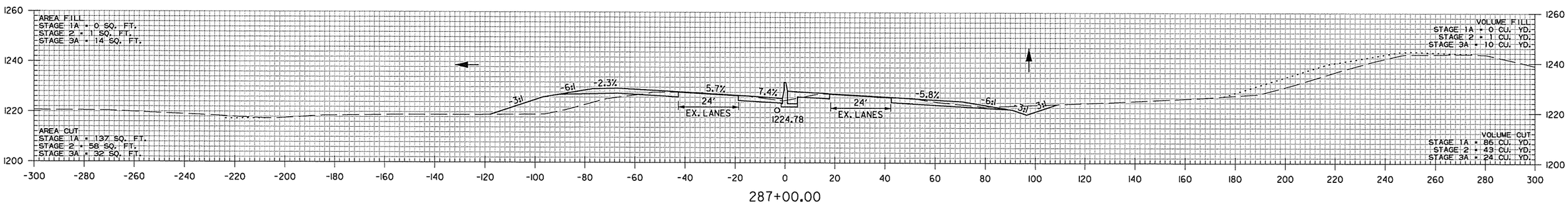

287+00.00

I-49
STA. 287+00 TO STA. 287+98

AEWierclok 3/20/2006 11:57:46 AM
WORKSPACE: AHTD
L:\20IN\I0I7I07 - I-540 Widening & Interchange Improvemen1\Drawings\rBB0414_CX_I-49_.dgn
REVISED DATE:

DATE REVISED	DATE FILMED	DATE REVISED	DATE FILMED	FED.RD. DIST.NO.	STATE	FED.AID PROJ.NO.	SHEET NO.	TOTAL SHEETS
				6	ARK.			
				JOB NO.		BB0414	688	886
				(2)	CROSS SECTIONS			

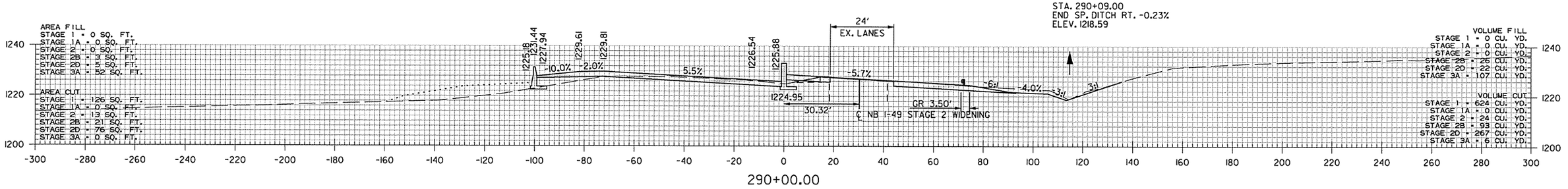

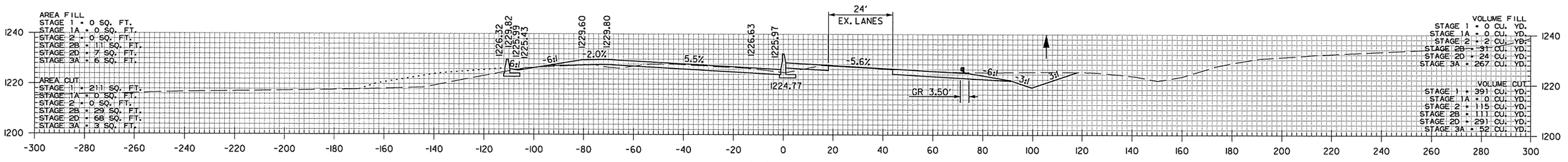

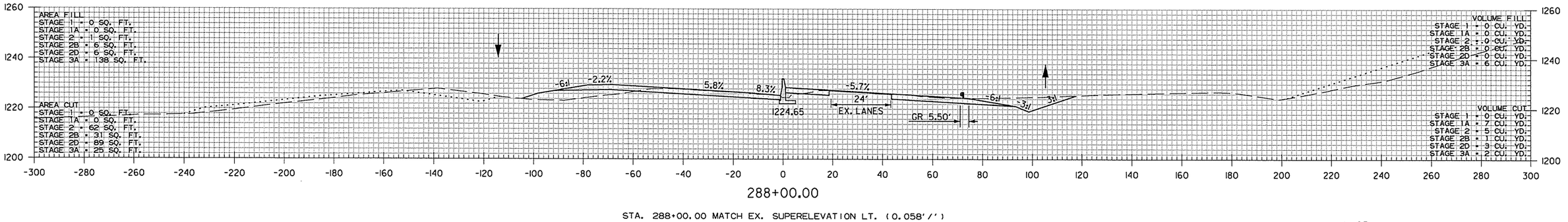

STA. 288+00.00 MATCH EX. SUPERELEVATION LT. (0.058'/')

I-49
STA. 288+00 TO STA. 290+00

AEWarelak 3/20/2016 11:57:46 AM
WORKSPACE: AHTD
L:\20IN\10I7TOT - I-540 Widening & Interchange Improvement\Drawings\rBB0414_CX_I-49_.dgn
REVISED DATE:

DATE REVISED	DATE FILMED	DATE REVISED	DATE FILMED	FED.RD. DIST.NO.	STATE	FED.AID PROJ.NO.	SHEET NO.	TOTAL SHEETS
				6	ARK.			
				JOB NO.		BB0414	689	886

(2) CROSS SECTIONS

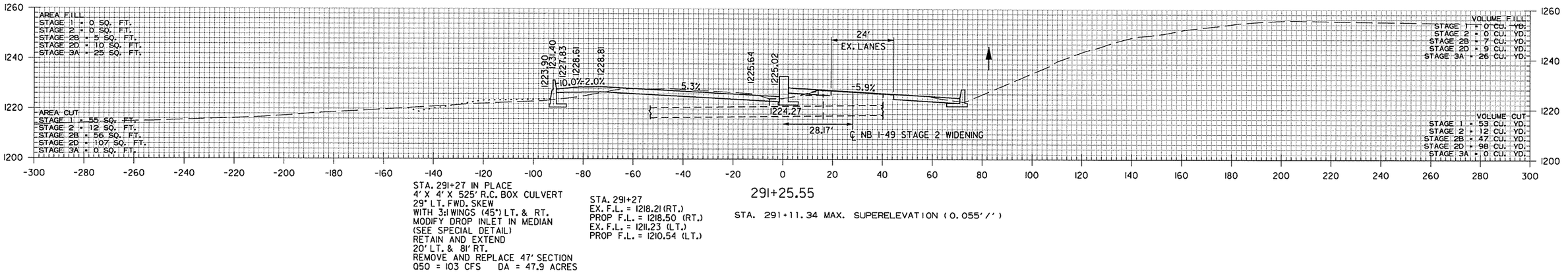

STA. 291+27 IN PLACE
4' X 4' X 525' R.C. BOX CULVERT
29° LT. FWD. SKEW
WITH 3:1 WINGS (45°) LT. & RT.
MODIFY DROP INLET IN MEDIAN
(SEE SPECIAL DETAIL)
RETAIN AND EXTEND
20' LT. & 8' RT.
REMOVE AND REPLACE 47' SECTION
Q50 = 103 CFS DA = 47.9 ACRES

STA. 291+27
EX. F.L. = 1218.21 (RT.)
PROP F.L. = 1218.50 (RT.)
EX. F.L. = 1211.23 (LT.)
PROP F.L. = 1210.54 (LT.)

291+25.55

STA. 291+11.34 MAX. SUPERELEVATION (0.055'/')

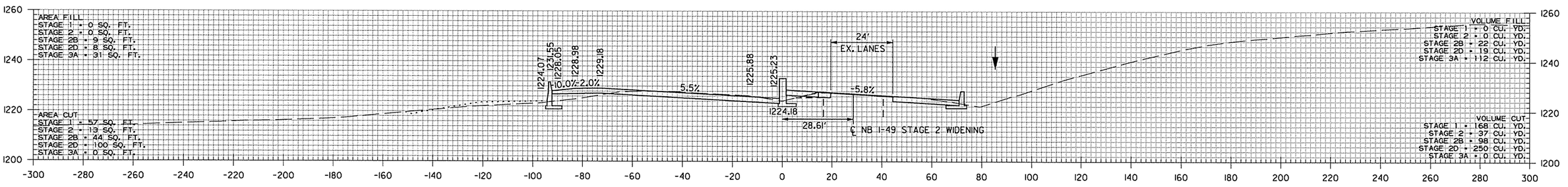

291+00.00

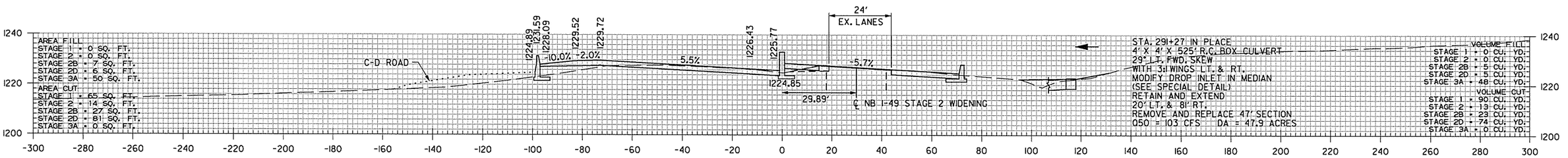

290+25.45

STA. 291+27 IN PLACE
4' X 4' X 525' R.C. BOX CULVERT
29° LT. FWD. SKEW
WITH 3:1 WINGS LT. & RT.
MODIFY DROP INLET IN MEDIAN
(SEE SPECIAL DETAIL)
RETAIN AND EXTEND
20' LT. & 8' RT.
REMOVE AND REPLACE 47' SECTION
Q50 = 103 CFS DA = 47.9 ACRES

STA. 291+27
EX. F.L. = 1218.21 (RT.)
PROP F.L. = 1218.50 (RT.)
EX. F.L. = 1211.13 (LT.)
PROP F.L. = 1210.54 (LT.)

I-49
STA. 290+25 TO STA. 291+26

AEWierciak 3/20/2016 11:57:46 AM
WORKSPACE: AHTD
L:\201\101707 - I-540 Widening & Interchange Improvement\Drawings\r-BB0414_CX_I-49_.dgn
REVISED DATE:

DATE REVISED	DATE FILMED	DATE REVISED	DATE FILMED	FED.RD. DIST.NO.	STATE	FED.AID PROJ.NO.	SHEET NO.	TOTAL SHEETS
				6	ARK.			
				JOB NO.		BB0414	690	886

(2) CROSS SECTIONS

STA. 292+68.89 BEGIN SUPERELEVATION LT. (0.032'/')
STA. 292+68.89 END SUPERELEVATION LT. (0.032'/')

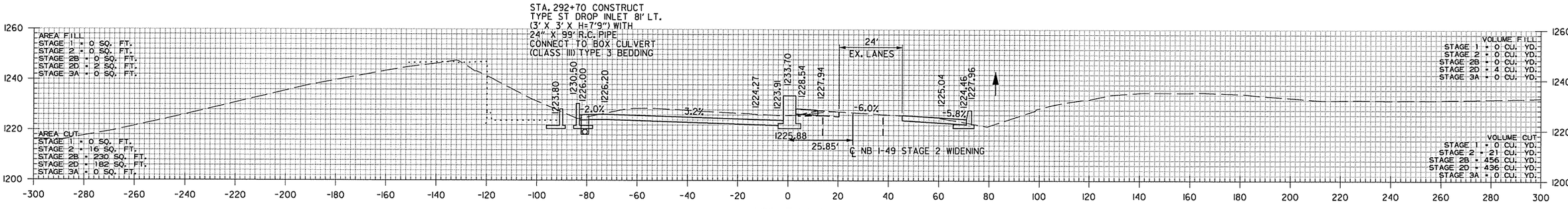

292+70.00

STA. 292+70
TOP = 1226.00
INV = 1218.25
F.L. = 1217.35
AT BOX CULV.

STA. 292+42.59 MATCH EX. SUPERELEVATION RT.

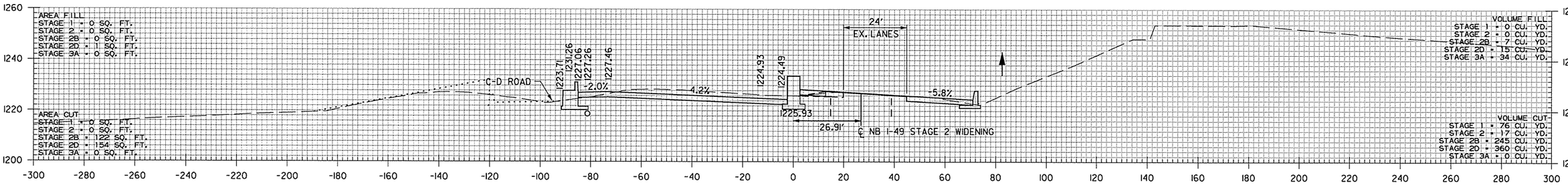

292+00.00

I-49
STA. 292+00 TO STA. 292+70

AEWierclok 3/20/2016 11:57:46 AM
WORKSPACE: AHTD
L:\20IN\10I7707 - I-540 Widening & Interchange Improvement\Drawings\rBB0414_CX_I-49_.dgn
REVISED DATE:

DATE REVISED	DATE FILMED	DATE REVISED	DATE FILMED	FED.RD. DIST.NO.	STATE	FED.AID PROJ.NO.	SHEET NO.	TOTAL SHEETS
				6	ARK.			
				JOB NO.		BB0414	691	886
				(2)		CROSS SECTIONS		

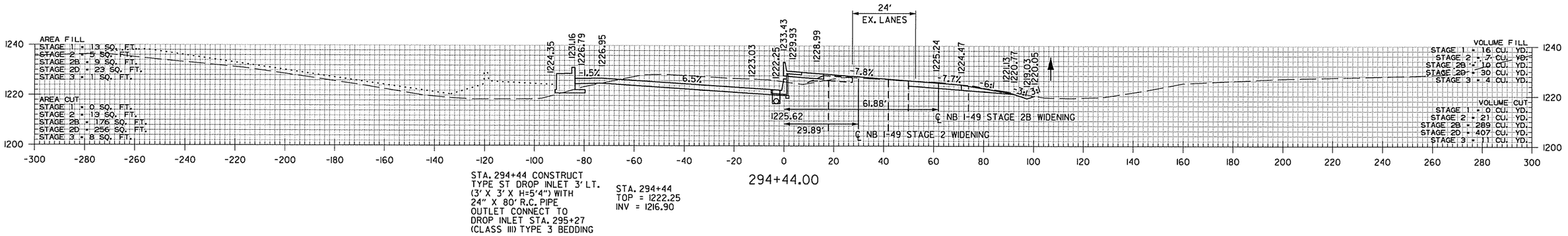

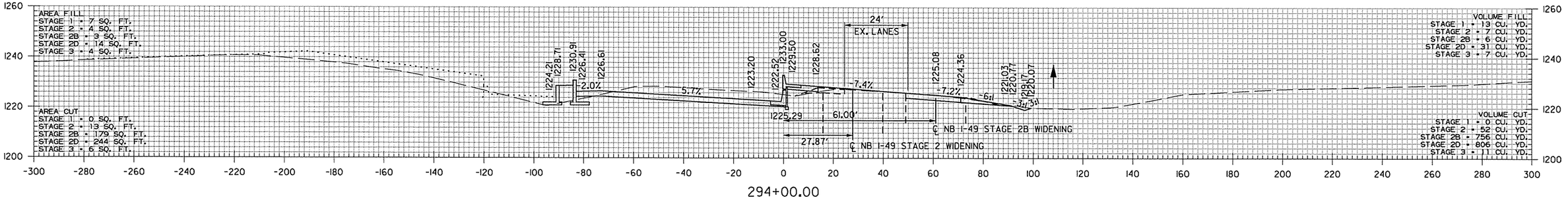

STA. 293+25.00
BEGIN SP. DITCH RT. -0.33%
ELEV. 1219.42

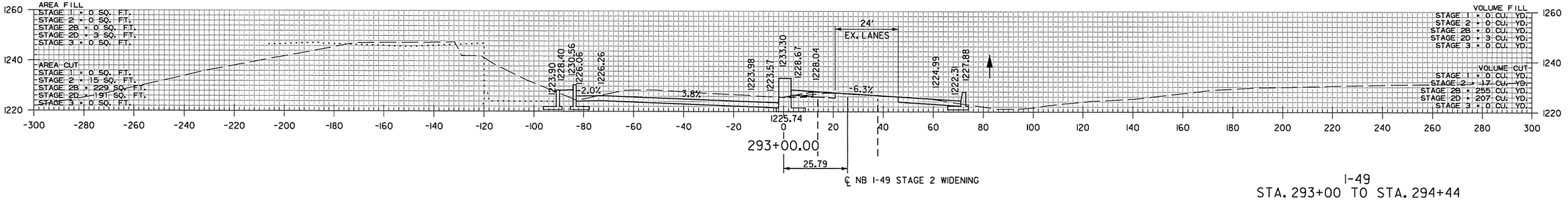

I-49
STA. 293+00 TO STA. 294+44

AEWierciak 3/20/2016 11:57:46 AM
WORKSPACE: AHTD
L:\20\1\101707 - I-540 Widening & Interchange Improvement\Drawings\rBB0414_CX_I-49_.dgn
REVISED DATE:

DATE REVISED	DATE FILMED	DATE REVISED	DATE FILMED	FED.RD. DIST.NO.	STATE	FED.AID PROJ.NO.	SHEET NO.	TOTAL SHEETS
				6	ARK.			
				JOB NO.		BB0414	692	886

(2) CROSS SECTIONS

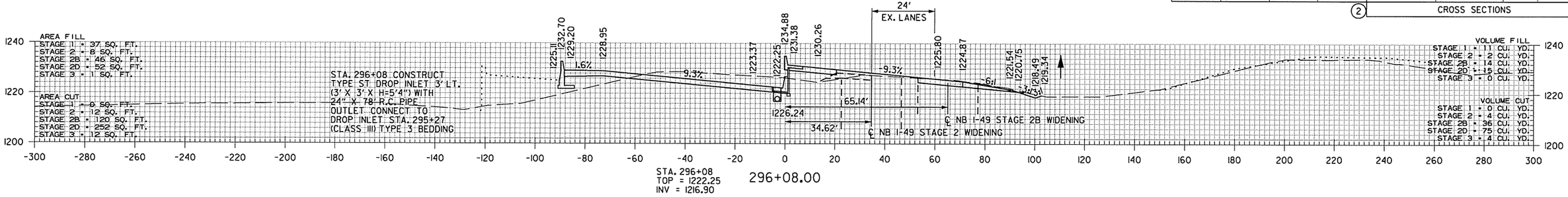

STA. 296+08
TOP = 1222.25
INV = 1216.90

296+08.00

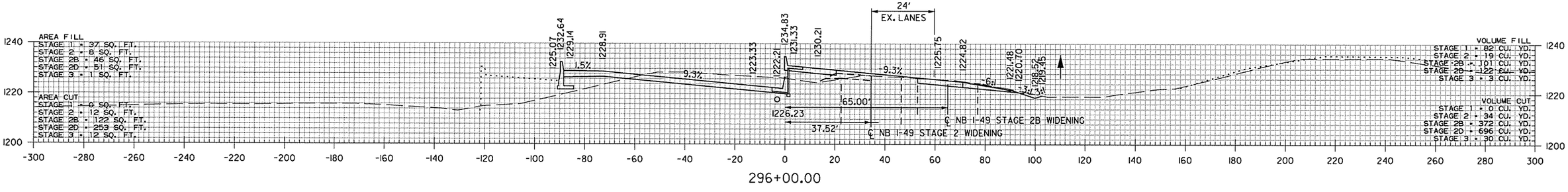

296+00.00

STA. 295+90.16 MAX. SUPERELEVATION (0.093'/')

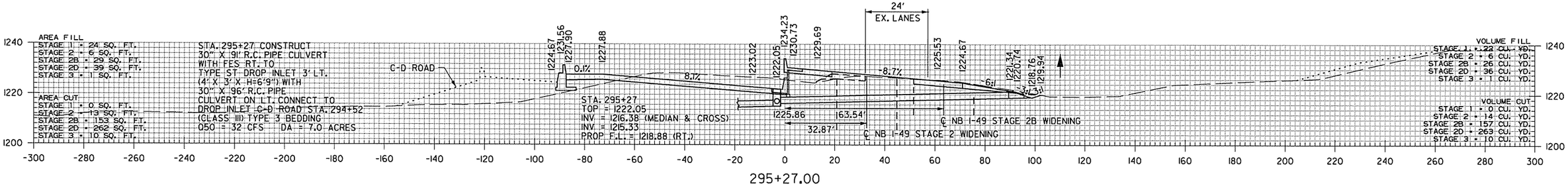

STA. 295+27
TOP = 1222.05
INV = 1216.38 (MEDIAN & CROSS)
INV = 1215.33
PROP F.L. = 1218.88 (RT.)

295+27.00

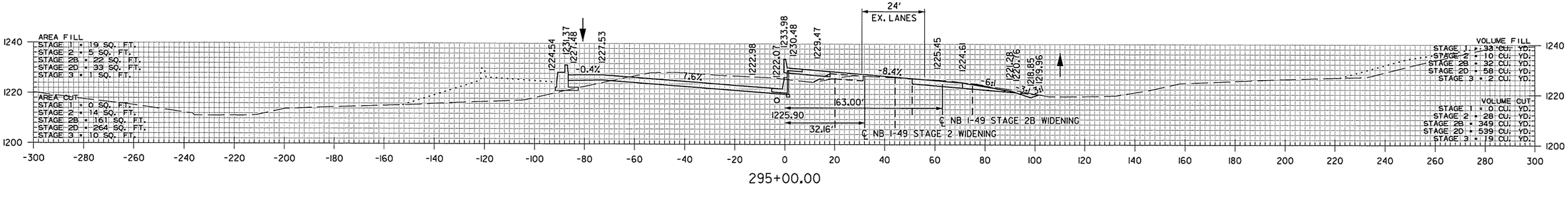

295+00.00

I-49
STA. 295+00 TO STA. 296+08

AEWierciak 3/20/2016 11:57:47 AM
WORKSPACE: AHTD
L:\201\11Q17107 - I-540 Widening & Interchange Improvement\Drawings\rBB0414_CX_I-49_.dgn
REVISED DATE:

DATE REVISED	DATE FILMED	DATE REVISED	DATE FILMED	FED.RD. DIST.NO.	STATE	FED.AID PROJ.NO.	SHEET NO.	TOTAL SHEETS
				6	ARK.			
				JOB NO.		BB0414	693	886

(2) CROSS SECTIONS

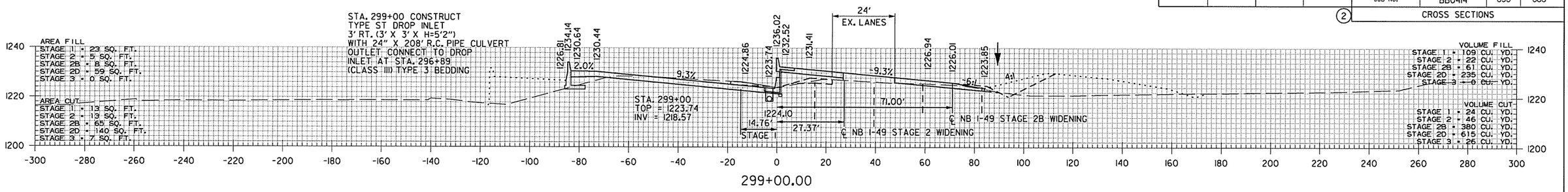

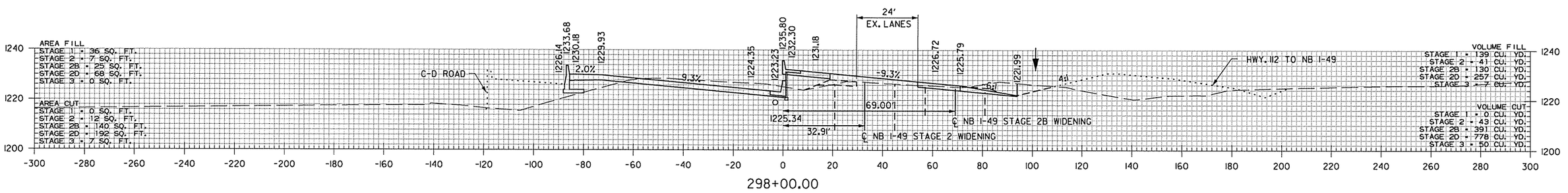

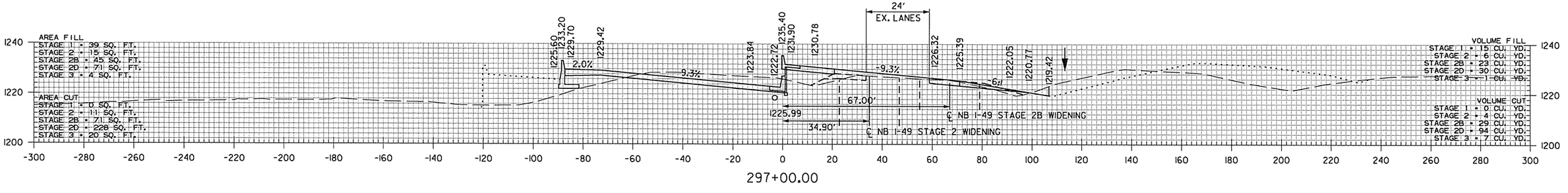

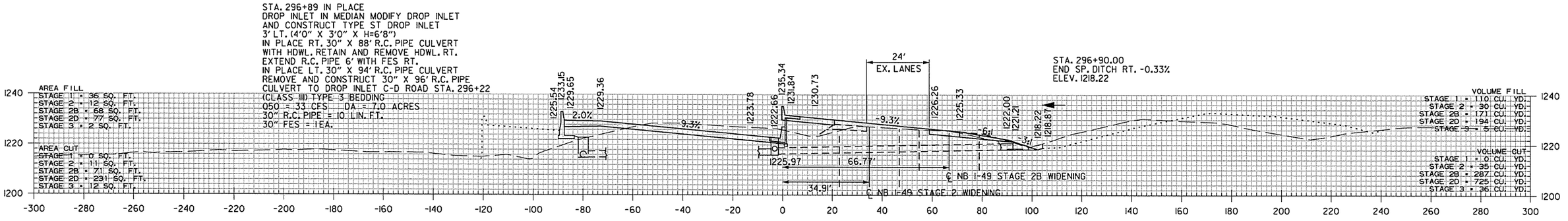

I-49 STA. 296+89 STAGE 1 CONSTRUCT
TEMPORARY TYPE RM DROP INLET 80' LT.
(4' X 4' X H=8'0") WITH
30" X 37' R.C. PIPE CULVERT
CONNECT TO DROP INLET
C-D RD. STA. 296+26

STA. 296+89 STAGE 1
TOP = 1222.84
INV = 1214.84

STA. 296+89
TOP = 1222.66 (MEDIAN)
INV = 1217.50 (MEDIAN)
INV = 1215.99 (MEDIAN)
EX. F.L. = 1218.13 (RT.)
PROP F.L. = 1218.22 (RT.)

I-49
STA. 296+89 TO STA. 299+00

AEWarelak 3/20/2016 11:57:47 AM
WORKSPACE: AHTD
L:\20IN\I40I7OT - I-540 Widening & Interchange Improvement\Drawings\rBB0414_CX_I-49..dgn
REVISED DATE:

DATE REVISED	DATE FILMED	DATE REVISED	DATE FILMED	FED.RD. DIST.NO.	STATE	FED.AID PROJ.NO.	SHEET NO.	TOTAL SHEETS
				6	ARK.			
				JOB NO.		BB0414	694	886

(2) CROSS SECTIONS

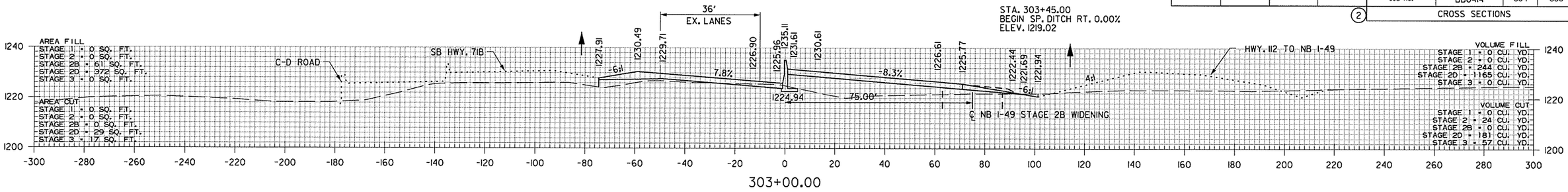

STA. 302+21.16 MAX. SUPERELEVATION (0.093'/')

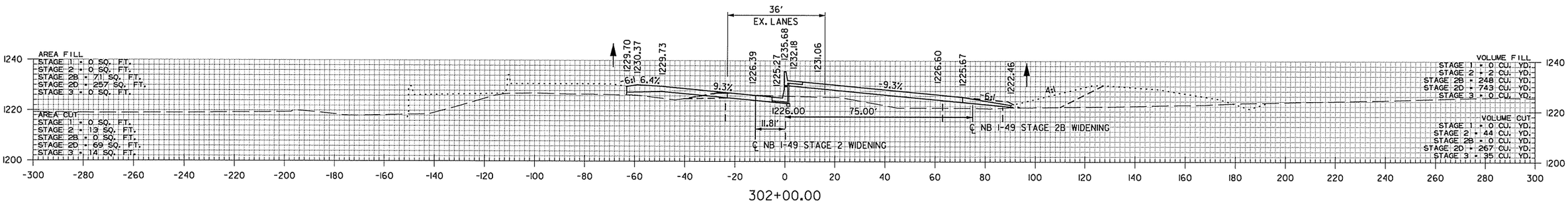

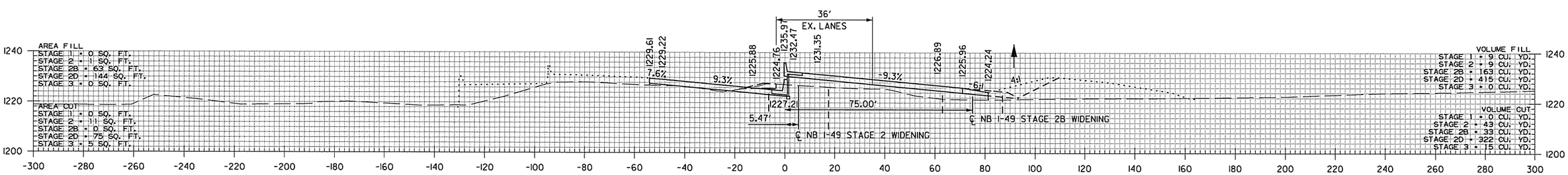

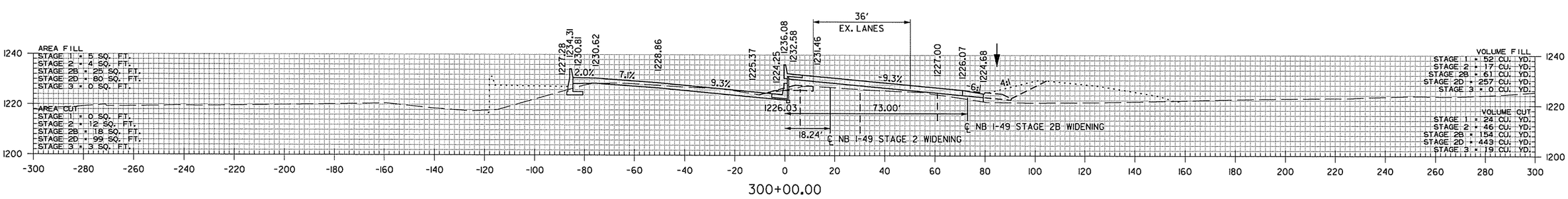

I-49
STA. 300+00 TO STA. 303+00

AEWierdak 3/20/2016 11:57:47 AM
WORKSPACE: AHTD
L:\20IN\10I7707 - I-540 Widening & Interchange Improvement\Drawings\rBB0414_CX_I-49..dgn
REVISED DATE:

DATE REVISED	DATE FILMED	DATE REVISED	DATE FILMED	FED.RD. DIST.NO.	STATE	FED.AID PROJ.NO.	SHEET NO.	TOTAL SHEETS
				6	ARK.			
				JOB NO.		BB0414	695	886

(2) CROSS SECTIONS

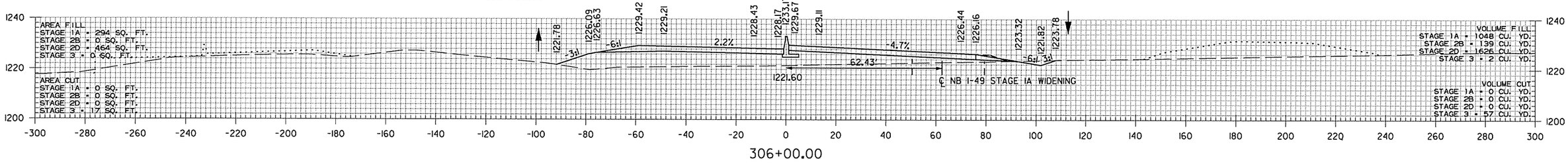

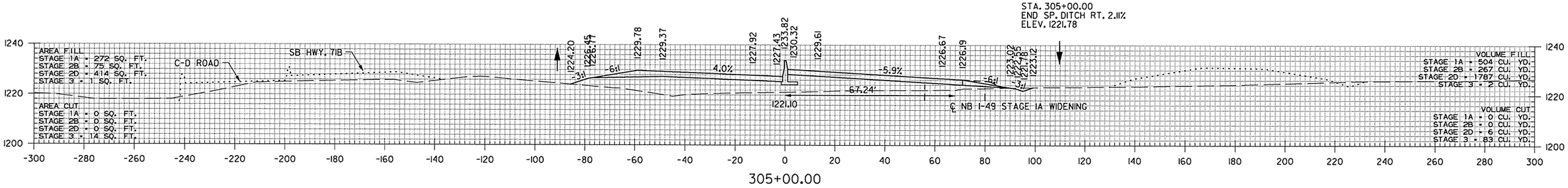

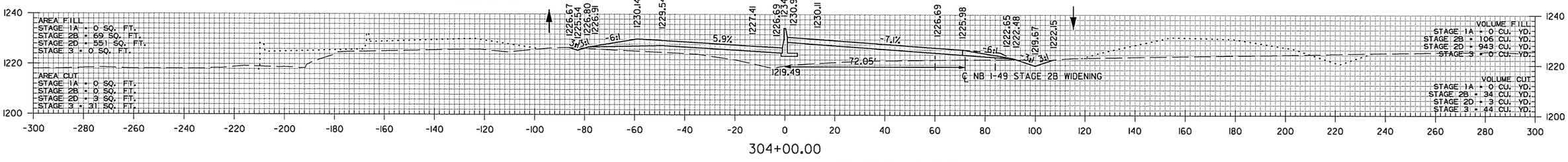

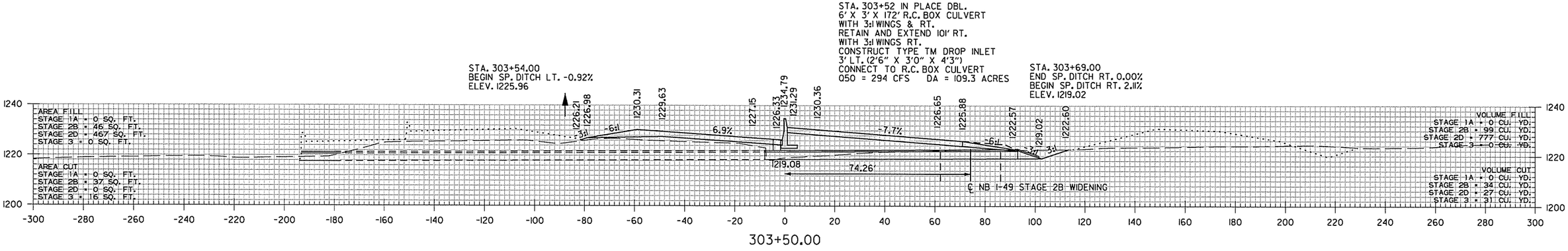

I-49
STA. 303+50 TO STA. 306+00

AEWardlaw 3/20/2016 11:57:47 AM
WORKSPACE: AHTD
L:\20II\II0I7I07 - I-540 Widening & Interchange Improvement\Drawings\rBB0414_CX_I-49..dgn
REVISED DATE:

DATE REVISED	DATE FILMED	DATE REVISED	DATE FILMED	FED.RD. DIST.NO.	STATE	FED.AID PROJ.NO.	SHEET NO.	TOTAL SHEETS
				6	ARK.			
				JOB NO.		BB0414	696	886
				(2)		CROSS SECTIONS		

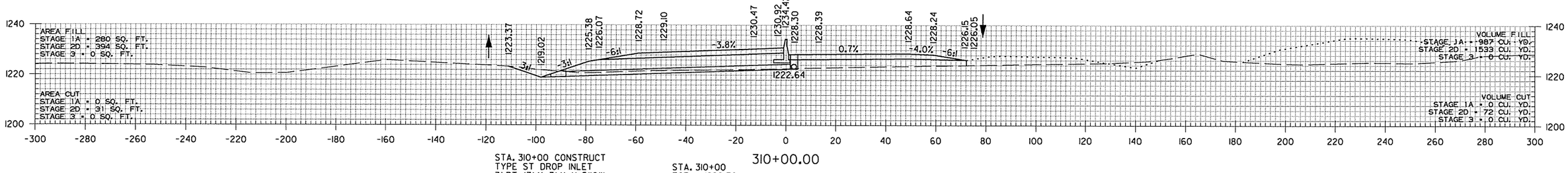

STA. 310+00 CONSTRUCT
TYPE ST DROP INLET
3' RT. (3' X 3' X H=5'10")
WITH 24" X 90' R.C. PIPE CULVERT
OUTLET ON LT. (CLASS III)
TYPE 3 BEDDING WITH FES.

STA. 310+00
TOP = 1228.30
INV = 1222.43
F.L. = 1219.02 LT.

310+00.00

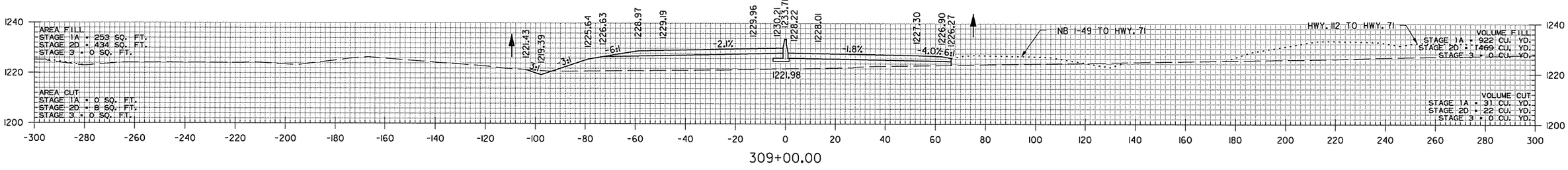

309+00.00

STA. 308+91.56 BEGIN SUPERELEVATION
STA. 308+21.16 END SUPERELEVATION

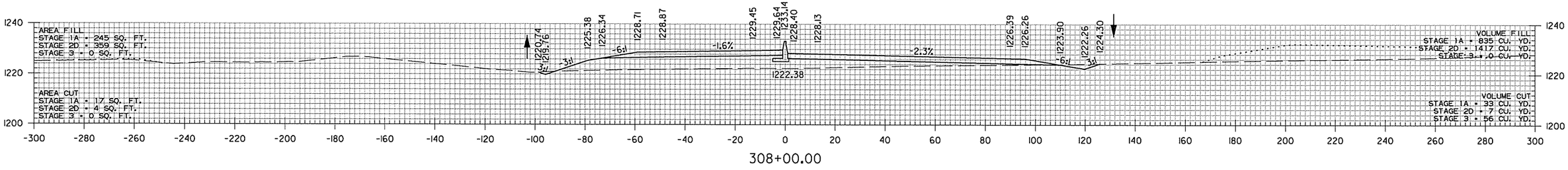

308+00.00

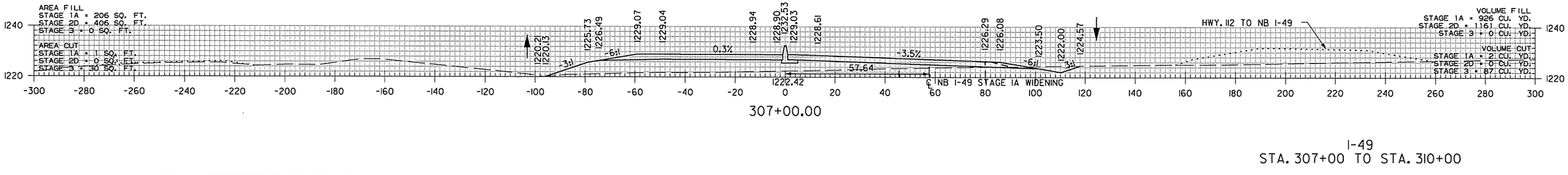

307+00.00

I-49
STA. 307+00 TO STA. 310+00

AEWierciak 3/20/2016 11:57:47 AM
WORKSPACE: AHTD
L:\20IN\I017107 - I-540 Widening & Interchange Improvement\Drawings\rBB0414_CX_I-49_.dgn
REVISED DATE:

DATE REVISED	DATE FILMED	DATE REVISED	DATE FILMED	FED.RD. DIST.NO.	STATE	FED.AID PROJ.NO.	SHEET NO.	TOTAL SHEETS
				6	ARK.			
				JOB NO.		BB0414	697	886

(2) CROSS SECTIONS

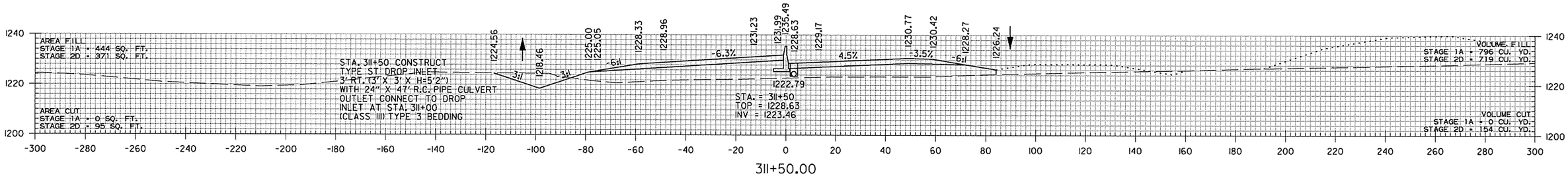

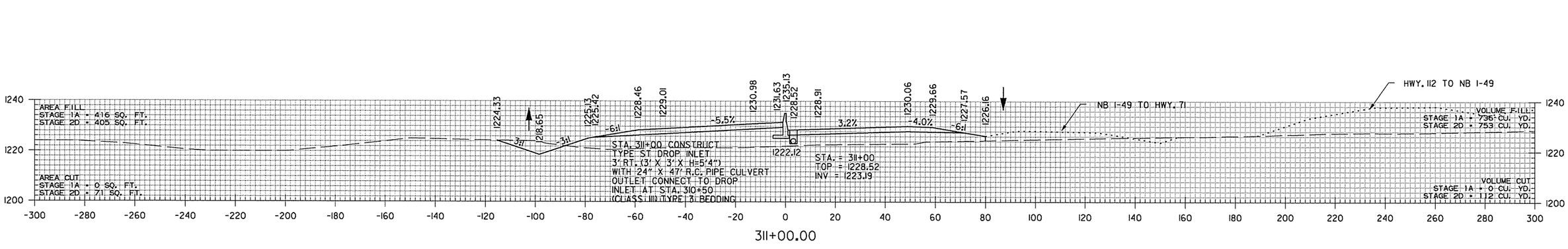

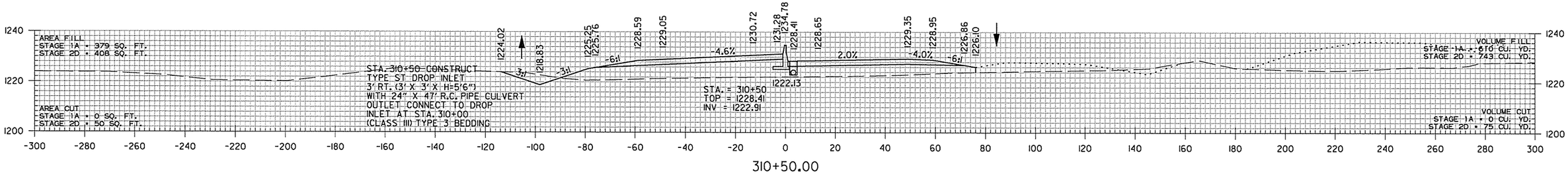

I-49
STA. 310+50 TO STA. 311+50

AEWierdak 3/20/2016 11:57:54 AM
WORKSPACE: AHTD
L:\20\1\101707 - I-540 Widening & Interchange Improvement\Drawings\rBB0414_CX_I-49_.dgn
REVISED DATE:

DATE REVISED	DATE FILMED	DATE REVISED	DATE FILMED	FED.RD. DIST.NO.	STATE	FED.AID PROJ.NO.	SHEET NO.	TOTAL SHEETS
				6	ARK.			
				JOB NO.		BB0414	698	886
				(2)		CROSS SECTIONS		

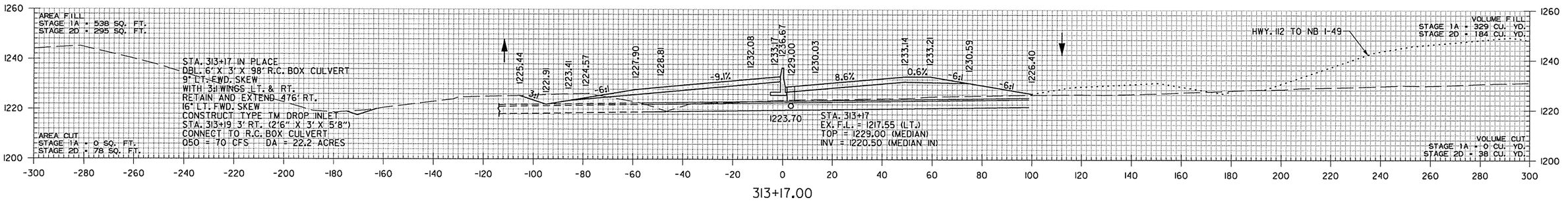

STA. 313+00.00
END SP. DITCH LT. 3.84%
ELEV. 1222.12

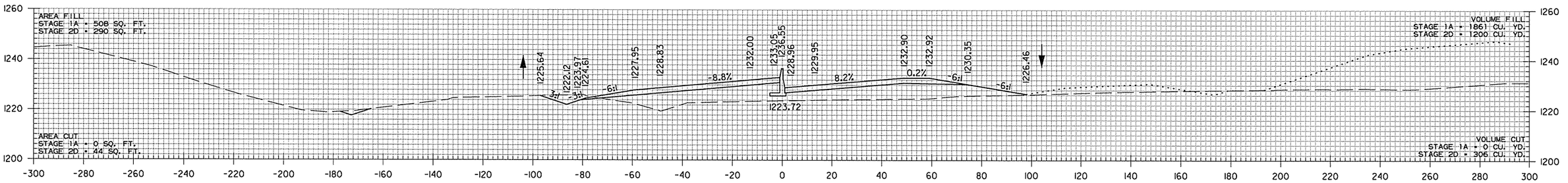

STA. 312+00.00
END SP. DITCH LT. -0.37%
BEGIN SP. DITCH LT. 3.84%
ELEV. 1218.28

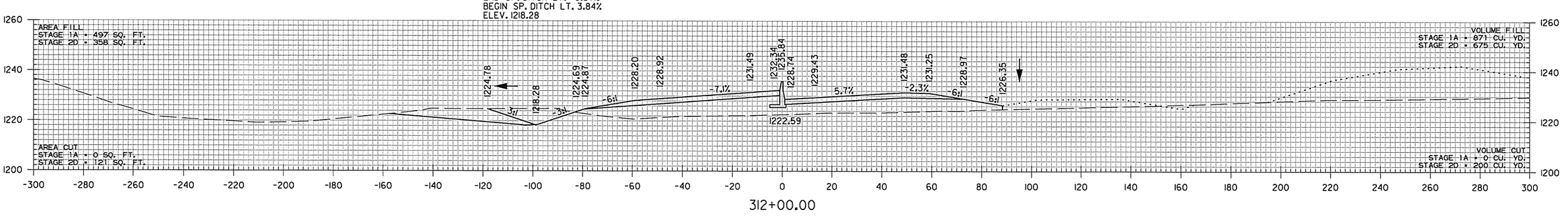

I-49
STA. 312+00 TO STA. 313+17

AEWierclak 3/20/2016 11:57:55 AM
WORKSPACE: AHTD
L:\20IN\I0I7I07 - I-540 Widening & Interchange Improvement\Drawings\rBB0414_CX_I-49_dgn
REVISED DATE:

DATE REVISED	DATE FILMED	DATE REVISED	DATE FILMED	FED.RD. DIST.NO.	STATE	FED.AID PROJ.NO.	SHEET NO.	TOTAL SHEETS
				6	ARK.			
				JOB NO.		BB0414	699	886
				(2)	CROSS SECTIONS			

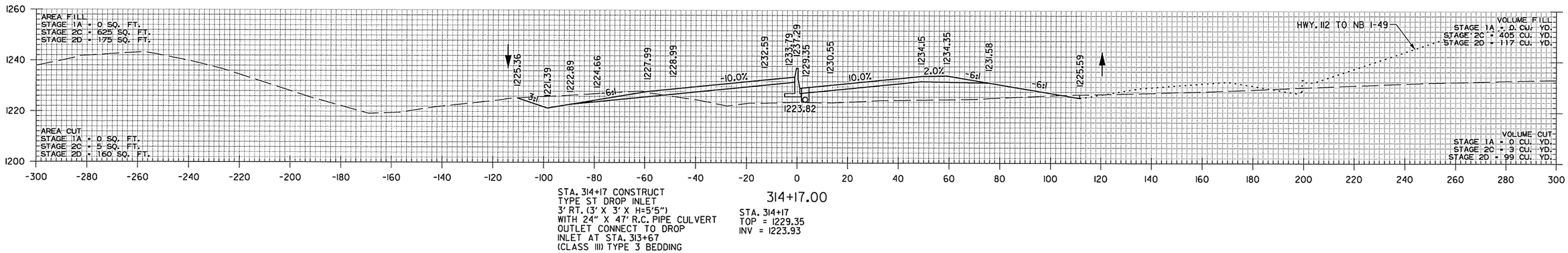

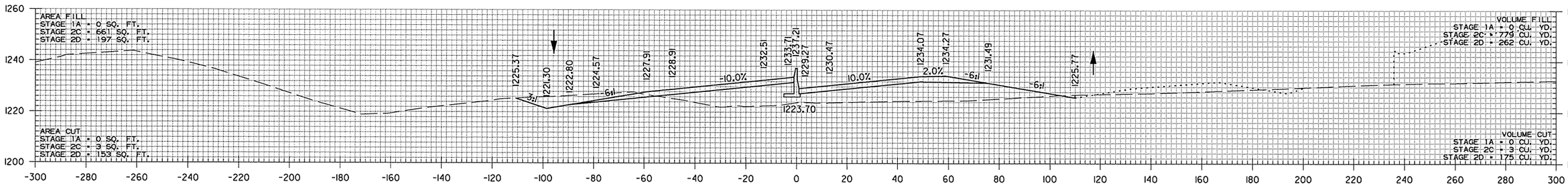

STA. 313+71.56 MAX. SUPERELEVATION (0.100'/')

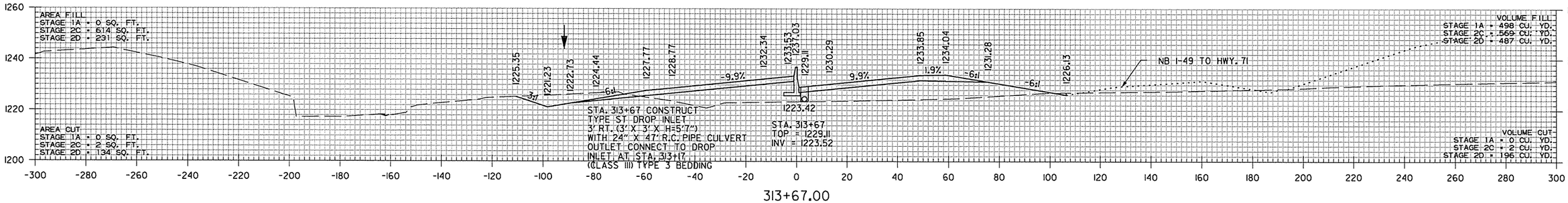

I-49
STA. 313+67 TO STA. 314+17

AEWierclak 3/20/2016 11:57:55 AM
WORKSPACE: AHTD
L:\20IN\I0I7I0T - I-540 Widening & Interchange Improvement\Drawings\rBB0414_CX_I-49_.dgn
REVISED DATE:

DATE REVISED	DATE FILMED	DATE REVISED	DATE FILMED	FED.RD. DIST.NO.	STATE	FED.AID PROJ.NO.	SHEET NO.	TOTAL SHEETS
				6	ARK.			
				JOB NO.		BB0414	700	886
				(2)	CROSS SECTIONS			

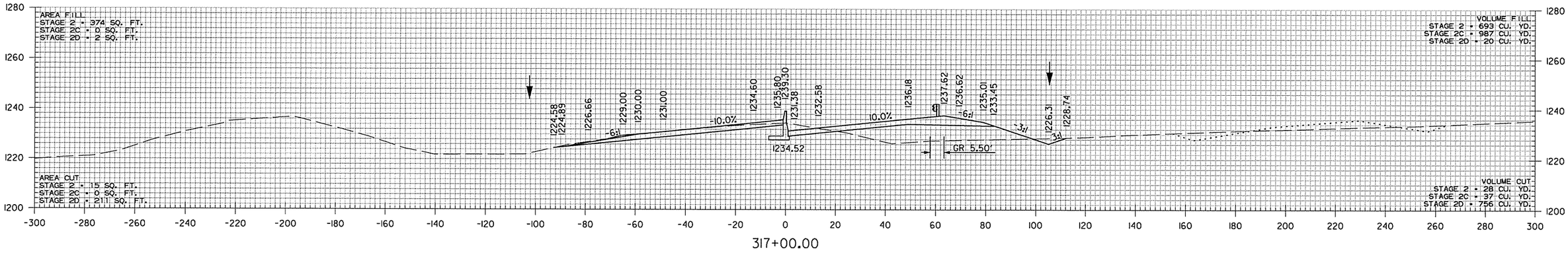

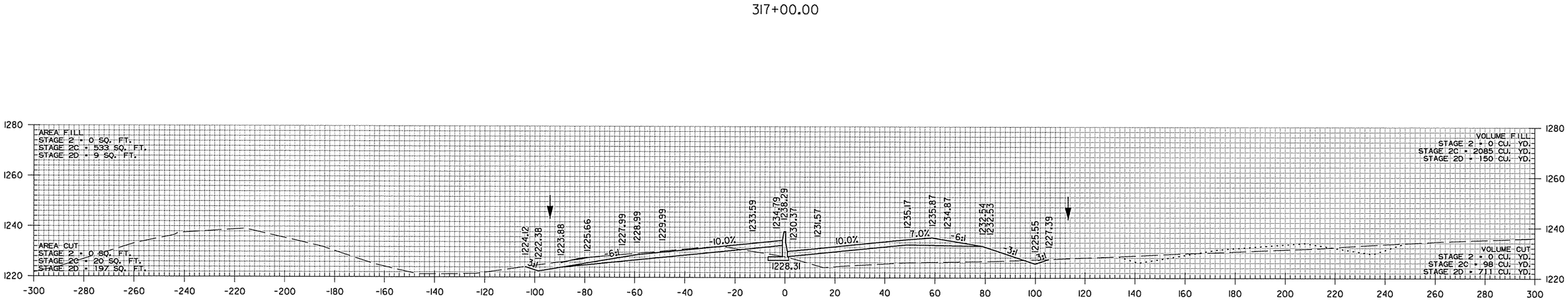

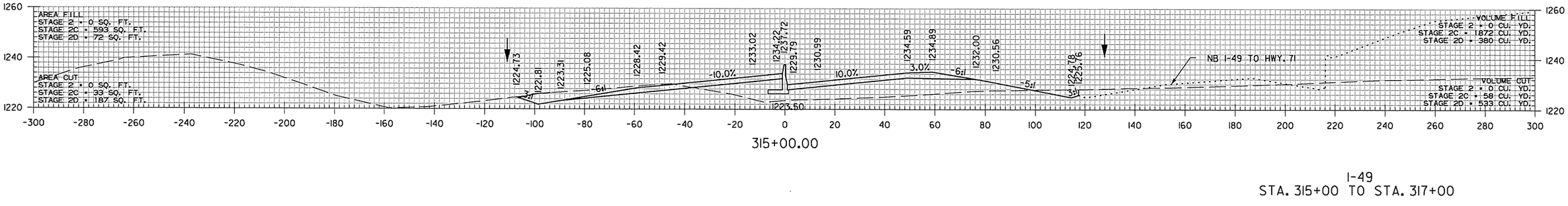

I-49
STA. 315+00 TO STA. 317+00

AEWerclak 3/20/2016 11:57:55 AM
WORKSPACE: AHTD
L:\20IN\I01T10T - I-540 Widening & Interchange Improvement\Drawings\RBB0414_CX_I-49..dgn
REVISED DATE:

DATE REVISED	DATE FILMED	DATE REVISED	DATE FILMED

FED.RD. DIST.NO.	STATE	FED.AID PROJ.NO.	SHEET NO.	TOTAL SHEETS
6	ARK.			
JOB NO.		BB0414	701	886

(2) CROSS SECTIONS

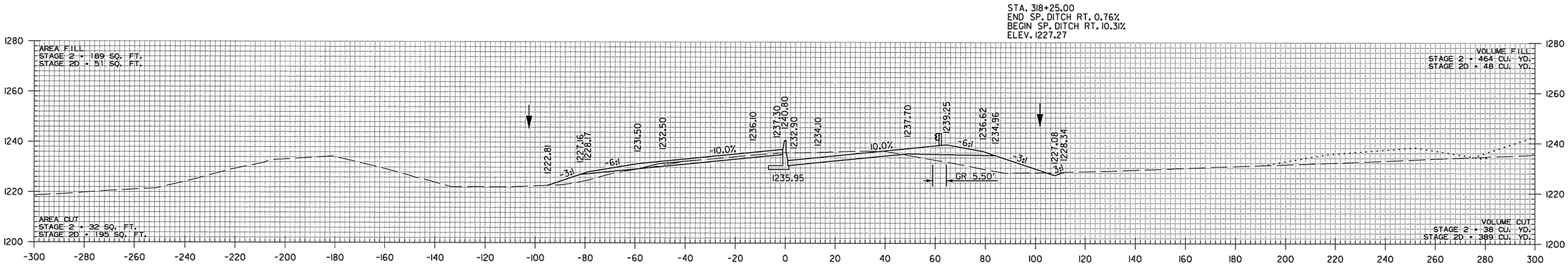

STA. 317+50 CONSTRUCT
TYPE ST DROP INLET
3' RT. (3' X 3' X H=6'2")
WITH 24" X 84' R.C. PIPE CULVERT
OUTLET ON LT. WITH FES.
(CLASS III) TYPE 3 BEDDING

STA. 317+50
PROP F.L. = 1222.79 (LT.)
TOP = 1232.08
INV = 1225.88

I-49
STA. 317+50 TO STA. 318+00

AEWlarclak 3/20/2016 11:57:55 AM
WORKSPACE: AHTD
L:\20IN\10I7707 - I-540 Widening & Interchange Improvement\Drawings\rBB0414_CX_I-49_.dgn
REVISED DATE:

DATE REVISED	DATE FILMED	DATE REVISED	DATE FILMED	FED.RD. DIST.NO.	STATE	FED.AID PROJ.NO.	SHEET NO.	TOTAL SHEETS
				6	ARK.			
				JOB NO.		BB0414	702	886

(2) CROSS SECTIONS

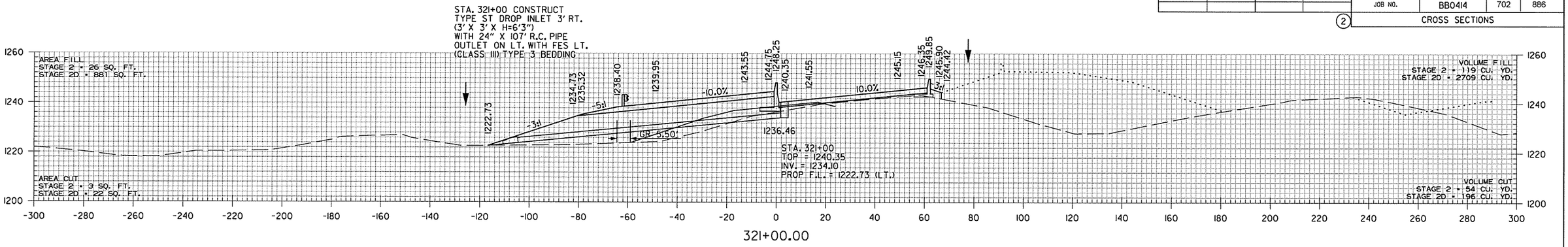

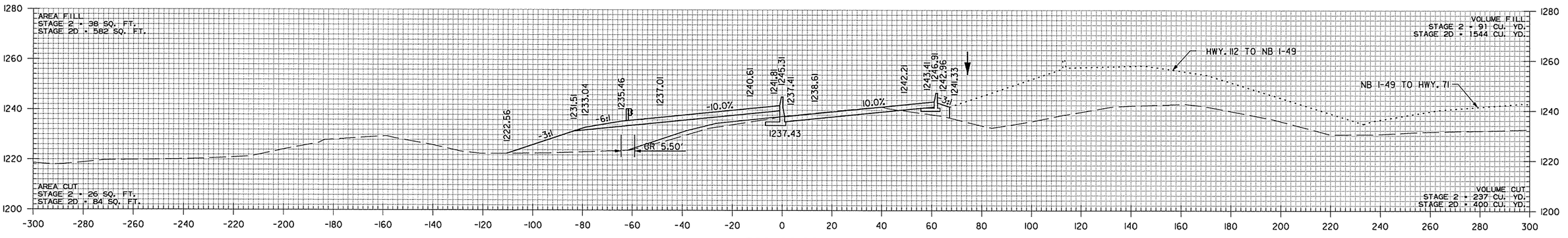

STA. 319+75.00
END SP. DITCH RT. 2.33%
ELEV. 1240.39

STA. 319+35.00
END SP. DITCH RT. 12.74%
BEGIN SP. DITCH RT. 2.33%
ELEV. 1239.46

STA. 319+00.00
END SP. DITCH RT. 10.31%
BEGIN SP. DITCH RT. 12.74%
ELEV. 1235.00

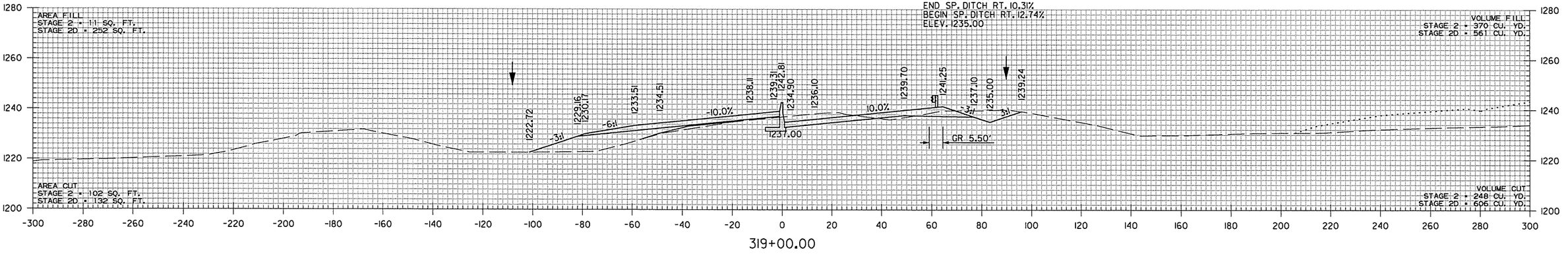

I-49
STA. 319+00 TO STA. 321+00

AEWierclok 3/20/2016 11:57:55 AM
WORKSPACE: AHTD
L:\201\1101707 - I-540 Widening & Interchange Improvement\Drawings\rBB0414_CX_I-49..dgn
REVISED DATE:

DATE REVISED	DATE FILMED	DATE REVISED	DATE FILMED	FED.RD. DIST.NO.	STATE	FED.AID PROJ.NO.	SHEET NO.	TOTAL SHEETS
				6	ARK.			
				JOB NO.		BB0414	703	886
				(2)		CROSS SECTIONS		

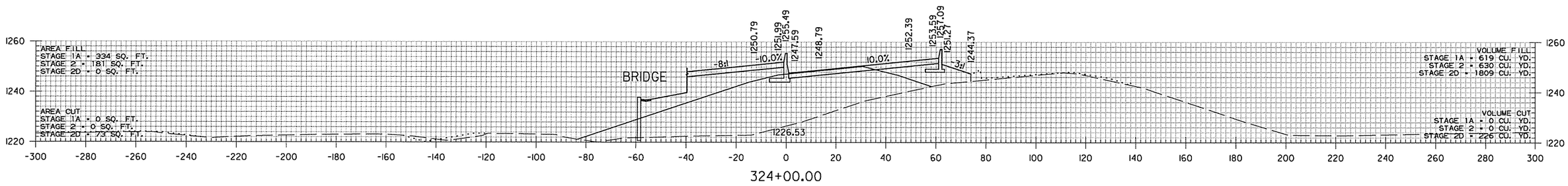

324+00.00

STA. 323+99.59 BEGIN BRIDGE LT.

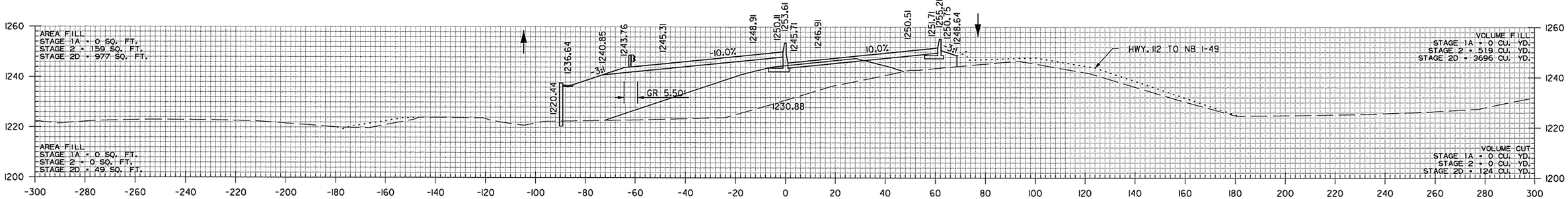

323+00.00

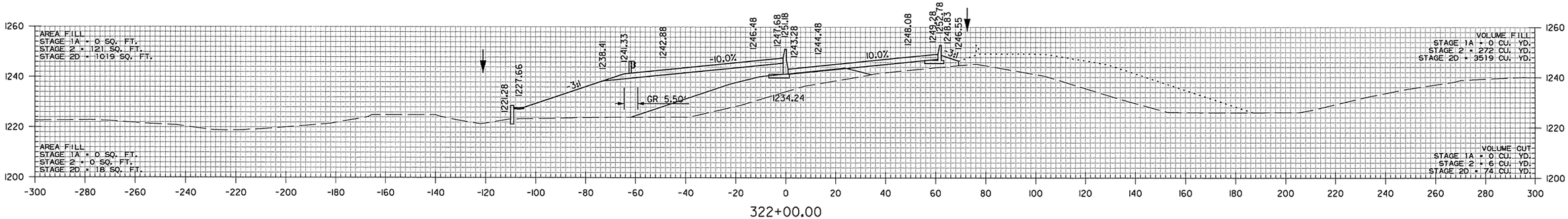

322+00.00

I-49
STA. 322+00 TO STA. 324+00

AEWierclok 3/20/2016 11:57:56 AM
WORKSPACE: AHTD
L:\201\101707 - I-540 Widening & Interchange Improvement\Drawings\r-BB0414_CX_I-49_.dgn
REVISED DATE:

DATE REVISED	DATE FILMED	DATE REVISED	DATE FILMED	FED.RD. DIST.NO.	STATE	FED.AID PROJ.NO.	SHEET NO.	TOTAL SHEETS
				6	ARK.			
				JOB NO.		BB0414	704	886
				(2)		CROSS SECTIONS		

STA. 327+53.34 BRIDGE TOE OF SLOPE RT.
STA. 327+21.74 BRIDGE TOE OF SLOPE LT.

BRIDGE END SLOPE: VOLUME FILL
STAGE 1A = 0 CU. YD.
STAGE 2 = 0 CU. YD.
STAGE 2D = 0 CU. YD.

BRIDGE END SLOPE: VOLUME CUT
STAGE 1A = 0 CU. YD.
STAGE 2 = 0 CU. YD.
STAGE 2D = 0 CU. YD.

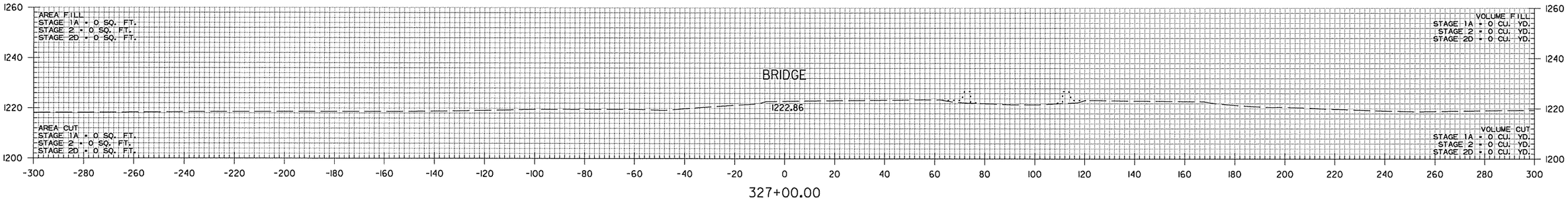

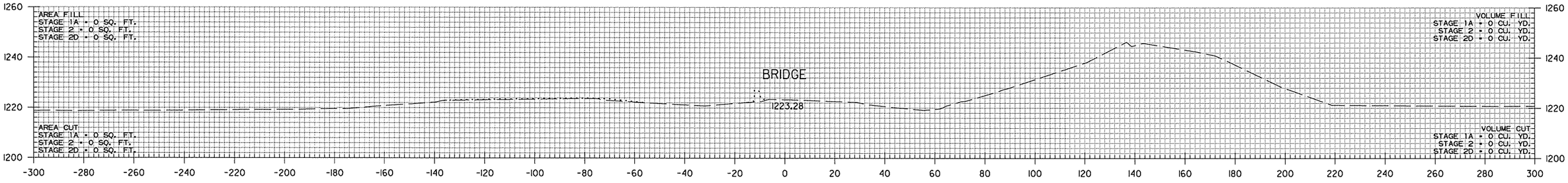

STA. 325+58.69 BRIDGE TOE OF SLOPE @ MSE WALL RT.

STA. 325+10.53 BEGIN BRIDGE RT.

BRIDGE END SLOPE: VOLUME FILL
STAGE 1A = 2776 CU. YD.
STAGE 2 = 0 CU. YD.
STAGE 2D = 0 CU. YD.

BRIDGE END SLOPE: VOLUME CUT
STAGE 1A = 0 CU. YD.
STAGE 2 = 0 CU. YD.
STAGE 2D = 0 CU. YD.

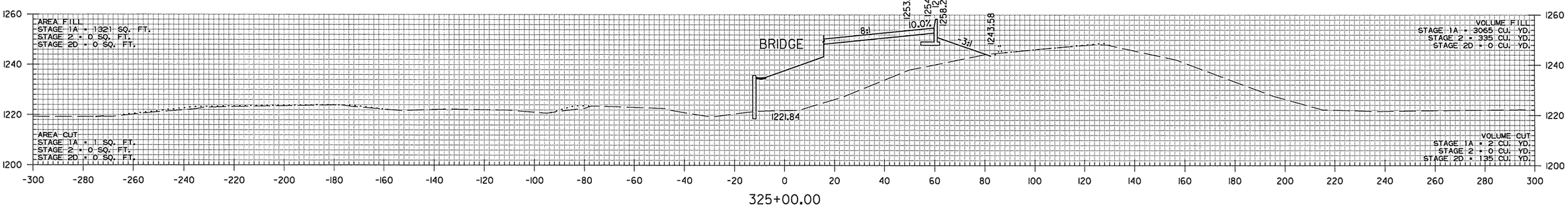

I-49
STA. 325+00 TO STA. 327+00

AEWierelak 3/20/2016 11:57:56 AM
WORKSPACE: AHTD
L:\20IN\I40I7I0T - I-540 Widening & Interchange Improvement\Drawings\rBB0414_CX_I-49..dgn
REVISED DATE:

DATE REVISED	DATE FILMED	DATE REVISED	DATE FILMED	FED.RD. DIST.NO.	STATE	FED.AID PROJ.NO.	SHEET NO.	TOTAL SHEETS
				6	ARK.			
				JOB NO.		BB0414	705	886

(2) CROSS SECTIONS

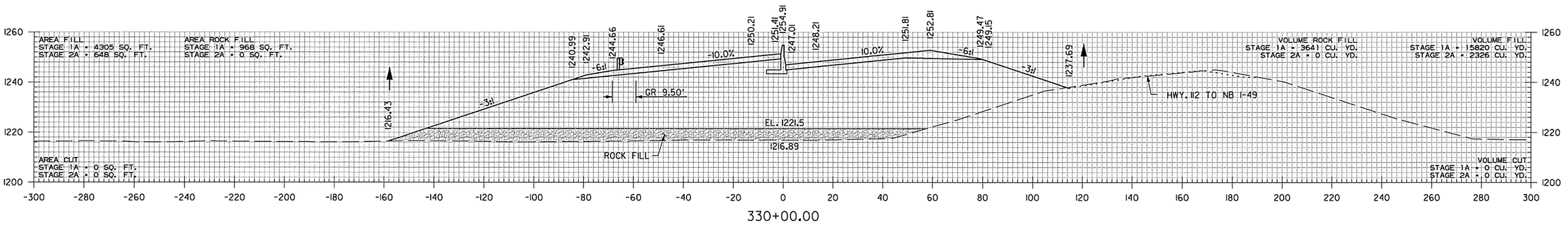

330+00.00

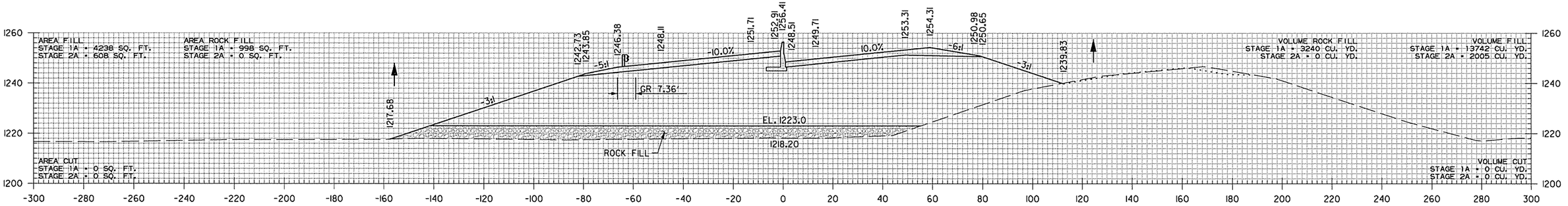

329+00.00

STA. 328+10.96 END BRIDGE RT.

BRIDGE END SLOPE: VOLUME ROCK FILL
STAGE 1A = 408 CU. YD.
STAGE 2A = 0 CU. YD.

BRIDGE END SLOPE: VOLUME FILL
STAGE 1A = 1521 CU. YD.
STAGE 2A = 123 CU. YD.

BRIDGE END SLOPE: VOLUME CUT
STAGE 1A = 0 CU. YD.
STAGE 2A = 0 CU. YD.

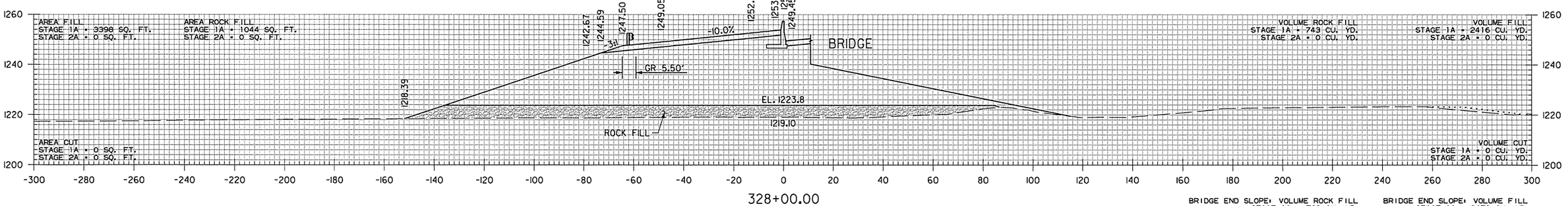

328+00.00

STA. 327+77.50 END BRIDGE LT.

BRIDGE END SLOPE: VOLUME ROCK FILL
STAGE 1A = 763 CU. YD.
STAGE 2A = 0 CU. YD.

BRIDGE END SLOPE: VOLUME FILL
STAGE 1A = 2478 CU. YD.
STAGE 2A = 0 CU. YD.

BRIDGE END SLOPE: VOLUME CUT
STAGE 1A = 0 CU. YD.
STAGE 2A = 0 CU. YD.

I-49
STA. 328+00 TO STA. 330+00

AEWierciak 3/21/2016 9:09:57 AM
WORKSPACE: AHTD
L:\20I\I0I707 - I-540 Widening & Interchange Improvement\Drawings\rBB0414_CX_I-49..dgn
REVISED DATE:

DATE REVISED	DATE FILMED	DATE REVISED	DATE FILMED	FED.RD. DIST.NO.	STATE	FED.AID PROJ.NO.	SHEET NO.	TOTAL SHEETS
				6	ARK.			
				JOB NO.		BB0414	706	886
				(2)	CROSS SECTIONS			

STA. 331+00 CONSTRUCT
TYPE ST DROP INLET 3' RT.
(3' X 3' X H=6'3")
WITH 24" X 141' R.C. PIPE
OUTLET ON LT. WITH FES LT.
(CLASS III) TYPE 3 BEDDING

STA. 331+00
TOP = 1244.94
INV. = 1238.69
PROP F.L. = 1215.81(LT.)

I-49
STA. 331+00 TO STA. 333+00

AEWTerclok 3/21/2006 9:09:57 AM
WORKSPACE: AHTD
L:\2011\101707 - I-540 Widening & Interchange Improvement\Drawings\r-BB0414_CX_I-49_.dgn
REVISED DATE:

DATE REVISED	DATE FILMED	DATE REVISED	DATE FILMED	FED.RD. DIST.NO.	STATE	FED.AID PROJ.NO.	SHEET NO.	TOTAL SHEETS
				6	ARK.			
				JOB NO.		BB0414	707	886
				(2)		CROSS SECTIONS		

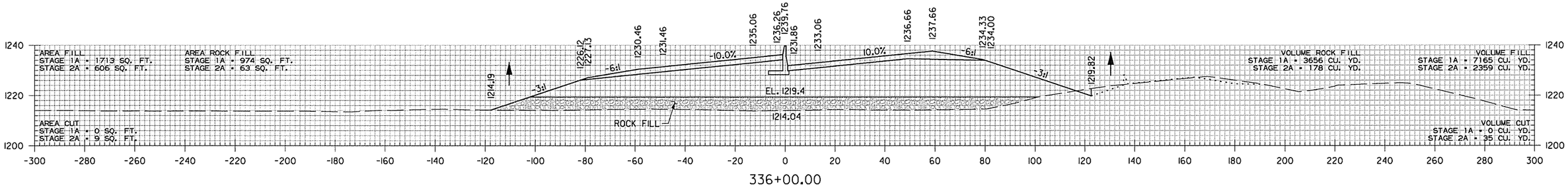

336+00.00

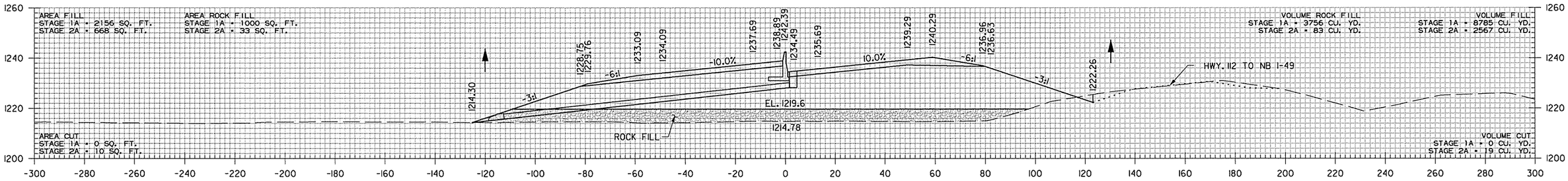

335+00.00

STA. 335+00 CONSTRUCT
TYPE ST DROP INLET 3' RT.
(3' X 3' X H=6'3")
WITH 24" X 115' R.C. PIPE
OUTLET ON LT. WITH FES LT.
(CLASS III) TYPE 3 BEDDING

STA. 335+00
TOP = 1234.49
INV. = 1228.24
PROP F.L. = 1214.30 (LT.)

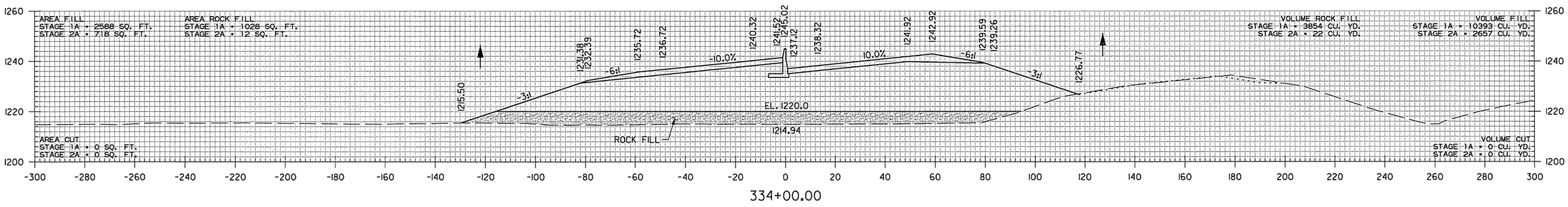

334+00.00

I-49
STA. 334+00 TO STA. 336+00

AEWierclak 3/21/2016 9:09:57 AM
WORKSPACE: AHTD
L:\20IN\I40I7I0T - I-540 Widening & Interchange Improvement\Drawings\rBB0414_CX_I-49..dgn
REVISED DATE:

DATE REVISED	DATE FILMED	DATE REVISED	DATE FILMED	FED.RD. DIST.NO.	STATE	FED.AID PROJ.NO.	SHEET NO.	TOTAL SHEETS
				6	ARK.			
				JOB NO.		BB0414	708	886
				(2)	CROSS SECTIONS			

STA. 340+60.73 MAX. SUPERELEVATION (0.100'/')

STA. 340+57.00
END SP. DITCH RT. 2.39%
BEGIN SP. DITCH RT. 1.69%
ELEV. 1219.59

AREA FILL
STAGE 1A = 220 SQ. FT.
STAGE 2A = 226 SQ. FT.

AREA ROCK FILL
STAGE 1A = 912 SQ. FT.
STAGE 2A = 83 SQ. FT.

AREA CUT
STAGE 1A = 0 SQ. FT.
STAGE 2A = 0 SQ. FT.

VOLUME ROCK FILL
STAGE 1A = 3109 CU. YD.
STAGE 2A = 348 CU. YD.

VOLUME FILL
STAGE 1A = 1669 CU. YD.
STAGE 2A = 944 CU. YD.

VOLUME CUT
STAGE 1A = 0 CU. YD.
STAGE 2A = 4 CU. YD.

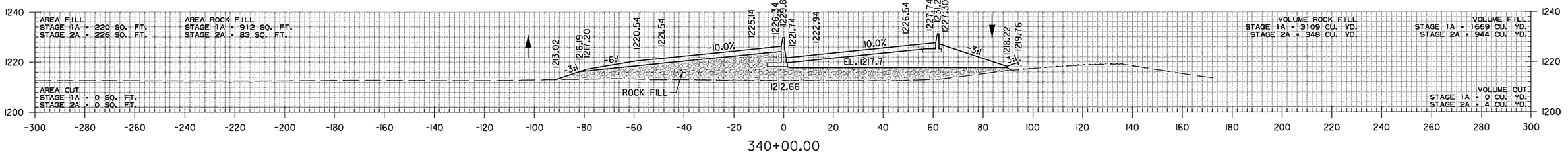

340+00.00

STA. 339+10.00
BEGIN SP. DITCH RT. 2.39%
ELEV. 1216.07

AREA FILL
STAGE 1A = 681 SQ. FT.
STAGE 2A = 284 SQ. FT.

AREA ROCK FILL
STAGE 1A = 767 SQ. FT.
STAGE 2A = 105 SQ. FT.

AREA CUT
STAGE 1A = 0 SQ. FT.
STAGE 2A = 2 SQ. FT.

VOLUME ROCK FILL
STAGE 1A = 2930 CU. YD.
STAGE 2A = 420 CU. YD.

VOLUME FILL
STAGE 1A = 3043 CU. YD.
STAGE 2A = 1276 CU. YD.

VOLUME CUT
STAGE 1A = 0 CU. YD.
STAGE 2A = 7 CU. YD.

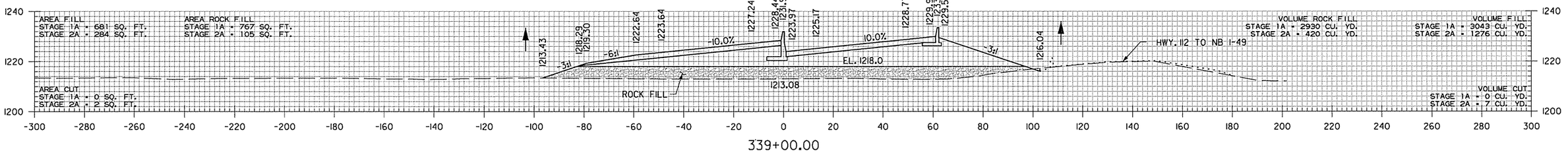

339+00.00

AREA FILL
STAGE 1A = 962 SQ. FT.
STAGE 2A = 405 SQ. FT.

AREA ROCK FILL
STAGE 1A = 815 SQ. FT.
STAGE 2A = 122 SQ. FT.

STA. 338+00 CONSTRUCT
TYPE ST DROP INLET 3' RT.
(3' X 3' X H=6'3")
WITH 24" X 94' R.C. PIPE
OUTLET ON LT. WITH FES LT.
(CLASS III) TYPE 3 BEDDING

AREA CUT
STAGE 1A = 0 SQ. FT.
STAGE 2A = 2 SQ. FT.

VOLUME ROCK FILL
STAGE 1A = 3119 CU. YD.
STAGE 2A = 383 CU. YD.

VOLUME FILL
STAGE 1A = 4341 CU. YD.
STAGE 2A = 1833 CU. YD.

VOLUME CUT
STAGE 1A = 0 CU. YD.
STAGE 2A = 9 CU. YD.

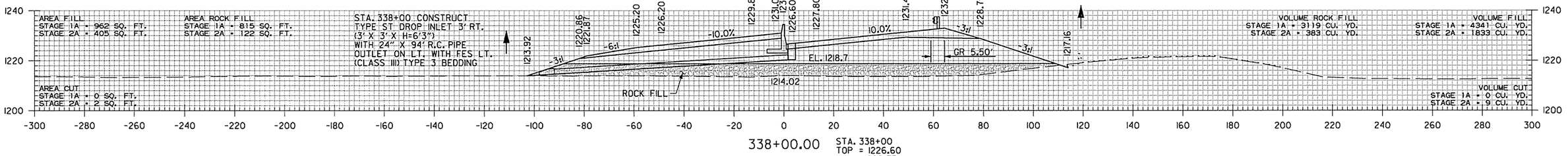

338+00.00

STA. 338+00
TOP = 1226.60
INV. = 1220.35
PROP F.L. = 1213.92 (LT.)

AREA FILL
STAGE 1A = 1382 SQ. FT.
STAGE 2A = 585 SQ. FT.

AREA ROCK FILL
STAGE 1A = 869 SQ. FT.
STAGE 2A = 85 SQ. FT.

AREA CUT
STAGE 1A = 0 SQ. FT.
STAGE 2A = 3 SQ. FT.

VOLUME ROCK FILL
STAGE 1A = 3413 CU. YD.
STAGE 2A = 274 CU. YD.

VOLUME FILL
STAGE 1A = 5791 CU. YD.
STAGE 2A = 2206 CU. YD.

VOLUME CUT
STAGE 1A = 0 CU. YD.
STAGE 2A = 22 CU. YD.

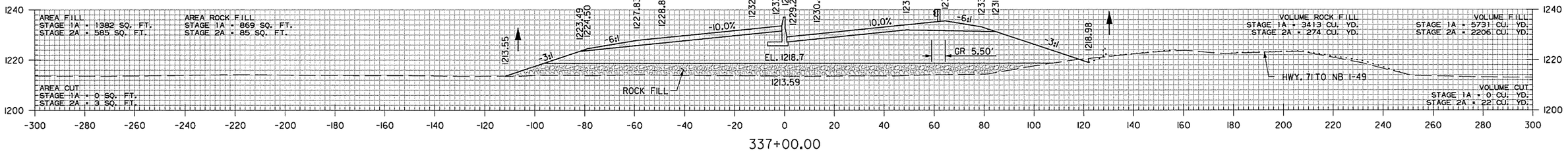

337+00.00

I-49
STA. 337+00 TO STA. 340+00

AEWercIok 3/21/2016 9:09:57 AM
WORKSPACE: AHTD
L:\2016\16017\07 - I-540 Widening & Interchange Improvement\Drawings\rBB0414_CX_I-49_.dgn
REVISED DATE:

DATE REVISED	DATE FILMED	DATE REVISED	DATE FILMED	FED.RD. DIST.NO.	STATE	FED.AID PROJ.NO.	SHEET NO.	TOTAL SHEETS
				6	ARK.			
				JOB NO.		BB0414	709	886
				(2)	CROSS SECTIONS			

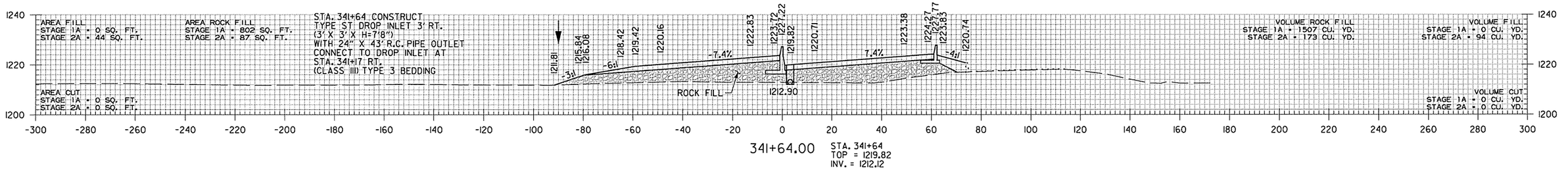

STA. 341+20.00
END SP. DITCH RT. 1.69%
ELEV. 1220.65

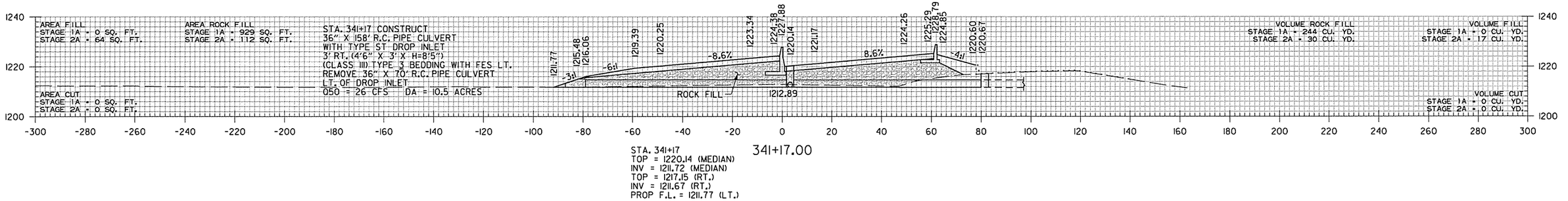

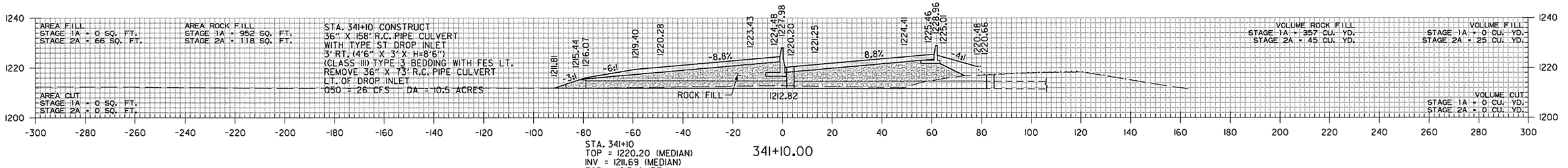

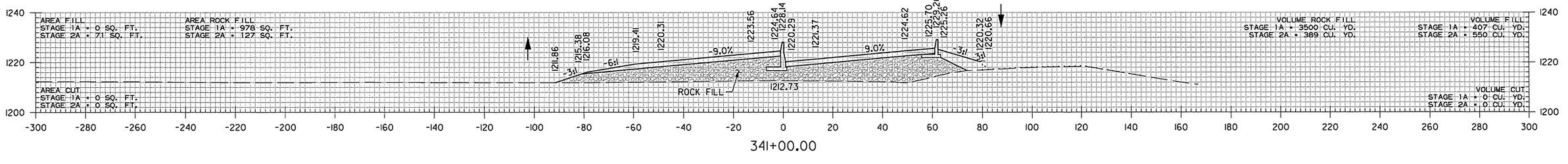

AEWlerclok 3/21/2016 9:09:58 AM
WORKSPACE: AHTD
L:\20II\II0I707 - I-540 Widening & Interchange Improvement\Drawings\YBB04I4_CX_I-49_.dgn
REVISED DATE:

DATE REVISED	DATE FILMED	DATE REVISED	DATE FILMED	FED.RD. DIST.NO.	STATE	FED.AID PROJ.NO.	SHEET NO.	TOTAL SHEETS
				6	ARK.			
				JOB NO.		BB0414	710	886

(2) CROSS SECTIONS

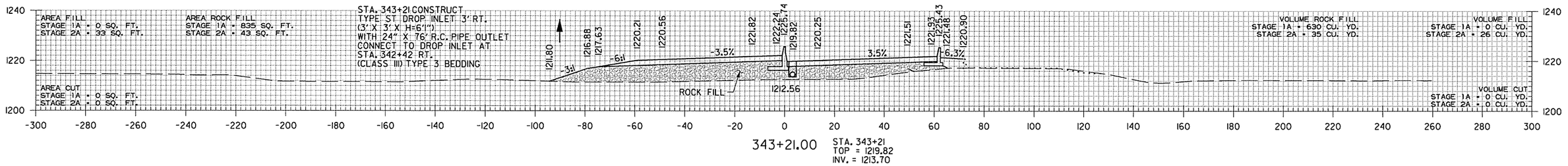

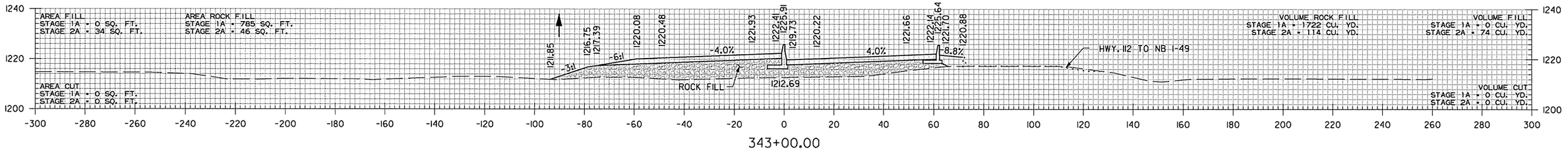

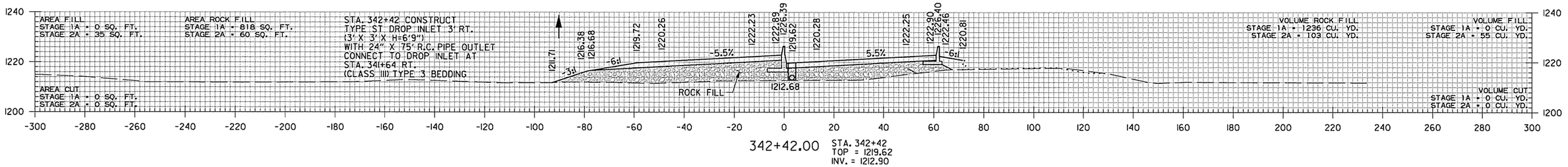

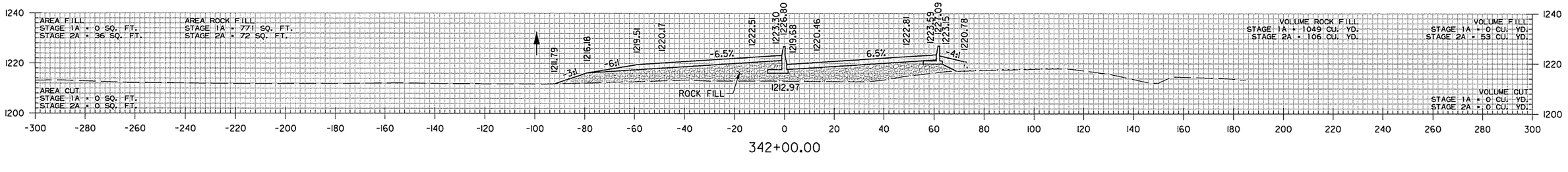

AEWierclok 3/21/2016 9:09:58 AM
WORKSPACE: AHTD
L:\201\101707 - I-540 Widening & Interchange Improvement\Drawings\rBB0414_CX_I-49_.dgn
REVISED DATE:

DATE REVISED	DATE FILMED	DATE REVISED	DATE FILMED	FED.RD. DIST.NO.	STATE	FED.AID PROJ.NO.	SHEET NO.	TOTAL SHEETS
				6	ARK.			
				JOB NO.		BB0414	711	886

(2) CROSS SECTIONS

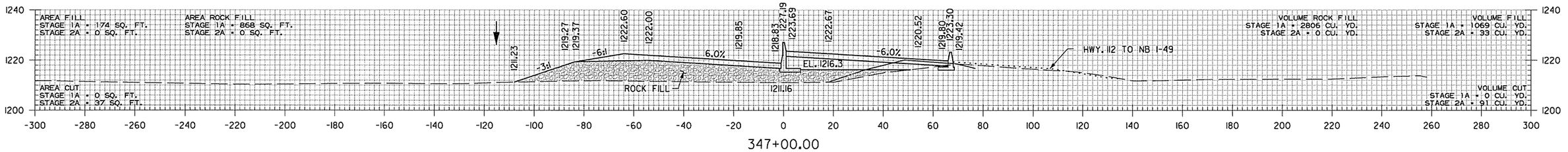

347+00.00

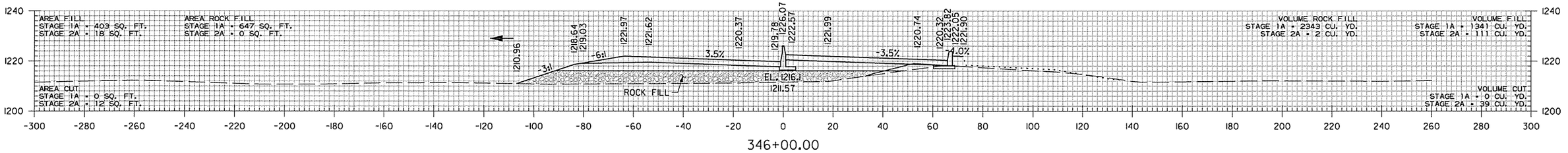

346+00.00

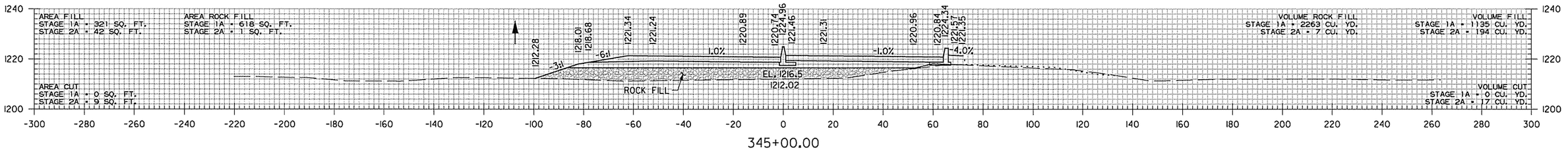

345+00.00

STA. 344+60.73 END SUPERELEVATION (0.000'/')
STA. 344+60.73 BEGIN SUPERELEVATION (0.000'/')

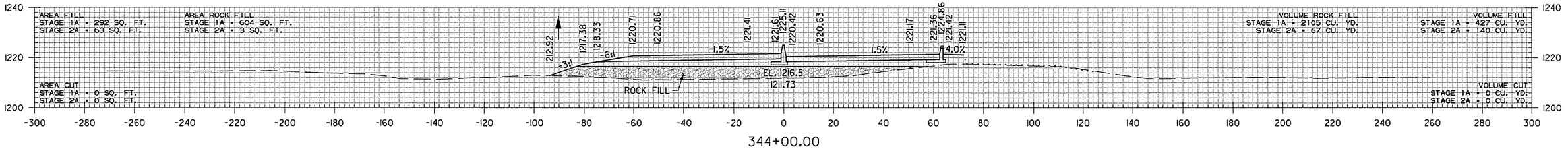

344+00.00

I-49
STA. 344+00 TO STA. 347+00

AEWierclok 3/21/2016 9:09:58 AM
WORKSPACE: AHTD
L:\201\101707 - I-540 Widening & Interchange Improvement\Drawings\rBB0414_CX_I-49_.dgn
REVISED DATE:

DATE REVISED	DATE FILMED	DATE REVISED	DATE FILMED	FED.RD. DIST.NO.	STATE	FED.AID PROJ.NO.	SHEET NO.	TOTAL SHEETS
				6	ARK.			
				JOB NO.		BB0414	712	886
				(2)		CROSS SECTIONS		

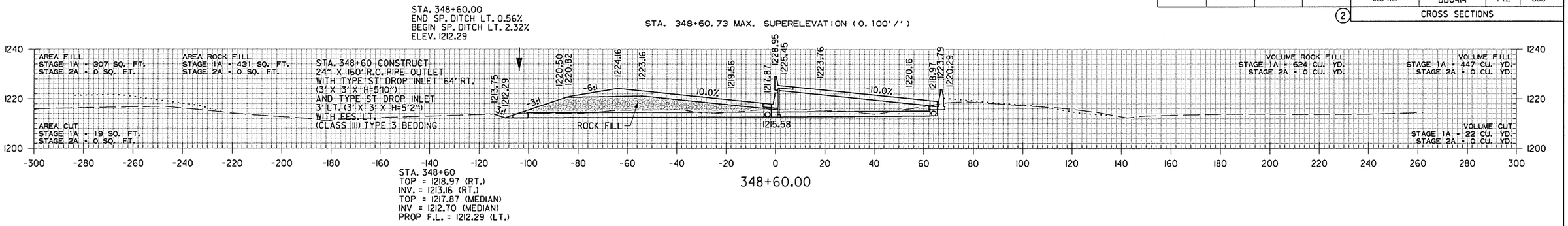

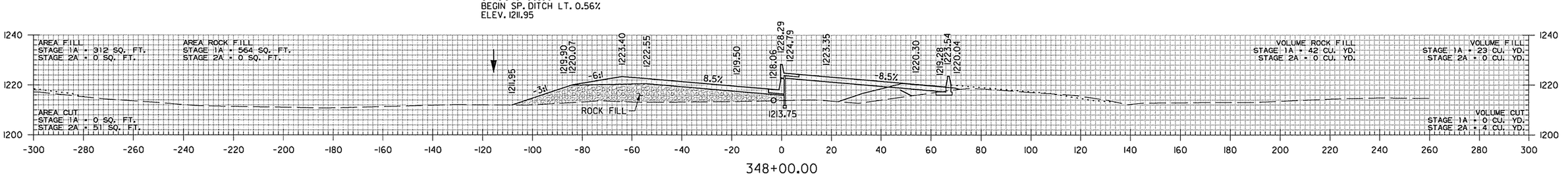

AEWerclok 3/21/2016 9:09:58 AM
WORKSPACE: AHTD
L:\20IN\001707 - I-540 Widening & Interchange Improvement\Drawings\r-BB0414_CX_I-49_.dgn
REVISED DATE:

DATE REVISED	DATE FILMED	DATE REVISED	DATE FILMED	FED.RD. DIST.NO.	STATE	FED.AID PROJ.NO.	SHEET NO.	TOTAL SHEETS
				6	ARK.			
				JOB NO.		BB0414	713	886
				(2)		CROSS SECTIONS		

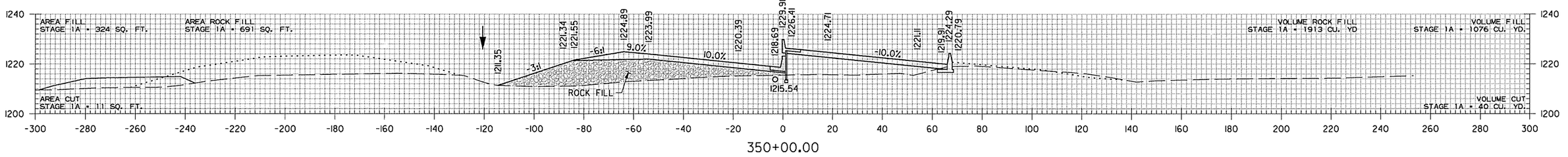

350+00.00

STA. 349+25.00
END SP. DITCH LT. 2.32%
ELEV. 1213.80

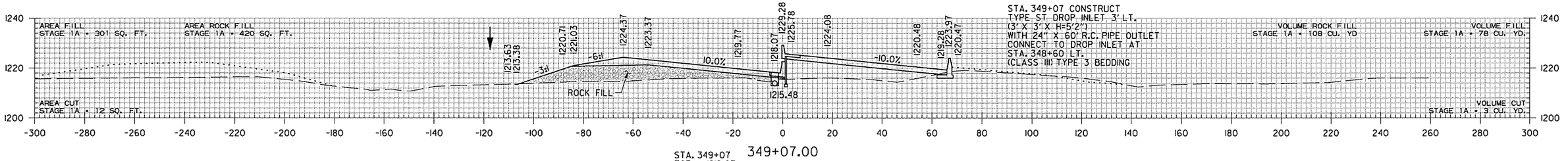

349+07.00

STA. 349+07
TOP = 1218.07
INV. = 1212.90

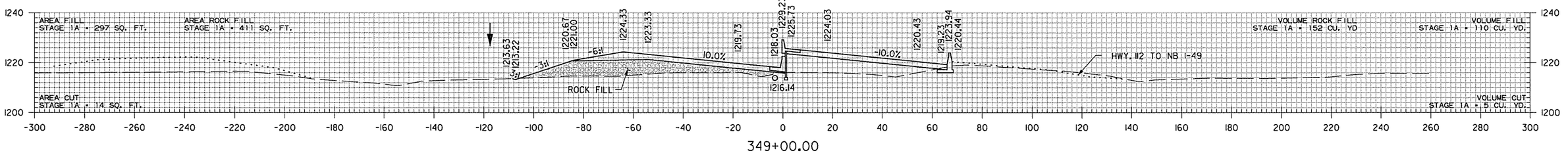

349+00.00

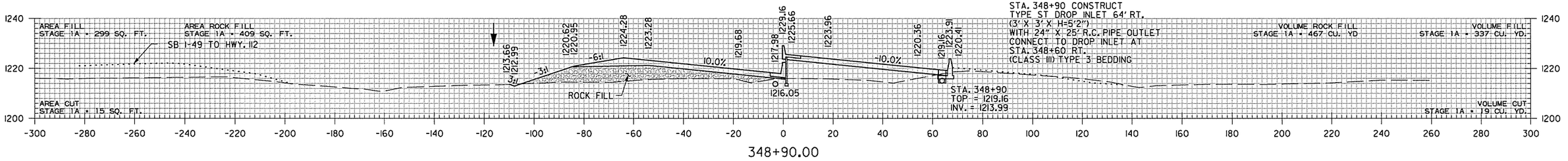

348+90.00

AEWierciak 3/21/2016 9:09:59 AM
WORKSPACE: AHTD
L:\201\101707 - I-540 Widening & Interchange Improvement\Drawings\rBB0414_CX_I-49_.dgn
REVISED DATE:

DATE REVISED	DATE FILMED	DATE REVISED	DATE FILMED	FED.RD. DIST.NO.	STATE	FED.AID PROJ.NO.	SHEET NO.	TOTAL SHEETS
				6	ARK.			
				JOB NO.		BB0414	714	886
				(2)		CROSS SECTIONS		

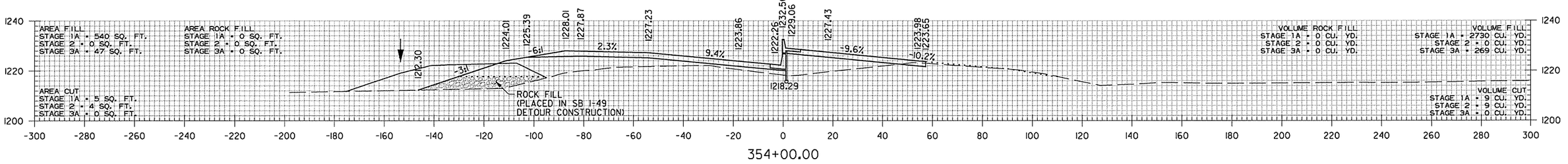

354+00.00

STA. 353+75.16 MAX. SUPERELEVATION (0.100'/')

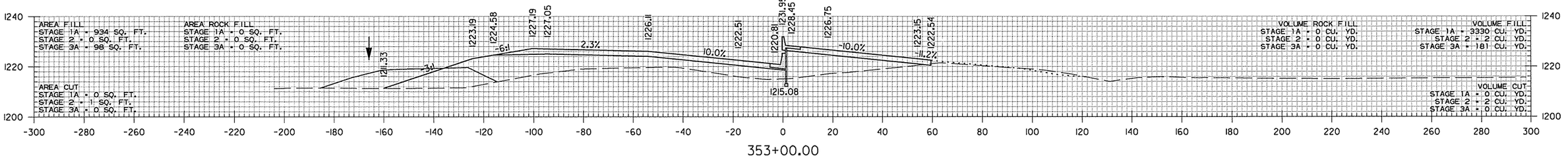

353+00.00

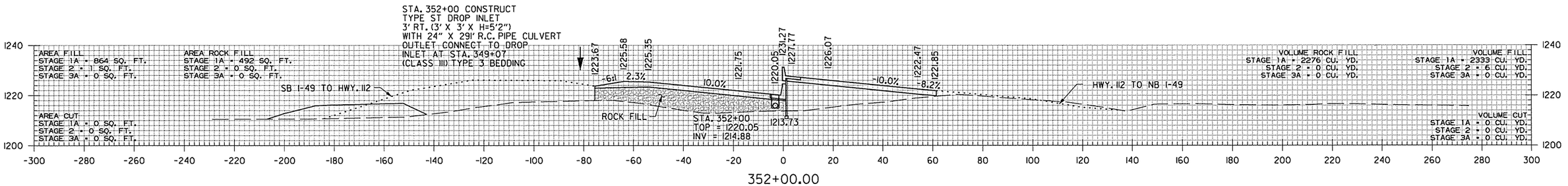

352+00.00

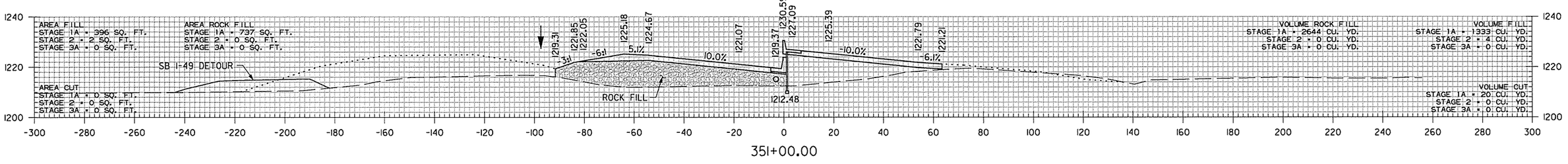

351+00.00

I-49
STA. 351+00 TO STA. 354+00

AEWierclok 3/21/2016 9:09:59 AM
WORKSPACE: AHTD
L:\201\101707 - I-540 Widening & Interchange Improvement\Drawings\rBB0414_CX_I-49_.dgn
REVISED DATE:

DATE REVISED	DATE FILMED	DATE REVISED	DATE FILMED	FED.RD. DIST.NO.	STATE	FED.AID PROJ.NO.	SHEET NO.	TOTAL SHEETS
				6	ARK.			
				JOB NO.		BB0414	715	886

(2) CROSS SECTIONS

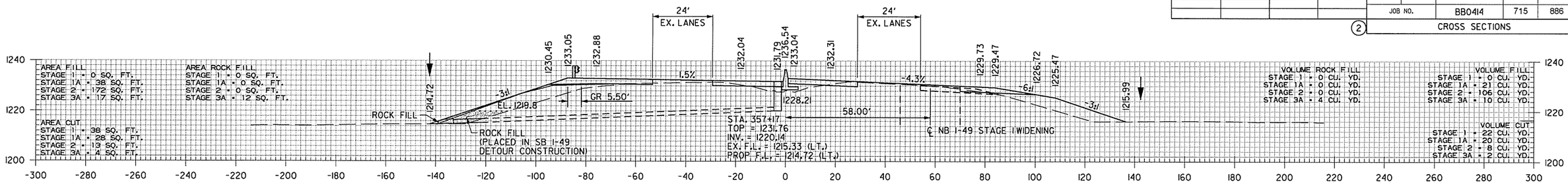

357+17.00

STA. 357+17 IN PLACE
DROP INLET IN MEDIAN REMOVE AND
CONSTRUCT TYPE ST DROP INLET
3' LT. (3' X 3' H=11'7")
IN PLACE 18" X 122' R.C. PIPE OUTLET
WITH FES LT. REMOVE FES AND
EXTEND R.C. PIPE 12' LT.
(CLASS III) TYPE 3 BEDDING WITH FES LT.
18" R.C. PIPE = 16 LIN. FT.
18" FES = 1EA.

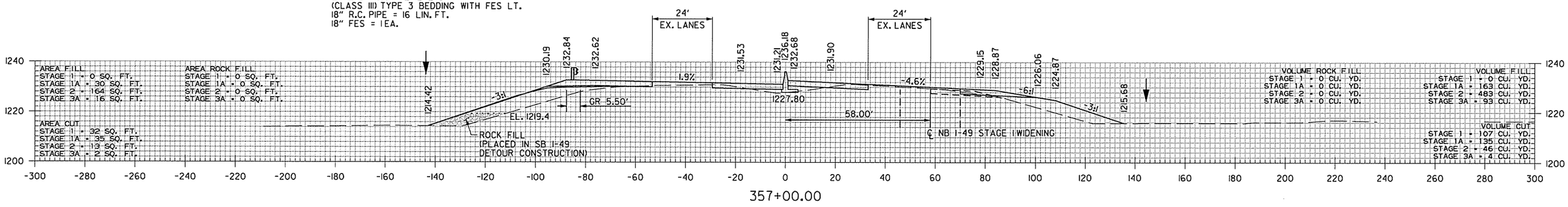

357+00.00

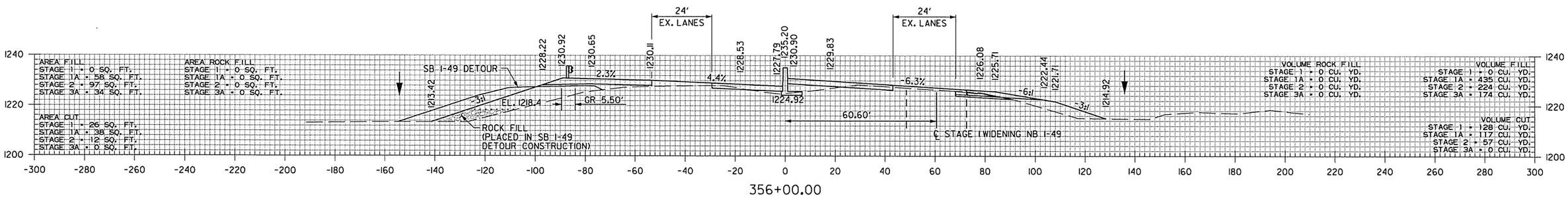

356+00.00

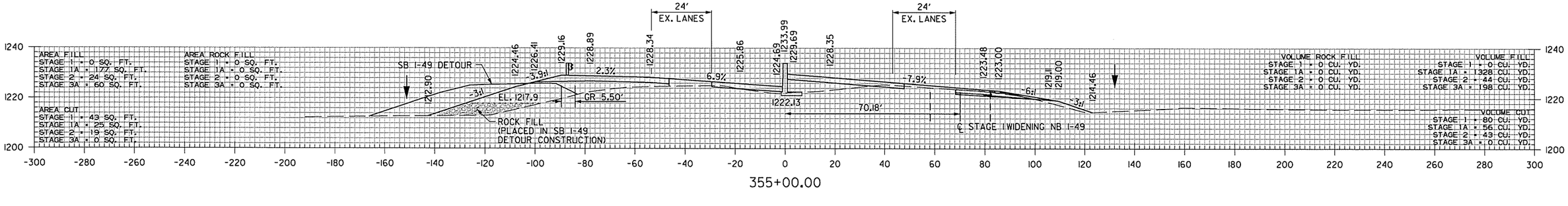

355+00.00

I-49
STA. 355+00 TO STA. 357+17

AEWlerclak 4/14/2016 2:37:10 PM
WORKSPACE: AHTD
L:\20\1\101707 - I-540 Widening & Interchange Improvement\Drawings\rBB0414_CX_I-49..dgn
REVISED DATE:

DATE REVISED	DATE FILMED	DATE REVISED	DATE FILMED	FED.RD. DIST.NO.	STATE	FED.AID PROJ.NO.	SHEET NO.	TOTAL SHEETS
				6	ARK.			
				JOB NO.		BB0414	716	886

(2) CROSS SECTIONS

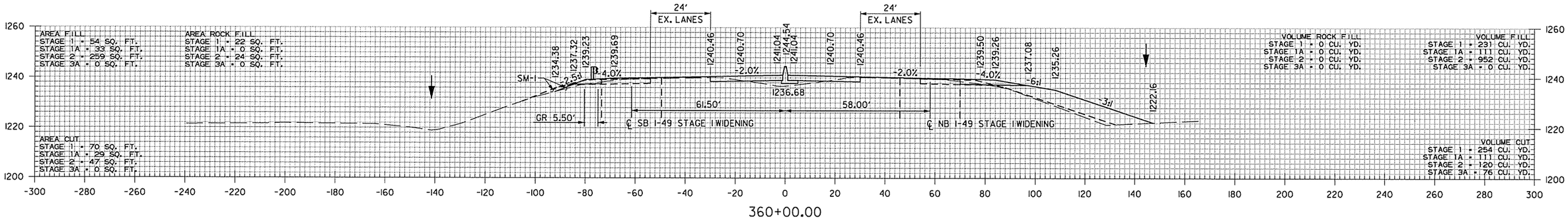

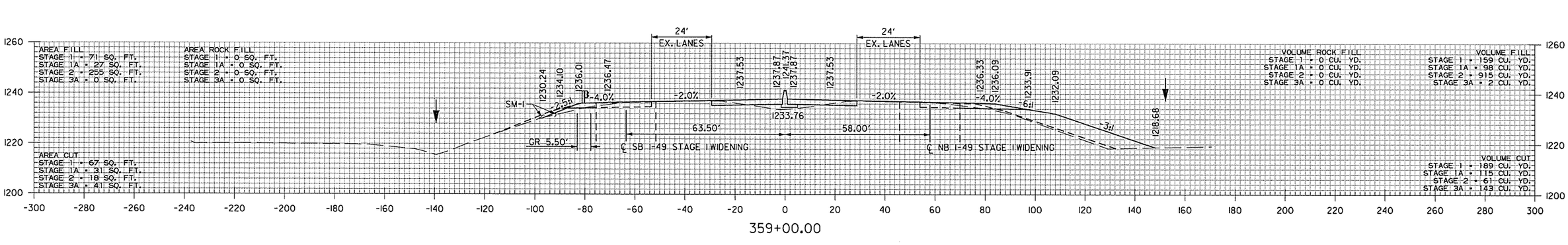

STA. 358+55.16 END SUPERELEVATION

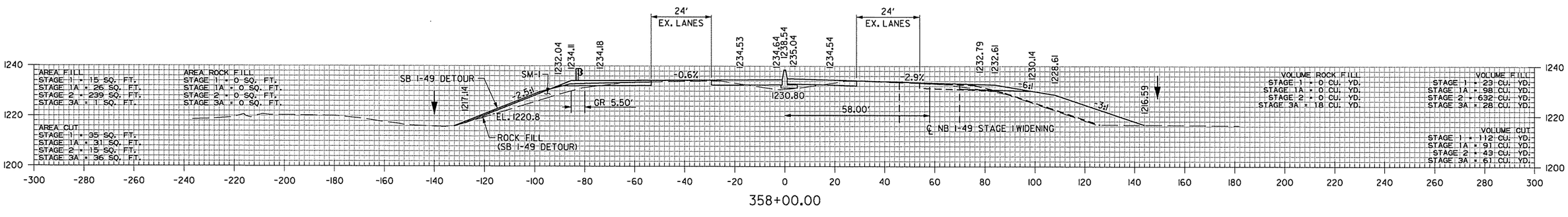

I-49
STA. 358+00 TO STA. 360+00

AEWierdak 4/18/2016 3:02:39 PM
WORKSPACE: AHTD
L:\20IN\NO17707 - I-540 Widening & Interchange Improvement\Drawings\rBB0414_CX_I-49..dgn
REVISED DATE:

DATE REVISED	DATE FILMED	DATE REVISED	DATE FILMED	FED.RD. DIST.NO.	STATE	FED.AID PROJ.NO.	SHEET NO.	TOTAL SHEETS
				6	ARK.			
				JOB NO.		BB0414	717	886
				(2)		CROSS SECTIONS		

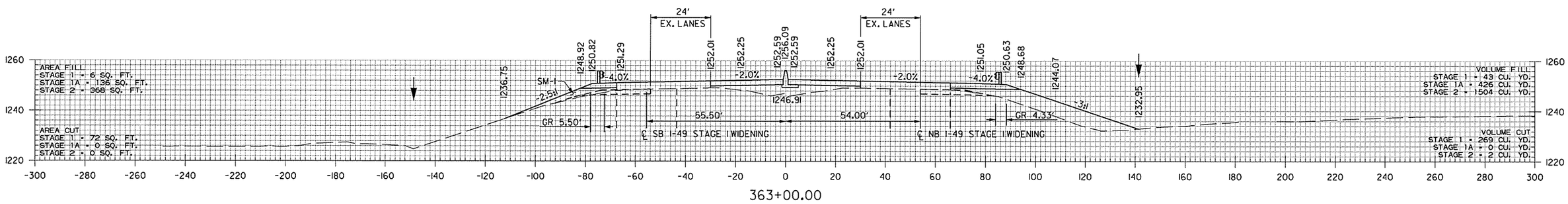

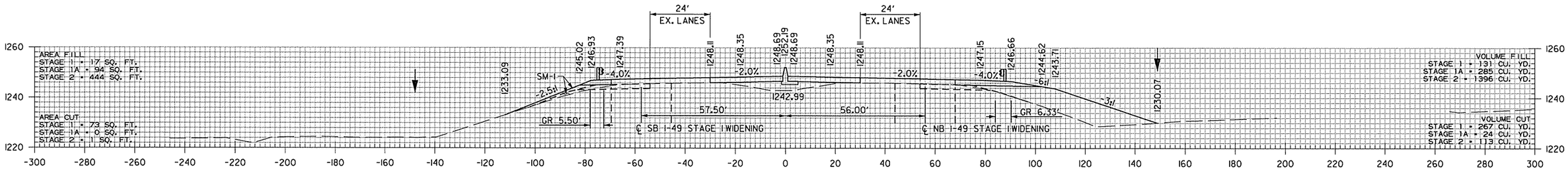

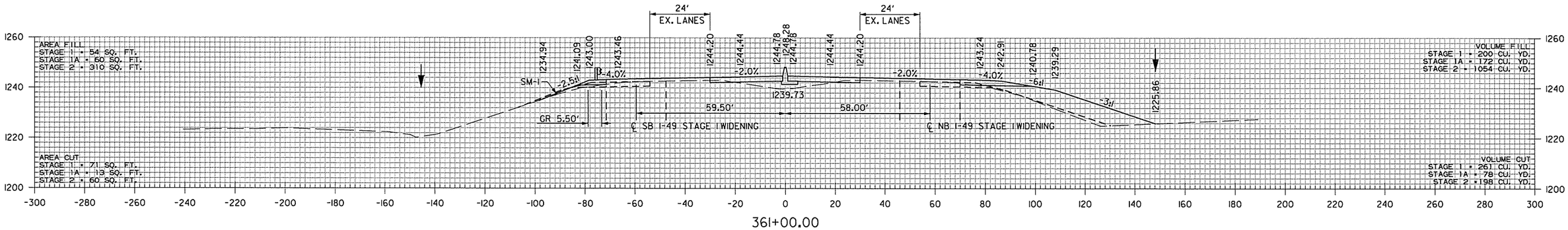

I-49
STA. 361+00 TO STA. 363+00

AEWierciak 4/14/2016 2:37:0 PM
WORKSPACE: AHTD
L:\201\100707 - I-540 Widening & Interchange Improvement\Drawings\r-BB0414_CX_I-49_.dgn
REVISED DATE:

DATE REVISED	DATE FILMED	DATE REVISED	DATE FILMED

FED.RD. DIST.NO.	STATE	FED.AID PROJ.NO.	SHEET NO.	TOTAL SHEETS
6	ARK.			
JOB NO.		BB0414	718	886

(2) CROSS SECTIONS

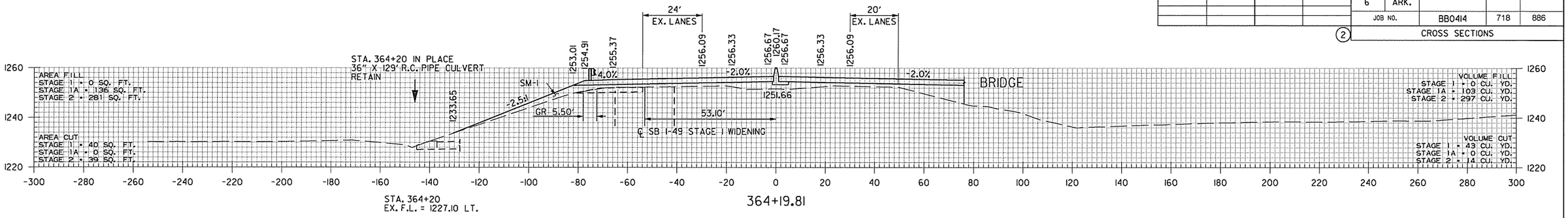

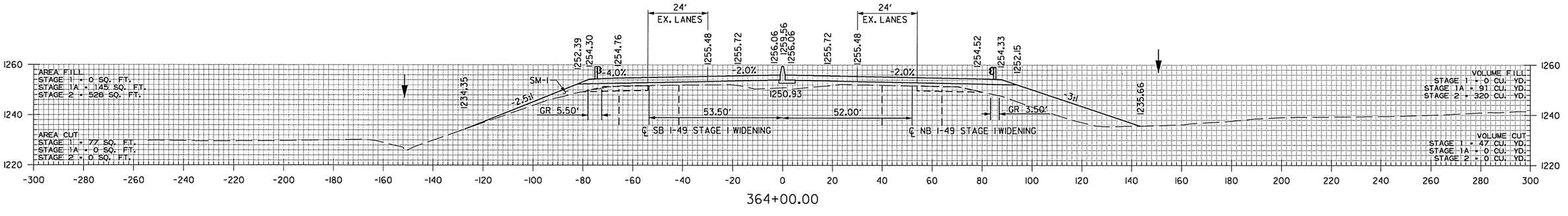

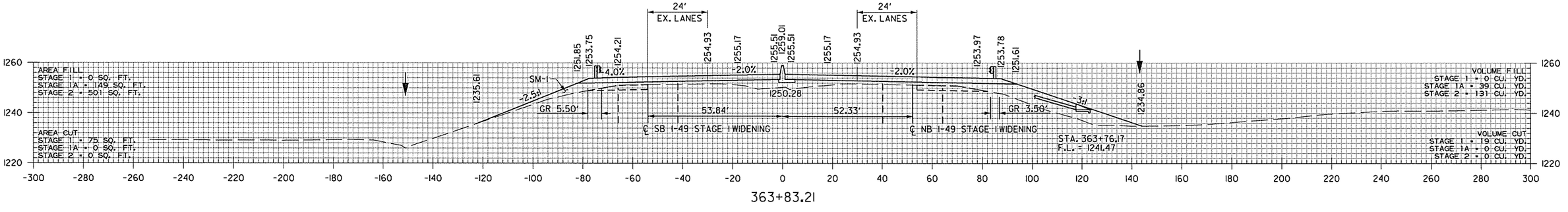

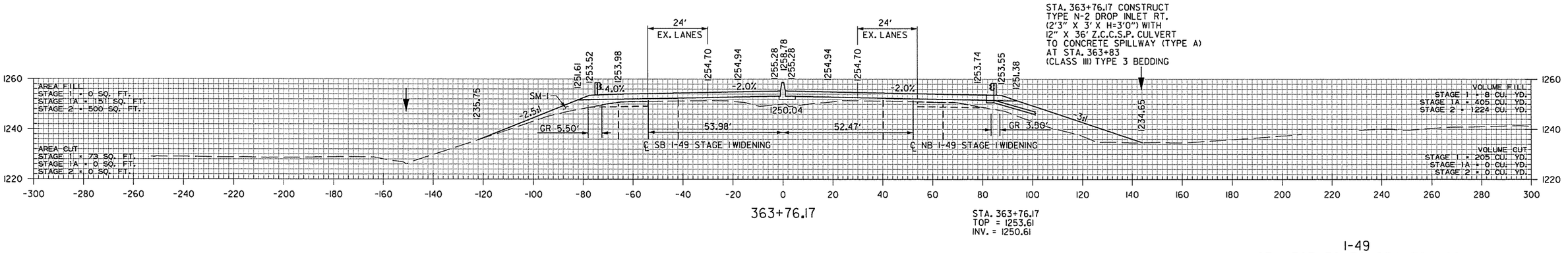

I-49
STA. 363+76 TO STA. 364+00

AEWierciak 4/14/2016 2:37:01 PM
WORKSPACE: AHTD
L:\20IN\I0I7I0T - I-540 Widening & Interchange Improvement\Drawings\rBB0414_CX_I-49..dgn
REVISED DATE:

DATE REVISED	DATE FILMED	DATE REVISED	DATE FILMED	FED.RD. DIST.NO.	STATE	FED.AID PROJ.NO.	SHEET NO.	TOTAL SHEETS
				6	ARK.			
				JOB NO.		BB0414	719	886
				(2)		CROSS SECTIONS		

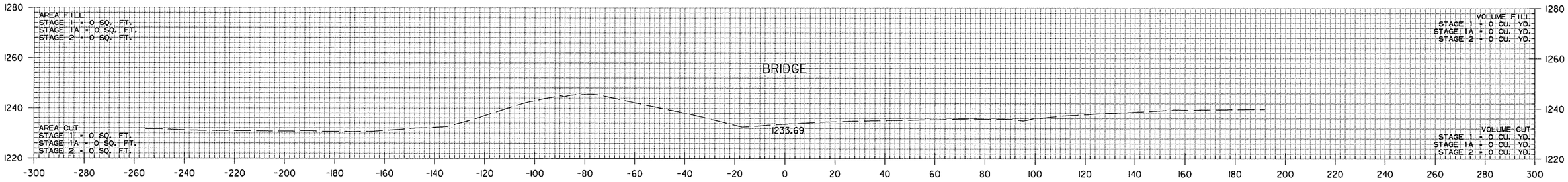

365+00.00

STA. 364+90.40 TOE OF SLOPE ℄ MSE WALL LT.

BEGIN BRIDGE LT.: VOLUME FILL
STAGE 1 = 0 CU. YD.
STAGE 1A = 145 CU. YD.
STAGE 2 = 111 CU. YD.

℄ MSE WALL LT.: VOLUME FILL
STAGE 1 = 0 CU. YD.
STAGE 1A = 147 CU. YD.
STAGE 2 = 284 CU. YD.

BEGIN BRIDGE LT.: VOLUME CUT
STAGE 1 = 38 CU. YD.
STAGE 1A = 0 CU. YD.
STAGE 2 = 0 CU. YD.

℄ MSE WALL LT.: VOLUME CUT
STAGE 1 = 10 CU. YD.
STAGE 1A = 0 CU. YD.
STAGE 2 = 0 CU. YD.

STA. 364+79.31 BEGIN BRIDGE LT.

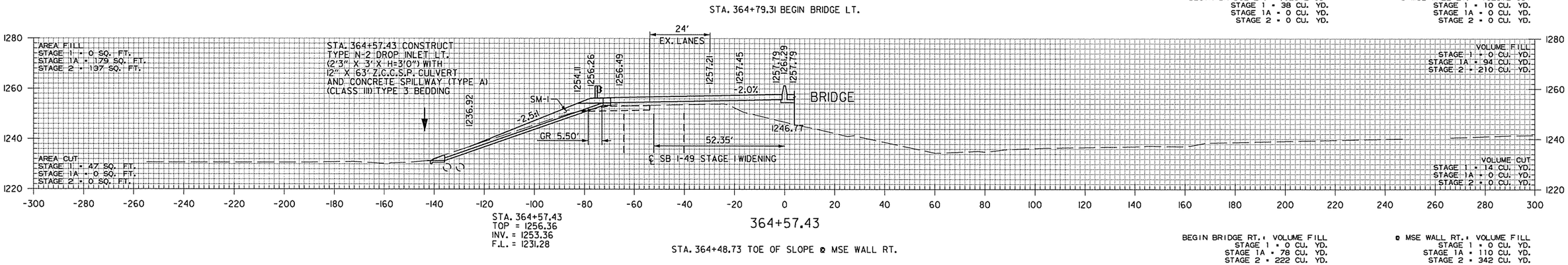

STA. 364+57.43
TOP = 1256.36
INV. = 1253.36
F.L. = 1231.28

364+57.43

STA. 364+48.73 TOE OF SLOPE ℄ MSE WALL RT.

BEGIN BRIDGE RT.: VOLUME FILL
STAGE 1 = 0 CU. YD.
STAGE 1A = 78 CU. YD.
STAGE 2 = 222 CU. YD.

℄ MSE WALL RT.: VOLUME FILL
STAGE 1 = 0 CU. YD.
STAGE 1A = 110 CU. YD.
STAGE 2 = 342 CU. YD.

BEGIN BRIDGE RT.: VOLUME CUT
STAGE 1 = 23 CU. YD.
STAGE 1A = 0 CU. YD.
STAGE 2 = 9 CU. YD.

℄ MSE WALL RT.: VOLUME FILL
STAGE 1 = 16 CU. YD.
STAGE 1A = 0 CU. YD.
STAGE 2 = 0 CU. YD.

STA. 364+37.64 BEGIN BRIDGE RT.

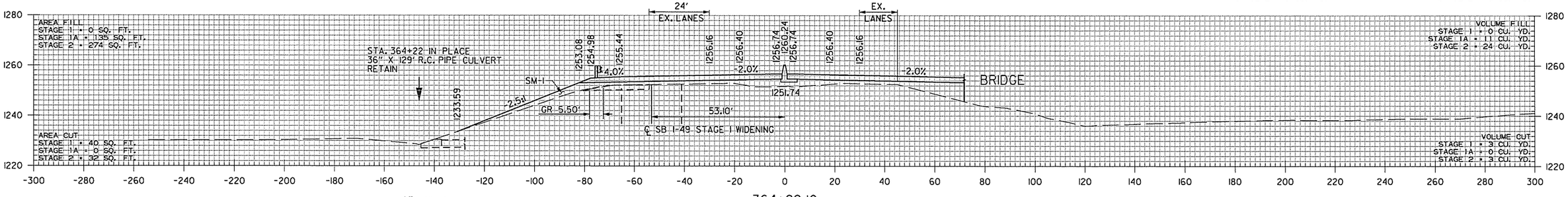

STA. 364+22
EX. F.L. = 1227.10 LT.

364+22.10

I-49
STA. 364+06 TO STA. 365+00

AEWierclok 4/14/2016 2:37:11 PM
WORKSPACE: AHTD
L:\2011\011707 - I-540 Widening & Interchange Improvement\Drawings\rBB0414_CX_I-49_.dgn
REVISED DATE:

DATE REVISED	DATE FILMED	DATE REVISED	DATE FILMED	FED.RD. DIST.NO.	STATE	FED.AID PROJ.NO.	SHEET NO.	TOTAL SHEETS
				6	ARK.			
				JOB NO.		BB0414	720	886

(2) CROSS SECTIONS

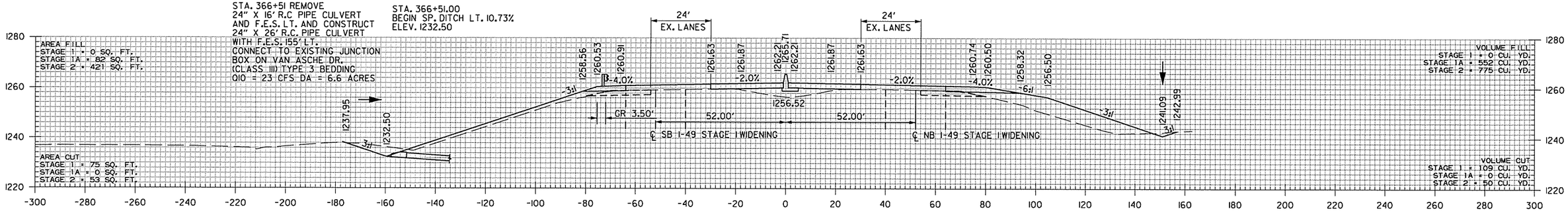

366+51.30

STA. 366+51
INV = 1232.50
F.L. = 1229.80 (MATCH EX.)

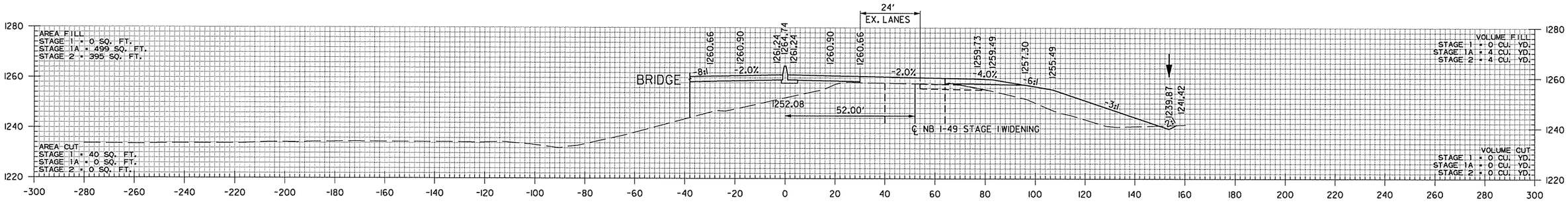

366+00.00

STA. 365+99.76 END BRIDGE LT.

STA. 365+88.67 TOE OF SLOPE ℄ MSE WALL LT.

STA. 365+70.03 RT.
BEGIN 300' TAPER

STA. 365+58.09 END BRIDGE RT.

STA. 365+50.00
BEGIN SP. DITCH RT. 2.37%
ELEV. 1238.69

VOLUME FILL TOE OF SLOPE LT.
STAGE 1 = 0 CU. YD.
STAGE 1A = 713 CU. YD.
STAGE 2 = 1139 CU. YD.

VOLUME CUT TOE OF SLOPE LT.
STAGE 1 = 45 CU. YD.
STAGE 1A = 126 CU. YD.
STAGE 2 = 227 CU. YD.

VOLUME FILL END BRIDGE LT.
STAGE 1 = 0 CU. YD.
STAGE 1A = 259 CU. YD.
STAGE 2 = 413 CU. YD.

VOLUME CUT END BRIDGE LT.
STAGE 1 = 16 CU. YD.
STAGE 1A = 46 CU. YD.
STAGE 2 = 82 CU. YD.

VOLUME FILL END BRIDGE RT.
STAGE 1 = 0 CU. YD.
STAGE 1A = 229 CU. YD.
STAGE 2 = 271 CU. YD.

VOLUME CUT END BRIDGE RT.
STAGE 1 = 8 CU. YD.
STAGE 1A = 46 CU. YD.
STAGE 2 = 93 CU. YD.

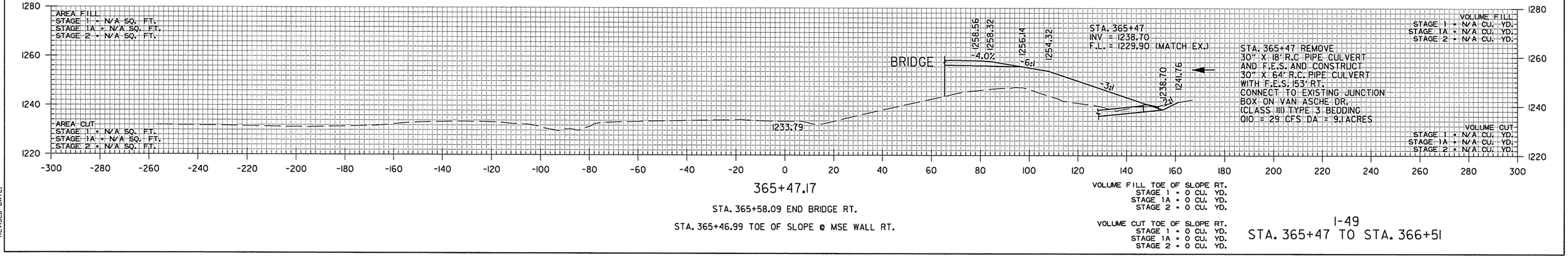

365+47.17

STA. 365+58.09 END BRIDGE RT.

STA. 365+46.99 TOE OF SLOPE ℄ MSE WALL RT.

VOLUME FILL TOE OF SLOPE RT.
STAGE 1 = 0 CU. YD.
STAGE 1A = 0 CU. YD.
STAGE 2 = 0 CU. YD.

VOLUME CUT TOE OF SLOPE RT.
STAGE 1 = 0 CU. YD.
STAGE 1A = 0 CU. YD.
STAGE 2 = 0 CU. YD.

I-49
STA. 365+47 TO STA. 366+51

AEWierclak 3/20/2016 11:57:59 AM
WORKSPACE: AHTD
L:\20II\II0I7I07 - I-540 Widening & Interchange Improvement\Drawings\rBB0414_CX_I-49_dgn
REVISED DATE:

DATE REVISED	DATE FILMED	DATE REVISED	DATE FILMED	FED.RD. DIST.NO.	STATE	FED.AID PROJ.NO.	SHEET NO.	TOTAL SHEETS
				6	ARK.			
				JOB NO.		BB0414	721	886
				(2)		CROSS SECTIONS		

STA. 368+70.03 RT.
END 300' TAPER

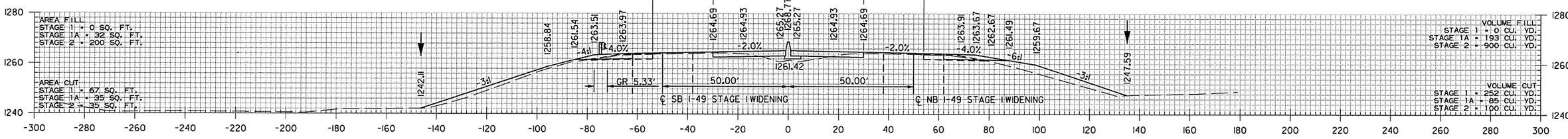

368+00.00

STA. 367+90.00
END SP. DITCH RT. 5.95%
ELEV. 1246.71

STA. 367+00.00
END SP. DITCH LT. 10.73%
ELEV. 1237.76

STA. 367+25.00
END SP. DITCH RT. 2.37%
BEGIN SP. DITCH RT. 5.95%
ELEV. 1242.84

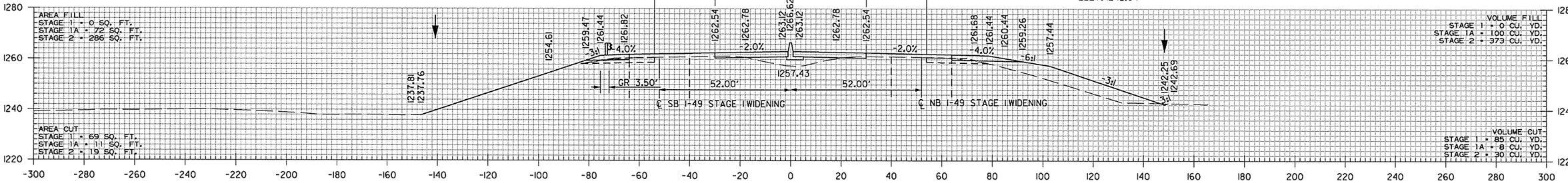

367+00.00

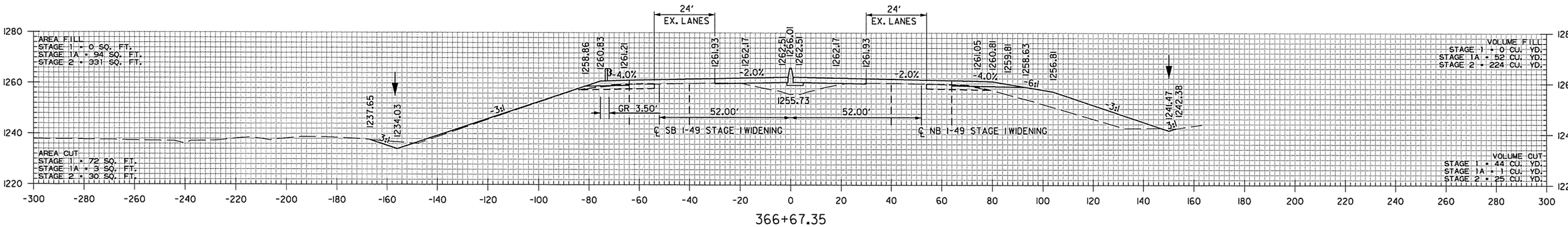

366+67.35

I-49
STA. 366+67 TO STA. 368+00

AEWierdak 3/20/2016 11:57:59 AM
WORKSPACE: AHTD
L:\20IN\I0I707 - I-540 Widening & Interchange Improvement\Drawings\rBB0414_CX_I-49..dgn
REVISED DATE:

DATE REVISED	DATE FILMED	DATE REVISED	DATE FILMED	FED.RD. DIST.NO.	STATE	FED.AID PROJ.NO.	SHEET NO.	TOTAL SHEETS
				6	ARK.			
				JOB NO.		BB0414	722	886
				(2)		CROSS SECTIONS		

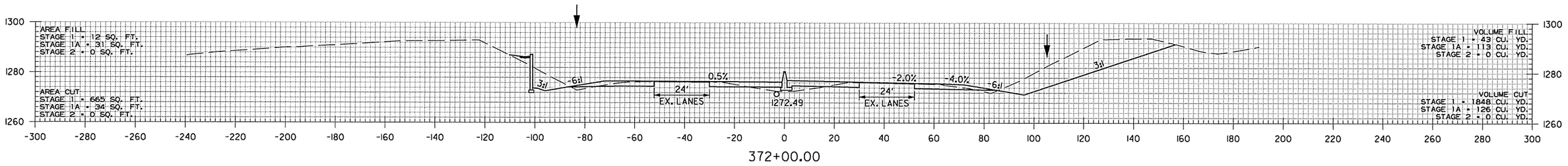

372+00.00

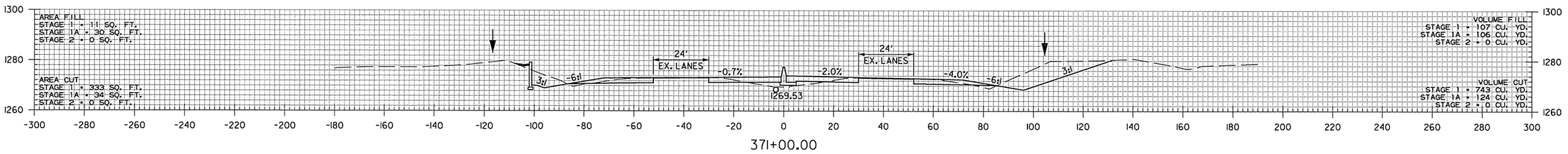

371+00.00

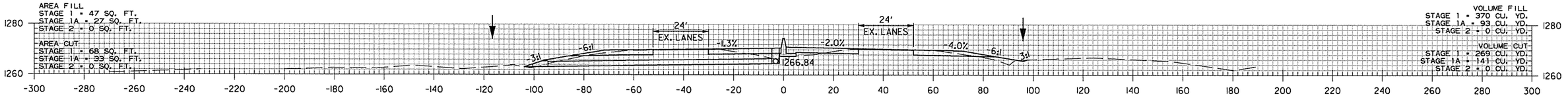

370+00.00

STA. 370+00 CONSTRUCT
TYPE ST JUNCTION BOX 3' LT.
(3' X 3' X H=6'1") WITH
24" X 90' R.C. PIPE OUTLET
ON LT. WITH FES. LT.
(JACK AND BORE)
(CLASS V) TYPE 2 BEDDING

STA. 370+00
TOP = 1270.58
INV = 1264.46
PROP F.L. = 1262.99 (LT.)

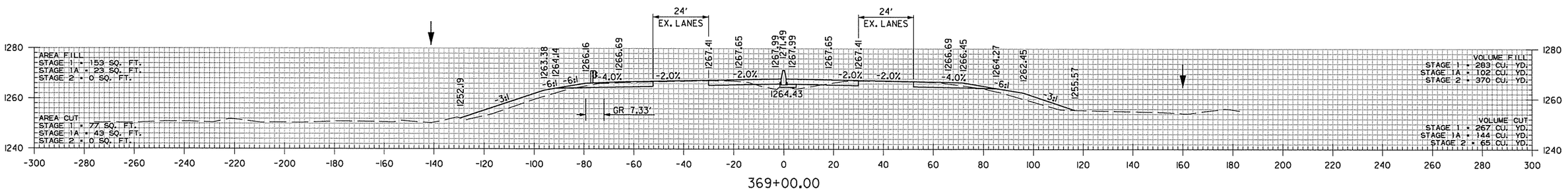

369+00.00

AEWierdick 3/20/2016 11:57:59 AM
WORKSPACE: AHTD
L:\20II\II07707 - I-540 Widening & Interchange Improvement\Drawings\rBB0414_CX_I-49..dgn
REVISED DATE:

DATE REVISED	DATE FILMED	DATE REVISED	DATE FILMED	FED.RD. DIST.NO.	STATE	FED.AID PROJ.NO.	SHEET NO.	TOTAL SHEETS
				6	ARK.			
				JOB NO.		BB0414	723	886
				(2)		CROSS SECTIONS		

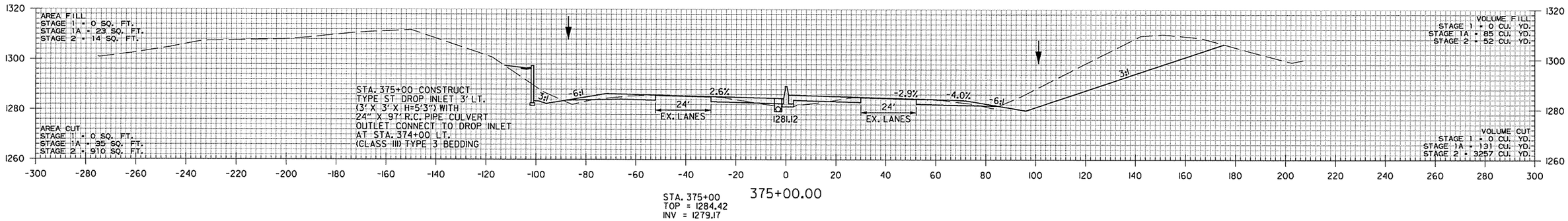

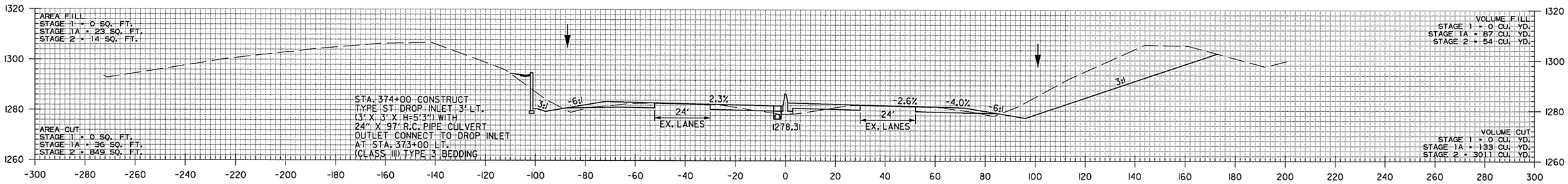

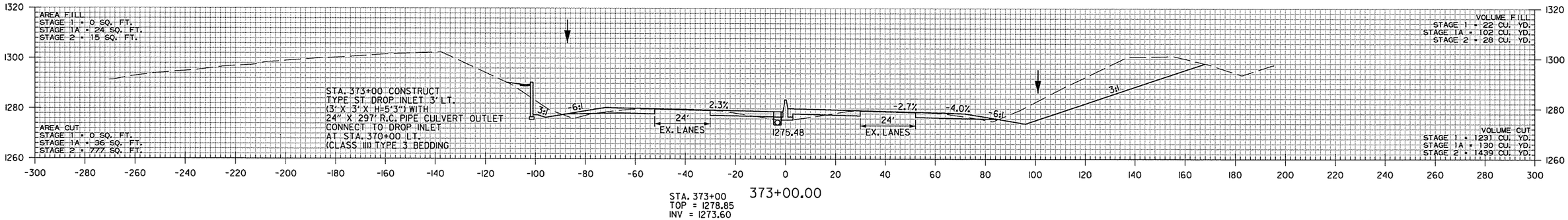

I-49
STA. 373+00 TO STA. 375+00

AEWierclok 3/20/2016 11:58:00 AM
WORKSPACE: AHTD
L:\20IN\I007107 - I-540 Widening & Interchange Improvement\Drawings\rBB0414_CX_I-49_.dgn
REVISED DATE:

DATE REVISED	DATE FILMED	DATE REVISED	DATE FILMED	FED.RD. DIST.NO.	STATE	FED.AID PROJ.NO.	SHEET NO.	TOTAL SHEETS
				6	ARK.			
				JOB NO.		BB0414	724	886
				(2)		CROSS SECTIONS		

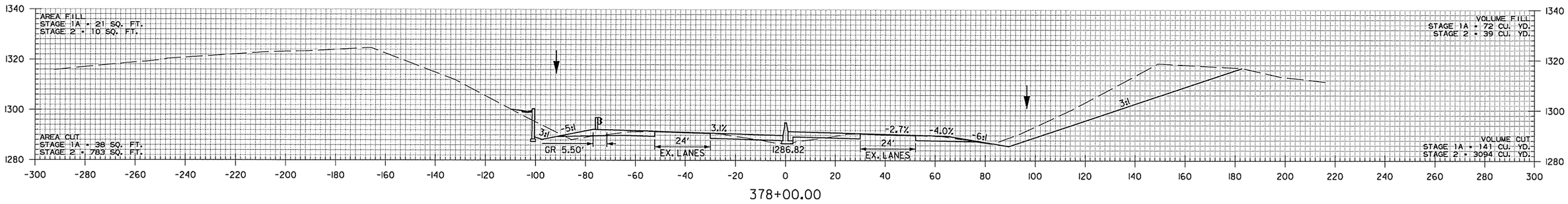

378+00.00

STA. 377+86.42 LT.
BEGIN 300' TAPER

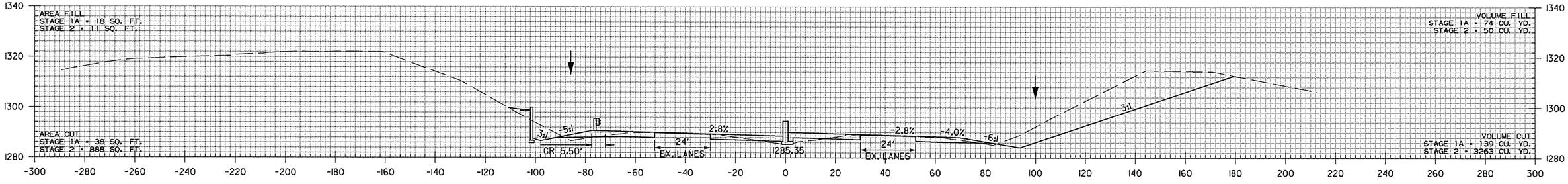

377+00.00

STA. 376+52.43 RT.
BEGIN 300' TAPER

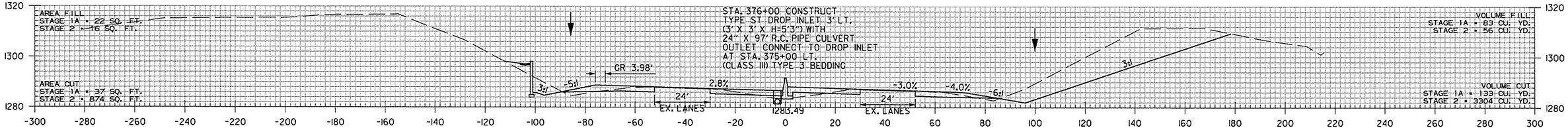

376+00.00

STA. 376+00
TOP = 1286.67
INV = 1281.42

I-49
STA. 376+00 TO STA. 378+00

AEWierciak 3/20/2016 11:58:00 AM
WORKSPACE: AHTD
L:\20IN\I40I707 - I-540 Widening & Interchange Improvement\Drawings\rBB0414_CX_I-49_.dgn
REVISED DATE:

DATE REVISED	DATE FILMED	DATE REVISED	DATE FILMED	FED.RD. DIST.NO.	STATE	FED.AID PROJ.NO.	SHEET NO.	TOTAL SHEETS
				6	ARK.			
				JOB NO.		BB0414	725	886
				(2)	CROSS SECTIONS			

STA. 381+52.43 RT.
END 200' VERTICAL TRANSITION
BEGIN MILL AND INLAY

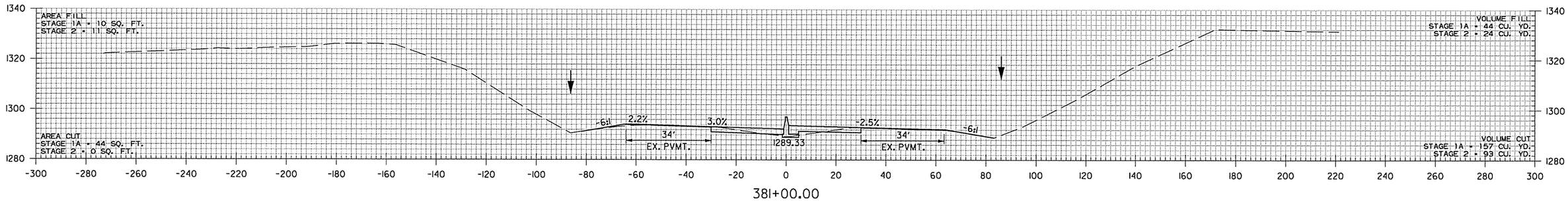

381+00.00

STA. 380+86.42 LT.
END 300' TAPER
BEGIN 200' VERTICAL TRANSITION

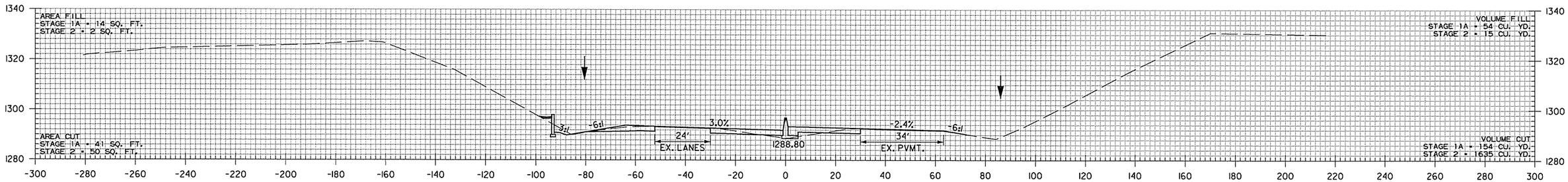

380+00.00

STA. 379+52.43 RT.
END 300' TAPER
BEGIN 200' VERTICAL TRANSITION

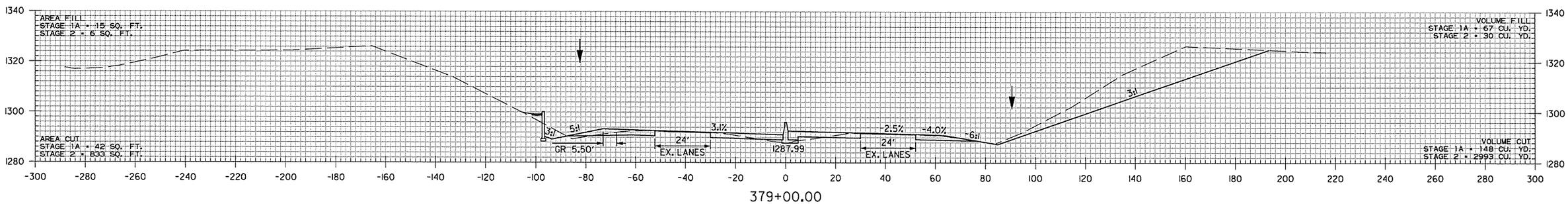

379+00.00

AEWierclak 3/20/2016 11:58:00 AM
WORKSPACE: AHTD
L:\20II\II0I7I07 - I-540 Widening & Interchange Improvement\Drawings\rBB0414_CX_I-49..dgn
REVISED DATE:

DATE REVISED	DATE FILMED	DATE REVISED	DATE FILMED	FED.RD. DIST.NO.	STATE	FED.AID PROJ.NO.	SHEET NO.	TOTAL SHEETS
				6	ARK.			
				JOB NO.		BB0414	726	886
				(2)		CROSS SECTIONS		

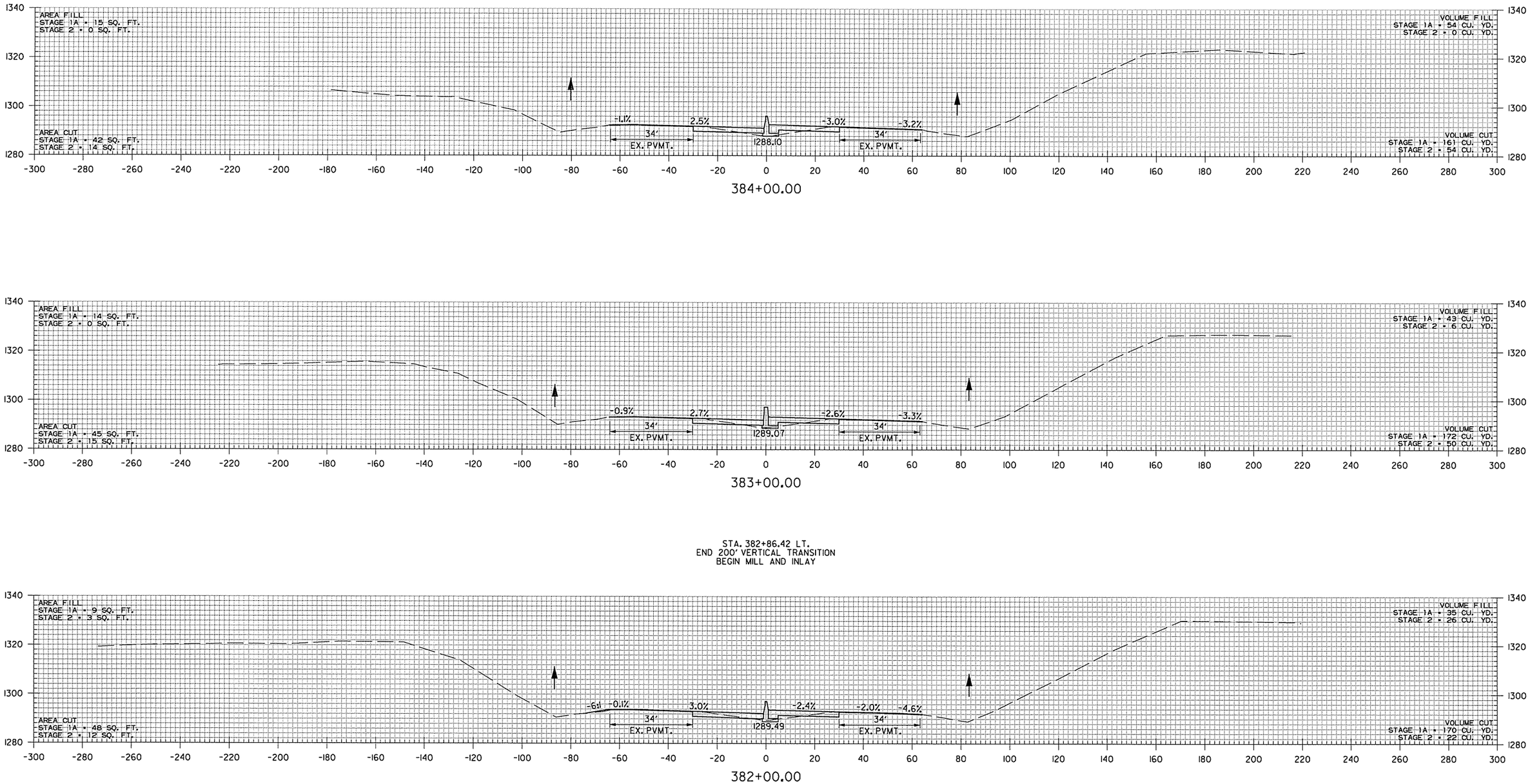

I-49
STA. 382+00 TO STA. 384+00

AEWierciak 3/20/2016 11:58:00 AM
WORKSPACE: AHTD
L:\20II\II0I707 - I-540 Widening & Interchange Improvement\Drawings\rBB0414_CX_I-49_.dgn
REVISED DATE:

DATE REVISED	DATE FILMED	DATE REVISED	DATE FILMED	FED.RD. DIST.NO.	STATE	FED.AID PROJ.NO.	SHEET NO.	TOTAL SHEETS
				6	ARK.			
				JOB NO.		BB0414	727	886

(2) CROSS SECTIONS

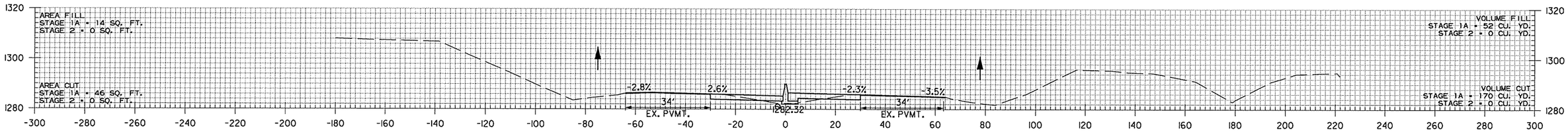

388+00.00

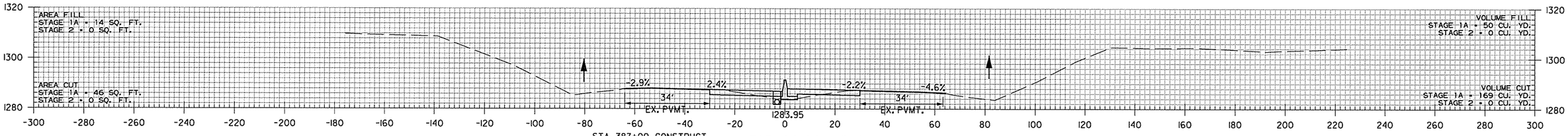

STA. 387+00 CONSTRUCT
TYPE ST DROP INLET 3' LT.
(3' X 3' X H=5'3")
WITH 24" X 197' R.C. PIPE OUTLET
CONNECT TO TYPE ST DROP INLET
AT STA. 389+00
(CLASS III) TYPE 3 BEDDING

387+00.00

STA. 387+00
TOP = 1286.99
INV = 1281.74

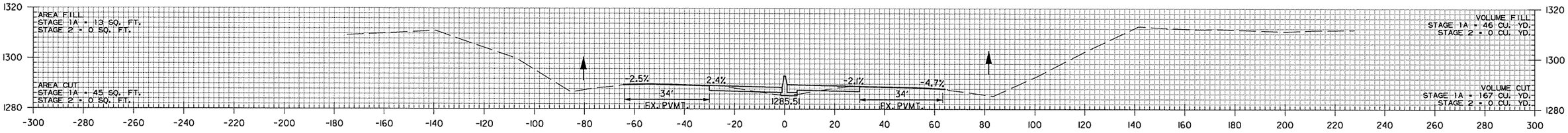

386+00.00

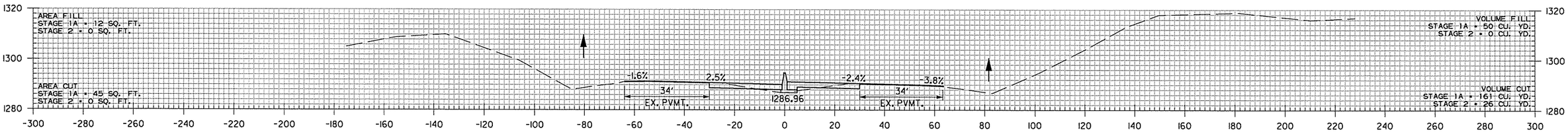

385+00.00

AEWerclok 3/20/2016 11:58:00 AM
WORKSPACE: AHTD
L:\20IN\10I7107 - I-540 Widening & Interchange Improvement\Drawings\r-BB0414_CX_I-49_.dgn
REVISED DATE:

DATE REVISED	DATE FILMED	DATE REVISED	DATE FILMED	FED.RD. DIST.NO.	STATE	FED.AID PROJ.NO.	SHEET NO.	TOTAL SHEETS
				6	ARK.			
				JOB NO.		BB0414	728	886
				(2)	CROSS SECTIONS			

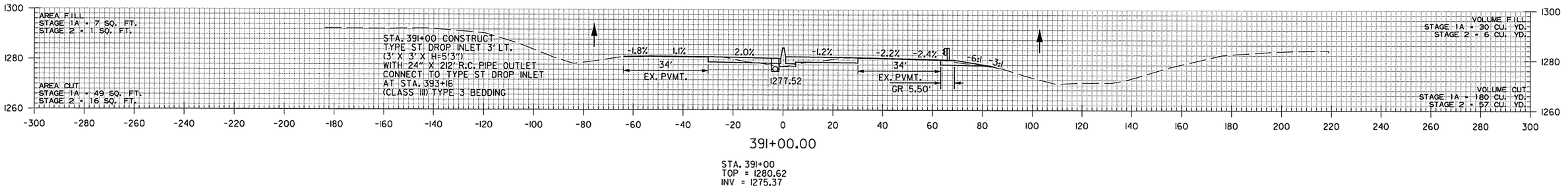

STA. 391+00
TOP = 1280.62
INV = 1275.37

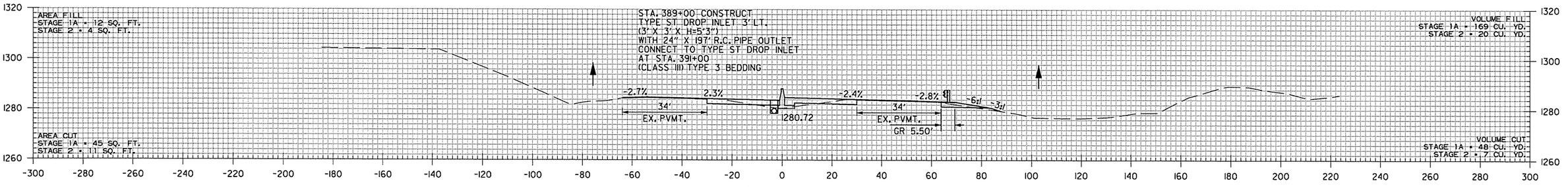

STA. 389+00
TOP = 1283.82
INV = 1278.57

AEWlerclok 3/20/2016 11:58:00 AM
WORKSPACE: AHTD
L:\20II\IOIT707 - I-540 Widening & Interchange Improvement\Drawings\r-BB0414_CX_I-49..dgn
REVISED DATE:

DATE REVISED	DATE FILMED	DATE REVISED	DATE FILMED	FED.RD. DIST.NO.	STATE	FED.AID PROJ.NO.	SHEET NO.	TOTAL SHEETS
				6	ARK.			
				JOB NO.		BB0414	729	886
				(2)		CROSS SECTIONS		

STA. 393+16.01 END JOB BB0414

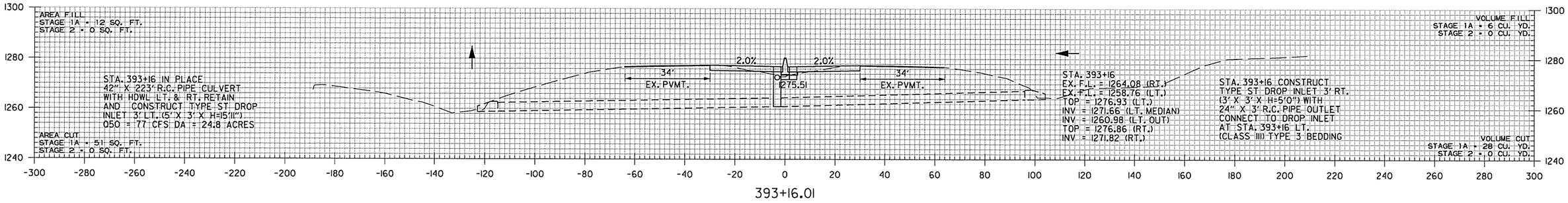

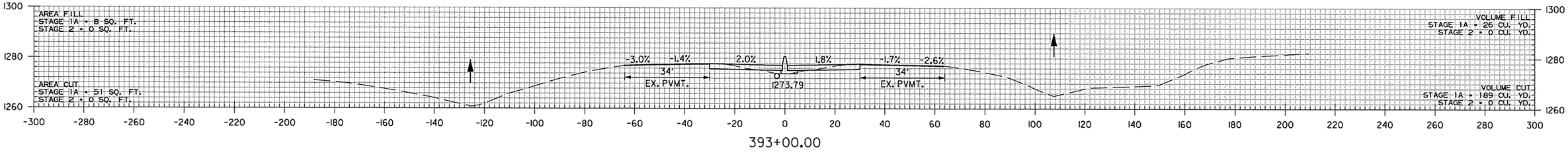

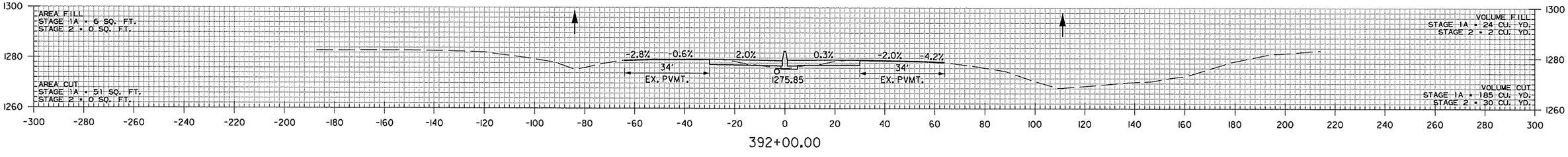

AEWierclok 3/20/2016 11:58:01 AM
WORKSPACE: AHTD
L:\2011\101707 - I-540 Widening & Interchange Improvement\Drawings\r-BB0414_CX_I-49_.dgn
REVISED DATE:

DATE REVISED	DATE FILMED	DATE REVISED	DATE FILMED	FED.RD. DIST.NO.	STATE	FED.AID PROJ.NO.	SHEET NO.	TOTAL SHEETS
				6	ARK.			
				JOB NO.		BB0414	730	886
				(2)		CROSS SECTIONS		

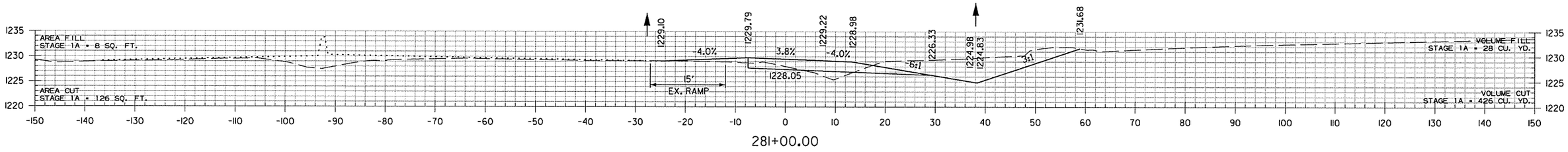

281+00.00

STA. 280+19.47 BEGIN SUPERELEVATION

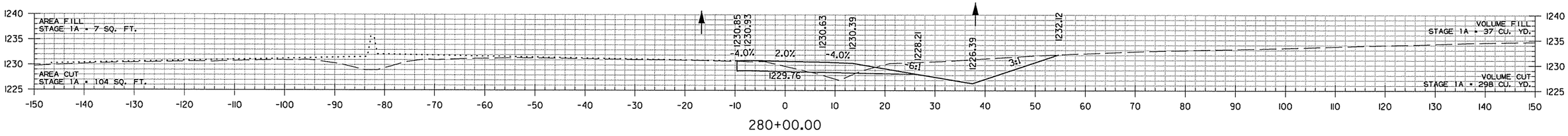

280+00.00

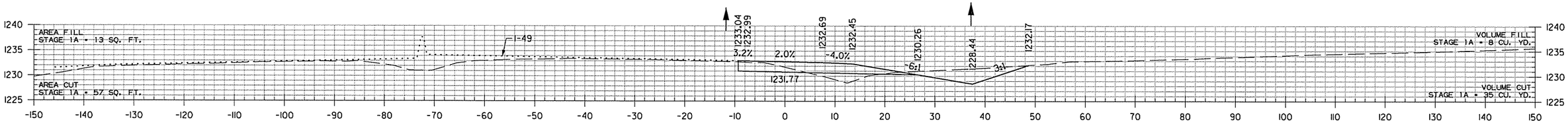

279+00.00

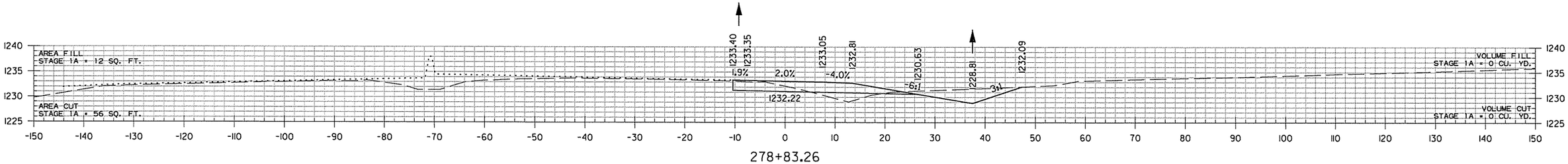

278+83.26

STA. 278+83.26 BEGIN HWY. 112 RAMP 1

HWY. 112 RAMP 1
STA. 278+83 TO STA. 281+00

AEWierciak 3/20/2016 11:58:01 AM
WORKSPACE: AHTD
L:\2011\110170T - I-540 Widening & Interchange Improvement\Drawings\rBB0414_CX_HWY 112 RAMP 1_.dgn
REVISED DATE:

DATE REVISED	DATE FILMED	DATE REVISED	DATE FILMED	FED.RD. DIST.NO.	STATE	FED.AID PROJ.NO.	SHEET NO.	TOTAL SHEETS
				6	ARK.			
				JOB NO.		BB0414	731	886
				(2)		CROSS SECTIONS		

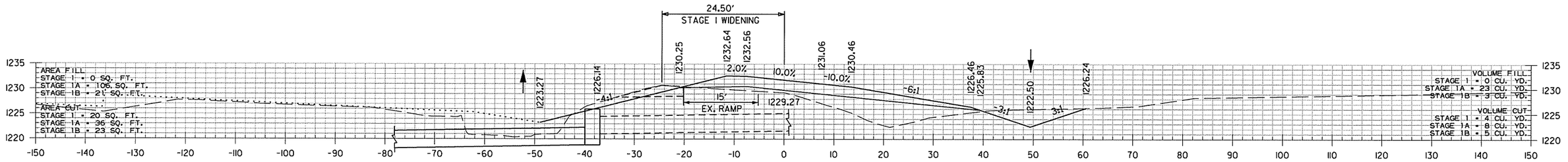

283+99.03

STA. 283+96
TOP = 1225.96
INV = 1221.00 RT.
INV = 1218.79 LT.

STA. 283+96 IN PLACE
42" X 60' R.C. PIPE CULVERT
WITH HDWL. LT. & RT.
REMOVE HDWL. LT. AND 8' PIPE AND CONSTRUCT
TYPE ST JUNCTION BOX (5' X 3' X H=7'2") 38' LT.
REMOVE HDWL. RT. AND EXTEND R.C. PIPE 24' RT.
(CLASS III) TYPE 3 BEDDING WITH FES RT.
Q50 = 58 CFS DA = 11.1 ACRES
42" R.C. PIPE = 28 LIN. FT.
42" FES = 1EA.

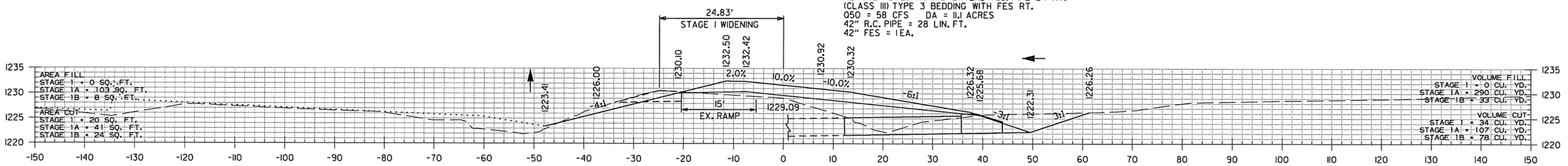

283+93.13

STA. 283+96
EX. F.L. = 1221.66 (RT.)
PROP F.L. = 1222.31 (RT.)

STA. 283+69.47 MAX. SUPERELEVATION (0.100'/')

STA. 283+93.00
END SP. DITCH RT. -0.99%
BEGIN SP. DITCH RT. 3.19%
ELEV. 1222.31

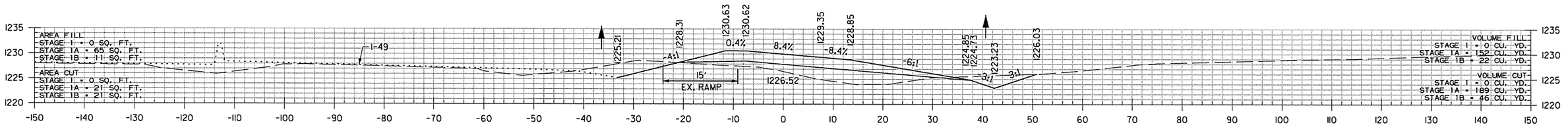

283+00.00

STA. 283+00.00
BEGIN SP. DITCH RT. -0.99%
ELEV. 1223.23

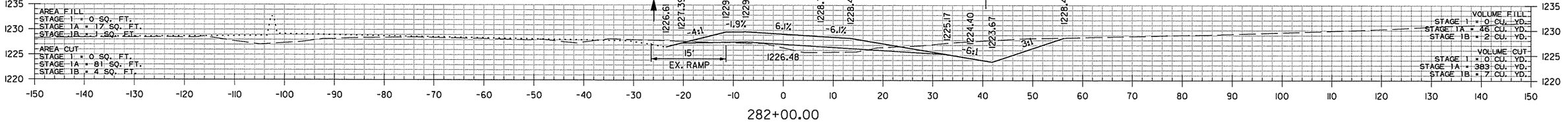

282+00.00

HWY. 112 RAMP 1
STA. 282+00 TO STA. 283+99

AEWierclck 3/20/2016 11:58:01 AM
WORKSPACE: AHTD
L:\2011\11017\07 - I-540 Widening & Interchange Improvement\Drawings\rBB0414_CX_HWY 112 RAMP 1_dgn
REVISED DATE:

DATE REVISED	DATE FILMED	DATE REVISED	DATE FILMED	FED.RD. DIST.NO.	STATE	FED.AID PROJ.NO.	SHEET NO.	TOTAL SHEETS
				6	ARK.			
				JOB NO.		BB0414	732	886
				(2)		CROSS SECTIONS		

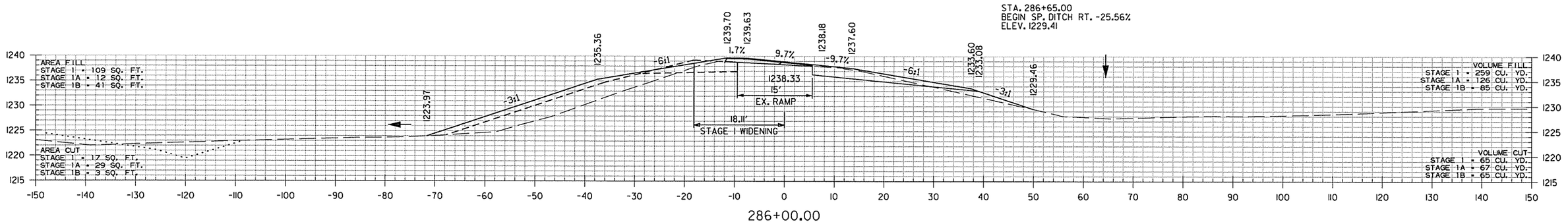

STA. 285+86.29 MAX. SUPERELEVATION (0.100'/')

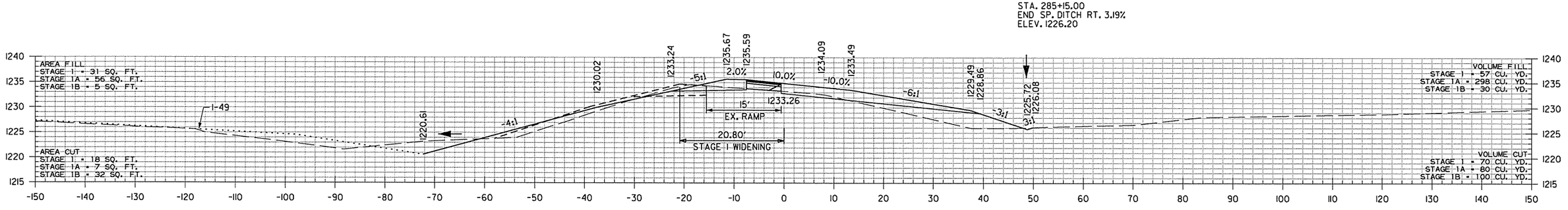

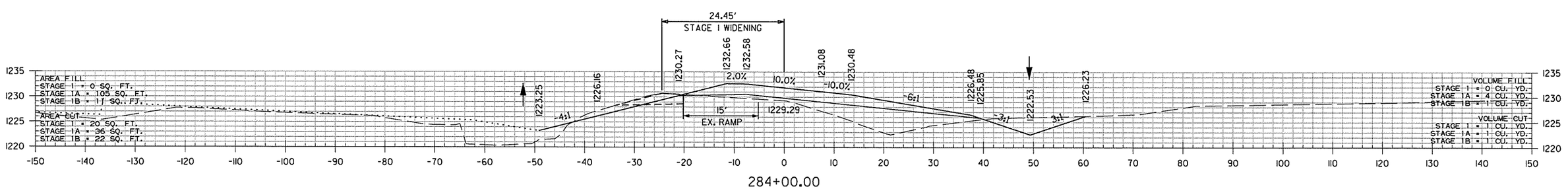

HWY. 112 RAMP 1
STA. 284+00 TO STA. 286+00

AEWierciak 3/20/2016 11:58:01 AM
WORKSPACE: AHTD
L:\201\110177OT - I-540 Widening & Interchange Improvement\Drawings\r BB0414_CX_HWY 112 RAMP 1_.dgn
REVISED DATE:

DATE REVISED	DATE FILMED	DATE REVISED	DATE FILMED	FED.RD. DIST.NO.	STATE	FED.AID PROJ.NO.	SHEET NO.	TOTAL SHEETS
				6	ARK.			
				JOB NO.		BB0414	733	886

(2) CROSS SECTIONS

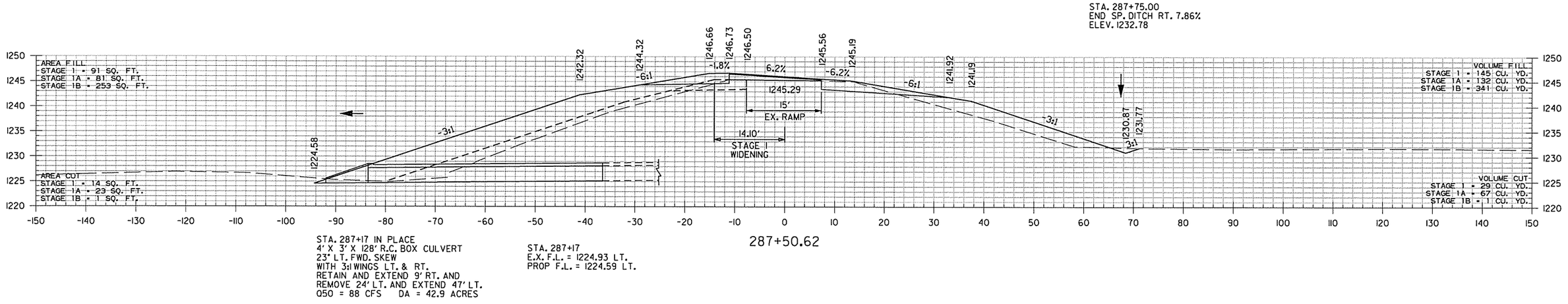

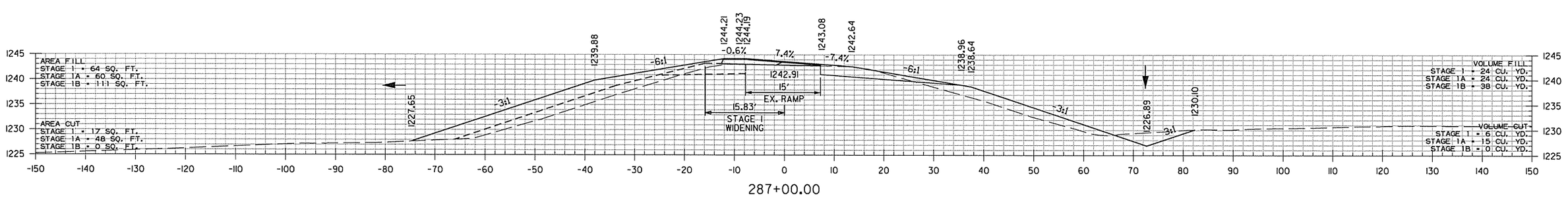

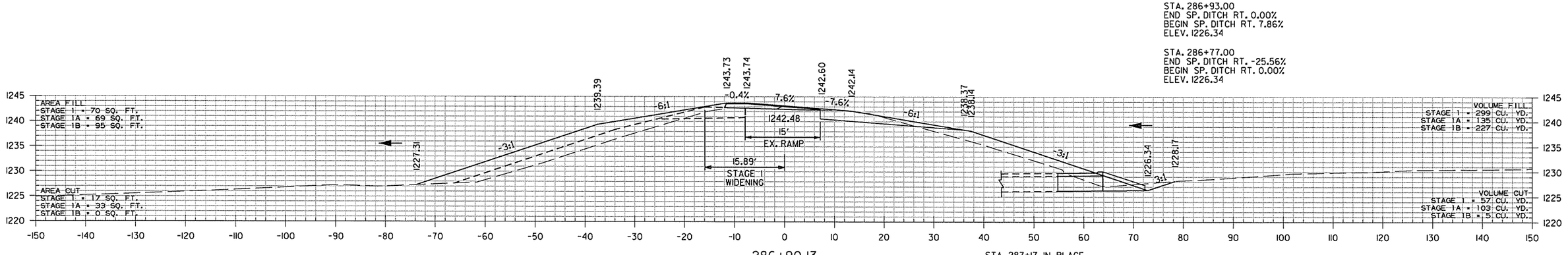

HWY. 112 RAMP 1
STA. 286+90 TO STA. 287+51

AEWierciak 3/20/2016 11:58:02 AM
WORKSPACE: AHTD
L:\20IN\IQ07107 - I-540 Widening & Interchange Improvement\Drawings\rBB0414_CX_HWY 112 RAMP 1.dgn
REVISED DATE:

DATE REVISED	DATE FILMED	DATE REVISED	DATE FILMED	FED.RD. DIST.NO.	STATE	FED.AID PROJ.NO.	SHEET NO.	TOTAL SHEETS
				6	ARK.			
				JOB NO.		BB0414	734	886
				(2)		CROSS SECTIONS		

STA. 290+68.59 END HWY. 112 RAMP 1

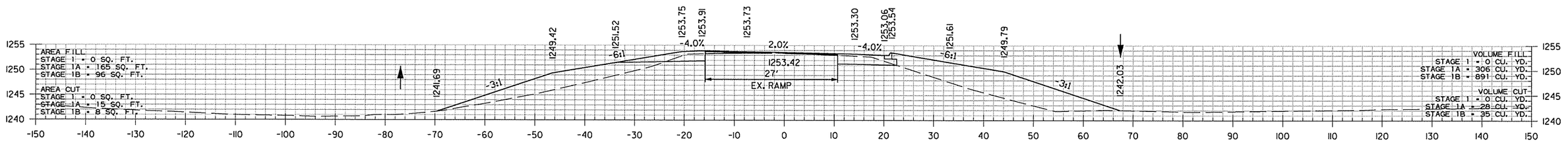

STA. 289+36.29 END SUPERELEVATION

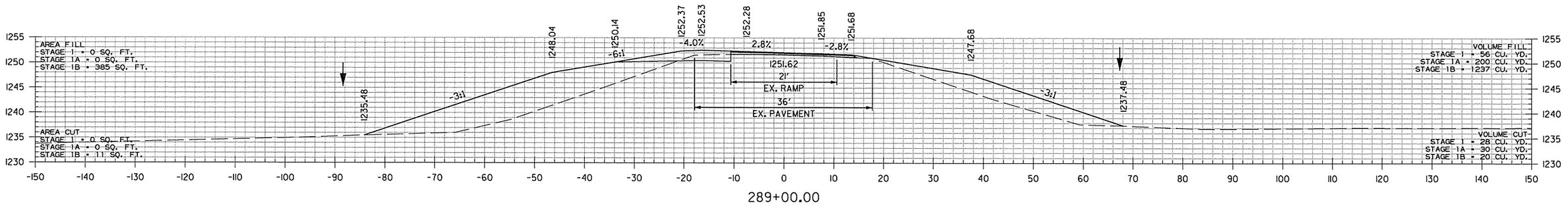

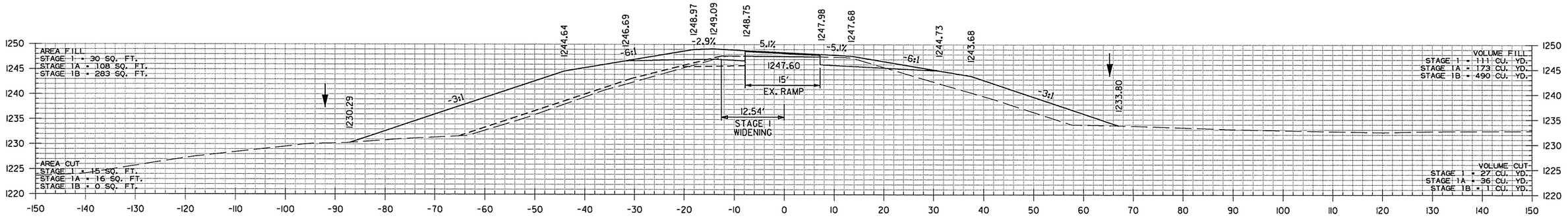

HWY. 112 RAMP 1
STA. 288+00 TO STA. 290+00

AEWerclok 3/20/2016 11:58:02 AM
WORKSPACE: AHTD
L:\20IN\10I1707 - I-540 Widening & Interchange Improvement\Drawings\r-BB0414_CX_HWY 112 RAMP 1_dgn
REVISED DATE:

DATE REVISED	DATE FILMED	DATE REVISED	DATE FILMED	FED.RD. DIST.NO.	STATE	FED.AID PROJ.NO.	SHEET NO.	TOTAL SHEETS
				6	ARK.			
				JOB NO.		BB0414	735	886
				(2)		CROSS SECTIONS		

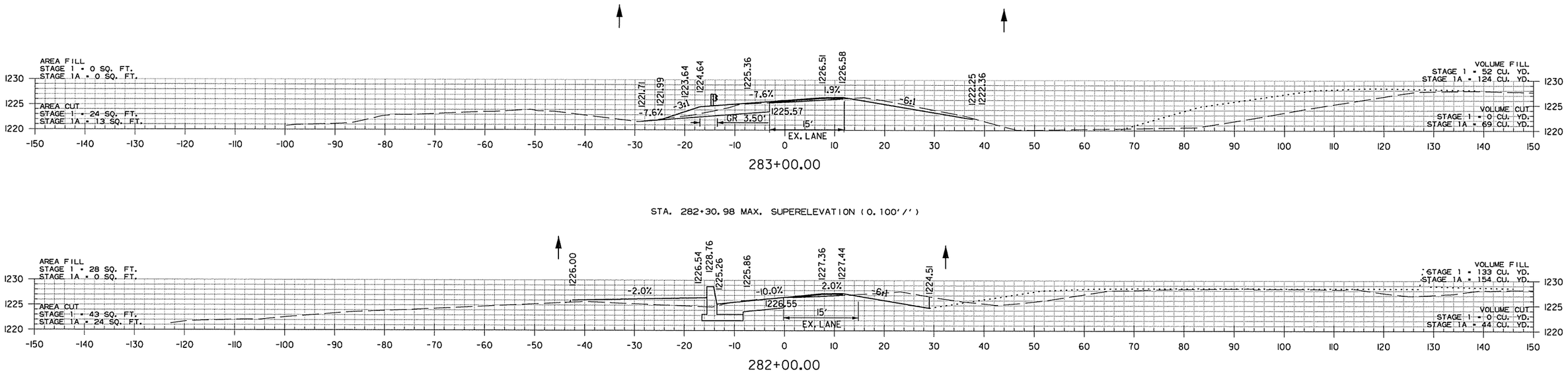

STA. 280+20.12 BEGIN HWY. 112 RAMP 4
STA. 278+01.37 BEGIN SUPERELEVATION

HWY. 112 RAMP 4
STA. 280+20 TO STA. 283+00

AEWierdick 3/20/2016 11:58:02 AM
WORKSPACE: AHTD
L:\20IN\I0I7\07 - I-540 Widening & Interchange Improvement\Drawings\r-BB0414_CX-HWY 112 RAMP 4.dgn
REVISED DATE:

DATE REVISED	DATE FILMED	DATE REVISED	DATE FILMED	FED.RD. DIST.NO.	STATE	FED.AID PROJ.NO.	SHEET NO.	TOTAL SHEETS
				6	ARK.			
				JOB NO.		BB0414	736	886
				(2)	CROSS SECTIONS			

NO CONSTRUCTION
STA. 286+50.00 TO 295+50.00

STA. 286+50.00 END 100' TRANSITION TO MATCH EXISTING

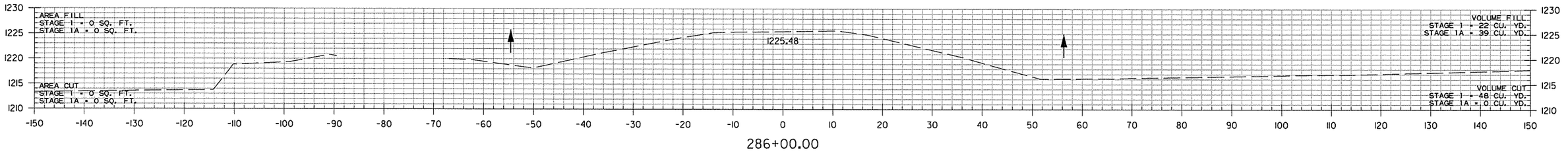

286+00.00

STA. 285+80.98 END SUPERELEVATION

STA. 285+50.00 BEGIN 100' TRANSITION TO MATCH EXISTING

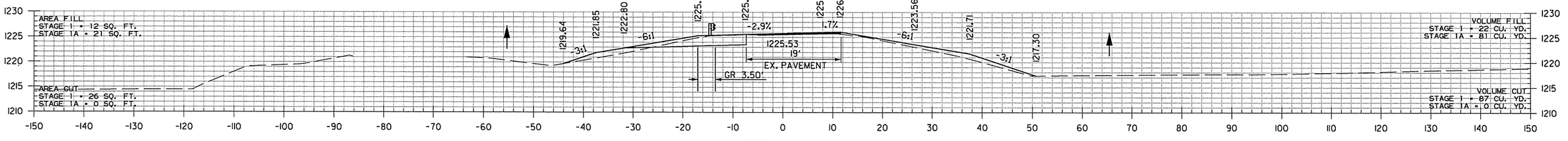

285+00.00

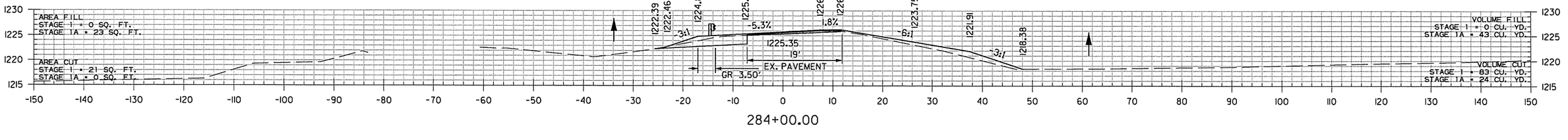

284+00.00

HWY. 112 RAMP 4
STA. 284+00 TO STA. 287+00

AEWierclak 3/20/2016 11:58:02 AM
WORKSPACE: AHTD
L:\r20\1\101707 - I-540 Widening & Interchange Improvement\Drawings\rBB0414_CX_HWY 112 RAMP 4_.dgn
REVISED DATE:

DATE REVISED	DATE FILMED	DATE REVISED	DATE FILMED	FED.RD. DIST.NO.	STATE	FED.AID PROJ.NO.	SHEET NO.	TOTAL SHEETS
				6	ARK.			
				JOB NO.		BB0414	737	886
				(2)	CROSS SECTIONS			

STA. 298+06.90 END HWY. 112 RAMP 4

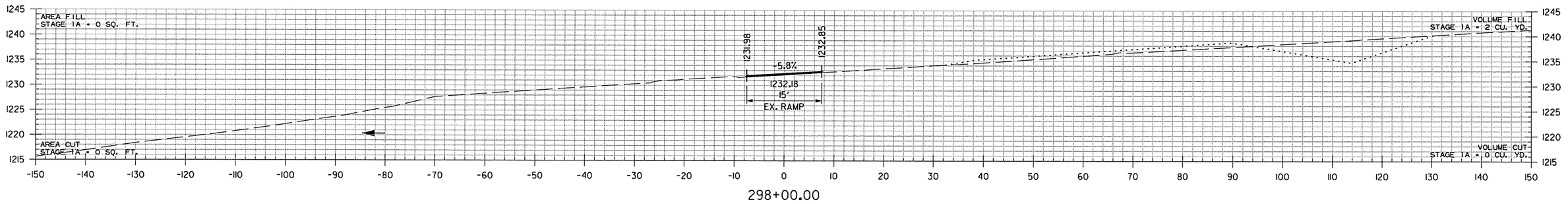

298+00.00

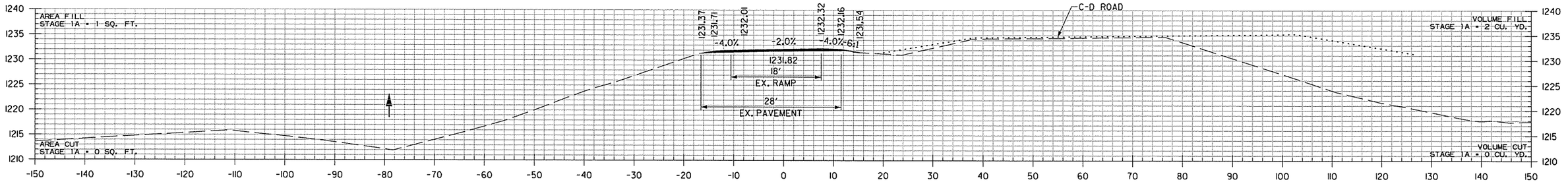

297+00.00

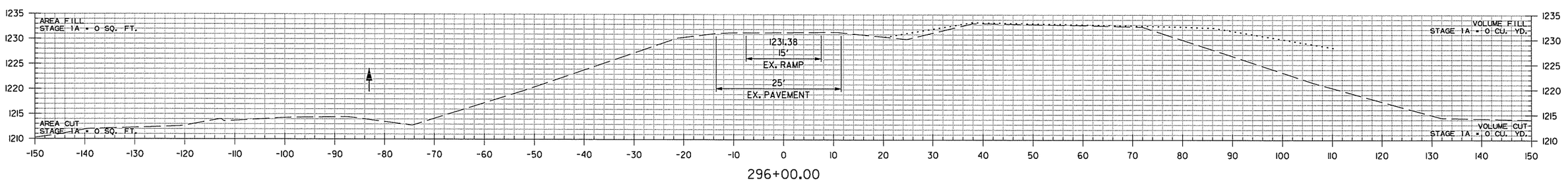

296+00.00

STA. 295+50.00 BEGIN 100' TRANSITION TO MATCH EXISTING

HWY. 112 RAMP 4
STA. 296+00 TO STA. 298+00

AEWtercick 3/20/2016 11:58:02 AM
WORKSPACE: AHTD
L:\20IN\10I1707 - I-540 Widening & Interchange Improvement\Drawings\rBB0414_CX_HWY 112 RAMP 4_.dgn
REVISED DATE:

DATE REVISED	DATE FILMED	DATE REVISED	DATE FILMED	FED.RD. DIST.NO.	STATE	FED.AID PROJ.NO.	SHEET NO.	TOTAL SHEETS
				6	ARK.			
				JOB NO.		BB0414	738	886

(2) CROSS SECTIONS

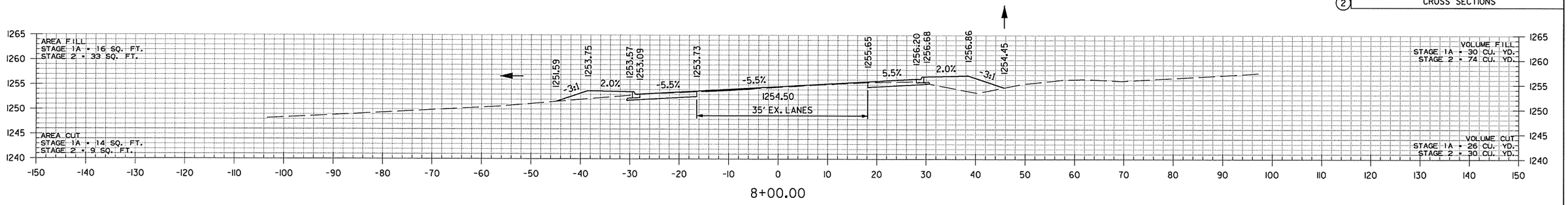

8+00.00

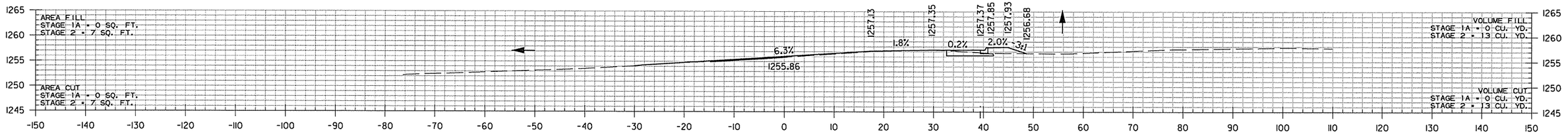

7+00.00

STA. 6+77.03 BEGIN HWY. 112

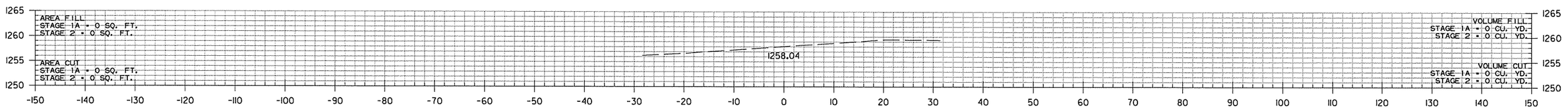

6+00.00

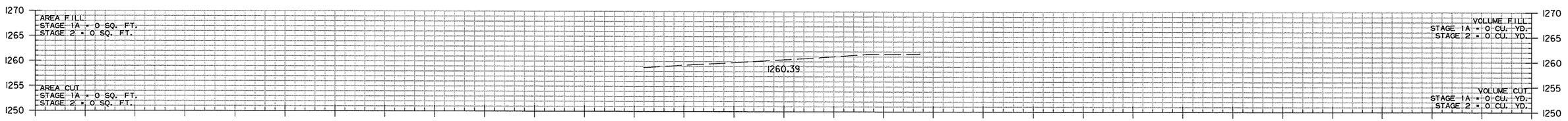

5+00.00

HWY. 112
STA. 5+00 TO STA. 8+00

AEWierclok 3/20/2016 11:58:04 AM
WORKSPACE: AHTD
L:\201\100170T - I-540 Widening & Interchange Improvement\Drawings\rBB0414_CX_HWY 112_.dgn
REVISED DATE:

DATE REVISED	DATE FILMED	DATE REVISED	DATE FILMED	FED.RD. DIST.NO.	STATE	FED.AID PROJ.NO.	SHEET NO.	TOTAL SHEETS
				6	ARK.			
				JOB NO.		BB0414	739	886
				(2)		CROSS SECTIONS		

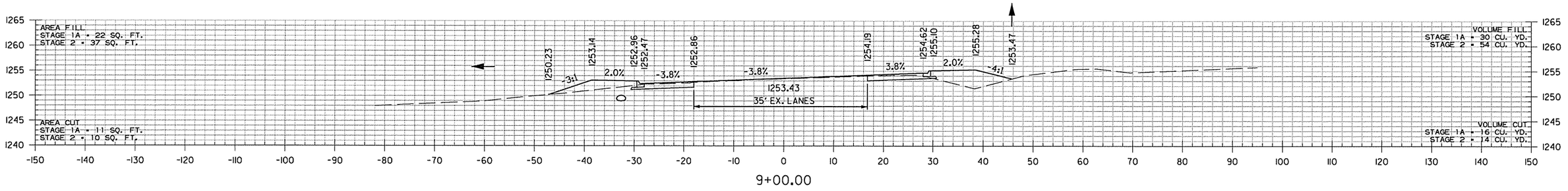

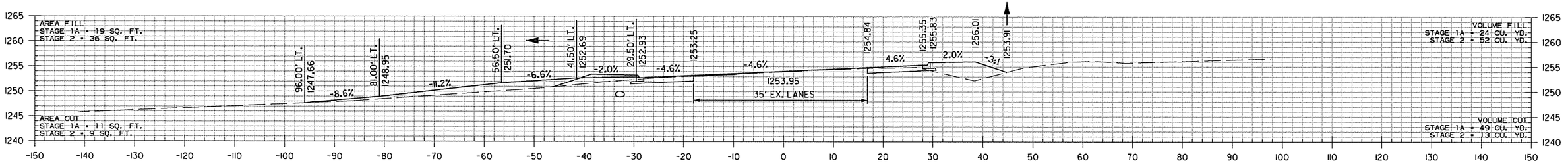

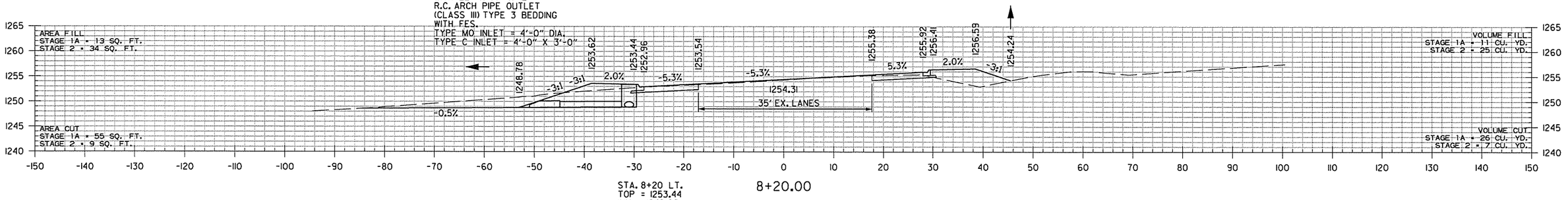

HWY. 112
STA. 8+20 TO STA. 9+00

AEWlerclark 3/20/2016 11:58:04 AM
WORKSPACE: AHTD
L:\20II\I0I7707 - I-540 Widening & Interchange Improvement\Drawings\rBB04I4_CX_HWY II2..dgn
REVISED DATE:

DATE REVISED	DATE FILMED	DATE REVISED	DATE FILMED	FED.RD. DIST.NO.	STATE	FED.AID PROJ.NO.	SHEET NO.	TOTAL SHEETS
				6	ARK.			
				JOB NO.		BB0414	740	886

(2) CROSS SECTIONS

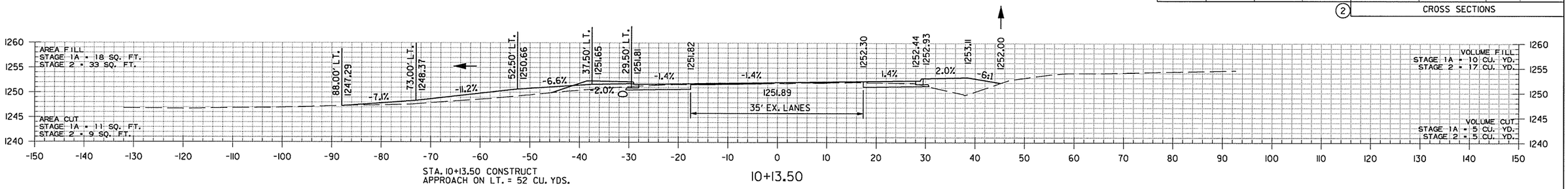

STA. 10+13.50 CONSTRUCT
APPROACH ON LT. = 52 CU. YDS.

10+13.50

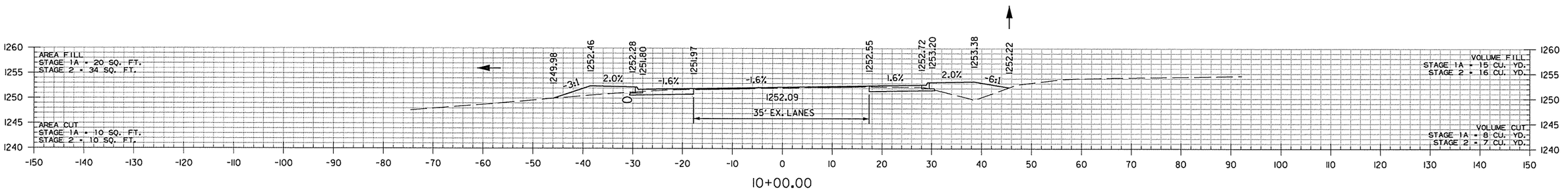

10+00.00

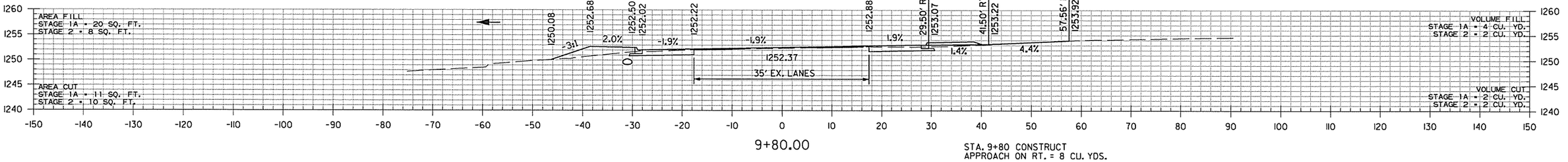

9+80.00

STA. 9+80 CONSTRUCT
APPROACH ON RT. = 8 CU. YDS.

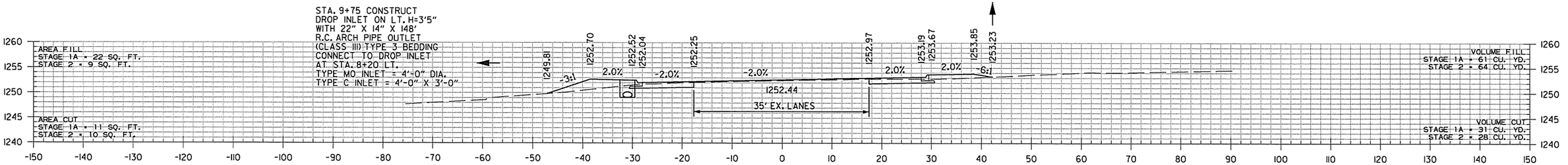

9+75.00

STA. 9+75 LT.
TOP = 1252.52
INV = 1249.10

HWY. 112
STA. 9+75 TO STA. 10+13

AEWarelak 3/20/2016 11:58:04 AM
WORKSPACE: AHTD
L:\2011\1107107 - I-540 Widening & Interchange Improvement\Drawings\rBB0414_CX_HWY 112_.dgn
REVISED DATE:

DATE REVISED	DATE FILMED	DATE REVISED	DATE FILMED	FED.RD. DIST.NO.	STATE	FED.AID PROJ.NO.	SHEET NO.	TOTAL SHEETS
				6	ARK.			
				JOB NO.		BB0414	741	886
				(2)		CROSS SECTIONS		

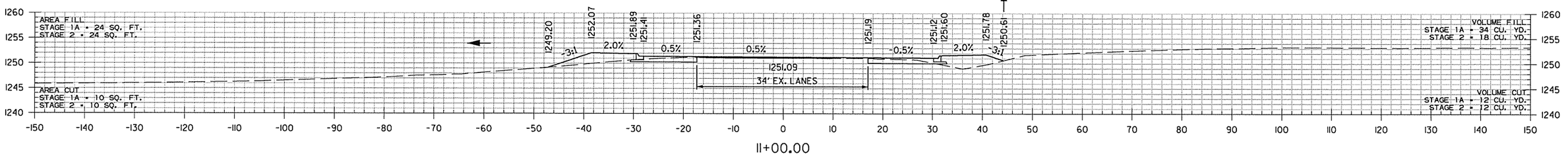

11+00.00

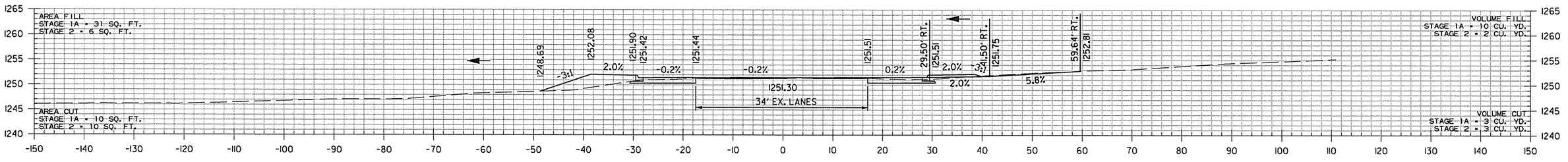

10+67.00

STA. 10+67 CONSTRUCT
APPROACH ON RT. = 12 CU. YDS.

STA. 10+58 CONSTRUCT
DROP INLET ON LT. H=2'8"
WITH 22" X 14" X 79'
R.C. ARCH PIPE OUTLET
(CLASS IV) TYPE 3 BEDDING
CONNECT TO DROP INLET
AT STA. 9+75 LT.
TYPE MO INLET = 4'-0" DIA.
TYPE C INLET = 4'-0" X 3'-6"

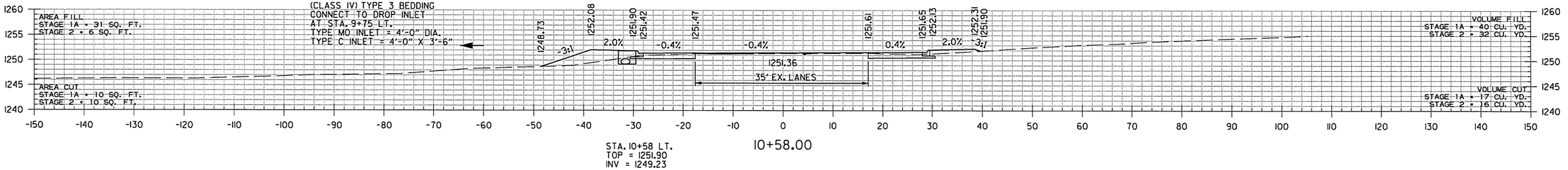

STA. 10+58 LT.
TOP = 1251.90
INV = 1249.23

10+58.00

HWY. 112
STA. 10+58 TO STA. 11+00

AEWarclak 3/20/2016 11:58:04 AM
WORKSPACE: AHTD
L:\20IN\1101707 - I-540 Widening & Interchange Improvement\Drawings\rBB0414_CX.HWY 112..dgn
REVISED DATE:

DATE REVISED	DATE FILMED	DATE REVISED	DATE FILMED	FED.RD. DIST.NO.	STATE	FED.AID PROJ.NO.	SHEET NO.	TOTAL SHEETS
				6	ARK.			
				JOB NO.		BB0414	742	886
				(2)	CROSS SECTIONS			

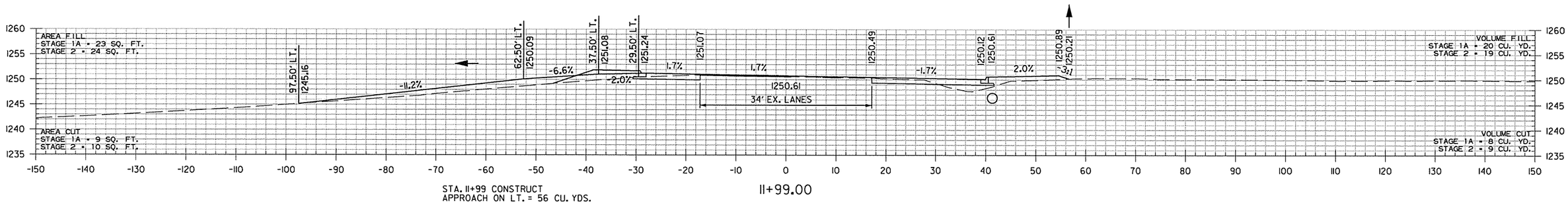

STA. 11+99 CONSTRUCT
APPROACH ON LT. = 56 CU. YDS.

11+99.00

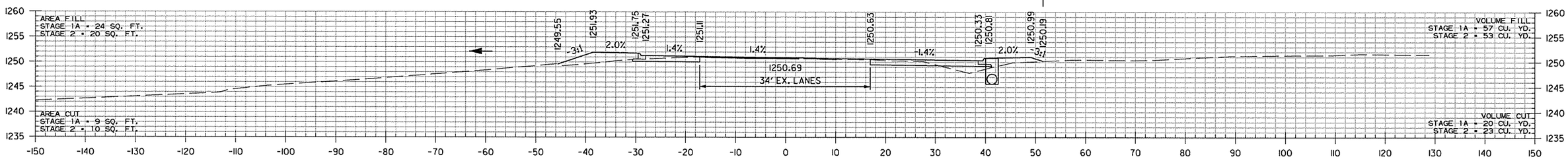

11+76.00

STA. 11+76 CONSTRUCT
DROP INLET ON RT. H=5'2"
WITH 4' EXTENSION AND 24" X 141'
R.C. PIPE CULVERT TO
DROP INLET AT STA. 13+23 RT.
IN PLACE 24" X 84'
PIPE CULVERT REMOVE
(CLASS IV) TYPE 3 BEDDING
TYPE M0 INLET = 4'-0" DIA.
TYPE C INLET = 4'-0" X 2'-6"

STA. 11+76 RT.
TOP = 1250.81
INV = 1245.64

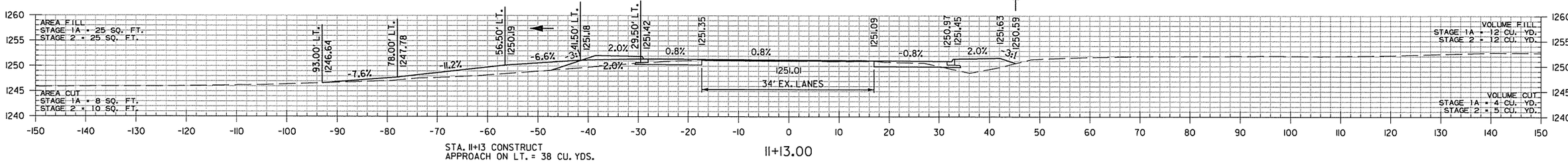

STA. 11+13 CONSTRUCT
APPROACH ON LT. = 38 CU. YDS.

11+13.00

HWY. 112
STA. 11+13 TO STA. 11+99

AEWierciok 3/20/2016 11:58:04 AM
WORKSPACE: AHTD
L:\2011\101707 - I-540 Widening & Interchange Improvement\Drawings\rBB0414_CX_HWY 112..dgn
REVISED DATE:

DATE REVISED	DATE FILMED	DATE REVISED	DATE FILMED	FED.RD. DIST.NO.	STATE	FED.AID PROJ.NO.	SHEET NO.	TOTAL SHEETS
				6	ARK.			
				JOB NO.		BB0414	743	886
				(2)		CROSS SECTIONS		

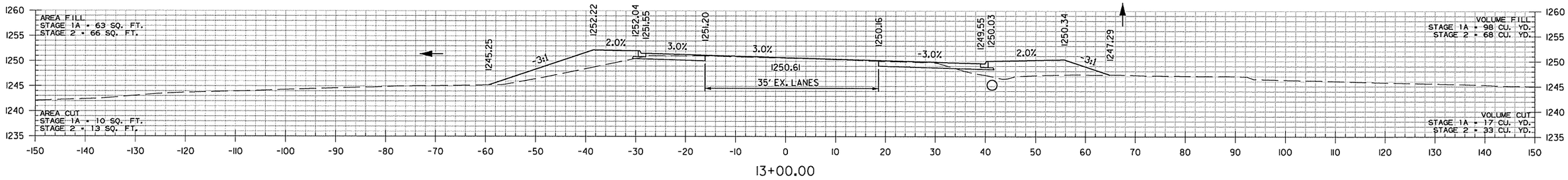

13+00.00

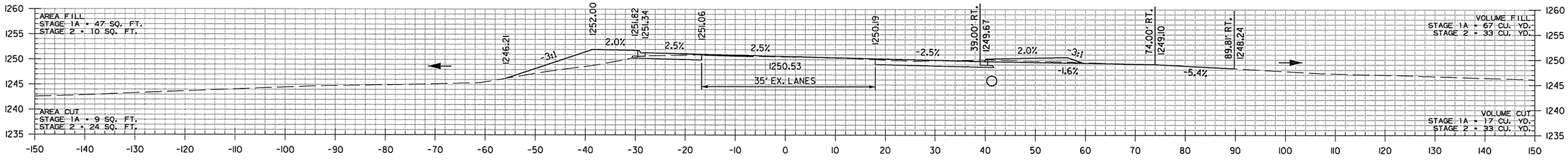

12+52.00

STA. 10+67
POINT CIR.
CONSTRUCT APPROACH
ON RT. = 74 CU. YDS.

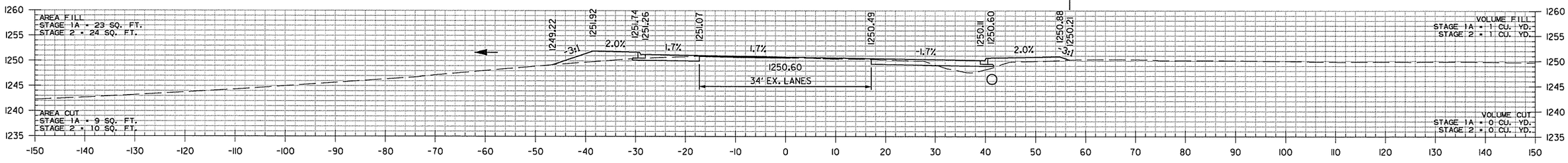

12+00.00

HWY. 112
STA. 12+00 TO STA. 13+00

AEWierzlak 3/20/2016 11:58:04 AM
WORKSPACE: AHTD
L:\20IN\110177OT - I-540 Widening & Interchange Improvement\Drawings\rBB0414_CX_HWY 112_.dgn
REVISED DATE:

DATE REVISED	DATE FILMED	DATE REVISED	DATE FILMED	FED.RD. DIST.NO.	STATE	FED.AID PROJ.NO.	SHEET NO.	TOTAL SHEETS
				6	ARK.			
				JOB NO.		BB0414	744	886
				(2)		CROSS SECTIONS		

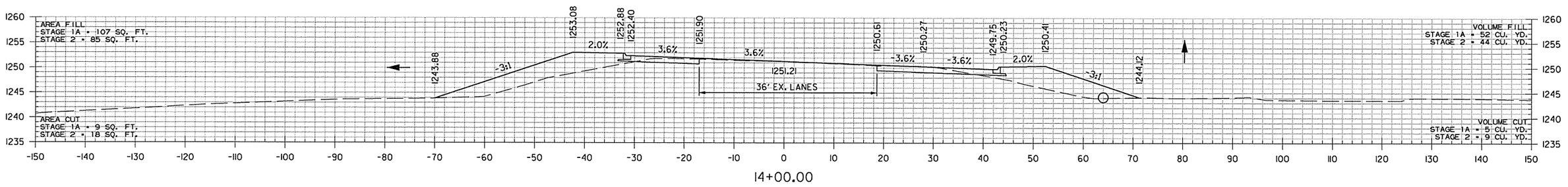

14+00.00

STA. 13+85 CONSTRUCT
DROP INLET ON RT. H=6'8"
WITH 24" X 46' R.C. PIPE
CULVERT OUTLET WITH FES.
(CLASS III) TYPE 3 BEDDING
TYPE MO INLET = 4'-0" DIA.
TYPE C INLET = 4'-0" X 2'-6"

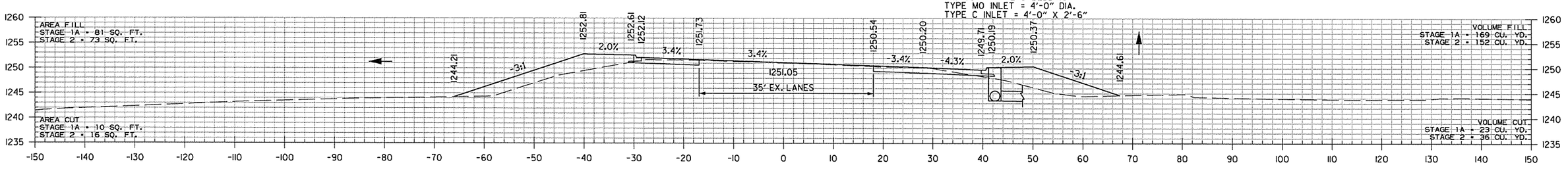

13+85.00

STA. 13+85 RT.
TOP = 1250.19
INV = 1243.52
F.L. = 1242.94 RT.

STA. 13+23 CONSTRUCT
DROP INLET ON RT. H=6'0"
WITH 4' EXTENSION AND 24" X 56'
R.C. PIPE CULVERT TO
DROP INLET AT STA. 13+85 RT.
(CLASS III) TYPE 3 BEDDING
TYPE MO INLET = 4'-0" DIA.
TYPE C INLET = 4'-0" X 2'-6"

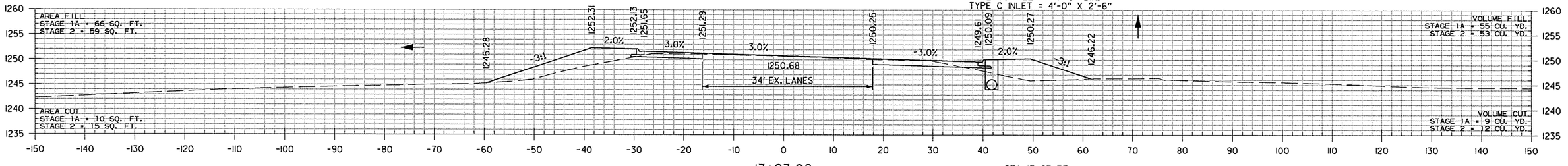

13+23.00

STA. 13+23 RT.
TOP = 1250.09
INV = 1244.09

HWY. 112
STA. 13+23 TO STA. 14+00

AEWierclak 3/20/2016 11:58:05 AM
WORKSPACE: AHTD
L:\201\W017107 - I-540 Widening & Interchange Improvement\Drawings\r-BB0414_CX_HWY 112_.dgn
REVISED DATE:

DATE REVISED	DATE FILMED	DATE REVISED	DATE FILMED	FED.RD. DIST.NO.	STATE	FED.AID PROJ.NO.	SHEET NO.	TOTAL SHEETS
				6	ARK.			
				JOB NO.		BB0414	745	886
				(2)		CROSS SECTIONS		

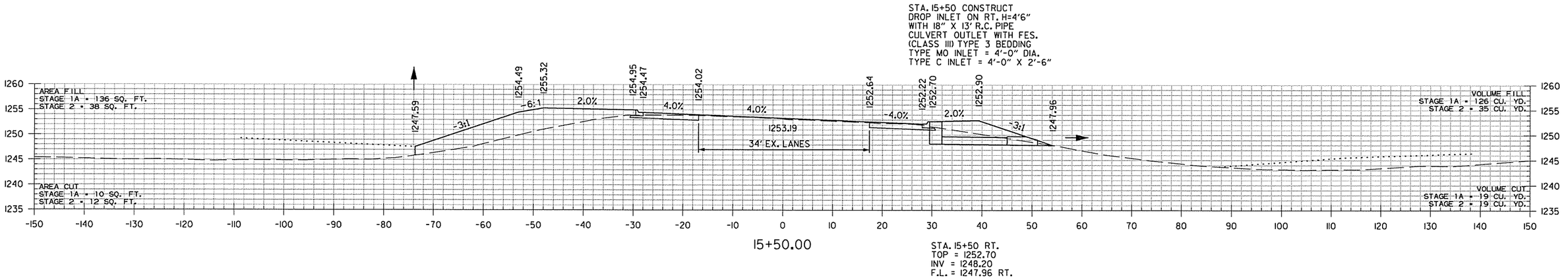

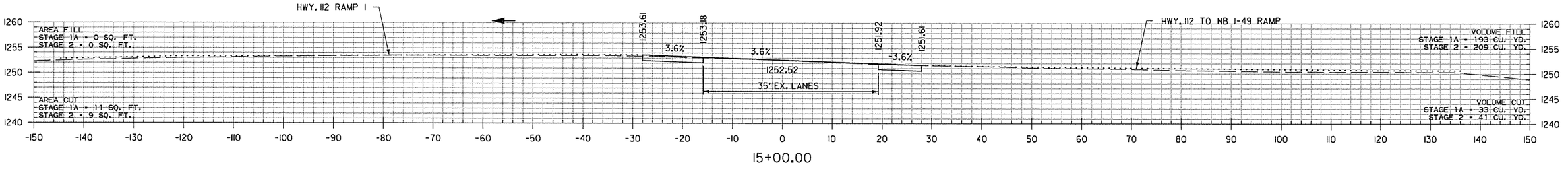

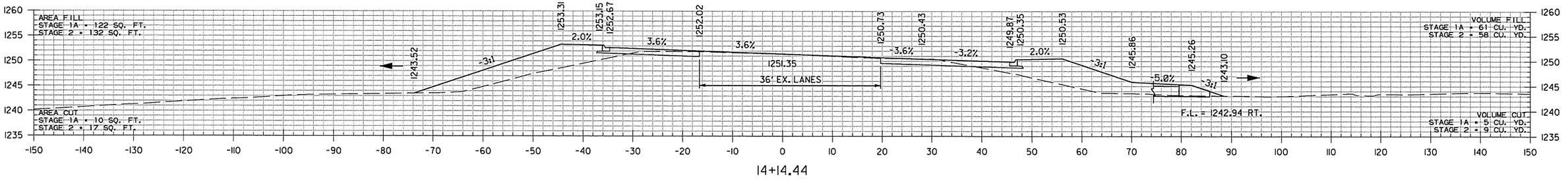

HWY. 112
STA. 14+14 TO STA. 15+50

AEWierciak 3/20/2016 11:58:05 AM
WORKSPACE: AHTD
L:\20IN\I007107 - I-540 Widening & Interchange Improvement\Drawings\rBB0414_CX_HWY 112.dgn
REVISED DATE:

DATE REVISED	DATE FILMED	DATE REVISED	DATE FILMED	FED.RD. DIST.NO.	STATE	FED.AID PROJ.NO.	SHEET NO.	TOTAL SHEETS
				6	ARK.			
				JOB NO.		BB0414	746	886
				(2)		CROSS SECTIONS		

BRIDGE END SLOPE: VOLUME FILL
STAGE 1A = 1296 CU. YD.
STAGE 2 = 289 CU. YD.

BRIDGE END SLOPE: VOLUME CUT
STAGE 1A = 42 CU. YD.
STAGE 2 = 45 CU. YD.

STA. 17+86.80 BEGIN BRIDGE

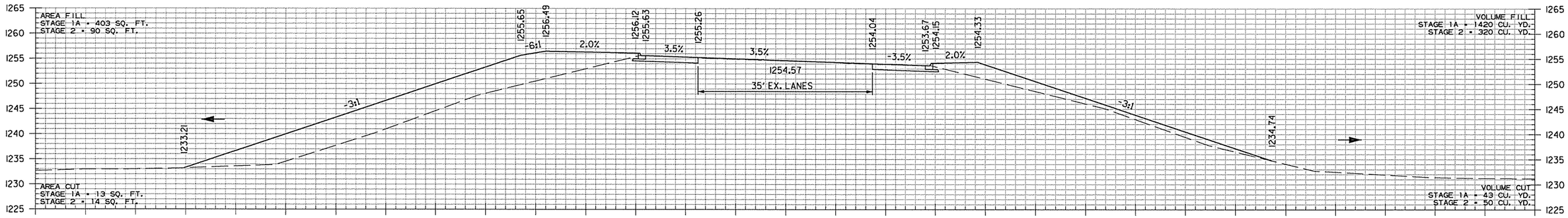

17+00.00

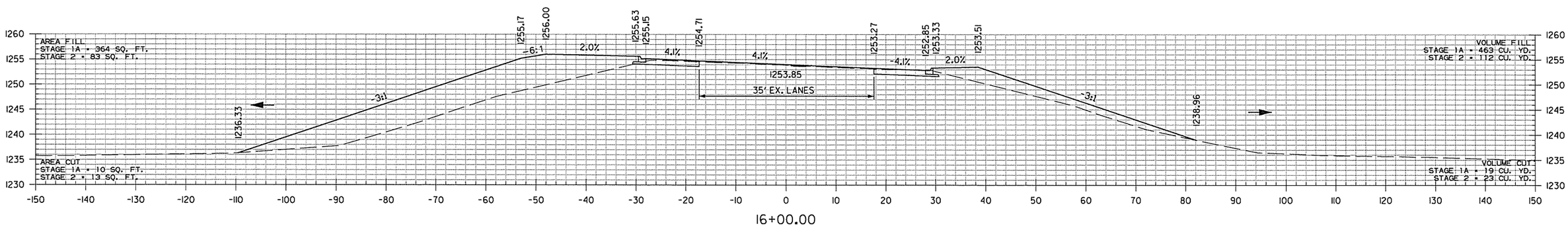

16+00.00

HWY. 112
STA. 16+00 TO STA. 17+00

AEWard clark 3/20/2016 11:58:05 AM
WORKSPACE: AHTD
L:\20II\WO17107 - I-540 Widening & Interchange Improvement\Drawings\rBB0414_CX.HWY II2..dgn
REVISED DATE:

DATE REVISED	DATE FILMED	DATE REVISED	DATE FILMED	FED.RD. DIST.NO.	STATE	FED.AID PROJ.NO.	SHEET NO.	TOTAL SHEETS
				6	ARK.			
				JOB NO.		BB0414	747	886
				(2)		CROSS SECTIONS		

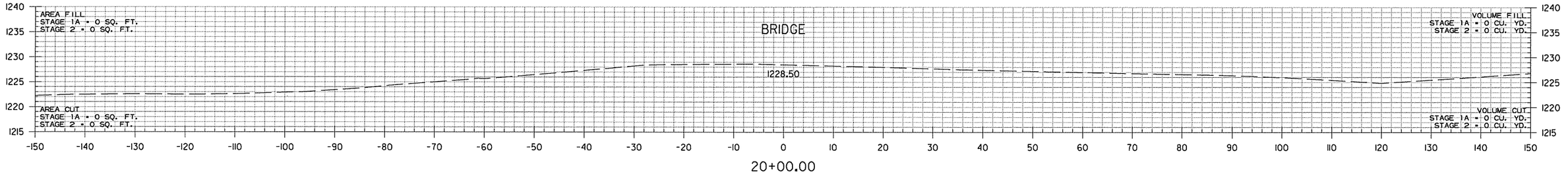

20+00.00

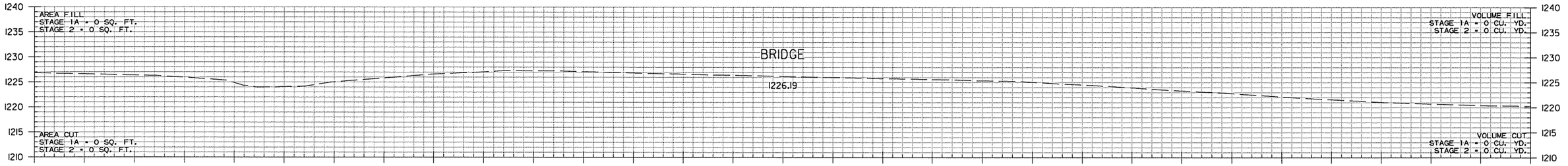

19+00.00

AREA FILL
STAGE 1A = 0 SQ. FT.
STAGE 2 = 0 SQ. FT.

AREA CUT
STAGE 1A = 0 SQ. FT.
STAGE 2 = 0 SQ. FT.

STA. 18+62.42 BRIDGE TOE OF SLOPE

VOLUME FILL
STAGE 1A = 564 CU. YD.
STAGE 2 = 126 CU. YD.

VOLUME CUT
STAGE 1A = 18 CU. YD.
STAGE 2 = 20 CU. YD.

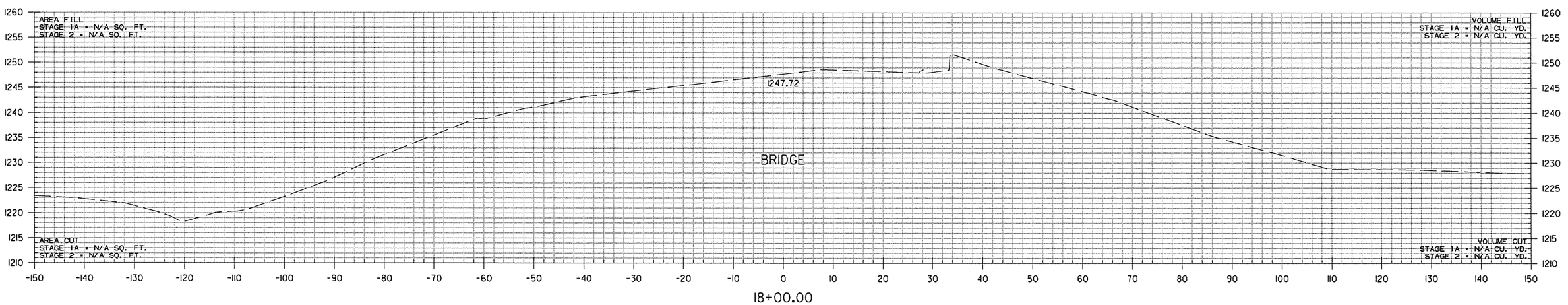

18+00.00

HWY. 112
STA. 18+00 TO STA. 20+00

AEWlerclark 3/20/2016 11:58:05 AM
WORKSPACE: AHTD
L:\20II\I0I7707 - I-540 Widening & Interchange Improvement\Drawings\rBB0414_CX_HWY 112..dgn
REVISED DATE:

DATE REVISED	DATE FILMED	DATE REVISED	DATE FILMED	FED.RD. DIST.NO.	STATE	FED.AID PROJ.NO.	SHEET NO.	TOTAL SHEETS
				6	ARK.			
				JOB NO.		BB0414	748	886

(2) CROSS SECTIONS

STA. 22+18.50
BEGIN SP. DITCH RT. -1.35%
5' FLAT BOTTOM
ELEV. 1211.50

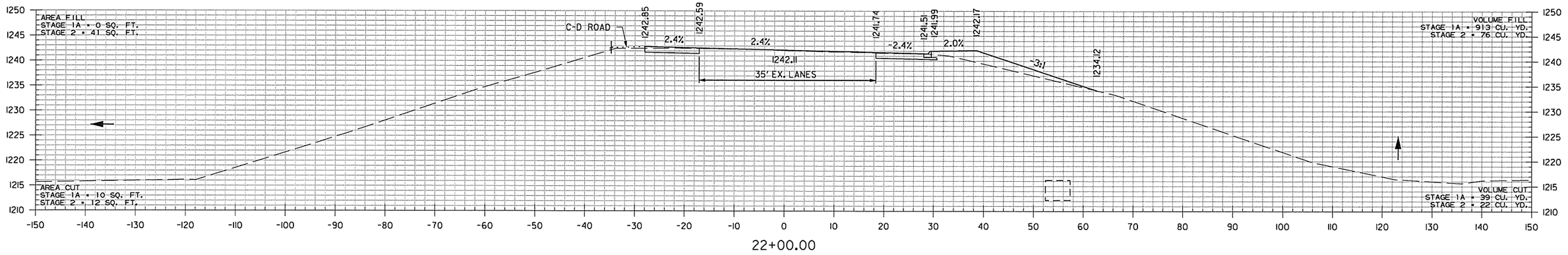

22+00.00

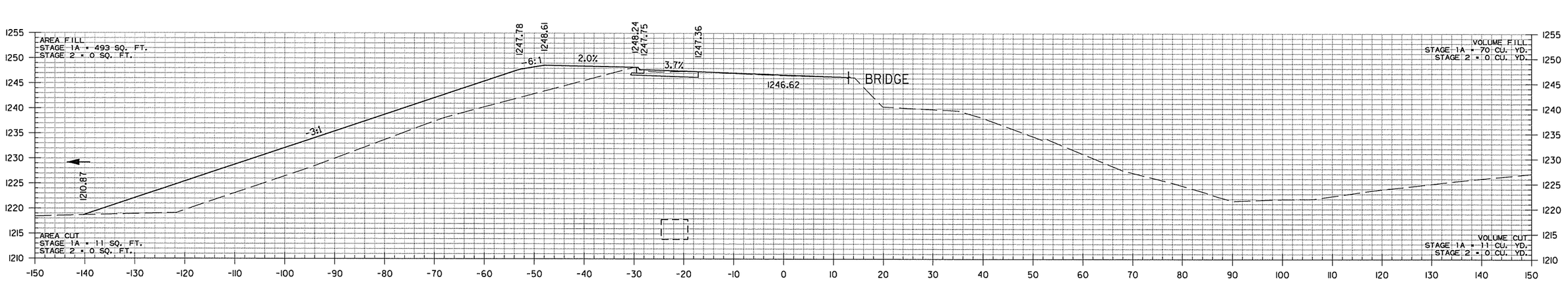

21+00.00

STA. 20+92.28 END BRIDGE

STA. 20+76.93 TOE OF SLOPE @ MSE WALL

STA. 20+38.39 EXISTING TOE OF SLOPE

BRIDGE END SLOPE: VOLUME FILL
STAGE 1A = 0 CU. YD.
STAGE 2 = 0 CU. YD.

BRIDGE END SLOPE: VOLUME CUT
STAGE 1A = 0 CU. YD.
STAGE 2 = 0 CU. YD.

BRIDGE END SLOPE: VOLUME FILL
STAGE 1A = 0 CU. YD.
STAGE 2 = 0 CU. YD.

BRIDGE END SLOPE: VOLUME CUT
STAGE 1A = 26 CU. YD.
STAGE 2 = 26 CU. YD.

BRIDGE END SLOPE: VOLUME FILL
STAGE 1A = 0 CU. YD.
STAGE 2 = 0 CU. YD.

BRIDGE END SLOPE: VOLUME CUT
STAGE 1A = 0 CU. YD.
STAGE 2 = 0 CU. YD.

HWY. 112
STA. 21+00 TO STA. 22+00

AEWtercick 3/20/2016 11:58:05 AM
WORKSPACE: AHTD
L:\20IN\10I1707 - I-540 Widening & Interchange Improvement\Drawings\r-BB0414_CX_HWY 112..dgn
REVISED DATE:

DATE REVISED	DATE FILMED	DATE REVISED	DATE FILMED	FED.RD. DIST.NO.	STATE	FED.AID PROJ.NO.	SHEET NO.	TOTAL SHEETS
				6	ARK.			
				JOB NO.		BB0414	749	886
				(2)		CROSS SECTIONS		

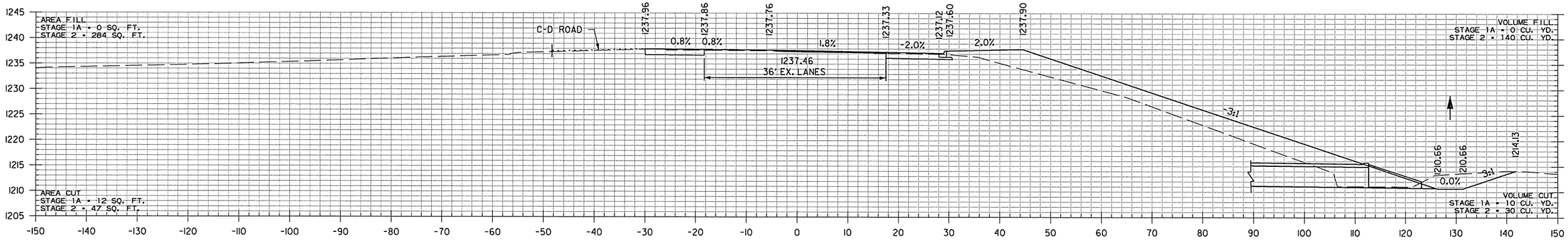

22+80.64

I-49 STA. 291+27 IN PLACE
4' X 4' X 525' R.C. BOX CULVERT
29° LT. FWD. SKEW
WITH 3:1 WINGS (45°) LT. & RT.
RETAIN AND EXTEND
20' LT. & 81' RT.
W/47' REPLACEMENT SECTION
Q50 = 103 CFS DA = 47.9 ACRES

HWY. 112
EX. F.L. = 1211.23
PROP. F.L. = 1210.54

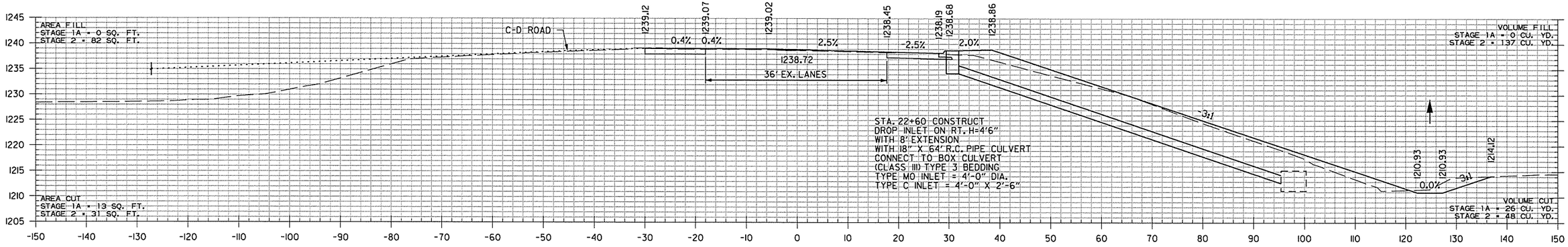

22+60.00

STA. 22+60 CONSTRUCT
DROP INLET ON RT. H=4'6"
WITH 8' EXTENSION
WITH 18" X 64' R.C. PIPE CULVERT
CONNECT TO BOX CULVERT
(CLASS III) TYPE 3 BEDDING
TYPE MO INLET = 4'-0" DIA.
TYPE C INLET = 4'-0" X 2'-6"

STA. 22+60 RT.
TOP = 1238.68
INV = 1234.18
F.L. = 1212.72 AT BOX

HWY. 112
STA. 22+60 TO STA. 22+81

AEWierclok 3/20/2016 11:58:05 AM
WORKSPACE: AHTD
L:\20IN\100707 - I-540 Widening & Interchange Improvement\Drawings\rBB0414_CX_HWY 112..dgn
REVISED DATE:

DATE REVISED	DATE FILMED	DATE REVISED	DATE FILMED	FED.RD. DIST.NO.	STATE	FED.AID PROJ.NO.	SHEET NO.	TOTAL SHEETS
				6	ARK.			
				JOB NO.		BB0414	750	886

(2) CROSS SECTIONS

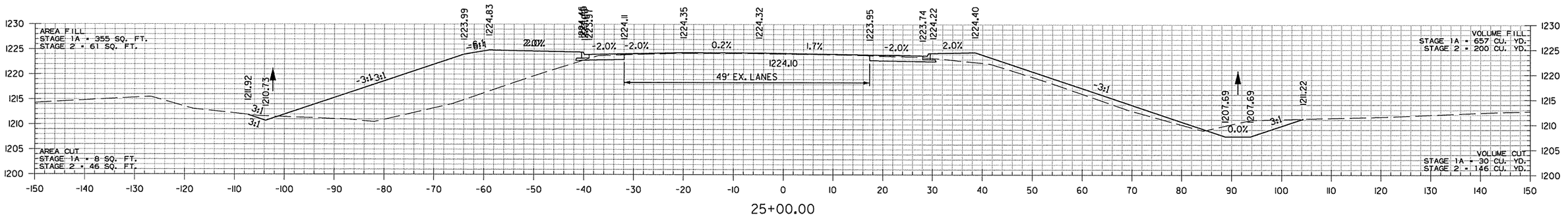

25+00.00

STA. 24+36.00
BEGIN SP. DITCH LT. -1.18%
ELEV. 1211.57

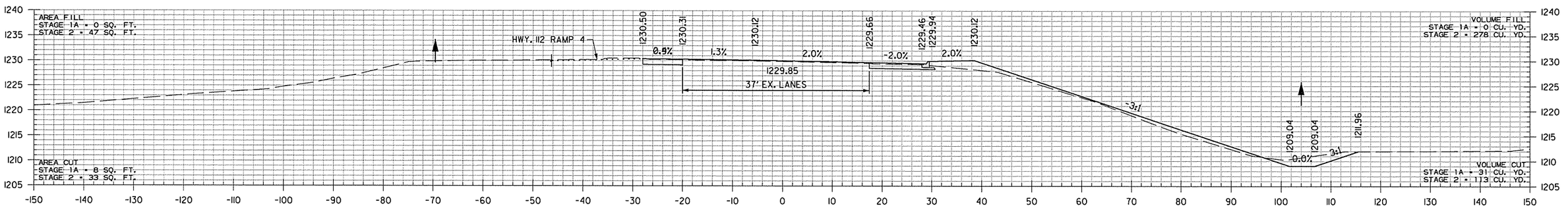

24+00.00

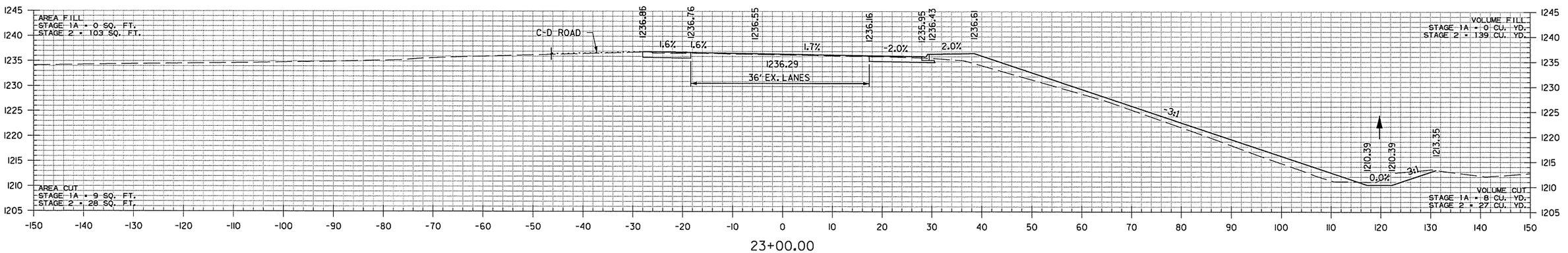

23+00.00

HWY. 112
STA. 23+00 TO STA. 25+00

AEWierciak 3/20/2016 11:58:05 AM
WORKSPACE: AHTD
L:\20IN\I0I7707 - I-540 Widening & Interchange Improvement\Drawings\rBB0414_CX_HWY 112..dgn
REVISED DATE:

DATE REVISED	DATE FILMED	DATE REVISED	DATE FILMED	FED.RD. DIST.NO.	STATE	FED.AID PROJ.NO.	SHEET NO.	TOTAL SHEETS
				6	ARK.			
				JOB NO.		BB0414	751	886
				(2)		CROSS SECTIONS		

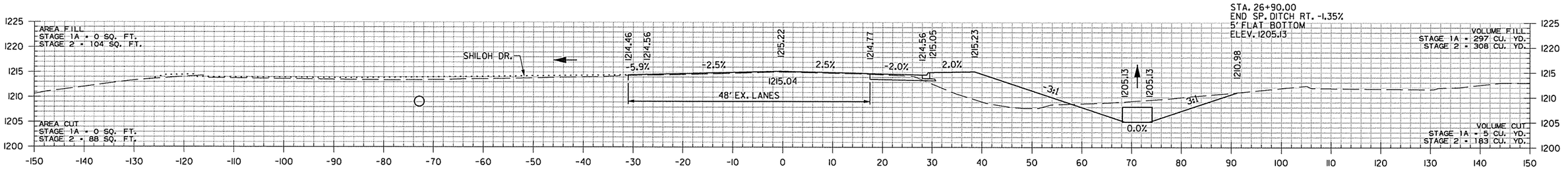

26+90.00

STA. 26+24 CONSTRUCT
DROP INLET ON LT. H=4'6"
W/ 18" X 42' R.C PIPE CULVERT
TO JUNCTION BOX AT
SHILOH DR. STA. 73+64 RT.
(CLASS III) TYPE 3 BEDDING
TYPE MO INLET = 4'-0" DIA.
TYPE C INLET = 4'-0" X 2'-6"

STA. 26+90 71.16' RT. TO
STA. 35+12 29.50' RT. CONSTRUCT
6' X 3' X 836' R.C. BOX CULVERT
15° INLET SKEWED END SECTION
WITH 3:1 WINGS EACH END
Q10 = 142 CFS DA = 71.5 AC.

STA. 26+90, 71.16' RT.
INV = 1205.13

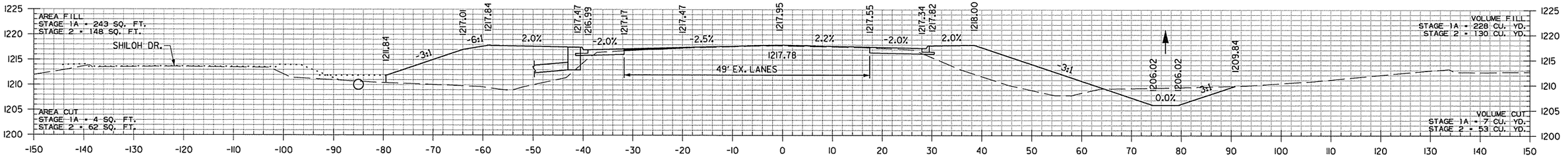

26+24.00

STA. 26+24 LT.
TOP = 1217.47
INV = 1212.97
F.L. = 1209.31 AT JUNCTION BOX

STA. 26+13.00
END SP. DITCH LT. -1.18%
ELEV. 1209.48

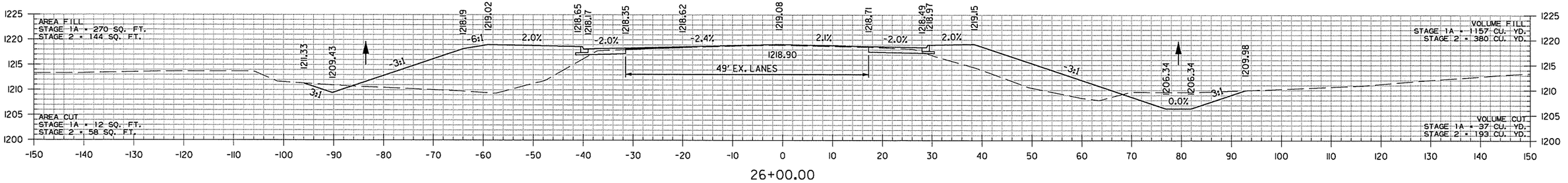

26+00.00

HWY. 112
STA. 26+00 TO STA. 26+90

AEWierciak 3/20/2016 11:58:05 AM
WORKSPACE: AHTD
L:\ZOI\NI0071O7 - I-540 Widening & Interchange Improvement\Drawings\r-BB0414_CX_HWY 112..dgn
REVISED DATE:

DATE REVISED	DATE FILMED	DATE REVISED	DATE FILMED	FED.RD. DIST.NO.	STATE	FED.AID PROJ.NO.	SHEET NO.	TOTAL SHEETS
				6	ARK.			
				JOB NO.		BB0414	752	886

(2) CROSS SECTIONS

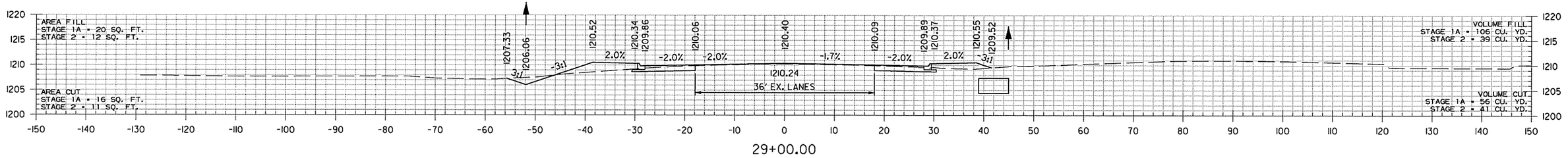

29+00.00

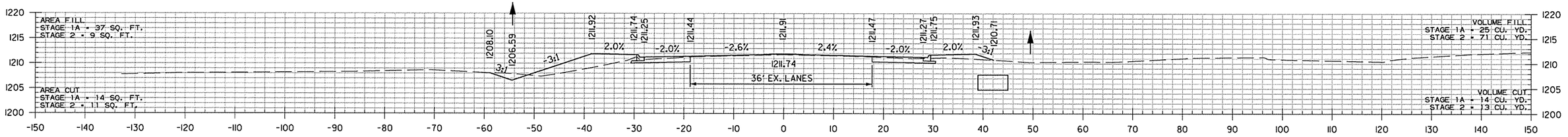

28+00.00

STA. 27+98.00
END SP. DITCH RT. 1.95%
ELEV. 1210.00

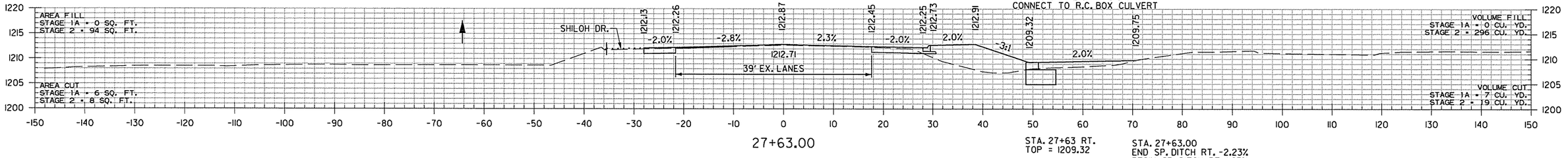

27+63.00

STA. 27+63 CONSTRUCT
TYPE TM DROP INLET
50' RT. (3' X 2'6" X 0'9")
CONNECT TO R.C. BOX CULVERT

STA. 27+63 RT.
TOP = 1209.32

STA. 27+63.00
END SP. DITCH RT. -2.23%
BEGIN SP. DITCH RT. 1.95%
ELEV. 1209.32

STA. 27+45.00
BEGIN SP. DITCH LT. -0.54%
ELEV. 1206.89

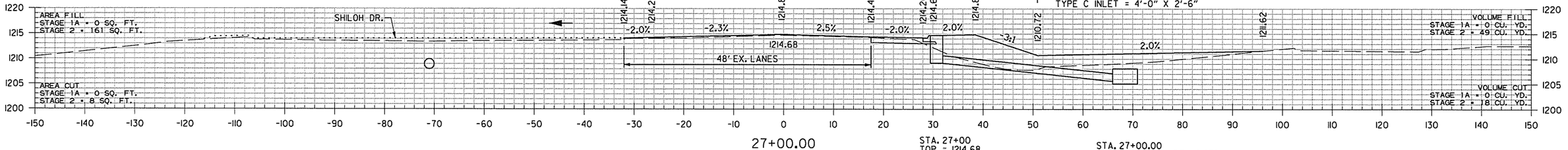

27+00.00

STA. 27+00 CONSTRUCT
DROP INLET ON RT. H=5'6"
WITH 8' EXTENSION
WITH 18" X 34' R.C. PIPE CULVERT
CONNECT TO BOX CULVERT
(CLASS III) TYPE 3 BEDDING
TYPE MO INLET = 4'-0" DIA.
TYPE C INLET = 4'-0" X 2'-6"

STA. 27+00
TOP = 1214.68
INV = 1209.18
F.L. = 1205.60 AT BOX

STA. 27+00.00
BEGIN SP. DITCH RT. -2.23%
ELEV. 1210.72

HWY. 112
STA. 27+00 TO STA. 29+00

AEWierclak 3/20/2016 11:58:06 AM
WORKSPACE: AHTD
L:\201\100707 - I-540 Widening & Interchange Improvement\Drawings\r-BB0414_CX_HWY 112..dgn
REVISED DATE:

DATE REVISED	DATE FILMED	DATE REVISED	DATE FILMED	FED.RD. DIST.NO.	STATE	FED.AID PROJ.NO.	SHEET NO.	TOTAL SHEETS
				6	ARK.			
				JOB NO.		BB0414	753	886

(2) CROSS SECTIONS

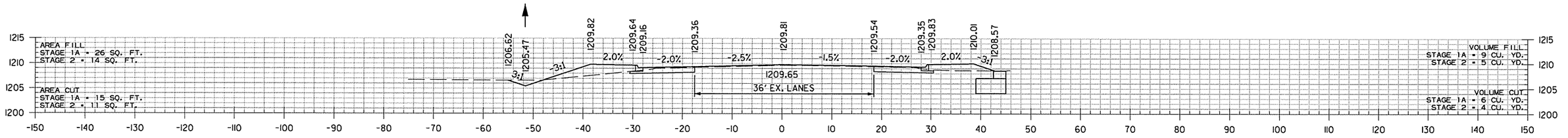

30+10.00

STA. 30+10 CONSTRUCT
TYPE TM DROP INLET
44' RT. (3' X 2'6" X 0'10")
CONNECT TO R.C. BOX CULVERT

STA. 30+10 RT.
TOP = 1208.57

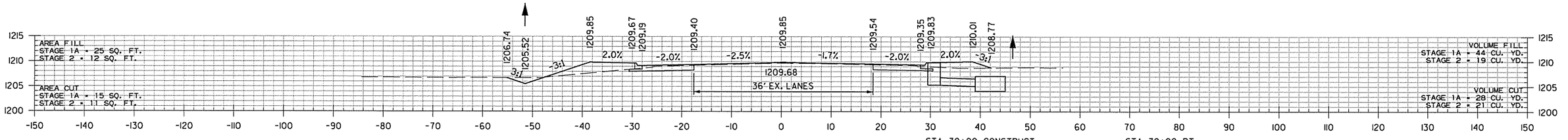

30+00.00

STA. 30+00 CONSTRUCT
DROP INLET ON RT. H=4'6"
WITH DBL. 4' EXTENSIONS
WITH 18" X 7' R.C. PIPE CULVERT
CONNECT TO BOX CULVERT
(CLASS III) TYPE 3 BEDDING
TYPE MO INLET = 4'-0" DIA.
TYPE C INLET = 4'-0" X 2'-6"

STA. 30+00 RT.
TOP = 1209.83
INV = 1205.33
F.L. = 1205.08 AT BOX

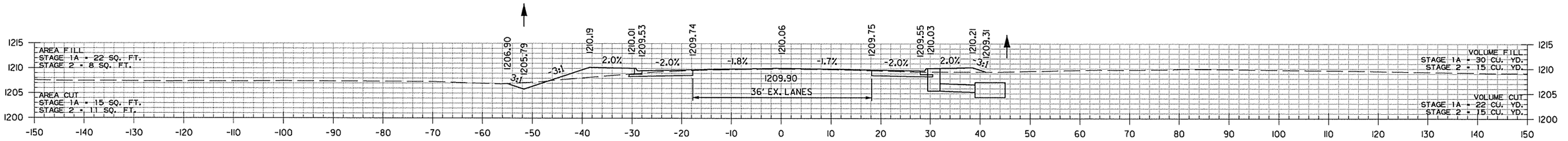

29+49.00

STA. 29+49 CONSTRUCT
DROP INLET ON RT. H=4'6"
WITH 8' EXTENSION
WITH 18" X 7' R.C. PIPE CULVERT
CONNECT TO BOX CULVERT
(CLASS III) TYPE 3 BEDDING
TYPE MO INLET = 4'-0" DIA.
TYPE C INLET = 4'-0" X 2'-6"

STA. 29+49 RT.
TOP = 1210.03
INV = 1205.53
F.L. = 1205.24 AT BOX

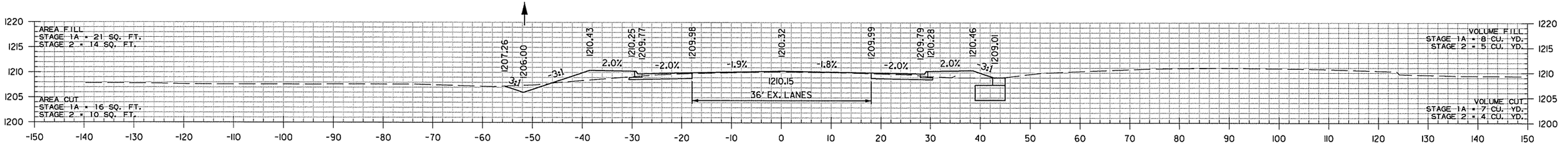

29+11.00

STA. 29+11 CONSTRUCT
TYPE TM DROP INLET
44' RT. (3' X 2'6" X 0'9")
CONNECT TO R.C. BOX CULVERT

STA. 29+11 RT.
TOP = 1209.01

HWY. 112
STA. 29+11 TO STA. 30+10

AEWercloh 3/20/2016 11:58:06 AM
WORKSPACE: AHTD
L:\20R\10\1707 - I-540 Widening & Interchange Improvement\Drawings\r-BB0414_CX_HWY 112..dgn
REVISED DATE:

DATE REVISED	DATE FILMED	DATE REVISED	DATE FILMED	FED.RD. DIST.NO.	STATE	FED.AID PROJ.NO.	SHEET NO.	TOTAL SHEETS
				6	ARK.			
				JOB NO.		BB0414	754	886
				(2)		CROSS SECTIONS		

STA. 31+07.40 END HWY. 112

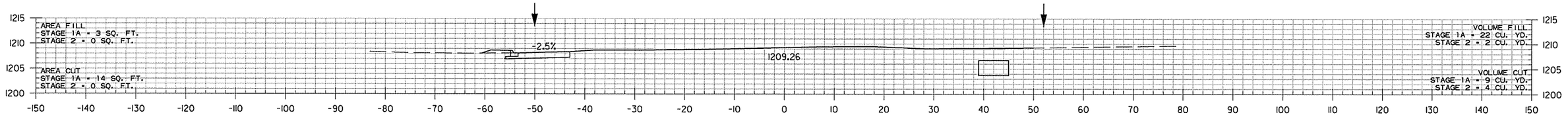

31+00.00

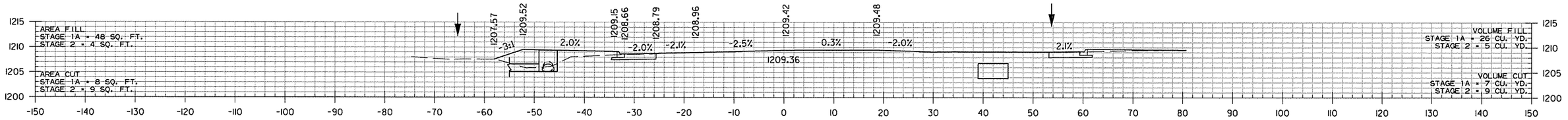

30+77.00

STA. 30+77 CONSTRUCT
TYPE E JUNCTION BOX 47' LT.
(3' X 3' X H=4'3") WITH
18" X 29" X 13' R.C. ARCH PIPE
CULVERT OUTLET WITH FES.
CONNECT TO EXISTING
R.C. PIPE UNDER TRUCKER DRIVE
(CLASS III) TYPE 3 BEDDING
Q10 = 8 CFS DA = 2.8 AC.

STA. 30+77 LT.
TOP = 1209.36
INV = 1205.11
PROP F.L. = 1205.24 (LT.)

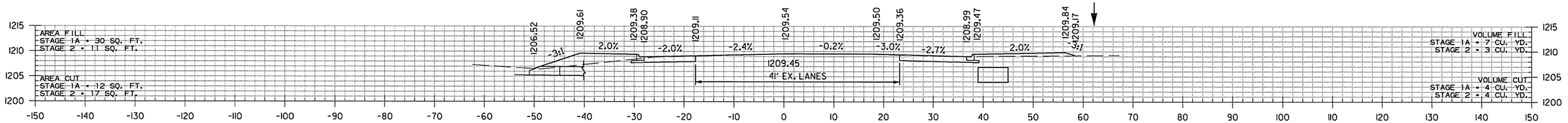

30+58.79

STA. 30+52.00
END SP. DITCH LT. -0.54%
ELEV. 1205.24

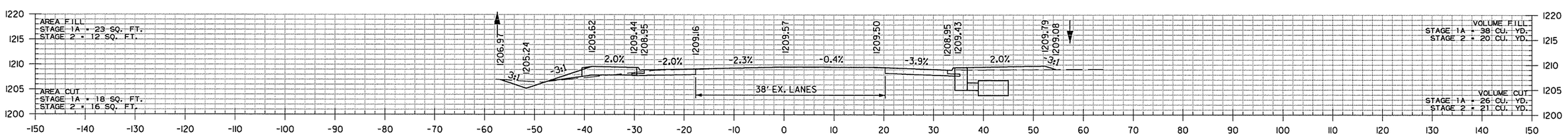

30+52.00

STA. 30+52 CONSTRUCT
DROP INLET TYPE
SPECIAL 29' LT.

STA. 30+52 CONSTRUCT
DROP INLET ON RT. H=4'6"
WITH 18" X 3' R.C. PIPE CULVERT
CONNECT TO BOX CULVERT
(CLASS III) TYPE 3 BEDDING
TYPE MO INLET = 4'-0" DIA.
TYPE C INLET = 4'-0" X 2'-6"

STA. 30+52 RT.
TOP = 1209.43
INV = 1204.93
F.L. = 1204.89 AT BOX

HWY. 112
STA. 30+52 TO STA. 31+00

AEWierclak 3/20/2006 11:58:06 AM
WORKSPACE: AHTD
L:\2011\101707 - I-540 Widening & Interchange Improvement\Drawings\r-BB0414_CX_HWY 112..dgn
REVISED DATE:

DATE REVISED	DATE FILMED	DATE REVISED	DATE FILMED	FED.RD. DIST.NO.	STATE	FED.AID PROJ.NO.	SHEET NO.	TOTAL SHEETS
				6	ARK.			
				JOB NO.		BB0414	755	886

(2) CROSS SECTIONS

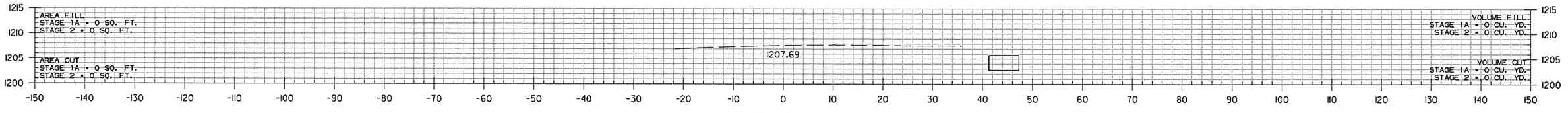

34+00.00

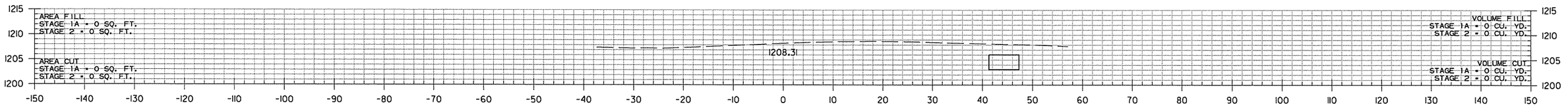

33+00.00

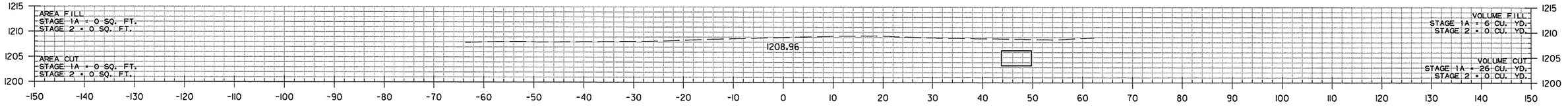

32+00.00

HWY. 112
STA. 32+00 TO STA. 34+00

AEWierclok 3/20/2016 11:58:06 AM
WORKSPACE: AHTD
L:\20IN\W017107 - I-540 Widening & Interchange Improvement\Drawings\r-BB0414_CX-HWY 112..dgn
REVISED DATE:

DATE REVISED	DATE FILMED	DATE REVISED	DATE FILMED	FED.RD. DIST.NO.	STATE	FED.AID PROJ.NO.	SHEET NO.	TOTAL SHEETS
				6	ARK.			
				JOB NO.		BB0414	756	886

(2) CROSS SECTIONS

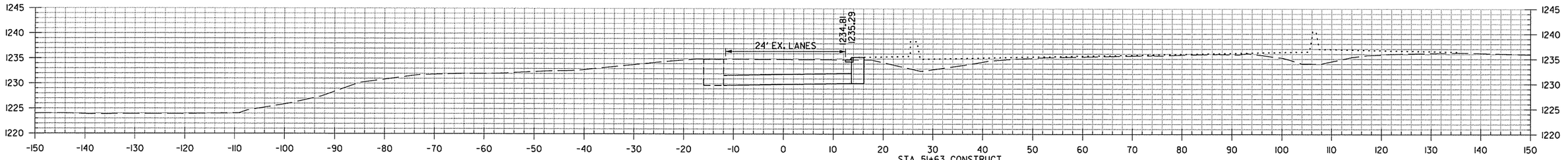

51+63.00

STA. 51+63 CONSTRUCT
DROP INLET 15' RT.
H=5'2", W/ 24" X 26' R.C. PIPE
CULVERT OUTLET CONNECT TO
EXISTING CURB INLET LT.
(TYPE III) CLASS 3 BEDDING
TYPE MO INLET = 4'-0" DIA.
TYPE C INLET = 4'-0" X 2'-6"

STA. 51+63
TOP = 1235.29 (RT.)
INV. = 1230.09 (RT.)
INV. = 1229.70 (LT.)

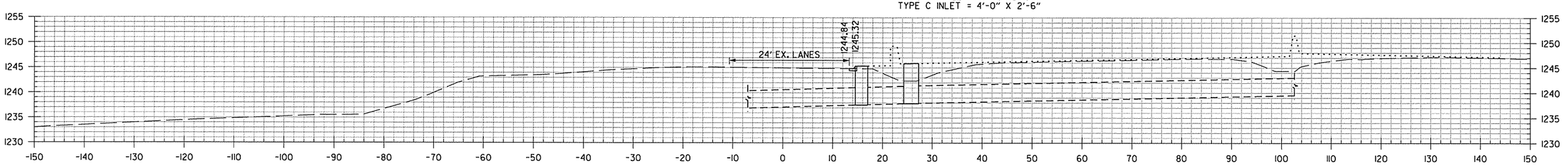

47+83.00

STA. 47+83 CONSTRUCT
DROP INLET 15' RT.
H=7'9" CONNECT TO PIPE
CULVERT I-49 STA. 273+90
TYPE MO INLET = 4'-0" DIA.
TYPE C INLET = 4'-0" X 2'-6"

STA. 47+83 RT.
TOP = 1245.32
INV. = 1237.57

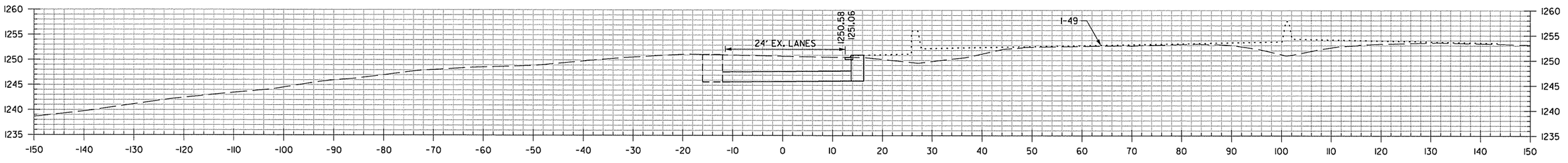

45+71.00

STA. 45+71 CONSTRUCT
DROP INLET 15' RT.
H=5'2", W/ 24" X 26' R.C. PIPE
CULVERT OUTLET CONNECT TO
EXISTING CURB INLET LT.
(TYPE III) CLASS 3 BEDDING
TYPE MO INLET = 4'-0" DIA.
TYPE C INLET = 4'-0" X 2'-6"

STA. 45+71
TOP = 1251.06 (RT.)
INV. = 1245.86 (RT.)
F.L. = 1245.67 (LT.)

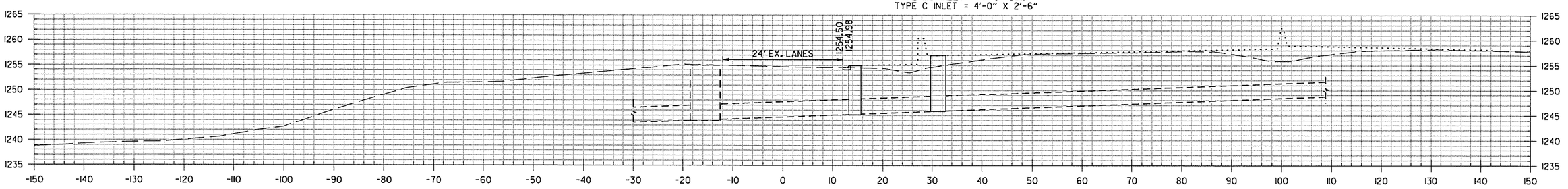

44+19.00

STA. 44+19 CONSTRUCT
DROP INLET 15' RT.
H=9'10" CONNECT TO PIPE
CULVERT I-49 STA. 270+26
TYPE MO INLET = 4'-0" DIA.
TYPE C INLET = 4'-0" X 2'-6"

STA. 44+19 RT.
TOP = 1254.98
INV. = 1245.15

SHILOH DR.
STA. 44+19 TO STA. 51+63

AEWierdak 3/20/2016 11:58:06 AM
WORKSPACE: AHTD
L:\208\110177OT - I-540 Widening & Interchange Improvement\Drawings\rBB0414_CX_SHLOH..dgn
REVISED DATE:

DATE REVISED	DATE FILMED	DATE REVISED	DATE FILMED	FED.RD. DIST.NO.	STATE	FED.AID PROJ.NO.	SHEET NO.	TOTAL SHEETS
				6	ARK.			
				JOB NO.		BB0414	757	886
				(2)	CROSS SECTIONS			

STA. 73+64 CONSTRUCT
DROP INLET 29' RT.
WITH 18" X 6' R.C. PIPE CULVERT
TO JUNCTION BOX AT STA. 73+64, 37' RT.
(CLASS III) TYPE 3 BEDDING
TYPE MO INLET = 4'-0" DIA.
TYPE C INLET = 4'-0" X 2'-6"

STA. 73+64 CONSTRUCT
JUNCTION BOX (TYPE E) 37' RT.
(3' X 3'-6" X H=3'-8")
WITH 24" X 21' R.C. PIPE CULVERT
INLET RT. WITH FES.
AND 24" X 95' R.C. PIPE CULVERT
OUTLET LT. WITH FES.
(CLASS III) TYPE 3 BEDDING
QIO = 6 CFS DA = 1.7 AC.

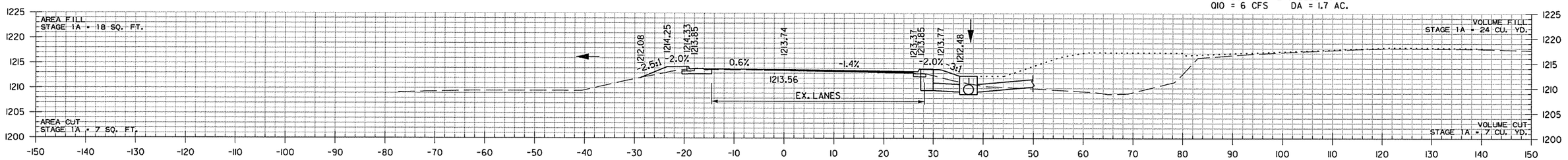

73+64.00

STA. 73+64, 29' RT.
TOP = 1213.85
INV. = 1209.60
F.L. = 1209.31 AT JUNCTION BOX

STA. 73+64, 37' RT.
TOP = 1212.48
INV. = 1208.81

STA. 73+53.04 BEGIN SHILOH DR.

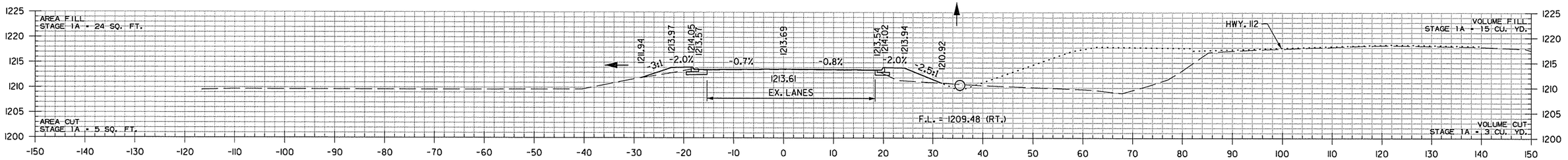

73+32.83

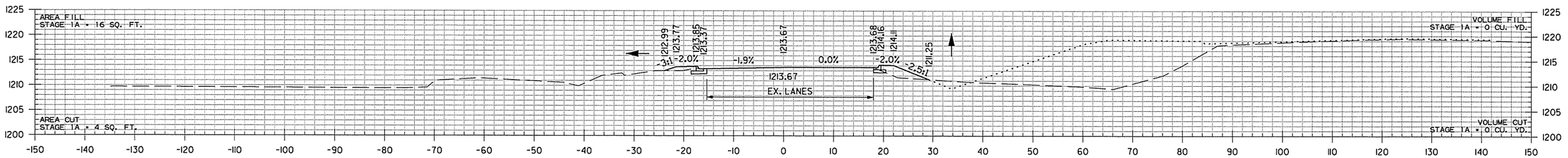

73+13.04

STA. 73+13.04 BEGIN 40' TRANSITION

SHILOH DR.
STA. 73+13 TO STA. 73+64

AEWerclok 3/20/2016 11:58:06 AM
WORKSPACE: AHTD
L:\20\10\10170T - I-540 Widening & Interchange Improvement\Drawings\r-BB0414_CX_SHILOH_.dgn
REVISED DATE:

DATE REVISED	DATE FILMED	DATE REVISED	DATE FILMED	FED.RD. DIST.NO.	STATE	FED.AID PROJ.NO.	SHEET NO.	TOTAL SHEETS
				6	ARK.			
				JOB NO.		BB0414	758	886
				(2)	CROSS SECTIONS			

STA. 74+72.00 END SHILOH DR.

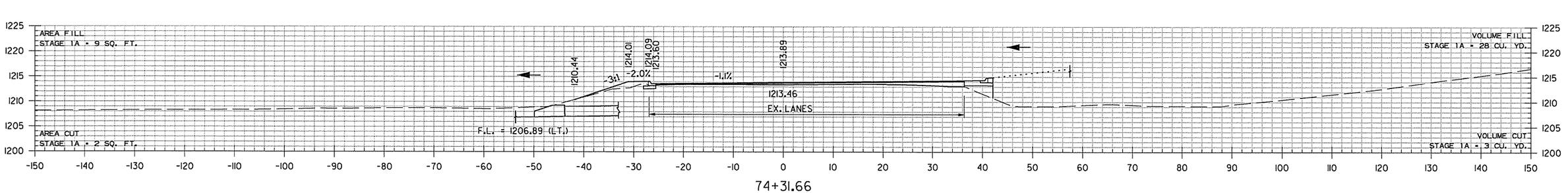

74+31.66

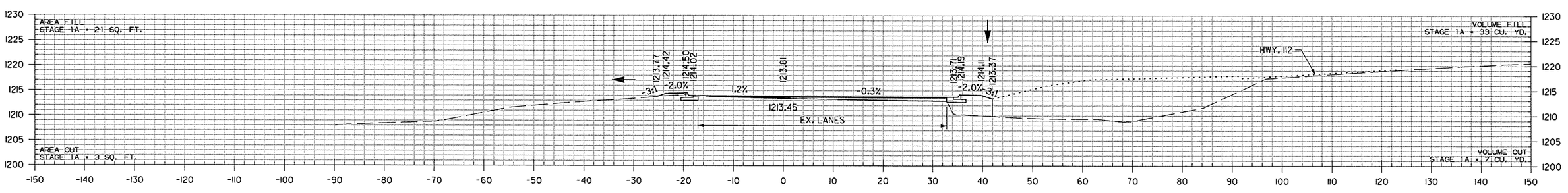

74+00.00

SHILOH DR.
STA. 74+00 TO STA. 74+32

AEWarclak 3/20/2016 11:58:07 AM
WORKSPACE: AHTD
L:\20II\I0I7707 - I-540 Widening & Interchange Improvement\Drawings\rBB0414_CX_SHILOH_.dgn
REVISED DATE:

DATE REVISED	DATE FILMED	DATE REVISED	DATE FILMED	FED.RD. DIST.NO.	STATE	FED.AID PROJ.NO.	SHEET NO.	TOTAL SHEETS
				6	ARK.			
				JOB NO.		BB0414	759	886

(2) CROSS SECTIONS

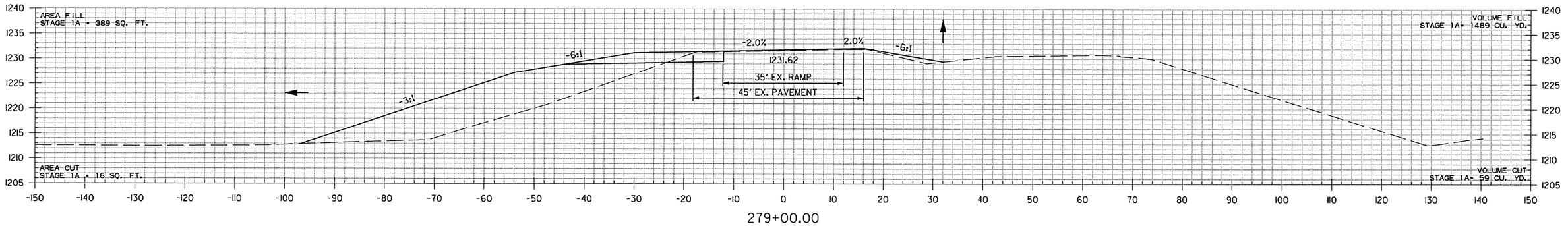

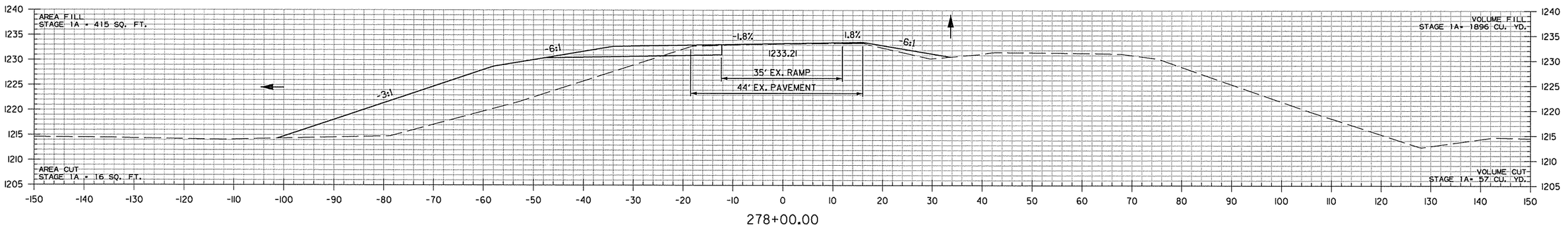

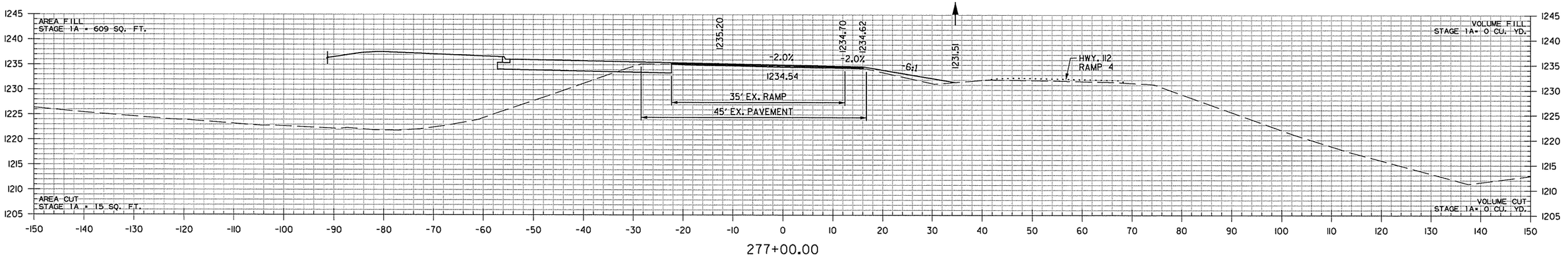

STA. 276+14.98 BEGIN
COLLECTOR-DISTRIBUTOR ROAD

COLLECTOR-DISTRIBUTOR ROAD
STA. 277+00 TO STA. 279+00

AEWterclark 3/20/2016 11:58:07 AM
WORKSPACE: AHTD
L:\20II\II0I707 - I-540 Widening & Interchange Improvement\Drawings\rBB0414_CX_C-D ROAD..dgn
REVISED DATE:

DATE REVISED	DATE FILMED	DATE REVISED	DATE FILMED	FED.RD. DIST.NO.	STATE	FED.AID PROJ.NO.	SHEET NO.	TOTAL SHEETS
				6	ARK.			
				JOB NO.		BB0414	760	886
				(2)		CROSS SECTIONS		

NO CONSTRUCTION
STA. 281+79.57 TO 284+61.04

STA. 281+79.57 END 100' TRANSTION

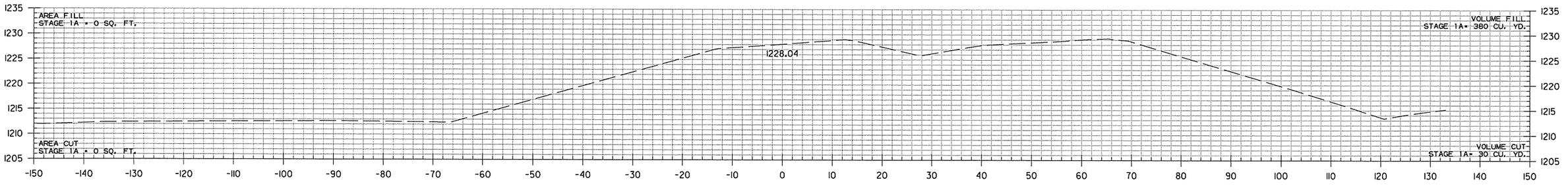

281+00.00

STA. 280+79.57 BEGIN 100' TRANSTION

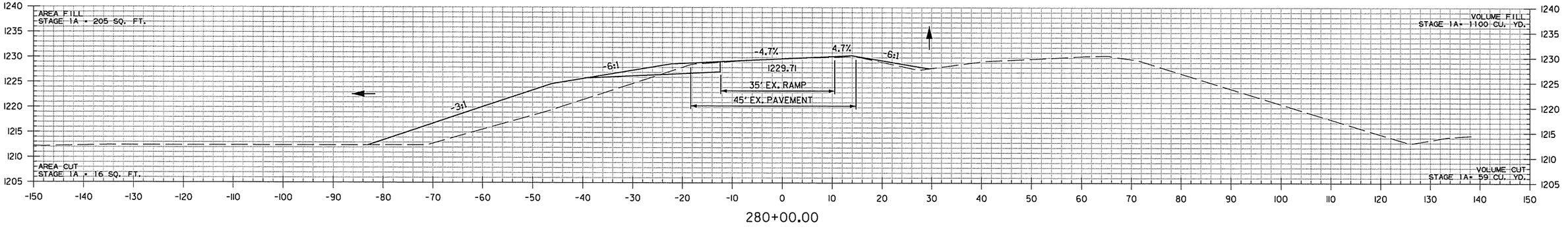

280+00.00

STA. 276+21.04 BEGIN
COLLECTOR-DISTRIBUTOR ROAD

COLLECTOR-DISTRIBUTOR ROAD
STA. 280+00 TO STA. 281+00

AEWierdak 3/20/2016 11:58:07 AM
WORKSPACE: AHTD
L:\20IN\001707 - I-540 Widening & Interchange Improvement\Drawings\rBB0414_CX_C-D ROAD.dgn
REVISED DATE:

DATE REVISED	DATE FILMED	DATE REVISED	DATE FILMED	FED.RD. DIST.NO.	STATE	FED.AID PROJ.NO.	SHEET NO.	TOTAL SHEETS
				6	ARK.			
				JOB NO.		BB0414	761	886

(2) CROSS SECTIONS

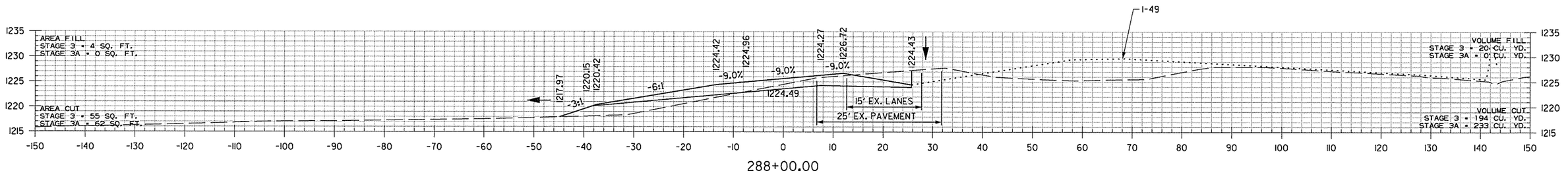

288+00.00

STA. 287+62.46 MAX. SUPERELEVATION (0.100'/')

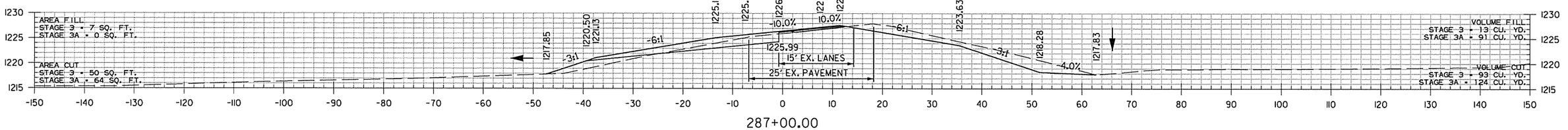

287+00.00

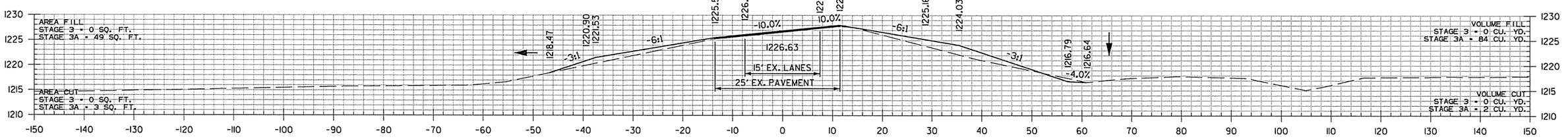

286+00.00

STA. 285+61.04 END 100' TRANSTION

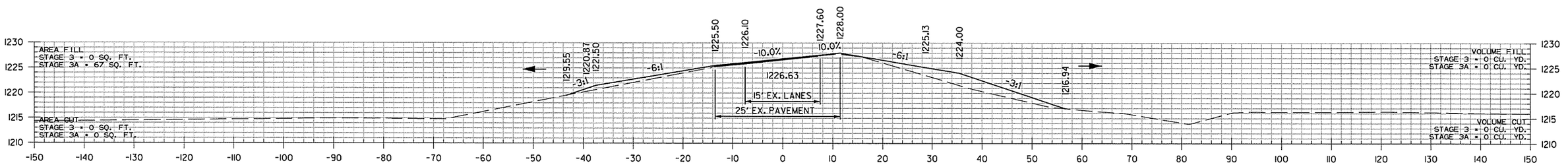

285+61.04

STA. 285+61.04 MATCH EX. SUPERELEVATION (0.100'/')

STA. 284+61.04 BEGIN 100' TRANSTION

COLLECTOR-DISTRIBUTOR ROAD
STA. 285+61 TO STA. 288+00

AEWierclak 3/20/2016 11:58:07 AM
WORKSPACE: AHTD
L:\20IN\110177\07 - I-540 Widening & Interchange Improvement\Drawings\rBB0414_CX_C-D ROAD_.dgn
REVISED DATE:

DATE REVISED	DATE FILMED	DATE REVISED	DATE FILMED	FED.RD. DIST.NO.	STATE	FED.AID PROJ.NO.	SHEET NO.	TOTAL SHEETS
				6	ARK.			
				JOB NO.		BB0414	762	886
				(2)		CROSS SECTIONS		

STA. 291+26.00
END SP. DITCH LT. 0.82%
ELEV. 1219.20

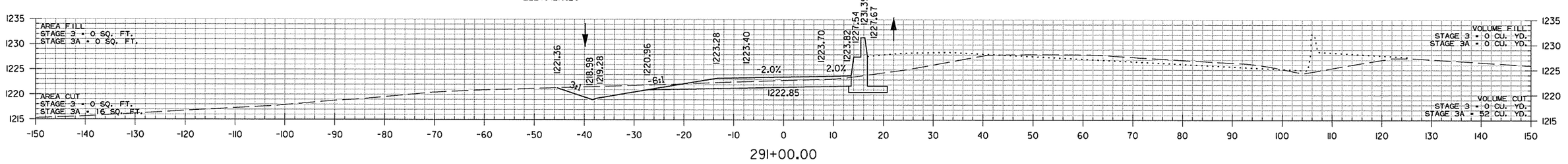

291+00.00

STA. 290+62.46 END SUPERELEVATION

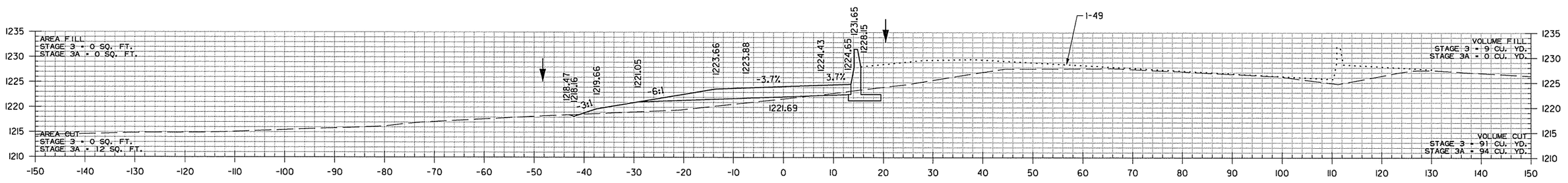

290+00.00

STA. 289+75.00
BEGIN SP. DITCH LT. 0.82%
ELEV. 1217.96

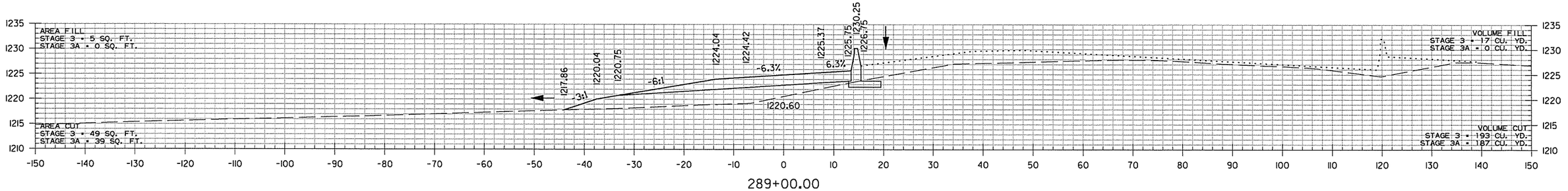

289+00.00

COLLECTOR-DISTRIBUTOR ROAD
STA. 289+00 TO STA. 291+00

AEWierclak 3/20/2016 11:58:07 AM
WORKSPACE: AHTD
L:\20IN\I0I7I0T - I-540 Widening & Interchange Improvement\Drawings\rBB0414_CX_C-D ROAD_.dgn
REVISED DATE:

DATE REVISED	DATE FILMED	DATE REVISED	DATE FILMED	FED.RD. DIST.NO.	STATE	FED.AID PROJ.NO.	SHEET NO.	TOTAL SHEETS
				6	ARK.			
				JOB NO.		BB0414	763	886
				(2)	CROSS SECTIONS			

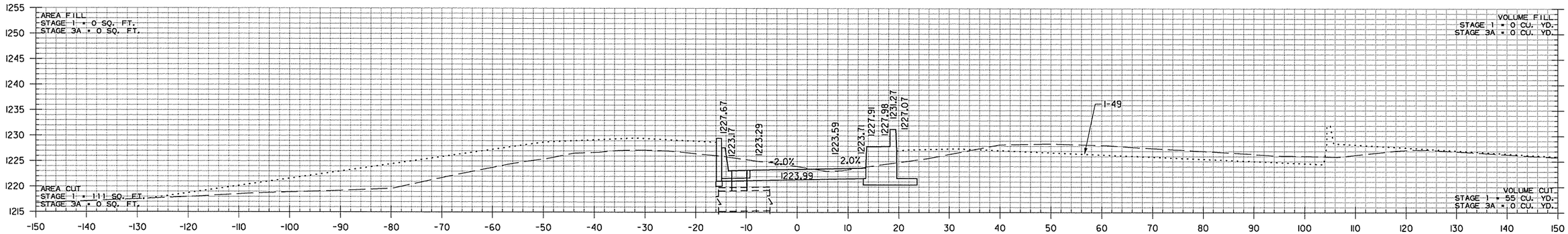

291+58.00

STA. 291+58 CONSTRUCT
TYPE TM DROP INLET 11' LT.
(3' X 2'6" X H=3'6")
CONNECT TO BOX CULVERT

STA. 291+58
TOP = 1223.17
INV. = 1214.97

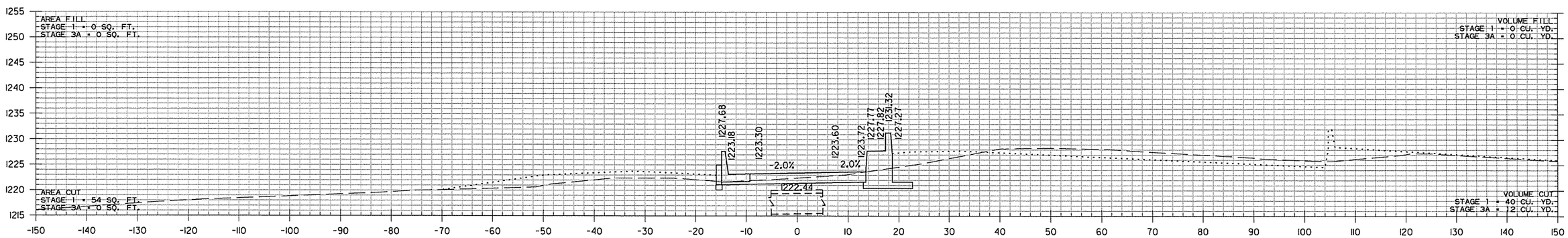

291+40.00

STA. 291+40.00 IN PLACE
4' X 4' X 525' R.C. BOX CULVERT
RETAIN

COLLECTOR-DISTRIBUTOR ROAD
STA. 291+40 TO STA. 291+58

AEWierclak 3/20/2016 11:58:07 AM
WORKSPACE: AHTD
L:\201\101707 - I-540 Widening & Interchange Improvement\Drawings\r-BB0414_CX_C-D ROAD..dgn
REVISED DATE:

DATE REVISED	DATE FILMED	DATE REVISED	DATE FILMED	FED.RD. DIST.NO.	STATE	FED.AID PROJ.NO.	SHEET NO.	TOTAL SHEETS
				6	ARK.			
				JOB NO.		BB0414	764	886
				(2)		CROSS SECTIONS		

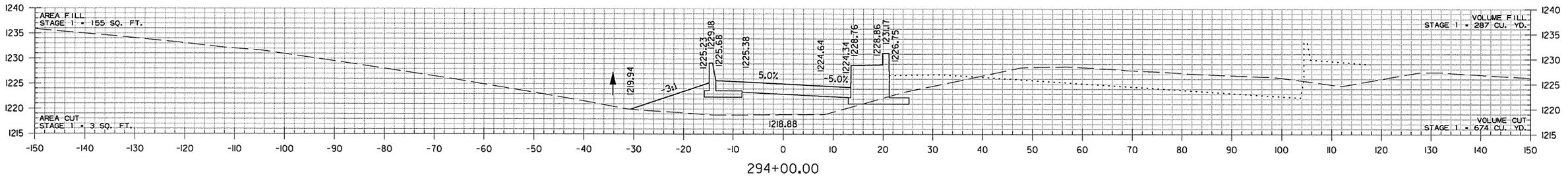

294+00.00

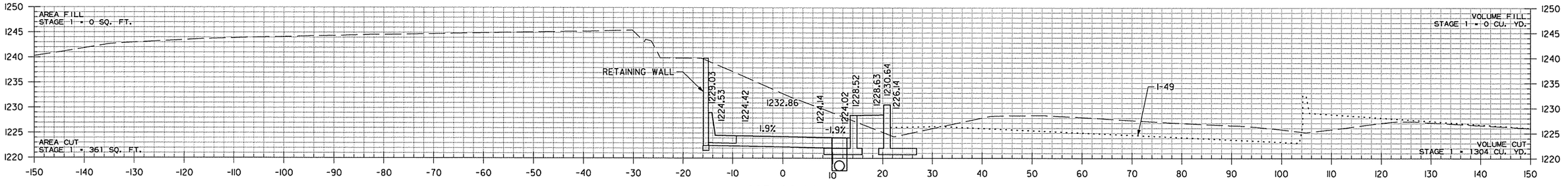

293+00.00

STA. 293+00 CONSTRUCT
TYPE ST DROP INLET 12' RT.
(3' X 3' X H=6'6") WITH
24" X 149' R.C. PIPE OUTLET
CONNECT TO DROP INLET AT
STA. 294+52
(CLASS III) TYPE 3 BEDDING

STA. 293+00
TOP = 1224.02
INV. = 1217.52

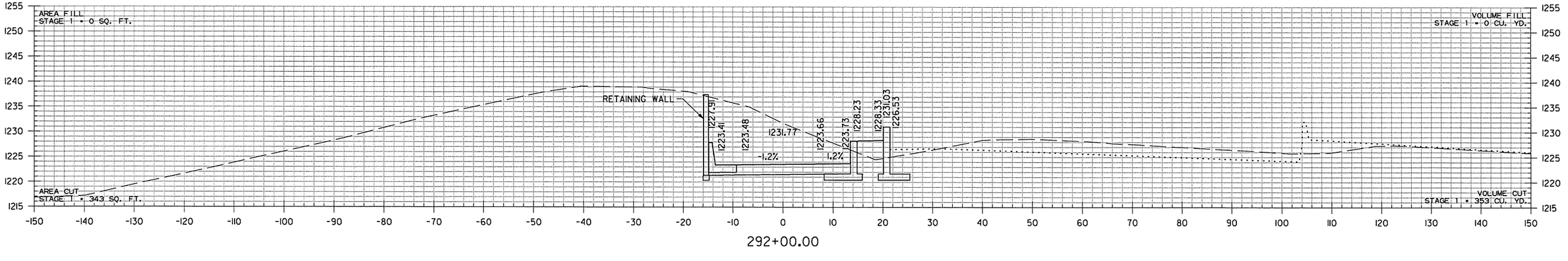

292+00.00

STA. 291+73.09 BEGIN SUPERELEVATION

COLLECTOR-DISTRIBUTOR ROAD
STA. 292+00 TO STA. 294+00

AEWierclok 3/20/2016 11:58:07 AM
WORKSPACE: AHTD
L:\20IN\I0I707 - I-540 Widening & Interchange Improvement\Drawings\rBB0414_CX_C-D ROAD_.dgn
REVISED DATE:

DATE REVISED	DATE FILMED	DATE REVISED	DATE FILMED

FED.RD. DIST.NO.	STATE	FED.AID PROJ.NO.	SHEET NO.	TOTAL SHEETS
6	ARK.			
JOB NO.		BB0414	765	886

(2) CROSS SECTIONS

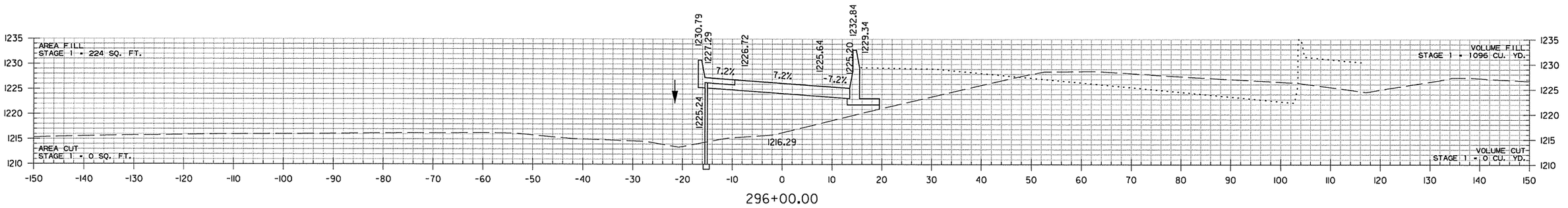

296+00.00

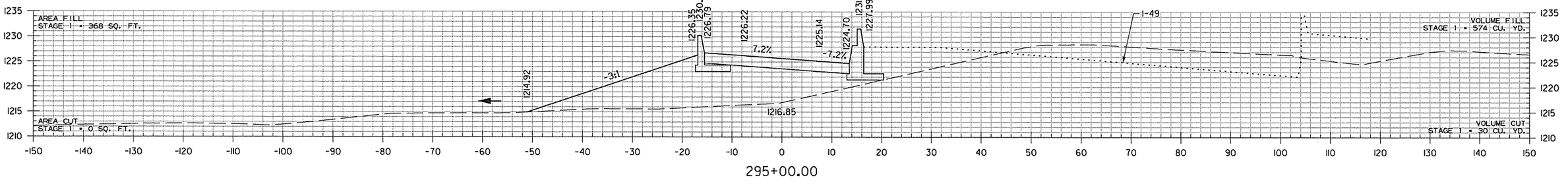

295+00.00

STA. 294+73.09 MAX. SUPERELEVATION (0.072'/')

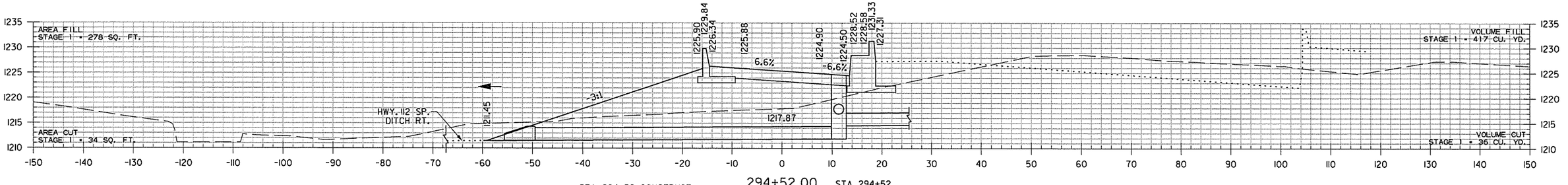

294+52.00

STA. 294+52 CONSTRUCT TYPE ST DROP INLET II' RT. (4' X 3' X H=12'8") WITH 30" X 59' R.C. PIPE OUTLET (CLASS III) TYPE 3 BEDDING WITH FES. LT.

STA. 294+52
TOP = 1224.50
INV = 1217.84 (MEDIAN DRAIN)
INV = 1213.50 (CROSS DRAIN)
INV. = 1211.87
PROP F.L. = 1211.45 (LT.)

COLLECTOR-DISTRIBUTOR ROAD
STA. 294+52 TO STA. 296+00

AEWierciak 3/20/2016 11:58:08 AM
WORKSPACE: AHTD
L:\20IN\IOI7\07 - I-540 Widening & Interchange Improvement\Drawings\rBB0414_CX_C-D ROAD_.dgn
REVISED DATE:

DATE REVISED	DATE FILMED	DATE REVISED	DATE FILMED	FED.RD. DIST.NO.	STATE	FED.AID PROJ.NO.	SHEET NO.	TOTAL SHEETS
				6	ARK.			
				JOB NO.		BB0414	766	886
				(2)		CROSS SECTIONS		

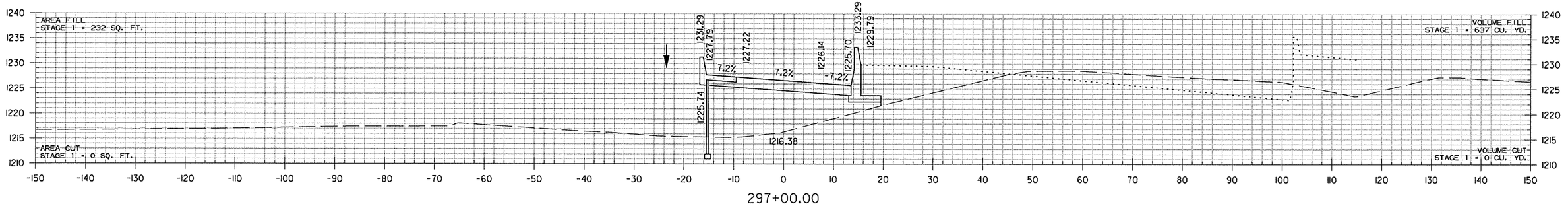

297+00.00

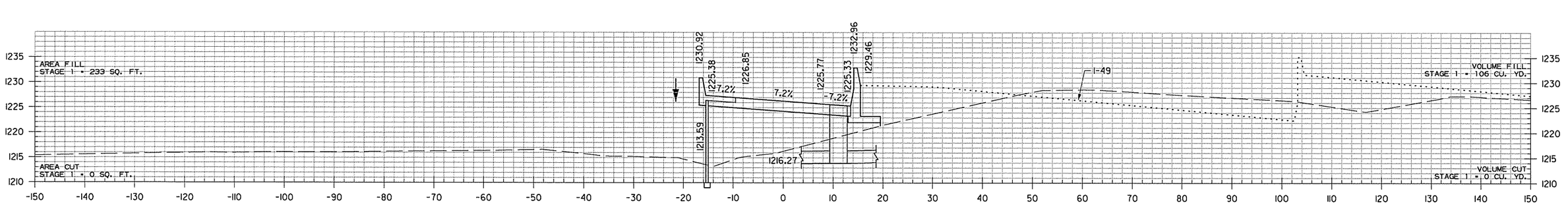

296+26.00

STA. 296+26 CONSTRUCT
TYPE ST DROP INLET II' RT.
(5' X 3-6" X H=11'5") WITH
30" X 30' R.C. PIPE OUTLET
MITER PIPE TO WALL FACE
(CLASS III) TYPE 3 BEDDING

STA. 296+26
TOP = 1225.33
INV. = 1213.89
PROP F.L. = 1213.55 (LT.)

STA. 296+26 TO STA. 296+26

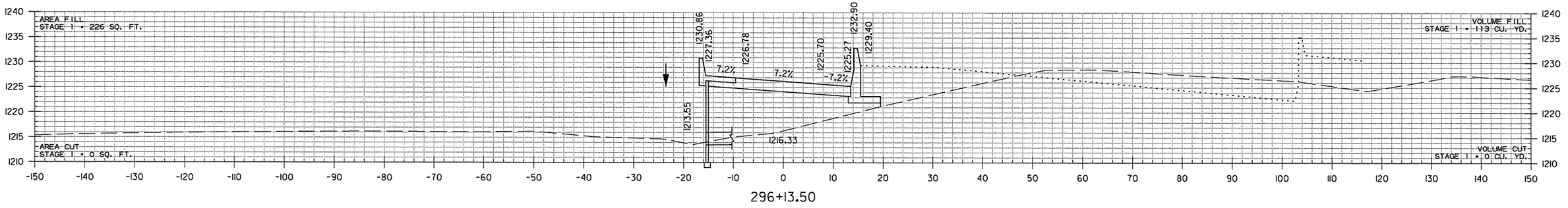

296+13.50

COLLECTOR-DISTRIBUTOR ROAD
STA. 296+14 TO STA. 297+00

AEWier-clark 3/20/2016 11:58:08 AM
WORKSPACE: AHTD
L:\201\101707 - I-540 Widening & Interchange Improvement\Drawings\r-BB0414_CX_C-D ROAD..dgn
REVISED DATE:

DATE REVISED	DATE FILMED	DATE REVISED	DATE FILMED	FED.RD. DIST.NO.	STATE	FED.AID PROJ.NO.	SHEET NO.	TOTAL SHEETS
				6	ARK.			
				JOB NO.		BB0414	767	886
				(2)	CROSS SECTIONS			

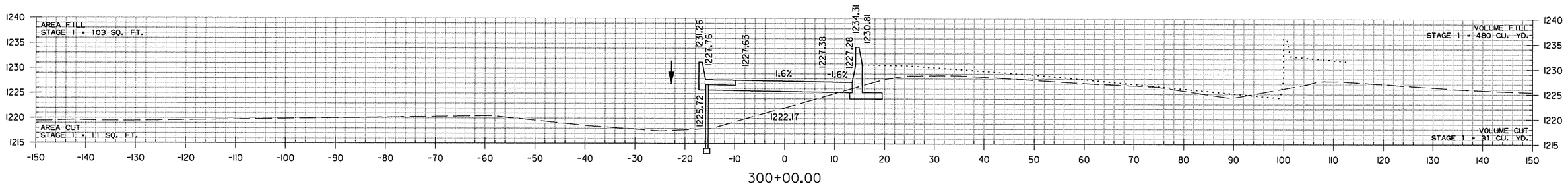

300+00.00

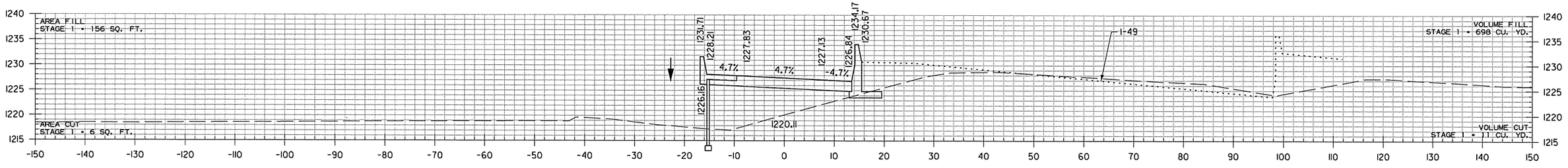

299+00.00

STA. 298+18.52 MAX. SUPERELEVATION (0.072'/')

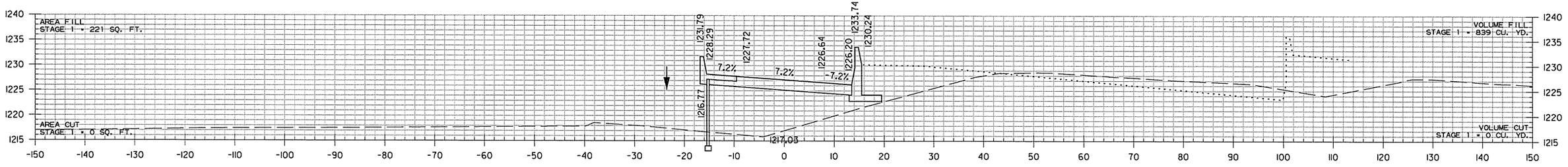

298+00.00

COLLECTOR-DISTRIBUTOR ROAD
STA. 298+00 TO STA. 300+00

AEWierclok 3/20/2016 11:58:08 AM
WORKSPACE: AHTD
L:\2011\101707 - I-540 Widening & Interchange Improvement\Drawings\rBB0414_CX_C-D ROAD_.dgn
REVISED DATE:

DATE REVISED	DATE FILMED	DATE REVISED	DATE FILMED	FED.RD. DIST.NO.	STATE	FED.AID PROJ.NO.	SHEET NO.	TOTAL SHEETS
				6	ARK.			
				JOB NO.		BB0414	768	886
				(2)	CROSS SECTIONS			

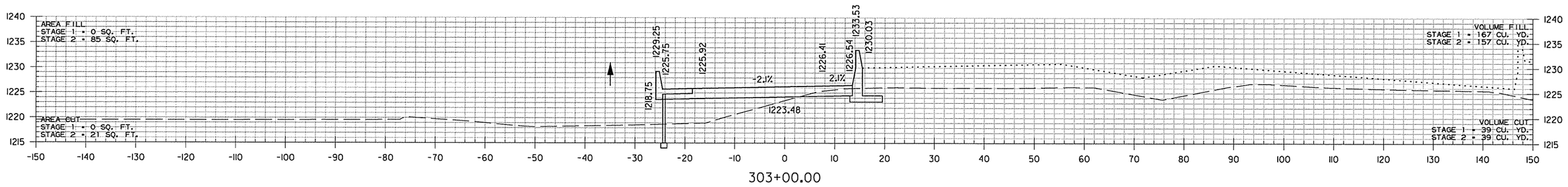

303+00.00

STA. 302+85.21 BEGIN SUPERELEVATION

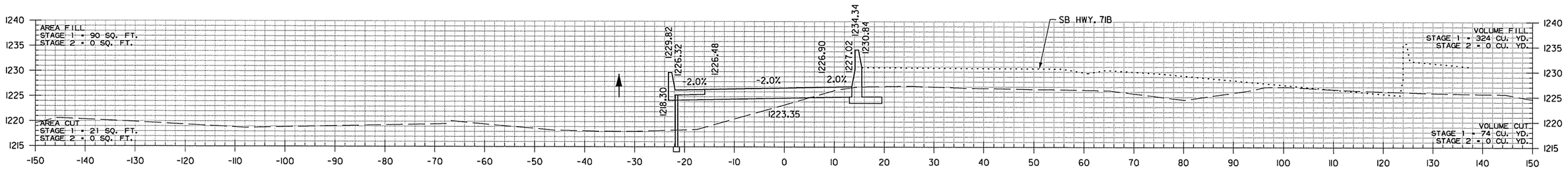

302+00.00

STA. 301+18.52 END SUPERELEVATION

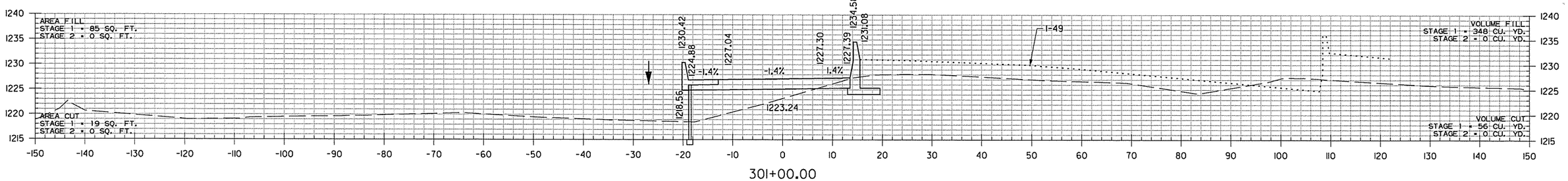

301+00.00

COLLECTOR-DISTRIBUTOR ROAD
STA. 301+00 TO STA. 303+00

AEWierclok 3/20/2016 11:58:08 AM
WORKSPACE: AHTD
L:\2011\101707 - I-540 Widening & Interchange Improvement\Drawings\rBB0414_CX_C-D ROAD_.dgn
REVISED DATE:

DATE REVISED	DATE FILMED	DATE REVISED	DATE FILMED	FED.RD. DIST.NO.	STATE	FED.AID PROJ.NO.	SHEET NO.	TOTAL SHEETS
				6	ARK.			
				JOB NO.		BB0414	769	886

(2) CROSS SECTIONS

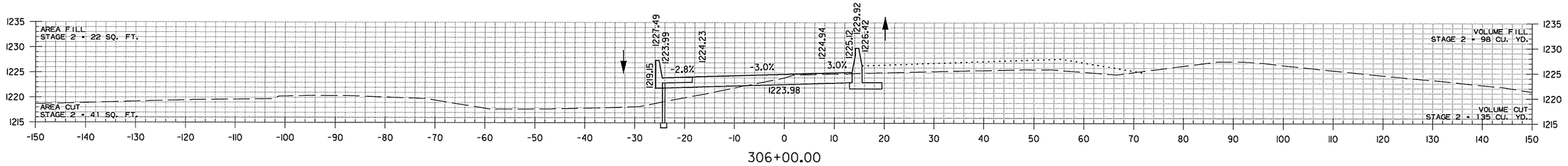

306+00.00

STA. 305+65.21 MAX. SUPERELEVATION (0.031'/')
STA. 305+68.86 MAX. SUPERELEVATION (0.031'/')

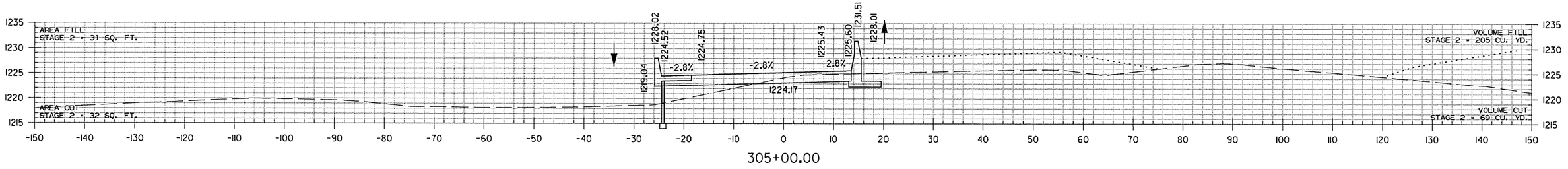

305+00.00

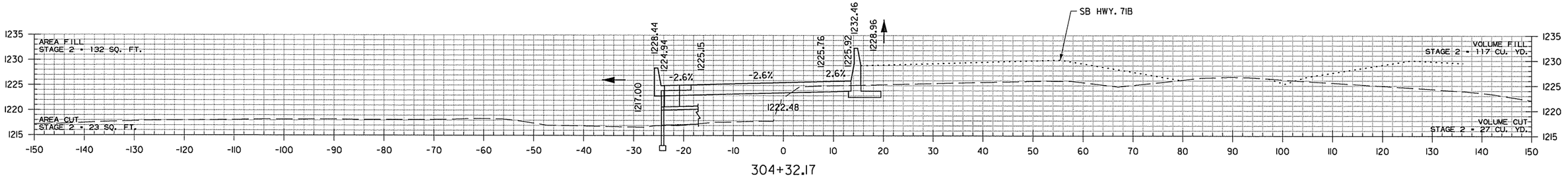

304+32.17

STA. 304+26 IN PLACE DOUBLE
6' X 3' X 172' R.C. BOX CULVERT
WITH 3:1 WINGS LT.
RETAIN AND EXTEND 27' LT.
29° LT. FWD. SKEW
CONSTRUCT TYPE TM DROP INLET LT.
(2'6" X 3'0" X 4'3")
Q50 = 294 CFS DA = 110.0 ACRES

STA. 304+26
TOP = 1224.94
EX. F.L. = 1217.64 (LT.)
PROP F.L. = 1217.00 (LT.)

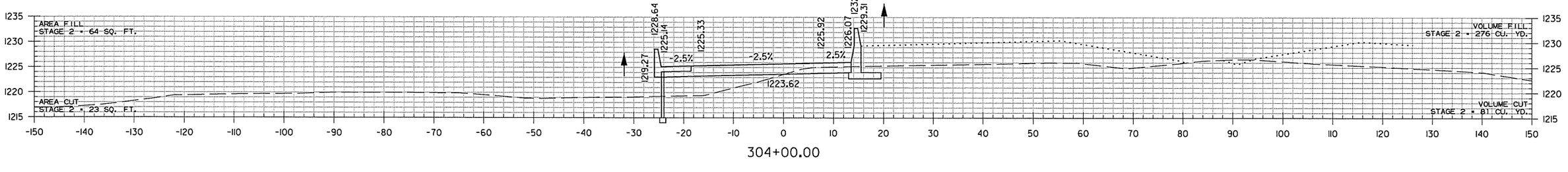

304+00.00

COLLECTOR-DISTRIBUTOR ROAD
STA. 304+00 TO STA. 306+00

AEWierciak 3/20/2016 11:58:08 AM
WORKSPACE: AHTD
L:\201\101707 - I-540 Widening & Interchange Improvement\Drawings\r-BB044_CX_C-D ROAD_.dgn
REVISED DATE:

DATE REVISED	DATE FILMED	DATE REVISED	DATE FILMED	FED.RD. DIST.NO.	STATE	FED.AID PROJ.NO.	SHEET NO.	TOTAL SHEETS
				6	ARK.			
				JOB NO.		BB0414	770	886

(2) CROSS SECTIONS

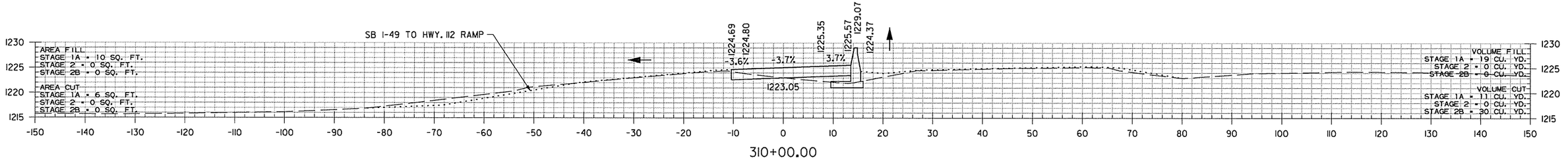

310+00.00

KEEP LONG FOOTING TOE ON RT.
SIDE OF WALL TO 310+00 FOR
M.O.T. STAGING.

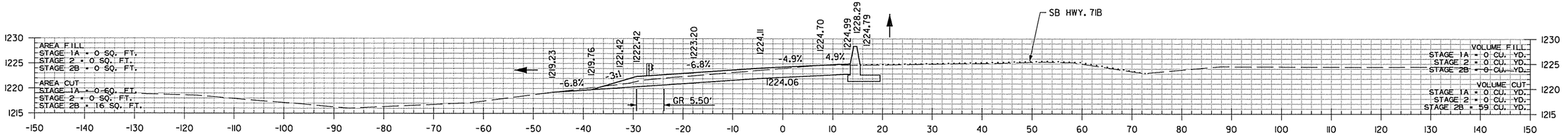

309+00.00

STA. 308+99.24 MAX. SUPERELEVATION (0.049'/')
STA. 308+24.39 MAX. SUPERELEVATION (0.049'/')

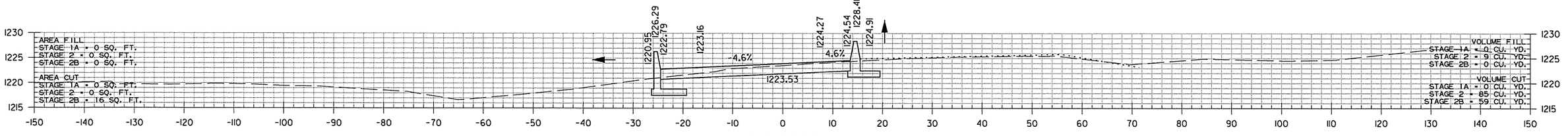

308+00.00

STA. 307+00 CONSTRUCT
TYPE ST DROP INLET LT.
(3' X 3' X H=3'-3") WITH
18" X 2' R.C. PIPE OUTLET
THROUGH RETAINING WALL
(CLASS III) TYPE 3 BEDDING

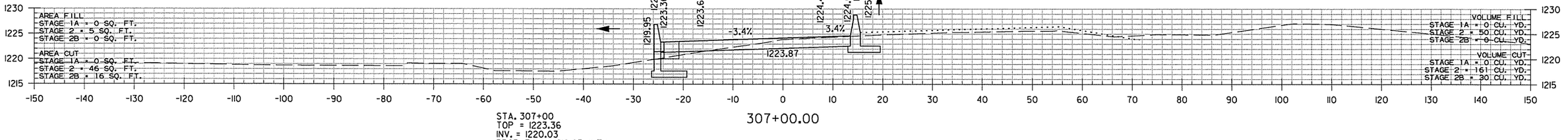

307+00.00

STA. 307+00
TOP = 1223.36
INV. = 1220.03
PROP F.L. = 1219.95 (LT.)

STA. 306+49.28 END SUPERELEVATION (0.0278'/')
STA. 306+49.28 BEGIN SUPERELEVATION (0.0278'/')

COLLECTOR-DISTRIBUTOR ROAD
STA. 307+00 TO STA. 310+00

AEWierclak 3/20/2016 11:58:08 AM
WORKSPACE: AHTD
L:\201\W017707 - I-540 Widening & Interchange Improvement\Drawings\r-BB0414_CX-C-D ROAD_.dgn
REVISED DATE:

DATE REVISED	DATE FILMED	DATE REVISED	DATE FILMED	FED.RD. DIST.NO.	STATE	FED.AID PROJ.NO.	SHEET NO.	TOTAL SHEETS
				6	ARK.			
				JOB NO.		BB0414	771	886

(2) CROSS SECTIONS

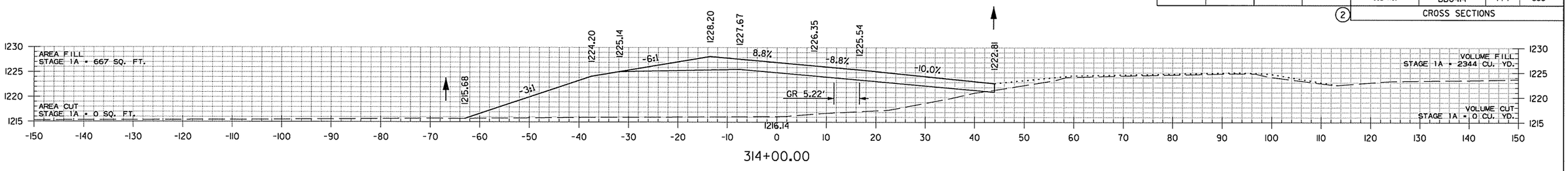

314+00.00

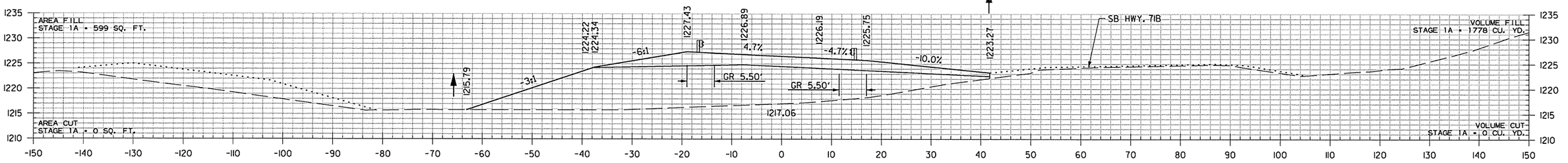

313+00.00

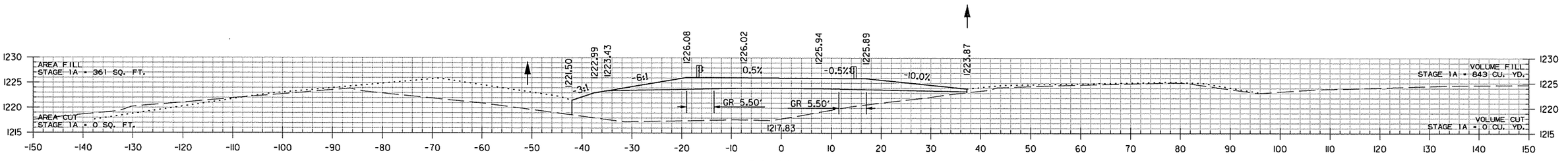

312+00.00

STA. 311+39.24 END SUPERELEVATION
STA. 311+39.24 BEGIN SUPERELEVATION

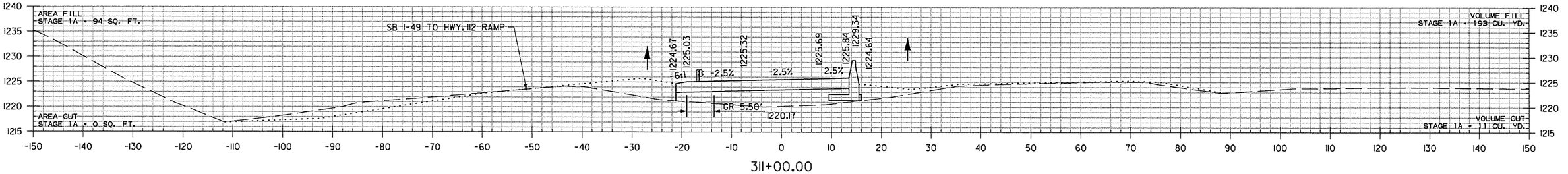

311+00.00

COLLECTOR-DISTRIBUTOR ROAD
STA. 311+00 TO STA. 314+00

AEWierciak 3/20/2016 11:58:08 AM
WORKSPACE: AHTD
L:\20IN\I0I710T - I-540 Widening & Interchange Improvement\Drawings\rBB0414_CX_C-D ROAD_.dgn
REVISED DATE:

DATE REVISED	DATE FILMED	DATE REVISED	DATE FILMED	FED.RD. DIST.NO.	STATE	FED.AID PROJ.NO.	SHEET NO.	TOTAL SHEETS
				6	ARK.			
				JOB NO.		BB0414	772	886

(2) CROSS SECTIONS

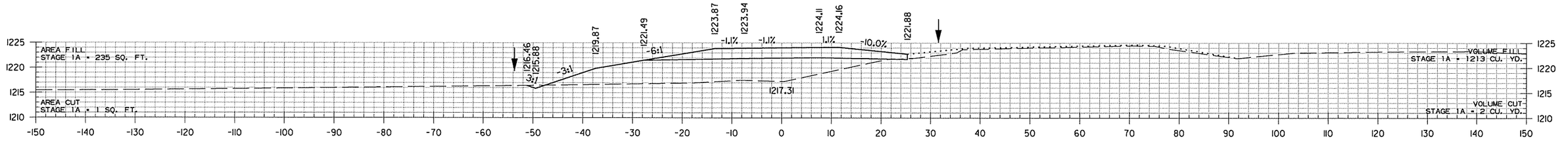

317+00.00

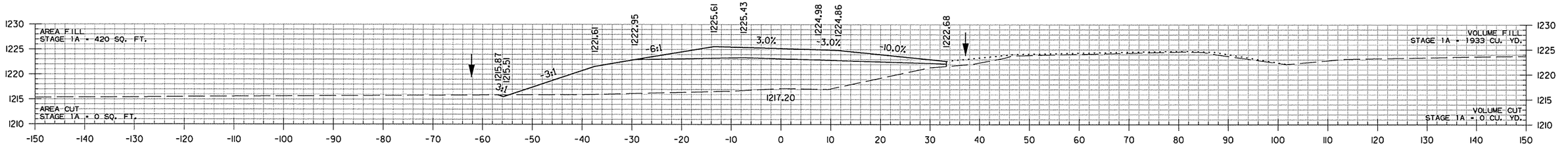

316+00.00

STA. 315+25.00
BEGIN SP. DITCH LT. 0.36%
ELEV. 1215.24

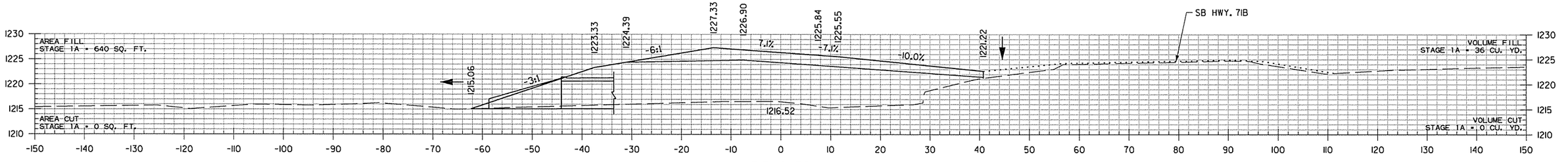

315+01.52

STA. 314+88 IN PLACE
DOUBLE 6' X 6' X 312' R.C. BOX CULVERT
18°LT. FWD. SKEW
WITH 3:1 WINGS LT.
RETAIN AND EXTEND 97' LT.
Q50 = 119 CFS DA = 40.2 ACRES

STA. 314+88
EX. F.L. = 1215.35 (RT.)
PROP F.L. = 1215.06 (LT.)

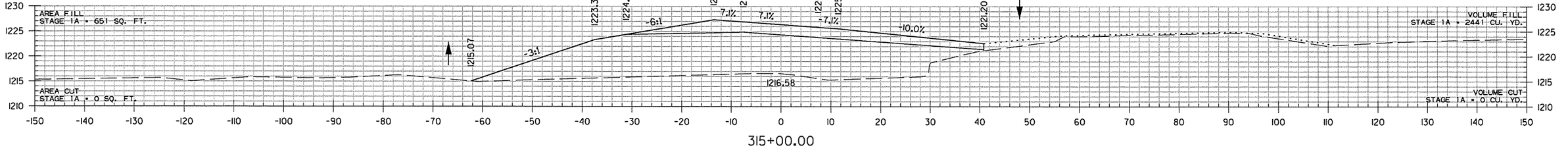

315+00.00

STA. 314+50.56 MAX. SUPERELEVATION (0.092'/')
STA. 314+09.24 MAX. SUPERELEVATION (0.092'/')

COLLECTOR-DISTRIBUTOR ROAD
STA. 315+00 TO STA. 317+00

AEWierciak 3/20/2016 11:58:08 AM
WORKSPACE: AHTD
L:\20\1\101707 - I-540 Widening & Interchange Improvement\Drawings\rBB0414_CX_C-D ROAD..dgn
REVISED DATE:

DATE REVISED	DATE FILMED	DATE REVISED	DATE FILMED	FED.RD. DIST.NO.	STATE	FED.AID PROJ.NO.	SHEET NO.	TOTAL SHEETS
				6	ARK.			
				JOB NO.		BB0414	773	886
				(2)		CROSS SECTIONS		

STA. 319+06.98 END
COLLECTOR-DISTRIBUTOR ROAD

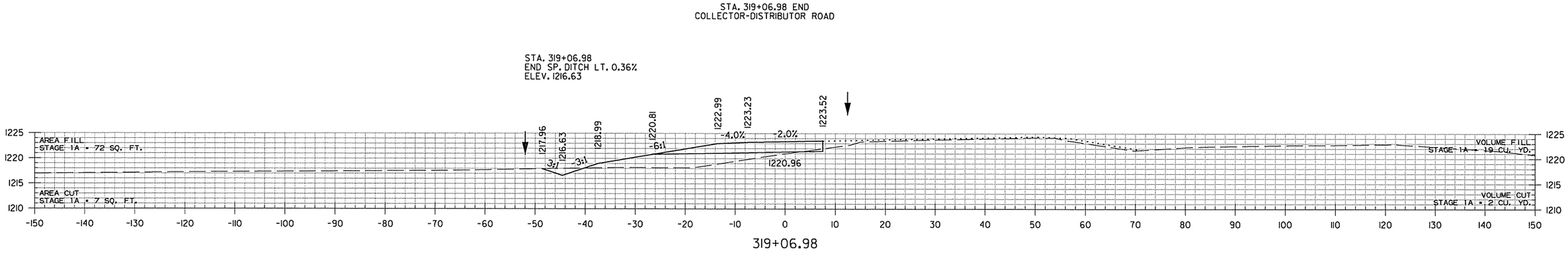

319+06.98

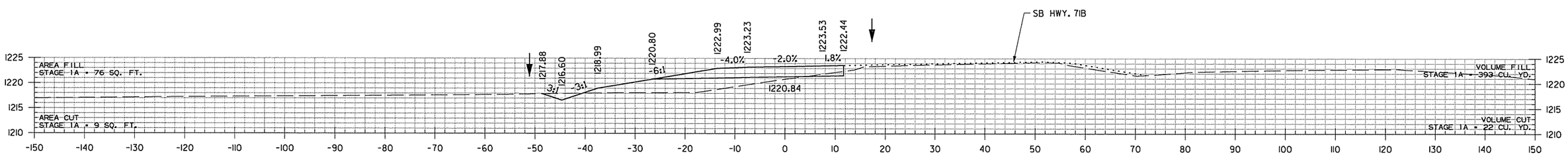

319+00.00

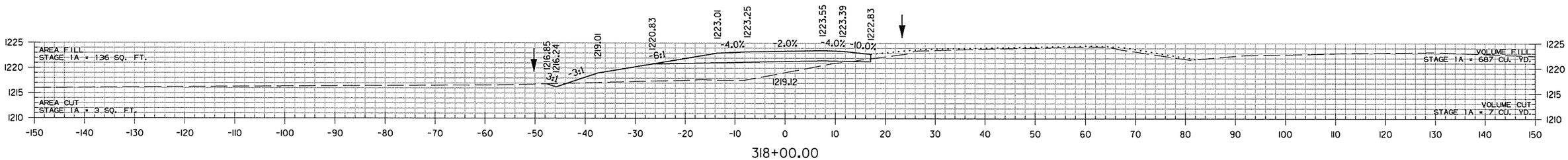

318+00.00

STA. 317+20.56 END SUPERELEVATION

COLLECTOR-DISTRIBUTOR ROAD
STA. 318+00 TO STA. 319+07

AEWierdak 3/20/2016 11:58:09 AM
WORKSPACE: AHTD
L:\20II\II07707 - I-540 Widening & Interchange Improvement\Drawings\rBB0414_CX_C-D ROAD..dgn
REVISED DATE:

DATE REVISED	DATE FILMED	DATE REVISED	DATE FILMED	FED.RD. DIST.NO.	STATE	FED.AID PROJ.NO.	SHEET NO.	TOTAL SHEETS
				6	ARK.			
				JOB NO.		BB0414	774	886
				(2)	CROSS SECTIONS			

HWY. 112 TO NB I-49 RAMP
STA. 288+00 TO STA. 290+00

AEWierclak 3/20/2016 11:58:18 AM
WORKSPACE: AHTD
L:\20\1\101707 - I-540 Widening & Interchange Improvement\Drawings\rBB0414_CX_HWY 112 TO NB I-49_.dgn
REVISED DATE:

DATE REVISED	DATE FILMED	DATE REVISED	DATE FILMED	FED.RD. DIST.NO.	STATE	FED.AID PROJ.NO.	SHEET NO.	TOTAL SHEETS
				6	ARK.			
				JOB NO.		BB0414	775	886

(2) CROSS SECTIONS

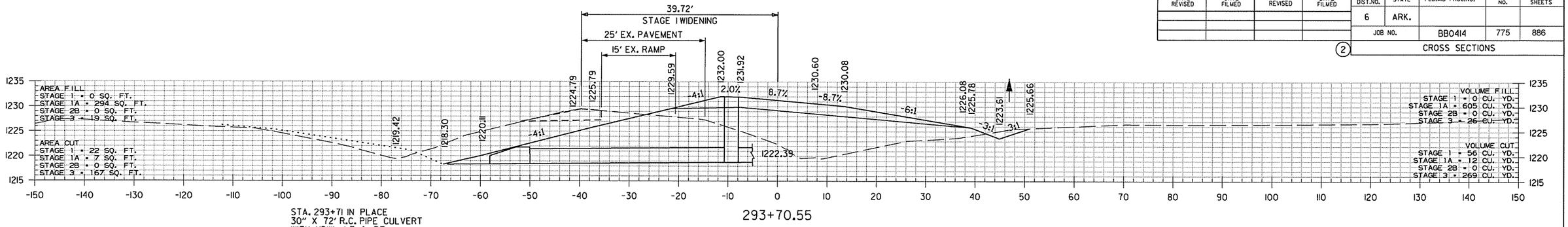

293+70.55

STA. 293+71 IN PLACE
30" X 72' R.C. PIPE CULVERT
WITH HDWL. LT. & RT.
REMOVE AND CONSTRUCT
TYPE ST JUNCTION BOX
(5'6" X 3' X H=13'2") 10' LT.
WITH 36" X 39' R.C. PIPE OUTLET LT.
AND 36" X 78' R.C. PIPE OUTLET RT.
44° RT. FORWARD SKEW (CLASS III)
TYPE 3 BEDDING WITH FES LT. & RT.
Q50 = 46 CFS DA = 9.5 ACRES

STA. 293+71
TOP 1231.96
INV 1218.77
PROP F.L. = 1219.45 (RT.)
PROP F.L. = 1218.30 (LT.)

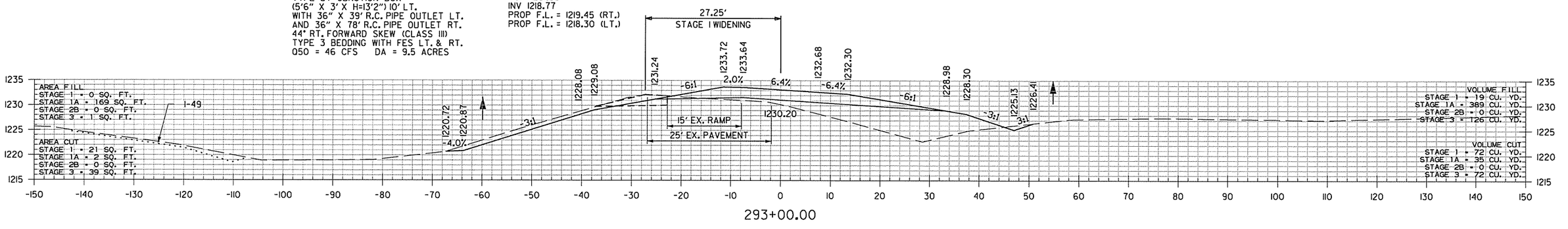

293+00.00

STA. 292+50.00
BEGIN SP. DITCH RT. -2.15%
ELEV. 1226.21

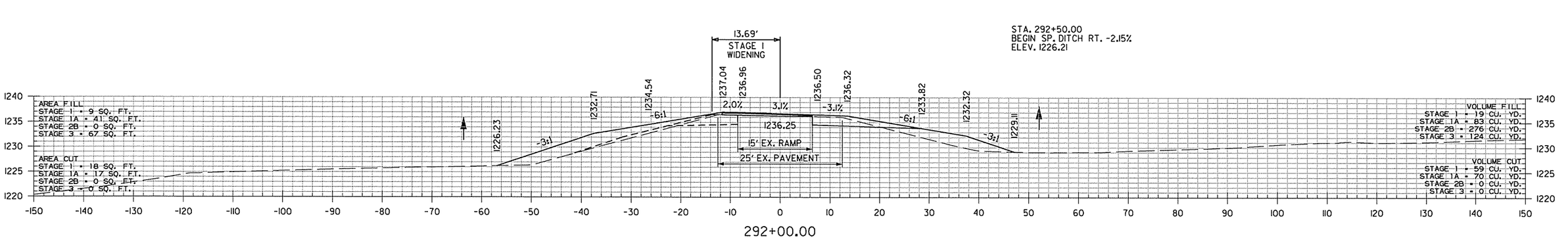

292+00.00

STA. 291+08.15 BEGIN SUPERELEVATION (0.000'/')

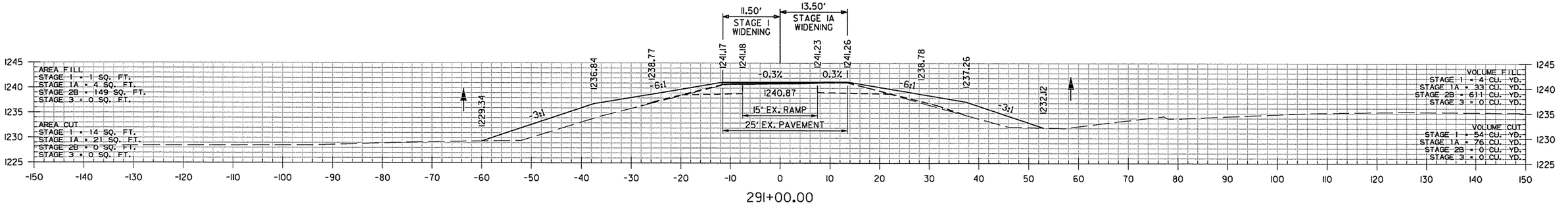

291+00.00

HWY. 112 TO NB I-49 RAMP
STA. 291+00 TO STA. 293+71

AEWierciak 3/20/2016 11:58:18 AM
WORKSPACE: AHTD
L:\201\110\7107 - I-540 Widening & Interchange Improvement\Drawings\r-BB0414_CX_HWY 112 TO NB I-49_.dgn
REVISED DATE:

DATE REVISED	DATE FILMED	DATE REVISED	DATE FILMED	FED.RD. DIST.NO.	STATE	FED.AID PROJ.NO.	SHEET NO.	TOTAL SHEETS
				6	ARK.			
				JOB NO.		BB0414	776	886
				(2)	CROSS SECTIONS			

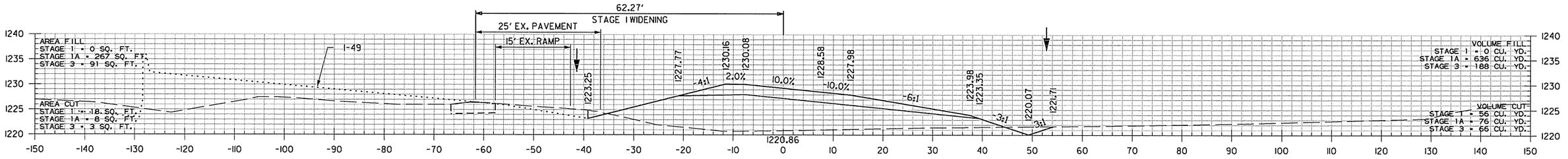

295+00.00

STA. 294+46.00
END SP. DITCH RT. 0.00%
BEGIN SP. DITCH RT. 1.16%
ELEV. 1219.45

STA. 294+37.00
END SP. DITCH RT. -9.55%
BEGIN SP. DITCH RT. 0.00%
ELEV. 1219.45

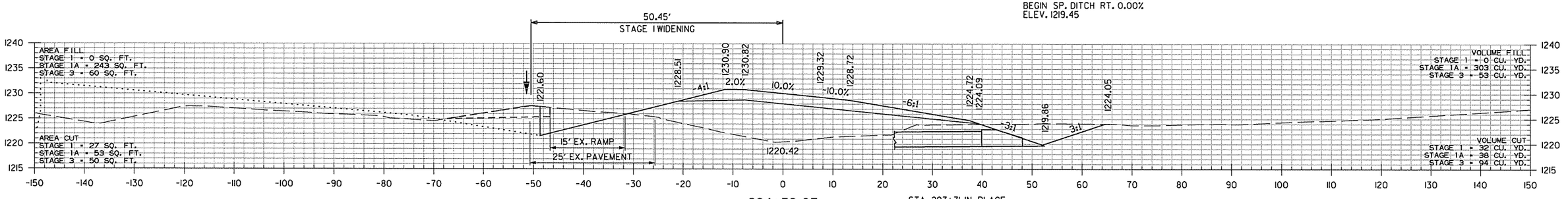

294+32.67

STA. 293+71 IN PLACE
30" X 72' R.C. PIPE CULVERT
WITH HDWL. LT. & RT.
REMOVE AND CONSTRUCT
TYPE ST JUNCTION BOX
(5'6" X 3' X H=13'2") 10' LT.
WITH 36" X 39' R.C. PIPE OUTLET LT.
AND 36" X 78' R.C. PIPE OUTLET RT.
44° RT. FORWARD SKEW (CLASS III)
TYPE 3 BEDDING WITH FES LT. & RT.
Q50 = 46 CFS DA = 9.5 ACRES

STA. 293+71
PROP F.L. = 1219.45 (RT.)

STA. 294+08.15 MAX. SUPERELEVATION (0.100'/')

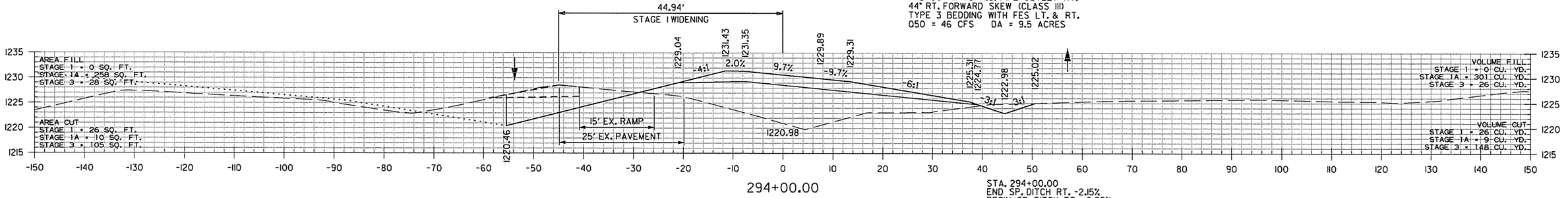

294+00.00

STA. 294+00.00
END SP. DITCH RT. -2.15%
BEGIN SP. DITCH RT. -9.55%
ELEV. 1222.98

HWY. 112 TO NB I-49 RAMP
STA. 294+00 TO STA. 295+00

AEWierciak 3/20/2016 11:58:18 AM
WORKSPACE: AHTD
L:\2016\16017\07 - I-540 Widening & Interchange Improvement\Drawings\rBB0414_CX_HWY 112 TO NB I-49_.dgn
REVISED DATE:

DATE REVISED	DATE FILMED	DATE REVISED	DATE FILMED	FED.RD. DIST.NO.	STATE	FED.AID PROJ.NO.	SHEET NO.	TOTAL SHEETS
				6	ARK.			
				JOB NO.		BB0414	777	886
				(2)		CROSS SECTIONS		

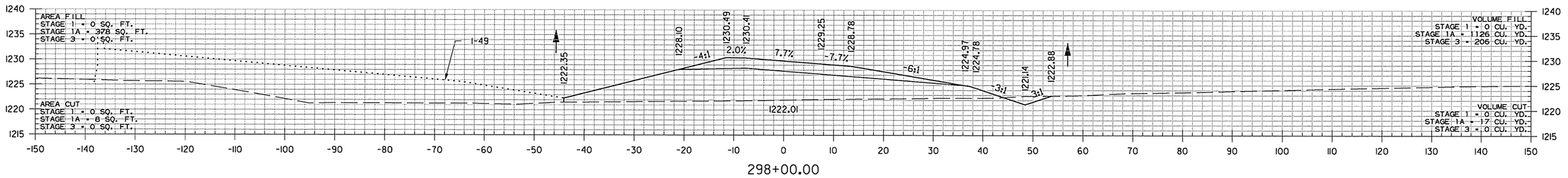

STA. 297+15.56 MAX. SUPERELEVATION (0.100'/')

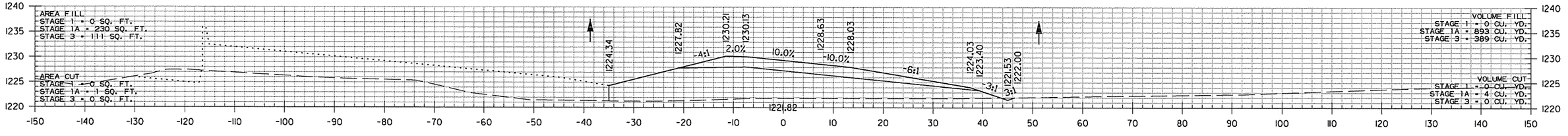

STA. 296+45.00
END SP. DITCH RT. 1.16%
BEGIN SP. DITCH RT. -0.39%
ELEV. 1221.75

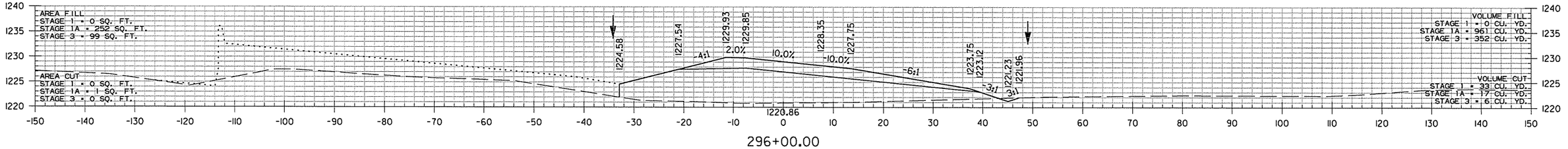

HWY. 112 TO NB I-49 RAMP
STA. 296+00 TO STA. 298+00

AEWierclak 3/20/2016 11:58:19 AM
WORKSPACE: AHTD
L:\20IN\110170T - I-540 Widening & Interchange Improvement\Drawings\rBB0414_CX.HWY 112 TO NB I-49..dgn
REVISED DATE:

DATE REVISED	DATE FILMED	DATE REVISED	DATE FILMED	FED.RD. DIST.NO.	STATE	FED.AID PROJ.NO.	SHEET NO.	TOTAL SHEETS
				6	ARK.			
				JOB NO.		BB0414	778	886

(2) CROSS SECTIONS

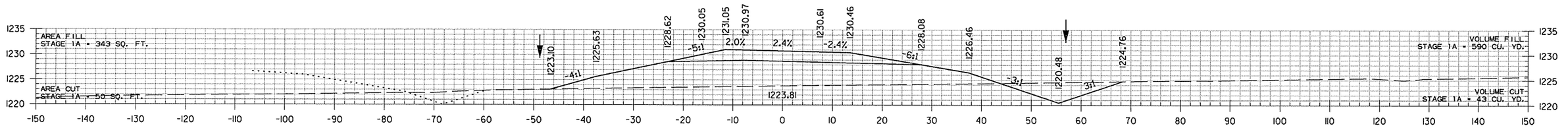

300+00.00

STA. 299+73.00
END SP. DITCH RT. 0.00%
BEGIN SP. DITCH RT. 3.29%
ELEV. 1219.59

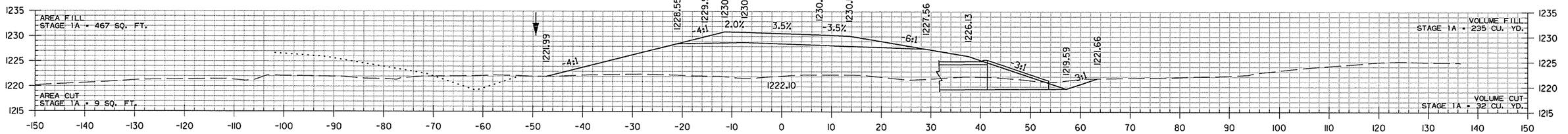

299+60.67

STA. 299+52 CONSTRUCT
DOUBLE 7' X 5' X 80' R.C. BOX CULVERT
10° RT. FWD. SKEW
WITH 3:1 WINGS LT. & RT.
Q50 = 294 CFS DA = 105.1 ACRES

STA. 299+52
PROP F.L. = 1219.59 (RT.)
PROP F.L. = 1219.04 (LT.)

STA. 299+51.00
END SP. DITCH RT. -2.27%
BEGIN SP. DITCH RT. 0.00%
ELEV. 1219.59

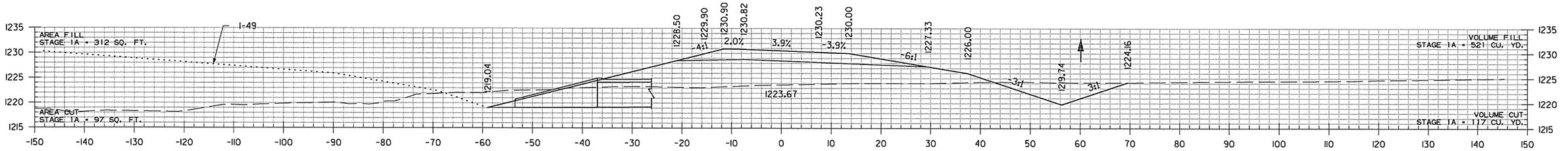

299+44.35

STA. 299+00.00
END SP. DITCH RT. -0.39%
BEGIN SP. DITCH RT. -2.27%
ELEV. 1220.75

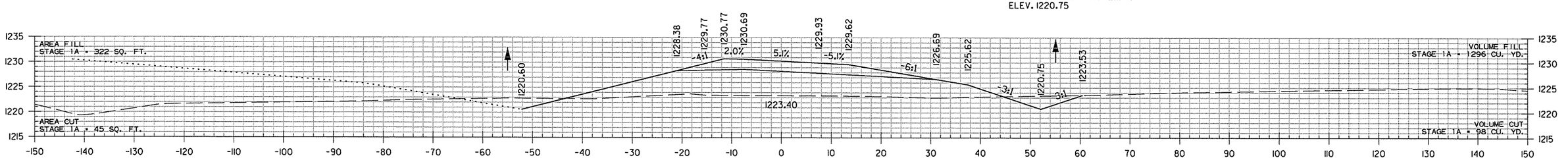

299+00.00

HWY. 112 TO NB I-49 RAMP
STA. 299+00 TO STA. 300+00

AEWerclok 3/20/2016 11:58:19 AM
WORKSPACE: AHTD
L:\20IN\1007TOT - I-540 Widening & Interchange Improvement\Drawings\r-BB0414_CX.HWY 112 TO NB I-49..dgn
REVISED DATE:

DATE REVISED	DATE FILMED	DATE REVISED	DATE FILMED	FED.RD. DIST.NO.	STATE	FED.AID PROJ.NO.	SHEET NO.	TOTAL SHEETS
				6	ARK.			
				JOB NO.		BB0414	779	886

(2) CROSS SECTIONS

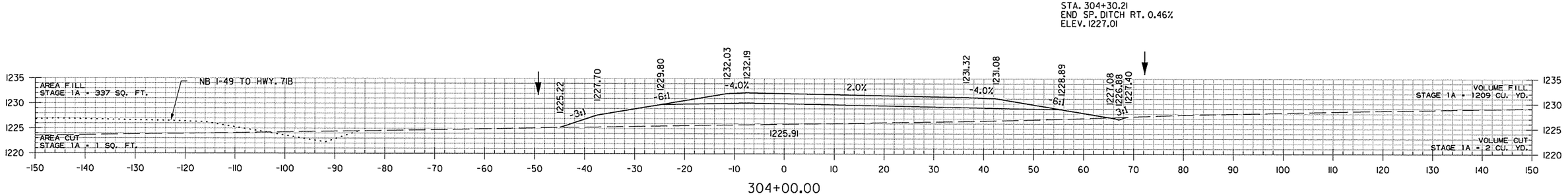

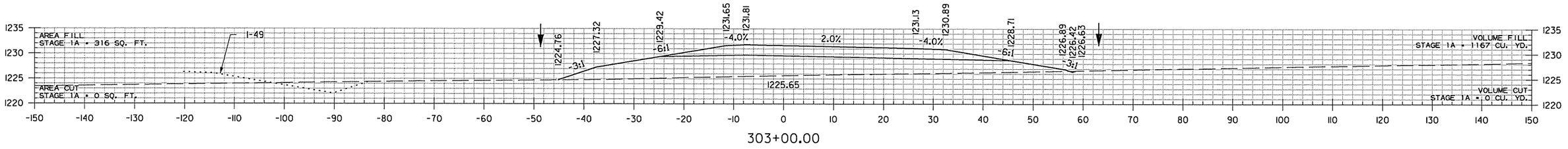

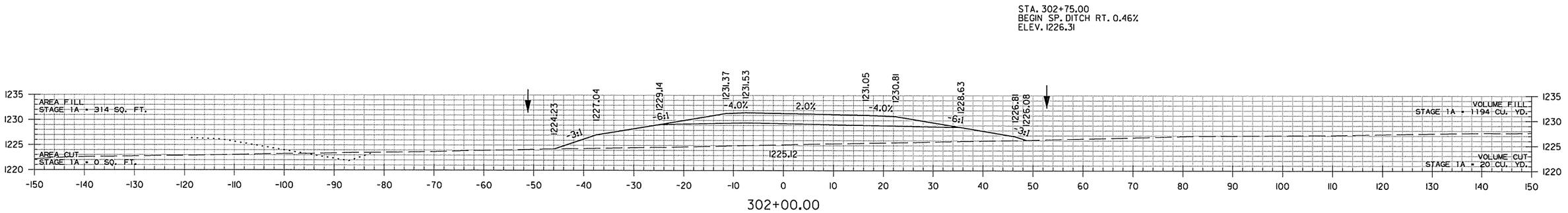

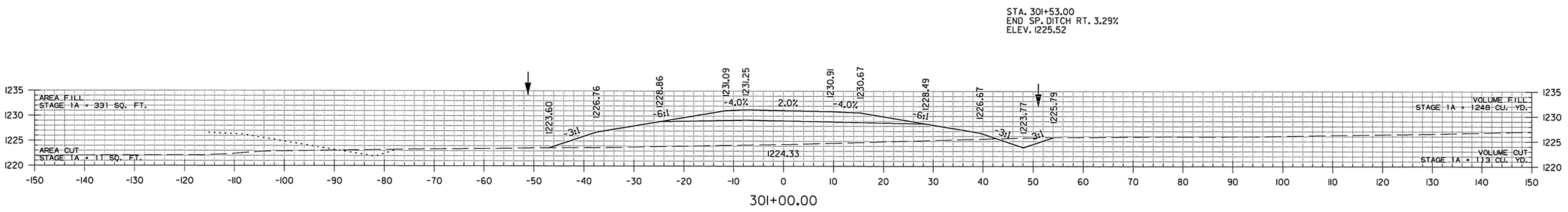

STA. 300+15.56 END SUPERELEVATION

HWY. 112 TO NB I-49 RAMP
STA. 301+00 TO STA. 304+00

AEWerclok 3/20/2016 11:58:19 AM
WORKSPACE: AHTD
L:\2016\016707 - I-540 Widening & Interchange Improvement\Drawings\r-BB0414_CX_HWY 112 TO NB I-49...dgn
REVISED DATE:

DATE REVISED	DATE FILMED	DATE REVISED	DATE FILMED	FED.RD. DIST.NO.	STATE	FED.AID PROJ.NO.	SHEET NO.	TOTAL SHEETS
				6	ARK.			
				JOB NO.		BB0414	780	886

(2) CROSS SECTIONS

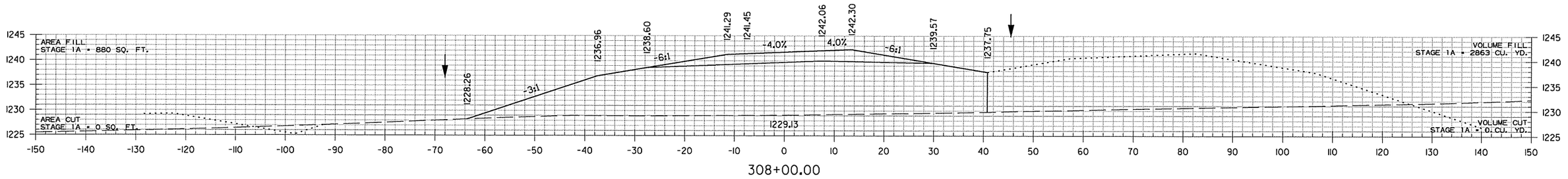

308+00.00

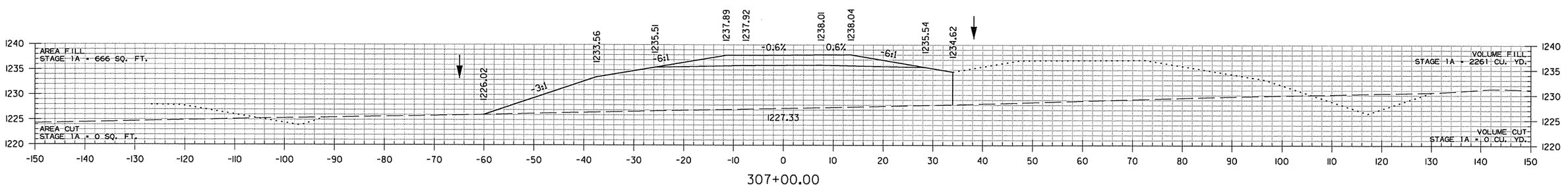

307+00.00

STA. 306+24.59 BEGIN SUPERELEVATION

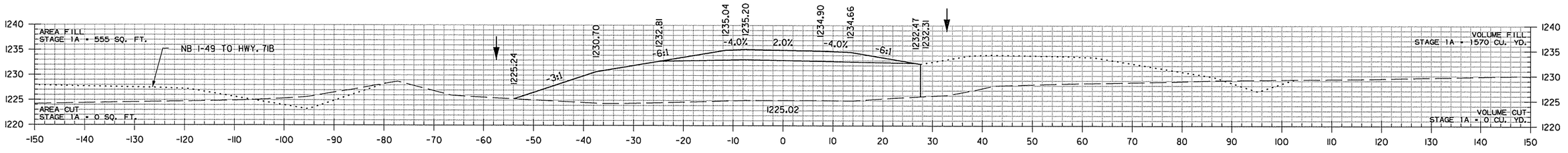

306+00.00

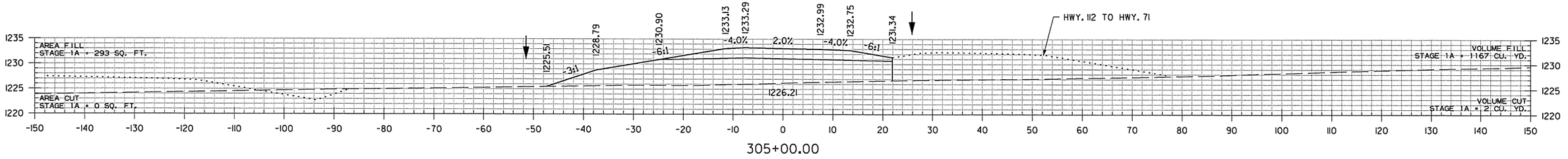

305+00.00

HWY. 112 TO NB I-49 RAMP
STA. 305+00 TO STA. 308+00

AEWierciak 3/20/2016 11:58:19 AM
WORKSPACE: AHTD
L:\201\101707 - I-540 Widening & Interchange Improvement\Drawings\rBB0414_CX_HWY 112 TO NB I-49_.dgn
REVISED DATE:

DATE REVISED	DATE FILMED	DATE REVISED	DATE FILMED	FED.RD. DIST.NO.	STATE	FED.AID PROJ.NO.	SHEET NO.	TOTAL SHEETS
				6	ARK.			
				JOB NO.		BB0414	781	886

(2) CROSS SECTIONS

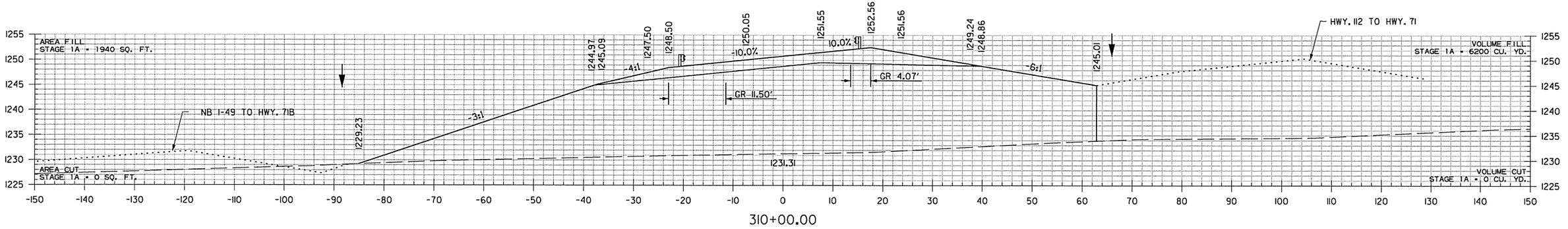

310+00.00

STA. 309+74.59 MAX. SUPERELEVATION (0.100'/')

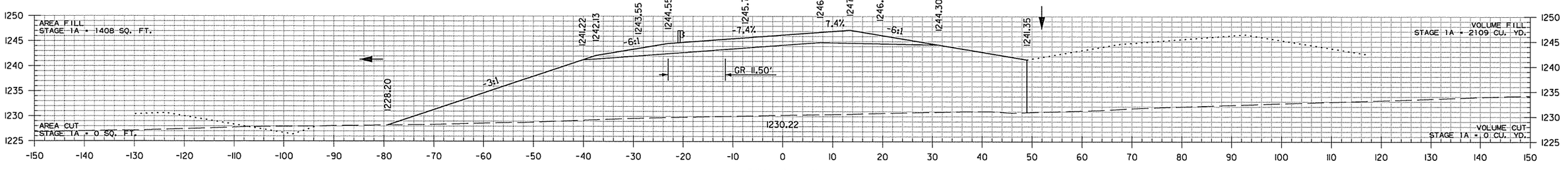

309+00.00

I-49 STA. 313+17 IN PLACE
DBL. 6' X 3' X 98' R.C. BOX CULVERT
9° LT. FWD. SKEW
WITH 3:1 WINGS LT. & RT.
RETAIN AND EXTEND 476' RT.
6° LT. FWD. SKEW
Q50 = 70 CFS DA = 22.2 ACRES

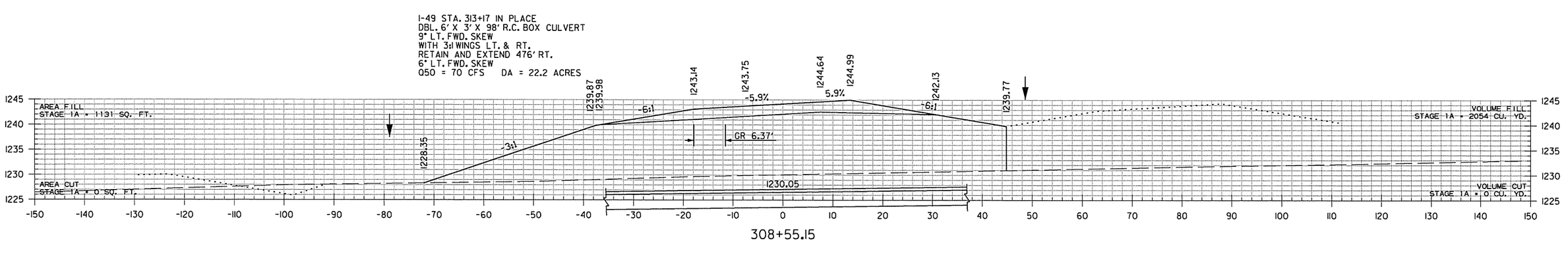

308+55.15

HWY. 112 TO NB I-49 RAMP
STA. 308+55 TO STA. 310+00

AEWierciak 3/20/2016 11:58:19 AM
WORKSPACE: AHTD
L:\201\101707 - I-540 Widening & Interchange Improvement\Drawings\rBB0414_CX_HWY 112 TO NB I-49_.dgn
REVISED DATE:

DATE REVISED	DATE FILMED	DATE REVISED	DATE FILMED	FED.RD. DIST.NO.	STATE	FED.AID PROJ.NO.	SHEET NO.	TOTAL SHEETS
				6	ARK.			
				JOB NO.		BB0414	782	886
				(2)		CROSS SECTIONS		

STA. 312+57.81 BRIDGE TOE OF SLOPE

BRIDGE END SLOPE: VOLUME FILL
STAGE 1A = 1440 CU. YD.

VOLUME CUT
STAGE 1A = 0 CU. YD.

AREA FILL
STAGE 1A = 1585 SQ. FT.

AREA CUT
STAGE 1A = 0 SQ. FT.

STA. 312+08.76 BEGIN BRIDGE

BRIDGE END SLOPE: VOLUME FILL
STAGE 1A = 558 CU. YD.

VOLUME CUT
STAGE 1A = 0 CU. YD.

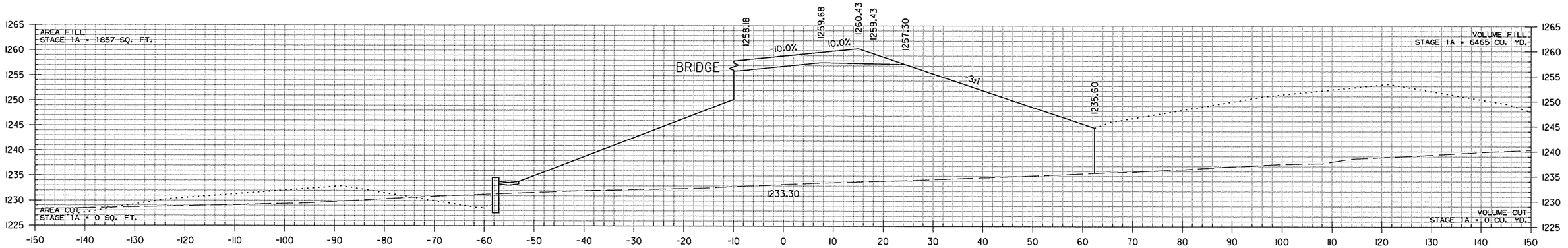

312+00.00

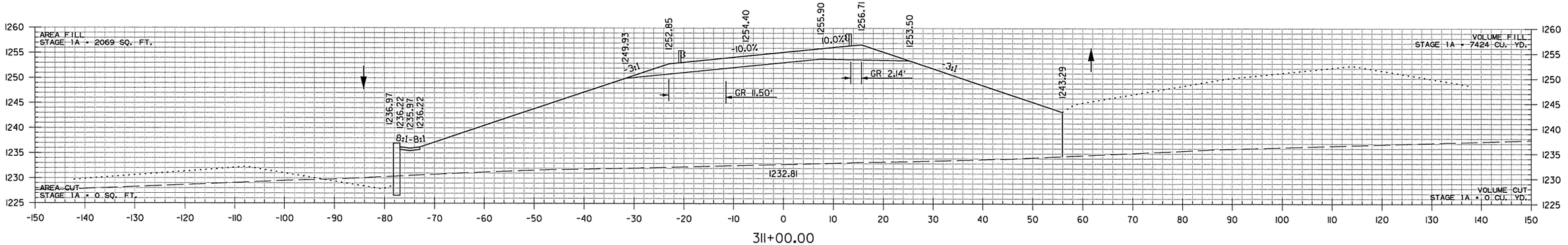

311+00.00

HWY. 112 TO NB I-49 RAMP
STA. 311+00 TO STA. 312+00

AEWerclok 3/20/2016 11:58:19 AM
WORKSPACE: AHTD
L:\20\N\1017707 - I-540 Widening & Interchange Improvement\Drawings\rBB0414_CX_HWY 112 TO NB I-49..dgn
REVISED DATE:

DATE REVISED	DATE FILMED	DATE REVISED	DATE FILMED	FED.RD. DIST.NO.	STATE	FED.AID PROJ.NO.	SHEET NO.	TOTAL SHEETS
				6	ARK.			
				JOB NO.		BB0414	783	886

(2) CROSS SECTIONS

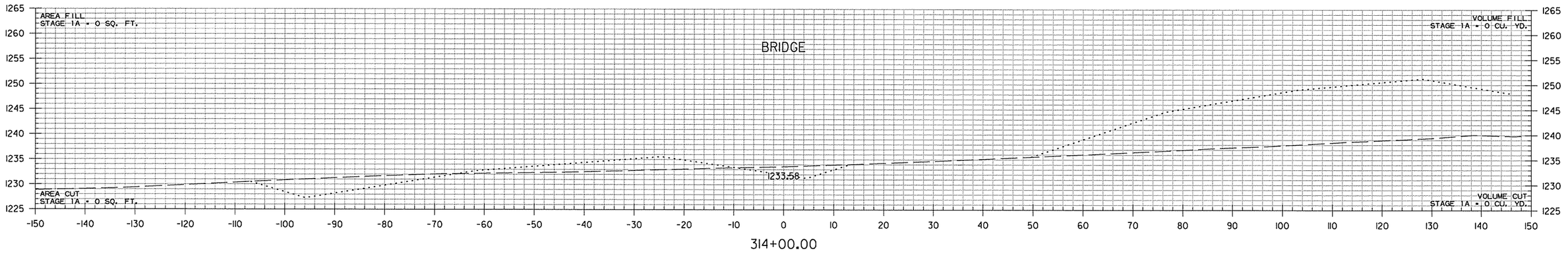

314+00.00

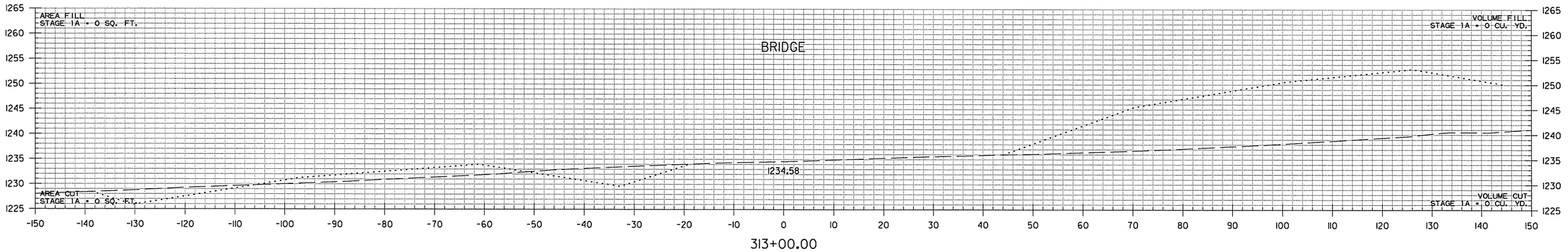

313+00.00

HWY. 112 TO NB I-49 RAMP
STA. 313+00 TO STA. 314+00

AEWier-clak 3/20/2016 11:58:9 AM
WORKSPACE: AHTD
L:\201\110707 - I-540 Widening & Interchange Improvement\Drawings\r-BB0414_CX_HWY 112 TO NB I-49_.dgn
REVISED DATE:

DATE REVISED	DATE FILMED	DATE REVISED	DATE FILMED	FED.RD. DIST.NO.	STATE	FED.AID PROJ.NO.	SHEET NO.	TOTAL SHEETS
				6	ARK.			
				JOB NO.		BB0414	784	886
				(2)	CROSS SECTIONS			

STA. 316+92.59 BRIDGE TOE OF SLOPE

BRIDGE END SLOPE: VOLUME FILL
STAGE 1A = 0 CU. YD.

BRIDGE END SLOPE: VOLUME CUT
STAGE 1A = 0 CU. YD.

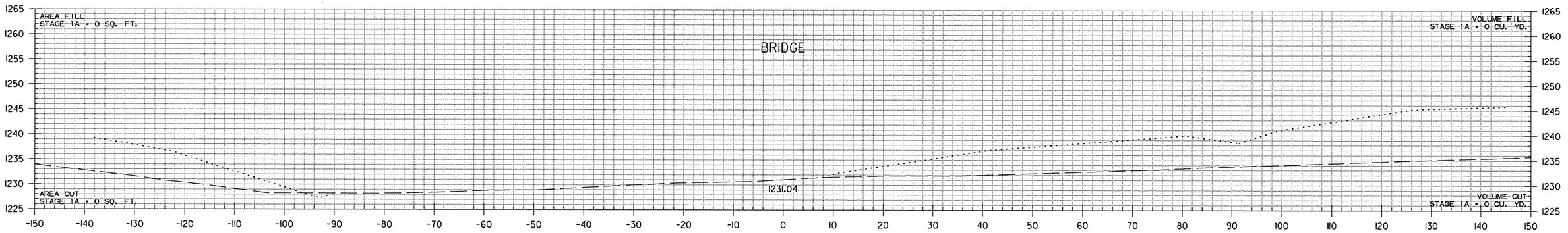

316+00.00

STA. 315+45.23 MAX. SUPERELEVATION (0.100'/')

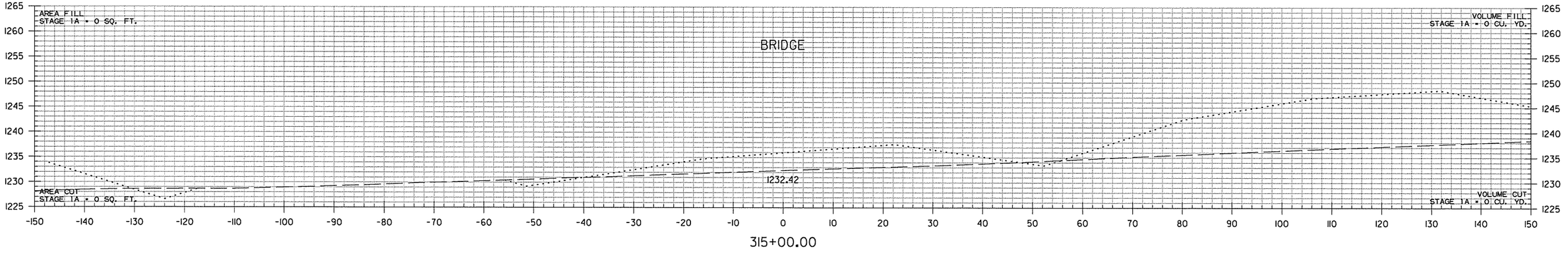

315+00.00

HWY. 112 TO NB I-49 RAMP
STA. 315+00 TO STA. 316+00

AEWierciak 3/20/2016 11:58:19 AM
WORKSPACE: AHTD
L:\201\101707 - I-540 Widening & Interchange Improvement\Drawings\rBB0414_CX_HWY 112 TO NB I-49_.dgn
REVISED DATE:

DATE REVISED	DATE FILMED	DATE REVISED	DATE FILMED	FED.RD. DIST.NO.	STATE	FED.AID PROJ.NO.	SHEET NO.	TOTAL SHEETS
				6	ARK.			
				JOB NO.		BB0414	785	886

(2) CROSS SECTIONS

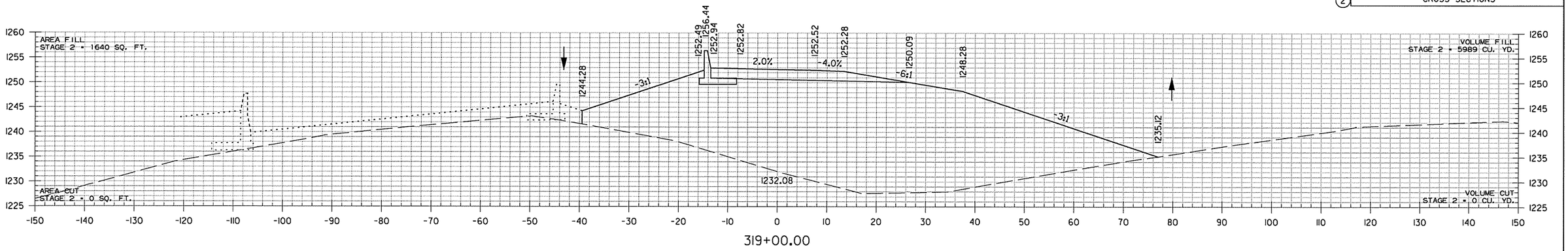

319+00.00

STA. 318+95.23 END SUPERELEVATION

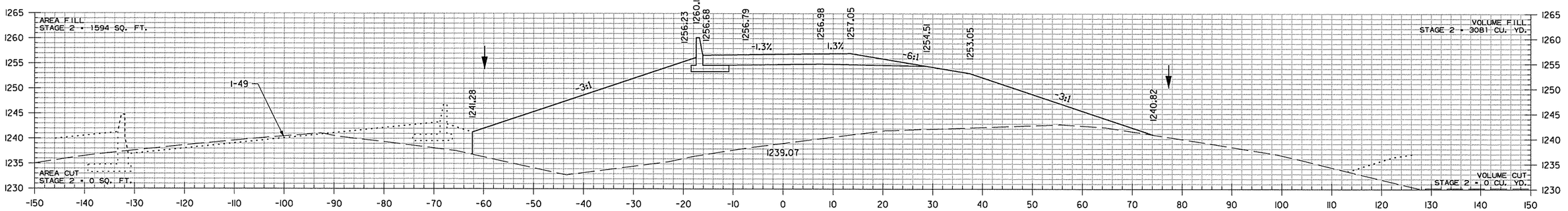

318+00.00

BRIDGE END SLOPE: VOLUME FILL
STAGE 1A = 1630 CU. YD.

BRIDGE END SLOPE: VOLUME CUT
STAGE 1A = 0 CU. YD.

STA. 317+47.82 END BRIDGE

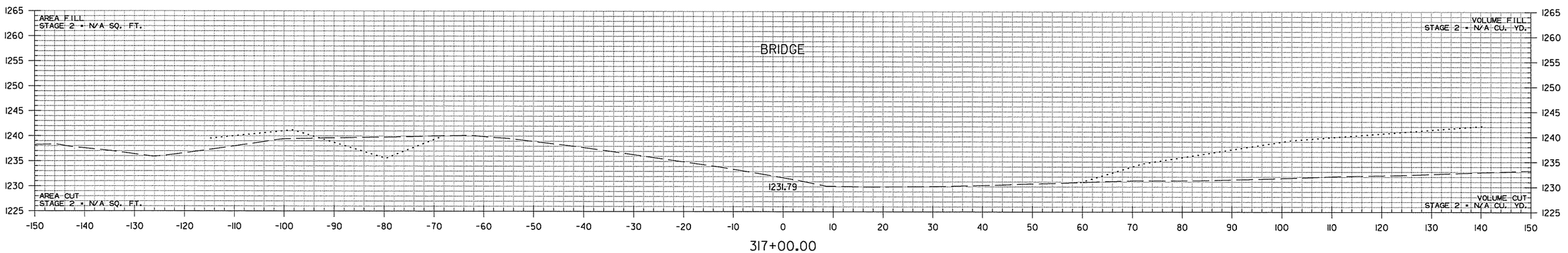

317+00.00

HWY. 112 TO NB I-49 RAMP
STA. 317+00 TO STA. 319+00

AEWerclok 3/20/2016 11:58:20 AM
WORKSPACE: AHTD
L:\20II\II07707 - I-540 Widening & Interchange Improvement\Drawings\rBB0414_CX_HWY 112 TO NB I-49..dgn
REVISED DATE:

DATE REVISED	DATE FILMED	DATE REVISED	DATE FILMED	FED.RD. DIST.NO.	STATE	FED.AID PROJ.NO.	SHEET NO.	TOTAL SHEETS
				6	ARK.			
				JOB NO.		BB0414	786	886
				(2)		CROSS SECTIONS		

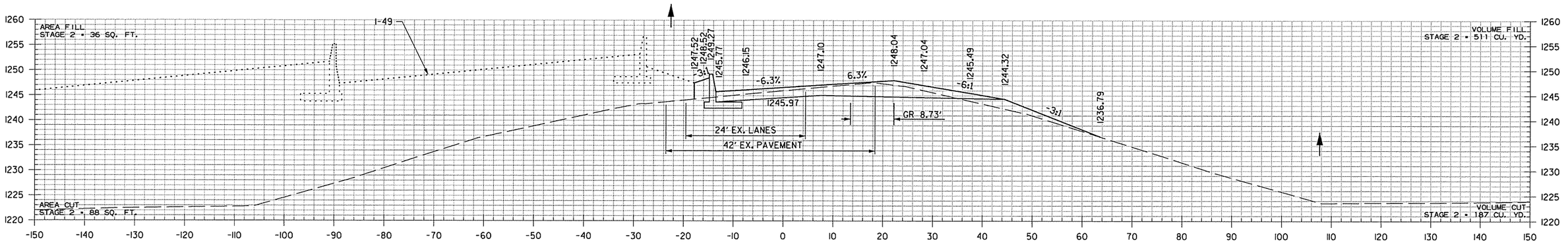

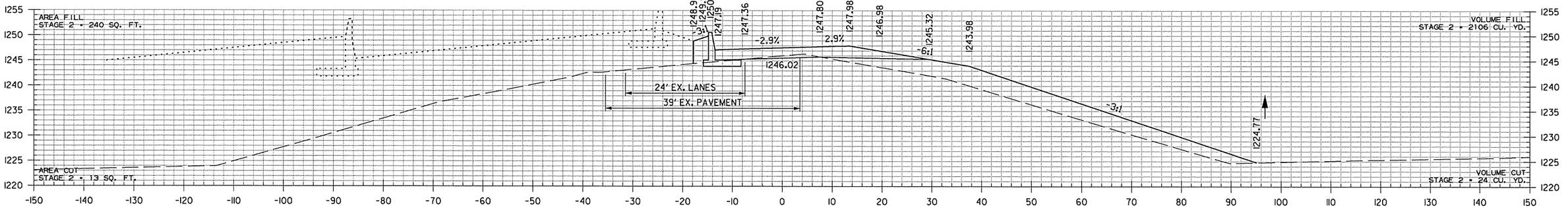

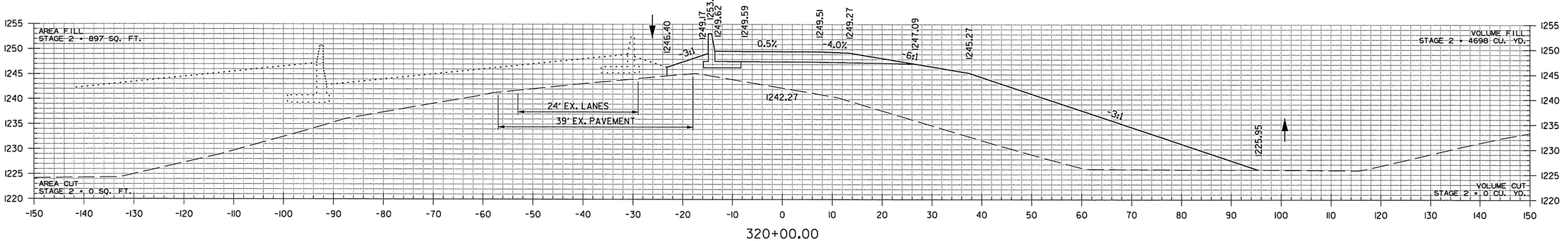

STA. 319+67.50 BEGIN SUPERELEVATION

HWY. 112 TO NB I-49 RAMP
STA. 320+00 TO STA. 322+00

AEWier-clark 3/20/2016 11:58:20 AM
WORKSPACE: AHTD
L:\20II\II0I707 - I-540 Widening & Interchange Improvement\Drawings\rBB0414_CX_HWY II2 TO NB I-49..dgn
REVISED DATE:

DATE REVISED	DATE FILMED	DATE REVISED	DATE FILMED	FED.RD. DIST.NO.	STATE	FED.AID PROJ.NO.	SHEET NO.	TOTAL SHEETS
				6	ARK.			
				JOB NO.		BB0414	787	886
				(2)		CROSS SECTIONS		

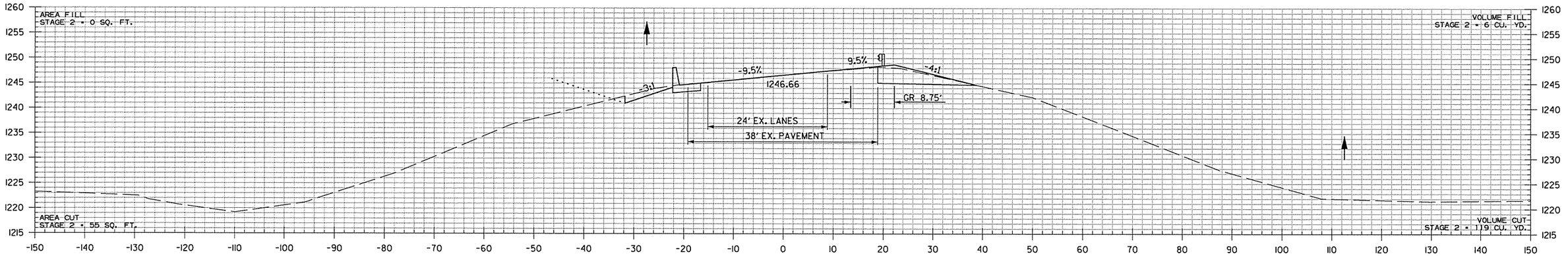

323+65.00

STA. 322+87.50
BEGIN SP. DITCH LT. -7.71%
ELEV. 1246.97

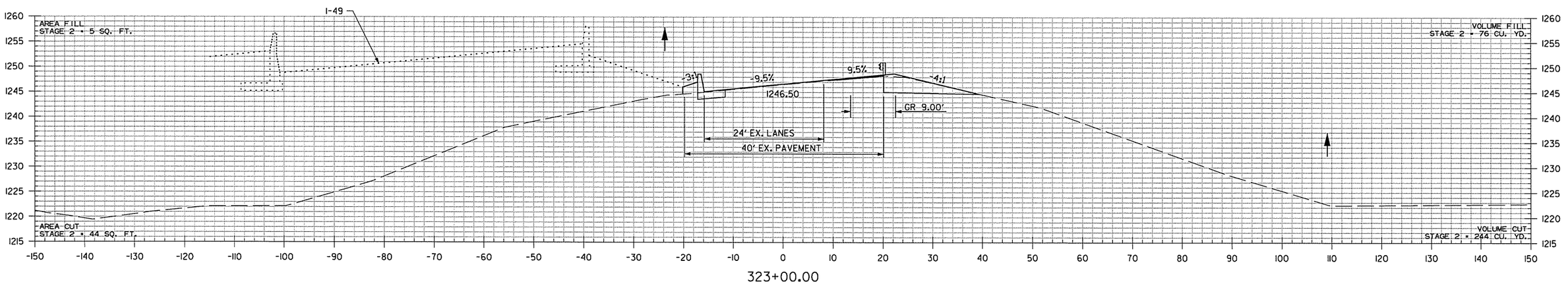

323+00.00

STA. 322+87.50 MATCH EX. SUPERELEVATION (0.094'/')

HWY. 112 TO NB I-49 RAMP
STA. 323+00 TO STA. 323+65

AEWtercick 3/20/2016 11:58:20 AM
WORKSPACE: AHTD
L:\20IN\10I7707 - I-540 Widening & Interchange Improvement\Drawings\r-BB0414_CX_HWY 112 TO NB I-49..dgn
REVISED DATE:

DATE REVISED	DATE FILMED	DATE REVISED	DATE FILMED	FED.RD. DIST.NO.	STATE	FED.AID PROJ.NO.	SHEET NO.	TOTAL SHEETS
				6	ARK.			
				JOB NO.		BB0414	788	886
				(2)	CROSS SECTIONS			

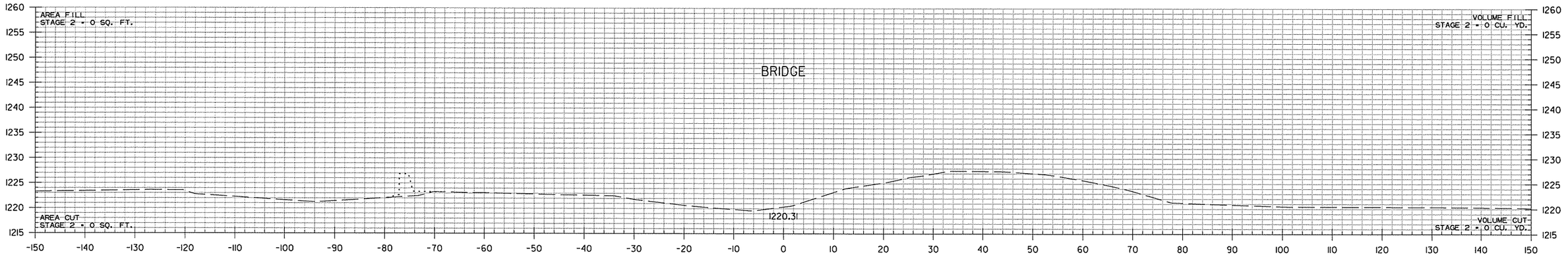

325+00.00

VOLUME FILL
STAGE 2 = 0 CU. YD.

VOLUME CUT
STAGE 2 = 21 CU. YD.

STA. 324+24.19 BEGIN BRIDGE

STA. 323+76.00
END SP. DITCH LT. -7.71%
ELEV. 1240.15

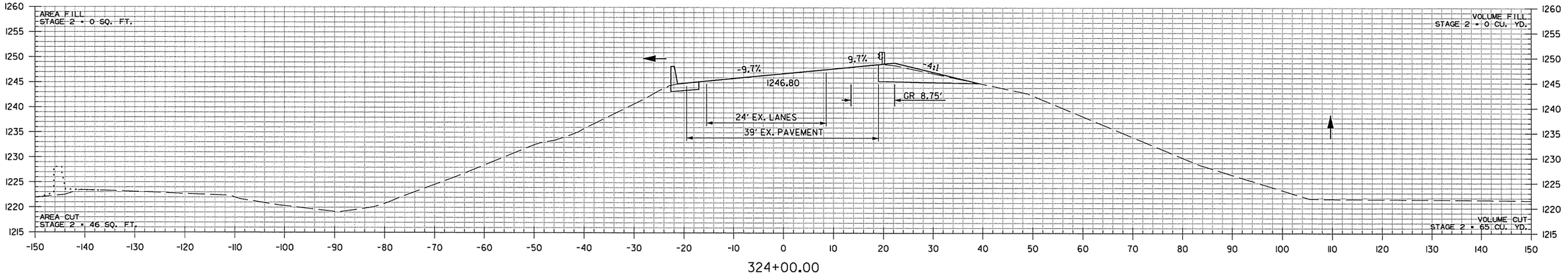

324+00.00

HWY. 112 TO NB I-49 RAMP
STA. 324+00 TO STA. 325+00

AEWierclok 3/20/2016 11:58:20 AM
WORKSPACE: AHTD
L:\ROW\101707 - I-540 Widening & Interchange Improvement\Drawings\rBB0414_CX_HWY 112 TO NB I-49_.dgn
REVISED DATE:

DATE REVISED	DATE FILMED	DATE REVISED	DATE FILMED	FED.RD. DIST.NO.	STATE	FED.AID PROJ.NO.	SHEET NO.	TOTAL SHEETS
				6	ARK.			
				JOB NO.		BB0414	789	886
				(2)		CROSS SECTIONS		

AREA FILL
STAGE 2 = 0 SQ. FT.

AREA CUT
STAGE 2 = 0 SQ. FT.

STA. 327+38.32 END BRIDGE

VOLUME FILL
STAGE 2 = 0 CU. YD.

VOLUME CUT
STAGE 2 = 0 CU. YD.

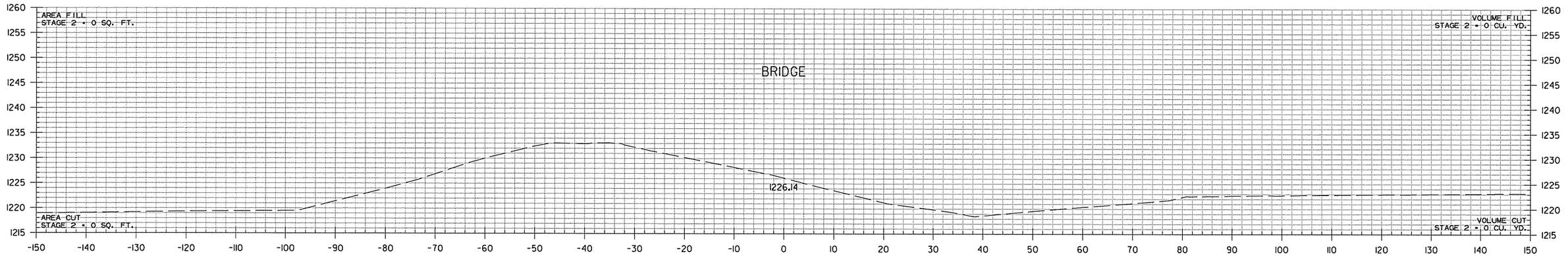

327+00.00

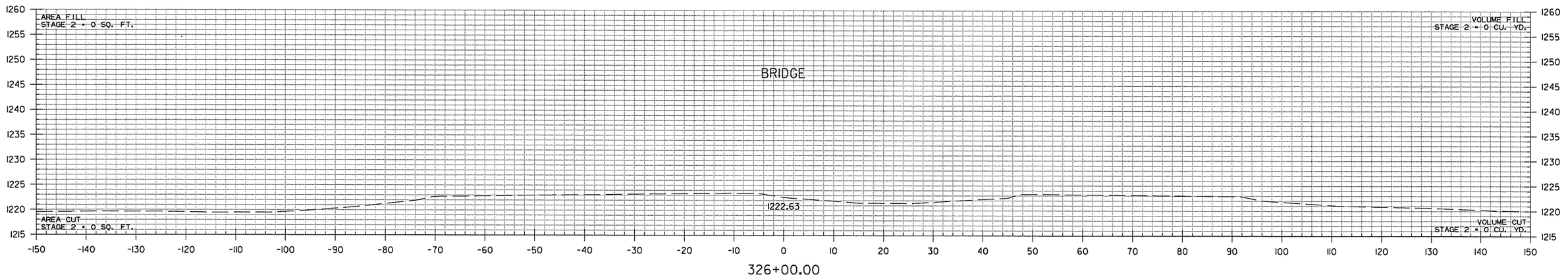

326+00.00

HWY. 112 TO NB I-49 RAMP
STA. 326+00 TO STA. 327+00

AEWtercick 3/20/2016 11:58:20 AM
WORKSPACE: AHTD
L:\20IN\11017107 - I-540 Widening & Interchange Improvement\Drawings\rBB0414_CX_HWY 112 TO NB I-49_.dgn
REVISED DATE:

DATE REVISED	DATE FILMED	DATE REVISED	DATE FILMED

FED.RD. DIST.NO.	STATE	FED.AID PROJ.NO.	SHEET NO.	TOTAL SHEETS
6	ARK.			
JOB NO.		BB0414	790	886

(2) CROSS SECTIONS

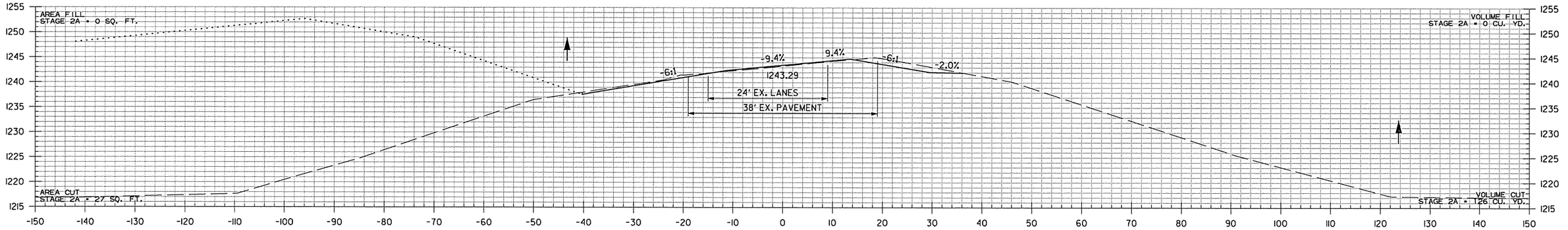

329+00.00

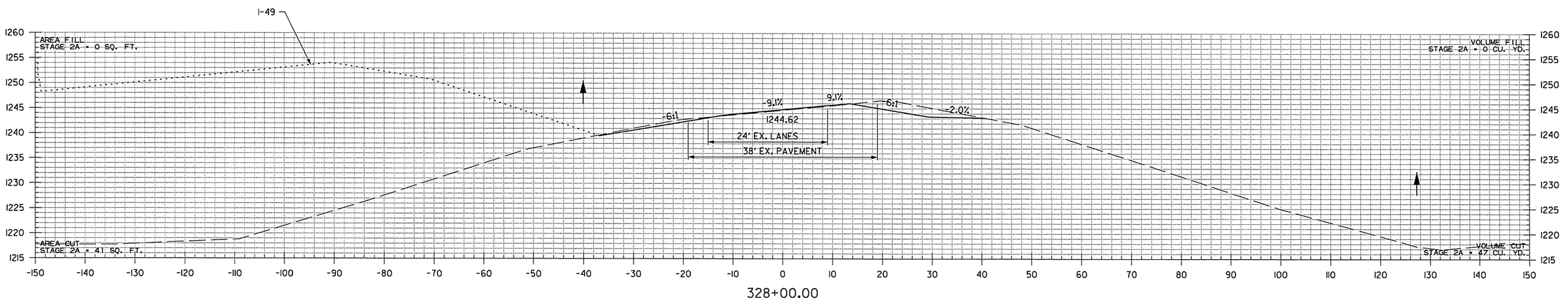

328+00.00

HWY. 112 TO NB I-49 RAMP
STA. 328+00 TO STA. 329+00

AEWerclak 3/20/2016 11:58:20 AM
WORKSPACE: AHTD
L:\20ARK\00170\07 - I-540 Widening & Interchange Improvement\Drawings\vBB0414_CX_HWY 112 TO NB I-49..dgn
REVISED DATE:

DATE REVISED	DATE FILMED	DATE REVISED	DATE FILMED	FED.RD. DIST.NO.	STATE	FED.AID PROJ.NO.	SHEET NO.	TOTAL SHEETS
				6	ARK.			
				JOB NO.		BB0414	791	886

(2) CROSS SECTIONS

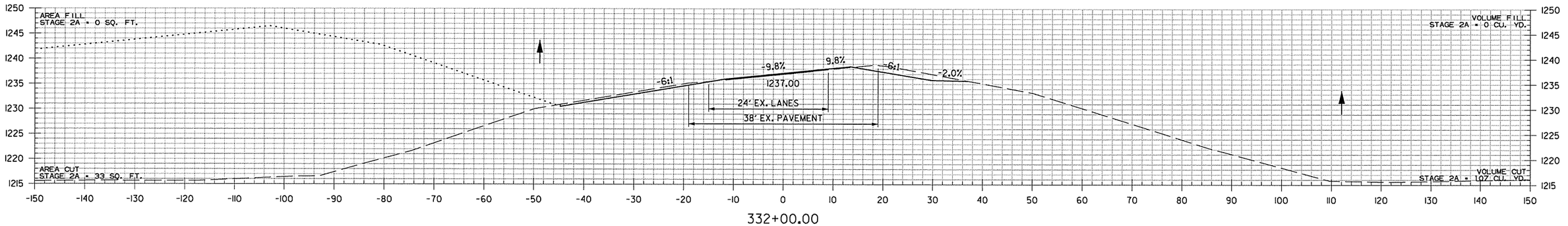

332+00.00

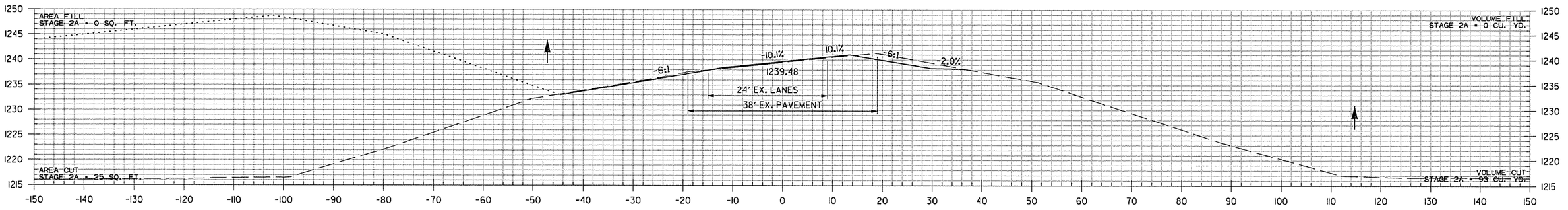

331+00.00

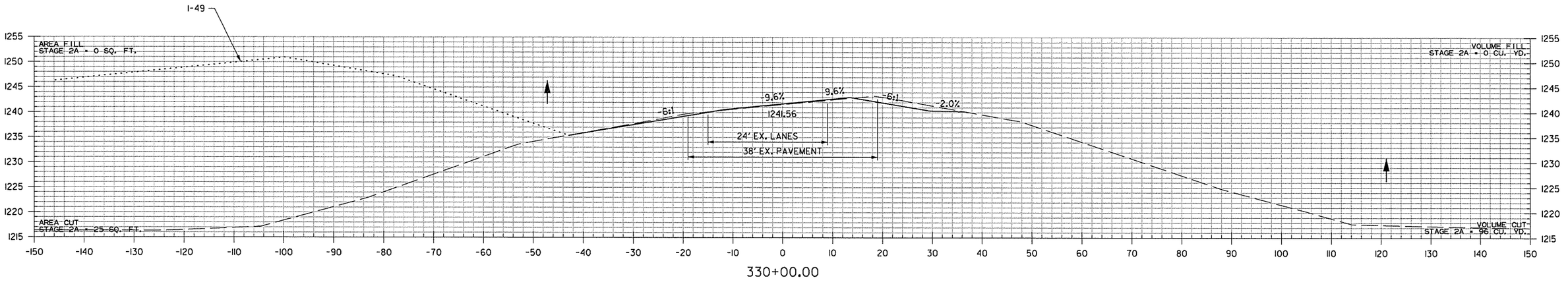

330+00.00

HWY. 112 TO NB I-49 RAMP
STA. 330+00 TO STA. 332+00

AEWierclok 3/20/2016 11:58:20 AM
WORKSPACE: AHTD
L:\2011\011707 - I-540 Widening & Interchange Improvement\Drawings\r-BB0414_CX_HWY 112 TO NB I-49_.dgn
REVISED DATE:

DATE REVISED	DATE FILMED	DATE REVISED	DATE FILMED	FED.RD. DIST.NO.	STATE	FED.AID PROJ.NO.	SHEET NO.	TOTAL SHEETS
				6	ARK.			
				JOB NO.		BB0414	792	886
				(2)		CROSS SECTIONS		

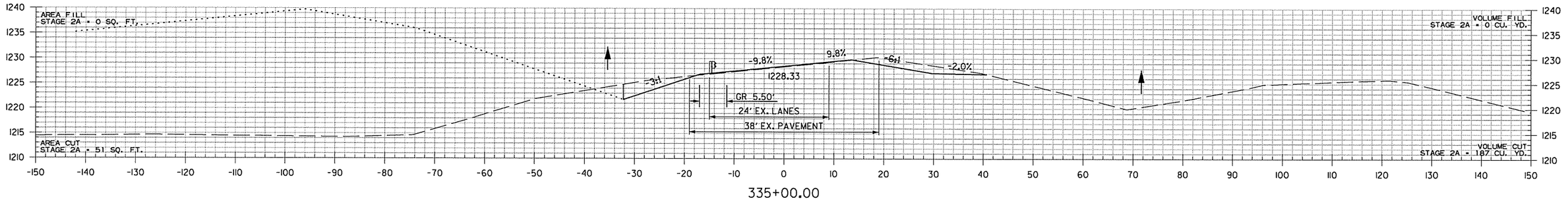

335+00.00

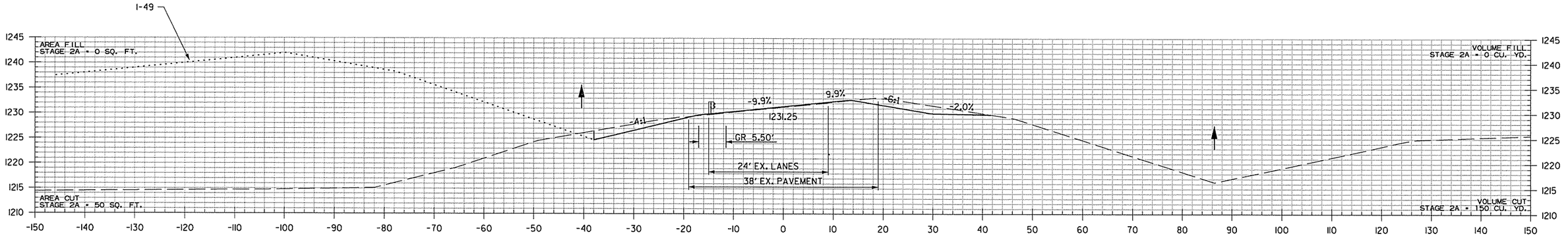

334+00.00

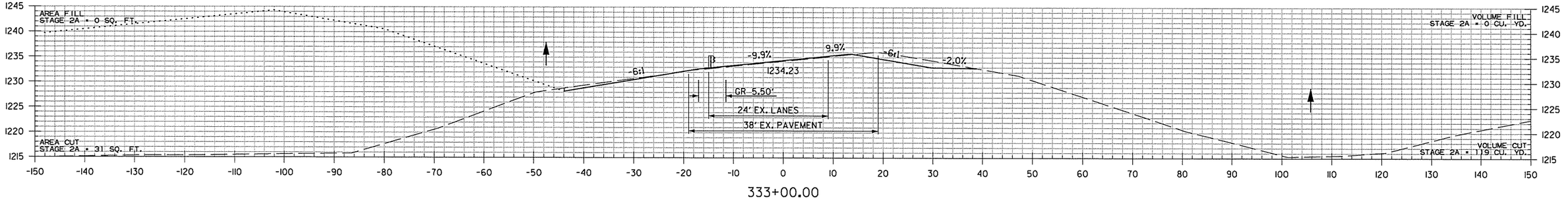

333+00.00

HWY. 112 TO NB I-49 RAMP
STA. 333+00 TO STA. 335+00

AEWierclak 3/20/2016 11:58:20 AM
WORKSPACE: AHTD
L:\201\110170T - I-540 Widening & Interchange Improvement\Drawings\r-BB0414_CX_HWY 112 TO NB I-49_.dgn
REVISED DATE:

DATE REVISED	DATE FILMED	DATE REVISED	DATE FILMED	FED.RD. DIST.NO.	STATE	FED.AID PROJ.NO.	SHEET NO.	TOTAL SHEETS
				6	ARK.			
				JOB NO.		BB0414	793	886
				(2)	CROSS SECTIONS			

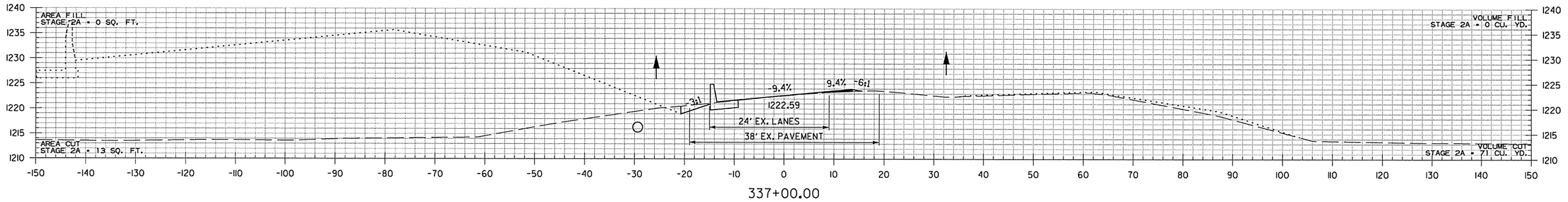

337+00.00

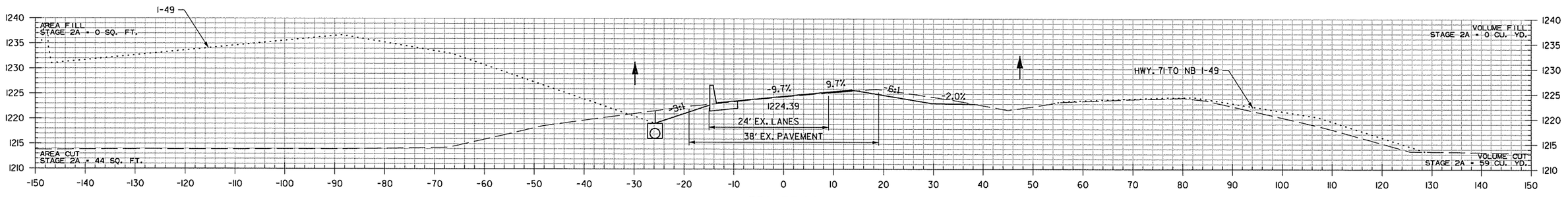

336+33.00

STA. 336+33 CONSTRUCT
TYPE RM DROP INLET 26' LT.
(4' X 3' X H=3'0") WITH
24" X 208' R.C. PIPE OUTLET
CONNECT TO DROP INLET AT
STA. 338+50
(CLASS III) TYPE 3 BEDDING

STA. 336+33
TOP = 1219.11
INV. = 1216.11

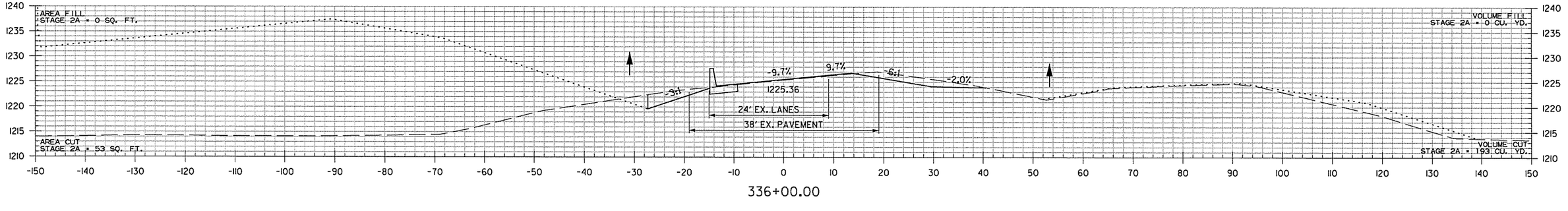

336+00.00

HWY. 112 TO NB I-49 RAMP
STA. 336+00 TO STA. 337+00

AEWlarolak 3/20/2016 11:58:21 AM
WORKSPACE: AHTD
L:\201\101707 - I-540 Widening & Interchange Improvement\Drawings\rBB0414_CX_HWY 112 TO NB I-49..dgn
REVISED DATE:

DATE REVISED	DATE FILMED	DATE REVISED	DATE FILMED	FED.RD. DIST.NO.	STATE	FED.AID PROJ.NO.	SHEET NO.	TOTAL SHEETS
				6	ARK.			
				JOB NO.		BB0414	794	886
				(2)		CROSS SECTIONS		

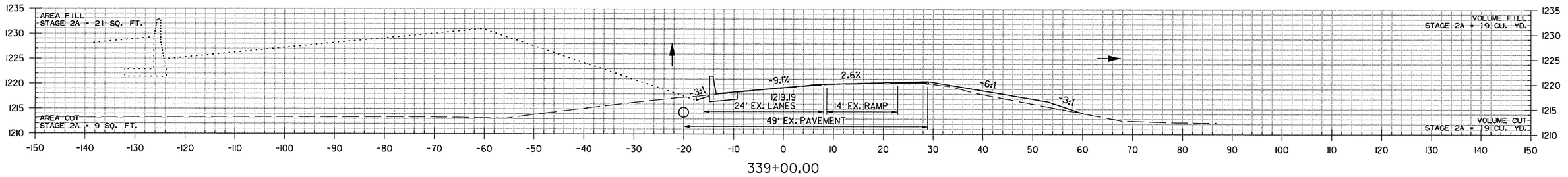

339+00.00

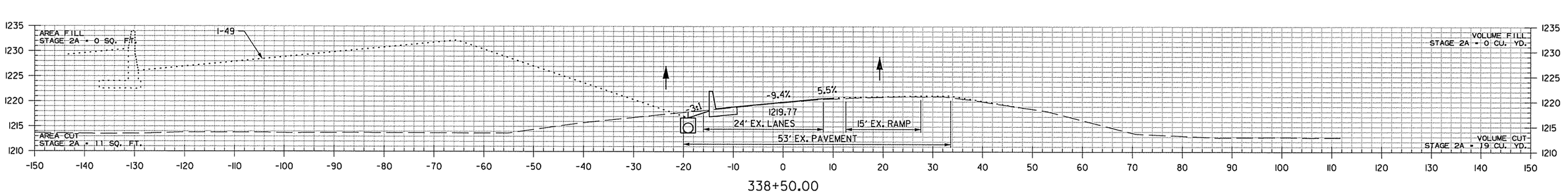

338+50.00

STA. 338+50 CONSTRUCT
TYPE RM DROP INLET 19' LT.
(4' X 3' X H=3'0") WITH
24" X 82' R.C. PIPE OUTLET
CONNECT TO DROP INLET AT
STA. 339+38
(CLASS III) TYPE 3 BEDDING

STA. 338+50
TOP = 1216.74
INV. = 1213.74

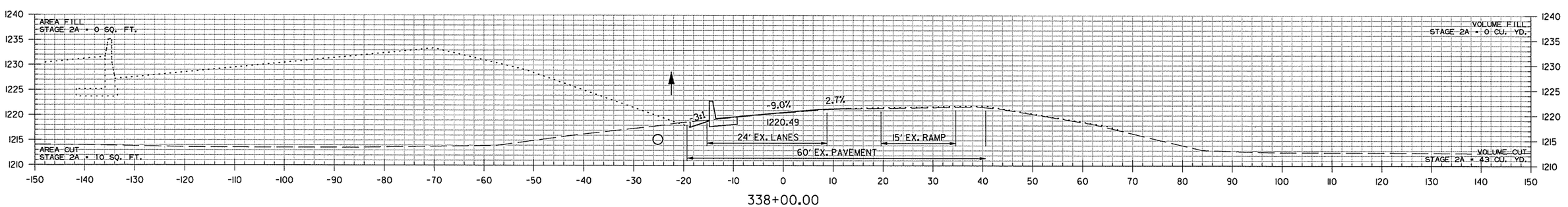

338+00.00

HWY. 112 TO NB I-49 RAMP
STA. 338+00 TO STA. 339+00

AEWler-clark 3/20/2016 11:58:21 AM
WORKSPACE: AHTD
L:\20II\II0I7707 - I-540 Widening & Interchange Improvement\Drawings\rBB0414_CX_HWY 112 TO NB I-49..dgn
REVISED DATE:

DATE REVISED	DATE FILMED	DATE REVISED	DATE FILMED	FED.RD. DIST.NO.	STATE	FED.AID PROJ.NO.	SHEET NO.	TOTAL SHEETS
				6	ARK.			
				JOB NO.		BB0414	795	886
				(2)	CROSS SECTIONS			

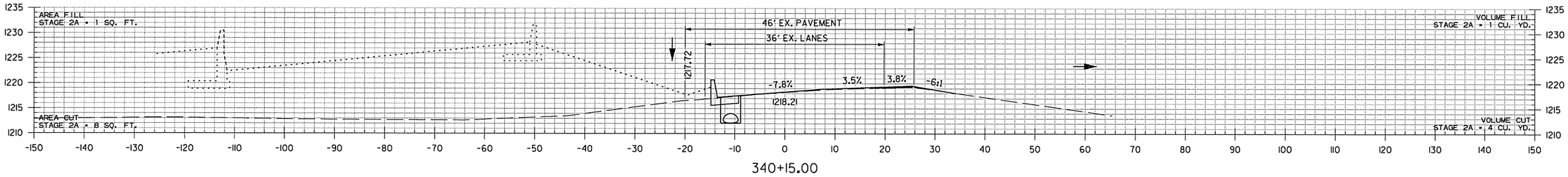

340+15.00

STA. 340+15 CONSTRUCT
TYPE ST DROP INLET 12' LT.
(3' X 4' X H=5'2") WITH
36" X 23" X 58' R.C. ARCH PIPE
CONNECT TO DROP INLET AT
STA. 340+77
(CLASS III) TYPE 3 BEDDING

STA. 340+15
TOP = 1217.26
INV. = 1212.13

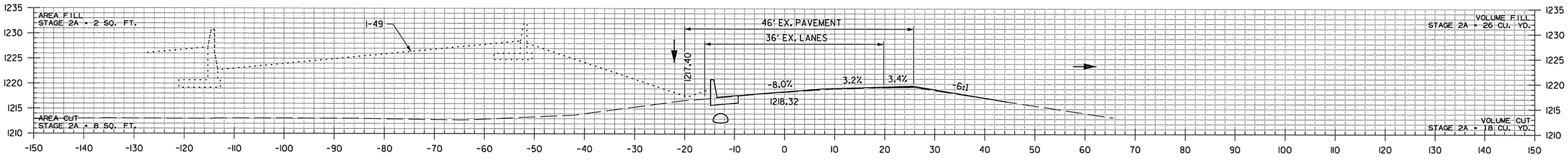

340+00.00

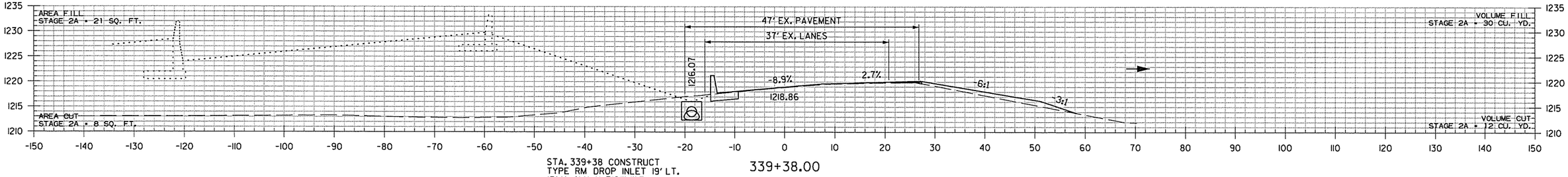

339+38.00

STA. 339+38 CONSTRUCT
TYPE RM DROP INLET 19' LT.
(3' X 4' X H=3'8") WITH
36" X 23" X 73' R.C. ARCH PIPE
CONNECT TO DROP INLET AT
STA. 340+15
(CLASS III) TYPE 3 BEDDING

STA. 339+38
TOP = 1216.07
INV. = 1213.07
INV. = 1212.40

HWY. 112 TO NB I-49 RAMP
STA. 339+38 TO STA. 340+15

AEWierclak 3/20/2016 11:58:21 AM
WORKSPACE: AHTD
L:\2016\16107 - I-540 Widening & Interchange Improvement\Drawings\r-BB0414_CX_HWY 112 TO NB I-49..dgn
REVISED DATE:

DATE REVISED	DATE FILMED	DATE REVISED	DATE FILMED	FED.RD. DIST.NO.	STATE	FED.AID PROJ.NO.	SHEET NO.	TOTAL SHEETS
				6	ARK.			
				JOB NO.		BB0414	796	886

(2) CROSS SECTIONS

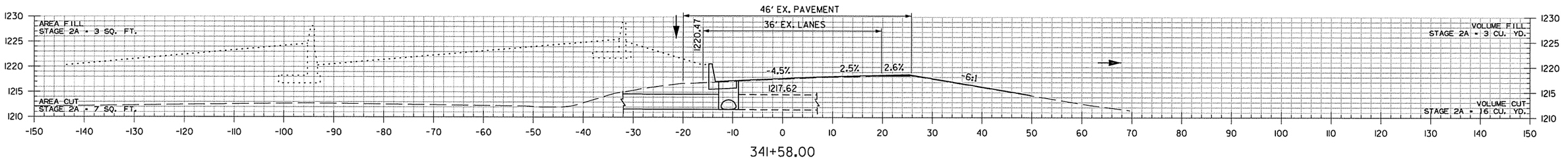

341+58.00

STA. 341+58 CONSTRUCT
TYPE ST DROP INLET
11.33' LT. (5'6" X 4' X H=5'7")
CONNECT TO PIPE CULVERT
I-49 STA. 341+10
(CLASS III) TYPE 3 BEDDING

STA. 341+58
TOP = 1217.16
INV. = 1211.59

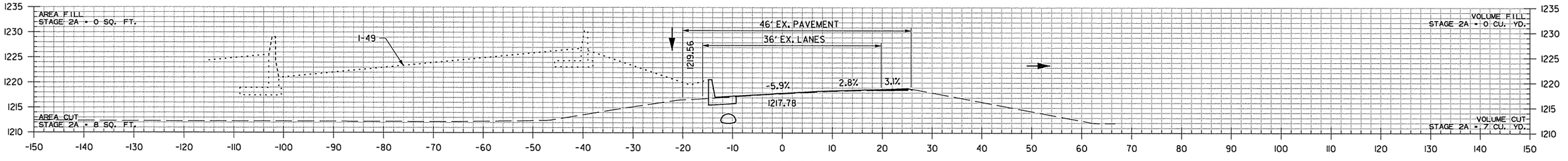

341+00.00

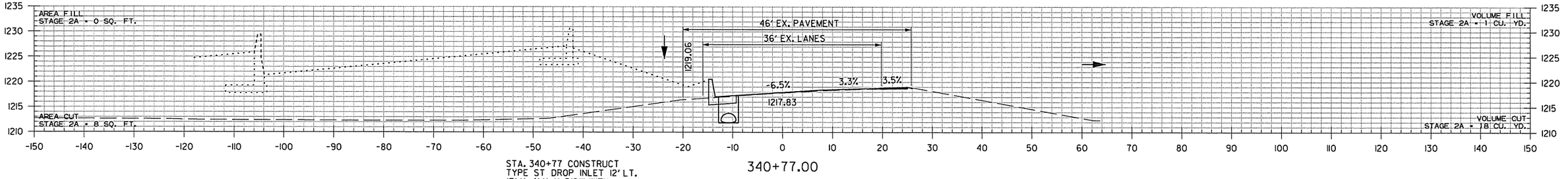

340+77.00

STA. 340+77 CONSTRUCT
TYPE ST DROP INLET 12' LT.
(3' X 4' X H=5'2") WITH
36" X 23" X 76' R.C. ARCH PIPE
CONNECT TO DROP INLET AT
STA. 341+58
(CLASS III) TYPE 3 BEDDING

STA. 340+77
TOP = 1217.05
INV. = 1211.89

HWY. 112 TO NB I-49 RAMP
STA. 340+77 TO STA. 341+58

AEWierciak 3/20/2016 11:58:21 AM
WORKSPACE: AHTD
L:\20IN\I0I707 - I-540 Widening & Interchange Improvement\Drawings\rBB0414_CX_HWY 112 TO NB I-49..dgn
REVISED DATE:

DATE REVISED	DATE FILMED	DATE REVISED	DATE FILMED	FED.RD. DIST.NO.	STATE	FED.AID PROJ.NO.	SHEET NO.	TOTAL SHEETS
				6	ARK.			
				JOB NO.		BB0414	797	886

(2) CROSS SECTIONS

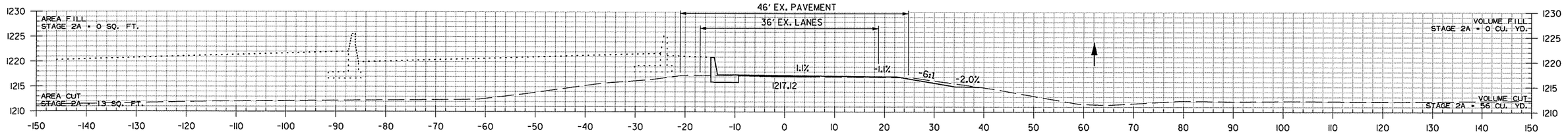

344+00.00

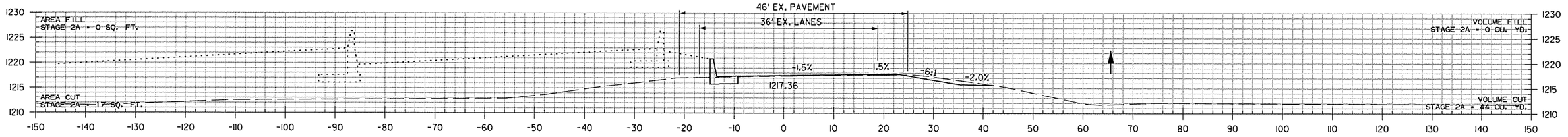

343+00.00

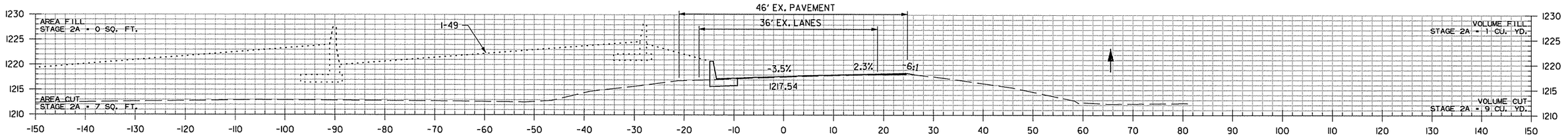

342+00.00

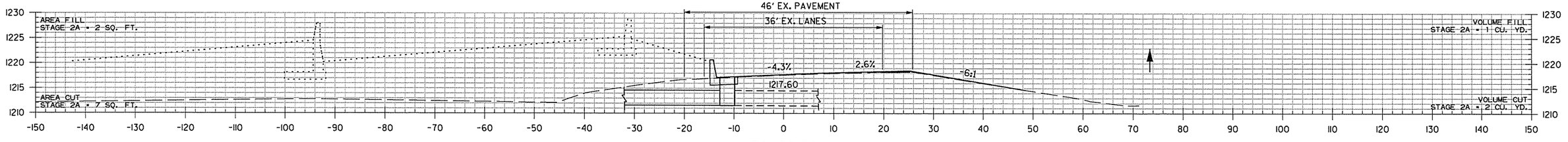

341+66.00

STA. 341+66 CONSTRUCT
TYPE ST DROP INLET
11.33' LT. (5'6" X 3' X H=5'7")
CONNECT TO PIPE CULVERT
I-49 STA. 341+17
(CLASS III) TYPE 3 BEDDING

STA. 341+66
TOP = 1217.17
INV. = 1211.57

HWY. 112 TO NB I-49 RAMP
STA. 341+66 TO STA. 344+00

AEWierclck 3/20/2016 11:58:28 AM
WORKSPACE: AHTD
L:\2011\110\7107 - I-540 Widening & Interchange Improvement\Drawings\rBB0414_CX_HWY 112 TO NB I-49_dgn
REVISED DATE:

DATE REVISED	DATE FILMED	DATE REVISED	DATE FILMED	FED.RD. DIST.NO.	STATE	FED.AID PROJ.NO.	SHEET NO.	TOTAL SHEETS
				6	ARK.			
				JOB NO.		BB0414	798	886

(2) CROSS SECTIONS

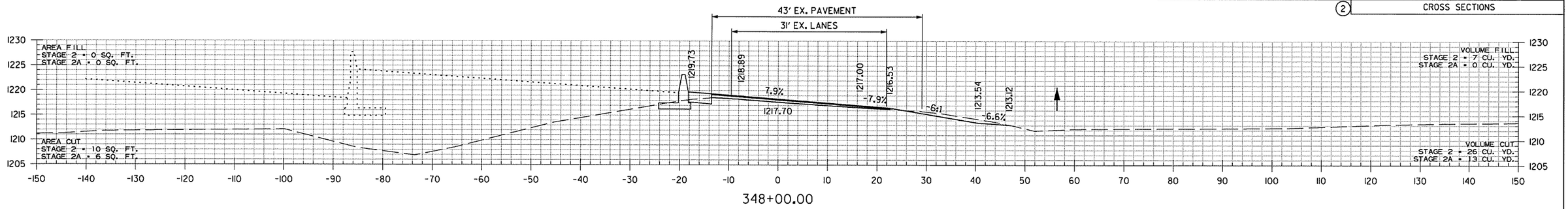

348+00.00

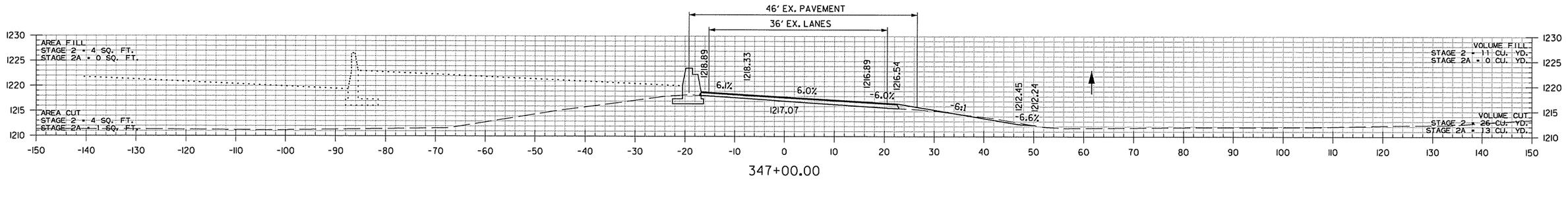

347+00.00

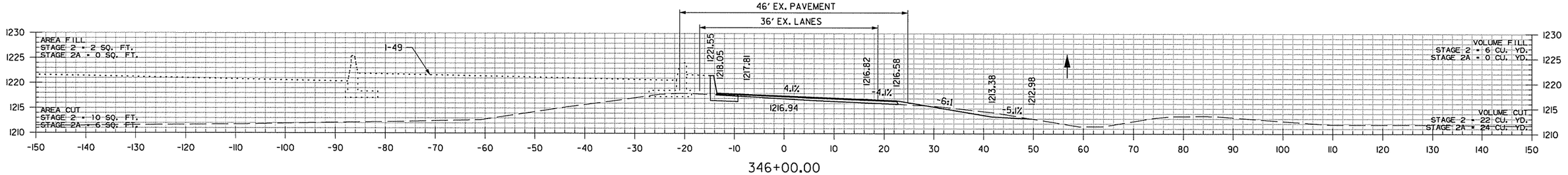

346+00.00

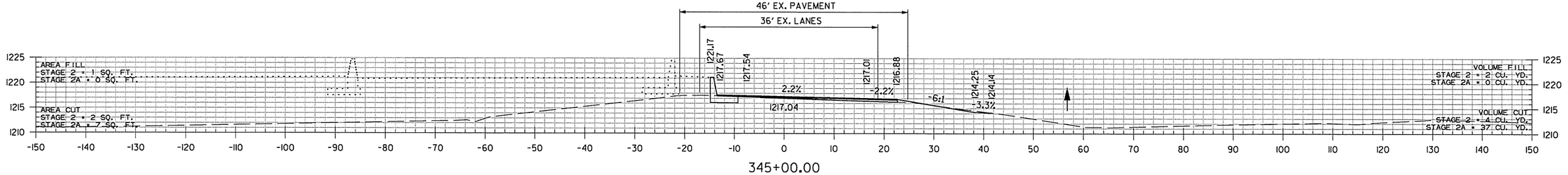

345+00.00

STA. 344+89.08 BEGIN SUPERELEVATION

HWY. 112 TO NB I-49 RAMP
STA. 345+00 TO STA. 348+00

AEWerclok 3/20/2016 11:58:28 AM
WORKSPACE: AHTD
L:\2011\011707 - I-540 Widening & Interchange Improvement\Drawings\r-BB0414_CX_HWY 112 TO NB I-49_.dgn
REVISED DATE:

DATE REVISED	DATE FILMED	DATE REVISED	DATE FILMED	FED.RD. DIST.NO.	STATE	FED.AID PROJ.NO.	SHEET NO.	TOTAL SHEETS
				6	ARK.			
				JOB NO.		BB0414	799	886
				(2)		CROSS SECTIONS		

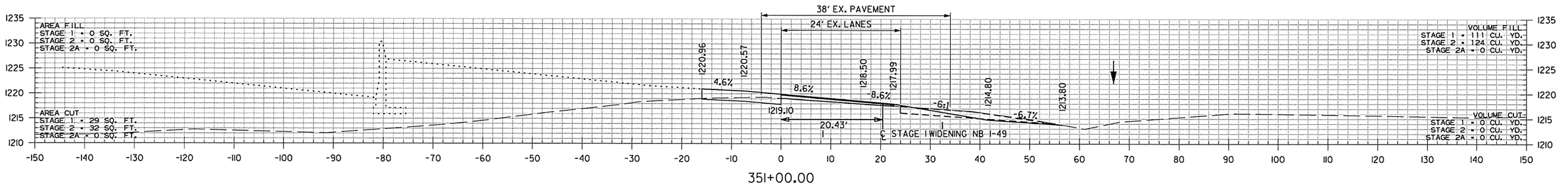

351+00.00

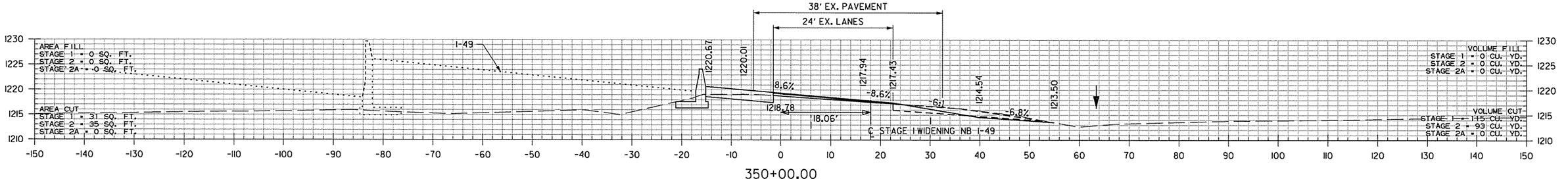

350+00.00

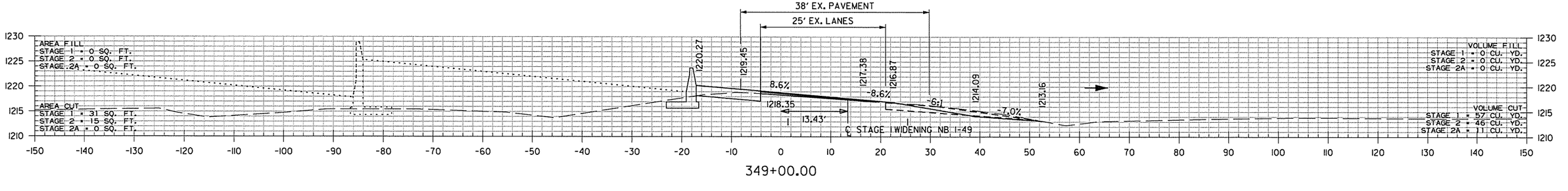

349+00.00

STA. 348+39.08 MAX. SUPERELEVATION (0.086'/')

HWY. 112 TO NB I-49 RAMP
STA. 349+00 TO STA. 351+00

AEWierclak 3/20/2016 11:58:28 AM
WORKSPACE: AHTD
L:\2011\11017107 - I-540 Widening & Interchange Improvement\Drawings\r-BB0414_CX_HWY 112 TO NB I-49_.dgn
REVISED DATE:

DATE REVISED	DATE FILMED	DATE REVISED	DATE FILMED	FED.RD. DIST.NO.	STATE	FED.AID PROJ.NO.	SHEET NO.	TOTAL SHEETS
				6	ARK.			
				JOB NO.		BB0414	800	886
				(2)	CROSS SECTIONS			

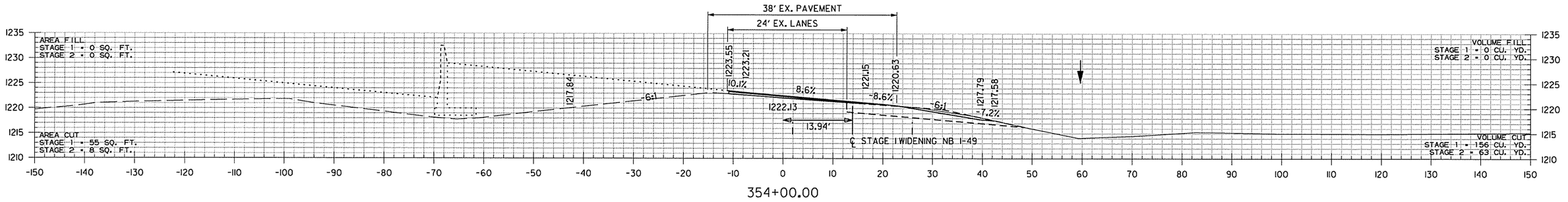

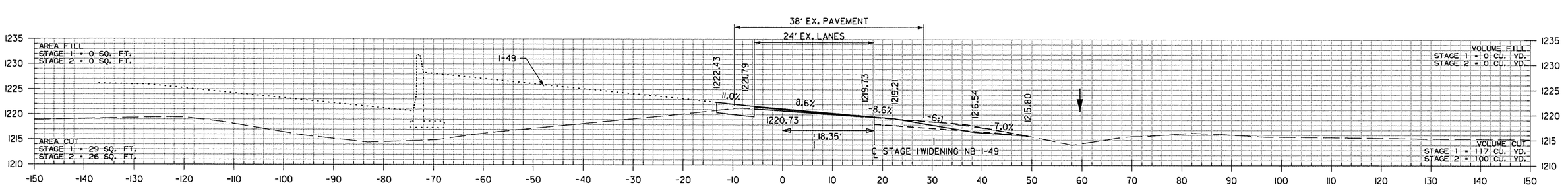

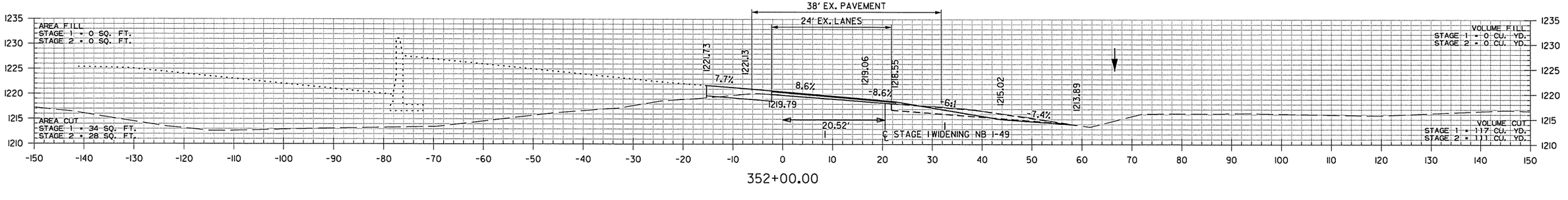

HWY. 112 TO NB I-49 RAMP
STA. 352+00 TO STA. 354+00

AEWierclok 3/20/2016 11:58:28 AM
WORKSPACE: AHTD
L:\20IN\I0I7707 - I-540 Widening & Interchange Improvement\Drawings\r-BB0414_CX_HWY 112 TO NB I-49_dgn
REVISED DATE:

DATE REVISED	DATE FILMED	DATE REVISED	DATE FILMED	FED.RD. DIST.NO.	STATE	FED.AID PROJ.NO.	SHEET NO.	TOTAL SHEETS
				6	ARK.			
				JOB NO.		BB0414	801	886
				(2)	CROSS SECTIONS			

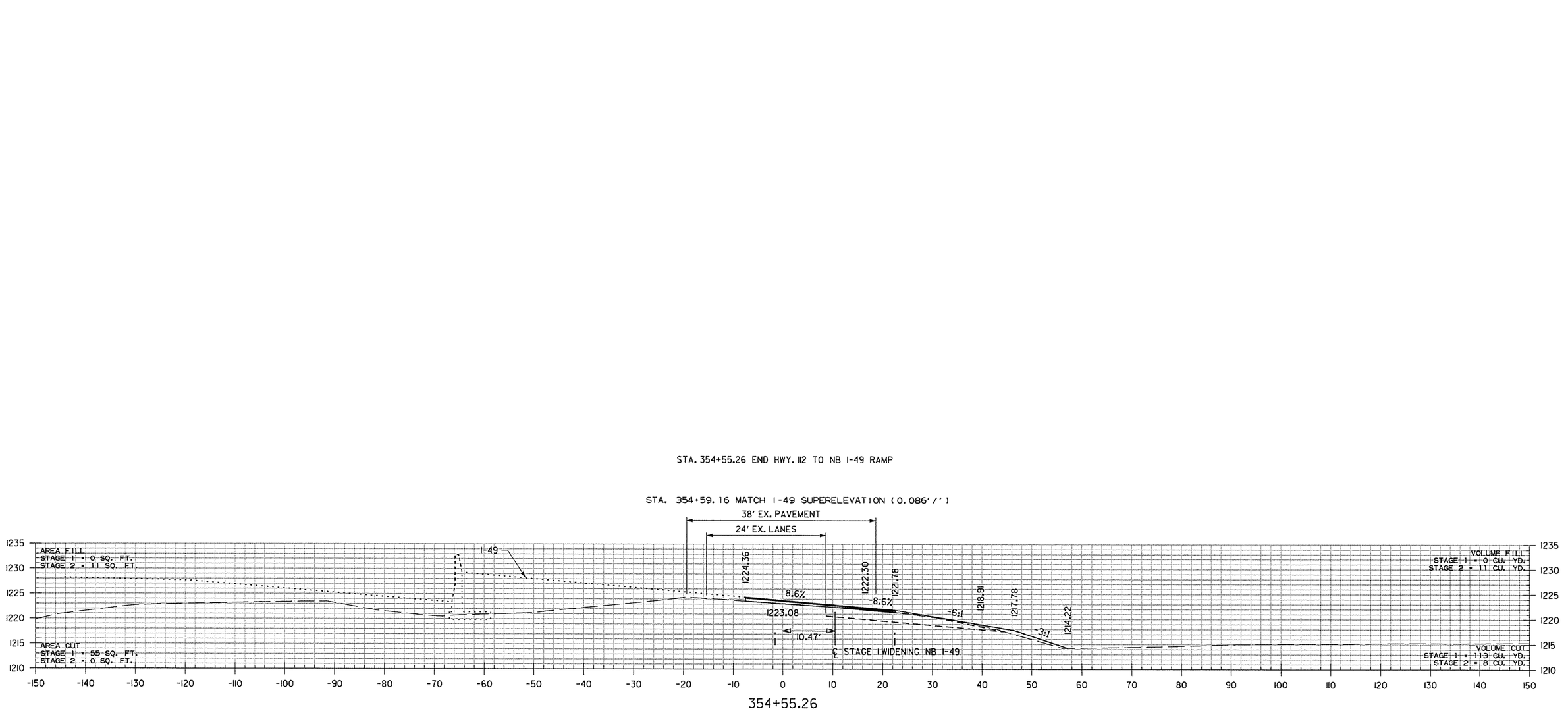

HWY. 112 TO NB I-49 RAMP
STA. 354+55 TO STA. 354+55

AEWierciak 3/20/2016 11:58:28 AM
WORKSPACE: AHTD
L:\201\101707 - I-540 Widening & Interchange Improvement\Drawings\rBB0414_CX_HWY 112 TO NB I-49_.dgn
REVISED DATE:

DATE REVISED	DATE FILMED	DATE REVISED	DATE FILMED	FED.RD. DIST.NO.	STATE	FED.AID PROJ.NO.	SHEET NO.	TOTAL SHEETS
				6	ARK.			
				JOB NO.		BB0414	802	886
				(2)		CROSS SECTIONS		

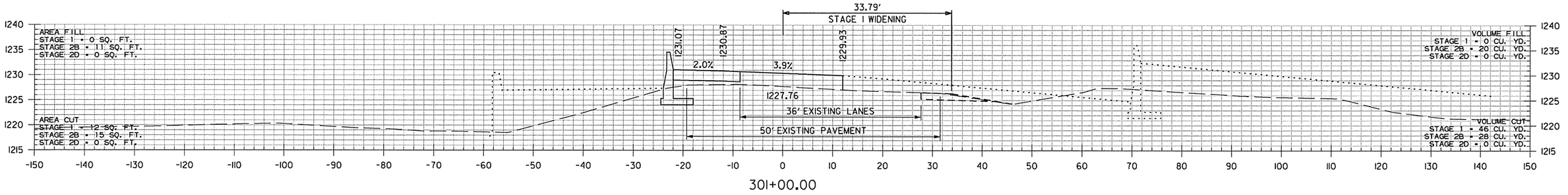

301+00.00

STA. 300+40.27 BEGIN SB HWY. 71B

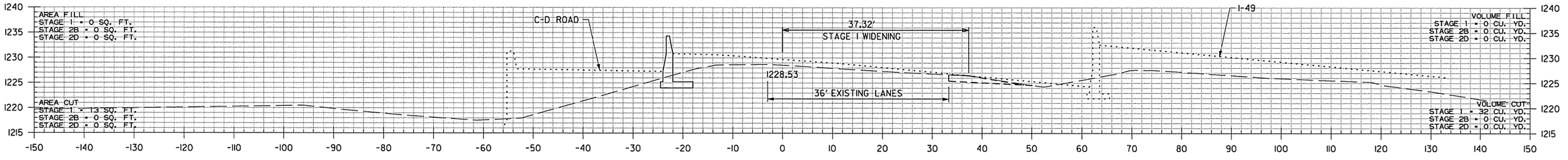

300+00.00

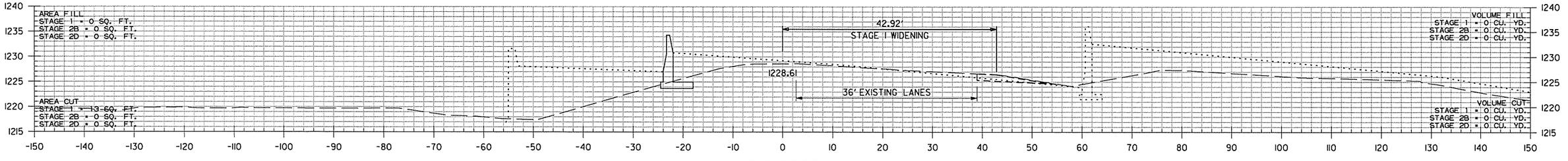

299+33.27

STA. 299+33.27 BEGIN SUPERELEVATION (0.093'/')

SB HWY. 71B
STA. 299+33 TO STA. 301+00

AEWierclok 3/20/2016 11:58:29 AM
WORKSPACE: AHTD
L:\201\W017107 - I-540 Widening & Interchange Improvement\Drawings\r-BB0414_CX_SB HWY 71_.dgn
REVISED DATE:

DATE REVISED	DATE FILMED	DATE REVISED	DATE FILMED	FED.RD. DIST.NO.	STATE	FED.AID PROJ.NO.	SHEET NO.	TOTAL SHEETS
				6	ARK.			
				JOB NO.		BB0414	803	886
				(2)		CROSS SECTIONS		

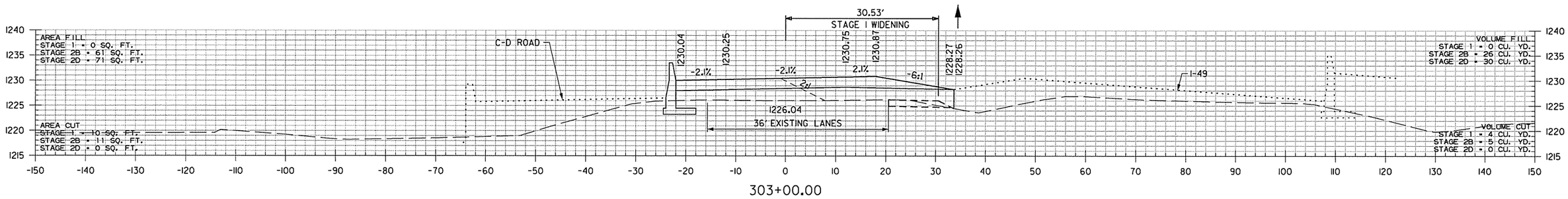

303+00.00

STA. 302+89.35 BEGIN SUPERELEVATION

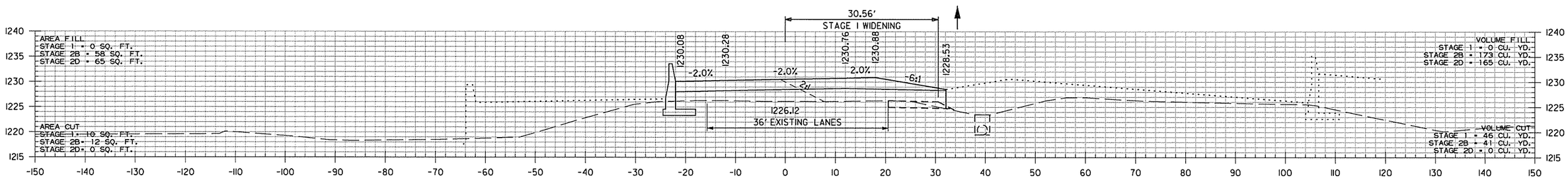

302+88.08

STA. 302+88 IN PLACE
DROP INLET 39' RT.
REMOVE
W/24" X 98' R.C. PIPE
TO BOX CULVERT
PLUG AND ABANDON

STA. 302+83.27 END SUPERELEVATION

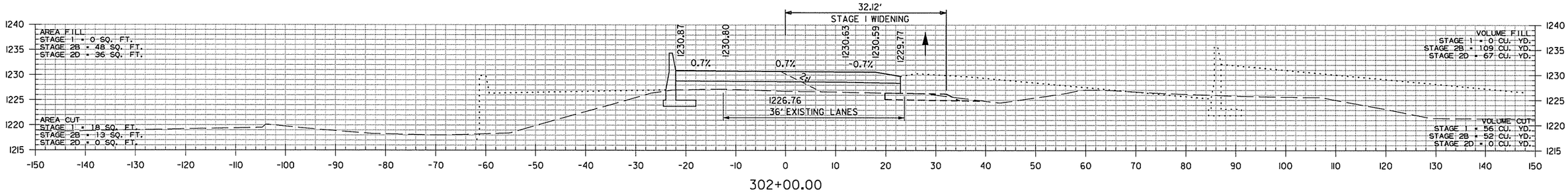

302+00.00

SB HWY. 7IB
STA. 302+00 TO STA. 303+00

AEWierclok 3/20/2016 11:58:23 AM
WORKSPACE: AHTD
L:\20IN\I0I7I0T - I-540 Widening & Interchange Improvement\Drawings\r-BB0414_CX_SB HWY 7I..dgn
REVISED DATE:

DATE REVISED	DATE FILMED	DATE REVISED	DATE FILMED	FED.RD. DIST.NO.	STATE	FED.AID PROJ.NO.	SHEET NO.	TOTAL SHEETS
				6	ARK.			
				JOB NO.		BB0414	804	886
				(2)		CROSS SECTIONS		

STA. 305+74.19 MAX. SUPERELEVATION (0.037'/')
STA. 305+69.35 MAX. SUPERELEVATION (0.037'/')

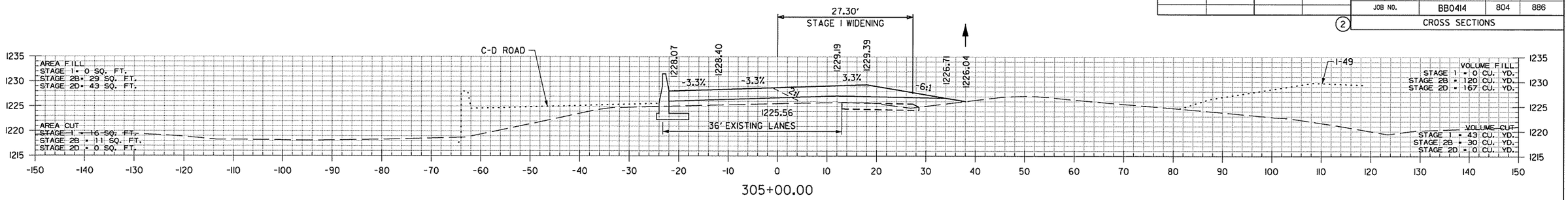

305+00.00

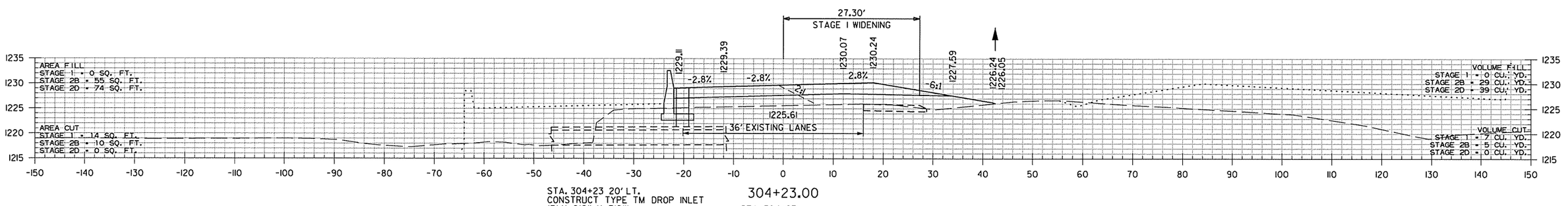

304+23.00

STA. 304+23 20' LT.
CONSTRUCT TYPE TM DROP INLET
(3' X 2'6" X 7'9")
CONNECT TO R.C. BOX CULVERT
Q50 = 294 CFS DA = 109.3 ACRES

STA. 304+23
TOP = 1229.11
INV. = 1217.85

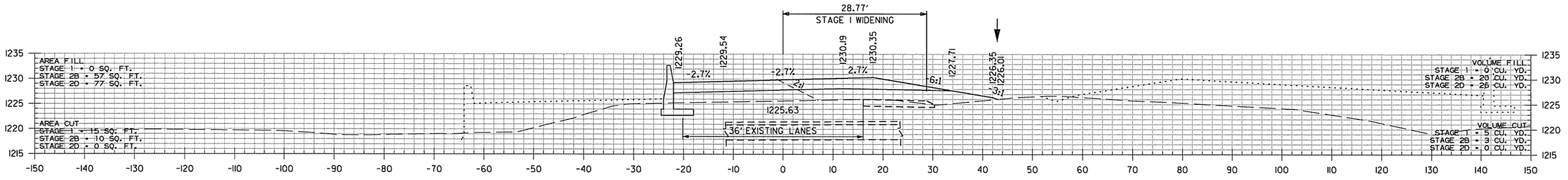

304+09.10

STA. 304+09 IN PLACE
DBL. 6' X 3' X 171' R.C. BOX CULVERT
28° LT. FWD. SKEW
RETAIN
Q50 = 294 CFS DA = 109.3 ACRES

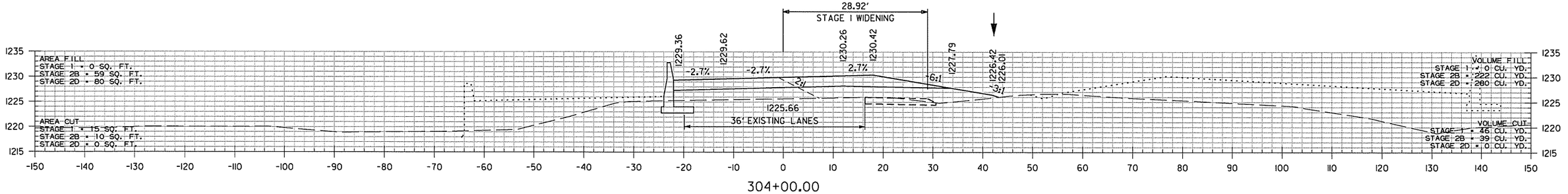

304+00.00

SB HWY. 71B
STA. 304+00 TO STA. 305+00

AEWierciak 3/20/2016 11:58:29 AM
WORKSPACE: AHTD
L:\201\101707 - I-540 Widening & Interchange Improvement\Drawings\rBB0414_CX_SB HWY 71..dgn
REVISED DATE:

DATE REVISED	DATE FILMED	DATE REVISED	DATE FILMED	FED.RD. DIST.NO.	STATE	FED.AID PROJ.NO.	SHEET NO.	TOTAL SHEETS
				6	ARK.			
				JOB NO.		BB0414	805	886
				(2)		CROSS SECTIONS		

STA. 309+81.00
BEGIN SP. DITCH LT. -0.28%
ELEV. 1223.99

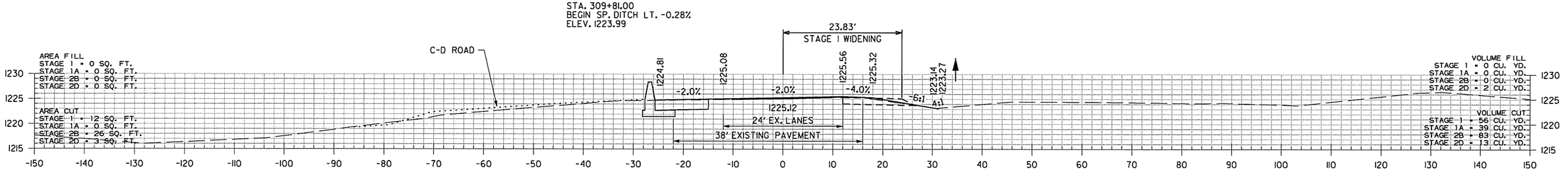

309+00.00

STA. 308+54.19 END SUPERELEVATION

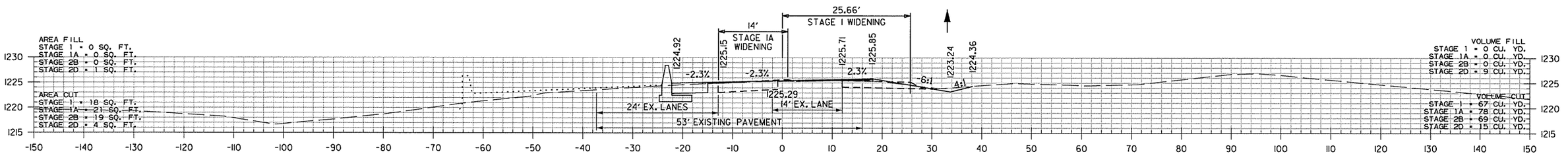

308+00.00

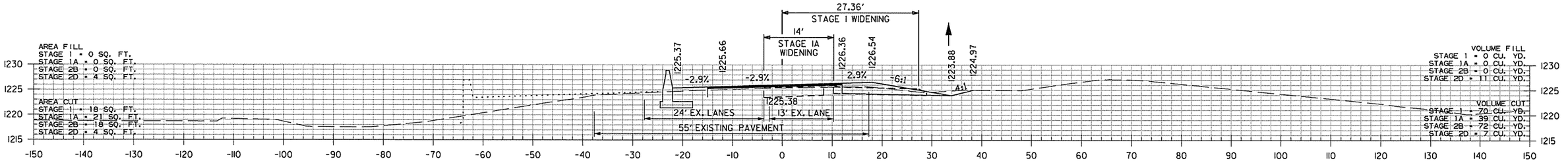

307+00.00

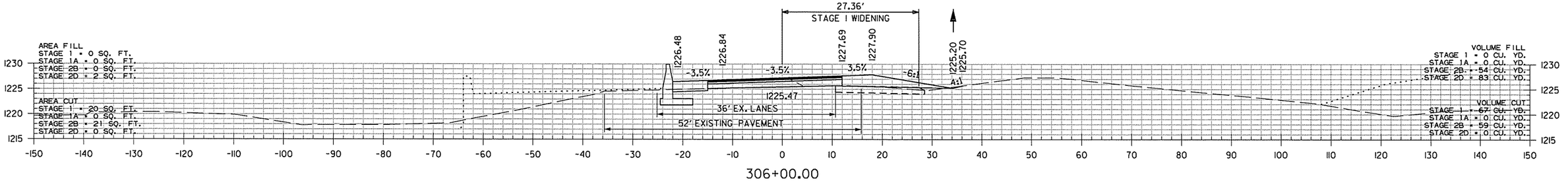

306+00.00

SB HWY. 71B
STA. 306+00 TO STA. 309+00

AEWierclak 3/20/2016 11:58:29 AM
WORKSPACE: AHTD
L:\20IN\I0I7I07 - I-540 Widening & Interchange Improvement\Drawings\rBB0414_CX_SB HWY 71.dgn
REVISED DATE:

DATE REVISED	DATE FILMED	DATE REVISED	DATE FILMED	FED.RD. DIST.NO.	STATE	FED.AID PROJ.NO.	SHEET NO.	TOTAL SHEETS
				6	ARK.			
				JOB NO.		BB0414	806	886
				(2)		CROSS SECTIONS		

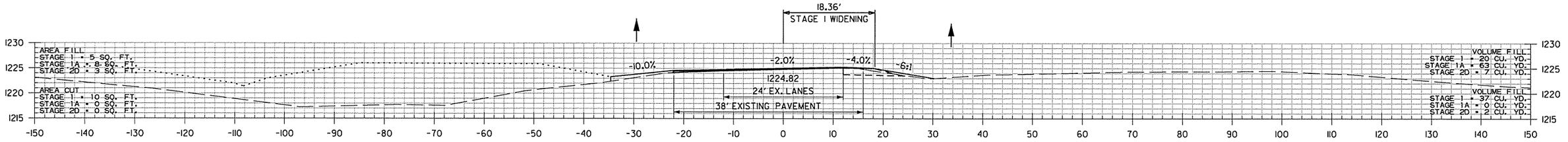

312+00.00

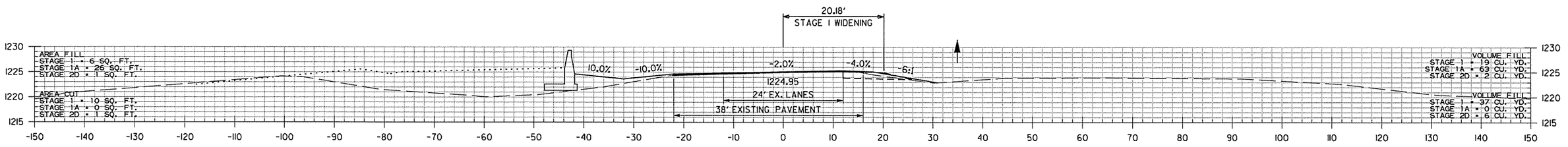

311+00.00

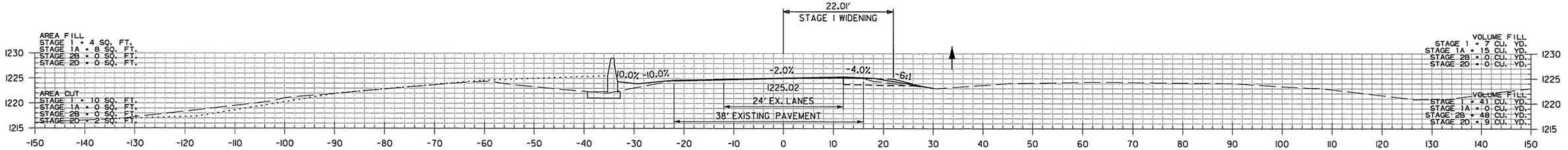

310+00.00

SB HWY. 71B
STA. 310+00 TO STA. 312+00

AEWierclok 3/20/2016 11:58:30 AM
WORKSPACE: AHTD
L:\2011\011707 - I-540 Widening & Interchange Improvement\Drawings\r-BB0414_CX_SB HWY 71.dgn
REVISED DATE:

DATE REVISED	DATE FILMED	DATE REVISED	DATE FILMED	FED.RD. DIST.NO.	STATE	FED.AID PROJ.NO.	SHEET NO.	TOTAL SHEETS
				6	ARK.			
				JOB NO.		BB0414	807	886

(2) CROSS SECTIONS

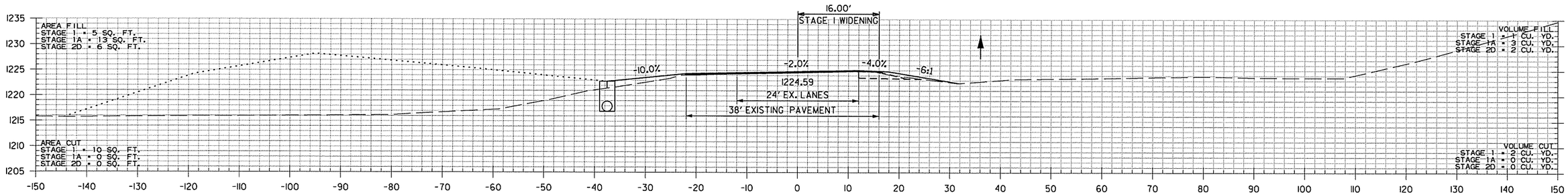

314+07.00

STA. 314+07 CONSTRUCT
TYPE RM DROP INLET
(4' X 3' X 5'10") 38' LT.
WITH 24" X 56' R.C. PIPE
OUTLET CONNECT TO BOX CULVERT
(CLASS III) TYPE 3 BEDDING

STA. 314+07
TOP = 1222.80
INV. = 1216.93
INV. = 1216.35 AT CONNECTION TO BOX

STA. 314+00.00
END SP. DITCH LT. -0.28%
ELEV. 1222.83

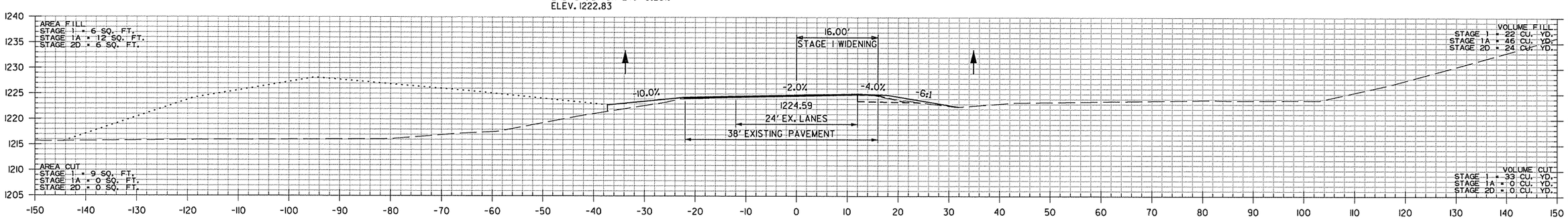

314+00.00

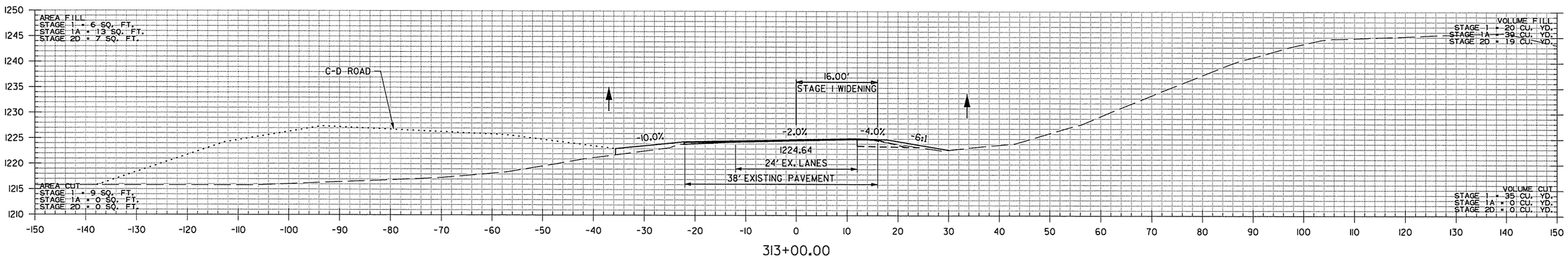

313+00.00

SB HWY. 71B
STA. 313+00 TO STA. 314+07

AEWierdak 3/20/2016 11:58:30 AM
WORKSPACE: AHTD
L:\20I\I0I7I07 - I-540 Widening & Interchange Improvement\Drawings\rBB0414_CX_SB HWY 71.dgn
REVISED DATE:

DATE REVISED	DATE FILMED	DATE REVISED	DATE FILMED	FED.RD. DIST.NO.	STATE	FED.AID PROJ.NO.	SHEET NO.	TOTAL SHEETS
				6	ARK.			
				JOB NO.		BB0414	808	886

(2) CROSS SECTIONS

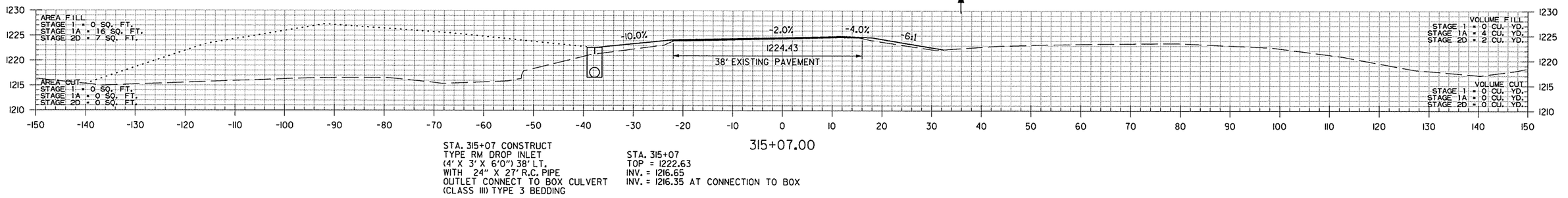

315+07.00

STA. 315+07 CONSTRUCT
TYPE RM DROP INLET
(4' X 3' X 6'0") 38' LT.
WITH 24" X 27' R.C. PIPE
OUTLET CONNECT TO BOX CULVERT
(CLASS III) TYPE 3 BEDDING

STA. 315+07
TOP = 1222.63
INV. = 1216.65
INV. = 1216.35 AT CONNECTION TO BOX

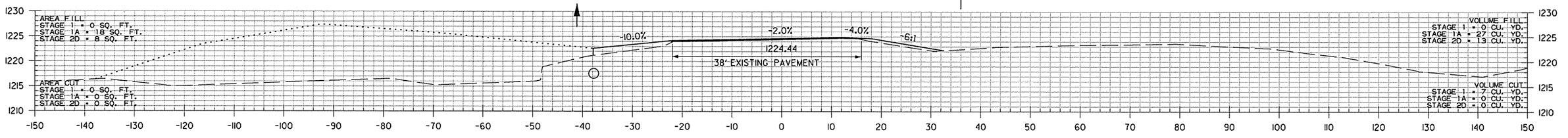

315+00.00

STA. 314+55 IN PLACE
DOUBLE 6' X 6' X 312' R.C. BOX CULVERT
W/ 3:1 WINGS RETAIN
Q50 = 119 CFS DA = 40.2 ACRES

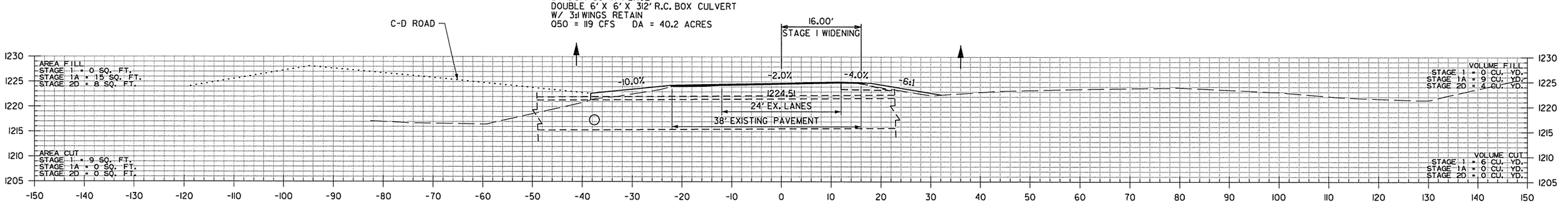

314+55.03

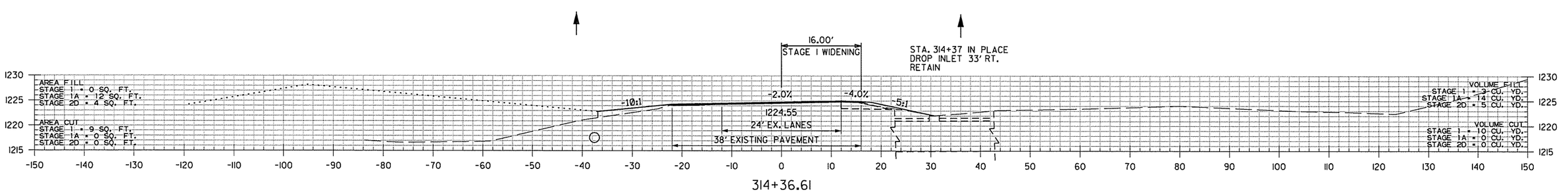

314+36.61

SB HWY. 71B
STA. 314+37 TO STA. 315+07

AEWier-clak 3/20/2016 11:58:30 AM
WORKSPACE: AHTD
L:\2011\11077.07 - I-540 Widening & Interchange Improvement\Drawings\r-BB0414_CX_SB HWY 71..dgn
REVISED DATE:

DATE REVISED	DATE FILMED	DATE REVISED	DATE FILMED	FED.RD. DIST.NO.	STATE	FED.AID PROJ.NO.	SHEET NO.	TOTAL SHEETS
				6	ARK.			
				JOB NO.		BB0414	809	886
				(2)	CROSS SECTIONS			

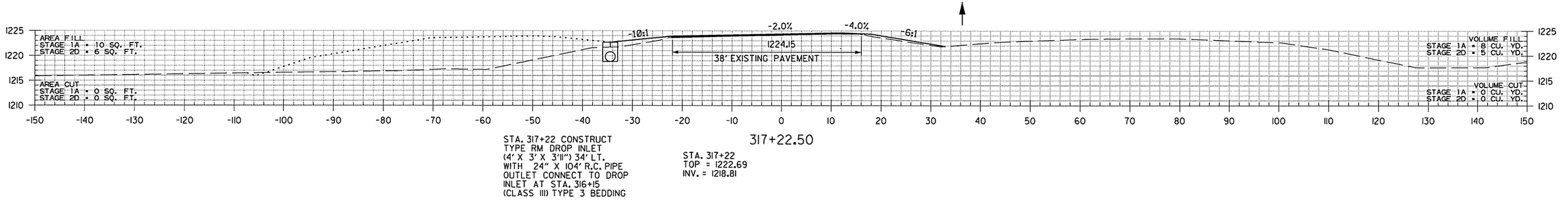

317+22.50

STA. 317+22 CONSTRUCT
TYPE RM DROP INLET
(4' X 3' X 3'11") 34' LT.
WITH 24" X 104' R.C. PIPE
OUTLET CONNECT TO DROP
INLET AT STA. 316+15
(CLASS III) TYPE 3 BEDDING

STA. 317+22
TOP = 1222.69
INV. = 1218.81

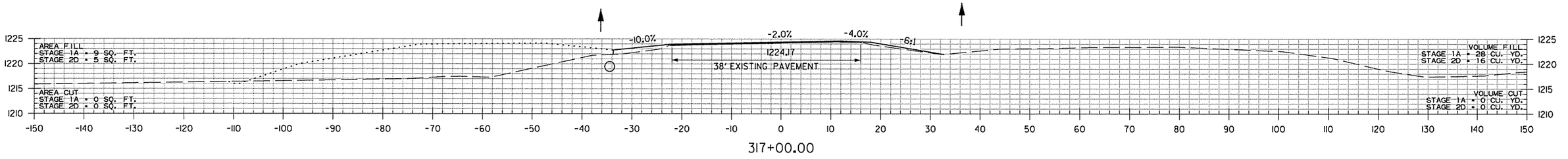

317+00.00

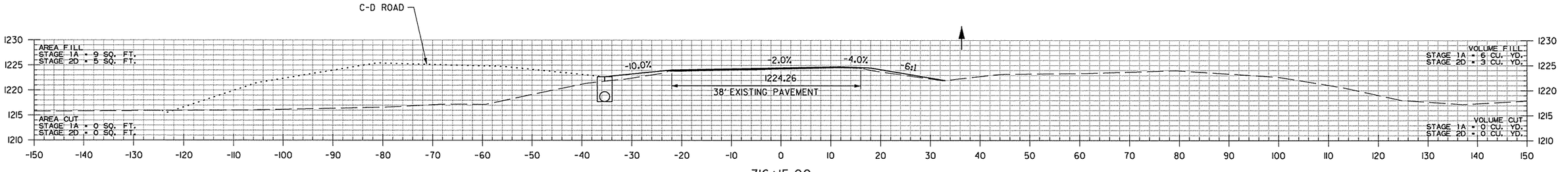

316+15.00

STA. 316+15 CONSTRUCT
TYPE RM DROP INLET
(4' X 3' X 5'0") 35' LT.
WITH 24" X 105' R.C. PIPE
OUTLET CONNECT TO DROP
INLET AT STA. 315+07
(CLASS III) TYPE 3 BEDDING

STA. 316+15
TOP = 1222.70
INV. = 1217.72

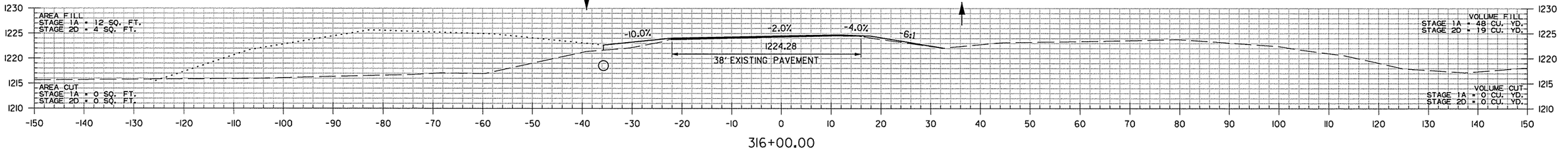

316+00.00

SB HWY. 71B
STA. 316+00 TO STA. 317+23

AEWierclak 3/20/2016 11:58:30 AM
WORKSPACE: AHTD
L:\20IN\I0I7I07 - I-540 Widening & Interchange Improvement\Drawings\rBB0414_CX_SB HWY 71.dgn
REVISED DATE:

DATE REVISED	DATE FILMED	DATE REVISED	DATE FILMED	FED.RD. DIST.NO.	STATE	FED.AID PROJ.NO.	SHEET NO.	TOTAL SHEETS
				6	ARK.			
				JOB NO.		BB0414	810	886

(2) CROSS SECTIONS

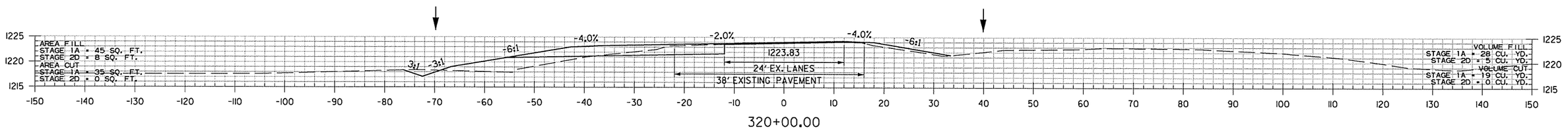

320+00.00

STA. 319+85.49
END SP. DITCH LT. 0.36%
BEGIN SP. DITCH LT. 1.42%
ELEV. 1216.91

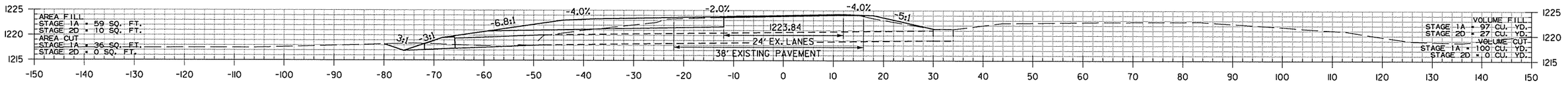

STA. 319+07.76
BEGIN SP. DITCH LT. 0.36%
ELEV. 1216.63

STA. 319+85 IN PLACE
DROP INLET 32' RT. - RETAIN
24" X 78' R.C. PIPE CULVERT
WITH HDWL. LT. REMOVE HDWL.
AND EXTEND R.C. PIPE 18' LT.
TYPE 3 BEDDING WITH FES. LT.
24" R.C. PIPE = 22 LIN. FT.
24" FES = 1EA.

STA. 319+85
EX. F.L. = 1221.31 RT.
EX. F.L. = 1218.08 LT.
PROP F.L. = 1216.91 LT.

319+85.48

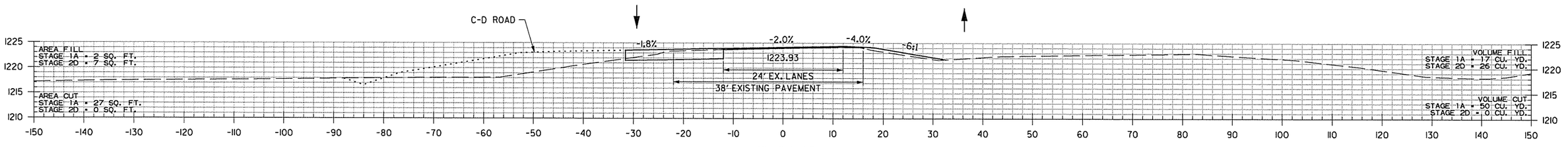

319+00.00

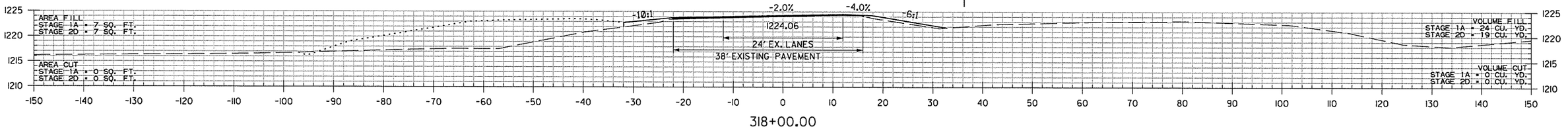

318+00.00

SB HWY. 71B
STA. 318+00 TO STA. 320+00

AEWierclok 3/20/2016 11:58:30 AM
WORKSPACE: AHTD
L:\2011\011707 - I-540 Widening & Interchange Improvement\Drawings\r-BB0414_CX-SB HWY 71..dgn
REVISED DATE:

DATE REVISED	DATE FILMED	DATE REVISED	DATE FILMED	FED.RD. DIST.NO.	STATE	FED.AID PROJ.NO.	SHEET NO.	TOTAL SHEETS
				6	ARK.			
				JOB NO.		BB0414	811	886
				(2)		CROSS SECTIONS		

STA. 323+41.74 END SB HWY. 71B OVERLAY
STA. 323+41.74 BEGIN 100' TRANSTION

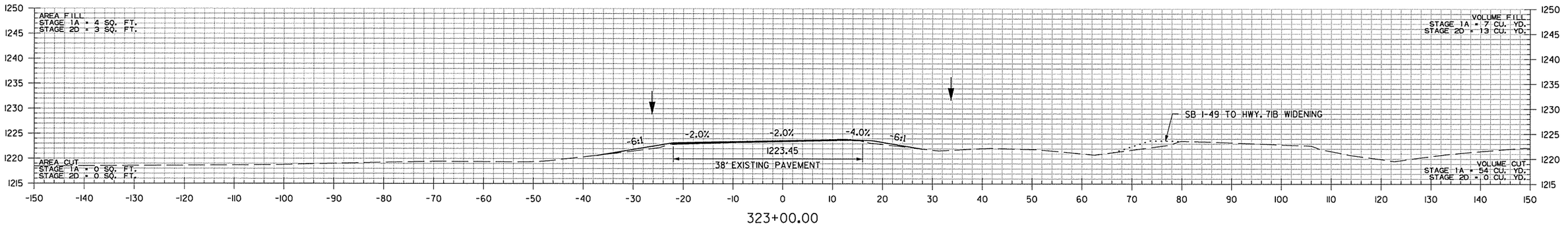

323+00.00

322+00.00

STA. 321+50.00
END SP. DITCH LT. 1.42%
ELEV. 1219.25

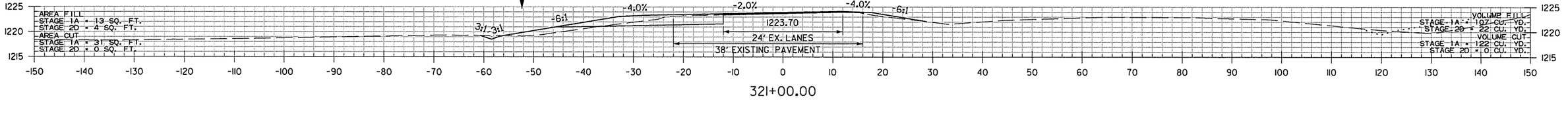

321+00.00

SB HWY. 71B
STA. 321+00 TO STA. 323+00

AEWierclak 3/20/2016 11:58:30 AM
WORKSPACE: AHTD
L:\2011\101707 - I-540 Widening & Interchange Improvement\Drawings\rBB0414_CX_SB HWY 71..dgn
REVISED DATE:

DATE REVISED	DATE FILMED	DATE REVISED	DATE FILMED	FED.RD. DIST.NO.	STATE	FED.AID PROJ.NO.	SHEET NO.	TOTAL SHEETS
				6	ARK.			
				JOB NO.		BB0414	812	886
				(2)	CROSS SECTIONS			

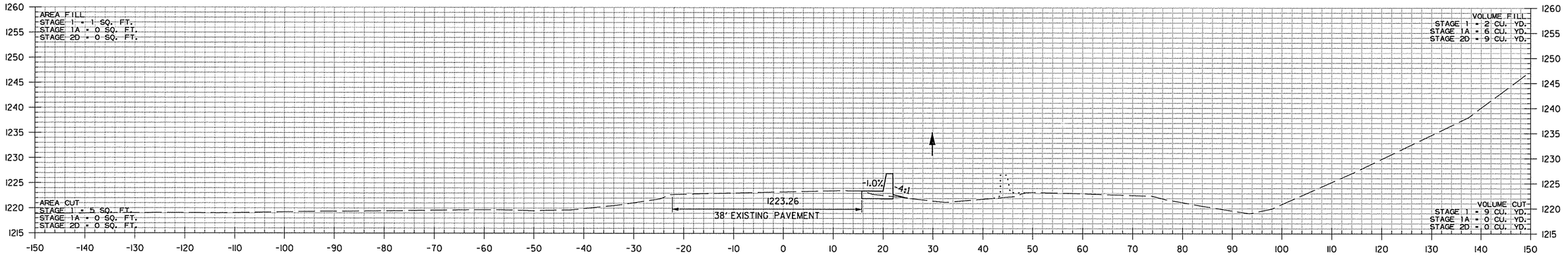

325+00.00

STA. 324+41.74 END 100' TRANSTION
STA. 324+30.00 BEGIN BARRIER WALL RT.

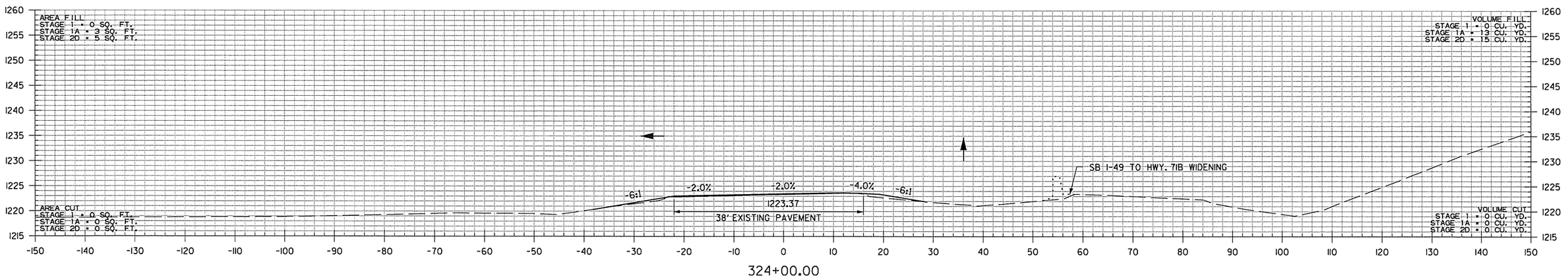

324+00.00

SB HWY. 71B
STA. 324+00 TO STA. 325+00

AEWerclok 3/20/2016 11:58:31 AM
WORKSPACE: AHTD
L:\20IN\10I7107 - I-540 Widening & Interchange Improvement\Drawings\r-BB0414_CX_SB HWY 71_.dgn
REVISED DATE:

DATE REVISED	DATE FILMED	DATE REVISED	DATE FILMED	FED.RD. DIST.NO.	STATE	FED.AID PROJ.NO.	SHEET NO.	TOTAL SHEETS
				6	ARK.			
				JOB NO.		BB0414	813	886
				(2)		CROSS SECTIONS		

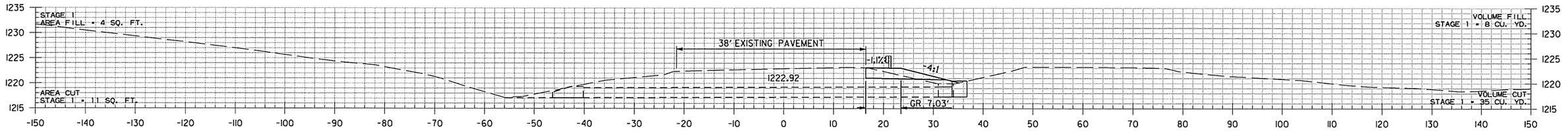

327+86.42

STA. 327+86 IN PLACE
DROP INLET 32.5' RT.
REMOVE DROP INLET
24" X 78' R.C. PIPE
CULVERT OUTLET LT.
RETAIN AND EXTEND
24" X 3' R.C. PIPE TO
TYPE RM DROP INLET
(4' X 3' X 3'2") 35.25' RT.
(CLASS III) TYPE 3 BEDDING
24" R.C. PIPE = 3 LIN. FT.

STA. 327+86
TOP = 1220.49
INV. = 1217.24

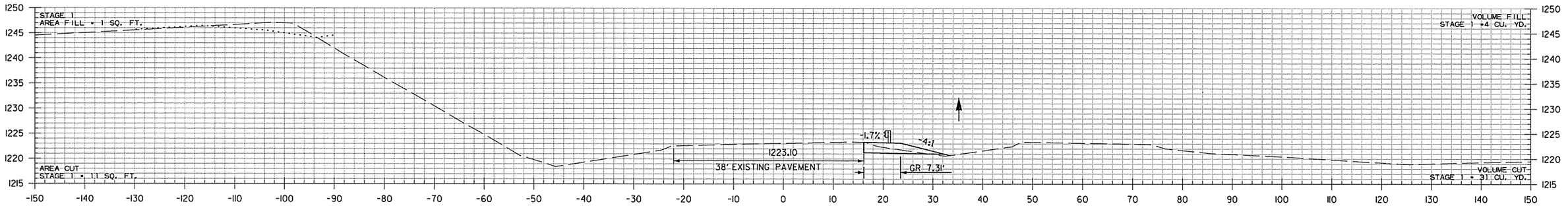

327+00.00

STA. 326+80.00 END BARRIER WALL RT.

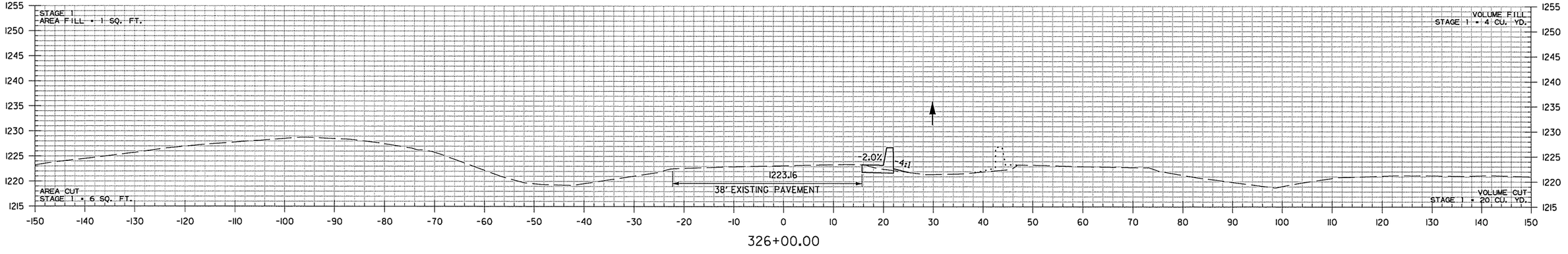

326+00.00

SB HWY. 7IB
STA. 326+00 TO STA. 327+86

AEWierciak 3/20/2016 11:58:31 AM
WORKSPACE: AHTD
L:\20IN\I0I7I07 - I-540 Widening & Interchange Improvement\Drawings\rBB0414_CX_SB HWY 7I..dgn
REVISED DATE:

DATE REVISED	DATE FILMED	DATE REVISED	DATE FILMED	FED.RD. DIST.NO.	STATE	FED.AID PROJ.NO.	SHEET NO.	TOTAL SHEETS
				6	ARK.			
				JOB NO.		BB0414	814	886
				(2)		CROSS SECTIONS		

STA. 329+81.82 END SB HWY. 71B

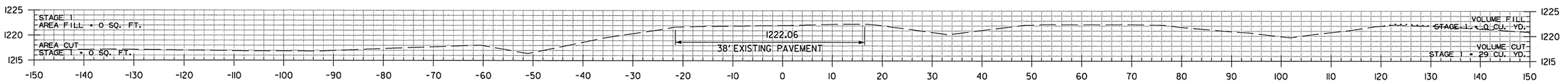

329+81.82

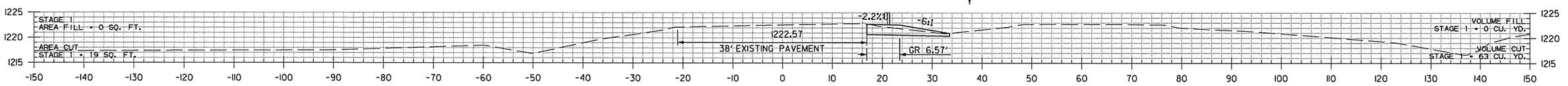

329+00.00

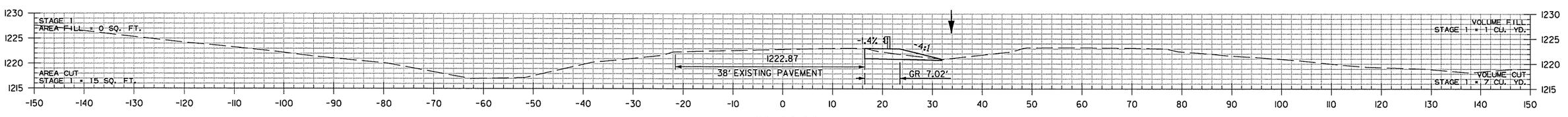

328+00.00

SB HWY. 71B
STA. 328+00 TO STA. 329+82

AEWierclok 3/20/2016 11:58:31 AM
WORKSPACE: AHTD
L:\20IN\I0I7I07 - I-540 Widening & Interchange Improvement\Drawings\r-BB0414_CX_SB HWY 71.dgn
REVISED DATE:

DATE REVISED	DATE FILMED	DATE REVISED	DATE FILMED	FED.RD. DIST.NO.	STATE	FED.AID PROJ.NO.	SHEET NO.	TOTAL SHEETS
				6	ARK.			
				JOB NO.		BB0414	815	886
				(2)		CROSS SECTIONS		

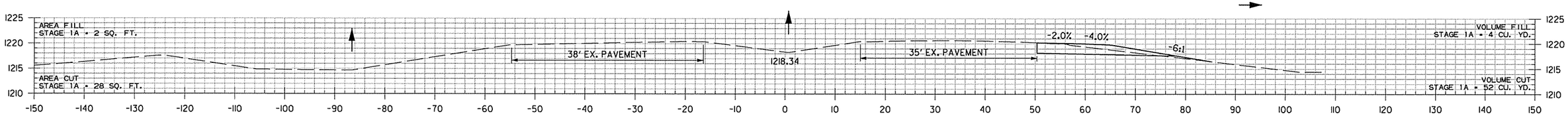

335+00.00

STA. 334+72.76 BEGIN 700' ACCELERATION LANE
STA. 334+72.76 BEGIN HWY. 71B

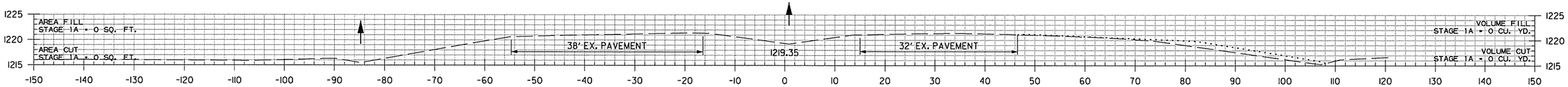

334+00.00

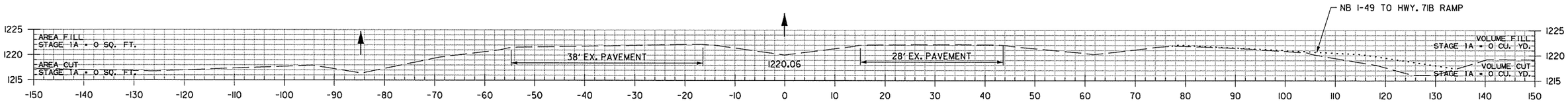

333+00.00

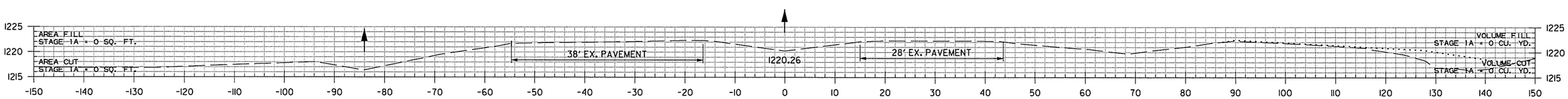

332+72.94

HWY. 71B
STA. 332+73 TO STA. 335+00

AEWierciak 3/20/2016 11:58:32 AM
WORKSPACE: AHTD
L:\20IN\DOT707 - I-540 Widening & Interchange Improvement\Drawings\rBB0414_CX_HWY 71B..dgn
REVISED DATE:

DATE REVISED	DATE FILMED	DATE REVISED	DATE FILMED	FED.RD. DIST.NO.	STATE	FED.AID PROJ.NO.	SHEET NO.	TOTAL SHEETS
				6	ARK.			
				JOB NO.		BB0414	816	886
				(2)		CROSS SECTIONS		

HWY. 71B
STA. 336+00 TO STA. 338+00

AEWierzlak 3/20/2016 11:58:32 AM
WORKSPACE: AHTD
L:\20IN\00707 - I-540 Widening & Interchange Improvement\Drawings\rBB0414_CX_HWY 71B_.dgn
REVISED DATE:

DATE REVISED	DATE FILMED	DATE REVISED	DATE FILMED	FED.RD. DIST.NO.	STATE	FED.AID PROJ.NO.	SHEET NO.	TOTAL SHEETS
				6	ARK.			
				JOB NO.		BB0414	817	886
				(2)		CROSS SECTIONS		

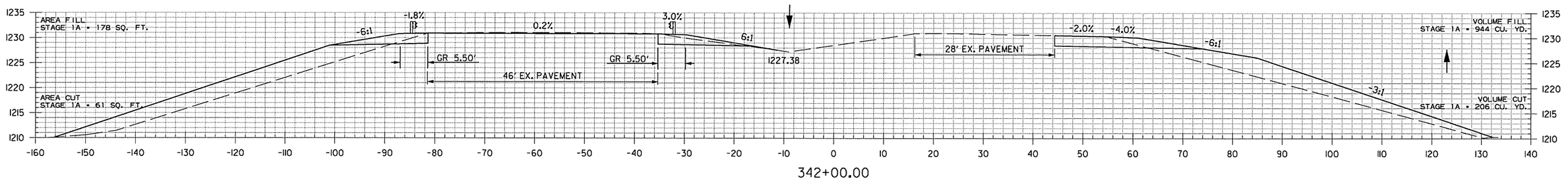

342+00.00

STA. 341+72.76 END 700' ACCELERATION LANE
STA. 341+72.76 BEGIN 300' TAPER

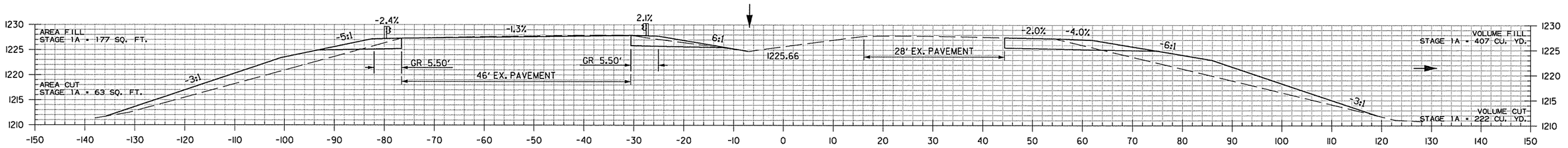

341+00.00

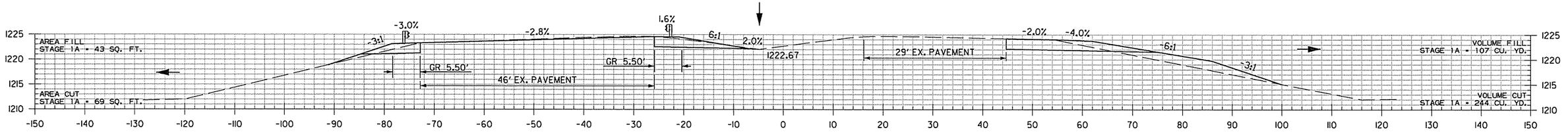

340+00.00

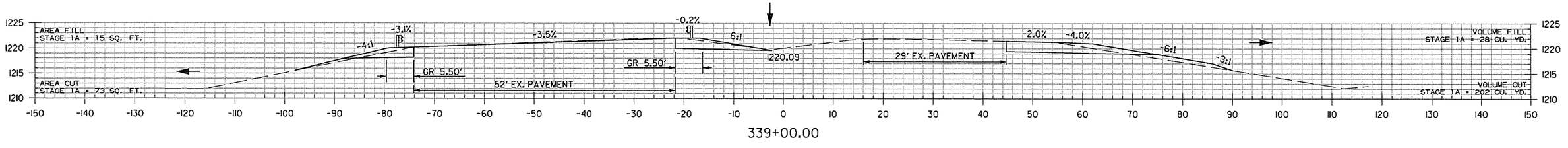

339+00.00

HWY. 71B
STA. 339+00 TO STA. 342+00

AEWierclak 3/20/2016 11:58:32 AM
WORKSPACE: AHTD
L:\20IN\I0I7I0T - I-540 Widening & Interchange Improvement\Drawings\rBB0414_CX_HWY 71B..dgn
REVISED DATE:

DATE REVISED	DATE FILMED	DATE REVISED	DATE FILMED	FED.RD. DIST.NO.	STATE	FED.AID PROJ.NO.	SHEET NO.	TOTAL SHEETS
				6	ARK.			
				JOB NO.		BB0414	818	886
				(2)		CROSS SECTIONS		

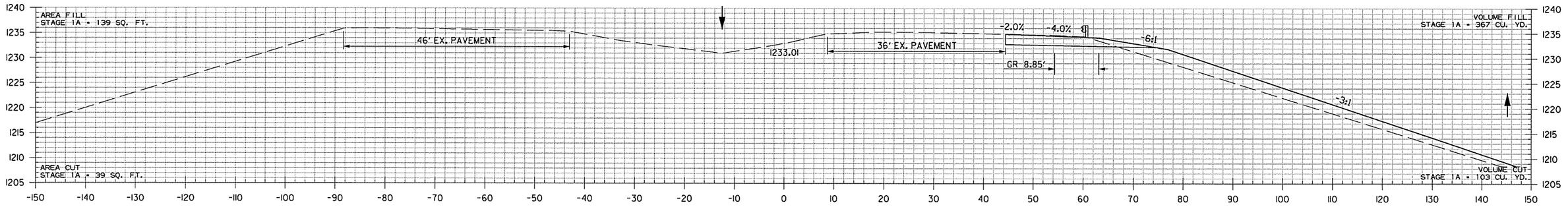

344+00.00

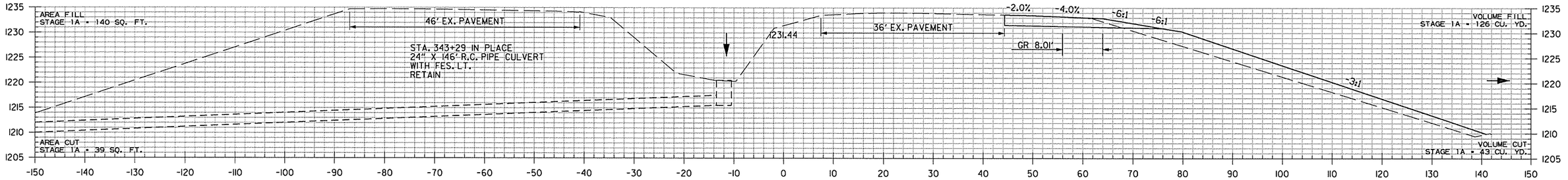

343+28.88

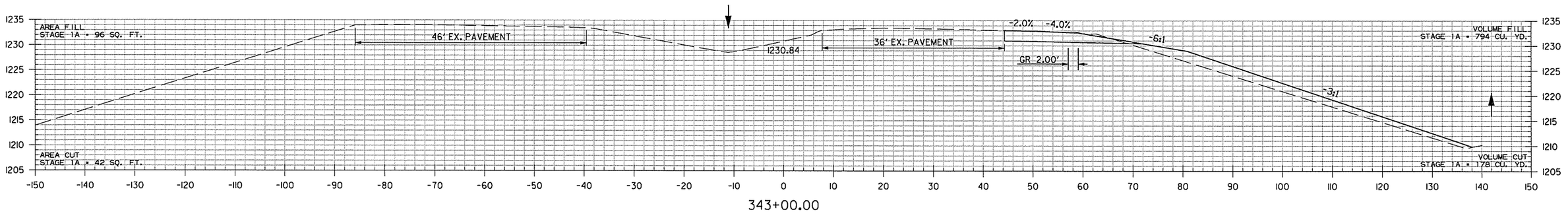

343+00.00

HWY. 7IB
STA. 343+00 TO STA. 344+00

AEWierclak 3/20/2016 11:58:32 AM
WORKSPACE: AHTD
L:\20IN\10I7I07 - I-540 Widening & Interchange Improvement\Drawings\rBB0414_CX_HWY 7IB_.dgn
REVISED DATE:

DATE REVISED	DATE FILMED	DATE REVISED	DATE FILMED	FED.RD. DIST.NO.	STATE	FED.AID PROJ.NO.	SHEET NO.	TOTAL SHEETS
				6	ARK.			
				JOB NO.		BB0414	819	886

(2) CROSS SECTIONS

345+85.37

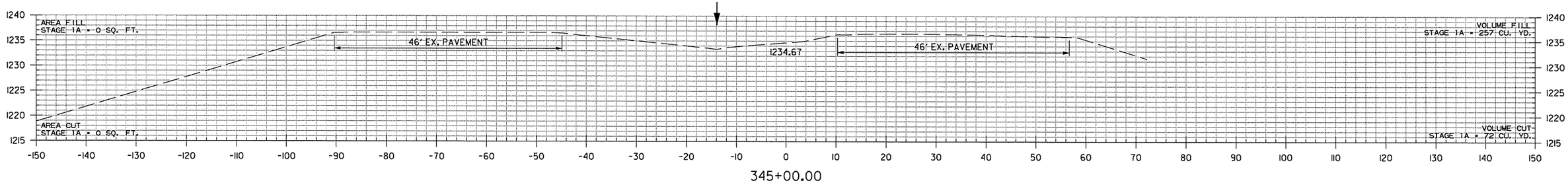

345+00.00

STA. 344+72.76 END 300' TAPER
STA. 344+72.76 END HWY. 71B

HWY. 71B
STA. 345+00 TO STA. 345+85

AEWierciak 3/20/2016 11:58:32 AM
WORKSPACE: AHTD
L:\201\101717OT - I-540 Widening & Interchange Improvement\Drawings\r-BB0414_CX_HWY 71B..dgn
REVISED DATE:

DATE REVISED	DATE FILMED	DATE REVISED	DATE FILMED	FED.RD. DIST.NO.	STATE	FED.AID PROJ.NO.	SHEET NO.	TOTAL SHEETS
				6	ARK.			
				JOB NO.		BB0414	820	886
				(2)		CROSS SECTIONS		

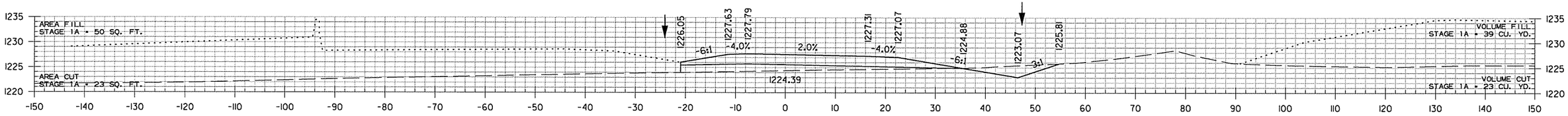

310+00.00

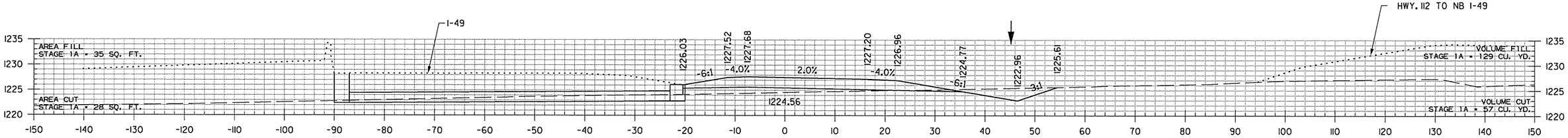

STA. 309+75 CONSTRUCT
TYPE RM DROP INLET 20' LT.
(4' X 3' X H=3'3") WITH
24" X 69' R.C. PIPE OUTLET
CONNECT TO DROP INLET
I-49 STA. 310+00

STA. 309+75
TOP = 1226.10
INV = 1222.85
F.L. = 1222.43 LT.

309+75.50

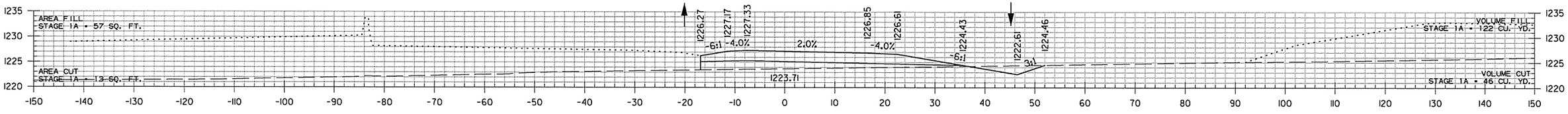

309+00.00

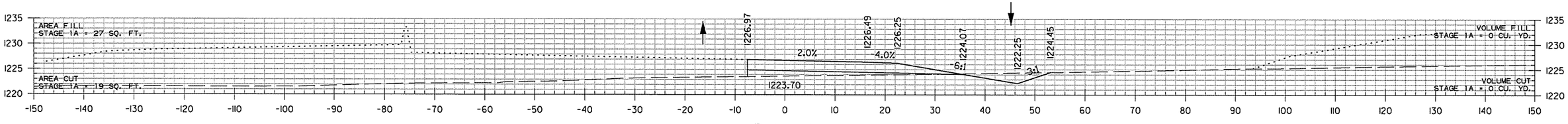

308+21.79

STA. 308+21.79 BEGIN NB I-49 TO HWY. 71B RAMP

NB I-49 TO HWY. 71B RAMP
STA. 308+22 TO STA. 310+00

AEWierciak 3/20/2016 11:58:33 AM
WORKSPACE: AHTD
L:\2011\11007107 - I-540 Widening & Interchange Improvement\Drawings\rBB0414_CX_NB I-49 TO HWY 71..dgn
REVISED DATE:

DATE REVISED	DATE FILMED	DATE REVISED	DATE FILMED

FED.RD. DIST.NO.	STATE	FED.AID PROJ.NO.	SHEET NO.	TOTAL SHEETS
6	ARK.			
JOB NO.		BB0414	821	886

(2) CROSS SECTIONS

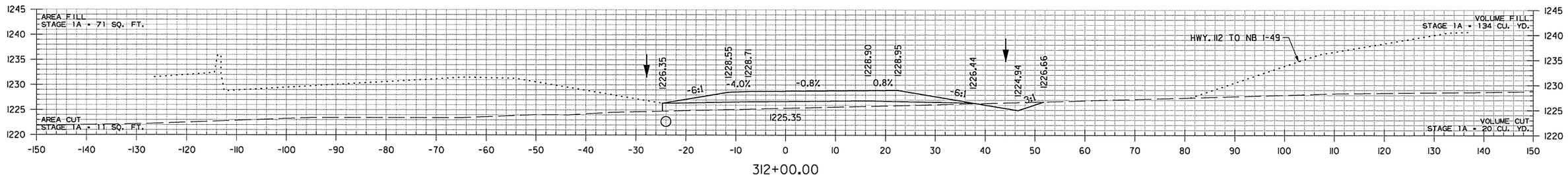

312+00.00

STA. 311+50 CONSTRUCT
TYPE RM DROP INLET 24' LT.
(4' X 3' X H=4'3") WITH
24" X 138' R.C. PIPE OUTLET
CONNECT TO BOX CULVERT
(CLASS III) TYPE 3 BEDDING

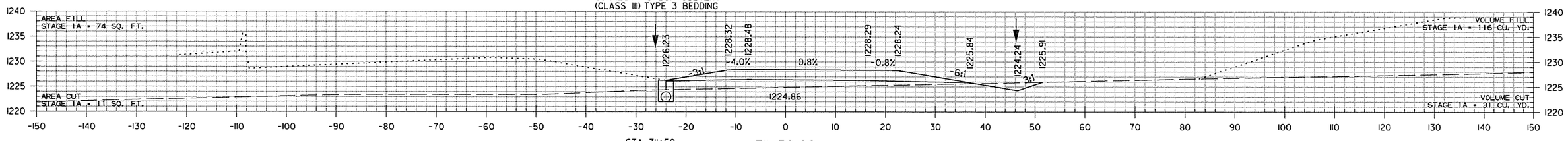

STA. 311+50
TOP = 1226.24
INV = 1221.99
F.L. = 1221.18
AT BOX CULVERT

311+50.00

STA. 311+11.68 BEGIN SUPERELEVATION

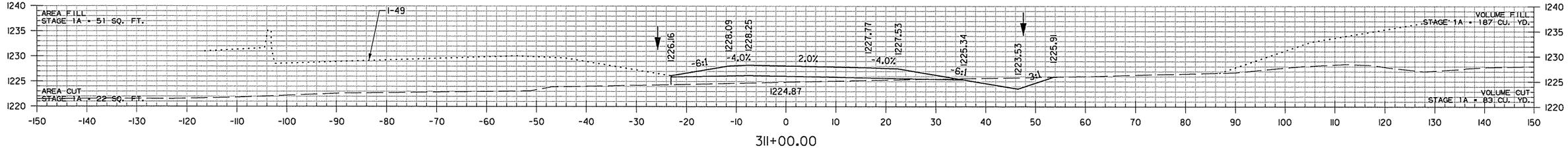

311+00.00

NB I-49 TO HWY. 71B RAMP
STA. 311+00 TO STA. 312+00

AEWierdak 3/20/2016 11:58:33 AM
WORKSPACE: AHTD
L:\20IN\I0I7TOT - I-540 Widening & Interchange Improvement\Drawings\rBB0414_CX_NB I-49 TO HWY 71..dgn
REVISED DATE:

DATE REVISED	DATE FILMED	DATE REVISED	DATE FILMED	FED.RD. DIST.NO.	STATE	FED.AID PROJ.NO.	SHEET NO.	TOTAL SHEETS
				6	ARK.			
				JOB NO.		BB0414	822	886
				(2)		CROSS SECTIONS		

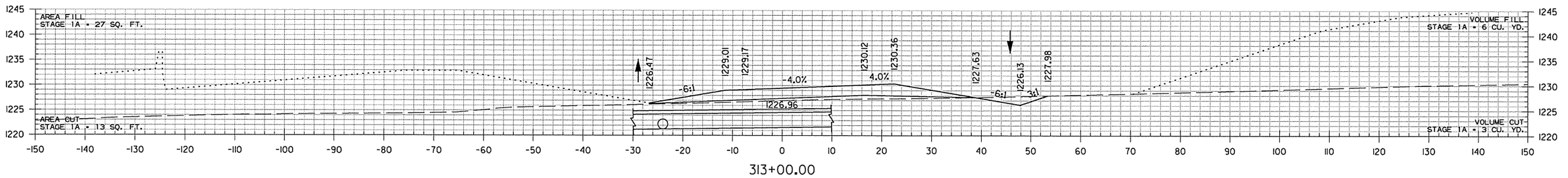

313+00.00

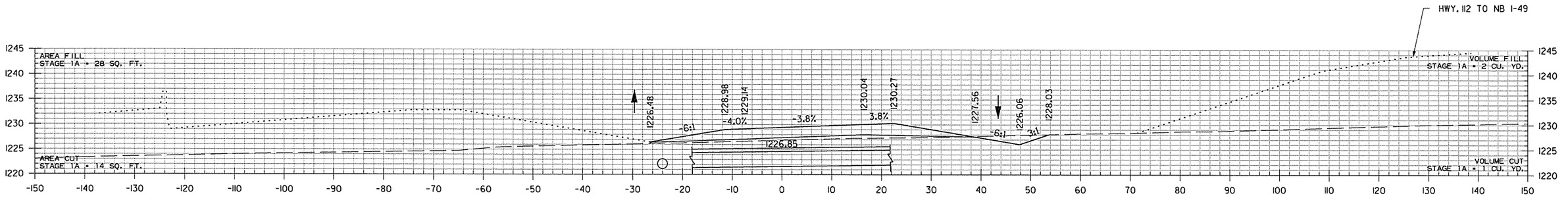

312+93.78

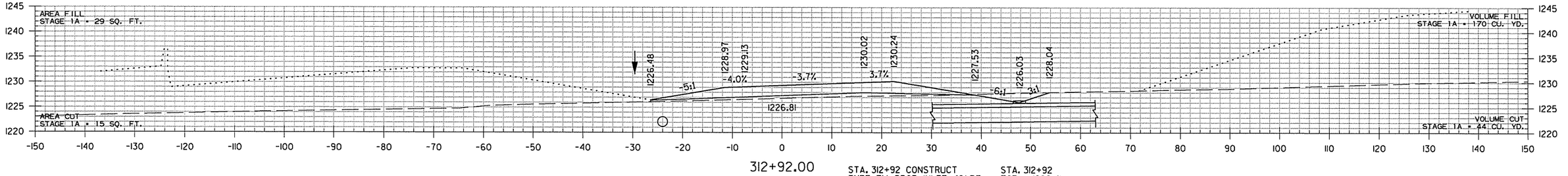

312+92.00

STA. 312+92 CONSTRUCT
TYPE TM DROP INLET 48' RT.
(3' X 2'6" X H=0'6")
CONNECT TO BOX CULVERT

STA. 312+92
TOP = 1226.41
INV = 1222.18

NB I-49 TO HWY. 71B RAMP
STA. 312+92 TO STA. 313+00

AEWierclok 3/20/2016 11:58:33 AM
WORKSPACE: AHTD
L:\201\101707 - I-540 Widening & Interchange Improvement\Drawings\r-BB0414_CX_NB I-49 TO HWY 71..dgn
REVISED DATE:

DATE REVISED	DATE FILMED	DATE REVISED	DATE FILMED	FED.RD. DIST.NO.	STATE	FED.AID PROJ.NO.	SHEET NO.	TOTAL SHEETS
				6	ARK.			
				JOB NO.		BB0414	823	886

(2) CROSS SECTIONS

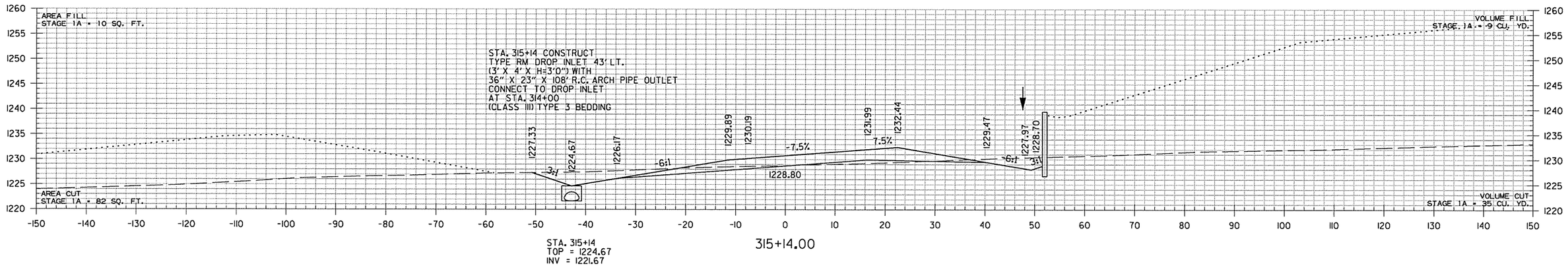

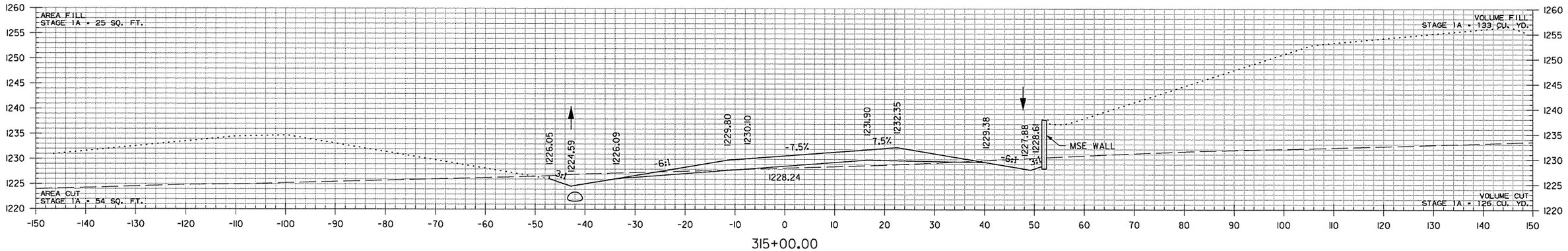

STA. 314+11.68 MAX. SUPERELEVATION (0.075'/')

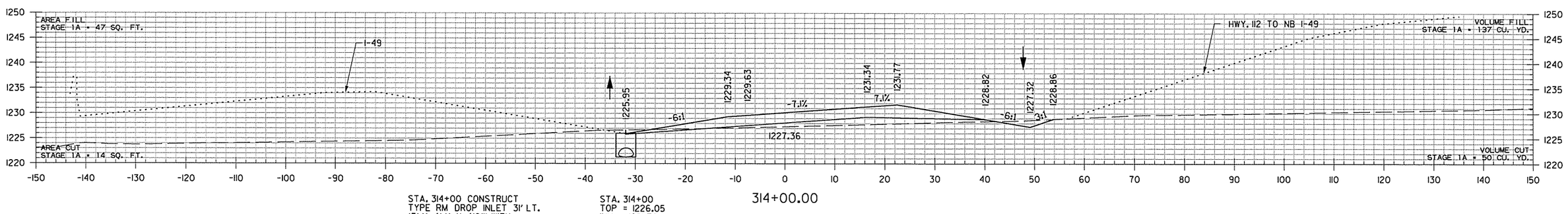

NB I-49 TO HWY. 71B RAMP
STA. 314+00 TO STA. 315+14

AEWerclok 3/20/2016 11:56:33 AM
WORKSPACE: AHTD
L:\2011\110707 - I-540 Widening & Interchange Improvement\Drawings\rBB0414_CX_NB I-49 TO HWY 71...dgn
REVISED DATE:

DATE REVISED	DATE FILMED	DATE REVISED	DATE FILMED	FED.RD. DIST.NO.	STATE	FED.AID PROJ.NO.	SHEET NO.	TOTAL SHEETS
				6	ARK.			
				JOB NO.		BB0414	824	886
				(2)		CROSS SECTIONS		

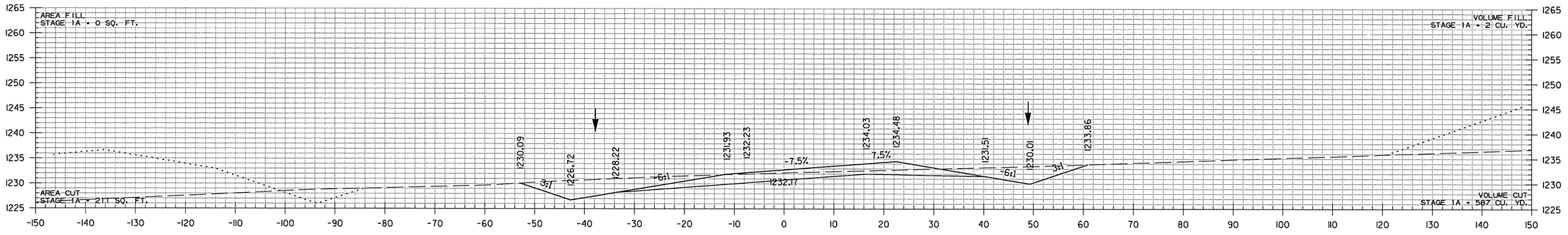

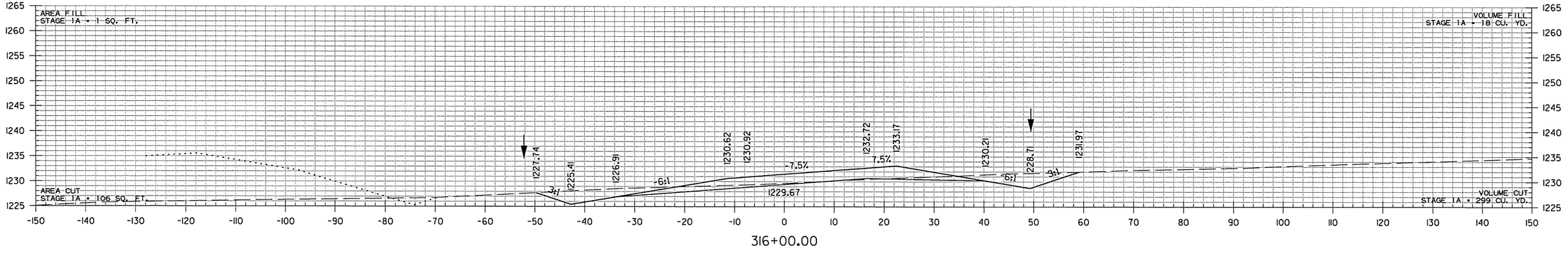

NB I-49 TO HWY. 71B RAMP
STA. 316+00 TO STA. 317+00

AEWercIoK 3/20/2016 11:58:33 AM
WORKSPACE: AHTD
L:\2011\11017\07 - I-540 Widening & Interchange Improvement\Drawings\r-BB0414_CX_NB I-49 TO HWY 71_dgn
REVISED DATE:

DATE REVISED	DATE FILMED	DATE REVISED	DATE FILMED	FED.RD. DIST.NO.	STATE	FED.AID PROJ.NO.	SHEET NO.	TOTAL SHEETS
				6	ARK.			
				JOB NO.		BB0414	825	886
				(2)	CROSS SECTIONS			

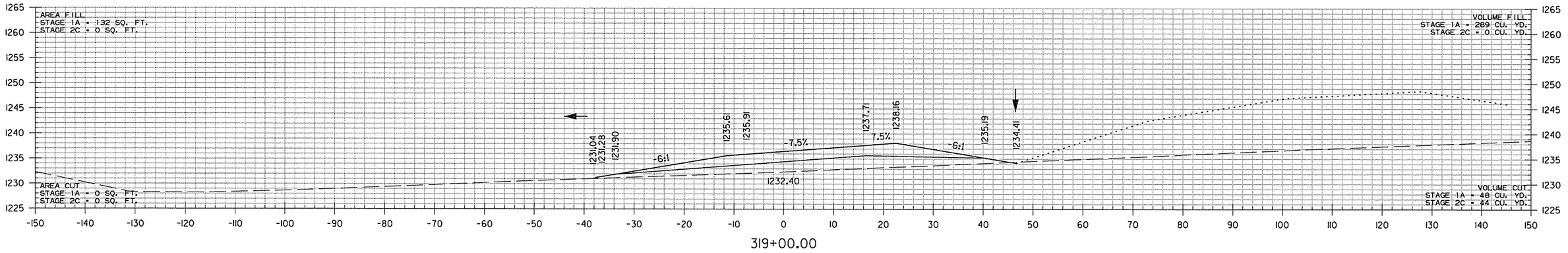

NB I-49 TO HWY. 71B RAMP
STA. 318+00 TO STA. 319+00

AEWierslok 3/20/2016 11:58:33 AM
WORKSPACE: AHTD
L:\201\101707 - I-540 Widening & Interchange Improvement\Drawings\rBB0414_CX_NB I-49 TO HWY 71..dgn
REVISED DATE:

DATE REVISED	DATE FILMED	DATE REVISED	DATE FILMED	FED.RD. DIST.NO.	STATE	FED.AID PROJ.NO.	SHEET NO.	TOTAL SHEETS
				6	ARK.			
				JOB NO.		BB0414	826	886
				(2)		CROSS SECTIONS		

STA. 322+46.58 BEGIN 700' ACCELERATION LANE

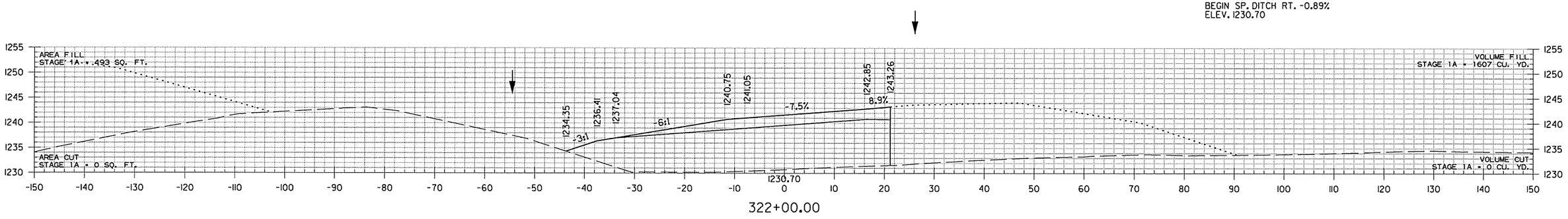

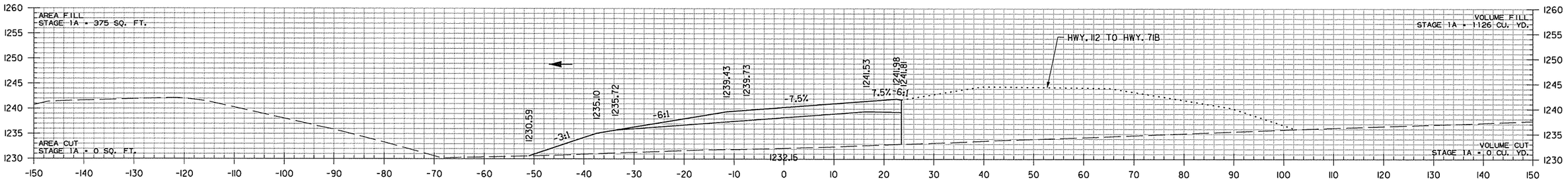

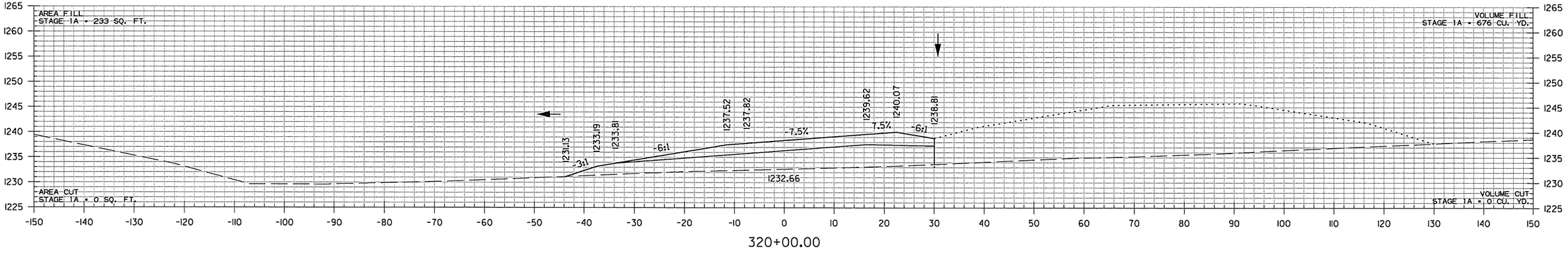

NB I-49 TO HWY. 71B RAMP
STA. 320+00 TO STA. 322+00

AEWierclak 3/20/2016 11:58:33 AM
WORKSPACE: AHTD
L:\20IN\10I7707 - I-540 Widening & Interchange Improvement\Drawings\r-BB0414_CX_NB I-49 TO HWY 71_dgn
REVISED DATE:

DATE REVISED	DATE FILMED	DATE REVISED	DATE FILMED	FED.RD. DIST.NO.	STATE	FED.AID PROJ.NO.	SHEET NO.	TOTAL SHEETS
				6	ARK.			
				JOB NO.		BB0414	827	886
				(2)	CROSS SECTIONS			

STA. 325+65.00
END SP. DITCH RT. -0.89%
ELEV. 1227.85

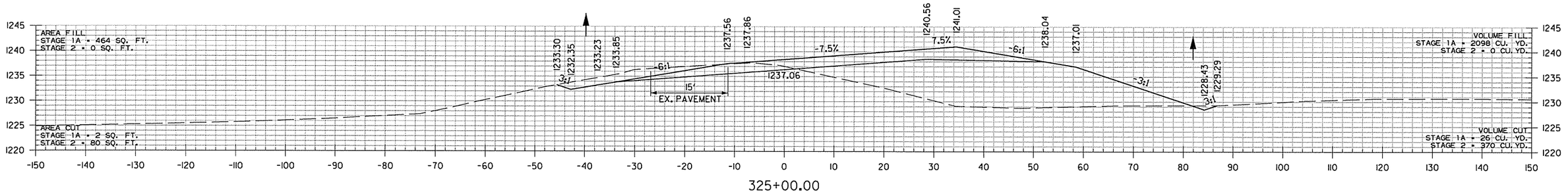

325+00.00

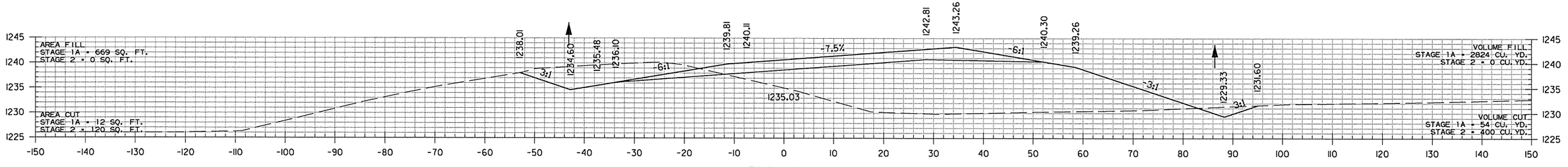

324+00.00

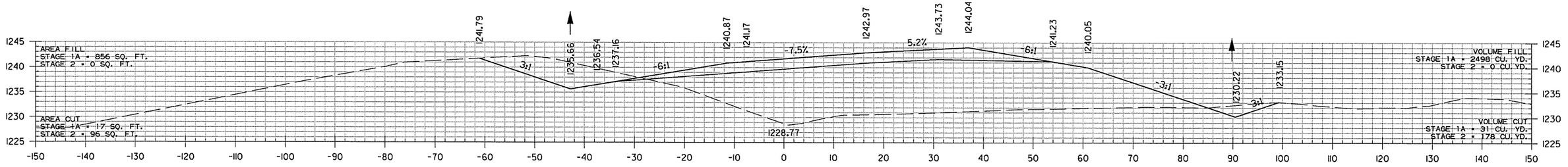

323+00.00

NB I-49 TO HWY. 71B RAMP
STA. 323+00 TO STA. 325+00

AEWierclok 3/20/2016 11:58:34 AM
WORKSPACE: AHTD
L:\20IN\10\7107 - I-540 Widening & Interchange Improvement\Drawings\rBB0414_CX_NB I-49 TO HWY 71..dgn
REVISED DATE:

DATE REVISED	DATE FILMED	DATE REVISED	DATE FILMED	FED.RD. DIST.NO.	STATE	FED.AID PROJ.NO.	SHEET NO.	TOTAL SHEETS
				6	ARK.			
				JOB NO.		BB0414	828	886

(2) CROSS SECTIONS

STA. 329+46.58 END 700' ACCELERATION LANE
STA. 329+46.58 BEGIN 300' TAPER

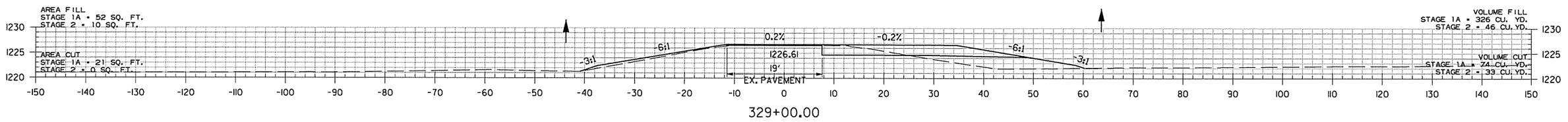

329+00.00

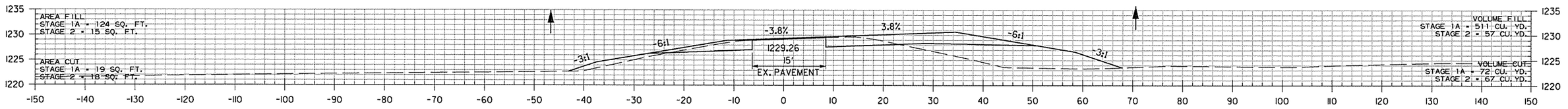

328+00.00

STA. 327+00.00 MATCH EXISTING SUPERELEVATION (0.0575'/')

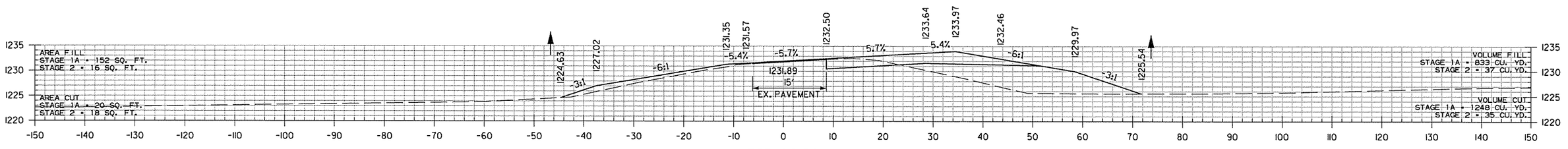

327+00.00

STA. 326+44.74 MAX. SUPERELEVATION (0.075'/')

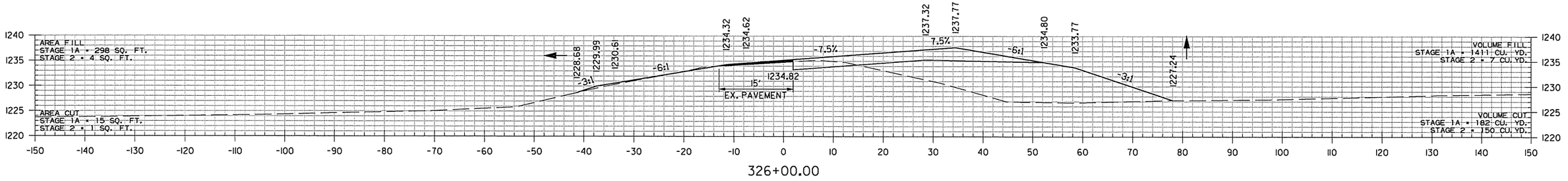

326+00.00

NB I-49 TO HWY. 71B RAMP
STA. 326+00 TO STA. 329+00

AEWierclok 3/20/2016 11:58:34 AM
WORKSPACE: AHTD
L:\201\101707 - I-540 Widening & Interchange Improvement\Drawings\r-BB0414_CX_NB I-49 TO HWY 71_dgn
REVISED DATE:

DATE REVISED	DATE FILMED	DATE REVISED	DATE FILMED	FED.RD. DIST.NO.	STATE	FED.AID PROJ.NO.	SHEET NO.	TOTAL SHEETS
				6	ARK.			
				JOB NO.		BB0414	829	886
				(2)		CROSS SECTIONS		

STA. 332+46.58 END 300' TAPER

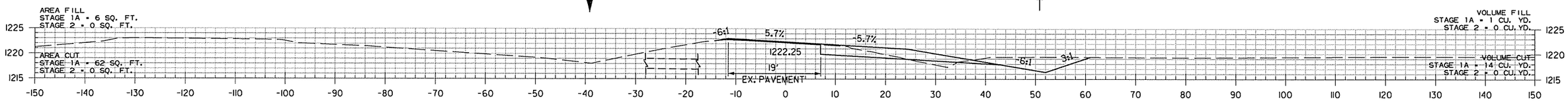

332+00.00

STA. 332+24 IN PLACE
24" X 78' R.C. PIPE CULVERT
45° LT. FWD. SKEW
WITH HDWL. LT. & RT.
REMOVE HDWL. RT. AND
EXTEND R.C. PIPE 32' RT.
(CLASS III) TYPE 3 BEDDING
WITH FES RT.
Q50 = 31CFS DA = 8.5 ACRES
24" R.C. PIPE = 36 LIN. FT.
24" FES = 1EA.

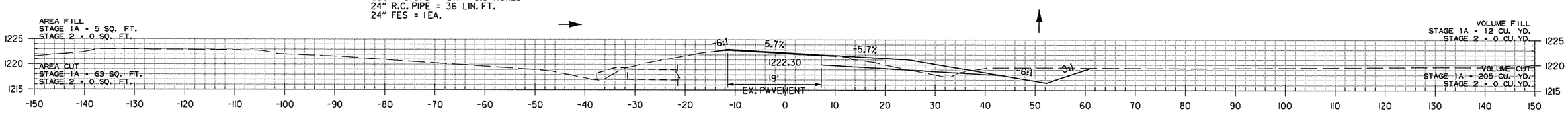

331+93.83

STA. 332+24 IN PLACE
PROP F.L. = 1215.80 RT.
EX. F.L. = 1216.20 RT.
EX. F.L. = 1217.16 LT.

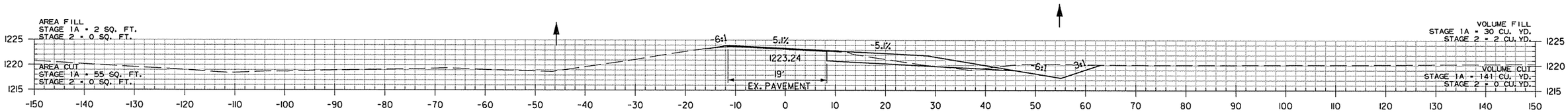

331+00.00

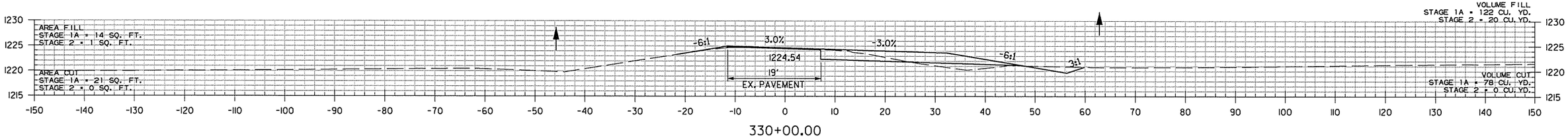

330+00.00

NB I-49 TO HWY. 71B RAMP
STA. 330+00 TO STA. 332+00

AEWierclok 3/20/2016 11:58:34 AM
WORKSPACE: AHTD
L:\201\1\101707 - I-540 Widening & Interchange Improvement\Drawings\r-BB0414_CX_NB I-49 TO HWY 71..dgn
REVISED DATE:

DATE REVISED	DATE FILMED	DATE REVISED	DATE FILMED	FED.RD. DIST.NO.	STATE	FED.AID PROJ.NO.	SHEET NO.	TOTAL SHEETS
				6	ARK.			
				JOB NO.		BB0414	830	886
				(2)	CROSS SECTIONS			

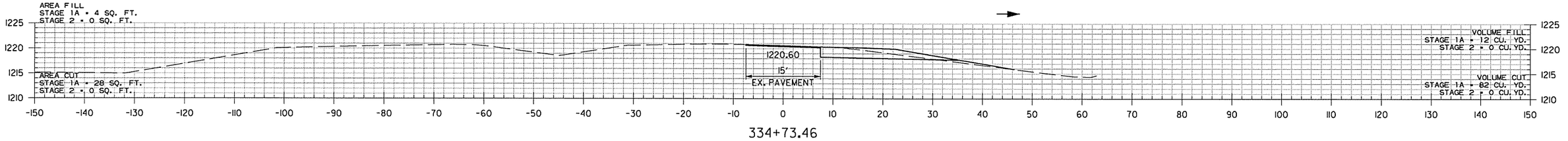

334+73.46

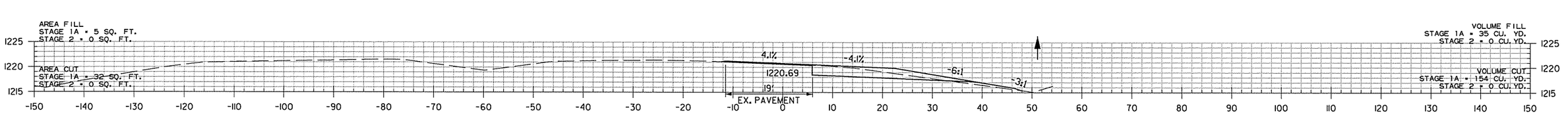

334+00.00

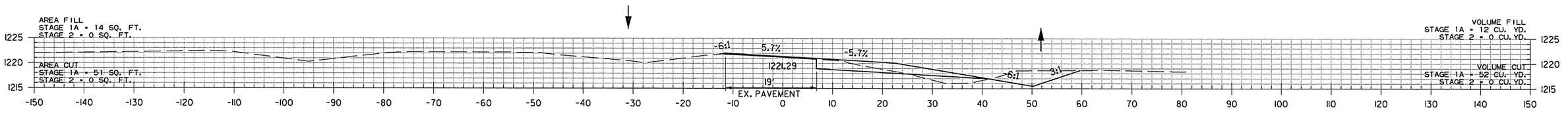

333+00.00

STA. 332+24 IN PLACE
24" X 78' R.C. PIPE CULVERT
45° LT. FWD. SKEW
WITH HDWL. LT. & RT.
REMOVE HDWL. RT. AND
EXTEND R.C. PIPE 32' RT.
(CLASS III) TYPE 3 BEDDING
WITH FES RT.
Q50 = 31 CFS DA = 8.5 ACRES

STA. 332+24 IN PLACE
PROP F.L. = 1215.48 RT.
EX. F.L. = 1216.20 RT.
EX. F.L. = 1217.16 LT.

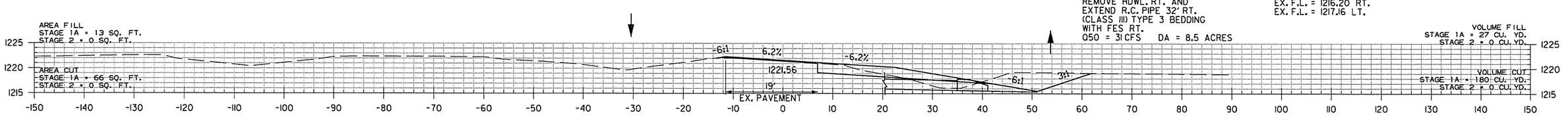

332+75.77

NB I-49 TO HWY. 71B RAMP
STA. 332+76 TO STA. 334+73

AEWierciak 3/20/2016 11:58:34 AM
WORKSPACE: AHTD
L:\201\N\01\707 - I-540 Widening & Interchange Improvement\Drawings\r-BB0414_CX_NB I-49 TO HWY 71.dgn
REVISED DATE:

DATE REVISED	DATE FILMED	DATE REVISED	DATE FILMED	FED.RD. DIST.NO.	STATE	FED.AID PROJ.NO.	SHEET NO.	TOTAL SHEETS
				6	ARK.			
				JOB NO.		BB0414	831	886
				(2)		CROSS SECTIONS		

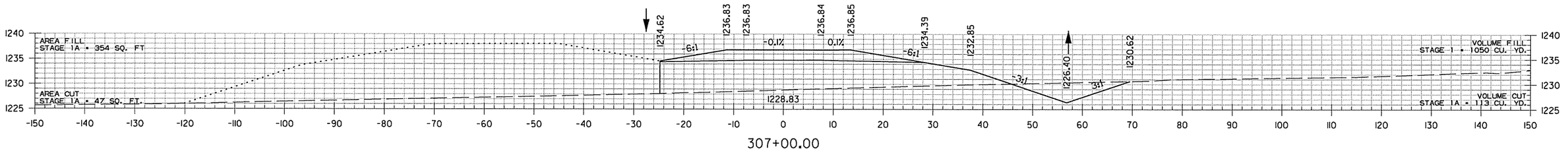

STA. 306+39.22 BEGIN SUPERELEVATION

STA. 306+00.00
END SP. DITCH RT. -7.01%
BEGIN SP. DITCH RT. -0.48%
ELEV. 1226.88

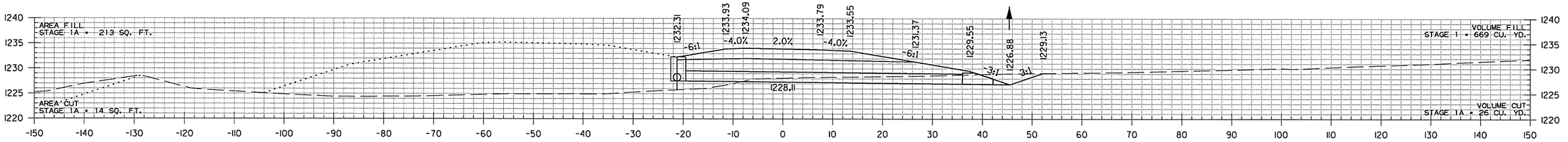

STA. 306+00 CONSTRUCT TYPE RM
DROP INLET 21' LT. (4' X 3' X H=4'9")
WITH 24" X 58' R.C. PIPE OUTLET
WITH FES. RT.
(CLASS III) TYPE 3 BEDDING

STA. 306+00
TOP = 1232.31
INV = 1227.55
PROP F.L. = 1226.88 (RT.)

STA. 305+75.00
BEGIN SP. DITCH RT. -7.01%
ELEV. 1228.63

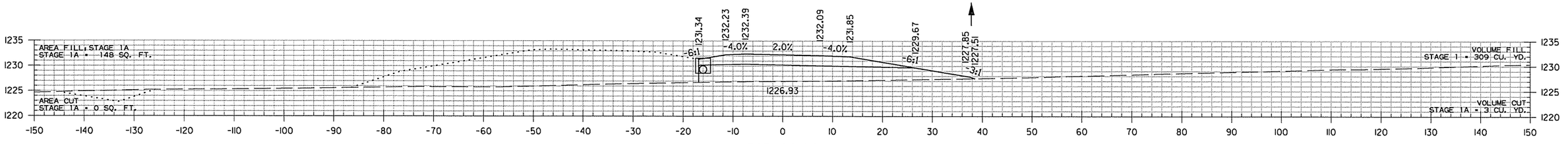

STA. 305+00 CONSTRUCT TYPE RM
DROP INLET 16' LT. (4' X 3' X H=3'0")
WITH 18" X 97' R.C. PIPE OUTLET
CONNECT TO DROP INLET AT STA. 306+00
(CLASS III) TYPE 3 BEDDING

STA. 305+00
TOP = 1231.56
INV = 1228.56

STA. 304+85.00
END SP. DITCH RT. 0.46%
ELEV. 1227.26

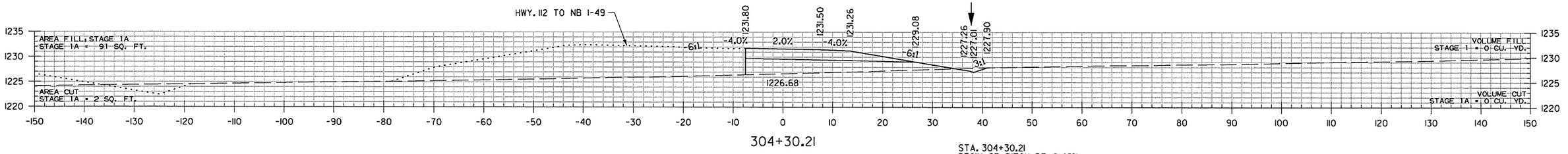

STA. 304+30.21
BEGIN SP. DITCH RT. 0.46%
ELEV. 1227.01

STA. 304+30.21 BEGIN HWY. 112 TO HWY. 71B RAMP

HWY. 112 TO HWY. 71B RAMP
STA. 304+30 TO STA. 307+00

AEWierclck 3/20/2016 11:58:34 AM
WORKSPACE: AHTD
L:\2016\160707 - I-540 Widening & Interchange Improvement\Drawings\r-BB0414_CX-HWY 112 TO HWY 71..dgn
REVISED DATE:

DATE REVISED	DATE FILMED	DATE REVISED	DATE FILMED	FED.RD. DIST.NO.	STATE	FED.AID PROJ.NO.	SHEET NO.	TOTAL SHEETS
				6	ARK.			
				JOB NO.		BB0414	832	886
				(2)	CROSS SECTIONS			

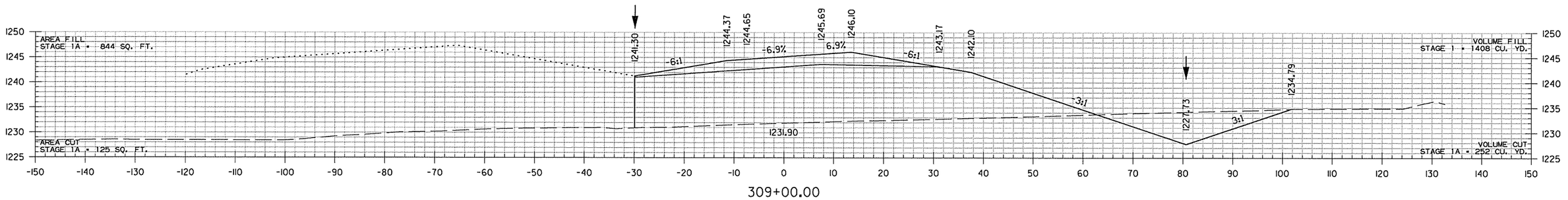

309+00.00

STA. 308+62.00
END SP. DITCH RT. -0.00%
BEGIN SP. DITCH RT. 5.27%
ELEV. 1225.73

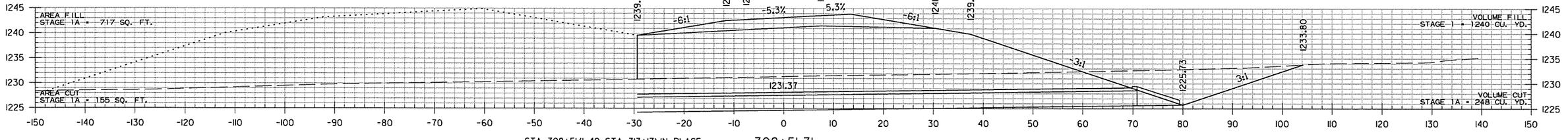

STA. 308+51 (1-49 STA. 313+17) IN PLACE
DBL. 6' X 3' X 98' R.C. BOX CULVERT
NO SKEW AT HWY. 112 TO HWY. 71B RAMP
WITH 3:1 WINGS LT. & RT.
RETAIN AND EXTEND 476' RT.
Q50 = 70 CFS DA = 22.2 ACRES

308+51.31

STA. 308+51
PROP F.L. = 1225.73

STA. 308+40.00
END SP. DITCH RT. -0.48%
BEGIN SP. DITCH RT. -0.00%
ELEV. 1225.73

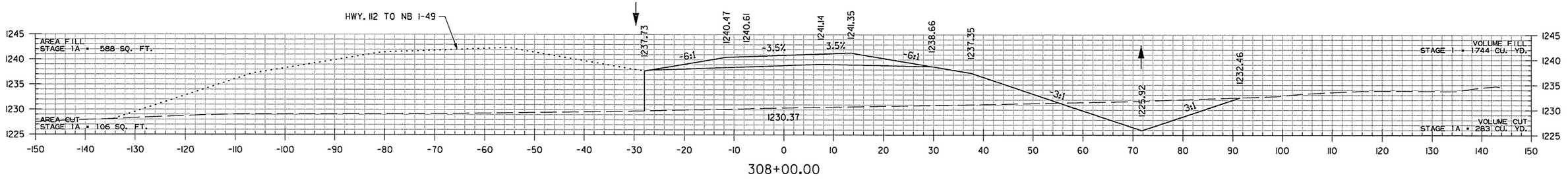

308+00.00

HWY. 112 TO HWY. 71B RAMP
STA. 308+00 TO STA. 309+00

AEWierclok 3/20/2016 11:58:34 AM
WORKSPACE: AHTD
L:\2011\011707 - I-540 Widening & Interchange Improvement\Drawings\r-BB0414_CX_HWY 112 TO HWY 71..dgn
REVISED DATE:

DATE REVISED	DATE FILMED	DATE REVISED	DATE FILMED	FED.RD. DIST.NO.	STATE	FED.AID PROJ.NO.	SHEET NO.	TOTAL SHEETS
				6	ARK.			
				JOB NO.		BB0414	833	886
				(2)		CROSS SECTIONS		

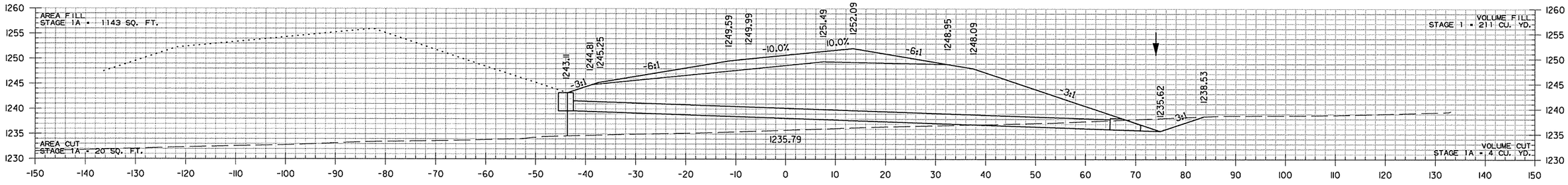

311+05.00

STA. 311+05 CONSTRUCT TYPE RM
DROP INLET 44' LT. (4' X 3' X H=3'7")
WITH 24" X 114' R.C. PIPE OUTLET
WITH FES. RT.
(CLASS III) TYPE 3 BEDDING

STA. 311+05
TOP = 1243.21
INV = 1239.61
PROP F.L. = 1235.62 (RT.)

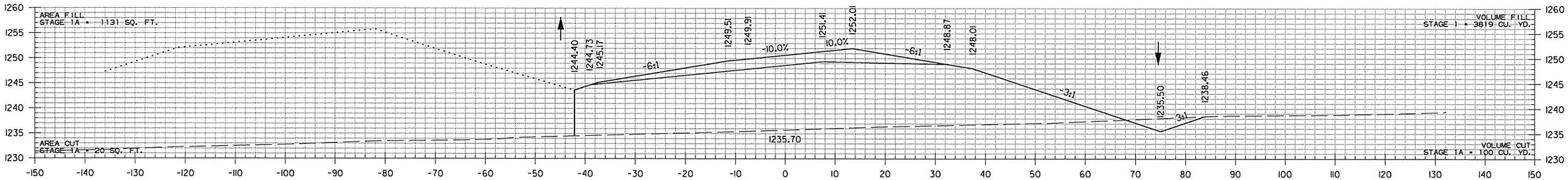

311+00.00

STA. 310+00.00
END SP. DITCH RT. 5.27%
BEGIN SP. DITCH RT. 2.50%
ELEV. 1233.00

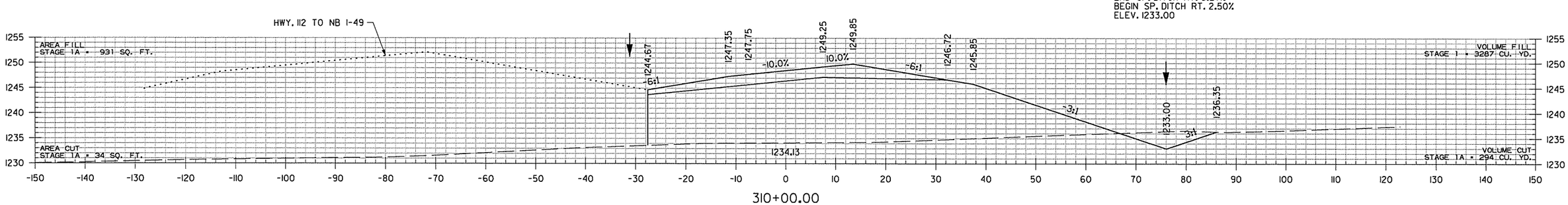

310+00.00

STA. 309+89.22 MAX. SUPERELEVATION (0.100'/')

HWY. 112 TO HWY. 71B RAMP
STA. 310+00 TO STA. 311+05

AEWerclok 3/20/2016 11:58:34 AM
WORKSPACE: AHTD
L:\20II\II0I707 - I-540 Widening & Interchange Improvement\Drawings\rBB0414_CX_HWY II2 TO HWY 7I_.dgn
REVISED DATE:

DATE REVISED	DATE FILMED	DATE REVISED	DATE FILMED	FED.RD. DIST.NO.	STATE	FED.AID PROJ.NO.	SHEET NO.	TOTAL SHEETS
				6	ARK.			
				JOB NO.		BB0414	834	886
				(2)	CROSS SECTIONS			

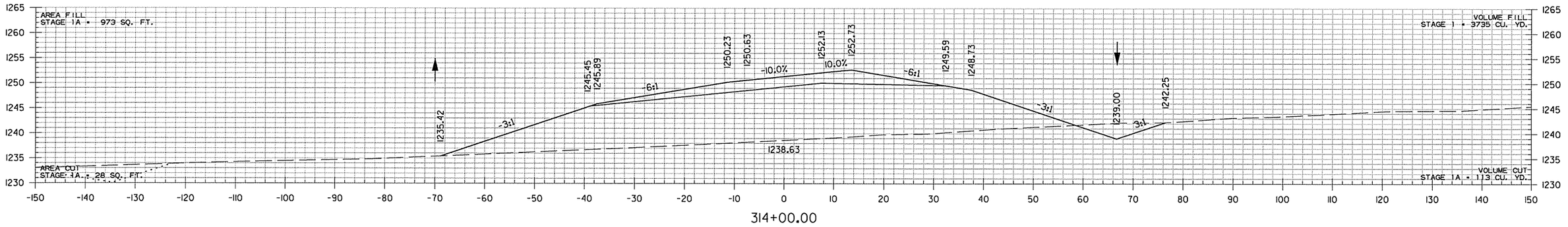

314+00.00

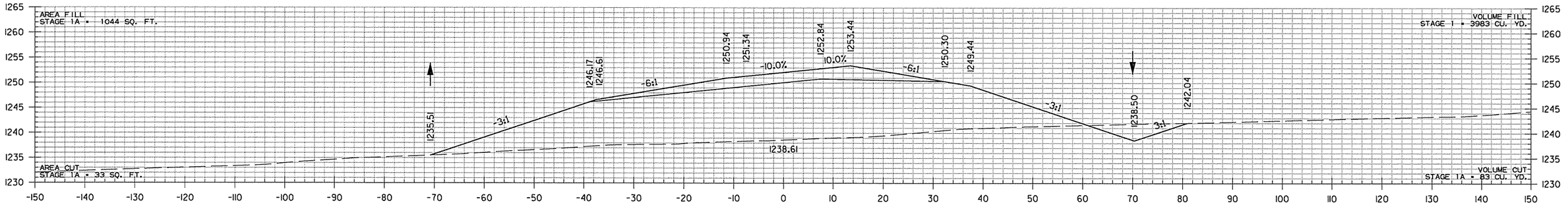

313+00.00

HWY. 112 TO NB I-49

STA. 312+00.00
END SP. DITCH RT. 2.50%
BEGIN SP. DITCH RT. 0.50%
ELEV. 1238.00

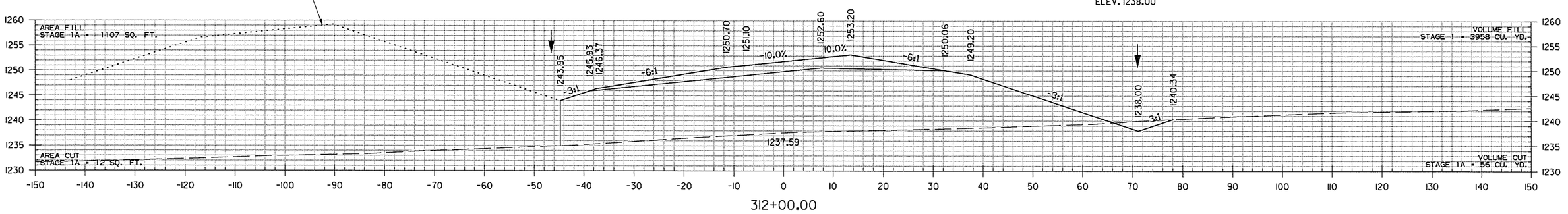

312+00.00

HWY. 112 TO HWY. 71B RAMP
STA. 312+00 TO STA. 314+00

AEWierclick 3/20/2016 11:58:35 AM
WORKSPACE: AHTD
L:\201\101707 - I-540 Widening & Interchange Improvement\Drawings\r-BB0414_CX_HWY 112 TO HWY 71_dgn
REVISED DATE:

DATE REVISED	DATE FILMED	DATE REVISED	DATE FILMED

FED.RD. DIST.NO.	STATE	FED.AID PROJ.NO.	SHEET NO.	TOTAL SHEETS
6	ARK.			
JOB NO.		BB0414	835	886

(2) CROSS SECTIONS

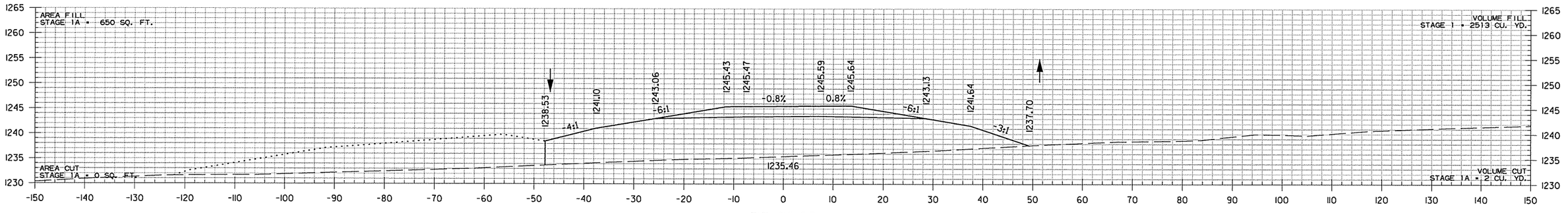

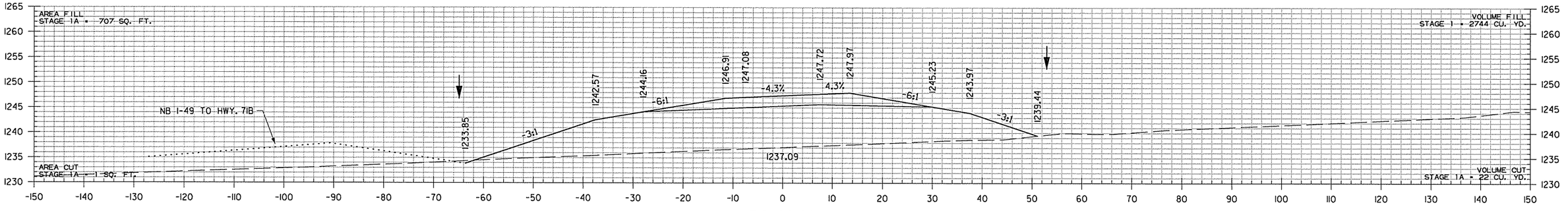

STA. 315+66.00
END SP. DITCH RT. 0.50%
ELEV. 1239.83

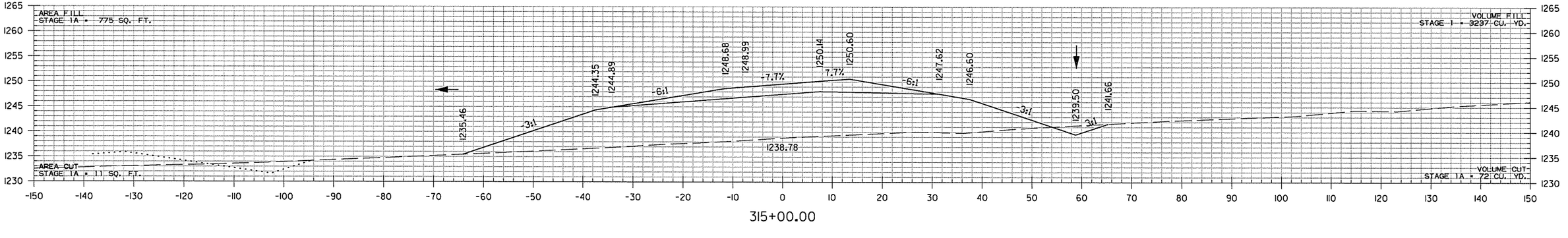

STA. 314+32.72 MAX. SUPERELEVATION (0.100'/')

HWY. 112 TO HWY. 71B RAMP
STA. 315+00 TO STA. 317+00

AEWierciak 3/20/2016 11:58:35 AM
WORKSPACE: AHTD
L:\201\N0171OT - I-540 Widening & Interchange Improvement\Drawings\r-BB0414_CX_HWY 112 TO HWY 71_.dgn
REVISED DATE:

DATE REVISED	DATE FILMED	DATE REVISED	DATE FILMED	FED.RD. DIST.NO.	STATE	FED.AID PROJ.NO.	SHEET NO.	TOTAL SHEETS
				6	ARK.			
				JOB NO.		BB0414	836	886
				(2)		CROSS SECTIONS		

STA. 320+82.72 END SUPERELEVATION (0.075'/')

STA. 319+57.61 END HWY. 112 TO HWY. 71B RAMP

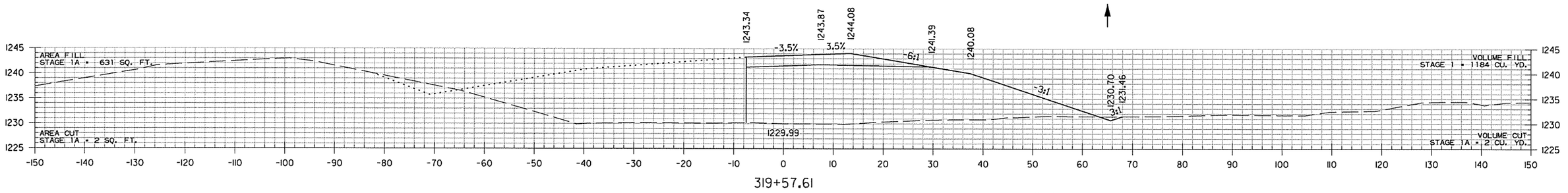

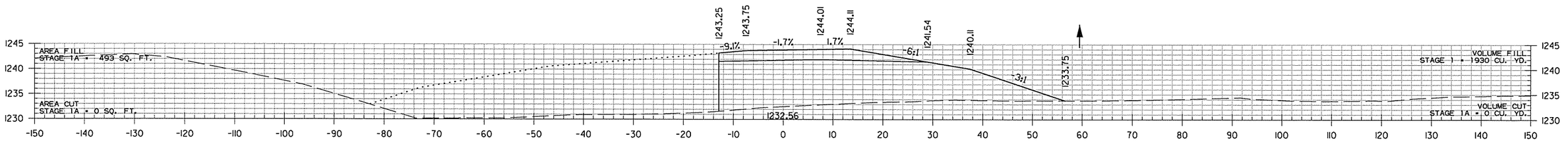

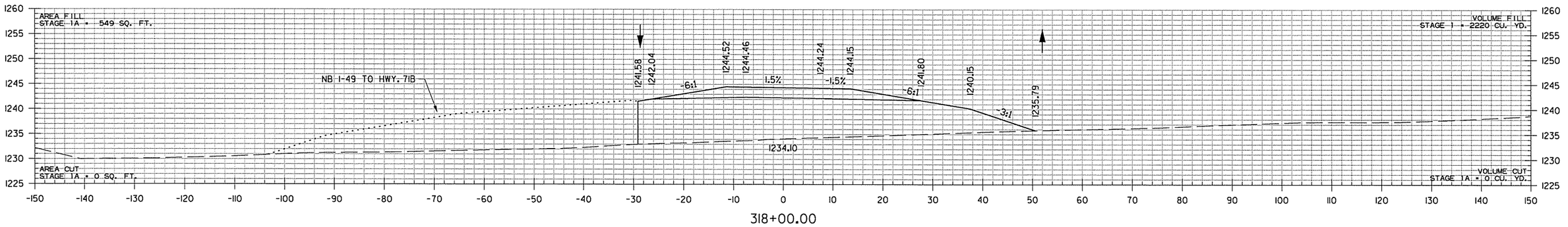

STA. 317+82.72 BEGIN SUPERELEVATION
STA. 317+82.72 END SUPERELEVATION

HWY. 112 TO HWY. 71B RAMP
STA. 318+00 TO STA. 319+58

AEWierdick 3/20/2016 11:58:35 AM
WORKSPACE: AHTD
L:\20III\101707 - I-540 Widening & Interchange Improvement\Drawings\rBB0414_CX_HWY 112 TO HWY 71_dgn
REVISED DATE:

DATE REVISED	DATE FILMED	DATE REVISED	DATE FILMED	FED.RD. DIST.NO.	STATE	FED.AID PROJ.NO.	SHEET NO.	TOTAL SHEETS
				6	ARK.			
				JOB NO.		BB0414	837	886
				(2)	CROSS SECTIONS			

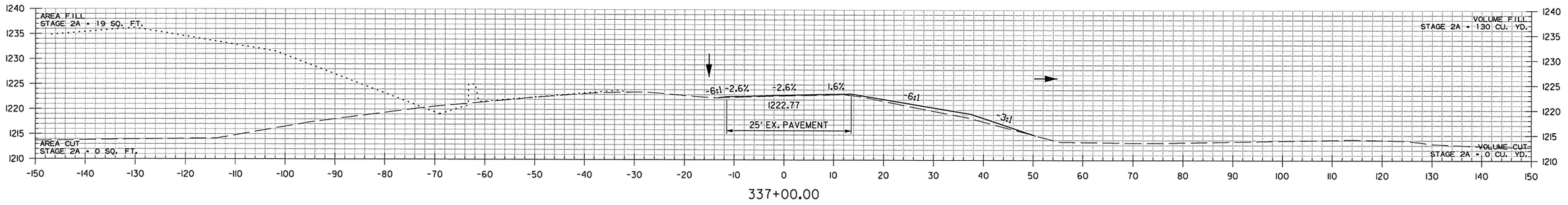

337+00.00

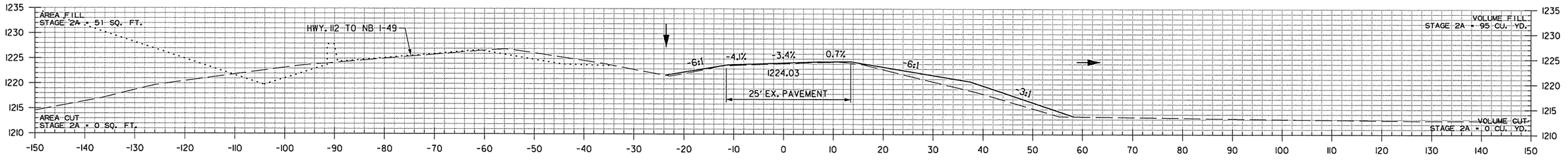

336+00.00

STA. 336+00.00 BEGIN HWY. 71B TO NB I-49 RAMP OVERLAY
STA. 336+00.00 END 100' TRANSITION

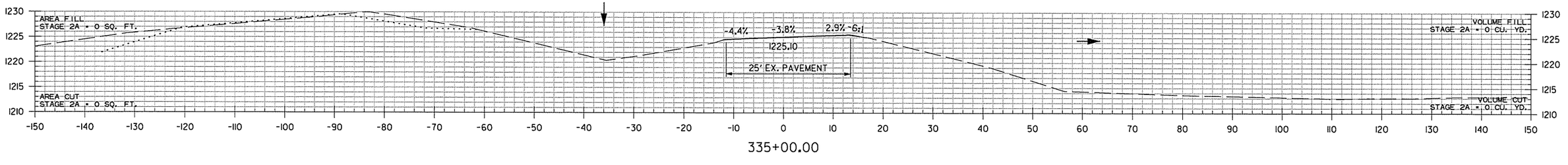

335+00.00

STA. 335+00.00 BEGIN 100' TRANSITION

HWY. 71B TO NB I-49
STA. 335+00 TO STA. 337+00

AEWierciak 3/20/2016 11:58:35 AM
WORKSPACE: AHTD
L:\20IN\II0\710T - I-540 Widening & Interchange Improvement\Drawings\rBB0414_CX_HWY 71 TO NB I-49..dgn
REVISED DATE:

DATE REVISED	DATE FILMED	DATE REVISED	DATE FILMED	FED.RD. DIST.NO.	STATE	FED.AID PROJ.NO.	SHEET NO.	TOTAL SHEETS
				6	ARK.			
				JOB NO.		BB0414	838	886
				(2)	CROSS SECTIONS			

STA. 338+57.01 END HWY. 71B TO NB I-49 RAMP OVERLAY

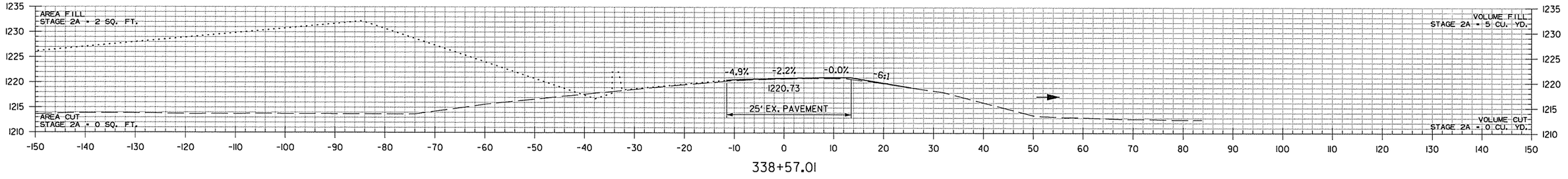

338+57.01

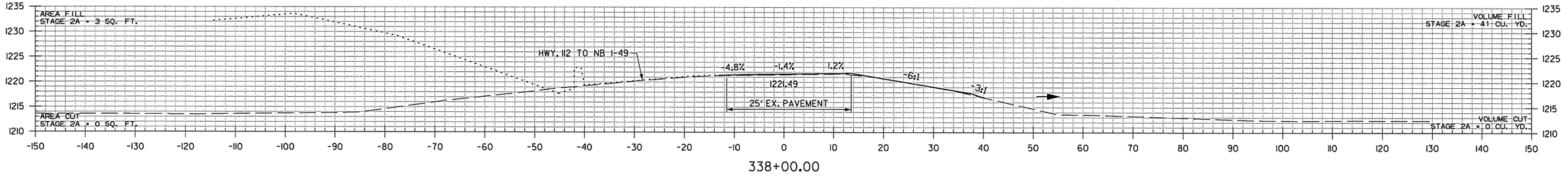

338+00.00

HWY. 71B TO NB I-49
STA. 338+00 TO STA. 338+57

AEWierclok 3/20/2016 11:58:35 AM
WORKSPACE: AHTD
L:\201\101707 - I-540 Widening & Interchange Improvement\Drawings\r-BB0414_CX_HWY 71B NB I-49..dgn
REVISED DATE:

DATE REVISED	DATE FILMED	DATE REVISED	DATE FILMED	FED.RD. DIST.NO.	STATE	FED.AID PROJ.NO.	SHEET NO.	TOTAL SHEETS
				6	ARK.			
				JOB NO.		BB0414	839	886

(2) CROSS SECTIONS

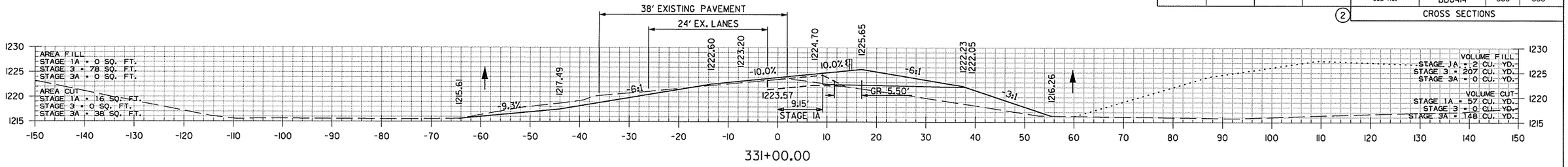

331+00.00

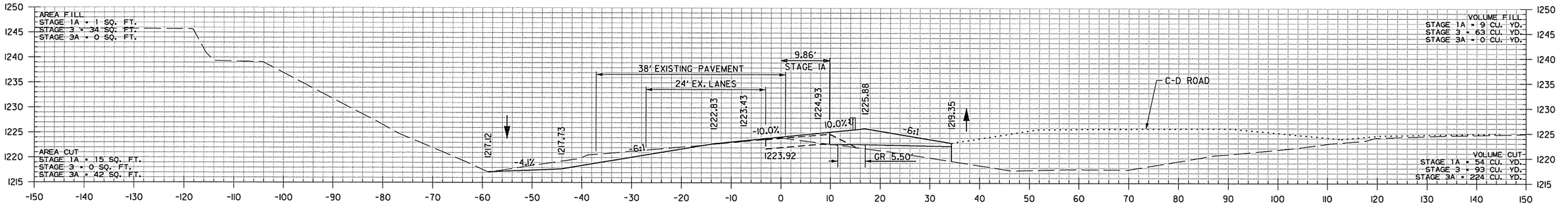

330+00.00

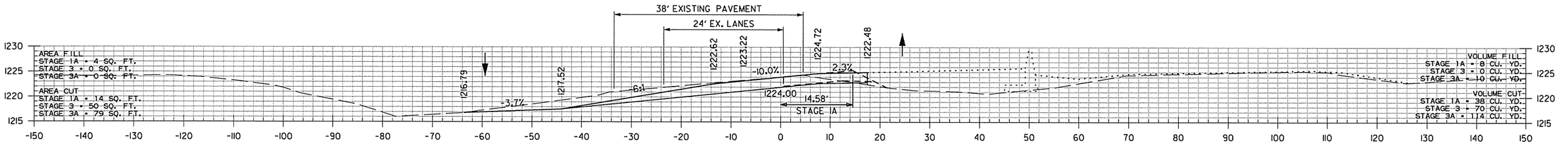

329+00.00

STA. 328+76.55 MAX. SUPERELEVATION (0.100'/')

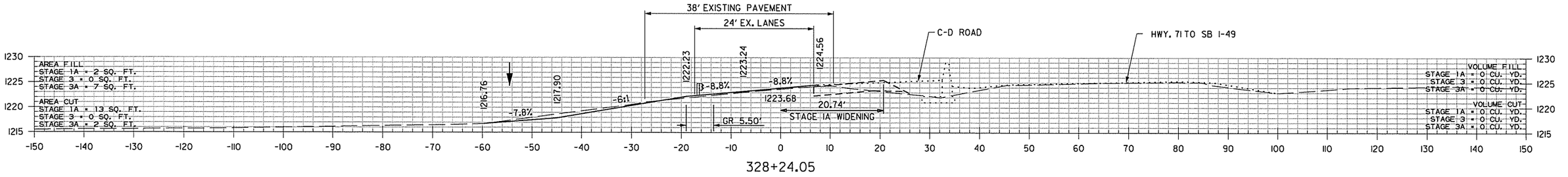

328+24.05

STA. 325+26.55 BEGIN SUPERELEVATION

STA. 328+24.05 BEGIN SB I-49 TO HWY. 112 RAMP

SB I-49 TO HWY. 112 RAMP
STA. 328+24 TO STA. 331+00

AEWierclak 3/20/2016 11:58:36 AM
WORKSPACE: AHTD
L:\201\100170\7 - I-540 Widening & Interchange Improvement\Drawings\r-BB0414_CX_SB I-49 TO HWY 112_.dgn
REVISED DATE:

DATE REVISED	DATE FILMED	DATE REVISED	DATE FILMED	FED.RD. DIST.NO.	STATE	FED.AID PROJ.NO.	SHEET NO.	TOTAL SHEETS
				6	ARK.			
				JOB NO.		BB0414	840	886
				(2)		CROSS SECTIONS		

STA. 334+58.94 MATCH EX. SUPERELEVATION (0.0912'/')

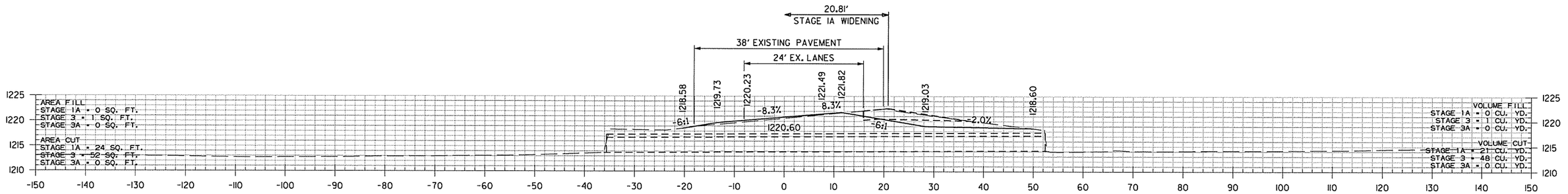

334+21.53

STA. 334+21 IN PLACE
DBL. 6' X 3' X 88' R.C. BOX CULVERT
WITH 3:1 WINGS LT. & RT.
RETAIN

STA. 334+21
EX. F.L. = 1214.16 RT.
EX. F.L. = 1213.71 LT.

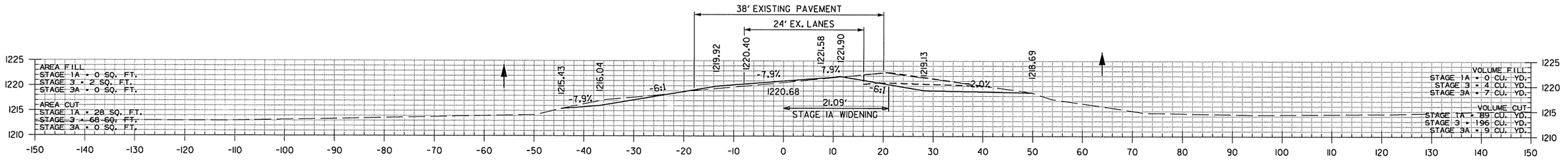

334+00.00

STA. 333+26.40 END SUPERELEVATION (0.064'/')
STA. 333+26.40 BEGIN SUPERELEVATION (0.064'/')

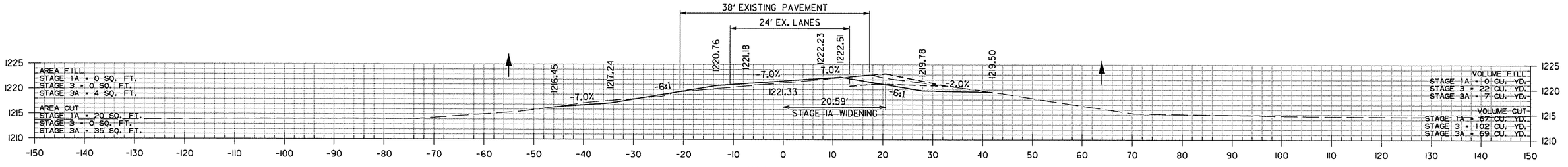

333+00.00

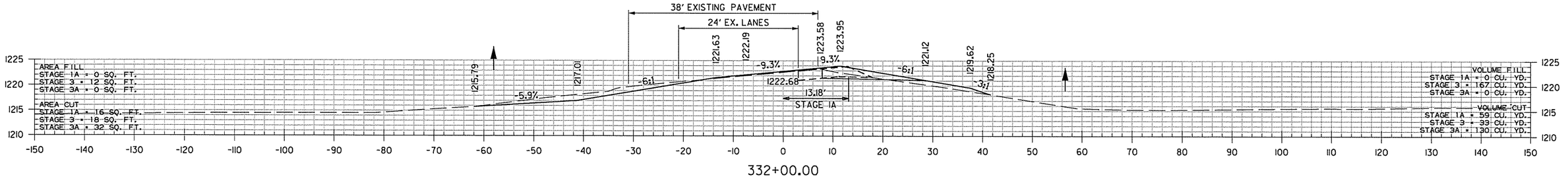

332+00.00

STA. 331+69.93 MAX. SUPERELEVATION (0.100'/')

SB I-49 TO HWY. 112 RAMP
STA. 332+00 TO STA. 334+22

AEWier-clark 3/20/2016 11:58:36 AM
WORKSPACE: AHTD
L:\201\1101707 - I-540 Widening & Interchange Improvement\Drawings\r-BB0414_CX_SB I-49 TO HWY 112..dgn
REVISED DATE:

DATE REVISED	DATE FILMED	DATE REVISED	DATE FILMED	FED.RD. DIST.NO.	STATE	FED.AID PROJ.NO.	SHEET NO.	TOTAL SHEETS
				6	ARK.			
				JOB NO.		BB0414	841	886
				(2)		CROSS SECTIONS		

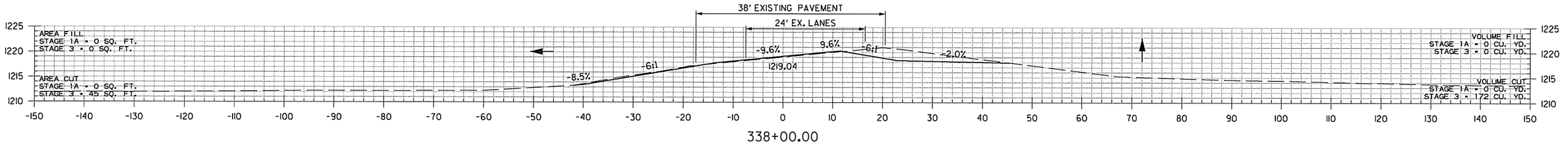

338+00.00

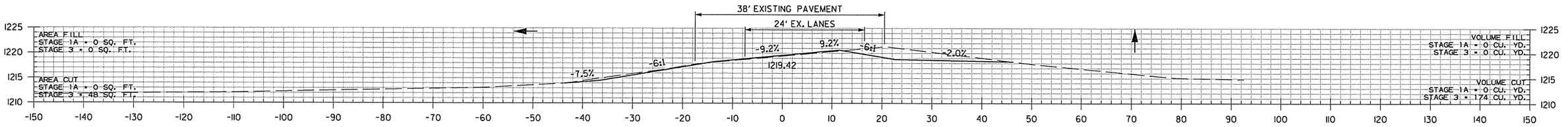

337+00.00

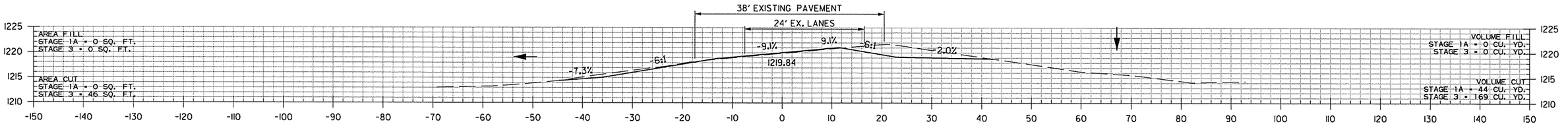

336+00.00

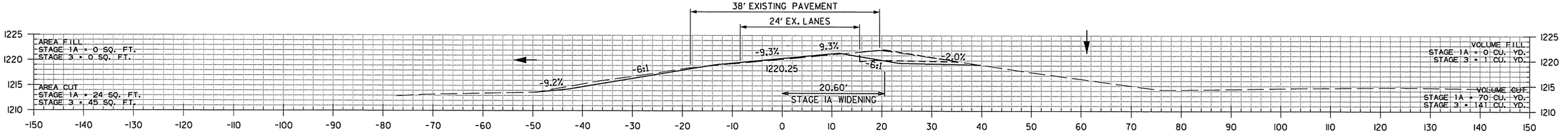

335+00.00

SB I-49 TO HWY. 112 RAMP
STA. 335+00 TO STA. 338+00

AEWierclak 3/20/2016 11:58:36 AM
WORKSPACE: AHTD
L:\20IN\NII7IOT - I-540 Widening & Interchange Improvement\Drawings\r-BB0414_CX_SB I-49 TO HWY 112..dgn
REVISED DATE:

DATE REVISED	DATE FILMED	DATE REVISED	DATE FILMED	FED.RD. DIST.NO.	STATE	FED.AID PROJ.NO.	SHEET NO.	TOTAL SHEETS
				6	ARK.			
				JOB NO.		BB0414	842	886
				(2)		CROSS SECTIONS		

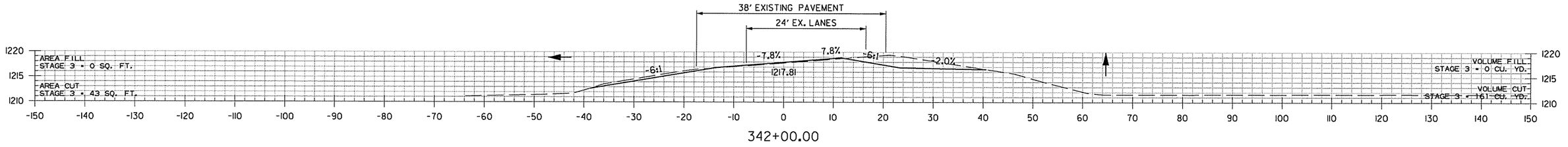

342+00.00

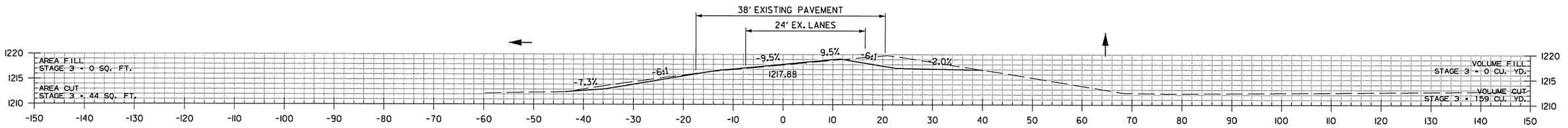

341+00.00

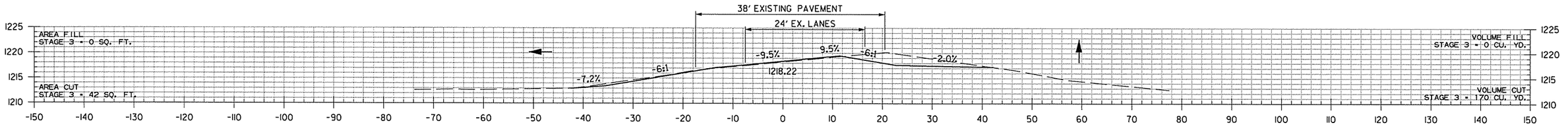

340+00.00

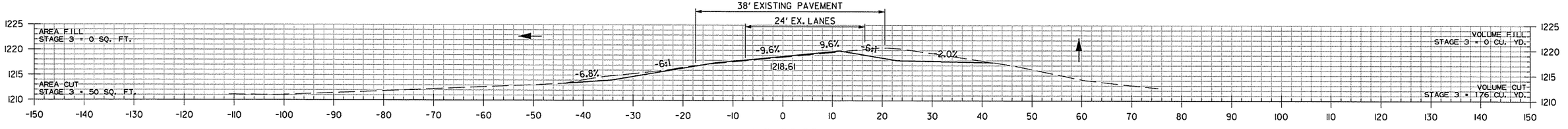

339+00.00

SB I-49 TO HWY. 112 RAMP
STA. 339+00 TO STA. 342+00

AEWierclak 3/20/2016 11:58:36 AM
WORKSPACE: AHTD
L:\2011\101707 - I-540 Widening & Interchange Improvement\Drawings\r-BB0414_CX-SB I-49 TO HWY 112.dgn
REVISED DATE:

DATE REVISED	DATE FILMED	DATE REVISED	DATE FILMED	FED.RD. DIST.NO.	STATE	FED.AID PROJ.NO.	SHEET NO.	TOTAL SHEETS
				6	ARK.			
				JOB NO.		BB0414	843	886
				(2)		CROSS SECTIONS		

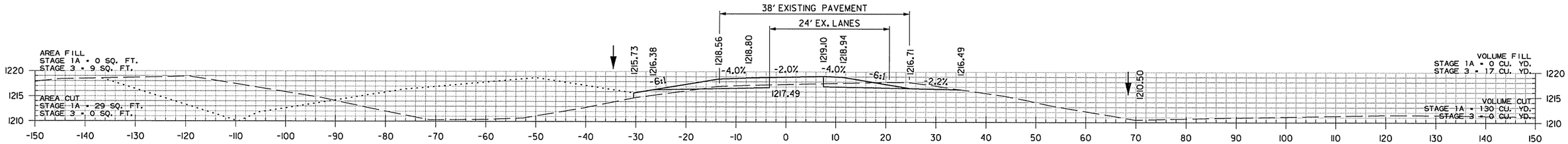

345+00.00

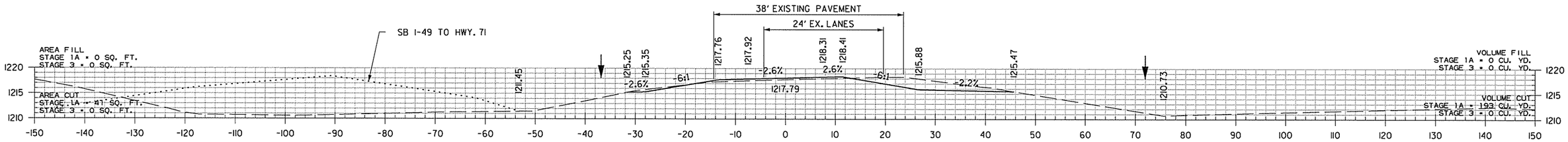

344+00.00

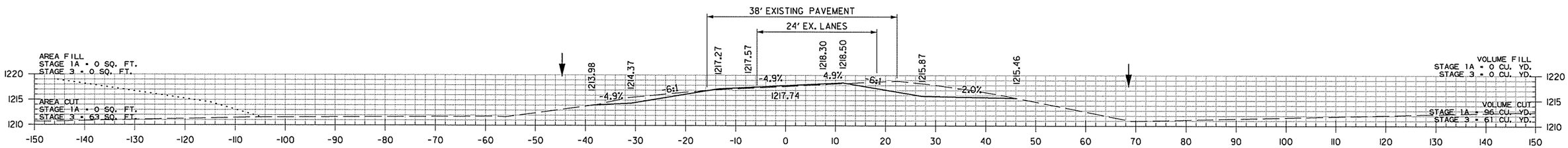

343+00.00

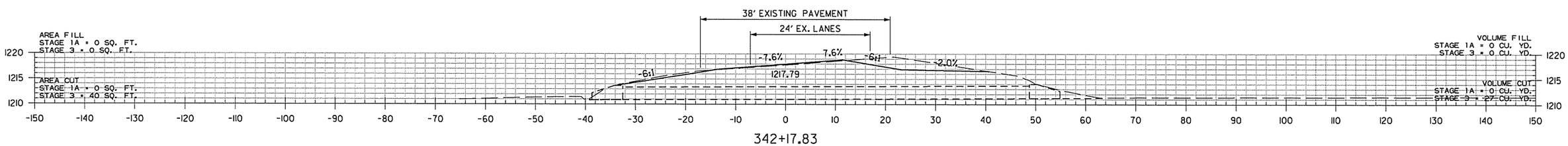

342+17.83

STA. 342+17 IN PLACE
30" X 86' R.C. PIPE CULVERT
WITH 3:1 FES. LT. & RT.
RETAIN

STA. 342+17
EX. F.L. = 1211.39 (RT.)
E.X F.L. = 1210.85 (LT.)

SB I-49 TO HWY. 112 RAMP
STA. 342+18 TO STA. 345+00

AEWlarclak 3/20/2016 11:58:37 AM
WORKSPACE: AHTD
L:\20IN\I0I707 - I-540 Widening & Interchange Improvement\Drawings\rBB0414_CX_SB I-49 TO HWY 112..dgn
REVISED DATE:

DATE REVISED	DATE FILMED	DATE REVISED	DATE FILMED	FED.RD. DIST.NO.	STATE	FED.AID PROJ.NO.	SHEET NO.	TOTAL SHEETS
				6	ARK.			
				JOB NO.		BB0414	844	886

(2) CROSS SECTIONS

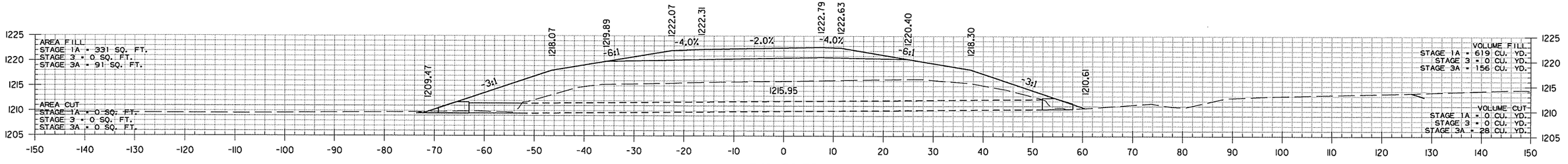

348+58.32

STA. 348+58.00
END SP. DITCH LT. -0.14%
ELEV. 1209.47

STA. 348+58 IN PLACE
24" X 104' R.C. PIPE CULVERT
WITH HDWL. LT. & RT.
REMOVE HDWL. LT. AND
EXTEND R.C. PIPE 11' LT.
(CLASS III) TYPE 3 BEDDING
WITH FES. LT.
Q50 = 5 CFS DA = 0.6 ACRES
24" R.C. PIPE = 15 LIN. FT.
24" FES = 1EA.

STA. 348+58
EX. F.L. = 1210.45 (RT.)
PROP F.L. = 1210.64 (RT.)
EX. F.L. = 1209.47 (LT.)
PROP F.L. = 1209.47 (LT.)

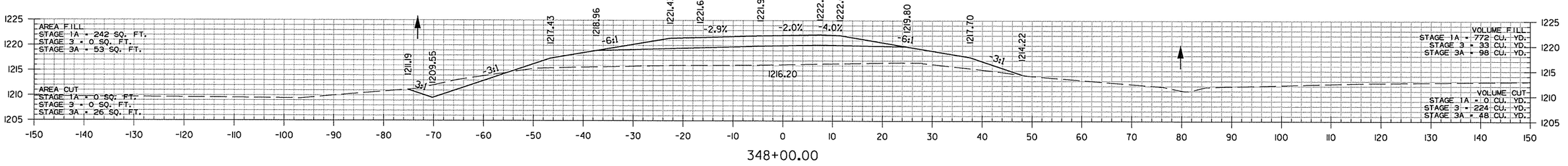

348+00.00

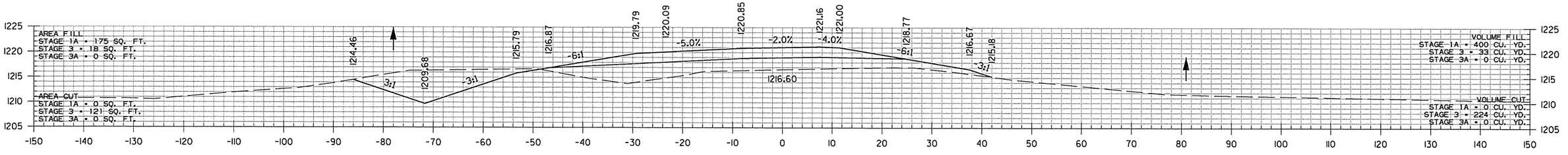

347+00.00

STA. 346+06.21
BEGIN SP. DITCH LT. -0.14%
ELEV. 1209.81

346+00.00

SB I-49 TO HWY. 112 RAMP
STA. 346+00 TO STA. 348+58

AEWierciak 3/20/2016 11:58:37 AM
WORKSPACE: AHTD
L:\201\NRT\TOT - I-540 Widening & Interchange Improvement\Drawings\rBB0414_CX_SB I-49 TO HWY 112..dgn
REVISED DATE:

DATE REVISED	DATE FILMED	DATE REVISED	DATE FILMED

FED.RD. DIST.NO.	STATE	FED.AID PROJ.NO.	SHEET NO.	TOTAL SHEETS
6	ARK.			
JOB NO.		BB0414	845	886

(2) CROSS SECTIONS

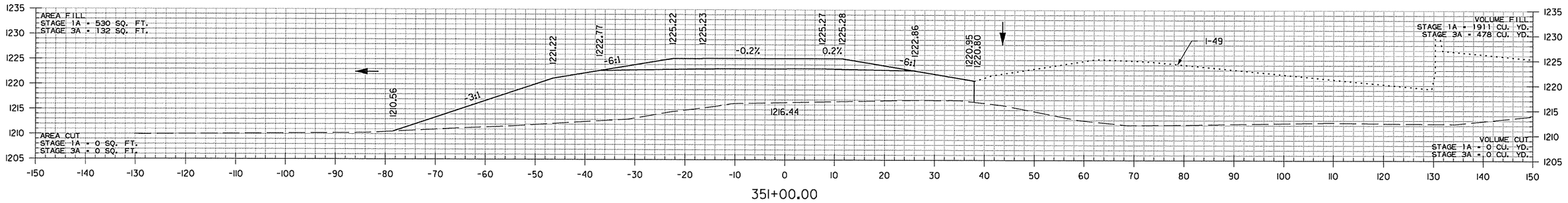

351+00.00

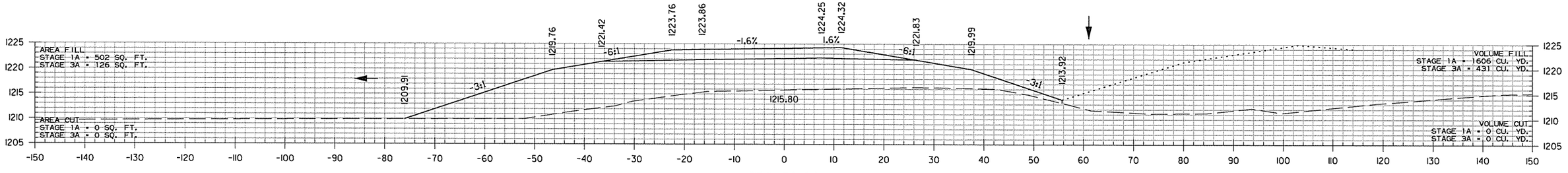

350+00.00

STA. 349+74.48 BEGIN SUPERELEVATION

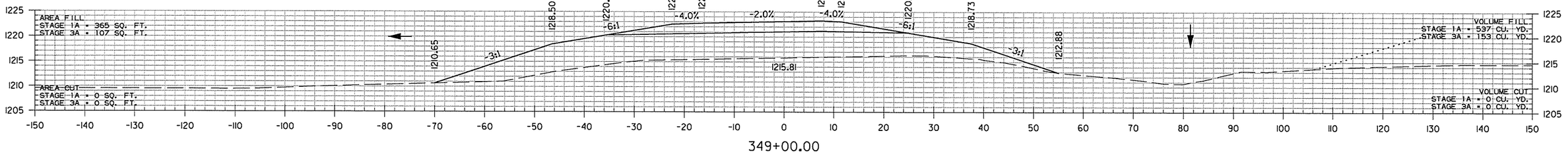

349+00.00

SB I-49 TO HWY. 112 RAMP
STA. 349+00 TO STA. 351+00

AEWiercIoK 3/20/2016 11:58:37 AM
WORKSPACE: AHTD
L:\ROW\100TOT - I-540 Widening & Interchange Improvement\Drawings\r-BB0414_CX-SB I-49 TO HWY 112..dgn
REVISED DATE:

DATE REVISED	DATE FILMED	DATE REVISED	DATE FILMED	FED.RD. DIST.NO.	STATE	FED.AID PROJ.NO.	SHEET NO.	TOTAL SHEETS
				6	ARK.			
				JOB NO.		BB0414	846	886
				(2)	CROSS SECTIONS			

STA. 352+74.48 END SB I-49 TO HWY. 112 RAMP

STA. 352+74.48 END SUPERELEVATION (0.023'/')

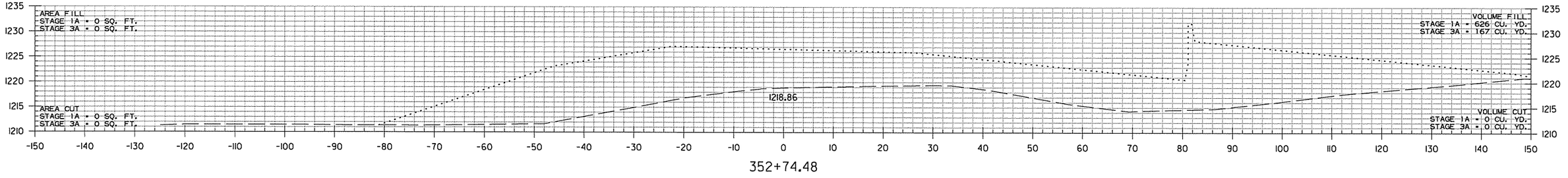

352+74.48

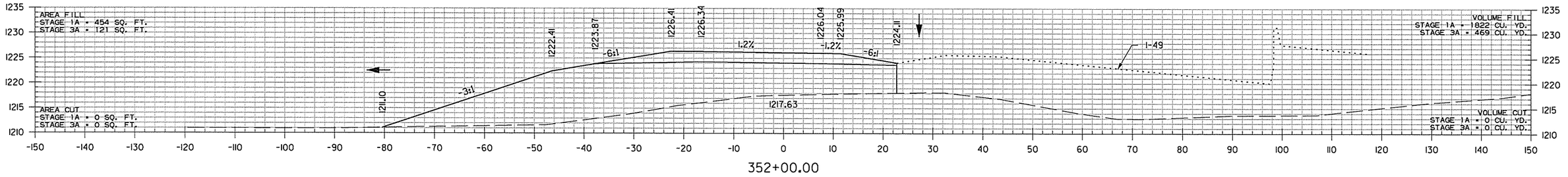

352+00.00

SB I-49 TO HWY. 112 RAMP
STA. 352+00 TO STA. 352+74

AEWier-clark 3/20/2016 11:58:37 AM
WORKSPACE: AHTD
L:\201\101707 - I-540 Widening & Interchange Improvement\Drawings\rBB0414_CX_SB I-49 TO HWY 112.dgn
REVISED DATE:

DATE REVISED	DATE FILMED	DATE REVISED	DATE FILMED	FED.RD. DIST.NO.	STATE	FED.AID PROJ.NO.	SHEET NO.	TOTAL SHEETS
				6	ARK.			
				JOB NO.		BB0414	847	886
				(2)	CROSS SECTIONS			

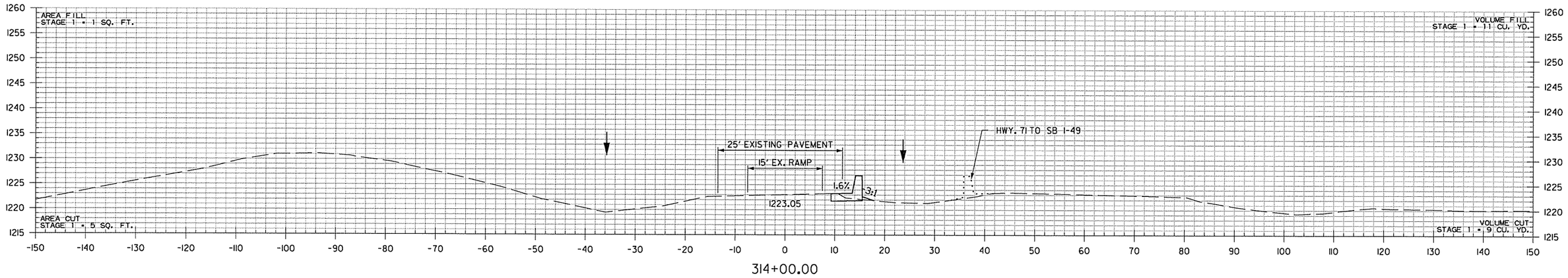

314+00.00

STA. 313+40.49 BEGIN BARRIER WALL RT.

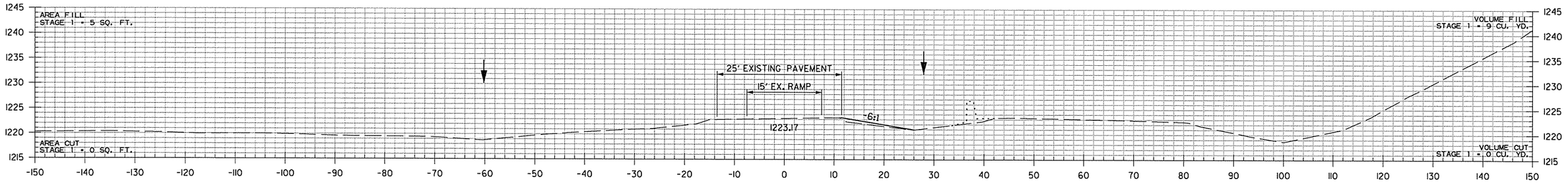

313+00.00

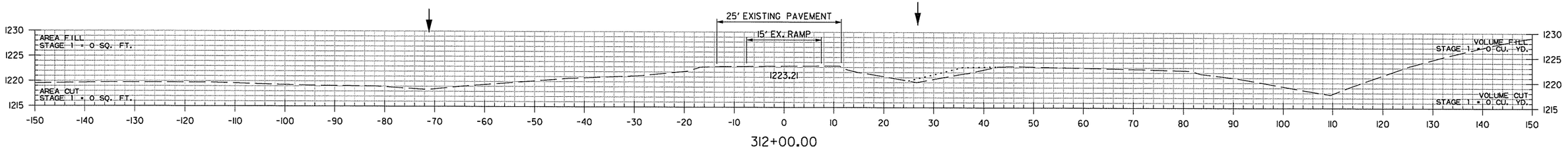

312+00.00

SB I-49 TO HWY. 71B RAMP
STA. 312+00 TO STA. 314+00

AEWIer-clark 3/20/2016 11:58:38 AM
WORKSPACE: AHTD
L:\201\101707 - I-540 Widening & Interchange Improvement\Drawings\r-BB0414_CX_SB I-49 TO HWY 71_dgn
REVISED DATE:

DATE REVISED	DATE FILMED	DATE REVISED	DATE FILMED	FED.RD. DIST.NO.	STATE	FED.AID PROJ.NO.	SHEET NO.	TOTAL SHEETS
				6	ARK.			
				JOB NO.		BB0414	848	886
				(2)	CROSS SECTIONS			

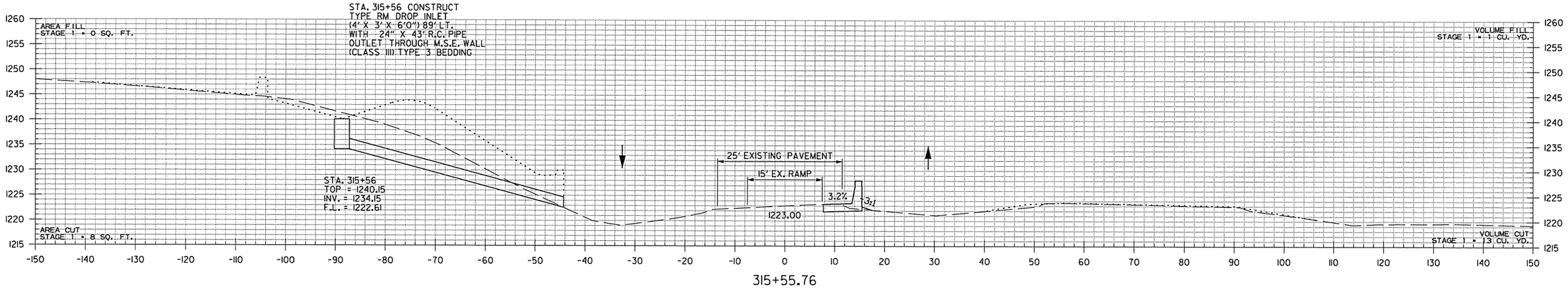

315+55.76

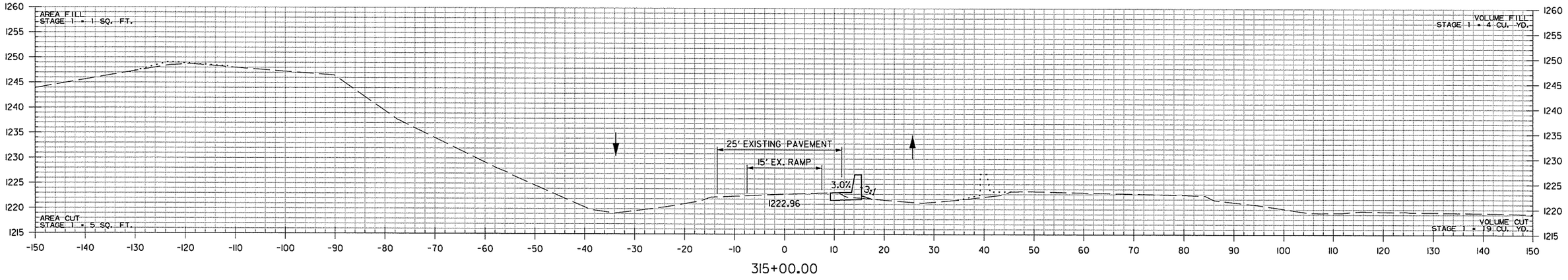

315+00.00

SB I-49 TO HWY. 71B RAMP
STA. 315+00 TO STA. 315+56

AEWerclok 3/20/2016 11:58:38 AM
WORKSPACE: AHTD
L:\2016\16071707 - I-540 Widening & Interchange Improvement\Drawings\rBB0414_CX_SB I-49 TO HWY 71_.dgn
REVISED DATE:

DATE REVISED	DATE FILMED	DATE REVISED	DATE FILMED	FED.RD. DIST.NO.	STATE	FED.AID PROJ.NO.	SHEET NO.	TOTAL SHEETS
				6	ARK.			
				JOB NO.		BB0414	849	886
				(2)		CROSS SECTIONS		

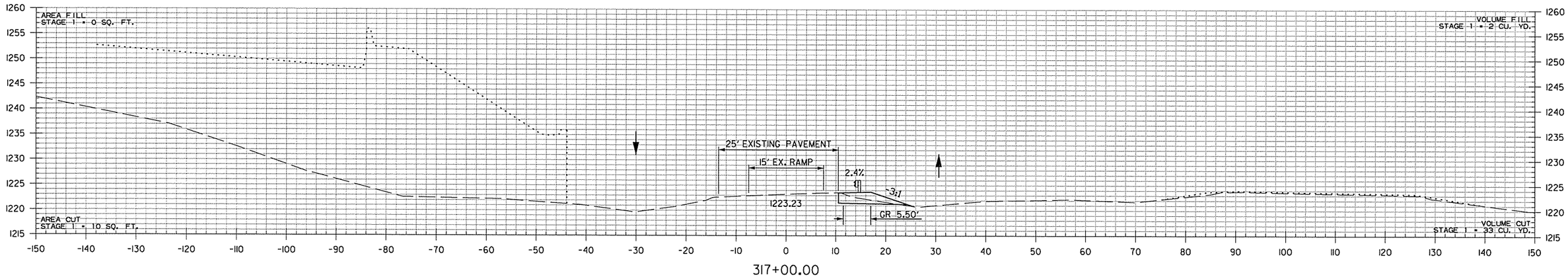

317+00.00

STA. 316+60.49 END BARRIER WALL RT.

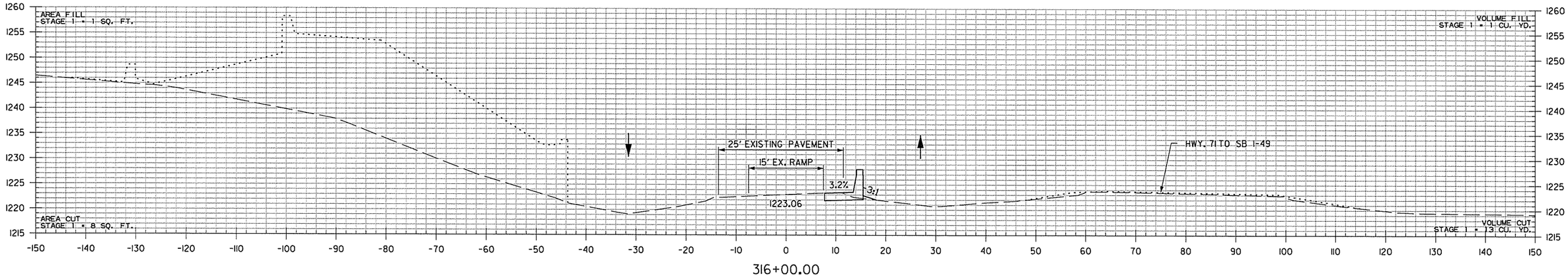

316+00.00

SB I-49 TO HWY. 71B RAMP
STA. 316+00 TO STA. 317+00

AEWerclok 3/20/2016 11:58:38 AM
WORKSPACE: AHTD
L:\20IN\101707 - I-540 Widening & Interchange Improvement\Drawings\r-BB0414_CX_SB I-49 TO HWY 71_.dgn
REVISED DATE:

DATE REVISED	DATE FILMED	DATE REVISED	DATE FILMED	FED.RD. DIST.NO.	STATE	FED.AID PROJ.NO.	SHEET NO.	TOTAL SHEETS
				6	ARK.			
				JOB NO.		BB0414	850	886

(2) CROSS SECTIONS

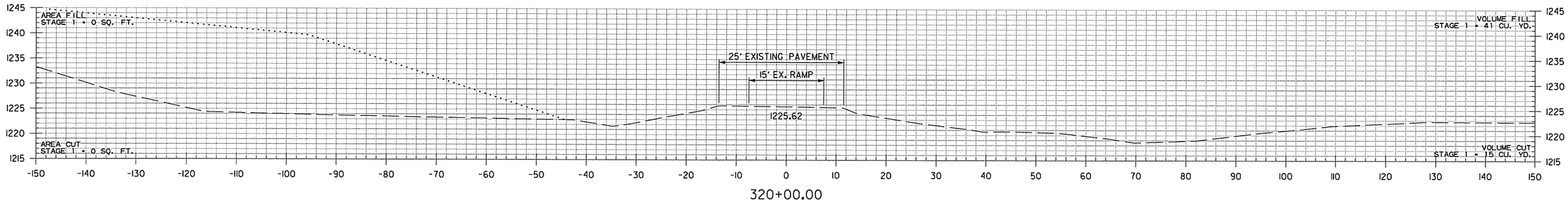

NO CONSTRUCTION
STA. 319+22.76 TO 334+50.00

STA. 319+15.49
END SP. DITCH RT. -0.89%
ELEV. 1219.09

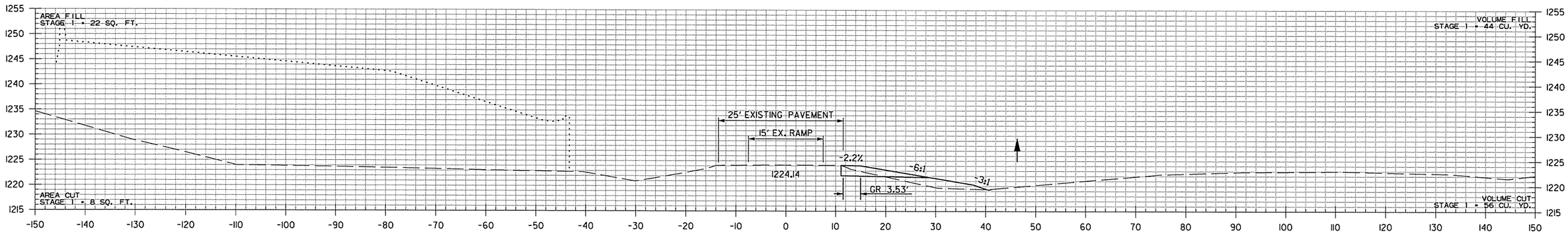

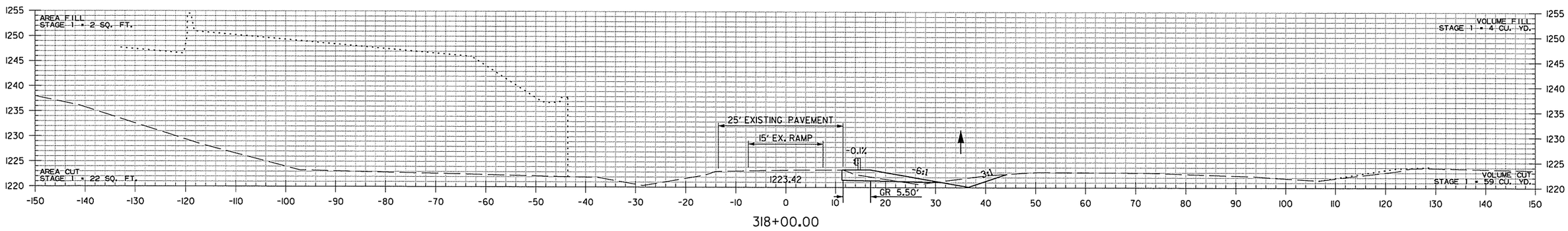

STA. 317+38.49
BEGIN SP. DITCH RT. -0.89%
ELEV. 1220.66

SB I-49 TO HWY. 71B RAMP
STA. 318+00 TO STA. 320+00

AEWtercloK 3/20/2016 11:58:38 AM
WORKSPACE: AHTD
L:\20IN\1017107 - I-540 Widening & Interchange Improvement\Drawings\r-BB0414_CX_SB I-49 TO HWY 71_.dgn
REVISED DATE:

DATE REVISED	DATE FILMED	DATE REVISED	DATE FILMED

FED.RD. DIST.NO.	STATE	FED.AID PROJ.NO.	SHEET NO.	TOTAL SHEETS
6	ARK.			
JOB NO.		BB0414	851	886

(2) CROSS SECTIONS

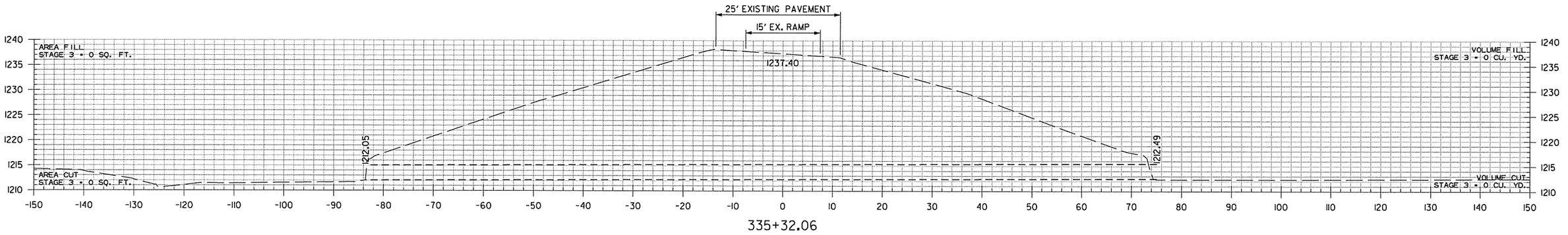

335+32.06

STA. 335+32 IN PLACE DBL.
6' X 3' X 158' R.C. PIPE CULVERT
WITH HDWL. LT. & RT.
RETAIN

STA. 335+32
EX. F.L. = 1212.49 (RT.)
EX. F.L. = 1212.05 (LT.)

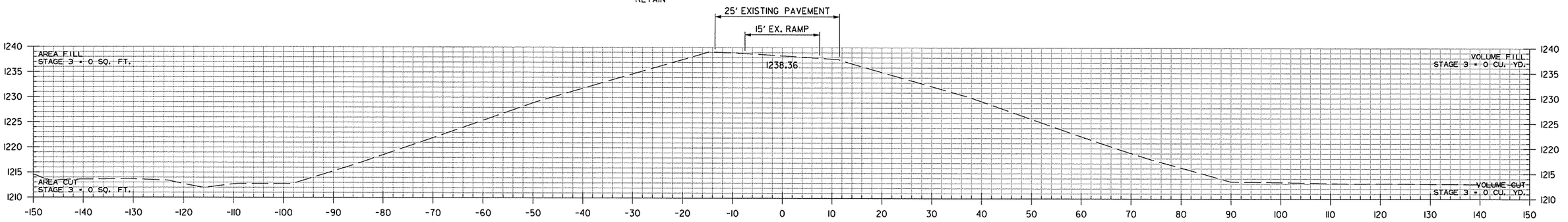

335+00.00

STA. 334+50.00 BEGIN 100' TRANSITION FROM EXISTING

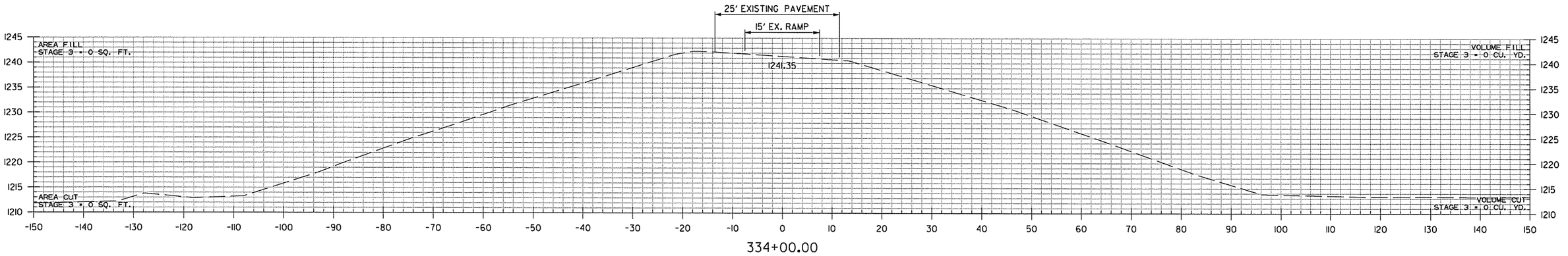

334+00.00

SB I-49 TO HWY. 71B RAMP
STA. 334+00 TO STA. 335+32

AEWierdak 3/20/2016 11:58:38 AM
WORKSPACE: AHTD
L:\2011\W017107 - I-540 Widening & Interchange Improvement\Drawings\rBB0414_CX_SB I-49 TO HWY 71..dgn
REVISED DATE:

DATE REVISED	DATE FILMED	DATE REVISED	DATE FILMED

FED.RD. DIST.NO.	STATE	FED.AID PROJ.NO.	SHEET NO.	TOTAL SHEETS
6	ARK.			
JOB NO.		BB0414	852	886

(2) CROSS SECTIONS

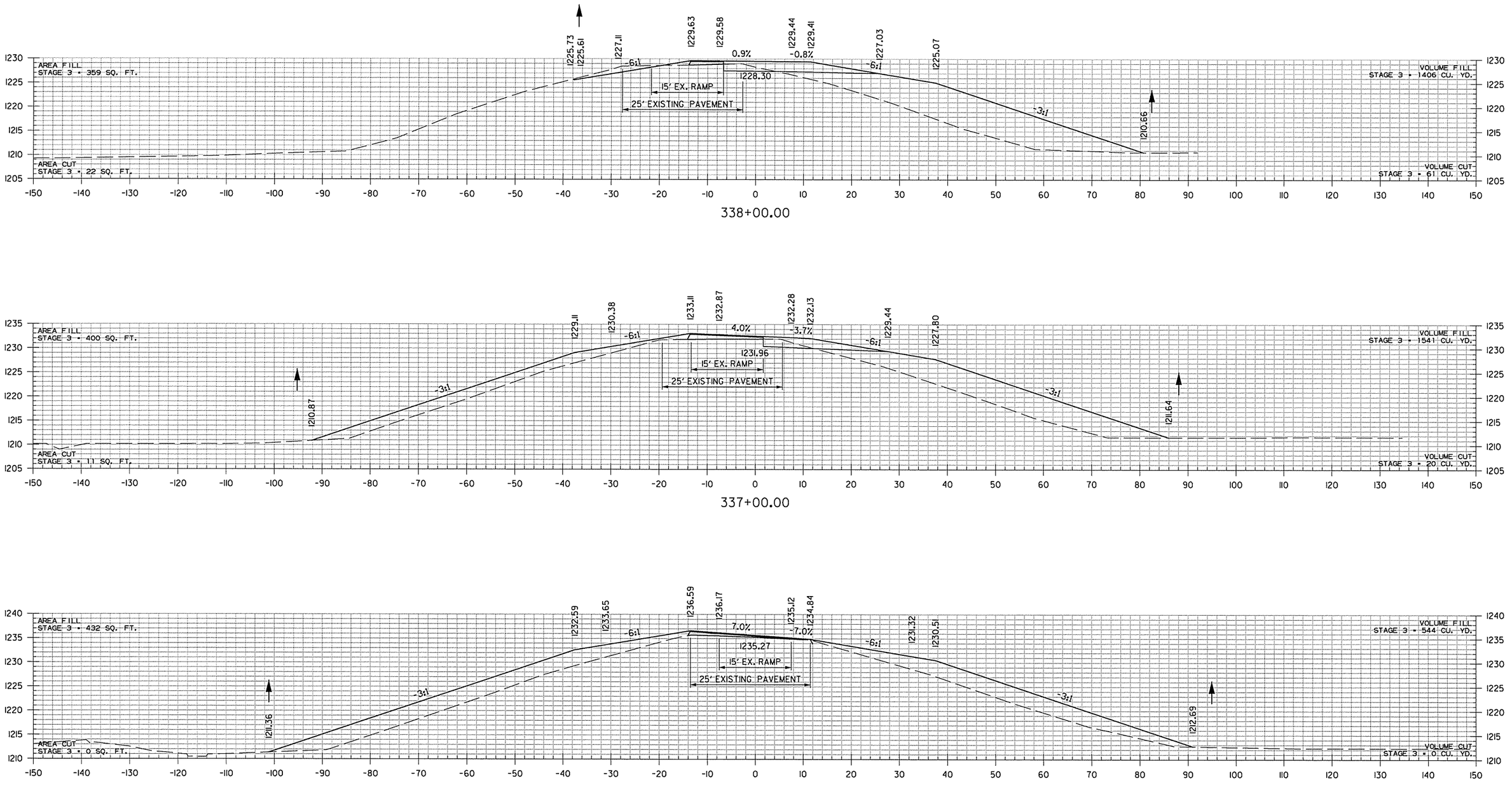

STA. 335+96.34 MAX. SUPERELEVATION (0.071'/')
STA. 335+50.00 MATCH EX. SUPERELEVATION (0.071'/')
STA. 335+50.00 BEGIN SB I-49 TO HWY. 71B RAMP
STA. 335+50.00 END 100' TRANSITION FROM EXISTING

SB I-49 TO HWY. 71B RAMP
STA. 336+00 TO STA. 338+00

AEMerclok 3/20/2016 11:58:38 AM
WORKSPACE: AHTD
L:\20IN\10I7707 - I-540 Widening & Interchange Improvement\Drawings\rBB0414_CX_SB I-49 TO HWY 71.dgn
REVISED DATE:

DATE REVISED	DATE FILMED	DATE REVISED	DATE FILMED	FED.RD. DIST.NO.	STATE	FED.AID PROJ.NO.	SHEET NO.	TOTAL SHEETS
				6	ARK.			
				JOB NO.		BB0414	853	886

(2) CROSS SECTIONS

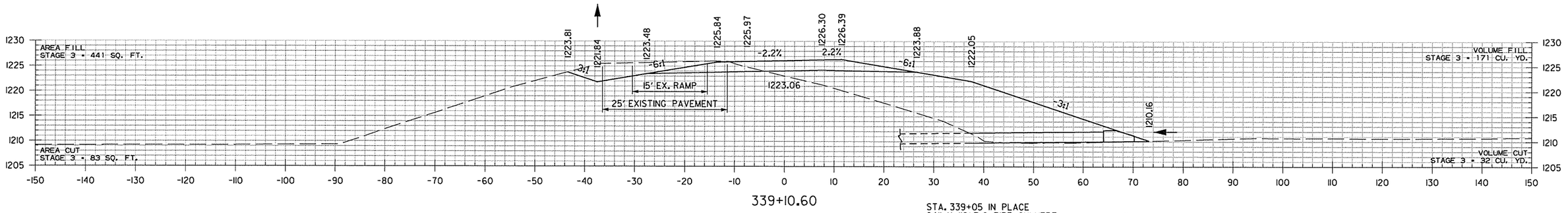

339+10.60

STA. 339+00.99 BEGIN SUPERELEVATION

STA. 339+05 IN PLACE
24" X 119' R.C. PIPE CULVERT
WITH HDWL. LT. & RT.
REMOVE HDWL. RT. AND
EXTEND R.C. PIPE 26' RT.
(CLASS III) TYPE 3 BEDDING
WITH FES. RT.
5° RT. FWD. SKEW
Q50 = 24 CFS DA = 15.0 ACRES
24" R.C. PIPE = 30 LIN. FT.
24" FES = 1EA.

STA. 339+05
EX. F.L. = 1209.73 (RT.)
PROP F.L. = 1210.13 (RT.)

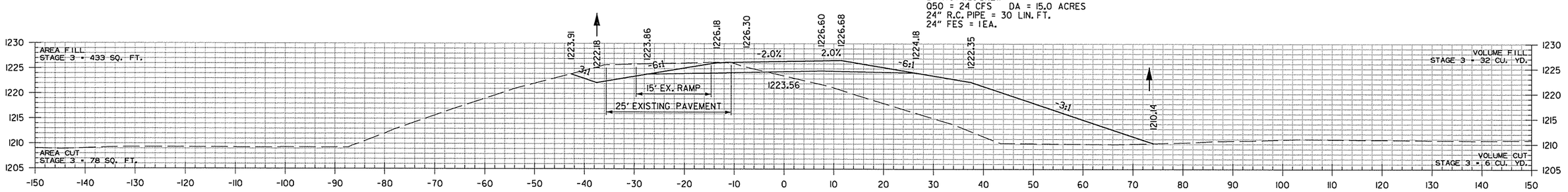

339+00.00

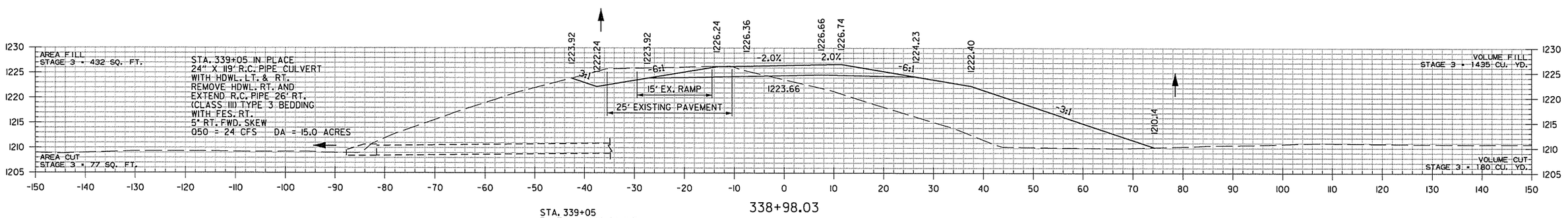

338+98.03

STA. 339+05
EX. F.L. = 1208.44 (LT.)

STA. 338+69.34 END SUPERELEVATION

SB I-49 TO HWY. 71B RAMP
STA. 338+98 TO STA. 339+11

AEWterlick 3/20/2016 11:58:39 AM
WORKSPACE: AHTD
L:\20IN\10I7I07 - I-540 Widening & Interchange Improvement\Drawings\rBB0414_CX_SB I-49 TO HWY 71_.dgn
REVISED DATE:

DATE REVISED	DATE FILMED	DATE REVISED	DATE FILMED	FED.RD. DIST.NO.	STATE	FED.AID PROJ.NO.	SHEET NO.	TOTAL SHEETS
				6	ARK.			
				JOB NO.		BB0414	854	886
				(2)		CROSS SECTIONS		

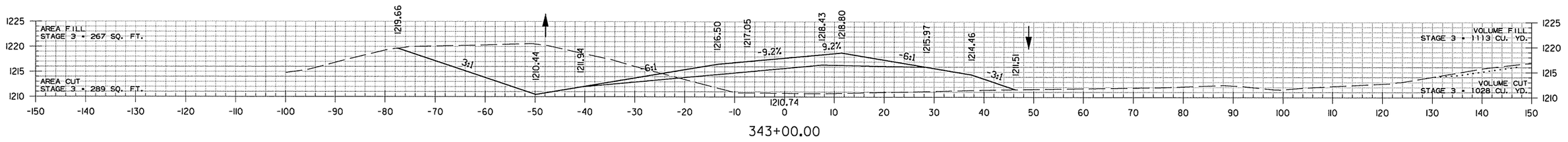

STA. 342+40.99 MAX. SUPERELEVATION (0.092'/')

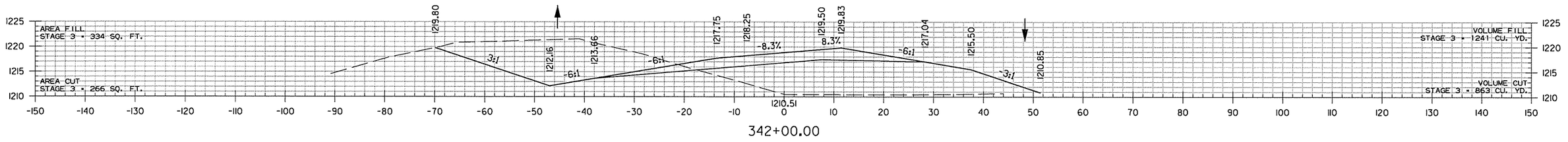

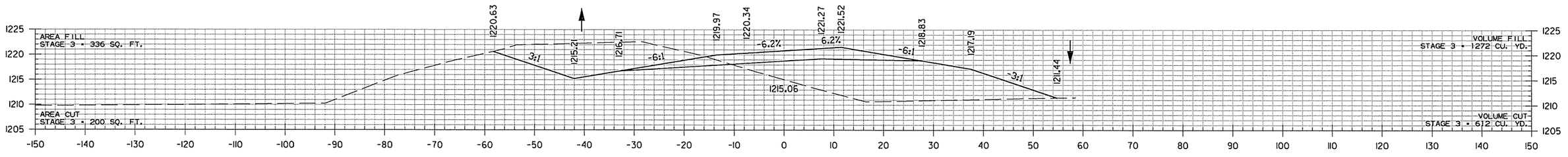

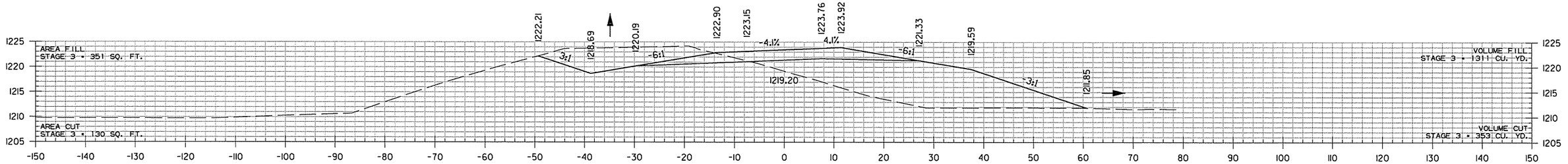

SB I-49 TO HWY. 71B RAMP
STA. 340+00 TO STA. 343+00

AEWierclok 3/20/2016 11:58:39 AM
WORKSPACE: AHTD
L:\201\101707 - I-540 Widening & Interchange Improvement\Drawings\rBB0414_CX_SB I-49 TO HWY 71_.dgn
REVISED DATE:

DATE REVISED	DATE FILMED	DATE REVISED	DATE FILMED	FED.RD. DIST.NO.	STATE	FED.AID PROJ.NO.	SHEET NO.	TOTAL SHEETS
				6	ARK.			
				JOB NO.		BB0414	855	886
				(2)		CROSS SECTIONS		

STA. 348+42.32 END SUPERELEVATION

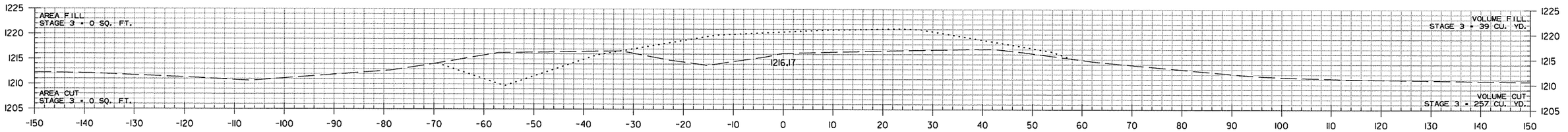

347+00.00

STA. 346+06.21 END SB I-49 TO HWY. 71B RAMP

STA. 346+06.80
END SP. DITCH LT. -0.13%
ELEV. 1209.81

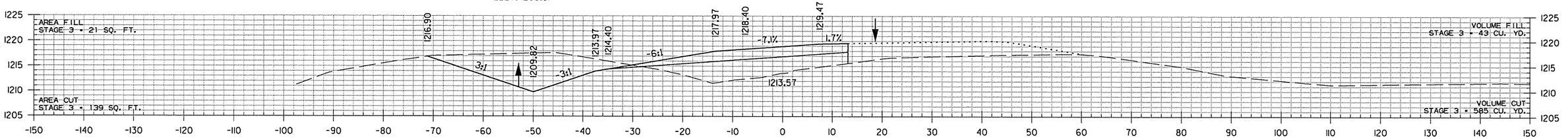

346+00.00

STA. 345+02.32 MAX. SUPERELEVATION (0.092'/')

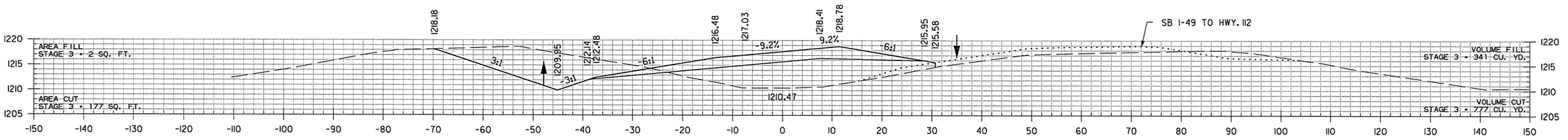

345+00.00

STA. 344+01.00
BEGIN SP. DITCH LT. -0.13%
ELEV. 1210.08

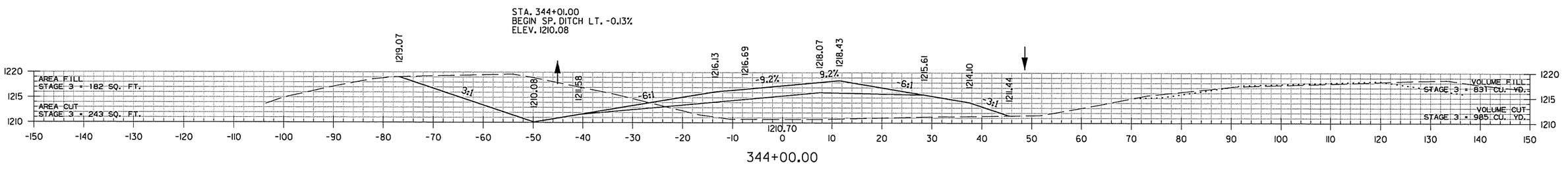

344+00.00

SB I-49 TO HWY. 71B RAMP
STA. 344+00 TO STA. 347+00

AEWierclok 3/20/2016 11:58:39 AM
WORKSPACE: AHTD
L:\20IN\I0I7\07 - I-540 Widening & Interchange Improvement\Drawings\rBB0414_CX_SB I-49 TO HWY 7I..dgn
REVISED DATE:

DATE REVISED	DATE FILMED	DATE REVISED	DATE FILMED	FED.RD. DIST.NO.	STATE	FED.AID PROJ.NO.	SHEET NO.	TOTAL SHEETS
				6	ARK.			
				JOB NO.		BB0414	856	886

(2) CROSS SECTIONS

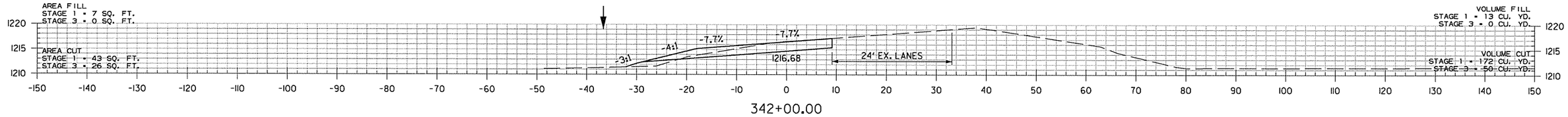

342+00.00

STA. 341+30.53 MATCH EX. SUPERELEVATION

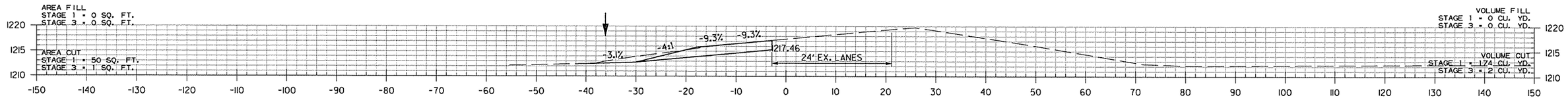

341+00.00

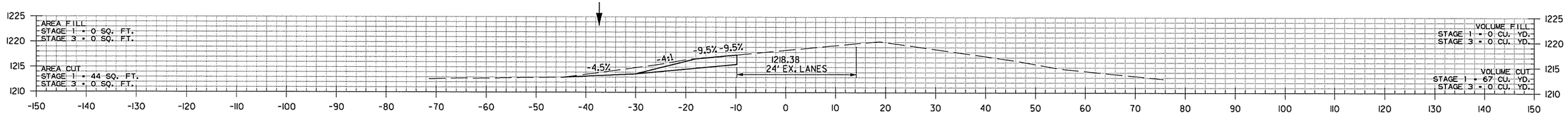

340+00.00

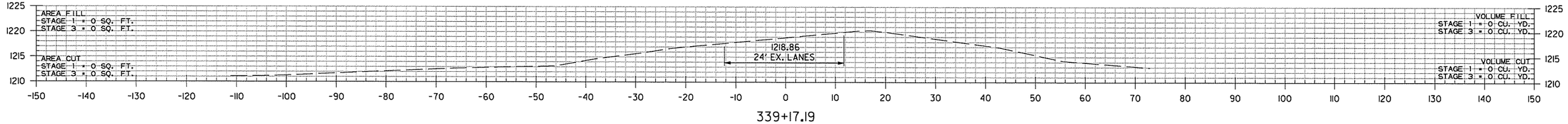

339+17.19

STA. 339+17.19 BEGIN TEMP. I-49 SB DETOUR

TEMP SB I-49 DETOUR
STA. 339+17 TO STA. 342+00

AEWerclok 3/21/2016 9:05:06 AM
WORKSPACE: AHTD
L:\201\101707 - I-540 Widening & Interchange Improvement\Drawings\rBB0414_CX TEMP SB I-49 DETOUR..dgn
REVISED DATE:

DATE REVISED	DATE FILMED	DATE REVISED	DATE FILMED	FED.RD. DIST.NO.	STATE	FED.AID PROJ.NO.	SHEET NO.	TOTAL SHEETS
				6	ARK.			
				JOB NO.		BB0414	857	886

(2) CROSS SECTIONS

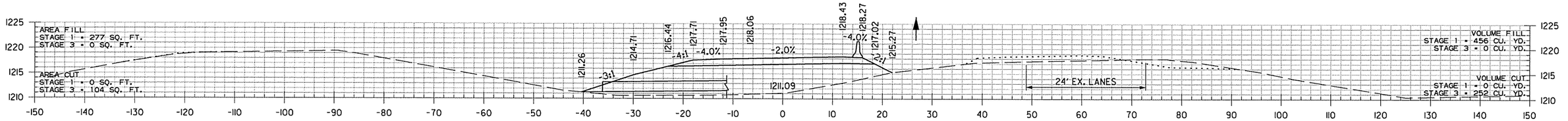

344+53.22

STA. 345+24 CONSTRUCT
24" X 148' TEMPORARY CULVERT
64° RT. FWD. SKEW
Q50 = 6 CFS DA = 0.7 ACRES

STA. 345+24
PROP FL. = 1211.26 LT.
PROP F.L. = 1212.50 RT.

STA. 344+30.53 END SUPERELEVATION

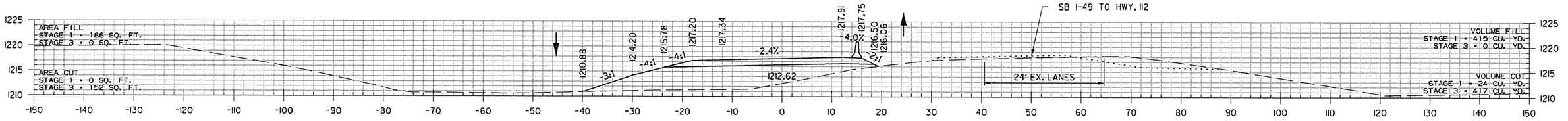

344+00.00

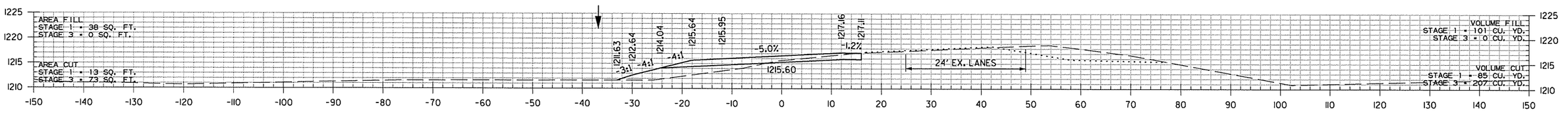

343+00.00

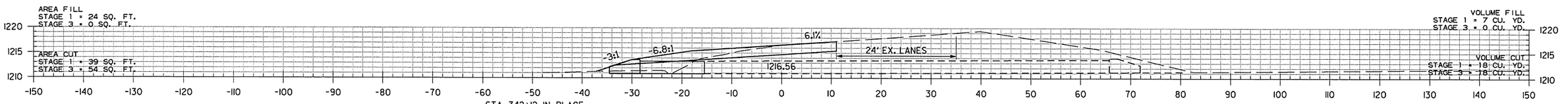

STA. 342+12 IN PLACE
30" X 86' R.C. PIPE CULVERT
WITH FES LT. REMOVE FES
AND EXTEND 13' LT. WITH R.C. PIPE CULVERT
9° LT. FWD. SKEW
Q50 = 11CFS DA = 8.7 ACRES
30" R.C. PIPE CULVERT = 17 LIN. FT.
30" FES = 1EA.

342+11.82

STA. 342+12
EX. FL. = 1210.85 LT.
PROP F.L. = 1210.85 LT.

TEMP SB I-49 DETOUR
STA. 342+12 TO STA. 344+53

AEWerclok 3/21/2016 9:05:06 AM
WORKSPACE: AHTD
L:\201\N007107 - I-540 Widening & Interchange Improvement\Drawings\r-BB0414_CX TEMP SB I-49 DETOUR..dgn
REVISED DATE:

DATE REVISED	DATE FILMED	DATE REVISED	DATE FILMED	FED.RD. DIST.NO.	STATE	FED.AID PROJ.NO.	SHEET NO.	TOTAL SHEETS
				6	ARK.			
				JOB NO.		BB0414	858	886

(2) CROSS SECTIONS

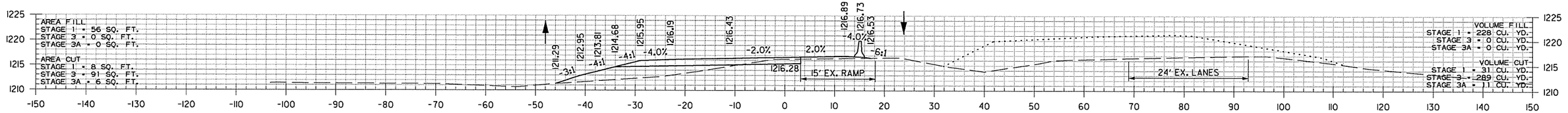

347+00.00

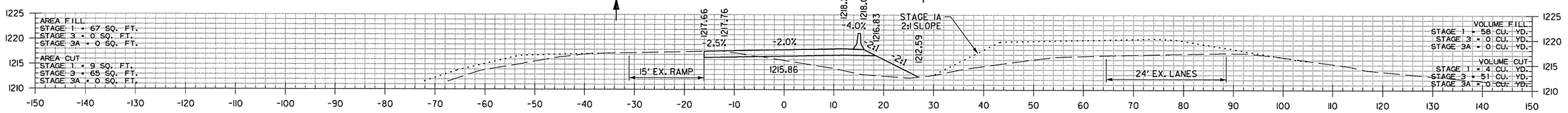

346+00.00

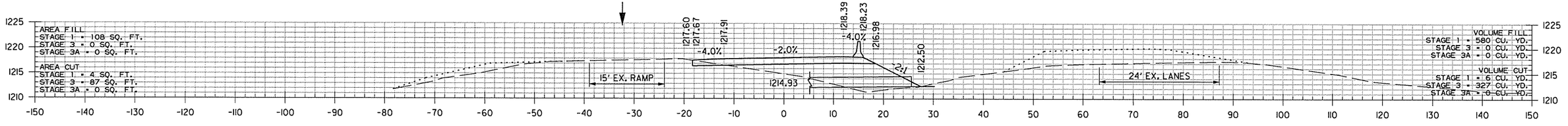

345+82.02

STA. 345+24 CONSTRUCT
24" X 148' TEMPORARY CULVERT
64° RT. FWD. SKEW
Q50 = 6 CFS DA = 0.7 ACRES

STA. 345+24
PROP FL. = 1211.26 LT.
PROP F.L. = 1212.50 RT.

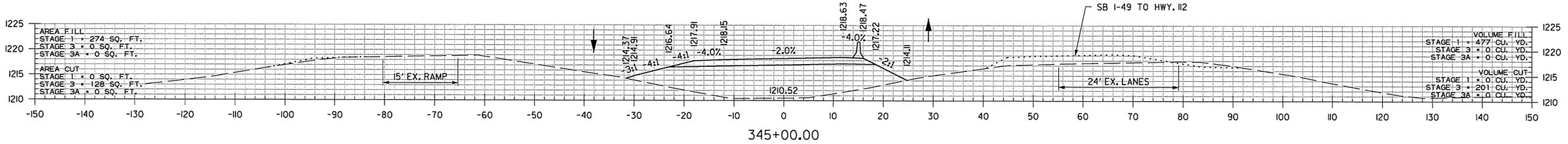

345+00.00

TEMP SB I-49 DETOUR
STA. 345+00 TO STA. 347+00

AEWierciak 3/21/2016 9:05:06 AM
WORKSPACE: AHTD
L:\201\W017\07 - I-540 Widening & Interchange Improvement\Drawings\rBB0414_CX TEMP SB I-49 DETOUR..dgn
REVISED DATE:

DATE REVISED	DATE FILMED	DATE REVISED	DATE FILMED	FED.RD. DIST.NO.	STATE	FED.AID PROJ.NO.	SHEET NO.	TOTAL SHEETS
				6	ARK.			
				JOB NO.		BB0414	859	886
				(2)		CROSS SECTIONS		

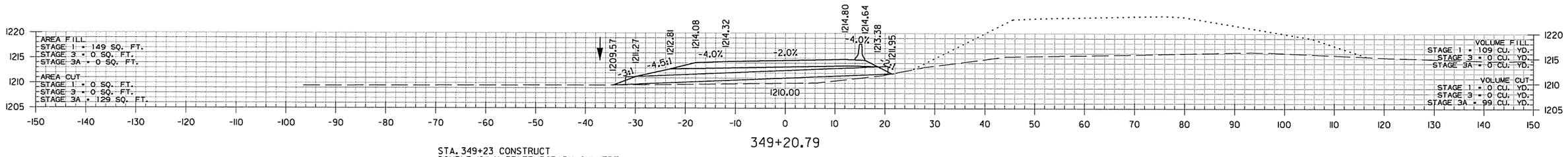

349+20.79

STA. 349+23 CONSTRUCT
DOUBLE 18" X 53' TEMPORARY CULVERT
Q50 = 13 CFS DA = 1.6 ACRES

STA. 349+23
PROP F.L. = 1211.95 RT.
PROP F.L. = 1209.58 LT.

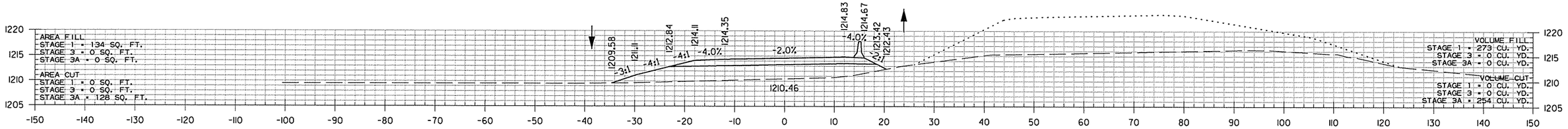

349+00.00

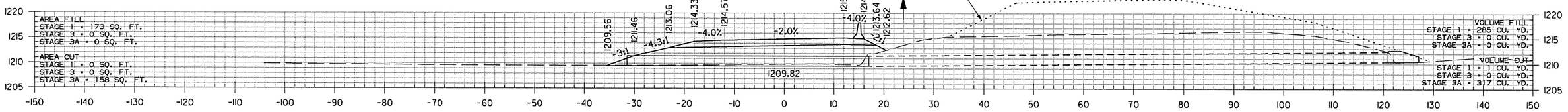

348+51.96

STA. 348+52 IN PLACE
24" X 104' R.C. PIPE CULVERT
WITH HDWL. LT. & RT.
REMOVE HDWL. LT. AND
EXTEND 49' LT. WITH
TEMPORARY CULVERT
Q50 = 5 CFS DA = 0.6 ACRES
24" R.C. PIPE = 53 LIN. FT.

STA. 348+52
EX. F.L. = 1209.47 LT.
PROP F.L. = 1209.47 LT.

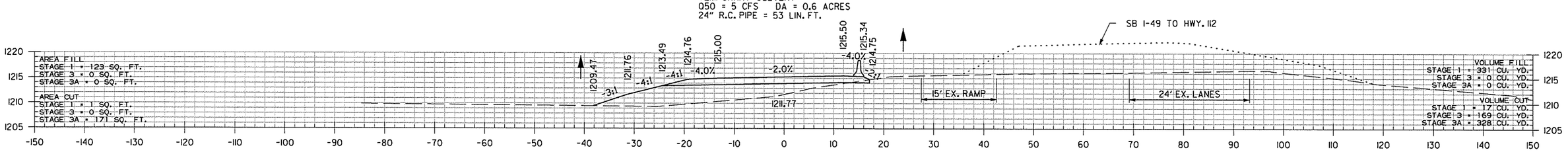

348+00.00

TEMP SB I-49 DETOUR
STA. 348+00 TO STA. 349+21

AEWierclok 3/21/2016 9:05:06 AM
WORKSPACE: AHTD
L:\2015\16017707 - I-540 Widening & Interchange Improvement\Drawings\rBB0414.CX TEMP SB I-49 DETOUR..dgn
REVISED DATE:

DATE REVISED	DATE FILMED	DATE REVISED	DATE FILMED	FED.RD. DIST.NO.	STATE	FED.AID PROJ.NO.	SHEET NO.	TOTAL SHEETS
				6	ARK.			
				JOB NO.		BB0414	860	886
				(2)	CROSS SECTIONS			

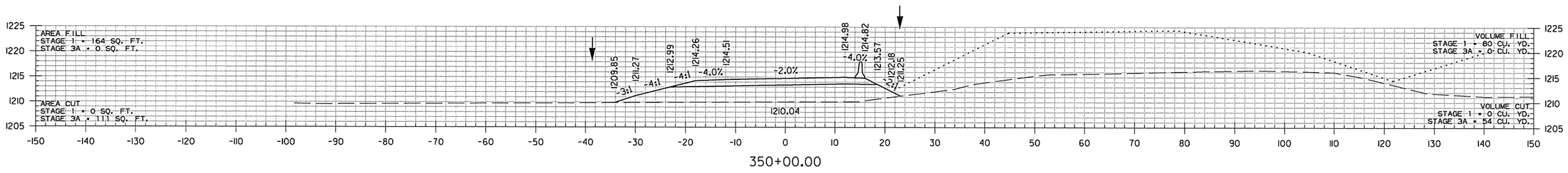

350+00.00

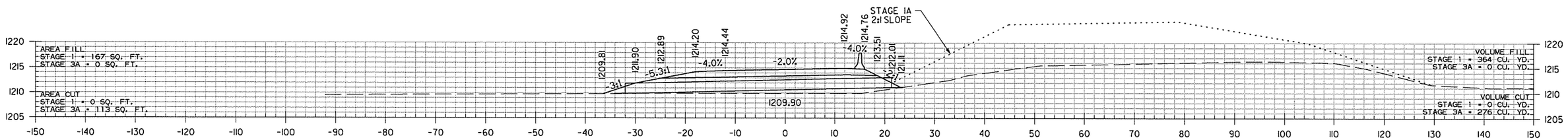

349+87.00

STA. 349+87 CONSTRUCT
24" X 54' TEMPORARY CULVERT
Q50 = 13 CFS DA = 1.6 ACRES

STA. 349+87
PROP F.L. = 1211.16 RT.
PROP F.L. = 1209.81 LT.

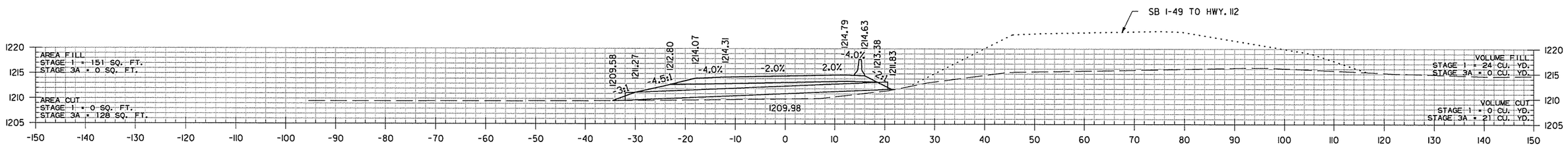

349+25.20

STA. 349+23 CONSTRUCT
DOUBLE 18" X 53' TEMPORARY CULVERT
Q50 = 13 CFS DA = 1.6 ACRES

STA. 349+23
PROP F.L. = 1211.95 RT.
PROP F.L. = 1209.58 LT.

TEMP SB I-49 DETOUR
STA. 349+25 TO STA. 350+00

AEWierclok 3/21/2016 9:05:06 AM
WORKSPACE: AHTD
L:\2011\011707 - I-540 Widening & Interchange Improvement\Drawings\rBB0414_CX TEMP SB I-49 DETOUR..dgn
REVISED DATE:

DATE REVISED	DATE FILMED	DATE REVISED	DATE FILMED	FED.RD. DIST.NO.	STATE	FED.AID PROJ.NO.	SHEET NO.	TOTAL SHEETS
				6	ARK.			
				JOB NO.		BB0414	861	886
				(2)	CROSS SECTIONS			

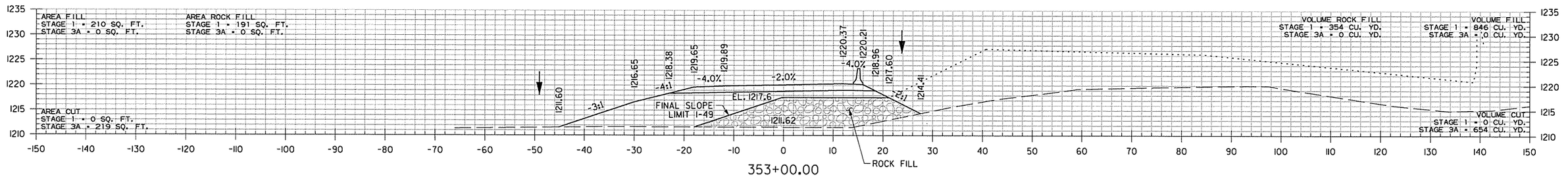

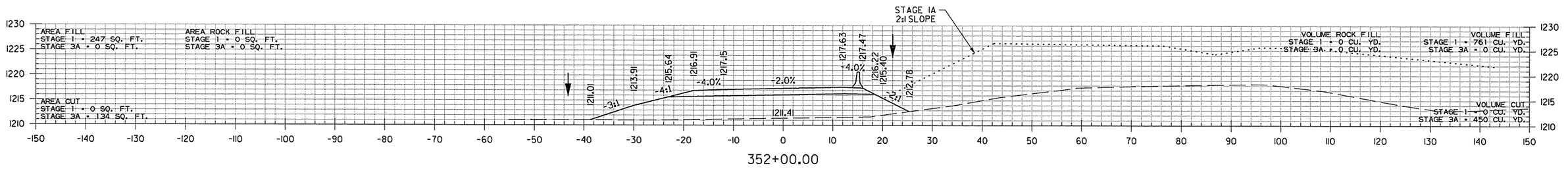

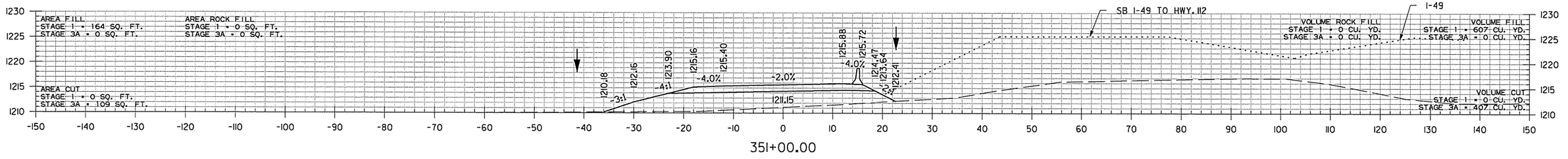

TEMP SB I-49 DETOUR
STA. 351+00 TO STA. 353+00

AEWierclok 3/21/2016 9:05:07 AM
WORKSPACE: AHTD
L:\201\101707 - I-540 Widening & Interchange Improvement\Drawings\rBB0414_CX TEMP SB I-49 DETOUR..dgn
REVISED DATE:

DATE REVISED	DATE FILMED	DATE REVISED	DATE FILMED	FED.RD. DIST.NO.	STATE	FED.AID PROJ.NO.	SHEET NO.	TOTAL SHEETS
				6	ARK.			
				JOB NO.		BB0414	862	886
				(2)		CROSS SECTIONS		

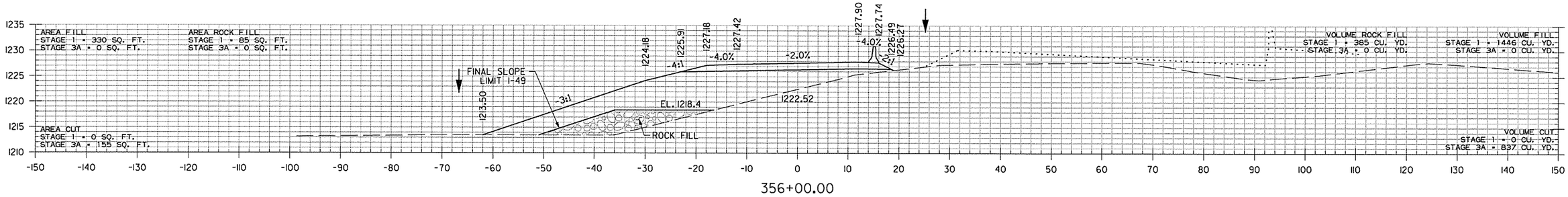

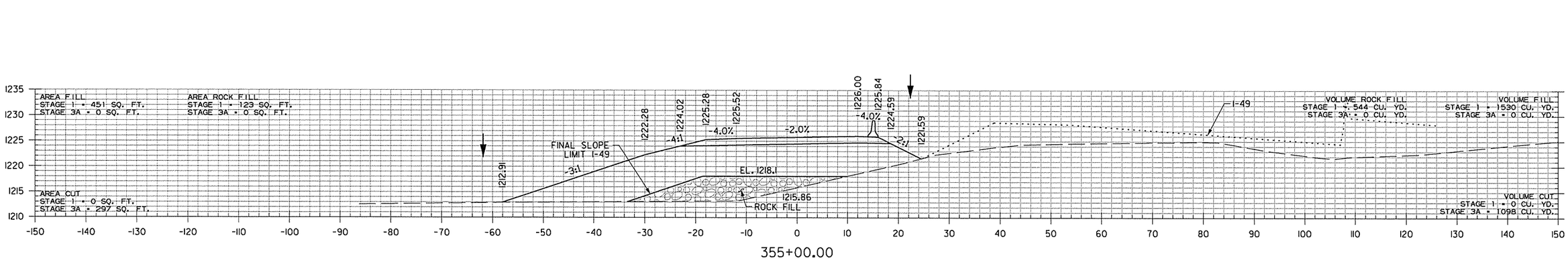

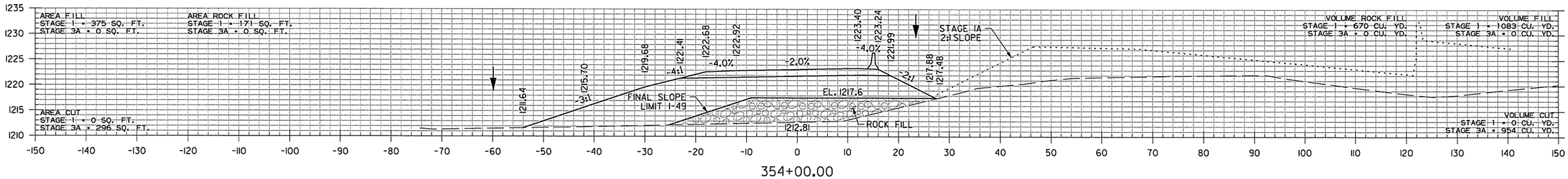

TEMP SB I-49 DETOUR
STA. 354+00 TO STA. 356+00

AEWlerclak 4/14/2016 4:18:45 PM
WORKSPACE: AHTD
L:\20IN\I0I7I07 - I-540 Widening & Interchange Improvement\Drawings\rBB0414_CX TEMP SB I-49 DETOUR_dgn
REVISED DATE:

DATE REVISED	DATE FILMED	DATE REVISED	DATE FILMED	FED.RD. DIST.NO.	STATE	FED.AID PROJ.NO.	SHEET NO.	TOTAL SHEETS
				6	ARK.			
				JOB NO.		BB0414	863	886
				(2)		CROSS SECTIONS		

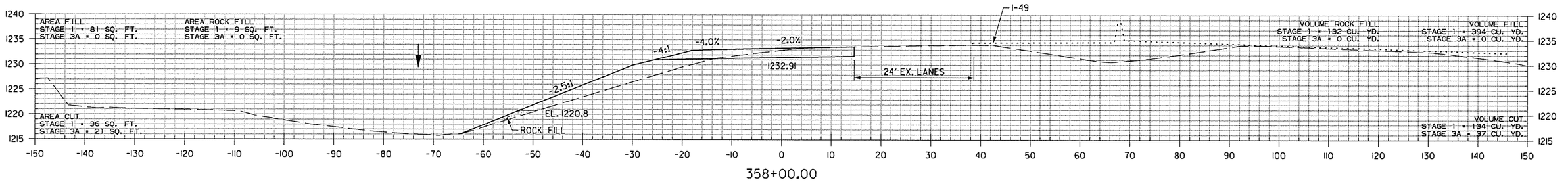

358+00.00

STA. 357+05 IN PLACE
18" X 122' R.C. PIPE OUTLET
WITH FES LT. REMOVE FES AND
EXTEND 14' LT. WITH R.C. PIPE CULVERT
18" R.C. PIPE = 18 LIN. FT.

STA. 357+05
EX. F.L. = 1215.33 LT.
PROP F.L. = 1214.68 LT.

357+05.00

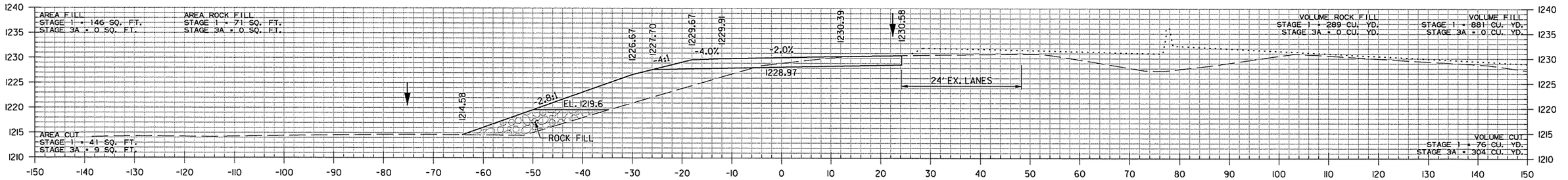

357+00.00

TEMP SB I-49 DETOUR
STA. 357+00 TO STA. 358+00

AEWierciak 4/14/2016 2:38:07 PM
WORKSPACE: AHTD
L:\201\101707 - I-540 Widening & Interchange Improvement\Drawings\rBB0414_CX TEMP SB I-49 DETOUR_dgn
REVISED DATE:

DATE REVISED	DATE FILMED	DATE REVISED	DATE FILMED	FED.RD. DIST.NO.	STATE	FED.AID PROJ.NO.	SHEET NO.	TOTAL SHEETS
				6	ARK.			
				JOB NO.		BB0414	864	886
				(2)		CROSS SECTIONS		

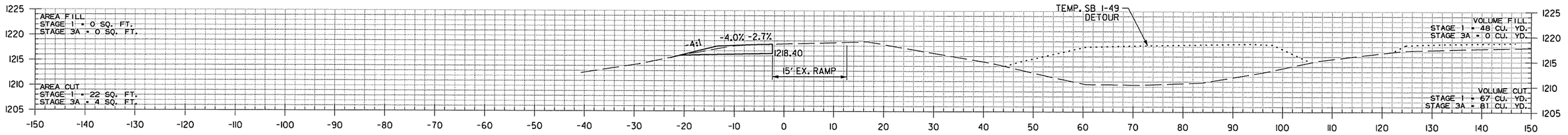

345+00.00

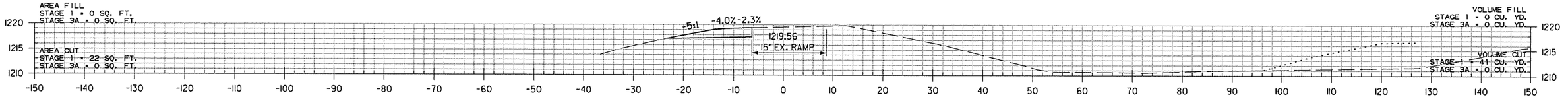

344+00.00

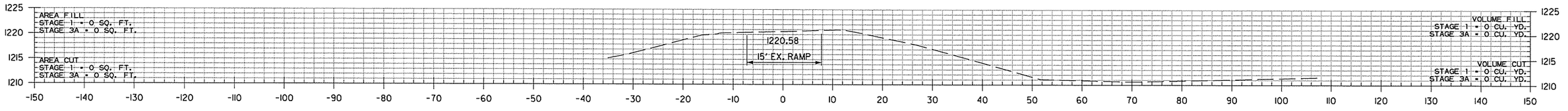

343+00.00

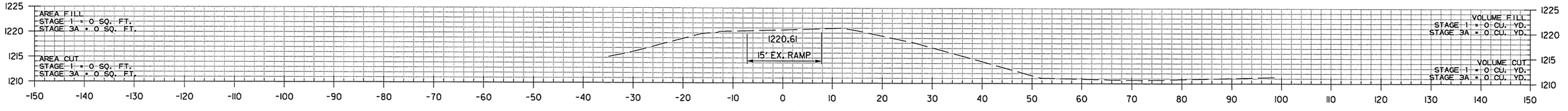

342+96.84

STA. 342+96.84 BEGIN TEMP. SB I-49 TO HWY. 7IB RAMP

TEMP. SB I-49 TO HWY. 7IB RAMP
STA. 342+97 TO STA. 345+00

AEWtercick 3/20/2016 11:58:41 AM
WORKSPACE: AHTD
L:\20IN\10I7707 - I-540 Widening & Interchange Improvement\Drawings\rBB0414_CX TEMP SB I-49 TO HWY 7IB RAMP..dgn
REVISED DATE:

DATE REVISED	DATE FILMED	DATE REVISED	DATE FILMED	FED.RD. DIST.NO.	STATE	FED.AID PROJ.NO.	SHEET NO.	TOTAL SHEETS
				6	ARK.			
				JOB NO.		BB0414	865	886
				(2)		CROSS SECTIONS		

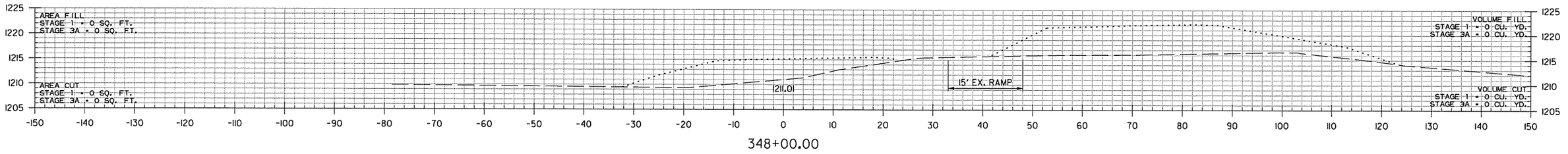

348+00.00

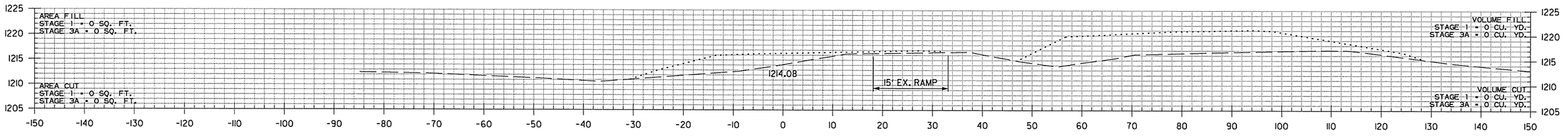

347+00.00

STA. 346+76.17 END TEMP. SB I-49 TO HWY. 71B RAMP

STA. 346+76.17 END SUPERELEVATION

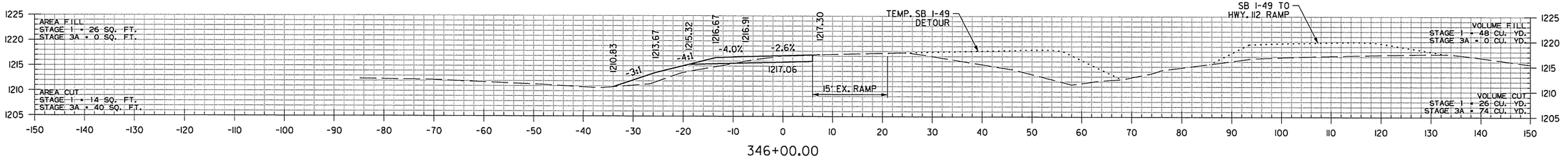

346+00.00

STA. 346+00.00 MATCH EX. SUPERELEVATION (0.026'/')

TEMP. SB I-49 TO HWY. 71B RAMP
STA. 346+00 TO STA. 348+00

AEWtercick 3/20/2016 11:58:41 AM
WORKSPACE: AHTD
L:\20IN\10I7107 - I-540 Widening & Interchange Improvement\Drawings\rBB0414_CX TEMP SB I-49 TO HWY 71B RAMP..dgn
REVISED DATE:

DATE REVISED	DATE FILMED	DATE REVISED	DATE FILMED

FED.RD. DIST.NO.	STATE	FED.AID PROJ.NO.	SHEET NO.	TOTAL SHEETS
6	ARK.			
JOB NO.		BB0414	866	886
(2)	CROSS SECTIONS			

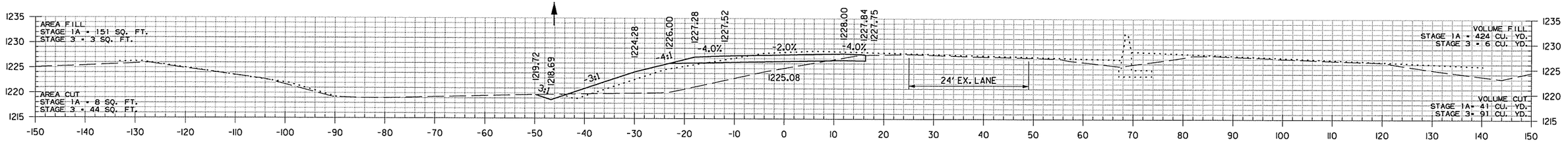

283+00.00

STA. 282+53.00 END SUPERELEVATION

STA. 282+25.00
BEGIN SP. DITCH LT. -2.63%
ELEV. 1220.67

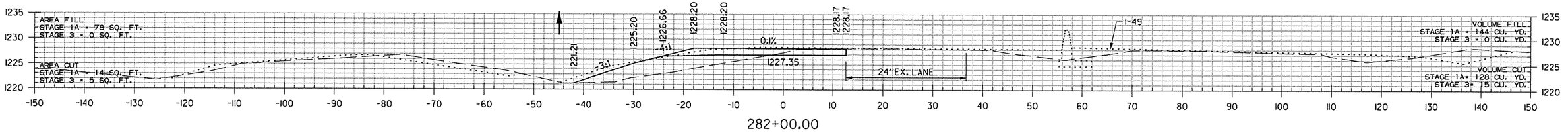

282+00.00

STA. 281+93.00 MATCH EX. SUPERELEVATION (0.004'/')

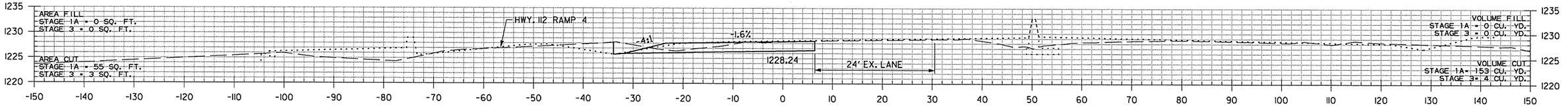

281+00.00

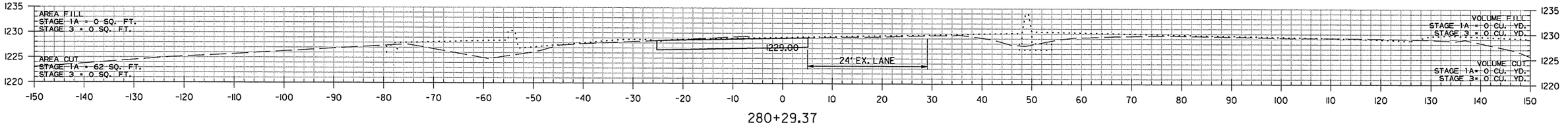

280+29.37

STA. 280+29.37 BEGIN TEMP. C-D RD. TO SB I-49 DETOUR

TEMP. C-D RD. TO SB I-49 DETOUR
STA. 280+29 TO STA. 283+00

AEWtercick 3/20/2016 11:58:42 AM
WORKSPACE: AHTD
L:\20IN\10I7\07 - I-540 Widening & Interchange Improvement\Drawings\rBB0414_CX TEMP C-D ROAD TO SB I-49 DETOUR...dgn
REVISED DATE:

DATE REVISED	DATE FILMED	DATE REVISED	DATE FILMED	FED.RD. DIST.NO.	STATE	FED.AID PROJ.NO.	SHEET NO.	TOTAL SHEETS
				6	ARK.			
				JOB NO.		BB0414	867	886

(2) CROSS SECTIONS

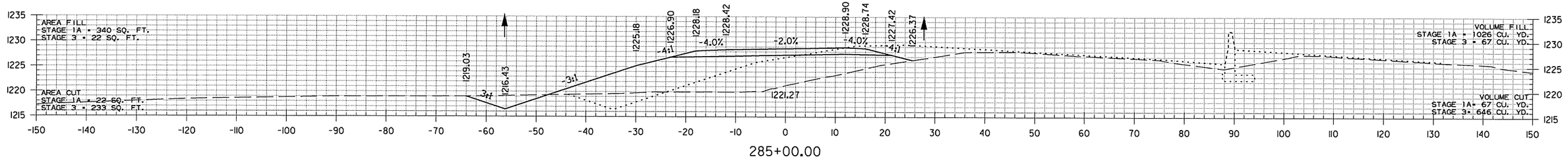

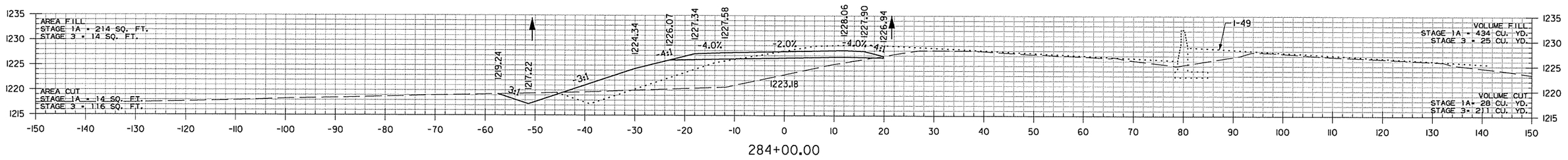

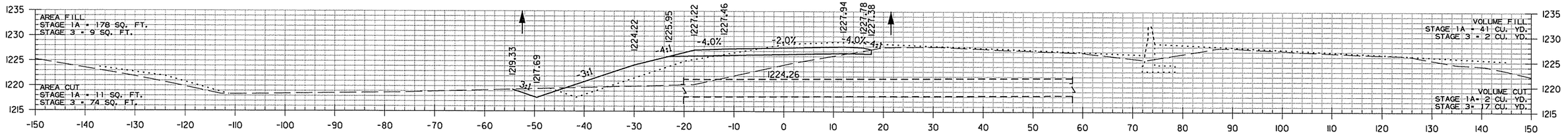

STA. 283+40 CONSTRUCT
42" X 8' R.C. PIPE CULVERT
EXTENSION FROM FINAL CONDITION
WITH FES LT.
6° LT. FWD. SKEW
Q50 = 58 CFS DA = 11.1 ACRES
42" R.C. PIPE = 8 LIN. FT.
42" FES = 1EA.

STA. 283+37.00
END SP. DITCH LT. -2.63%
BEGIN SP. DITCH LT. -0.79%
ELEV. 1217.72

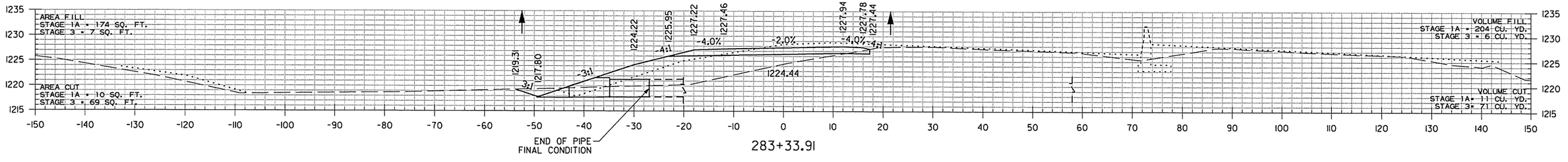

STA. 283+40
PROP F.L. = 1217.70 LT.

TEMP. C-D RD. TO SB I-49 DETOUR
STA. 283+34 TO STA. 285+00

AEWtercick 3/20/2016 11:58:42 AM
WORKSPACE: AHTD
L:\20IN\10IT07 - I-540 Widening & Interchange Improvement\Drawings\rBB0414_CX TEMP C-D ROAD TO SB I-49 DETOUR..dgn
REVISED DATE:

DATE REVISED	DATE FILMED	DATE REVISED	DATE FILMED	FED.RD. DIST.NO.	STATE	FED.AID PROJ.NO.	SHEET NO.	TOTAL SHEETS
				6	ARK.			
				JOB NO.		BB0414	868	886
				(2)	CROSS SECTIONS			

STA. 287+01 IN PLACE
18" X 96' R.C. PIPE CULVERT
WITH FES LT. REMOVE FES LT.
AND EXTEND 73' LT.
WITH R.C. PIPE CULVERT
35° RT. FWD. SKEW
18" R.C. PIPE = 77 LIN. FT.

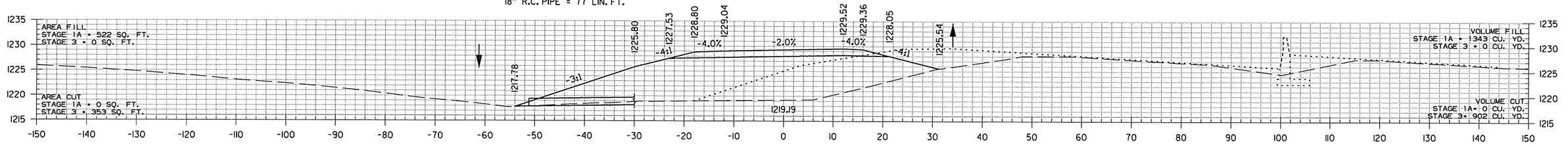

286+73.45

STA. 287+01
PROP F.L. = 1217.84 LT.

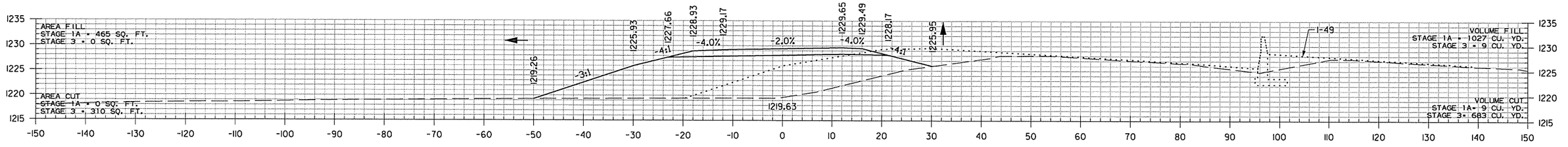

286+00.00

STA. 285+47.00
END SP. DITCH LT. -0.79%
ELEV. 1216.06

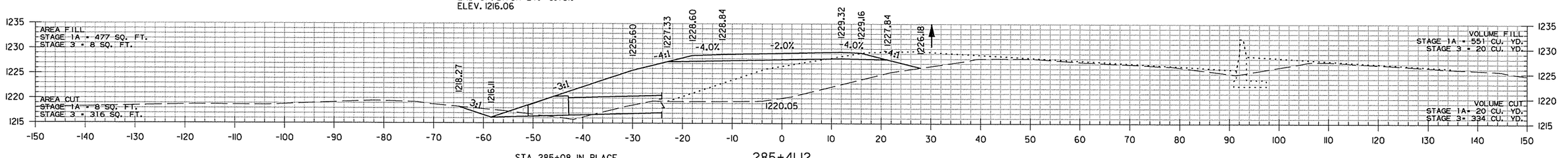

285+41.12

STA. 285+08 IN PLACE
42" X 116' R.C. PIPE CULVERT
WITH FES LT.
REMOVE FES LT. AND
EXTEND 64' LT. WITH
R.C. PIPE CULVERT
35° LT. FWD. SKEW
Q50 = 58 CFS DA = 11.1 ACRES
42" R.C. PIPE = 68 LIN. FT.
42" FES = 1EA.

STA. 285+08
PROP F.L. = 1216.13 LT.

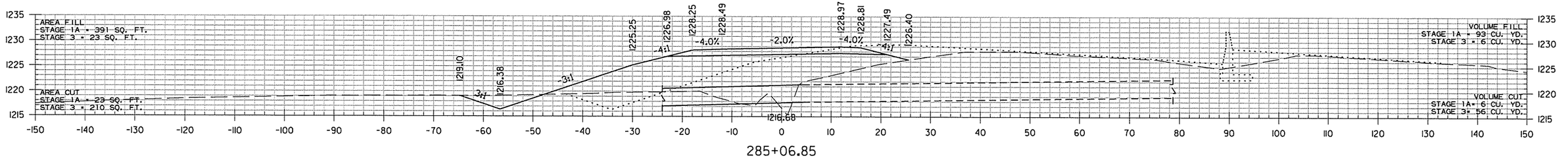

285+06.85

TEMP. C-D RD. TO SB I-49 DETOUR
STA. 285+07 TO STA. 286+73

AEWtercick 3/20/2016 11:58:42 AM
WORKSPACE: AHTD
L:\20IN\10I7707 - I-540 Widening & Interchange Improvement\Drawings\r-BB0414_CX TEMP C-D ROAD TO SB I-49 DETOUR...dgn
REVISED DATE:

DATE REVISED	DATE FILMED	DATE REVISED	DATE FILMED	FED.RD. DIST.NO.	STATE	FED.AID PROJ.NO.	SHEET NO.	TOTAL SHEETS
				6	ARK.			
				JOB NO.		BB0414	869	886
				(2)	CROSS SECTIONS			

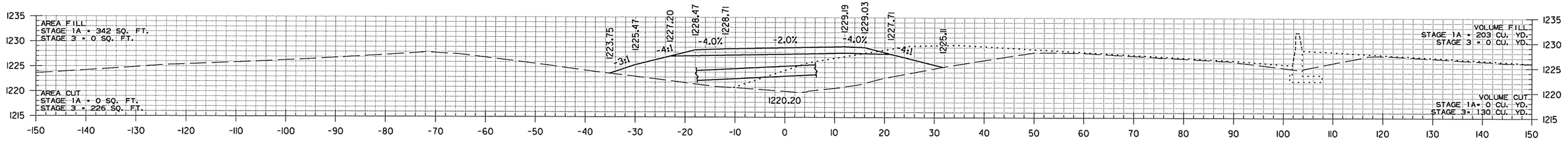

287+14.38

STA. 287+14 CONSTRUCT
24" X 79' R.C. PIPE CULVERT
30° RT. FWD. SKEW
Q50 = 3 CFS DA = 0.4 ACRES

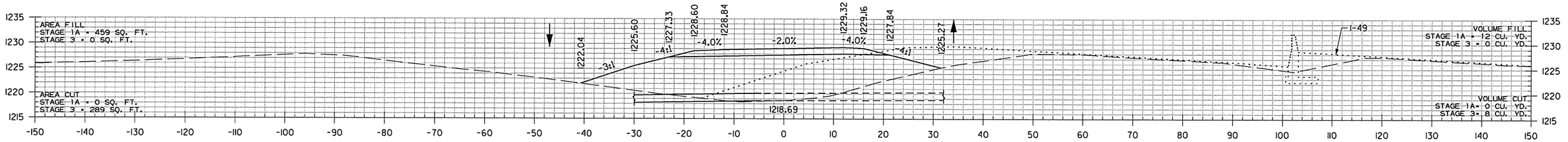

287+00.71

STA. 287+01 IN PLACE
18" X 96' R.C. PIPE CULVERT
WITH FES LT. REMOVE FES LT.
AND EXTEND 73' LT.
WITH R.C. PIPE CULVERT
35° RT. FWD. SKEW
18" R.C. PIPE = 77 LIN. FT.

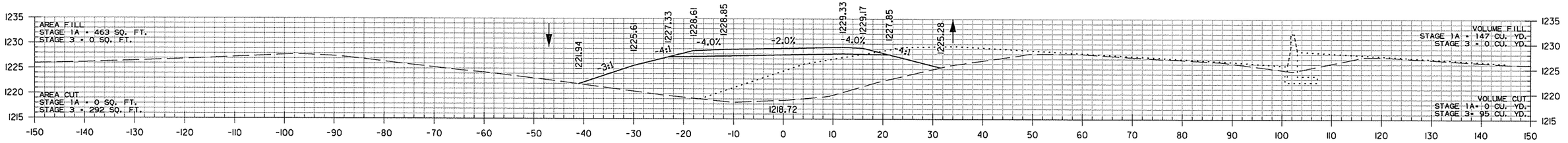

287+00.00

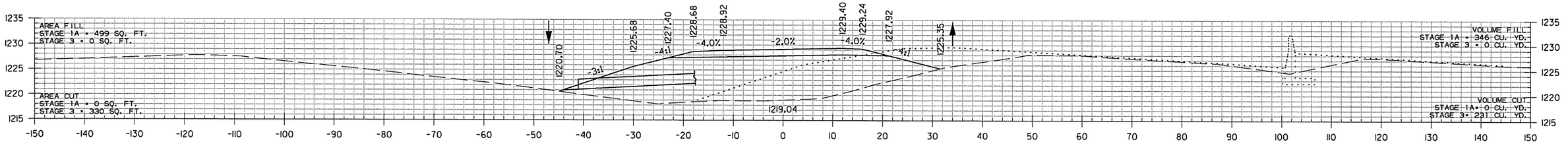

286+91.73

STA. 287+14 CONSTRUCT
24" X 83' TEMPORARY CULVERT
30° RT. FWD. SKEW
Q50 = 3 CFS DA = 0.4 ACRES

STA. 287+14
PROP F.L. = 1220.95 LT.

TEMP. C-D RD. TO SB I-49 DETOUR
STA. 286+92 TO STA. 287+14

AEWierclak 3/20/2016 11:58:43 AM
WORKSPACE: AHTD
L:\20II\II0I707 - I-540 Widening & Interchange Improvement\Drawings\rBB0414_CX TEMP C-D ROAD TO SB I-49 DETOUR..dgn
REVISED DATE:

DATE REVISED	DATE FILMED	DATE REVISED	DATE FILMED	FED.RD. DIST.NO.	STATE	FED.AID PROJ.NO.	SHEET NO.	TOTAL SHEETS
				6	ARK.			
				JOB NO.		BB0414	870	886

(2) CROSS SECTIONS

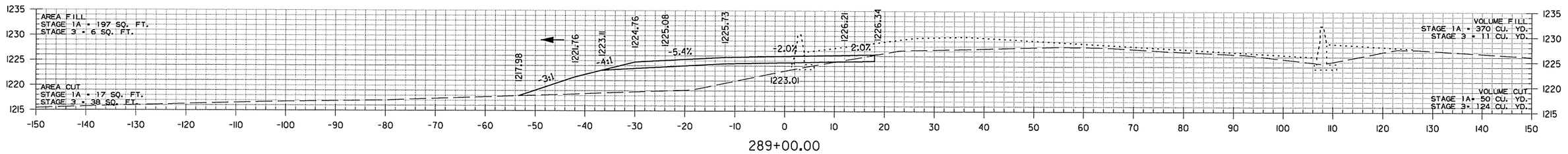

289+00.00

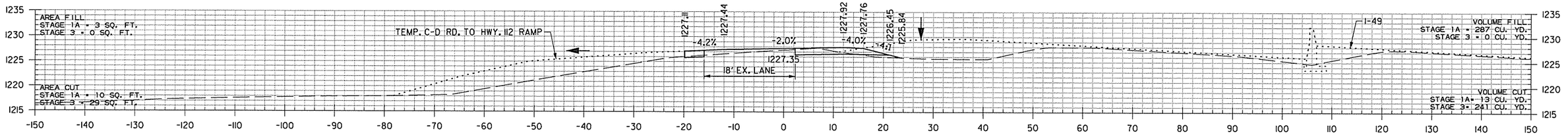

288+00.00

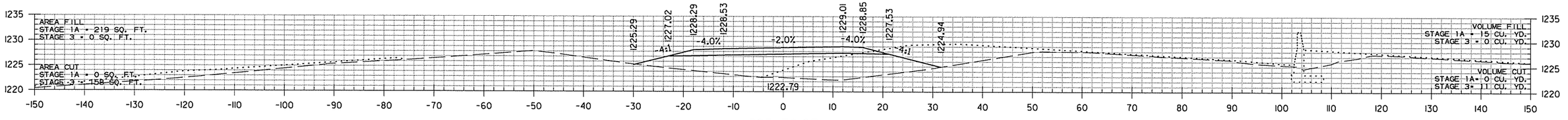

287+30.27

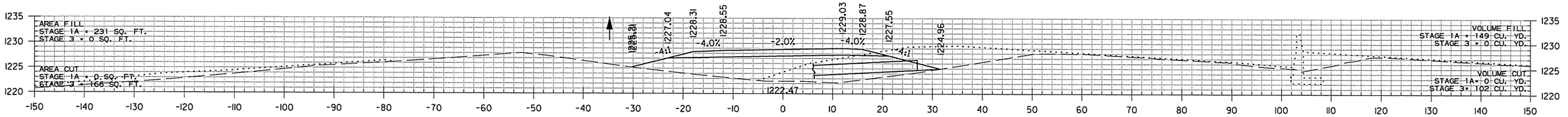

287+28.44

STA. 287+14 CONSTRUCT
24" X 79' R.C. PIPE CULVERT
30° RT. FWD. SKEW
Q50 = 3 CFS DA = 0.4 ACRES

STA. 287+14
PROP F.L. = 1224.96 RT.

TEMP. C-D RD. TO SB I-49 DETOUR
STA. 287+28 TO STA. 289+00

AEWerclok 3/20/2016 11:58:43 AM
WORKSPACE: AHTD
L:\20IN\IQ1TOT - I-540 Widening & Interchange Improvement\Drawings\rBB0414_CX TEMP C-D ROAD TO SB I-49 DETOUR..dgn
REVISED DATE:

DATE REVISED	DATE FILMED	DATE REVISED	DATE FILMED	FED.RD. DIST.NO.	STATE	FED.AID PROJ.NO.	SHEET NO.	TOTAL SHEETS
				6	ARK.			
				JOB NO.		BB0414	871	886
				(2)	CROSS SECTIONS			

STA. 291+10.81 END TEMP. C-D RD. TO SB I-49 DETOUR

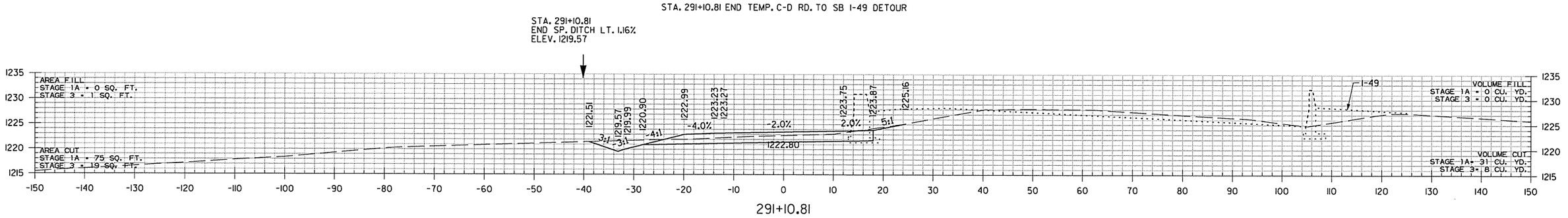

291+10.81

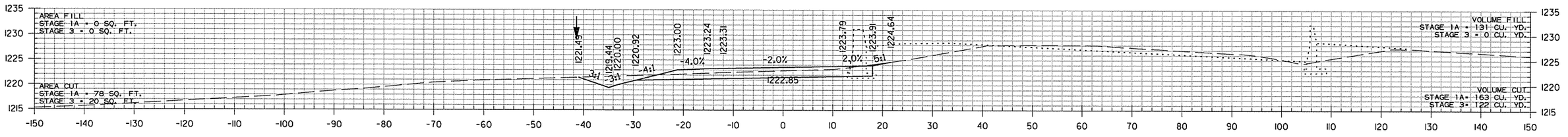

291+00.00

STA. 290+00.00
BEGIN SP. DITCH LT. 1.16%
ELEV. 1218.28

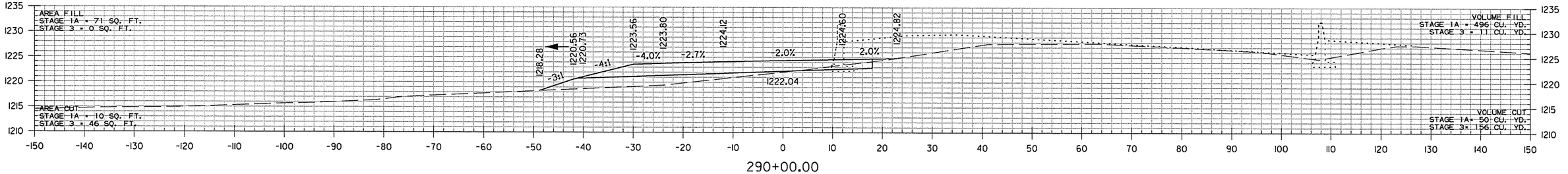

290+00.00

STA. 290+00.00 TO END: CONSTRUCT C-D RD. PAVEMENT SECTION WITH FINAL 2" SURFACE COURSE LIFT OMITTED. CONSTRUCT TEMPORARY SURFACE COURSE LIFT TO MATCH TEMP C-D RD. TO SB I-49 DETOUR GRADES. IN STAGES 3 AND 3A, MILL TEMPORARY LIFT AND PLACE FINAL LIFT TO C-D ROAD GRADES.

TEMP. C-D RD. TO SB I-49 DETOUR
STA. 290+00 TO STA. 291+11

AEWerclok 3/20/2016 11:58:43 AM
WORKSPACE: AHTD
L:\20IN\IOITO7 - I-540 Widening & Interchange Improvement\Drawings\rBB0414_CX TEMP C-D ROAD TO SB I-49 DETOUR_.dgn
REVISED DATE:

DATE REVISED	DATE FILMED	DATE REVISED	DATE FILMED	FED.RD. DIST.NO.	STATE	FED.AID PROJ.NO.	SHEET NO.	TOTAL SHEETS
				6	ARK.			
				JOB NO.		BB0414	872	886
				(2)	CROSS SECTIONS			

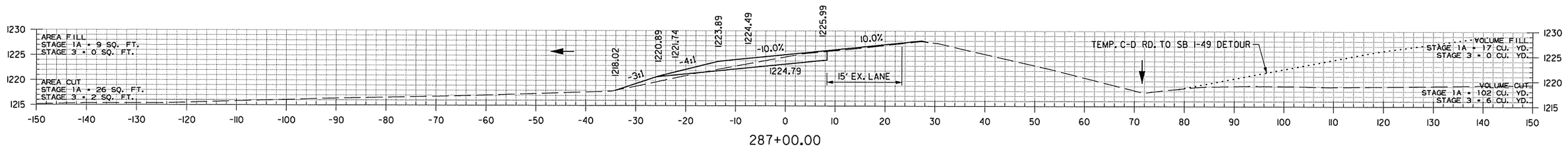

287+00.00

STA. 286+89.44 MATCH EX. SUPERELEVATION (0.100'/')

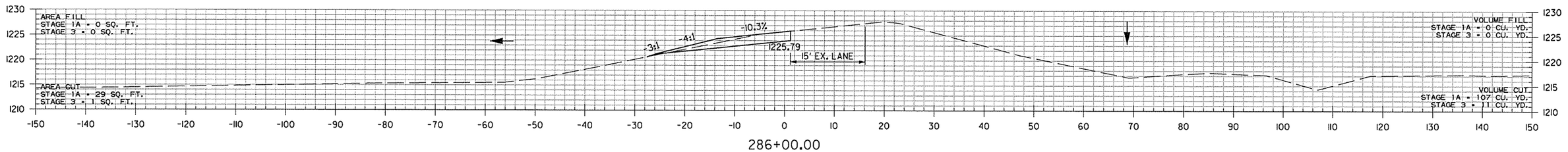

286+00.00

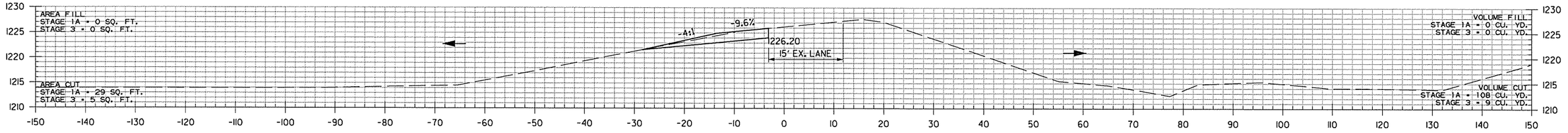

285+00.00

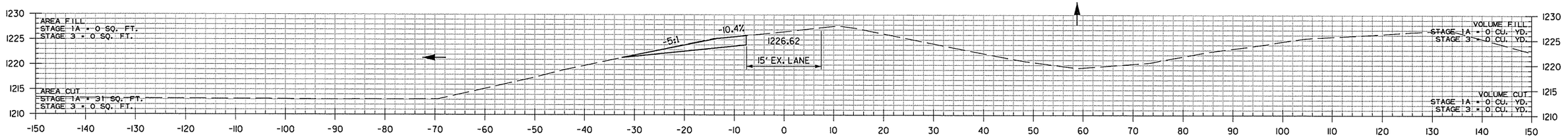

284+02.90

STA. 284+02.90 BEGIN TEMP. C-D RD. TO HWY. 112 RAMP

TEMP. C-D RD. TO HWY. 112 RAMP
STA. 284+03 TO STA. 287+00

AEWercIck 3/20/2016 11:58:43 AM
WORKSPACE: AHTD
L:\201\101707 - I-540 Widening & Interchange Improvement\Drawings\r-BB0414_CX TEMP C-D ROAD TO HWY. 112 RAMP.dgn
REVISED DATE:

DATE REVISED	DATE FILMED	DATE REVISED	DATE FILMED	FED.RD. DIST.NO.	STATE	FED.AID PROJ.NO.	SHEET NO.	TOTAL SHEETS
				6	ARK.			
				JOB NO.		BB0414	873	886

(2) CROSS SECTIONS

STA. 290+26.60 END SUPERELEVATION

288+83.21

STA. 288+50.00 END TEMP. C-D RD. TO HWY. 112 RAMP

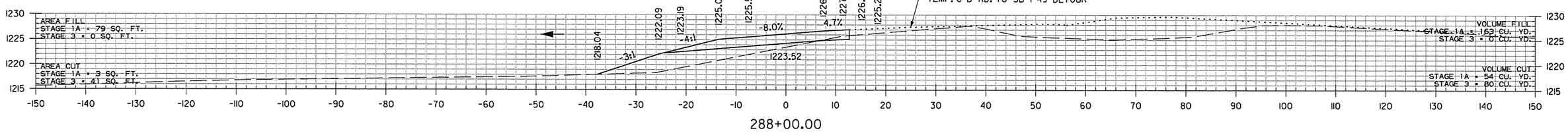

288+00.00

STA. 287+26.60 MAX. SUPERELEVATION (0.100'/')

TEMP. C-D RD. TO HWY. 112 RAMP
STA. 288+00 TO STA. 288+83

AEWercIock 3/20/2016 11:58:43 AM
WORKSPACE: AHTD
L:\2011\011707 - I-540 Widening & Interchange Improvement\Drawings\rBB0414_CX TEMP C-D ROAD TO HWY. 112 RAMP.dgn
REVISED DATE:

DATE REVISED	DATE FILMED	DATE REVISED	DATE FILMED	FED.RD. DIST.NO.	STATE	FED.AID PROJ.NO.	SHEET NO.	TOTAL SHEETS
				6	ARK.			
				JOB NO.		BB0414	874	886
				(2)		CROSS SECTIONS		

STA. 311+00.50 MAX. SUPERELEVATION (0.049'/')

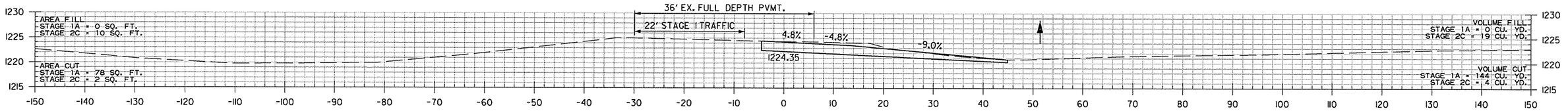

311+00.00

STA. 310+48.91 MATCH EX. SUPERELEVATION (0.042'/')

STA. 310+48.91 BEGIN TEMP. NB I-49 TO HWY. 71B RAMP

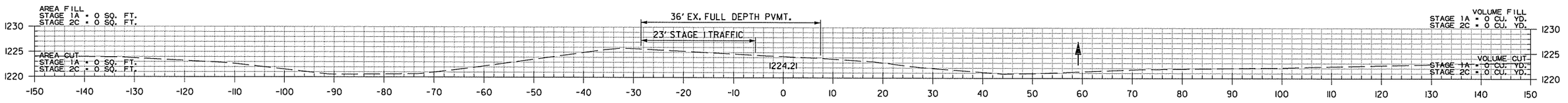

310+00.00

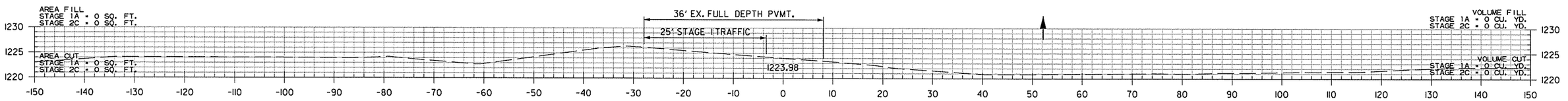

309+00.00

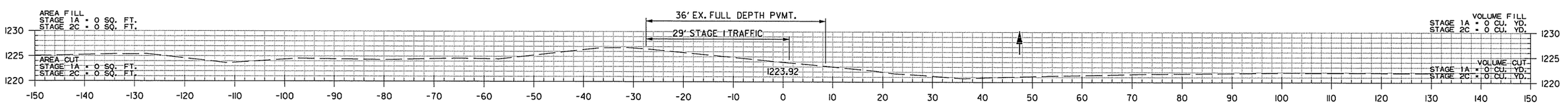

308+13.00

TEMP. NB I-49 TO HWY. 71B
STA. 308+13 TO STA. 311+00

AEWierdak 3/20/2016 11:58:53 AM
WORKSPACE: AHTD
L:\201\110177107 - I-540 Widening & Interchange Improvement\Drawings\rBB0414.CX TEMP NB I-49 TO HWY 71B..dgn
REVISED DATE:

DATE REVISED	DATE FILMED	DATE REVISED	DATE FILMED	FED.RD. DIST.NO.	STATE	FED.AID PROJ.NO.	SHEET NO.	TOTAL SHEETS
				6	ARK.			
				JOB NO.		BB0414	875	886
				(2)	CROSS SECTIONS			

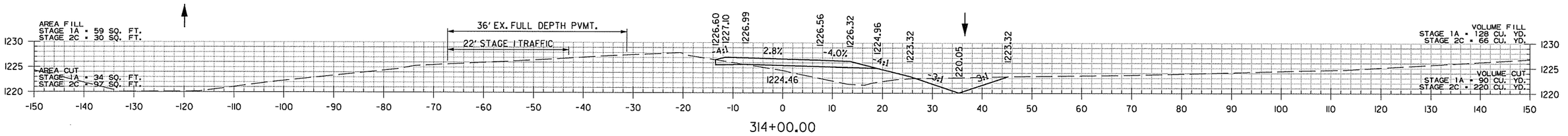

314+00.00

STA. 313+42.71
END SP. DITCH RT. 0.00%
BEGIN SP. DITCH RT. 1.43%
ELEV. 1219.23

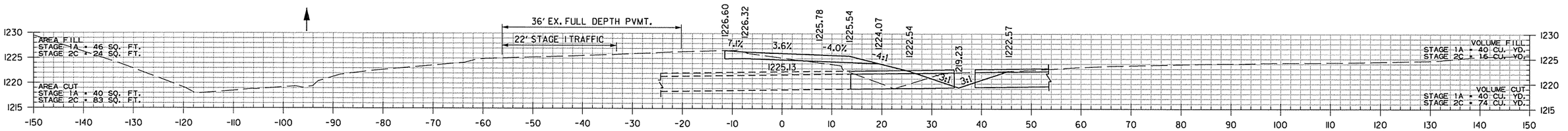

313+34.00

STA. 313+36
EX. F.L. 1218.95 (RT.)
PROP F.L. 1219.23 (RT.)

I-49 STA. 313+36 IN PLACE
DBL. 6' X 3' X 98' R.C. BOX CULVERT
8°38'17" RT. FWD. SKEW
WITH 3:1 WINGS LT. & RT.
RETAIN AND EXTEND 23' RT.
2° LT. FWD. SKEW
PROVIDE TEMPORARY 4.2' GAP IN BOX
CULVERT FOR STAGE DRAINAGE
Q50 = 70 CFS DA = 22.2 ACRES

STA. 313+30.05
END SP. DITCH RT. -2.64%
BEGIN SP. DITCH RT. 0.00%
ELEV. 1219.23

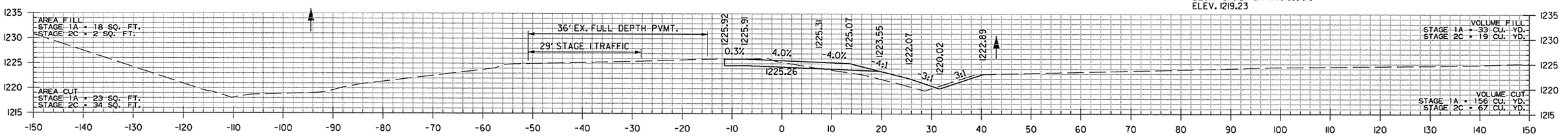

313+00.00

STA. 312+22.29 MAX. SUPERELEVATION (0.049'/')

STA. 312+83.00
BEGIN SP. DITCH RT. -2.64%
ELEV. 1220.47

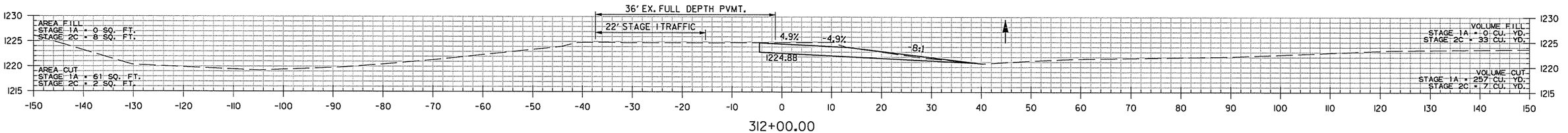

312+00.00

TEMP. NB I-49 TO HWY. 71B
STA. 312+00 TO STA. 314+00

AEWerclok 3/20/2016 11:58:53 AM
WORKSPACE: AHTD
L:\20\NO1707 - I-540 Widening & Interchange Improvement\Drawings\rBB0414_CX TEMP NB I-49 TO HWY 71B.dgn
REVISED DATE:

DATE REVISED	DATE FILMED	DATE REVISED	DATE FILMED	FED.RD. DIST.NO.	STATE	FED.AID PROJ.NO.	SHEET NO.	TOTAL SHEETS
				6	ARK.			
				JOB NO.		BB0414	876	886
				(2)		CROSS SECTIONS		

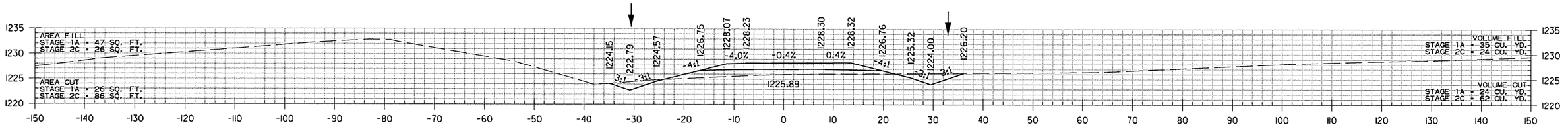

316+00.00

STA. 315+80.00
BEGIN SP. DITCH LT. 2.82%
ELEV. 1222.22

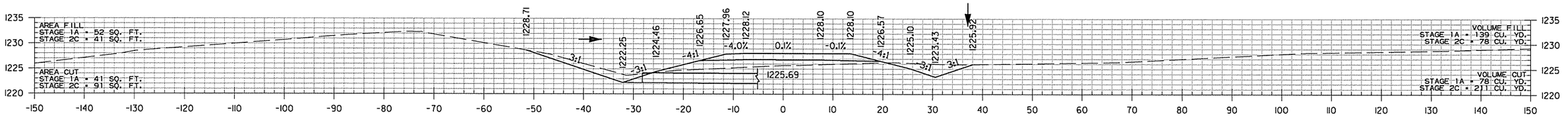

315+80.96

STA. 315+53 CONSTRUCT
24" X 79' TEMPORARY CULVERT
45° LT. FWD. SKEW
Q50 = 15 CFS DA = 2.1 ACRES

STA. 315+53
PROP F.L. 1222.22 (LT.)
PROP F.L. 1221.90 (RT.)

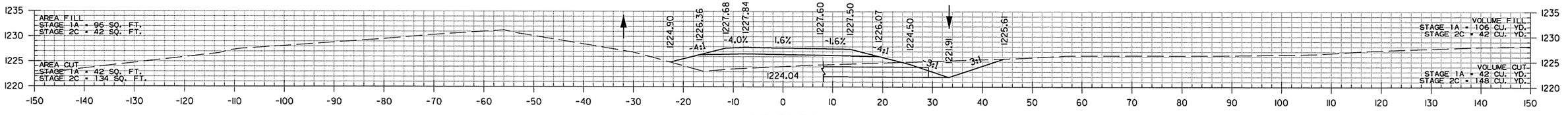

315+30.34

STA. 315+30.00
END SP. DITCH RT. 1.43%
BEGIN SP. DITCH RT. 2.99%
ELEV. 1221.90

STA. 315+17.84 BEGIN SUPERELEVATION

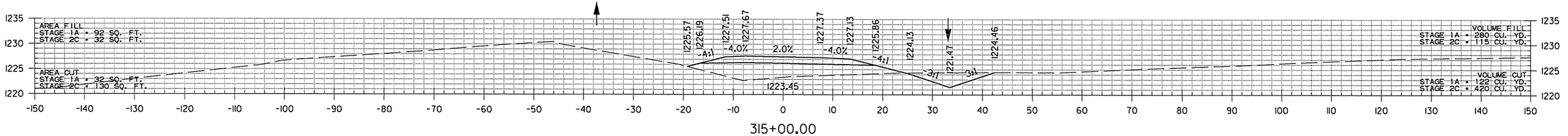

315+00.00

STA. 314+72.29 END SUPERELEVATION

TEMP. NB I-49 TO HWY. 71B
STA. 315+00 TO STA. 316+00

AEWierciak 3/20/2016 11:58:53 AM
WORKSPACE: AHTD
L:\201\N001707 - I-540 Widening & Interchange Improvement\Drawings\rBB0414_CX TEMP NB I-49 TO HWY 71B..dgn
REVISED DATE:

DATE REVISED	DATE FILMED	DATE REVISED	DATE FILMED	FED.RD. DIST.NO.	STATE	FED.AID PROJ.NO.	SHEET NO.	TOTAL SHEETS
				6	ARK.			
				JOB NO.		BB0414	877	886
				(2)	CROSS SECTIONS			

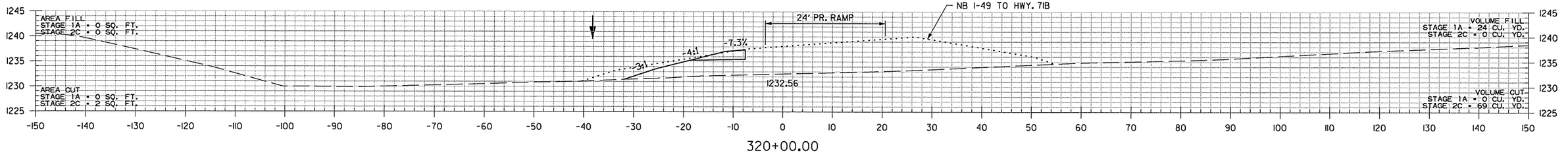

320+00.00

STA. 319+28.25 MAX. SUPERELEVATION (0.070'/')

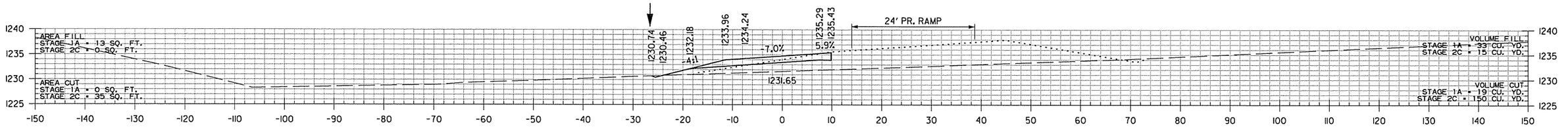

319+00.00

STA. 318+17.84 MAX. SUPERELEVATION (0.070'/')

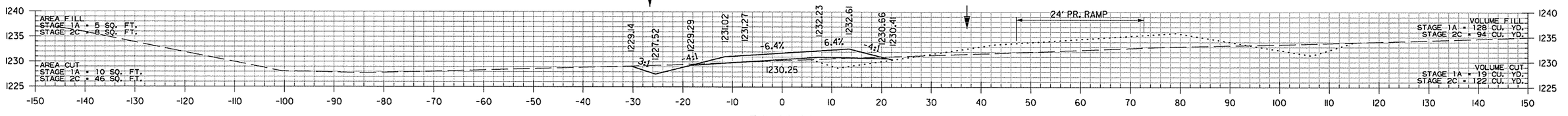

318+00.00

STA. 317+00.00
END SP. DITCH LT. 2.82%
ELEV. 1225.61

STA. 317+00.00
END SP. DITCH RT. 2.99%
ELEV. 1226.99

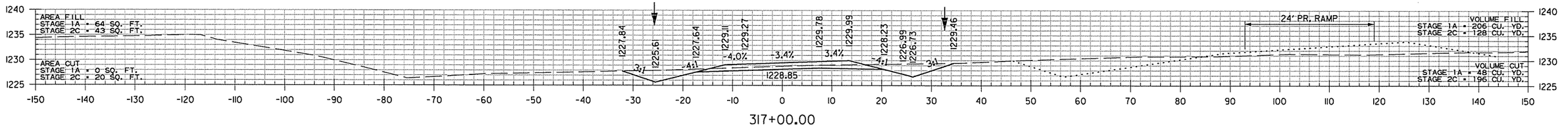

317+00.00

TEMP. NB I-49 TO HWY. 71B
STA. 317+00 TO STA. 320+00

AEWerclok 3/20/2016 11:58:54 AM
WORKSPACE: AHTD
L:\ROW\107107 - I-540 Widening & Interchange Improvement\Drawings\rBB0414_CX TEMP NB I-49 TO HWY 71B..dgn
REVISED DATE:

DATE REVISED	DATE FILMED	DATE REVISED	DATE FILMED	FED.RD. DIST.NO.	STATE	FED.AID PROJ.NO.	SHEET NO.	TOTAL SHEETS
				6	ARK.			
				JOB NO.		BB0414	878	886
				(2)	CROSS SECTIONS			

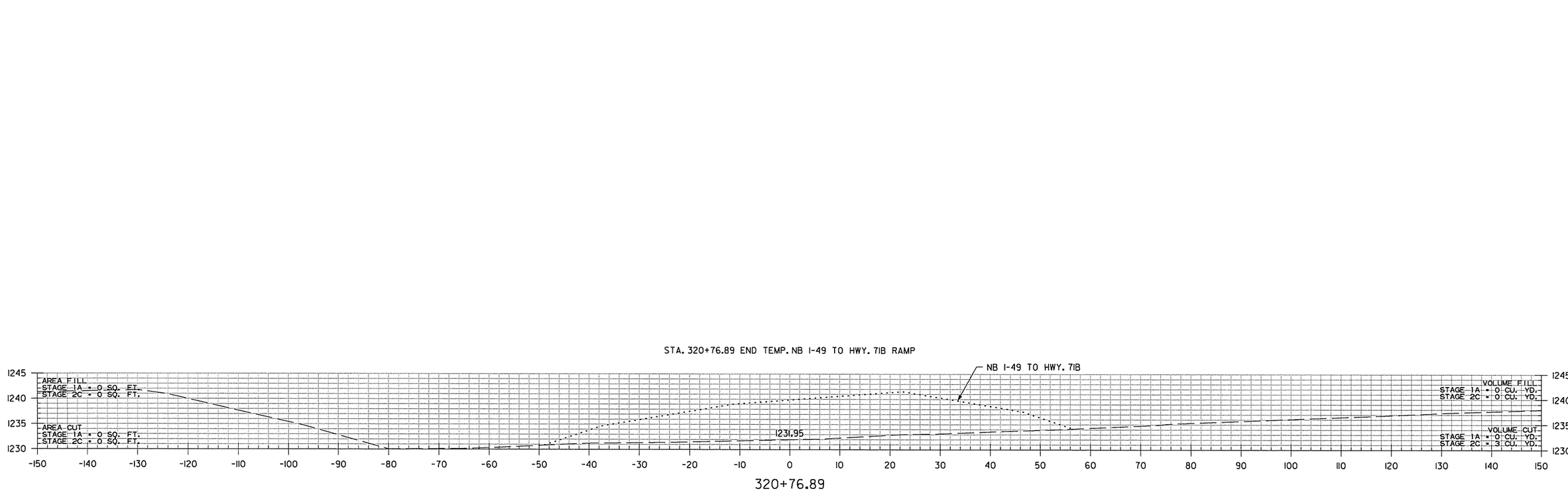

TEMP. NB I-49 TO HWY. 71B
STA. 320+77 TO STA. 320+77

AEWierclok 3/20/2016 11:58:54 AM
WORKSPACE: AHTD
L:\2011\101707 - I-540 Widening & Interchange Improvement\Drawings\r-BB0414_CX TEMP NB I-49 TO HWY 71B..dgn
REVISED DATE:

DATE REVISED	DATE FILMED	DATE REVISED	DATE FILMED	FED.RD. DIST.NO.	STATE	FED.AID PROJ.NO.	SHEET NO.	TOTAL SHEETS
				6	ARK.			
				JOB NO.		BB0414	879	886
				(2)	CROSS SECTIONS			

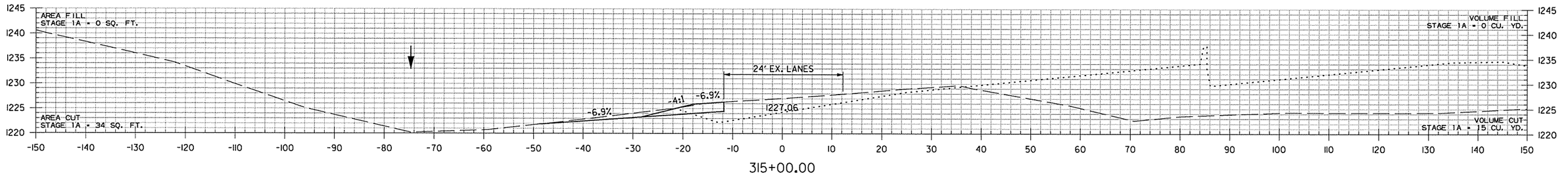

315+00.00

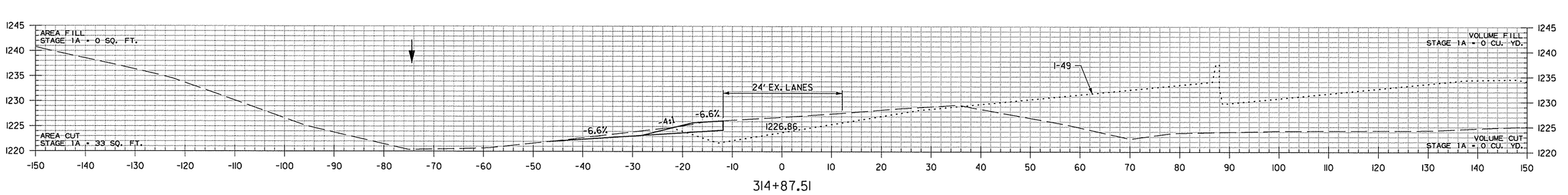

314+87.51

STA. 314+87.51 BEGIN TEMP. EX. NB I-49 TO PR. I-49 RAMP

TEMP EX. NB I-49 TO PR. NB I-49 RAMP
STA. 314+88 TO STA. 315+00

AEWierclok 3/20/2016 11:58:54 AM
WORKSPACE: AHTD
L:\2011\101707 - I-540 Widening & Interchange Improvement\Drawings\rBB0414_CX TEMP EX NB I-49 TO PR NB I-49..dgn
REVISED DATE:

DATE REVISED	DATE FILMED	DATE REVISED	DATE FILMED	FED.RD. DIST.NO.	STATE	FED.AID PROJ.NO.	SHEET NO.	TOTAL SHEETS
				6	ARK.			
				JOB NO.		BB0414	880	886

(2) CROSS SECTIONS

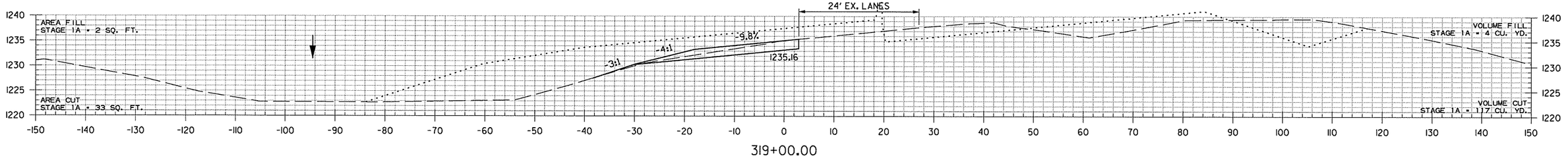

319+00.00

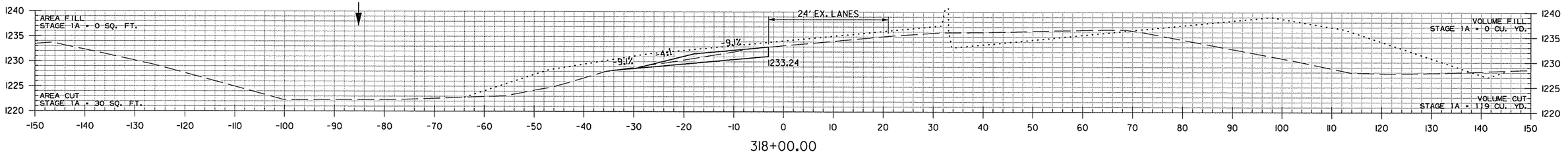

318+00.00

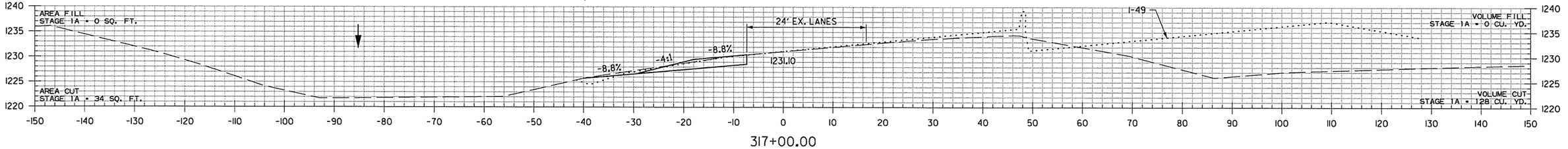

317+00.00

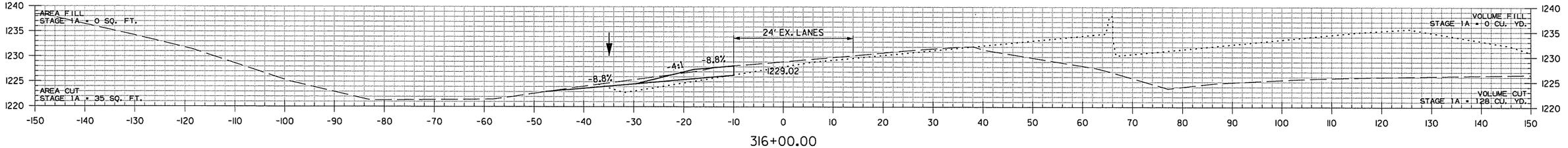

316+00.00

TEMP EX. NB I-49 TO PR. NB I-49 RAMP
STA. 316+00 TO STA. 319+00

AEWierciak 3/20/2016 11:58:54 AM
WORKSPACE: AHTD
L:\20IN\I\01707 - I-540 Widening & Interchange Improvement\Drawings\rBB0414_CX TEMP EX NB I-49 TO PR NB I-49..dgn
REVISED DATE:

DATE REVISED	DATE FILMED	DATE REVISED	DATE FILMED

FED.RD. DIST.NO.	STATE	FED.AID PROJ.NO.	SHEET NO.	TOTAL SHEETS
6	ARK.			
JOB NO.		BB0414	881	886

(2) CROSS SECTIONS

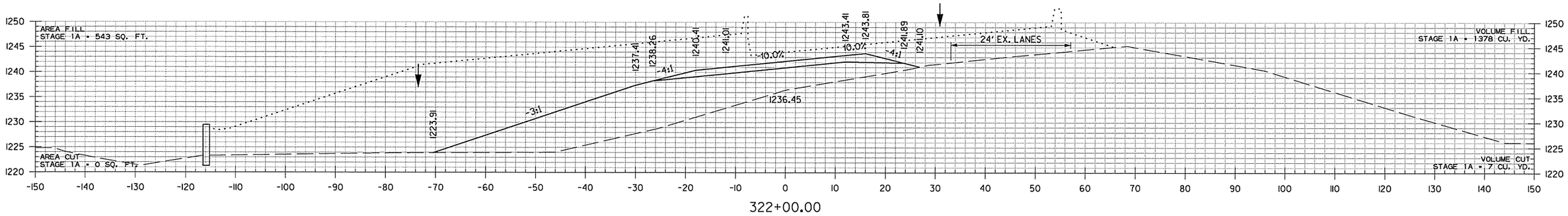

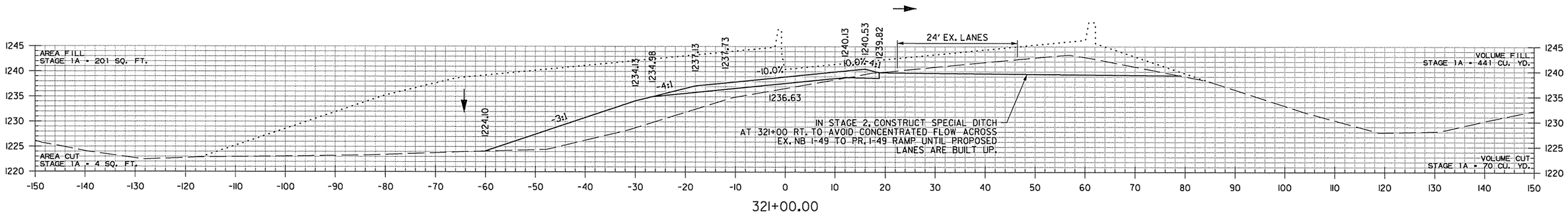

STA. 320+00.78 MAX. SUPERELEVATION (0.100'/')

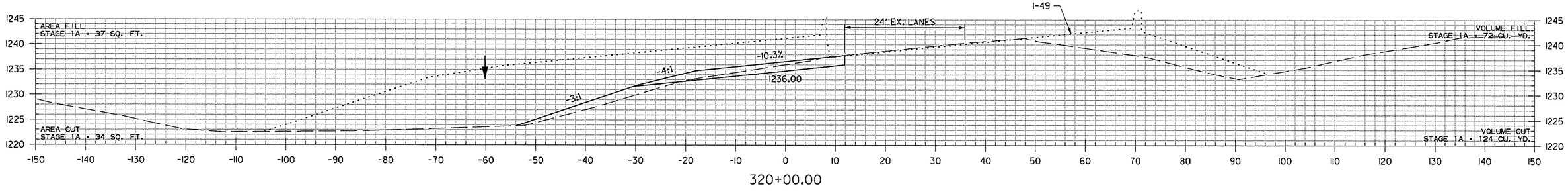

TEMP EX. NB I-49 TO PR. NB I-49 RAMP
STA. 320+00 TO STA. 322+00

AEWierclok 3/20/2016 11:58:54 AM
WORKSPACE: AHTD
L:\20IN\I0I710T - I-540 Widening & Interchange Improvement\Drawings\rBB0414_CX TEMP EX NB I-49 TO PR NB I-49..dgn
REVISED DATE:

DATE REVISED	DATE FILMED	DATE REVISED	DATE FILMED	FED.RD. DIST.NO.	STATE	FED.AID PROJ.NO.	SHEET NO.	TOTAL SHEETS
				6	ARK.			
				JOB NO.		BB0414	882	886
				(2)		CROSS SECTIONS		

STA. 324+60.28 END TEMP. EX. NB I-49 TO PR. I-49 RAMP

STA. 324+60.28 MAX. SUPERELEVATION (0.100'/')

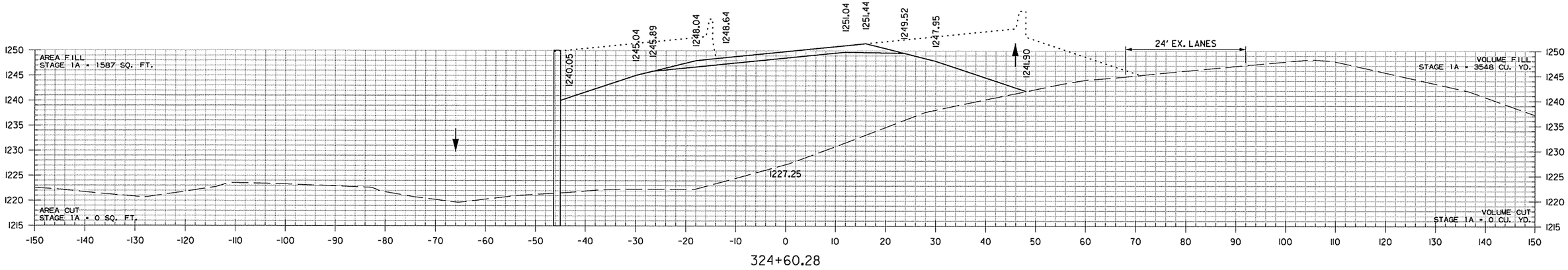

324+60.28

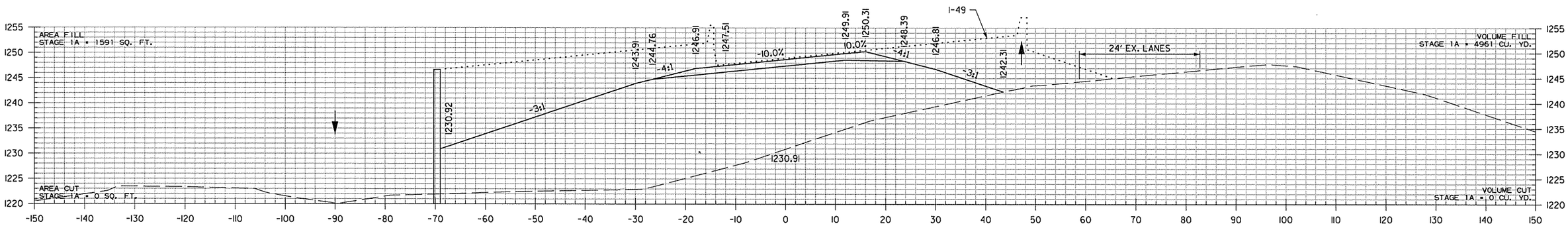

324+00.00

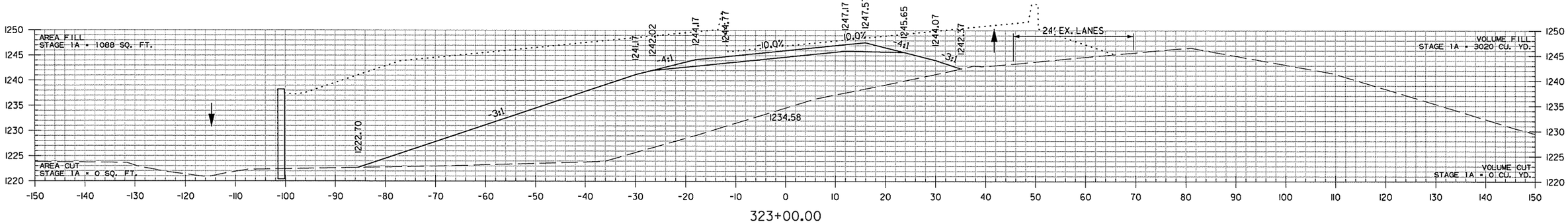

323+00.00

TEMP EX. NB I-49 TO PR. NB I-49 RAMP
STA. 323+00 TO STA. 324+60

AEWerclok 3/20/2016 11:58:54 AM
WORKSPACE: AHTD
L:\20\N\01\707 - I-540 Widening & Interchange Improvement\Drawings\rBB0414_CX TEMP EX NB I-49 TO PR NB I-49..dgn
REVISED DATE:

DATE REVISED	DATE FILMED	DATE REVISED	DATE FILMED	FED.RD. DIST.NO.	STATE	FED.AID PROJ.NO.	SHEET NO.	TOTAL SHEETS
				6	ARK.			
				JOB NO.		BB0414	883	886
				(2)	CROSS SECTIONS			

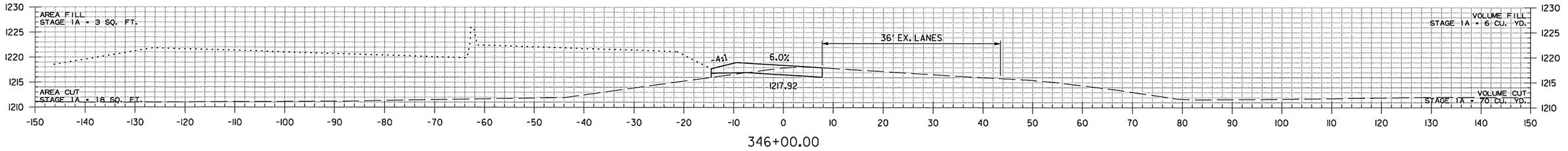

346+00.00

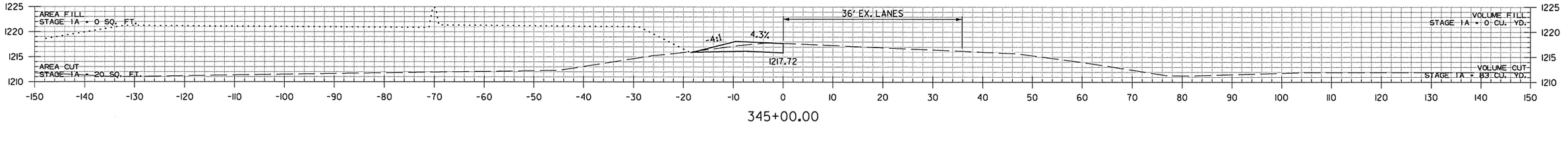

345+00.00

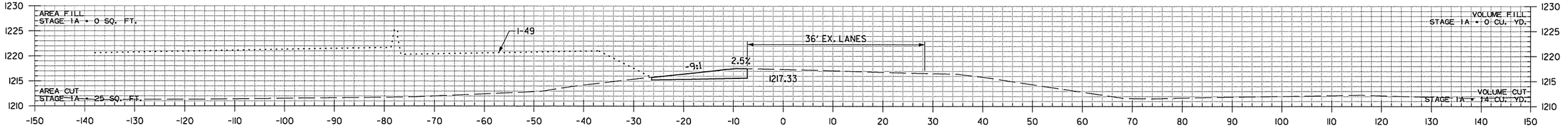

344+00.00

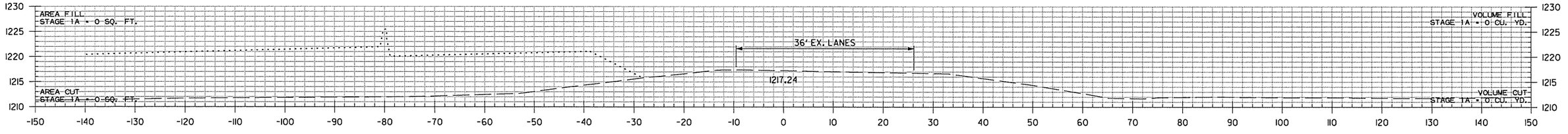

343+70.26

STA. 343+70.26 BEGIN TEMP. HWY. 71B TO NB I-49 RAMP

TEMP. HWY. 71B TO NB I-49 RAMP
STA. 343+70 TO STA. 346+00

AEWierclok 3/20/2016 11:58:55 AM
WORKSPACE: AHTD
L:\2011\101707 - I-540 Widening & Interchange Improvement\Drawings\rBB0414_CX TEMP HWY 71B TO NB I-49.dgn
REVISED DATE:

DATE REVISED	DATE FILMED	DATE REVISED	DATE FILMED	FED.RD. DIST.NO.	STATE	FED.AID PROJ.NO.	SHEET NO.	TOTAL SHEETS
				6	ARK.			
				JOB NO.		BB0414	884	886
				(2)	CROSS SECTIONS			

STA. 348+00.00 END TEMP. HWY. 71B TO NB I-49 RAMP

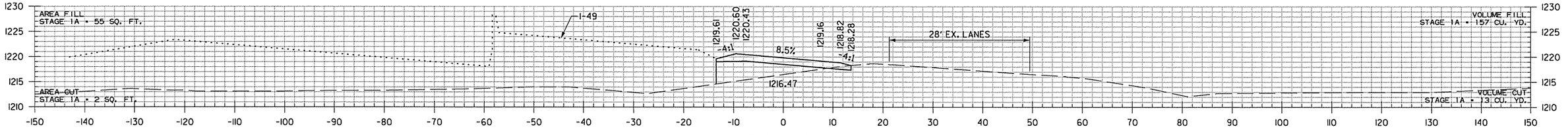

348+00.00

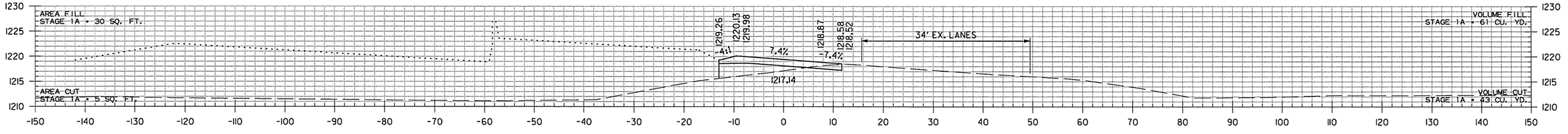

347+00.00

TEMP. HWY. 71B TO NB I-49 RAMP
STA. 347+00 TO STA. 348+00

AEWierclak 3/20/2016 11:58:55 AM
WORKSPACE: AHTD
L:\2011\101707 - I-540 Widening & Interchange Improvement\Drawings\rBB0414_CX TEMP HWY 71B TO NB I-49.dgn
REVISED DATE:

DATE REVISED	DATE FILMED	DATE REVISED	DATE FILMED

FED.RD. DIST.NO.	STATE	FED.AID PROJ.NO.	SHEET NO.	TOTAL SHEETS
6	ARK.			
JOB NO.		BB0414	885	886

(2) CROSS SECTIONS

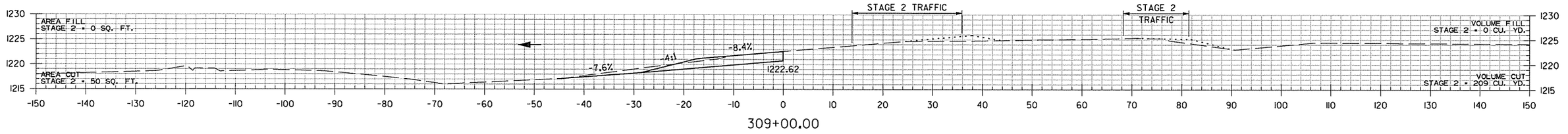

309+00.00

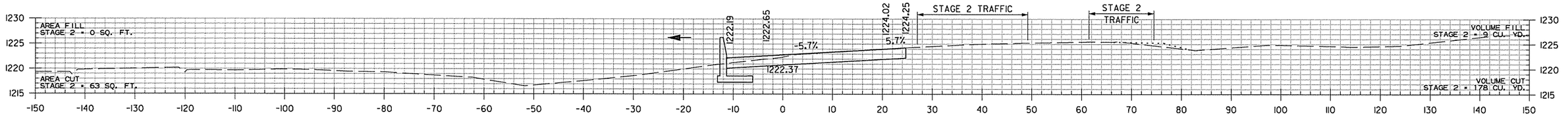

308+00.00

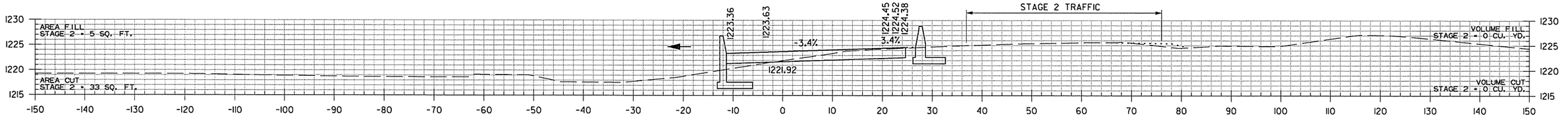

307+00.00

STA. 307+00.00 BEGIN TEMP. SB I-49 TO C-D RD. RAMP

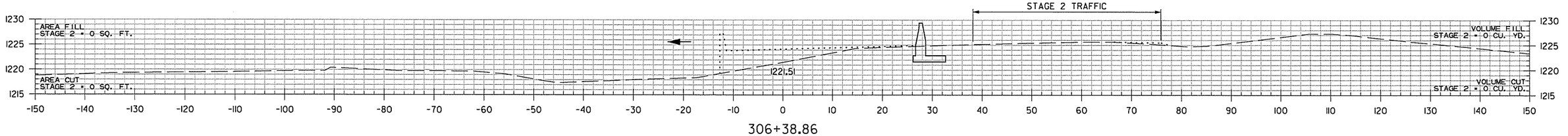

306+38.86

TEMP. SB I-49 TO C-D RD. RAMP
STA. 306+39 TO STA. 309+00

AEWarelak 3/20/2016 11:58:55 AM
WORKSPACE: AHTD
L:\20IN\IOITOT - I-540 Widening & Interchange Improvement\Drawings\rBB0414.CX TEMP SB I-49 TO C-D ROAD RAMP.dgn
REVISED DATE:

DATE REVISED	DATE FILMED	DATE REVISED	DATE FILMED

FED.RD. DIST.NO.	STATE	FED.AID PROJ.NO.	SHEET NO.	TOTAL SHEETS
6	ARK.			
JOB NO.		BB0414	886	886

(2) CROSS SECTIONS

STA. 311+08.92 END TEMP. SB I-49 TO C-D RD. RAMP

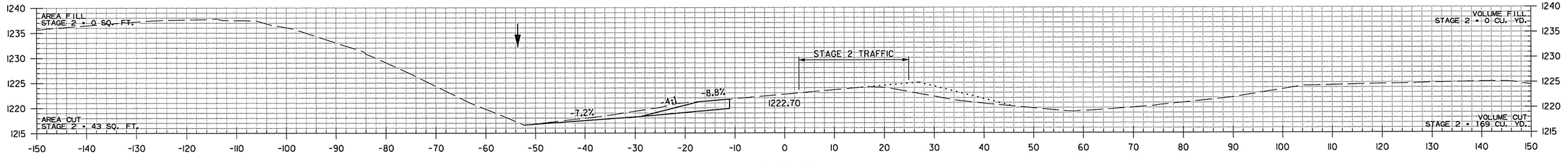

311+00.00

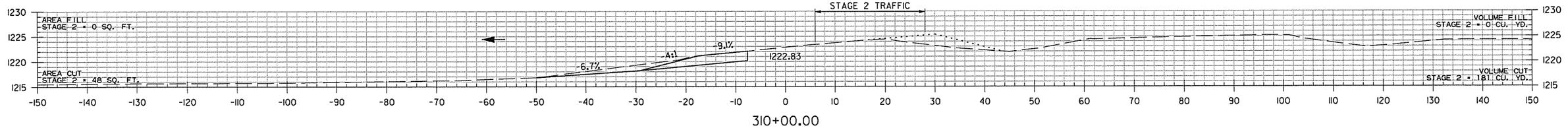

310+00.00

TEMP. SB I-49 TO C-D RD. RAMP
STA. 310+00 TO STA. 311+00

AEWierciak 3/20/2016 11:58:56 AM
WORKSPACE: AHTD
L:\20IN\IOIT7OT - I-540 Widening & Interchange Improvement\Drawings\rBB0414.CX TEMP SB I-49 TO C-D ROAD RAMP.dgn
REVISED DATE: