DATE REVISED	DATE FILMED	DATE REVISED	DATE FILMED

FED.RD. DIST.NO.	STATE	FED.AID PROJ.NO.	SHEET NO.	TOTAL SHEETS
6	ARK.			
JOB NO.		CA0901	1	452
2 HWY. 264 - NEW HOPE RD. (WIDENING) (S)				

Crafton Tull
architecture | engineering | surveying

"A FULLY CONTROLLED ACCESS FACILITY"

ARKANSAS STATE HIGHWAY AND TRANSPORTATION DEPARTMENT

CONSTRUCTION PLANS FOR STATE HIGHWAY

HWY. 264 - NEW HOPE RD. (WIDENING) (S)

BENTON COUNTY

ROUTE 49 SECTION 29

FED. AID PROJ. ACNHPP-49-1(17)77 & BIM-B49-0(219)

JOB CA0901

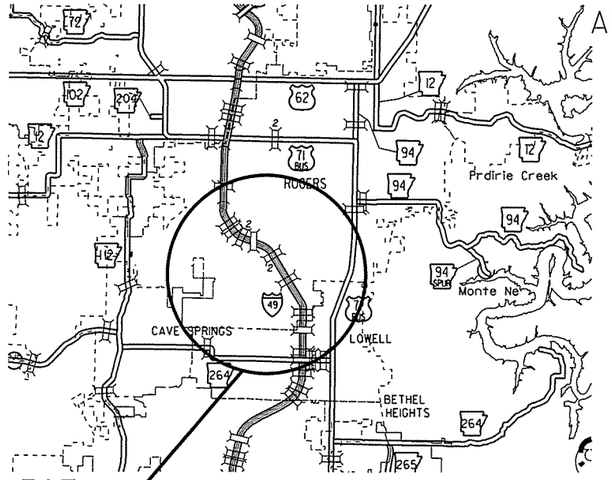

PROJECT LOCATION

VICINITY MAP

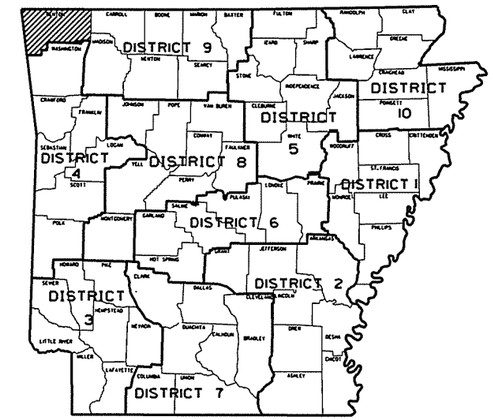

ARK. HWY. DIST. NO. 9

BRIDGE DATA

(3) STA. 1261+92.66 - BRIDGE END
BR. NO. A5956
143'-0" CONT. PRESTRESSED CONC. GIRDER UNIT
(43'-57'-43')
62'-0" CLEAR ROADWAY
(20° LT. FWD. SKEW)
145'-2⅜" BRIDGE LENGTH
STA. 1263+37.86 - BRIDGE END

(4) STA. 1261+68.73 - BRIDGE END
BR. NO. B5956
143'-0" CONT. PRESTRESSED CONC. GIRDER UNIT
(43'-57'-43')
62'-0" CLEAR ROADWAY
(20° LT. FWD. SKEW)
145'-2⅜" BRIDGE LENGTH
STA. 1263+13.92 - BRIDGE END

(5) STA. 1309+50.12 - BRIDGE END
BR. NO. A5958
267'-0" CONT. COMP. W-BEAM UNIT
(48'-57'-57'-57'-48')
62'- 0" CLEAR ROADWAY
BEGIN (39°02'05" RT. FWD. SKEW)
END (42°46'49" RT. FWD. SKEW)
267'-0" BRIDGE LENGTH
STA. 1312+17.12 - BRIDGE END

(6) STA. 1310+23.28 - BRIDGE END
BR. NO. B5958
267'-0" CONT. COMP. W-BEAM UNIT
(48'-57'-57'-57'-48')
62'- 0" CLEAR ROADWAY
BEGIN (39°02'05" RT. FWD. SKEW)
END (44°23'03" RT. FWD. SKEW)
274'-0 ⅛" BRIDGE LENGTH
STA. 1312+97.29 - BRIDGE END

(8) STA. 1376+57.71 - BRIDGE END
BR. NO. A5960
399'-0" CONT. PRESTRESSED CONC. GIRDER UNIT
(43'-57'-43'-64'-64'-64'-64')
62'- 0" CLEAR ROADWAY
401'-1⅝" BRIDGE LENGTH
STA. 1380+58.82 - BRIDGE END

(9) STA. 1376+57.71 - BRIDGE END
BR. NO. B5960
399'-0" CONT. PRESTRESSED CONC. GIRDER UNIT
(43'-57'-43'-64'-64'-64'-64')
62'- 0" CLEAR ROADWAY
401'-1⅝" BRIDGE LENGTH
STA. 1380+58.82 - BRIDGE END

STRUCTURES OVER 20'-0" SPAN

(SHOWN FOR INFORMATION ONLY)

[1] STA. 1125+85 - IN PLACE
TRIPLE 6' X 4' X 441' R.C.
BOX CULVERT RETAIN
(23° RT. FWD. SKEW)
Q50 = 142 CFS: DA = 130.7 AC.
(SPAN 20'-4")

[2] STA. 1178+10 - IN PLACE
TRIPLE 6' X 4' X 196' R.C.
BOX CULVERT RETAIN
(30° LT. FWD. SKEW)
Q50 = 316 CFS: DA = 345 AC.
(SPAN 20'-4")

[7] STA. 1326+00 - IN PLACE
TRIPLE 10' X 6' X 177' R.C.
BOX CULVERT RETAIN
Q50 = 372 CFS: DA = 136.6 AC.
(SPAN 32'-11")

NOT TO SCALE

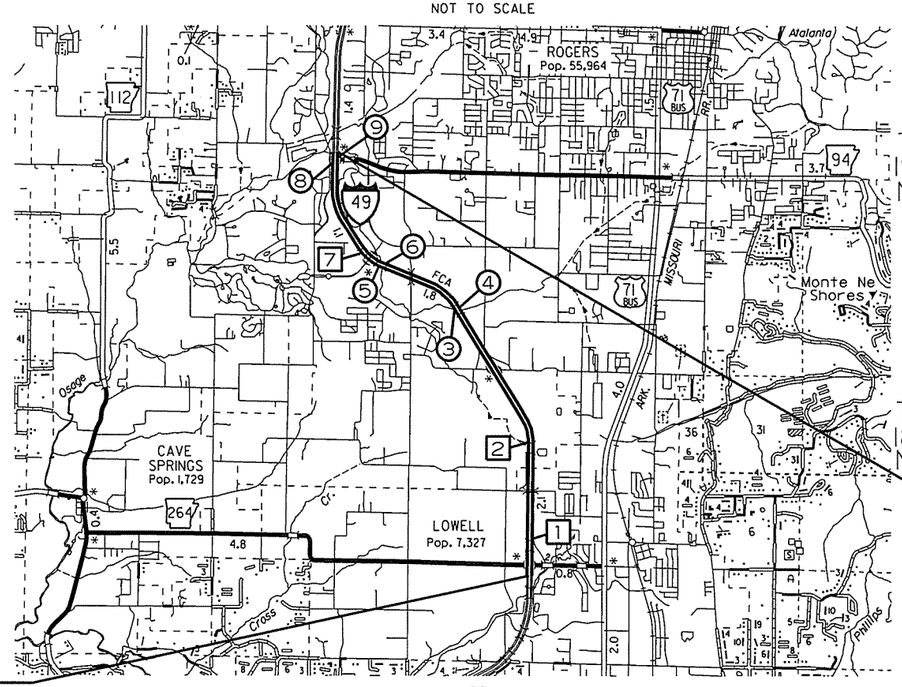

STA. 1108+78.59
BEGIN JOB CA0901
(LOG MILE 77.86)

STA. 1386+69.30
END JOB CA0901
(LOG MILE 83.12)

• DESIGN TRAFFIC DATA •

DESIGN YEAR	2036
2016 ADT	77,000
2036 ADT	120,000
2036 DHV	13,000
DIRECTIONAL DISTRIBUTION	60%
TRUCKS	12%
DESIGN SPEED	70 MPH

LENGTH OF PROJECT CALCULATED ALONG C.L.

GROSS	LENGTH OF PROJECT	27790.71	FEET	OR	5.263	MILES
NET	" " ROADWAY	26973.89	"	"	5.109	"
NET	" " BRIDGES	816.82	"	"	0.154	"
NET	" " PROJECT	27790.71	"	"	5.263	"

BEGINNING OF PROJECT
LAT. = N 36°15'10"
LONG.= W 94°09'02"

MID-POINT OF PROJECT
LAT. = N 36°17'20"
LONG.= W 94°09'38"

END OF PROJECT
LAT. = N 36°19'02"
LONG.= W 94°11'06"

CERTIFICATE OF AUTHORIZATION
CRAFTON, TULL & ASSOCIATES, INC.
No. 109
ARKANSAS ENGINEER

STATE OF ARKANSAS
REGISTERED PROFESSIONAL ENGINEER
No. 9620
5/6/16
HUBERT BURNS

P.E. CA0901
NON-PART.

JOB CA0901

USER: a15106
DESIGN FILE: G:\13106100_264toNHope\TRANSP\dgn\misc\CA0901 Title Sheet.dgn MODEL: TITLE SHEET
PLOTTED: 5/6/2016 08:07 SCALE: 200:1

INDEX OF SHEETS (SHEET 1 OF 2)

Crafton Tull
architecture | engineering | surveying

DATE REVISED	DATE FILMED	DATE REVISED	DATE FILMED

FED.RD. DIST.NO.	STATE	FED.AID PROJ.NO.	SHEET NO.	TOTAL SHEETS
6	ARK.			
JOB NO.		CA0901	2	452

2 INDEX OF SHEETS

STATE OF ARKANSAS
REGISTERED PROFESSIONAL ENGINEER
No. 15560
3-3-16
JEROME PAUL DAVIS

SHEET NO.	TITLE	BRIDGE NO.	DRWG.NO.	DATE
1	TITLE SHEET			
2-3	INDEX OF SHEETS			
4	GOVERNING SPECIFICATIONS AND GENERAL NOTES			
5-6	TYPICAL SECTIONS OF IMPROVEMENT			
7-33	SPECIAL DETAILS			
34-46	TEMPORARY EROSION CONTROL DETAILS			
47-51	SOIL BORING LOG			
52-67	MAINTENANCE OF TRAFFIC DETAILS			
68-79	PERMANENT PAVEMENT MARKING DETAILS			
80-91	QUANTITIES			
92	SCHEDULE OF BRIDGE QUANTITIES	A&B5956, A&B5958 & A&B5960	57679	
93-94	SUMMARY OF QUANTITIES AND REVISIONS			
95-106	SURVEY CONTROL DETAILS			
107-127	PLAN AND PROFILE SHEETS			
128	DETAILS FOR 60' TO 85' STEEL OVERHEAD SIGN STRUCTURES (SHEET 1 OF 5)		57679A	
129	DETAILS FOR 60' TO 85' STEEL OVERHEAD SIGN STRUCTURES (SHEET 2 OF 5)		57679B	
130	DETAILS FOR 60' TO 85' STEEL OVERHEAD SIGN STRUCTURES (SHEET 3 OF 5)		57679C	
131	DETAILS FOR 60' TO 85' STEEL OVERHEAD SIGN STRUCTURES (SHEET 4 OF 5)		57679D	
132	DETAILS FOR 60' TO 85' STEEL OVERHEAD SIGN STRUCTURES (SHEET 5 OF 5)		57679E	
133	LAYOUT OF BRIDGE 'A' OVER BLOSSOM WAY CREEK (SHEET 1 OF 3)	A5956	57680	
134	LAYOUT OF BRIDGE 'B' OVER BLOSSOM WAY CREEK (SHEET 2 OF 3)	B5956	57681	
135	LAYOUT OF BRIDGES 'A & B' OVER BLOSSOM WAY CREEK (SHEET 3 OF 3)	A&B5956	57682	
136	DETAILS OF STAGE CONSTRUCTION BRIDGES 'A & B' OVER BLOSSOM WAY CREEK (SHEET 1 OF 2)	A&B5956	57683	
137	DETAILS OF STAGE CONSTRUCTION BRIDGES 'A & B' OVER BLOSSOM WAY CREEK (SHEET 2 OF 2)	A&B5956	57684	
138	DETAILS OF END BENT 1 - BRIDGE A	A5956	57685	
139	DETAILS OF END BENT 1 - BRIDGE B	B5956	57686	
140	DETAILS OF END BENTS 1 & 4 - BRIDGES A & B	A&B5956	57687	
141	DETAILS OF END BENT 4 - BRIDGE A	A5956	57688	
142	DETAILS OF END BENT 4 - BRIDGE B	B5956	57689	
143	DETAILS OF BENTS 2 & 3 - BRIDGE A (SHEET 1 OF 3)	A5956	57690	
144	DETAILS OF BENTS 2 & 3 - BRIDGE B (SHEET 2 OF 3)	B5956	57691	
145	DETAILS OF BENTS 2 & 3 - BRIDGES A & B (SHEET 3 OF 3)	A&B5956	57692	
146	DETAILS OF ELASTOMERIC BEARINGS	A&B5956	57693	
147	DETAILS OF 143'-0" CONTINUOUS PRESTRESSED CONCRETE GIRDER (BRIDGES A & B) BLOSSOM WAY CREEK (SHEET 1 OF 9)	A&B5956	57694	
148	DETAILS OF 143'-0" CONTINUOUS PRESTRESSED CONCRETE GIRDER (BRIDGES A & B) BLOSSOM WAY CREEK (SHEET 2 OF 9)	A&B5956	57695	
149	DETAILS OF 143'-0" CONTINUOUS PRESTRESSED CONCRETE GIRDER (BRIDGES A & B) BLOSSOM WAY CREEK (SHEET 3 OF 9)	A&B5956	57696	
150	DETAILS OF 143'-0" CONTINUOUS PRESTRESSED CONCRETE GIRDER (BRIDGES A & B) BLOSSOM WAY CREEK (SHEET 4 OF 9)	A&B5956	57697	
151	DETAILS OF 143'-0" CONTINUOUS PRESTRESSED CONCRETE GIRDER (BRIDGES A & B) BLOSSOM WAY CREEK (SHEET 5 OF 9)	A&B5956	57698	
152	DETAILS OF 143'-0" CONTINUOUS PRESTRESSED CONCRETE GIRDER (BRIDGES A & B) BLOSSOM WAY CREEK (SHEET 6 OF 9)	A&B5956	57699	
153	DETAILS OF 143'-0" CONTINUOUS PRESTRESSED CONCRETE GIRDER (BRIDGES A & B) BLOSSOM WAY CREEK (SHEET 7 OF 9)	A&B5956	57700	
154	DETAILS OF 143'-0" CONTINUOUS PRESTRESSED CONCRETE GIRDER (BRIDGES A & B) BLOSSOM WAY CREEK (SHEET 8 OF 9)	A&B5956	57701	
155	DETAILS OF 143'-0" CONTINUOUS PRESTRESSED CONCRETE GIRDER (BRIDGES A & B) BLOSSOM WAY CREEK (SHEET 9 OF 9)	A&B5956	57702	
156	DETAILS OF TYPE SPECIAL 1 APPROACH SLABS (SHEET 1 OF 3)	A5956	57703	
157	DETAILS OF TYPE SPECIAL 1 APPROACH SLABS (SHEET 2 OF 3)	B5956	57704	
158	DETAILS OF TYPE SPECIAL 1 APPROACH SLABS (SHEET 3 OF 3)	A&B5956	57705	
159	DETAILS OF TYPE SPECIAL 1 APPROACH GUTTERS (SHEET 1 OF 2)	A5956	57706	
160	DETAILS OF TYPE SPECIAL 1 APPROACH GUTTERS (SHEET 2 OF 2)	B5956	57707	
161	LAYOUT OF BRIDGE 'A' OVER BLOSSOM WAY CREEK (SHEET 1 OF 4)	A5958	57708	
162	LAYOUT OF BRIDGE 'B' OVER BLOSSOM WAY CREEK (SHEET 2 OF 4)	B5958	57709	
163	LAYOUT OF BRIDGES 'A & B' OVER BLOSSOM WAY CREEK (SHEET 3 OF 4)	A&B5958	57710	
164	LAYOUT OF BRIDGES 'A & B' OVER BLOSSOM WAY CREEK (SHEET 4 OF 4)	A&B5958	57711	
165	DETAILS OF STAGE CONSTRUCTION BRIDGES 'A & B' OVER BLOSSOM WAY CREEK (SHEET 1 OF 2)	A&B5958	57712	
166	DETAILS OF STAGE CONSTRUCTION BRIDGES 'A & B' OVER BLOSSOM WAY CREEK (SHEET 2 OF 2)	A&B5958	57713	
167	DETAILS OF END BENT 1 - BRIDGE A	A5958	57714	
168	DETAILS OF END BENT 1 - BRIDGE B	B5958	57715	
169	DETAILS OF END BENTS 1 & 6 - BRIDGES A & B	A&B5958	57716	
170	DETAILS OF END BENT 6 - BRIDGE A	A5958	57717	
171	DETAILS OF END BENT 6 - BRIDGE B	B5958	57718	
172	DETAILS OF BENTS 2 & 5 - BRIDGE A (SHEET 1 OF 3)	A5958	57719	
173	DETAILS OF BENTS 2 & 5 - BRIDGE B (SHEET 2 OF 3)	B5958	57720	
174	DETAILS OF BENTS 2 & 5 - BRIDGES A & B (SHEET 3 OF 3)	A&B5958	57721	
175	DETAILS OF BENTS 3 & 4 - BRIDGE A (SHEET 1 OF 3)	A5958	57722	
176	DETAILS OF BENTS 3 & 4 - BRIDGE B (SHEET 2 OF 3)	B5958	57723	
177	DETAILS OF BENTS 3 & 4 - BRIDGES A & B (SHEET 3 OF 3)	A&B5958	57724	
178	DETAILS OF ELASTOMERIC BEARINGS	A&B5958	57725	
179	DETAILS OF 267'-0" CONTINUOUS COMPOSITE W-BEAM UNIT OVER BLOSSOM WAY CREEK (SHEET 1 OF 10)	A&B5958	57726	
180	DETAILS OF 267'-0" CONTINUOUS COMPOSITE W-BEAM UNIT OVER BLOSSOM WAY CREEK (SHEET 2 OF 10)	A&B5958	57727	
181	DETAILS OF 267'-0" CONTINUOUS COMPOSITE W-BEAM UNIT OVER BLOSSOM WAY CREEK (SHEET 3 OF 10)	A5958	57728	
182	DETAILS OF 267'-0" CONTINUOUS COMPOSITE W-BEAM UNIT OVER BLOSSOM WAY CREEK (SHEET 4 OF 10)	B5958	57729	
183	DETAILS OF 267'-0" CONTINUOUS COMPOSITE W-BEAM UNIT OVER BLOSSOM WAY CREEK (SHEET 5 OF 10)	A5958	57730	
184	DETAILS OF 267'-0" CONTINUOUS COMPOSITE W-BEAM UNIT OVER BLOSSOM WAY CREEK (SHEET 6 OF 10)	B5958	57731	
185	DETAILS OF 267'-0" CONTINUOUS COMPOSITE W-BEAM UNIT OVER BLOSSOM WAY CREEK (SHEET 7 OF 10)	A&B5958	57732	
186	DETAILS OF 267'-0" CONTINUOUS COMPOSITE W-BEAM UNIT OVER BLOSSOM WAY CREEK (SHEET 8 OF 10)	A&B5958	57733	
187	DETAILS OF 267'-0" CONTINUOUS COMPOSITE W-BEAM UNIT OVER BLOSSOM WAY CREEK (SHEET 9 OF 10)	A&B5958	57734	
188	DETAILS OF 267'-0" CONTINUOUS COMPOSITE W-BEAM UNIT OVER BLOSSOM WAY CREEK (SHEET 10 OF 10)	A&B5958	57735	
189	DETAILS OF TYPE SPECIAL 1 APPROACH SLABS (SHEET 1 OF 3)	A5958	57736	
190	DETAILS OF TYPE SPECIAL 1 APPROACH SLABS (SHEET 2 OF 3)	B5958	57737	
191	DETAILS OF TYPE SPECIAL 1 APPROACH SLABS (SHEET 3 OF 3)	A&B5958	57738	
192	DETAILS OF TYPE SPECIAL 1 APPROACH GUTTERS (SHEET 1 OF 2)	A5958	57739	
193	DETAILS OF TYPE SPECIAL 1 APPROACH GUTTERS (SHEET 2 OF 2)	B5958	57740	
194	LAYOUT OF BRIDGE 'A' OVER NEW HOPE ROAD & BLOSSOM WAY CREEK (SHEET 1 OF 3)	A5960	57741	
195	LAYOUT OF BRIDGE 'B' OVER NEW HOPE ROAD & BLOSSOM WAY CREEK (SHEET 2 OF 3)	B5960	57742	
196	LAYOUT OF BRIDGES 'A & B' OVER NEW HOPE ROAD & BLOSSOM WAY CREEK (SHEET 3 OF 3)	A&B5960	57743	

INDEX OF SHEETS

Crafton Tull
architecture | engineering | surveying

DATE REVISED	DATE FILMED	DATE REVISED	DATE FILMED
5-25-16			

FED.RD. DIST.NO.	STATE	FED.AID PROJ.NO.	SHEET NO.	TOTAL SHEETS
6	ARK.			
JOB NO.		CA0901	3	452

2 INDEX OF SHEETS

STATE OF ARKANSAS
REGISTERED PROFESSIONAL ENGINEER
No. 15560
JEROME PAUL DAVIS
5-26-16

INDEX OF SHEETS (SHEET 2 OF 2)

SHEET NO.	TITLE	BRIDGE NO.	DRWG.NO.	DATE
197	DETAILS OF STAGE CONSTRUCTION BRIDGES 'A & B' OVER NEW HOPE RD. & BLOSSOM WAY CREEK (143' UNIT) (SHEET 1 OF 4)	A&B5960	57744	
198	DETAILS OF STAGE CONSTRUCTION BRIDGES 'A & B' OVER NEW HOPE RD. & BLOSSOM WAY CREEK (256' UNIT) (SHEET 2 OF 4)	A&B5960	57745	
199	DETAILS OF STAGE CONSTRUCTION BRIDGES 'A & B' OVER NEW HOPE RD. & BLOSSOM WAY CREEK (SHEET 3 OF 4)	A&B5960	57746	
200	DETAILS OF STAGE CONSTRUCTION BRIDGES 'A & B' OVER NEW HOPE RD. & BLOSSOM WAY CREEK (SHEET 4 OF 4)	A&B5960	57747	
201	DETAILS OF END BENT 1 - BRIDGES A & B	A&B5960	57748	
202	DETAILS OF END BENTS 1 & 8- BRIDGES A & B	A&B5960	57749	
203	DETAILS OF END BENT 8 - BRIDGES A & B	A&B5960	57750	
204	DETAILS OF BENTS 2 & 3 - BRIDGES A & B (SHEET 1 OF 2)	A&B5960	57751	
205	DETAILS OF BENTS 2 & 3 - BRIDGES A & B (SHEET 2 OF 2)	A&B5960	57752	
206	DETAILS OF BENT 4 - BRIDGES A & B (SHEET 1 OF 2)	A&B5960	57753	
207	DETAILS OF BENT 4 - BRIDGES A & B (SHEET 2 OF 2)	A&B5960	57754	
208	DETAILS OF BENTS 5 - 7 - BRIDGES A & B (SHEET 1 OF 2)	A&B5960	57755	
209	DETAILS OF BENTS 5 - 7 - BRIDGES A & B (SHEET 2 OF 2)	A&B5960	57756	
210	DETAILS OF ELASTOMERIC BEARINGS	A&B5960	57757	
211	DETAILS OF 143'-0" CONTINUOUS PRESTRESSED CONCRETE GIRDER UNIT NEW HOPE ROAD & BLOSSOM WAY CREEK - BRIDGES A & B (SHEET 1 OF 8)	A&B5960	57758	
212	DETAILS OF 143'-0" CONTINUOUS PRESTRESSED CONCRETE GIRDER UNIT NEW HOPE ROAD & BLOSSOM WAY CREEK - BRIDGES A & B (SHEET 2 OF 8)	A&B5960	57759	
213	DETAILS OF 143'-0" CONTINUOUS PRESTRESSED CONCRETE GIRDER UNIT NEW HOPE ROAD & BLOSSOM WAY CREEK - BRIDGES A & B (SHEET 3 OF 8)	A&B5960	57760	
214	DETAILS OF 143'-0" CONTINUOUS PRESTRESSED CONCRETE GIRDER UNIT NEW HOPE ROAD & BLOSSOM WAY CREEK - BRIDGES A & B (SHEET 4 OF 8)	A&B5960	57761	
215	DETAILS OF 143'-0" CONTINUOUS PRESTRESSED CONCRETE GIRDER UNIT NEW HOPE ROAD & BLOSSOM WAY CREEK - BRIDGES A & B (SHEET 5 OF 8)	A&B5960	57762	
216	DETAILS OF 143'-0" CONTINUOUS PRESTRESSED CONCRETE GIRDER UNIT NEW HOPE ROAD & BLOSSOM WAY CREEK - BRIDGES A & B (SHEET 6 OF 8)	A&B5960	57763	
217	DETAILS OF 143'-0" CONTINUOUS PRESTRESSED CONCRETE GIRDER UNIT NEW HOPE ROAD & BLOSSOM WAY CREEK - BRIDGES A & B (SHEET 7 OF 8)	A&B5960	57764	
218	DETAILS OF 143'-0" CONTINUOUS PRESTRESSED CONCRETE GIRDER UNIT NEW HOPE ROAD & BLOSSOM WAY CREEK - BRIDGES A & B (SHEET 8 OF 8)	A&B5960	57765	
219	DETAILS OF 143'-0" & 256'-0" CONTINUOUS PRESTRESSED CONCRETE GIRDER UNIT NEW HOPE ROAD & BLOSSOM WAY CREEK - BRIDGES A & B (SHEET 1 OF 2)	A&B5960	57766	
220	DETAILS OF 143'-0" & 256'-0" CONTINUOUS PRESTRESSED CONCRETE GIRDER UNIT NEW HOPE ROAD & BLOSSOM WAY CREEK - BRIDGES A & B (SHEET 2 OF 2)	A&B5960	57767	
221	DETAILS OF 256'-0" CONTINUOUS PRESTRESSED CONCRETE GIRDER UNIT NEW HOPE ROAD & BLOSSOM WAY CREEK - BRIDGES A & B (SHEET 1 OF 7)	A&B5960	57768	
222	DETAILS OF 256'-0" CONTINUOUS PRESTRESSED CONCRETE GIRDER UNIT NEW HOPE ROAD & BLOSSOM WAY CREEK - BRIDGES A & B (SHEET 2 OF 7)	A&B5960	57769	
223	DETAILS OF 256'-0" CONTINUOUS PRESTRESSED CONCRETE GIRDER UNIT NEW HOPE ROAD & BLOSSOM WAY CREEK - BRIDGES A & B (SHEET 3 OF 7)	A&B5960	57770	
224	DETAILS OF 256'-0" CONTINUOUS PRESTRESSED CONCRETE GIRDER UNIT NEW HOPE ROAD & BLOSSOM WAY CREEK - BRIDGES A & B (SHEET 4 OF 7)	A&B5960	57771	
225	DETAILS OF 256'-0" CONTINUOUS PRESTRESSED CONCRETE GIRDER UNIT NEW HOPE ROAD & BLOSSOM WAY CREEK - BRIDGES A & B (SHEET 5 OF 7)	A&B5960	57772	
226	DETAILS OF 256'-0" CONTINUOUS PRESTRESSED CONCRETE GIRDER UNIT NEW HOPE ROAD & BLOSSOM WAY CREEK - BRIDGES A & B (SHEET 6 OF 7)	A&B5960	57773	
227	DETAILS OF 256'-0" CONTINUOUS PRESTRESSED CONCRETE GIRDER UNIT NEW HOPE ROAD & BLOSSOM WAY CREEK - BRIDGES A & B (SHEET 7 OF 7)	A&B5960	57774	
228	DETAILS OF TYPE SPECIAL 1 APPROACH SLABS (SHEET 1 OF 2)	A&B5960	57775	
229	DETAILS OF TYPE SPECIAL 1 APPROACH SLABS (SHEET 2 OF 2)	A&B5960	57776	
230	DETAILS OF TYPE SPECIAL 1 APPROACH GUTTERS (SHEET 1 OF 1)	A&B5960	57777	
231	STANDARD DETAILS FOR EMBANKMENT CONSTRUCTION AND BACKFILL AT BRIDGE ENDS		55000	2-27-14
232	STANDARD DETAILS FOR DUMPED RIPRAP AND FILTER BLANKET AND COMPUTING EXCAVATION FOR STRUCTURES		55001	2-27-14
233	STANDARD DETAILS FOR CONCRETE RIPRAP		55002	2-27-14
234	STANDARD DETAILS FOR PERMANENT STEEL BRIDGE DECK FORMS FOR STEEL & CONCRETE GIRDER SPANS		55005	3-24-16
235	STANDARD DETAILS FOR TYPE D BRIDGE NAME PLATE		55010	1-14-15
236	STANDARD DETAILS FOR STEEL H-PILES AND PILE ENCASEMENTS		55020	3-24-16
237	CONCRETE DITCH PAVING		CDP-1	11-17-10
238	DETAILS OF DRIVEWAYS & ISLANDS		DR-1	2-27-14
239	FLARED END SECTION		FES-1	10-18-96
240	FLARED END SECTION		FES-2	10-18-96
241	DETAILS OF DROP INLETS & JUNCTION BOXES		FPC-9	11-16-01
242	DETAILS OF DROP INLET & JUNCTION BOX (TYPE ST)		FPC-9S	7-26-12
242a	GUARD RAIL DETAILS		GR-8	7-14-10
243	GUARD RAIL DETAILS		GR-9A	4-17-08
244	GUARD RAIL DETAILS		GRT-1	7-14-10
245	IMPACT ATTENUATION BARRIER		IB-1	10-15-09
246	CONCRETE PIPE CULVERT FILL HEIGHTS & BEDDING		PCC-1	2-27-14
247	METAL PIPE CULVERT FILL HEIGHTS & BEDDING		PCM-1	2-27-14
248	PAVEMENT MARKING DETAILS		PM-1	5-12-16
249	PERMANENT PAVEMENT MARKING ON ACCESS CONTROLLED ROADWAYS		PM-2	9-12-13
250	DETAILS OF PIPE UNDERDRAIN		PU-1	4-10-13
251	STANDARD TRAFFIC CONTROLS FOR HIGHWAY CONSTRUCTION		TC-1	9-02-15
252	STANDARD TRAFFIC CONTROLS FOR HIGHWAY CONSTRUCTION		TC-2	9-02-15
253	STANDARD TRAFFIC CONTROLS FOR HIGHWAY CONSTRUCTION		TC-3	9-02-15
254	STANDARD TRAFFIC CONTROLS FOR HIGHWAY CONSTRUCTION-TEMPORARY PRECAST BARRIER		TC-4	2-27-14
255	STANDARD TRAFFIC CONTROLS FOR HIGHWAY CONSTRUCTION-TEMPORARY PRECAST BARRIER		TC-5	10-15-09
256	TEMPORARY EROSION CONTROL DEVICES		TEC-1	12-15-11
257	WIRE FENCE TYPE A AND B		WF-1	8-22-02
258	WIRE FENCE WATER GAPS		WF-2	4-20-79
259	WIRE FENCE TYPE C AND D		WF-4	8-22-02
260-452	CROSS SECTIONS			

NOTE: CROSS SECTIONS NOT NORMALLY INCLUDED IN PLANS SOLD TO PROSPECTIVE BIDDERS, BUT MAY BE HAD UPON REQUEST.

USER: at5106
DESIGN FILE: G:\13106100_264toNHope\TRANSP\dgn\misc\CA0901INDEX AND GOV.dgn
PLOTTED: 5/26/2016 10:57 SCALE: 16:1 MODEL: TYPICAL SECTIONS OF IMPROVEMENT

STATE OF ARKANSAS
REGISTERED PROFESSIONAL ENGINEER
No. 15560
JEROME PAUL DAVIS
6/09/16

GOVERNING SPECIFICATIONS

ARKANSAS STATE HIGHWAY COMMISSION STANDARD SPECIFICATIONS FOR HIGHWAY CONSTRUCTION, EDITION OF 2014, AND THE FOLLOWING SPECIAL PROVISIONS AND SUPPLEMENTAL SPECIFICATIONS.

NUMBER	TITLE
ERRATA	ERRATA FOR THE BOOK OF STANDARD SPECIFICATIONS
FHWA-1273	REQUIRED CONTRACT PROVISIONS FEDERAL-AID CONSTRUCTION CONTRACTS
FHWA-1273	SUPPLEMENT - EQUAL EMPLOYMENT OPPORTUNITY - NOTICE TO CONTRACTORS
FHWA-1273	SUPPLEMENT - SPECIFIC EQUAL EMPLOYMENT OPPORTUNITY RESPONSIBILITIES (23 U.S.C. 140)
FHWA-1273	SUPPLEMENT - EQUAL EMPLOYMENT OPPORTUNITY - GOALS AND TIMETABLES
FHWA-1273	SUPPLEMENT - EQUAL EMPLOYMENT OPPORTUNITY - FEDERAL STANDARDS
FHWA-1273	SUPPLEMENT - TRAINING PROGRAM - JOB CA0901
FHWA-1273	SUPPLEMENT - POSTERS AND NOTICES REQUIRED FOR FEDERAL-AID PROJECTS
FHWA-1273	SUPPLEMENT - WAGE RATE DETERMINATION
100-3	CONTRACTOR'S LICENSE
108-1	LIQUIDATED DAMAGES
108-2	WORK ALLOWED PRIOR TO ISSUANCE OF WORK ORDER
303-1	AGGREGATE BASE COURSE
400-1	TACK COATS
410-1	CONSTRUCTION REQUIREMENTS AND ACCEPTANCE OF ASPHALT CONCRETE PLANT MIX COURSES
604-1	RETROREFLECTIVE SHEETING FOR TRAFFIC CONTROL DEVICES IN CONSTRUCTION ZONES
606-1	PIPE CULVERTS FOR SIDE DRAINS
620-1	MULCH COVER
JOB CA0901	AIRPORT CLEARANCE REQUIREMENTS
JOB CA0901	AUTOMATED WORK ZONE INFORMATION SYSTEM
JOB CA0901	BIDDING REQUIREMENTS AND CONDITIONS
JOB CA0901	BROADBAND INTERNET SERVICE FOR ASPHALT CONCRETE PLANT
JOB CA0901	BROADBAND INTERNET SERVICE FOR FIELD OFFICE
JOB CA0901	CARGO PREFERENCE ACT REQUIREMENTS
JOB CA0901	CONSTRUCTION IN SPECIAL FLOOD HAZARD AREAS
JOB CA0901	COORDINATION OF WORK
JOB CA0901	DELAY IN RIGHT OF WAY OCCUPANCY
JOB CA0901	DETENTION POND CLAY LINER
JOB CA0901	DIRECT TENSION INDICATORS FOR HIGH STRENGTH BOLT ASSEMBLIES
JOB CA0901	DISADVANTAGED BUSINESS ENTERPRISE BIDDER'S RESPONSIBILITIES
JOB CA0901	DROP INLETS (TYPE RM MODIFIED)
JOB CA0901	EMPLOYMENT REPORTING
JOB CA0901	EXTENSION FOR PIPE CULVERTS
JOB CA0901	GOALS FOR DISADVANTAGED BUSINESS ENTERPRISE PARTICIPATION
JOB CA0901	HIGH PERFORMANCE PAVEMENT MARKING
JOB CA0901	ISSUANCE OF PROPOSALS
JOB CA0901	MAINTENANCE OF TRAFFIC
JOB CA0901	MANDATORY ELECTRONIC CONTRACT
JOB CA0901	NESTING SITES OF MIGRATORY BIRDS
JOB CA0901	OFF-SITE RESTRAINING CONDITIONS FOR BATS
JOB CA0901	OVERHEAD SIGN STRUCTURE FOUNDATION
JOB CA0901	PARTNERING REQUIREMENTS
JOB CA0901	PERCENT WITHIN LIMITS/PAVEMENT SMOOTHNESS
JOB CA0901	PIPE CULVERTS
JOB CA0901	PROSECUTION AND PROGRESS- CONNECTING ARKANSAS PROGRAM
JOB CA0901	REMOVAL AND DISPOSAL OF GUARDRAIL
JOB CA0901	REMOVAL AND DISPOSAL OF PLOWABLE PAVEMENT MARKER
JOB CA0901	REMOVAL AND DISPOSAL OF WIRE ROPE SAFETY FENCE
JOB CA0901	SEQUENCE OF CONSTRUCTION
JOB CA0901	SHORING
JOB CA0901	SHORING FOR CULVERTS
JOB CA0901	SITE USE (A+C METHOD) - CALENDAR DAY CONTRACT - CONNECTING ARKANSAS PROGRAM
JOB CA0901	SOIL STABILIZATION
JOB CA0901	SPECIAL CLEARING REQUIREMENTS
JOB CA0901	SPECIAL SAFETY REQUIREMENTS FOR BRIDGES
JOB CA0901	SPECIAL SAFETY REQUIREMENTS FOR OVERHEAD SIGNS
JOB CA0901	STEEL SIGN STRUCTURES
JOB CA0901	STORM WATER POLLUTION PREVENTION PLAN
JOB CA0901	SUBMISSION OF ASPHALT CONCRETE HOT MIX ACCEPTANCE TEST RESULTS
JOB CA0901	TRENCHING AND SHOULDER PREPARATION FOR TEMPORARY WIDENING
JOB CA0901	TRAFFIC CONTROL DEVICES IN CONSTRUCTION ZONES
JOB CA0901	UTILITY ADJUSTMENTS
JOB CA0901	VALUE ENGINEERING
JOB CA0901	WARM MIX ASPHALT

GENERAL NOTES

1. GRADE LINE DENOTES FINISHED GRADE WHERE SHOWN ON PLANS.
2. ALL PIPE LINES, POWER, TELEPHONE, AND TELEGRAPH LINES TO BE MOVED OR LOWERED BY THE RESPECTIVE OWNERS AS PER AGREEMENT WITH SUCH OWNERS.
3. ANY EQUIPMENT OR APPURTENANCE THAT INTERFERES WITH THE PROPOSED CONSTRUCTION AND WHICH MAY BE THE PROPERTY OF UTILITY SERVICE ORGANIZATIONS SHALL BE MOVED BY THE OWNERS UNLESS OTHERWISE PROVIDED.
4. ALL LAND MONUMENTS LOCATED WITHIN THE CONSTRUCTION AREA SHALL BE PROTECTED IN ACCORDANCE WITH SECTION 107.12 OF THE STANDARD SPECIFICATIONS.
5. ALL FLEXIBLE BASE AND ASPHALTIC PAVEMENTS REMOVED SHALL BE PAID FOR UNDER THE ITEM NO. 210 - UNCLASSIFIED EXCAVATION.
6. THE EXISTING ASPHALT PAVEMENT TO BE REMOVED FROM THE REMAINING PAVEMENT SHALL BE SEPARATED BY SAWING ALONG A NEAT LINE. AFTER SAWING, THE PAVEMENT TO BE REMOVED SHALL BE CAREFULLY REMOVED IN A MANNER THAT WILL NOT DAMAGE THE PAVEMENT THAT IS TO REMAIN. ANY DAMAGE OF THE ASPHALT PAVEMENT THAT IS TO REMAIN IN PLACE SHALL BE REPAIRED AT THE CONTRACTOR'S EXPENSE.
7. THIS PROJECT IS COVERED UNDER A NATIONWIDE 14 SECTION 404 PERMIT. REFER TO SECTION 110 OF THE STANDARD SPECIFICATIONS, EDITION OF 2014, FOR PERMIT REQUIREMENTS.

Crafton Tull
architecture | engineering | surveying

DATE REVISED	DATE FILMED	DATE REVISED	DATE FILMED

FED.RD. DIST.NO.	STATE	FED.AID PROJ.NO.	SHEET NO.	TOTAL SHEETS
6	ARK.			
JOB NO.		CA0901	5	452

(2) TYPICAL SECTIONS OF IMPROVEMENT

STATE OF ARKANSAS
REGISTERED PROFESSIONAL ENGINEER
No. 15560
JEROME PAUL DAVIS
5-09-16

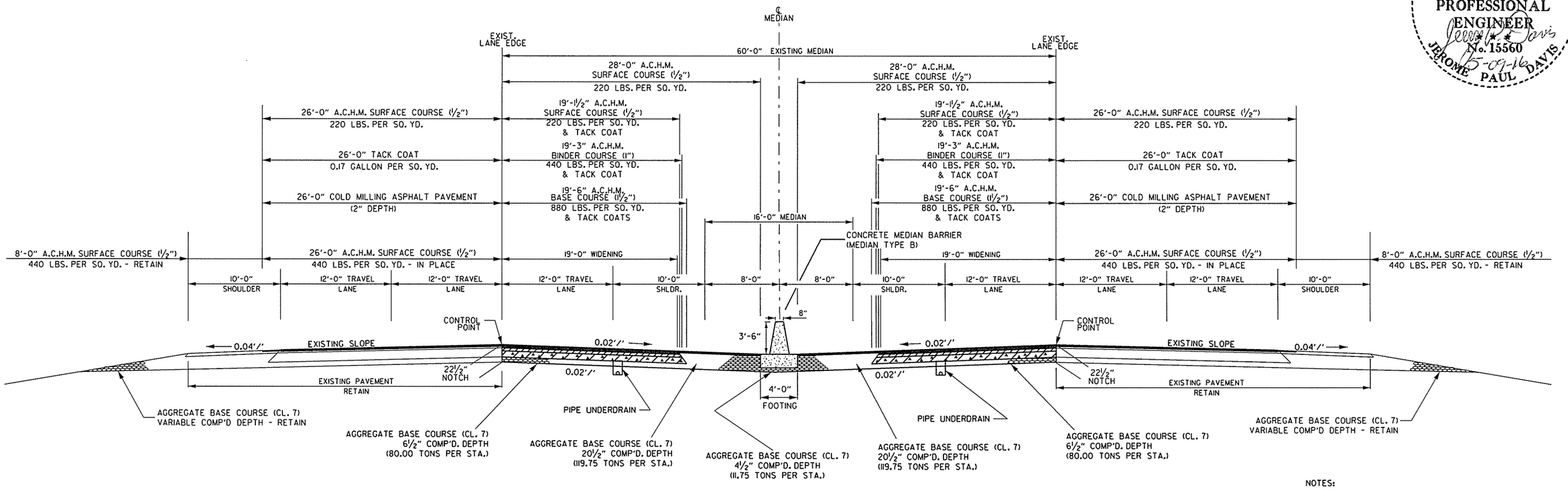

TYPICAL SECTION OF IMPROVEMENT - I-49
NOTCH AND WIDEN INTO MEDIAN
MILL AND INLAY OF EXISTING

STA. 1108+78.59 TO STA. 1176+65.00
STA. 1197+55.00 TO STA. 1264+35.00
STA. 1287+60.00 TO STA. 1308+00.00
STA. 1332+05.00 TO STA. 1339+91.00
STA. 1363+59.00 TO STA. 1386+69.30

NOTES:

REFER TO CROSS SECTIONS FOR DEVIATIONS FROM THE NORMAL SLOPES. NO CHANGES SHALL BE MADE FROM THE PLANNED SLOPES WITHOUT THE APPROVAL OF THE ENGINEER.

THE THICKNESS OF AGGREGATE BASE COURSE SHALL BE WITHIN PLUS OR MINUS ONE INCH OF THE PLAN THICKNESS SHOWN. THE CONTRACTOR WILL CORRECT ANY DEFICIENT THICKNESS THAT DOES NOT MEET TOLERANCE INDICATED. PAYMENT WILL NOT BE MADE FOR MATERIAL PLACED IN EXCESS OF THE TOLERANCE INDICATED.

THE FINAL 2" OF SURFACE COURSE IS TO BE PLACED AFTER ALL OTHER COURSES HAVE BEEN LAID. LONGITUDINAL JOINTS SHALL BE AT LANE LINES.

THE EXISTING ASPHALT PAVEMENT TO BE REMOVED FROM THE REMAINING PAVEMENT SHALL BE SEPARATED BY SAWING ALONG A NEAT LINE. AFTER SAWING, THE PAVEMENT TO BE REMOVED SHALL BE CAREFULLY REMOVED IN A MANNER THAT WILL NOT DAMAGE THE PAVEMENT THAT IS TO REMAIN. ANY DAMAGE OF THE ASPHALT PAVEMENT THAT IS TO REMAIN IN PLACE SHALL BE REPAIRED AT THE CONTRACTOR'S EXPENSE.

PRIOR TO AND DURING PLACEMENT OF PAVEMENT, THE CONTRACTOR SHALL PROVIDE POSITIVE DRAINAGE AT ALL TIMES. THE METHOD(S) USED SHALL BE APPROVED BY THE ENGINEER. PAYMENT FOR THIS WORK SHALL BE CONSIDERED INCLUDED IN THE PRICE BID FOR THE VARIOUS CONTRACT ITEMS.

UNDERDRAINS TO BE CONNECTED TO DROP INLETS.

TYPICAL SECTIONS OF IMPROVEMENT

USER: at5106
DESIGN FILE: G:\13106100_264toNHope\TRANSP\dgn\typical\rCA0901_TS_01.dgn
PLOTTED: 5/9/2016 14:58 SCALE: 10:1 MODEL: TYPICAL SECTIONS OF IMPROVEMENT

Crafton Tull
architecture | engineering | surveying

DATE REVISED	DATE FILMED	DATE REVISED	DATE FILMED

FED.RD. DIST.NO.	STATE	FED.AID PROJ.NO.	SHEET NO.	TOTAL SHEETS
6	ARK.			
JOB NO.		CA0901	6	452

(2) TYPICAL SECTIONS OF IMPROVEMENT

STATE OF ARKANSAS
REGISTERED PROFESSIONAL ENGINEER
No. 15560
JEROME PAUL DAVIS
5-09-16

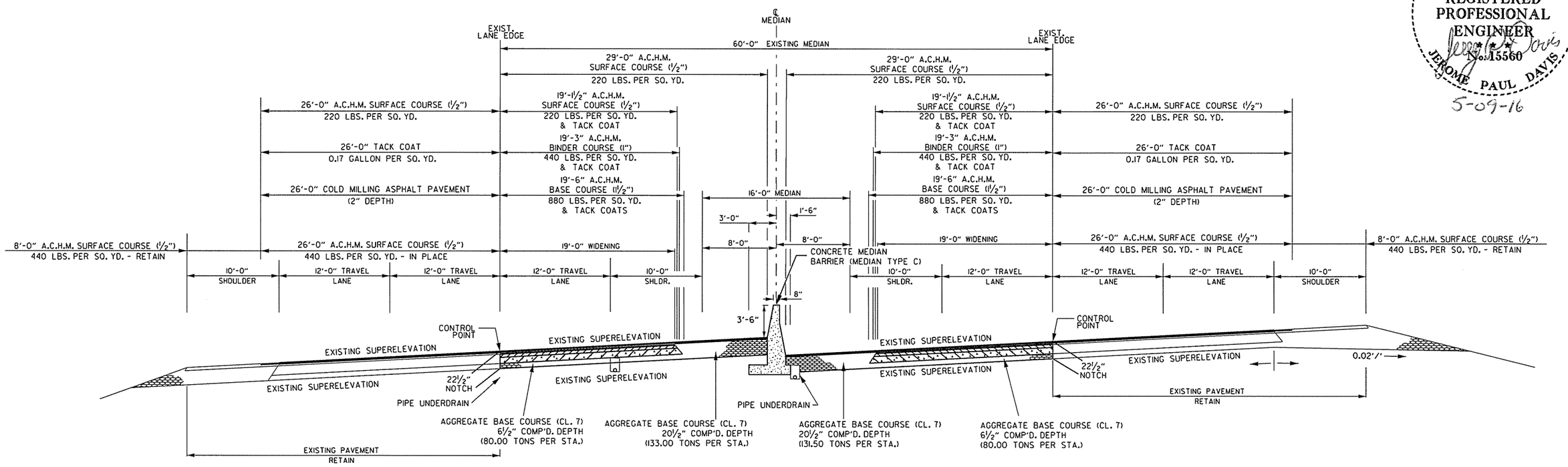

TYPICAL SECTION OF IMPROVEMENT - I-49
SUPERELEVATION
NOTCH AND WIDEN INTO MEDIAN
MILL AND INLAY OF EXISTING

STA. 1176+65.00 TO STA. 1197+55.00
STA. 1264+35.00 TO STA. 1287+60.00
STA. 1308+00.00 TO STA. 1332+05.00
STA. 1339+91.00 TO STA. 1363+59.00

NOTES:

REFER TO CROSS SECTIONS FOR DEVIATIONS FROM THE NORMAL SLOPES. NO CHANGES SHALL BE MADE FROM THE PLANNED SLOPES WITHOUT THE APPROVAL OF THE ENGINEER.

THE THICKNESS OF AGGREGATE BASE COURSE SHALL BE WITHIN PLUS OR MINUS ONE INCH OF THE PLAN THICKNESS SHOWN. THE CONTRACTOR WILL CORRECT ANY DEFICIENT THICKNESS THAT DOES NOT MEET TOLERANCE INDICATED. PAYMENT WILL NOT BE MADE FOR MATERIAL PLACED IN EXCESS OF THE TOLERANCE INDICATED.

THE FINAL 2" OF SURFACE COURSE IS TO BE PLACED AFTER ALL OTHER COURSES HAVE BEEN LAID. LONGITUDINAL JOINTS SHALL BE AT LANE LINES.

THE EXISTING ASPHALT PAVEMENT TO BE REMOVED FROM THE REMAINING PAVEMENT SHALL BE SEPARATED BY SAWING ALONG A NEAT LINE. AFTER SAWING, THE PAVEMENT TO BE REMOVED SHALL BE CAREFULLY REMOVED IN A MANNER THAT WILL NOT DAMAGE THE PAVEMENT THAT IS TO REMAIN. ANY DAMAGE OF THE ASPHALT PAVEMENT THAT IS TO REMAIN IN PLACE SHALL BE REPAIRED AT THE CONTRACTOR'S EXPENSE.

PRIOR TO AND DURING PLACEMENT OF PAVEMENT, THE CONTRACTOR SHALL PROVIDE POSITIVE DRAINAGE AT ALL TIMES. THE METHOD(S) USED SHALL BE APPROVED BY THE ENGINEER. PAYMENT FOR THIS WORK SHALL BE CONSIDERED INCLUDED IN THE PRICE BID FOR THE VARIOUS CONTRACT ITEMS.

UNDERDRAINS TO BE CONNECTED TO DROP INLETS.

TYPICAL SECTIONS OF IMPROVEMENT

USER: at5106
DESIGN FILE: G:\13106100_264toNHope\TRANSP\dgn\typical\rCA0901_TS_01.dgn
PLOTTED: 5/9/2016 14:58 SCALE: 10:1 MODEL: TYPICAL SECTIONS OF IMPROVEMENT

DATE REVISED	DATE FILMED	DATE REVISED	DATE FILMED

Crafton Tull
architecture | engineering | surveying

FED.RD. DIST.NO.	STATE	FED.AID PROJ.NO.	SHEET NO.	TOTAL SHEETS
6	ARK.			
JOB NO.		CA0901	7	452

2 SPECIAL DETAILS

STATE OF ARKANSAS
REGISTERED PROFESSIONAL ENGINEER
No. 15560
3-09-16
JEROME PAUL DAVIS

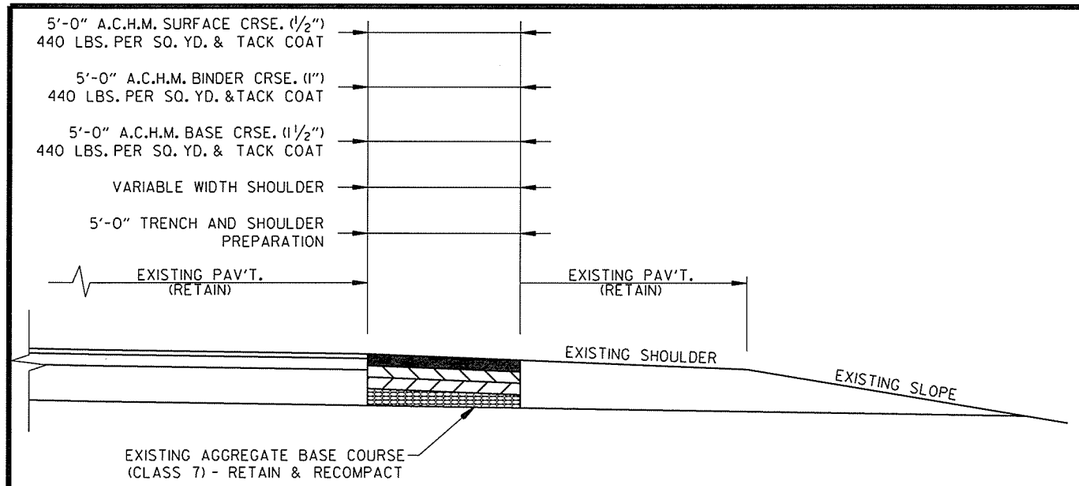

SHOULDER TRENCHING AND PREPARATION
OUTSIDE SHOULDER
(SHOWN IN DIRECTION OF TRAFFIC)
(NOT TO SCALE)

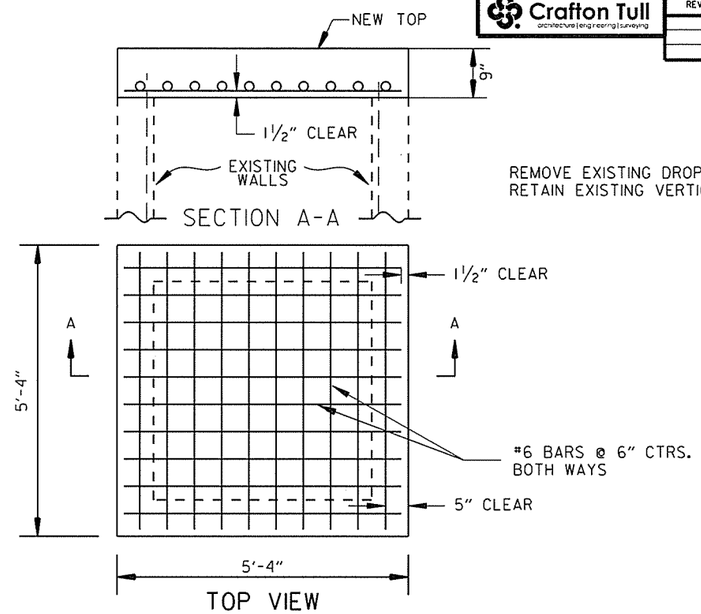

REMOVE EXISTING DROP INLET TOP, RETAIN EXISTING VERTICAL REINFORCING.

DETAILS OF MODIFIED DROP INLET
(NOT TO SCALE)

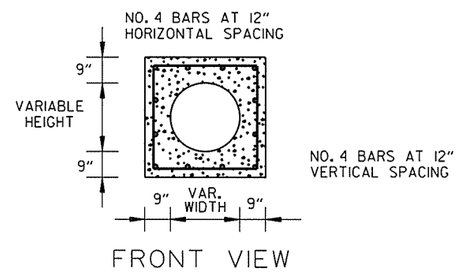

FRONT VIEW

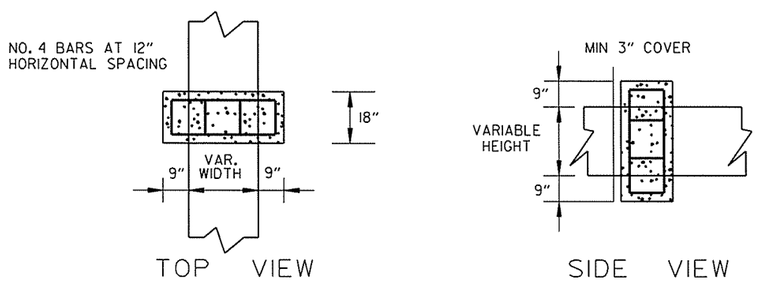

TOP VIEW SIDE VIEW

PIPE EXTENSION
REINFORCED CONCRETE COLLAR DETAIL
(NOT TO SCALE)

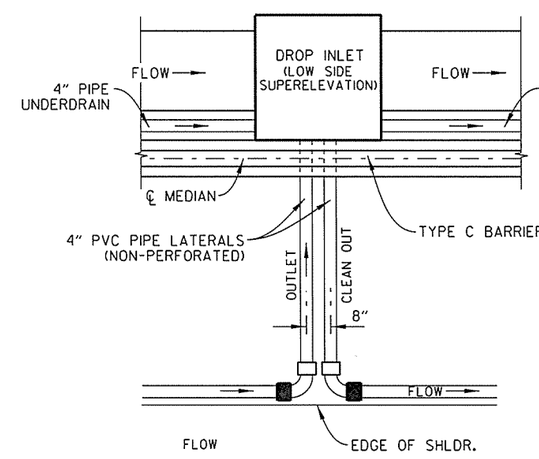

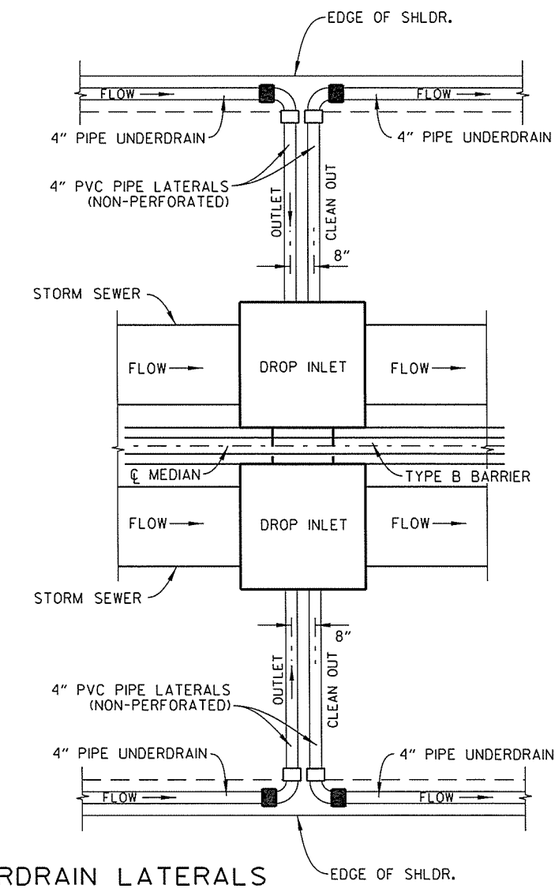

NOTES:

1. FOR MATERIAL REQUIREMENTS REFER TO STD. DWG. PU-1
2. TYPICAL SHOWN FOR INLETS AND DRAIN ON GRADE. FOR INLETS IN SAG, BOTH LATERALS FLOW INTO INLET.
3. ANY LATERAL CROSSING ℄ MEDIAN MUST BE BELOW MEDIAN BARRIER.

PLAN DETAIL OF PIPE UNDERDRAIN LATERALS
(NOT TO SCALE)

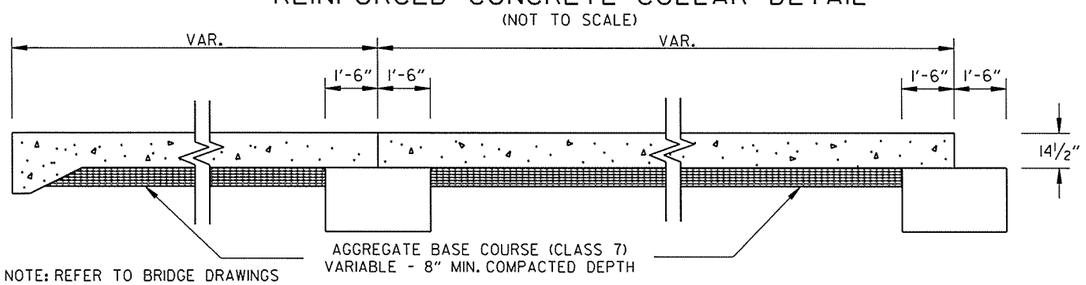

NOTE: REFER TO BRIDGE DRAWINGS
A5956, B5956
A5958, B5958
A5960, B5960
FOR ADDITIONAL INFORMATION.

DETAIL OF APPROACH SLAB
(NOT TO SCALE)

SPECIAL DETAILS

DESIGN FILE: G:\13106100_264toNHope\TRANSP\dgn\special_details\CA0901SpecialDetails.dgn MODEL: SPECIAL DETAILS
PLOTTED: 3/9/2016 07:49 SCALE: 20:1

STATE OF ARKANSAS
REGISTERED PROFESSIONAL ENGINEER
No. 15560
3-09-16
JEROME PAUL DAVIS

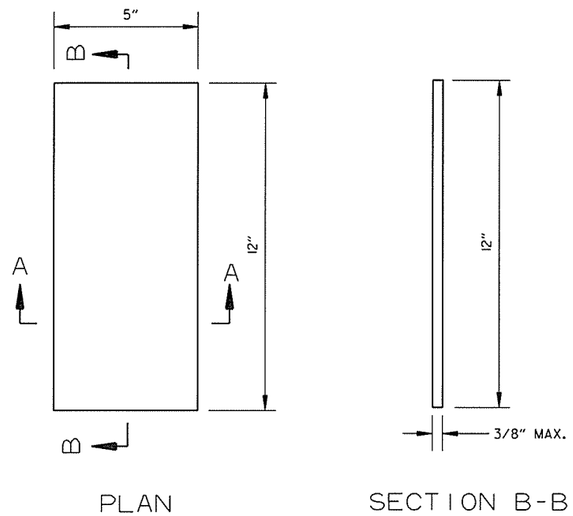

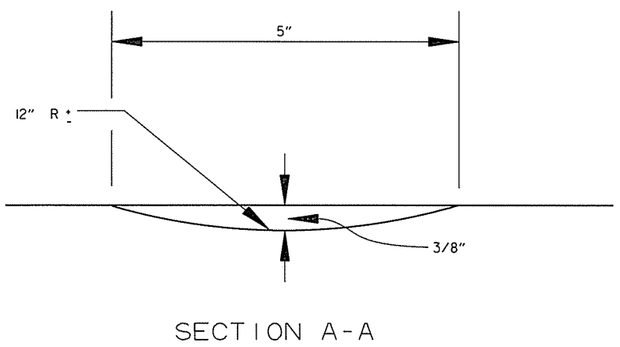

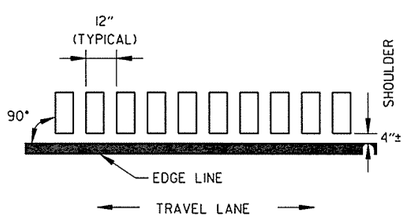

LOCATION PLAN OF RUMBLE STRIPS
LEFT OR RIGHT SHOULDER

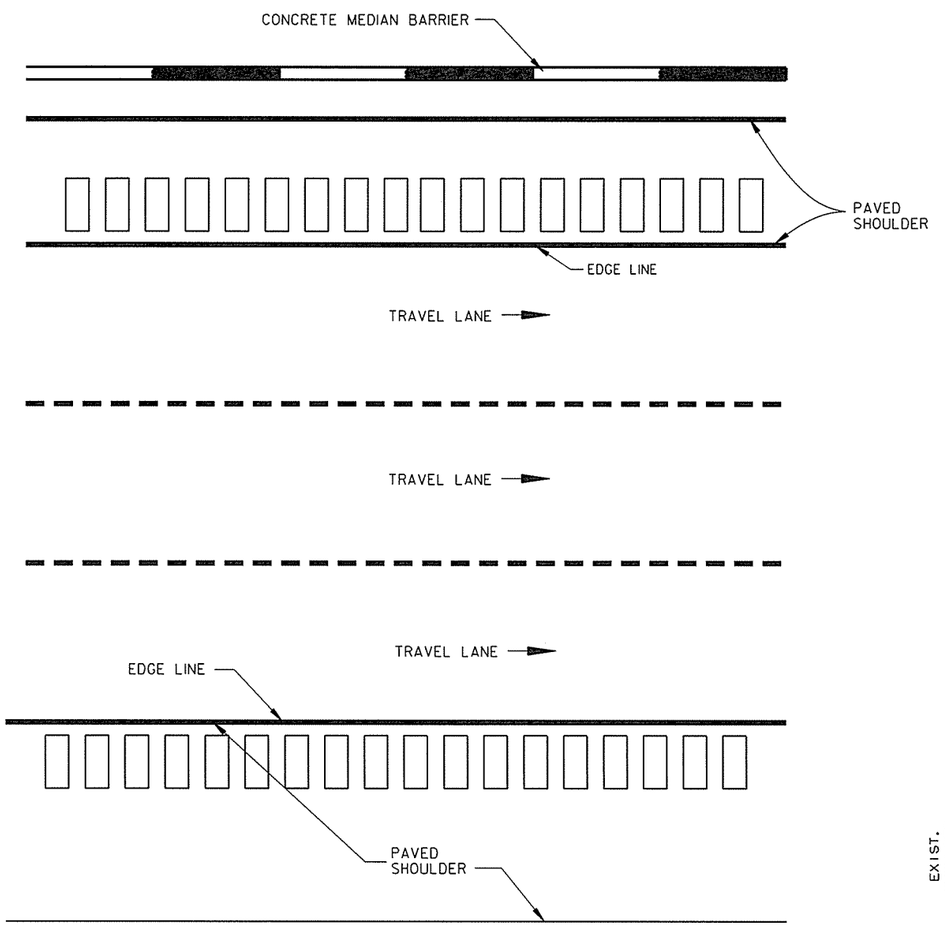

PLAN VIEW
(NOT TO SCALE)

NOTES:

1. ALIGNMENT OF RUMBLE STRIPS SHALL GENERALLY BE STRAIGHT AND OFFSET APPROXIMATELY 4" FROM THE OUTER EDGE OF THE EDGE LINE. THIS OFFSET MAY BE ADJUSTED TO ACCOMMODATE VARIATIONS IN THE EDGE LINE AS WELL AS TO AVOID EXISTING LONGITUDINAL JOINTS.
2. THE 1/2" DEPTH SHALL GENERALLY APPLY FOR THE ENTIRE 16" LENGTH. SOME VARIATION TO SUIT SHOULDER SLOPE BREAKS MAY BE NECESSARY.

DETAILS OF RUMBLE STRIPS

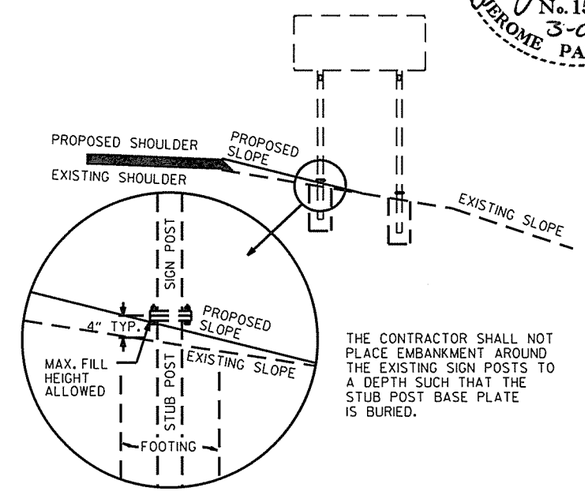

THE CONTRACTOR SHALL NOT PLACE EMBANKMENT AROUND THE EXISTING SIGN POSTS TO A DEPTH SUCH THAT THE STUB POST BASE PLATE IS BURIED.

DETAIL FOR THE MAINTENANCE OF EXISTING BREAKAWAY SIGN STRUCTURES

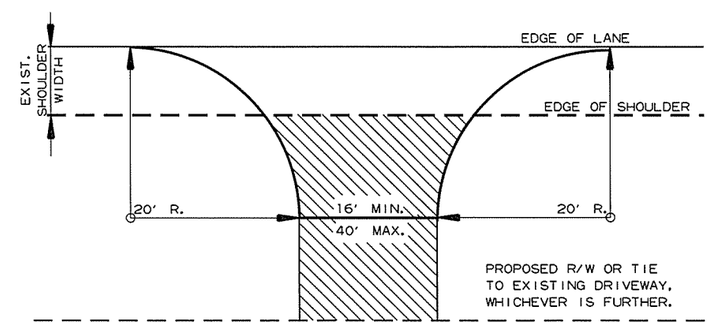

DETAIL FOR DRIVEWAY TURNOUTS

STATE OF ARKANSAS
REGISTERED PROFESSIONAL ENGINEER
No. 15560
3-09-16
JEROME PAUL DAVIS

GENERAL NOTES FOR CONCRETE BARRIER WALLS

1. ALL BARRIER WALLS SHALL BE CONSTRUCTED IN ACCORDANCE WITH SECTION 631 OF THE STANDARD SPECIFICATIONS, 2014 EDITION.
2. CONTRACTION JOINTS REQUIRED @ 15'-0" MAXIMUM SPACING FOR MEDIAN TYPE C AND MEDIAN TYPE C SPECIAL.
3. ALL CONTRACTION JOINTS TO BE FORMED IN FRESH CONCRETE ON TOP AND IN SIDES OF BARRIER WALL.
4. DOWEL BARS FOR BARRIER MEDIAN TYPE B WILL NOT BE REQUIRED IF BARRIER AND MINIMUM 4' WIDE BASE ARE CAST AS A COMPLETE UNIT.
5. ALL EXPOSED EDGES OF CONCRETE BARRIER WALL SHALL HAVE A ¾" CHAMFER.
6. THE DESIGN OF BARRIER WALL MEDIAN TYPE C IS BASED ON A MINIMUM FOUNDATION BEARING CAPACITY OF ONE TON PER SQUARE FOOT. MEDIAN TYPE C SPECIAL IS BASED ON A MINIMUM FOUNDATION BEARING CAPACITY OF 1500 POUNDS PER SQUARE FOOT. UNSTABLE FOUNDATION MATERIAL SHALL BE REMOVED AND REPLACED TO PROVIDE A FIRM FOUNDATION AS DIRECTED BY THE ENGINEER.
7. SPACING BETWEEN EXPANSION JOINTS SHALL NOT EXCEED 400 FT. FOR BARRIER MEDIAN TYPE B OR 120 FT. FOR BARRIER MEDIAN TYPES C AND C SPECIAL. EXPANSION JOINTS SHALL BE FORMED USING 1" PREFORMED JOINT FILLER. CONTINUOUS REINFORCEMENT SHALL BE CUT 2" CLEAR OF EXPANSION JOINTS.
8. PROVIDE 1/2" EXPANSION JOINT MATERIAL BETWEEN FOOTING AND DROP INLET STRUCTURES. SHIFT REINFORCING STEEL IN FOOTINGS TO PROVIDE 3" CLR. FROM DROP INLET STRUCTURES.
9. CONTRACTOR MAY OMIT BARRIER WALL FOOTING OR SHEAR KEY IF NECESSARY AROUND DROP INLETS.
10. MAINTAIN 3" CLEARANCE ON ALL FOOTING REINFORCEMENT AND 2" CLEARANCE ON ALL OTHER REINFORCEMENT, UNLESS OTHERWISE NOTED.

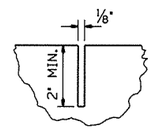

CONTRACTION JOINT DETAIL

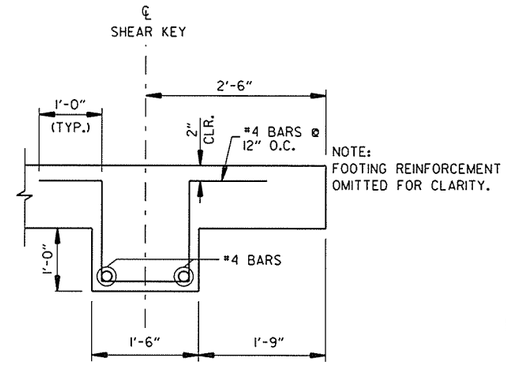

SHEAR KEY DETAIL

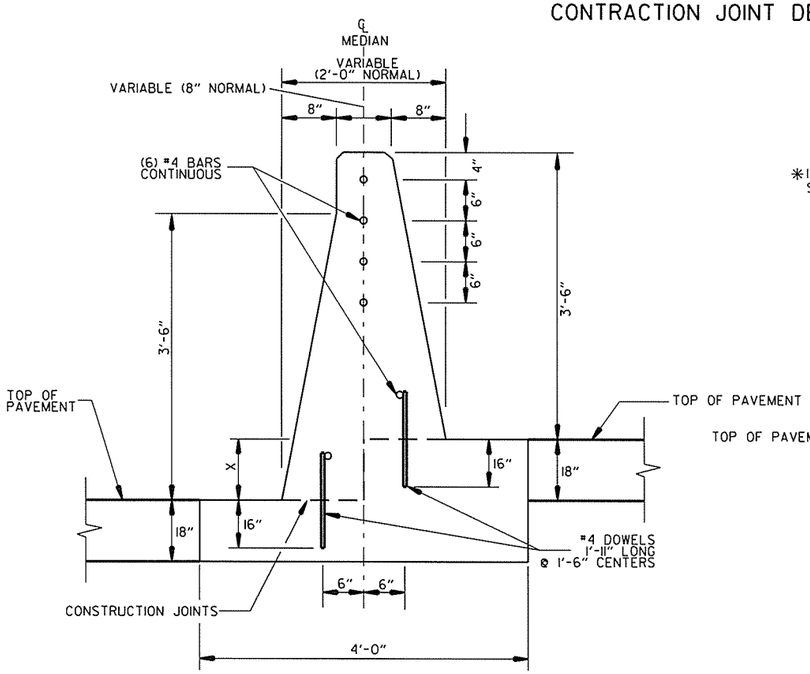

CONCRETE BARRIER WALL
(MEDIAN TYPE B)
X = 0'-0" TO 1'-0" MAX
(NOT TO SCALE)

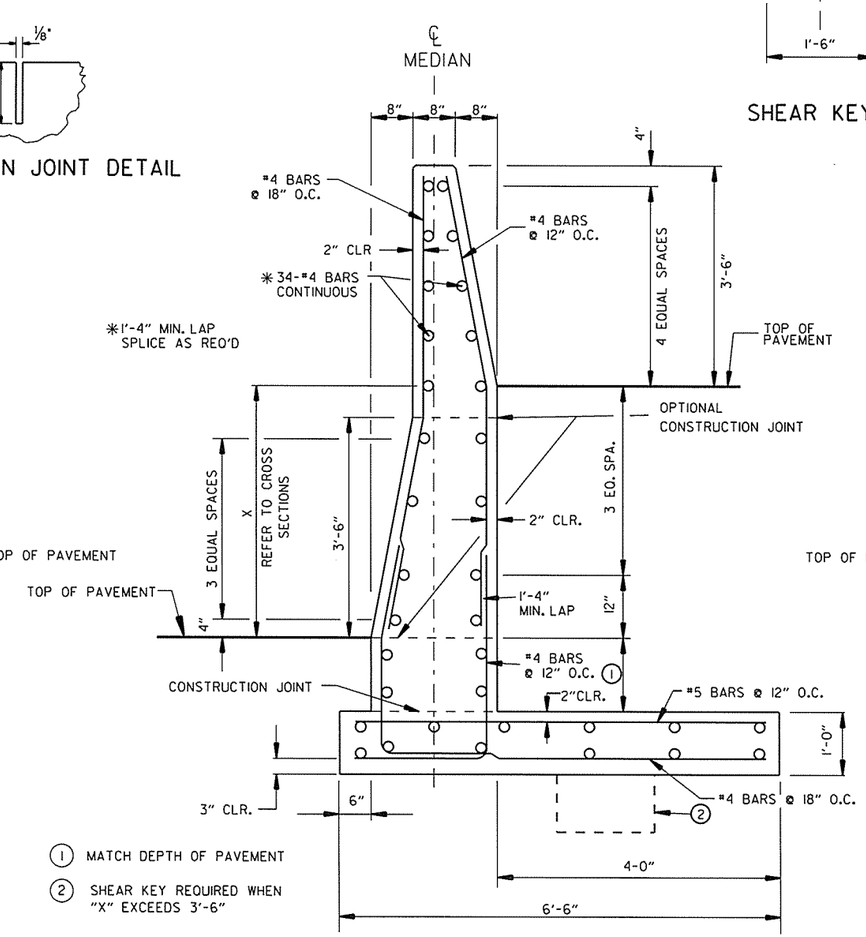

1 MATCH DEPTH OF PAVEMENT

2 SHEAR KEY REQUIRED WHEN "X" EXCEEDS 3'-6"

CONCRETE BARRIER WALL
(MEDIAN TYPE C)
X = 1'-0" TO 5'-0" MAX.
(NOT TO SCALE)

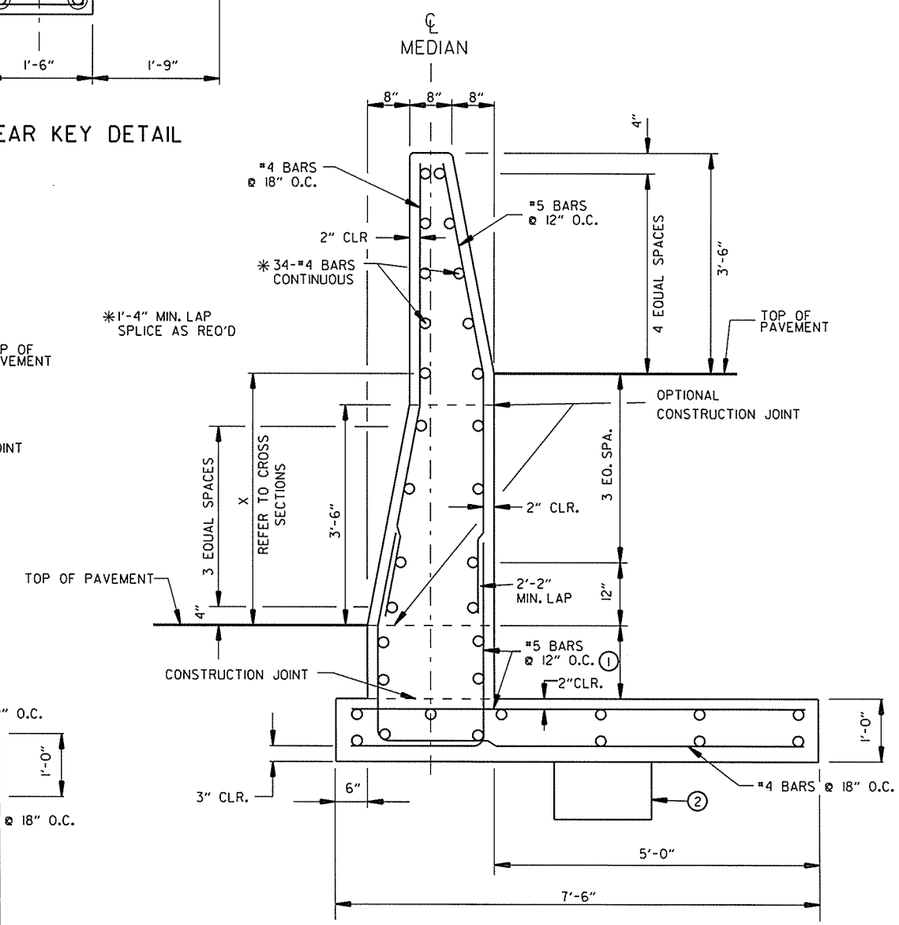

CONCRETE BARRIER WALL
(MEDIAN TYPE C SPECIAL)
X = 5'-0" TO 6'-0" MAX.
(NOT TO SCALE)

Crafton Tull (architecture | engineering | surveying)	DATE REVISED	DATE FILMED	DATE REVISED	DATE FILMED	FED.RD. DIST.NO.	STATE	FED.AID PROJ.NO.	SHEET NO.	TOTAL SHEETS
					6	ARK.			
					JOB NO.		CA0901	10	452
					(2)	SPECIAL DETAILS			

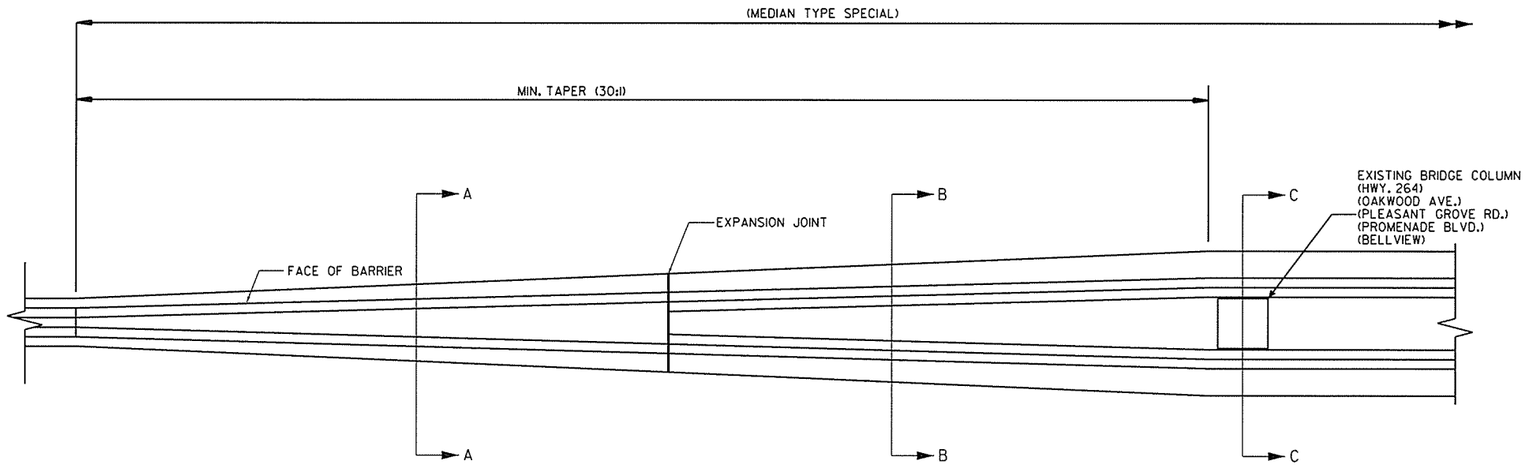

CONCRETE BARRIER WALL

NOTE: TRANSITION FOR SOUTH SIDE SHOWN
NORTH SIDE TRANSITION IS IDENTICAL.

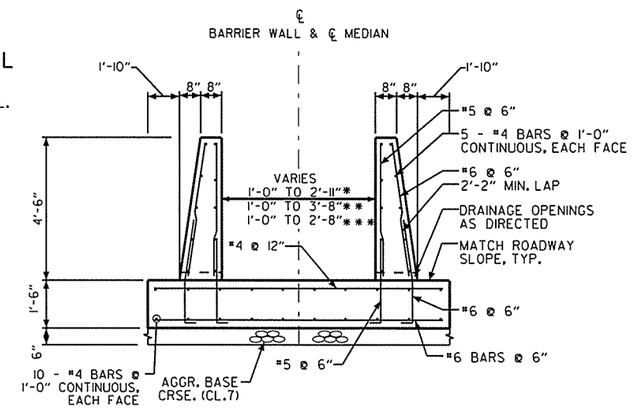

(SECTION B-B)

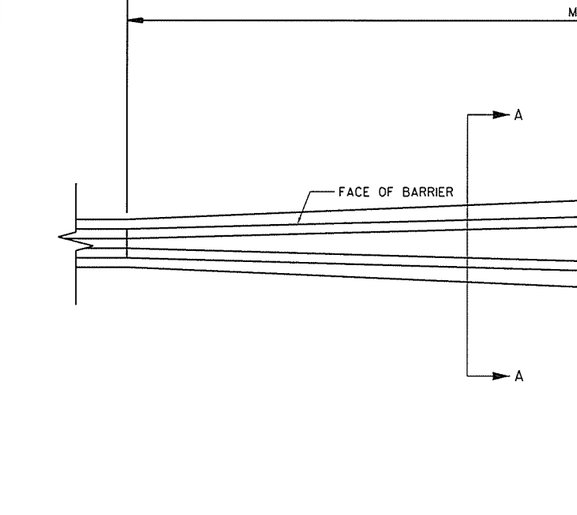

(SECTION A-A)

△ 1'-4" MIN. LAP SPLICE AS REQ'D

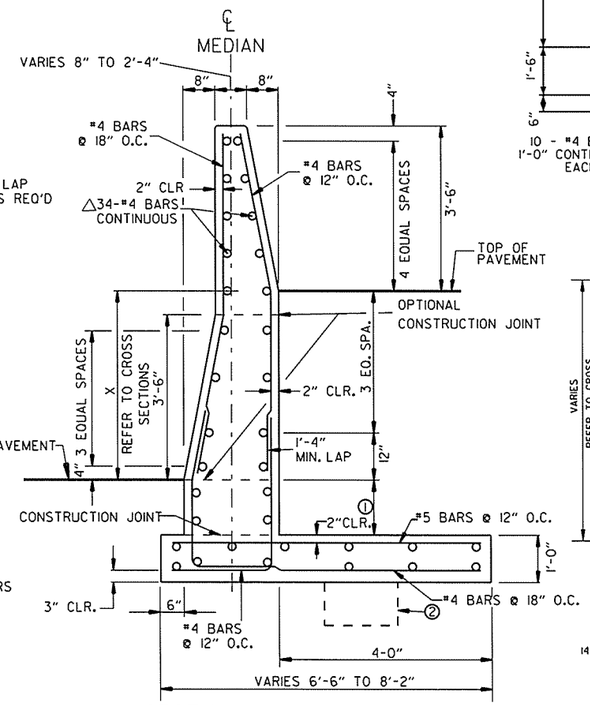

(SECTION A-A) IN SUPERELEVATION

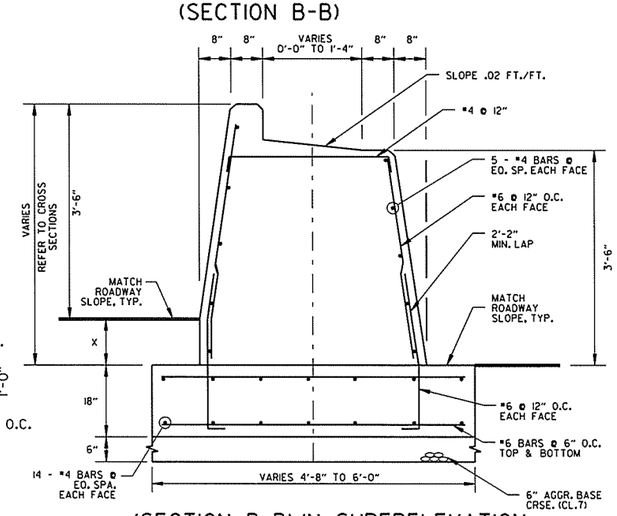

(SECTION B-B) IN SUPERELEVATION
DETAILS OF CONCRETE BARRIER
WALL (MEDIAN TYPE SPECIAL)
(NOT TO SCALE)
(STA. 1113+17.11 TO STA. 1115+93.46)
(STA. 1153+30.61 TO STA. 1155+21.94) (STA. 1223+79.47 TO STA. 1226+47.05)
(STA. 1292+80.78 TO STA. 1295+25.67) (STA. 1317+56.76 TO STA. 1320+07.21)

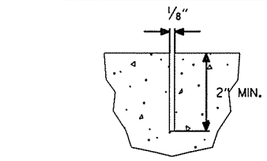

CONTRACTION JOINT DETAIL

STATE OF ARKANSAS
REGISTERED PROFESSIONAL ENGINEER
No. 15560
3-07-16
JEROME PAUL DAVIS

GENERAL NOTES FOR CONCRETE BARRIER WALLS

1. ALL BARRIER WALLS SHALL BE CONSTRUCTED IN ACCORDANCE WITH SECTION 631 OF THE STANDARD SPECIFICATIONS, 2014 EDITION.
2. CONTRACTION JOINTS REQUIRED @ 15'-0" MAXIMUM SPACING. CONTRACTION JOINTS ARE NOT PERMITTED AT THE DOWEL BAR LOCATIONS.
3. ALL CONTRACTION JOINTS TO BE FORMED IN FRESH CONCRETE ON TOP AND IN SIDES OF BARRIER WALL.
4. THE DESIGN OF BARRIER WALL MEDIAN TYPE SPECIAL IS BASED ON A MINIMUM FOUNDATION BEARING CAPACITY OF 1500 POUNDS PER SQUARE FOOT. UNSTABLE FOUNDATION MATERIAL SHALL BE REMOVED AND REPLACED TO PROVIDE A FIRM FOUNDATION AS DIRECTED BY THE ENGINEER.
5. ALL EXPOSED EDGES OF CONCRETE BARRIER WALL SHALL HAVE A 3/4" CHAMFER.
6. SPACING BETWEEN EXPANSION JOINTS SHALL NOT EXCEED 400 FT. FOR BARRIER. EXPANSION JOINTS SHALL BE FORMED USING 1" PREFORMED JOINT FILLER. CONTINUOUS REINFORCEMENT SHALL BE CUT 2" CLEAR OF EXPANSION JOINTS.
7. MAINTAIN 3" CLEARANCE ON ALL FOOTING REINFORCEMENT AND 2" CLEARANCE ON ALL OTHER REINFORCEMENT, UNLESS OTHERWISE NOTED.
8. FOR BARRIER SECTION C-C, SHIFT #6 BARS IN FOOTING EQUALLY TO EACH SIDE OF OPENINGS AT COLUMNS. MAINTAIN AT LEAST 3" O.C. SPACING. TRIM #4 BARS TO MAINTAIN 2" CLEARANCE.
9. CLASS 7 AGGREGATE BASE UNDER CONCRETE BARRIER WALL (MEDIAN TYPE SPECIAL) SHALL BE INSTALLED ACCORDING TO SECTION 303 OF THE STANDARD SPECIFICATIONS. SEPARATE PAYMENT WILL NOT BE MADE BUT WILL BE CONSIDERED SUBSIDIARY TO PAY ITEM "CONCRETE BARRIER WALL (MEDIAN TYPE SPECIAL)."
10. CONTRACTOR MAY OMIT BARRIER WALL FOOTING OR SHEAR KEY IF NECESSARY AROUND DROP INLETS.

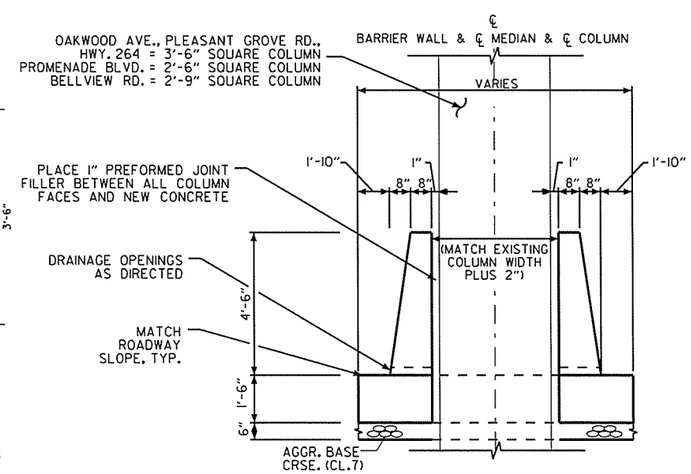

(SECTION C-C)

SEE SECTION B-B FOR REINFORCEMENT

*BELLVIEW RD.
**OAKWOOD AVE.
**PLEASANT GROVE RD.
**HWY. 264
***PROMENADE BLVD.

(1) MATCH DEPTH OF PAVEMENT

(2) SHEAR KEY REQUIRED WHEN "X" EXCEEDS 3'-6"

SPECIAL DETAILS

DESIGN FILE: G:\13106100_264toNHope\TRANSP\dgn\special_details\CA0901SpecialDetails.dgn MODEL: SPECIAL DETAILS
PLOTTED: 3/9/2016 07:49 SCALE: 20:1

DATE REVISED	DATE FILMED	DATE REVISED	DATE FILMED	FED.RD. DIST.NO.	STATE	FED.AID PROJ.NO.	SHEET NO.	TOTAL SHEETS
				6	ARK.			
				JOB NO.		CA0901	11	452

Crafton Tull architecture | engineering | surveying

(2) SPECIAL DETAILS

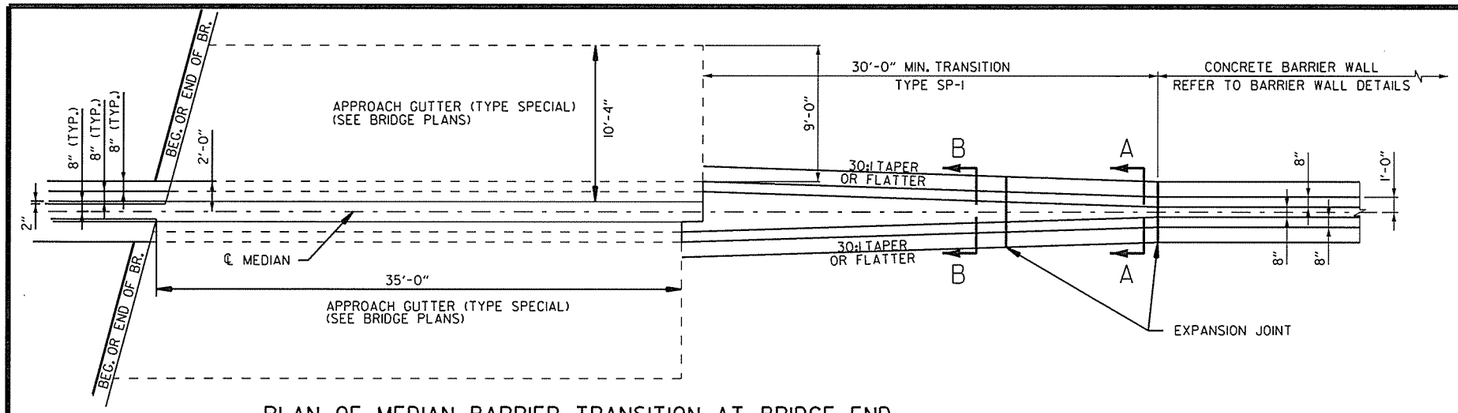

PLAN OF MEDIAN BARRIER TRANSITION AT BRIDGE END

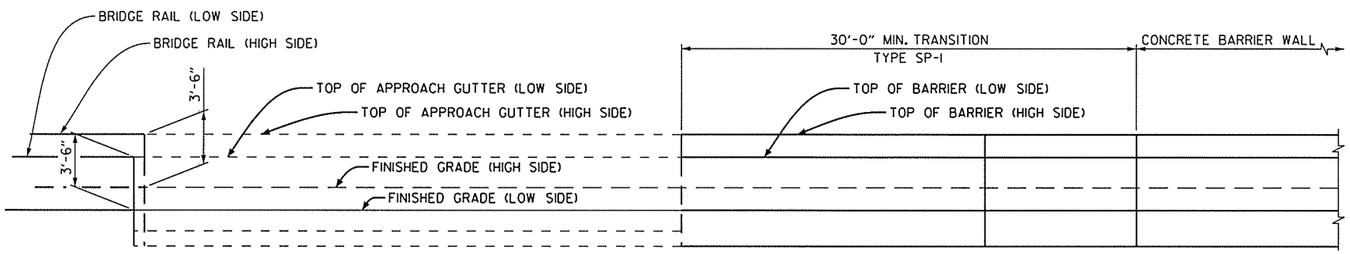

ELEVATION OF MEDIAN BARRIER TRANSITION AT BRIDGE END

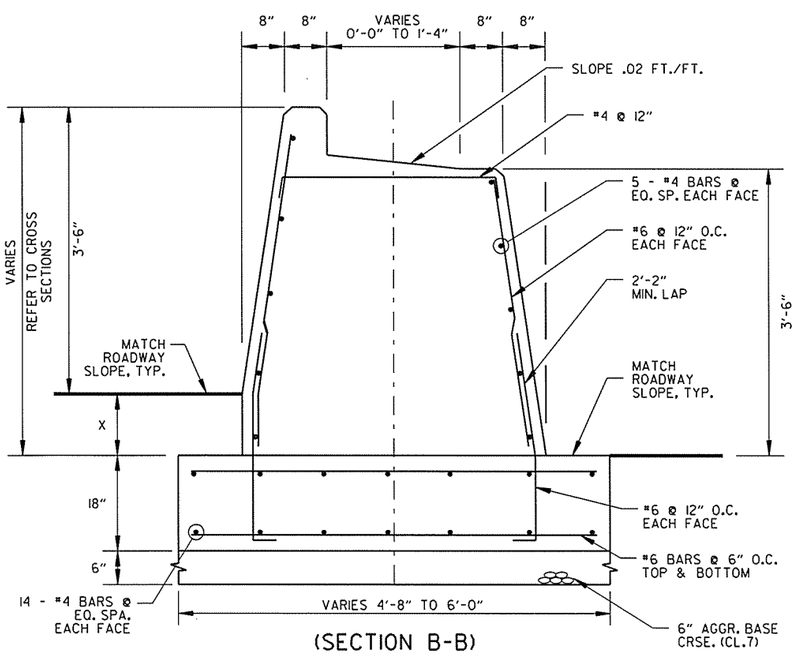

(SECTION B-B)

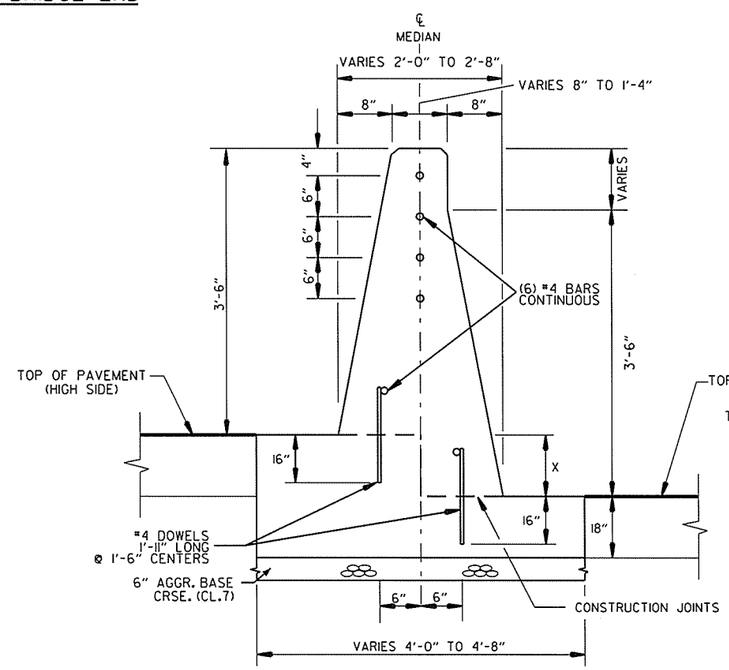

(SECTION A-A)
DETAILS OF CONCRETE BARRIER WALL (MEDIAN TYPE SP-1)
X= 0'-0"-1'-0"
(NOT TO SCALE)

GENERAL NOTES FOR CONCRETE BARRIER WALLS

1. ALL BARRIER WALLS SHALL BE CONSTRUCTED IN ACCORDANCE WITH SECTION 631 OF THE STANDARD SPECIFICATIONS, 2014 EDITION.
2. CONTRACTION JOINTS REQUIRED @ 15'-0" MAXIMUM SPACING. CONTRACTION JOINTS ARE NOT PERMITTED AT THE DOWEL BAR LOCATIONS.
3. ALL CONTRACTION JOINTS TO BE FORMED IN FRESH CONCRETE ON TOP AND IN SIDES OF BARRIER WALL.
4. THE DESIGN OF BARRIER WALL MEDIAN TYPE SP-1 IS BASED ON A MINIMUM FOUNDATION BEARING CAPACITY OF 1500 POUNDS PER SQUARE FOOT. UNSTABLE FOUNDATION MATERIAL SHALL BE REMOVED AND REPLACED TO PROVIDE A FIRM FOUNDATION AS DIRECTED BY THE ENGINEER.
5. ALL EXPOSED EDGES OF CONCRETE BARRIER WALL SHALL HAVE A 3/4" CHAMFER.
6. SPACING BETWEEN EXPANSION JOINTS SHALL NOT EXCEED 400 FT. FOR BARRIER. EXPANSION JOINTS SHALL BE FORMED USING 1" PREFORMED JOINT FILLER. CONTINUOUS REINFORCEMENT SHALL BE CUT 2" CLEAR OF EXPANSION JOINTS.
7. MAINTAIN 3" CLEARANCE ON ALL FOOTING REINFORCEMENT AND 2" CLEARANCE ON ALL OTHER REINFORCEMENT, UNLESS OTHERWISE NOTED.
8. FOR BARRIER SECTION B-B, SHIFT #6 BARS IN FOOTING TO EQUALLY TO EACH SIDE OF OPENINGS AT COLUMNS. MAINTAIN AT LEAST 3" MINIMUM SPACING. TRIM #4 BARS TO MAINTAIN 2" CLEARANCE.
9. CLASS 7 AGGREGATE BASE UNDER CONCRETE BARRIER WALL (MEDIAN TYPE SP-1) SHALL BE INSTALLED ACCORDING TO SECTION 303 OF THE STANDARD SPECIFICATIONS. SEPARATE PAYMENT WILL NOT BE MADE BUT WILL BE CONSIDERED SUBSIDIARY TO PAY ITEM "CONCRETE BARRIER WALL (MEDIAN TYPE SP-1)."
10. CONTRACTOR MAY OMIT BARRIER WALL FOOTING OR SHEAR KEY IF NECESSARY AROUND DROP INLETS.

STATE OF ARKANSAS
REGISTERED PROFESSIONAL ENGINEER
No. 15560
3-09-16
JEROME PAUL DAVIS

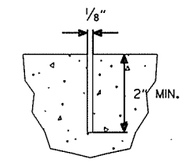

CONTRACTION JOINT DETAIL

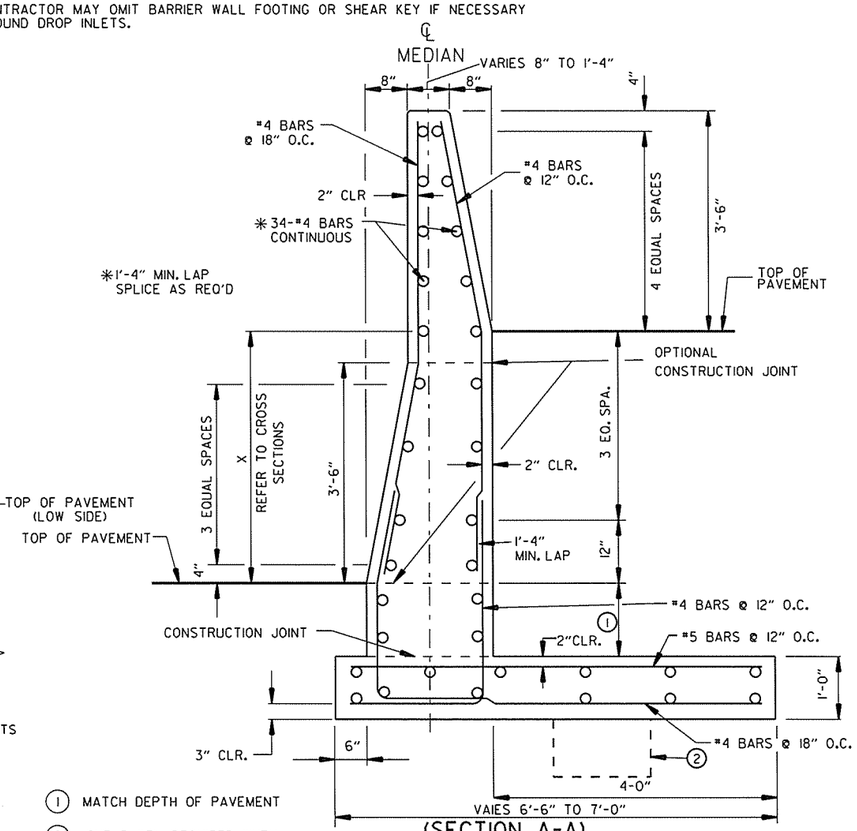

(1) MATCH DEPTH OF PAVEMENT
(2) SHEAR KEY REQUIRED WHEN "X" EXCEEDS 3'-6"

(SECTION A-A)
DETAILS OF CONCRETE BARRIER WALL (MEDIAN TYPE SP-1)
X= 1'-6"-3'-3"

SPECIAL DETAILS

USER: at5106
DESIGN FILE: G:\13106100_264toNHope\TRANSP\dgn\special_details\CA0901SpecialDetails.dgn
PLOTTED: 3/9/2016 07:49
SCALE: 20:1
MODEL: SPECIAL DETAILS

DATE REVISED	DATE FILMED	DATE REVISED	DATE FILMED

Crafton Tull
architecture | engineering | surveying

FED.RD. DIST.NO.	STATE	FED.AID PROJ.NO.	SHEET NO.	TOTAL SHEETS
6	ARK.			
JOB NO.		CA0901	12	452

(2) SPECIAL DETAILS

STATE OF ARKANSAS
REGISTERED PROFESSIONAL ENGINEER
No. 15560
3-09-16
JEROME PAUL DAVIS

GENERAL NOTES FOR CONCRETE BARRIER WALLS

1. ALL BARRIER WALLS SHALL BE CONSTRUCTED IN ACCORDANCE WITH SECTION 631 OF THE STANDARD SPECIFICATIONS, 2014 EDITION.
2. ALL EXPOSED EDGES SHALL HAVE ¾" CHAMFERS.
3. CONTRACTION JOINTS SHALL BE CONSTRUCTED AT 15'-0" MAXIMUM SPACING IN TOP AND SIDES OF MEDIAN BARRIER AND SHALL BE FORMED IN FRESH CONCRETE.
4. CONTRACTION JOINTS ARE NOT PERMITTED AT THE DOWEL BAR LOCATIONS.
5. MAINTAIN 3" CLEARANCE ON FOOTING REINFORCEMENT AND 2" CLEARANCE ON ALL OTHER REINFORCEMENT, UNLESS OTHERWISE NOTED.
6. CONTRACTOR MAY OMIT BARRIER WALL FOOTING OR SHEAR KEY IF NECESSARY AROUND DROP INLETS.

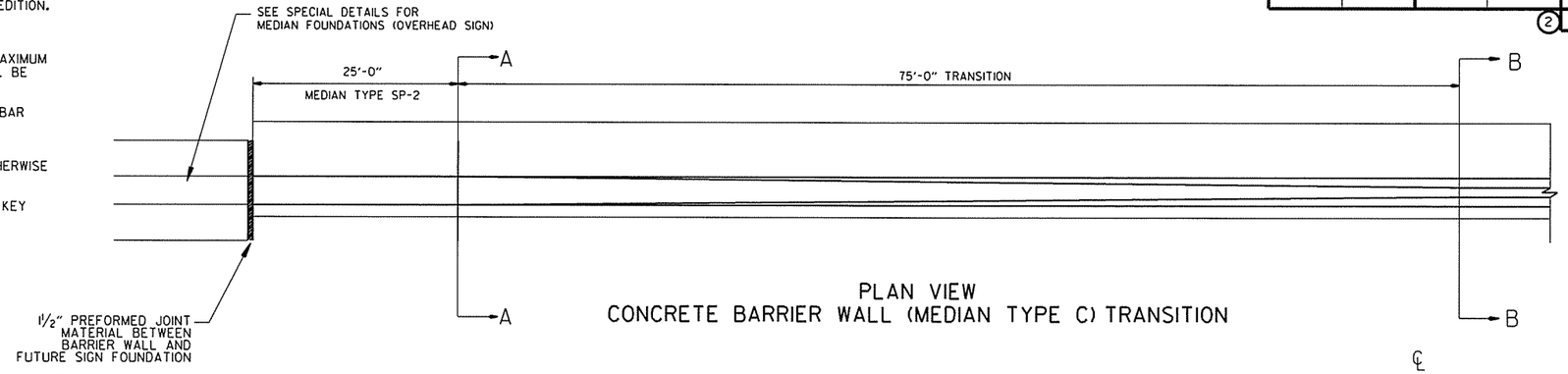

PLAN VIEW
CONCRETE BARRIER WALL (MEDIAN TYPE C) TRANSITION

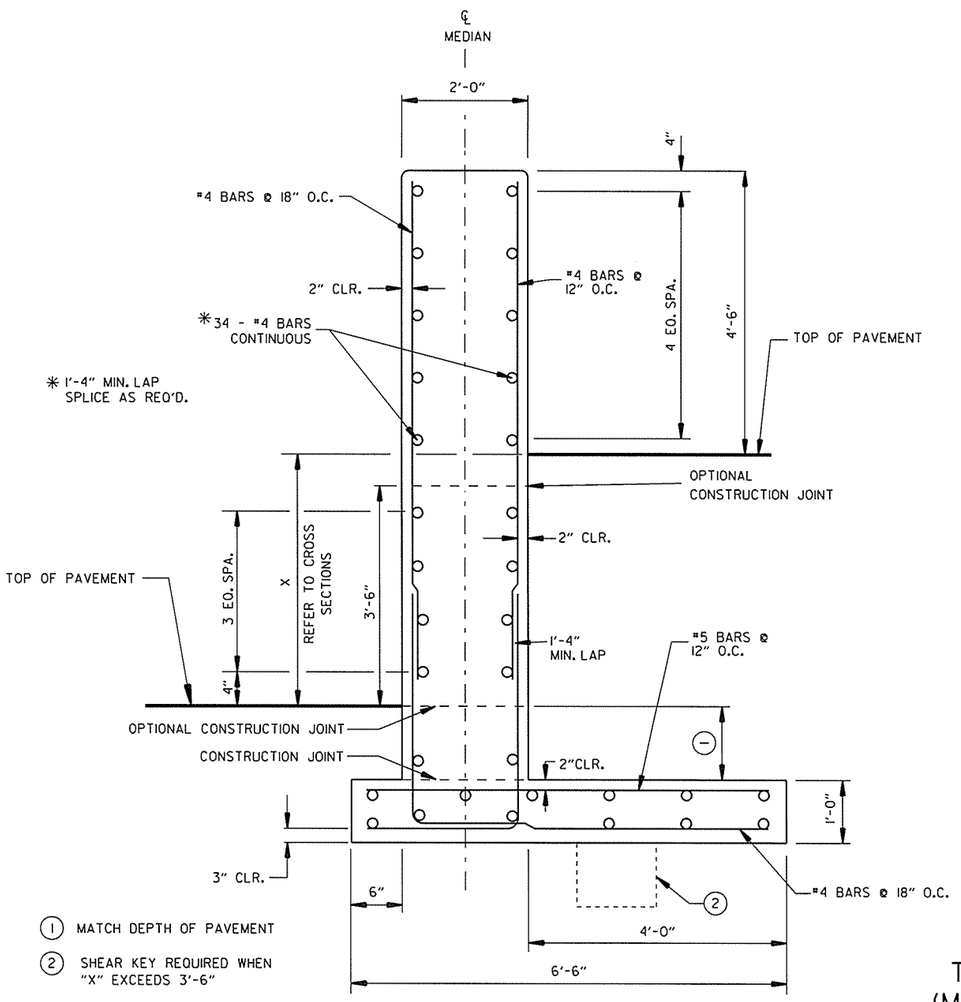

(SECTION A-A)
CONCRETE BARRIER WALL (MEDIAN TYPE SP-2)
X = 1'-0" TO 5'-0" MAX.

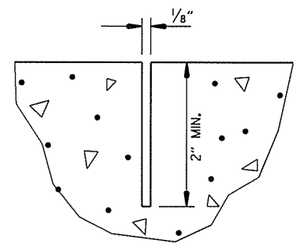

CONTRACTION JOINT DETAIL

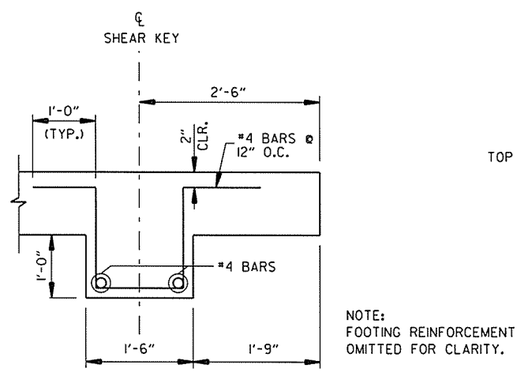

NOTE:
FOOTING REINFORCEMENT OMITTED FOR CLARITY.

SHEAR KEY DETAIL

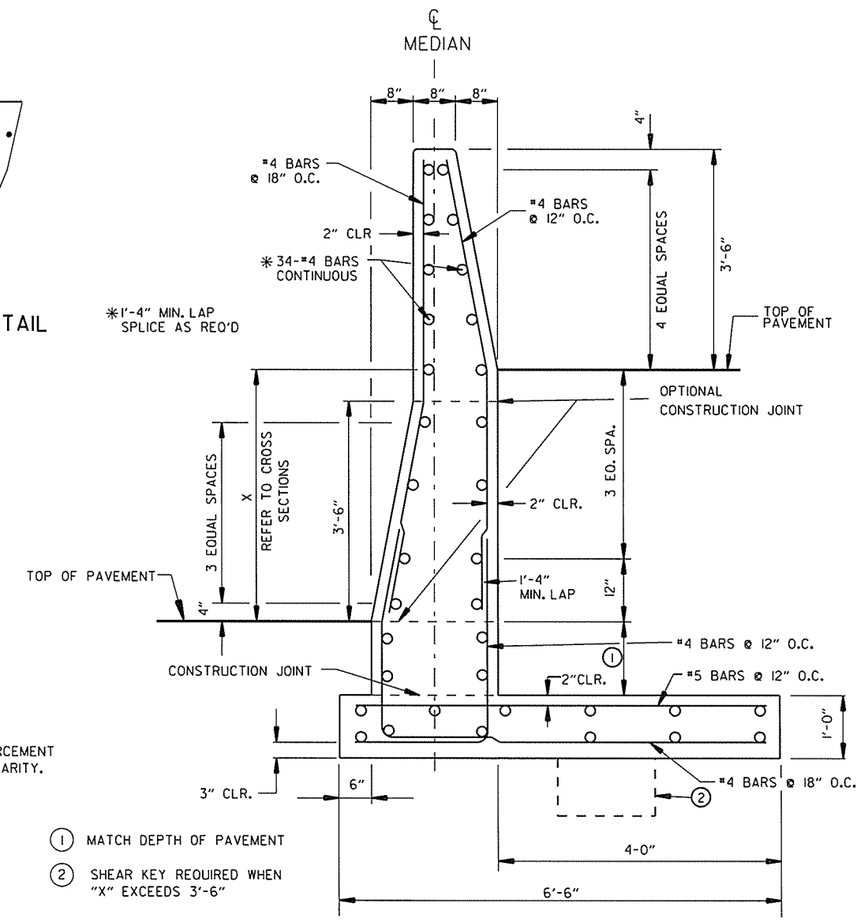

(SECTION B-B)
CONCRETE BARRIER WALL (MEDIAN TYPE C)
X = 0'-0" TO 5'-0" MAX.

TRANSITION FROM CONCRETE BARRIER WALL (MEDIAN TYPE C) TO CONCRETE BARRIER WALL (MEDIAN TYPE SP-2) TO MEDIAN FOUNDATION (OVERHEAD SIGN)
(NOT TO SCALE)

SPECIAL DETAILS

DESIGN FILE: G:\13106100_264toNHope\TRANSP\dgn\special_details\CA0901SpecialDetails.dgn
PLOTTED: 3/9/2016 07:49 SCALE: 20:1 MODEL: SPECIAL DETAILS

Crafton Tull	DATE REVISED	DATE FILMED	DATE REVISED	DATE FILMED	FED.RD. DIST.NO.	STATE	FED.AID PROJ.NO.	SHEET NO.	TOTAL SHEETS
					6	ARK.			
					JOB NO.		CA0901	13	452
					(2)	SPECIAL DETAILS			

GENERAL NOTES FOR CONCRETE BARRIER WALLS

1. ALL BARRIER WALLS SHALL BE CONSTRUCTED IN ACCORDANCE WITH SECTION 631 OF THE STANDARD SPECIFICATIONS, 2014 EDITION.
2. ALL EXPOSED EDGES SHALL HAVE ¾" CHAMFERS.
3. CONTRACTION JOINTS SHALL BE CONSTRUCTED AT 15'-0" MAXIMUM SPACING IN TOP AND SIDES OF MEDIAN BARRIER AND SHALL BE FORMED IN FRESH CONCRETE.
4. CONTRACTION JOINTS ARE NOT PERMITTED AT THE DOWEL BAR LOCATIONS.
5. MAINTAIN 3" CLEARANCE ON ALL FOOTING REINFORCEMENT AND 2" ON ALL OTHER REINFORCEMENT, UNLESS OTHERWISE NOTED.
6. DOWEL BARS WILL NOT BE REQUIRED IF BARRIER AND BASE ARE CAST AS A COMPLETE UNIT.
7. CONTRACTOR MAY OMIT BARRIER WALL FOOTING OR SHEAR KEY IF NECESSARY AROUND DROP INLETS.

STATE OF ARKANSAS
REGISTERED PROFESSIONAL ENGINEER
No. 15560
3-09-16
JEROME PAUL DAVIS

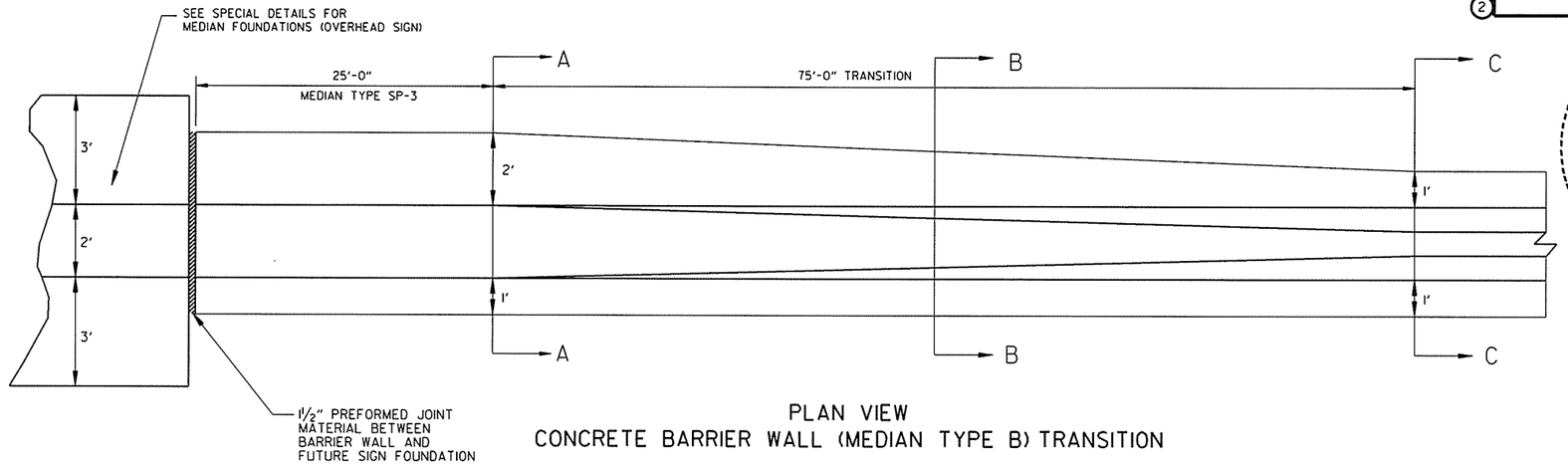

PLAN VIEW
CONCRETE BARRIER WALL (MEDIAN TYPE B) TRANSITION

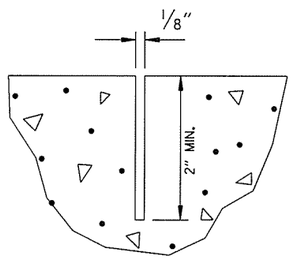

CONTRACTION JOINT DETAIL

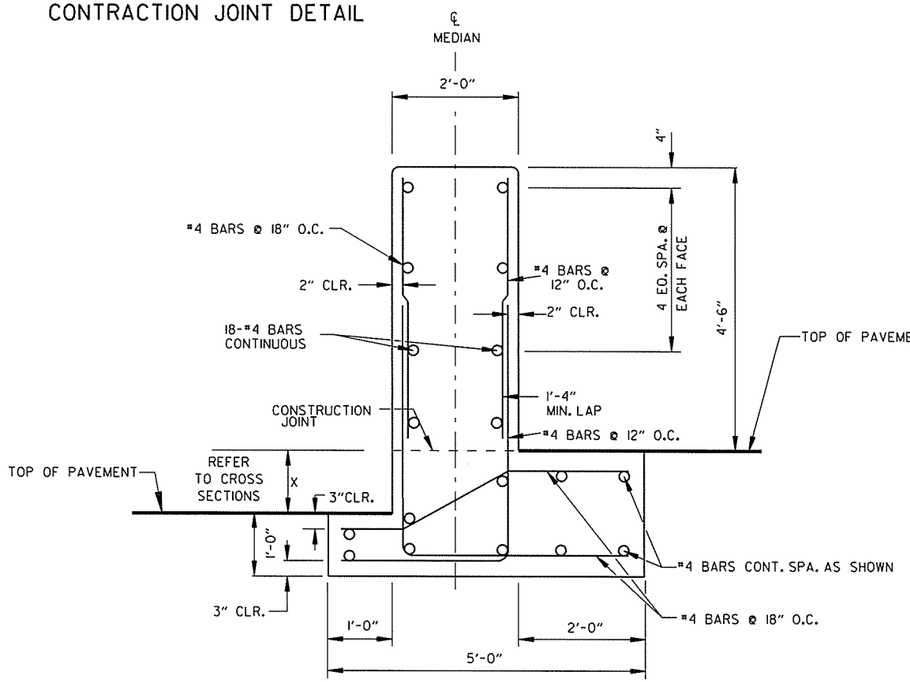

(SECTION A-A)
CONCRETE BARRIER WALL (MEDIAN TYPE SP-3)
X = 0'-0" TO 1'-0" MAX.

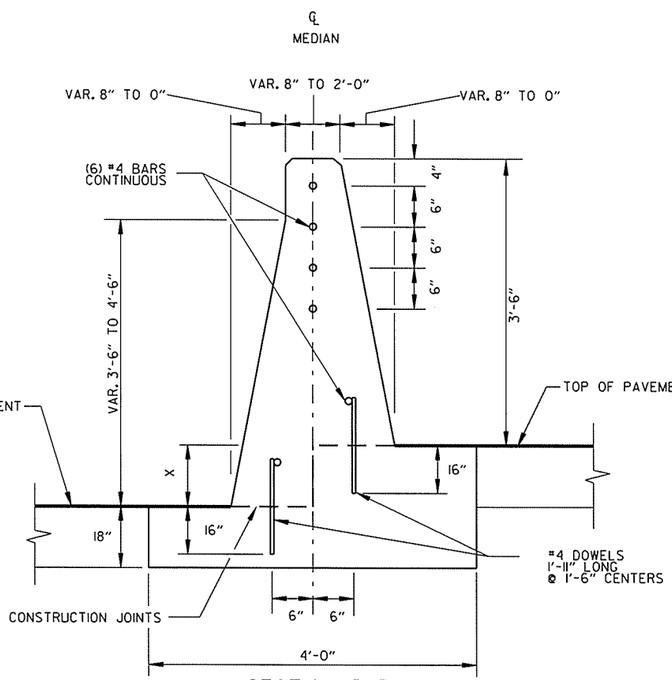

(SECTION B-B)
CONCRETE BARRIER WALL
(MEDIAN TYPE B)
X = 0'-0" TO 1'-0" MAX

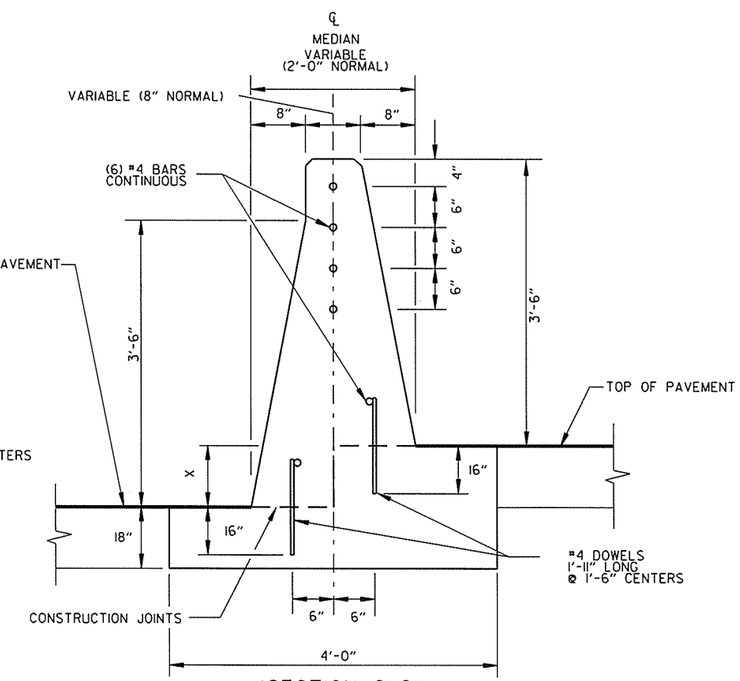

(SECTION C-C)
CONCRETE BARRIER WALL
(MEDIAN TYPE B)
X = 0'-0" TO 1'-0" MAX

TRANSITION FROM CONCRETE BARRIER WALL (MEDIAN TYPE B) TO CONCRETE BARRIER WALL (MEDIAN TYPE SP-3) TO MEDIAN FOUNDATION (OVERHEAD SIGN)

(NOT TO SCALE)

SPECIAL DETAILS

DATE REVISED	DATE FILMED	DATE REVISED	DATE FILMED	FED.RD. DIST.NO.	STATE	FED.AID PROJ.NO.	SHEET NO.	TOTAL SHEETS
				6	ARK.			
				JOB NO.		CA0901	14	452

Crafton Tull
architecture | engineering | surveying

(2) SPECIAL DETAILS

STATE OF ARKANSAS
REGISTERED PROFESSIONAL ENGINEER
No. 15560
3-09-16
JEROME PAUL DAVIS

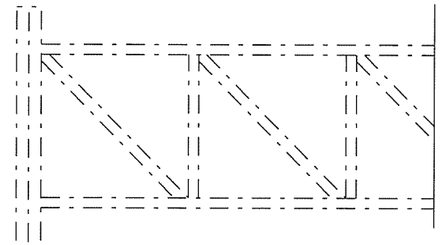

NOTE: FOUNDATION DETAILS SHOWN ARE FOR STANDARD 70'-85' STEEL OVERHEAD SIGN STRUCTURES WITH MEDIAN FOUNDATION. (NOT IN THIS CONTRACT)

C.L. MEDIAN, C.L. COLUMN & C.L. FOUNDATION (TYP.)

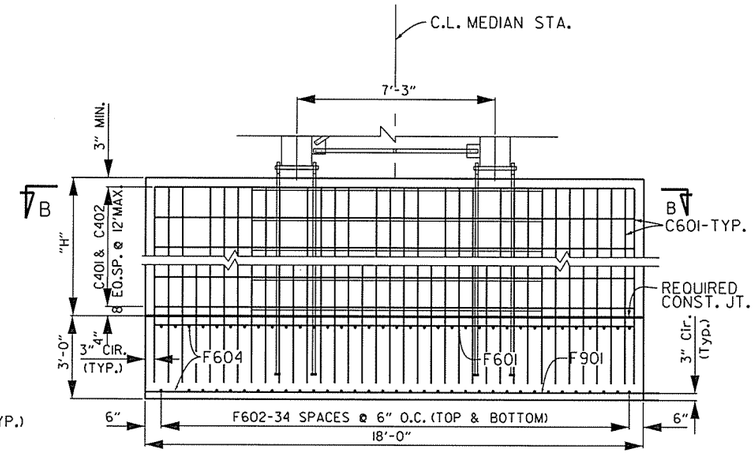

VIEW A-A

GENERAL NOTES:

FOUNDATION MATERIALS AND STRENGTHS:

CLASS S CONCRETE F'C= 3,500 PSI
REINFORCING STEEL (GRADE 60, AASHTO M 31 OR M 322, TYPE A) FY= 60,000 PSI

ANCHOR BOLTS SHALL COMPLY WITH AASHTO M 314, GRADE 55 INCLUDING SUPPLEMENTARY REQUIREMENT S1, AND GALVANIZED ACCORDING TO SUBSECTION 807.07. NUTS FOR BOLTS SHALL BE AS SPECIFIED IN SECTION 807.07.

SHORING MAY BE REQUIRED TO PROTECT EXISTING SHOULDERS DURING EXCAVATION. ANY SHORING REQUIRED SHALL NOT BE PAID FOR DIRECTLY, BUT SHALL BE CONSIDERED INCIDENTAL TO OTHER ITEMS IN THE CONTRACT.

PAYMENT FOR CLASS S CONCRETE, REINFORCING STEEL, EXCAVATION, ANCHOR BOLTS, NUTS, WASHERS, AND FOR ALL OTHER MATERIALS, LABOR, EQUIPMENT, TOOLS, AND INCIDENTALS NECESSARY TO COMPLETE THE WORK SHALL BE CONSIDERED SUBSIDIARY TO THE PAY ITEM "OVERHEAD SIGN STRUCTURE FOUNDATION."

ANCHOR BOLTS SHALL BE INSTALLED DURING FOUNDATION CONSTRUCTION. SEE "ANCHOR BOLT LAYOUT." ANCHOR BOLT SHALL HAVE 1'-6" MIN. EMBEDMENT INTO FOOTING-TYP.

"H" =4'-8" @ STA. 1133+50
8'-2" @ STA. 1195+00
4'-10" @ STA. 1211+25
4'-10" @ STA. 1242+25
5'-8" @ STA. 1340+25
6'-4" @ STA. 1362+50

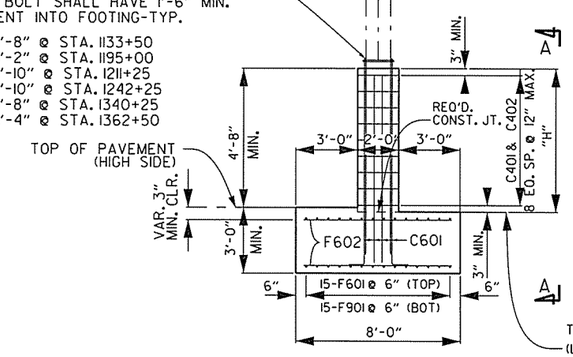

ELEVATION

NOTE:
1. FOR MEDIAN BARRIER ON EITHER SIDE OF FOUNDATION, SEE ROADWAY PLANS.
2. TOP OF SIGN FOOTING SHALL MATCH TOP OF MEDIAN BARRIER FOOTING WHEN CONNECTING TO CONCRETE BARRIER WALL (MEDIAN TYPE B). TOP OF FOOTING SHALL MATCH TOP OF PAVEMENT LOW SIDE WHEN CONNECTING TO TYPES OF CONCRETE BARRIER WALL OTHER THAN CONCRETE BARRIER WALL (MEDIAN TYPE B).

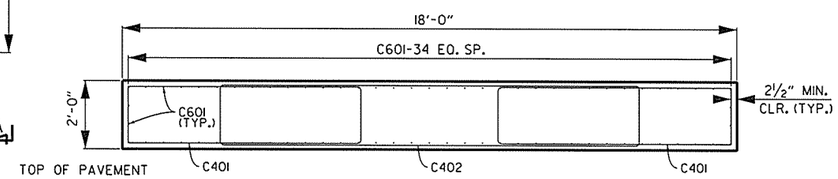

SECTION B-B

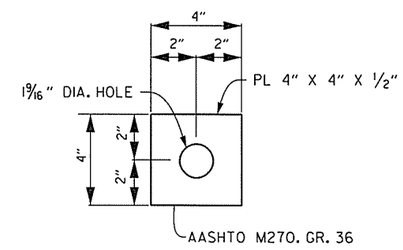

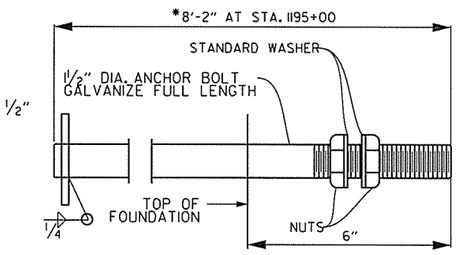

ANCHOR BOLT DETAIL

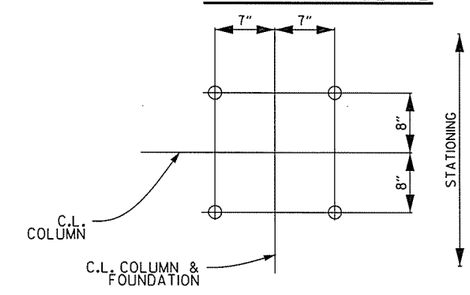

ANCHOR BOLT LAYOUT

MARK	NO. REQ'D	LENGTH	P.D.	BENDING DIAGRAMS
				DIMENSIONS ARE OUT TO OUT OF BARS
C401	14	17'-8"	3"	
C402	7	24'-8"	3"	
C601	74	9'-9"	4½"	
F601	15	17'-6"	Str.	
F602	70	7'-6"	Str.	
F901	15	17'-6"	Str.	

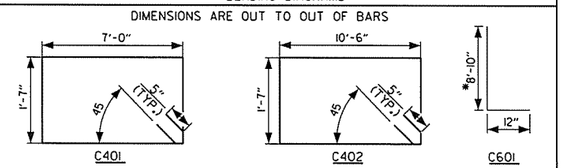

*APPROXIMATE QUANTITIES FOR FOUNDATION (FOR INFORMATION ONLY)

CLASS S CONCRETE (CU. YDS.)	REINFORCING STEEL (LBS.)	EXCAVATION (CU. YDS.)
24.4	3440	28.1

* NOTE: ANCHOR BOLT LENGTH, BAR LIST AND QUANTITIES BASED ON 6'-4" COLUMN HEIGHT. CONTRACTOR SHALL MAKE APPROPRIATE ADJUSTMENTS FOR OTHER COLUMN HEIGHTS.

DETAILS FOR MEDIAN FOUNDATIONS (OVERHEAD SIGN)

SPECIAL DETAILS

USER: at5106
DESIGN FILE: G:\13106100_264toNHope\TRANSP\dgn\special_details\CA0901SpecialDetails.dgn MODEL: SPECIAL DETAILS
PLOTTED: 3/9/2016 07:49 SCALE: 20:1

Crafton Tull	DATE REVISED	DATE FILMED	DATE REVISED	DATE FILMED	FED.RD. DIST.NO.	STATE	FED.AID PROJ.NO.	SHEET NO.	TOTAL SHEETS
					6	ARK.			
					JOB NO.		CA0901	15	452
					(2)	SPECIAL DETAILS			

STATE OF ARKANSAS
REGISTERED PROFESSIONAL ENGINEER
No. 15560
JEROME PAUL DAVIS
3-03-16

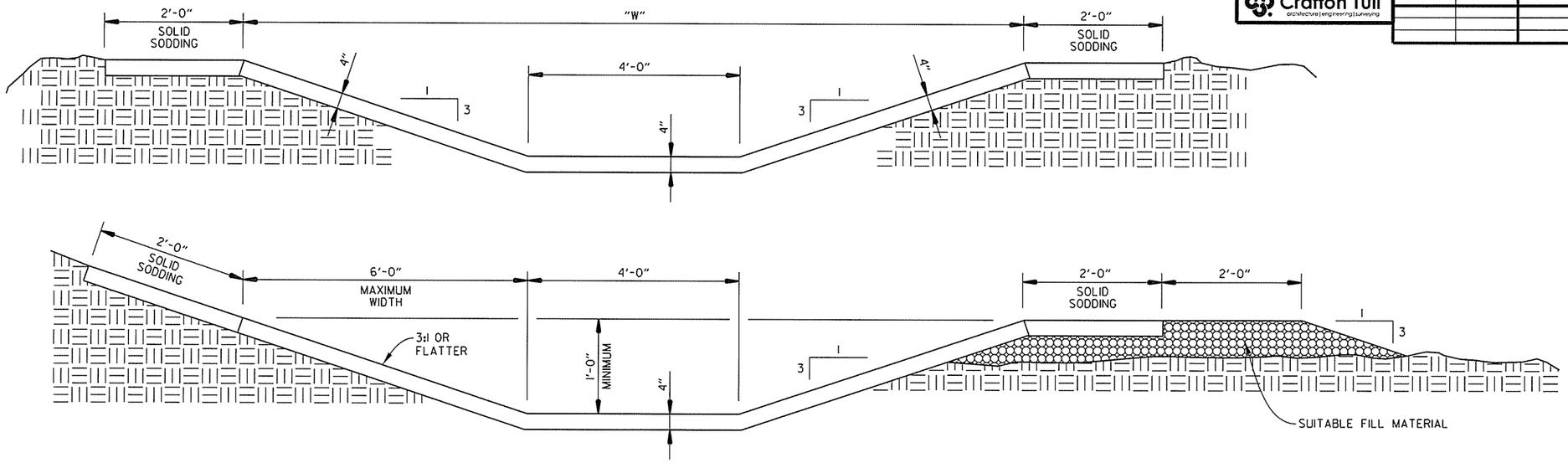

CONCRETE DITCH
PAVING (TYPE SPECIAL)
TO DETENTION/RETENTION PONDS
(NOT TO SCALE)

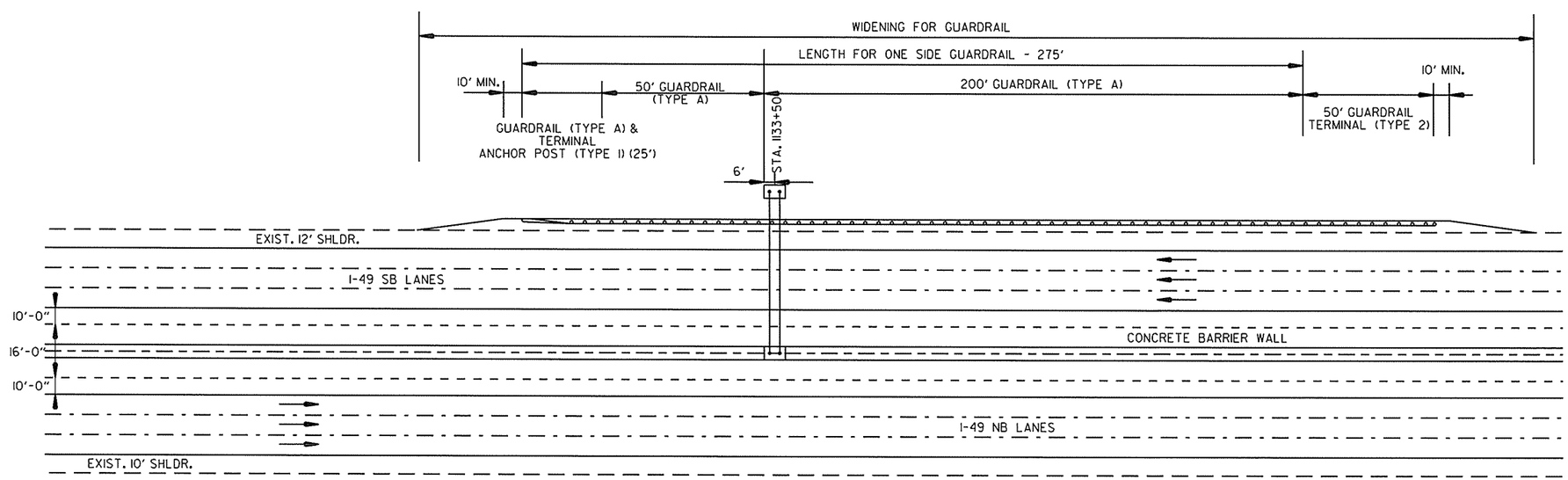

GUARDRAIL INSTALLATION FOR OVERHEAD SIGN
DIMENSIONS ARE TYPICAL BOTH DIRECTIONS
(NOT TO SCALE)

SPECIAL DETAILS

Crafton Tull
architecture | engineering | surveying

DATE REVISED	DATE FILMED	DATE REVISED	DATE FILMED

FED.RD. DIST.NO.	STATE	FED.AID PROJ.NO.	SHEET NO.	TOTAL SHEETS
6	ARK.			
JOB NO.		CA0901	16	452

2 SPECIAL DETAILS

STATE OF ARKANSAS
REGISTERED PROFESSIONAL ENGINEER
No. 15560
3-03-16
JEROME PAUL DAVIS

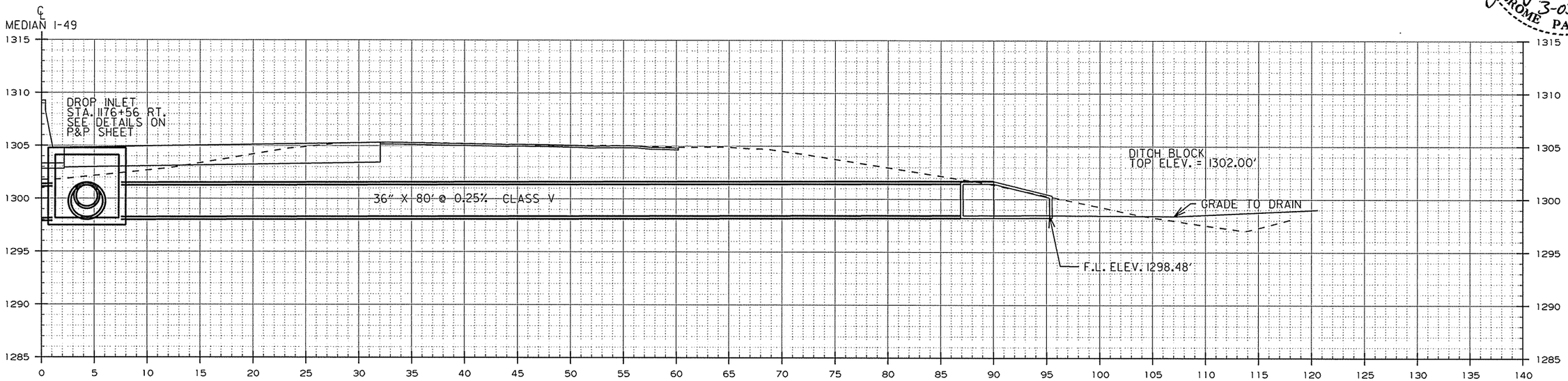

STA. 1176+53.25 RT. (21°27'52" RT. FWD. SKEW)

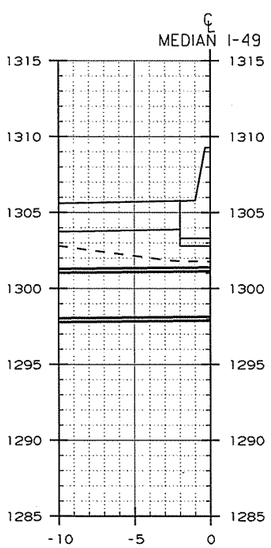

STA. 1176+56 LT.
(4°43'54" RT. FWD. SKEW)
PART 1

USER: at5106
DESIGN FILE: G:\13106100_264toNHope\TRANSP\dgn\special_details\CA0901 Special Details Pipes.dgn
PLOTTED: 2/24/2016 12:07
SCALE: 10:1
MODEL: SPECIAL DETAILS

SPECIAL DETAILS

STATE OF ARKANSAS
REGISTERED PROFESSIONAL ENGINEER
No. 15560
3-03-16
JEROME PAUL DAVIS

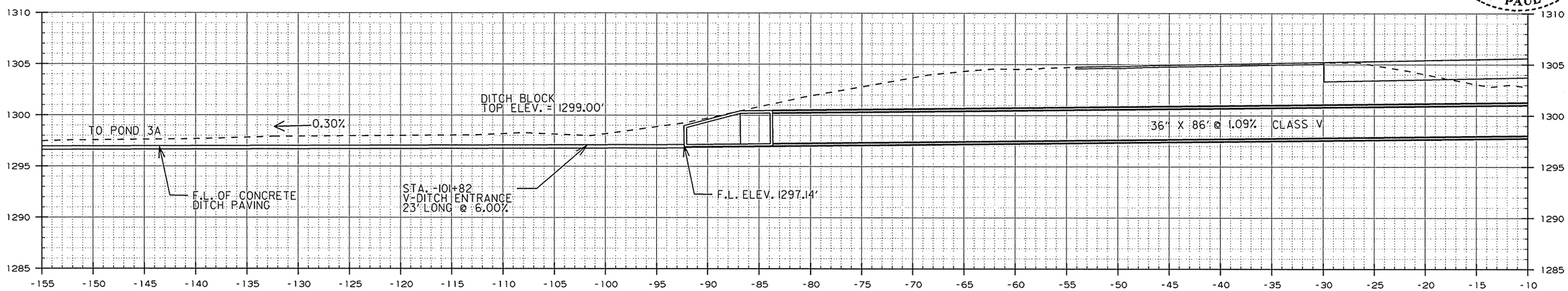

STA. 1176+56 LT. (4°43'54" RT. FWD. SKEW)
CONTINUED PART 2

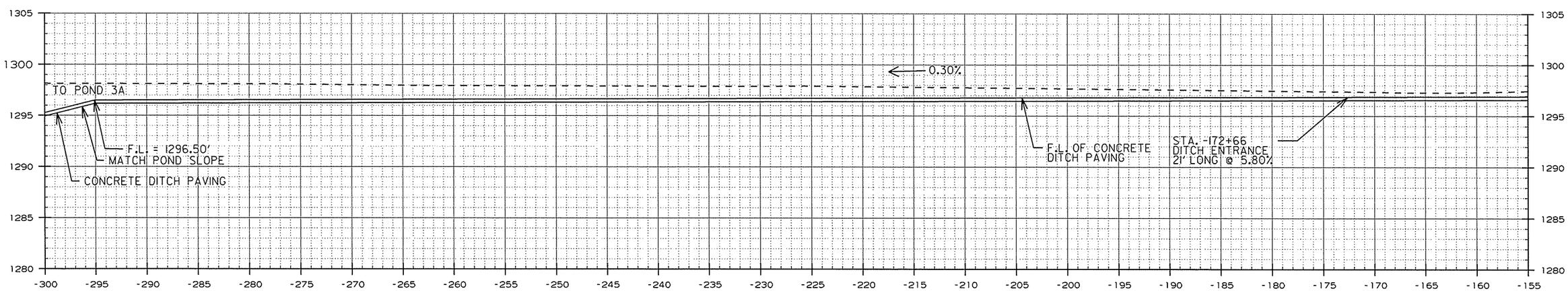

STA. 1176+56 LT. (4°43'54" RT. FWD. SKEW)
CONTINUED PART 3

Crafton Tull
architecture | engineering | surveying

DATE REVISED	DATE FILMED	DATE REVISED	DATE FILMED

FED.RD. DIST.NO.	STATE	FED.AID PROJ.NO.	SHEET NO.	TOTAL SHEETS
6	ARK.			
JOB NO.		CA0901	18	452

2 SPECIAL DETAILS

STATE OF ARKANSAS
REGISTERED PROFESSIONAL ENGINEER
No. 15560
3-03-16
JEROME PAUL DAVIS

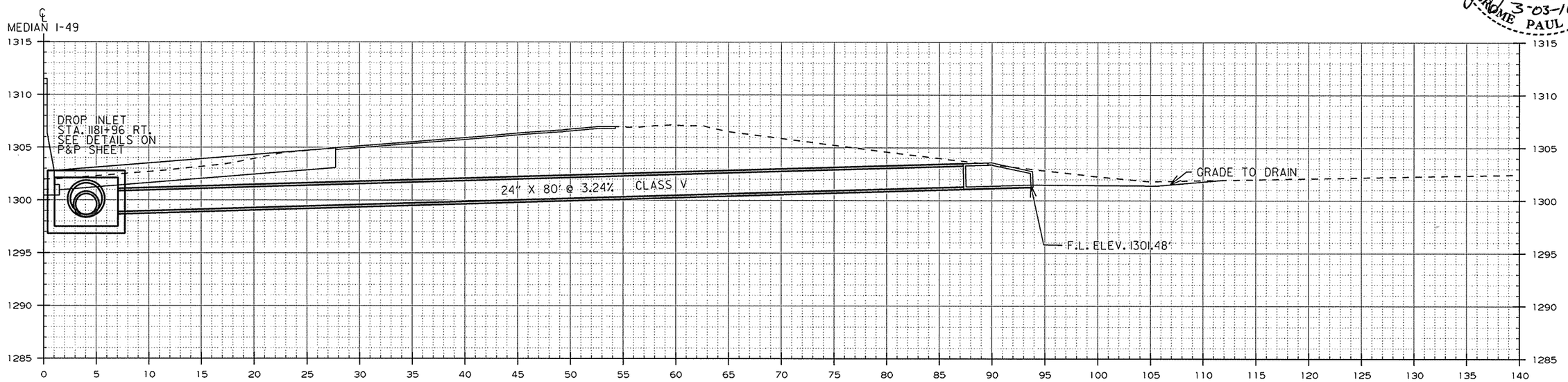

STA. 1181+96 RT.

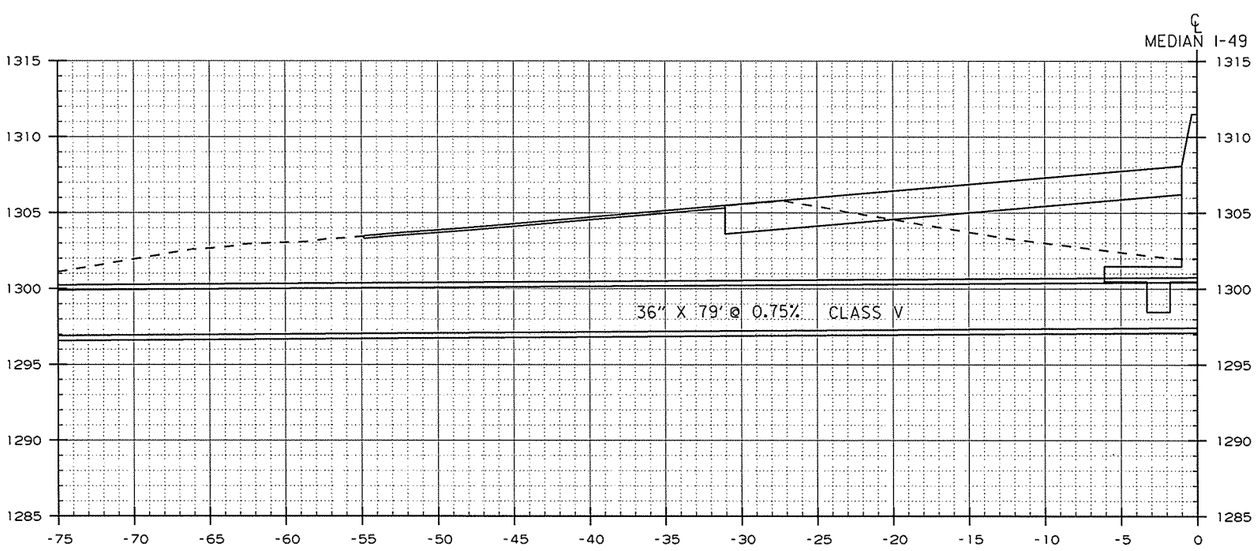

STA. 1181+96 LT. (10° LT. FWD. SKEW)
PART 1

SPECIAL DETAILS

USER: at5106
DESIGN FILE: G:\13106100_264toNHope\TRANSP\dgn\special_details\CA0901SpecialDetails Pipes.dgn
PLOTTED: 2/24/2016 12:08
MODEL: SPECIAL DETAILS
SCALE: 10:1

Crafton Tull
architecture | engineering | surveying

DATE REVISED	DATE FILMED	DATE REVISED	DATE FILMED

FED.RD. DIST.NO.	STATE	FED.AID PROJ.NO.	SHEET NO.	TOTAL SHEETS
6	ARK.			
JOB NO.		CA0901	19	452

2 SPECIAL DETAILS

STATE OF ARKANSAS
REGISTERED PROFESSIONAL ENGINEER
No. 15560
3-03-16
JEROME PAUL DAVIS

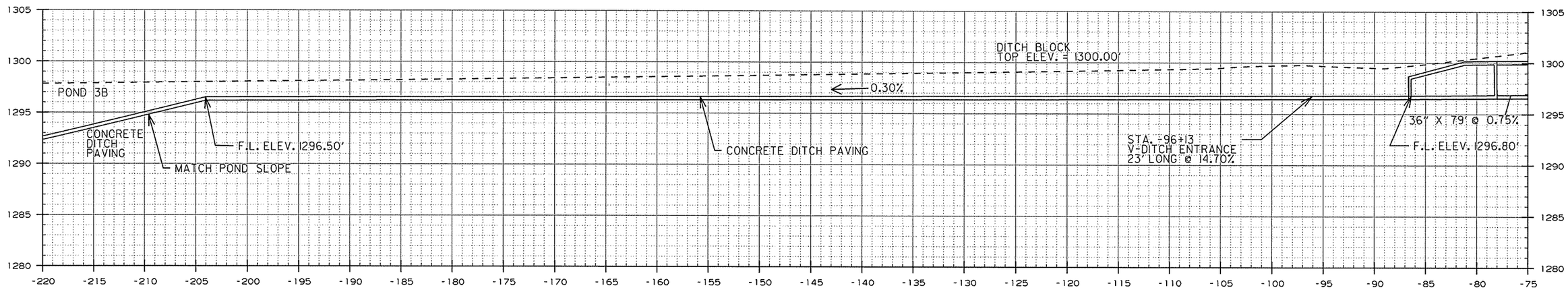

STA. 1181+96 LT . (10° LT. FWD. SKEW)
CONTINUED PART 2

SPECIAL DETAILS

USER: at5106
DESIGN FILE: G:\13106100_264toNHope\TRANSP\dgn\special_details\CA0901SpecialDetails Pipes.dgn
PLOTTED: 2/24/2016 12:08 SCALE: 10:1 MODEL: SPECIAL DETAILS

Crafton Tull
architecture | engineering | surveying

DATE REVISED	DATE FILMED	DATE REVISED	DATE FILMED	FED.RD. DIST.NO.	STATE	FED.AID PROJ.NO.	SHEET NO.	TOTAL SHEETS
				6	ARK.			
				JOB NO.		CA0901	20	452

2 SPECIAL DETAILS

STATE OF ARKANSAS
REGISTERED PROFESSIONAL ENGINEER
No. 15560
JEROME PAUL DAVIS
3-03-16

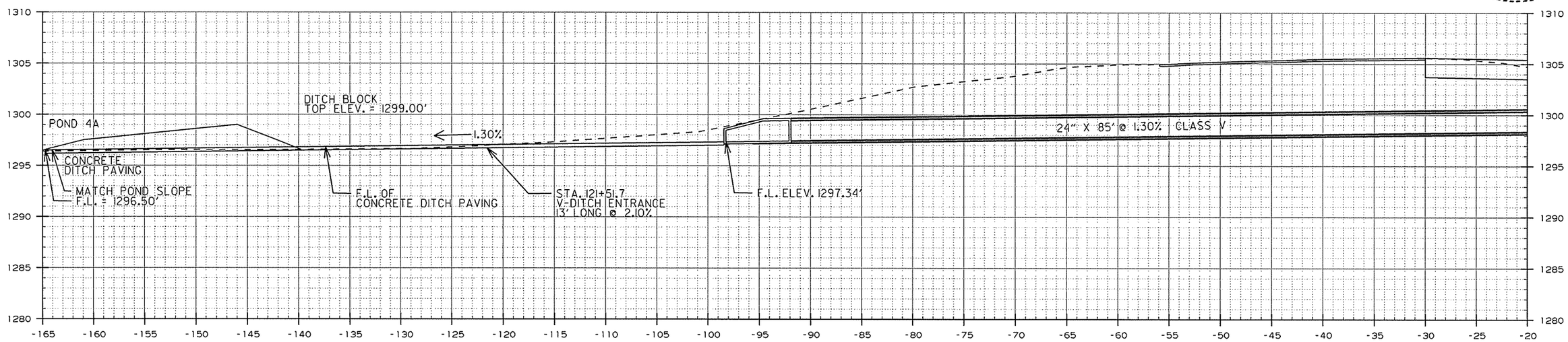

STA. 1199+75 LT.
PART 1

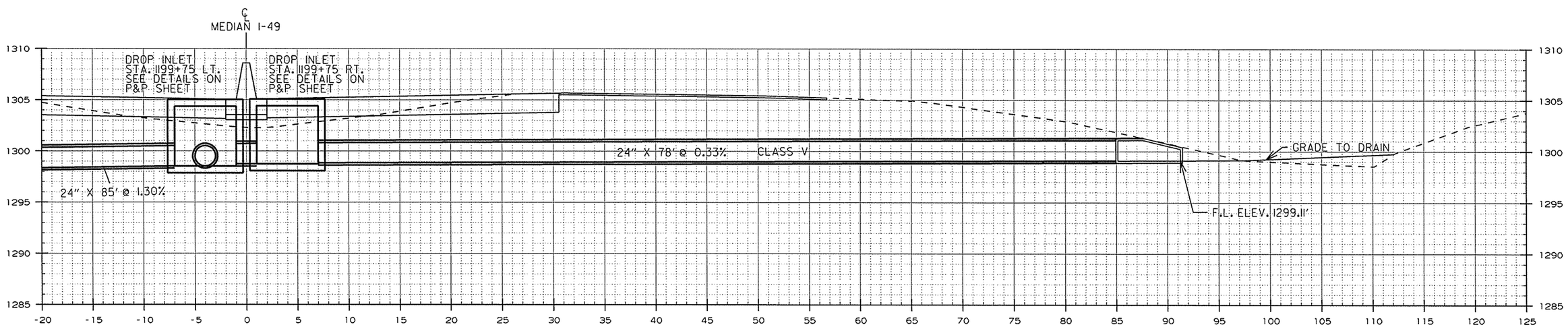

STA. 1199+75 LT. & RT.
CONTINUED PART 2

SPECIAL DETAILS

USER: a15106
DESIGN FILE: G:\13106100_264toNHope\TRANSP\dgn\special_details\CA0901SpecialDetails Pipes.dgn
PLOTTED: 2/24/2016 12:08
MODEL: SPECIAL DETAILS
SCALE: 10:1

Crafton Tull
architecture | engineering | surveying

DATE REVISED	DATE FILMED	DATE REVISED	DATE FILMED

FED.RD. DIST.NO.	STATE	FED.AID PROJ.NO.	SHEET NO.	TOTAL SHEETS
6	ARK.			
JOB NO.		CA0901	21	452

2 SPECIAL DETAILS

STATE OF ARKANSAS
REGISTERED PROFESSIONAL ENGINEER
No. 15560
3-03-16
JEROME PAUL DAVIS

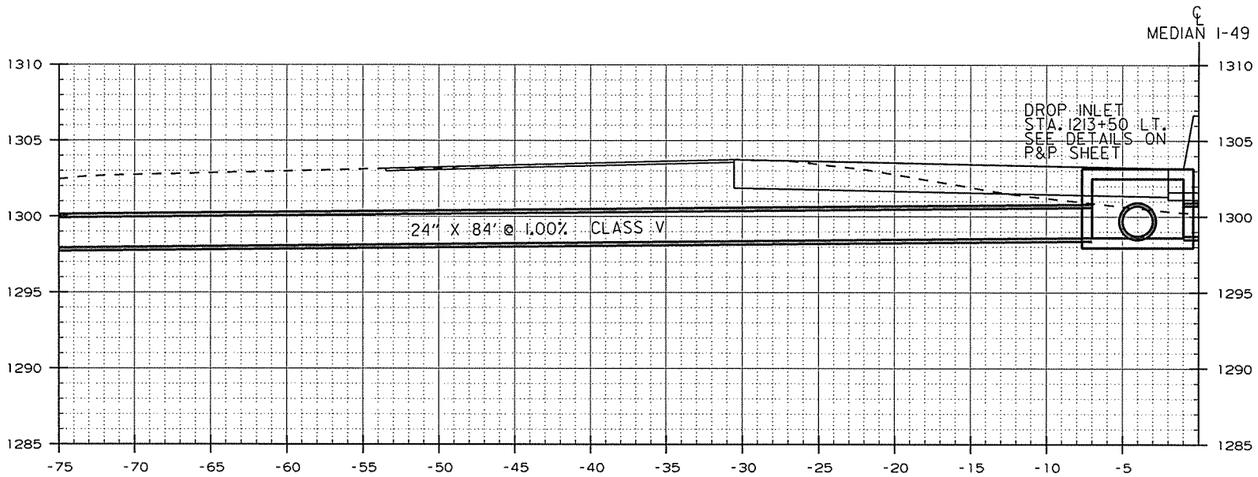

STA. 1213+50 LT. (1°12'00" LT. FWD. SKEW)
CONTINUED PART 2

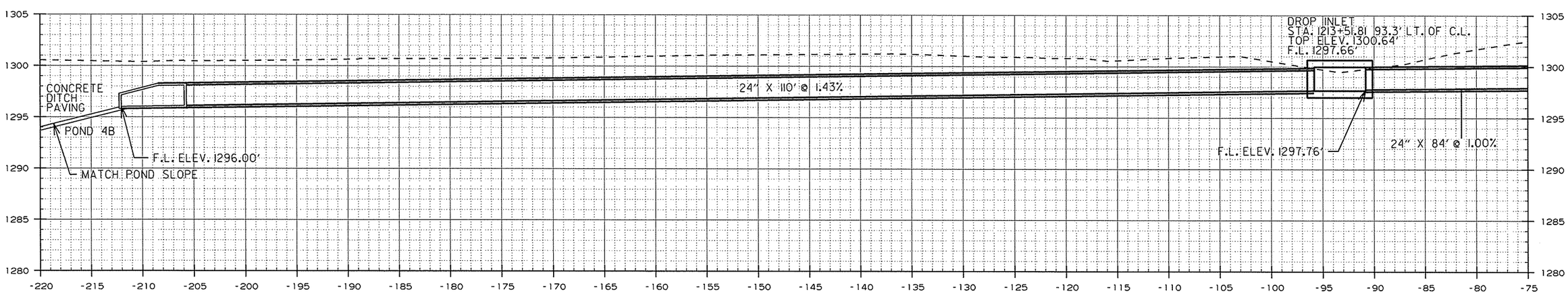

STA. 1213+50 LT. (1°12'00" LT. FWD. SKEW)
PART 1

SPECIAL DETAILS

USER: at5106
DESIGN FILE: G:\13106100_264toNHope\TRANSP\dgn\special_details\CA0901SpecialDetails Pipes.dgn
PLOTTED: 2/24/2016 12:08
MODEL: SPECIAL DETAILS
SCALE: 10:1

Crafton Tull
architecture | engineering | surveying

DATE REVISED	DATE FILMED	DATE REVISED	DATE FILMED

FED.RD. DIST.NO.	STATE	FED.AID PROJ.NO.	SHEET NO.	TOTAL SHEETS
6	ARK.			
JOB NO.		CA0901	22	452

2 SPECIAL DETAILS

STATE OF ARKANSAS
REGISTERED PROFESSIONAL ENGINEER
No. 15560
3-03-16
JEROME PAUL DAVIS

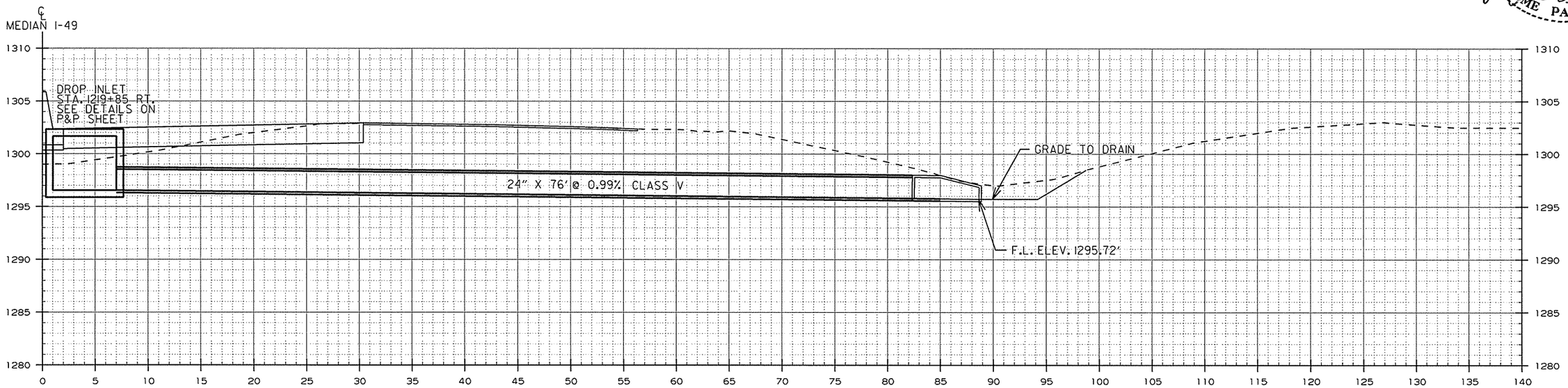

STA. 1219+85 RT.

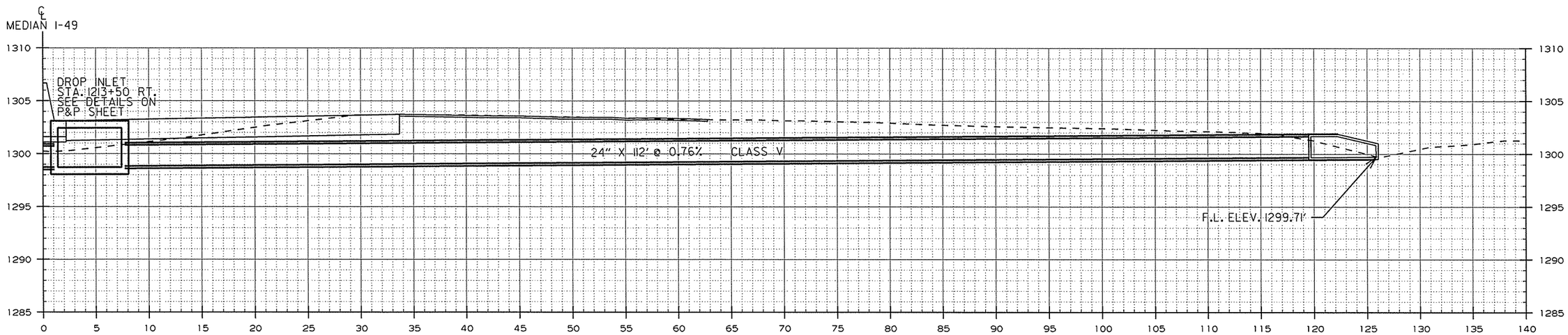

STA. 1213+53.27 RT. (25°02' 46" LT. FWD. SKEW)

SPECIAL DETAILS

USER: at5106
DESIGN FILE: G:\13106100_264toNHope\TRANSP\dgn\special_details\CA0901SpecialDetails Pipes.dgn
PLOTTED: 2/24/2016 12:08
SCALE: 10:1
MODEL: SPECIAL DETAILS

Crafton Tull
architecture | engineering | surveying

DATE REVISED	DATE FILMED	DATE REVISED	DATE FILMED

FED.RD. DIST.NO.	STATE	FED.AID PROJ.NO.	SHEET NO.	TOTAL SHEETS
6	ARK.			
JOB NO.		CA0901	23	452

2 SPECIAL DETAILS

STATE OF ARKANSAS
REGISTERED PROFESSIONAL ENGINEER
No. 15560
3-03-16
JEROME PAUL DAVIS

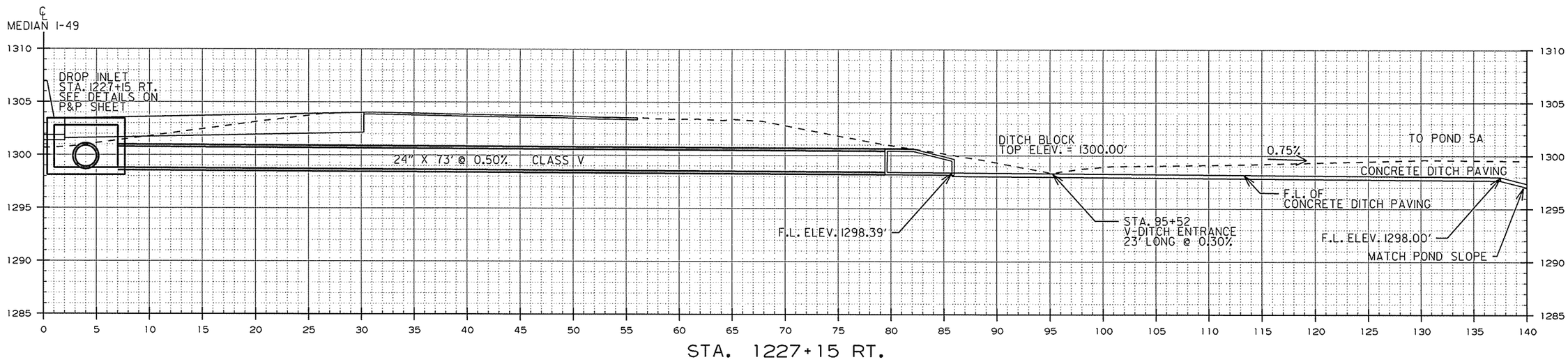

SPECIAL DETAILS

USER: at5106
DESIGN FILE: G:\13106100_264toNHope\TRANSP\dgn\special_details\CA0901 Special Details Pipes.dgn
PLOTTED: 2/24/2016 12:08 SCALE: 10:1 MODEL: SPECIAL DETAILS

Crafton Tull
architecture | engineering | surveying

DATE REVISED	DATE FILMED	DATE REVISED	DATE FILMED

FED.RD. DIST.NO.	STATE	FED.AID PROJ.NO.	SHEET NO.	TOTAL SHEETS
6	ARK.			
JOB NO.		CA0901	24	452

2 SPECIAL DETAILS

STATE OF ARKANSAS
REGISTERED PROFESSIONAL ENGINEER
No. 15560
3-03-16
JEROME PAUL DAVIS

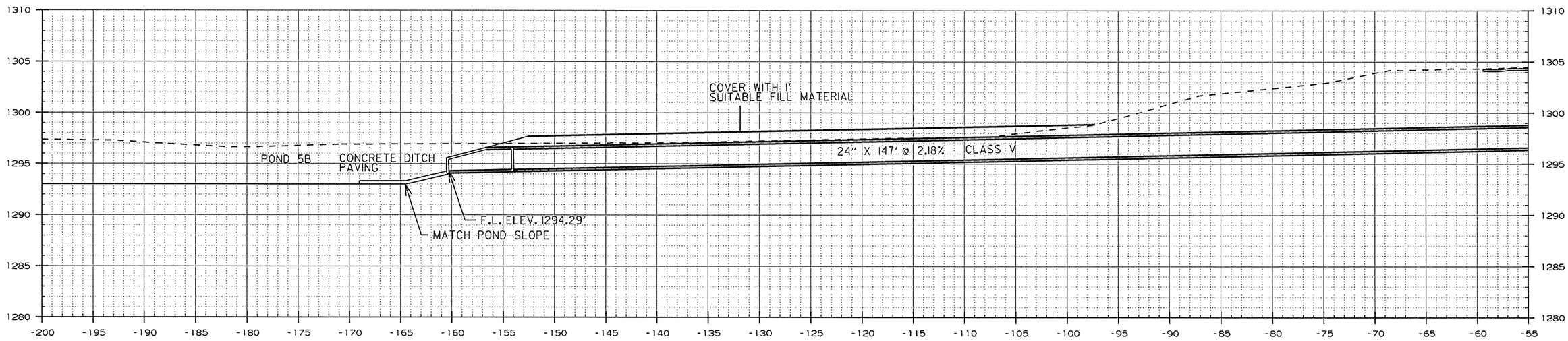

STA. 1232+52.38 LT. (17°15'26" RT. FWD. SKEW)
PART 1

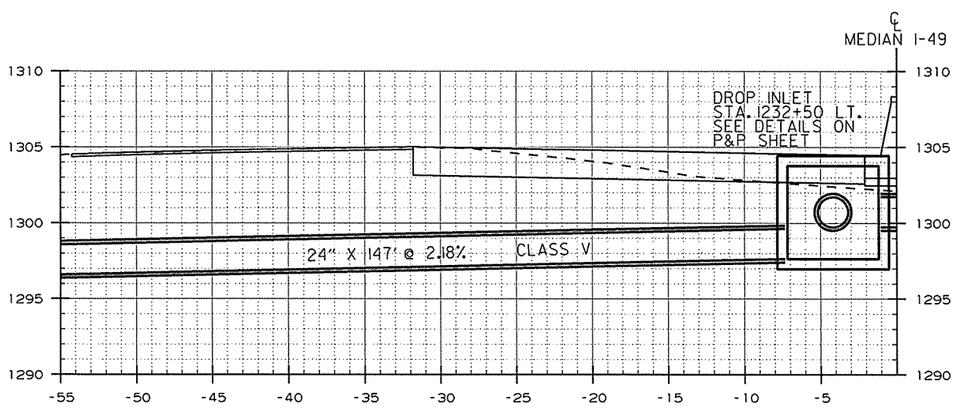

STA. 1232+52.38 LT. (17°15'26" RT. FWD. SKEW)
CONTINUED PART 2

SPECIAL DETAILS

USER: a+5106
DESIGN FILE: G:\13106100_264toNHope\TRANSP\dgn\special_details\CA0901SpecialDetails Pipes.dgn
PLOTTED: 2/24/2016 12:08
SCALE: 10:1
MODEL: SPECIAL DETAILS

Crafton Tull
architecture | engineering | surveying

DATE REVISED	DATE FILMED	DATE REVISED	DATE FILMED

FED.RD. DIST.NO.	STATE	FED.AID PROJ.NO.	SHEET NO.	TOTAL SHEETS
6	ARK.			
JOB NO.		CA0901	25	452

(2) SPECIAL DETAILS

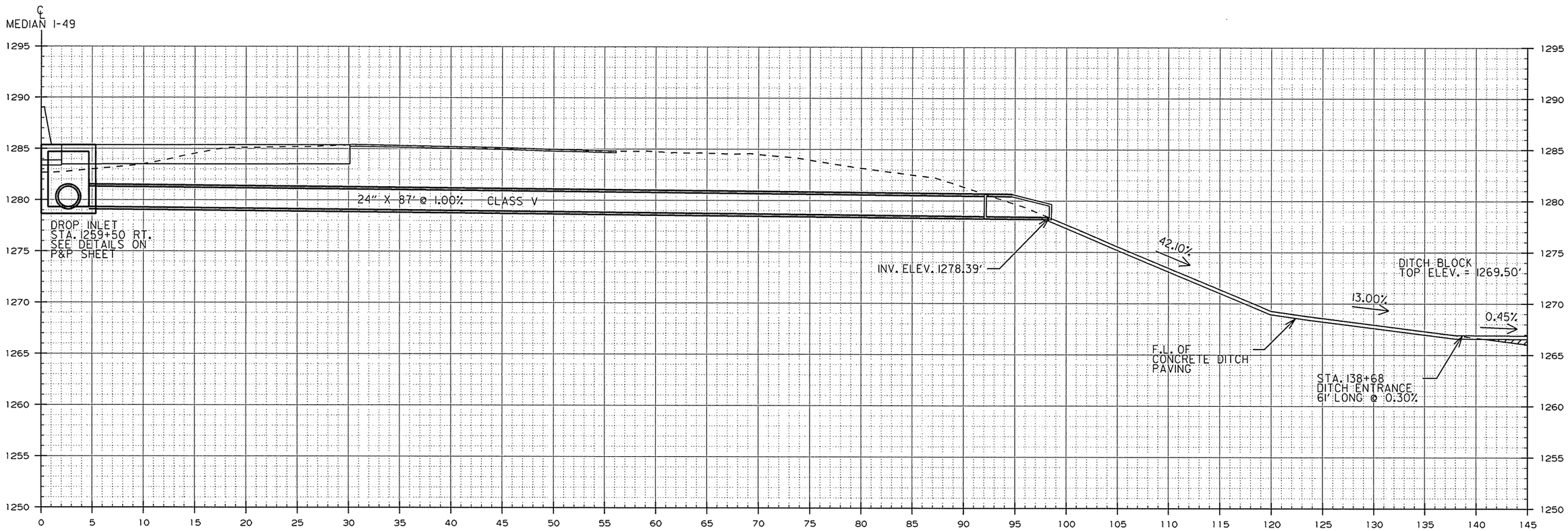

STA. 1259+50 RT. (0°52' 45" RT. FWD. SKEW)
PART 1

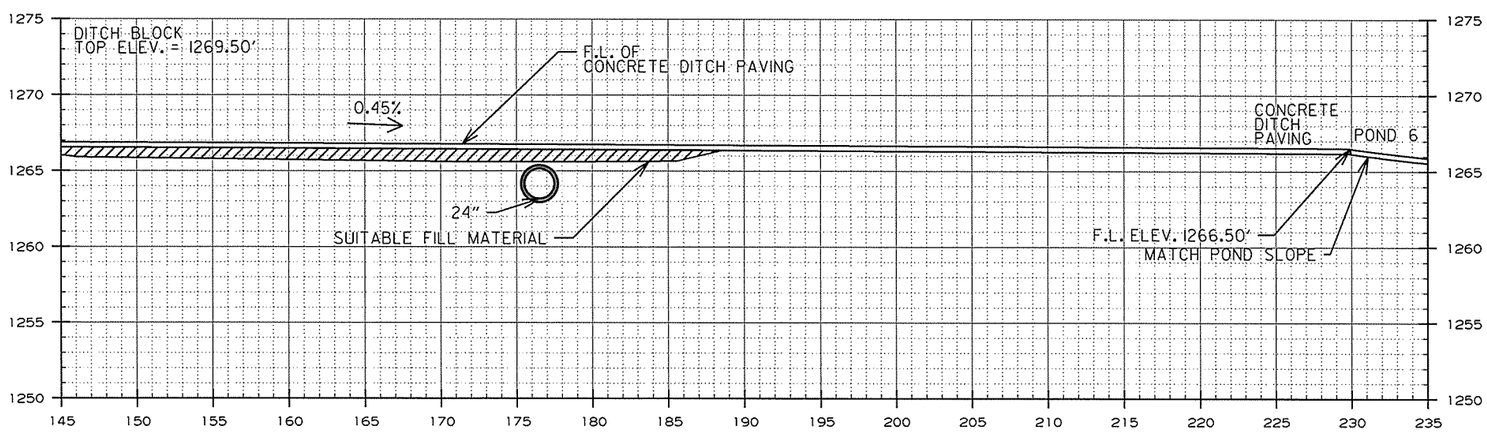

STA. 1259+50 RT. (0°52' 45" RT. FWD. SKEW)
CONTINUED PART 2

STATE OF ARKANSAS
REGISTERED PROFESSIONAL ENGINEER
No. 15560
3-03-16
JEROME PAUL DAVIS

SPECIAL DETAILS

USER: at5106
DESIGN FILE: G:\13106100_264toNHope\TRANSP\dgn\special_details\CA0901Special Details Pipes.dgn
PLOTTED: 2/24/2016 12:08
SCALE: 1:01
MODEL: SPECIAL DETAILS

DATE REVISED	DATE FILMED	DATE REVISED	DATE FILMED	FED.RD. DIST.NO.	STATE	FED.AID PROJ.NO.	SHEET NO.	TOTAL SHEETS
				6	ARK.			
				JOB NO.		CA0901	26	452

② SPECIAL DETAILS

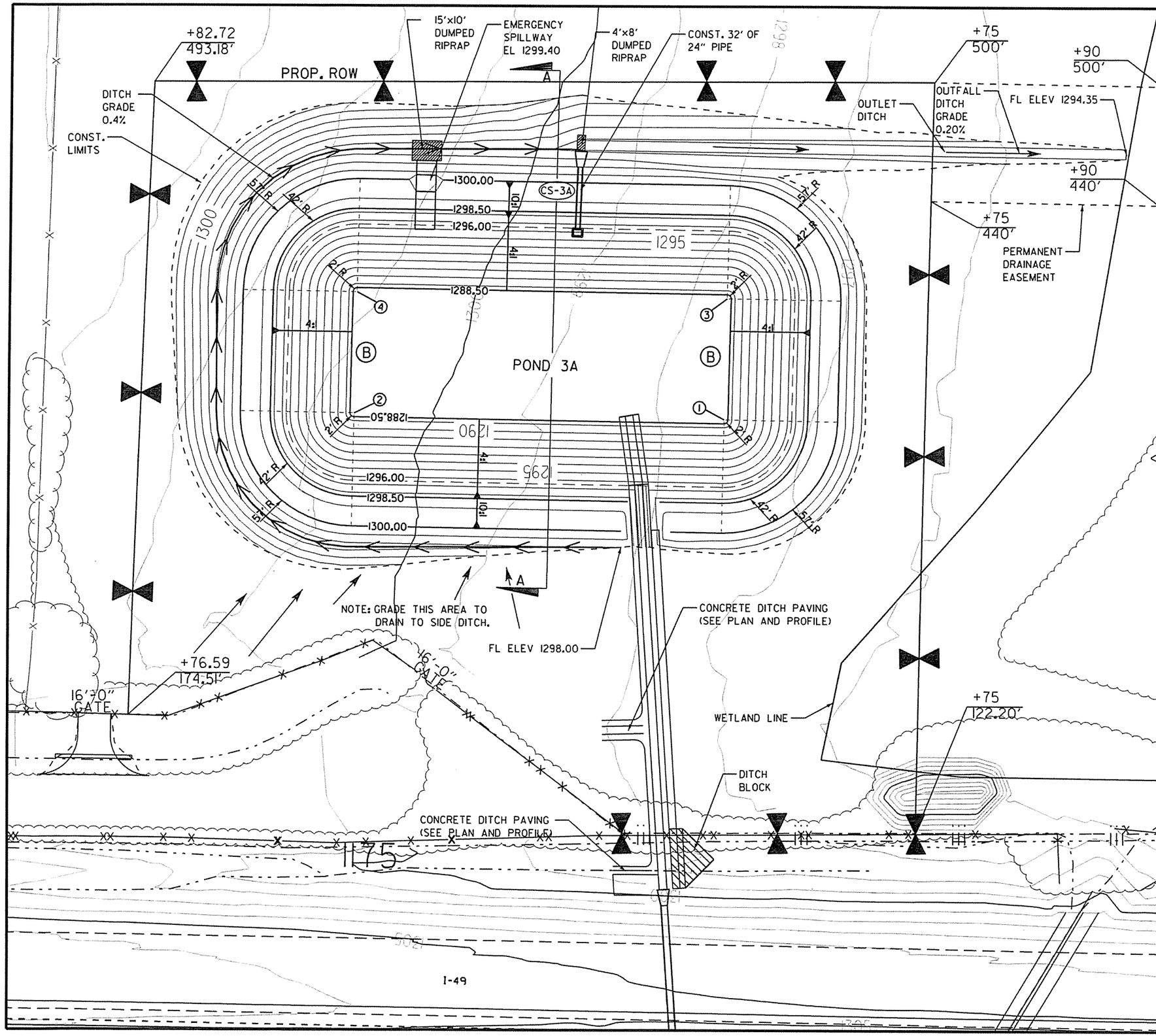

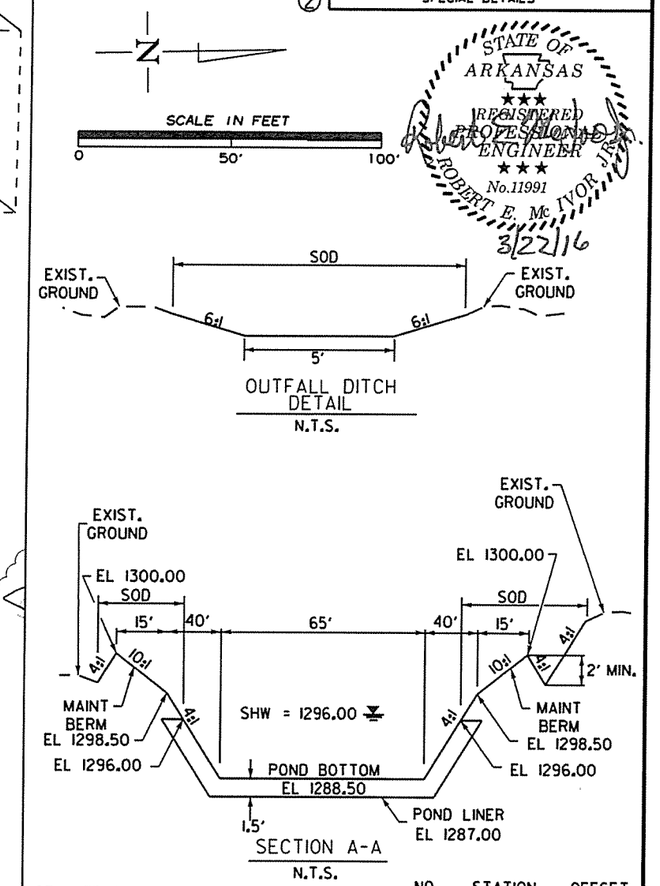

STA. 1175+98 CONSTRUCT (TYPE RM MODIFIED) DROP INLET 420.86' LT. (4' X 3' X H= 6'-5") WITH 24" X 32' R.C. PIPE OUTLET (CLASS III) (TYPE 3 BEDDING) WITH F.E.S.

NO.	STATION	OFFSET
①	1176+74	328'
②	1174+87	328'
③	1176+74	389'
④	1174+87	389'

LEGEND

Ⓑ POND 3A AUGER BORING LOCATION

▨ DUMPED RIPRAP

NOTE:
FOR CS-3A AND EMERGENCY SPILLWAY DETAILS SEE CONTROL STRUCTURE DETAILS SHEET.

STORM FREQ.	PEAK STAGE
25 YEAR/24 HOUR (DESIGN STORM)	1298.72
100 YEAR/24 HOUR	1299.40

POND 3A DETAILS
SPECIAL DETAILS

USER: 11656
DESIGN FILE: R:\Cove Springs Recharge\Pond Detail Sheets 12-09-14\Pond 3A Details.dgn
PLOTTED: 03/22/16 14:41
SCALE: 50:1
MODEL: POND 3A DETAILS

DATE REVISED	DATE FILMED	DATE REVISED	DATE FILMED	FED.RD. DIST.NO.	STATE	FED.AID PROJ.NO.	SHEET NO.	TOTAL SHEETS
				6	ARK.			
				JOB NO.		CA0901	27	452

② SPECIAL DETAILS

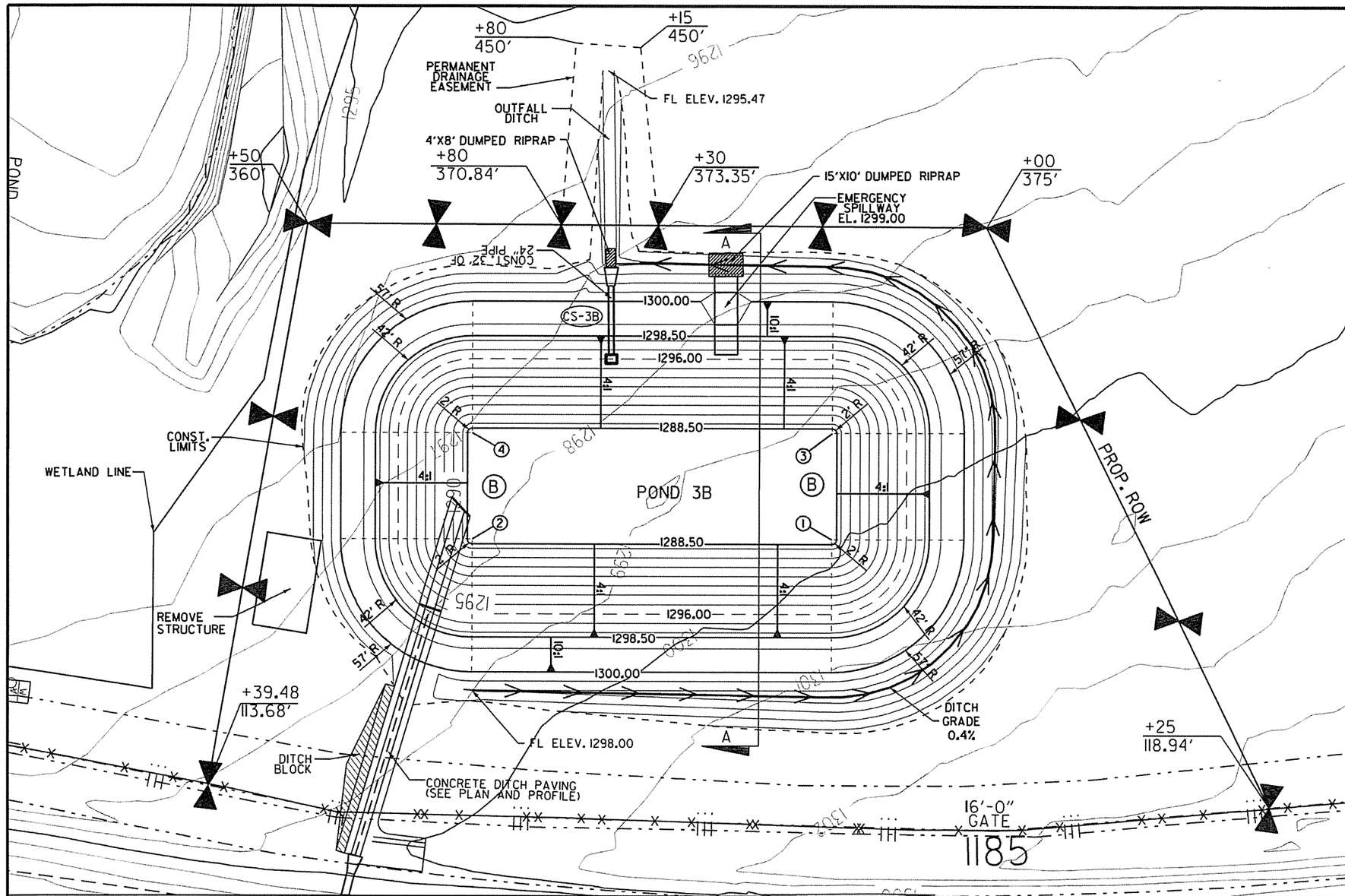

STATE OF ARKANSAS
REGISTERED PROFESSIONAL ENGINEER
No.11991
ROBERT E. Mc IVOR JR.
3/1/16

NO.	STATION	OFFSET
①	1184+23.00	240.00'
②	1182+49.27	232.00'
③	1184+22.33	286.00'
④	1182+44.64	277.90'

STA. 1183+10 CONTRUCT
(TYPE RM MODIFIED)
DROP INLET 314.36' LT.
(4' X 3' X H= 5'-10")
WITH 24" X 32' R.C. PIPE
OUTLET (CLASS III)
(TYPE 3 BEDDING) WITH F.E.S.

LEGEND

Ⓑ POND 3B AUGER BORING LOCATION

▨ DUMPED RIPRAP

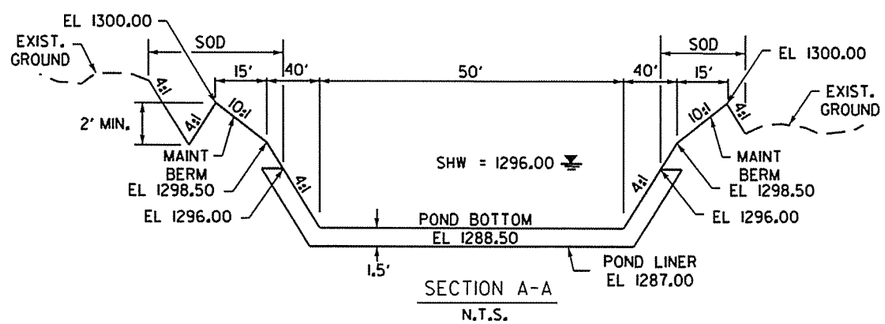

SECTION A-A
N.T.S.

NOTE:
FOR CS-3B AND EMERGENCY SPILLWAY DETAILS SEE CONTROL STRUCTURE DETAILS SHEET.

STORM FREQ.	PEAK STAGE
25 YEAR/24 HOUR (DESIGN STORM)	1298.17
100 YEAR/24 HOUR	1298.72

SCALE IN FEET
0 50' 100'

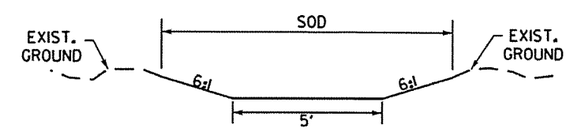

OUTFALL DITCH DETAIL
N.T.S.

POND 3B DETAILS
SPECIAL DETAILS

USER: 11656
DESIGN FILE: R:\Cave Springs Recharge\Pond Detail Sheets 12-09-14\Pond 3B Details.dgn
PLOTTED: 03/01/16 14:58
SCALE: 50:1
MODEL: POND 3B DETAILS

DATE REVISED	DATE FILMED	DATE REVISED	DATE FILMED	FED.RD. DIST.NO.	STATE	FED.AID PROJ.NO.	SHEET NO.	TOTAL SHEETS
				6	ARK.			
				JOB NO.		CA0901	28	452

② SPECIAL DETAILS

STATE OF ARKANSAS
REGISTERED PROFESSIONAL ENGINEER
No.11991
ROBERT E. McIVOR, JR.
3/1/16

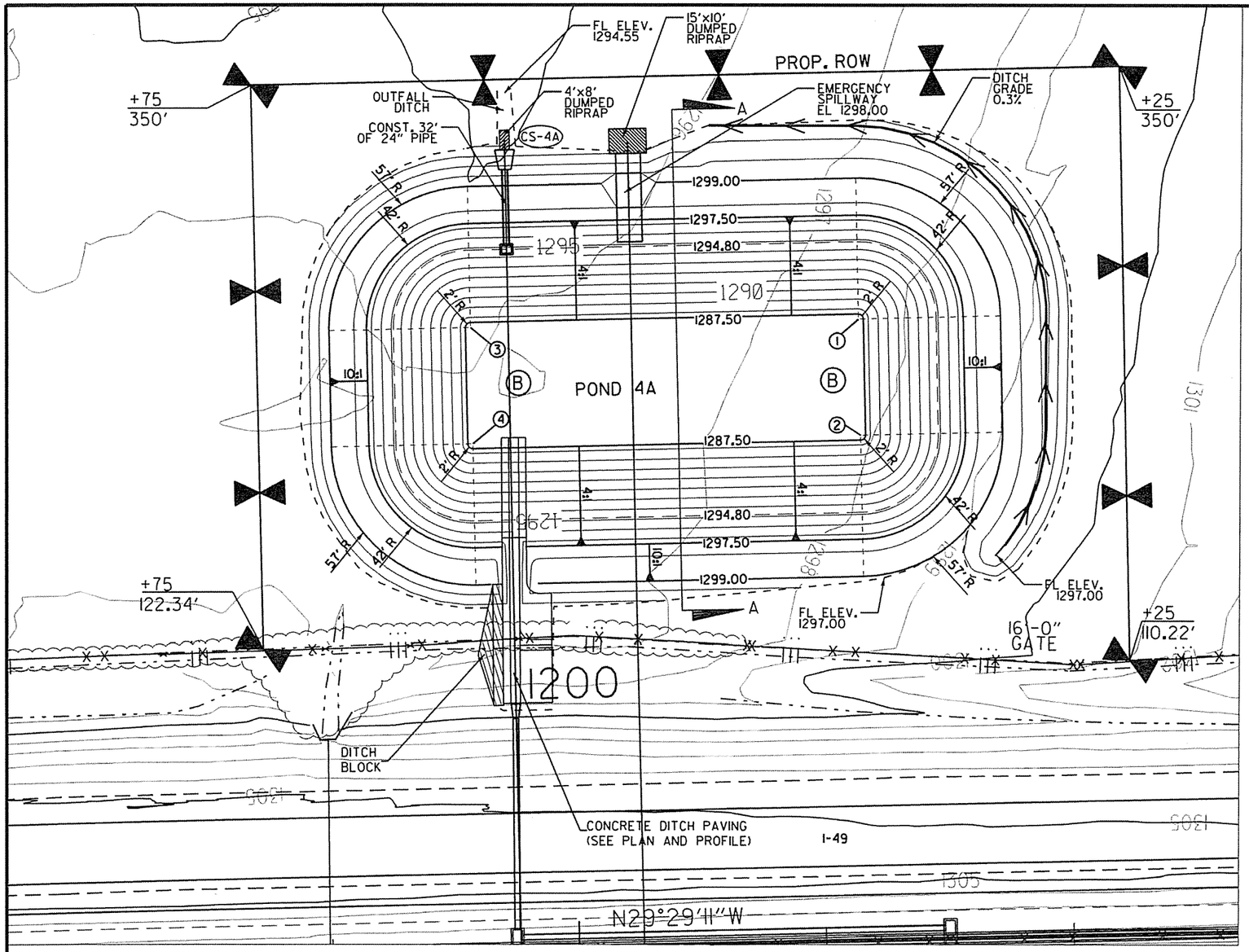

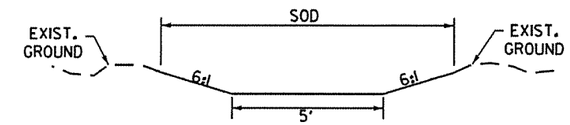

OUTFALL DITCH DETAIL
N.T.S.

NO.	STATION	OFFSET
①	1201+18	250'
②	1201+18	203'
③	1199+61	250'
④	1199+61	203'

LEGEND

Ⓑ POND 4A AUGER BORING LOCATION

DUMPED RIPRAP

STA. 1199+76 CONSTRUCT
(TYPE RM MODIFIED)
DROP INLET 28'-2" LT.
(4' X 3' X H= 6'-2")
WITH 24" X 32' R.C. PIPE
OUTLET (CLASS III)
(TYPE 3 BEDDING) WITH F.E.S.

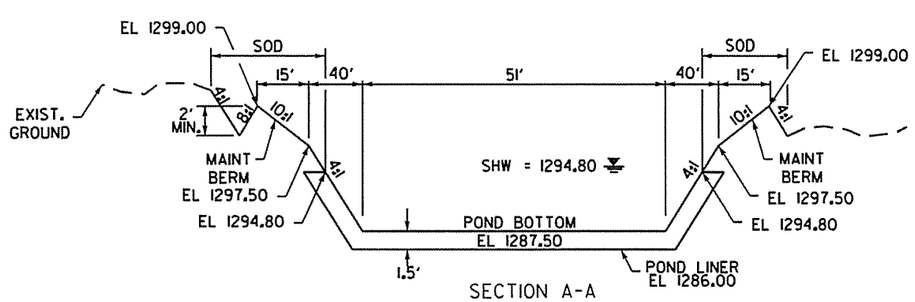

SECTION A-A
N.T.S.

NOTE:
FOR CS-4A AND EMERGENCY SPILLWAY DETAILS SEE CONTROL STRUCTURE DETAILS SHEET.

STORM FREQ.	PEAK STAGE
25 YEAR/24 HOUR (DESIGN STORM)	1297.17
100 YEAR/24 HOUR	1297.83

SCALE IN FEET
0 50' 100'

POND 4A DETAILS
SPECIAL DETAILS

USER: 11656
DESIGN FILE: R:\Cove Springs Recharge\Pond DetailSheets 12-09-14\Pond 4A Details.dgn MODEL: POND 4A DETAILS
PLOTTED: 03/01/16 15:00 SCALE: 50:1

DATE REVISED	DATE FILMED	DATE REVISED	DATE FILMED

FED.RD. DIST.NO.	STATE	FED.AID PROJ.NO.	SHEET NO.	TOTAL SHEETS
6	ARK.			
JOB NO.		CA0901	29	452

SPECIAL DETAILS

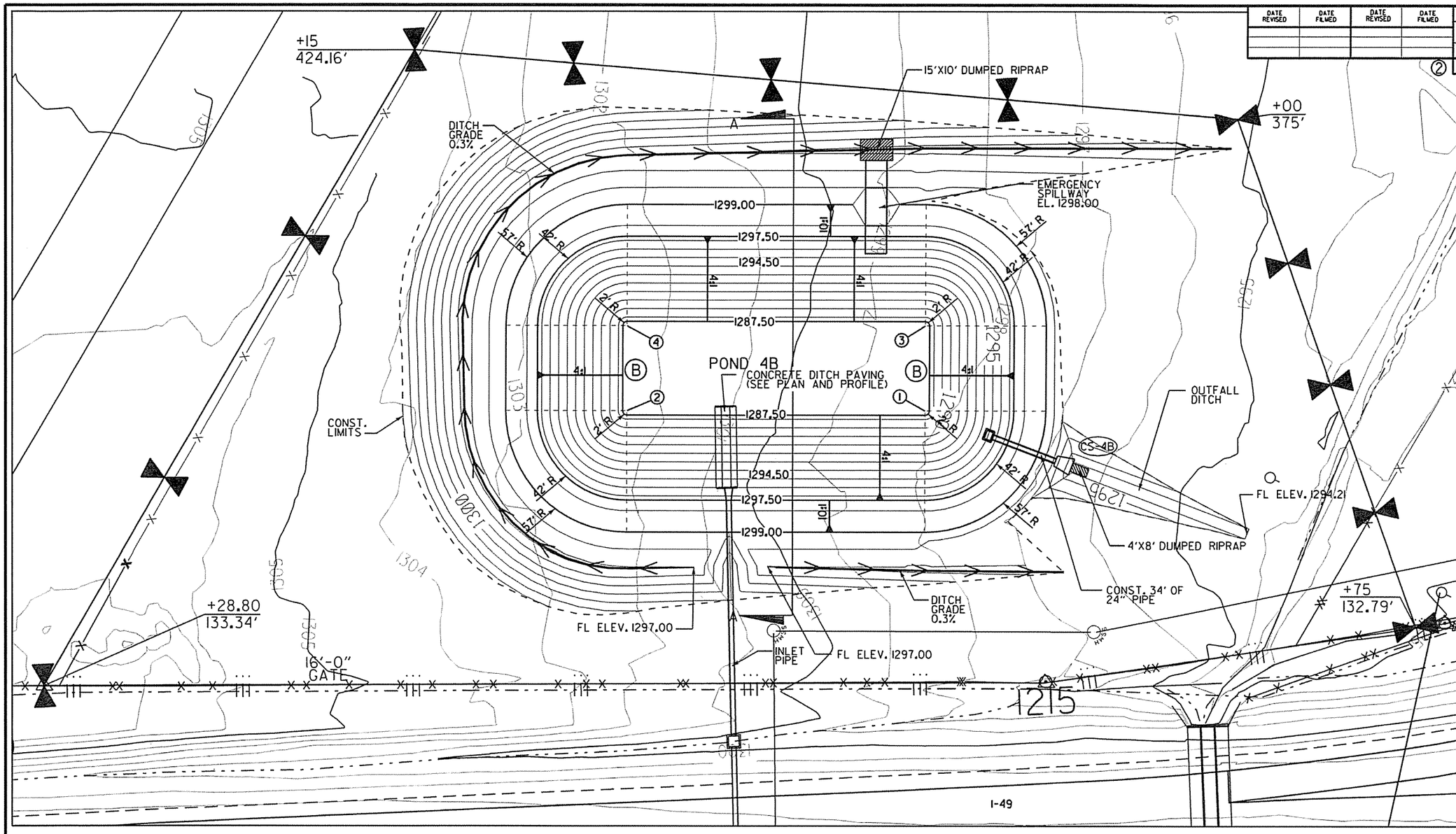

STATE OF ARKANSAS
REGISTERED PROFESSIONAL ENGINEER
No.11991
ROBERT E. Mc IVOR, JR.
3/1/16

NOTE:
FOR CS-4B AND EMERGENCY SPILLWAY DETAILS SEE CONTROL STRUCTURE DETAILS SHEET.

NO.	STATION	OFFSET
1	1214+48.00	244.00'
2	1213+08.13	250.07'
3	1214+49.74	283.96'
4	1213+09.87	290.03'

STA. 1214+78 CONSTRUCT (TYPE RM MODIFIED) DROP INLET 231.31' LT. (4' X 3' X H= 5'-6") WITH 24" X 32' R.C. PIPE OUTLET (CLASS III) (TYPE 3 BEDDING) WITH F.E.S.

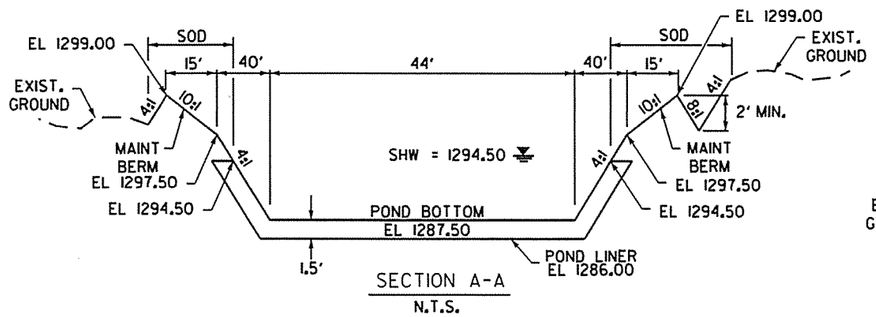

SECTION A-A
N.T.S.

LEGEND

(B) POND 4B AUGER BORING LOCATION

DUMPED RIPRAP

STORM FREQ.	PEAK STAGE
25 YEAR/24 HOUR (DESIGN STORM)	1296.96
100 YEAR/24 HOUR	1297.53

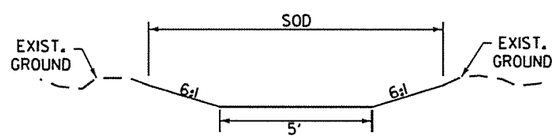

OUTFALL DITCH DETAIL
N.T.S.

SCALE IN FEET
0 50' 100'

POND 4B DETAILS
SPECIAL DETAILS

USER: 11656
DESIGN FILE: R:\Cove Springs Recharge\Pond Detail Sheets 12-09-14\Pond 4B Details.dgn
PLOTTED: 03/01/16 15:02
SCALE: 50:1
MODEL: POND 4B DETAILS

DATE REVISED	DATE FILMED	DATE REVISED	DATE FILMED	FED.RD. DIST.NO.	STATE	FED.AID PROJ.NO.	SHEET NO.	TOTAL SHEETS
				6	ARK.			
				JOB NO.		CA0901	30	452
				SPECIAL DETAILS				

NOTES:

1. SEE CONTROL STRUCTURE DETAILS SHEET FOR SKIMMER ATTACHMENT DETAILS.
2. CONTROL STRUCTURE SHALL BE PAID FOR AS DROP INLETS (TYPE RM MODIFIED).

STATE OF ARKANSAS
REGISTERED PROFESSIONAL ENGINEER
No.11991
ROBERT E. McIVOR
3/1/16

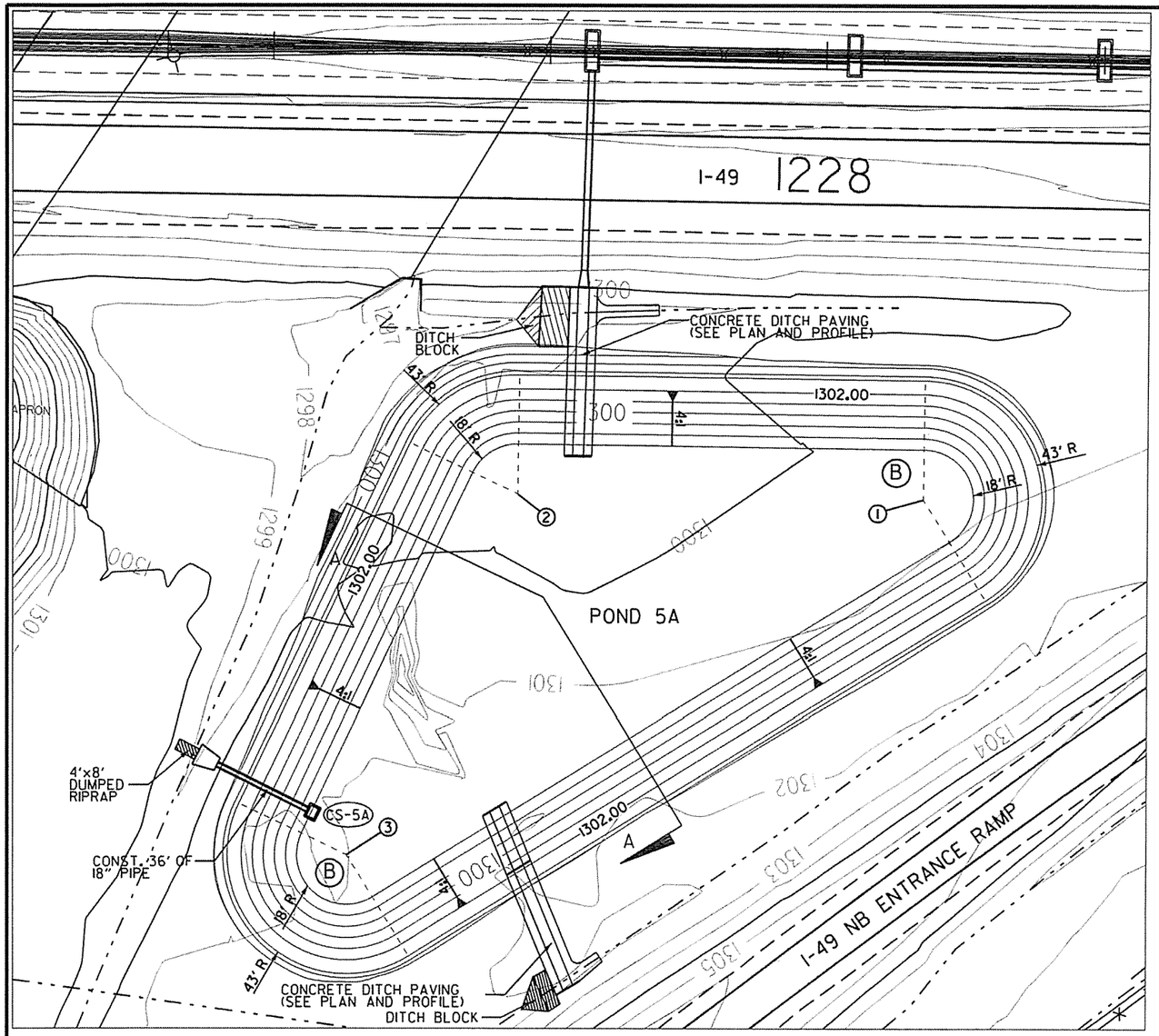

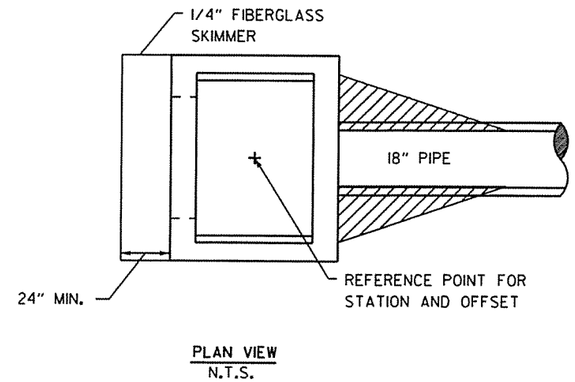

PLAN VIEW
N.T.S.

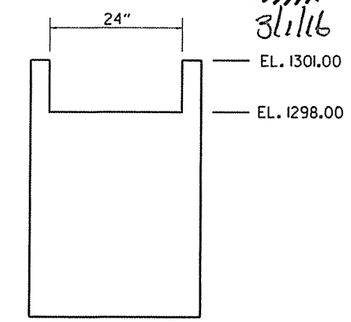

WEIR DETAIL
N.T.S.

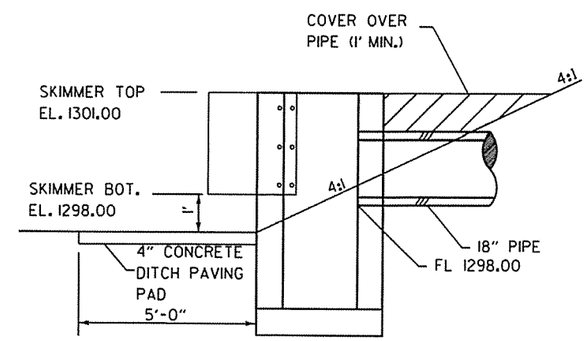

ELEVATION VIEW
N.T.S.

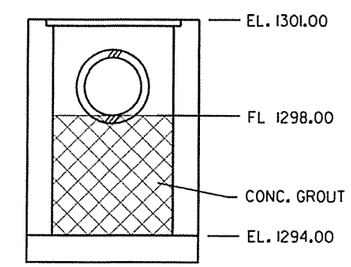

ELEVATION VIEW
N.T.S.

CONTROL STRUCTURE DETAIL

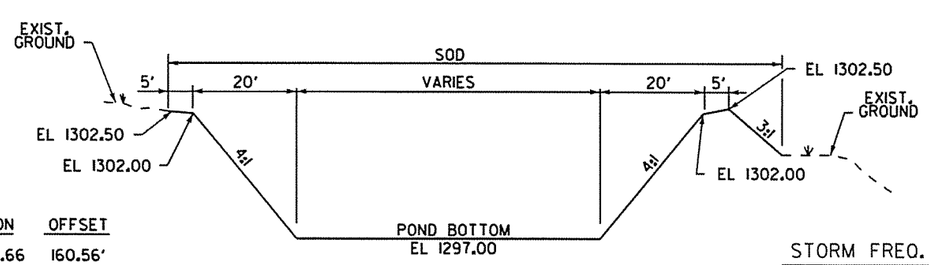

SECTION A-A
N.T.S.

NO.	STATION	OFFSET
1	1228+37.66	160.56'
2	1226+91.00	161.00'
3	1226+31.19	291.99'

LEGEND

(B) POND 5A AUGER BORING LOCATION

DUMPED RIPRAP

STORM FREQ.	PEAK STAGE
25 YEAR/24 HOUR (DESIGN STORM)	1298.44
100 YEAR/24 HOUR	1298.78

STA. 1226+19 CONSTRUCT (TYPE RM MODIFIED) DROP INLET 276.93' RT. (4' X 3' X H= 7'-0") WITH 18" X 36' R.C. PIPE OUTLET (CLASS III) (TYPE 3 BEDDING) WITH F.E.S.

N

SCALE IN FEET
0 50' 100'

POND 5A DETAILS
SPECIAL DETAILS

USER: 11656
DESIGN FILE: R:\Cove Springs Recharge\Pond Detail Sheets 12-09-14\Pond 5A Details.dgn
PLOTTED: 03/01/16 15:04 SCALE: 50:1 MODEL: POND 5A DETAILS

DATE REVISED	DATE FILMED	DATE REVISED	DATE FILMED	FED.RD. DIST.NO.	STATE	FED.AID PROJ.NO.	SHEET NO.	TOTAL SHEETS
				6	ARK.			
				JOB NO.		CA0901	31	452

SPECIAL DETAILS

NOTES:

1. SEE CONTROL STRUCTURE DETAILS SHEET FOR SKIMMER ATTACHMENT DETAILS.
2. CONTROL STRUCTURE SHALL BE PAID FOR AS DROP INLETS (TYPE RM MODIFIED).

STATE OF ARKANSAS
REGISTERED PROFESSIONAL ENGINEER
No.11991
ROBERT E. Mc IVOR, JR.
3/1/16

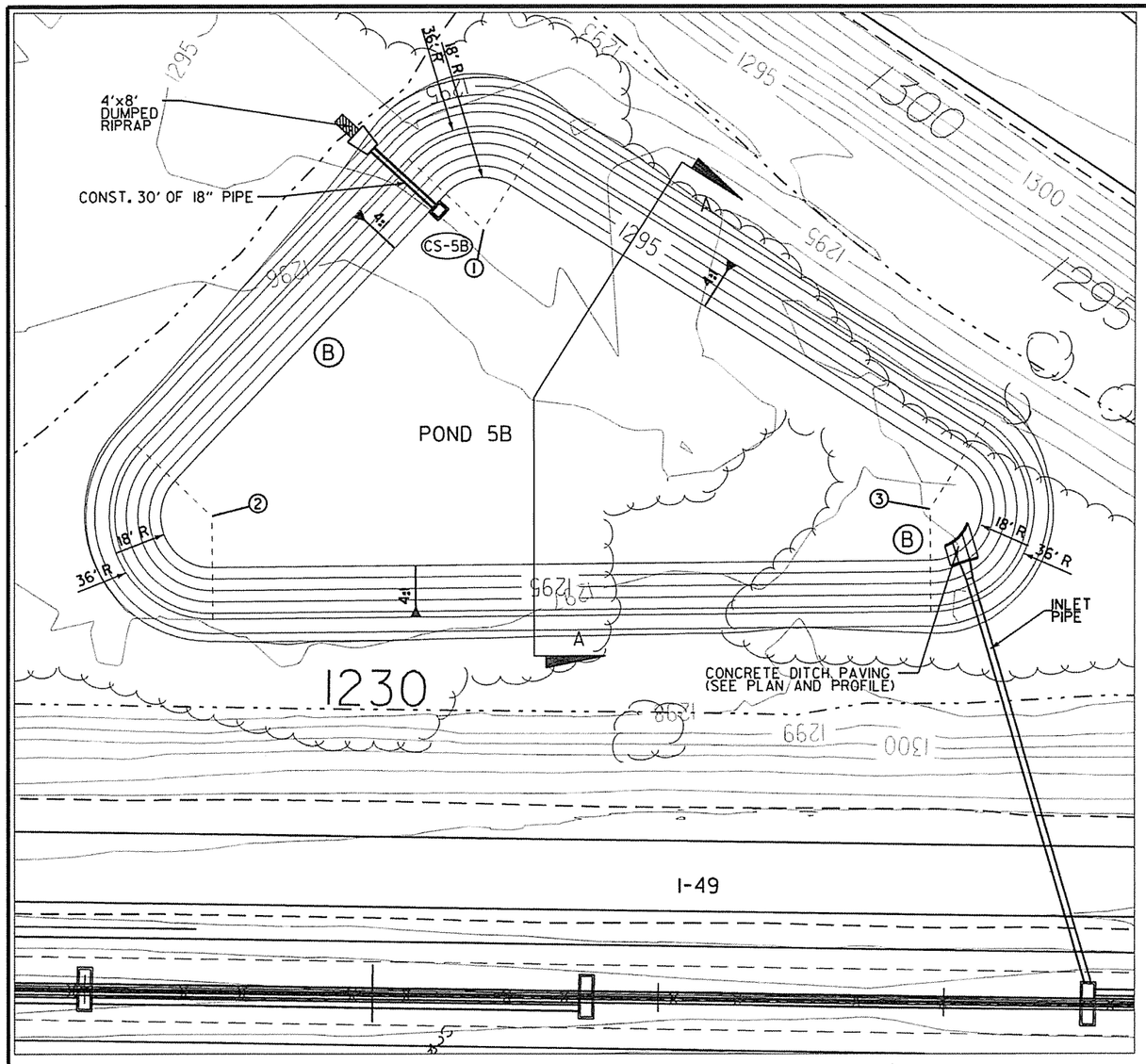

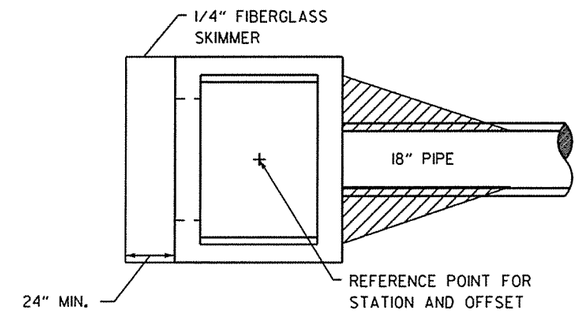

PLAN VIEW
N.T.S.

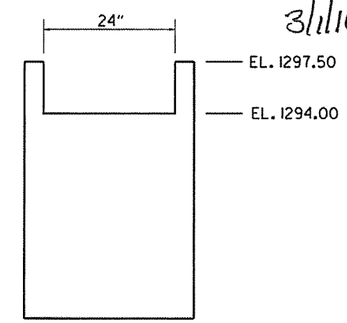

WEIR DETAIL
N.T.S.

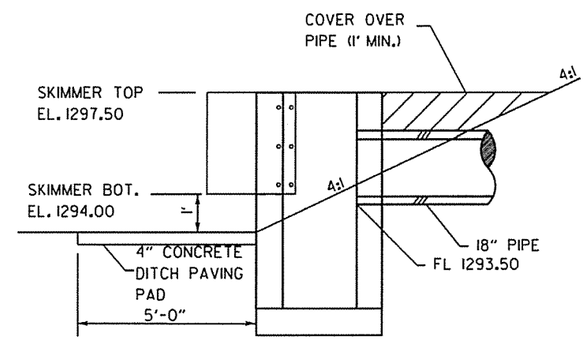

ELEVATION VIEW
N.T.S.

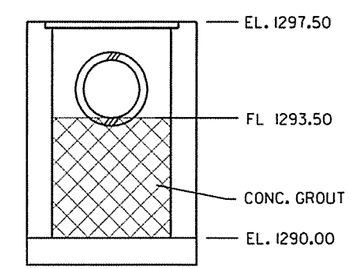

ELEVATION VIEW
N.T.S.

CONTROL STRUCTURE DETAIL

LEGEND

(B) POND 5B AUGER BORING LOCATION

DUMPED RIPRAP

STA. 1230+19 CONSTRUCT (TYPE RM MODIFIED) DROP INLET 272.90' LT. (4' X 3' X H= 7'-6") WITH 18" X 30' R.C. PIPE OUTLET (CLASS III) (TYPE 3 BEDDING) WITH F.E.S.

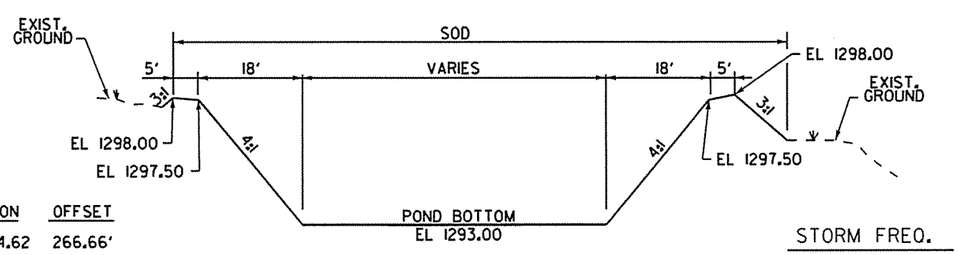

SECTION A-A
N.T.S.

NO.	STATION	OFFSET
1	1230+34.62	266.66'
2	1229+42.00	165.00'
3	1231+92.60	171.36'

STORM FREQ.	PEAK STAGE
25 YEAR/24 HOUR (DESIGN STORM)	1294.24
100 YEAR/24 HOUR	1294.52

SCALE IN FEET
0 50' 100'

POND 5B DETAILS
SPECIAL DETAILS

USER: 11656
DESIGN FILE: R:\Cave Springs Recharge\Pond Detail Sheets 12-09-14\Pond 5B Details.dgn
PLOTTED: 03/01/16 15:05
SCALE: 50:1
MODEL: POND 5B DETAILS

DATE REVISED	DATE FILMED	DATE REVISED	DATE FILMED

FED.RD. DIST.NO.	STATE	FED.AID PROJ.NO.	SHEET NO.	TOTAL SHEETS
6	ARK.			
JOB NO.		CA0901	32	452

SPECIAL DETIALS

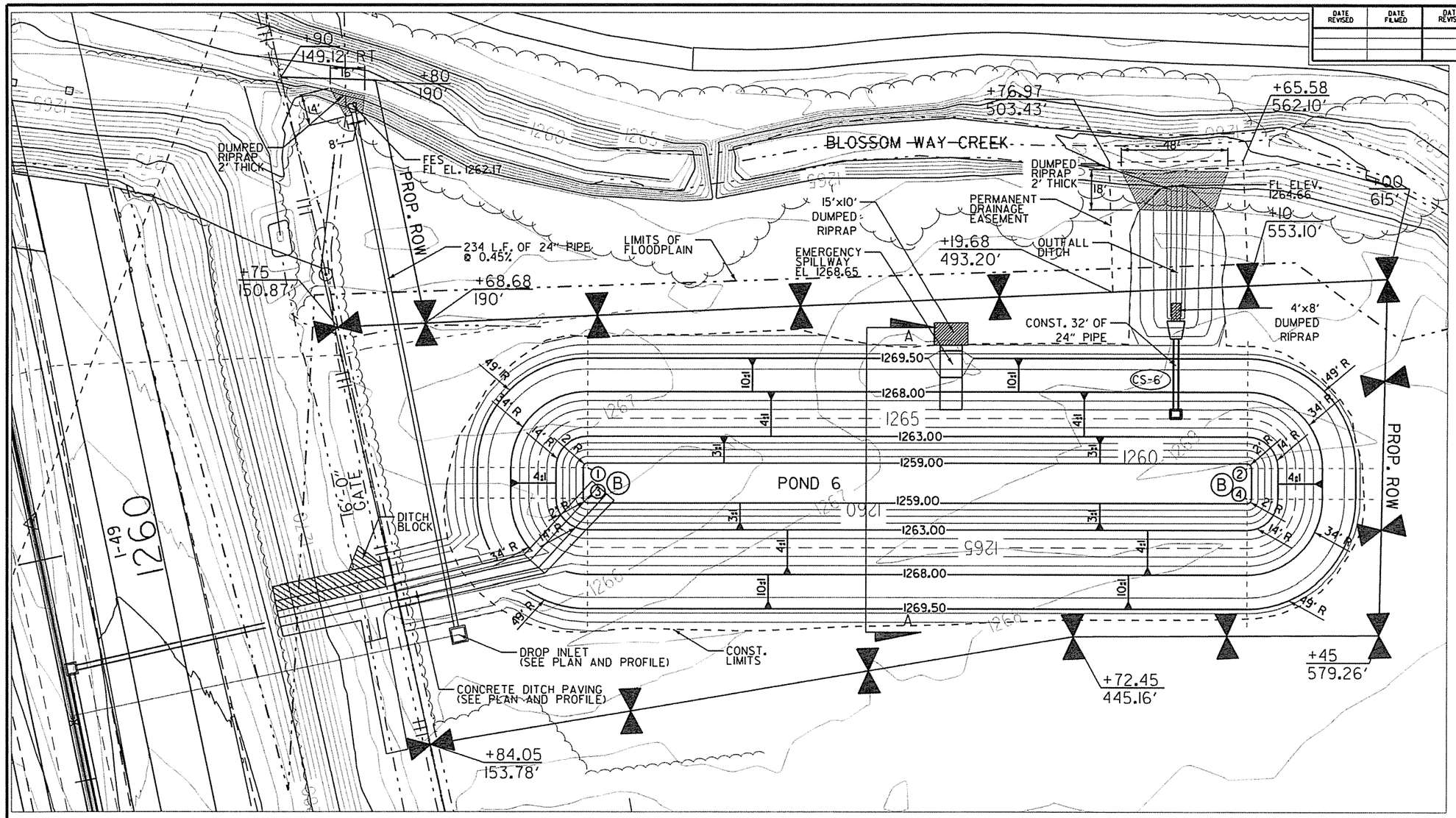

STATE OF ARKANSAS
REGISTERED PROFESSIONAL ENGINEER
No.11991
ROBERT E. Mc IVOR, JR.
3/3/16

NO.	STATION	OFFSET
1	1259+90.50	247.83'
2	1259+30.05	536.38'
3	1259+77.00	245.00'
4	1259+16.56	533.55'

STORM FREQ.	PEAK STAGE
25 YEAR/24 HOUR (DESIGN STORM)	1268.00
100 YEAR/24 HOUR	1268.65

LEGEND

(B) POND 6 AUGER BORING LOCATION

DUMPED RIPRAP

NOTE:
FOR CS-6 AND EMERGENCY SPILLWAY DETAILS SEE CONTROL STRUCTURE DETAILS SHEET.

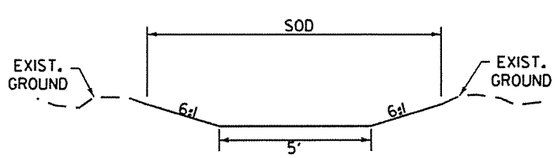

OUTFALL DITCH DETAIL
N.T.S.

STA. 1259+60 CONSTRUCT (TYPE RM MODIFIED) DROP INLET 509.73' RT. (4' X 3' X H= 6'-8") WITH 24" X 32' R.C. PIPE OUTLET (CLASS III) (TYPE 3 BEDDING) WITH F.E.S.

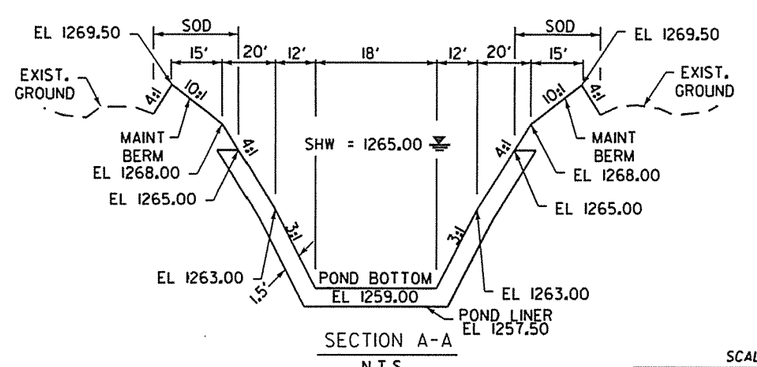

SECTION A-A
N.T.S.

SCALE IN FEET
0 50' 100'

POND 6 DETAILS
SPECIAL DETAILS

USER: 11656
DESIGN FILE: R:\Cave Springs Recharge\Pond Detail Sheets 12-09-14\Pond 6 Details.dgn
PLOTTED: 03/03/16 7:30
SCALE: 50:1
MODEL: POND 6 DETAILS

DATE REVISED	DATE FILMED	DATE REVISED	DATE FILMED

FED.RD. DIST.NO.	STATE	FED.AID PROJ.NO.	SHEET NO.	TOTAL SHEETS
6	ARK.			
JOB NO.		CA0901	33	452

SPECIAL DETAILS

STR. NO.	POND NO.	DROP STRUCTURE		GRATE ELEV. "A"	WEIR ELEV. "B" (FT)	ORIFICE DATA		WEIR LENGTH "E" (IN)	TOP OF SKIMMER "F"	BOTTOM OF SKIMMER "G"	SKIMMER SEPARATION (INCHES) "H"	OUTLET PIPE			EMERGENCY SPILLWAY		
		STATION	OFFSET			DIA. (IN.) "C"	INVERT ELEV. "D"					INLET FL. EL. "I"	OUTFALL FL. EL. "J"	PIPE SIZE "K"	STATION	OFFSET	ELEVATION
CS-3A	3A	1175+98	420.86	1299.40	1296.50	3.00	1296.00	24	1300.00	1296.00	24	1296.00	1295.90	24"	1175+20.69	448.40	1299.40
CS-3B	3B	1183+10	314.36	1298.80	1296.50	3.00	1296.00	24	1300.00	1296.00	24	1296.00	1295.80	24"	1183+66.88	341.78	1299.00
CS-4A	4A	1199+76	281.21	1298.00	1296.00	3.00	1294.80	24	1298.50	1294.00	24	1294.80	1294.70	24"	1200+26.30	307.00	1298.00
CS-4B	4B	1214+78	231.31	1298.00	1296.00	3.00	1294.50	24	1298.50	1294.00	24	1295.50	1294.40	24"	1214+28.79	341.92	1298.00
CS-6	6	1259+60	509.73	1268.65	1266.50	3.00	1265.00	24	1269.15	1266.00	24	1265.00	1264.80	24"	1260+08.46	416.95	1268.65

NOTES:

1. THE COST OF THE ORIFICE PIPE AND ATTACHMENTS AND FIBERGLASS SKIMMERS WITH ASSOCIATED HARDWARE AND FITTINGS SHALL BE INCLUDED IN THE COST OF THE OUTFALL CONTROL DROP STRUCTURE.
2. SKIMMER TO BE ATTACHED TO BACK OF MOUNTING STRAP USING 3/8" DIAMETER BY 1-1/2" LONG HEX BOLT, FLAT WASHER, FENDER WASHER, AND LOCK NUT, ALL STAINLESS STEEL.
3. SKIMMER TO BE ATTACHED DIRECTLY TO THE BACK OF INLET USING 3/8" DIAMETER STAINLESS STEEL STUD TYPE EXPANSION ANCHOR WITH NUT AND WASHER, EMBEDDED 2-1/2".
4. ANCHORS TO BE INSTALLED ACCORDING TO THE MANUFACTURER'S RECOMMENDATIONS.
5. CONTROL STRUCTURE SHALL BE PAID FOR AS DROP INLETS (TYPE RM MODIFIED).

STATE OF ARKANSAS REGISTERED PROFESSIONAL ENGINEER No.11991 ROBERT E. Mc IVOR
3/1/16

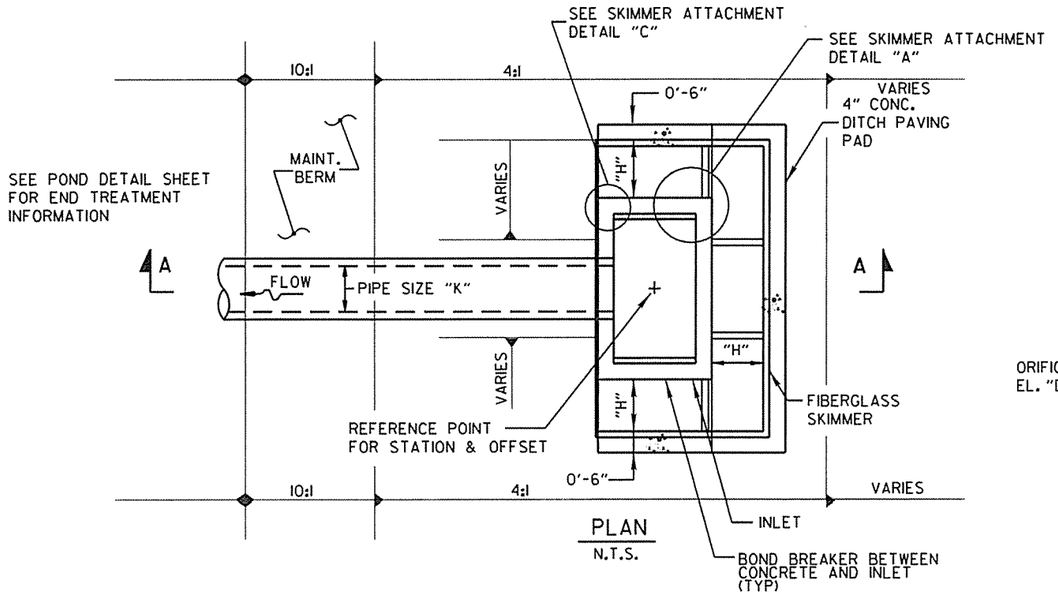

PLAN
N.T.S.

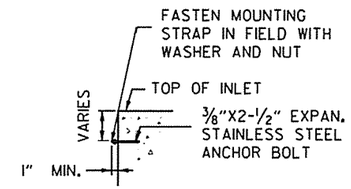

DETAIL "B"
N.T.S.

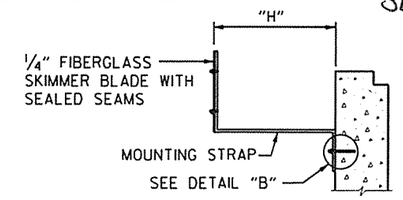

DETAIL "A"
N.T.S.

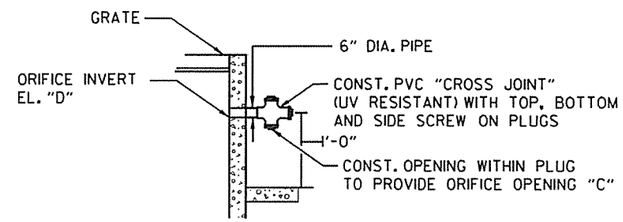

ORIFICE DETAIL
N.T.S.

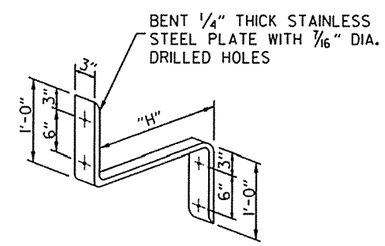

MOUNTING STRAP
N.T.S.

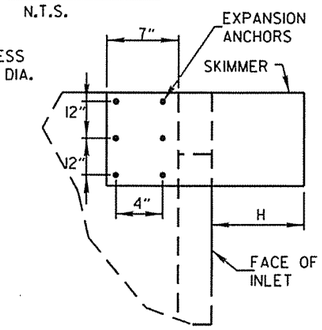

DETAIL "C"
N.T.S.

SKIMMER ATTACHMENT DETAILS

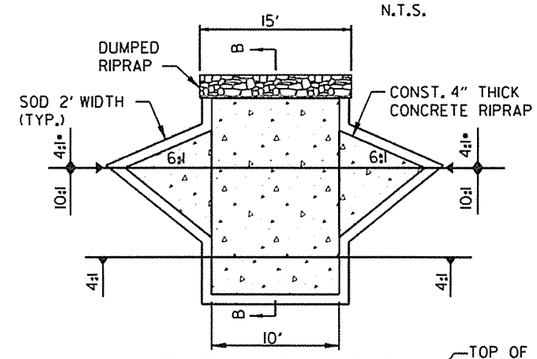

EMERGENCY SPILLWAY PLAN
NTS

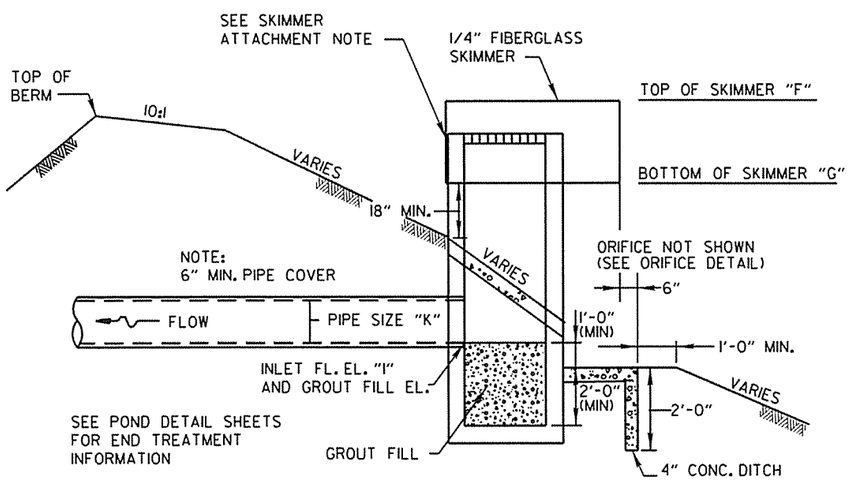

SECTION A-A
N.T.S.

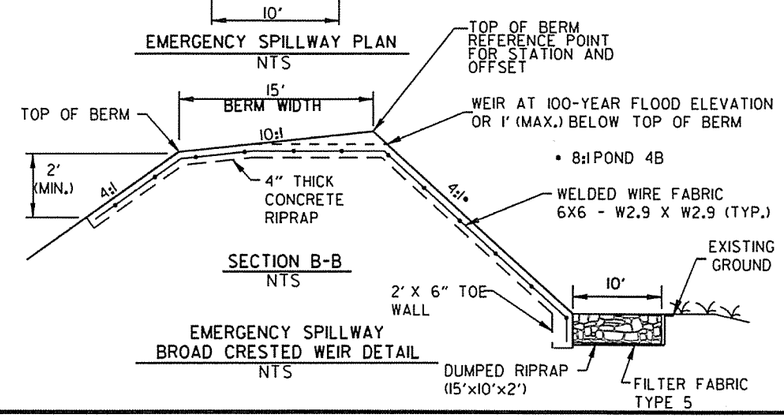

SECTION B-B
NTS

EMERGENCY SPILLWAY BROAD CRESTED WEIR DETAIL
NTS

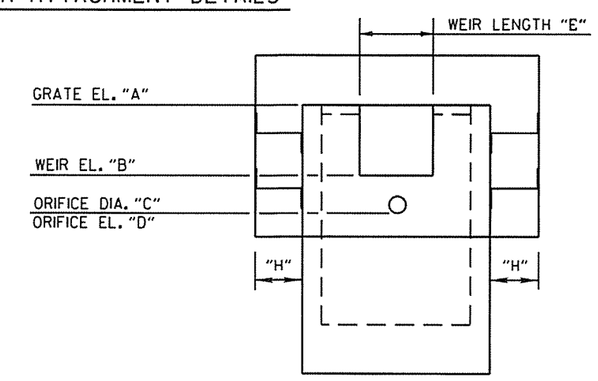

WEIR DETAIL
N.T.S.

CONTROL STRUCTURE DETAILS
SPECIAL DETAILS

USER: 11656
DESIGN FILE: R:\Cove Springs Recharge\Pond Detail Sheets 12-09-14\Control Structure Details.dgn
PLOTTED: 03/01/16 15:07
SCALE: 50:1
MODEL: SPECIAL DETAILS

Crafton Tull
architecture | engineering | surveying

DATE REVISED	DATE FILMED	DATE REVISED	DATE FILMED

FED.RD. DIST.NO.	STATE	FED.AID PROJ.NO.	SHEET NO.	TOTAL SHEETS
6	ARK.			
JOB NO.		CA0901	34	452

2 TEMPORARY EROSION CONTROL DETAILS

TEMPORARY EROSION CONTROL GENERAL NOTES:

THE QUANTITIES AND LOCATIONS OF THE TEMPORARY EROSION CONTROL DEVICES SHOWN IN THE PLANS ARE ESTIMATED, AND MAY BE ALTERED IF AND WHERE DIRECTED BY THE ENGINEER TO MAXIMIZE THEIR EFFECTIVENESS. THE DEVICES ARE TO BE INSTALLED IN AN AREA ONLY WHEN THE SOIL DISTURBING ACTIVITY IN THAT AREA BEGINS.

STATE OF ARKANSAS
REGISTERED PROFESSIONAL ENGINEER
No. 15560
JEROME PAUL DAVIS
3-03-16

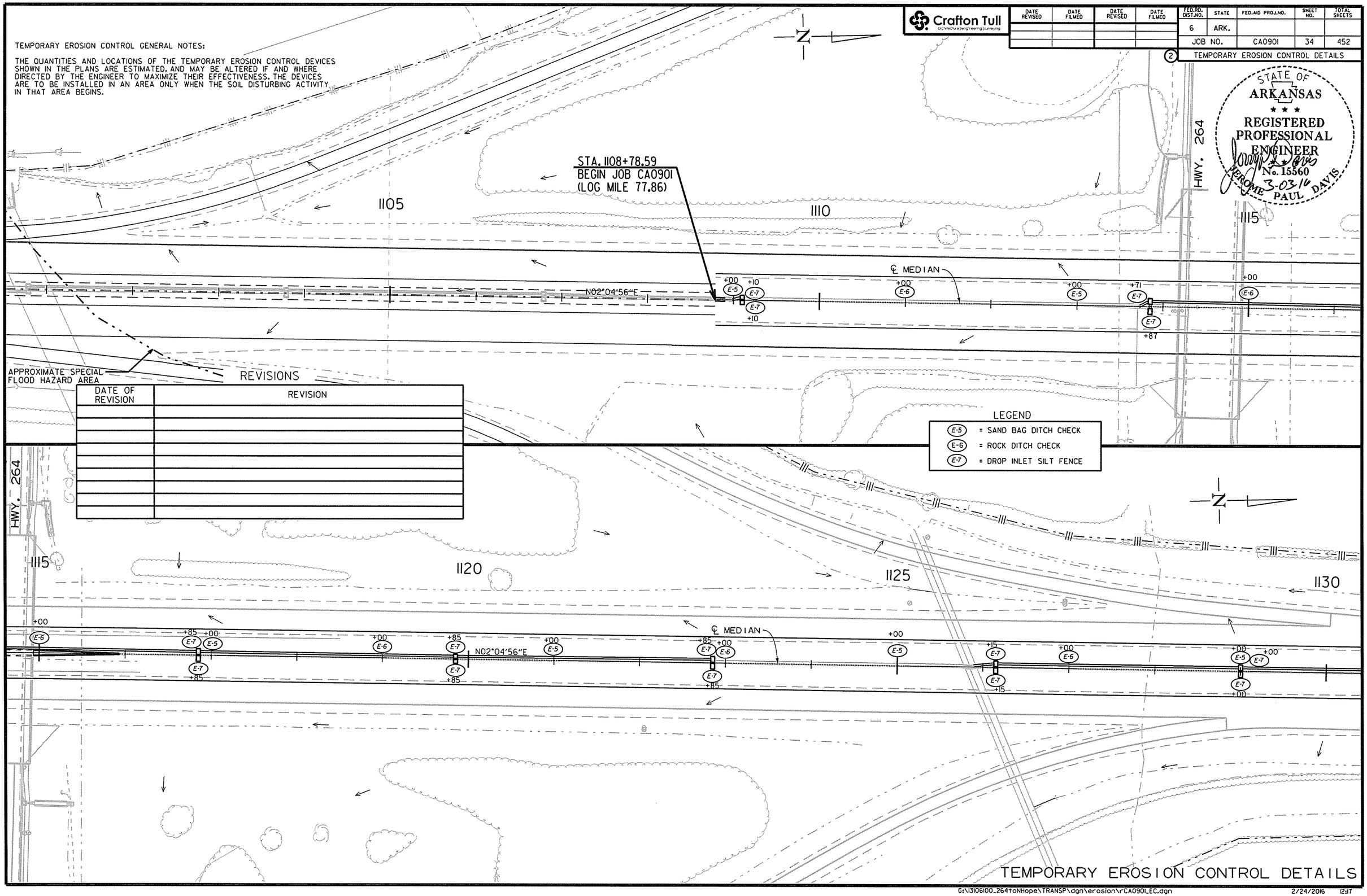

REVISIONS

DATE OF REVISION	REVISION

LEGEND

E-5	= SAND BAG DITCH CHECK
E-6	= ROCK DITCH CHECK
E-7	= DROP INLET SILT FENCE

TEMPORARY EROSION CONTROL DETAILS

G:\13106100_264toNHope\TRANSP\dgn\erosion\rCA0901_EC.dgn 2/24/2016 12:17

USER: q75106
DESIGN FILE: G:\13106100_264toNHope\TRANSP\dgn\erosion\rCA0901_EC.dgn
PLOTTED: 2/24/2016 12:17
SCALE: 100:1
MODEL: EROSION CNTRL DETAILS

Crafton Tull
architecture | engineering | surveying

DATE REVISED	DATE FILMED	DATE REVISED	DATE FILMED

FED.RD. DIST.NO.	STATE	FED.AID PROJ.NO.	SHEET NO.	TOTAL SHEETS
6	ARK.			
JOB NO.		CA0901	35	452

(2) TEMPORARY EROSION CONTROL DETAILS

STATE OF ARKANSAS
REGISTERED PROFESSIONAL ENGINEER
No. 15560
JEROME PAUL DAVIS
3-03-16

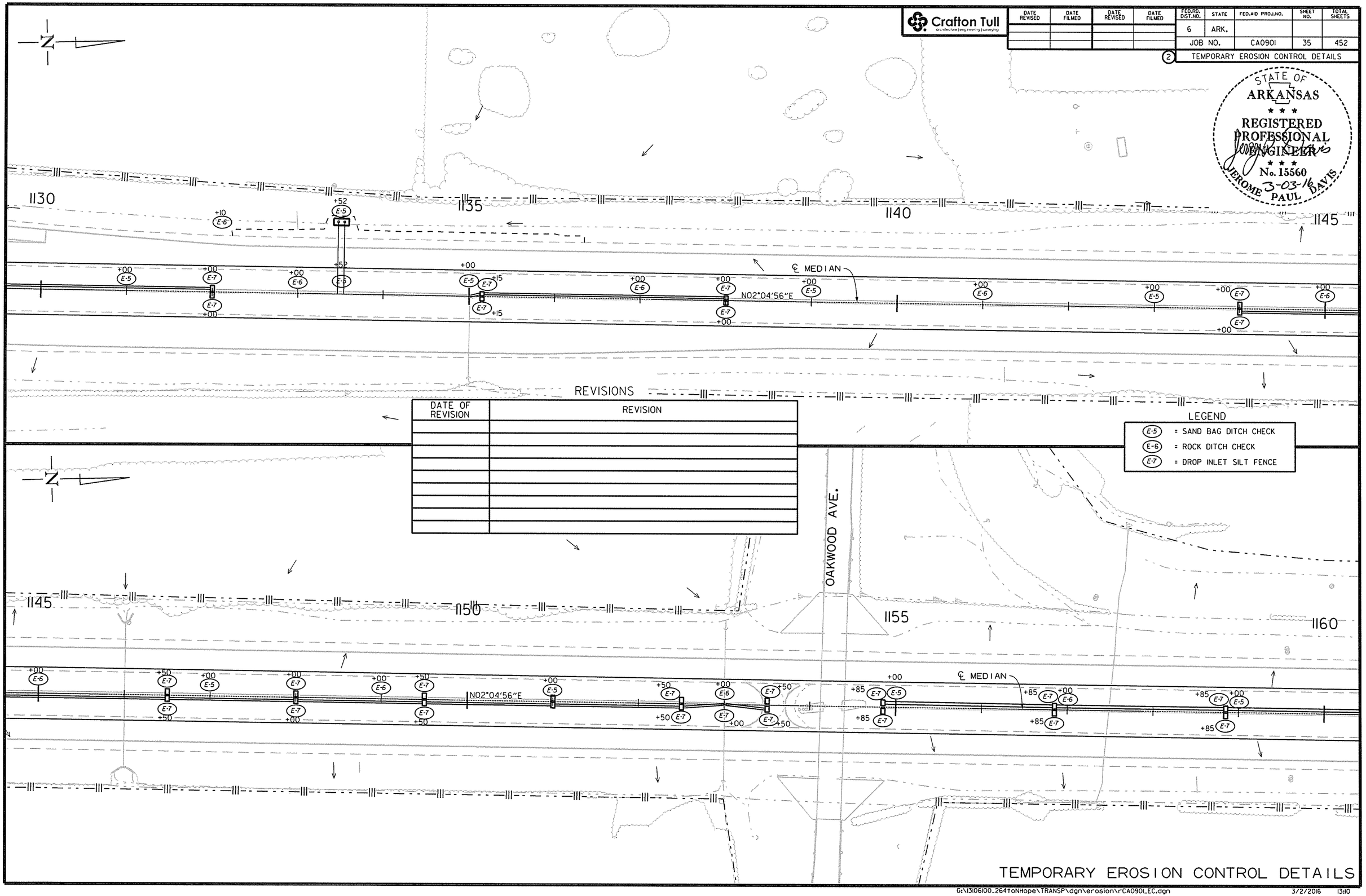

REVISIONS

DATE OF REVISION	REVISION

TEMPORARY EROSION CONTROL DETAILS

USER: a15106
DESIGN FILE: G:\13106100_264toNHope\TRANSP\dgn\erosion\rCA0901_EC.dgn
PLOTTED: 3/2/2016 13:10
SCALE: 100:1
MODEL: EROSION CNTRL DETAILS

Crafton Tull
architecture | engineering | surveying

DATE REVISED	DATE FILMED	DATE REVISED	DATE FILMED

FED.RD. DIST.NO.	STATE	FED.AID PROJ.NO.	SHEET NO.	TOTAL SHEETS
6	ARK.			
JOB NO.		CA0901	36	452

(2) TEMPORARY EROSION CONTROL DETAILS

STATE OF ARKANSAS
REGISTERED PROFESSIONAL ENGINEER
No. 15560
3-03-16
JEROME PAUL DAVIS

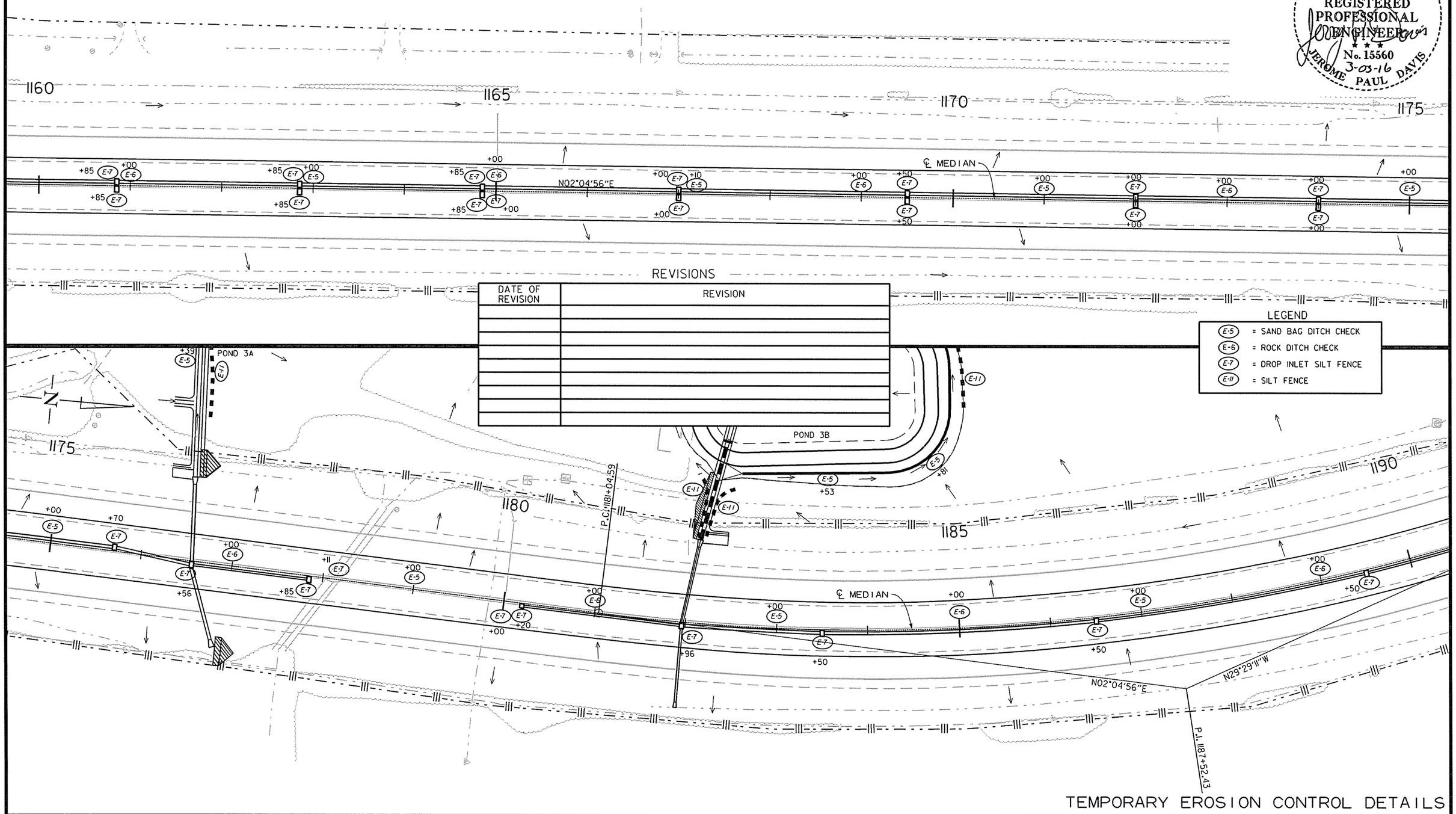

REVISIONS

DATE OF REVISION	REVISION

LEGEND

- (E-5) = SAND BAG DITCH CHECK
- (E-6) = ROCK DITCH CHECK
- (E-7) = DROP INLET SILT FENCE
- (E-11) = SILT FENCE

TEMPORARY EROSION CONTROL DETAILS

USER: at5106
DESIGN FILE: G:\13106100_264toNHope\TRANSP\dgn\erosion\rCA0901_EC.dgn
PLOTTED: 2/24/2016 12:17
SCALE: 100:1
MODEL: EROSION CNTRL DETAILS

Crafton Tull
architecture | engineering | surveying

DATE REVISED	DATE FILMED	DATE REVISED	DATE FILMED

FED.RD. DIST.NO.	STATE	FED.AID PROJ.NO.	SHEET NO.	TOTAL SHEETS
6	ARK.			
JOB NO.		CA0901	37	452

2 TEMPORARY EROSION CONTROL DETAILS

STATE OF ARKANSAS
REGISTERED PROFESSIONAL ENGINEER
No. 15560
3-03-16
JEROME PAUL DAVIS

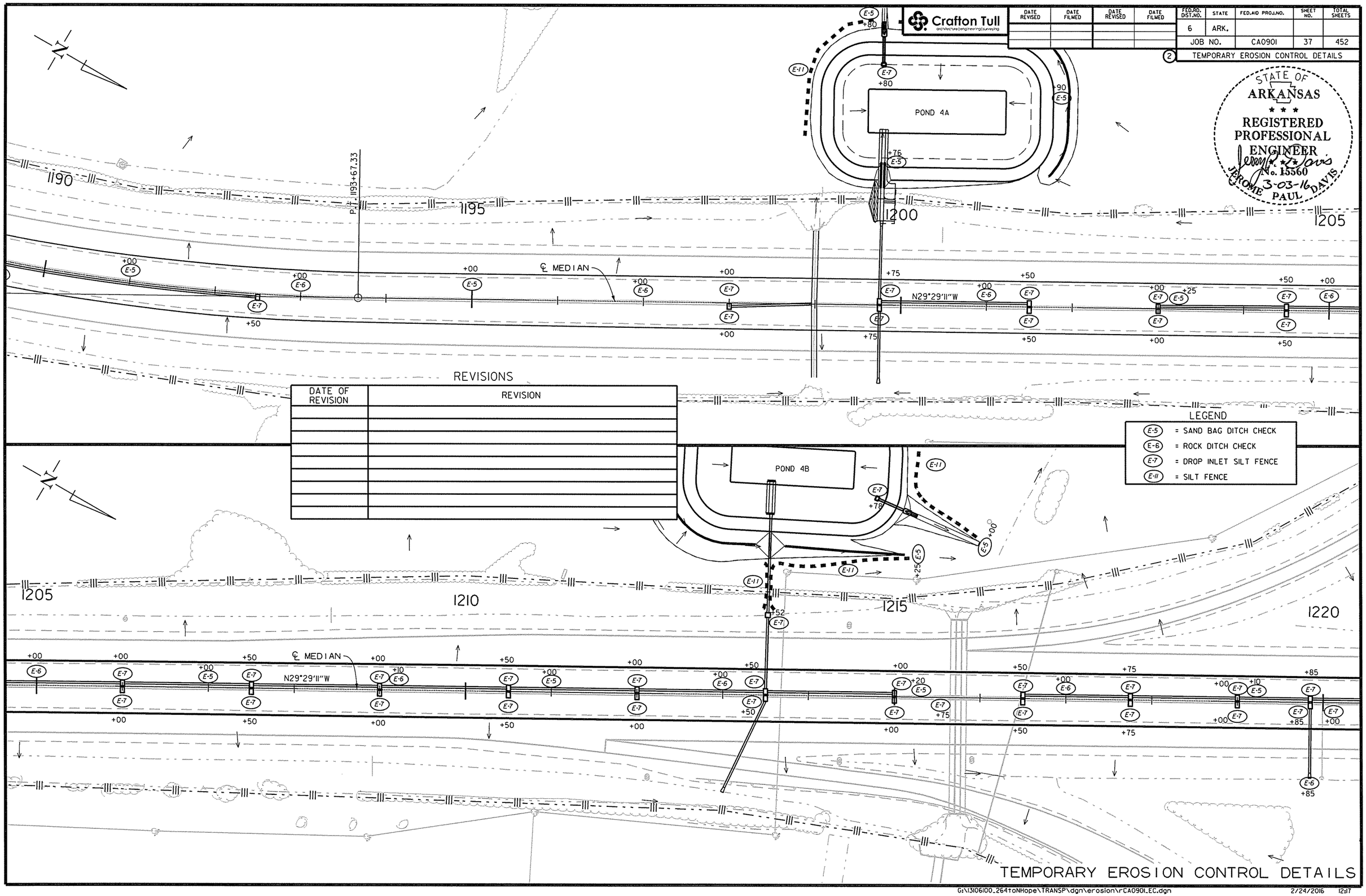

REVISIONS

DATE OF REVISION	REVISION

TEMPORARY EROSION CONTROL DETAILS

USER: at5106
DESIGN FILE: G:\13106100_264toNHope\TRANSP\dgn\erosion\rCA0901_EC.dgn
PLOTTED: 2/24/2016 12:17
SCALE: 100:1
MODEL: EROSION CNTRL DETAILS

Crafton Tull
architecture | engineering | surveying

DATE REVISED	DATE FILMED	DATE REVISED	DATE FILMED

FED.RD. DIST.NO.	STATE	FED.AID PROJ.NO.	SHEET NO.	TOTAL SHEETS
6	ARK.			
JOB NO.		CA0901	38	452

(2) TEMPORARY EROSION CONTROL DETAILS

STATE OF ARKANSAS
REGISTERED PROFESSIONAL ENGINEER
No. 15560
3-03-16
JEROME PAUL DAVIS

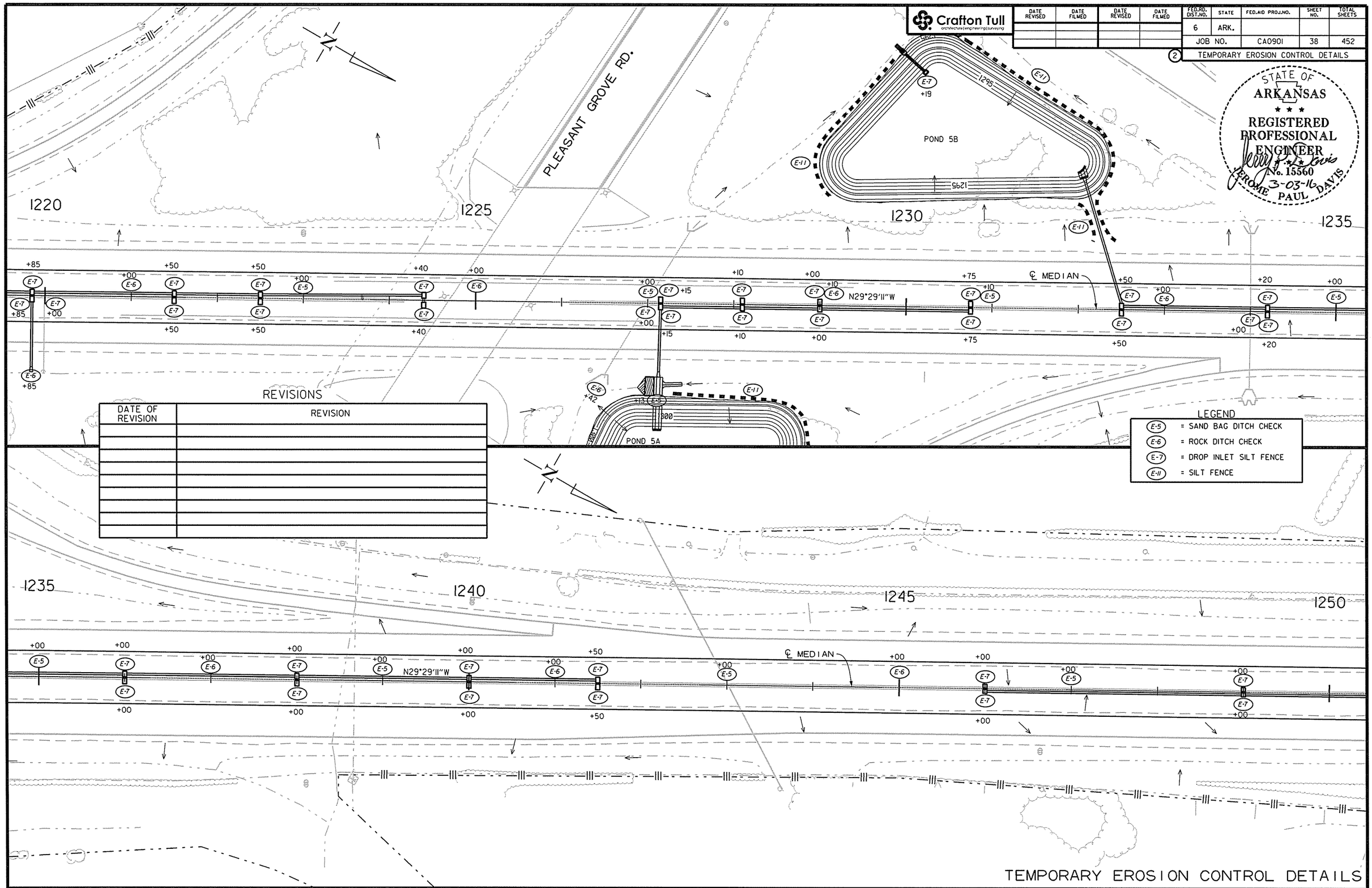

REVISIONS

DATE OF REVISION	REVISION

TEMPORARY EROSION CONTROL DETAILS

USER: a15106
DESIGN FILE: G:\13106100_264toNHope\TRANSP\dgn\erosion\rCA0901_EC.dgn
PLOTTED: 2/24/2016 12:17
SCALE: 100:1
MODEL: EROSION CNTRL DETAILS

Crafton Tull
architecture | engineering | surveying

DATE REVISED	DATE FILMED	DATE REVISED	DATE FILMED

FED.RD. DIST.NO.	STATE	FED.AID PROJ.NO.	SHEET NO.	TOTAL SHEETS
6	ARK.			
JOB NO.		CA0901	39	452

(2) TEMPORARY EROSION CONTROL DETAILS

STATE OF ARKANSAS
REGISTERED PROFESSIONAL ENGINEER
No. 15560
JEROME PAUL DAVIS
3-03-16

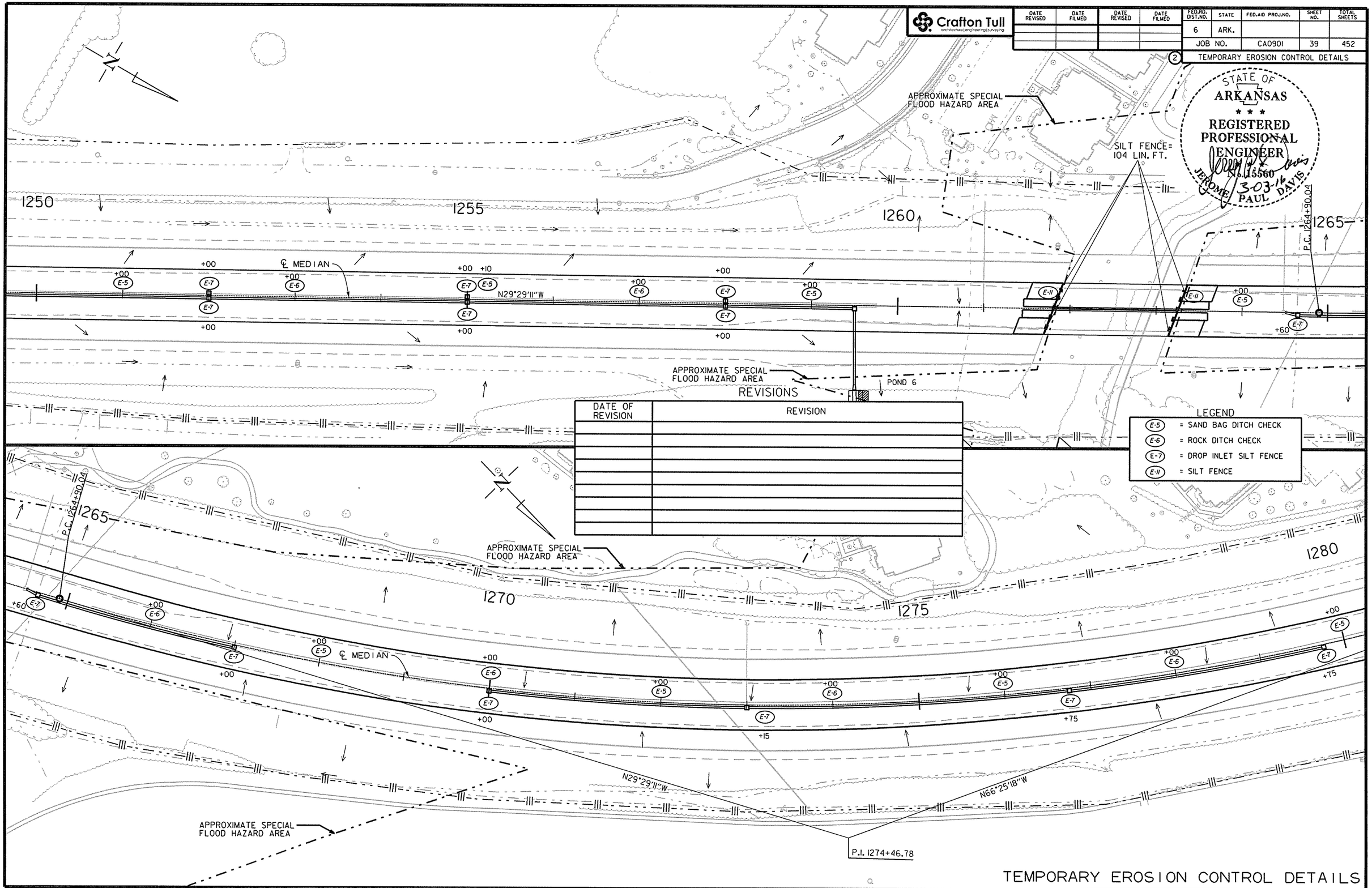

REVISIONS

DATE OF REVISION	REVISION

LEGEND

- (E-5) = SAND BAG DITCH CHECK
- (E-6) = ROCK DITCH CHECK
- (E-7) = DROP INLET SILT FENCE
- (E-11) = SILT FENCE

TEMPORARY EROSION CONTROL DETAILS

USER: ot5106
DESIGN FILE: G:\13106100_264toNHope\TRANSP\dgn\erosion\rCA0901_EC.dgn
PLOTTED: 2/24/2016 12:17
SCALE: 100:1
MODEL: EROSION CNTRL DETAILS

Crafton Tull
architecture | engineering | surveying

DATE REVISED	DATE FILMED	DATE REVISED	DATE FILMED

FED.RD. DIST.NO.	STATE	FED.AID PROJ.NO.	SHEET NO.	TOTAL SHEETS
6	ARK.			
JOB NO.		CA0901	40	452

(2) TEMPORARY EROSION CONTROL DETAILS

STATE OF ARKANSAS
REGISTERED PROFESSIONAL ENGINEER
No. 15560
3-03-16
JEROME PAUL DAVIS

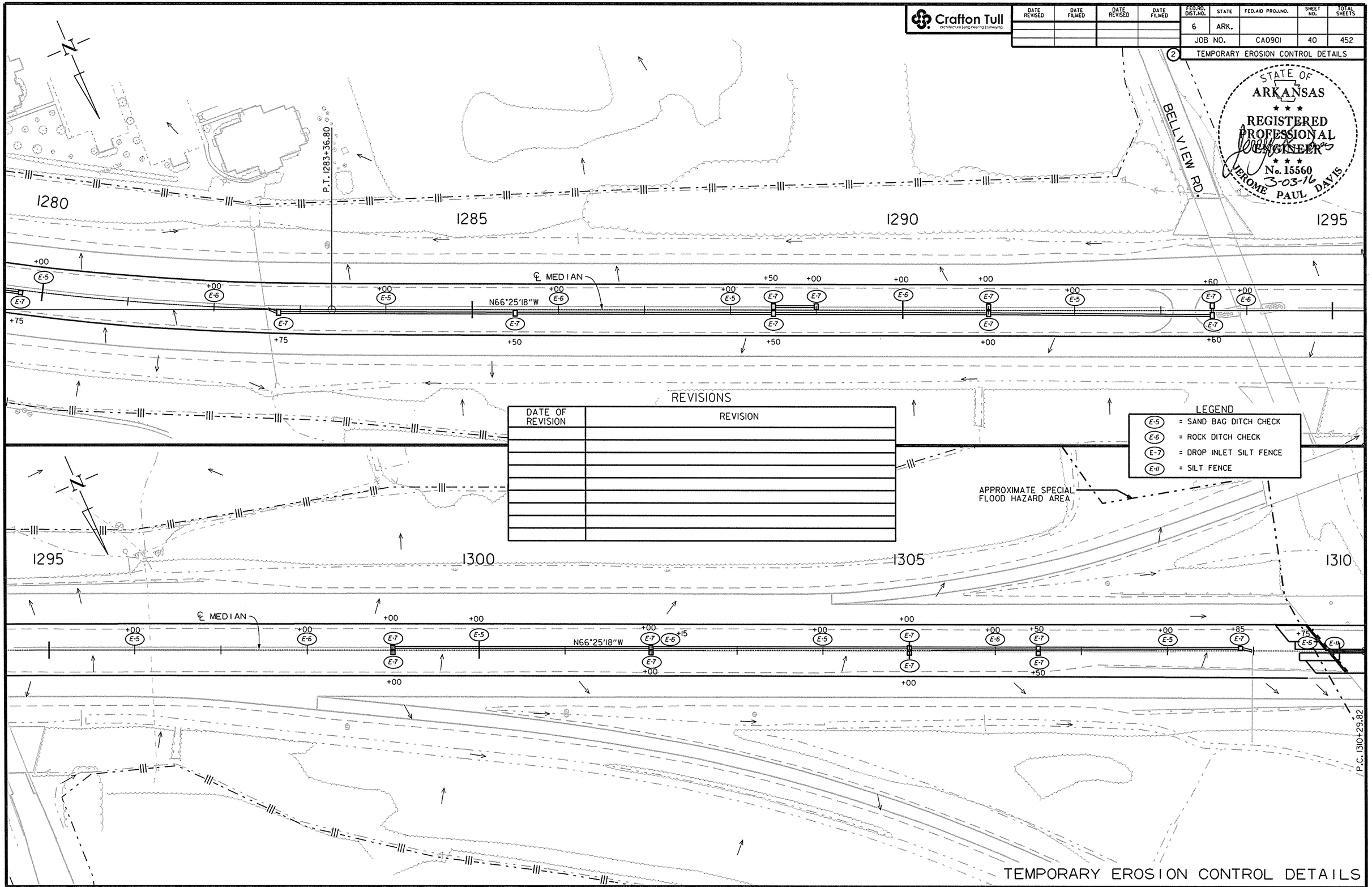

REVISIONS

DATE OF REVISION	REVISION

LEGEND

E-5	= SAND BAG DITCH CHECK
E-6	= ROCK DITCH CHECK
E-7	= DROP INLET SILT FENCE
E-11	= SILT FENCE

TEMPORARY EROSION CONTROL DETAILS

USER: a15106
DESIGN FILE: G:\13106100_264toNHope\TRANSP\dgn\erosion\rCA0901_EC.dgn
PLOTTED: 2/24/2016 12:18
SCALE: 100:1
MODEL: EROSION CNTRL DETAILS

G:\13106100_264toNHope\TRANSP\dgn\erosion\rCA0901_EC.dgn 2/24/2016 12:18

Crafton Tull
architecture | engineering | surveying

DATE REVISED	DATE FILMED	DATE REVISED	DATE FILMED

FED.RD. DIST.NO.	STATE	FED.AID PROJ.NO.	SHEET NO.	TOTAL SHEETS
6	ARK.			
JOB NO.		CA0901	41	452

(2) TEMPORARY EROSION CONTROL DETAILS

STATE OF ARKANSAS
REGISTERED PROFESSIONAL ENGINEER
No. 15560
JEROME PAUL DAVIS
3-03-16

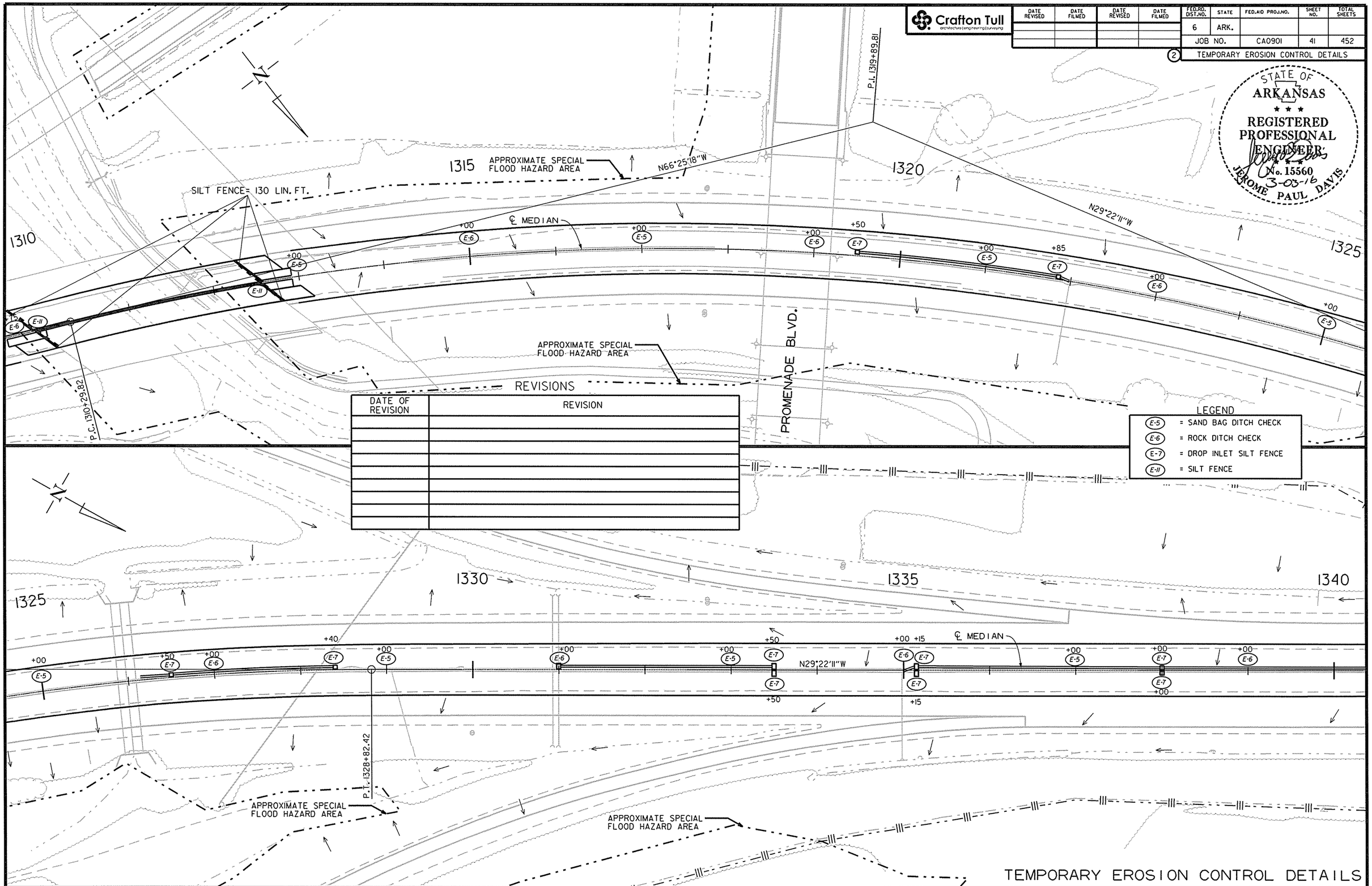

REVISIONS

DATE OF REVISION	REVISION

LEGEND

- (E-5) = SAND BAG DITCH CHECK
- (E-6) = ROCK DITCH CHECK
- (E-7) = DROP INLET SILT FENCE
- (E-11) = SILT FENCE

TEMPORARY EROSION CONTROL DETAILS

USER: at5106
DESIGN FILE: G:\13106100_264toNHope\TRANSP\dgn\erosion\rCA0901_EC.dgn
PLOTTED: 2/24/2016 12:18
SCALE: 100:1
MODEL: EROSION CNTRL DETAILS

G:\13106100_264toNHope\TRANSP\dgn\erosion\rCA0901_EC.dgn 2/24/2016 12:18

Crafton Tull
architecture | engineering | surveying

DATE REVISED	DATE FILMED	DATE REVISED	DATE FILMED

FED.RD. DIST.NO.	STATE	FED.AID PROJ.NO.	SHEET NO.	TOTAL SHEETS
6	ARK.			
JOB NO.		CA0901	42	452

(2) TEMPORARY EROSION CONTROL DETAILS

STATE OF ARKANSAS
REGISTERED PROFESSIONAL ENGINEER
No. 15560
JEROME PAUL DAVIS
3-03-16

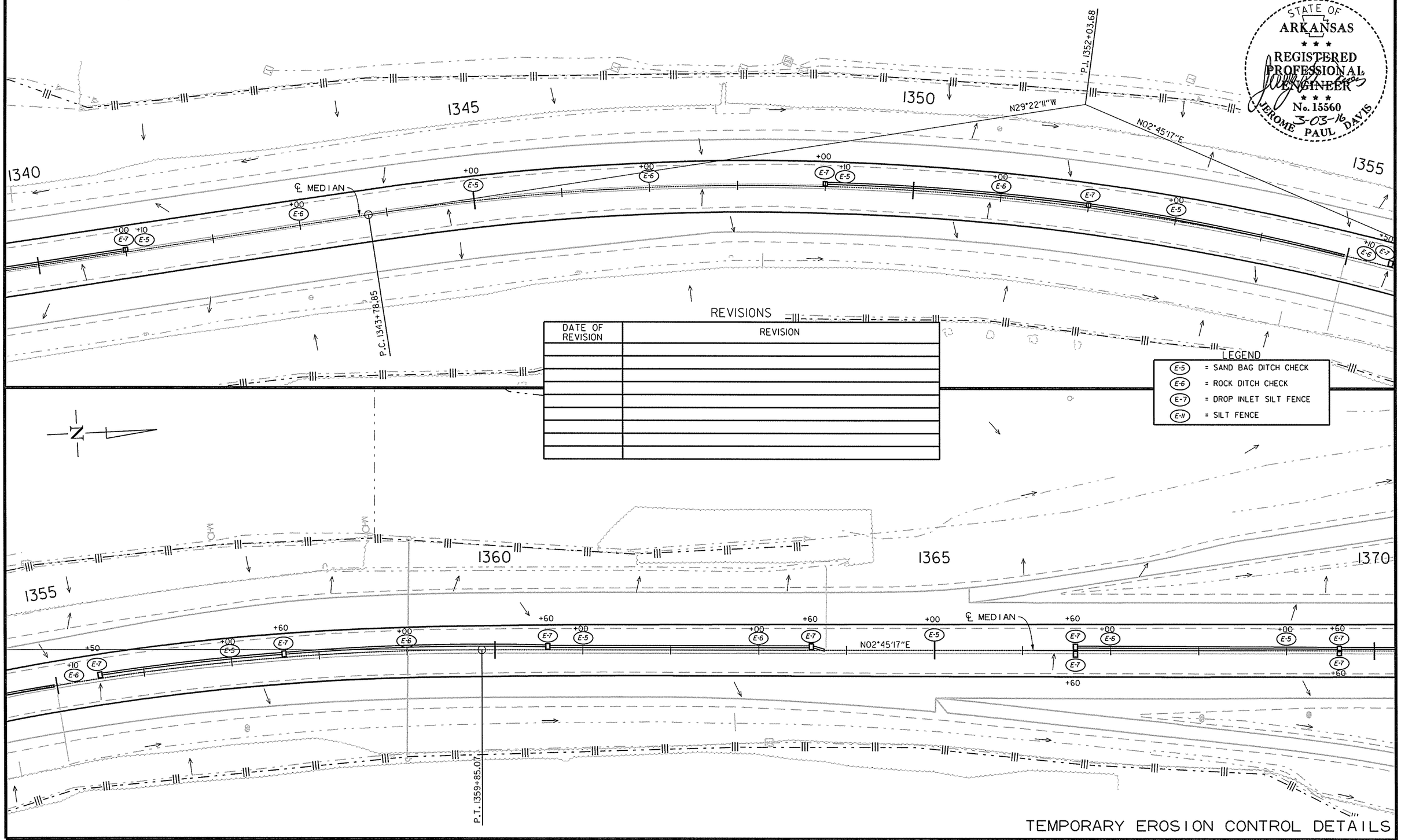

REVISIONS

DATE OF REVISION	REVISION

LEGEND

E-5	= SAND BAG DITCH CHECK
E-6	= ROCK DITCH CHECK
E-7	= DROP INLET SILT FENCE
E-11	= SILT FENCE

TEMPORARY EROSION CONTROL DETAILS

USER: at5106
DESIGN FILE: G:\13106100_264toNHope\TRANSP\dgn\erosion\rCA0901_EC.dgn
PLOTTED: 2/24/2016 12:18
SCALE: 100:1
MODEL: EROSION CNTRL DETAILS

G:\13106100_264toNHope\TRANSP\dgn\erosion\rCA0901_EC.dgn 2/24/2016 12:18

Crafton Tull
architecture | engineering | surveying

DATE REVISED	DATE FILMED	DATE REVISED	DATE FILMED

FED.RD. DIST.NO.	STATE	FED.AID PROJ.NO.	SHEET NO.	TOTAL SHEETS
6	ARK.			
JOB NO.		CA0901	43	452

2 TEMPORARY EROSION CONTROL DETAILS

STATE OF ARKANSAS
REGISTERED PROFESSIONAL ENGINEER
No. 15560
JEROME PAUL DAVIS
3-03-16

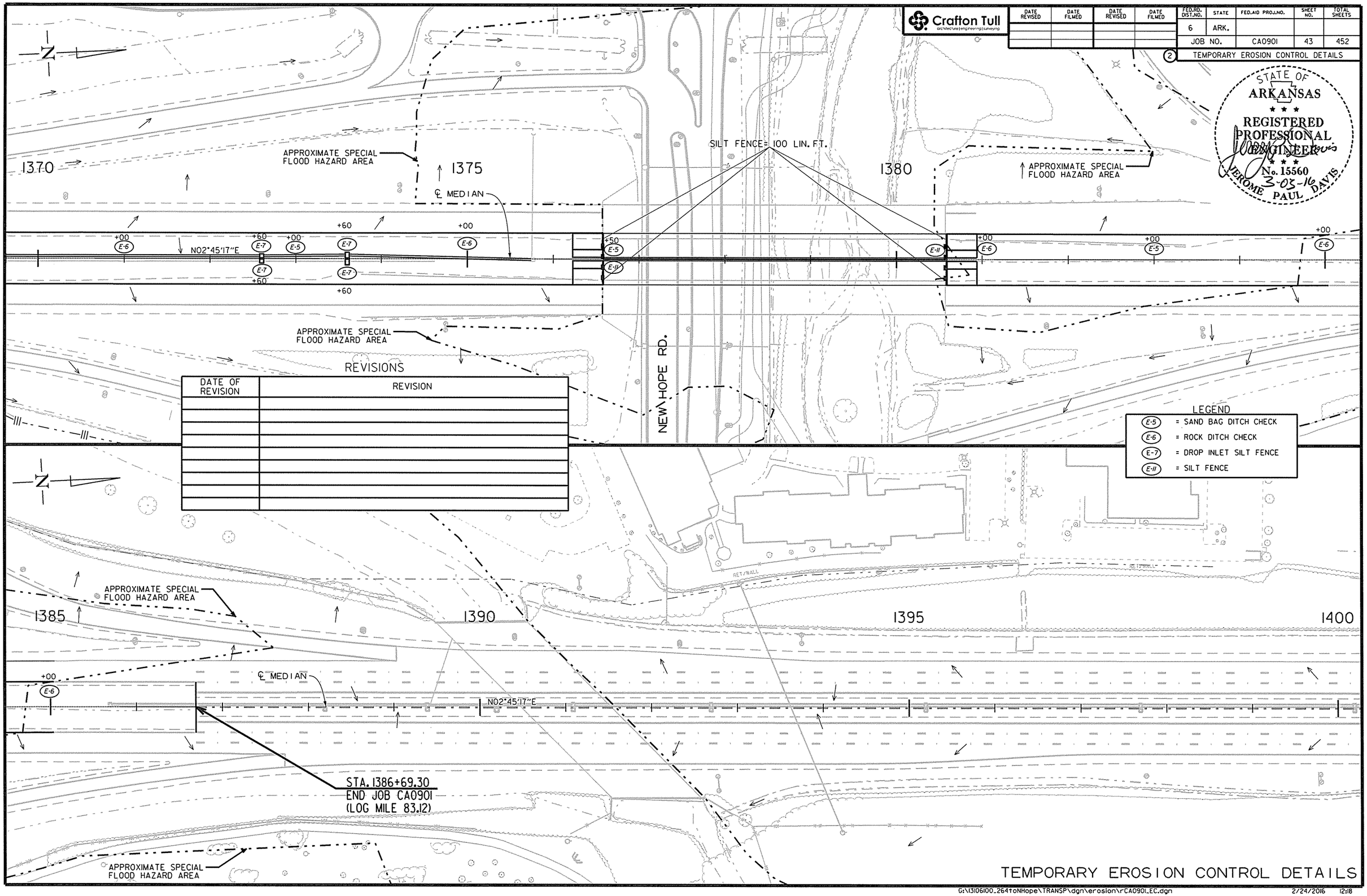

REVISIONS

DATE OF REVISION	REVISION

LEGEND

- E-5 = SAND BAG DITCH CHECK
- E-6 = ROCK DITCH CHECK
- E-7 = DROP INLET SILT FENCE
- E-11 = SILT FENCE

TEMPORARY EROSION CONTROL DETAILS

USER: at5106
DESIGN FILE: G:\13106100_264toNHope\TRANSP\dgn\erosion\rCA0901_EC.dgn
PLOTTED: 2/24/2016 12:18
SCALE: 100:1
MODEL: EROSION CNTRL DETAILS

Crafton Tull
architecture | engineering | surveying

DATE REVISED	DATE FILMED	DATE REVISED	DATE FILMED

FED.RD. DIST.NO.	STATE	FED.AID PROJ.NO.	SHEET NO.	TOTAL SHEETS
6	ARK.			
JOB NO.		CA0901	44	452

(2) TEMPORARY EROSION CONTROL DETAILS

REVISIONS

DATE OF REVISION	REVISION

STATE OF ARKANSAS
REGISTERED PROFESSIONAL ENGINEER
No. 15560
3-03-16
JEROME PAUL DAVIS

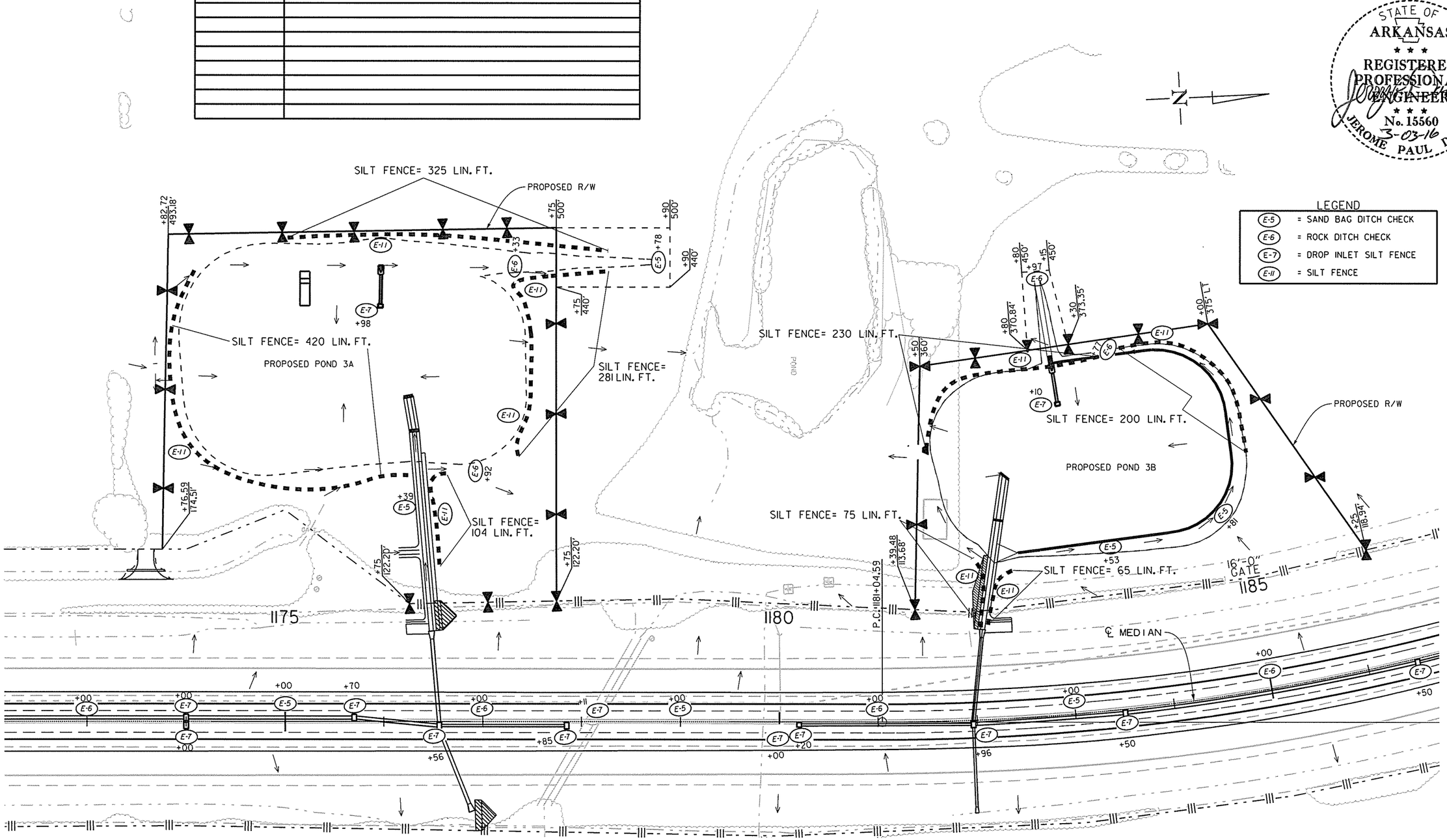

TEMPORARY EROSION CONTROL DETAILS

USER: at5106
DESIGN FILE: G:\13106100_264toNHope\TRANSP\dgn\erosion\rCA0901_EC.dgn
PLOTTED: 2/24/2016 12:18
SCALE: 100:1
MODEL: EROSION CNTRL DETAILS

G:\13106100_264toNHope\TRANSP\dgn\erosion\rCA0901_EC.dgn 2/24/2016 12:18

Crafton Tull
architecture | engineering | surveying

DATE REVISED	DATE FILMED	DATE REVISED	DATE FILMED

FED.RD. DIST.NO.	STATE	FED.AID PROJ.NO.	SHEET NO.	TOTAL SHEETS
6	ARK.			
JOB NO.		CA0901	45	452

(2) TEMPORARY EROSION CONTROL DETAILS

STATE OF ARKANSAS
REGISTERED PROFESSIONAL ENGINEER
No. 15560
3-03-16
JEROME PAUL DAVIS

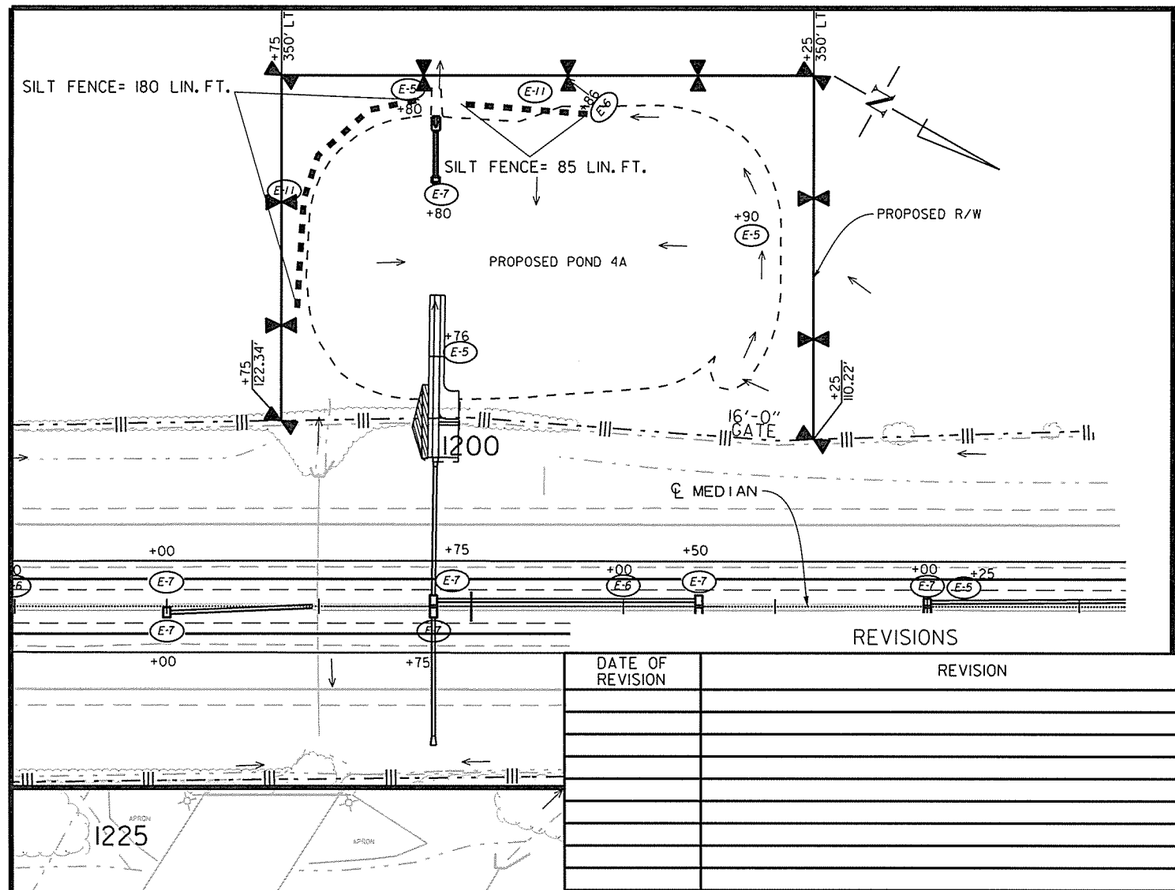

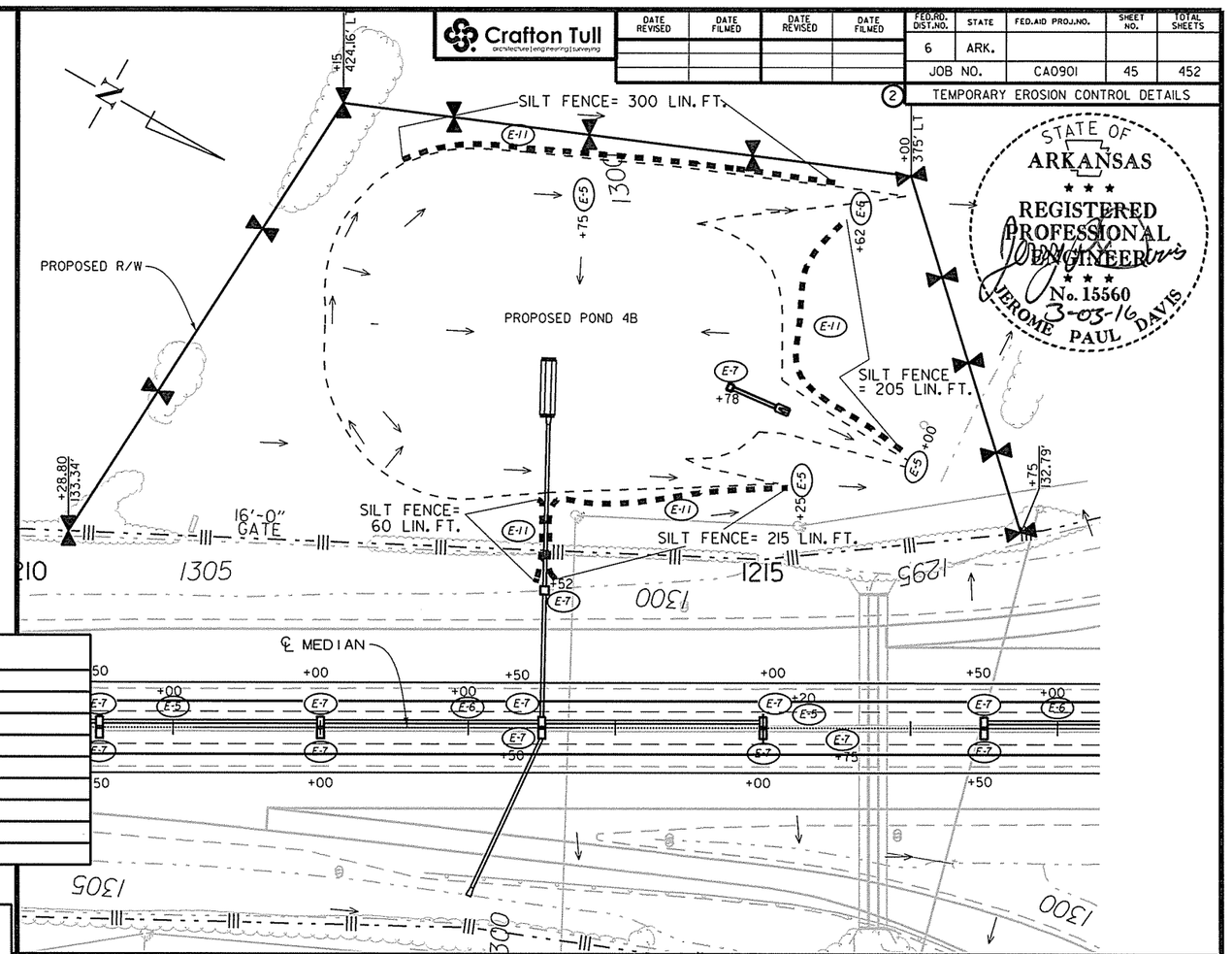

REVISIONS

DATE OF REVISION	REVISION

LEGEND

E-5	= SAND BAG DITCH CHECK
E-6	= ROCK DITCH CHECK
E-7	= DROP INLET SILT FENCE
E-11	= SILT FENCE

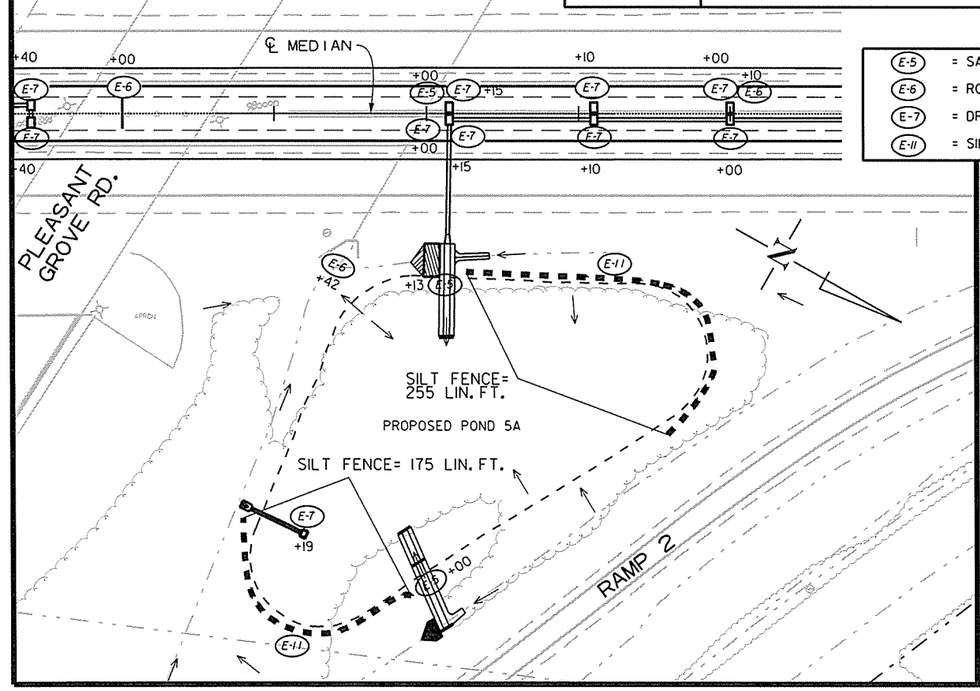

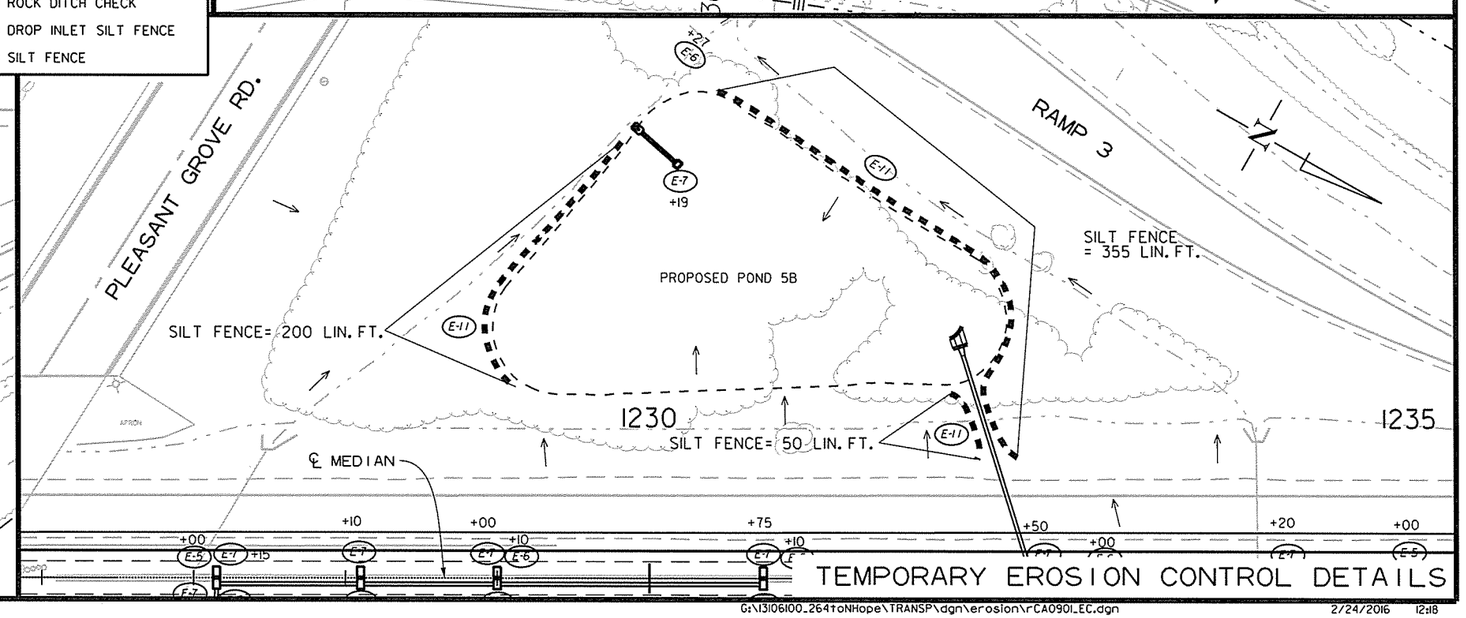

TEMPORARY EROSION CONTROL DETAILS

USER: at5106
DESIGN FILE: G:\13106100_2641oNHope\TRANSP\dgn\erosion\rCA0901_EC.dgn
PLOTTED: 2/24/2016 12:18
SCALE: 100:1
MODEL: EROSION CNTRL DETAILS

Crafton Tull
architecture | engineering | surveying

DATE REVISED	DATE FILMED	DATE REVISED	DATE FILMED

FED.RD. DIST.NO.	STATE	FED.AID PROJ.NO.	SHEET NO.	TOTAL SHEETS
6	ARK.			
JOB NO.		CA0901	46	452

(2) TEMPORARY EROSION CONTROL DETAILS

STATE OF ARKANSAS
REGISTERED PROFESSIONAL ENGINEER
No. 15560
3-03-16
JEROME PAUL DAVIS

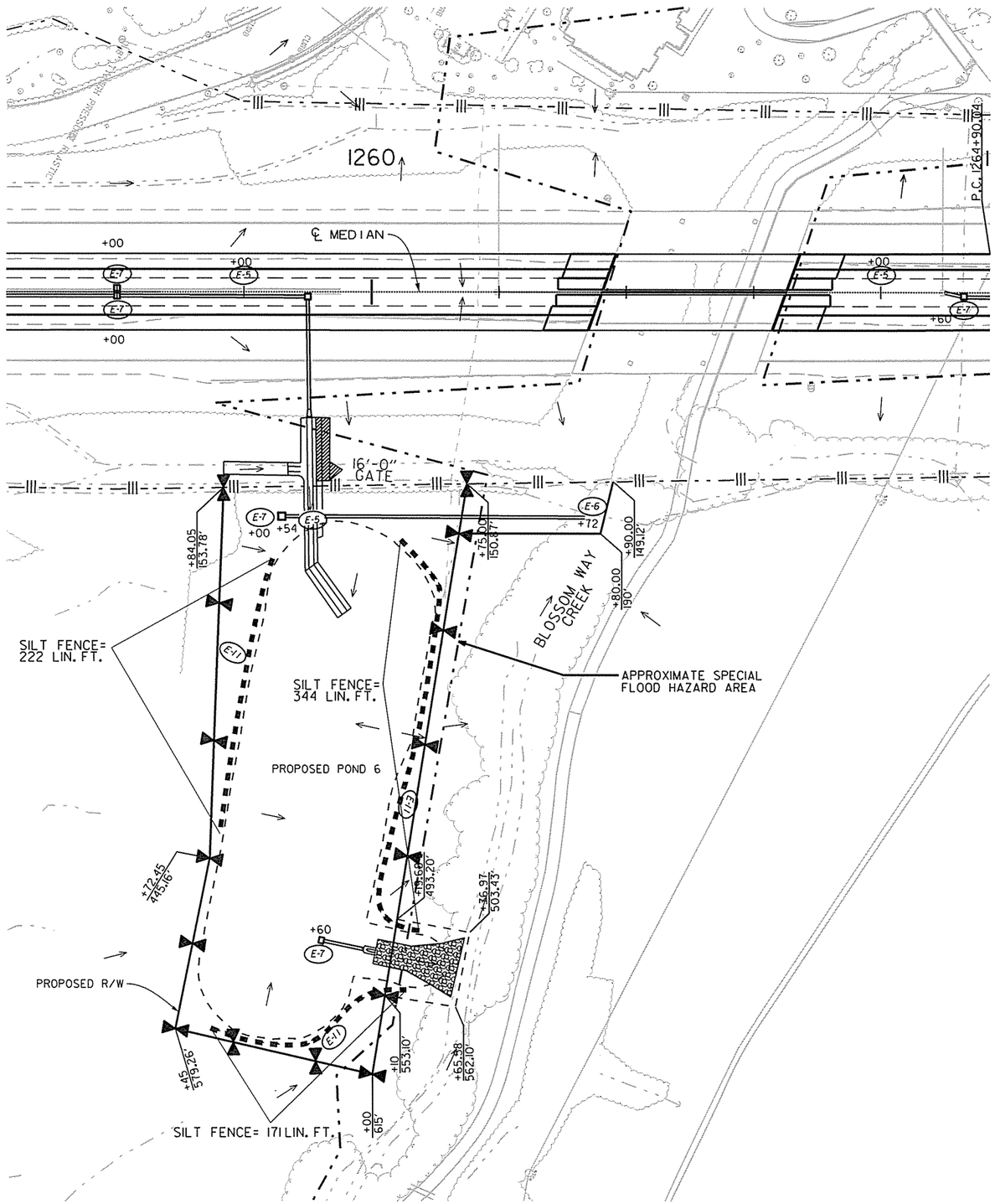

REVISIONS

DATE OF REVISION	REVISION

LEGEND

E-5	= SAND BAG DITCH CHECK
E-6	= ROCK DITCH CHECK
E-7	= DROP INLET SILT FENCE
E-11	= SILT FENCE

TEMPORARY EROSION CONTROL DETAILS

USER: at5106
DESIGN FILE: G:\13106100_264toNHope\TRANSP\dgn\erosion\rCA0901_EC.dgn
PLOTTED: 2/24/2016 12:18 SCALE: 1:00:1 MODEL: EROSION CNTRL DETAILS

Crafton Tull
architecture | engineering | surveying

DATE REVISED	DATE FILMED	DATE REVISED	DATE FILMED

FED.RD. DIST.NO.	STATE	FED.AID PROJ.NO.	SHEET NO.	TOTAL SHEETS
6	ARK.			
JOB NO.		CA0901	47	452

(2) SOIL BORING LOG

STATE OF ARKANSAS
REGISTERED PROFESSIONAL ENGINEER
No. 15560
3-03-16
JEROME PAUL DAVIS

STA. 1176+49 - 428' LT.

13-158

Grubbs, Hoskyn, Barton & Wyatt, Inc.
Consulting Engineers

LOG OF BORING NO. 1
AHTD - CA0901 - Ponds
Rogers, Arkansas

TYPE: Auger to 13 ft /Wash
LOCATION: See Plate 2 - Pond 3A

SURF. EL:

DEPTH, FT	DESCRIPTION OF MATERIAL	BLOWS PER FT	UNIT DRY WT LB/CU FT	COHESION, TON/SQ FT (0.2 0.4 0.6 0.8 1.0 1.2 1.4)	PLASTIC LIMIT / WATER CONTENT / LIQUID LIMIT (10 20 30 40 50 60 70)	- No. 200 %
	Stiff brown silty clay	12				
		16				89
5	Very stiff reddish brown cherty clay	33				
		48				50
	- with chert cobbles below 8 ft	50/4"				
10						
	- auger refusal at 13 ft - with more cobbles below 13 ft	50/2"				
15	Moderately hard light tan weathered chert w/silty clay seams					
		25/0"				
20	- reddish tan silty clay layers from 20 - 22 ft, 28 - 30 ft, and 36 - 38 ft					
		25/0"				
25						
		25/0"				
30						
		50/2"				
35						
		25/0"				
40	NOTE: Water at 28.6 ft at 18 hours.					

COMPLETION DEPTH: 40.0 ft
DATE: 10-21-14
DEPTH TO WATER IN BORING: 13 ft
DATE: 10/21/2014

PLATE 3

STA. 1176+46 - 562' LT.

13-158

Grubbs, Hoskyn, Barton & Wyatt, Inc.
Consulting Engineers

LOG OF BORING NO. 2
AHTD - CA0901 - Ponds
Rogers, Arkansas

TYPE: Auger
LOCATION: See Plate 2 - Pond 3A

SURF. EL:

DEPTH, FT	DESCRIPTION OF MATERIAL	BLOWS PER FT	UNIT DRY WT LB/CU FT	COHESION, TON/SQ FT (0.2 0.4 0.6 0.8 1.0 1.2 1.4)	PLASTIC LIMIT / WATER CONTENT / LIQUID LIMIT (10 20 30 40 50 60 70)	- No. 200 %
	Firm brown silty clay					
	Stiff reddish brown cherty clay w/occasional chert cobbles					
	- very stiff below 4 ft					
5		50/8"				
		50/10"				30
10		37				
15		43				
20		50/5"				
25						

COMPLETION DEPTH: 20.0 ft
DATE: 10-22-14
DEPTH TO WATER IN BORING: Dry
DATE: 10/22/2014

PLATE 4

STA. 1183+42 - 397' LT.

13-158

Grubbs, Hoskyn, Barton & Wyatt, Inc.
Consulting Engineers

LOG OF BORING NO. 3
AHTD - CA0901 - Ponds
Rogers, Arkansas

TYPE: Auger
LOCATION: See Plate 2 - Pond 3B

SURF. EL:

DEPTH, FT	DESCRIPTION OF MATERIAL	BLOWS PER FT	UNIT DRY WT LB/CU FT	COHESION, TON/SQ FT (0.2 0.4 0.6 0.8 1.0 1.2 1.4)	PLASTIC LIMIT / WATER CONTENT / LIQUID LIMIT (10 20 30 40 50 60 70)	- No. 200 %
	Firm brown silty clay					
	Stiff reddish brown silty clay					93
	- very stiff below 4 ft					
5	- stiff below 6 ft					95
10		20				
	Very stiff reddish brown cherty clay w/some chert cobbles					
15		32				
20		50/4"				
25						

COMPLETION DEPTH: 20.0 ft
DATE: 10-22-14
DEPTH TO WATER IN BORING: Dry
DATE: 10/22/2014

PLATE 5

SOIL BORING LOG

Crafton Tull
architecture | engineering | surveying

DATE REVISED	DATE FILMED	DATE REVISED	DATE FILMED

FED.RD. DIST.NO.	STATE	FED.AID PROJ.NO.	SHEET NO.	TOTAL SHEETS
6	ARK.			
JOB NO.		CA0901	48	452

(2) SOIL BORING LOG

STATE OF ARKANSAS
REGISTERED PROFESSIONAL ENGINEER
No. 15560
3-03-16
JEROME PAUL DAVIS

STA. 1183+52 - 502' LT.

13-158

Grubbs, Hoskyn, Barton & Wyatt, Inc.
Consulting Engineers

LOG OF BORING NO. 4
AHTD - CA0901 - Ponds
Rogers, Arkansas

TYPE: Auger
LOCATION: See Plate 2 - Pond 3B

DEPTH, FT	DESCRIPTION OF MATERIAL	BLOWS PER FT	UNIT DRY WT LB/CU FT	COHESION, TON/SQ FT (PLASTIC LIMIT / WATER CONTENT / LIQUID LIMIT)	- No. 200 %
SURF. EL:					
	Stiff brown silty clay w/organics				
	Stiff tan and reddish brown silty clay w/ferrous nodules and stains				
5	- very stiff below 4.5 ft				89
	- stiff below 6 ft	20			84
10	- with numerous ferrous nodules and concretions below 9 ft				
	Stiff reddish brown cherty clay w/occasional chert cobbles	22			
15	- very stiff below 18 ft				
20		50/7"			
25					

COMPLETION DEPTH: 20.0 ft
DATE: 10-22-14
DEPTH TO WATER IN BORING: Dry
DATE: 10/22/2014

PLATE 6

STA. 1201+03 - 273' LT.

13-158

Grubbs, Hoskyn, Barton & Wyatt, Inc.
Consulting Engineers

LOG OF BORING NO. 5
AHTD - CA0901 - Ponds
Rogers, Arkansas

TYPE: Auger to 15 ft /Wash
LOCATION: See Plate 2 - Pond 4A

DEPTH, FT	DESCRIPTION OF MATERIAL	BLOWS PER FT	UNIT DRY WT LB/CU FT	COHESION, TON/SQ FT (PLASTIC LIMIT / WATER CONTENT / LIQUID LIMIT)	- No. 200 %
SURF. EL:					
	Firm dark brown silty clay	8			90
	- stiff, reddish brown and tan below 2 ft	12			
5		15			
		16			89
10		17			
	- with ferrous nodules below 13 ft	22			
15					
20	Moderately hard reddish brown chert w/interbedded clay seams and layers	25/0"			
25		25/0"			
30		25/0"			
35	Moderately hard to hard light gray limestone	25/0"			
40					

COMPLETION DEPTH: 37.0 ft
DATE: 10-16-14
DEPTH TO WATER IN BORING: Dry to 15 ft
DATE: 10/16/2014

PLATE 7

STA. 1201+81 - 274' LT.

13-158

Grubbs, Hoskyn, Barton & Wyatt, Inc.
Consulting Engineers

LOG OF BORING NO. 6
AHTD - CA0901 - Ponds
Rogers, Arkansas

TYPE: Auger to 8.5 ft /Wash
LOCATION: See Plate 2 - Pond 4B

DEPTH, FT	DESCRIPTION OF MATERIAL	BLOWS PER FT	UNIT DRY WT LB/CU FT	COHESION, TON/SQ FT (PLASTIC LIMIT / WATER CONTENT / LIQUID LIMIT)	- No. 200 %
SURF. EL:					
	Firm dark brown silty clay	9			
	- stiff, reddish brown with fine sand below 2 ft	16			85
5		13			
	- with ferrous nodules below 7 ft	16			78
10	Moderately hard reddish brown chert w/interbedded clay seams and layers	25/0"			
	- more cherty below 12 ft	25/0"			
15					
20		50/7"			
25		25/0"			
	Moderately hard to hard light gray limestone	25/0"			
30					

NOTE: Borehole bailed dry and water measured at 18 ft after 24 hours.

COMPLETION DEPTH: 30.0 ft
DATE: 10-16-14
DEPTH TO WATER IN BORING: 18 ft
DATE: 10/16/2014

PLATE 8

SOIL BORING LOG

Crafton Tull
architecture | engineering | surveying

DATE REVISED	DATE FILMED	DATE REVISED	DATE FILMED

FED.RD. DIST.NO.	STATE	FED.AID PROJ.NO.	SHEET NO.	TOTAL SHEETS
6	ARK.			
JOB NO.		CA0901	49	452

(2) SOIL BORING LOG

STATE OF ARKANSAS
REGISTERED PROFESSIONAL ENGINEER
No. 15560
3-03-16
JEROME PAUL DAVIS

STA. 1213+96 - 349' LT.

13-158

Grubbs, Hoskyn, Barton & Wyatt, Inc.
Consulting Engineers

LOG OF BORING NO. 7

AHTD - CA0901 - Ponds
Rogers, Arkansas

TYPE: Auger to 7.5 ft /Wash
LOCATION: See Plate 2 - Pond 4B
SURF. EL:

DEPTH, FT	DESCRIPTION OF MATERIAL	BLOWS PER FT	No. 200 %
	Firm dark brown silty clay	8	
	- stiff, light brown and reddish brown with ferrous stains below 2 ft	23	
5		22	85
	Moderately hard reddish brown chert w/interbedded clay seams and layers	33	
10		50/7"	
15		50/7"	40
	- low hardness with more clay layers below 18 ft	21	
20			
25		20	20
30	Moderately hard to hard light gray chert w/clay seams	25/0"	
	Moderately hard to hard light gray limestone		
35		25/0"	
40			

COHESION, TON/SQ FT: 0.2 0.4 0.6 0.8 1.0 1.2 1.4
PLASTIC LIMIT — WATER CONTENT — LIQUID LIMIT: 10 20 30 40 50 60 70

COMPLETION DEPTH: 36.0 ft
DATE: 10-16-14
DEPTH TO WATER IN BORING: Dry to 7.5 ft
DATE: 10/16/2014

PLATE 9

STA. 1214+39 - 427' LT.

13-158

Grubbs, Hoskyn, Barton & Wyatt, Inc.
Consulting Engineers

LOG OF BORING NO. 8

AHTD - CA0901 - Ponds
Rogers, Arkansas

TYPE: Auger to 8 ft /Wash
LOCATION: See Plate 2 - Pond 4B
SURF. EL:

DEPTH, FT	DESCRIPTION OF MATERIAL	BLOWS PER FT	No. 200 %
	Firm to stiff brown silty clay	10	87
	- stiff, reddish brown and brown with trace fine sand and chert fragments below 2 ft	17	
5		41	
	Moderately hard reddish brown chert w/interbedded clay seams and layers	50/2"	29
10		50/5"	
	- more cherty below 12 ft	25/0"	
15			
	- low hardness with more clay layers below 16.5 ft	24	31
20			
	- with limestone fragments below 23 ft	19	
25			
	Moderately hard light gray chert w/clay seams - low hardness layer at 27.5 - 28.5 ft	25/0"	
30	Moderately hard to hard light gray limestone		
35		25/0"	

NOTE: Borehole bailed dry and water measured at 24 ft after 24 hours.

COHESION, TON/SQ FT: 0.2 0.4 0.6 0.8 1.0 1.2 1.4
PLASTIC LIMIT — WATER CONTENT — LIQUID LIMIT: 10 20 30 40 50 60 70

COMPLETION DEPTH: 35.0 ft
DATE: 10-15-14
DEPTH TO WATER IN BORING: 24 ft
DATE: 10/15/2014

PLATE 10

STA. 1230+47 - 262' LT.

13-158

Grubbs, Hoskyn, Barton & Wyatt, Inc.
Consulting Engineers

LOG OF BORING NO. 9

AHTD - CA0901 - Ponds
Rogers, Arkansas

TYPE: Auger
LOCATION: See Plate 2 - Pond 5B
SURF. EL:

DEPTH, FT	DESCRIPTION OF MATERIAL	BLOWS PER FT	No. 200 %
	Firm brown silty clay	9	
	- stiff, reddish brown and tan with fine sand below 2 ft	21	86
	Moderately hard reddish brown and tan chert w/interbedded clay seams and layers	50/7"	
5		50/7"	
		50/4"	
10	- auger refusal at 10 ft on chert		
15			

COHESION, TON/SQ FT: 0.2 0.4 0.6 0.8 1.0 1.2 1.4
PLASTIC LIMIT — WATER CONTENT — LIQUID LIMIT: 10 20 30 40 50 60 70

COMPLETION DEPTH: 10.0 ft
DATE: 10-17-14
DEPTH TO WATER IN BORING: Dry
DATE: 10/17/2014

PLATE 11

SOIL BORING LOG

Crafton Tull
architecture | engineering | surveying

DATE REVISED	DATE FILMED	DATE REVISED	DATE FILMED

FED.RD. DIST.NO.	STATE	FED.AID PROJ.NO.	SHEET NO.	TOTAL SHEETS
6	ARK.			
JOB NO.		CA0901	50	452

(2) SOIL BORING LOG

STATE OF ARKANSAS
REGISTERED PROFESSIONAL ENGINEER
No. 15560
3-03-16
JEROME PAUL DAVIS

STA. 1229+18 - 292' LT.

13-158

Grubbs, Hoskyn, Barton & Wyatt, Inc. Consulting Engineers

LOG OF BORING NO. 10
AHTD - CA0901 - Ponds
Rogers, Arkansas

TYPE: Auger LOCATION: See Plate 2 - Pond 5B

DEPTH, FT	DESCRIPTION OF MATERIAL (SURF. EL:)	BLOWS PER FT	UNIT DRY WT LB/CU FT	COHESION, TON/SQ FT	PLASTIC LIMIT	WATER CONTENT	LIQUID LIMIT	- No. 200 %
	Stiff brown silty clay w/trace fine sand	12						86
	- very stiff below 2 ft	31						
5	Moderately hard brown chert w/interbedded clay seams and layers	50/10"						49
		25/0"						
	- reddish brown below 8 ft	50/4"						
10								
		50/4"						
15	- auger refusal at 15 ft on chert							
20								
25								

COMPLETION DEPTH: 15.0 ft
DATE: 10-17-14
DEPTH TO WATER IN BORING: Dry
DATE: 10/17/2014

PLATE 12

1226+81 - 148' RT.

13-158

Grubbs, Hoskyn, Barton & Wyatt, Inc. Consulting Engineers

LOG OF BORING NO. 11
AHTD - CA0901 - Ponds
Rogers, Arkansas

TYPE: Auger LOCATION: See Plate 2 - Pond 5A

DEPTH, FT	DESCRIPTION OF MATERIAL (SURF. EL:)	BLOWS PER FT	UNIT DRY WT LB/CU FT	COHESION, TON/SQ FT	PLASTIC LIMIT	WATER CONTENT	LIQUID LIMIT	- No. 200 %
	Stiff brown clayey silt	16						
	Very stiff brown silty clay w/medium to coarse sand-sized chert nodules	33						77
5	Moderately hard reddish brown and light gray chert w/interbedded clay seams and layers	50/5"						
		50/3"						
	- auger refusal at 8.5 ft on chert							
10								
15								

COMPLETION DEPTH: 8.5 ft
DATE: 10-17-14
DEPTH TO WATER IN BORING: Dry
DATE: 10/17/2014

PLATE 13

STA. 1225+67 - 224' RT.

13-158

Grubbs, Hoskyn, Barton & Wyatt, Inc. Consulting Engineers

LOG OF BORING NO. 12
AHTD - CA0901 - Ponds
Rogers, Arkansas

TYPE: Auger LOCATION: See Plate 2 - Pond 5A

DEPTH, FT	DESCRIPTION OF MATERIAL (SURF. EL:)	BLOWS PER FT	UNIT DRY WT LB/CU FT	COHESION, TON/SQ FT	PLASTIC LIMIT	WATER CONTENT	LIQUID LIMIT	- No. 200 %
	Medium dense brown fine sandy silt, slightly clayey	14						83
	Very stiff light brown silty clay	43						
5	Moderately hard tan and reddish brown chert w/interbedded clay seams	50/3"						
		50/3"						28
	- with less clay below 8 ft	25/0"						
10								
		50/3"						
15	- auger refusal in chert at 15 ft							
20								
25								

COMPLETION DEPTH: 15.0 ft
DATE: 10-17-14
DEPTH TO WATER IN BORING: Dry
DATE: 10/17/2014

PLATE 14

SOIL BORING LOG

Form 108-6(74) Job No. 13-158
LGBNEW 13-158_PONDS.GPJ 6-2-15

USER: at5106
DESIGN FILE: G:\13106100_2641toNHope\TRANSP\dgn\special_details\CA0901Pond Boring Logs.dgn
PLOTTED: 2/24/2016 12:19 SCALE: 20:1 MODEL: SPECIAL DETAILS

Crafton Tull
architecture | engineering | surveying

DATE REVISED	DATE FILMED	DATE REVISED	DATE FILMED

FED.RD. DIST.NO.	STATE	FED.AID PROJ.NO.	SHEET NO.	TOTAL SHEETS
6	ARK.			
JOB NO.		CA0901	51	452

(2) SOIL BORING LOG

STATE OF ARKANSAS
REGISTERED PROFESSIONAL ENGINEER
No. 15560
3-03-16
JEROME PAUL DAVIS

STA. 1259+09 - 309' RT.

13-158

Grubbs, Hoskyn, Barton & Wyatt, Inc.
Consulting Engineers

LOG OF BORING NO. 13
AHTD - CA0901 - Ponds
Rogers, Arkansas

TYPE: Auger to 12 ft /Wash
LOCATION: See Plate 2 - Pond 6

COHESION, TON/SQ FT: 0.2 0.4 0.6 0.8 1.0 1.2 1.4
PLASTIC LIMIT — WATER CONTENT — LIQUID LIMIT: 10 20 30 40 50 60 70

DEPTH, FT	DESCRIPTION OF MATERIAL (SYMBOL, SAMPLES)	BLOWS PER FT	UNIT DRY WT LB/CU FT	- No. 200 %
SURF. EL:				
	Firm brown silty clay w/some chert fragments and organics (fill)	9		
		20		
5	Moderately hard light tan and gray chert w/interbedded clay seams and layers	50/10"		
		50/8"		16
	- moderately soft below 8 ft	28		
10	- auger refusal at 12 ft			
	Moderately hard to hard light tan chert w/occasional reddish brown silty clay seams	25/0"		
15		50/2"		
20	- reddish brown silty clay layers from 20 - 22 ft and 24 - 26 ft	25/0"		
25	Moderately hard to hard light gray limestone w/chert nodules			
30		25/0"		
35				

-NON-PLASTIC-

COMPLETION DEPTH: 32.0 ft
DATE: 10-21-14
DEPTH TO WATER IN BORING: 11 ft
DATE: 10/21/2014

PLATE 15

STA. 1258+80 - 431' RT.

13-158

Grubbs, Hoskyn, Barton & Wyatt, Inc.
Consulting Engineers

LOG OF BORING NO. 14
AHTD - CA0901 - Ponds
Rogers, Arkansas

TYPE: Auger to 9.5 ft /Wash
LOCATION: See Plate 2 - Pond 6

COHESION, TON/SQ FT: 0.2 0.4 0.6 0.8 1.0 1.2 1.4
PLASTIC LIMIT — WATER CONTENT — LIQUID LIMIT: 10 20 30 40 50 60 70

DEPTH, FT	DESCRIPTION OF MATERIAL (SYMBOL, SAMPLES)	BLOWS PER FT	UNIT DRY WT LB/CU FT	- No. 200 %
SURF. EL:				
	Firm to stiff brown silty clay w/organics (fill)	10		
		19		
5	Stiff reddish brown silty clay w/chert fragments and occasional chert cobbles	17		
	Low hardness tan and reddish brown chert w/interbedded silty clay seams and layers	16		33
		8		
10	- water at 9 ft - auger refusal at 9.5 ft	25/0"		
	Moderately hard reddish tan weathered chert w/interbedded reddish brown silty clay seams			
15		25/0"		
		25/0"		
20	Stiff reddish brown silty clay w/chert nodules and fragments			
	Moderately hard to hard light gray limestone			
25		25/0"		
30	NOTE: Water at 9 ft at 18 hours.			

COMPLETION DEPTH: 28.0 ft
DATE: 10-20-14
DEPTH TO WATER IN BORING: 9 ft
DATE: 10/20/2014

PLATE 16

Form 108-6(74) Job No. 13-158

LGBNEW 13-158_POND5.GPJ 6-2-15

USER: at5106
DESIGN FILE: G:\13106100_264toNHope\TRANSP\dgn\special_details\CA0901Pond Boring Logs.dgn
PLOTTED: 2/24/2016 12:19
SCALE: 20:1
MODEL: SPECIAL DETAILS

SOIL BORING LOG

DATE REVISED	DATE FILMED	DATE REVISED	DATE FILMED

Crafton Tull
architecture | engineering | surveying

FED.RD. DIST.NO.	STATE	FED.AID PROJ.NO.	SHEET NO.	TOTAL SHEETS
6	ARK.			
JOB NO.		CA0901	52	452

2 MAINTENANCE OF TRAFFIC DETAILS

STATE OF ARKANSAS
REGISTERED PROFESSIONAL ENGINEER
No. 15560
3-03-16
JEROME PAUL DAVIS

CONSTRUCTION SEQUENCE:

INSTALL ADVANCE WARNING SIGNS AT THE LOCATIONS LISTED ON THE ADVANCE WARNING DETAIL. INSTALL END ROAD WORK SIGNS AND SPEED LIMIT SIGNS AT THE END OF JOB AND AT EACH ENTRANCE RAMP AS SHOWN ON THE ADVANCE WARNING DETAIL. INSTALL ROAD WORK AHEAD (W20-1) SIGN AND END ROAD WORK (G20-2) ON RAMPS AS SHOWN ON THE ADVANCE WARNING DETAIL.

STAGE IA:
CONSTRUCT SHOULDER TRENCHING FOR MOT TRAFFIC SHIFT AS FOLLOWING.
REFER TO SPECIAL DETAILS FOR SHOULDER TRENCHING,
FROM STA. 1258+25 TO STA. 1261+25 ON RML,
FROM STA. 1263+39 TO SAT. 1266+39 ON RML,
FROM STA. 1307+03 TO STA. 1310+03 ON RML,
FROM STA. 1313+45 TO STA. 1316+45 ON RML.
FROM STA. 1373+23 TO STA. 1376+23 ON RML.
FROM STA. 1380+94 TO STA. 1383+94 ON RML.
FROM STA. 1258+65 TO STA. 1261+65 ON LML.
FROM STA. 1263+81 TO STA. 1266+81 ON LML.
FROM STA. 1306+09 TO STA. 1309+09 ON LML.
FROM STA. 1312+41 TO STA. 1315+41 ON LML.
FROM STA. 1373+23 TO STA. 1376+23 ON LML. AND
FROM STA. 1380+94 TO STA. 1383+94 ON LML.

STAGE IB:
INSTALL CONSTRUCTION PAVEMENT MARKINGS ON ROADWAY, REMOVABLE CONSTRUCTION PAVEMENT MARKING ON EXISTING BRIDGE DECKS, AND PRECAST CONCRETE BARRIERS AS SHOWN IN STAGE IB MAINTENANCE OF TRAFFIC DETAILS.

TRAFFIC WILL BE MAINTAINED ON EXISTING PAVEMENT IN (2) 11'-0" LANES EXCEPT WHEN CROSSING THE EXISTING BRIDGE.
REFER TO STA. 1257+85 TO STA. 1266+60 ON RML.
REFER TO STA. 1306+05 TO STA. 1316+70 ON RML.
REFER TO STA. 1372+70 TO STA. 1384+45 ON RML.
REFER TO STA. 1258+00 TO STA. 1266+20 ON LML.
REFER TO STA. 1305+75 TO STA. 1315+36 ON LML.
REFER TO STA. 1373+23 TO STA. 1383+94 ON LML.

CONSTRUCT CONCRETE BARRIER WALL AND PAVEMENT WIDENING IN THE MEDIAN OF I-49.
CONSTRUCT THE PORTION OF BRIDGE ON BOTH LML & RML.

REMOVE PRECAST CONCRETE BARRIER WALL.

PLACE LANE CLOSURE DEVICES ON RIGHT AND LEFT MAIN LANES AS SHOWN IN THE MAINTENANCE OF TRAFFIC WORK ZONE - LANE CLOSURE DETAIL IF AND WHEN DIRECTED BY THE ENGINEER.

PLACE PERMANENT PAVEMENT MARKINGS AS SHOWN IN THE PERMANENT PAVEMENT MARKING DETAILS.

REFER TO "MAINTENANCE OF TRAFFIC" SPECIAL PROVISION.

STAGE 2:
MILL AND A.C.H.M. INLAY OPERATIONS SHALL MAINTAIN A SINGLE LANE OF TRAFFIC ON THE EXISTING ROADWAY IN THE DIRECTION THE OPERATIONS ARE OCCURRING AS A MINIMUM.

A TWO (2) MILE LANE CLOSURE WILL BE PERMITTED IN THE OPPOSITE MAIN LANES FOR CONSTRUCTION OTHER THAN MILL AND INLAY OPERATIONS AS LONG AS NO OTHER LANE CLOSURE EXISTS IN THAT SET OF LANES.

FINAL LIFT OF ASPHALT ON WIDENED PORTION OF MAIN LANES SHALL BE PLACED WITH EXISTING INSIDE MAIN LANE MILL AND INLAY OPERATIONS.

PLACE PERMANENT PAVEMENT MARKINGS AS SHOWN IN THE PERMANENT PAVEMENT MARKING DETAILS.

REFER TO "MAINTENANCE OF TRAFFIC" SPECIAL PROVISION.

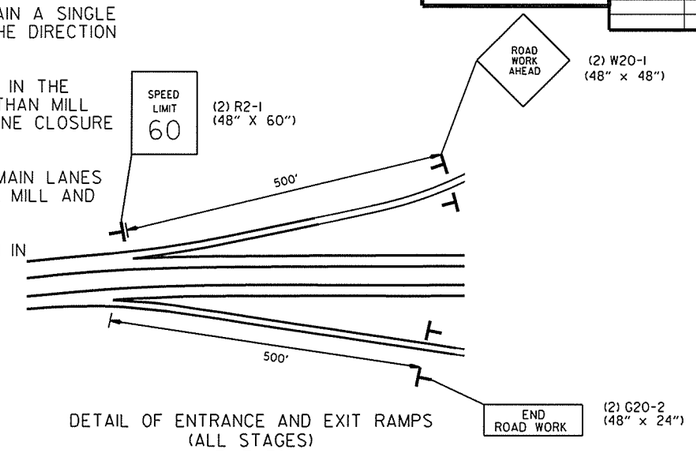

DETAIL OF ENTRANCE AND EXIT RAMPS
(ALL STAGES)
EXIT 78
EXIT 81
EXIT 82
EXIT 83
•NOTE FOR EXIT 83, THERE WILL BE NO END ROAD WORK SIGN

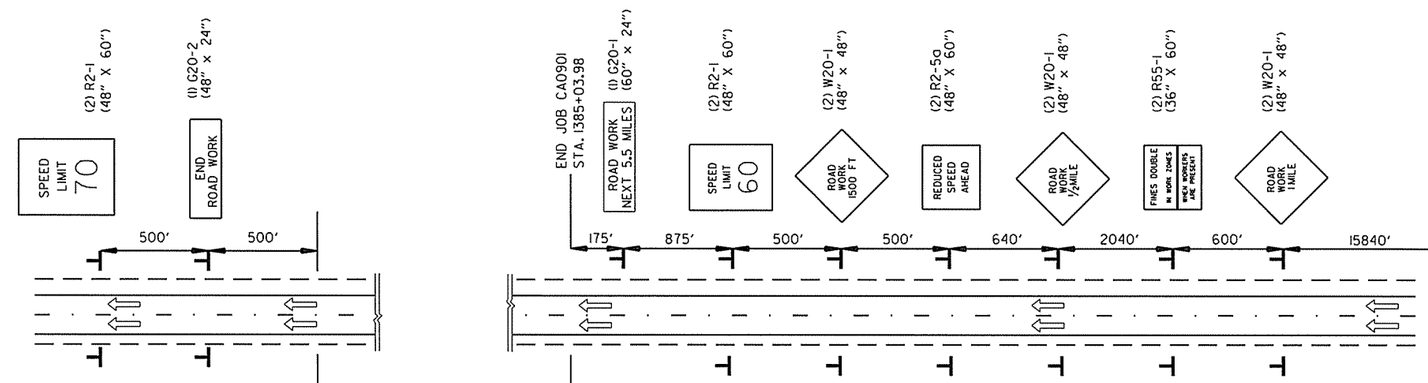

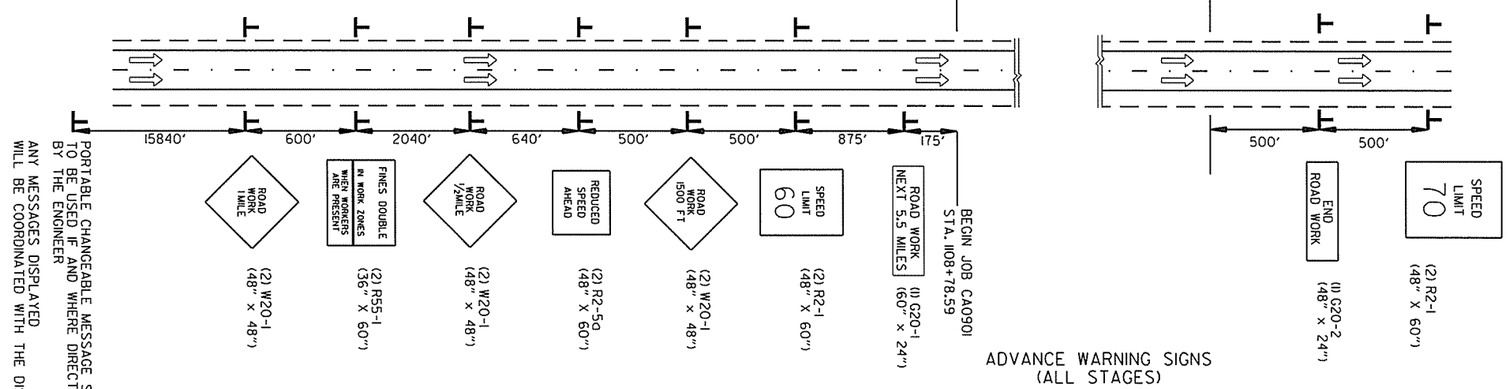

ADVANCE WARNING SIGNS
(ALL STAGES)

ADVANCE WARNING MAINTENANCE OF TRAFFIC DETAILS

USER: at5106
DESIGN FILE: G:\13106100_2641toNHope\TRANSP\dgn\maint_of_traffic\rCA0901_MOT.dgn
PLOTTED: 2/24/2016 12:19
SCALE: 1:001
MODEL: MOT ALL STAGES DETAILS

Crafton Tull
architecture | engineering | surveying

DATE REVISED	DATE FILMED	DATE REVISED	DATE FILMED

FED.RD. DIST.NO.	STATE	FED.AID PROJ.NO.	SHEET NO.	TOTAL SHEETS
6	ARK.			
JOB NO.		CA0901	53	452

(2) MAINTENANCE OF TRAFFIC DETAILS

STATE OF ARKANSAS
REGISTERED PROFESSIONAL ENGINEER
No. 15560
JEROME PAUL DAVIS
3-03-16

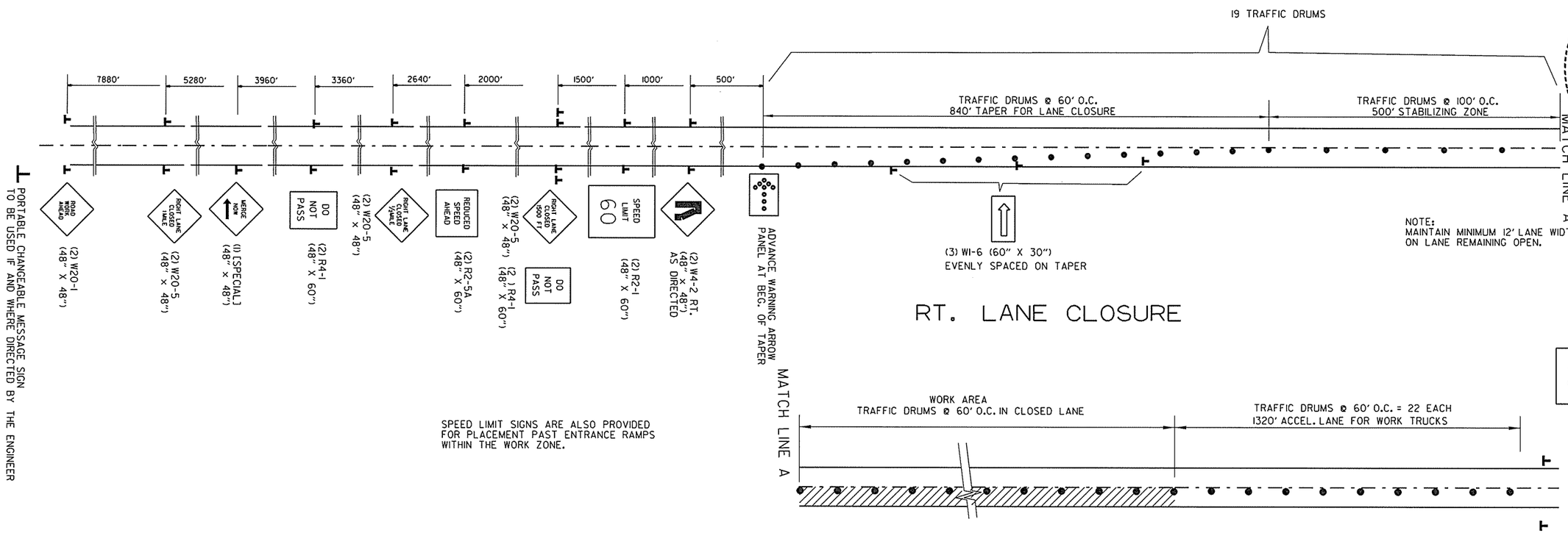

WORK ZONE - LANE CLOSURE
MAINTENANCE OF TRAFFIC DETAILS

USER: at5106
DESIGN FILE: G:\13106100_264toNHope\TRANSP\dgn\maint_of_traffic\rCA0901_MOT.dgn
PLOTTED: 2/24/2016 12:19
SCALE: 100:1
MODEL: MOT ALL STAGES DETAILS

Crafton Tull
architecture | engineering | surveying

DATE REVISED	DATE FILMED	DATE REVISED	DATE FILMED

FED.RD. DIST.NO.	STATE	FED.AID PROJ.NO.	SHEET NO.	TOTAL SHEETS
6	ARK.			
JOB NO.		CA0901	54	452

(2) MAINTENANCE OF TRAFFIC DETAILS

STATE OF ARKANSAS
REGISTERED PROFESSIONAL ENGINEER
No. 15560
3-03-16
JEROME PAUL DAVIS

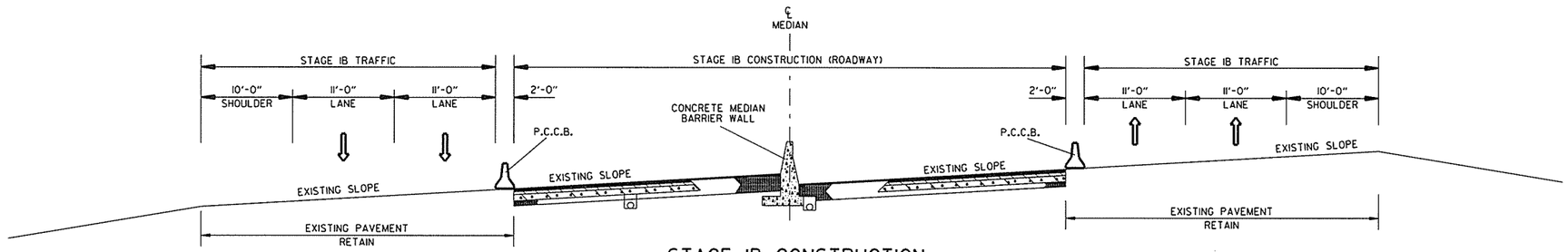

STAGE IB CONSTRUCTION

SEE TYPICAL SECTIONS FOR PAVEMENT DETAILS.
SEE SPECIAL DETAILS FOR CONCRETE BARRIER WALL DETAILS.
SEE BRIDGE PLANS FOR ADDITIONAL INFORMATION.

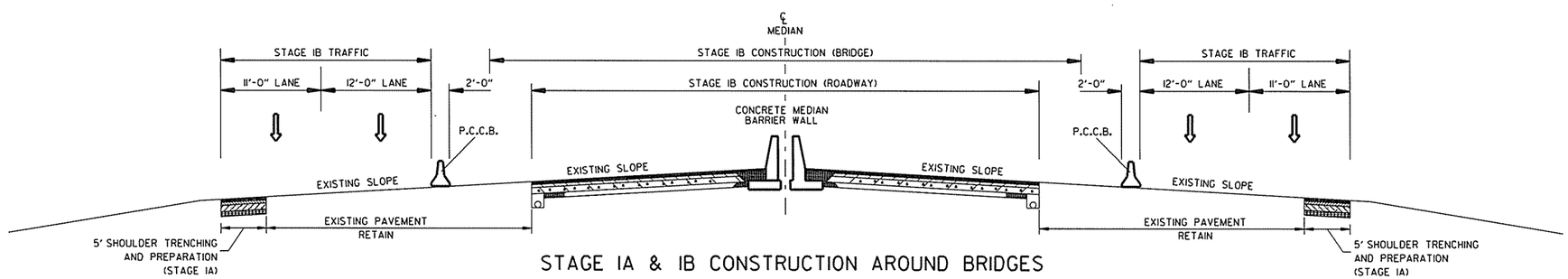

STAGE IA & IB CONSTRUCTION AROUND BRIDGES

SEE TYPICAL SECTIONS FOR PAVEMENT DETAILS.
SEE SPECIAL DETAILS FOR CONCRETE BARRIER WALL AND SHOULDER TRENCHING DETAILS.
SEE BRIDGE PLANS FOR ADDITIONAL INFORMATION.

STAGE 1A & 1B CONSTRUCTION MAINTENANCE OF TRAFFIC DETAILS

USER: ot5106
DESIGN FILE: G:\13106100_264toNHope\TRANSP\dgn\maint_of_traffic\rCA0901_MOT.dgn
PLOTTED: 2/24/2016 12:19
SCALE: 100:1
MODEL: MOT ALL STAGES DETAILS

Crafton Tull
architecture | engineering | surveying

DATE REVISED	DATE FILMED	DATE REVISED	DATE FILMED

FED.RD. DIST.NO.	STATE	FED.AID PROJ.NO.	SHEET NO.	TOTAL SHEETS
6	ARK.			
JOB NO.		CA0901	55	452

(2) MAINTENANCE OF TRAFFIC DETAILS

STATE OF ARKANSAS
REGISTERED PROFESSIONAL ENGINEER
No. 15560
3-03-16
JEROME PAUL DAVIS

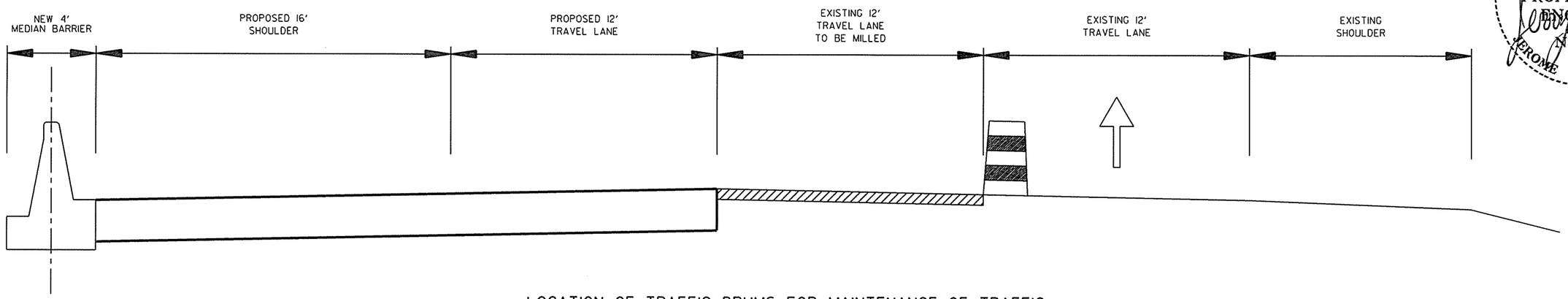

LOCATION OF TRAFFIC DRUMS FOR MAINTENANCE OF TRAFFIC
INSIDE LANE CLOSED FOR MILL AND OVERLAY
(SHOWN IN DIRECTION OF TRAFFIC)

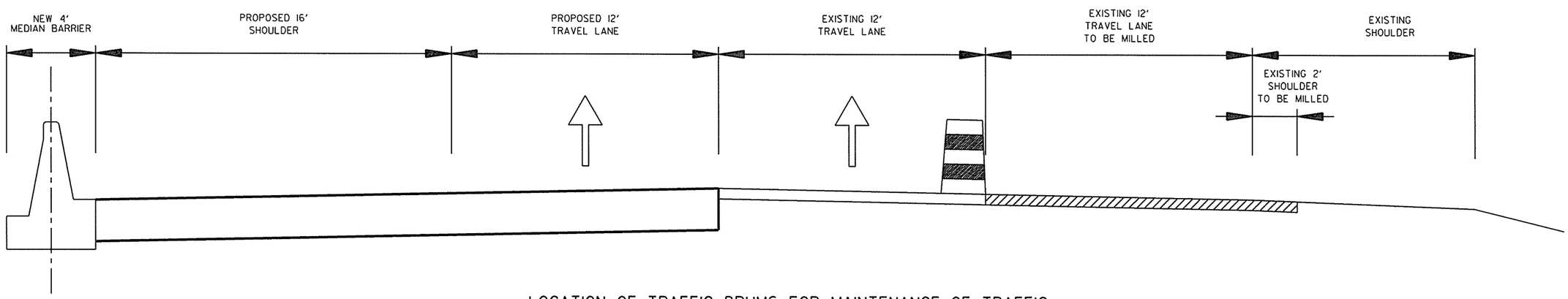

LOCATION OF TRAFFIC DRUMS FOR MAINTENANCE OF TRAFFIC
OUTSIDE LANE CLOSED FOR MILL AND OVERLAY
(SHOWN IN DIRECTION OF TRAFFIC)

STAGE 2 CONSTRUCTION
MAINTENANCE OF TRAFFIC DETAILS

USER: at5106
DESIGN FILE: G:\13106100_264toNHope\TRANSP\dgn\maint_of_traffic\rCA0901_MOT.dgn
PLOTTED: 2/24/2016 12:19
SCALE: 100:1
MODEL: MOT ALL STAGES DETAILS

Crafton Tull
architecture|engineering|surveying

DATE REVISED	DATE FILMED	DATE REVISED	DATE FILMED

FED.RD. DIST.NO.	STATE	FED.AID PROJ.NO.	SHEET NO.	TOTAL SHEETS
6	ARK.			
JOB NO.		CA0901	56	452

(2) MAINTENANCE OF TRAFFIC DETAILS

STATE OF ARKANSAS
REGISTERED PROFESSIONAL ENGINEER
No. 15560
3-03-16
JEROME PAUL DAVIS

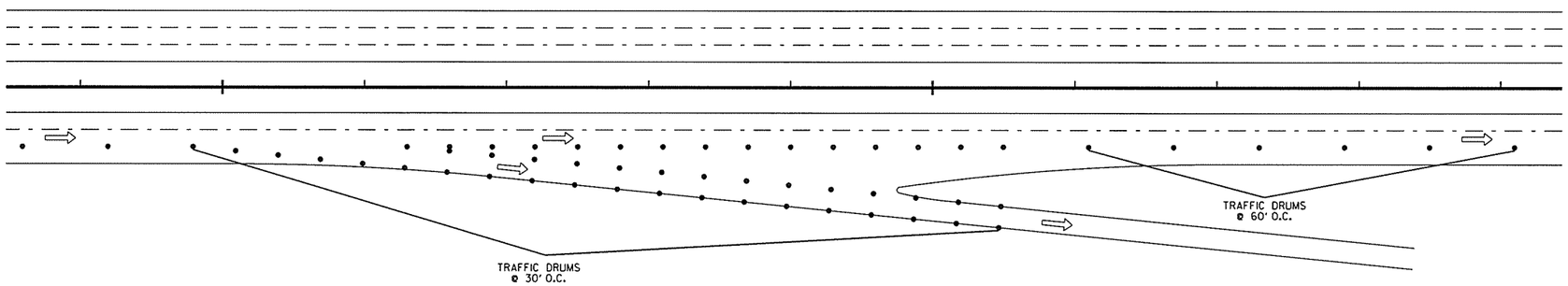

EXIT RAMP - TYPICAL TRAFFIC DRUM LAYOUT
OUTSIDE LANE CLOSURE

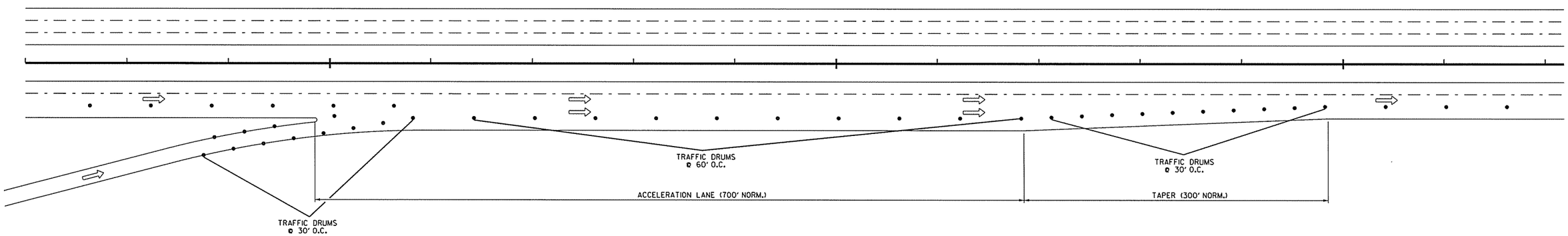

ENTRANCE RAMP - TYPICAL TRAFFIC DRUM LAYOUT
ACCELERATION LANE CLOSURE

EXIT 78:
NORTHBOUND EXIT = 40 TRAFFIC DRUMS

SOUTHBOUND ENTRANCE = 17 TRAFFIC DRUMS

EXIT 81:
NORTHBOUND EXIT = 40 TRAFFIC DRUMS
NORTHBOUND ENTRANCE = 17 TRAFFIC DRUMS

SOUTHBOUND EXIT = 40 TRAFFIC DRUMS
SOUTHBOUND ENTRANCE = 17 TRAFFIC DRUMS

EXIT 82:
NORTHBOUND EXIT = 40 TRAFFIC DRUMS
NORTHBOUND ENTRANCE = 17 TRAFFIC DRUMS

SOUTHBOUND EXIT = 40 TRAFFIC DRUMS
SOUTHBOUND ENTRANCE = 17 TRAFFIC DRUMS

EXIT 83:
NORTHBOUND EXIT = 40 TRAFFIC DRUMS
NORTHBOUND ENTRANCE = 17 TRAFFIC DRUMS

SOUTHBOUND EXIT = 40 TRAFFIC DRUMS
SOUTHBOUND ENTRANCE = 17 TRAFFIC DRUMS

STAGE 2 CONSTRUCTION
DETAIL OF RAMPS WITH LANE CLOSURE
MAINTENANCE OF TRAFFIC DETAILS

Crafton Tull
architecture | engineering | surveying

DATE REVISED	DATE FILMED	DATE REVISED	DATE FILMED

FED.RD. DIST.NO.	STATE	FED.AID PROJ.NO.	SHEET NO.	TOTAL SHEETS
6	ARK.			
JOB NO.		CA0901	57	452

(2) MAINTENANCE OF TRAFFIC DETAILS

STATE OF ARKANSAS
REGISTERED PROFESSIONAL ENGINEER
No. 15560
3-03-16
JEROME PAUL DAVIS

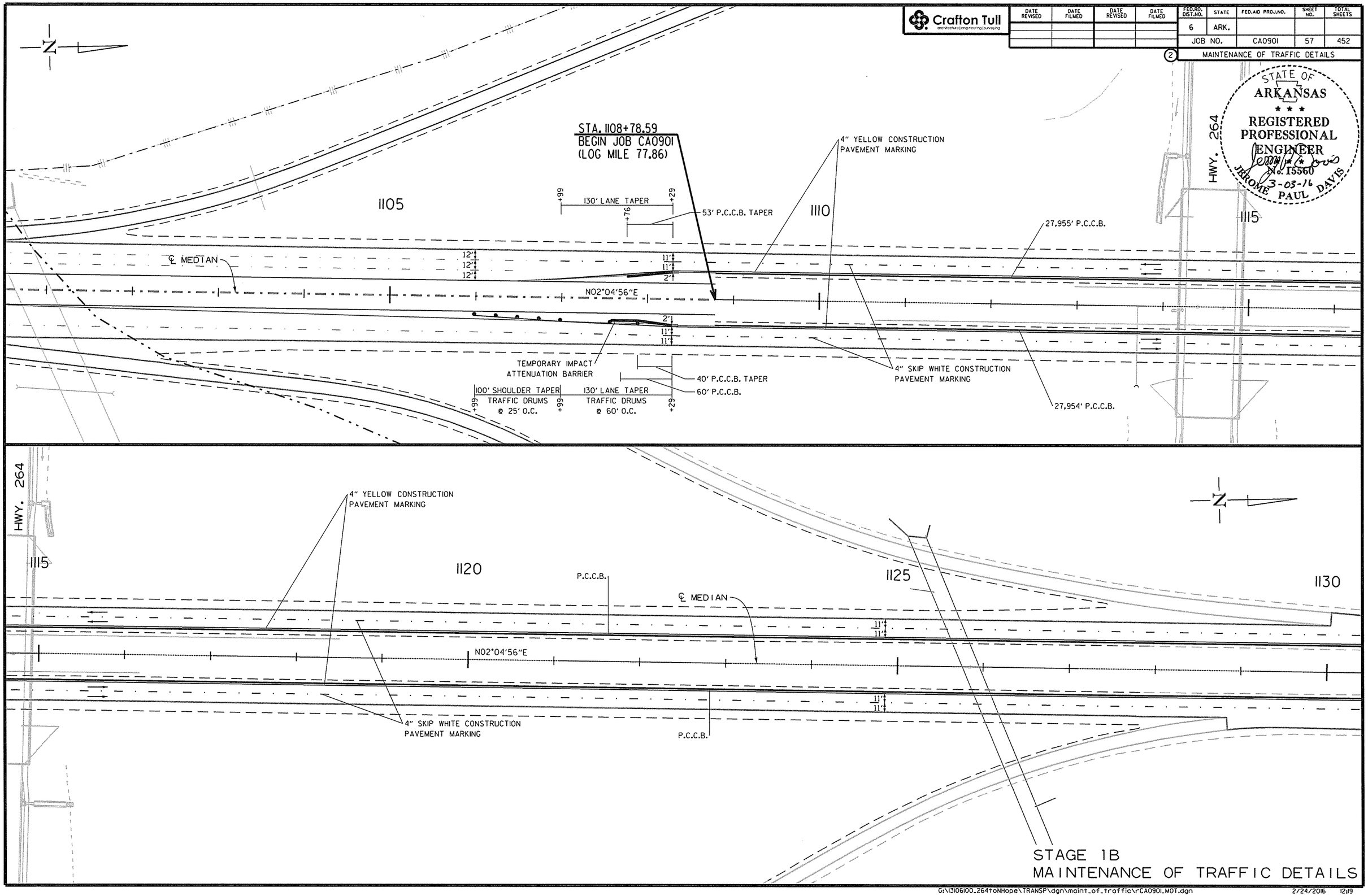

USER: a15106
DESIGN FILE: G:\13106100_264toNHope\TRANSP\dgn\maint_of_traffic\rCA0901_MOT.dgn
PLOTTED: 2/24/2016 12:19
SCALE: 1:00:1
MODEL: MOT STAGE 1DETAILS

G:\13106100_264toNHope\TRANSP\dgn\maint_of_traffic\rCA0901_MOT.dgn 2/24/2016 12:19

Crafton Tull
architecture | engineering | surveying

DATE REVISED	DATE FILMED	DATE REVISED	DATE FILMED

FED.RD. DIST.NO.	STATE	FED.AID PROJ.NO.	SHEET NO.	TOTAL SHEETS
6	ARK.			
JOB NO.		CA0901	58	452

(2) MAINTENANCE OF TRAFFIC DETAILS

STATE OF ARKANSAS
REGISTERED PROFESSIONAL ENGINEER
No. 15560
3-22-16
JEROME PAUL DAVIS

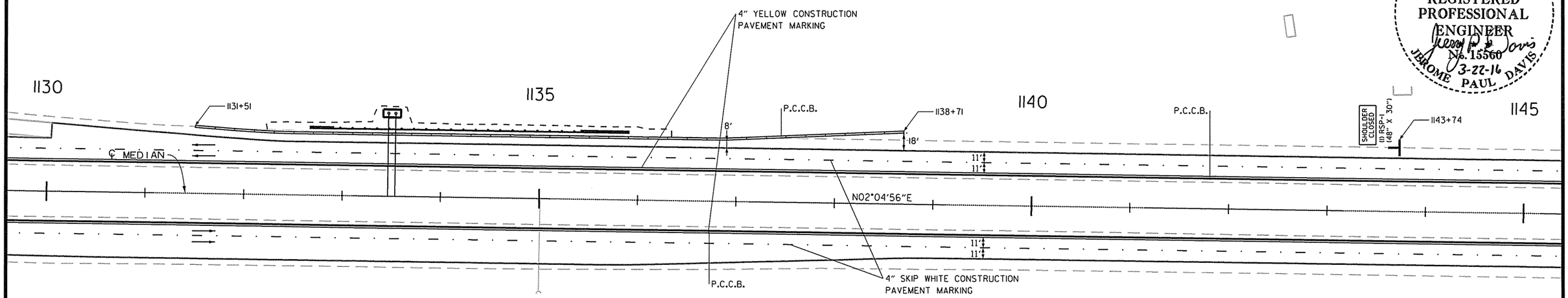

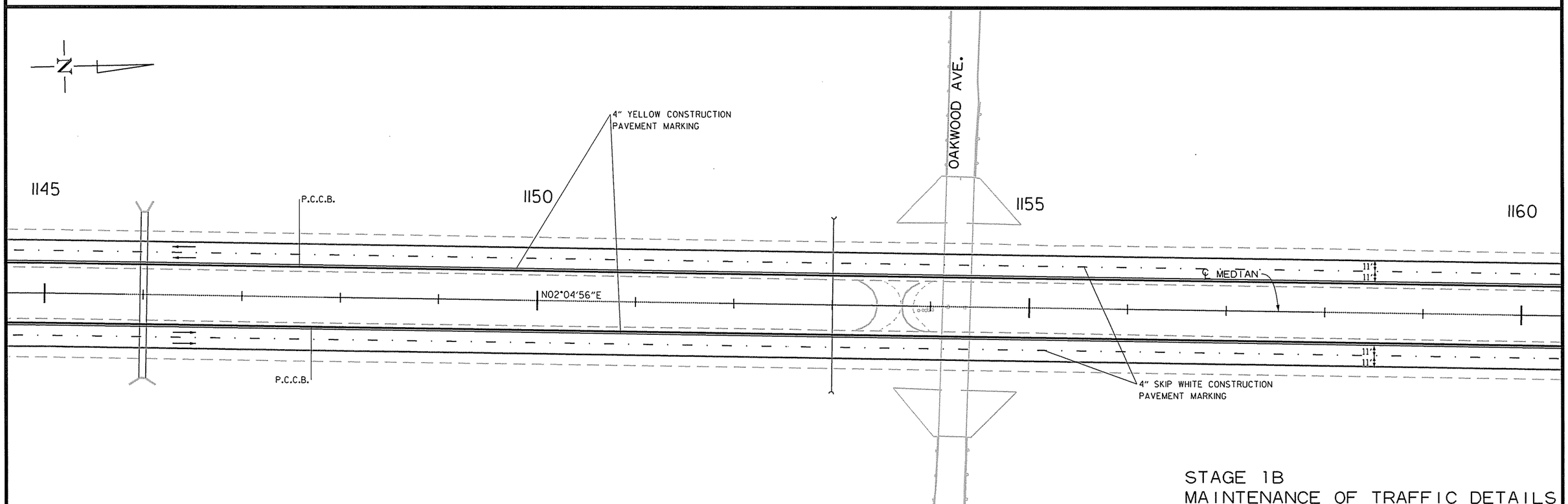

STAGE 1B
MAINTENANCE OF TRAFFIC DETAILS

USER: at5106
DESIGN FILE: G:\13106100_264toNHope\TRANSP\dgn\maint_of_traffic\rCA0901_MOT.dgn
PLOTTED: 3/21/2016 12:49
SCALE: 100:1
MODEL: MOT STAGE 1DETAILS

Crafton Tull
architecture | engineering | surveying

DATE REVISED	DATE FILMED	DATE REVISED	DATE FILMED

FED.RD. DIST.NO.	STATE	FED.AID PROJ.NO.	SHEET NO.	TOTAL SHEETS
6	ARK.			
JOB NO.		CA0901	59	452

(2) MAINTENANCE OF TRAFFIC DETAILS

STATE OF ARKANSAS
REGISTERED PROFESSIONAL ENGINEER
No. 15560
3-03-16
JEROME PAUL DAVIS

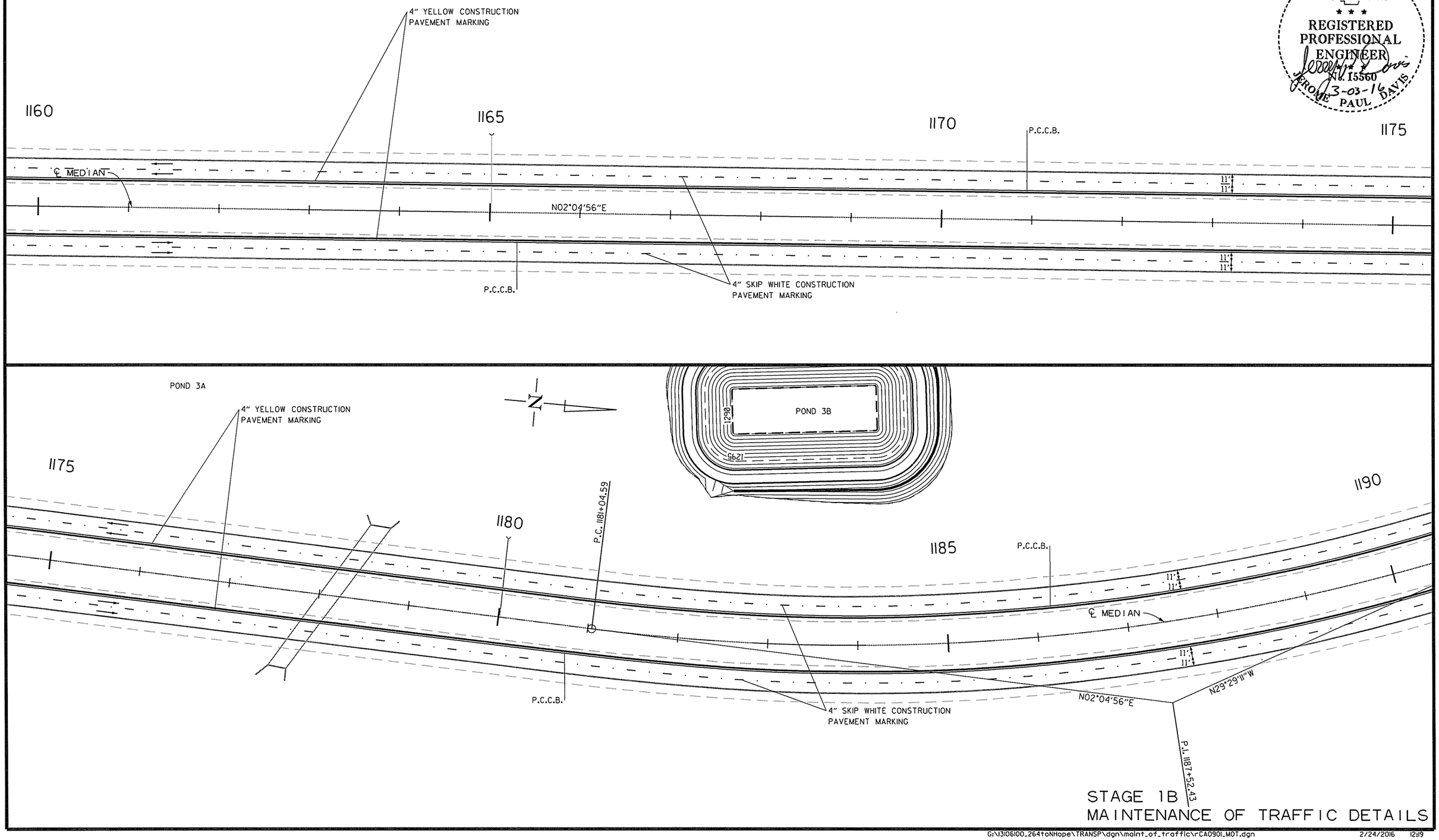

STAGE 1B
MAINTENANCE OF TRAFFIC DETAILS

USER: a15106
DESIGN FILE: G:\13106100_264toNHope\TRANSP\dgn\maint_of_traffic\rCA0901_MOT.dgn
PLOTTED: 2/24/2016 12:19
SCALE: 100:1
MODEL: MOT STAGE 1DETAILS

Crafton Tull
architecture | engineering | surveying

DATE REVISED	DATE FILMED	DATE REVISED	DATE FILMED

FED.RD. DIST.NO.	STATE	FED.AID PROJ.NO.	SHEET NO.	TOTAL SHEETS
6	ARK.			
JOB NO.		CA0901	60	452

2 MAINTENANCE OF TRAFFIC DETAILS

STATE OF ARKANSAS
REGISTERED PROFESSIONAL ENGINEER
No. 15560
3-03-16
JEROME PAUL DAVIS

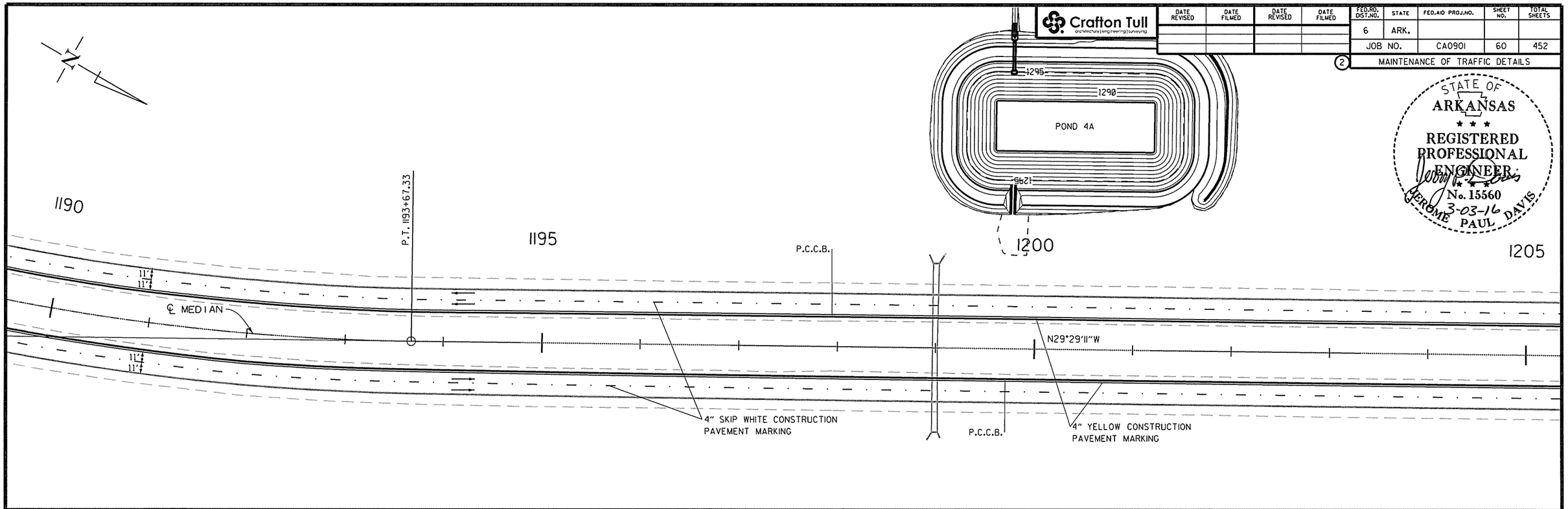

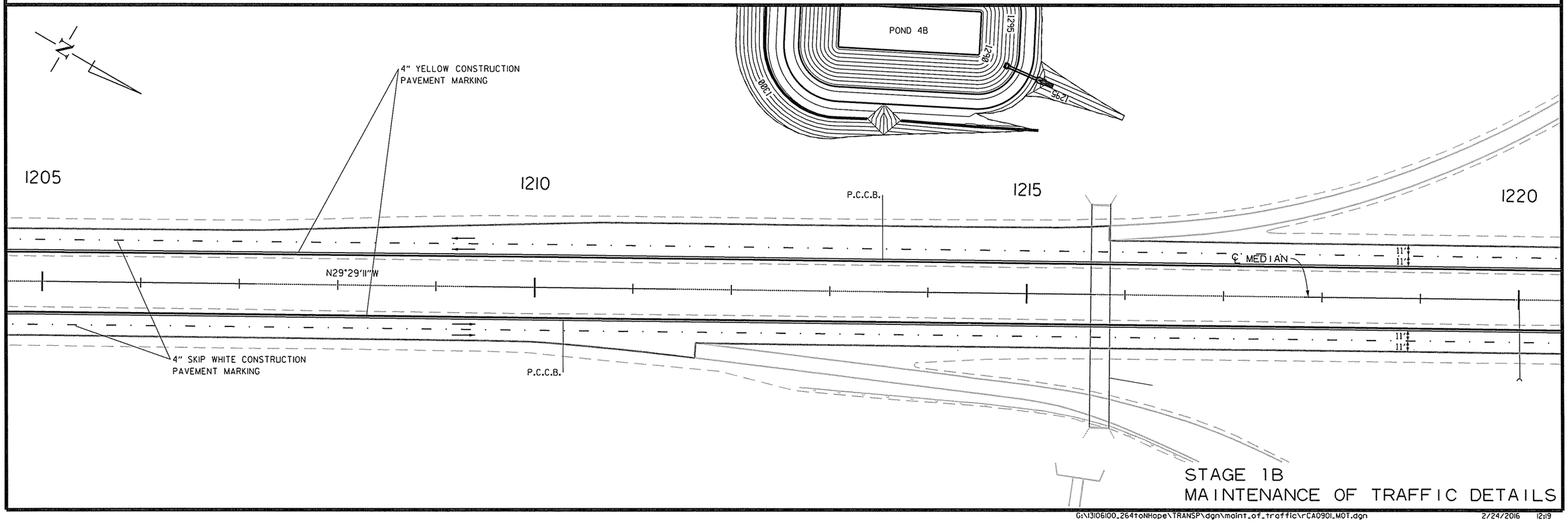

STAGE 1B
MAINTENANCE OF TRAFFIC DETAILS

USER: at5106
DESIGN FILE: G:\13106100_264toNHope\TRANSP\dgn\maint_of_traffic\rCA0901_MOT.dgn
PLOTTED: 2/24/2016 12:19
MODEL: MOT STAGE 1DETAILS
SCALE: 100:1

Crafton Tull
architecture | engineering | surveying

DATE REVISED	DATE FILMED	DATE REVISED	DATE FILMED

FED.RD. DIST.NO.	STATE	FED.AID PROJ.NO.	SHEET NO.	TOTAL SHEETS
6	ARK.			
JOB NO.		CA0901	61	452

(2) MAINTENANCE OF TRAFFIC DETAILS

STATE OF ARKANSAS
REGISTERED PROFESSIONAL ENGINEER
No. 15560
3-03-16
JEROME PAUL DAVIS

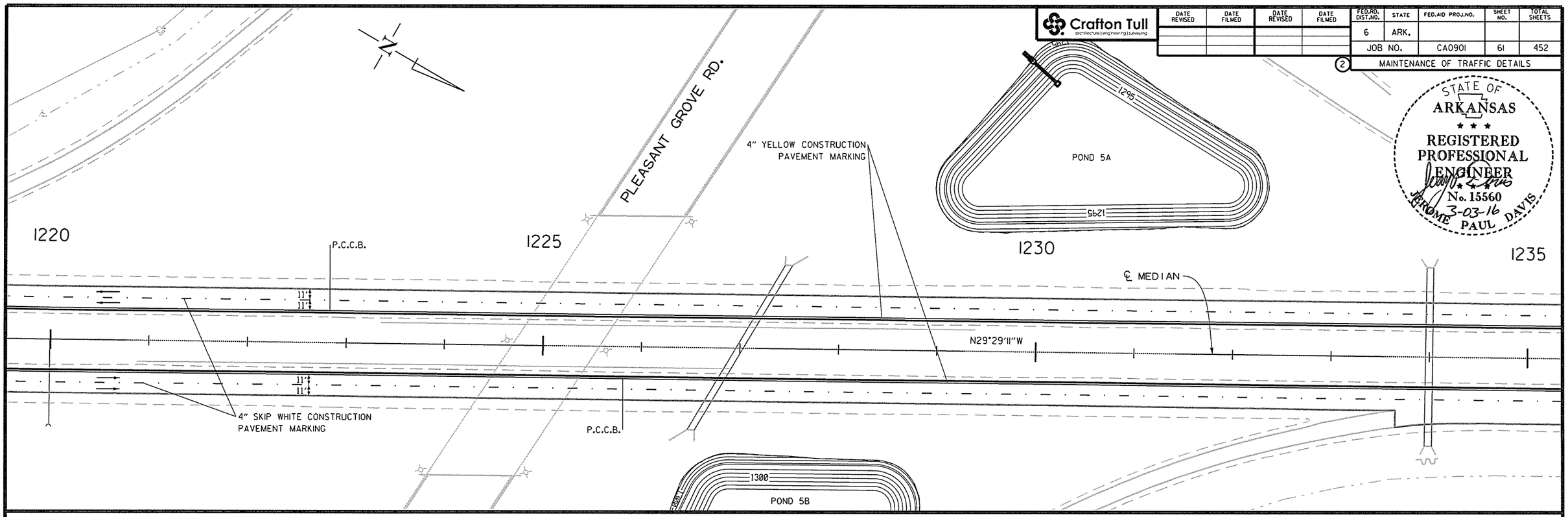

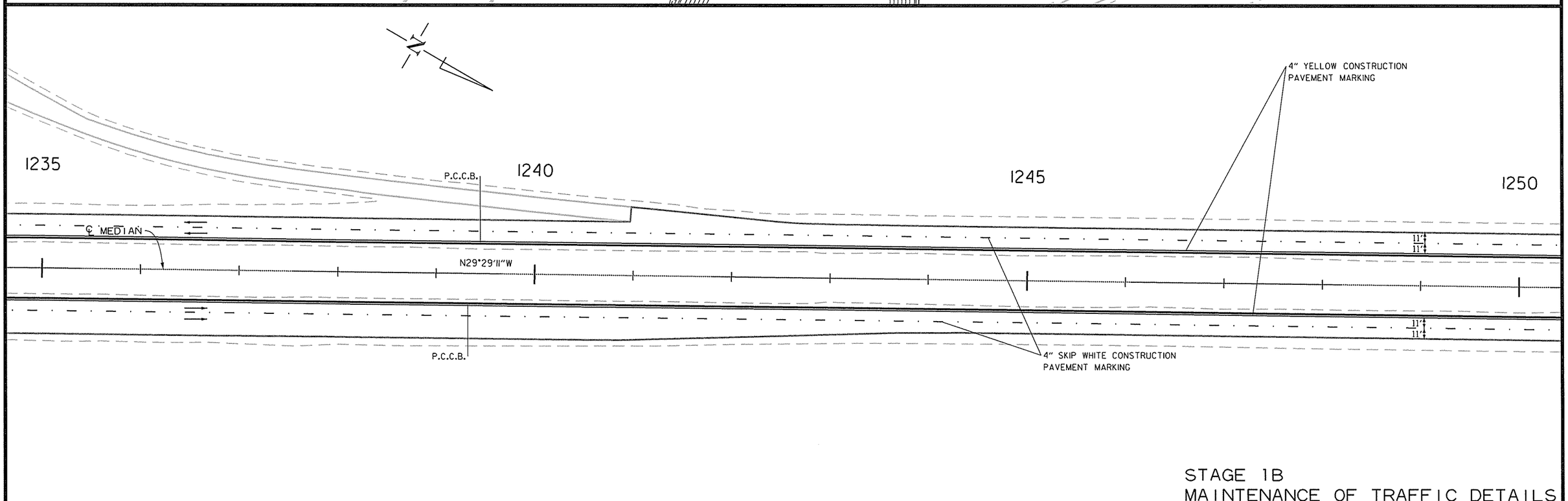

STAGE 1B
MAINTENANCE OF TRAFFIC DETAILS

USER: at5106
DESIGN FILE: G:\13106100_264toNHope\TRANSP\dgn\maint_of_traffic\rCA0901_MOT.dgn
PLOTTED: 2/24/2016 12:19
SCALE: 100:1
MODEL: MOT STAGE 1DETAILS

Crafton Tull
architecture | engineering | surveying

DATE REVISED	DATE FILMED	DATE REVISED	DATE FILMED

FED.RD. DIST.NO.	STATE	FED.AID PROJ.NO.	SHEET NO.	TOTAL SHEETS
6	ARK.			
JOB NO.		CA0901	62	452

(2) MAINTENANCE OF TRAFFIC DETAILS

STATE OF ARKANSAS
REGISTERED PROFESSIONAL ENGINEER
No. 15560
3-03-16
JEROME PAUL DAVIS

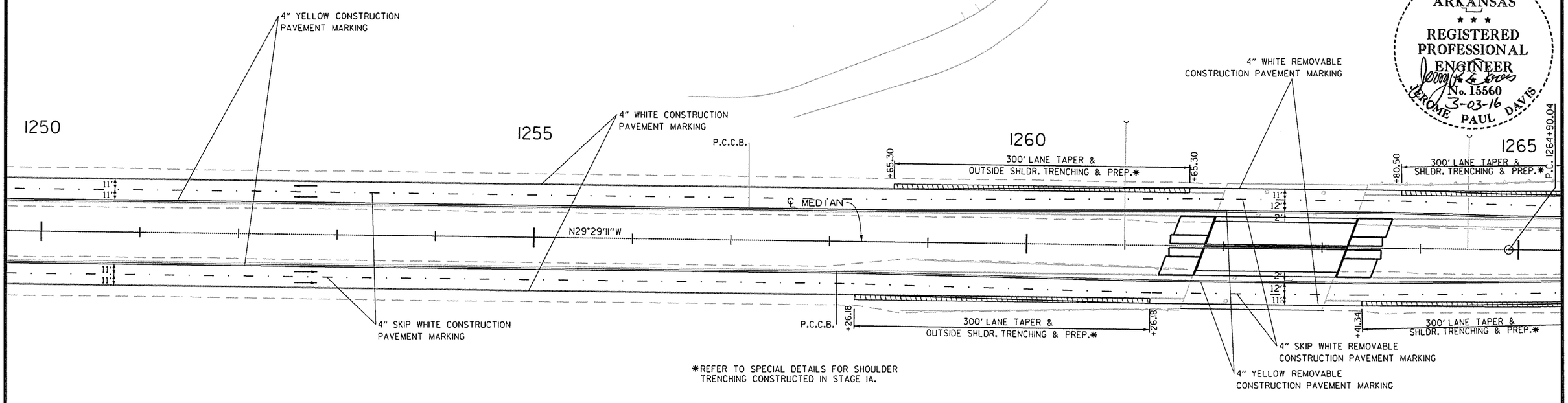

*REFER TO SPECIAL DETAILS FOR SHOULDER TRENCHING CONSTRUCTED IN STAGE IA.

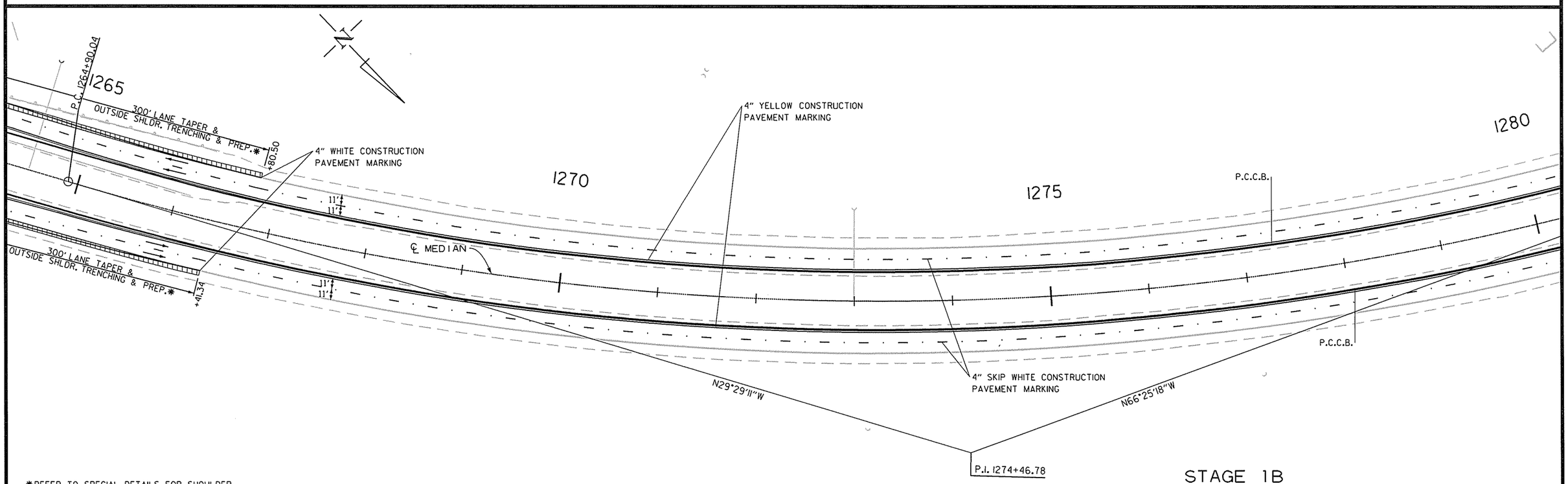

*REFER TO SPECIAL DETAILS FOR SHOULDER TRENCHING CONSTRUCTED IN STAGE IA.

STAGE 1B
MAINTENANCE OF TRAFFIC DETAILS

USER: a15106
DESIGN FILE: G:\13106100_264toNHope\TRANSP\dgn\maint_of_traffic\rCA0901_MOT.dgn
PLOTTED: 2/24/2016 12:19
SCALE: 100:1
MODEL: MOT STAGE 1DETAILS

Crafton Tull
architecture | engineering | surveying

DATE REVISED	DATE FILMED	DATE REVISED	DATE FILMED

FED.RD. DIST.NO.	STATE	FED.AID PROJ.NO.	SHEET NO.	TOTAL SHEETS
6	ARK.			
JOB NO.		CA0901	63	452

2 MAINTENANCE OF TRAFFIC DETAILS

STATE OF ARKANSAS
REGISTERED PROFESSIONAL ENGINEER
No. 15560
3-03-16
JEROME PAUL DAVIS

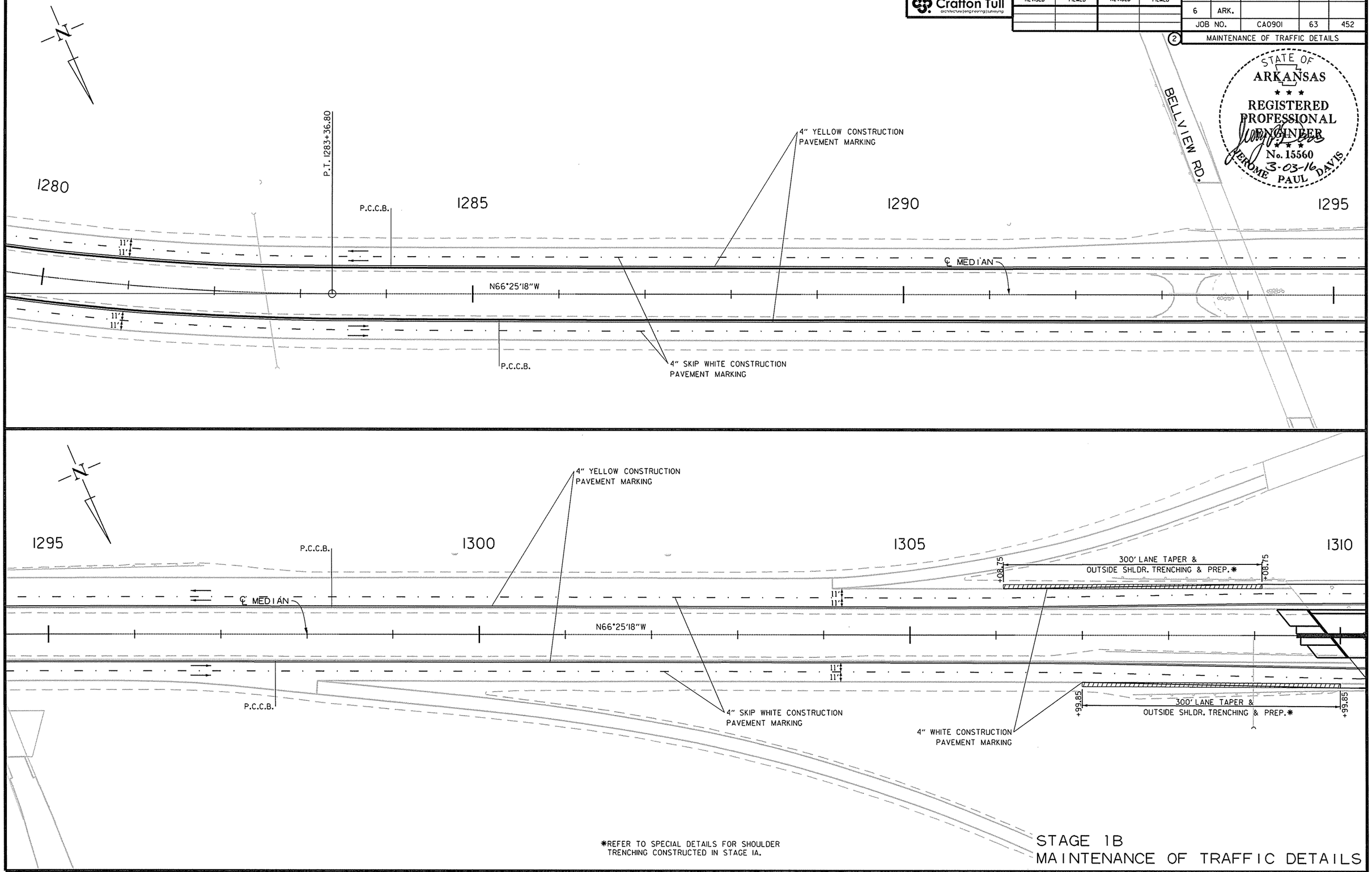

*REFER TO SPECIAL DETAILS FOR SHOULDER TRENCHING CONSTRUCTED IN STAGE IA.

STAGE 1B
MAINTENANCE OF TRAFFIC DETAILS

USER: a15106
DESIGN FILE: G:\13106100_264toNHope\TRANSP\dgn\maint_of_traffic\rCA0901_MOT.dgn
PLOTTED: 2/24/2016 12:19
SCALE: 100:1
MODEL: MOT STAGE 1DETAILS

Crafton Tull
architecture | engineering | surveying

DATE REVISED	DATE FILMED	DATE REVISED	DATE FILMED

FED.RD. DIST.NO.	STATE	FED.AID PROJ.NO.	SHEET NO.	TOTAL SHEETS
6	ARK.			
JOB NO.		CA0901	64	452

2 MAINTENANCE OF TRAFFIC DETAILS

STATE OF ARKANSAS
REGISTERED PROFESSIONAL ENGINEER
No. 15560
3-03-16
JEROME PAUL DAVIS

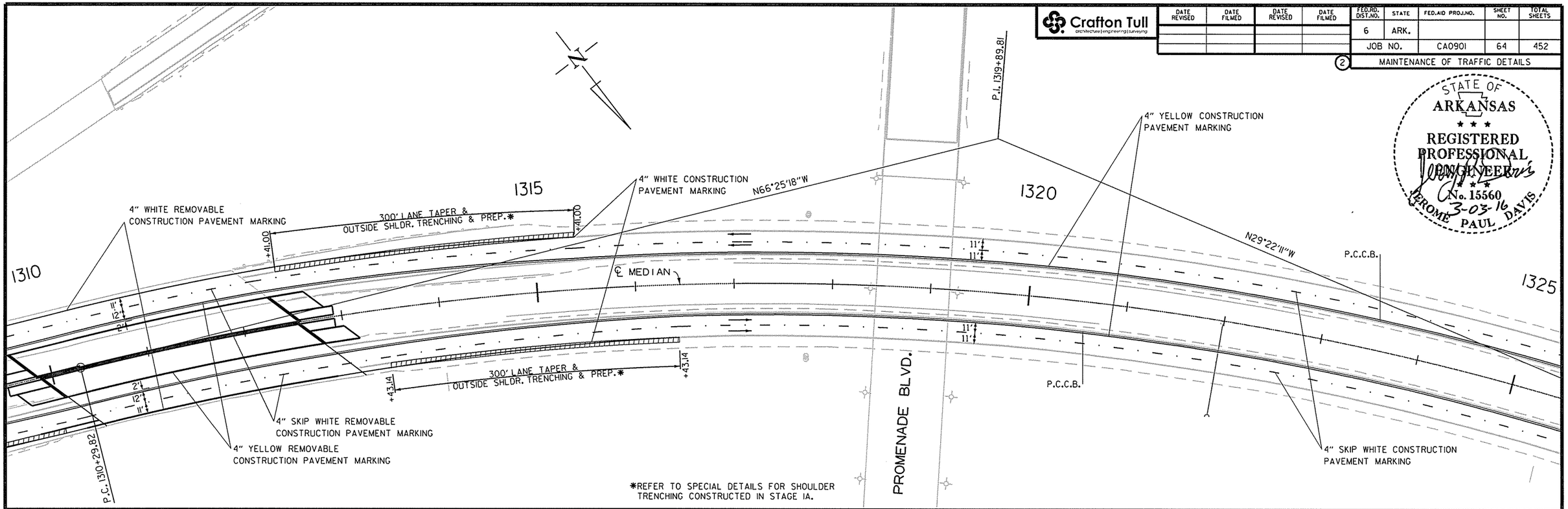

*REFER TO SPECIAL DETAILS FOR SHOULDER TRENCHING CONSTRUCTED IN STAGE 1A.

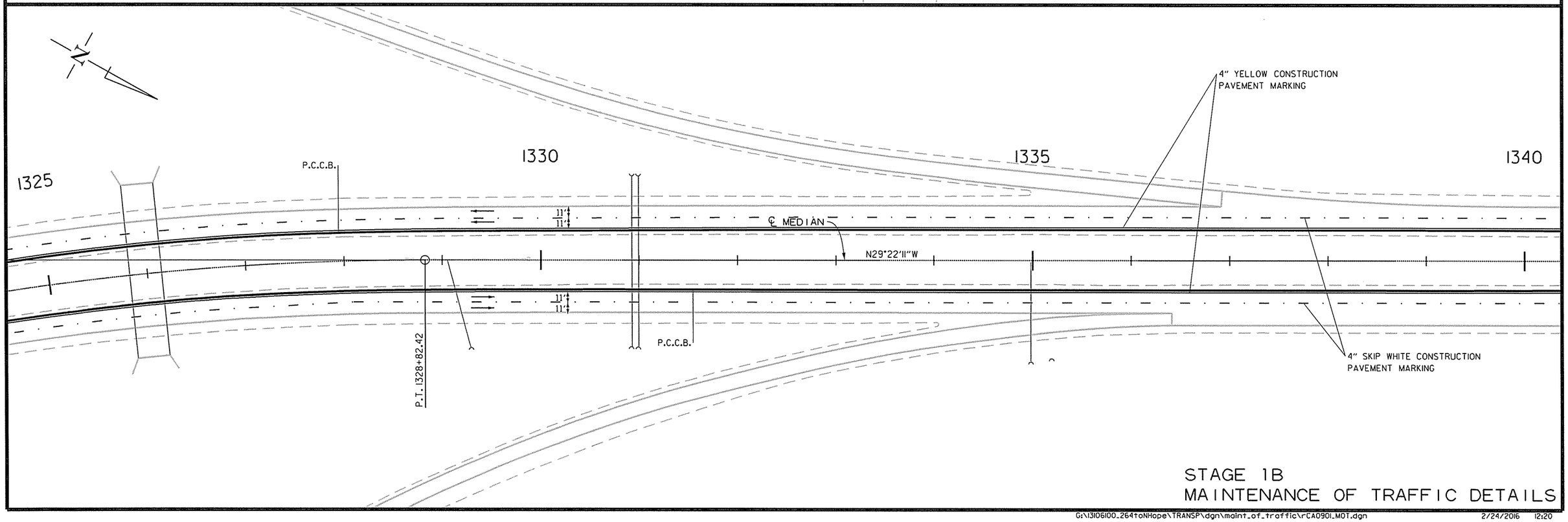

STAGE 1B
MAINTENANCE OF TRAFFIC DETAILS

USER: at5106
DESIGN FILE: G:\13106100_264toNHope\TRANSP\dgn\maint_of_traffic\rCA0901_MOT.dgn
PLOTTED: 2/24/2016 12:20
MODEL: MOT STAGE 1DETAILS
SCALE: 100:1

Crafton Tull
architecture | engineering | surveying

DATE REVISED	DATE FILMED	DATE REVISED	DATE FILMED

FED.RD. DIST.NO.	STATE	FED.AID PROJ.NO.	SHEET NO.	TOTAL SHEETS
6	ARK.			
JOB NO.		CA0901	65	452

2 MAINTENANCE OF TRAFFIC DETAILS

STATE OF ARKANSAS
REGISTERED PROFESSIONAL ENGINEER
No. 15560
3-03-16
JEROME PAUL DAVIS

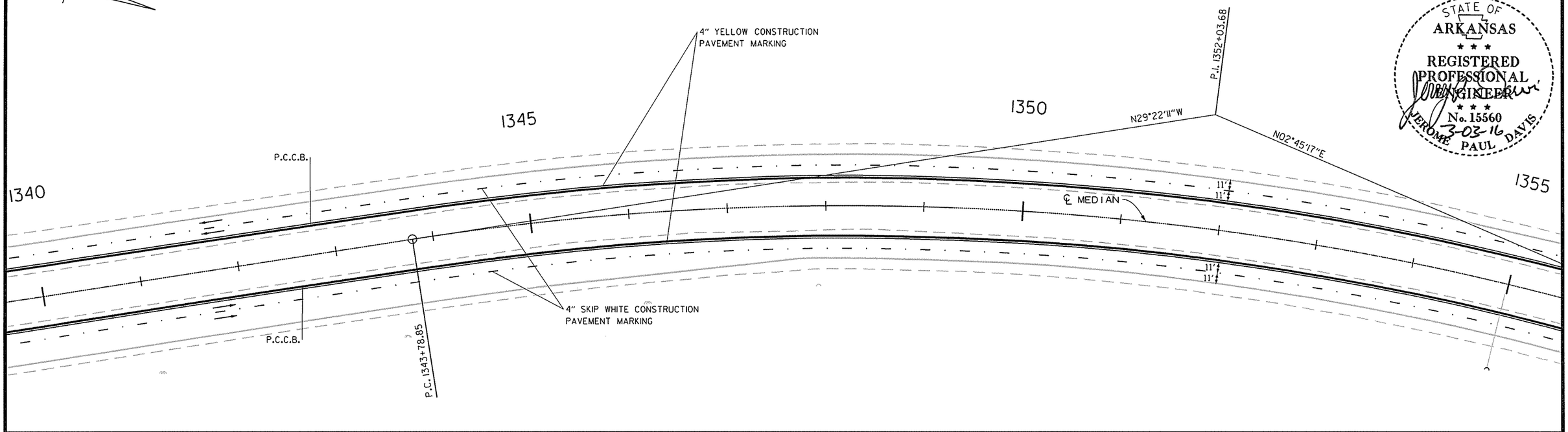

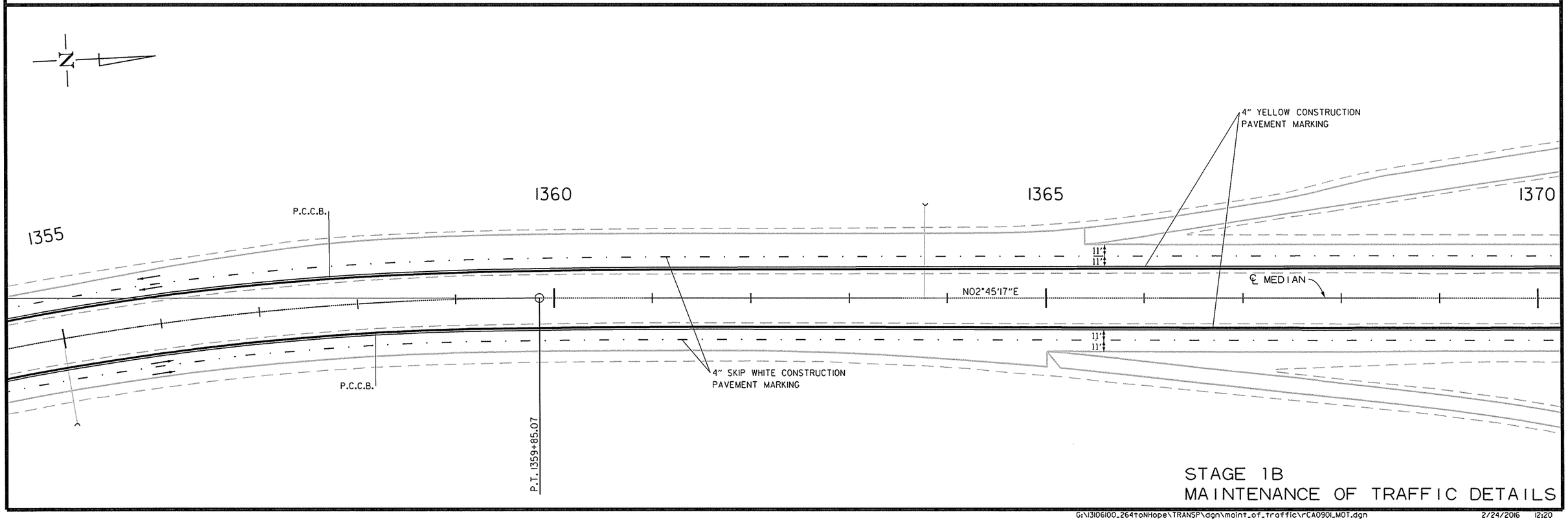

STAGE 1B
MAINTENANCE OF TRAFFIC DETAILS

USER: at5106
DESIGN FILE: G:\13106100_264toNHope\TRANSP\dgn\maint_of_traffic\rCA0901_MOT.dgn
PLOTTED: 2/24/2016 12:20
MODEL: MOT STAGE 1DETAILS
SCALE: 100:1

Crafton Tull
architecture | engineering | surveying

DATE REVISED	DATE FILMED	DATE REVISED	DATE FILMED
06/09/16			

FED.RD. DIST.NO.	STATE	FED.AID PROJ.NO.	SHEET NO.	TOTAL SHEETS
6	ARK.			
JOB NO.		CA0901	66	452

2 MAINTENANCE OF TRAFFIC DETAILS

STATE OF ARKANSAS
REGISTERED PROFESSIONAL ENGINEER
No. 15560
JEROME PAUL DAVIS
6/09/16

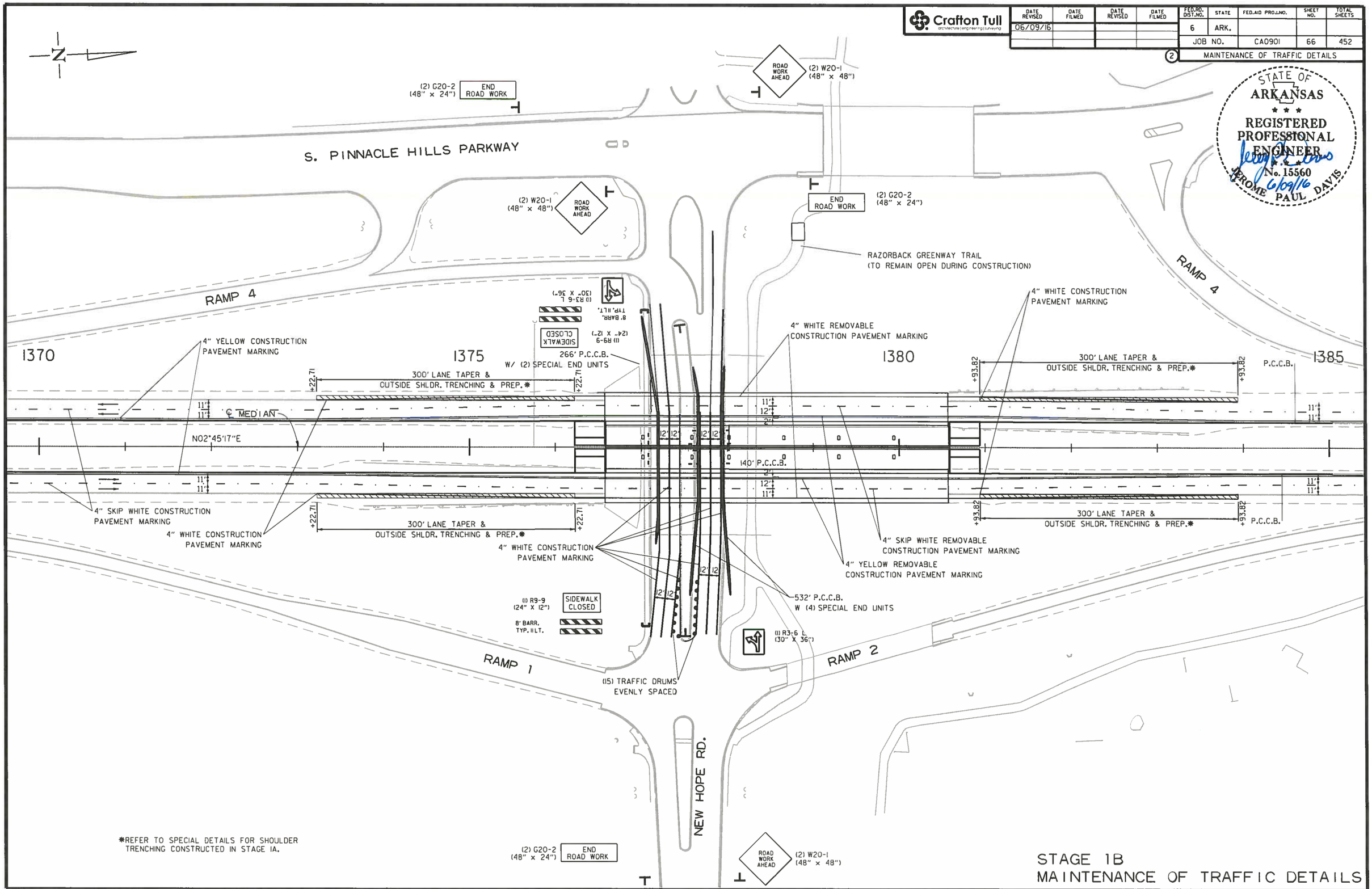

*REFER TO SPECIAL DETAILS FOR SHOULDER TRENCHING CONSTRUCTED IN STAGE IA.

STAGE 1B
MAINTENANCE OF TRAFFIC DETAILS

USER: dd5109
DESIGN FILE: G:\13106100_264toNHope\TRANSP\dgn\maint_of_traffic\rCA0901_MOT.dgn
PLOTTED: 6/9/2016 16:09
SCALE: 100:1
MODEL: MOT STAGE 1DETAILS

Crafton Tull
architecture | engineering | surveying

DATE REVISED	DATE FILMED	DATE REVISED	DATE FILMED	FED.RD. DIST.NO.	STATE	FED.AID PROJ.NO.	SHEET NO.	TOTAL SHEETS
				6	ARK.			
				JOB NO.		CA0901	67	452

(2) MAINTENANCE OF TRAFFIC DETAILS

STATE OF ARKANSAS
REGISTERED PROFESSIONAL ENGINEER
No. 15560
JEROME PAUL DAVIS
3-03-16

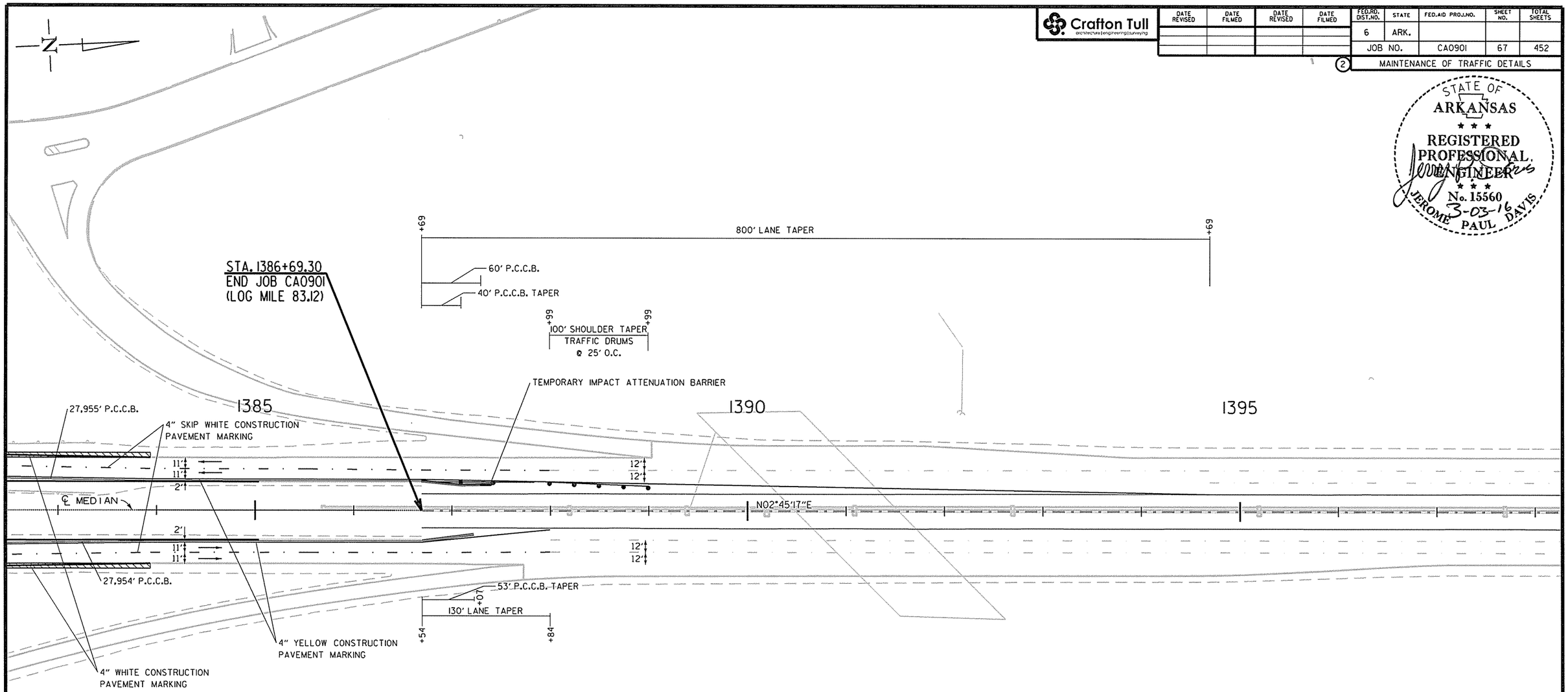

STAGE 1B
MAINTENANCE OF TRAFFIC DETAILS

USER: at5106
DESIGN FILE: G:\13106100_264toNHope\TRANSP\dgn\maint_of_traffic\rCA0901_MOT.dgn
PLOTTED: 2/24/2016 12:20
SCALE: 100d
MODEL: MOT STAGE 1DETAILS

DATE REVISED	DATE FILMED	DATE REVISED	DATE FILMED
06/09/16			

FED.RD. DIST.NO.	STATE	FED.AID PROJ.NO.	SHEET NO.	TOTAL SHEETS
6	ARK.			
JOB NO.		CA0901	68	452

2 PERMANENT PAVEMENT MARKING DETAILS

STATE OF ARKANSAS
REGISTERED PROFESSIONAL ENGINEER
No. 15560
JEROME PAUL DAVIS
06/09/16

PERMANENT PAVEMENT MARKING QUANTITIES

LEFT MAIN LANES
HIGH PERFORMANCE PAVEMENT MARKINGS
4" YELLOW = 29,590 LIN. FT.
4" WHITE = 27,499 LIN. FT.
4" SKIP WHITE = 13,812 LIN. FT.
4" SKIP WHITE CONTRAST = 514 LIN. FT.
8" WHITE = 2325 LIN. FT.
8" DOTTED WHITE = 563 LIN. FT.

RAISED PAVEMENT MARKERS
TYPE II (WHITE/RED) = 981 EACH

RIGHT MAIN LANES
HIGH PERFORMANCE PAVEMENT MARKINGS
4" YELLOW = 27,789 LIN. FT.
4" WHITE = 27,495 LIN. FT.
4" SKIP WHITE = 13,536 LIN. FT.
4" SKIP WHITE CONTRAST = 394 LIN. FT.
8" WHITE = 2,325 LIN. FT.
8" DOTTED WHITE = 566 LIN. FT.

RAISED PAVEMENT MARKERS
TYPE II (WHITE/RED) = 964 EACH

NEW HOPE ROAD
HIGH PERFORMANCE PAVEMENT MARKINGS
4" THERMOPLASTIC MARKING WHITE SKIP = 164 LIN. FT.
4" THERMOPLASTIC MARKING SOLID WHITE = 778 LIN. FT.
THERMOPLASTIC MARKING ARROWS = 6 EACH
THERMOPLASTIC MARKING WORDS = 6 EACH
RAISED PAVEMENT MARKERS TYPE 2 (WHITE/RED) = 11 EACH

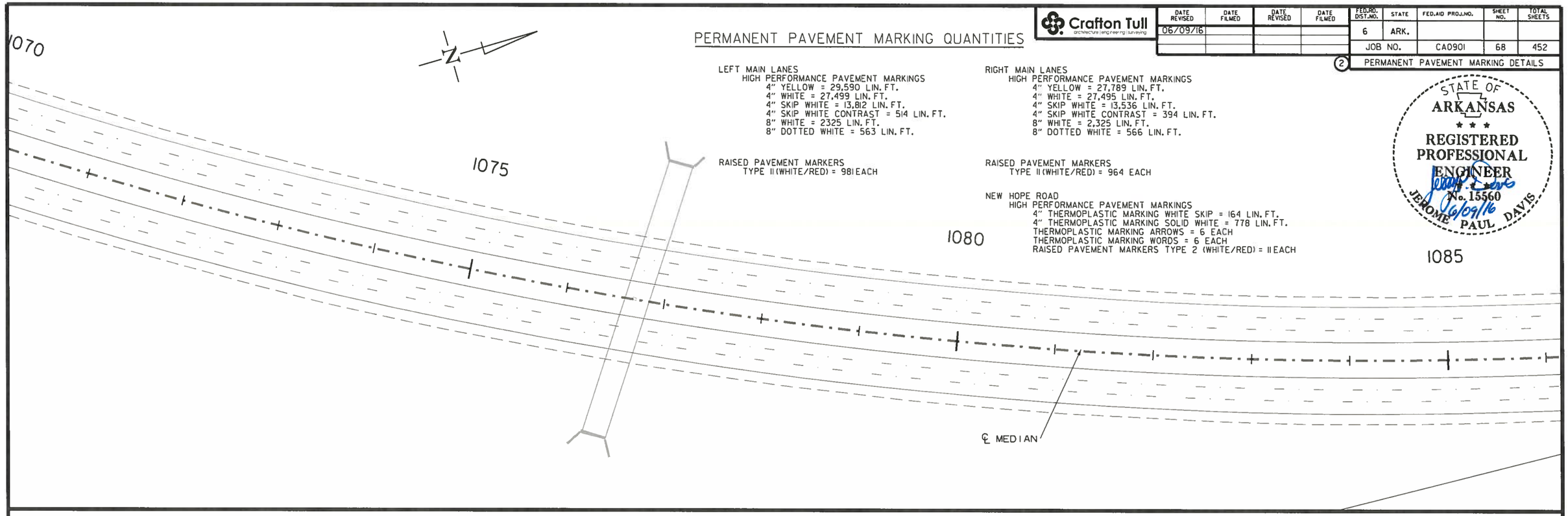

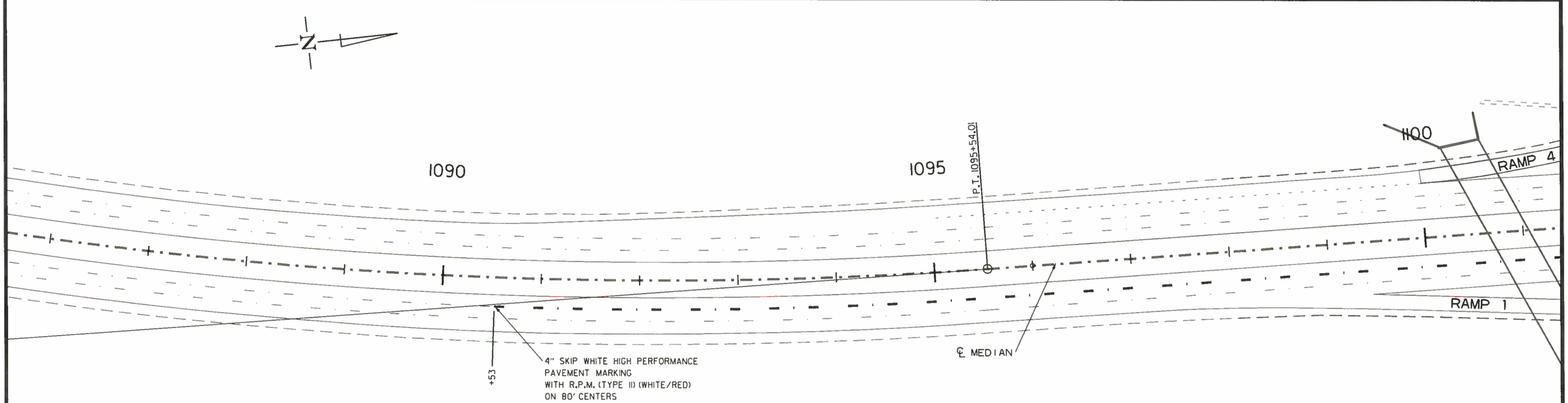

NO PERMANENT PAVEMENT MARKINGS SHALL BE PLACED UNTIL A MINIMUM OF 3 DAYS AFTER ALL MAIN LANE PAVING HAS BEEN COMPLETED. IN ADDITION, NO PERMANENT PAVEMENT MARKINGS SHALL BE PLACED DURING THE TIME PERIOD FROM DECEMBER 21 TO MARCH 15, INCLUSIVE.

PERMANENT PAVEMENT MARKING DETAILS

Crafton Tull
architecture | engineering | surveying

DATE REVISED	DATE FILMED	DATE REVISED	DATE FILMED

FED.RD. DIST.NO.	STATE	FED.AID PROJ.NO.	SHEET NO.	TOTAL SHEETS
6	ARK.			
JOB NO.		CA0901	69	452

(2) PERMANENT PAVEMENT MARKING DETAILS

STATE OF ARKANSAS
REGISTERED PROFESSIONAL ENGINEER
No. 15560
JEROME PAUL DAVIS
3-03-16

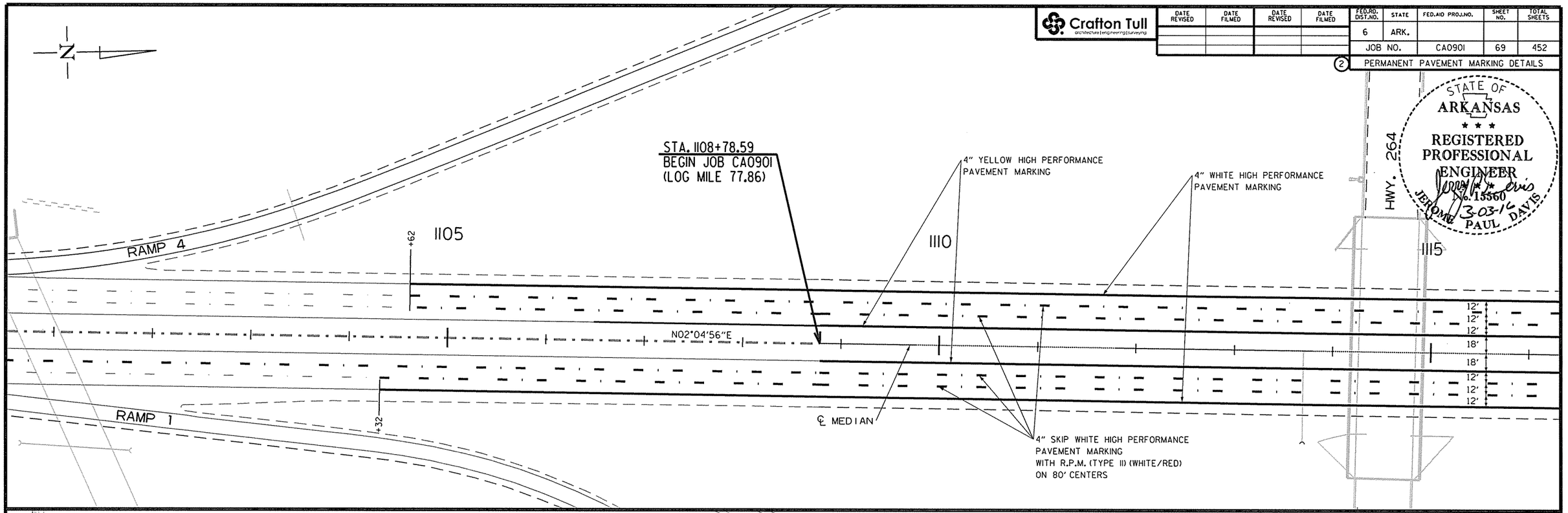

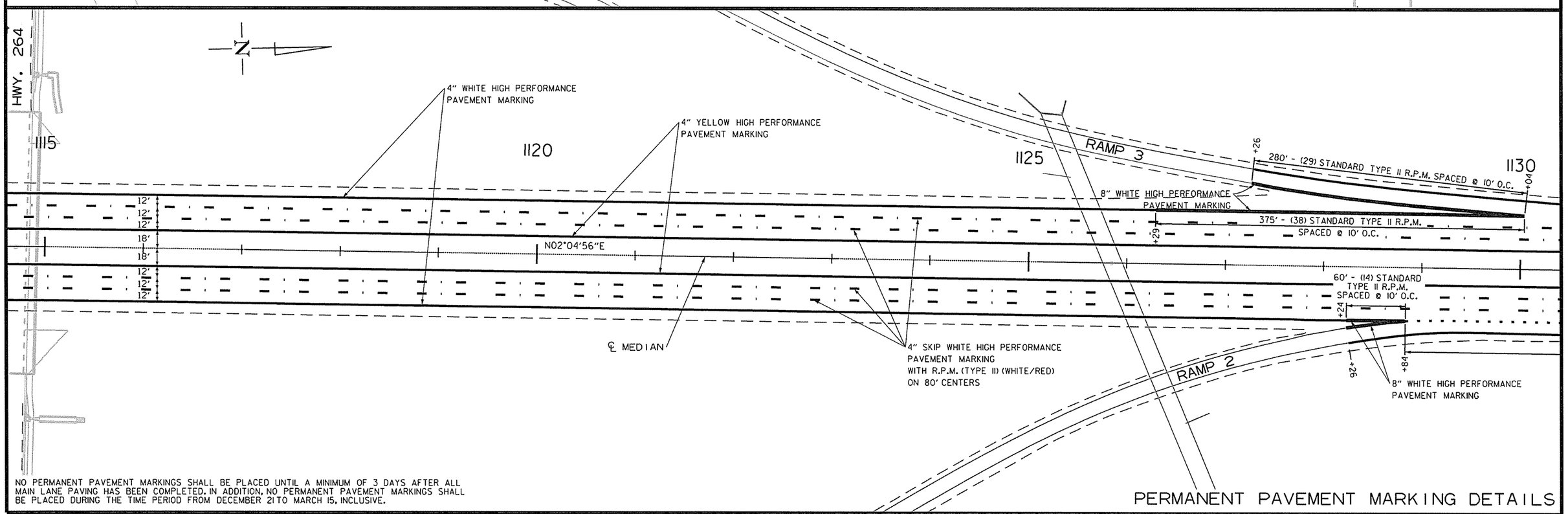

NO PERMANENT PAVEMENT MARKINGS SHALL BE PLACED UNTIL A MINIMUM OF 3 DAYS AFTER ALL MAIN LANE PAVING HAS BEEN COMPLETED. IN ADDITION, NO PERMANENT PAVEMENT MARKINGS SHALL BE PLACED DURING THE TIME PERIOD FROM DECEMBER 21 TO MARCH 15, INCLUSIVE.

PERMANENT PAVEMENT MARKING DETAILS

USER: a15106
DESIGN FILE: G:\13106100_264toNHope\TRANSP\dgn\misc\rCA0901_PM.dgn
PLOTTED: 2/24/2016 12:20
SCALE: 100:1
MODEL: PPM SHEETS

Crafton Tull
architecture | engineering | surveying

DATE REVISED	DATE FILMED	DATE REVISED	DATE FILMED

FED.RD. DIST.NO.	STATE	FED.AID PROJ.NO.	SHEET NO.	TOTAL SHEETS
6	ARK.			
JOB NO.		CA0901	70	452

(2) PERMANENT PAVEMENT MARKING DETAILS

STATE OF ARKANSAS
REGISTERED PROFESSIONAL ENGINEER
No. 15560
3-03-16
JEROME PAUL DAVIS

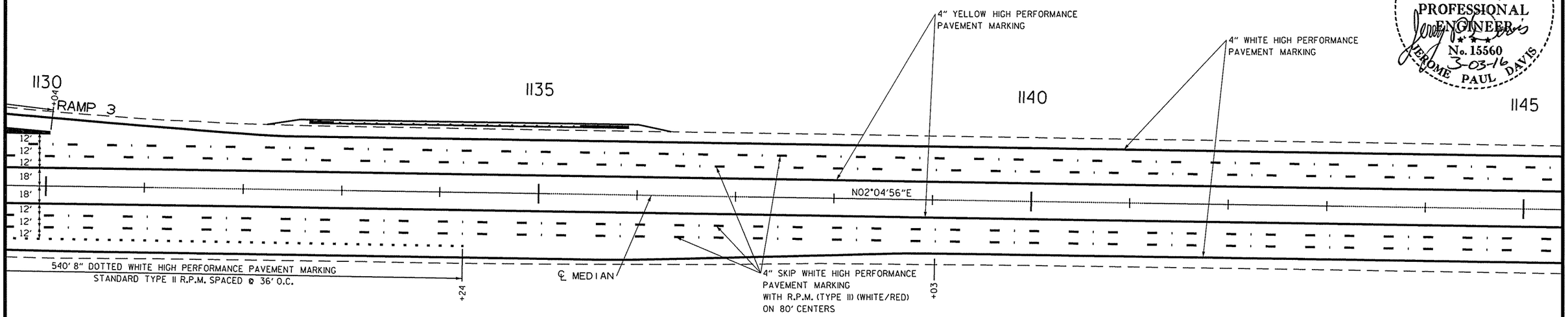

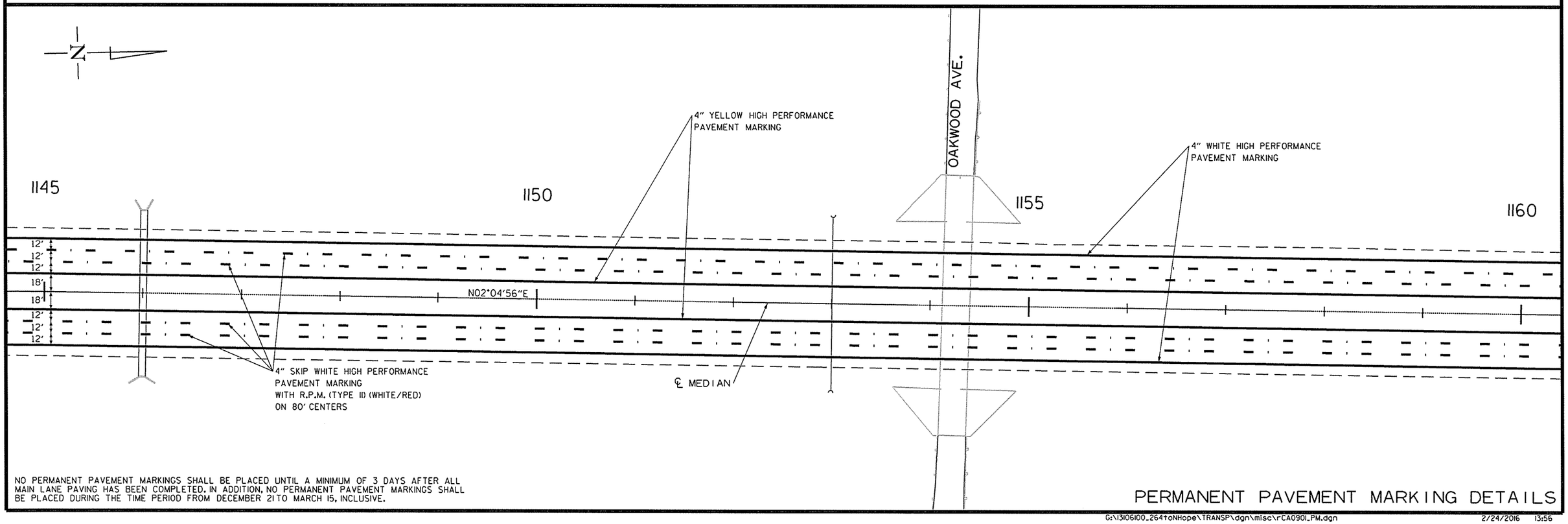

NO PERMANENT PAVEMENT MARKINGS SHALL BE PLACED UNTIL A MINIMUM OF 3 DAYS AFTER ALL MAIN LANE PAVING HAS BEEN COMPLETED. IN ADDITION, NO PERMANENT PAVEMENT MARKINGS SHALL BE PLACED DURING THE TIME PERIOD FROM DECEMBER 21 TO MARCH 15, INCLUSIVE.

PERMANENT PAVEMENT MARKING DETAILS

USER: at5106
DESIGN FILE: G:\13106100_264toNHope\TRANSP\dgn\misc\rCA0901_PM.dgn
PLOTTED: 2/24/2016 13:56
SCALE: 100:1
MODEL: PPM SHEETS

Crafton Tull
architecture | engineering | surveying

DATE REVISED	DATE FILMED	DATE REVISED	DATE FILMED

FED.RD. DIST.NO.	STATE	FED.AID PROJ.NO.	SHEET NO.	TOTAL SHEETS
6	ARK.			
JOB NO.		CA0901	71	452

(2) PERMANENT PAVEMENT MARKING DETAILS

STATE OF ARKANSAS
REGISTERED PROFESSIONAL ENGINEER
No. 15560
3-03-16
JEROME PAUL DAVIS

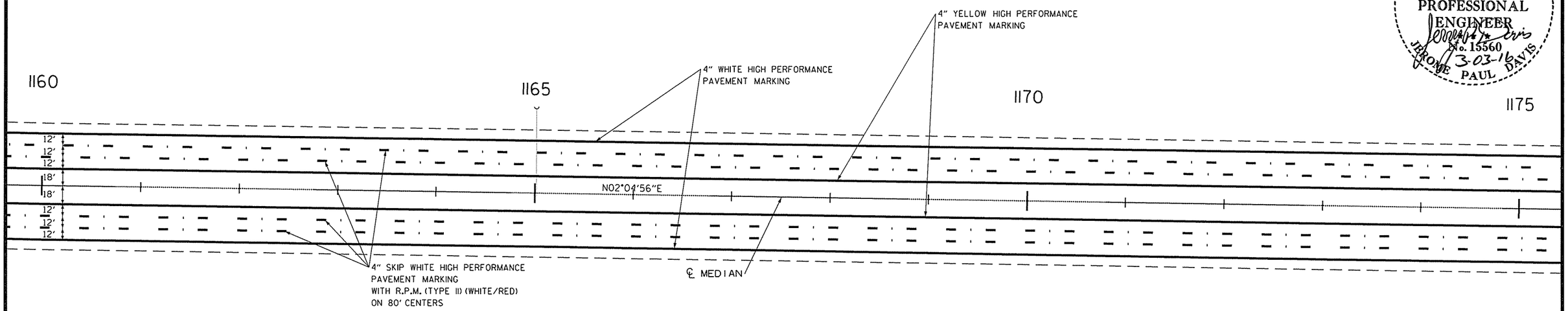

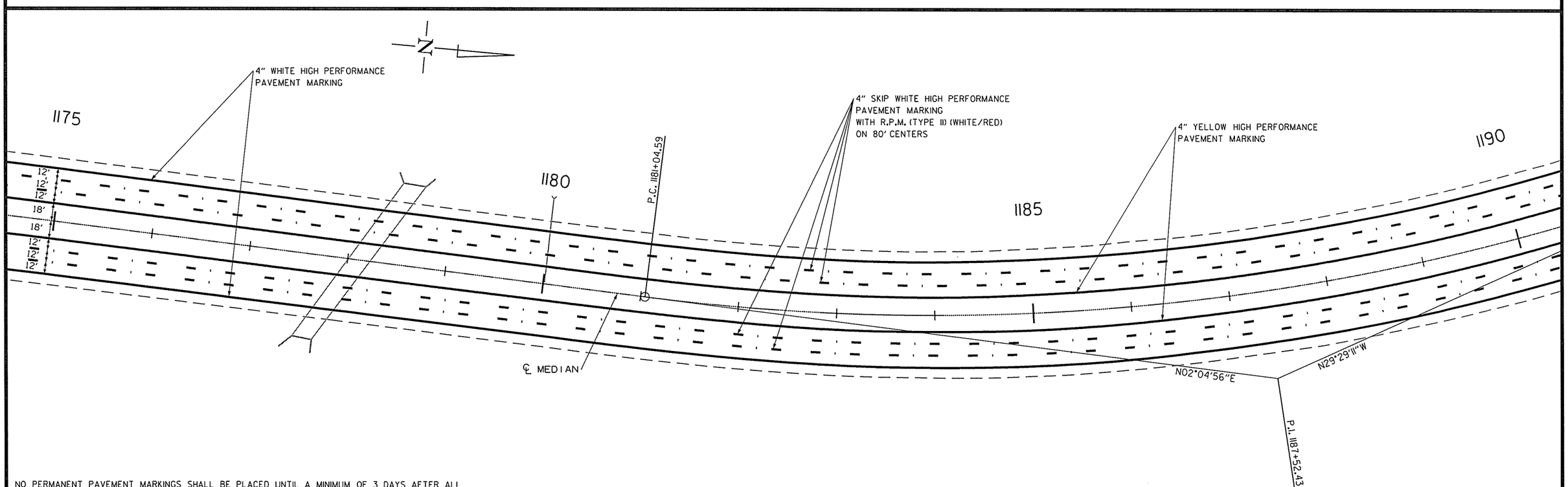

NO PERMANENT PAVEMENT MARKINGS SHALL BE PLACED UNTIL A MINIMUM OF 3 DAYS AFTER ALL MAIN LANE PAVING HAS BEEN COMPLETED. IN ADDITION, NO PERMANENT PAVEMENT MARKINGS SHALL BE PLACED DURING THE TIME PERIOD FROM DECEMBER 21 TO MARCH 15, INCLUSIVE.

PERMANENT PAVEMENT MARKING DETAILS

USER: at5106
DESIGN FILE: G:\13106100_264toNHope\TRANSP\dgn\misc\rCA0901_PM.dgn
PLOTTED: 2/24/2016 12:20
SCALE: 100:1
MODEL: PPM SHEETS

Crafton Tull
architecture | engineering | surveying

DATE REVISED	DATE FILMED	DATE REVISED	DATE FILMED

FED.RD. DIST.NO.	STATE	FED.AID PROJ.NO.	SHEET NO.	TOTAL SHEETS
6	ARK.			
JOB NO.		CA0901	72	452

(2) PERMANENT PAVEMENT MARKING DETAILS

STATE OF ARKANSAS
REGISTERED PROFESSIONAL ENGINEER
No. 15560
3-03-16
JEROME PAUL DAVIS

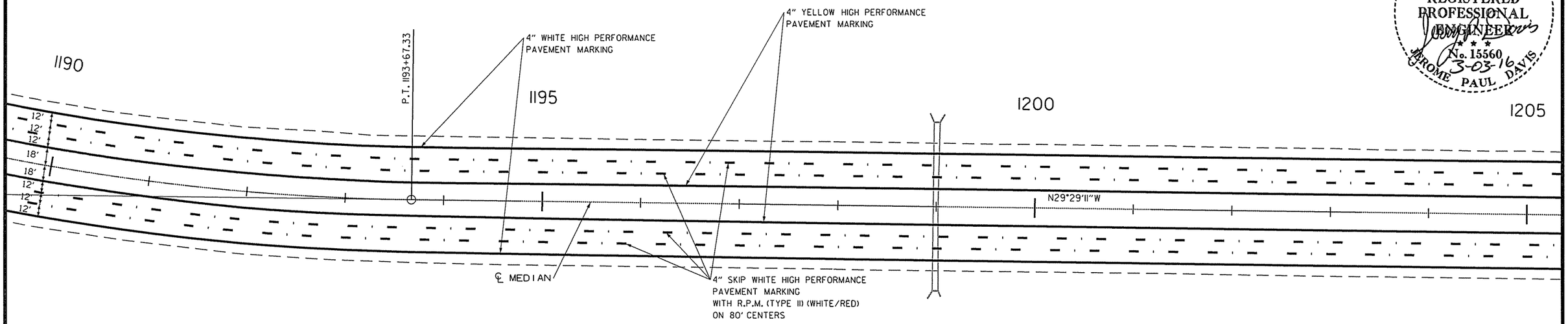

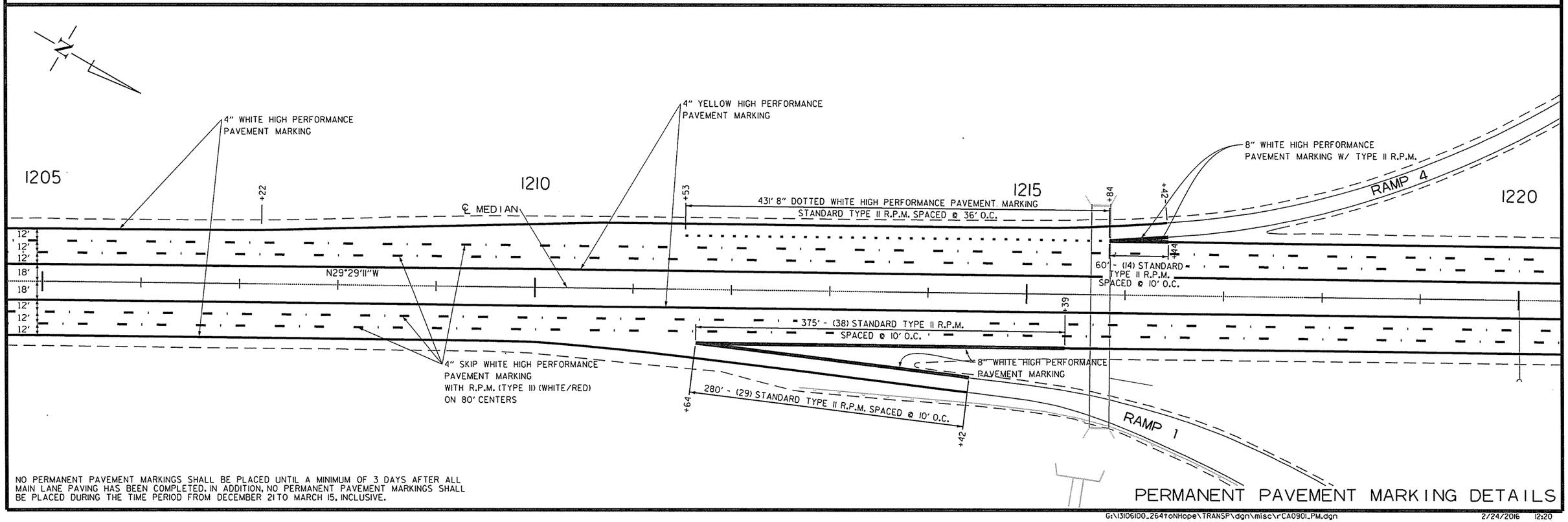

NO PERMANENT PAVEMENT MARKINGS SHALL BE PLACED UNTIL A MINIMUM OF 3 DAYS AFTER ALL MAIN LANE PAVING HAS BEEN COMPLETED. IN ADDITION, NO PERMANENT PAVEMENT MARKINGS SHALL BE PLACED DURING THE TIME PERIOD FROM DECEMBER 21 TO MARCH 15, INCLUSIVE.

PERMANENT PAVEMENT MARKING DETAILS

USER: at5106
DESIGN FILE: G:\13106100_264toNHope\TRANSP\dgn\misc\rCA0901_PM.dgn
PLOTTED: 2/24/2016 12:20
MODEL: PPM SHEETS
SCALE: 100:1

Crafton Tull
architecture | engineering | surveying

DATE REVISED	DATE FILMED	DATE REVISED	DATE FILMED

FED.RD. DIST.NO.	STATE	FED.AID PROJ.NO.	SHEET NO.	TOTAL SHEETS
6	ARK.			
JOB NO.		CA0901	73	452

PERMANENT PAVEMENT MARKING DETAILS

STATE OF ARKANSAS
REGISTERED PROFESSIONAL ENGINEER
No. 15560
JEROME PAUL DAVIS
3-03-16

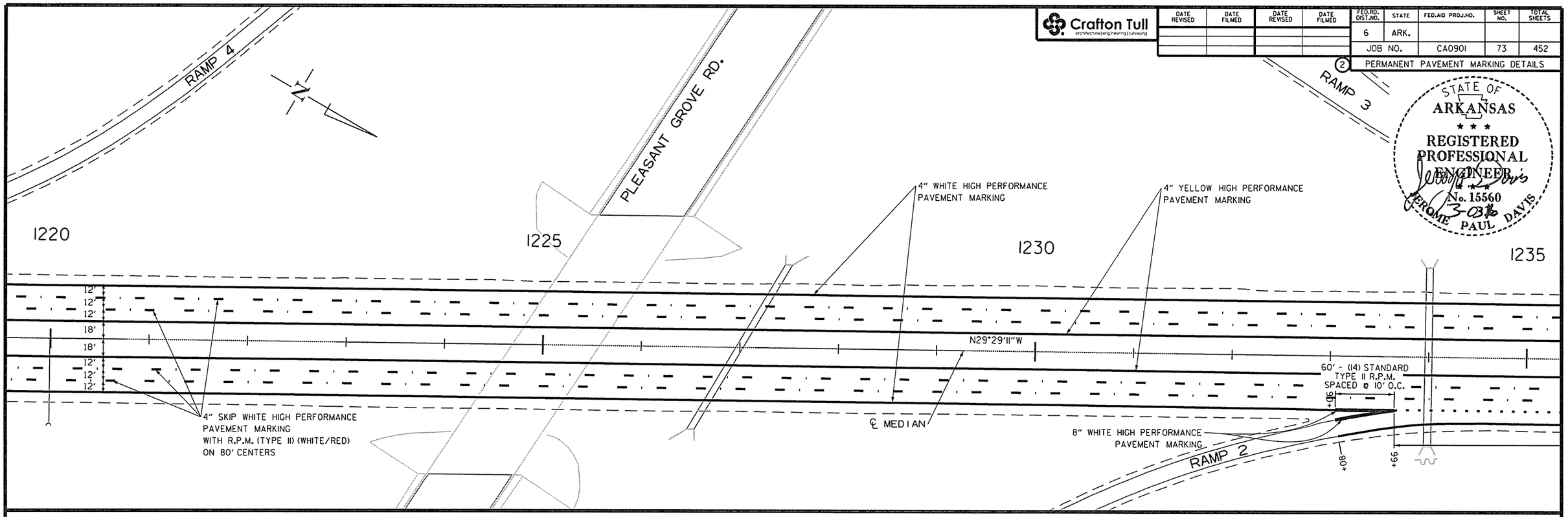

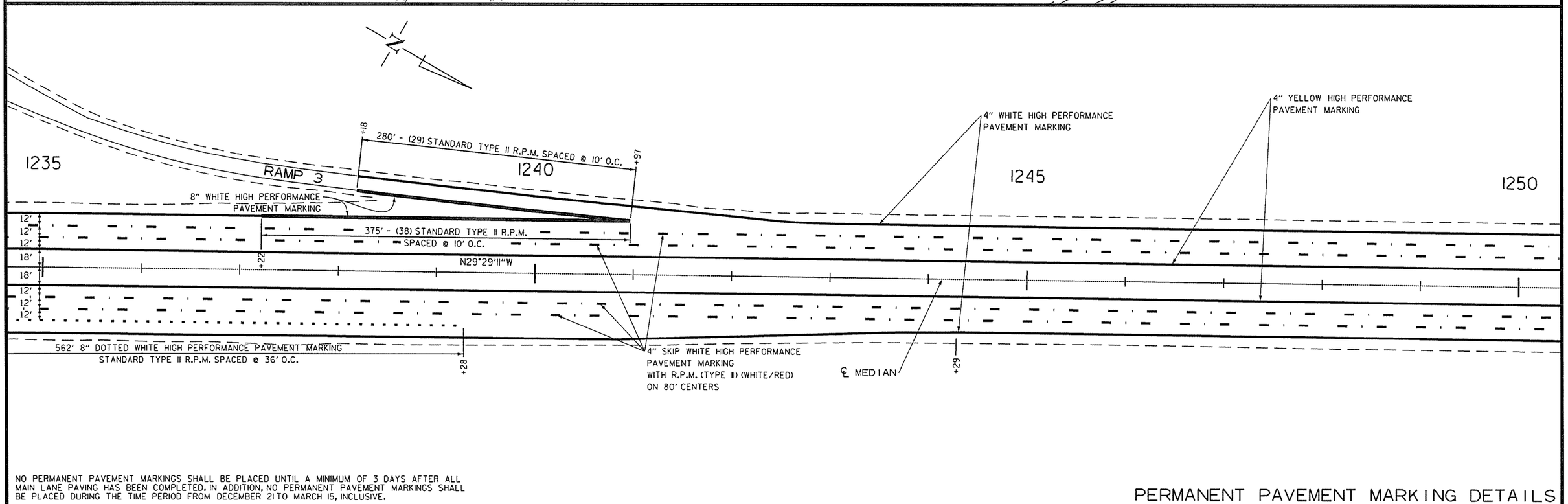

NO PERMANENT PAVEMENT MARKINGS SHALL BE PLACED UNTIL A MINIMUM OF 3 DAYS AFTER ALL MAIN LANE PAVING HAS BEEN COMPLETED. IN ADDITION, NO PERMANENT PAVEMENT MARKINGS SHALL BE PLACED DURING THE TIME PERIOD FROM DECEMBER 21 TO MARCH 15, INCLUSIVE.

PERMANENT PAVEMENT MARKING DETAILS

Crafton Tull
architecture | engineering | surveying

DATE REVISED	DATE FILMED	DATE REVISED	DATE FILMED

FED.RD. DIST.NO.	STATE	FED.AID PROJ.NO.	SHEET NO.	TOTAL SHEETS
6	ARK.			
JOB NO.		CA0901	74	452

(2) PERMANENT PAVEMENT MARKING DETAILS

STATE OF ARKANSAS
REGISTERED PROFESSIONAL ENGINEER
No. 15560
JEROME PAUL DAVIS
3-03-16

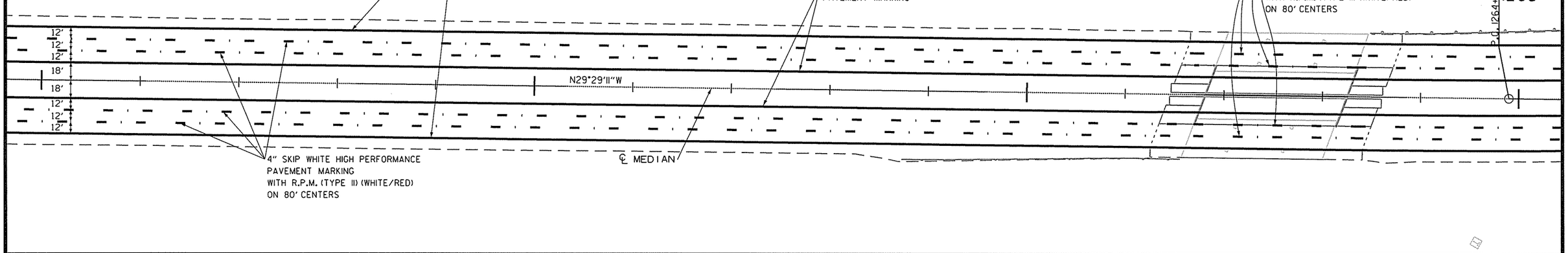

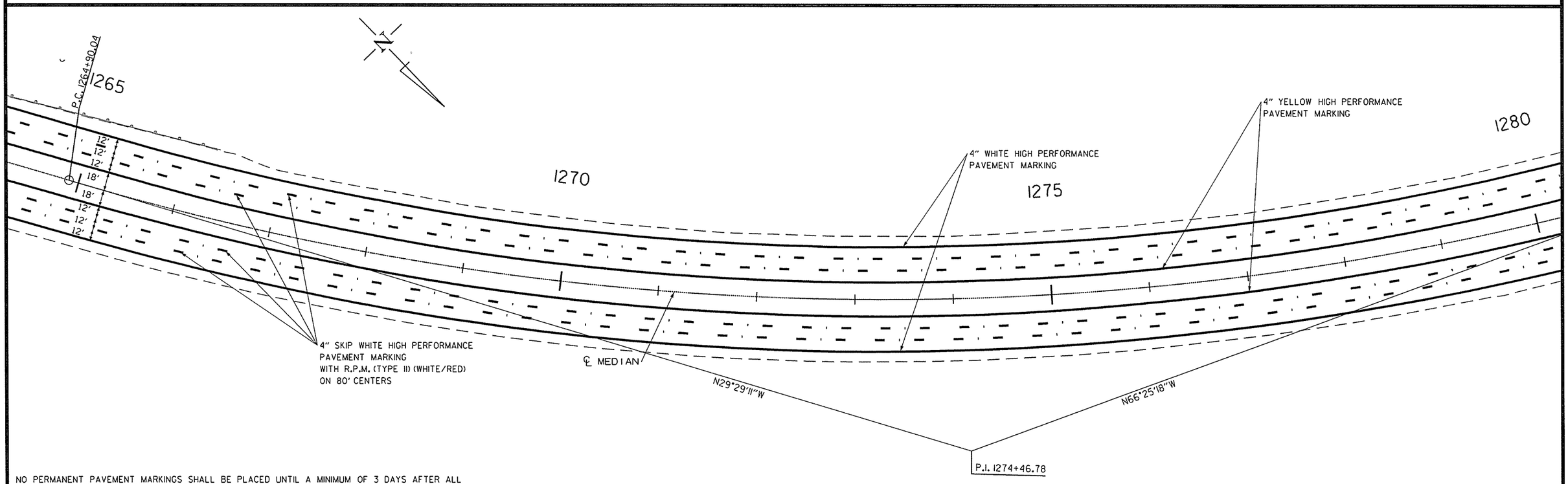

NO PERMANENT PAVEMENT MARKINGS SHALL BE PLACED UNTIL A MINIMUM OF 3 DAYS AFTER ALL MAIN LANE PAVING HAS BEEN COMPLETED. IN ADDITION, NO PERMANENT PAVEMENT MARKINGS SHALL BE PLACED DURING THE TIME PERIOD FROM DECEMBER 21 TO MARCH 15, INCLUSIVE.

PERMANENT PAVEMENT MARKING DETAILS

USER: at5106
DESIGN FILE: G:\13106100_264toNHope\TRANSP\dgn\misc\rCA0901_PM.dgn
PLOTTED: 2/24/2016 12:21
SCALE: 100:1
MODEL: PPM SHEETS

Crafton Tull
architecture | engineering | surveying

DATE REVISED	DATE FILMED	DATE REVISED	DATE FILMED

FED.RD. DIST.NO.	STATE	FED.AID PROJ.NO.	SHEET NO.	TOTAL SHEETS
6	ARK.			
JOB NO.		CA0901	75	452

2 PERMANENT PAVEMENT MARKING DETAILS

STATE OF ARKANSAS
REGISTERED PROFESSIONAL ENGINEER
No. 15560
3-03-16
JEROME PAUL DAVIS

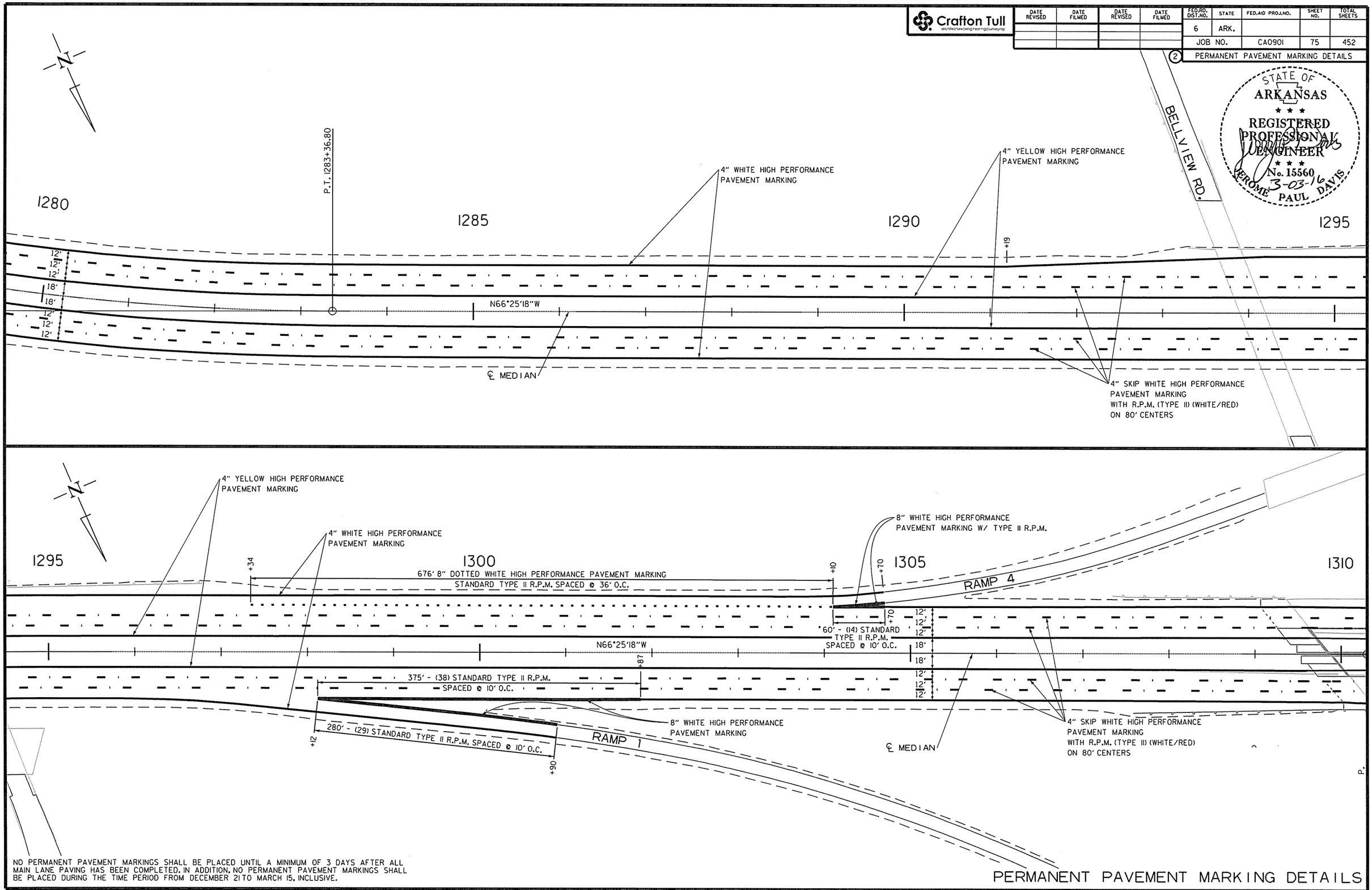

NO PERMANENT PAVEMENT MARKINGS SHALL BE PLACED UNTIL A MINIMUM OF 3 DAYS AFTER ALL MAIN LANE PAVING HAS BEEN COMPLETED. IN ADDITION, NO PERMANENT PAVEMENT MARKINGS SHALL BE PLACED DURING THE TIME PERIOD FROM DECEMBER 21 TO MARCH 15, INCLUSIVE.

PERMANENT PAVEMENT MARKING DETAILS

USER: ar5106
DESIGN FILE: G:\13106100_264toNHope\TRANSP\dgn\misc\rCA0901_PM.dgn
PLOTTED: 2/24/2016 12:21
SCALE: 100:1
MODEL: PPM SHEETS

Crafton Tull
architecture | engineering | surveying

DATE REVISED	DATE FILMED	DATE REVISED	DATE FILMED

FED.RD. DIST.NO.	STATE	FED.AID PROJ.NO.	SHEET NO.	TOTAL SHEETS
6	ARK.			
JOB NO.		CA0901	76	452

(2) PERMANENT PAVEMENT MARKING DETAILS

STATE OF ARKANSAS
REGISTERED PROFESSIONAL ENGINEER
No. 15560
3-03-16
JEROME PAUL DAVIS

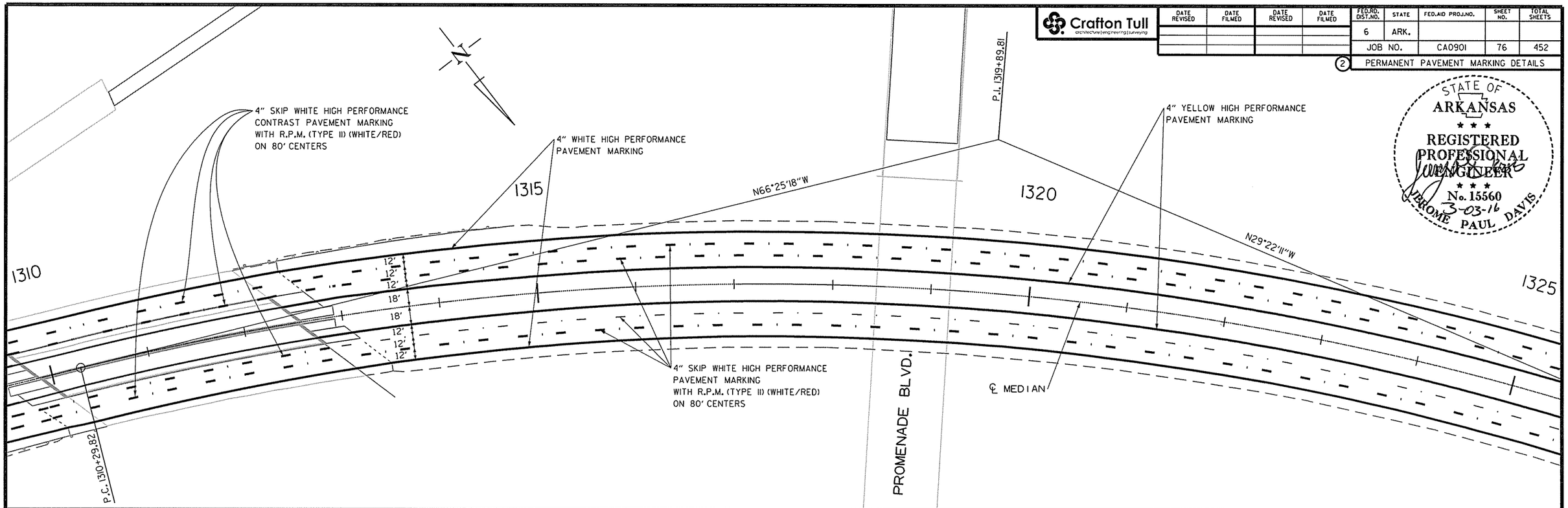

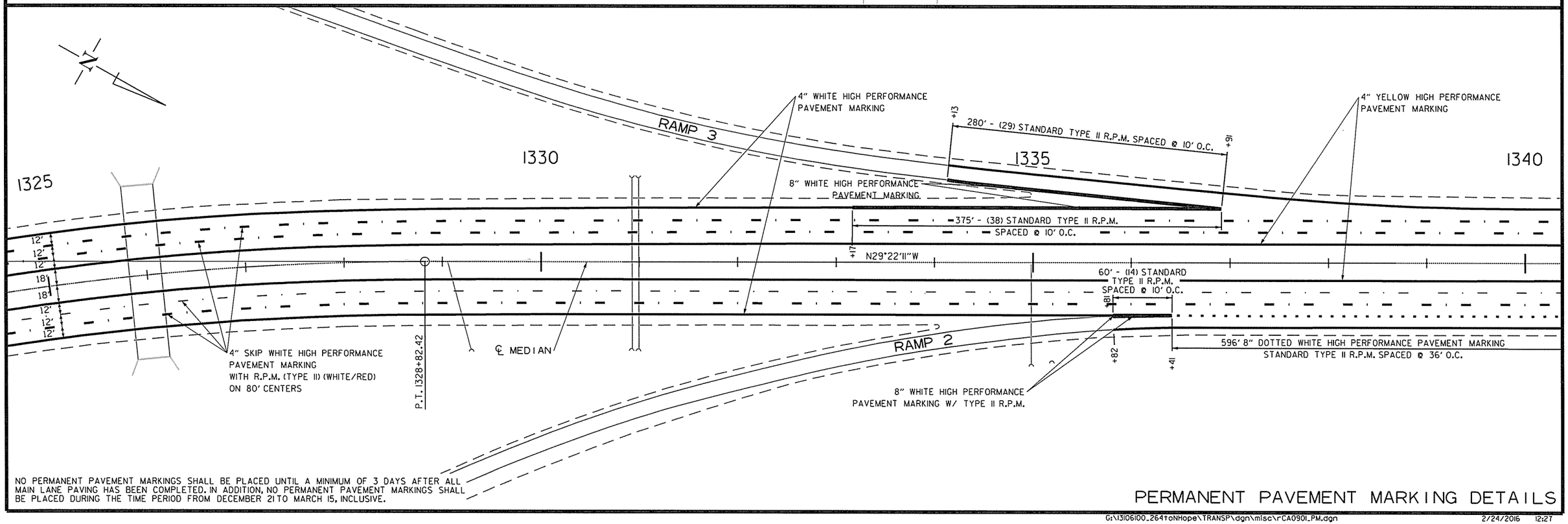

NO PERMANENT PAVEMENT MARKINGS SHALL BE PLACED UNTIL A MINIMUM OF 3 DAYS AFTER ALL MAIN LANE PAVING HAS BEEN COMPLETED. IN ADDITION, NO PERMANENT PAVEMENT MARKINGS SHALL BE PLACED DURING THE TIME PERIOD FROM DECEMBER 21 TO MARCH 15, INCLUSIVE.

PERMANENT PAVEMENT MARKING DETAILS

USER: at5106
DESIGN FILE: G:\13106100_264toNHope\TRANSP\dgn\misc\rCA0901_PM.dgn
PLOTTED: 2/24/2016 12:27
MODEL: PPM SHEETS
SCALE: 100:1

Crafton Tull
architecture | engineering | surveying

DATE REVISED	DATE FILMED	DATE REVISED	DATE FILMED

FED.RD. DIST.NO.	STATE	FED.AID PROJ.NO.	SHEET NO.	TOTAL SHEETS
6	ARK.			
JOB NO.		CA0901	77	452

(2) PERMANENT PAVEMENT MARKING DETAILS

STATE OF ARKANSAS
REGISTERED PROFESSIONAL ENGINEER
No. 15560
3-03-16
JEROME PAUL DAVIS

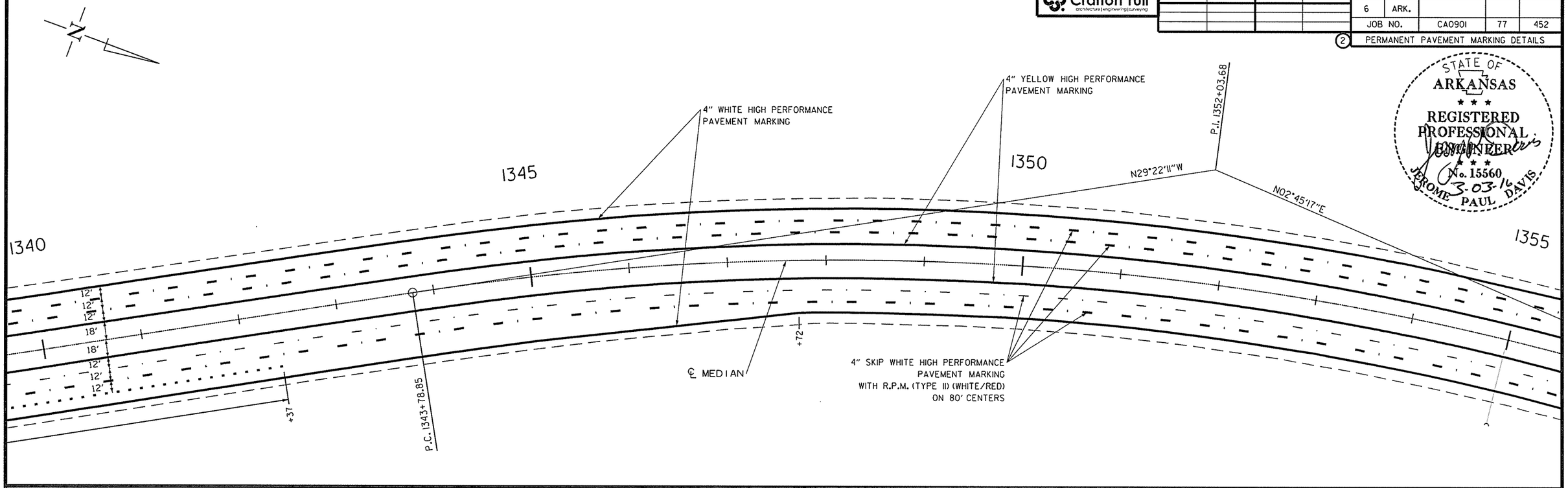

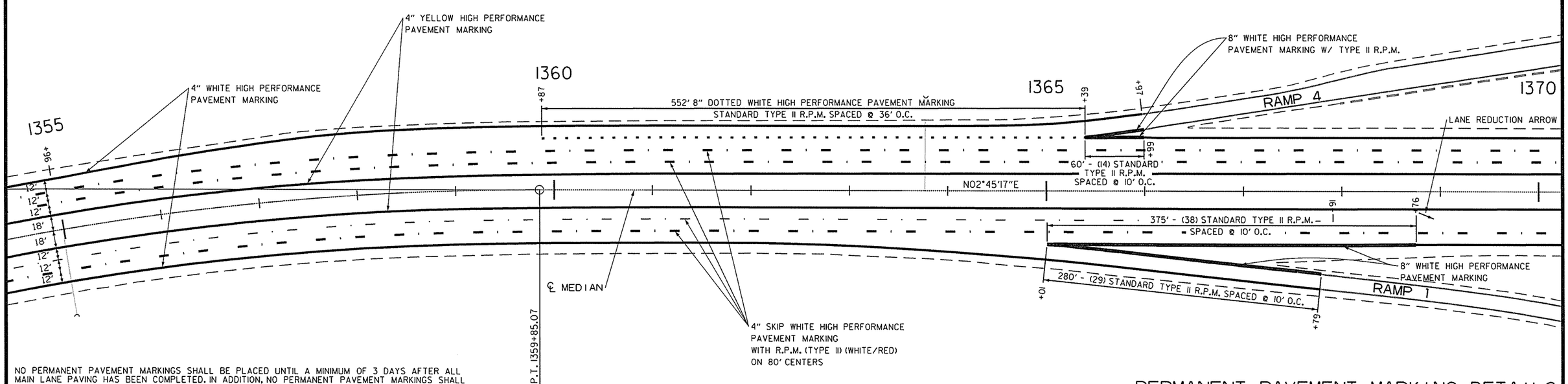

NO PERMANENT PAVEMENT MARKINGS SHALL BE PLACED UNTIL A MINIMUM OF 3 DAYS AFTER ALL MAIN LANE PAVING HAS BEEN COMPLETED. IN ADDITION, NO PERMANENT PAVEMENT MARKINGS SHALL BE PLACED DURING THE TIME PERIOD FROM DECEMBER 21 TO MARCH 15, INCLUSIVE.

PERMANENT PAVEMENT MARKING DETAILS

Crafton Tull
architecture | engineering | surveying

DATE REVISED	DATE FILMED	DATE REVISED	DATE FILMED
06/09/16			

FED.RD. DIST.NO.	STATE	FED.AID PROJ.NO.	SHEET NO.	TOTAL SHEETS
6	ARK.			
JOB NO.		CA0901	78	452

(2) PERMANENT PAVEMENT MARKING DETAILS

STATE OF ARKANSAS
REGISTERED PROFESSIONAL ENGINEER
No. 15560
JEROME PAUL DAVIS
6/9/16

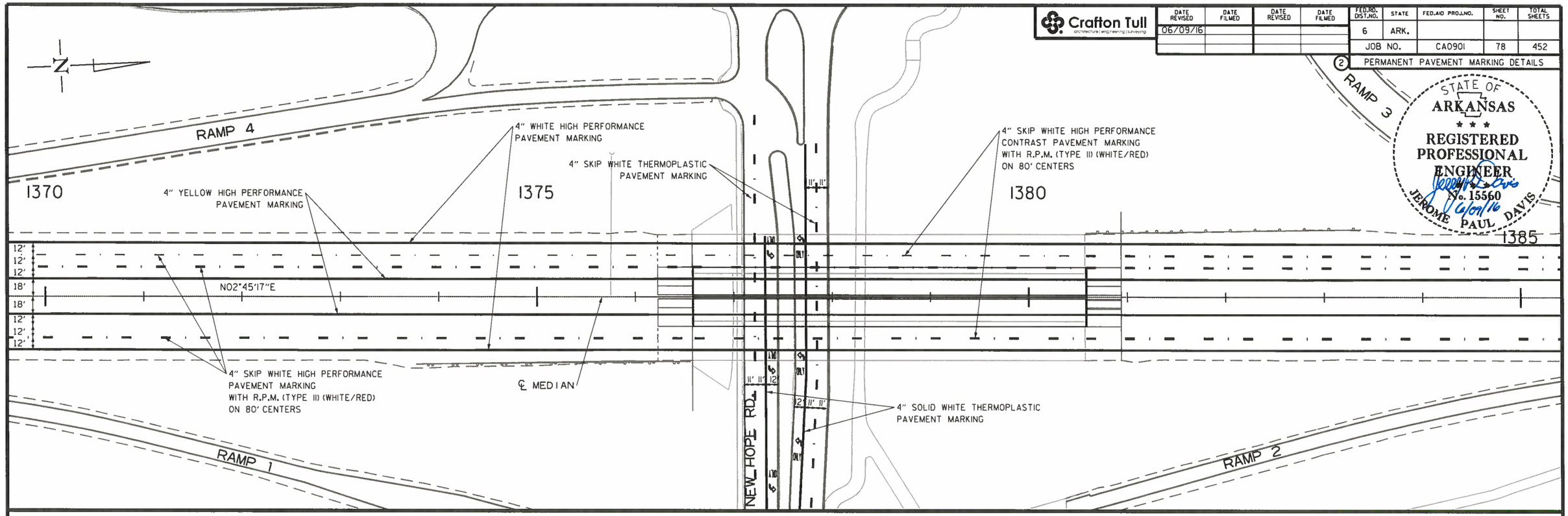

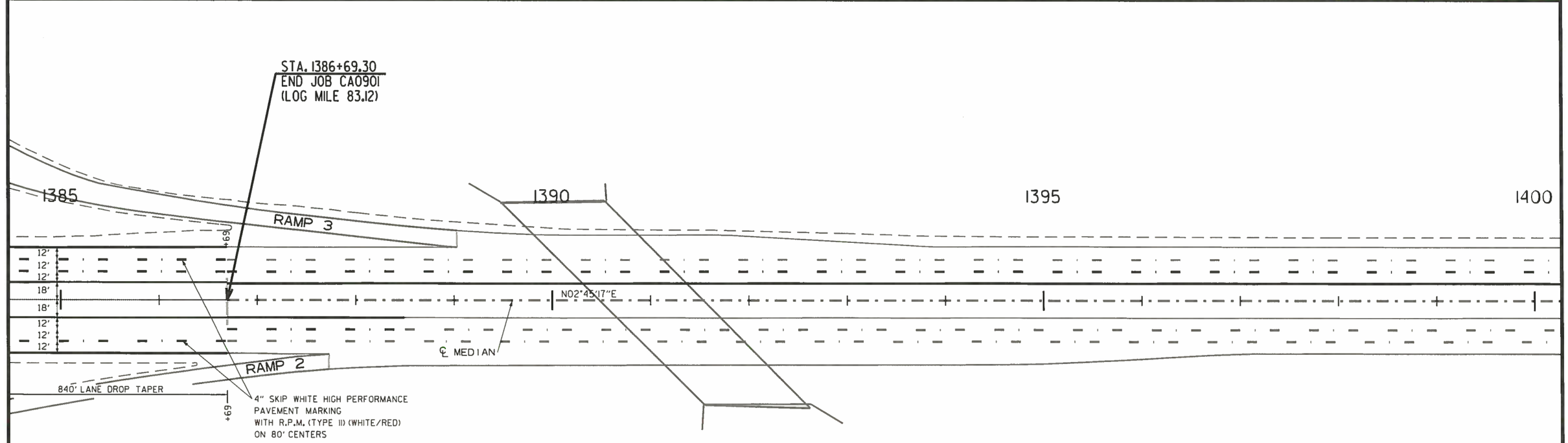

NO PERMANENT PAVEMENT MARKINGS SHALL BE PLACED UNTIL A MINIMUM OF 3 DAYS AFTER ALL MAIN LANE PAVING HAS BEEN COMPLETED. IN ADDITION, NO PERMANENT PAVEMENT MARKINGS SHALL BE PLACED DURING THE TIME PERIOD FROM DECEMBER 21 TO MARCH 15, INCLUSIVE.

PERMANENT PAVEMENT MARKING DETAILS

USER: ddsl09
DESIGN FILE: G:\13106100_264toNHope\TRANSP\dgn\misc\rCA0901_PM.dgn
PLOTTED: 6/9/2016 16:11
SCALE: 100:1
MODEL: PPM SHEETS

Crafton Tull
architecture | engineering | surveying

DATE REVISED	DATE FILMED	DATE REVISED	DATE FILMED

FED.RD. DIST.NO.	STATE	FED.AID PROJ.NO.	SHEET NO.	TOTAL SHEETS
6	ARK.			
JOB NO.		CA0901	79	452

(2) PERMANENT PAVEMENT MARKING DETAILS

STATE OF ARKANSAS
REGISTERED PROFESSIONAL ENGINEER
No. 15560
3-03-16
JEROME PAUL DAVIS

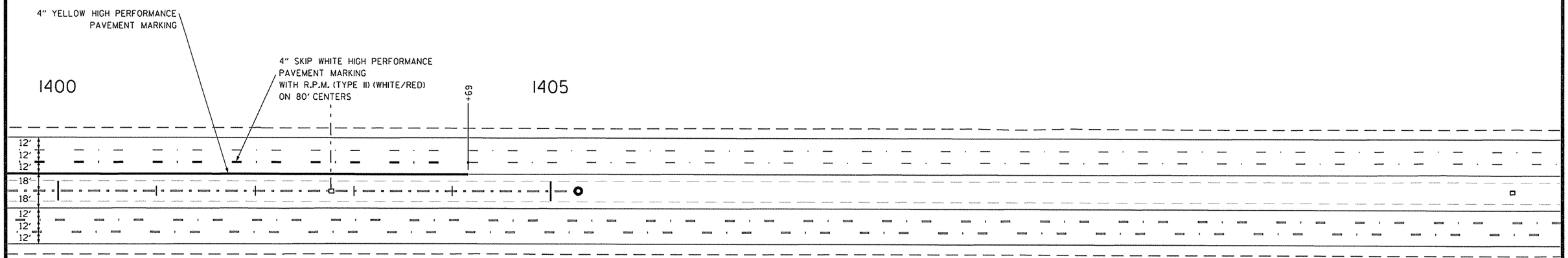

NO PERMANENT PAVEMENT MARKINGS SHALL BE PLACED UNTIL A MINIMUM OF 3 DAYS AFTER ALL MAIN LANE PAVING HAS BEEN COMPLETED. IN ADDITION, NO PERMANENT PAVEMENT MARKINGS SHALL BE PLACED DURING THE TIME PERIOD FROM DECEMBER 21 TO MARCH 15, INCLUSIVE.

PERMANENT PAVEMENT MARKING DETAILS

STATE OF ARKANSAS
REGISTERED PROFESSIONAL ENGINEER
No. 15560
6-09-16
JEROME PAUL DAVIS

ADVANCE WARNING SIGNS AND DEVICES

SIGN NUMBER	DESCRIPTION	SIGN SIZE	STAGE 1	STAGE 2	MAXIMUM NUMBER REQUIRED	TOTAL SIGNS REQUIRED		TRAFFIC DRUMS	FURNISHING AND INSTALLING PRECAST CONCRETE BARRIER	TEMPORARY IMPACT ATTENUATION BARRIER	TEMPORARY IMPACT ATTENUATION BARRIER (REPAIR)	ADVANCE WARNING ARROW PANEL	PORTABLE CHANGEABLE MESSAGE SIGN
						NO.	SQ. FT.	EACH	LIN.FT.	EACH		DAY	WEEK
W20-5	RIGHT LANE CLOSED 1 MILE	48" x 48"	4		4	4	64.0						
R4-1	DO NOT PASS	48" x 60"	4		4	4	80.0						
W20-5	RIGHT LANE CLOSED 1/2 MILE	48" x 48"	4		4	4	64.0						
W20-5	RIGHT LANE CLOSED 1500 FEET	48" x 48"	4		4	4	64.0						
W20-1	ROAD WORK 1 MILE	48" x 48"	4	4	4	4	64.0						
R55-1	FINES DOUBLE IN WORK ZONES	36" x 60"	4	4	4	4	60.0						
W20-1	ROAD WORK 1/2 MILE	48" x 48"	4	4	4	4	64.0						
R2-5A	REDUCED SPEED AHEAD	48" x 60"	8	4	8	8	160.0						
RSP-1	SHOULDER CLOSED	48" x 30"	1		1	1	80.0						
W20-1	ROAD WORK 1500 FT.	48" x 48"	4	4	4	4	64.0						
R2-1	SPEED LIMIT 60 MPH	48" x 60"	12	8	12	12	240.0						
G20-1	ROAD WORK NEXT xx MILES	60" x 24"	2	2	2	2	20.0						
W20-1	ROAD WORK AHEAD	48" x 24"	9	9	9	9	72.0						
G20-2	END ROAD WORK	48" x 24"	15	15	15	15	120.0						
R2-1	SPEED LIMIT 70 MPH	48" x 60"	8	4	8	8	160.0						
R3-6 L	OPTIONAL MOVEMENT	30" x 36"	2		2	2	15.0						
R9-9	SIDEWALK CLOSED	24" x 12"	2		2	2	4.0						
SPECIAL 1	MERGE NOW + ARROW	48" x 48"	2	2	2	2	32.0						
W4-2 R	LANE ENDS	48" x 48"	4		4	4	64.0						
W1-6 L	LARGE ARROW	60" x 30"	12	2	12	12	150.0						
	TRAFFIC DRUMS		627	1212	1212			1212					
	FURNISHING AND INSTALLING PRECAST CONCRETE BARRIER		57653		57653				57653				
	TEMPORARY IMPACT ATTENUATION BARRIER		2		2					2			
	TEMPORARY IMPACT ATTENUATION BARRIER (REPAIR)		2		2						2		
	ADVANCE WARNING ARROW PANEL		2	2	2							200	
	PORTABLE CHANGEABLE MESSAGE SIGN		4	4	4								285
	*TEMPORARY IMPACT ATTENUATION BARRIER		4		4					4			
	*TEMPORARY IMPACT ATTENUATION BARRIER (REPAIR)		4		4						4		
TOTALS:							**1641.0**	**1212**	**57653**	**6**	**6**	**200**	**285**

NOTE: THIS IS A HIGH TRAFFIC VOLUME ROAD AS DEFINED IN SECTION 604.03, STANDARD SPECIFICATIONS FOR HIGHWAY CONSTRUCTION, 2014 EDITION.
* TO BE USED IF AND WHERE DIRECTED BY THE ENGINEER.
* QUANTITIES ESTIMATED. SEE SECTION 104.03 OF THE STANDARD SPECIFICATIONS.
NOTE: THE QUANTITY OF TRAFFIC DRUMS PROVIDED IS FOR BOTH SIDES OF THE ROADWAY FOR THE FULL LENGTH OF THE JOB. HOWEVER, THE INSTALLATION OF TRAFFIC DRUMS SHALL NEVER EXCEED THE ACTUAL WORK AREA BY MORE THAN 1/4 MILE, UNLESS APPROVED BY THE ENGINEER.

CONSTRUCTION PAVEMENT MARKINGS AND PERMANENT PAVEMENT MARKINGS

DESCRIPTION	REMOVAL OF PERMANENT PAVEMENT MARKINGS	CONSTRUCTION PAVEMENT MARKINGS	RAISED PAVEMENT MARKERS	HIGH PERFORMANCE CONTRAST PAVEMENT MARKING	HIGH PERFORMANCE PAVEMENT MARKING				THERMOPLASTIC PAVEMENT MARKING		
				4"	4"			8"	4"		
			TY. II (WHITE/RED)	WHITE	WHITE BIM-B49-0(219)	WHITE SKIP	YELLOW	WHITE BIM-B49-0(219)	WHITE	WORDS	ARROWS
	LIN. FT.		EACH	LIN.FT.	LIN. FT.					EACH	
REMOVAL OF PERMANENT PAVEMENT MARKINGS	17829										
CONSTRUCTION PAVEMENT MARKINGS		77626							942		
RAISED PAVEMENT MARKERS TYPE II (WHITE/RED)			2049								
HIGH PERFORMANCE CONTRAST MARKING TAPE WHITE (4")				1027							
HIGH PERFORMANCE MARKING TAPE WHITE (4")					54944						
HIGH PERFORMANCE MARKING TAPE WHITE SKIP (4")						27348					
HIGH PERFORMANCE MARKING TAPE YELLOW (4")							57379				
HIGH PERFORMANCE MARKING TAPE WHITE (8")								5779			
THERMOPLASTIC PAVEMENT MARKING WHITE (4")											
THERMOPLASTIC PAVEMENT MARKING (WORDS)										6	
THERMOPLASTIC PAVEMENT MARKING (ARROWS)											6
TOTALS:	**17829**	**77626**	**2049**	**1027**	**54944**	**27348**	**57379**	**5779**	**942**	**6**	**6**

NOTE: THIS IS A HIGH TRAFFIC VOLUME ROAD AS DEFINED IN SECTION 604.03, STANDARD SPECIFICATIONS FOR HIGHWAY CONSTRUCTION, 2014 EDITION.

NO PERMANENT PAVEMENT MARKINGS SHALL BE PLACED UNTIL A MINIMUM OF 3 DAYS AFTER ALL MAIN LANE PAVING HAS BEEN COMPLETED. IN ADDITION, NO PERMANENT PAVEMENT MARKINGS SHALL BE PLACED DURING THE TIME PERIOD FROM DECEMBER 21 TO MARCH 15, INCLUSIVE.

STATE OF ARKANSAS
REGISTERED PROFESSIONAL ENGINEER
No. 15560
3-03-16
JEROME PAUL DAVIS

EROSION CONTROL

STATION	STATION	LOCATION	PERMANENT EROSION CONTROL					TEMPORARY EROSION CONTROL							
			SEEDING	LIME	MULCH COVER	WATER	SECOND SEEDING APPLICATION	TEMPORARY SEEDING	MULCH COVER	WATER	SAND BAG DITCH CHECKS	ROCK DITCH CHECKS	DROP INLET SILT FENCE	SILT FENCE	SEDIMENT REMOVAL AND DISPOSAL
											(E-5)	(E-6)	(E-7)	(E-11)	
			ACRE	TON	ACRE	M. GAL.	ACRE	ACRE	ACRE	M. GAL.	BAG	CU. YD.	LIN.FT.	LIN.FT.	CU. YD.
1108+78.59	1130+00	I-49 - C.L. MEDIAN									132	15	252		42
1130+00	1160+00	I-49 - C.L. MEDIAN & SB LEFT									220	24	450		69
1160+00	1190+00	I-49 - C.L. MEDIAN & PONDS ON LT.									242	36	468	1825	162
1190+00	1220+00	I-49 - C.L. MEDIAN & PONDS ON LT.									286	27	684	1045	129
1220+00	1250+00	I-49 - C.L. MEDIAN & PONDS ON LT. & RT.									220	27	558	1035	119
1250+00	1280+00	I-49 - C.L. MEDIAN & POND RT.									198	21	252	841	89
1280+00	1310+00	I-49 - C.L. MEDIAN									154	24	324		59
1310+00	1340+00	I-49 - C.L. MEDIAN									154	21	180	130	54
1340+00	1370+00	I-49 - C.L. MEDIAN									176	21	198		51
1370+00	1386+69.30	I-49 - C.L. MEDIAN									66	12	72	100	29
ENTIRE	PROJECT	I-49 - C.L. MEDIAN	11.83	24	11.83	1206.7	11.83	16.67	16.67	340.1					
* ENTIRE PROJECT AS DIRECTED BY THE ENGINEER			4.00	8	4.00	408.0	4.00	6.00	6.00	122.4			900	1742	281
TOTALS:			**15.83**	**32**	**15.83**	**1614.7**	**15.83**	**22.67**	**22.67**	**462.5**	**1848**	**228**	**4338**	**6718**	**1084**

BASIS OF ESTIMATE:
LIME.....2 TONS / ACRE OF SEEDING
WATER.....102.0 M.G./ACRE OF SEEDING
WATER.....20.4 M.G./ACRE OF TEMPORARY SEEDING
SAND BAG DITCH CHECKS.....22 BAGS / LOCATION
DROP INLET SILT FENCE.....18 LIN.FT./LOCATION
ROCK DITCH CHECKS.....3 CU. YDS. PER DITCH CHECK

NOTE: TEMPORARY EROSION CONTROL DEVICES SHOWN ABOVE AND ON THE PLANS SHALL BE INSTALLED IN SUCH A SEQUENCE AS TO DETER EROSION AND SEDIMENTATION OF U.S. WATERWAYS AS EXPLAINED BY THE NATIONAL POLLUTANT DISCHARGE ELIMINATION SYSTEM PERMIT.

*QUANTITIES ESTIMATED. SEE SECTION 104.03 OF THE STANDARD SPECIFICATIONS.

BENCH MARKS

STATION	DESCRIPTION	BENCH MARKS
		EACH
1262+50	BRIDGE END ON RT.	1
1311+50	BRIDGE END ON RT.	1
1378+50	BRIDGE END ON RT.	1
TOTAL:		**3**

NOTE: SHOWN FOR INFORMATION ONLY. BENCH MARKS SHALL BE FURNISHED AND PLACED BY STATE FORCES.

SELECTED PIPE BEDDING

LOCATION	SELECTED PIPE BEDDING
	CU.YD.
ENTIRE PROJECT TO BE USED IF AND WHERE DIRECTED BY THE ENGINEER	600
TOTAL:	**600**

NOTE: QUANTITY ESTIMATED.
SEE SECTION 104.03 OF THE STANDARD SPECIFICATIONS.

REMOVAL AND DISPOSAL OF FENCE

STATION	STATION	LOCATION	LIN. FT.
1149+04	1154+22	LT. OF I-49	1169
1173+42	1175+41	LT. OF I-49	71
1181+78	1185+38	LT. OF I-49	289
1198+75	1202+25	LT. OF I-49	66
1210+29	1216+58	LT. OF I-49	483
1259+37	1260+21	RT. OF I-49	66
1261+72	1263+33	I-49 MEDIAN	83
1309+70	1310+04	I-49 MEDIAN	52
1312+38	1312+78	I-49 MEDIAN	112
1376+57	1376+58	I-49 MEDIAN	37
1380+57	1380+58	I-49 MEDIAN	37
TOTAL:			**2465**

REMOVAL AND DISPOSAL OF ITEMS

STATION	STATION	LOCATION	IMPACT ATTENUATION BARRIERS	*APPROACH SLAB AND GUTTERS	GUARDRAIL	CONCRETE DITCH PAVING	WIRE ROPE SAFETY FENCE	PLOWABLE PAVEMENT MARKERS	PIER PROTECTION	PIPE CULVERTS	DROP INLETS	SAFETY END SECTIONS	BUILDINGS
			EACH		LIN.FT.	SQ.YD.	LIN.FT.	EACH	LIN.FT.	EACH			
1108+79	1114+03	I-49 - C.L. MEDIAN	1			233	524						
1110+64	1116+18	I-49 - R.M.L. - LT.			554								
1108+79	1385+04	I-49 - L.M.L. & R.M.L.						691					
1112+97	1118+51	I-49 - L.M.L. - RT.			554								
1115+29	1153+36	I-49 - C.L. MEDIAN				1692	3807						
1153+39		I-49 - C.L. MEDIAN								1			
1153+87	1154+38	I-49 - C.L. MEDIAN	2										
1154+16	1154+38	I-49 - C.L. MEDIAN							44				
1154+79	1224+21	I-49 - C.L. MEDIAN				3085	6942						
1165+00		I-49 - C.L. MEDIAN									1		
1180+00		I-49 - C.L. MEDIAN									1		
1181+63		I-49 - LT.											1
1220+00		I-49 - C.L. MEDIAN									1		
1220+88	1226+92	I-49 - R.M.L. - LT.			604								
1223+35	1229+39	I-49 - L.M.L. - RT.			604								
1224+57	1225+83	I-49 - L.M.L. - RT.							252				
1226+09	1259+78	I-49 - C.L. MEDIAN				1497	3369						
1258+90	1261+60	I-49 - R.M.L. - LT.		1	270								
1261+00		I-49 - C.L. MEDIAN									1		
1263+44	1266+14	I-49 - L.M.L. - RT.		1	270								
1263+14	1263+49	I-49 - R.M.L. - LT.		1									
1263+38	1263+73	I-49 - L.M.L. - RT.		1									
1265+28	1293+05	I-49 - C.L. MEDIAN				1234	2777						
1273+00		I-49 - C.L. MEDIAN									1		
1293+08		I-49 - C.L. MEDIAN								1		2	
1293+66	1294+41	I-49 - C.L. MEDIAN							150				
1294+05		I-49 - C.L. MEDIAN	2										
1294+55	1308+12	I-49 - C.L. MEDIAN				603	1357						
1307+27	1309+97	I-49 - R.M.L. - LT.			270								
1309+24	1309+59	I-49 - L.M.L. - RT.		1									
1309+79	1310+14	I-49 - R.M.L. - LT.		1									
1312+45	1315+15	I-49 - L.M.L. - RT.		1	270								
1312+86	1313+21	I-49 - R.M.L. - LT.		1									
1314+66	1320+74	I-49 - R.M.L. - LT.			608								
1314+31	1317+88	I-49 - C.L. MEDIAN				159	357						
1319+87	1374+65	I-49 - C.L. MEDIAN				2435	5478						
1316+99	1322+99	I-49 - L.M.L. - RT.			600								
1318+38	1319+27	I-49 - C.L. MEDIAN							178				
1373+76	1376+46	I-49 - R.M.L. - LT.		1	270								
1376+23	1376+58	I-49 - L.M.L. - RT.		1									
1380+69	1383+37	I-49 - L.M.L. - RT.		1	268								
1380+59	1380+94	I-49 - R.M.L. - LT.		1									
1382+53	1386+69	I-49 - C.L. MEDIAN				185	416						
1385+69		I-49 - C.L. MEDIAN									1		
1386+69		I-49 - C.L. MEDIAN	1										
TOTALS:			**6**	**12**	**5142**	**11123**	**25027**	**691**	**624**	**2**	**6**	**2**	**1**

* REMOVE TO CUT LINE SHOWN ON BRIDGE PLANS.

QUANTITIES

Crafton Tull
architecture | engineering | surveying

DATE REVISED	DATE FILMED	DATE REVISED	DATE FILMED

FED.RD. DIST.NO.	STATE	FED.AID PROJ.NO.	SHEET NO.	TOTAL SHEETS
6	ARK.			
JOB NO.		CA0901	82	452

2 QUANTITIES

STATE OF ARKANSAS
REGISTERED PROFESSIONAL ENGINEER
No. 15560
3-03-16
JEROME PAUL DAVIS

STRUCTURES (BOX 1 OF 4)

STATION	DESCRIPTION	REINFORCED CONCRETE PIPE CULVERT								FLARED END SECTIONS FOR REINFORCED CONCRETE PIPE CULVERTS	FLARED END SECTIONS FOR REINFORCED CONCRETE PIPE CULVERTS	DROP INLETS				WATER	SOLID SODDING	MODIFYING DROP INLET	STD. DWG. NOS.
		CLASS III	CLASS III	CLASS IV	CLASS V (JACK AND BORE)	CLASS III	CLASS III	CLASS IV	CLASS V (JACK AND BORE)			TYPE ST		TYPE RM	TYPE RM MODIFIED				
		18"	24"			30"	36"			24"	36"	4' X 4'	4' X 6'	5' X 5'	4' X 3'				
		LIN. FT.										EACH				M. GAL.	SQ. YD.	EACH	
1108+96.59	MODIFY D.I. ON CL.																	1	PCC-1, FPC-9S
1109+10	CONST. D.I. ON LT. W/ PIPE CULVERT		10									1							
1109+10	CONST. D.I. ON RT. W/ PIPE CULVERT		2									1							PCC-1, FPC-9S
1113+71	MODIFY D.I. ON CL.																	1	FPC-9S
1113+85	CONST. D.I. ON LT. W/ PIPE CULVERT			12									1						PCC-1, FPC-9S
1113+85	CONST. D.I. ON RT. W/ PIPE CULVERT			6									1						PCC-1, FPC-9S
1116+85	CONST. D.I. ON LT. W/ PIPE CULVERT		296										1						PCC-1, FPC-9S
1116+85	CONST. D.I. ON RT. W/ PIPE CULVERT		2										1						PCC-1, FPC-9S
1119+85	CONST. D.I. ON LT. W/ PIPE CULVERT		296									1							PCC-1, FPC-9S
1119+85	CONST. D.I. ON RT. W/ PIPE CULVERT		2									1							PCC-1, FPC-9S
1122+85	CONST. D.I. ON LT. W/ PIPE CULVERT		296										1						PCC-1, FPC-9S
1122+85	CONST. D.I. ON RT. W/ PIPE CULVERT		2										1						PCC-1, FPC-9S
1125+85	MODIFY D.I. ON CL.																	1	FPC-9S
1126+15	CONST. D.I. ON LT. W/ PIPE CULVERT		24										1						PCC-1, FPC-9S
1126+15	CONST. D.I. ON RT. W/ PIPE CULVERT		2										1						PCC-1, FPC-9S
1129+00	CONST. D.I. ON LT. W/ PIPE CULVERT		281										1						PCC-1, FPC-9S
1129+00	CONST. D.I. ON RT. W/ PIPE CULVERT		2										1						PCC-1, FPC-9S
1132+00	CONST. D.I. ON LT. W/ PIPE CULVERT		296										1						PCC-1, FPC-9S
1132+00	CONST. D.I. ON RT. W/ PIPE CULVERT		2										1						PCC-1, FPC-9S
1135+00	MODIFY D.I. ON CL.																	1	FPC-9S
1135+15	CONST. D.I. ON LT. W/ PIPE CULVERT		12									1							PCC-1, FPC-9S
1135+15	CONST. D.I. ON RT. W/ PIPE CULVERT		2									1							PCC-1, FPC-9S
1138+00	CONST. D.I. ON LT. W/ PIPE CULVERT		281									1							PCC-1, FPC-9S
1138+00	CONST. D.I. ON RT. W/ PIPE CULVERT		2									1							PCC-1, FPC-9S
1144+00	CONST. D.I. ON LT. W/ PIPE CULVERT		2										1						PCC-1, FPC-9S
1144+00	CONST. D.I. ON RT. W/ PIPE CULVERT			246									1						PCC-1, FPC-9S
1146+50	CONST. D.I. ON LT. W/ PIPE CULVERT		2										1						PCC-1, FPC-9S
1146+50	CONST. D.I. ON RT. W/ PIPE CULVERT		146										1						PCC-1, FPC-9S
1148+00	CONST. D.I. ON LT. W/ PIPE CULVERT		2										1						PCC-1, FPC-9S
1148+00	CONST. D.I. ON RT. W/ PIPE CULVERT		146										1						PCC-1, FPC-9S
1149+50	CONST. D.I. ON LT. W/ PIPE CULVERT		2										1						PCC-1, FPC-9S
1149+50	CONST. D.I. ON RT. W/ PIPE CULVERT		146										1						PCC-1, FPC-9S
1151+00	CONST. D.I. ON LT. W/ PIPE CULVERT		2										1						PCC-1, FPC-9S
1151+00	CONST. D.I. ON RT. W/ PIPE CULVERT		146										1						PCC-1, FPC-9S
1152+50	CONST. D.I. ON LT. W/ PIPE CULVERT		2										1						PCC-1, FPC-9S
1152+50	CONST. D.I. ON RT. W/ PIPE CULVERT		48										1						PCC-1, FPC-9S
1153+00	MODIFY D.I. ON CL.																	1	FPC-9S
1153+50	CONST. D.I. ON LT. W/ PIPE CULVERT		4										1						PCC-1, FPC-9S
1153+50	CONST. D.I. ON RT. W/ PIPE CULVERT		47										1						PCC-1, FPC-9S
1154+85	CONST. D.I. ON LT. W/ PIPE CULVERT						196						1						PCC-1, FPC-9S
1154+85	CONST. D.I. ON RT. W/ PIPE CULVERT		4										1						PCC-1, FPC-9S
1156+85	CONST. D.I. ON LT. W/ PIPE CULVERT						196						1						PCC-1, FPC-9S
1156+85	CONST. D.I. ON RT. W/ PIPE CULVERT		2										1						PCC-1, FPC-9S
1158+85	CONST. D.I. ON LT. W/ PIPE CULVERT						196						1						PCC-1, FPC-9S
1158+85	CONST. D.I. ON RT. W/ PIPE CULVERT		2										1						PCC-1, FPC-9S
1160+85	CONST. D.I. ON LT. W/ PIPE CULVERT						196						1						PCC-1, FPC-9S
1160+85	CONST. D.I. ON RT. W/ PIPE CULVERT		2										1						PCC-1, FPC-9S
1162+85	CONST. D.I. ON LT. W/ PIPE CULVERT						196						1						PCC-1, FPC-9S
1162+85	CONST. D.I. ON RT. W/ PIPE CULVERT		2										1						PCC-1, FPC-9S
1164+85	CONST. D.I. ON LT. W/ PIPE CULVERT						211						1						PCC-1, FPC-9S
1164+85	CONST. D.I. ON RT. W/ PIPE CULVERT		2										1						PCC-1, FPC-9S
1167+00	CONST. D.I. ON LT. W/ PIPE CULVERT						246						1						PCC-1, FPC-9S
1167+00	CONST. D.I. ON RT. W/ PIPE CULVERT		2										1						PCC-1, FPC-9S
1169+50	CONST. D.I. ON LT. W/ PIPE CULVERT						246						1						PCC-1, FPC-9S
1169+50	CONST. D.I. ON RT. W/ PIPE CULVERT		2										1						PCC-1, FPC-9S
1172+00	CONST. D.I. ON LT. W/ PIPE CULVERT						196						1						PCC-1, FPC-9S
1172+00	CONST. D.I. ON RT. W/ PIPE CULVERT		2										1						PCC-1, FPC-9S
1174+00	CONST. D.I. ON LT. W/ PIPE CULVERT						166						1						PCC-1, FPC-9S
1174+00	CONST. D.I. ON RT. W/ PIPE CULVERT		2										1						PCC-1, FPC-9S
1175+70	CONST. D.I. ON LT. W/ PIPE CULVERT						83						1						PCC-1, FPC-9S
1175+97	**CONST. D.I. ON LT. W/ PIPE CULVERT		32							1					1	0.2	12		PCC-1, FPC-9D, FES-1, FES-2
1176+56	*CONST. D.I. ON RT. W/ PIPE CULVERT								166		2		1			1.0	82		PCC-1, FPC-9S, FES-1, FES-2
1177+85	CONST. D.I. ON RT. W/ PIPE CULVERT						125						1						PCC-1, FPC-9S
1178+10	MODIFY D.I. ON CL.																	1	FPC-9S
1180+20	CONST. D.I. ON RT. W/ PIPE CULVERT		172									1							PCC-1, FPC-9S
1181+96	*CONST. D.I. ON RT. W/ PIPE CULVERT				80				79	1	1		1			0.8	60		PCC-1, FPC-9S, FES-1, FES-2
1183+10	**CONST. D.I. ON LT. W/ PIPE CULVERT		32							1					1	0.2	12		PCC-1, FPC-9D, FES-1, FES-2
1183+50	CONST. D.I. ON RT. W/ PIPE CULVERT							149					1						PCC-1, FPC-9S
1186+50	CONST. D.I. ON RT. W/ PIPE CULVERT							296					1						PCC-1, FPC-9S
SUBTOTALS:			**2763**	**264**	**80**		**2253**	**445**	**245**	**3**	**3**	**9**	**52**		**2**	**2.2**	**166**	**6**	

BASIS OF ESTIMATE:
WATER..... 12.6 GAL./SQ.YD. SOLID SODDING
NOTE: FOR R.C. PIPE CULVERT INSTALLATIONS USE TYPE 3 BEDDING UNLESS OTHERWISE SPECIFIED.
*JACK AND BORE PIPE CULVERT.
**FOR PONDS

QUANTITIES

USER: a15106
DESIGN FILE: G:\13106100_264toNHope\TRANSP\dgn\quantities\CA0901QBOXES.dgn
PLOTTED: 2/24/2016 12:28
SCALE: 16:1
MODEL: TYPICAL SECTIONS OF IMPROVEMENT

Crafton Tull
architecture | engineering | surveying

DATE REVISED	DATE FILMED	DATE REVISED	DATE FILMED

FED.RD. DIST.NO.	STATE	FED.AID PROJ.NO.	SHEET NO.	TOTAL SHEETS
6	ARK.			
JOB NO.		CA0901	83	452

2 QUANTITIES

STATE OF ARKANSAS
REGISTERED PROFESSIONAL ENGINEER
No. 15560
JEROME PAUL DAVIS
3-03-16

STRUCTURES (BOX 2 OF 4)

STATION	DESCRIPTION	REINFORCED CONCRETE PIPE CULVERT								FLARED END SECTIONS FOR REINFORCED CONCRETE PIPE CULVERTS	FLARED END SECTIONS FOR REINFORCED CONCRETE PIPE CULVERTS	DROP INLETS				WATER	SOLID SODDING	MODIFYING DROP INLET	STD. DWG. NOS.
		CLASS III	CLASS III	CLASS IV	CLASS V (JACK AND BORE)	CLASS III	CLASS III	CLASS IV	CLASS V (JACK AND BORE)			TYPE ST		TYPE RM	TYPE RM MODIFIED				
		18"	24"			30"	36"			24"	36"	4' X 4'	4' X 6'	5' X 5'	4' X 3'				
		LIN. FT.										EACH				M. GAL.	SQ. YD.	EACH	
1189+50	CONST. D.I. ON RT. W/ PIPE CULVERT			296									1						PCC-1, FPC-9S
1192+50	CONST. D.I. ON RT. W/ PIPE CULVERT			296									1						PCC-1, FPC-9S
1198+00	CONST. D.I. ON RT. W/ PIPE CULVERT		94										1						PCC-1, FPC-9S
1199+75	*CONST. D.I. ON LT. W/ PIPE CULVERT				85					1			1			0.2	19		PCC-1, FPC-9S, FES-1, FES-2
1199+75	*CONST. D.I. ON RT. W/ PIPE CULVERT		2		78					1			1			0.2	19		PCC-1, FPC-9S, FES-1, FES-2
1199+76	**CONST. D.I. ON LT. W/ PIPE CULVERT		32							1					1	0.2	12		PCC-1, FPC-9D, FES-1, FES-2
1201+50	CONST. D.I. ON LT. W/ PIPE CULVERT		171										1						PCC-1, FPC-9S
1201+50	CONST. D.I. ON LT. W/ PIPE CULVERT		2										1						PCC-1, FPC-9S
1203+00	CONST. D.I. ON LT. W/ PIPE CULVERT			146								1							PCC-1, FPC-9S
1203+00	CONST. D.I. ON RT. W/ PIPE CULVERT			2								1							PCC-1, FPC-9S
1204+50	CONST. D.I. ON LT. W/ PIPE CULVERT			146									1						PCC-1, FPC-9S
1204+50	CONST. D.I. ON RT. W/ PIPE CULVERT			2									1						PCC-1, FPC-9S
1206+00	CONST. D.I. ON LT. W/ PIPE CULVERT		146										1						PCC-1, FPC-9S
1206+00	CONST. D.I. ON RT. W/ PIPE CULVERT		2										1						PCC-1, FPC-9S
1207+50	CONST. D.I. ON LT. W/ PIPE CULVERT		146										1						PCC-1, FPC-9S
1207+50	CONST. D.I. ON RT. W/ PIPE CULVERT		2										1						PCC-1, FPC-9S
1209+00	CONST. D.I. ON LT. W/ PIPE CULVERT		146										1						PCC-1, FPC-9S
1209+00	CONST. D.I. ON RT. W/ PIPE CULVERT		2										1						PCC-1, FPC-9S
1210+50	CONST. D.I. ON LT. W/ PIPE CULVERT		146										1						PCC-1, FPC-9S
1210+50	CONST. D.I. ON RT. W/ PIPE CULVERT		2										1						PCC-1, FPC-9S
1212+00	CONST. D.I. ON LT. W/ PIPE CULVERT		146										1						PCC-1, FPC-9S
1212+00	CONST. D.I. ON RT. W/ PIPE CULVERT		2										1						PCC-1, FPC-9S
1213+50	*CONST. D.I. ON LT. W/ PIPE CULVERT				84								1						PCC-1, FPC-9S
1213+50	*CONST. D.I. ON RT. W/ PIPE CULVERT		2		112					1			1			0.2	19		PCC-1, FPC-9S, FES-1, FES-2
1213+52	*CONST. D.I. ON LT. W/ PIPE CULVERT		110							1				1		0.2	19		PCC-1, FPC-9S, FES-1, FES-2
1214+78	**CONST. D.I. ON LT. W/ PIPE CULVERT		34							1					1	0.2	19		PCC-1, FPC-9D, FES-1, FES-2
1215+00	CONST. D.I. ON LT. W/ PIPE CULVERT		146										1						PCC-1, FPC-9S
1215+00	CONST. D.I. ON RT. W/ PIPE CULVERT		2										1						PCC-1, FPC-9S
1215+75	MODIFY D.I. ON CL.																	1	FPC-9S
1216+50	CONST. D.I. ON LT. W/ PIPE CULVERT		121										1						PCC-1, FPC-9S
1216+50	CONST. D.I. ON RT. W/ PIPE CULVERT		2										1						PCC-1, FPC-9S
1217+75	CONST. D.I. ON LT. W/ PIPE CULVERT		121										1						PCC-1, FPC-9S
1217+75	CONST. D.I. ON RT. W/ PIPE CULVERT		2										1						PCC-1, FPC-9S
1219+00	CONST. D.I. ON LT. W/ PIPE CULVERT		81										1						PCC-1, FPC-9S
1219+00	CONST. D.I. ON RT. W/ PIPE CULVERT		2										1						PCC-1, FPC-9S
1219+85	CONST. D.I. ON LT. W/ PIPE CULVERT		2										1						PCC-1, FPC-9S
1219+85	*CONST. D.I. ON RT. W/ PIPE CULVERT				76					1			1			0.1	8		PCC-1, FPC-9S, FES-1, FES-2
1221+50	CONST. D.I. ON LT. W/ PIPE CULVERT		161										1						PCC-1, FPC-9S
1221+50	CONST. D.I. ON RT. W/ PIPE CULVERT		2										1						PCC-1, FPC-9S
1222+50	CONST. D.I. ON LT. W/ PIPE CULVERT		96										1						PCC-1, FPC-9S
1222+50	CONST. D.I. ON RT. W/ PIPE CULVERT		2										1						PCC-1, FPC-9S
1224+40	CONST. D.I. ON LT. W/ PIPE CULVERT		186										1						PCC-1, FPC-9S
1224+40	CONST. D.I. ON RT. W/ PIPE CULVERT		6										1						PCC-1, FPC-9S
1226+19	**CONST. D.I. ON RT. W/ PIPE CULVERT	36								1					1	0.1	7		PCC-1, FPC-9D, FES-1, FES-2
1227+00	MODIFY D.I. ON CL.																	1	FPC-9S
1227+15	CONST. D.I. ON LT. W/ PIPE CULVERT		2										1						PCC-1, FPC-9S
1227+15	*CONST. D.I. ON RT. W/ PIPE CULVERT				73					1			1			0.2	19		PCC-1, FPC-9S
1228+10	CONST. D.I. ON LT. W/ PIPE CULVERT		2										1						PCC-1, FPC-9S
1228+10	CONST. D.I. ON RT. W/ PIPE CULVERT		91										1						PCC-1, FPC-9S
1229+00	CONST. D.I. ON LT. W/ PIPE CULVERT		2										1						PCC-1, FPC-9S
1229+00	CONST. D.I. ON RT. W/ PIPE CULVERT		86										1						PCC-1, FPC-9S
1230+19	**CONST. D.I. ON LT. W/ PIPE CULVERT	30								1					1	0.1	7		PCC-1, FPC-9D, FES-1, FES-2
1230+75	CONST. D.I. ON LT. W/ PIPE CULVERT		2										1						PCC-1, FPC-9S
1230+75	CONST. D.I. ON RT. W/ PIPE CULVERT		171										1						PCC-1, FPC-9S
1232+50	*CONST. D.I. ON LT. W/ PIPE CULVERT				147					1			1			0.1	8		PCC-1, FPC-9S, FES-1, FES-2
1232+50	CONST. D.I. ON RT. W/ PIPE CULVERT		2										1						PCC-1, FPC-9S
1234+00	MODIFY D.I. ON CL.																	1	FPC-9S
1234+20	CONST. D.I. ON LT. W/ PIPE CULVERT			166									1						PCC-1, FPC-9S
1234+20	CONST. D.I. ON RT. W/ PIPE CULVERT			2									1						PCC-1, FPC-9S
1236+00	CONST. D.I. ON LT. W/ PIPE CULVERT			176									1						PCC-1, FPC-9S
1236+00	CONST. D.I. ON RT. W/ PIPE CULVERT			2									1						PCC-1, FPC-9S
1238+00	CONST. D.I. ON LT. W/ PIPE CULVERT			196									1						PCC-1, FPC-9S
1238+00	CONST. D.I. ON RT. W/ PIPE CULVERT			2									1						PCC-1, FPC-9S
1240+00	CONST. D.I. ON LT. W/ PIPE CULVERT			196									1						PCC-1, FPC-9S
1240+00	CONST. D.I. ON RT. W/ PIPE CULVERT			2									1						PCC-1, FPC-9S
1241+50	CONST. D.I. ON LT. W/ PIPE CULVERT			146									1						PCC-1, FPC-9S
SUBTOTALS:		**66**	**2477**	**1776**	**655**					**11**		**2**	**56**	**1**	**4**	**1.8**	**156**	**3**	

BASIS OF ESTIMATE:
WATER..... 12.6 GAL./SQ.YD. SOLID SODDING
NOTE: FOR R.C. PIPE CULVERT INSTALLATIONS USE TYPE 3 BEDDING UNLESS OTHERWISE SPECIFIED.
*JACK AND BORE PIPE CULVERT.
**FOR PONDS

QUANTITIES

USER: ar5106
DESIGN FILE: G:\13106100_264toNHope\TRANSP\dgn\quantities\CA0901OBOXES.dgn
PLOTTED: 2/24/2016 12:28
SCALE: 1&1
MODEL: TYPICAL SECTIONS OF IMPROVEMENT

Crafton Tull
architecture | engineering | surveying

DATE REVISED	DATE FILMED	DATE REVISED	DATE FILMED

FED.RD. DIST.NO.	STATE	FED.AID PROJ.NO.	SHEET NO.	TOTAL SHEETS
6	ARK.			
JOB NO.		CA0901	84	452

2 QUANTITIES

STATE OF ARKANSAS
REGISTERED PROFESSIONAL ENGINEER
No. 15560
3-03-16
JEROME PAUL DAVIS

STRUCTURES (BOX 3 OF 4)

STATION	DESCRIPTION	REINFORCED CONCRETE PIPE CULVERT								FLARED END SECTIONS FOR REINFORCED CONCRETE PIPE CULVERTS	FLARED END SECTIONS FOR REINFORCED CONCRETE PIPE CULVERTS	DROP INLETS				WATER	SOLID SODDING	MODIFYING DROP INLET	STD. DWG. NOS.
		CLASS III	CLASS III	CLASS IV	CLASS V (JACK AND BORE)	CLASS III	CLASS III	CLASS IV	CLASS V (JACK AND BORE)			TYPE ST		TYPE RM	TYPE RM MODIFIED				
		18"	24"			30"	36"			24"	36"	4' X 4'	4' X 6'	5' X 5'	4' X 3'				
		LIN. FT.										EACH				M. GAL.	SQ. YD.	EACH	
1241+50	CONST. D.I. ON RT. W/ PIPE CULVERT			2									1						PCC-1, FPC-9S
1246+00	CONST. D.I. ON LT. W/ PIPE CULVERT		2									1							PCC-1, FPC-9S
1246+00	CONST. D.I. ON RT. W/ PIPE CULVERT		296									1							PCC-1, FPC-9S
1249+00	CONST. D.I. ON LT. W/ PIPE CULVERT		2									1							PCC-1, FPC-9S
1249+00	CONST. D.I. ON RT. W/ PIPE CULVERT		296									1							PCC-1, FPC-9S
1252+00	CONST. D.I. ON LT. W/ PIPE CULVERT		2									1							PCC-1, FPC-9S
1252+00	CONST. D.I. ON RT. W/ PIPE CULVERT		296									1							PCC-1, FPC-9S
1255+00	CONST. D.I. ON LT. W/ PIPE CULVERT		2									1							PCC-1, FPC-9S
1255+00	CONST. D.I. ON RT. W/ PIPE CULVERT		296									1							PCC-1, FPC-9S
1258+00	CONST. D.I. ON LT. W/ PIPE CULVERT		2									1							PCC-1, FPC-9S
1258+00	CONST. D.I. ON RT. W/ PIPE CULVERT		146									1							PCC-1, FPC-9S
1259+29	CONST. D.I. ON RT. W/ PIPE CULVERT		234							1				1		0.2	19		PCC-1, FPC-9S
1259+50	*CONST. D.I. ON RT. W/ PIPE CULVERT				87					1		1				0.1	8		PCC-1, FPC-9S
1259+60	**CONST. D.I. ON RT. W/ PIPE CULVERT		32							1					1	0.2	12		PCC-1, FPC-9D, FES-1, FES-2
1264+50	MODIFY D.I. ON CL.																	1	FPC-9S
1264+65	CONST. D.I. ON RT. W/ PIPE CULVERT		14									1							PCC-1, FPC-9S
1267+00	CONST. D.I. ON RT. W/ PIPE CULVERT		231									1							PCC-1, FPC-9S
1270+00	CONST. D.I. ON RT. W/ PIPE CULVERT			296								1							PCC-1, FPC-9S
1273+00	CONST. D.I. ON RT. W/ PIPE CULVERT	4										1							PCC-1, FPC-9S
1273+00	MODIFY D.I. ON CL.																	1	FPC-9S
1276+75	CONST. D.I. ON RT. W/ PIPE CULVERT		371									1							PCC-1, FPC-9S
1279+75	CONST. D.I. ON RT. W/ PIPE CULVERT		296									1							PCC-1, FPC-9S
1282+60	MODIFY D.I. ON CL.																	1	FPC-9S
1282+75	CONST. D.I. ON RT. W/ PIPE CULVERT		11										1						PCC-1, FPC-9S
1285+50	CONST. D.I. ON RT. W/ PIPE CULVERT		271										1						PCC-1, FPC-9S
1288+50	CONST. D.I. ON LT. W/ PIPE CULVERT		2										1						PCC-1, FPC-9S
1288+50	CONST. D.I. ON RT. W/ PIPE CULVERT		296										1						PCC-1, FPC-9S
1289+00	CONST. D.I. ON LT. W/ PIPE CULVERT		46										1						PCC-1, FPC-9S
1291+00	CONST. D.I. ON LT. W/ PIPE CULVERT		2										1						PCC-1, FPC-9S
1291+00	CONST. D.I. ON RT. W/ PIPE CULVERT		246										1						PCC-1, FPC-9S
1293+60	CONST. D.I. ON LT. W/ PIPE CULVERT		6										1						PCC-1, FPC-9S
1293+60	CONST. D.I. ON RT. W/ PIPE CULVERT		256										1						PCC-1, FPC-9S
1299+00	CONST. D.I. ON LT. W/ PIPE CULVERT		296									1							PCC-1, FPC-9S
1299+00	CONST. D.I. ON RT. W/ PIPE CULVERT		2									1							PCC-1, FPC-9S
1302+00	CONST. D.I. ON LT. W/ PIPE CULVERT		296									1							PCC-1, FPC-9S
1302+00	CONST. D.I. ON RT. W/ PIPE CULVERT		2									1							PCC-1, FPC-9S
1305+00	CONST. D.I. ON LT. W/ PIPE CULVERT		146									1							PCC-1, FPC-9S
1305+00	CONST. D.I. ON RT. W/ PIPE CULVERT		2									1							PCC-1, FPC-9S
1306+50	CONST. D.I. ON LT. W/ PIPE CULVERT		231									1							PCC-1, FPC-9S
1306+50	CONST. D.I. ON RT. W/ PIPE CULVERT		2									1							PCC-1, FPC-9S
1308+85	CONST. D.I. ON LT. W/ PIPE CULVERT		12									1							PCC-1, FPC-9S
1309+00	MODIFY D.I. ON CL.																	1	FPC-9S
1319+50	CONST. D.I. ON LT. W/ PIPE CULVERT		231									1							PCC-1, FPC-9S
1321+85	CONST. D.I. ON LT. W/ PIPE CULVERT		12									1							PCC-1, FPC-9S
1322+00	MODIFY D.I. ON CL.																	1	FPC-9S
1326+50	CONST. D.I. ON LT. W/ PIPE CULVERT		34									1							PCC-1, FPC-9S
1328+40	CONST. D.I. ON LT. W/ PIPE CULVERT		186									1							PCC-1, FPC-9S
1328+60	MODIFY D.I. ON CL.																	1	FPC-9S
1329+05	MODIFY D.I. ON CL.																	1	FPC-9S
1329+88	MODIFY D.I. ON CL.																	1	FPC-9S
1331+00	CONST. D.I. ON LT. W/ PIPE CULVERT					4							1						PCC-1, FPC-9S
1333+50	CONST. D.I. ON LT. W/ PIPE CULVERT		247										1						PCC-1, FPC-9S
1333+50	CONST. D.I. ON RT. W/ PIPE CULVERT		2										1						PCC-1, FPC-9S
1335+00	MODIFY D.I. ON CL.																	1	FPC-9S
1335+15	CONST. D.I. ON LT. W/ PIPE CULVERT		13										1						PCC-1, FPC-9S
1335+15	CONST. D.I. ON RT. W/ PIPE CULVERT		2										1						PCC-1, FPC-9S
1338+00	CONST. D.I. ON LT. W/ PIPE CULVERT		281									1							PCC-1, FPC-9S
1338+00	CONST. D.I. ON RT. W/ PIPE CULVERT		2									1							PCC-1, FPC-9S
1341+00	CONST. D.I. ON LT. W/ PIPE CULVERT		296									1							PCC-1, FPC-9S
1349+00	CONST. D.I. ON LT. W/ PIPE CULVERT		296									1							PCC-1, FPC-9S
1352+00	CONST. D.I. ON LT. W/ PIPE CULVERT		295									1							PCC-1, FPC-9S
SUBTOTALS:		**4**	**6540**	**298**	**87**	**4**				**3**		**35**	**15**	**1**	**1**	**0.5**	**39**	**9**	

BASIS OF ESTIMATE:
WATER..... 12.6 GAL./SQ.YD. SOLID SODDING
NOTE: FOR R.C. PIPE CULVERT INSTALLATIONS USE TYPE 3 BEDDING UNLESS OTHERWISE SPECIFIED.
*JACK AND BORE PIPE CULVERT.
**FOR PONDS

USER: at5106
DESIGN FILE: G:\13106100_264toNHope\TRANSP\dgn\quantities\CA0901OBOXES.dgn
PLOTTED: 2/24/2016 12:28
SCALE: 16:1
MODEL: TYPICAL SECTIONS OF IMPROVMENT

QUANTITIES

STATE OF ARKANSAS
REGISTERED PROFESSIONAL ENGINEER
No. 15560
3-03-16
JEROME PAUL DAVIS

STRUCTURES (BOX 4 OF 4)

STATION	DESCRIPTION	REINFORCED CONCRETE PIPE CULVERT								FLARED END SECTIONS FOR REINFORCED CONCRETE PIPE CULVERTS	FLARED END SECTIONS FOR REINFORCED CONCRETE PIPE CULVERTS	DROP INLETS				WATER	SOLID SODDING	MODIFYING DROP INLET	STD. DWG. NOS.
		CLASS III	CLASS III	CLASS IV	CLASS V (JACK AND BORE)	CLASS III	CLASS III	CLASS IV	CLASS V (JACK AND BORE)			TYPE ST		TYPE RM	TYPE RM MODIFIED				
		18"	24"			30"	36"			24"	36"	4' X 4'	4' X 6'	5' X 5'	4' X 3'				
		LIN. FT.										EACH				M. GAL.	SQ. YD.	EACH	
1355+00	MODIFY D.I. ON CL.																	1	FPC-9S
1355+50	CONST. D.I. ON LT. W/ PIPE CULVERT		206										1						PCC-1, FPC-9S
1357+60	CONST. D.I. ON LT. W/ PIPE CULVERT		296										1						PCC-1, FPC-9S
1360+60	CONST. D.I. ON LT. W/ PIPE CULVERT		296										1						PCC-1, FPC-9S
1363+60	CONST. D.I. ON LT. W/ PIPE CULVERT		14										1						PCC-1, FPC-9S
1363+77	MODIFY D.I. ON CL.																	1	FPC-9S
1366+60	CONST. D.I. ON LT. W/ PIPE CULVERT		296										1						PCC-1, FPC-9S
1366+60	CONST. D.I. ON RT. W/ PIPE CULVERT		2										1						PCC-1, FPC-9S
1369+60	CONST. D.I. ON LT. W/ PIPE CULVERT		296									1							PCC-1, FPC-9S
1369+60	CONST. D.I. ON RT. W/ PIPE CULVERT		2									1							PCC-1, FPC-9S
1372+60	CONST. D.I. ON LT. W/ PIPE CULVERT		96									1							PCC-1, FPC-9S
1372+60	CONST. D.I. ON RT. W/ PIPE CULVERT		2									1							PCC-1, FPC-9S
1373+60	CONST. D.I. ON LT. W/ PIPE CULVERT		212										1						PCC-1, FPC-9S
1373+60	CONST. D.I. ON RT. W/ PIPE CULVERT		2										1						PCC-1, FPC-9S
1375+75	MODIFY D.I. ON CL.																	1	FPC-9S
1385+69	CONST. D.I. ON LT. W/ PIPE CULVERT											1							PCC-1, FPC-9S
1385+69	CONST. D.I. ON RT. W/ PIPE CULVERT		2									1							PCC-1, FPC-9S
SUBTOTALS (BOX 1 OF 4):			2763	264	80		2253	445	245	3	3	9	52		2	2.2	166	6	
SUBTOTALS (BOX 2 OF 4):		66	2477	1776	655					11		2	56	1	4	1.8	156	3	
SUBTOTALS (BOX 3 OF 4):		4	6540	298	87	4				3		35	15	1	1	0.5	39	9	
SUBTOTALS (BOX 4 OF 4):			1722									6	8					3	
TOTALS:		**70**	**13502**	**2338**	**822**	**4**	**2253**	**445**	**245**	**17**	**3**	**52**	**131**	**2**	**7**	**4.5**	**361**	**21**	

BASIS OF ESTIMATE:
WATER..... 12.6 GAL./SQ.YD. SOLID SODDING
NOTE: FOR R.C. PIPE CULVERT INSTALLATIONS USE TYPE 3 BEDDING, UNLESS OTHERWISE SPECIFIED.
*JACK AND BORE PIPE CULVERT.
**FOR PONDS

EARTHWORK

STATION	STATION	LOCATION/DESCRIPTION	UNCLASSIFIED EXCAVATION	COMPACTED EMBANKMENT	DETENTION POND CLAY LINER	SOIL STABILIZATION
			CU.YD.	CU.YD.	SQ. YD.	TON
1108+78.59	1386+69.30	I-49 - MEDIAN	49795	18721		
1132+23.00	1136+34.00	I-49 - L.M.L. WIDENING FOR GUARDRAIL	45	5		
1173+60		APPROACH		25		
		POND 3A	14222	538	3957	
1176+50.75	1176+73.81	POND 3A DITCH BLOCK		32		
		POND 3B	9152	800	3085	
1182+01.04	1182+19.49	POND 3B DITCH BLOCK		69		
		POND 4A	7872	935	3066	
1199+61.30	1199+71.16	POND 4A DITCH BLOCK		26		
		POND 4B	13570	110	2582	
		POND 5A	3430	530		
1226+89.43	1227+08.51	POND 5A LEFT DITCH BLOCK		24		
1226+95.48	1227+03.94	POND 5A RIGHT DITCH BLOCK		10		
		POND 5B	3485	425		
		POND 5B PIPE COVER		8		
		POND 6	6278	1055	2745	
1259+56.37	1259+77.41	POND 6 DITCH BLOCK		45		
*ENTIRE PROJECT TO BE USED IF AND WHERE DIRECTED BY THE ENGINEER.			700	700		200
TOTALS:			**108549**	**24058**	**15435**	**200**

* QUANTITIES ESTIMATED. SEE SECTION 104.03 OF THE STANDARD SPECIFICATIONS.

SOIL LOG

STATION	LOCATION	DEPTH FEET	LIQUID LIMIT	PLASTICITY INDEX	AASHTO CLASSIFICATION	COLOR
1176+46.03	562.06' LT	6-7	43	25	A-2-7	RD/BR
1176+49.42	427.62' LT	2.5-3.5	36	18	A-6	BROWN
1176+49.42	427.62' LT	6.5-7.5	54	32	A-7-6	RD/BR
1183+42.21	396.74' LT	2.5-3	37	19	A-6	RD/BR
1183+42.21	396.74' LT	6.5-7	43	24	A-7-6	RD/BR
1183+51.94	502.08' LT	4.5-5	39	22	A-6	TN & RD/BR
1183+51.94	502.08' LT	6.5-7.5	39	22	A-6	TN & RD/BR
1201+02.95	273.24' LT	0.5-1.5	29	11	A-6	BROWN
1201+02.95	273.24' LT	6.5-7.5	48	30	A-7-6	RD/BR & TN
1201+81.23	273.81' LT	2.5-3.5	32	14	A-6	RD/BR
1201+81.23	273.81' LT	6.5-7.5	36	20	A-6	RD/BR
1213+96.45	349.44' LT	4.5-5.5	40	20	A-6	BR & RD/BR
1213+96.45	349.44' LT	13.5-14	50	31	A-7-6	RD/BR
1213+96.45	349.44' LT	24-25	51	31	A-2-7	RD/BR
1214+39.28	426.67' LT	0.5-1.5	33	13	A-6	BROWN
1214+39.28	426.67' LT	6-7	41	23	A-2-7	RD/BR
1214+39.28	426.67' LT	19-20	65	41	A-2-7	RD/BR
1225+66.78	223.53' RT	0.5-1.5	23	2	A-4	BROWN
1225+66.78	223.53' RT	6-6.5	40	21	A-2-6	TN & RD/BR
1226+81.37	147.57' RT	2.5-3.5	27	9	A-4	BROWN
1229+17.77	292.23' LT	0.5-1.5	28	7	A-5	BROWN
1229+17.77	292.23' LT	4-5	33	14	A-6	BROWN
1230+47.22	261.70' LT	2.5-3.5	40	20	A-6	RD/BR & TN
1258+80.05	430.63' RT	6.5-7.5	29	7	A-2-4	TN & RD/BR
1259+09.19	308.81' RT	6.5-7.5	NP	NP	A-2-4	TN & GR

SOIL CHARACTERISTICS TABULATED ABOVE ARE REPRESENTATIVE AT THE LOCATION OF THE SAMPLE, AND FROM SURFACE INDICATIONS ARE TYPICAL FOR THE LIMITS SHOWN. THESE DATA ARE SHOWN FOR INFORMATION ONLY. THE STATE WILL NOT BE RESPONSIBLE FOR VARIATIONS IN THE SOIL CHARACTERISTICS AND/OR EXTENT OF SAME DIFFERING FROM THE ABOVE TABULATIONS.
NP - NON-PLASTIC

CONCRETE BARRIER WALL

STATION	STATION	LOCATION	MEDIAN TYPE						
			B	C	SP-1	SP-2	SP-3	C SPECIAL	SPECIAL
			LIN. FT.						
1108+79	1113+17	I-49 - C.L. MEDIAN	438						
1113+17	1115+93	I-49 - C.L. MEDIAN							276
1115+93	1133+16	I-49 - C.L. MEDIAN	1723						
1133+16	1133+41	I-49 - C.L. MEDIAN					25		
1133+59	1133+84	I-49 - C.L. MEDIAN					25		
1133+84	1153+31	I-49 - C.L. MEDIAN	1947						
1153+31	1155+22	I-49 - C.L. MEDIAN							191
1155+22	1176+55	I-49 - C.L. MEDIAN	2133						
1176+55	1181+25	I-49 - C.L. MEDIAN		470					
1181+25	1193+75	I-49 - C.L. MEDIAN						1250	
1193+75	1194+66	I-49 - C.L. MEDIAN		91					
1194+66	1194+91	I-49 - C.L. MEDIAN				25			
1195+09	1195+34	I-49 - C.L. MEDIAN				25			
1195+34	1197+55	I-49 - C.L. MEDIAN		221					
1197+55	1210+91	I-49 - C.L. MEDIAN	1336						
1210+91	1211+16	I-49 - C.L. MEDIAN					25		
1211+34	1211+59	I-49 - C.L. MEDIAN					25		
1211+59	1223+80	I-49 - C.L. MEDIAN	1221						
1223+80	1226+47	I-49 - C.L. MEDIAN							267
1226+47	1241+91	I-49 - C.L. MEDIAN	1544						
1241+91	1242+16	I-49 - C.L. MEDIAN					25		
1242+34	1242+59	I-49 - C.L. MEDIAN					25		
1242+59	1261+15	I-49 - C.L. MEDIAN	1856						
1261+15	1261+45	I-49 - C.L. MEDIAN			30				
1263+62	1263+92	I-49 - C.L. MEDIAN			30				
1263+92	1287+50	I-49 - C.L. MEDIAN		2358					
1287+50	1292+81	I-49 - C.L. MEDIAN	531						
1292+81	1295+26	I-49 - C.L. MEDIAN							245
1295+26	1307+95	I-49 - C.L. MEDIAN	1269						
1307+95	1309+19	I-49 - C.L. MEDIAN		124					
1309+19	1309+49	I-49 - C.L. MEDIAN			30				
1312+91	1313+21	I-49 - C.L. MEDIAN			30				
1313+21	1317+57	I-49 - C.L. MEDIAN		436					
1317+57	1320+07	I-49 - C.L. MEDIAN							250
1320+07	1332+10	I-49 - C.L. MEDIAN		1203					
1332+10	1339+91	I-49 - C.L. MEDIAN	781						
1339+91	1340+16	I-49 - C.L. MEDIAN					25		
1340+34	1340+59	I-49 - C.L. MEDIAN				25			
1340+59	1349+90	I-49 - C.L. MEDIAN		931					
1349+90	1350+85	I-49 - C.L. MEDIAN						95	
1350+85	1362+16	I-49 - C.L. MEDIAN		1131					
1362+16	1362+41	I-49 - C.L. MEDIAN				25			
1362+59	1362+84	I-49 - C.L. MEDIAN				25			
1362+84	1363+60	I-49 - C.L. MEDIAN		76					
1363+60	1375+60	I-49 - C.L. MEDIAN	1200						
1375+60	1376+23	I-49 - C.L. MEDIAN			63				
1380+94	1381+24	I-49 - C.L. MEDIAN			30				
1381+24	1386+69	I-49 - C.L. MEDIAN	545						
TOTALS:			16524	7041	213	125	175	1345	1229

OVERHEAD SIGN STRUCTURE FOUNDATION

STATION	LOCATION	EACH
1133+50	I-49 MEDIAN SOUTHBOUND	1
1195+00	I-49 MEDIAN SOUTHBOUND	1
1211+25	I-49 MEDIAN NORTHBOUND	1
1242+25	I-49 MEDIAN SOUTHBOUND	1
1340+25	I-49 MEDIAN SOUTHBOUND	1
1362+50	I-49 MEDIAN NORTHBOUND	1
TOTAL:		6

STATE OF ARKANSAS
REGISTERED PROFESSIONAL ENGINEER
No. 15560
JEROME PAUL DAVIS
5-06-16

RUMBLE STRIPS IN ASPHALT SHOULDERS

STATION	STATION	LOCATION	ACNHPP-49-1(17)77 LIN. FT.	BIM-B49-0(219) LIN. FT.
1108+79	1127+83	I-49 - R.M.L. OUTSIDE SHOULDER		1904
1108+79	1261+35	I-49 - R.M.L. INSIDE SHOULDER	15256	
1138+93	1208+06	I-49 - R.M.L. OUTSIDE SHOULDER		6913
1212+20	1232+79	I-49 - R.M.L. OUTSIDE SHOULDER		2059
1244+16	1261+26	I-49 - R.M.L. OUTSIDE SHOULDER		1710
1263+41	1295+95	I-49 - R.M.L. OUTSIDE SHOULDER		3254
1263+50	1309+61	I-49 - R.M.L. INSIDE SHOULDER	4611	
1301+49	1310+00	I-49 - R.M.L. OUTSIDE SHOULDER		851
1313+15	1376+23	I-49 - R.M.L. INSIDE SHOULDER	6308	
1313+43	1335+20	I-49 - R.M.L. OUTSIDE SHOULDER		2177
1347+59	1361+59	I-49 - R.M.L. OUTSIDE SHOULDER		1400
1365+58	1376+23	I-49 - R.M.L. OUTSIDE SHOULDER		1065
1380+94	1385+04	I-49 - R.M.L. INSIDE SHOULDER	410	
1380+94	1385+04	I-49 - R.M.L. OUTSIDE SHOULDER		410
1108+79	1129+50	I-49 - L.M.L. OUTSIDE SHOULDER		2071
1108+79	1261+50	I-49 - L.M.L. INSIDE SHOULDER	15271	
1132+33	1207+22	I-49 - L.M.L. OUTSIDE SHOULDER		7489
1216+42	1240+44	I-49 - L.M.L. OUTSIDE SHOULDER		2402
1243+07	1261+65	I-49 - L.M.L. OUTSIDE SHOULDER		1858
1263+72	1309+26	I-49 - L.M.L. INSIDE SHOULDER	4554	
1263+81	1291+24	I-49 - L.M.L. OUTSIDE SHOULDER		2743
1304+71	1309+09	I-49 - L.M.L. OUTSIDE SHOULDER		438
1312+41	1334+20	I-49 - L.M.L. OUTSIDE SHOULDER		2179
1312+83	1376+23	I-49 - L.M.L. INSIDE SHOULDER	6340	
1339+82	1354+45	I-49 - L.M.L. OUTSIDE SHOULDER		1463
1366+00	1376+23	I-49 - L.M.L. OUTSIDE SHOULDER		1023
1380+94	1385+04	I-49 - L.M.L. INSIDE SHOULDER	410	
1380+94	1385+04	I-49 - L.M.L. OUTSIDE SHOULDER		410
TOTALS:			53160	43819

TRENCHING AND SHOULDER PREPARATION

STATION	STATION	LOCATION	TRENCHING AND SHOULDER PREPARATION	TACK COAT 0.05 GAL. PER SQ.YD.			ACHM BASE COURSE (1 1/2") 440 LBS. PER SQ.YD.			ACHM BINDER COURSE (1") 440 LBS. PER SQ.YD.			ACHM SURFACE COURSE (1/2") 440 LBS. PER SQ.YD.		
				AVG. WIDTH	SQYD.	GALLON	AVG. WIDTH	SQYD.	PG 76-22	AVG. WIDTH	SQYD.	PG 76-22	AVG. WIDTH	SQYD.	PG 76-22
			STATION	FEET			FEET		TON	FEET		TON	FEET		TON
1258+26.18	1261+26.18	I-49 R.M.L. - OUTSIDE SHOULDER	3.00	15.00	500.00	25.00	5.00	166.67	36.67	5.00	166.67	36.67	5.00	166.67	36.67
1258+65.30	1261+65.30	I-49 L.M.L. - OUTSIDE SHOULDER	3.00	15.00	500.00	25.00	5.00	166.67	36.67	5.00	166.67	36.67	5.00	166.67	36.67
1263+41.34	1266+41.34	I-49 R.M.L. - OUTSIDE SHOULDER	3.00	15.00	500.00	25.00	5.00	166.67	36.67	5.00	166.67	36.67	5.00	166.67	36.67
1263+80.50	1266+80.50	I-49 L.M.L. - OUTSIDE SHOULDER	3.00	15.00	500.00	25.00	5.00	166.67	36.67	5.00	166.67	36.67	5.00	166.67	36.67
1306+08.75	1309+08.75	I-49 L.M.L. - OUTSIDE SHOULDER	3.00	15.00	500.00	25.00	5.00	166.67	36.67	5.00	166.67	36.67	5.00	166.67	36.67
1306+99.85	1309+99.85	I-49 R.M.L. - OUTSIDE SHOULDER	3.00	15.00	500.00	25.00	5.00	166.67	36.67	5.00	166.67	36.67	5.00	166.67	36.67
1312+41.00	1315+41.00	I-49 L.M.L. - OUTSIDE SHOULDER	3.00	15.00	500.00	25.00	5.00	166.67	36.67	5.00	166.67	36.67	5.00	166.67	36.67
1313+43.14	1316+43.14	I-49 R.M.L. - OUTSIDE SHOULDER	3.00	15.00	500.00	25.00	5.00	166.67	36.67	5.00	166.67	36.67	5.00	166.67	36.67
1373+22.71	1376+22.71	I-49 R.M.L. - OUTSIDE SHOULDER	3.00	15.00	500.00	25.00	5.00	166.67	36.67	5.00	166.67	36.67	5.00	166.67	36.67
1373+22.71	1376+22.71	I-49 L.M.L. - OUTSIDE SHOULDER	3.00	15.00	500.00	25.00	5.00	166.67	36.67	5.00	166.67	36.67	5.00	166.67	36.67
1380+93.82	1383+93.82	I-49 R.M.L. - OUTSIDE SHOULDER	3.00	15.00	500.00	25.00	5.00	166.67	36.67	5.00	166.67	36.67	5.00	166.67	36.67
1380+93.82	1383+93.82	I-49 L.M.L. - OUTSIDE SHOULDER	3.00	15.00	500.00	25.00	5.00	166.67	36.67	5.00	166.67	36.67	5.00	166.67	36.67
TOTALS:			36.00			300.00			440.04			440.04			440.04

BASIS OF ESTIMATE:
ACHM SURFACE COURSE (1/2") ..... 94.5% MIN. AGGR. . 5.5% ASPHALT BINDER
ACHM BINDER COURSE (1") ..... 95.5% MIN. AGGR. . 4.5% ASPHALT BINDER
ACHM BASE COURSE (1 1/2") ..... 95.9% MIN. AGGR. . 4.1% ASPHALT BINDER
MAXIMUM NUMBER OF GYRATIONS = 205 FOR PG 76-22

STATE OF ARKANSAS
REGISTERED PROFESSIONAL ENGINEER
No. 15560
5-06-16
JEROME PAUL DAVIS

ASPHALT CONCRETE PATCHING FOR MAINTENANCE OF TRAFFIC

LOCATION	ACNHPP-49-1(17)77 ASPHALT CONCRETE	ACNHPP-49-1(17)77 TACK COAT
	TON	GALLON
ENTIRE PROJECT - TO BE USED IF AND WHERE	132	264
DIRECTED BY THE ENGINEER		
TOTALS:	132	264

NOTE: QUANTITIES ESTIMATED. SEE SECTION 104.03 OF THE STANDARD SPECIFICATIONS.
BASIS OF ESTIMATE:
ASPHALT CONCRETE PATCHING FOR MAINTENANCE OF TRAFFIC..... 25 TON/MILE
TACK COAT FOR MAINTENANCE OF TRAFFIC..... 50 GAL./MILE

CONCRETE DITCH PAVING

STATION	STATION	LOCATION	LENGTH	WIDTH	CONC. DITCH PAVING (TYPE B)	CONC. DITCH PAVING (TYPE SPECIAL)	SOLID SODDING	WATER
			FT.	FT.	SQ.YD.			M.GAL.
1176+16	1176+53	I-49 LT. TO POND 3A	257.40	10.00		286.00	108.56	1.40
1176+23	1176+42	I-49 LT. TO POND 3A	23.37	14.25	37.00		9.46	0.10
1182+05	1182+48	I-49 LT. TO POND 3B	158.40	10.00		176.00	65.89	0.80
1182+15	1182+41	I-49 LT. TO POND 3B	24.63	14.25	39.00		14.28	0.20
1199+71	1199+83	I-49 LT. TO POND 4A	95.40	10.00		106.00	18.71	0.20
1199+78	1199+91	I-49 LT. TO POND 4A	12.70	43.92	62.00		6.75	0.10
1213+50	1213+59	I-49 RT. TO POND 4B	37.80	10.00		42.00	16.89	0.20
1226+80	1227+17	I-49 RT. TO POND 5A	70.20	10.00		78.00	27.41	0.30
1227+08	1227+19	I-49 RT. TO POND 5A	61.20	10.00		68.00	26.73	0.30
1227+17	1227+22	I-49 RT. TO POND 5A	11.25	4.00	5.00		4.68	0.10
1227+18	1227+41	I-49 RT. TO POND 5A	22.50	4.00	10.00		10.34	0.10
1231+98	1232+10	I-49 RT. TO POND 5B	9.00	10.00		10.00	4.38	0.10
1258+84	1259+84	I-49 RT. TO POND 6	246.60	10.00		274.00	96.44	1.20
TOTALS:					153.00	1040.00	410.52	5.10

BASIS OF ESTIMATE:
WATER.....12.6 GAL. / SQ. YD. OF SOLID SODDING.

DUMPED RIPRAP

STATION	SIDE	DUMPED RIPRAP	*FILTER BLANKET
		CU. YD.	SQ. YD.
1175+21	LT.	11	25
1175+97	LT.	2	11
1176+56	LT. & RT.	10	18
1181+96	RT.	5	9
1182+11	LT.	5	9
1183+10	LT.	2	11
1183+67	LT.	11	25
1199+75	LT. & RT.	10	18
1199+77	LT.	2	11
1200+26	LT.	11	25
1213+50	RT.	5	9
1213+50	LT.	5	9
1214+29	LT.	11	25
1214+78	LT.	2	11
1219+85	RT.	5	9
1226+19	RT.	2	11
1227+15	RT.	5	9
1230+19	LT.	2	11
1232+50	LT.	5	9
1259+50	RT.	5	9
1259+60	RT.	56	120
1260+08	RT.	11	25
1261+72	RT.	7	24
TOTALS:		190	443

*NOTE: FILTER BLANKET SHALL BE GEOTEXTILE FABRIC (TYPE 5).

MAIN LANES SIGNING QUANTITIES OVERHEAD MOUNTED

SIGN NO./ LOCATION	STRUCTURE TYPE
	OH
	EACH
OH-049-04-02	1
TOTAL:	1

GUARDRAIL

STATION	STATION	LOCATION	GUARDRAIL (TYPE A)	GUARDRAIL TERMINAL (TYPE 2)	TERMINAL ANCHOR POST (TYPE 1)
			LIN. FT.	EACH	EACH
1132+66	1135+91	I-49 - L.M.L. OUTSIDE SHOULDER	275	1	1
TOTALS:			275	1	1

CONCRETE RIPRAP

STATION	SIDE	LOCATION/DESCRIPTION	CONCRETE RIPRAP	SOLID SODDING	WATER
			CU. YD.	SQ. YD.	M.GAL.
1175+21	LT.	POND 3A EMERGENCY SPILLWAY	5.4	20.0	0.2
1183+67	LT.	POND 3B EMERGENCY SPILLWAY	5.4	20.0	0.3
1200+26	LT.	POND 4A EMERGENCY SPILLWAY	6.4	21.0	0.3
1214+29	LT.	POND 4B EMERGENCY SPILLWAY	7.4	24.0	0.3
1260+08	RT.	POND 6 EMERGENCY SPILLWAY	4.4	17.0	0.2
TOTALS:			29.0	102.0	1.3

BASIS OF ESTIMATE:
WATER.....12.6 GAL./SQ.YD. SOLID SODDING

AUTOMATED WORK ZONE INFORMATION SYSTEM

	AWIS MOBILIZATION	AWIS OPERATION	FURNISH AND INSTALL: VEHICLE DETECTION SYSTEM	FURNISH AND INSTALL: CLOSED CIRCUIT TELEVISION SYSTEM	FURNISH AND INSTALL: VARIABLE MESSAGE SIGN	FURNISH AND INSTALL: PUBLIC NOTIFICATION SYSTEM	DEVICE RELOCATION
	LUMP SUM	MONTH	EACH				
	1.00	17	40	4	6	2	10
TOTALS:	1.00	17	40	4	6	2	10

NOTE: QUANTITIES ESTIMATED. BASIS OF ESTIMATE:
VDS.....1/2 MILE SPACING FOR 5 MILES SOUTH OF CA0901 AND 3.5 MILES NORTH OF CA0902. 1 MILE SPACING WITHIN BOTH WORK ZONES, BETWEEN LOG MILES 77.5 TO 84.5.
VMS..... ONE IN ADVANCE OF EACH OF THE FOLLOWING:
SOUTHBOUND - N. WALTON BLVD. (EXIT 93), LOG MILE 90, CENTRAL AVE. (EXIT 88)
NORTHBOUND- ELM SPRINGS RD. (EXIT 73), WAGON WHEEL RD. (EXIT 76), W. MONROE AVE. (EXIT 78)
PNS..... ONE AT EXIT 76 AND ONE AT EXIT 93.
CCTV..... ONE AT THE BEGINNING AND END OF EACH PROJECT.

STATE OF ARKANSAS
REGISTERED PROFESSIONAL ENGINEER
No. 15560
3-22-16
JEROME PAUL DAVIS

APPROACH GUTTERS AND SLABS

STATION	STATION	LOCATION	APPROACH GUTTERS (TYPE SPECIAL 1)	APPROACH SLABS (TYPE SPECIAL 1)	REINFORCING STEEL-RDWY. (GR. 60)	AGGREGATE BASE COURSE (CLASS 7)
			CU.YD.		POUND	TON
1261+50	1261+92	I-49 LML - BEG. BRIDGE A (APPR. SLAB A)		37.50	5808	34.48
1263+27	1263+72	I-49 LML - END BRIDGE A (APPR. SLAB B)		37.50	5804	35.96
1261+46	1261+85	I-49 LML - BEG. BRIDGE A (GUTTER A) - INSIDE	17.30		4873	39.74
1263+27	1263+62	I-49 LML - END BRIDGE A (GUTTER B) - INSIDE	15.50		4451	27.44
1261+35	1261+77	I-49 RML - BEG. BRIDGE B (APPR. SLAB A)		37.50	5804	34.48
1263+15	1263+50	I-49 RML - END BRIDGE B (APPR. SLAB B)		37.50	5808	34.48
1261+45	1261+80	I-49 RML - BEG. BRIDGE B (GUTTER A) - INSIDE	15.50		4451	27.44
1263+22	1263+60	I-49 RML - END BRIDGE B (GUTTER B) - INSIDE	17.30		4873	29.73
1309+26	1309+76	I-49 LML - BEG. BRIDGE A (APPR. SLAB A)		37.70	5885	34.48
1312+31	1312+83	I-49 LML - END BRIDGE A (APPR. SLAB B)		37.70	5845	34.48
1309+49	1309+84	I-49 LML - BEG. BRIDGE A (GUTTER A) - INSIDE	14.40		4202	29.74
1312+48	1312+92	I-49 LML - END BRIDGE A (GUTTER B) - INSIDE	18.80		5248	27.44
1309+61	1310+08	I-49 RML - BEG. BRIDGE B (APPR. SLAB A)		37.70	5813	34.48
1312+66	1313+15	I-49 RML - END BRIDGE B (APPR. SLAB B)		37.70	5897	34.48
1309+54	1309+96	I-49 RML - BEG. BRIDGE B (GUTTER A) - INSIDE	18.20		5008	27.44
1312+57	1312+92	I-49 RML - END BRIDGE B (GUTTER B) - INSIDE	14.00		4032	29.73
1376+23	1376+58	I-49 LML - BEG. BRIDGE A (APPR. SLAB A)		37.50	5478	34.48
1380+59	1380+94	I-49 LML - END BRIDGE A (APPR. SLAB B)		37.50	5478	34.48
1376+23	1376+58	I-49 LML - BEG. BRIDGE A (GUTTER A) - INSIDE	21.00		4375	29.74
1380+59	1380+94	I-49 LML - END BRIDGE A (GUTTER B) - INSIDE	21.00		4375	27.44
1376+23	1376+58	I-49 RML - BEG. BRIDGE B (APPR. SLAB A)		37.50	5478	34.48
1380+59	1380+94	I-49 RML - END BRIDGE B (APPR. SLAB B)		37.50	5478	34.48
1376+23	1376+58	I-49 RML - BEG. BRIDGE B (GUTTER A) - INSIDE	21.00		4375	27.44
1380+59	1380+94	I-49 RML - END BRIDGE B (GUTTER B) - INSIDE	21.00		4375	29.73
TOTALS:			215.00	450.80	123214	768.29

FENCING

STATION	STATION	LOCATION	WIRE FENCE (TYPE A)	* 16' GATES
			LIN.FT.	EACH
1149+01.22	1154+22.00	I-49 ON LT.	1320	1
1173+42.00	1177+25.00	POND 3A	1238	2
1181+39.48	1186+25.00	POND 3B	870	1
1198+75.00	1202+25.00	POND 4A	868	1
1210+28.80	1216+75.00	POND 4B	1036	1
1258+84.05	1261+90.00	POND 6	1191	1
TOTALS:			6523	7

* DENOTES ALTERNATE BID ITEM.

SOLID SODDING

STATION	SIDE	LOCATION/DESCRIPTION	SOLID SODDING	WATER
			SQ. YD.	M. GAL.
1175+80	LT.	POND 3A	5460.0	69.0
1183+33	LT.	POND 3B	3977.0	50.0
1200+40	LT.	POND 4A	3482.0	44.0
1213+78	LT.	POND 4B	5448.0	69.0
1227+64	RT.	POND 5A	4916.0	62.0
1230+67	LT.	POND 5B	5170.0	65.0
1259+47	RT.	POND 6	3897.0	49.0
TOTALS:			32350.0	408.0

FLOWABLE SELECT MATERIAL

STATION	LOCATION	CU. YD.
1165+00	MAIN LANES - FILL AND ABANDON 18" X 84' R.C. PIPE CULVERT	6
1180+00	MAIN LANES - FILL AND ABANDON 18" X 86' R.C. PIPE CULVERT	6
1220+00	MAIN LANES - FILL AND ABANDON 18" X 85' R.C. PIPE CULVERT	6
1261+00	MAIN LANES - FILL AND ABANDON 18" X 123' R.C. PIPE CULVERT	8
TOTAL:		26

DRIVEWAYS & TURNOUTS

STATION	SIDE	WIDTH	ACHM SURFACE COURSE (1/2") 220 LBS. PER SQ YD. (PG 76-22)		AGGREGATE BASE CRS. (CLASS 7)	SIDE DRAINS
			SQ. YD.	TON		21" X 15" ARCH
		FT.	SQ.YD.		TON	LIN. FT.
1173+60	LT.	16	10.12	1.11	12.40	38
TOTALS:				1.11	12.40	38

BASIS OF ESTIMATE:
ACHM SURFACE COURSE (1/2").....94.5% MIN. AGGR.....5.5% ASPHALT BINDER
MAXIMUM NUMBER OF GYRATIONS = 205 FOR PG 76-22

NOTE: FOR R.C. PIPE CULVERT INSTALLATIONS USE TYPE 3 BEDDING UNLESS OTHERWISE SPECIFIED.
FOR C.M. PIPE CULVERT INSTALLATIONS USE TYPE 2 BEDDING, UNLESS OTHERWISE SPECIFICED.

CLEARING AND GRUBBING

STATION	STATION	LOCATION	CLEARING	GRUBBING
			ACRES	
1181+21	1182+29	POND 3A	0.33	0.33
1225+63	1228+92	POND 5A	1.10	1.10
1228+88	1232+55	POND 5B	1.43	1.43
1260+29	1261+74	POND 6	0.10	0.10
TOTALS:			2.96	2.96

STATE OF ARKANSAS
REGISTERED PROFESSIONAL ENGINEER
No. 15560
3-03-16
JEROME PAUL DAVIS

4" PIPE UNDERDRAINS (BOX 1 OF 3)

STATION	STATION	LOCATION	4" PIPE UNDERDRAINS	UNDERDRAIN OUTLET PROTECTORS
			LIN. FT.	EACH
1113+85	1116+85	I-49 R.M.L.	311	
1113+85	1116+85	I-49 L.M.L.	311	
1116+85	1119+85	I-49 R.M.L.	311	
1116+85	1119+85	I-49 L.M.L.	311	
1119+85	1122+85	I-49 R.M.L.	313	
1119+85	1122+85	I-49 L.M.L.	313	
1126+15	1129+00	I-49 R.M.L.	296	
1126+15	1129+00	I-49 L.M.L.	296	
1129+00	1132+00	I-49 R.M.L.	311	
1129+00	1132+00	I-49 L.M.L.	311	
1135+15	1138+00	I-49 R.M.L.	298	
1135+15	1138+00	I-49 L.M.L.	298	
1144+00	1146+50	I-49 R.M.L.	261	
1144+00	1146+50	I-49 L.M.L.	261	
1146+50	1148+00	I-49 R.M.L.	161	
1146+50	1148+00	I-49 L.M.L.	161	
1148+00	1149+50	I-49 R.M.L.	161	
1148+00	1149+50	I-49 L.M.L.	161	
1149+50	1151+00	I-49 R.M.L.	161	
1149+50	1151+00	I-49 L.M.L.	161	
1151+00	1152+50	I-49 R.M.L.	161	
1151+00	1152+50	I-49 L.M.L.	161	
1152+50	1153+00	I-49 R.M.L.	66	
1152+50	1153+00	I-49 L.M.L.	66	
1153+00	1153+50	I-49 R.M.L.	66	
1153+00	1153+50	I-49 L.M.L.	66	
1154+85	1156+85	I-49 R.M.L.	211	
1154+85	1156+85	I-49 L.M.L.	211	
1156+85	1158+85	I-49 R.M.L.	211	
1156+85	1158+85	I-49 L.M.L.	211	
1158+85	1160+85	I-49 R.M.L.	211	
1158+85	1160+85	I-49 L.M.L.	211	
1160+85	1162+85	I-49 R.M.L.	211	
1160+85	1162+85	I-49 L.M.L.	211	
1162+85	1164+85	I-49 R.M.L.	211	
1162+85	1164+85	I-49 L.M.L.	211	
1164+85	1167+00	I-49 R.M.L.	226	
1164+85	1167+00	I-49 L.M.L.	226	
1167+00	1169+50	I-49 R.M.L.	261	
1167+00	1169+50	I-49 L.M.L.	261	
1169+50	1172+00	I-49 R.M.L.	261	
1169+50	1172+00	I-49 L.M.L.	261	
1172+00	1174+00	I-49 R.M.L.	211	
1172+00	1174+00	I-49 L.M.L.	211	
1174+00	1176+56	I-49 R.M.L.	267	
1174+00	1175+70	I-49 L.M.L.	181	
1176+56	1177+85	I-49 R.M.L.	129	
1176+56	1177+85	I-49 L.M.L.	148	
1180+20	1181+96	I-49 R.M.L.	176	
1180+20	1181+96	I-49 L.M.L.	195	
1181+96	1183+50	I-49 R.M.L.	154	
1181+96	1183+50	I-49 L.M.L.	173	
1183+50	1186+50	I-49 R.M.L.	300	
1183+50	1186+50	I-49 L.M.L.	319	
1186+50	1189+50	I-49 R.M.L.	300	
1186+50	1189+50	I-49 L.M.L.	319	
1189+50	1192+50	I-49 R.M.L.	300	
1189+50	1192+50	I-49 L.M.L.	319	
1198+00	1199+75	I-49 R.M.L.	186	
1198+00	1199+75	I-49 L.M.L.	186	
1199+75	1201+50	I-49 R.M.L.	186	
1199+75	1201+50	I-49 L.M.L.	186	
1201+50	1203+00	I-49 R.M.L.	163	
1201+50	1203+00	I-49 L.M.L.	163	
1203+00	1204+50	I-49 R.M.L.	161	
1203+00	1204+50	I-49 L.M.L.	161	
1204+50	1206+00	I-49 R.M.L.	161	
1204+50	1206+00	I-49 L.M.L.	161	
1206+00	1207+50	I-49 R.M.L.	161	
1206+00	1207+50	I-49 L.M.L.	161	
SUBTOTALS:			**15098**	

4" PIPE UNDERDRAIN (BOX 2 OF 3)

STATION	STATION	LOCATION	4" PIPE UNDERDRAINS	UNDERDRAIN OUTLET PROTECTORS
			LIN. FT.	EACH
1207+50	1209+00	I-49 R.M.L.	161	
1207+50	1209+00	I-49 L.M.L.	161	
1209+00	1210+50	I-49 R.M.L.	161	
1209+00	1210+50	I-49 L.M.L.	161	
1210+50	1212+00	I-49 R.M.L.	161	
1210+50	1212+00	I-49 L.M.L.	161	
1212+00	1213+50	I-49 R.M.L.	161	
1212+00	1213+50	I-49 L.M.L.	161	
1213+50	1215+00	I-49 R.M.L.	161	
1213+50	1215+00	I-49 L.M.L.	161	
1216+50	1217+75	I-49 R.M.L.	136	
1216+50	1217+75	I-49 L.M.L.	136	
1217+75	1219+00	I-49 R.M.L.	136	
1217+75	1219+00	I-49 L.M.L.	136	
1219+00	1219+85	I-49 R.M.L.	96	
1219+00	1219+85	I-49 L.M.L.	96	
1219+85	1221+50	I-49 R.M.L.	176	
1219+85	1221+50	I-49 L.M.L.	176	
1221+50	1222+50	I-49 R.M.L.	111	
1221+50	1222+50	I-49 L.M.L.	111	
1222+50	1224+40	I-49 R.M.L.	201	
1222+50	1224+40	I-49 L.M.L.	201	
1227+15	1228+10	I-49 R.M.L.	106	
1227+15	1228+10	I-49 L.M.L.	106	
1228+10	1229+00	I-49 R.M.L.	101	
1228+10	1229+00	I-49 L.M.L.	101	
1229+00	1230+75	I-49 R.M.L.	186	
1229+00	1230+75	I-49 L.M.L.	186	
1232+50	1234+20	I-49 R.M.L.	181	
1232+50	1234+20	I-49 L.M.L.	181	
1234+20	1236+00	I-49 R.M.L.	191	
1234+20	1236+00	I-49 L.M.L.	191	
1236+00	1238+00	I-49 R.M.L.	211	
1236+00	1238+00	I-49 L.M.L.	211	
1238+00	1240+00	I-49 R.M.L.	211	
1238+00	1240+00	I-49 L.M.L.	211	
1240+00	1241+50	I-49 R.M.L.	161	
1240+00	1241+50	I-49 L.M.L.	161	
1246+00	1249+00	I-49 R.M.L.	313	
1246+00	1249+00	I-49 L.M.L.	313	
1249+00	1252+00	I-49 R.M.L.	313	
1249+00	1252+00	I-49 L.M.L.	313	
1252+00	1255+00	I-49 R.M.L.	313	
1252+00	1255+00	I-49 L.M.L.	313	
1255+00	1258+00	I-49 R.M.L.	313	
1255+00	1258+00	I-49 L.M.L.	313	
1258+00	1259+50	I-49 R.M.L.	163	
1258+00	1259+50	I-49 L.M.L.	169	
1264+65	1267+00	I-49 R.M.L.	235	
1264+65	1267+00	I-49 L.M.L.	254	
1270+00	1273+00	I-49 R.M.L.	300	
1270+00	1273+00	I-49 L.M.L.	319	
1273+00	1276+75	I-49 R.M.L.	375	
1273+00	1276+75	I-49 L.M.L.	394	
1276+75	1279+75	I-49 R.M.L.	300	
1276+75	1279+75	I-49 L.M.L.	319	
1282+75	1285+50	I-49 R.M.L.	286	
1282+75	1285+50	I-49 L.M.L.	286	
1285+50	1288+50	I-49 R.M.L.	311	
1285+50	1288+50	I-49 L.M.L.	311	
1288+50	1291+00	I-49 R.M.L.	261	
1288+50	1289+00	I-49 L.M.L.	61	
1289+00	1291+00	I-49 L.M.L.	211	
1291+00	1293+60	I-49 R.M.L.	271	
1291+00	1293+60	I-49 L.M.L.	271	
1299+00	1302+00	I-49 R.M.L.	313	
1299+00	1302+00	I-49 L.M.L.	313	
1302+00	1305+00	I-49 R.M.L.	313	
1302+00	1305+00	I-49 L.M.L.	313	
SUBTOTALS:			**14871**	

4" PIPE UNDERDRAIN (BOX 3 OF 3)

STATION	STATION	LOCATION	4" PIPE UNDERDRAINS	UNDERDRAIN OUTLET PROTECTORS
			LIN. FT.	EACH
1305+00	1306+50	I-49 R.M.L.	163	
1305+00	1306+50	I-49 L.M.L.	163	
1306+50	1308+85	I-49 R.M.L.	254	
1306+50	1308+85	I-49 L.M.L.	248	
1319+50	1321+85	I-49 R.M.L.	248	
1319+50	1321+85	I-49 L.M.L.	248	
1326+50	1328+40	I-49 R.M.L.	209	
1326+50	1328+40	I-49 L.M.L.	203	
1330+00	1332+00	I-49 R.M.L.	211	
1330+00	1332+00	I-49 L.M.L.	211	
1335+15	1338+00	I-49 R.M.L.	296	
1335+15	1338+00	I-49 L.M.L.	296	
1338+00	1341+00	I-49 R.M.L.	313	
1338+00	1341+00	I-49 L.M.L.	313	
1349+00	1352+00	I-49 R.M.L.	313	
1349+00	1352+00	I-49 L.M.L.	313	
1352+00	1355+00	I-49 R.M.L.	311	
1352+00	1355+00	I-49 L.M.L.	316	
1355+50	1357+60	I-49 R.M.L.	221	
1355+50	1357+60	I-49 L.M.L.	229	
1357+60	1360+60	I-49 R.M.L.	311	
1357+60	1360+60	I-49 L.M.L.	319	
1360+60	1363+60	I-49 R.M.L.	311	
1360+60	1363+60	I-49 L.M.L.	319	
1363+60	1366+60	I-49 R.M.L.	311	
1363+60	1366+60	I-49 L.M.L.	319	
1366+60	1369+60	I-49 R.M.L.	313	
1366+60	1369+60	I-49 L.M.L.	313	
1369+60	1372+60	I-49 R.M.L.	313	
1369+60	1372+60	I-49 L.M.L.	313	
1372+60	1373+60	I-49 R.M.L.	111	
1372+60	1373+60	I-49 L.M.L.	111	
1382+00	1385+69	I-49 R.M.L.	382	
1382+00	1385+69	I-49 L.M.L.	382	
*ENTIRE PROJECT TO BE USED IF AND			5000	10
WHERE DIRECTED BY THE ENGINEER				
SUBTOTALS:			**14207**	**10**

SUBTOTALS (BOX 1 OF 3):	15098	
SUBTOTALS (BOX 2 OF 3):	14871	
SUBTOTALS (BOX 3 OF 3):	14207	10
TOTALS:	**44176**	**10**

NOTE: QUANTITIES ESTIMATED. SEE SECTION 104.03 OF THE STANDARD SPECIFICATIONS.
UNDERDRAINS SHALL BE STUBBED INTO THE PROPOSED DROP INLET IF AND WHERE DIRECTED BY THE ENGINEER
PAYMENT FOR THIS TO BE INCLUDED IN THE UNIT PRICE BID FOR THE 4" PIPE UNDERDRAIN.

QUANTITIES

STATE OF ARKANSAS
REGISTERED PROFESSIONAL ENGINEER
No. 15560
5-06-16
JEROME PAUL DAVIS

BASE AND SURFACING

STATION	STATION	LOCATION	LENGTH	AGGREGATE BASE COURSE (CLASS 7)		ACNHPP-49-1(17)77 ACHM BASE COURSE (1 1/2")				ACNHPP-49-1(17)77 ACHM BINDER COURSE (1")				ACNHPP-49-1(17)77 ACHM SURFACE COURSE (1/2")									ACNHPP-49-1(17)77 TACK COAT			
				TON / STATION	TON	AVG. WID.	SQ.YD.	POUND / SQ.YD.	PG 76-22	AVG. WID.	SQ.YD.	POUND / SQ.YD.	PG 76-22	AVG. WID.	SQ.YD.	POUND / SQ.YD.	PG 76-22	AVG. WID.	SQ.YD.	POUND / SQ.YD.	PG 76-22	TOTAL PG 76-22	AVG. WID.	SQ.YD.	GALLONS/ SQ.YD.	GALLONS
			FT.			FT.			TON	FT.			TON	FT.			TON	FT.			TON	TON	FT.			
FULL DEPTH WIDENING INTO MEDIAN																										
1108+78.59	1113+17.11	I-49	438.52	411.25	1803.41	39.00	1900.25	880.00	836.11	38.50	1875.89	440.00	412.70	38.26	1864.20	220.00	205.06	56.00	2728.57	220.00	300.14	505.20	154.76	7540.60	0.05	377.03
1113+17.11	1114+17.11	I-49 MEDIAN TAPER	100.00	382.73	382.73	39.00	433.33	880.00	190.67	38.50	427.78	440.00	94.11	38.26	425.11	220.00	46.76	56.00	622.22	220.00	68.44	115.20	154.76	1719.56	0.05	85.98
1114+17.11	1114+93.46	I-49 MEDIAN WIDENED FOR BRIDGE PIER	76.35	354.20	270.43	39.00	330.85	880.00	145.57	38.50	326.61	440.00	71.85	38.26	324.57	220.00	35.70	56.00	475.07	220.00	52.26	87.96	154.76	1312.88	0.05	65.64
1114+93.46	1115+93.46	I-49 MEDIAN TAPER	100.00	382.73	382.73	39.00	433.33	880.00	190.67	38.50	427.78	440.00	94.11	38.26	425.11	220.00	46.76	56.00	622.22	220.00	68.44	115.20	154.76	1719.56	0.05	85.98
1132+56.00	1136+34.46	I-49 LML LEFT SHOULDER	411.00	110.50	454.16													5.97	272.63	220.00	29.99	29.99	5.97	272.63	0.05	13.63
1115+93.46	1153+31.00	I-49	3737.54	411.25	15370.63	39.00	16196.01	880.00	7126.24	38.50	15988.37	440.00	3517.44	38.26	15888.70	220.00	1747.76	56.00	23255.80	220.00	2558.14	4305.90	154.76	64269.08	0.05	3213.45
1153+31.00	1154+15.61	I-49 MEDIAN TAPER	84.61	400.54	338.89	39.00	366.64	880.00	161.32	38.50	361.94	440.00	79.63	38.26	359.69	220.00	39.57	56.00	526.46	220.00	57.91	97.48	154.76	1454.92	0.05	72.75
1154+15.61	1154+36.94	I-49 MEDIAN WIDENED FOR BRIDGE PIER	21.33	389.82	83.15	39.00	92.43	880.00	40.67	38.50	91.25	440.00	20.08	38.26	90.68	220.00	9.97	56.00	132.72	220.00	14.60	24.57	154.76	366.78	0.05	18.34
1154+36.94	1155+22.00	I-49 MEDIAN TAPER	85.06	400.54	340.70	39.00	368.59	880.00	162.18	38.50	363.87	440.00	80.05	38.26	361.60	220.00	39.78	56.00	529.26	220.00	58.22	98.00	154.76	1462.65	0.05	73.13
1155+22.00	1176+55.00	I-49	2133.00	411.25	8771.96	39.00	9243.00	880.00	4066.92	38.50	9124.50	440.00	2007.39	38.26	9067.62	220.00	997.44	56.00	13272.00	220.00	1459.92	2457.36	154.76	36678.12	0.05	1833.91
1176+55.00	1197+55.00	I-49 SUPERELEVATION, TYPE C MEDIAN BARRIER	2100.00	205.63	4318.23	39.00	9100.00	880.00	4004.00	38.50	8983.33	440.00	1976.33	38.26	8927.33	220.00	982.01	58.00	13533.33	220.00	1488.67	2470.68	154.76	36110.67	0.05	1805.53
1197+55.00	1223+79.47	I-49	2624.47	411.25	10793.13	39.00	11372.70	880.00	5003.99	38.50	11226.90	440.00	2469.92	38.26	11156.91	220.00	1227.26	56.00	16330.04	220.00	1796.30	3023.56	154.76	45129.22	0.05	2256.46
1223+79.49	1224+64.47	I-49 MEDIAN TAPER	84.98	400.54	340.37	39.00	368.25	880.00	162.03	38.50	363.53	440.00	79.98	38.26	361.26	220.00	39.74	56.00	528.76	220.00	58.16	97.90	154.76	1461.28	0.05	73.06
1224+64.47	1225+62.05	I-49 MEDIAN WIDENED FOR BRIDGE PIER	97.58	389.82	380.39	39.00	422.85	880.00	186.05	38.50	417.43	440.00	91.83	38.26	414.82	220.00	45.63	56.00	607.16	220.00	66.79	112.42	154.76	1677.94	0.05	83.90
1225+62.05	1226+47.05	I-49 MEDIAN TAPER	85.00	400.54	340.45	39.00	368.33	880.00	162.07	38.50	363.61	440.00	79.99	38.26	361.34	220.00	39.75	56.00	528.89	220.00	58.18	97.93	154.76	1461.62	0.05	73.08
1226+47.05	1261+15.00	I-49	3467.95	411.25	14261.94	39.00	15027.78	880.00	6612.22	38.50	14835.12	440.00	3263.73	38.26	14742.64	220.00	1621.69	56.00	21578.36	220.00	2373.62	3995.31	154.76	59633.33	0.05	2981.67
1261+15.00	1261+45.00	I-49 MEDIAN TAPER	30.00	418.82	125.64	39.00	130.00	880.00	57.20	38.50	128.33	440.00	28.23	38.26	127.53	220.00	14.03	56.00	186.67	220.00	20.53	34.56	154.76	515.87	0.05	25.79
1263+62.00	1263+92.00	I-49 MEDIAN TAPER	30.00	425.44	127.63	39.00	130.00	880.00	57.20	38.50	128.33	440.00	28.23	38.26	127.53	220.00	14.03	56.00	186.67	220.00	20.53	34.56	154.76	515.87	0.05	25.79
1263+92.00	1287+50.00	I-49 SUPERELEVATION, TYPE C MEDIAN BARRIER	2358.00	424.50	10009.71	39.00	10218.00	880.00	4495.92	38.50	10087.00	440.00	2219.14	38.26	10024.12	220.00	1102.65	58.00	15196.00	220.00	1671.56	2774.21	154.76	40547.12	0.05	2027.36
1287+50.00	1292+81.00	I-49	531.00	411.25	2183.74	39.00	2301.00	880.00	1012.44	38.50	2271.50	440.00	499.73	38.26	2257.34	220.00	248.31	56.00	3304.00	220.00	363.44	611.75	154.76	9130.84	0.05	456.54
1292+80.78	1295+25.68	I-49 MEDIAN WIDENED FOR BRIDGE PIER	244.90	389.82	954.67	39.00	1061.23	880.00	466.94	38.50	1047.63	440.00	230.48	38.26	1041.10	220.00	114.52	56.00	1523.82	220.00	167.62	282.14	154.76	4211.19	0.05	210.56
1295+25.68	1308+20.00	I-49	1294.32	411.25	5322.89	39.00	5608.72	880.00	2467.84	38.50	5536.81	440.00	1218.10	38.26	5502.30	220.00	605.25	56.00	8053.55	220.00	885.89	1491.14	154.76	22256.55	0.05	1112.83
1308+20.00	1309+19.00	I-49 SUPERELEVATION, TYPE C MEDIAN BARRIER	99.00	424.50	420.26	39.00	429.00	880.00	188.76	38.50	423.50	440.00	93.17	38.26	420.86	220.00	46.29	58.00	638.00	220.00	70.18	116.47	154.76	1702.36	0.05	85.12
1309+19.00	1309+49.00	I-49 MEDIAN TAPER	30.00	425.44	127.63	39.00	130.00	880.00	57.20	38.50	128.33	440.00	28.23	38.26	127.53	220.00	14.03	56.00	186.67	220.00	20.53	34.56	154.76	515.87	0.05	25.79
1312+91.00	1313+21.46	I-49 MEDIAN TAPER	30.46	425.44	129.59	39.00	131.99	880.00	58.08	38.50	130.30	440.00	28.67	38.26	129.49	220.00	14.24	56.00	189.53	220.00	20.85	35.09	154.76	523.78	0.05	26.19
1313+21.46	1317+56.74	I-49 SUPERELEVATION, TYPE C MEDIAN BARRIER	435.28	424.50	1847.76	39.00	1886.21	880.00	829.93	38.50	1862.03	440.00	409.65	38.26	1850.42	220.00	203.55	58.00	2805.14	220.00	308.57	512.12	154.76	7484.88	0.05	374.24
1317+56.74	1318+41.75	I-49 MEDIAN TAPER	85.01	415.41	353.14	39.00	368.38	880.00	162.09	38.50	363.65	440.00	80.00	38.26	361.39	220.00	39.75	56.00	528.95	220.00	58.18	97.93	154.76	1461.79	0.05	73.09
1318+41.75	1319+22.22	I-49 MEDIAN WIDENED FOR BRIDGE PIER	80.47	406.32	326.97	39.00	348.70	880.00	153.43	38.50	344.23	440.00	75.73	38.26	342.09	220.00	37.63	56.00	500.70	220.00	55.08	92.71	154.76	1383.73	0.05	69.19
1319+22.22	1320+07.23	I-49 MEDIAN TAPER	85.01	415.41	353.14	39.00	368.38	880.00	162.09	38.50	363.65	440.00	80.00	38.26	361.39	220.00	39.75	56.00	528.95	220.00	58.18	97.93	154.76	1461.79	0.05	73.09
1320+07.23	1332+10.00	I-49 SUPERELEVATION, TYPE C MEDIAN BARRIER	1202.77	424.50	5105.76	39.00	5212.00	880.00	2293.28	38.50	5145.18	440.00	1131.94	38.26	5113.11	220.00	562.44	58.00	7751.18	220.00	852.63	1415.07	154.76	20682.30	0.05	1034.12
1332+10.00	1341+34.00	I-49	924.00	411.25	3799.95	39.00	4004.00	880.00	1761.76	38.50	3952.67	440.00	869.59	38.26	3928.03	220.00	432.08	56.00	5749.33	220.00	632.43	1064.51	154.76	15888.69	0.05	794.43
1341+34.00	1363+60.00	I-49 SUPERELEVATION, TYPE C MEDIAN BARRIER	2226.00	424.50	9449.37	39.00	9646.00	880.00	4244.24	38.50	9522.33	440.00	2094.91	38.26	9462.97	220.00	1040.93	58.00	14345.33	220.00	1577.99	2618.92	154.76	38277.31	0.05	1913.87
1363+60.00	1375+60.00	I-49	1200.00	411.25	4935.00	39.00	5200.00	880.00	2288.00	38.50	5133.33	440.00	1129.33	38.26	5101.33	220.00	561.15	56.00	7466.67	220.00	821.33	1382.48	154.76	20634.67	0.05	1031.73
1375+60.00	1376+23.00	I-49 MEDIAN TAPER	63.00	418.82	263.85	39.00	273.00	880.00	120.12	38.50	269.50	440.00	59.29	38.26	267.82	220.00	29.46	56.00	392.00	220.00	43.12	72.58	154.76	1083.32	0.05	54.17
1380+94.00	1381+24.00	I-49 MEDIAN TAPER	30.00	418.82	125.64	39.00	130.00	880.00	57.20	38.50	128.33	440.00	28.23	38.26	127.53	220.00	14.03	56.00	186.67	220.00	20.53	34.56	154.76	515.87	0.05	25.79
1381+24.00	1385+03.98	I-49	379.98	411.25	1562.67	39.00	1646.58	880.00	724.50	38.50	1625.47	440.00	357.60	38.26	1615.34	220.00	177.69	56.00	2364.32	220.00	260.08	437.77	154.76	6533.97	0.05	326.70
TOTALS:					**106158.31**		**115247.53**		**50708.93**		**113770.01**		**25029.39**		**113060.80**		**12436.69**		**167627.64**		**18439.03**	**30875.72**		**457598.61**		**22879.93**

BASIS OF ESTIMATE:
ACHM SURFACE COURSE (1/2") ..... 94.5% MIN. AGGR ..... 5.5% ASPHALT BINDER
ACHM BINDER COURSE (1") ..... 95.5% MIN. AGGR ..... 4.5% ASPHALT BINDER
ACHM BASE COURSE (1 1/2") ..... 95.9% MIN. AGGR ..... 4.1% ASPHALT BINDER
MAXIMUM NUMBER OF GYRATIONS = 205 FOR PG 76-22

STATE OF ARKANSAS
REGISTERED PROFESSIONAL ENGINEER
No. 15560
5-06-16
JEROME PAUL DAVIS

BASE AND SURFACING

STATION	STATION	LOCATION	LENGTH	BIM-B49-0(219) ACHM SURFACE COURSE (1/2")				BIM-B49-0(219) TACK COAT			
				AVG. WID.	SQ.YD.	POUND / SQ.YD.	PG 76-22	AVG. WID.	SQ.YD.	GALLONS/ SQ.YD.	GALLONS
			FT.	FT.			TON	FT.			
INLAY EXISTING LANES - RIGHT											
1104+31.59	1128+83.86	I-49 R.M.L.	2452.27	26.00	7084.34	220.00	779.28	26.00	7084.34	0.17	1204.34
1128+83.86	1138+92.73	I-49 R.M.L.	1008.87	33.57	3763.09	220.00	413.94	33.57	3763.09	0.17	639.73
1138+92.73	1209+65.63	I-49 R.M.L.	7072.90	26.00	20432.82	220.00	2247.61	26.00	20432.82	0.17	3473.58
1209+65.63	1211+63.35	I-49 R.M.L.	197.72	33.62	738.59	220.00	81.24	33.62	738.59	0.17	125.56
1211+63.35	1233+65.77	I-49 R.M.L.	2202.42	26.00	6362.55	220.00	699.88	26.00	6362.55	0.17	1081.63
1233+65.77	1244+15.83	I-49 R.M.L.	1050.06	34.67	4045.06	220.00	444.96	34.67	4045.06	0.17	687.66
1244+15.83	1261+45.00	I-49 R.M.L.	1729.17	26.00	4995.38	220.00	549.49	26.00	4995.38	0.17	849.21
1263+62.00	1295+94.85	I-49 R.M.L.	3232.85	26.00	9339.34	220.00	1027.33	26.00	9339.34	0.17	1587.69
1295+94.85	1298+11.02	I-49 R.M.L.	216.17	33.88	813.76	220.00	89.51	33.88	813.76	0.17	138.34
1298+11.02	1309+72.77	I-49 R.M.L.	1161.75	26.00	3356.17	220.00	369.18	26.00	3356.17	0.17	570.55
1313+15.43	1336+41.30	I-49 R.M.L.	2325.87	26.00	6719.18	220.00	739.11	26.00	6719.18	0.17	1142.26
1336+41.30	1347+59.37	I-49 R.M.L.	1118.07	31.95	3969.15	220.00	436.61	31.95	3969.15	0.17	674.76
1347+59.37	1362+29.33	I-49 R.M.L.	1469.96	26.00	4246.55	220.00	467.12	26.00	4246.55	0.17	721.91
1362+29.33	1365+00.61	I-49 R.M.L.	271.28	34.13	1028.75	220.00	113.16	34.13	1028.75	0.17	174.89
1365+00.61	1376+23.00	I-49 R.M.L.	1122.39	26.00	3242.46	220.00	356.67	26.00	3242.46	0.17	551.22
1380+94.00	1386+69.00	I-49 R.M.L.	575.00	26.00	1661.11	220.00	182.72	26.00	1661.11	0.17	282.39
INLAY EXISTING LANES - LEFT											
1106+48.59	1130+03.91	I-49 L.M.L.	2355.32	26.00	6804.26	220.00	748.47	26.00	6804.26	0.17	1156.72
1130+03.91	1132+32.50	I-49 L.M.L.	228.59	33.47	850.10	220.00	93.51	33.47	850.10	0.17	144.52
1132+32.50	1207+22.03	I-49 L.M.L.	7489.53	26.00	21636.42	220.00	2380.01	26.00	21636.42	0.17	3678.19
1207+22.03	1215+83.55	I-49 L.M.L.	861.52	33.66	3222.08	220.00	354.43	33.66	3222.08	0.17	547.75
1215+83.55	1240+97.61	I-49 L.M.L.	2514.06	26.00	7262.84	220.00	798.91	26.00	7262.84	0.17	1234.68
1240+97.61	1243+07.26	I-49 L.M.L.	209.65	33.73	785.72	220.00	86.43	33.73	785.72	0.17	133.57
1243+07.26	1261+45.00	I-49 L.M.L.	1837.74	26.00	5309.03	220.00	583.99	26.00	5309.03	0.17	902.54
1263+62.00	1291+24.22	I-49 L.M.L.	2762.22	26.00	7979.75	220.00	877.77	26.00	7979.75	0.17	1356.56
1291+24.22	1304+10.29	I-49 L.M.L.	1286.07	32.06	4581.27	220.00	503.94	32.06	4581.27	0.17	778.82
1304+10.29	1309+25.83	I-49 L.M.L.	515.54	26.00	1489.34	220.00	163.83	26.00	1489.34	0.17	253.19
1312+65.08	1336+95.57	I-49 L.M.L.	2430.49	26.00	7021.42	220.00	772.36	26.00	7021.42	0.17	1193.64
1336+95.57	1339+81.80	I-49 L.M.L.	286.23	34.03	1082.27	220.00	119.05	34.03	1082.27	0.17	183.99
1339+81.80	1355+11.00	I-49 L.M.L.	1529.20	26.00	4417.69	220.00	485.95	26.00	4417.69	0.17	751.01
1355+11.00	1365+39.31	I-49 L.M.L.	1028.31	34.89	3986.42	220.00	438.51	34.89	3986.42	0.17	677.69
1365+39.31	1376+23.00	I-49 L.M.L.	1083.69	26.00	3130.66	220.00	344.37	26.00	3130.66	0.17	532.21
1380+94.00	1386+69.00	I-49 L.M.L.	575.00	26.00	1661.11	220.00	182.72	26.00	1661.11	0.17	282.39
TOTALS:					**163018.68**		**17932.06**		**163018.68**		**27713.19**

BASIS OF ESTIMATE:
ACHM SURFACE COURSE (1/2") ..... 94.5% MIN. AGGR ..... 5.5% ASPHALT BINDER
MAXIMUM NUMBER OF GYRATIONS = 205 FOR PG 76-22

COLD MILLING ASPHALT PAVEMENT

STATION	STATION	LOCATION	AVG. WIDTH	BIM-B49-0(219) COLD MILLING ASPHALT PAVEMENT
			FEET	SQ.YD.
1104+31.59	1128+83.86	I-49 R.M.L.	26.00	7084.34
1128+83.86	1138+92.73	I-49 R.M.L.	33.57	3763.09
1138+92.73	1209+65.63	I-49 R.M.L.	26.00	20432.82
1209+65.63	1211+63.35	I-49 R.M.L.	33.62	738.59
1211+63.35	1233+65.77	I-49 R.M.L.	26.00	6362.55
1233+65.77	1244+15.83	I-49 R.M.L.	34.67	4045.06
1244+15.83	1261+45.00	I-49 R.M.L.	26.00	4995.38
1263+62.00	1295+94.85	I-49 R.M.L.	26.00	9339.34
1295+94.85	1298+11.02	I-49 R.M.L.	33.88	813.76
1298+11.02	1309+72.77	I-49 R.M.L.	26.00	3356.17
1313+15.43	1336+41.30	I-49 R.M.L.	26.00	6719.18
1336+41.30	1347+59.37	I-49 R.M.L.	31.95	3969.15
1347+59.37	1362+29.33	I-49 R.M.L.	26.00	4246.55
1362+29.33	1365+00.61	I-49 R.M.L.	34.13	1028.75
1365+00.61	1376+23.00	I-49 R.M.L.	26.00	3242.46
1380+94.00	1386+69.00	I-49 R.M.L.	26.00	1661.11
1106+48.59	1130+03.91	I-49 L.M.L.	26.00	6804.26
1130+03.91	1132+32.50	I-49 L.M.L.	33.47	850.10
1132+32.50	1207+22.03	I-49 L.M.L.	26.00	21636.42
1207+22.03	1215+83.55	I-49 L.M.L.	33.66	3222.08
1215+83.55	1240+97.61	I-49 L.M.L.	26.00	7262.84
1240+97.61	1243+07.26	I-49 L.M.L.	33.73	785.72
1243+07.26	1261+45.00	I-49 L.M.L.	26.00	5309.03
1263+62.00	1291+24.22	I-49 L.M.L.	26.00	7979.75
1291+24.22	1304+10.29	I-49 L.M.L.	32.06	4581.27
1304+10.29	1309+25.83	I-49 L.M.L.	26.00	1489.34
1312+65.08	1336+95.57	I-49 L.M.L.	26.00	7021.42
1336+95.57	1339+81.80	I-49 L.M.L.	34.03	1082.27
1339+81.80	1355+11.00	I-49 L.M.L.	26.00	4417.69
1355+11.00	1365+39.31	I-49 L.M.L.	34.89	3986.42
1365+39.31	1376+23.00	I-49 L.M.L.	26.00	3130.66
1380+94.00	1386+69.00	I-49 L.M.L.	26.00	1661.11
TOTAL:				**163018.68**

QUANTITIES

Crafton, Tull & Associates Inc.

DATE REVISED	DATE FILMED	DATE REVISED	DATE FILMED

FED.RD. DIST.NO.	STATE	FED.AID PROJ.NO.	SHEET NO.	TOTAL SHEETS
6	ARK.			
JOB NO.		CA0901	92	452
(1) A&B5956-A&B5960		BR. OTYS.		57679

SCHEDULE OF BRIDGE QUANTITIES - JOB NO. CA0901

BRIDGE NO.	NAME PLATE TITLE	UNIT OF STRUCTURE / ITEM NO.	801	802	802	802	802	803	804	805	805	SP & 807	807	808	809	812	816	816	821
		ITEM	UNCLASSIFIED EXCAVATION FOR STRUCTURES-BRIDGE	CLASS S CONCRETE -BRIDGE	CLASS S(AE) CONCRETE -BRIDGE	PRESTRESSED CONCRETE GIRDERS (TYPE II)	PRESTRESSED CONCRETE GIRDERS (TYPE III)	CLASS 2 PROTECTIVE SURFACE TREATMENT	REINFORCING STEEL - BRIDGE (GRADE 60)	(1) STEEL PILING (HP 12X53)	PREBORING	STRUCTURAL STEEL IN BEAM SPANS (M 270, GRADE 50)	(3) PAINTING STRUCTURAL STEEL	ELASTOMERIC BEARINGS	SILICONE JOINT SEALANT	BRIDGE NAME PLATE (TYPE D)	DUMPED RIPRAP	FILTER BLANKET	MODIFICATION OF EXISTING BRIDGE STRUCTURE (BRIDGE NO.)
		UNIT	CU. YD.	CU. YD.	CU. YD.	LIN. FT.	LIN. FT.	SQ. YD.	LB.	LIN. FT.	LIN. FT.	LB.	TON	CU. IN.	LIN. FT.	EACH	CU. YD.	SQ. YD.	LUMP SUM
A5956	BLOSSOM WAY CREEK	BENT 1	58	15.83				8.8	1431	132		432		1674.0					
		BENT 2	246	69.06					15291					3348.0			10	20	
		BENT 3	277	69.22					15286					3348.0			10	20	
		BENT 4	29	14.89				8.0	1396	120		432		1674.0					
		143'-0" CONT. P.S. CONC. GIRDER UNIT			135.60	561.0		1068.2	36726			3276			144	1			
		EXIST. BR. NO. A5956																	1
		TOTALS FOR BRIDGE NO. A5956	610	169.00	135.60	561.0		1085.0	70130	252		4140		10044.0	144	1	20	40	1
B5956	BLOSSOM WAY CREEK	BENT 1	45	14.77				8.0	1346	132		432		1674.0					
		BENT 2	275	69.57					15350					3348.0			10	20	
		BENT 3	282	69.72					15327					3348.0			10	20	
		BENT 4	44	15.94				8.8	1431	116		432		1674.0					
		143'-0" CONT. P.S. CONC. GIRDER UNIT			135.60	561.0		1068.2	36726			3276			144				
		EXIST. BR. NO. B5956																	1
		TOTALS FOR BRIDGE NO. B5956	646	170.00	135.60	561.0		1085.0	70180	248		4140		10044.0	144		20	40	1
A5958	BLOSSOM WAY CREEK	BENT 1	16	17.32				5.0	1760	144	141	1900	0.9	819.0					
		BENT 2	42	49.95					8788	264	252	140		1331.0			12	24	
		BENT 3	52	66.63					10899			57		1331.0			13	26	
		BENT 4	52	66.88					10899			57		1331.0			13	26	
		BENT 5	42	46.26					8118	276	264	140		1331.0			12	24	
		BENT 6	17	17.96				5.0	1836	150	147	1900	0.9	819.0					
		267'-0" CONT. COMP. W-BEAM UNIT			231.80			2099.2	69390			103116	51.6		170	1			
		EXIST. BR. NO. A5958																	1
		TOTALS FOR BRIDGE NO. A5958	221	265.00	231.80			2109.2	111690	834	804	107310	53.4	6962.0	170	1	50	100	1
B5958	BLOSSOM WAY CREEK	BENT 1	16	19.36				5.0	1892	144	141	1900	0.9	819.0					
		BENT 2	42	50.87					8909	276	264	140		1331.0			12	24	
		BENT 3	52	69.33					11328			57		1331.0			13	26	
		BENT 4	52	69.99					11328			57		1331.0			13	26	
		BENT 5	42	47.39					8306	288	276	140		1331.0			12	24	
		BENT 6	16	18.06				5.0	1787	150	147	1900	0.9	819.0					
		267'-0" CONT. COMP. W-BEAM UNIT			229.60			2099.2	66260			101936	51.0		172				
		EXIST. BR. NO. B5958																	1
		TOTALS FOR BRIDGE NO. B5958	220	275.00	229.60			2109.2	109810	858	828	106130	52.8	6962.0	172		50	100	1
A5960	NEW HOPE ROAD & BLOSSOM WAY CREEK	BENT 1	44	12.72					1157	140				810.0					
		BENT 2	50	38.95					6244	168				2106.0					
		BENT 3	43	38.05					6116	204				2106.0					
		BENT 4	45	39.84					6606	204	144			2427.0					
		BENT 5	95	47.98					8091					3234.0					
		BENT 6	56	48.00					8091					3234.0					
		BENT 7	64	48.00					8091					3234.0					
		BENT 8	58	13.46					1679	120				1617.0					
		143'-0" CONT. P.S. CONC. GIRDER UNIT SPANS 1-3			138.43	561.0		1004.7	34998			2376			65	1			
		256'-0" CONT. P.S. CONC. GIRDER UNIT SPANS 4-7			246.57		756.8	1798.5	57617			2424			130				
		EXIST. BR. NO. A5960																	1
		TOTALS FOR BRIDGE NO. A5960	455	287.00	385.00	561.0	756.8	2803.2	138690	836	144	4800		18768.0	195	1			1
B5960	NEW HOPE ROAD & BLOSSOM WAY CREEK	BENT 1	44	12.72					1157	140				810.0					
		BENT 2	50	38.95					6244	168				2106.0					
		BENT 3	43	38.05					6116	204				2106.0					
		BENT 4	45	39.84					6606	204	144			2427.0					
		BENT 5	95	47.98					8091					3234.0					
		BENT 6	56	48.00					8091					3234.0					
		BENT 7	64	48.00					8091					3234.0					
		BENT 8	58	13.46					1679	120				1617.0					
		143'-0" CONT. P.S. CONC. GIRDER UNIT SPANS 1-3			138.43	561.0		1004.7	34998			2376			65				
		256'-0" CONT. P.S. CONC. GIRDER UNIT SPANS 4-7			246.57		756.8	1798.5	57617			2424			130				
		EXIST. BR. NO. B5960																	1
		TOTALS FOR BRIDGE NO. B5960	455	287.00	385.00	561.0	756.8	2803.2	138690	836	144	4800		18768.0	195				1
		TOTALS FOR JOB CA0901	(2) 2607	1453.00	1502.60	2244.0	1513.6	11994.8	639190	3864	1920	231320	106.2	71548.0	1020	3	140	280	

(1) Steel piling (Grade 50) shall have special driving points which shall not be paid for directly, but shall be considered subsidiary to the item "Steel Piling (HP 12x53)".

(2) Includes 397 cu. yard of rock excavation.

(3) The paint color for the new structural steel shall match the paint color of the existing structural steel.

STATE OF ARKANSAS
REGISTERED PROFESSIONAL ENGINEER
No. 11856
CHARLES A. WIPF

03/28/16

SCHEDULE OF BRIDGE QUANTITIES
HWY. 264 - NEW HOPE RD. (WIDENING) (S)
BENTON COUNTY
ROUTE 49 SEC. 29
ARKANSAS STATE HIGHWAY COMMISSION
LITTLE ROCK, ARK.

DRAWN BY: BWC DATE: 09-03-15 FILENAME: bca0901.gl.dgn
CHECKED BY: CAW DATE: 09-02-15 SCALE: NOT TO SCALE
DESIGNED BY: KRW DATE: 07-23-15

BRIDGE NO. A&B5956-A&B5960 DRAWING NO. 57679

USER: cw584 DESIGN FILE: G:\13106100.264toNhope\TRANSP\dgn\bridge\bca0901.gl.dgn PLOTTED: 3/28/2016 09:05 SCALE: 2:1

Crafton Tull
architecture | engineering | surveying

DATE REVISED	DATE FILMED	DATE REVISED	DATE FILMED
06/09/16			

FED.RD. DIST.NO.	STATE	FED.AID PROJ.NO.	SHEET NO.	TOTAL SHEETS
6	ARK.			
JOB NO.		CA0901	93	452

2 SUMMARY OF QUANTITIES

STATE OF ARKANSAS
REGISTERED PROFESSIONAL ENGINEER
No. 15560
JEROME PAUL DAVIS
6-09-16

SUMMARY OF QUANTITIES (BOX 1 OF 2)

ITEM NUMBER	ITEM	QUANTITIES ACNHPP-49-1(117)77	QUANTITIES BIM-B49-0(219)	TOTAL	UNIT
SP & 201	CLEARING	3		3	ACRES
201	GRUBBING	3		3	ACRES
202	REMOVAL AND DISPOSAL OF FENCE	2465		2465	LIN. FT.
202	REMOVAL AND DISPOSAL OF PIER PROTECTION	624		624	LIN. FT.
202	REMOVAL AND DISPOSAL OF APPROACH SLAB AND GUTTERS	12		12	EACH
202	REMOVAL AND DISPOSAL OF DROP INLETS	6		6	EACH
202	REMOVAL AND DISPOSAL OF SAFETY END SECTIONS	2		2	EACH
SP & 202	REMOVAL AND DISPOSAL OF WIRE ROPE SAFETY FENCE	25027		25027	LIN. FT.
SP & 202	REMOVAL AND DISPOSAL OF GUARDRAIL	5142		5142	LIN. FT.
202	REMOVAL AND DISPOSAL OF CONCRETE DITCH PAVING	11123		11123	SQ. YD.
202	REMOVAL AND DISPOSAL OF IMPACT ATTENUATION BARRIER	6		6	EACH
202	REMOVAL AND DISPOSAL OF BUILDINGS	1		1	EACH
202	REMOVAL AND DISPOSAL OF PIPE CULVERTS	2		2	EACH
206	FLOWABLE SELECT MATERIAL	26		26	CU. YD.
210	UNCLASSIFIED EXCAVATION	108549		108549	CU. YD.
210	COMPACTED EMBANKMENT	24058		24058	CU. YD.
SP & 210	SOIL STABILIZATION	200		200	TON
SP & 215	TRENCHING AND SHOULDER PREPARATION	36		36	STA.
SS & 303	AGGREGATE BASE COURSE (CLASS 7)	106939		106939	TON
SS & 401	TACK COAT	23444	27713	51157	GAL.
SP & 405	MINERAL AGGREGATE IN ACHM BASE COURSE (1 1/2")	49052		49052	TON
SP & 405	ASPHALT BINDER (PG76-22) IN ACHM BASE COURSE (1 1/2")	2097		2097	TON
SP, SS, & 406	MINERAL AGGREGATE IN ACHM BINDER COURSE (1")	24323		24323	TON
SP, SS, & 406	ASPHALT BINDER (PG76-22) IN ACHM BINDER COURSE (1")	1146		1146	TON
SP, SS, & 407	MINERAL AGGREGATE IN ACHM SURFACE COURSE (1/2")	29594	16946	46540	TON
SP, SS, & 407	ASPHALT BINDER (PG76-22) IN ACHM SURFACE COURSE (1/2")	1723	986	2709	TON
412	COLD MILLING ASPHALT PAVEMENT		163019	163019	SQ. YD.
SP & 414	ASPHALT CONCRETE PATCHING FOR MAINTENANCE OF TRAFFIC	132		132	TON
504	APPROACH SLABS	450.80		450.80	CU. YD.
504	APPROACH GUTTERS	215.00		215.00	CU. YD.
601	MOBILIZATION	1.00		1.00	LUMP SUM
SP & 602	FURNISHING FIELD OFFICE	1		1	EACH
603	TRAFFIC CONTROL SUPERVISOR	1.00		1.00	LUMP SUM
SP & 603	MAINTENANCE OF TRAFFIC	1.00		1.00	LUMP SUM
SS & 604	SIGNS	1641		1641	SQ. FT.
SS & 604	TRAFFIC DRUMS	1212		1212	EACH
604	FURNISHING AND INSTALLING PRECAST CONCRETE BARRIER	57653		57653	LIN. FT.
604	CONSTRUCTION PAVEMENT MARKINGS	77626		77626	LIN. FT.
604	REMOVAL OF PERMANENT PAVEMENT MARKINGS	17829		17829	LIN. FT.
604	ADVANCE WARNING ARROW PANEL	200		200	DAY
SP & 604	PORTABLE CHANGEABLE MESSAGE SIGN	285		285	WEEK
605	CONCRETE DITCH PAVING (TYPE B)	153		153	SQ. YD.
605	CONCRETE DITCH PAVING (TYPE SPECIAL)	1040		1040	SQ. YD.
SS & 606	21" X 15" SIDE DRAIN	38		38	LIN. FT.
606	24" FLARED END SECTIONS FOR REINFORCED CONCRETE PIPE CULVERTS	17		17	EACH
606	36" FLARED END SECTIONS FOR REINFORCED CONCRETE PIPE CULVERTS	3		3	EACH
606	SELECTED PIPE BEDDING	600		600	CU. YD.
606	18" REINFORCED CONCRETE PIPE CULVERTS (CLASS III)	70		70	LIN. FT.
606	24" REINFORCED CONCRETE PIPE CULVERTS (CLASS III)	13502		13502	LIN. FT.
606	24" REINFORCED CONCRETE PIPE CULVERTS (CLASS IV)	2338		2338	LIN. FT.
SP & 606	24" REINFORCED CONCRETE PIPE CULVERTS (CLASS V) (JACK AND BORE)	822		822	LIN. FT.
606	30" REINFORCED CONCRETE PIPE CULVERTS (CLASS III)	4		4	LIN. FT.
606	36" REINFORCED CONCRETE PIPE CULVERTS (CLASS III)	2253		2253	LIN. FT.
606	36" REINFORCED CONCRETE PIPE CULVERTS (CLASS IV)	445		445	LIN. FT.
SP & 606	36" REINFORCED CONCRETE PIPE CULVERTS (CLASS V) (JACK AND BORE)	245		245	LIN. FT.
609	DROP INLETS (TYPE RM)	2		2	EACH
SP & 609	DROP INLETS (TYPE RM MODIFIED)	7		7	EACH
609	DROP INLETS (TYPE ST)	183		183	EACH
611	UNDERDRAIN OUTLET PROTECTORS	10		10	EACH
611	4" PIPE UNDERDRAINS	44176		44176	LIN. FT.
617	GUARDRAIL (TYPE A)	275		275	LIN. FT.
617	TERMINAL ANCHOR POSTS (TYPE 1)	1		1	EACH
617	GUARDRAIL TERMINAL (TYPE 2)	1		1	EACH
619	WIRE FENCE (TYPE A)	6523		6523	LIN. FT.
619	16' STEEL GATES	7	(ALTERNATE NO. 1)	7	EACH
619	16' ALUMINUM GATES	7	(ALTERNATE NO. 2)	7	EACH
620	LIME	32		32	TON
620	SEEDING	15.83		15.83	ACRE
SS & 620	MULCH COVER	38.50		38.50	ACRE
620	WATER	2496.1		2496.1	M. GAL.
621	TEMPORARY SEEDING	22.67		22.67	ACRE
621	SILT FENCE	6718		6718	LIN. FT.
621	SAND BAG DITCH CHECKS	1848		1848	BAG
621	DROP INLET SILT FENCE	4338		4338	LIN. FT.
621	SEDIMENT REMOVAL AND DISPOSAL	1084		1084	CU. YD.
621	ROCK DITCH CHECKS	228		228	CU. YD.
623	SECOND SEEDING APPLICATION	15.83		15.83	ACRE
624	SOLID SODDING	33224		33224	SQ. YD.
631	CONCRETE BARRIER WALL (MEDIAN TYPE B)	16524		16524	LIN. FT.
631	CONCRETE BARRIER WALL (MEDIAN TYPE C)	7041		7041	LIN. FT.
631	CONCRETE BARRIER WALL (MEDIAN TYPE SP-1)	213		213	LIN. FT.
631	CONCRETE BARRIER WALL (MEDIAN TYPE SP-2)	125		125	LIN. FT.
631	CONCRETE BARRIER WALL (MEDIAN TYPE SP-3)	175		175	LIN. FT.
631	CONCRETE BARRIER WALL (MEDIAN TYPE C SPECIAL)	1345		1345	LIN. FT.
631	CONCRETE BARRIER WALL (MEDIAN TYPE SPECIAL)	1229		1229	LIN. FT.
635	ROADWAY CONSTRUCTION CONTROL	1.00		1.00	LUMP SUM
640	MODIFYING DROP INLETS	21		21	EACH
642	RUMBLE STRIPS IN ASPHALT SHOULDERS	53160	43819	96979	LIN. FT.
SP & 719	INVERTED PROFILE THERMOPLASTIC PAVEMENT MARKING WHITE (4")		54944 (ALTERNATE NO. 1)	54944	LIN. FT.
SP	HIGH PERFORMANCE MARKING TAPE WHITE (4")		54944 (ALTERNATE NO. 2)	54944	LIN. FT.
SP & 719	INVERTED PROFILE THERMOPLASTIC PAVEMENT MARKING (SKIP LINE) WHITE (4")	27348	(ALTERNATE NO. 1)	27348	LIN. FT.
SP	HIGH PERFORMANCE MARKING TAPE (SKIP LINE) WHITE (4")	27348	(ALTERNATE NO. 2)	27348	LIN. FT.
SP & 719	INVERTED PROFILE THERMOPLASTIC PAVEMENT MARKING WHITE (8")		5779 (ALTERNATE NO. 1)	5779	LIN. FT.
SP	HIGH PERFORMANCE MARKING TAPE WHITE (8")		5779 (ALTERNATE NO. 2)	5779	LIN. FT.
SP & 719	INVERTED PROFILE THERMOPLASTIC PAVEMENT MARKING YELLOW (4")	57379	(ALTERNATE NO. 1)	57379	LIN. FT.
SP	HIGH PERFORMANCE MARKING TAPE YELLOW (4")	57379	(ALTERNATE NO. 2)	57379	LIN. FT.
SP & 719	INVERTED PROFILE THERMOPLASTIC CONTRAST PAVEMENT MARKING WHITE (4")	1027	(ALTERNATE NO. 1)	1027	LIN. FT.
SP	HIGH PERFORMANCE CONTRAST MARKING TAPE WHITE (4")	1027	(ALTERNATE NO. 2)	1027	LIN. FT.
719	THERMOPLASTIC PAVEMENT MARKING WHITE (4")	942		942	LIN. FT.
719	THERMOPLASTIC PAVEMENT MARKING (WORDS)	6		6	EACH
719	THERMOPLASTIC PAVEMENT MARKING (ARROWS)	6		6	EACH
721	RAISED PAVEMENT MARKERS (TYPE II)	2049		2049	EACH
SP & 724	OVERHEAD SIGN STRUCTURE FOUNDATION	6		6	EACH
731	TEMPORARY IMPACT ATTENUATION BARRIER	6		6	EACH
731	TEMPORARY IMPACT ATTENUATION BARRIER (REPAIR)	6		6	EACH
804	REINFORCING STEEL-ROADWAY (GRADE 60)	123214		123214	LB.
816	FILTER BLANKET	443		443	SQ. YD.
816	DUMPED RIPRAP	190		190	CU. YD.
816	CONCRETE RIPRAP	29		29	CU. YD.
SP	AWS MOBILIZATION	1.00		1.00	LUMP SUM
SP	AWS OPERATION	17		17	MONTH
SP	DEVICE RELOCATION	10		10	EACH
SP	DETENTION POND CLAY LINER	15435		15435	SQ. YD.
SP	FURNISH AND INSTALL CLOSED CIRCUIT TELEVISION SYSTEM	4		4	EACH
SP	FURNISH AND INSTALL PUBLIC NOTIFICATION SYSTEM	2		2	EACH
SP	FURNISH AND INSTALL VARIABLE MESSAGE SIGN	6		6	EACH
SP	FURNISH AND INSTALL VEHICLE DETECTION SYSTEM	40		40	EACH

SUMMARY OF QUANTITIES

SUMMARY OF QUANTITIES (BOX 2 OF 2)

ITEM NUMBER	ITEM	QUANTITIES			
		ACNHPP-49-1(17)77	BIM-B49-0(219)	TOTAL	UNIT
SP	REMOVAL AND DISPOSAL OF PLOWABLE PAVEMENT MARKER	691		691	EACH
SP	STEEL OVERHEAD SIGN STRUCTURE (OH-049-04-02)	1		1	EACH
	STRUCTURES OVER 20'-0" SPAN				
636	BRIDGE CONSTRUCTION CONTROL	1.00		1.00	LUMP SUM
801	UNCLASSIFIED EXCAVATION FOR STRUCTURES - BRIDGE	2607		2607	CU. YD.
802	CLASS S CONCRETE-BRIDGE	1453.00		1453.00	CU. YD.
802	CLASS S (AE) CONCRETE-BRIDGE	1502.60		1502.60	CU. YD.
802	PRESTRESSED CONCRETE GIRDERS (TYPE II)	2244.0		2244.0	LIN. FT.
802	PRESTRESSED CONCRETE GIRDERS (TYPE III)	1513.6		1513.6	LIN. FT.
803	CLASS 2 PROTECTIVE SURFACE TREATMENT	11994.8		11994.8	SQ. YD.
804	REINFORCING STEEL-BRIDGE (GRADE 60)	639190		639190	LB.
805	STEEL PILING (HP 12X53)	3864		3864	LIN. FT.
805	PREBORING	1920		1920	LIN. FT.
SP & 807	STRUCTURAL STEEL IN BEAM SPANS (M270-GR50)	231320		231320	LB.
807	PAINTING STRUCTURAL STEEL	106.2		106.2	TON
808	ELASTOMERIC BEARINGS	71548.0		71548.0	CU. IN.
809	SILICONE JOINT SEALANT	1020		1020	LIN. FT.
812	BRIDGE NAME PLATE (TYPE D)	3		3	EACH
816	FILTER BLANKET	280		280	SQ. YD.
816	DUMPED RIPRAP	140		140	CU. YD.
821	MODIFICATION OF EXISTING BRIDGE STRUCTURE (BRIDGE NO. A5956)	1.00		1.00	LUMP SUM
821	MODIFICATION OF EXISTING BRIDGE STRUCTURE (BRIDGE NO. B5956)	1.00		1.00	LUMP SUM
821	MODIFICATION OF EXISTING BRIDGE STRUCTURE (BRIDGE NO. A5958)	1.00		1.00	LUMP SUM
821	MODIFICATION OF EXISTING BRIDGE STRUCTURE (BRIDGE NO. B5958)	1.00		1.00	LUMP SUM
821	MODIFICATION OF EXISTING BRIDGE STRUCTURE (BRIDGE NO. A5960)	1.00		1.00	LUMP SUM
821	MODIFICATION OF EXISTING BRIDGE STRUCTURE (BRIDGE NO. B5960)	1.00		1.00	LUMP SUM

REVISIONS

DATE	REVISION	SHEET NUMBER
5-25-16	REVISED STANDARD DRAWING PM-1	3, 94, 248
6-09-16	REVISED MOT AND PERMANENT PAVEMENT MARKINGS AT NEW HOPE ROAD, REVISED BRIDGE LAYOUTS, ADDED SPECIAL PROVISIONS " ISSUANCE OF PROPOSALS" AND "TRENCHING AND SHOULDER PREPARATION FOR SHOULDER WIDENING", AND REVISED SPECIAL PROVISION "SPECIAL SAFETY REQUIREMENTS FOR BRIDGES".	4, 66, 68, 78, 80, 93, 94, 161, 162, 194, 195

STATE OF ARKANSAS
REGISTERED PROFESSIONAL ENGINEER
No. 15560
PAUL DAVIS
6/09/16

Crafton Tull
civil engineers planners surveyors

DATE REVISED	DATE FILMED	DATE REVISED	DATE FILMED
05/25/16			
06/09/16			

FED.ROD. DISTRC.	STATE	FED.AID PROJ.NO.	SHEET NO.	TOTAL SHEETS
6	ARK.		94	452
JOB NO.				
CA0901				

SUMMARY OF QUANTITIES AND REVISIONS

CTLRVEY CONTROL COORDINATES
Project Name: CA0901
Date: 6/15/2015
Coordinate System: Arkansas State Plane Coordinates
Based on AHTD GPS PTS *040063, 040018, & 040046*
Projected to Ground Coordinates
Units: U.S. CTLrvey Foot

MIDPOINT:
N 36-16-36.49
W 094-09-05.43

STATE OF ARKANSAS
REGISTERED PROFESSIONAL ENGINEER
No. 15360
3-03-16
JEROME PAUL DAVIS

Crafton Tull
architecture | engineering | surveying

DATE REVISED	DATE FILMED	DATE REVISED	DATE FILMED	FED.RD. DIST.NO.	STATE	FED.AID PROJ.NO.	SHEET NO.	TOTAL SHEETS
				6	ARK.			
				JOB NO.		CA0901	95	452

2 SURVEY CONTROL DETAILS

COORDINATES LISTED BELOW ARE GROUND (Localized) COORDINATES !!!!

Point No.	Northing	SY	Easting	SX	Elevation	SZ	Feature Code	Point Description	Ref Job No.
100	758835.7364	0.0001	669740.3118	0.0001	1259.66	0.000	GPS	PD:AHTD GPS 040063	
101	728304.9463	0.0001	668616.4800	0.0001	1229.70	0.000	GPS	PD:AHTD GPS 040018	CA0901
102	726429.2836	0.0001	668395.5103	0.0001	1264.28	0.000	GPS	PD:AHTD GPS 040046	CA0901
6063	703093.5841	0.0050	678132.5067	0.0050	1287.44	0.004	CTL	PD:STD.AHTD MON.	CA0901
6064	704674.1690	0.0020	678365.1667	0.0020	1265.44	0.003	CTL	PD:STD.AHTD MON.	CA0901
6065	705886.2752	0.0030	678925.4979	0.0030	1272.74	0.003	CTL	PD:STD.AHTD MON.	CA0901
6066	705527.6525	0.0050	677992.5425	0.0050	1285.57	0.005	CTL	PD:STD.AHTD MON.	CA0901
6067	706084.3424	0.0070	680531.4536	0.0070	1296.23	0.006	CTL	PD:STD.AHTD MON.	CA0901
6068	706220.6611	0.0060	679218.5831	0.0060	1272.14	0.004	CTL	PD:STD.AHTD MON.	CA0901
6069	706190.3989	0.0030	678478.5182	0.0030	1307.11	0.005	CTL	PD:STD.AHTD MON.	CA0901
6070	706223.4183	0.0060	677800.1356	0.0060	1313.54	0.006	CTL	PD:STD.AHTD MON.	CA0901
6071	706330.1505	0.0070	676619.7876	0.0100	1323.47	0.007	CTL	PD:STD.AHTD MON.	CA0901
6072	706104.9189	0.0050	678321.1202	0.0050	1287.99	0.004	CTL	PD:STD.AHTD MON.	CA0901
6073	706902.0614	0.0030	678350.3358	0.0030	1302.32	0.005	CTL	PD:STD.AHTD MON.	CA0901
6074	707029.8093	0.0030	678748.4028	0.0020	1304.74	0.006	CTL	PD:STD.AHTD MON.	CA0901
6075	707030.5671	0.0040	678097.5328	0.0040	1306.37	0.006	CTL	PD:STD.AHTD MON.	CA0901
6076	707815.1077	0.0030	678422.6541	0.0030	1309.69	0.005	CTL	PD:STD.AHTD MON.	CA0901
6077	708559.6619	0.0060	678410.9893	0.0060	1313.91	0.006	CTL	PD:STD.AHTD MON.	CA0901
6078	709422.3826	0.0040	678481.0117	0.0040	1314.33	0.006	CTL	PD:STD.AHTD MON.	CA0901
6079	714379.2819	0.0110	678204.7583	0.0100	1304.80	0.008	CTL	PD:STD.AHTD MON.	CA0901
6080	715117.6940	0.0040	677786.9131	0.0050	1303.42	0.008	CTL	PD:STD.AHTD MON.	CA0901
6081	715897.7947	0.0060	677352.8283	0.0060	1302.43	0.008	CTL	PD:STD.AHTD MON.	CA0901
6082	716454.1423	0.0050	676396.9480	0.0040	1298.69	0.010	CTL	PD:STD.AHTD MON.	CA0901
6083	716706.6269	0.0020	676790.7590	0.0020	1301.57	0.008	CTL	PD:STD.AHTD MON.	CA0901
6084	716595.6621	0.0110	679184.2664	0.0100	1309.79	0.010	CTL	PD:STD.AHTD MON.	CA0901
6085	716793.5637	0.0120	678241.9209	0.0120	1307.38	0.010	CTL	PD:STD.AHTD MON.	CA0901
6086	716745.4928	0.0050	677378.3384	0.0060	1306.57	0.010	CTL	PD:STD.AHTD MON.	CA0901
6087	716841.1138	0.0040	676090.5890	0.0040	1299.98	0.009	CTL	PD:STD.AHTD MON.	CA0901
6088	716956.0786	0.0040	674823.1820	0.0050	1286.19	0.010	CTL	PD:STD.AHTD MON.	CA0901
6089	716978.1034	0.0040	673683.5875	0.0040	1296.99	0.010	CTL	PD:STD.AHTD MON.	CA0901
6090	717272.1812	0.0040	676969.1751	0.0040	1303.48	0.009	CTL	PD:STD.AHTD MON.	CA0901
6091	717462.1431	0.0040	676404.7288	0.0040	1304.00	0.008	CTL	PD:STD.AHTD MON.	CA0901
6092	717902.3797	0.0040	676047.8445	0.0040	1305.00	0.008	CTL	PD:STD.AHTD MON.	CA0901
6093	718654.3022	0.0050	675731.5019	0.0040	1304.74	0.008	CTL	PD:STD.AHTD MON.	CA0901
6094	719311.2768	0.0020	675358.6297	0.0020	1293.15	0.008	CTL	PD:STD.AHTD MON.	CA0901
6953	704798.8046	30.0000	678203.7373	30.0000	1262.09	0.004	TBM	PD:SQUARE CUT IN SOUTH END OF	CA0901
6954	706143.4119	30.0000	678342.3297	30.0000	1285.89	0.004	TBM	PD:SQUARE CUT IN DROP INLET OF	CA0901
6955	706100.6223	30.0000	680244.4081	30.0000	1290.37	0.006	TBM	PD:SQUARE CUT IN BACK OF CATCH BASIN	CA0901
6956	706214.8884	30.0000	679451.3570	30.0000	1268.61	0.005	TBM	PD:SQUARE CUT IN CENTER OF HEADWALL	CA0901
6957	706206.1984	30.0000	678207.4017	30.0000	1313.24	0.007	TBM	PD:AHTD CAP IN SOUTHWEST CORNER OF	CA0901
6958	706279.2056	30.0000	676719.5732	30.0000	1323.54	0.007	TBM	PD:CPS IN COMBINATION POLE	CA0901
6959	707355.5667	30.0000	678386.4451	30.0000	1303.45	0.005	TBM	PD:SQUARE CUT IN DROP INLET OF	CA0901
6960	708275.8313	30.0000	678420.1109	30.0000	1309.49	0.005	TBM	PD:SQUARE CUT IN DROP INLET OF	CA0901
6961	710069.1146	30.0000	678485.6235	30.0000	1309.35	0.006	TBM	PD:SQUARE CUT IN DROP INLET OF	CA0901
6962	710187.7012	30.0000	678356.1530	30.0000	1332.10	0.007	TBM	PD:AHTD CAP IN SOUTHWEST CORNER OF	CA0901
6963	712527.4188	30.0000	678659.4755	30.0000	1301.37	0.007	TBM	PD:SQUARE CUT IN CENTER OF HEADWALL	CA0901
6964	714546.3157	30.0000	678031.6011	30.0000	1301.82	0.008	TBM	PD:SQUARE CUT IN DROP INLET OF	CA0901
6965	715953.1635	30.0000	677130.7710	30.0000	1299.82	0.008	TBM	PD:SQUARE CUT IN SOUTH END OF	CA0901
6966	716988.8990	30.0000	676746.0903	30.0000	1301.03	0.008	TBM	PD:SQUARE CUT IN NORTH END OF	CA0901
6967	716607.0671	30.0000	679172.9623	30.0000	1309.54	0.010	TBM	PD:SQUARE CUT IN BACK OF CATCH BASIN	CA0901
6968	716806.4036	30.0000	678252.7635	30.0000	1307.98	0.010	TBM	PD:SQUARE CUT IN BASE OF SIGNAL POLE	CA0901
6969	716851.9912	30.0000	676573.7232	30.0000	1322.14	0.008	TBM	PD:AHTD CAP IN NORTHWEST CORNER OF	CA0901
6970	716951.4342	30.0000	674297.6168	30.0000	1278.73	0.010	TBM	PD:SQUARE CUT IN WEST END OF HEADWALL	CA0901
6971	717598.1568	30.0000	676305.5514	30.0000	1301.16	0.008	TBM	PD:SQUARE CUT IN DROP INLET OF	CA0901
6972	718424.2821	30.0000	675750.1112	30.0000	1304.54	0.007	TBM	PD:SQUARE CUT IN CONCRETE BASE OF	CA0901
6973	720027.2017	30.0000	675008.8348	30.0000	1281.82	0.009	TBM	PD:AHTD CAP SOUTH EAST CORNER	CA0901
6974	721780.0695	30.0000	672470.8489	30.0000	1314.30	0.011	TBM	PD:AHTD CAP SET IN SOUTHWEST CORNER	CA0901
6975	719092.0178	30.0000	676245.4471	30.0000	1310.13	0.007	TBM	PD:CPS IN COMBINATION POLE AT 26TH	CA0901
6979	702511.2849	30.0000	677826.4837	30.0000	1275.99	0.005	TBM	PD:SQUARE CUT IN DROP INLET	CA0901
6980	728312.2505	30.0000	668668.5361	30.0000	1228.98	0.000	TBM	PD:AHTD CAP SET IN SOUTHWEST CRNR	CA0901
7091	708184.0278	0.0200	678347.6396	0.0150	1310.75	0.064	CTL	PD:STD.AHTD MON.STAMPED: 001966 / 91	CA0901
7092	707155.7471	0.0160	678309.9894	0.0130	1304.34	0.063	CTL	PD:STD.AHTD MON.STAMPED: 001966 / 92	CA0901
7093	705869.0094	0.0180	678263.5643	0.0140	1282.84	0.064	CTL	PD:STD.AHTD MON.STAMPED: 001966 / 93	CA0901
7094	705072.6712	0.0130	678231.0102	0.0130	1267.48	0.063	CTL	PD:STD.AHTD MON.STAMPED: 001966 / 94	
7095	704294.2549	0.0100	678198.6832	0.0120	1271.48	0.063	CTL	PD:STD.AHTD MON.STAMPED: 001966 / 95	
7096	703624.5831	0.0100	678126.8394	0.0130	1285.55	0.063	CTL	PD:STD.AHTD MON.STAMPED: 001966 / 96	
7097	703069.6488	0.0090	677980.9719	0.0110	1284.55	0.063	CTL	PD:STD.AHTD MON.STAMPED: 001966 / 97	
7098	702000.1215	0.0100	677459.6131	0.0120	1291.64	0.063	CTL	PD:STD.AHTD MON.STAMPED: 001966 / 98	
7099	701365.8779	0.0100	676950.4923	0.0130	1308.79	0.064	CTL	PD:STD.AHTD MON.STAMPED: 001966 / 99	
7100	700846.7071	0.0100	676349.4075	0.0100	1310.26	0.063	CTL	PD:STD.AHTD MON.STAMPED: 001966 / 100	
7101	700460.7045	0.0120	675709.5066	0.0130	1311.70	0.063	CTL	PD:STD.AHTD MON.STAMPED: 001966 / 101	
7102	700190.8431	0.0160	675135.7533	0.0140	1312.33	0.064	CTL	PD:STD.AHTD MON.STAMPED: 001966 / 102	

Point No.	Northing	SY	Easting	SX	Elevation	SZ	Feature Code	Point Description	Ref Job No.
7103	699872.0085	0.0120	674429.0769	0.0140	1310.04	0.064	CTL	PD:STD.AHTD MON.STAMPED: 001966 / 103	
7104	699628.5283	0.0110	673893.0569	0.0130	1304.81	0.063	CTL	PD:STD.AHTD MON.STAMPED: 001966 / 104	
7105	699295.8141	0.0120	673161.0190	0.0130	1293.52	0.064	CTL	PD:STD.AHTD MON.STAMPED: 001966 / 105	
7106	698969.1878	0.0100	672525.7231	0.0110	1292.35	0.063	CTL	PD:STD.AHTD MON.STAMPED: 001966 / 106	
7107	698640.2837	0.0110	671945.6186	0.0120	1273.24	0.063	CTL	PD:STD.AHTD MON.STAMPED: 001966 / 107	
7108	698318.7369	0.0090	671390.9332	0.0100	1258.77	0.063	CTL	PD:STD.AHTD MON.STAMPED: 001966 / 108	
7109	698031.9205	0.0110	670898.1290	0.0120	1253.22	0.063	CTL	PD:STD.AHTD MON.STAMPED: 001966 / 109	
7110	697619.2532	0.0120	670406.6135	0.0130	1253.83	0.063	CTL	PD:STD.AHTD MON.STAMPED: 001966 / 110	
7111	697067.8377	0.0130	669979.6476	0.0130	1257.33	0.064	CTL	PD:STD.AHTD MON.STAMPED: 001966 / 111	
7907	706182.6206	50.0000	679694.3346	50.0000	1272.62	0.025	BM	PD:DIXIELAND-WEST MONROE AV.	CA0901
7908	701249.5277	50.0000	676858.0852	50.0000	1310.07	0.029	TBM	PD:OVERPASS SOUTH BOUND LANE	
7909	700938.0522	50.0000	679447.2699	50.0000	1304.57	0.026	TBM	PD:CPS IN PP	
7910	700429.2993	0.0001	675531.2215	0.0001	1312.53	0.034	TBM	PD:CPS IN PP	
7911	699265.3658	50.0000	673240.0058	50.0000	1290.31	0.039	TBM	PD:DROP INLET	
7912	697853.8806	0.0001	670778.7417	0.0001	1249.26	0.045	TBM	PD:CH SQ DI CEN OF MEDIAN	
8500	709966.9284	0.0110	678462.4934	0.0090	1312.77	0.002	CTL	PD:STD.AHTD MON.	CA0901
8501	710545.0250	0.0100	678483.2542	0.0090	1311.26	0.003	CTL	PD:STD.AHTD MON.	CA0901
8502	711291.9519	0.0100	678510.3663	0.0070	1309.30	0.003	CTL	PD:STD.AHTD MON.	CA0901
8503	712055.4521	0.0080	678536.3213	0.0060	1306.06	0.002	CTL	PD:STD.AHTD MON.	CA0901
8504	712798.5823	0.0090	678565.0564	0.0070	1303.85	0.002	CTL	PD:STD.AHTD MON.	CA0901
8505	713648.3690	0.0010	678460.1260	0.0010	1306.01	0.002	CTL	PD:STD.AHTD MON.	CA0901
8506	716708.9950	0.0040	676790.9220	0.0040	1301.46	0.003	CTL	PD:STD.AHTD MON.	CA0901
8507	716785.1221	0.0140	677419.5735	0.0100	1307.49	0.002	CTL	PD:STD.AHTD MON.	CA0901
8508	716791.6916	0.0060	676017.4161	0.0050	1297.32	0.005	CTL	PD:STD.AHTD MON.	CA0901
8509	716895.3246	0.0200	674748.0718	0.0140	1285.27	0.019	CTL	PD:STD.AHTD MON.	CA0901
8510	720006.1503	0.0020	674957.2785	0.0020	1282.42	0.000	CTL	PD:STD.AHTD MON.	CA0901
8511	720556.9127	0.0140	674634.8951	0.0110	1280.63	0.002	CTL	PD:STD.AHTD MON.	CA0901
8512	721424.1927	0.0070	673635.6751	0.0060	1288.36	0.004	CTL	PD:STD.AHTD MON.	CA0901
8513	721689.2801	0.0140	673052.4905	0.0130	1292.35	0.003	CTL	PD:STD.AHTD MON.	CA0901
8514	721902.8520	0.0100	672518.7342	0.0100	1294.40	0.015	CTL	PD:STD.AHTD MON.	CA0901
8515	722167.7998	0.0070	671958.0102	0.0050	1295.60	0.000	CTL	PD:STD.AHTD MON.	CA0901
8516	722455.8521	0.0170	671299.5323	0.0150	1278.78	0.003	CTL	PD:STD.AHTD MON.	CA0901
8517	722704.1380	0.0120	671350.7313	0.0100	1281.21	0.003	CTL	PD:STD.AHTD MON.	CA0901
8518	722771.4856	0.0100	670643.2646	0.0060	1257.28	0.003	CTL	PD:STD.AHTD MON.	CA0901
8519	722371.1134	0.0040	670417.4547	0.0040	1260.06	0.003	CTL	PD:STD.AHTD MON.	CA0901
8520	723949.5620	0.0150	671061.2748	0.0160	1262.46	0.004	CTL	PD:STD.AHTD MON.	CA0901
8521	723416.7894	0.0130	670676.9606	0.0120	1266.03	0.004	CTL	PD:STD.AHTD MON.	CA0901
8522	722672.7827	0.0130	669881.6466	0.0110	1277.88	0.003	CTL	PD:STD.AHTD MON.	CA0901
8523	722071.3041	0.0130	668966.1945	0.0110	1288.32	0.004	CTL	PD:STD.AHTD MON.	CA0901
8524	723748.5444	0.0260	670065.6641	0.0230	1253.56	0.004	CTL	PD:STD.AHTD MON.	CA0901
8525	723318.5344	0.0150	669985.4750	0.0100	1245.77	0.002	CTL	PD:STD.AHTD MON.	CA0901
8526	723261.7671	0.0160	669484.7355	0.0130	1262.35	0.004	CTL	PD:STD.AHTD MON.	CA0901
8527	724071.2301	0.0170	669489.4246	0.0090	1247.10	0.003	CTL	PD:STD.AHTD MON.	CA0901
8528	724779.7721	0.0140	669049.4535	0.0070	1267.07	0.005	CTL	PD:STD.AHTD MON.	CA0901
8529	725514.3141	0.0140	668676.1062	0.0070	1268.42	0.005	CTL	PD:STD.AHTD MON.	CA0901
8530	726455.9939	0.0140	668501.3214	0.0070	1252.47	0.005	CTL	PD:STD.AHTD MON.	CA0901
8531	727224.2354	0.0350	668527.7157	0.0190	1240.65	0.006	CTL	PD:STD.AHTD MON.	CA0901
8532	727868.4529	0.0130	668765.4067	0.0080	1224.52	0.006	CTL	PD:STD.AHTD MON.	CA0901
8533	727742.8124	0.0130	668203.1589	0.0120	1221.62	0.006	CTL	PD:STD.AHTD MON.	CA0901
8534	728389.1483	0.0190	669829.1953	0.0120	1217.36	0.004	CTL	PD:STD.AHTD MON.	CA0901
8535	728390.7958	0.0120	668942.3550	0.0090	1212.29	0.003	CTL	PD:STD.AHTD MON.	CA0901
8536	728474.5156	0.0130	668191.3523	0.0100	1211.94	0.003	CTL	PD:STD.AHTD MON.	CA0901
8552	706205.2088	0.0130	677763.2707	0.0080	1312.10	0.000	CTL	PD:STD.AHTD MON.	CA0901
8554	718645.0873	0.0080	675792.1196	0.0060	1304.50	0.003	CTL	PD:STD.AHTD MON.STAMPED PN:8554	CA0901
8555	719344.9904	0.0080	675395.8560	0.0070	1292.74	0.004	CTL	PD:STD.AHTD MON.STAMPED PN:8555	CA0901
8556	721154.6688	0.0060	674134.8974	0.0050	1286.21	0.002	CTL	PD:STD.AHTD MON.STAMPED PN:8556	CA0901
8557	722061.3582	0.0040	672321.1247	0.0040	1296.23	0.003	CTL	PD:STD.AHTD MON.STAMPED PN:8557	CA0901
8558	722306.1575	0.0050	671775.8371	0.0040	1291.43	0.003	CTL	PD:STD.AHTD MON.STAMPED PN:8558	CA0901
8559	724029.9883	0.0060	669566.1848	0.0040	1244.89	0.004	CTL	PD:STD.AHTD MON.STAMPED PN:8559	CA0901
8560	723310.9471	0.0090	669989.8939	0.0060	1245.49	0.003	CTL	PD:STD.AHTD MON.STAMPED PN:8560	CA0901
8561	725373.1584	0.0070	668767.7514	0.0050	1270.87	0.002	CTL	PD:STD.AHTD MON.STAMPED PN:8561	CA0901
8562	726054.2344	0.0130	668570.6047	0.0100	1259.77	0.002	CTL	PD:STD.AHTD MON.STAMPED PN:8562	CA0901
8563	726803.9212	0.0030	668597.3181	0.0020	1246.11	0.003	CTL	PD:STD.AHTD MON.STAMPED PN:8563	CA0901
8564	727572.7610	0.0080	668634.9052	0.0060	1235.42	0.003	CTL	PD:STD.AHTD MON.STAMPED PN:8564	CA0901

SURVEY CONTROL DETAILS

STATE OF ARKANSAS
REGISTERED PROFESSIONAL ENGINEER
No. 15560
3-03-16
JEROME PAUL DAVIS

Point No.	Northing	SY	Easting	SX	Elevation	SZ	Feature Code	Point Description	Ref Job No.
9900	711269.6387	30.0000	678529.9526	30.0000	1306.59	0.003	TBM	PD:SQ CUT IN DI	CA0901
9901	716784.9277	30.0000	676598.6466	30.0000	1322.17	0.004	TBM	PD:SQ CUT	CA0901
9902	716911.3336	30.0000	674300.9625	30.0000	1281.31	0.005	TBM	PD:SQ CUT IN CENTER OF HW	CA0901
9903	720925.9521	30.0000	674291.6330	30.0000	1279.54	0.003	TBM	PD:SQ CUT IN DI	CA0901
9904	721468.6495	30.0000	673505.9032	30.0000	1287.09	0.003	TBM	PD:SQ CUT IN DI	CA0901
9905	721911.7596	30.0000	672481.2970	30.0000	1297.60	0.002	TBM	PD:SQ CUT	CA0901
9906	722644.4805	30.0000	670986.4232	30.0000	1267.02	0.003	TBM	PD:SQ CUT	CA0901
9907	722589.9349	30.0000	670786.6152	30.0000	1265.79	0.003	TBM	PD:AHTD DISK	CA0901
9908	723847.1314	30.0000	670994.0067	30.0000	1265.11	0.004	TBM	PD:CUT SQ BASE OF PA	CA0901
9909	723367.0126	30.0000	670482.5452	30.0000	1269.06	0.004	TBM	PD:CUT SQ	CA0901
9910	722914.8996	30.0000	670209.7190	30.0000	1277.16	0.000	TBM	PD:AHTD DISK	CA0901
9911	722072.1229	30.0000	668959.1130	30.0000	1288.80	0.004	TBM	PD:CUT SQ BASE OF LP	CA0901
9912	723248.1779	30.0000	670025.0443	30.0000	1242.33	0.000	TBM	PD:SQ CUT IN DI	CA0901
9913	724337.7281	30.0000	669316.3222	30.0000	1250.98	0.005	TBM	PD:SQ CUT IN DI	CA0901
9914	725534.6688	30.0000	668758.9387	30.0000	1265.74	0.005	TBM	PD:SQ CUT IN BASE OF SIGN	CA0901
9915	726160.9815	30.0000	668538.6816	30.0000	1255.39	10.000	TBM	PD:SQ CUT IN DI	CA0901
9916	727038.9108	30.0000	668541.1562	30.0000	1240.15	0.006	TBM	PD:SQ CUT IN DI	CA0901
9917	728411.6239	30.0000	669533.9167	30.0000	1216.37	0.004	TBM	PD:SQ CUT	CA0901

*Standard Primary Control Monument - Rebar and Cap - Standard - 5/8"x 24" Rebar with 2"Aluminum Cap stamped: plus other markings indicated in the point description of the individual point. AHTD monuments will be stamped "Arkansas Hwy & Trans Dept" with "PN: ###" & "Job ######". Monuments that are set by ConCTLItants will be stamped "Arkansas Hwy & Trans Dept" with "PN:###", "Job######", & "PS####". The conCTLItant Professional CTLrveyor in charge will stamp his/her PS license number on the cap.

**Standard GPS Control Point Monument - 5/8" x 48" Rebar with 2.5"Aluminum Cap stamped: plus other markings indicated in the point description of the individual point. These monuments will be stamped "Ark. State Hwy Trans. Dept.", "GPS CTLrvey", & "Point No. #######".

SX, SY, SZ – Represents the standard error estimate of the coordinate values of each point at the 67% confidence level (one sigma) based on the least squares analysis of the control network. See the AASHTO SDMS Technical Data Guide data tag definition for SX:, SY:, and SZ: for additional information. These values shall be used when control points are added and the entire network is reprocessed using least square analysis. A value of 0.001 is defined as fixed (no adjustment) in the least square analysis process. A value of 30 is defined as location by handheld GPS device or scaled from USGS Quadmap.

Reference Control points (1500 series) shall be used to re-establish horizontal datum if the primary control has been destroyed. These reference control points shall not be used for vertical control unless the elevation has been established from the project datum with 3-wire level techiniques.

All additional project control shall be occupied, meaCTLred, and adjusted with direct CTLrvey ties to at least two of the control points listed in the table above. New CTLrvey control shall not be independent of the CTLrvey control listed above. This includes horizontal coordinates and elevations.

Positional Accuracy:

Horizontal - GPS (1.0 cm± 1PPM)	*PN: 100-103*
Horizontal - Primary (2.0cm± 20PPM):	*PN:6066-6094, 8500-8564*
Horizontal - Secondary (3 cm ± 50PPM):	*PN:N/A*
Vertical - NGS 1st Order (±4mm x Vdist in km)	*PN:L 309, K 309, Q 310, K 310, & A 27*
Vertical - NGS 2nd Order (±6mm x Vdist in km)	*PN:N/A*
Vertical - NGS 3rd Order (±8mm x Vdist in km)	*PN:6953-6980, 9900-9917*

Horizontal Datum: NAD 1983 (1997) State Plane Zone: 0301 - North Zone

A project CAF of: 0.999945589 has been used to compute the above coordinates.

This CAF is intended for use within the project limits only.
Grid Distance = Ground Distance X CAF
If Coordinates are listed as Ground:
To compute Grid Coordinates, multiply the Ground Coordinates by CAF about the origin of X=0 & Y=0
If Coordinates are listed as Grid:
To compute Ground Coordinates, divide the Grid Coordinates by CAF about the origin of X=0 & Y=0

Vertical Datum: NAVD 1988 based NGS BM:L 309, K 309, Q 310, K 310, & A 27
A project Elevation Factor of: 0.9999401454 has been computed and incorporated in the above CAF.
This is based on the average elevation of the project: 1251.40 Feet
3-Wire Leveling techniques have been used to establish elevations on
Points: 1-10, 100-103 From NGS BM L 309, K 309, Q 310, K 310, & A 27

Basis of Bearing: Grid Bearings based on AHTD GPS points:
Convergence Angle is: 1-15-36.86062 LEFT at PN: 108
LT: 36-16-36.49 N LG: 094-09-05.43 W
Grid Azimuth = Astronomical Azimuth - Convergence Angle

DATE REVISED	DATE FILMED	DATE REVISED	DATE FILMED

FED.RD. DIST.NO.	STATE	FED.AID PROJ.NO.	SHEET NO.	TOTAL SHEETS
6	ARK.			
JOB NO.		CA0901	97	452

Crafton Tull
architecture | engineering | surveying

2 SURVEY CONTROL DETAILS

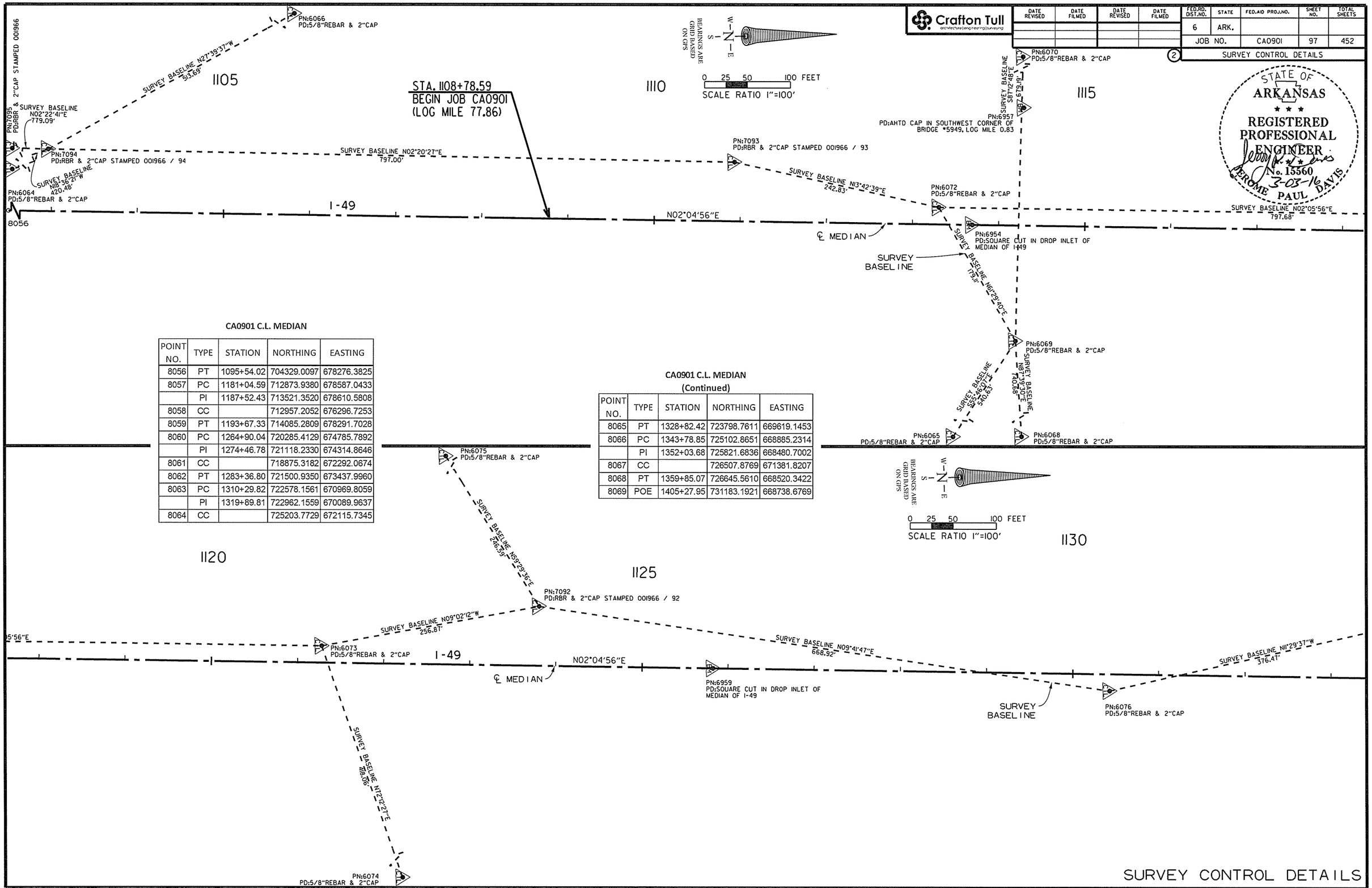

STATE OF ARKANSAS
REGISTERED PROFESSIONAL ENGINEER
No. 15360
3-03-16
JEROME PAUL DAVIS

CA0901 C.L. MEDIAN

POINT NO.	TYPE	STATION	NORTHING	EASTING
8056	PT	1095+54.02	704329.0097	678276.3825
8057	PC	1181+04.59	712873.9380	678587.0433
	PI	1187+52.43	713521.3520	678610.5808
8058	CC		712957.2052	676296.7253
8059	PT	1193+67.33	714085.2809	678291.7028
8060	PC	1264+90.04	720285.4129	674785.7892
	PI	1274+46.78	721118.2330	674314.8646
8061	CC		718875.3182	672292.0674
8062	PT	1283+36.80	721500.9350	673437.9960
8063	PC	1310+29.82	722578.1561	670969.8059
	PI	1319+89.81	722962.1559	670089.9637
8064	CC		725203.7729	672115.7345

CA0901 C.L. MEDIAN (Continued)

POINT NO.	TYPE	STATION	NORTHING	EASTING
8065	PT	1328+82.42	723798.7611	669619.1453
8066	PC	1343+78.85	725102.8651	668885.2314
	PI	1352+03.68	725821.6836	668480.7002
8067	CC		726507.8769	671381.8207
8068	PT	1359+85.07	726645.5610	668520.3422
8069	POE	1405+27.95	731183.1921	668738.6769

USER: a15106
DESIGN FILE: G:\13106100_264toNHope\TRANSP\dgn\CA0901Survey Ctl.dgn
PLOTTED: 2/24/2016 12:31
SCALE: 100:1
MODEL: SURVEY CNTRL DETAILS

SURVEY CONTROL DETAILS

Crafton Tull
architecture | engineering | surveying

DATE REVISED	DATE FILMED	DATE REVISED	DATE FILMED

FED.RD. DIST.NO.	STATE	FED.AID PROJ.NO.	SHEET NO.	TOTAL SHEETS
6	ARK.			
JOB NO.		CA0901	98	452

2 SURVEY CONTROL DETAILS

STATE OF ARKANSAS
REGISTERED PROFESSIONAL ENGINEER
No. 15560
3-03-16
JEROME PAUL DAVIS

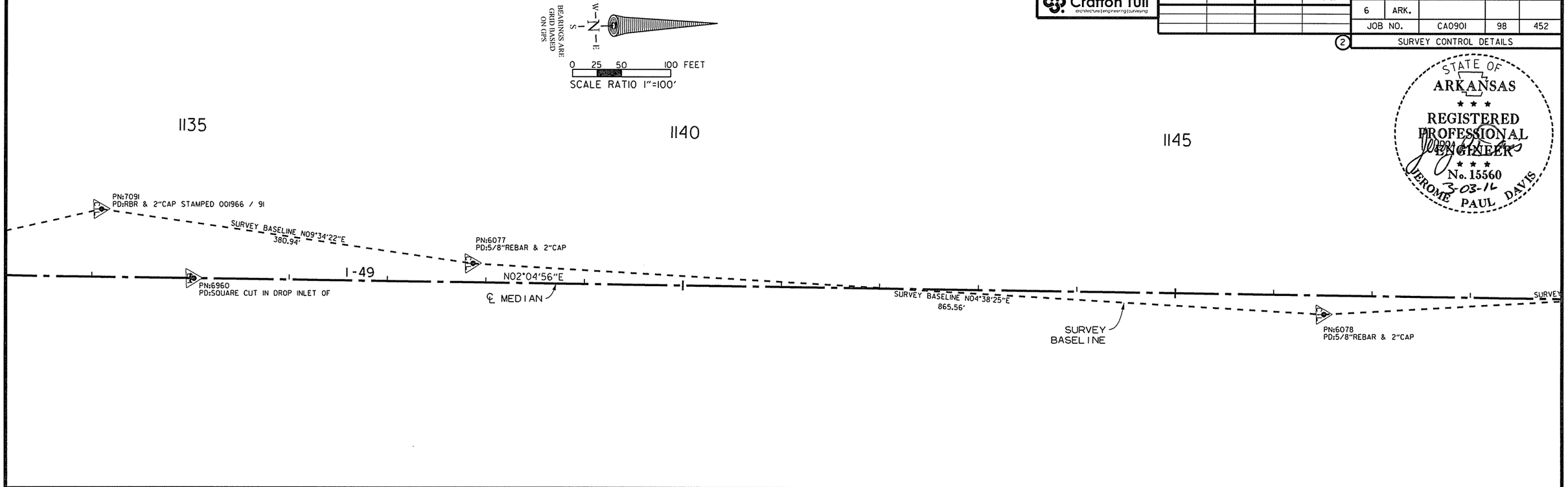

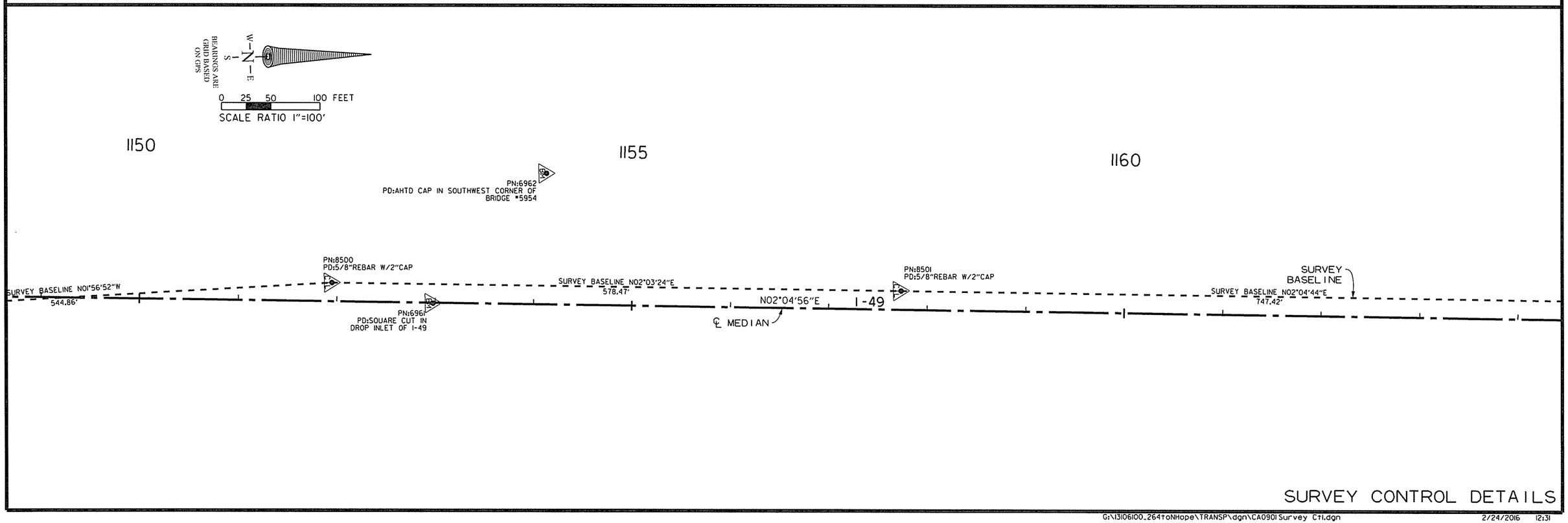

SURVEY CONTROL DETAILS

USER: at5106
DESIGN FILE: G:\13106100_264toNHope\TRANSP\dgn\CA0901Survey Ctl.dgn
PLOTTED: 2/24/2016 12:31
MODEL: SURVEY CNTRL DETAILS
SCALE: 100:1

Crafton Tull
architecture | engineering | surveying

DATE REVISED	DATE FILMED	DATE REVISED	DATE FILMED

FED.RD. DIST.NO.	STATE	FED.AID PROJ.NO.	SHEET NO.	TOTAL SHEETS
6	ARK.			
JOB NO.		CA0901	99	452

(2) SURVEY CONTROL DETAILS

STATE OF ARKANSAS
REGISTERED PROFESSIONAL ENGINEER
No. 15560
3-03-16
JEROME PAUL DAVIS

BEARINGS ARE GRID BASED ON GPS
W-N-E
S

0 25 50 100 FEET
SCALE RATIO 1"=100'

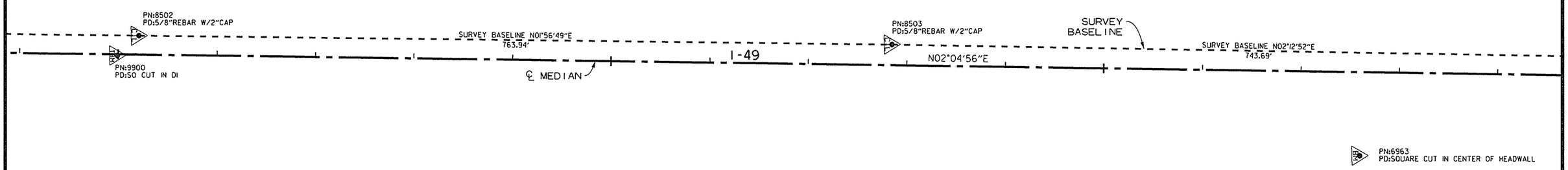

BEARINGS ARE GRID BASED ON GPS
W-N-E
S

0 25 50 100 FEET
SCALE RATIO 1"=100'

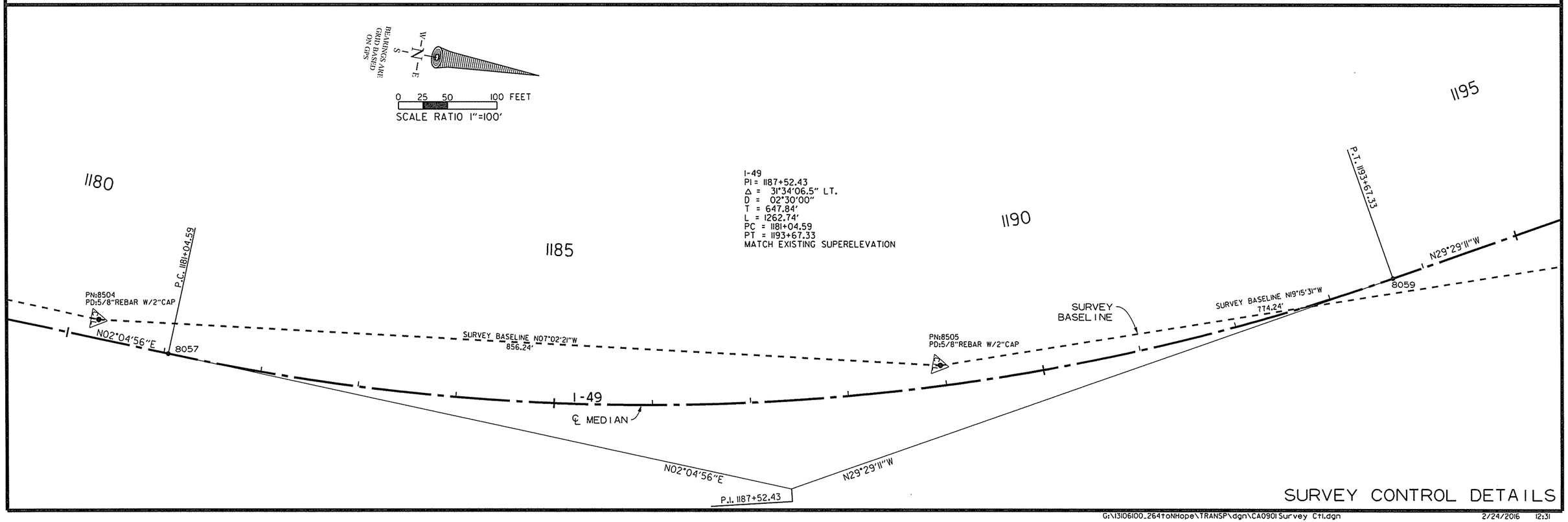

SURVEY CONTROL DETAILS

USER: at5106
DESIGN FILE: G:\13106100_264toNHope\TRANSP\dgn\CA0901Survey Ctl.dgn
PLOTTED: 2/24/2016 12:31
SCALE: 100:1
MODEL: SURVEY CNTRL DETAILS

Crafton Tull
architecture | engineering | surveying

DATE REVISED	DATE FILMED	DATE REVISED	DATE FILMED

FED.RD. DIST.NO.	STATE	FED.AID PROJ.NO.	SHEET NO.	TOTAL SHEETS
6	ARK.			
JOB NO.		CA0901	100	452

2 SURVEY CONTROL DETAILS

STATE OF ARKANSAS
REGISTERED PROFESSIONAL ENGINEER
No. 15560
3-03-16
JEROME PAUL DAVIS

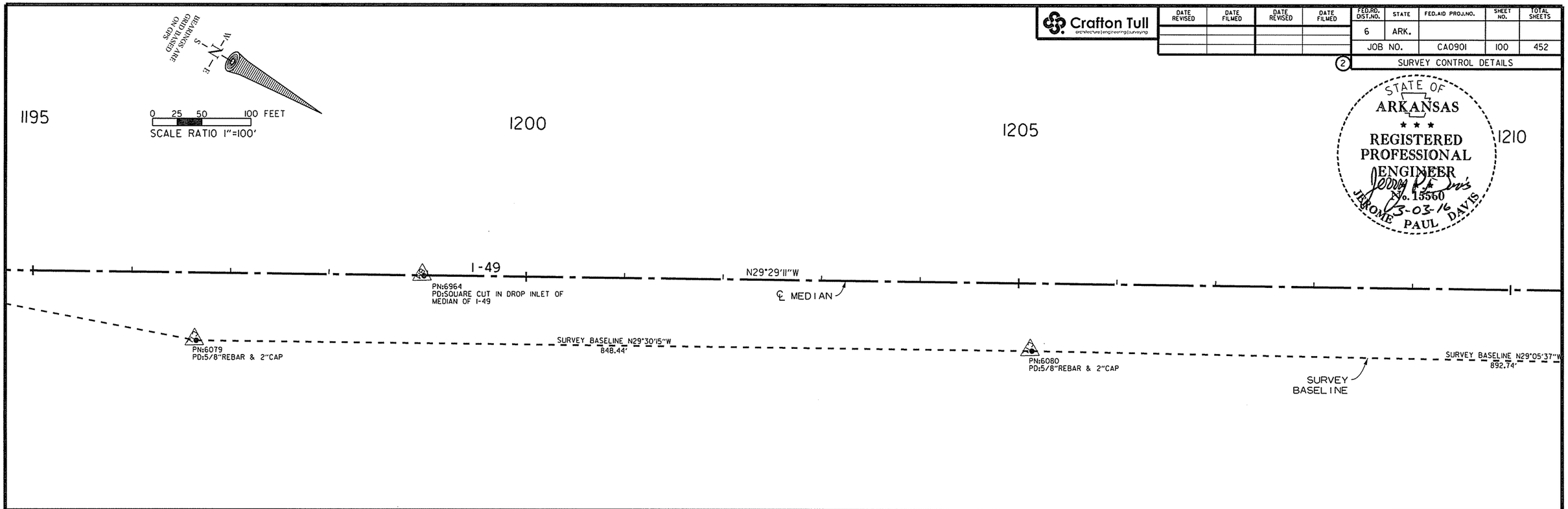

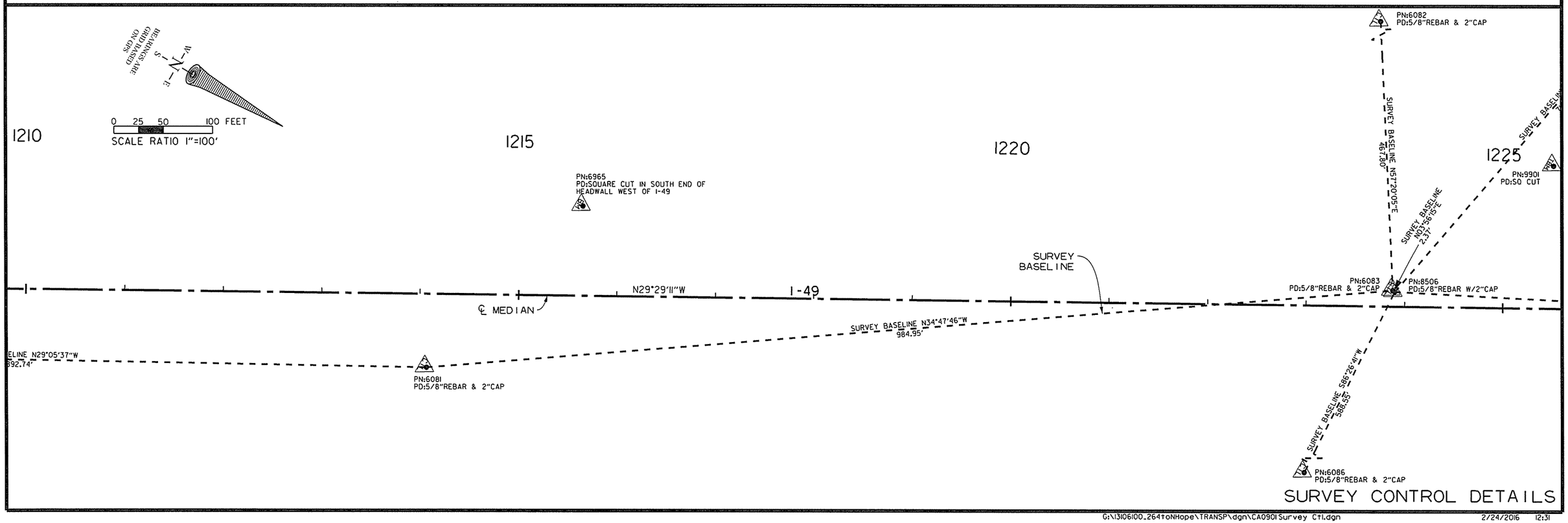

SURVEY CONTROL DETAILS

USER: ot5106
DESIGN FILE: G:\13106100_264toNHope\TRANSP\dgn\CA0901Survey Ctl.dgn
PLOTTED: 2/24/2016 12:31
SCALE: 100:1
MODEL: SURVEY CNTRL DETAILS

Crafton Tull
architecture | engineering | surveying

DATE REVISED	DATE FILMED	DATE REVISED	DATE FILMED

FED.RD. DIST.NO.	STATE	FED.AID PROJ.NO.	SHEET NO.	TOTAL SHEETS
6	ARK.			
JOB NO.		CA0901	101	452

2 SURVEY CONTROL DETAILS

STATE OF ARKANSAS
REGISTERED PROFESSIONAL ENGINEER
No. 15560
3-03-16
JEROME PAUL DAVIS

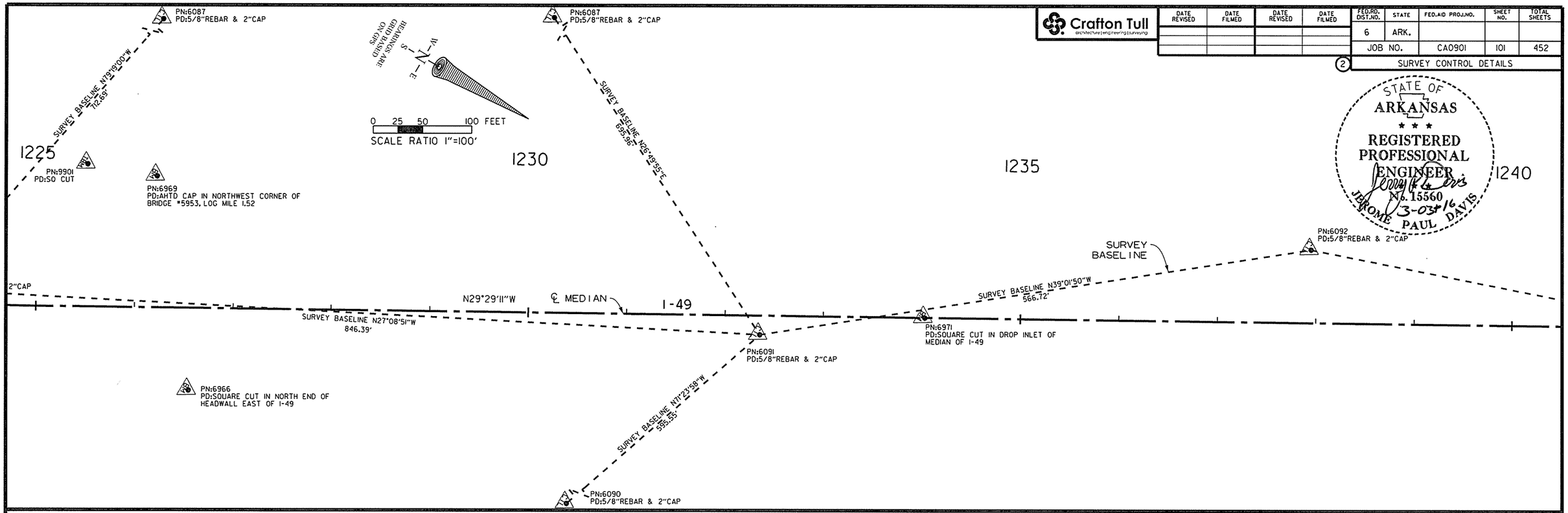

SURVEY CONTROL DETAILS

USER: at5106
DESIGN FILE: G:\13106100_264toNHope\TRANSP\dgn\CA0901Survey Ctl.dgn
PLOTTED: 2/24/2016 12:31
MODEL: SURVEY CNTRL DETAILS
SCALE: 1001

Crafton Tull
architecture | engineering | surveying

DATE REVISED	DATE FILMED	DATE REVISED	DATE FILMED

FED.RD. DIST.NO.	STATE	FED.AID PROJ.NO.	SHEET NO.	TOTAL SHEETS
6	ARK.			
JOB NO.		CA0901	102	452

2 SURVEY CONTROL DETAILS

STATE OF ARKANSAS
REGISTERED PROFESSIONAL ENGINEER
No. 15560
3-03-16
JEROME PAUL DAVIS

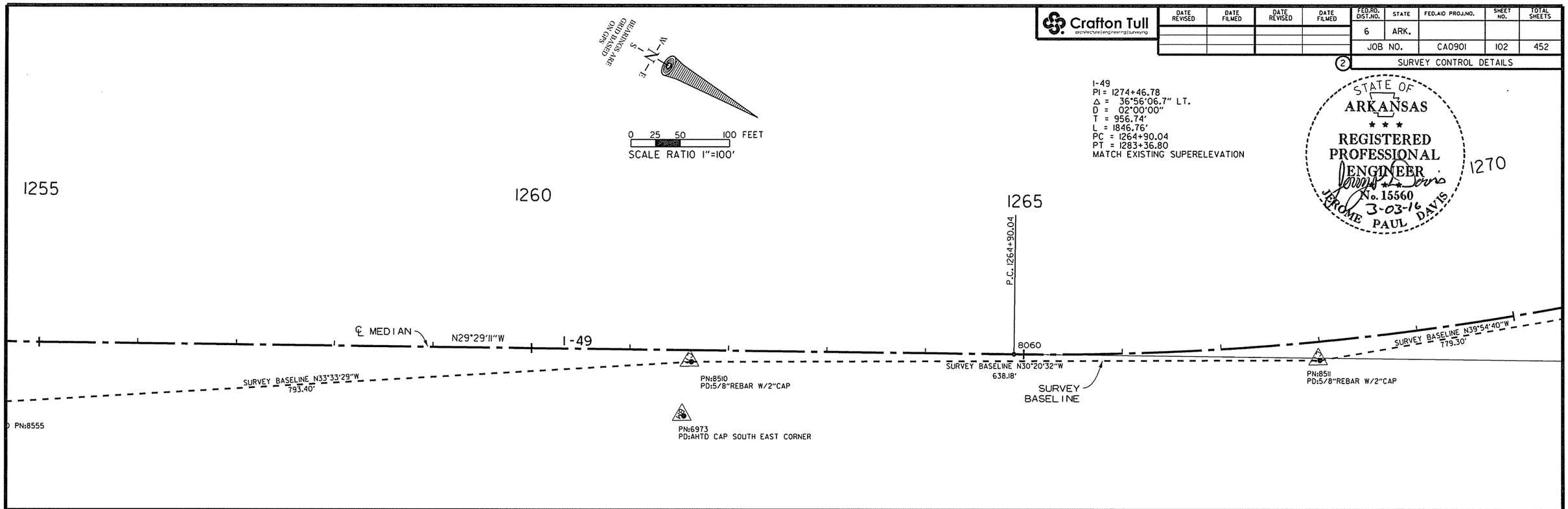

SURVEY CONTROL DETAILS

USER: at5106
DESIGN FILE: G:\13106100_264toNHope\TRANSP\dgn\CA0901Survey Ctl.dgn
PLOTTED: 2/24/2016 12:31
SCALE: 100d
MODEL: SURVEY CNTRL DETAILS

Crafton Tull
architecture | engineering | surveying

DATE REVISED	DATE FILMED	DATE REVISED	DATE FILMED

FED.RD. DIST.NO.	STATE	FED.AID PROJ.NO.	SHEET NO.	TOTAL SHEETS
6	ARK.			
JOB NO.		CA0901	103	452

(2) SURVEY CONTROL DETAILS

STATE OF ARKANSAS
REGISTERED PROFESSIONAL ENGINEER
No. 15560
3-03-16
JEROME PAUL DAVIS

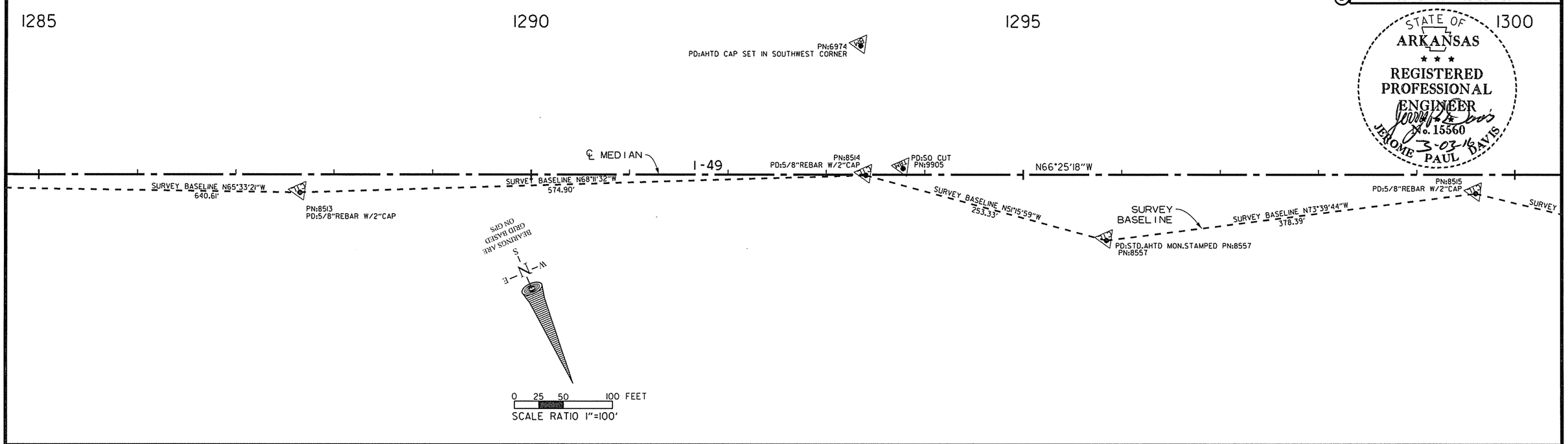

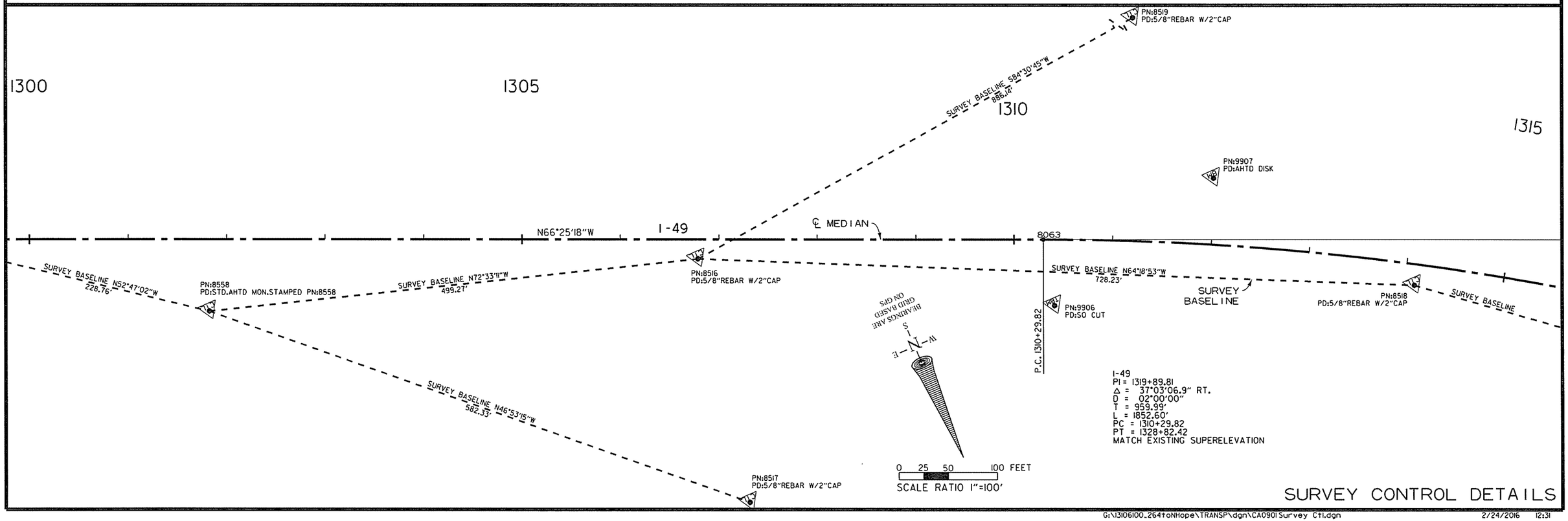

SURVEY CONTROL DETAILS

USER: at5106
DESIGN FILE: G:\13106100_264toNHope\TRANSP\dgn\CA0901Survey Ctl.dgn
PLOTTED: 2/24/2016 12:31
MODEL: SURVEY CNTRL DETAILS
SCALE: 100:1

DATE REVISED	DATE FILMED	DATE REVISED	DATE FILMED	FED.RD. DIST.NO.	STATE	FED.AID PROJ.NO.	SHEET NO.	TOTAL SHEETS
				6	ARK.			
				JOB NO.		CA0901	104	452

Crafton Tull
architecture | engineering | surveying

(2) SURVEY CONTROL DETAILS

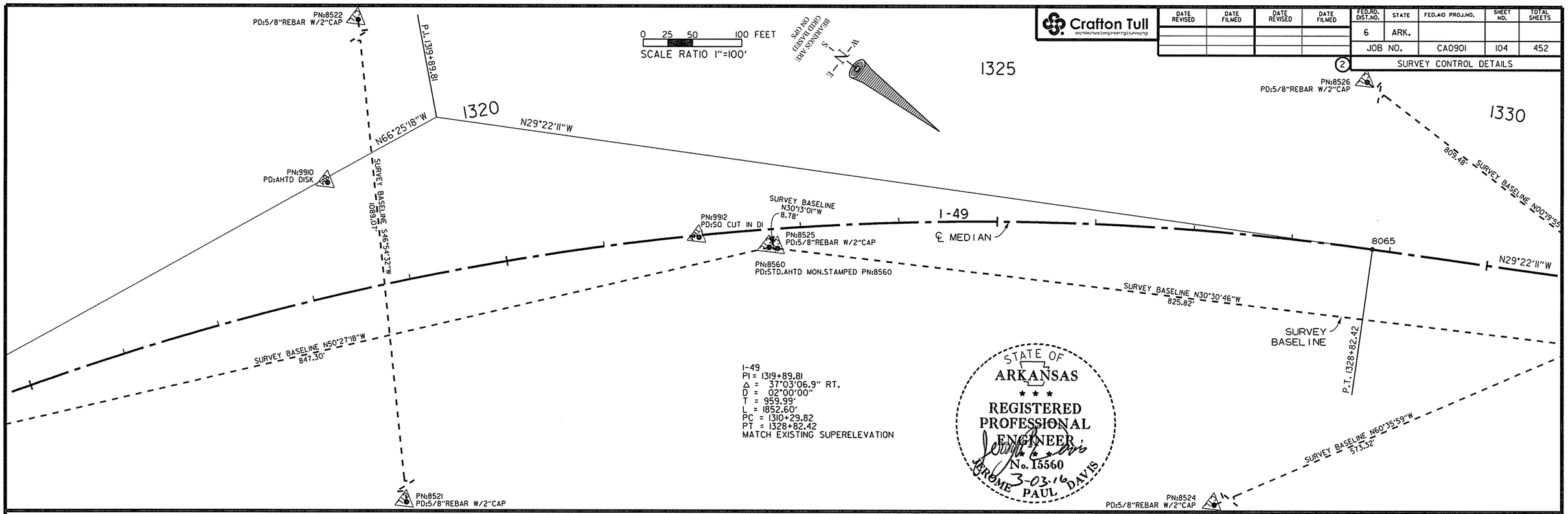

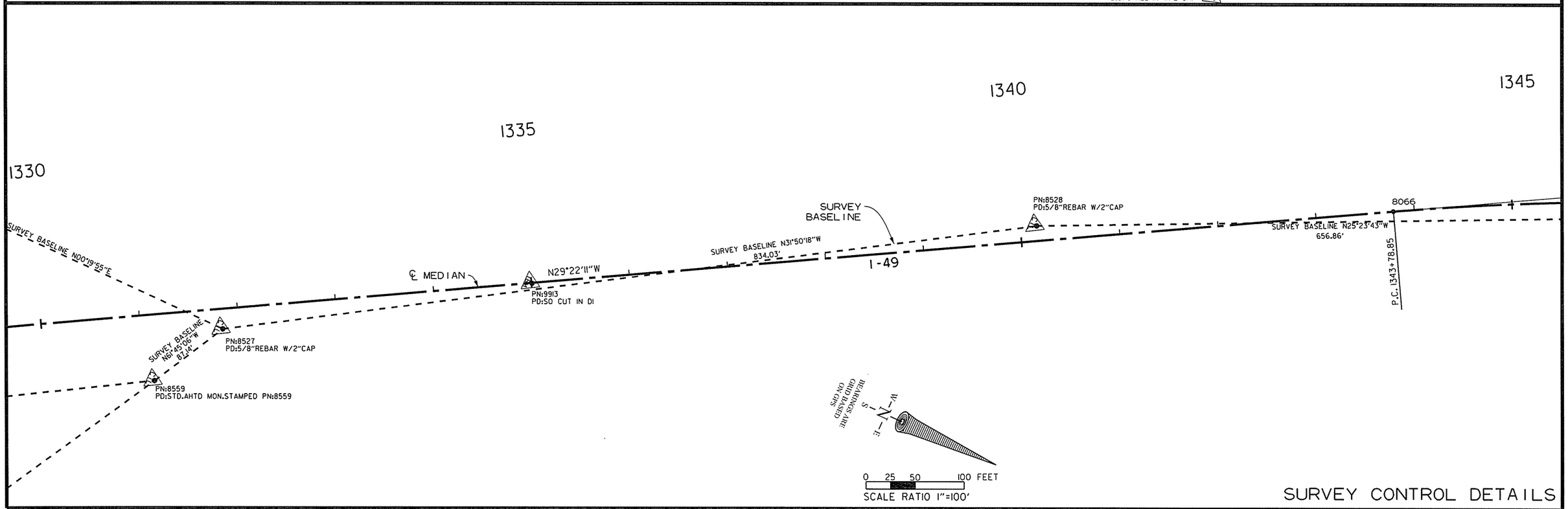

SURVEY CONTROL DETAILS

USER: ot5106
DESIGN FILE: G:\13106100_264toNHope\TRANSP\dgn\CA0901Survey Ctl.dgn
PLOTTED: 2/24/2016 12:31
SCALE: 100:1
MODEL: SURVEY CNTRL DETAILS

G:\13106100_264toNHope\TRANSP\dgn\CA0901Survey Ctl.dgn 2/24/2016 12:31

Crafton Tull
architecture | engineering | surveying

DATE REVISED	DATE FILMED	DATE REVISED	DATE FILMED

FED.RD. DIST.NO.	STATE	FED.AID PROJ.NO.	SHEET NO.	TOTAL SHEETS
6	ARK.			
JOB NO.		CA0901	105	452

(2) SURVEY CONTROL DETAILS

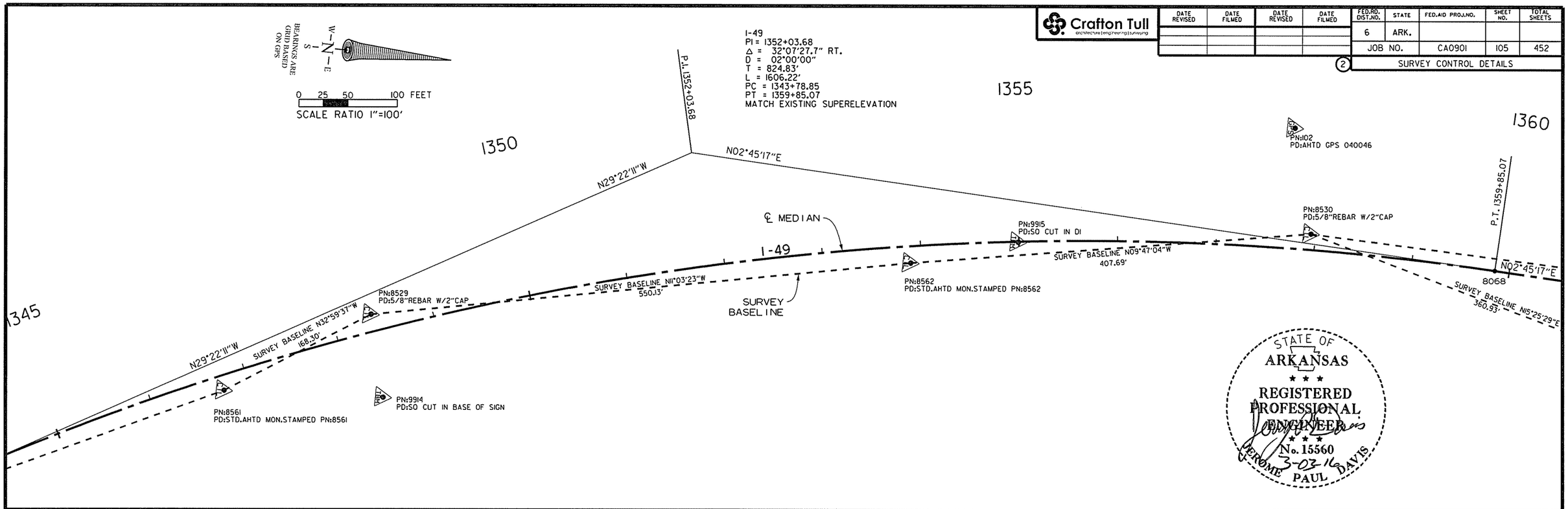

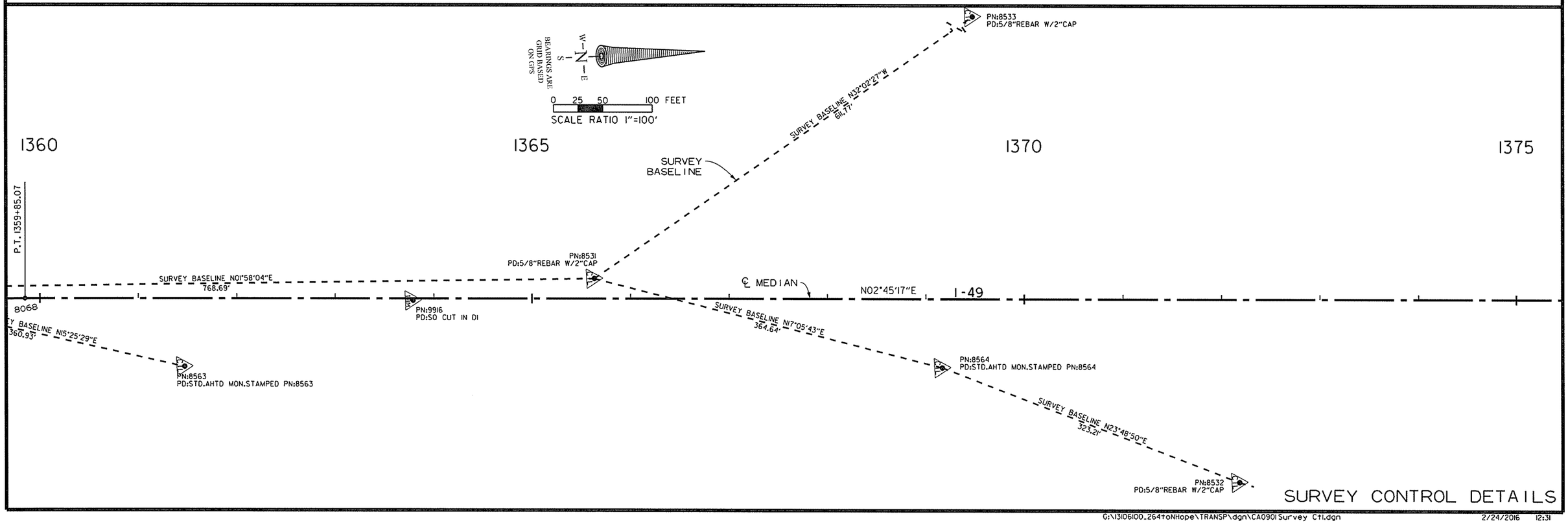

SURVEY CONTROL DETAILS

USER: at5106
DESIGN FILE: G:\13106100_264toNHope\TRANSP\dgn\CA0901Survey Ctl.dgn
PLOTTED: 2/24/2016 12:31
MODEL: SURVEY CNTRL DETAILS
SCALE: 100:1

Crafton Tull
architecture | engineering | surveying

DATE REVISED	DATE FILMED	DATE REVISED	DATE FILMED

FED.RD. DIST.NO.	STATE	FED.AID PROJ.NO.	SHEET NO.	TOTAL SHEETS
6	ARK.			
JOB NO.		CA0901	106	452

2 SURVEY CONTROL DETAILS

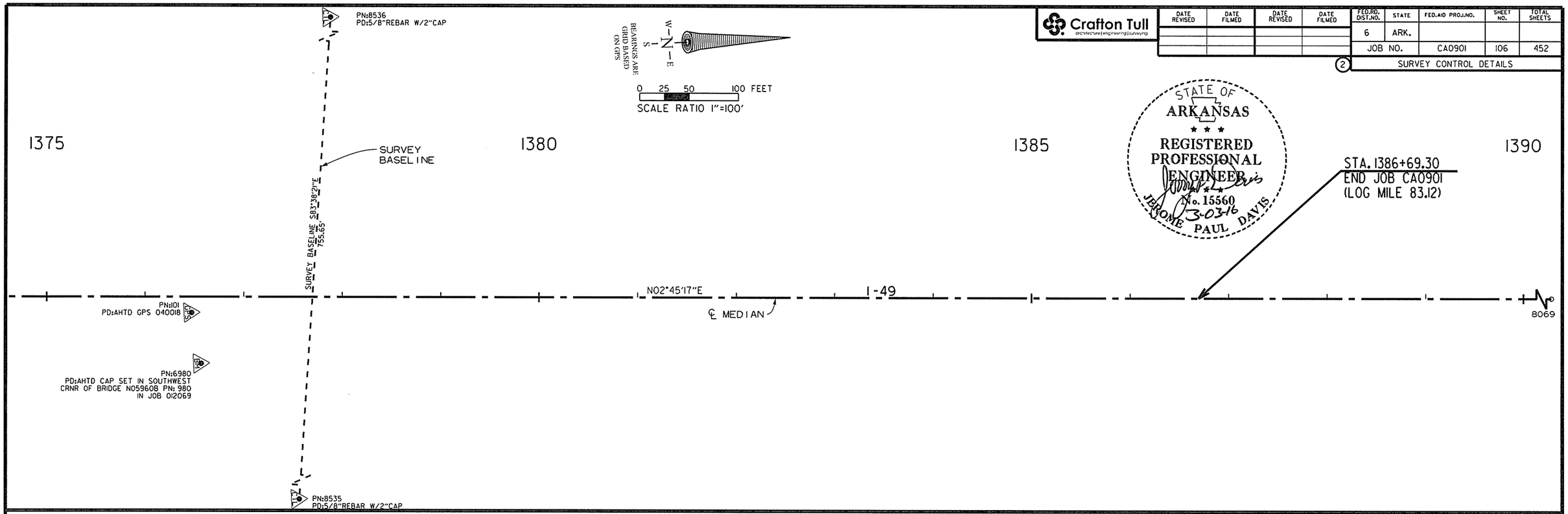

STATE OF ARKANSAS
REGISTERED PROFESSIONAL ENGINEER
No. 15560
3-03-16
JEROME PAUL DAVIS

SURVEY CONTROL DETAILS

USER: a15106
DESIGN FILE: G:\13106100_264toNHope\TRANSP\dgn\CA0901Survey Ctl.dgn
PLOTTED: 2/24/2016 12:31 SCALE: 100:1 MODEL: SURVEY CNTRL DETAILS

Crafton Tull
architecture | engineering | surveying

DATE REVISED	DATE FILMED	DATE REVISED	DATE FILMED

FED.RD. DIST.NO.	STATE	FED.AID PROJ.NO.	SHEET NO.	TOTAL SHEETS
6	ARK.			
JOB NO.		CA0901	107	452

PLAN & PROFILE SHEETS

STATE OF ARKANSAS
REGISTERED PROFESSIONAL ENGINEER
No. 15560
3-03-16
JEROME PAUL DAVIS

REMOVAL AND DISPOSAL GUARDRAIL

STA.	STA.	SIDE	LIN. FT.
1110+64	1116+18	R.M.L. - L.T.	554
1112+97	1118+51	L.M.L. - R.T.	554

CONCRETE BARRIER WALL

STA.	STA.	MEDIAN TYPE
1108+79	1113+17	B
1113+17	1115+93	SPECIAL
1115+93	1133+16	B

STA. 1103+78.59 IN PLACE TYPE ST
DROP INLET 3' RT. OF C.L.
W/18" X 296' R.C. PIPE CULVERT
RETAIN

STA. 1103+78.59 IN PLACE TYPE ST
DROP INLET 3' LT. OF C.L.
W/18" X 2' R.C. PIPE CULVERT
RETAIN

STA. 1106+78.59 IN PLACE TYPE ST
DROP INLET 3' RT. OF C.L.
W/18" X 2' R.C. PIPE CULVERT
RETAIN

STA. 1106+78.59 IN PLACE TYPE ST
DROP INLET 3' LT. OF C.L.
W/18" X 296' R.C. PIPE CULVERT
RETAIN

STA. 1108+96.59 IN PLACE TYPE RM
DROP INLET IN MEDIAN
W/18" X 214' R.C. PIPE CULVERT
MODIFY

STA. 1109+10 - CONSTRUCT
DROP INLET 3' LT. OF C.L. H=7'5"
W/24" X 10' R.C. PIPE CULVERT
(CLASS III) (TYPE 3 BEDDING)
CONNECT TO EXIST. DROP INLET
STA. 1108+96.59
TYPE ST DROP INLET = 4' X 4'

STA. 1109+10 - CONSTRUCT
DROP INLET 3' RT. OF C.L. H=7'3"
W/24" X 2' R.C. PIPE CULVERT
(CLASS III) (TYPE 3 BEDDING)
CONNECT TO DROP INLET
STA. 1109+10 LT.
TYPE ST DROP INLET = 4' X 4'

STA. 1113+71 IN PLACE TYPE R
DROP INLET IN MEDIAN
W/18" X 91' R.C. PIPE OUTLET
TO RT. W/FES
MODIFY

STA. 1113+85 - CONSTRUCT
DROP INLET 4'-11" LT. OF C.L. H=3'11"
W/24" X 12' R.C. PIPE CULVERT
(CLASS IV) (TYPE 3 BEDDING)
CONNECT TO EXIST. DROP INLET
STA. 1113+71
TYPE ST DROP INLET = 4' X 6'
3 GRATES

STA. 1113+85 - CONSTRUCT
DROP INLET 4'-11" RT. OF C.L. H=3'9"
W/24" X 6' R.C. PIPE CULVERT
(CLASS IV) (TYPE 3 BEDDING)
CONNECT TO DROP INLET
STA. 1113+85 LT.
TYPE ST DROP INLET = 4' X 6'
3 GRATES

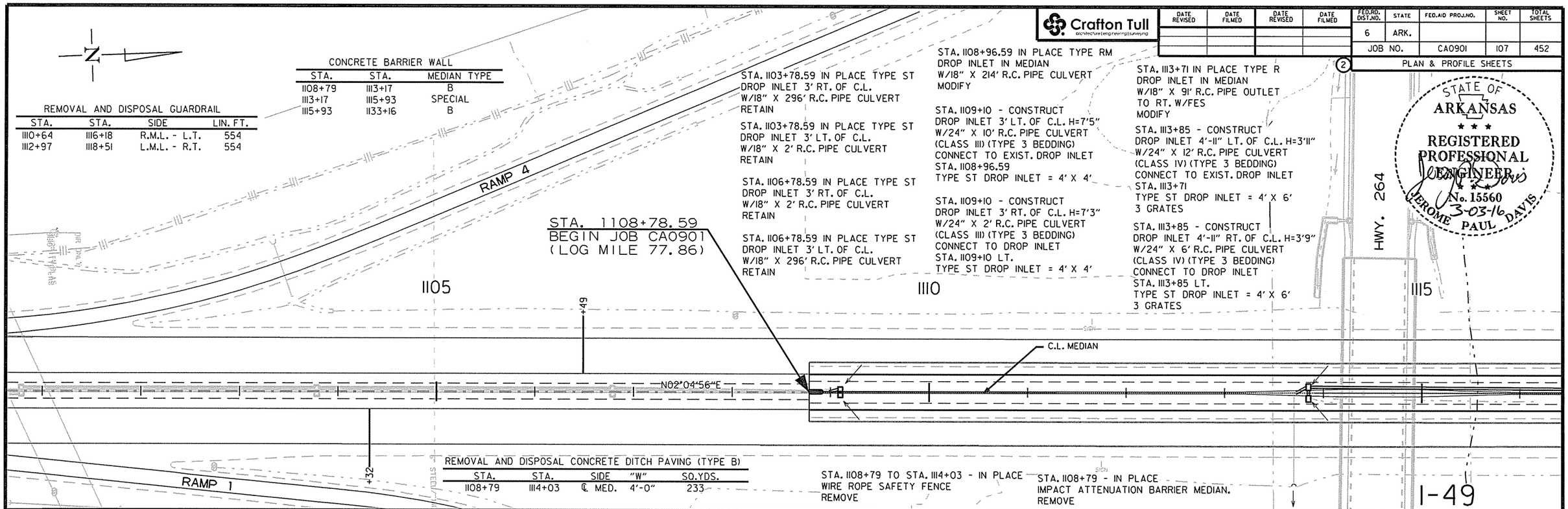

REMOVAL AND DISPOSAL CONCRETE DITCH PAVING (TYPE B)

STA.	STA.	SIDE	"W"	SQ.YDS.
1108+79	1114+03	℄ MED.	4'-0"	233

STA. 1108+79 TO STA. 1114+03 - IN PLACE
WIRE ROPE SAFETY FENCE
REMOVE

STA. 1108+79 - IN PLACE
IMPACT ATTENUATION BARRIER MEDIAN.
REMOVE

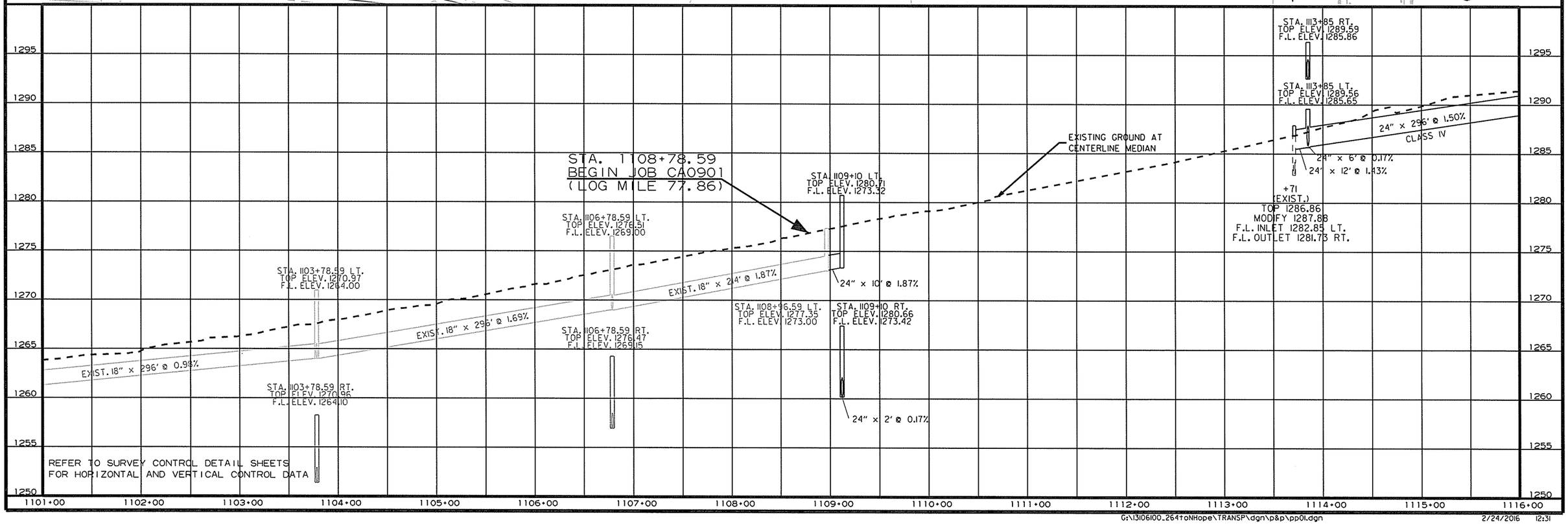

USER: at5106
DESIGN FILE: G:\13106100_264toNHope\TRANSP\dgn\p&p\pp01.dgn
PLOTTED: 2/24/2016 12:31
SCALE: 100:1
MODEL: PROPOSED DESIGN

Crafton Tull
architecture | engineering | surveying

DATE REVISED	DATE FILMED	DATE REVISED	DATE FILMED

FED.RD. DIST.NO.	STATE	FED.AID PROJ.NO.	SHEET NO.	TOTAL SHEETS
6	ARK.			
JOB NO.		CA0901	108	452

2 PLAN & PROFILE SHEETS

STATE OF ARKANSAS
REGISTERED PROFESSIONAL ENGINEER
No. 15560
JEROME PAUL DAVIS
3-03-16

STA. 1116+85 - CONSTRUCT
DROP INLET 3' LT. OF C.L. H=4'9"
W/24" x 296' R.C. PIPE CULVERT
(CLASS IV) (TYPE 3 BEDDING)
CONNECT TO DROP INLET
STA. 1113+85 LT.
TYPE ST DROP INLET = 4' X 6'
3 GRATES

STA. 1116+85 - CONSTRUCT
DROP INLET 3' RT. OF C.L. H=4'9"
W/24" x 2' R.C. PIPE CULVERT
(CLASS III) (TYPE 3 BEDDING)
CONNECT TO DROP INLET
STA. 1116+85 LT.
TYPE ST DROP INLET = 4' X 6'
3 GRATES

STA. 1119+85 - CONSTRUCT
DROP INLET 3' LT. OF C.L. H=5'5"
W/24" x 296' R.C. PIPE CULVERT
(CLASS III) (TYPE 3 BEDDING)
CONNECT TO DROP INLET
STA. 1116+85 LT.
TYPE ST DROP INLET = 4' X 4'

STA. 1119+85 - CONSTRUCT
DROP INLET 3' RT. OF C.L. H=5'4"
W/24" x 2' R.C. PIPE CULVERT
(CLASS III) (TYPE 3 BEDDING)
CONNECT TO DROP INLET
STA. 1119+85 LT.
TYPE ST DROP INLET = 4' X 4'

STA. 1122+85 - CONSTRUCT
DROP INLET 3' LT. OF C.L. H=5'1"
W/24" x 296' R.C. PIPE CULVERT
(CLASS III) (TYPE 3 BEDDING)
CONNECT TO DROP INLET
STA. 1119+85 LT.
TYPE ST DROP INLET = 4' X 6'
3 GRATES

STA. 1122+85 - CONSTRUCT
DROP INLET 3' RT. OF C.L. H=5'2"
W/24" x 2' R.C. PIPE CULVERT
(CLASS III) (TYPE 3 BEDDING)
CONNECT TO DROP INLET
STA. 1122+85 LT.
TYPE ST DROP INLET = 4' X 6'
3 GRATES

STA. 1126+15 - CONSTRUCT
DROP INLET 3' LT. OF C.L. H=5'8"
W/24" x 24' R.C. PIPE CULVERT
(CLASS III) (TYPE 3 BEDDING)
CONNECT TO EXIST. DROP INLET
STA. 1125+85
TYPE ST DROP INLET = 4' X 6'
3 GRATES

STA. 1126+15 - CONSTRUCT
DROP INLET 3' RT. OF C.L. H=5'7"
W/24" x 2' R.C. PIPE CULVERT
(CLASS III) (TYPE 3 BEDDING)
CONNECT TO DROP INLET
STA. 1126+15 LT.
TYPE ST DROP INLET = 4' X 6'
3 GRATES

STA. 1129+00 - CONSTRUCT
DROP INLET 3' LT. OF C.L. H=5'4"
W/24" x 281' R.C. PIPE CULVERT
(CLASS III) (TYPE 3 BEDDING)
CONNECT TO EXIST DROP INLET
STA. 1126+15 LT.
TYPE ST DROP INLET = 4' X 6'
3 GRATES

STA. 1129+00 - CONSTRUCT
DROP INLET 3' RT. OF C.L. H=5'3"
W/24" x 2' R.C. PIPE CULVERT
(CLASS III) (TYPE 3 BEDDING)
CONNECT TO DROP INLET
STA. 1129+00 LT.
TYPE ST DROP INLET = 4' X 6'
3 GRATES

RAMP 3

STA. 1125+85 IN PLACE
TRIPLE 6' X 4' X 441' R.C.
BOX CULVERT RETAIN
(23° RT. FWD. SKEW)
Q50=142 CFS; D.A.=130.7 AC.
(SPAN 20'-4")

STA. 1125+85 IN PLACE
TYPE T DROP INLET
IN MEDIAN
MODIFY

STA. 1125+13 IN PLACE
24"X27' R.C. PIPE INLET
W/FES TO R.C. BOX
RETAIN

1115 1120 1125 1130

C.L. MEDIAN

N02°04'56"E

REMOVAL AND DISPOSAL CONCRETE DITCH PAVING (TYPE B)

STA.	STA.	SIDE	"W"	SQ.YDS.
1115+29	1153+36	℄ MED.	4'-0"	1692

STA. 1115+29 TO STA. 1153+36 - IN PLACE
WIRE ROPE SAFETY FENCE
REMOVE

RAMP 2

I-49

STA. 1116+85 RT.
TOP ELEV. 1295.08
F.L. ELEV. 1290.30

STA. 1119+85 RT.
TOP ELEV. 1300.50
F.L. ELEV. 1295.14

STA. 1122+85 RT.
TOP ELEV. 1305.17
F.L. ELEV. 1299.98

STA. 1126+15 RT.
TOP ELEV. 1307.46
F.L. ELEV. 1301.83

STA. 1129+00 RT.
TOP ELEV. 1309.14
F.L. ELEV. 1303.90

STA. 1116+85 LT.
TOP ELEV. 1294.95
F.L. ELEV. 1290.19

STA. 1119+85 LT.
TOP ELEV. 1300.43
F.L. ELEV. 1295.03

STA. 1122+85 LT.
TOP ELEV. 1304.95
F.L. ELEV. 1299.87

STA. 1126+15 LT.
TOP ELEV. 1307.35
F.L. ELEV. 1301.72

STA. 1129+00 LT.
TOP ELEV. 1309.09
F.L. ELEV. 1303.79

EXISTING GROUND AT CENTERLINE MEDIAN

24" x 296' @ 1.60%
CLASS IV

24" x 2' @ 0.28%

24" x 296' @ 1.60%

24" x 2' @ 0.28%

24" x 296' @ 1.60%

24" x 2' @ 0.28%

24" x 2' @ 0.28%

24" x 24' @ 0.70%

24" x 281' @ 0.70%

24" x 296' @ 0.60%

24" x 2' @ 0.28%

+85
(EXIST.)
TOP 1303.83
F.L. INLET 1298.17 LT.
F.L. OUTLET 1294.19 RT.

REFER TO SURVEY CONTROL DETAIL SHEETS
FOR HORIZONTAL AND VERTICAL CONTROL DATA

1325 1320 1315 1310 1305 1300 1295 1290 1285 1280

1115+00 1116+00 1117+00 1118+00 1119+00 1120+00 1121+00 1122+00 1123+00 1124+00 1125+00 1126+00 1127+00 1128+00 1129+00 1130+00

USER: ar5106
DESIGN FILE: G:\13106100_264toNHope\TRANSP\dgn\p&p\pp02.dgn
PLOTTED: 2/24/2016 12:31
SCALE: 100:1
MODEL: PROPOSED DESIGN

G:\13106100_264toNHope\TRANSP\dgn\p&p\pp02.dgn 2/24/2016 12:31

DATE REVISED	DATE FILMED	DATE REVISED	DATE FILMED

FED.RD. DIST.NO.	STATE	FED.AID PROJ.NO.	SHEET NO.	TOTAL SHEETS
6	ARK.			
JOB NO.		CA0901	109	452

2 PLAN & PROFILE SHEETS

STA. 1132+00 - CONSTRUCT
DROP INLET 3' LT. OF C.L. H=5'4"
W/24" x 296' R.C. PIPE CULVERT
(CLASS III) (TYPE 3 BEDDING)
CONNECT TO DROP INLET
STA. 1129+00 LT.
TYPE ST DROP INLET = 4' X 6'
3 GRATES

STA. 1132+00 - CONSTRUCT
DROP INLET 3' RT. OF C.L. H=5'3"
W/24" x 2' R.C. PIPE CULVERT
(CLASS III) (TYPE 3 BEDDING)
CONNECT TO DROP INLET
STA. 1132+00 LT.
TYPE ST DROP INLET = 4' X 6'
3 GRATES

STA. 1135+00 IN PLACE
TYPE R DROP INLET IN MEDIAN
W/18" X 93' R.C. PIPE OUTLET
W/F.E.S.
MODIFY
STA. 1135+15 - CONSTRUCT
DROP INLET 3' LT. OF C.L. H=5'7"
W/24" x 12' R.C. PIPE CULVERT
(CLASS III) (TYPE 3 BEDDING)
CONNECT TO EXIST. DROP INLET
STA. 1135+00
TYPE ST DROP INLET = 4' X 4'

STA. 1135+15 - CONSTRUCT
DROP INLET 3' RT. OF C.L. H=5'6"
W/24" x 2' R.C. PIPE CULVERT
(CLASS III) (TYPE 3 BEDDING)
CONNECT TO DROP INLET
STA. 1135+15 LT.
TYPE ST DROP INLET = 4' X 4'

STA. 1138+00 - CONSTRUCT
DROP INLET 3' LT. OF C.L. H=5'4"
W/24" x 281' R.C. PIPE CULVERT
(CLASS III) (TYPE 3 BEDDING)
CONNECT TO DROP INLET
STA. 1135+15 LT.
TYPE ST DROP INLET = 4' X 4'

STA. 1138+00 - CONSTRUCT
DROP INLET 3' RT. OF C.L. H=5'5"
W/24" x 2' R.C. PIPE CULVERT
(CLASS III) (TYPE 3 BEDDING)
CONNECT TO DROP INLET
STA. 1138+00 LT.
TYPE ST DROP INLET = 4' X 4'

STA. 1144+00 - CONSTRUCT
DROP INLET 3' LT. OF C.L. H=3'9"
W/24" x 2' R.C. PIPE CULVERT
(CLASS III) (TYPE 1 OR 2 BEDDING)
CONNECT TO DROP INLET
STA. 1144+00 RT.
TYPE ST DROP INLET = 4' X 6'
3 GRATES

STA. 1144+00 - CONSTRUCT
DROP INLET 3' RT. OF C.L. H=3'9"
W/24" x 246' R.C. PIPE CULVERT
(CLASS IV) (TYPE 1 OR 2 BEDDING)
CONNECT TO DROP INLET
STA. 1146+50 RT.
TYPE ST DROP INLET = 4' X 6'
3 GRATES

CONCRETE BARRIER WALL

STA.	STA.	MEDIAN TYPE
1133+16	1133+41	SP-3
1133+59	1133+84	SP-3
1133+84	1153+31	B

STATE OF ARKANSAS
REGISTERED PROFESSIONAL ENGINEER
No. 15560
3-03-16
JEROME PAUL DAVIS

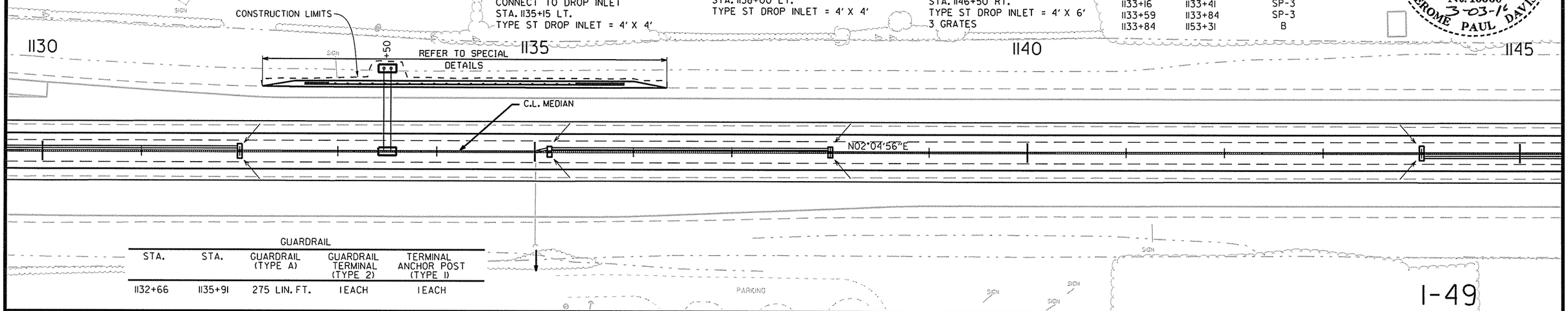

GUARDRAIL

STA.	STA.	GUARDRAIL (TYPE A)	GUARDRAIL TERMINAL (TYPE 2)	TERMINAL ANCHOR POST (TYPE 1)
1132+66	1135+91	275 LIN. FT.	1 EACH	1 EACH

I-49

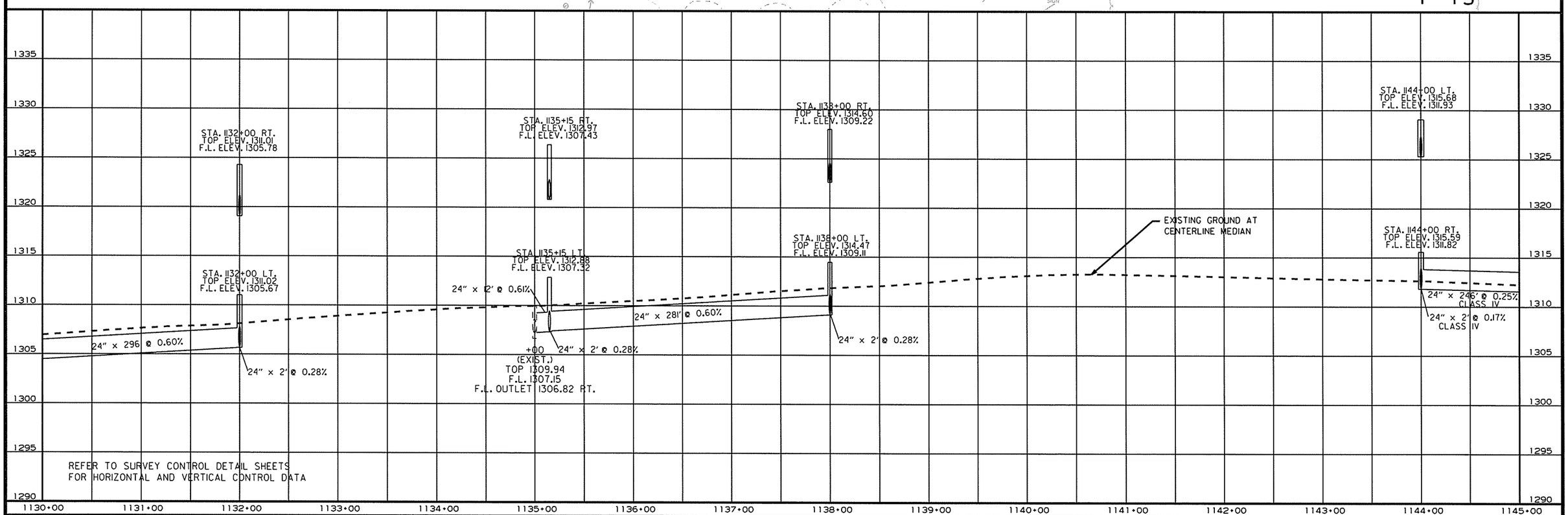

REFER TO SURVEY CONTROL DETAIL SHEETS
FOR HORIZONTAL AND VERTICAL CONTROL DATA

USER: at5106
DESIGN FILE: G:\13106100_264toNHope\TRANSP\dgn\p&p\pp03.dgn MODEL: PROPOSED DESIGN
PLOTTED: 3/1/2016 13:04 SCALE: 100:1

G:\13106100_264toNHope\TRANSP\dgn\p&p\pp03.dgn 3/1/2016 13:04

DATE REVISED	DATE FILMED	DATE REVISED	DATE FILMED

FED.RD. DIST.NO.	STATE	FED.AID PROJ.NO.	SHEET NO.	TOTAL SHEETS
6	ARK.			
JOB NO.		CA0901	110	452

2 PLAN & PROFILE SHEETS

STATE OF ARKANSAS
REGISTERED PROFESSIONAL ENGINEER
No. 15560
3-03-16
JEROME PAUL DAVIS

STA. 1146+50 - CONSTRUCT
DROP INLET 3' LT. OF C.L. H=5'4"
W/24" x 2' R.C. PIPE CULVERT
(CLASS III) (TYPE 3 BEDDING)
CONNECT TO DROP INLET
STA. 1146+50 RT.
TYPE ST DROP INLET = 4' X 6'
3 GRATES

STA. 1146+50 - CONSTRUCT
DROP INLET 3' RT. OF C.L. H=5'1"
W/24" x 146' R.C. PIPE CULVERT
(CLASS III) (TYPE 3 BEDDING)
CONNECT TO DROP INLET
STA. 1148+50 RT.
TYPE ST DROP INLET = 4' X 6'
3 GRATES

STA. 1148+00 - CONSTRUCT
DROP INLET 3' LT. OF C.L. H=5'8"
W/24" x 2' R.C. PIPE CULVERT
(CLASS III) (TYPE 3 BEDDING)
CONNECT TO DROP INLET
STA. 1148+00 RT.
TYPE ST DROP INLET = 4' X 6'
3 GRATES

STA. 1148+00 - CONSTRUCT
DROP INLET 3' RT. OF C.L. H=5'7"
W/24" x 146' R.C. PIPE CULVERT
(CLASS III) (TYPE 3 BEDDING)
CONNECT TO DROP INLET
STA. 1149+50 RT.
TYPE ST DROP INLET = 4' X 6'
3 GRATES

PROPOSED R/W

EXIST. R/W & C/A

+01.22
113.08'

FENCE

STA.	STA.	SIDE	TYPE	LIN. FT	16' GATE
1149+01	1154+22	LT.	A	1320	1

STA. 1149+50 - CONSTRUCT
DROP INLET 3' LT. OF C.L. H=6'3"
W/24" x 2' R.C. PIPE CULVERT
(CLASS III) (TYPE 3 BEDDING)
CONNECT TO DROP INLET
STA. 1149+50 RT.
TYPE ST DROP INLET = 4' X 6'
3 GRATES

STA. 1149+50 - CONSTRUCT
DROP INLET 3' RT. OF C.L. H=6'2"
W/24" x 146' R.C. PIPE CULVERT
(CLASS III) (TYPE 3 BEDDING)
CONNECT TO DROP INLET
STA. 1151+00 RT.
TYPE ST DROP INLET = 4' X 6'
3 GRATES

STA. 1151+00 - CONSTRUCT
DROP INLET 3' RT. OF C.L. H=6'7"
W/24" x 146' R.C. PIPE CULVERT
(CLASS III) (TYPE 3 BEDDING)
CONNECT TO DROP INLET
STA. 1152+50 RT.
TYPE ST DROP INLET = 4' X 6'
3 GRATES

STA. 1151+00 - CONSTRUCT
DROP INLET 3' LT. OF C.L. H=6'7"
W/24" x 2' R.C. PIPE CULVERT
(CLASS III) (TYPE 3 BEDDING)
CONNECT TO DROP INLET
STA. 1151+00 RT.
TYPE ST DROP INLET = 4' X 6'
3 GRATES

OAKWOOD AVE.

REMOVAL AND DISPOSAL CONC. PIER PROTECTION

STA.	STA.	SIDE	LIN. FT.
1154+16	1154+38	C.L. MEDIAN	44

REMOVAL AND DISPOSAL CONCRETE DITCH PAVING (TYPE B)

STA.	STA.	SIDE	"W"	SQ.YDS.
1154+79	1224+21	℄ MED.	4'-0"	3085

STA. 1153+87 & STA. 1154+38 IN PLACE
(2) TYPE-B IMPACT ATTENUATION BARRIERS
REMOVE

STA. 1153+39 IN PLACE
CROSS OVER
W/18" X 38' PIPE CULVERT
MEDIAN DRAIN
REMOVE

1145 1150 1155 1160

C.L. MEDIAN

N02°04'56"E

STA. 1146+00 IN PLACE TRIPLE
6' X 4' X 170' R.C. BOX CULVERT
Q50=55 CFS: D.A.=62.1 AC.
RETAIN

CONCRETE BARRIER WALL

STA.	STA.	MEDIAN TYPE
1153+31	1155+22	SPECIAL
1155+22	1176+55	B

STA. 1154+79 TO STA. 1224+21 - IN PLACE
WIRE ROPE SAFETY FENCE
REMOVE

STA. 1152+50 - CONSTRUCT
DROP INLET 3' RT. OF C.L. H=6'11"
W/24" x 48' R.C. PIPE CULVERT
(CLASS III) (TYPE 3 BEDDING)
CONNECT TO EXIST. DROP INLET
AT STA. 1153+00
TYPE ST DROP INLET = 4' X 6'
3 GRATES

STA. 1152+50 - CONSTRUCT
DROP INLET 3' LT. OF C.L. H=6'10"
W/24" x 2' R.C. PIPE CULVERT
(CLASS III) (TYPE 3 BEDDING)
CONNECT TO DROP INLET
STA. 1152+50 RT.
TYPE ST DROP INLET = 4' X 6'
3 GRATES

STA. 1153+00 IN PLACE
TYPE R DROP INLET IN MEDIAN
W/24" X 87' PIPE INLET AND
24" X 86' PIPE OUTLET
W/FES LT. AND RT.
Q50=5 CFS: D.A.=8.6 AC.
MODIFY

STA. 1153+50 - CONSTRUCT
DROP INLET 3'-10" RT. OF C.L. H=6'1"
W/24" x 47' R.C. PIPE CULVERT
(CLASS III) (TYPE 3 BEDDING)
CONNECT TO EXIST. DROP INLET
AT STA. 1153+00
TYPE ST DROP INLET = 4' X 6'
3 GRATES

STA. 1153+50 - CONSTRUCT
DROP INLET 3'-10" LT. OF C.L. H=6'1"
W/24" x 4' R.C. PIPE CULVERT
(CLASS III) (TYPE 3 BEDDING)
CONNECT TO DROP INLET
STA. 1153+50 RT.
TYPE ST DROP INLET = 4' X 6'
3 GRATES

STA. 1154+85 - CONSTRUCT
DROP INLET 3' LT. OF C.L. H=6'6"
W/36" x 196' R.C. PIPE CULVERT
(CLASS III) (TYPE 3 BEDDING)
CONNECT TO DROP INLET
STA. 1156+85 LT.
TYPE ST DROP INLET = 4' X 6'
3 GRATES

STA. 1154+85 - CONSTRUCT
DROP INLET 3' RT. OF C.L. H=5'5"
W/24" x 4' R.C. PIPE CULVERT
(CLASS III) (TYPE 3 BEDDING)
CONNECT TO DROP INLET
STA. 1154+85 LT.
TYPE ST DROP INLET = 4' X 6'
3 GRATES

STA. 1156+85 - CONSTRUCT
DROP INLET 3' LT. OF C.L. H=6'4"
W/36" x 196' R.C. PIPE CULVERT
(CLASS III) (TYPE 3 BEDDING)
CONNECT TO DROP INLET
STA. 1158+85 LT.
TYPE ST DROP INLET = 4' X 6'
3 GRATES

STA. 1156+85 - CONSTRUCT
DROP INLET 3' RT. OF C.L. H=5'4"
W/24" x 2' R.C. PIPE CULVERT
(CLASS III) (TYPE 3 BEDDING)
CONNECT TO DROP INLET
STA. 1156+85 LT.
TYPE ST DROP INLET = 4' X 6'
3 GRATES

STA. 1158+85 - CONSTRUCT
DROP INLET 3' LT. OF C.L. H=6'4"
W/36" x 196' R.C. PIPE CULVERT
(CLASS III) (TYPE 3 BEDDING)
CONNECT TO DROP INLET
STA. 1160+85 LT.
TYPE ST DROP INLET = 4' X 6'
3 GRATES

STA. 1158+85 - CONSTRUCT
DROP INLET 3' RT. OF C.L. H=5'4"
W/24" x 2' R.C. PIPE CULVERT
(CLASS III) (TYPE 3 BEDDING)
CONNECT TO DROP INLET
STA. 1158+85 LT.
TYPE ST DROP INLET = 4' X 6'
3 GRATES

1-49

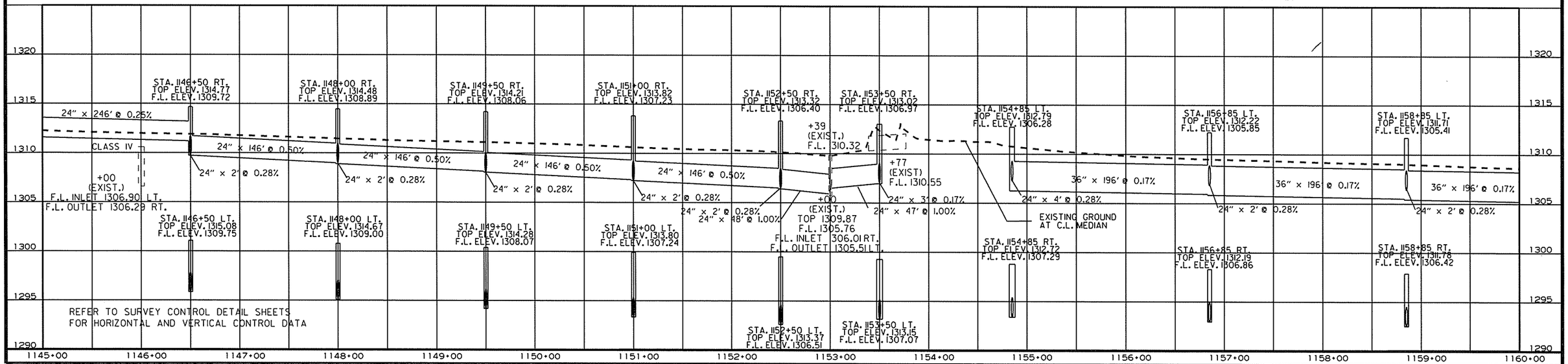

REFER TO SURVEY CONTROL DETAIL SHEETS
FOR HORIZONTAL AND VERTICAL CONTROL DATA

USER: at5106
DESIGN FILE: G:\13106100_264toNHope\TRANSP\dgn\p&p\pp04.dgn
PLOTTED: 2/24/2016 12:31
MODEL: PROPOSED DESIGN
SCALE: 100:1

DATE REVISED	DATE FILMED	DATE REVISED	DATE FILMED

FED.RD. DIST.NO.	STATE	FED.AID PROJ.NO.	SHEET NO.	TOTAL SHEETS
6	ARK.			
JOB NO.		CA0901	III	452

PLAN & PROFILE SHEETS

STA. 1165+00 IN PLACE
TYPE R DROP INLET IN MEDIAN
REMOVE

FENCE

STA.	STA.	SIDE	TYPE	LIN. FT	16' GATE
1173+42	1177+25	LT.	A	1238	2

STA. 1165+00 IN PLACE
18" X 84' R.C. PIPE OUTLET
W/FES LT.
FILL AND ABANDON

STA. 1160+85 - CONSTRUCT
DROP INLET 3' RT. OF C.L. H=5'2"
W/24" x 2' R.C. PIPE CULVERT
(CLASS III) (TYPE 3 BEDDING)
CONNECT TO DROP INLET
STA. 1160+85 LT.
TYPE ST DROP INLET = 4' X 6'
3 GRATES

STA. 1160+85 - CONSTRUCT
DROP INLET 3' LT. OF C.L. H=6'4"
W/36" x 196' R.C. PIPE CULVERT
(CLASS III) (TYPE 3 BEDDING)
CONNECT TO DROP INLET
STA. 1162+85 LT.
TYPE ST DROP INLET = 4' X 6'
3 GRATES

STA. 1162+85 - CONSTRUCT
DROP INLET 3' RT. OF C.L. H=5'2"
W/24" x 2' R.C. PIPE CULVERT
(CLASS III) (TYPE 3 BEDDING)
CONNECT TO DROP INLET
STA. 1162+85 LT.
TYPE ST DROP INLET = 4' X 6'
3 GRATES

STA. 1162+85 - CONSTRUCT
DROP INLET 3' LT. OF C.L. H=6'2"
W/36" x 196' R.C. PIPE CULVERT
(CLASS III) (TYPE 3 BEDDING)
CONNECT TO DROP INLET
STA. 1164+85 LT.
TYPE ST DROP INLET = 4' X 6'
3 GRATES

STA. 1164+85 - CONSTRUCT
DROP INLET 3' RT. OF C.L. H=4'11"
W/24" x 2' R.C. PIPE CULVERT
(CLASS III) (TYPE 3 BEDDING)
CONNECT TO DROP INLET
STA. 1164+85 LT.
TYPE ST DROP INLET = 4' X 6'
3 GRATES

STA. 1164+85 - CONSTRUCT
DROP INLET 3' LT. OF C.L. H=5'11"
W/36" x 211' R.C. PIPE CULVERT
(CLASS III) (TYPE 3 BEDDING)
CONNECT TO DROP INLET
STA. 1167+00 LT.
TYPE ST DROP INLET = 4' X 6'
3 GRATES

STA. 1167+00 - CONSTRUCT
DROP INLET 3' RT. OF C.L. H=5'1"
W/24" x 2' R.C. PIPE CULVERT
(CLASS III) (TYPE 3 BEDDING)
CONNECT TO DROP INLET
STA. 1167+00 LT.
TYPE ST DROP INLET = 4' X 6'
3 GRATES

STA. 1167+00 - CONSTRUCT
DROP INLET 3' LT. OF C.L. H=6'1"
W/36" x 246' R.C. PIPE CULVERT
(CLASS III) (TYPE 3 BEDDING)
CONNECT TO DROP INLET
STA. 1169+50 LT.
TYPE ST DROP INLET = 4' X 6'
3 GRATES

STA. 1169+50 - CONSTRUCT
DROP INLET 3' RT. OF C.L. H=5'2"
W/24" x 2' R.C. PIPE CULVERT
(CLASS III) (TYPE 3 BEDDING)
CONNECT TO DROP INLET
STA. 1169+50 LT.
TYPE ST DROP INLET = 4' X 6'
3 GRATES

STA. 1169+50 - CONSTRUCT
DROP INLET 3' LT. OF C.L. H=6'2"
W/36" x 246' R.C. PIPE CULVERT
(CLASS III) (TYPE 3 BEDDING)
CONNECT TO DROP INLET
STA. 1172+00 LT.
TYPE ST DROP INLET = 4' X 6'
3 GRATES

STA. 1172+00 - CONSTRUCT
DROP INLET 3' RT. OF C.L. H=5'6"
W/24" x 2' R.C. PIPE CULVERT
(CLASS III) (TYPE 3 BEDDING)
CONNECT TO DROP INLET
STA. 1172+00 LT.
TYPE ST DROP INLET = 4' X 6'
3 GRATES

STA. 1172+00 - CONSTRUCT
DROP INLET 3' LT. OF C.L. H=6'5"
W/36" x 196' R.C. PIPE CULVERT
(CLASS III) (TYPE 3 BEDDING)
CONNECT TO DROP INLET
STA. 1174+00 LT.
TYPE ST DROP INLET = 4' X 6'
3 GRATES

STA. 1174+00 - CONSTRUCT
DROP INLET 3' RT. OF C.L. H=5'7"
W/24" x 2' R.C. PIPE CULVERT
(CLASS III) (TYPE 3 BEDDING)
CONNECT TO DROP INLET
STA. 1174+00 LT.
TYPE ST DROP INLET = 4' X 6'
3 GRATES

STA. 1174+00 - CONSTRUCT
DROP INLET 3' LT. OF C.L. H=6'7"
W/36" x 166' R.C. PIPE CULVERT
(CLASS III) (TYPE 3 BEDDING)
CONNECT TO DROP INLET
STA. 1175+70 LT.
TYPE ST DROP INLET = 4' X 6'
3 GRATES

STA. 1173+60 INSTALL
21" X 15" X 38' PIPE CULV'T.
LT. SIDE DRAIN
CONST. APPR. = 25 CU. YD.

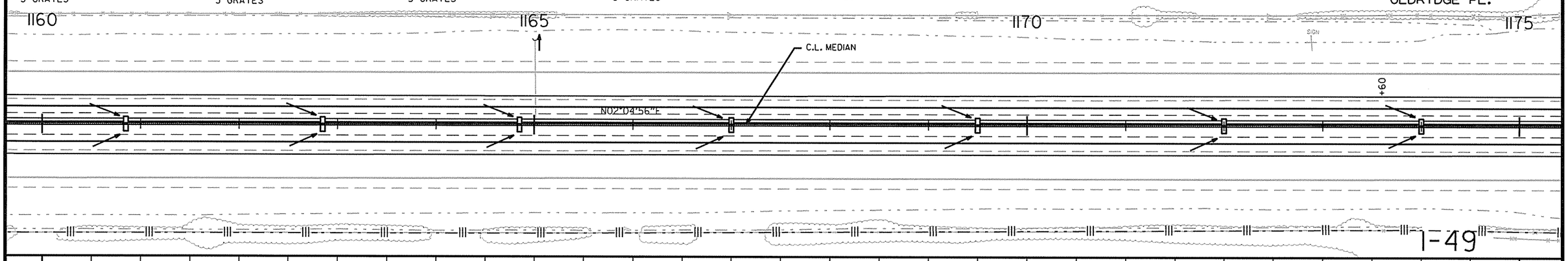

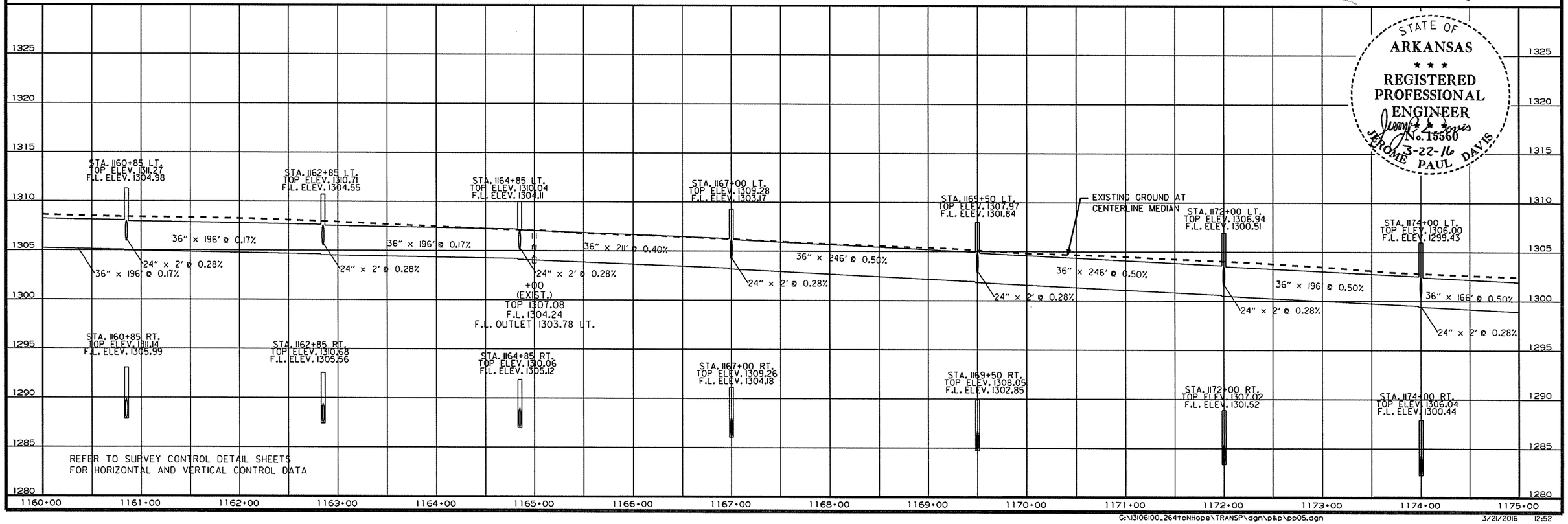

STATE OF
ARKANSAS
REGISTERED
PROFESSIONAL
ENGINEER
No. 15560
3-22-16
JEROME PAUL DAVIS

USER: at5106
DESIGN FILE: G:\13106100_264toNHope\TRANSP\dgn\p&p\pp05.dgn
PLOTTED: 3/21/2016 12:52
MODEL: PROPOSED DESIGN
SCALE: 100:1

G:\13106100_264toNHope\TRANSP\dgn\p&p\pp05.dgn 3/21/2016 12:52

DATE REVISED	DATE FILMED	DATE REVISED	DATE FILMED

FED.RD. DIST.NO.	STATE	FED.AID PROJ.NO.	SHEET NO.	TOTAL SHEETS
6	ARK.			
JOB NO.		CA0901	112	452

PLAN & PROFILE SHEETS

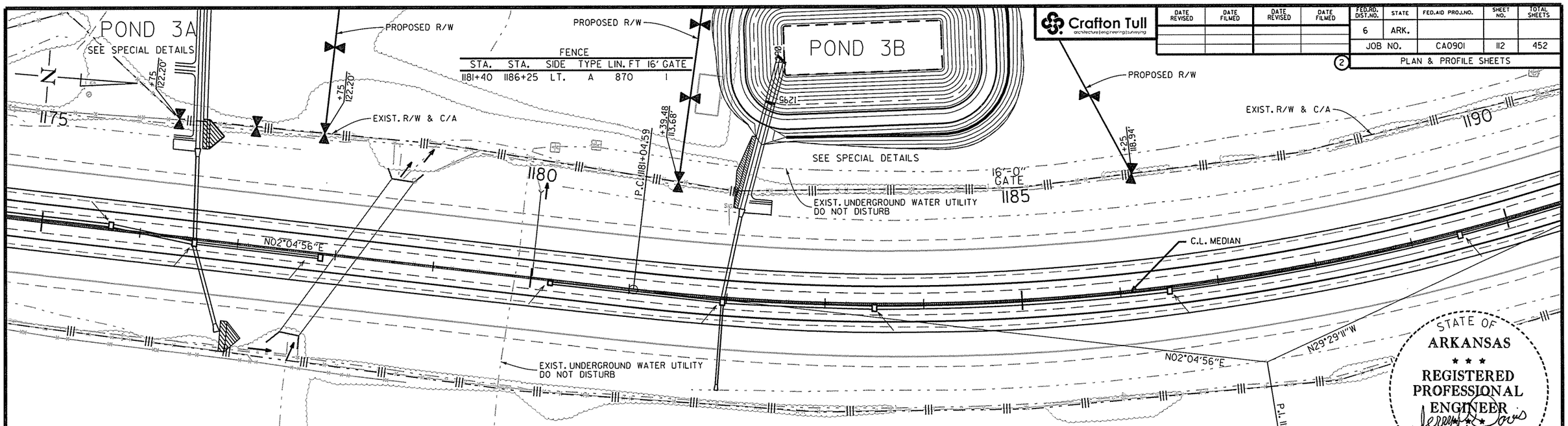

FENCE					
STA.	STA.	SIDE	TYPE	LIN. FT	16' GATE
1181+40	1186+25	LT.	A	870	1

STATE OF ARKANSAS
REGISTERED PROFESSIONAL ENGINEER
No. 15560
5-11-16
JEROME PAUL DAVIS

STA. 1175+70 - CONSTRUCT
DROP INLET 3' LT. OF C.L. H=6'6"
W/36" x 83' R.C. PIPE CULVERT
(CLASS III) (TYPE 3 BEDDING)
CONNECT TO DROP INLET
STA. 1176+56 RT.
TYPE ST DROP INLET = 4' X 6'
3 GRATES

STA. 1178+10 IN PLACE
TRIPLE 6' X 4' X 196' R.C.
BOX CULVERT RETAIN
(30° LT. FWD. SKEW)
050=316 CFS: D.A.=345 AC.
(SPAN 20'-4")

STA. 1178+10 IN PLACE
TYPE T DROP INLET
IN MEDIAN
MODIFY

STA. 1180+00 IN PLACE
TYPE R DROP INLET
IN MEDIAN
REMOVE

STA. 1180+00 IN PLACE
18" X 86' R.C. PIPE CULVERT
W/F.E.S.
FILL AND ABANDON

CONCRETE DITCH PAVING (TYPE B)					
LOCATION	STA.	STA.	SIDE	"W"	SQ. YDS.
POND 3A	1176+23	1176+42	LT. I-49	14'3"	37
POND 3B	1182+15	1182+41	LT. I-49	14'3"	39
CONCRETE DITCH PAVING (TYPE SPECIAL)					
LOCATION	STA.	STA.	SIDE	"W"	SQ. YDS.
POND 3A	1176+16	1176+53	LT. I-49	10'0"	286
POND 3B	1182+05	1182+48	LT. I-49	10'0"	176

CONCRETE BARRIER WALL		
STA.	STA.	MEDIAN TYPE
1176+55	1181+25	C
1181+25	1193+75	C-SPECIAL

STA. 1176+56 - CONSTRUCT
DROP INLET 3' RT. OF C.L. H=6'6"
W/36" x 86' R.C. PIPE CULVERT
& 36" X 80' R.C. PIPE CULVERT
(CLASS V)
W/F.E.S. LT. & RT.
JACK AND BORE BOTH PIPES
TYPE ST DROP INLET = 4' X 6'
3 GRATES
5 CU. YD. DUMPED RIPRAP BOTH PIPES

STA. 1177+85 - CONSTRUCT
DROP INLET 3' RT. OF C.L. H=4'9"
W/36" X 125' R.C. PIPE CULVERT
(CLASS III) (TYPE 3 BEDDING)
CONNECT TO DROP INLET
STA. 1176+56 RT.
TYPE ST DROP INLET = 4' X 6'
3 GRATES

STA. 1180+20 - CONSTRUCT
DROP INLET 3' RT. OF C.L. H=4'3"
W/24" x172' R.C. PIPE CULVERT
(CLASS III) (TYPE 3 BEDDING)
CONNECT TO DROP INLET
STA. 1181+96 RT.
TYPE ST DROP INLET = 4' X 4'

STA. 1181+96 - CONSTRUCT
DROP INLET 3' RT. OF C.L. H=5'3"
W/36" X 79' R.C. PIPE CULVERT OUTLET
& W/24" X 80' R.C. PIPE CULVERT INLET
(CLASS V)
W/F.E.S. LT. & RT.
TYPE ST. DROP INLET = 4' X 6'
3 GRATES
5 CU. YD. DUMPED RIPRAP
(JACK AND BORE)

I-49
PI = 1187+52.43
Δ = 31°34'06.5" LT.
D = 02°30'00"
T = 647.84'
L = 1262.74'
PC = 1181+04.59
PT = 1193+67.33
MATCH EXIST. SUPERELEVATION

STA. 1183+50 - CONSTRUCT
DROP INLET 3' RT. OF C.L. H=5'2"
W/36" x 149' R.C. PIPE CULVERT
(CLASS IV) (TYPE 3 BEDDING)
CONNECT TO DROP INLET
STA. 1181+96 RT.
TYPE ST DROP INLET = 4' X 6'
3 GRATES

STA. 1186+50 - CONSTRUCT
DROP INLET 3' RT. OF C.L. H=5'0"
W/36" x 296' R.C. PIPE CULVERT
(CLASS IV) (TYPE 3 BEDDING)
CONNECT TO DROP INLET
STA. 1183+50 RT.
TYPE ST DROP INLET = 4' X 6'
3 GRATES

STA. 1189+50 - CONSTRUCT
DROP INLET 3' RT. OF C.L. H=4'0"
W/24" x 296' R.C. PIPE CULVERT
(CLASS IV) (TYPE 3 BEDDING)
CONNECT TO DROP INLET
STA. 1186+50 RT.
TYPE ST DROP INLET = 4' X 6'
3 GRATES

I-49

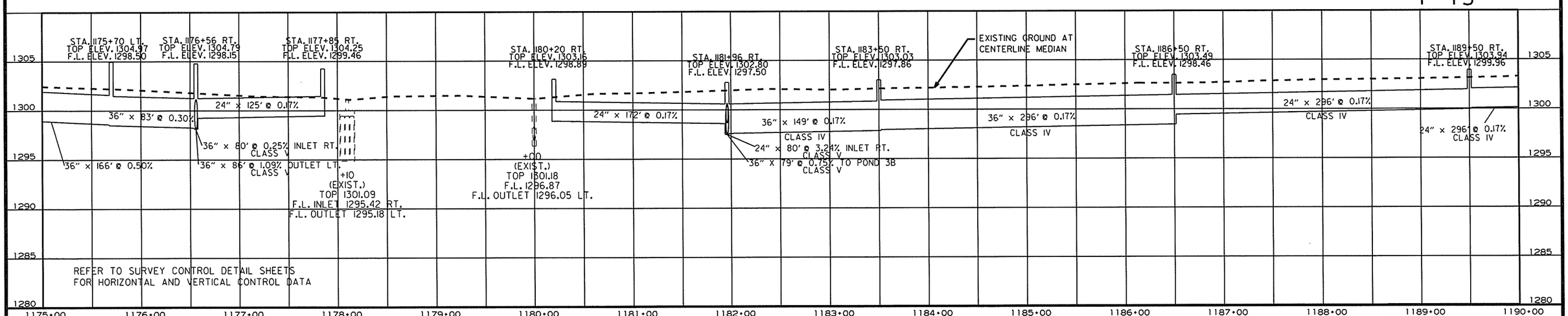

REFER TO SURVEY CONTROL DETAIL SHEETS
FOR HORIZONTAL AND VERTICAL CONTROL DATA

USER: ot5106
DESIGN FILE: G:\13106100_264toNHope\TRANSP\dgn\p&p\pp06.dgn
PLOTTED: 5/11/2016 14:43
MODEL: PROPOSED DESIGN
SCALE: 100:1

DATE REVISED	DATE FILMED	DATE REVISED	DATE FILMED

Crafton Tull
architecture | engineering | surveying

FED.RD. DIST.NO.	STATE	FED.AID PROJ.NO.	SHEET NO.	TOTAL SHEETS
6	ARK.			
JOB NO.		CA0901	113	452

2 PLAN & PROFILE SHEETS

STATE OF ARKANSAS
REGISTERED PROFESSIONAL ENGINEER
No. 15560
3-03-16
JEROME PAUL DAVIS

STA. 1192+50 - CONSTRUCT
DROP INLET 3' RT. OF C.L. H=4'2"
W/24" x 296' R.C. PIPE CULVERT
(CLASS IV) (TYPE 3) BEDDING
CONNECT TO DROP INLET
STA. 1189+50 RT.
TYPE ST DROP INLET = 4' X 6'
3 GRATES

STA. 1198+00 - CONSTRUCT
DROP INLET 3' RT. OF C.L. H=5'11"
W/24" x 94' R.C. PIPE CULVERT
(CLASS III) (TYPE 3 BEDDING)
CONNECT TO EXIST. DROP INLET
STA. 1199+00
TYPE ST DROP INLET = 4' X 6'
3 GRATES

STA. 1199+00 IN PLACE
6' X 4' X 171' R.C.
BOX CULVERT WITH 4:1
WINGS LT. & RT.
Q50=206 CFS: D.A.=119.2 AC.
RETAIN

STA. 1199+00 IN PLACE
TYPE T DROP INLET
IN MEDIAN OVER R.C.
BOX CULVERT
MODIFY

STA. 1199+75 - CONSTRUCT
DROP INLET 3' RT. OF C.L. H=6'4"
W/24" x 78' R.C. PIPE CULVERT INLET
(CLASS V)
W/F.E.S. RT.
(JACK AND BORE)
5 CU. YD. DUMPED RIPRAP
& 24" x 2' R.C. PIPE CULVERT OUTLET
(CLASS III) (TYPE 3) BEDDING
CONNECT TO DROP INLET
STA. 1199+75 LT.
TYPE ST DROP INLET = 4' X 6'
3 GRATES

STA. 1199+75 - CONSTRUCT
DROP INLET 3' LT. OF C.L. H=7'11"
W/24" x 85' R.C. PIPE CULVERT OUTLET
(CLASS V)
W/F.E.S. LT.
TYPE ST DROP INLET = 4' X 6'
(JACK AND BORE)
5 CU. YD. DUMPED RIPRAP
3 GRATES

CONCRETE BARRIER WALL

STA.	STA.	MEDIAN TYPE
1193+75	1194+66	C
1194+66	1194+91	SP-2
1195+09	1195+34	SP-2
1195+34	1197+55	C
1197+55	1210+91	B

CONCRETE DITCH PAVING (TYPE SPECIAL)

LOCATION	STA.	STA.	SIDE	"W"	SQ. YDS.
POND 4A	1199+71	1199+83	LT. I-49	10'0"	106

CONCRETE DITCH PAVING (TYPE B)

LOCATION	STA.	STA.	SIDE	"W"	SQ. YDS.
POND 4A	1199+78	1199+91	LT. I-49	43'11"	62

FENCE

STA.	STA.	SIDE	TYPE	LIN. FT	16' GATE
1198+75	1202+25	LT.	A	868	1

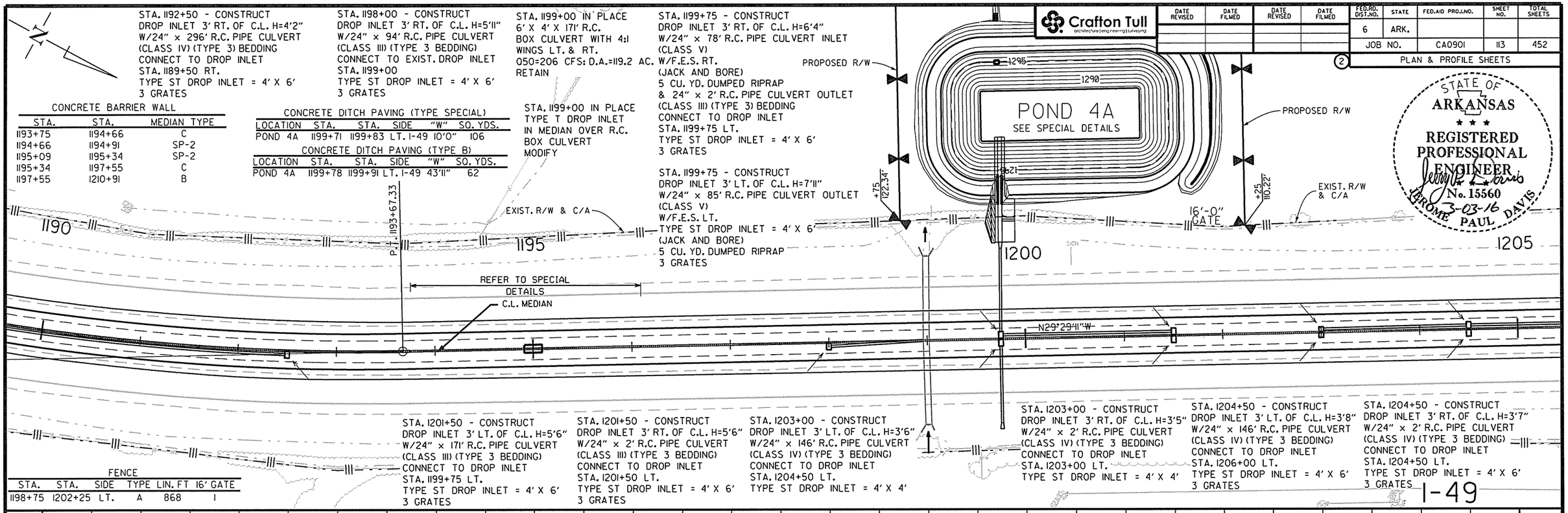

STA. 1201+50 - CONSTRUCT
DROP INLET 3' LT. OF C.L. H=5'6"
W/24" x 171' R.C. PIPE CULVERT
(CLASS III) (TYPE 3 BEDDING)
CONNECT TO DROP INLET
STA. 1199+75 LT.
TYPE ST DROP INLET = 4' X 6'
3 GRATES

STA. 1201+50 - CONSTRUCT
DROP INLET 3' RT. OF C.L. H=5'6"
W/24" x 2' R.C. PIPE CULVERT
(CLASS III) (TYPE 3 BEDDING)
CONNECT TO DROP INLET
STA. 1201+50 LT.
TYPE ST DROP INLET = 4' X 6'
3 GRATES

STA. 1203+00 - CONSTRUCT
DROP INLET 3' LT. OF C.L. H=3'6"
W/24" x 146' R.C. PIPE CULVERT
(CLASS IV) (TYPE 3 BEDDING)
CONNECT TO DROP INLET
STA. 1204+50 LT.
TYPE ST DROP INLET = 4' X 4'

STA. 1203+00 - CONSTRUCT
DROP INLET 3' RT. OF C.L. H=3'5"
W/24" x 2' R.C. PIPE CULVERT
(CLASS IV) (TYPE 3 BEDDING)
CONNECT TO DROP INLET
STA. 1203+00 LT.
TYPE ST DROP INLET = 4' X 4'

STA. 1204+50 - CONSTRUCT
DROP INLET 3' LT. OF C.L. H=3'8"
W/24" x 146' R.C. PIPE CULVERT
(CLASS IV) (TYPE 3 BEDDING)
CONNECT TO DROP INLET
STA. 1206+00 LT.
TYPE ST DROP INLET = 4' X 6'
3 GRATES

STA. 1204+50 - CONSTRUCT
DROP INLET 3' RT. OF C.L. H=3'7"
W/24" x 2' R.C. PIPE CULVERT
(CLASS IV) (TYPE 3 BEDDING)
CONNECT TO DROP INLET
STA. 1204+50 LT.
TYPE ST DROP INLET = 4' X 6'
3 GRATES

I-49

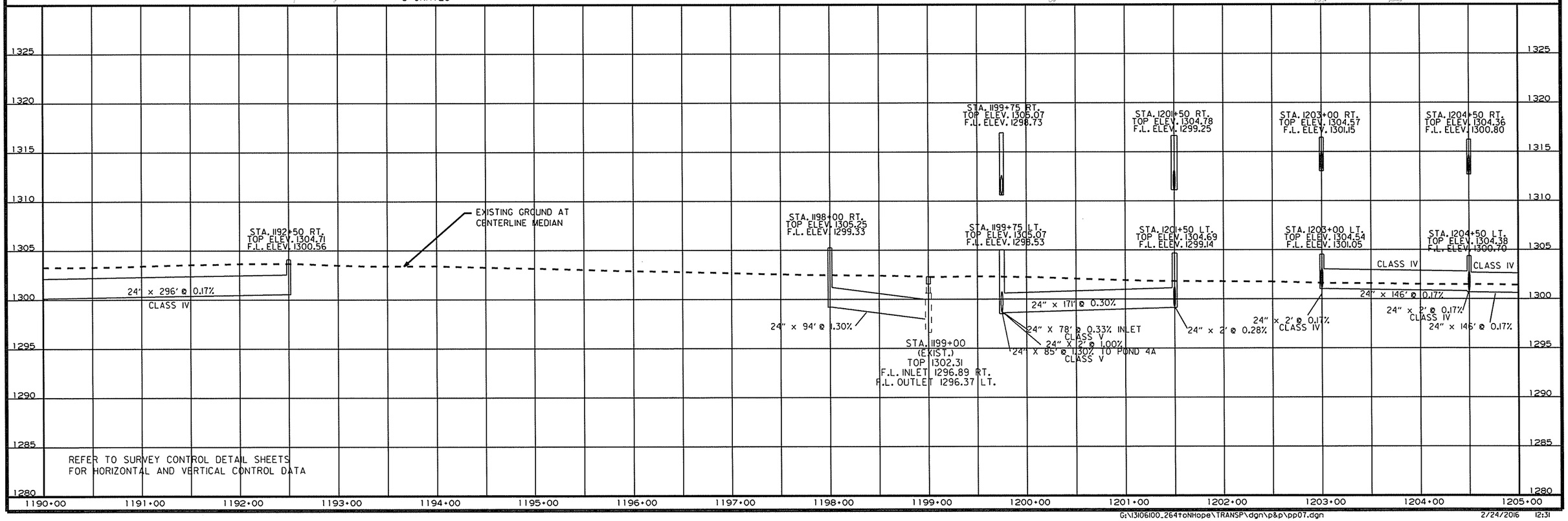

USER: a15106
DESIGN FILE: G:\13106100_264toNHope\TRANSP\dgn\p&p\pp07.dgn
PLOTTED: 2/24/2016 12:31
MODEL: PROPOSED DESIGN
SCALE: 100:1

DATE REVISED	DATE FILMED	DATE REVISED	DATE FILMED

FED.RD. DIST.NO.	STATE	FED.AID PROJ.NO.	SHEET NO.	TOTAL SHEETS
6	ARK.			
JOB NO.		CA0901	114	452

PLAN & PROFILE SHEETS

STATE OF ARKANSAS
REGISTERED PROFESSIONAL ENGINEER
No. 15560
3-03-16
JEROME PAUL DAVIS

STA. 1206+00 - CONSTRUCT
DROP INLET 3' LT. OF C.L. H=3'11"
W/24" x 146' R.C. PIPE CULVERT
(CLASS III) (TYPE 1 OR 2 BEDDING)
CONNECT TO DROP INLET
STA. 1207+50 LT.
TYPE ST DROP INLET = 4' X 6'
3 GRATES

STA. 1206+00 - CONSTRUCT
DROP INLET 3' RT. OF C.L. H=3'9"
W/24" x 2' R.C. PIPE CULVERT
(CLASS III) (TYPE 3 BEDDING)
CONNECT TO DROP INLET
STA. 1206+00 LT.
TYPE ST DROP INLET = 4' X 6'
3 GRATES

STA. 1209+00 - CONSTRUCT
DROP INLET 3' LT. OF C.L. H=4'0"
W/24" x 146' R.C. PIPE CULVERT
(CLASS III) (TYPE 3 BEDDING)
CONNECT TO DROP INLET
STA. 1210+50 LT.
TYPE ST DROP INLET = 4' X 6'
3 GRATES

STA. 1209+00 - CONSTRUCT
DROP INLET 3' RT. OF C.L. H=4'0"
W/24" x 2' R.C. PIPE CULVERT
(CLASS III) (TYPE 3 BEDDING)
CONNECT TO DROP INLET
STA. 1209+00 LT.
TYPE ST DROP INLET = 4' X 6'
3 GRATES

STA. 1212+00 - CONSTRUCT
DROP INLET 3' LT. OF C.L. H=4'6"
W/24" x 146' R.C. PIPE CULVERT
(CLASS III) (TYPE 3 BEDDING)
CONNECT TO DROP INLET
STA. 1213+50 LT.
TYPE ST DROP INLET = 4' X 6'
3 GRATES

STA. 1212+00 - CONSTRUCT
DROP INLET 3' RT. OF C.L. H=4'2"
W/24" x 2' R.C. PIPE CULVERT
(CLASS III) (TYPE 3 BEDDING)
CONNECT TO DROP INLET
STA. 1212+00 LT.
TYPE ST DROP INLET = 4' X 6'
3 GRATES

PROPOSED R/W

POND 4B
SEE SPECIAL DETAILS

1295
1298
1300

PROPOSED R/W

+28.80
133.34

16'-0" GATE

EXIST. R/W & C/A

CONCRETE BARRIER WALL

STA.	STA.	MEDIAN TYPE
1210+91	1211+16	SP-3
1211+34	1211+59	SP-3
1211+59	1223+80	B

STA.	STA.	SIDE	TYPE	LIN. FT	16' GATE
1210+29	1216+75	LT.	A	1036	1

1205 1210 1215 1220

+75
132.79

STA. 1219+85 - CONSTRUCT
DROP INLET 3' LT. OF C.L. H=5'5"
W/24" x 2' R.C. PIPE CULVERT
(CLASS III) (TYPE 3 BEDDING)
CONNECT TO DROP INLET
STA. 1219+85 RT.
TYPE ST DROP INLET = 4' X 6'
3 GRATES

STA. 1219+85 - CONSTRUCT
DROP INLET 3' RT. OF C.L. H=5'8"
W/24" x 76' R.C. PIPE CULVERT
W/F.E.S. RT.
(CLASS V)
TYPE ST DROP INLET = 4' X 6'
3 GRATES
(JACK AND BORE)
5 CU. YD. DUMPED RIPRAP

RAMP 4

REFER TO SPECIAL DETAILS

C.L. MEDIAN

N29°29'11"W

RAMP 1

CONCRETE DITCH PAVING (TYPE SPECIAL)

LOCATION	STA.	STA.	SIDE	"W"	SQ. YDS.
POND 4B	1213+50	1213+59	LT. I-49	10'0"	42

STA. 1207+50 - CONSTRUCT
DROP INLET 3' LT. OF C.L. H=4'0"
W/24" x 146' R.C. PIPE CULVERT
(CLASS III) (TYPE 3 BEDDING)
CONNECT TO DROP INLET
STA. 1209+00 LT.
TYPE ST DROP INLET = 4' X 6'
3 GRATES

STA. 1207+50 - CONSTRUCT
DROP INLET 3' RT. OF C.L. H=3'11"
W/24" x 2' R.C. PIPE CULVERT
(CLASS III) (TYPE 1 OR 2 BEDDING)
CONNECT TO DROP INLET
STA. 1207+50 LT.
TYPE ST DROP INLET = 4' X 6'
3 GRATES

STA. 1210+50 - CONSTRUCT
DROP INLET 3' LT. OF C.L. H=4'4"
W/24" x 146' R.C. PIPE CULVERT
(CLASS III) (TYPE 3 BEDDING)
CONNECT TO DROP INLET
STA. 1212+00 LT.
TYPE ST DROP INLET = 4' X 6'
3 GRATES

STA. 1210+50 - CONSTRUCT
DROP INLET 3' RT. OF C.L. H=4'2"
W/24" x 2' R.C. PIPE CULVERT
(CLASS III) (TYPE 3 BEDDING)
CONNECT TO DROP INLET
STA. 1210+50 LT.
TYPE ST DROP INLET = 4' X 6'
3 GRATES

STA. 1213+50 - CONSTRUCT
DROP INLET 3' RT. OF C.L. H=4'10"
W/24" x 112' R.C. PIPE CULVERT INLET
(CLASS V)
W/F.E.S. RT.
(JACK AND BORE)
5 CU. YD. DUMPED RIPRAP
& 24" x 2' R.C. PIPE CULVERT OUTLET
(CLASS III) (TYPE 3) BEDDING
CONNECT TO DROP INLET STA. 1213+50 LT.
TYPE ST DROP INLET = 4' X 6'
3 GRATES

STA. 1213+50 - CONSTRUCT
DROP INLET 3' LT. OF C.L. H=4'7"
W/24" x 84' R.C. PIPE CULVERT
(CLASS V)
CONNECT TO DROP INLET
STA. 1213+50 93.3' LT.
TYPE ST DROP INLET = 4' X 6'
3 GRATES
(JACK AND BORE)
5 CU. YD. DUMPED RIPRAP

STA. 1213+51.81 - CONSTRUCT
DROP INLET 93.3' LT. OF C.L. H=2'2"
W/24" x 110' R.C. PIPE CULVERT OUTLET
TO POND 4B
(CLASS III) (TYPE 3 BEDDING)
W/F.E.S. LT.
TYPE RM DROP INLET = 5' X 5'

STA. 1215+00 - CONSTRUCT
DROP INLET 3' RT. OF C.L. H=3'9"
W/24" x 2' R.C. PIPE CULVERT
(CLASS III) (TYPE 3 BEDDING)
CONNECT TO DROP INLET
STA. 1215+00 LT.
TYPE ST DROP INLET = 4' X 6'
3 GRATES

STA. 1215+00 - CONSTRUCT
DROP INLET 3' LT. OF C.L. H=3'8"
W/24" x 146' R.C. PIPE CULVERT
(CLASS III) (TYPE 3 BEDDING)
CONNECT TO DROP INLET
STA. 1213+50 LT.
TYPE ST DROP INLET = 4' X 6'
3 GRATES

STA. 1215+75 IN PLACE
TRIPLE 6' X 4' X 227' R.C.
BOX CULVERT WITH 4:1
WINGS LT. & RT.
Q50=208 CFS: D.A.=293 AC.
RETAIN

STA. 1215+75 IN PLACE
TYPE T DROP INLET
IN MEDIAN OVER R.C. BOX
MODIFY

STA. 1216+00 IN PLACE
24"X26' R.C. PIPE CULVERT
ON RT. W/FES CONNECTED TO
R.C. BOX
Q50=7 CFS: D.A.= 6 AC.
RETAIN

STA. 1216+50 - CONSTRUCT
DROP INLET 3' LT. OF C.L. H=4'9"
W/24" x 121' R.C. PIPE CULVERT
(CLASS III) (TYPE 3 BEDDING)
CONNECT TO DROP INLET
STA. 1217+75 LT.
TYPE ST DROP INLET = 4' X 6'
3 GRATES

STA. 1216+50 - CONSTRUCT
DROP INLET 3' RT. OF C.L. H=4'9"
W/24" x 2' R.C. PIPE CULVERT
(CLASS III) (TYPE 3 BEDDING)
CONNECT TO DROP INLET
STA. 1216+50 LT.
TYPE ST DROP INLET = 4' X 6'
3 GRATES

OVERHEAD POWER LINE

STA. 1220+00 IN PLACE
W/18" X 85' R.C. PIPE OUTLET
W/FES ON RT.
FILL AND ABANDON

STA. 1220+00 IN PLACE
TYPE R DROP INLET IN MEDIAN
REMOVE

STA. 1217+75 - CONSTRUCT
DROP INLET 3' LT. OF C.L. H=5'2"
W/24" x 121' R.C. PIPE CULVERT
(CLASS III) (TYPE 3 BEDDING)
CONNECT TO DROP INLET
STA. 1219+00 LT.
TYPE ST DROP INLET = 4' X 6'
3 GRATES

STA. 1217+75 - CONSTRUCT
DROP INLET 3' RT. OF C.L. H=5'1"
W/24" x 2' R.C. PIPE CULVERT
(CLASS III) (TYPE 3 BEDDING)
CONNECT TO DROP INLET
STA. 1217+75 LT.
TYPE ST DROP INLET = 4' X 6'
3 GRATES

STA. 1219+00 - CONSTRUCT
DROP INLET 3' LT. OF C.L. H=5'5"
W/24" x 81' R.C. PIPE CULVERT
(CLASS III) (TYPE 3 BEDDING)
CONNECT TO DROP INLET
STA. 1219+85 LT.
TYPE ST DROP INLET = 4' X 6'
3 GRATES

STA. 1219+00 - CONSTRUCT
DROP INLET 3' RT. OF C.L. H=5'3"
W/24" x 2' R.C. PIPE CULVERT
(CLASS III) (TYPE 3)BEDDING)
CONNECT TO DROP INLET
STA. 1219+00 LT.
TYPE ST DROP INLET = 4' X 6'
3 GRATES

I-49

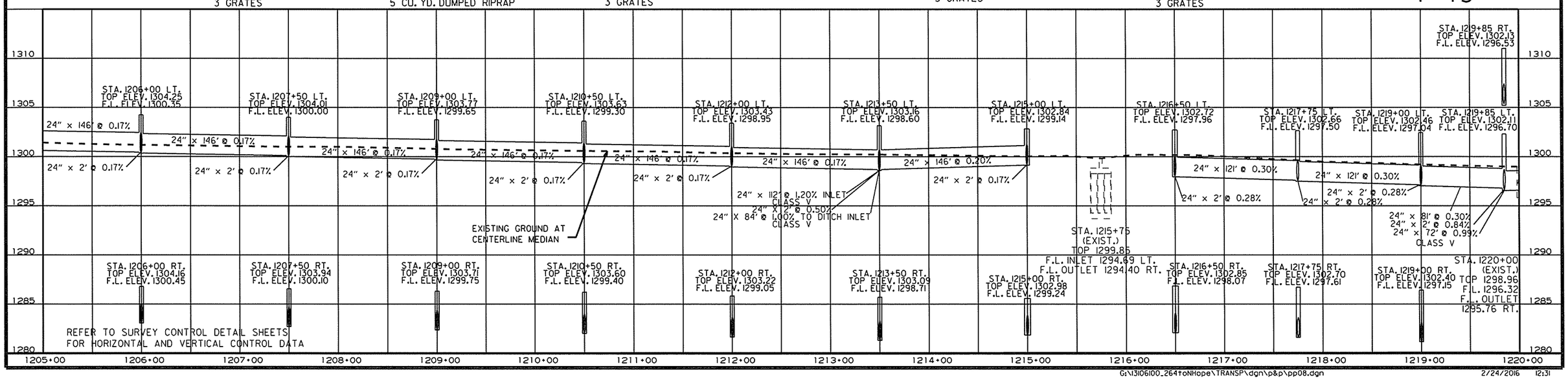

USER: a+5106
DESIGN FILE: G:\13106100_264toNHope\TRANSP\dgn\p&p\pp08.dgn
PLOTTED: 2/24/2016 12:31
SCALE: 100H
MODEL: PROPOSED DESIGN

G:\13106100_264toNHope\TRANSP\dgn\p&p\pp08.dgn 2/24/2016 12:31

DATE REVISED	DATE FILMED	DATE REVISED	DATE FILMED

FED.RD. DIST.NO.	STATE	FED.AID PROJ.NO.	SHEET NO.	TOTAL SHEETS
6	ARK.			
JOB NO.		CA0901	115	452

2 PLAN & PROFILE SHEETS

STATE OF ARKANSAS
REGISTERED PROFESSIONAL ENGINEER
No. 15560
3-03-16
JEROME PAUL DAVIS

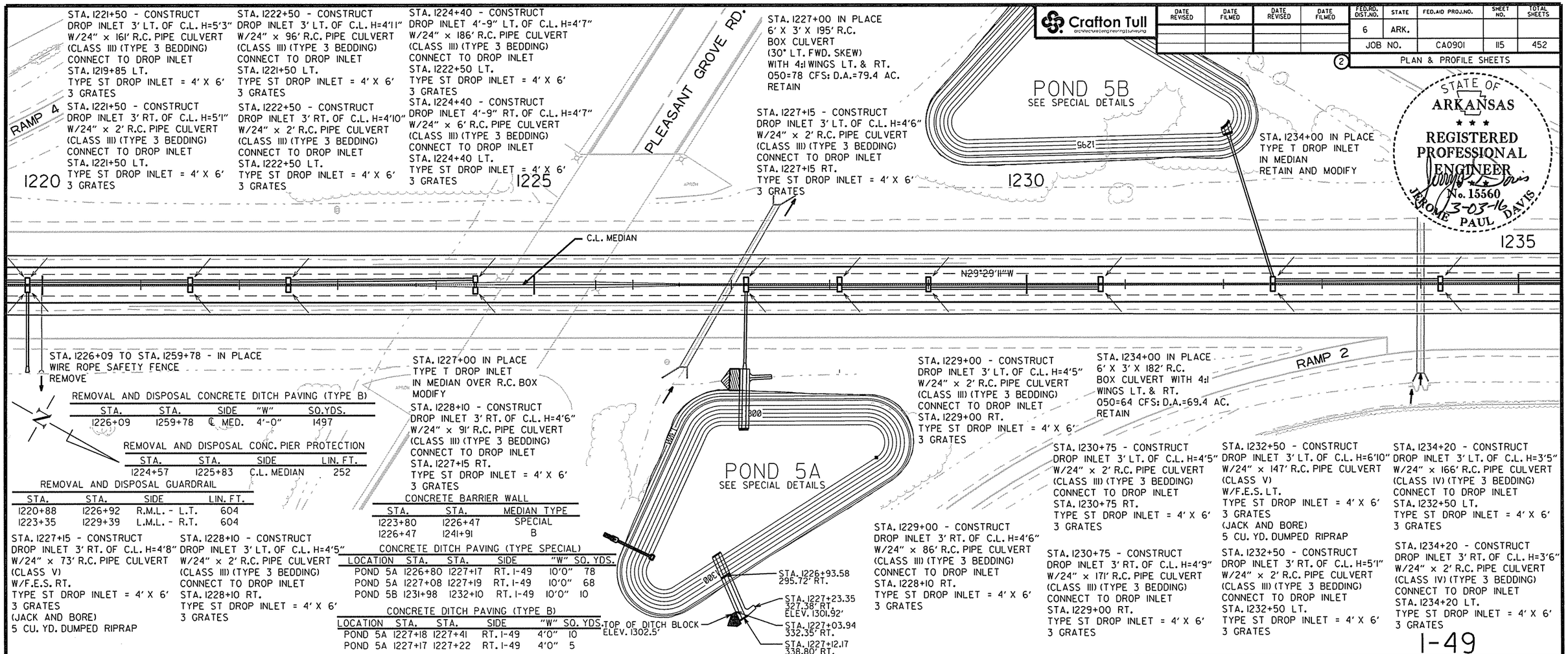

REMOVAL AND DISPOSAL CONCRETE DITCH PAVING (TYPE B)

STA.	STA.	SIDE	"W"	SQ.YDS.
1226+09	1259+78	℄ MED.	4'-0"	1497

REMOVAL AND DISPOSAL CONC. PIER PROTECTION

STA.	STA.	SIDE	LIN. FT.
1224+57	1225+83	C.L. MEDIAN	252

REMOVAL AND DISPOSAL GUARDRAIL

STA.	STA.	SIDE	LIN. FT.
1220+88	1226+92	R.M.L. - L.T.	604
1223+35	1229+39	L.M.L. - R.T.	604

CONCRETE BARRIER WALL

STA.	STA.	MEDIAN TYPE
1223+80	1226+47	SPECIAL
1226+47	1241+91	B

CONCRETE DITCH PAVING (TYPE SPECIAL)

LOCATION	STA.	STA.	SIDE	"W"	SQ. YDS.
POND 5A	1226+80	1227+17	RT. I-49	10'0"	78
POND 5A	1227+08	1227+19	RT. I-49	10'0"	68
POND 5B	1231+98	1232+10	RT. I-49	10'0"	10

CONCRETE DITCH PAVING (TYPE B)

LOCATION	STA.	STA.	SIDE	"W"	SQ. YDS.
POND 5A	1227+18	1227+41	RT. I-49	4'0"	10
POND 5A	1227+17	1227+22	RT. I-49	4'0"	5

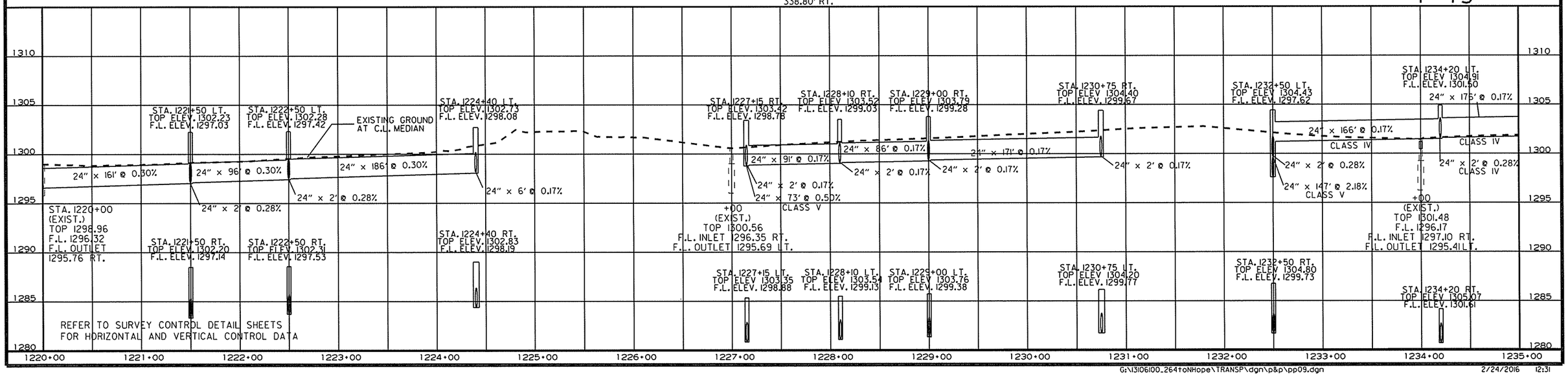

USER: at5106
DESIGN FILE: G:\13106100_264toNHope\TRANSP\dgn\p&p\pp09.dgn
PLOTTED: 2/24/2016 12:31
MODEL: PROPOSED DESIGN
SCALE: 100:1

Crafton Tull
architecture | engineering | surveying

DATE REVISED	DATE FILMED	DATE REVISED	DATE FILMED

FED.RD. DIST.NO.	STATE	FED.AID PROJ.NO.	SHEET NO.	TOTAL SHEETS
6	ARK.			
JOB NO.		CA0901	116	452

2 PLAN & PROFILE SHEETS

STA. 1236+00 - CONSTRUCT
DROP INLET 3' LT. OF C.L. H=5'0"
W/24" x 176' R.C. PIPE CULVERT
(CLASS IV) (TYPE 3 BEDDING)
CONNECT TO DROP INLET
STA. 1234+20 LT.
TYPE ST DROP INLET = 4' X 6'
3 GRATES

STA. 1236+00 - CONSTRUCT
DROP INLET 3' RT. OF C.L. H=4'11"
W/24" x 2' R.C. PIPE CULVERT
(CLASS IV) (TYPE 3 BEDDING)
CONNECT TO DROP INLET
STA. 1236+00 LT.
TYPE ST DROP INLET = 4' X 6'
3 GRATES

STA. 1238+00 - CONSTRUCT
DROP INLET 3' LT. OF C.L. H=5'1"
W/24" x 196' R.C. PIPE CULVERT
(CLASS IV) (TYPE 3 BEDDING)
CONNECT TO DROP INLET
STA. 1236+00 LT.
TYPE ST DROP INLET = 4' X 6'
3 GRATES

STA. 1238+00 - CONSTRUCT
DROP INLET 3' RT. OF C.L. H=5'1"
W/24" x 2' R.C. PIPE CULVERT
(CLASS IV) (TYPE 3 BEDDING)
CONNECT TO DROP INLET
STA. 1238+00 LT.
TYPE ST DROP INLET = 4' X 6'
3 GRATES

STA. 1240+00 - CONSTRUCT
DROP INLET 3' LT. OF C.L. H=5'2"
W/24" x 196' R.C. PIPE CULVERT
(CLASS IV) (TYPE 3 BEDDING)
CONNECT TO DROP INLET
STA. 1238+00 LT.
TYPE ST DROP INLET = 4' X 6'
3 GRATES

STA. 1240+00 - CONSTRUCT
DROP INLET 3' RT. OF C.L. H=4'11"
W/24" x 2' R.C. PIPE CULVERT
(CLASS IV) (TYPE 3 BEDDING)
CONNECT TO DROP INLET
STA. 1240+00 LT.
TYPE ST DROP INLET = 4' X 6'
3 GRATES

STA. 1241+50 - CONSTRUCT
DROP INLET 3' LT. OF C.L. H=5'1"
W/24" x 146' R.C. PIPE CULVERT
(CLASS IV) (TYPE 3 BEDDING)
CONNECT TO DROP INLET
STA. 1240+00 LT.
TYPE ST DROP INLET = 4' X 6'
3 GRATES

STA. 1241+50 - CONSTRUCT
DROP INLET 3' RT. OF C.L. H=4'10"
W/24" x 2' R.C. PIPE CULVERT
(CLASS IV) (TYPE 3 BEDDING)
CONNECT TO DROP INLET
STA. 1241+50 LT.
TYPE ST DROP INLET = 4' X 6'
3 GRATES

STA. 1246+00 - CONSTRUCT
DROP INLET 3' LT. OF C.L. H=5'5"
W/24" x 2' R.C. PIPE CULVERT
(CLASS III) (TYPE 3 BEDDING)
CONNECT TO DROP INLET
STA. 1246+00 RT.
TYPE ST DROP INLET = 4' X 4'

STA. 1246+00 - CONSTRUCT
DROP INLET 3' RT. OF C.L. H=5'6"
W/24" x 296' R.C. PIPE CULVERT
(CLASS III) (TYPE 3 BEDDING)
CONNECT TO DROP INLET
STA. 1249+00 RT.
TYPE ST DROP INLET = 4' X 4'

STA. 1249+00 - CONSTRUCT
DROP INLET 3' LT. OF C.L. H=5'9"
W/24" x 2' R.C. PIPE CULVERT
(CLASS III) (TYPE 3 BEDDING)
CONNECT TO DROP INLET
STA. 1249+00 RT.
TYPE ST DROP INLET = 4' X 4'

STA. 1249+00 - CONSTRUCT
DROP INLET 3' RT. OF C.L. H=5'9"
W/24" x 296' R.C. PIPE CULVERT
(CLASS III) (TYPE 3 BEDDING)
CONNECT TO DROP INLET
STA. 1252+00 RT.
TYPE ST DROP INLET = 4' X 4'

STATE OF ARKANSAS
REGISTERED PROFESSIONAL ENGINEER
No. 15560
3-03-16
JEROME PAUL DAVIS

CONCRETE BARRIER WALL

STA.	STA.	MEDIAN TYPE
1241+91	1242+16	SP-3
1242+34	1242+59	SP-3
1242+59	1261+15	B

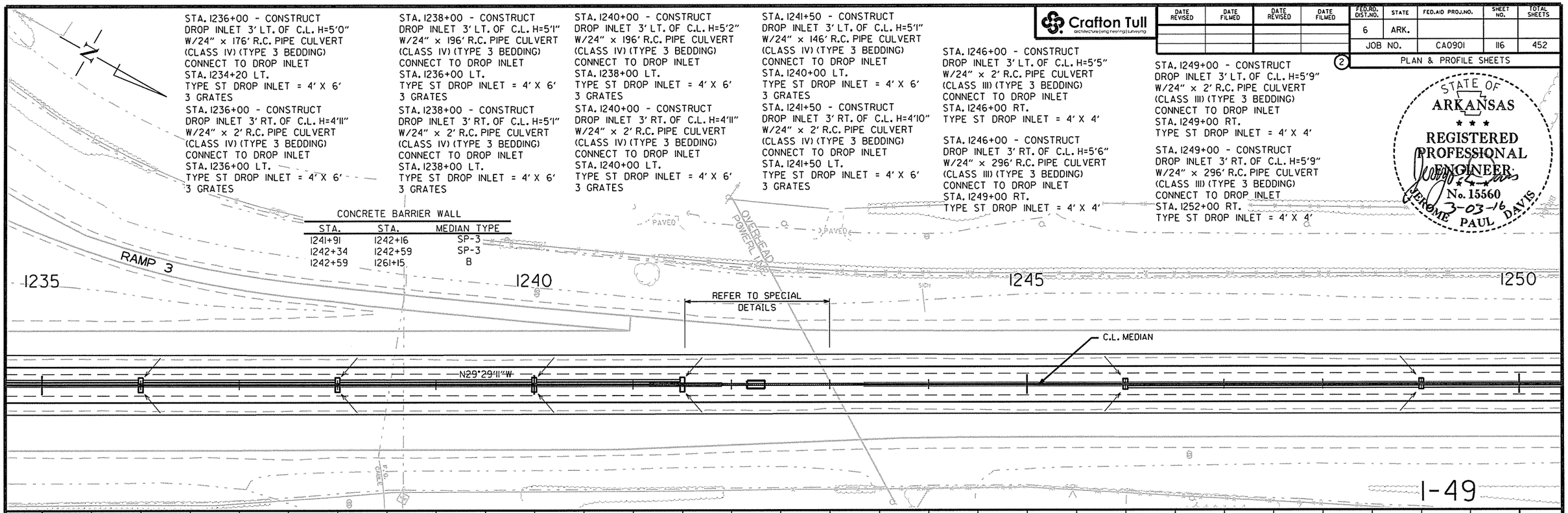

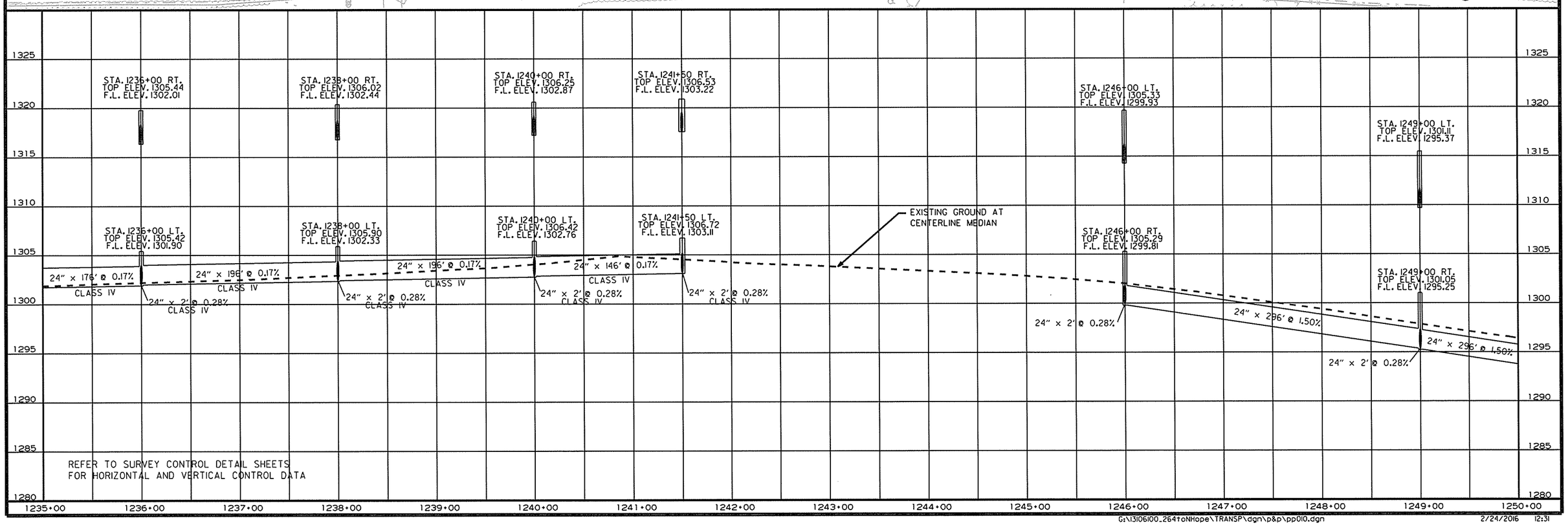

USER: at5106
DESIGN FILE: G:\13106100_264toNHope\TRANSP\dgn\p&p\pp010.dgn
PLOTTED: 2/24/2016 12:31
SCALE: 100:1
MODEL: PROPOSED DESIGN

G:\13106100_264toNHope\TRANSP\dgn\p&p\pp010.dgn 2/24/2016 12:31

Crafton Tull
architecture | engineering | surveying

DATE REVISED	DATE FILMED	DATE REVISED	DATE FILMED

FED.RD. DIST.NO.	STATE	FED.AID PROJ.NO.	SHEET NO.	TOTAL SHEETS
6	ARK.			
JOB NO.		CA0901	117	452

PLAN & PROFILE SHEETS

STATE OF ARKANSAS
REGISTERED PROFESSIONAL ENGINEER
No. 15560
JEROME PAUL DAVIS
3-03-16

REMOVAL AND DISPOSAL GUARDRAIL

STA.	STA.	SIDE	LIN. FT.
1258+90	1261+60	R.M.L. - L.T.	270
1263+44	1266+14	L.M.L. - R.T.	270

CONCRETE BARRIER WALL

STA.	STA.	MEDIAN TYPE
1261+15	1261+45	SP-1
1263+62	1263+92	SP-1
1263+92	1287+50	C

STA. 1252+00 - CONSTRUCT
DROP INLET 3' LT. OF C.L. H=5'5"
W/24" x 2' R.C. PIPE CULVERT
(CLASS III) (TYPE 3 BEDDING)
CONNECT TO DROP INLET
STA. 1252+00 RT.
TYPE ST DROP INLET = 4' X 4'

STA. 1252+00 - CONSTRUCT
DROP INLET 3' RT. OF C.L. H=5'8"
W/24" x 296' R.C. PIPE CULVERT
(CLASS III) (TYPE 3 BEDDING)
CONNECT TO DROP INLET
STA. 1255+00 RT.
TYPE ST DROP INLET = 4' X 4'

STA. 1255+00 - CONSTRUCT
DROP INLET 3' LT. OF C.L. H=5'4"
W/24" x 2' R.C. PIPE CULVERT
(CLASS III) (TYPE 3 BEDDING)
CONNECT TO DROP INLET
STA. 1255+00 RT.
TYPE ST DROP INLET = 4' X 4'

STA. 1255+00 - CONSTRUCT
DROP INLET 3' RT. OF C.L. H=5'7"
W/24" x 296' R.C. PIPE CULVERT
(CLASS III) (TYPE 3 BEDDING)
CONNECT TO DROP INLET
STA. 1258+00 RT.
TYPE ST DROP INLET = 4' X 4'

STA. 1258+00 - CONSTRUCT
DROP INLET 3' LT. OF C.L. H=5'4"
W/24" x 2' R.C. PIPE CULVERT
(CLASS III) (TYPE 3 BEDDING)
CONNECT TO DROP INLET
STA. 1258+00 RT.
TYPE ST DROP INLET = 4' X 4'

STA. 1258+00 - CONSTRUCT
DROP INLET 3' RT. OF C.L. H=5'8"
W/24" x 146' R.C. PIPE CULVERT
(CLASS III) (TYPE 3 BEDDING)
CONNECT TO DROP INLET
STA. 1259+50 RT.
TYPE ST DROP INLET = 4' X 4'

STA. 1259+50 - CONSTRUCT
DROP INLET 3' RT. OF C.L. H=5'3"
W/24" x 87' R.C. PIPE CULVERT
(CLASS V)
W/F.E.S. RT.
TYPE ST DROP INLET = 4' X 4'
(JACK AND BORE)
5 CU. YD. DUMPED RIPRAP

STA. 1264+65 - CONSTRUCT
DROP INLET 3' RT. OF C.L. H=6'5"
W/24" x 14' R.C. PIPE CULVERT
(CLASS III) (TYPE 3 BEDDING)
CONNECT TO EXIST. DROP INLET
STA. 1264+50 RT.
TYPE ST DROP INLET = 4' X 4'

STA. 1261+00 IN PLACE
TYPE R DROP INLET IN MEDIAN
REMOVE
STA. 1261+00 IN PLACE
W/18" X 123' R.C. PIPE OUTLET
W/FES LT.
FILL AND ABANDON
STA. 1264+50 IN PLACE
TYPE R DROP INLET IN MEDIAN
W/18" X 113' R.C. PIPE OUTLET
W/FES LT.
MODIFY

APPROXIMATE SPECIAL FLOOD HAZARD AREA

1250 1255 1260 1265

C.L. MEDIAN

BR. A5956

BR. B5956

BLOSSOM WAY CREEK

P.C. 1264+90.04

FENCE

STA.	STA.	SIDE	TYPE	LIN. FT	16' GATE
1258+04	1261+90	LT.	A	1191	1

EXIST. R/W & C/A

CONCRETE DITCH PAVING (TYPE SPECIAL)

LOCATION	STA.	STA.	SIDE	"W"	SQ. YDS.
POND 6	1258+84	1259+84	RT. I-49	10'0"	274

STA. 1265+28 TO STA. 1293+05 - IN PLACE
WIRE ROPE SAFETY FENCE
REMOVE

REMOVAL AND DISPOSAL CONCRETE DITCH PAVING (TYPE B)

STA.	STA.	SIDE	"W"	SQ.YDS.
1265+28	1293+05	℄ MED.	4'-0"	1234

STA. 1259+29.37 - CONSTRUCT
DROP INLET 176.39' RT. OF C.L. H=3'0"
W/24" x 234' R.C. PIPE CULVERT
(CLASS III) (TYPE 3 BEDDING)
W/F.E.S.
TYPE RM DROP INLET = 5' X 5'

PROPOSED R/W +84.05 153.78'

16'-0" GATE

POND 6 SEE SPECIAL DETAILS

+75.00 150.87'

+90 149.12'

+68.68 190.00'

PROPOSED R/W +80 190.00'

I-49

STREAM	STATION	STREAM TYPE	TOP OF CHANNEL ELEV.
BLOSSOM WAY CREEK	1262+25-1262+75	INTERMITTENT	1,263.0 FT. MSL

STA. 1261+92.66 BR. END
I-49 LML BRIDGE (S.B.)
143'-0" CONT. PRESTRESSED
CONC. GIRDER UNIT
(43'-57'-43')
62'-0" CLEAR ROADWAY
(20° LT. FWD. SKEW)
BR. NO. A5956
STA. 1263+37.86 BR. END

STA. 1261+68.73 BR. END
I-49 RML BRIDGE (N.B.)
143'-0" CONT. PRESTRESSED
CONC. GIRDER UNIT
(43'-57'-43')
62'-0" CLEAR ROADWAY
(20° LT. FWD. SKEW)
BR. NO. B5956
STA. 1263+13.92 BR. END

+77 FLOODPLAIN LIMITS +30

1305 1300 1295 1290 1285 1280 1275 1270 1265 1260

STA. 1252+00 RT.
TOP ELEV. 1296.33
F.L. ELEV. 1290.70

24" x 296' @ 1.50%

24" x 2' @ 0.28%

STA. 1255+00 RT.
TOP ELEV. 1291.72
F.L. ELEV. 1286.14

24" x 296' @ 1.50%

24" x 2' @ 0.28%

EXISTING GROUND AT CENTERLINE MEDIAN

STA. 1258+00 RT.
TOP ELEV. 1287.23
F.L. ELEV. 1281.59

24" x 296' @ 1.50%

24" x 2' @ 0.28%

STA. 1259+50 RT.
TOP ELEV. 1285.35
F.L. ELEV. 1279.31

24" x 146' @ 1.50%

24" x 87' @ 1.00%
CLASS V

+00 (EXIST.)
TOP 1278.83
F.L. 1265.32
F.L. OUTLET 1264.12 LT.

STA. 1261+92.66 BR. END (I-49 LML BRIDGE)

STA. 1261+68.73 BR. END (RML BRIDGE)

STA. 1263+37.86 BR. END (I-49 LML BRIDGE)

STA. 1263+13.92 BR. END (RML BRIDGE)

STA. 1264+65 RT.
TOP ELEV. 1280.50
F.L. ELEV. 1274.11

24" x 14' @ 0.25%

050 DESIGN H.W.
ELEV. 1273.39

24" x 231' @ 0.25%

STA. 1252+00 LT.
TOP ELEV. 1296.26
F.L. ELEV. 1290.81

STA. 1255+00 LT.
TOP ELEV. 1291.59
F.L. ELEV. 1286.26

STA. 1258+00 LT.
TOP ELEV. 1287.01
F.L. ELEV. 1281.70

EXISTING GROUND AT 176.39' RT. OF CENTERLINE MEDIAN

24" x 234' @ 0.45%

STA. 1259+29.37 (176.39' RT.)
TOP ELEV. 1266.25
F.L. ELEV. 1263.25

+50 (EXIST.)
TOP 1276.68
F.L. 1266.43
F.L. OUTLET 1265.68 LT.

+76.42 24" SEWER CROSSING F.L.=1253.31

REFER TO SURVEY CONTROL DETAIL SHEETS
FOR HORIZONTAL AND VERTICAL CONTROL DATA

1250+00 1251+00 1252+00 1253+00 1254+00 1255+00 1256+00 1257+00 1258+00 1259+00 1260+00 1261+00 1262+00 1263+00 1264+00 1265+00

USER: ot5106
DESIGN FILE: G:\13106100_264toNHope\TRANSP\dgn\p&p\pp01.dgn
PLOTTED: 2/24/2016 12:31
SCALE: 100:1
MODEL: PROPOSED DESIGN

G:\13106100_264toNHope\TRANSP\dgn\p&p\pp01.dgn 2/24/2016 12:31

DATE REVISED	DATE FILMED	DATE REVISED	DATE FILMED

Crafton Tull
architecture | engineering | surveying

FED.RD. DIST.NO.	STATE	FED.AID PROJ.NO.	SHEET NO.	TOTAL SHEETS
6	ARK.			
JOB NO.		CA0901	118	452

2 PLAN & PROFILE SHEETS

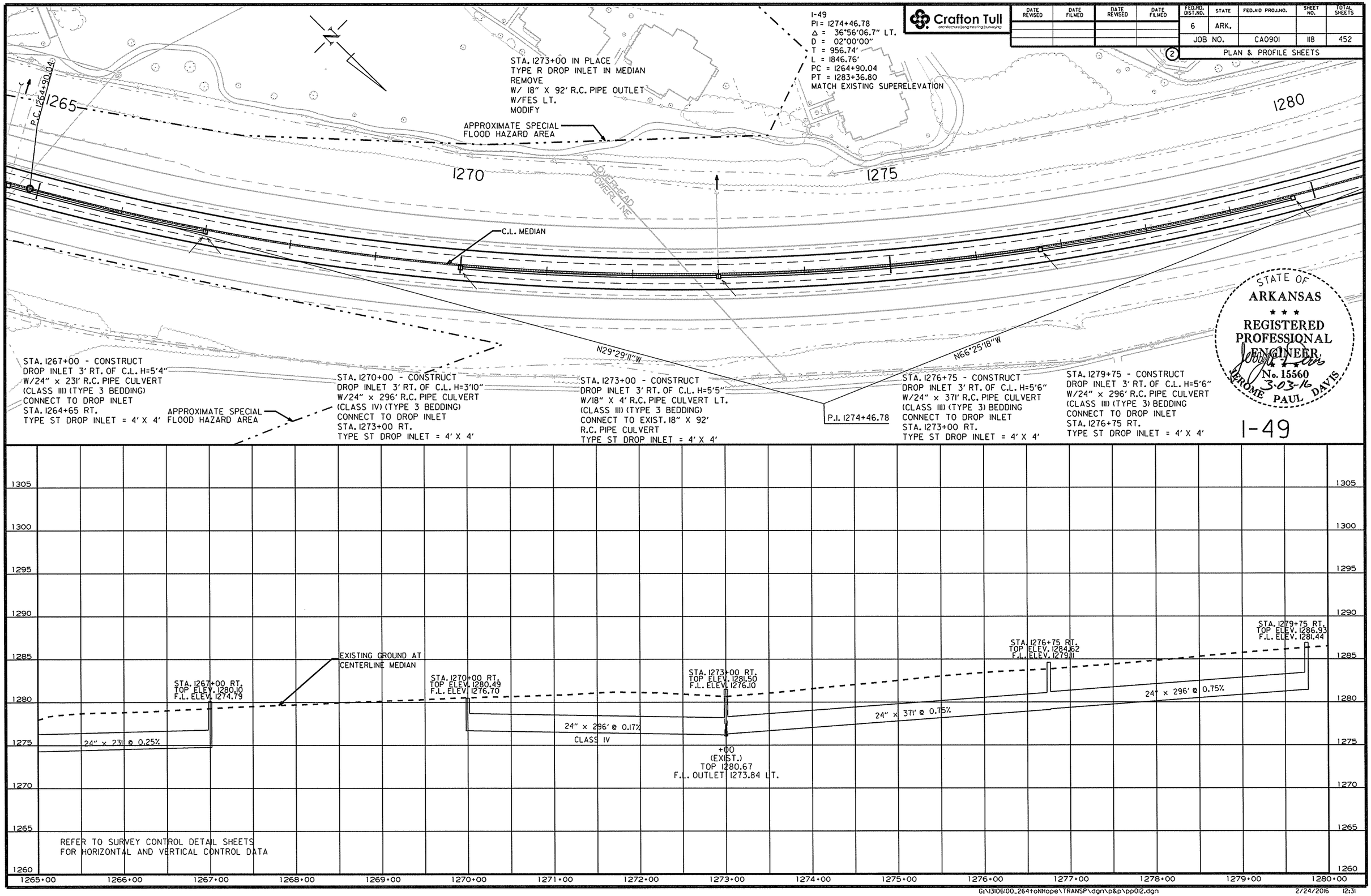

USER: at5106
DESIGN FILE: G:\13106100_264toNHope\TRANSP\dgn\p&p\pp012.dgn
PLOTTED: 2/24/2016 12:31
SCALE: 100:1
MODEL: PROPOSED DESIGN

G:\13106100_264toNHope\TRANSP\dgn\p&p\pp012.dgn 2/24/2016 12:31

Crafton Tull
architecture | engineering | surveying

DATE REVISED	DATE FILMED	DATE REVISED	DATE FILMED

FED.RD. DIST.NO.	STATE	FED.AID PROJ.NO.	SHEET NO.	TOTAL SHEETS
6	ARK.			
JOB NO.		CA0901	119	452

PLAN & PROFILE SHEETS

STATE OF ARKANSAS
REGISTERED PROFESSIONAL ENGINEER
No. 15560
3-03-16
JEROME PAUL DAVIS

STA. 1282+75 - CONSTRUCT
DROP INLET 3' RT. OF C.L. H=5'2"
W/24" x 11' R.C. PIPE CULVERT
(CLASS III) (TYPE 3 BEDDING)
CONNECT TO EXIST. DROP INLET
AT STA. 1282+60
TYPE ST DROP INLET = 4' X 6'
3 GRATES

STA. 1285+50 - CONSTRUCT
DROP INLET 3' RT. OF C.L. H=6'0"
W/24" x 271' R.C. PIPE CULVERT
(CLASS III) (TYPE 3 BEDDING)
CONNECT TO DROP INLET
STA. 1282+75 RT.
TYPE ST DROP INLET = 4' X 6'
3 GRATES

STA. 1288+50 - CONSTRUCT
DROP INLET 3' RT. OF C.L. H=5'11"
W/24" x 296' R.C. PIPE CULVERT
(CLASS III) (TYPE 3 BEDDING)
CONNECT TO DROP INLET
STA. 1285+50 RT.
TYPE ST DROP INLET = 4' X 6'
3 GRATES

STA. 1289+00 - CONSTRUCT
DROP INLET 3' LT. OF C.L. H=5'7"
W/24" x 46' R.C. PIPE CULVERT
(CLASS III) (TYPE 3 BEDDING)
CONNECT TO DROP INLET
STA. 1288+50 LT.
TYPE ST DROP INLET = 4' X 6'
3 GRATES

STA. 1288+50 - CONSTRUCT
DROP INLET 3' LT. OF C.L. H=6'0"
W/24" x 2' R.C. PIPE CULVERT
(CLASS III) (TYPE 3 BEDDING)
CONNECT TO DROP INLET
STA. 1288+50 RT.
TYPE ST DROP INLET = 4' X 6'
3 GRATES

STA. 1291+00 - CONSTRUCT
DROP INLET 3' RT. OF C.L. H=5'8"
W/24" x 246' R.C. PIPE CULVERT
(CLASS III) (TYPE 3 BEDDING)
CONNECT TO DROP INLET
STA. 1288+50 RT.
TYPE ST DROP INLET = 4' X 6'
3 GRATES

STA. 1291+00 - CONSTRUCT
DROP INLET 3' LT. OF C.L. H=5'5"
W/24" x 2' R.C. PIPE CULVERT
(CLASS III) (TYPE 3 BEDDING)
CONNECT TO DROP INLET
STA. 1291+00 RT.
TYPE ST DROP INLET = 4' X 6'
3 GRATES

CONCRETE BARRIER WALL

STA.	STA.	MEDIAN TYPE
1287+50	1292+81	B
1292+81	1295+26	SPECIAL

STA. 1293+60 - CONSTRUCT
DROP INLET 4'-9" RT. OF C.L. H=5'4"
W/24" x 256' R.C. PIPE CULVERT
(CLASS III) (TYPE 3 BEDDING)
CONNECT TO DROP INLET
STA. 1291+00 RT.
TYPE ST DROP INLET = 4' X 6'
3 GRATES
STA. 1293+60 - CONSTRUCT
DROP INLET 4'-9" LT. OF C.L. H=5'1"
W/24" x 6' R.C. PIPE CULVERT
(CLASS III) (TYPE 3 BEDDING)
CONNECT TO DROP INLET
STA. 1293+60 RT.
TYPE ST DROP INLET = 4' X 6'
3 GRATES

BELLVIEW RD.
EAST TRACK
APRON

1280 1285 1290 1295

P.T. 1283+36.80

C.L. MEDIAN

N66°25'18"W

STA. 1282+60 IN PLACE
TYPE R DROP INLET W/
48" X 89' R.C. PIPE
CULVERT LT. AND 48" X 85'
R.C. PIPE CULVERT RT.
(10° RT. FWD. SKEW)
W/FES LT. & RT.
Q50=22 CFS: D.A.=25.5 AC.
MODIFY

STA. 1294+55 TO STA. 1308+12 - IN PLACE
WIRE ROPE SAFETY FENCE
REMOVE

REMOVAL AND DISPOSAL CONC. PIER PROTECTION

STA.	STA.	SIDE	LIN. FT.
1293+66	1294+41	C.L. MEDIAN	150

STA. 1293+07.5 IN PLACE
18" X 38' PIPE CULVERT
MEDIAN DRAIN W. SES
LT. & RT.
REMOVE

STA. 1294+05 IN PLACE
(2) TYPE-B IMPACT ATTENUATION BARRIERS
REMOVE

1-49

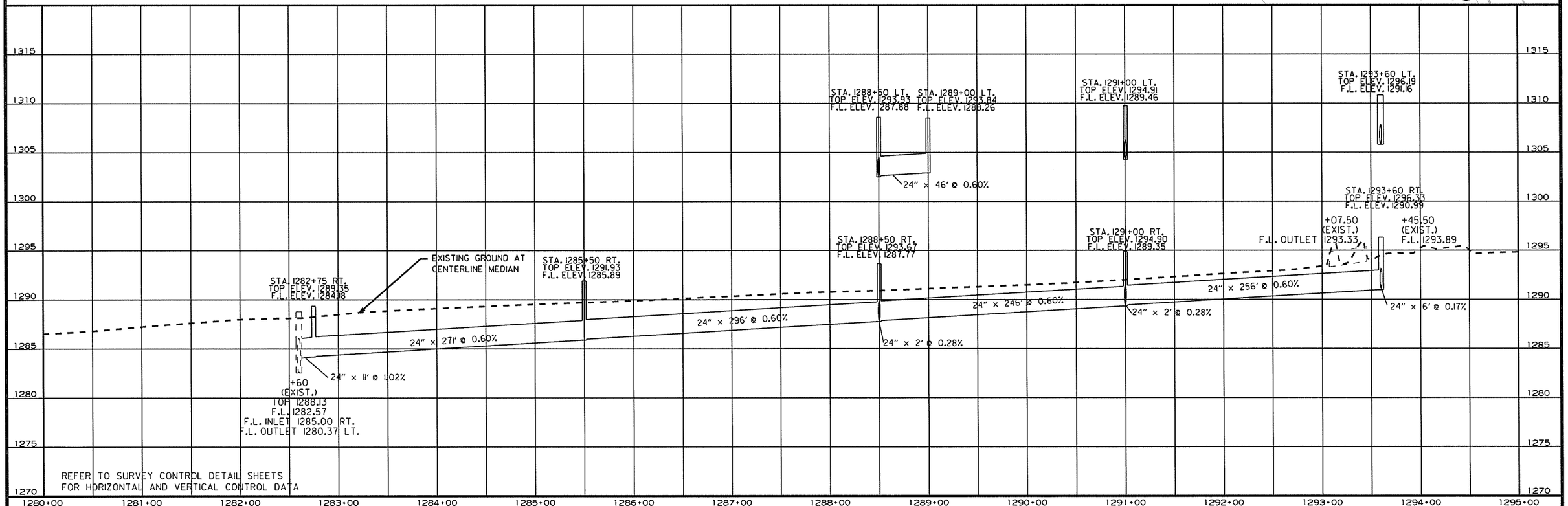

USER: a15106
DESIGN FILE: G:\13106100_264toNHope\TRANSP\dgn\p&p\pp013.dgn
PLOTTED: 2/24/2016 12:32
SCALE: 100:1
MODEL: PROPOSED DESIGN

G:\13106100_264toNHope\TRANSP\dgn\p&p\pp013.dgn 2/24/2016 12:32

©2014

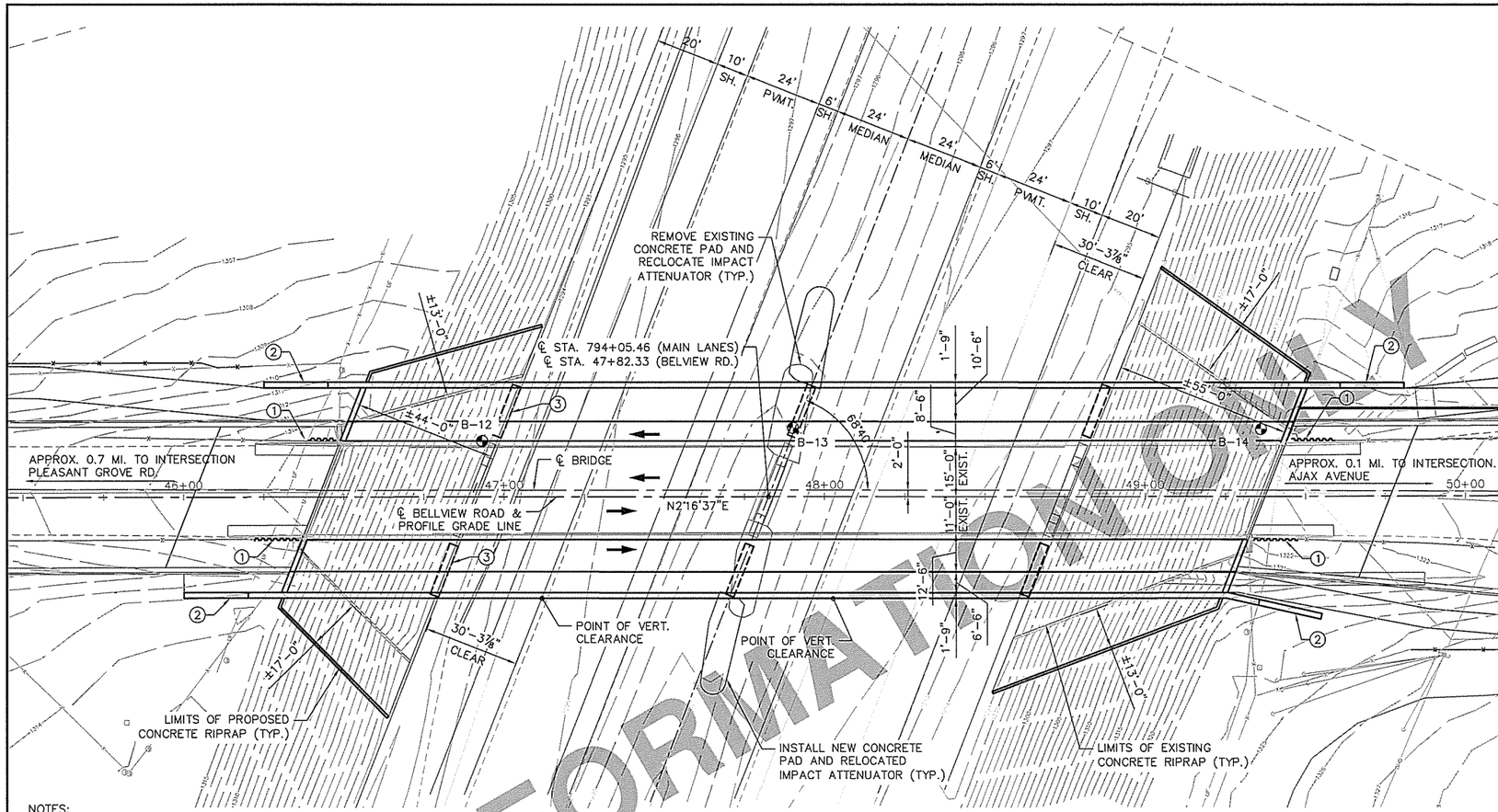

PLAN

0 20' 40'

Scale in feet

NOTES:

1. SHORING REQUIRED. SEE SHEET NO. BR-04 FOR REQUIREMENTS.
2. TRANSITIONAL APPROACH RAIL. SEE SHEET NO. BR-31 FOR DETAILS.
3. REMOVE AND REINSTALL EXISTING GUARDRAIL AS REQUIRED FOR BRIDGE CONSTRUCTION.
4. EXISTING SECTION FOR I-49 SHOWN. SEE SHEET NO. BR-06 FOR TWO ALTERNATE FUTURE LANE SECTIONS FOR I-49.

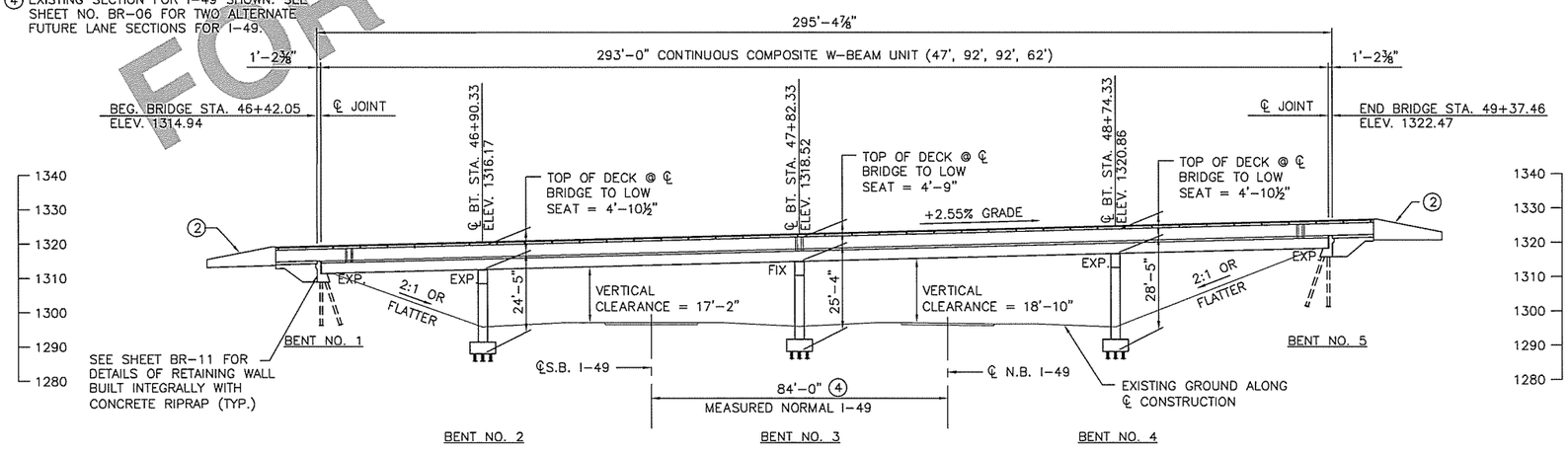

ELEVATION

0 20' 40'

Scale in feet

CONSTRUCTION SPECIFICATIONS: ARKANSAS STATE HIGHWAY AND TRANSPORTATION DEPARTMENT STANDARD SPECIFICATIONS FOR HIGHWAY CONSTRUCTION (2014 EDITION) WITH APPLICABLE SUPPLEMENTAL SPECIFICATIONS AND SPECIAL PROVISIONS. UNLESS OTHERWISE NOTED, SECTION AND SUBSECTION NUMBERS IN THE PLANS REFER TO THE CONSTRUCTION SPECIFICATIONS.

DESIGN SPECIFICATIONS: AASHTO STANDARD SPECIFICATIONS FOR HIGHWAY BRIDGES (2002 EDITION).

LIVE LOADING: HS20

METHOD OF DESIGN: LOAD FACTOR

SEISMIC PERFORMANCE CATEGORY: A

MATERIAL AND STRENGTHS:

CLASS S(AE) CONCRETE (SUPERSTRUCTURE)	f'c = 4,000 psi
CLASS S CONCRETE (SUBSTRUCTURE)	f'c = 3,500 psi
REINFORCING STEEL (AASHTO M31 OR M53, GR. 60)	Fy = 60,000 psi
STRUCTURAL STEEL (AASHTO M270, GR. 36)	Fy = 36,000 psi
STRUCTURAL STEEL (AASHTO M270, GR. 50)	Fy = 50,000 psi

STEEL PILING: PILING AT BENTS 1-5 SHALL BE HP10 x 42 AND SHALL BE DRIVEN WITH AN APPROVED AIR, STEAM OR DIESEL HAMMER TO A MINIMUM SAFE BEARING CAPACITY OF 55 TONS. ALL PILING SHALL BE DRIVEN INTO THE MATERIAL DESIGNATED AS LIMESTONE ON THE BORING LEGEND UNLESS BEARING IS ACHIEVED AT A HIGHER ELEVATIONS. ON ALL BENTS THE CONTRACTOR SHALL USE APPROVED STEEL H-PILE DRIVING POINTS.

FOOTINGS: FOUNDATIONS FOR FOOTINGS SHALL BE PREPARED IN ACCORDANCE WITH SUBSECTION 801.04.

BRIDGE DECK: THE CONCRETE BRIDGE DECK SHALL BE GIVEN A TINE FINISH AS SPECIFIED FOR FINAL FINISHING IN SUBSECTION 802.19.(b)(5) FOR CLASS 5 TINED BRIDGE ROADWAY SURFACE FINISH. THE TINED FINISH SHALL EXTEND UNDER THE SIDEWALK. THE BRIDGE SIDEWALK SHALL BE GIVEN A BROOM FINISH AS SPECIFIED IN SUBSECTION 802.19.(b)(6) FOR CLASS 6 BROOMED FINISH.

PROTECTIVE SURFACE TREATMENT: CLASS 1 PROTECTIVE SURFACE TREATMENT SHALL BE APPLIED TO THE ROADWAY SURFACE, SIDEWALK SURFACE, AND THE ROADWAY FACE OF CONCRETE PARAPET RAIL.

TEXTURED COATING FINISH: CLASS 3 TEXTURED COATING FINISH SHALL BE APPLIED TO SURFACES OF BENTS AND FACES OF SUPERSTRUCTURE AS INDICATED IN THE SPECIAL PROVISIONS.

SHORING: SHORING WILL BE REQUIRED TO ALLOW CONSTRUCTION OF THE PROPOSED BRIDGE WHILE MAINTAINING TRAFFIC. PAYMENTS FOR THESE ITEMS SHALL BE INCLUDED IN THE ITEM "SHORING: BRIDGE #05957".

DETAIL DRAWINGS:	SHEET NO.
STAGE CONST. DETAILS	BR-03 TO BR-05
END BENTS	BR-06 TO BR-11
INTERIOR BENTS	BR-12 TO BR-15
293' CONT. W-BEAM UNIT	BR-16 TO BR-28
ELASTOMERIC BEARINGS	BR-29 TO BR-30
TRANSITION APPROACH RAILING	BR-31

PROPOSED WORK: THE PROPOSED WORK IS TO BE DONE IN STAGES AND CONSISTS OF CONSTRUCTING NEW INTERMEDIATE BENTS ADJACENT TO THE EXISTING INTERMEDIATE BENTS; EXTENDING THE EXISTING END BENTS; CONSTRUCTING A NEW SUPERSTRUCTURE WITH SIDEWALK ADJACENT TO THE EXISTING STRUCTURE; REMOVING THE EXISTING BRIDGE SLAB; RAISING THE EXISTING BEAMS; RECONSTRUCTING THE EXISTING BRIDGE SLAB AND CONNECTING IT TO THE NEW ADJACENT SUPERSTRUCTURE.

ALL EXISTING MATERIAL NOT INCORPORATED INTO THE FINISHED STRUCTURE SHALL BECOME THE PROPERTY OF THE CONTRACTOR.

SPAN LENGTHS AND DIMENSIONS ARE BASED ON THE EXISTING BRIDGE PLANS. ELEVATIONS ARE BASED ON FIELD SURVEY AND EXISTING BRIDGE PLANS. THE CONTRACTOR SHALL VERIFY DIMENSIONS AND ELVATIONS ON THE EXISTING BRIDGE AND MAKE ADJUSTMENTS AS NECESSARY TO FIT THE NEW WORK TO THE EXISTING STRUCTURE. PROPOSED MODIFICATIONS SHALL BE SUBMITTED TO THE ENGINEER FOR APPROVAL PRIOR TO INCORPORATING INTO THE FINISHED BRIDGE. WORK FOR THE VERIFICATION PROCESS AND THE NECESSARY ADJUSTMENTS SHALL BE INCLUDED IN THE ITEM "MODIFY EXISTING STRUCTURE". HALF-SIZED PLANS OF THE EXISTING BRIDGE MAY BE OBTAINED FROM THE BRIDGE DIVISION OF THE A.H.T.D. FOR BRIDGE NO. 05957, SEE DWGS 25291 TO 25297.

MAINTENANCE OF TRAFFIC: SEE ROADWAY PLANS FOR MAINTENANCE OF TRAFFIC.

REFER TO SHEET BR-02 FOR BORING LOG INFORMATION IN VICINITY OF BELLVIEW ROAD OVERPASS.

FOR SUPERSTRUCTURE GENERAL NOTES, SEE SHEET NO. BR-23.

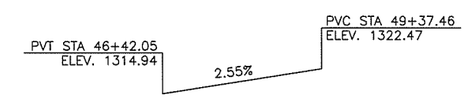

VERTICAL PROFILE DATA

FOR INFORMATION ONLY

STATE OF ARKANSAS REGISTERED PROFESSIONAL ENGINEER No. 13303 3/30/2015

NO.	DATE	DRN:	APPV'D.	REVISIONS DESCRIPTION

CITY of ROGERS ARKANSAS EST. 1881

McCLELLAND CONSULTING ENGINEERS, INC. DESIGNED TO SERVE
Kimley»Horn
2550 UNIVERSITY AVENUE, SUITE 238N, ST. PAUL, MN 55114
PHONE: 651-645-4197
WWW.MCCLELLANDCEI.COM

BELLVIEW ROAD NORTH
PLEASANT GROVE ROAD TO AJAX AVENUE
ROGERS, ARKANSAS

GENERAL PLAN AND ELEVATION

DRAWN BY PHH	APPROVED JDP
SCALE AS NOTED	DATE OCT 2014
JOB. NO. 160578000	FIELD BOOK
SHEET NO. BR-01	REV.

AHTD BR NO. 05957

K:\TWC_Civil\City\McClelland Engineers\Bellview Road Bridge\160578000\CADD\PLAN SHEETS\BELL-BRG01.dwg March 30, 2015 - 11:03am

DATE REVISED	DATE FILMED	DATE REVISED	DATE FILMED

FED.RD. DIST.NO.	STATE	FED.AID PROJ.NO.	SHEET NO.	TOTAL SHEETS
6	ARK.			
JOB NO.		CA0901	121	452

PLAN & PROFILE SHEETS

Crafton Tull
architecture | engineering | surveying

STATE OF ARKANSAS
REGISTERED PROFESSIONAL ENGINEER
No. 13560
JEROME PAUL DAVIS
3-03-16

STA. 1299+00 - CONSTRUCT
DROP INLET 3' LT. OF C.L. H=5'9"
W/24" x 296' R.C. PIPE CULVERT
(CLASS III) (TYPE 3 BEDDING)
CONNECT TO DROP INLET AT
STA. 1302+00 LT.
TYPE ST DROP INLET = 4' X 4'

STA. 1299+00 - CONSTRUCT
DROP INLET 3' RT. OF C.L. H=5'6"
W/24" x 2' R.C. PIPE CULVERT
(CLASS III) (TYPE 3 BEDDING)
CONNECT TO DROP INLET AT
STA. 1299+00 LT.
TYPE ST DROP INLET = 4' X 4'

STA. 1302+00 - CONSTRUCT
DROP INLET 3' LT. OF C.L. H=6'4"
W/24" x 296' R.C. PIPE CULVERT
(CLASS III) (TYPE 3 BEDDING)
CONNECT TO DROP INLET AT
STA. 1305+00 LT.
TYPE ST DROP INLET = 4' X 4'

STA. 1302+00 - CONSTRUCT
DROP INLET 3' RT. OF C.L. H=6'0"
W/24" x 2' R.C. PIPE CULVERT
(CLASS III) (TYPE 3 BEDDING)
CONNECT TO DROP INLET AT
STA. 1302+00 LT.
TYPE ST DROP INLET = 4' X 4'

STA. 1305+00 - CONSTRUCT
DROP INLET 3' LT. OF C.L. H=6'11"
W/24" x 146' R.C. PIPE CULVERT
(CLASS III) (TYPE 3 BEDDING)
CONNECT TO DROP INLET AT
STA. 1306+50 LT.
TYPE ST DROP INLET = 4' X 4'

STA. 1305+00 - CONSTRUCT
DROP INLET 3' RT. OF C.L. H=6'6"
W/24" x 2' R.C. PIPE CULVERT
(CLASS III) (TYPE 3 BEDDING)
CONNECT TO DROP INLET AT
STA. 1305+00 LT.
TYPE ST DROP INLET = 4' X 4'

STA. 1306+50 - CONSTRUCT
DROP INLET 3' LT. OF C.L. H=6'5"
W/24" x 231' R.C. PIPE CULVERT
(CLASS III) (TYPE 3 BEDDING)
CONNECT TO DROP INLET AT
STA. 1308+85 LT.
TYPE ST DROP INLET = 4' X 4'

STA. 1306+50 - CONSTRUCT
DROP INLET 3' RT. OF C.L. H=6'4"
W/24" x 2' R.C. PIPE CULVERT
(CLASS III) (TYPE 3 BEDDING)
CONNECT TO DROP INLET AT
STA. 1306+50 LT.
TYPE ST DROP INLET = 4' X 4'

STA. 1308+85 - CONSTRUCT
DROP INLET 3' LT. OF C.L. H=5'6"
W/24" x 12' R.C. PIPE CULVERT
(CLASS III) (TYPE 3 BEDDING)
CONNECT TO EXIST DROP INLET
AT STA. 1309+00
TYPE ST DROP INLET = 4' X 4'

APPROXIMATE SPECIAL FLOOD HAZARD AREA (2)

STA. 1309+00 IN PLACE
TYPE R DROP INLET IN MEDIAN
W/18" X 105' PIPE OUTLET
W/FES RT.
MODIFY

REMOVAL AND DISPOSAL GUARDRAIL

STA.	STA.	SIDE	LIN. FT.
1307+27	1309+97	R.M.L. - L.T.	270

CONCRETE BARRIER WALL

STA.	STA.	MEDIAN TYPE
1295+26	1307+95	B
1307+95	1309+19	C
1309+19	1309+49	SP-1

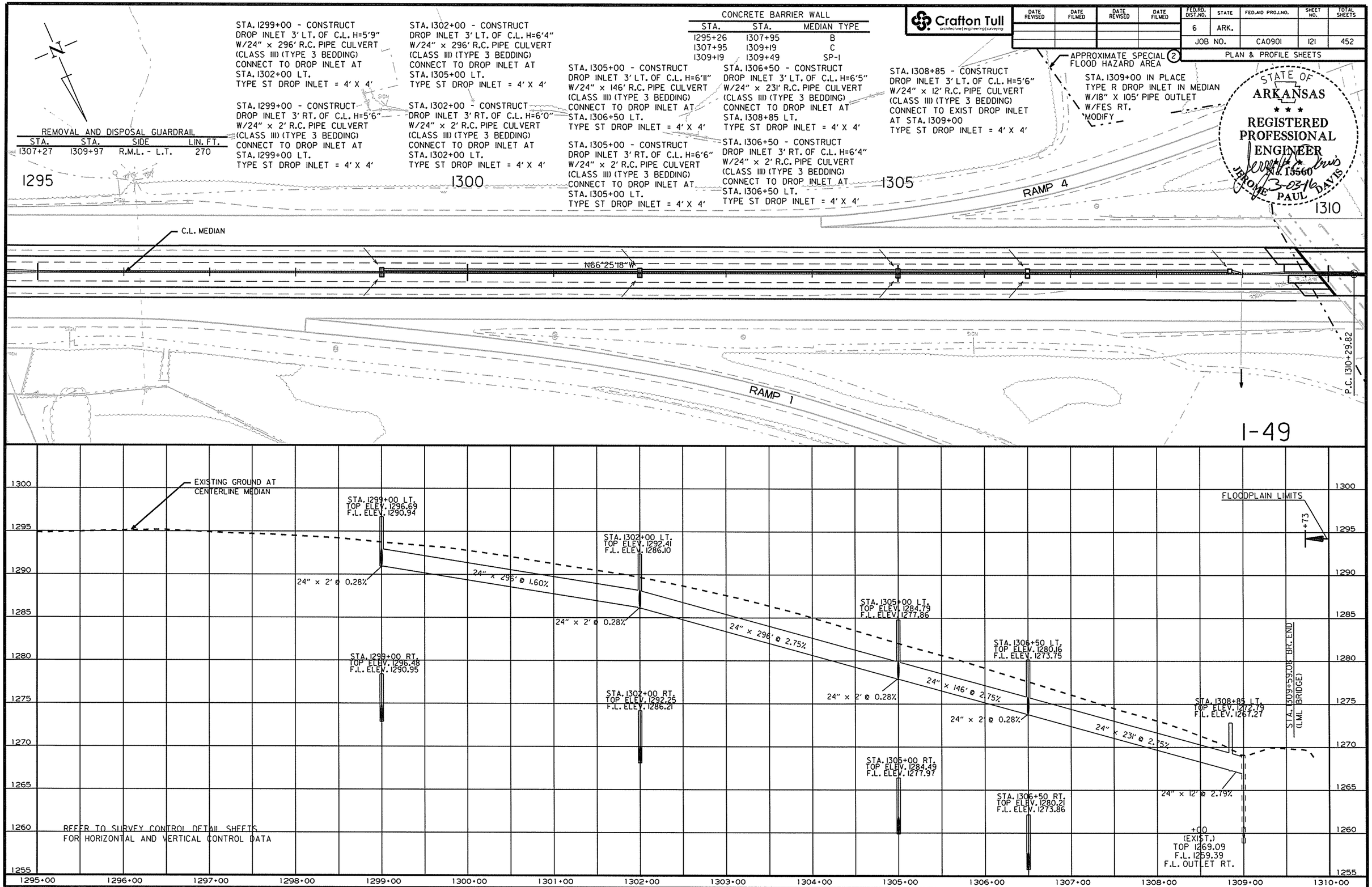

USER: a15106
DESIGN FILE: G:\13106100_264toNHope\TRANSP\dgn\p&p\pp014.dgn MODEL: PROPOSED DESIGN
PLOTTED: 3/1/2016 13:04 SCALE: 100:1

G:\13106100_264toNHope\TRANSP\dgn\p&p\pp014.dgn 3/1/2016 13:04

DATE REVISED	DATE FILMED	DATE REVISED	DATE FILMED

Crafton Tull
architecture | engineering | surveying

FED.RD. DIST.NO.	STATE	FED.AID PROJ.NO.	SHEET NO.	TOTAL SHEETS
6	ARK.			
JOB NO.		CA0901	122	452

2 PLAN & PROFILE SHEETS

STATE OF ARKANSAS
REGISTERED PROFESSIONAL ENGINEER
No. 15560
5-06-16
JEROME PAUL DAVIS

STA. 1309+50.12 BR. END
I-49 LML BRIDGE (S.B.)
267'-0" CONT. W-BEAM UNIT
(48'-57'-57'-57'-48')
62'-0" CLEAR ROADWAY
BR. NO. A5958
STA. 1312+27.24 BR. END

STA. 1310+23.28 BR. END
I-49 RML BRIDGE (N.B.)
267'-0" CONT. W-BEAM UNIT
(48'-57'-57'-57'-48')
62'-0" CLEAR ROADWAY
BR. NO. B5958
STA. 1312+97.29 BR. END

APPROXIMATE SPECIAL FLOOD HAZARD AREA

CONCRETE BARRIER WALL

STA.	STA.	MEDIAN TYPE
1312+91	1313+21	SP-1
1313+21	1317+57	C
1317+57	1320+07	SPECIAL
1320+07	1332+10	C

REMOVAL AND DISPOSAL GUARDRAIL

STA.	STA.	SIDE	LIN. FT.
1312+45	1315+15	L.M.L. - RT.	270
1314+66	1320+74	R.M.L. - LT.	608
1316+99	1322+99	L.M.L. - RT.	600

REMOVAL AND DISPOSAL CONC. PIER PROTECTION

STA.	STA.	SIDE	LIN. FT.
1318+38	1319+27	C.L. MEDIAN	178

1315

N66°25'18"W

C.L. MEDIAN

1310

BR. A5958

BR. B5958

P.C. 1310+29.82

STA. 1314+31 TO STA. 1317+88 - IN PLACE
WIRE ROPE SAFETY FENCE
REMOVE

RAZORBACK GREENWAY TRAIL

I-49
PI = 1319+89.81
Δ = 37°03'06.9" RT.
D = 02°00'00"
T = 959.99'
L = 1852.60'
PC = 1310+29.82
PT = 1328+82.42
MATCH EXISTING SUPERELEVATION

PROMENADE BLVD.

P.I. 1319+89.81

STA. 1319+50 - CONSTRUCT
DROP INLET 3' LT. OF C.L. H=5'5"
W/24" x 231' R.C. PIPE CULVERT
(CLASS III) (TYPE 3 BEDDING)
CONNECT TO DROP INLET AT
STA. 1321+85 LT.
TYPE ST DROP INLET = 4' X 4'

1320

STA. 1321+85 - CONSTRUCT
DROP INLET 3' LT. OF C.L. H=5'5"
W/24" x 12' R.C. PIPE CULVERT
(CLASS III) (TYPE 3 BEDDING)
CONNECT TO EXIST. DROP INLET
AT STA. 1322+00
TYPE ST DROP INLET = 4' X 4'

STA. 1322+00 IN PLACE
TYPE R DROP INLET IN MEDIAN
W/18" X 95' PIPE OUTLET
W/FES RT.
MODIFY

N29°22'11"W

1325

STA. 1319+89 TO STA. 1374+65 - IN PLACE
WIRE ROPE SAFETY FENCE
REMOVE

APPROXIMATE SPECIAL FLOOD HAZARD AREA

I-49

REMOVAL AND DISPOSAL CONCRETE DITCH PAVING (TYPE B)

STA.	STA.	SIDE	"W"	SQ.YDS.
1314+31	1317+88	℄ MED.	4'-0"	159
1319+89	1374+65	℄ MED.	4'-0"	2435

STREAM	STATION	STREAM TYPE	TOP OF CHANNEL ELEV.
BLOSSOM WAY CREEK	1310+85-1311+60	INTERMITTENT	1,236.0 FT. MSL

FLOODPLAIN LIMITS

+12

STA. 1312+27.24 BR. END
(LML BRIDGE)

STA. 1310+14.33 BR. END
(RML BRIDGE)

STA. 1312+86.38 BR. END
(RML BRIDGE)

EXISTING GROUND AT CENTERLINE MEDIAN

050 DESIGN H.W.
ELEV. 1245.69

+32.46
42" SEWER CROSSING
F.L.=1238.37

STA. 1319+50 LT.
TOP ELEV. 1245.85
F.L. ELEV. 1240.43

STA. 1321+85 LT.
TOP ELEV. 1244.61
F.L. ELEV. 1239.17

24" x 231' @ 0.50%

24" x 12' @ 1.42%

+00
(EXIST.)
TOP 1243.75
F.L. 1236.44
F.L. OUTLET 1235.90 RT.

REFER TO SURVEY CONTROL DETAIL SHEETS
FOR HORIZONTAL AND VERTICAL CONTROL DATA

1275 1270 1265 1260 1255 1250 1245 1240 1235 1230

1310+00 1311+00 1312+00 1313+00 1314+00 1315+00 1316+00 1317+00 1318+00 1319+00 1320+00 1321+00 1322+00 1323+00 1324+00 1325+00

USER: a15106
DESIGN FILE: G:\13106100_264toNHope\TRANSP\dgn\p&p\pp015.dgn MODEL: PROPOSED DESIGN
PLOTTED: 5/6/2016 11:21 SCALE: 100:1

G:\13106100_264toNHope\TRANSP\dgn\p&p\pp015.dgn 5/6/2016 11:21

Crafton Tull
architecture | engineering | surveying

DATE REVISED	DATE FILMED	DATE REVISED	DATE FILMED

FED.RD. DIST.NO.	STATE	FED.AID PROJ.NO.	SHEET NO.	TOTAL SHEETS
6	ARK.			
JOB NO.		CA0901	123	452

PLAN & PROFILE SHEETS

STATE OF ARKANSAS
REGISTERED PROFESSIONAL ENGINEER
No. 15560
3-03-16
JEROME PAUL DAVIS

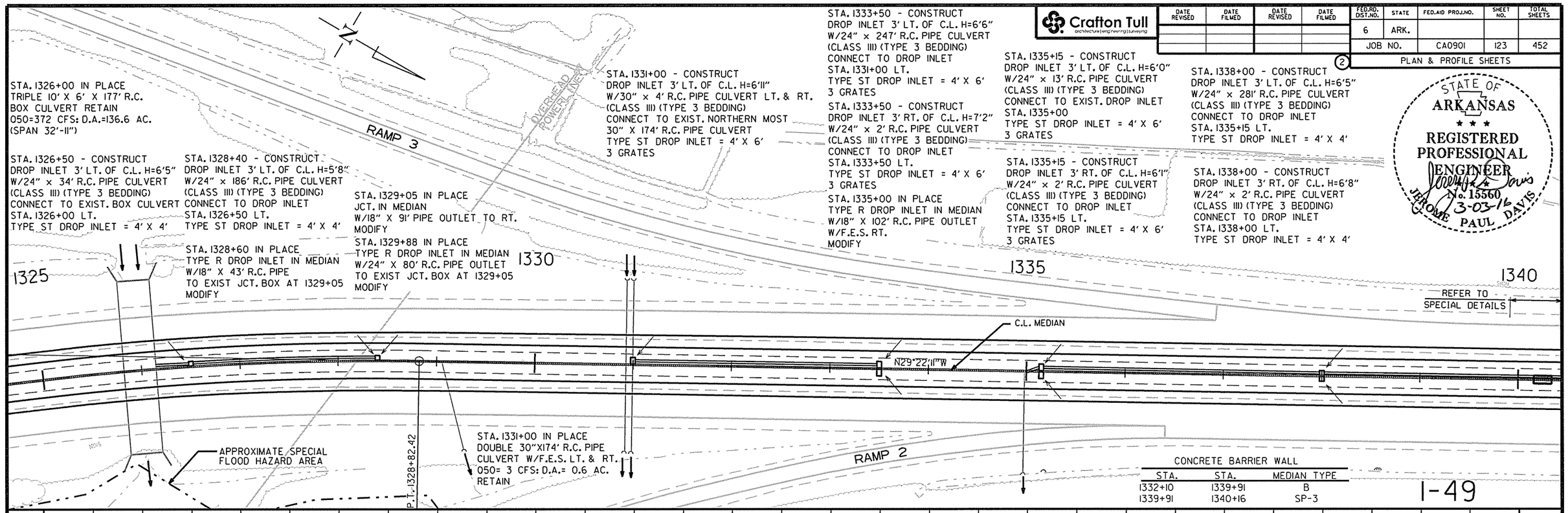

CONCRETE BARRIER WALL

STA.	STA.	MEDIAN TYPE
1332+10	1339+91	B
1339+91	1340+16	SP-3

USER: at5106
DESIGN FILE: G:\13106100.264toNHope\TRANSP\dgn\p&p\pp016.dgn
PLOTTED: 2/24/2016 12:32
MODEL: PROPOSED DESIGN
SCALE: 100:1

Crafton Tull
architecture | engineering | surveying

DATE REVISED	DATE FILMED	DATE REVISED	DATE FILMED

FED.RD. DIST.NO.	STATE	FED.AID PROJ.NO.	SHEET NO.	TOTAL SHEETS
6	ARK.			
JOB NO.		CA0901	124	452

2 PLAN & PROFILE SHEETS

STATE OF ARKANSAS
REGISTERED PROFESSIONAL ENGINEER
No. 15560
JEROME PAUL DAVIS
3-03-16

CONCRETE BARRIER WALL

STA.	STA.	MEDIAN TYPE
1340+34	1340+59	SP-3
1340+59	1349+90	C
1349+90	1350+85	C-SPECIAL
1350+85	1362+16	C

STA. 1341+00 - CONSTRUCT
DROP INLET 3' LT. OF C.L. H=4'9"
W/24" x 296' R.C. PIPE CULVERT
(CLASS III) (TYPE 3 BEDDING)
CONNECT TO DROP INLET
STA. 1338+00 LT.
TYPE ST DROP INLET = 4' X 4'

I-49
PI = 1352+03.68
Δ = 32°07'27.7" RT.
D = 02°00'00"
T = 824.83'
L = 1606.22'
PC = 1343+78.85
PT = 1359+85.07
MATCH EXIST. SUPERELEVATION

STA. 1349+00 - CONSTRUCT
DROP INLET 3' LT. OF C.L. H=5'9"
W/24" x 296' R.C. PIPE CULVERT
(CLASS III) (TYPE 3 BEDDING)
CONNECT TO DROP INLET
STA. 1352+00 LT.
TYPE ST DROP INLET = 4' X 4'

STA. 1352+00 - CONSTRUCT
DROP INLET 3' LT. OF C.L. H=5'0"
W/24" x 295' R.C. PIPE CULVERT
(CLASS III) (TYPE 3 BEDDING)
CONNECT TO EXIST. DROP INLET
STA. 1355+00 LT.
TYPE ST DROP INLET = 4' X 4'

STA. 1355+00 IN PLACE
TYPE R DROP INLET IN MEDIAN
W/18" X 86' R.C. PIPE OUTLET
W/F.E.S. RT.
MODIFY

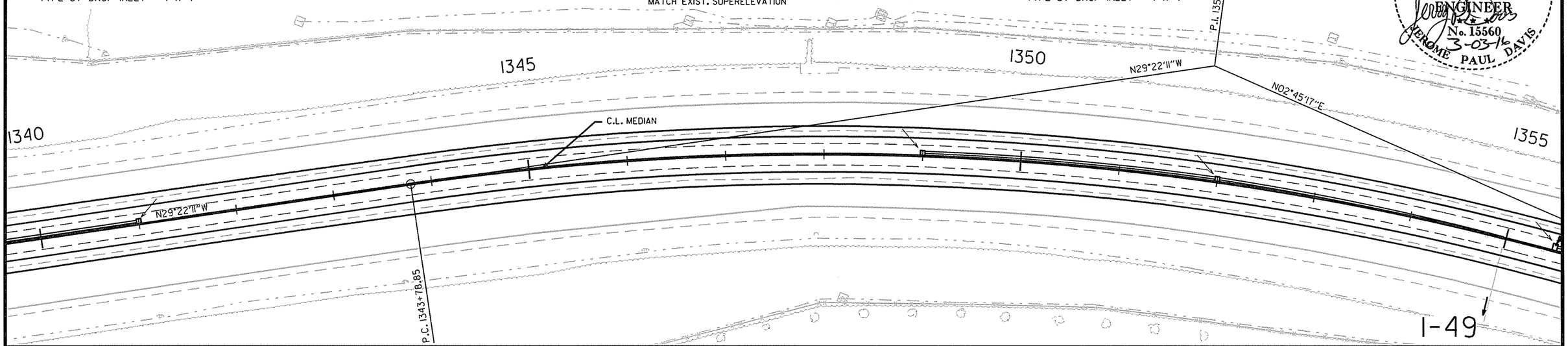

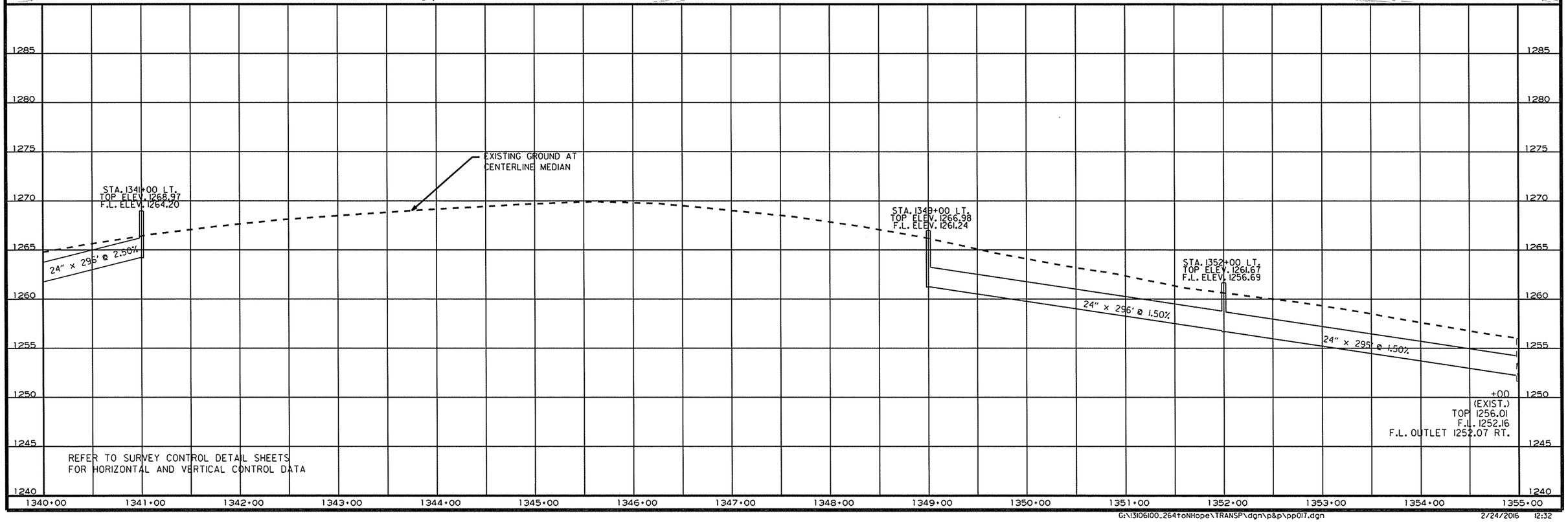

USER: at5106
DESIGN FILE: G:\13106100_264toNHope\TRANSP\dgn\p&p\pp017.dgn
PLOTTED: 2/24/2016 12:32
MODEL: PROPOSED DESIGN
SCALE: 100:1

G:\13106100_264toNHope\TRANSP\dgn\p&p\pp017.dgn 2/24/2016 12:32

Crafton Tull
architecture | engineering | surveying

DATE REVISED	DATE FILMED	DATE REVISED	DATE FILMED

FED.RD. DIST.NO.	STATE	FED.AID PROJ.NO.	SHEET NO.	TOTAL SHEETS
6	ARK.			
JOB NO.		CA0901	125	452

2 PLAN & PROFILE SHEETS

STA. 1355+50 - CONSTRUCT
DROP INLET 3' LT. OF C.L. H=4'6"
W/24" x 206' R.C. PIPE CULVERT
(CLASS III) (TYPE 3 BEDDING)
CONNECT TO DROP INLET
STA. 1357+60 LT.
TYPE ST DROP INLET = 4' X 6'
3 GRATES

STA. 1357+60 - CONSTRUCT
DROP INLET 3' LT. OF C.L. H=5'2"
W/24" x 296' R.C. PIPE CULVERT
(CLASS III) (TYPE 3 BEDDING)
CONNECT TO DROP INLET
STA. 1360+60 LT.
TYPE ST DROP INLET = 4' X 6'
3 GRATES

STA. 1360+60 - CONSTRUCT
DROP INLET 3' LT. OF C.L. H=5'6"
W/24" x 296' R.C. PIPE CULVERT
(CLASS III) (TYPE 3 BEDDING)
CONNECT TO DROP INLET
STA. 1363+60 LT.
TYPE ST DROP INLET = 4' X 6'
3 GRATES

STA. 1363+60 - CONSTRUCT
DROP INLET 3' LT. OF C.L. H=6'2"
W/24" x 14' R.C. PIPE CULVERT
(CLASS III) (TYPE 3 BEDDING)
CONNECT TO EXIST. DROP INLET
STA. 1363+77 LT.
TYPE ST DROP INLET = 4' X 6'
3 GRATES

STA. 1363+77 IN PLACE
TYPE R DROP INLET IN MEDIAN
W/18" X 93' R.C. PIPE OUTLET
W/F.E.S. LT.
MODIFY

STA. 1366+60 - CONSTRUCT
DROP INLET 3' LT. OF C.L. H=6'2"
W/24" x 296' R.C. PIPE CULVERT
(CLASS III) (TYPE 3 BEDDING)
CONNECT TO DROP INLET
STA. 1369+60 LT.
TYPE ST DROP INLET = 4' X 6'
3 GRATES

STA. 1366+60 - CONSTRUCT
DROP INLET 3' RT. OF C.L. H=6'3"
W/24" x 2' R.C. PIPE CULVERT
(CLASS III) (TYPE 3 BEDDING)
CONNECT TO DROP INLET
STA. 1366+60 LT.
TYPE ST DROP INLET = 4' X 6'
3 GRATES

STA. 1369+60 - CONSTRUCT
DROP INLET 3' LT. OF C.L. H=6'1"
W/24" x 296' R.C. PIPE CULVERT
(CLASS III) (TYPE 3 BEDDING)
CONNECT TO DROP INLET
STA. 1372+60 LT.
TYPE ST DROP INLET = 4' X 4'

STA. 1369+60 - CONSTRUCT
DROP INLET 3' RT. OF C.L. H=6'1"
W/24" x 2' R.C. PIPE CULVERT
(CLASS III) (TYPE 3 BEDDING)
CONNECT TO DROP INLET
STA. 1369+60 LT.
TYPE ST DROP INLET = 4' X 4'

STATE OF ARKANSAS
REGISTERED PROFESSIONAL ENGINEER
No. 15560
JEROME PAUL DAVIS
3-03-16

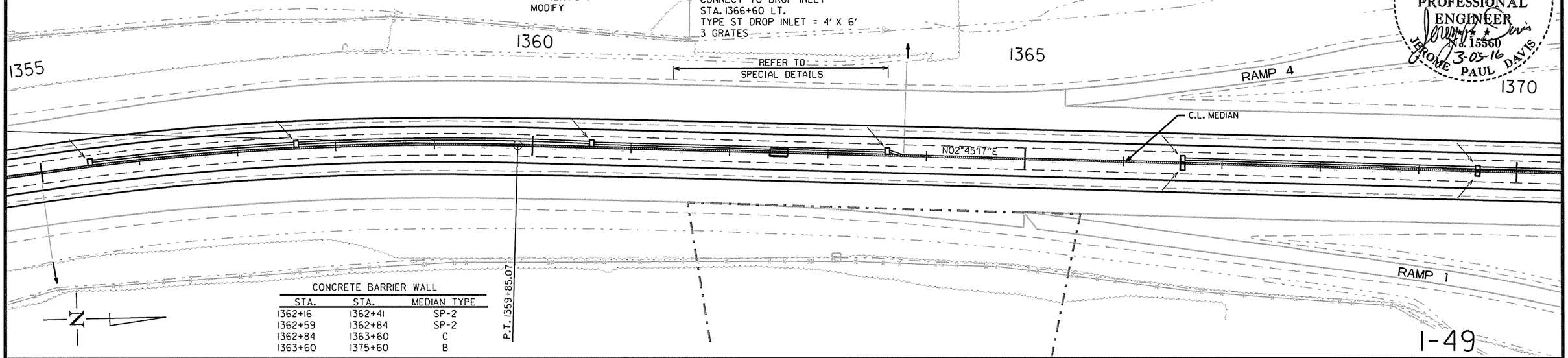

CONCRETE BARRIER WALL

STA.	STA.	MEDIAN TYPE
1362+16	1362+41	SP-2
1362+59	1362+84	SP-2
1362+84	1363+60	C
1363+60	1375+60	B

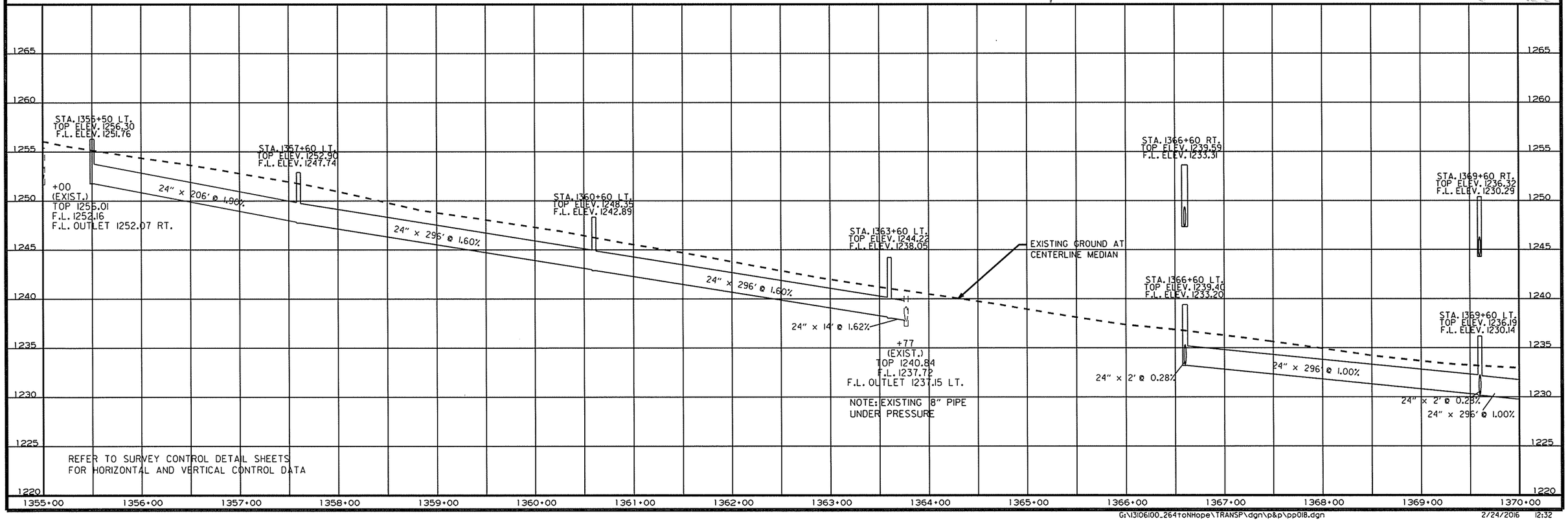

USER: at5106
DESIGN FILE: G:\13106100_264toNHope\TRANSP\dgn\p&p\pp018.dgn
PLOTTED: 2/24/2016 12:32
MODEL: PROPOSED DESIGN
SCALE: 100:1

Crafton Tull
architecture | engineering | surveying

DATE REVISED	DATE FILMED	DATE REVISED	DATE FILMED

FED.RD. DIST.NO.	STATE	FED.AID PROJ.NO.	SHEET NO.	TOTAL SHEETS
6	ARK.			
JOB NO.		CA0901	126	452

2 PLAN & PROFILE SHEETS

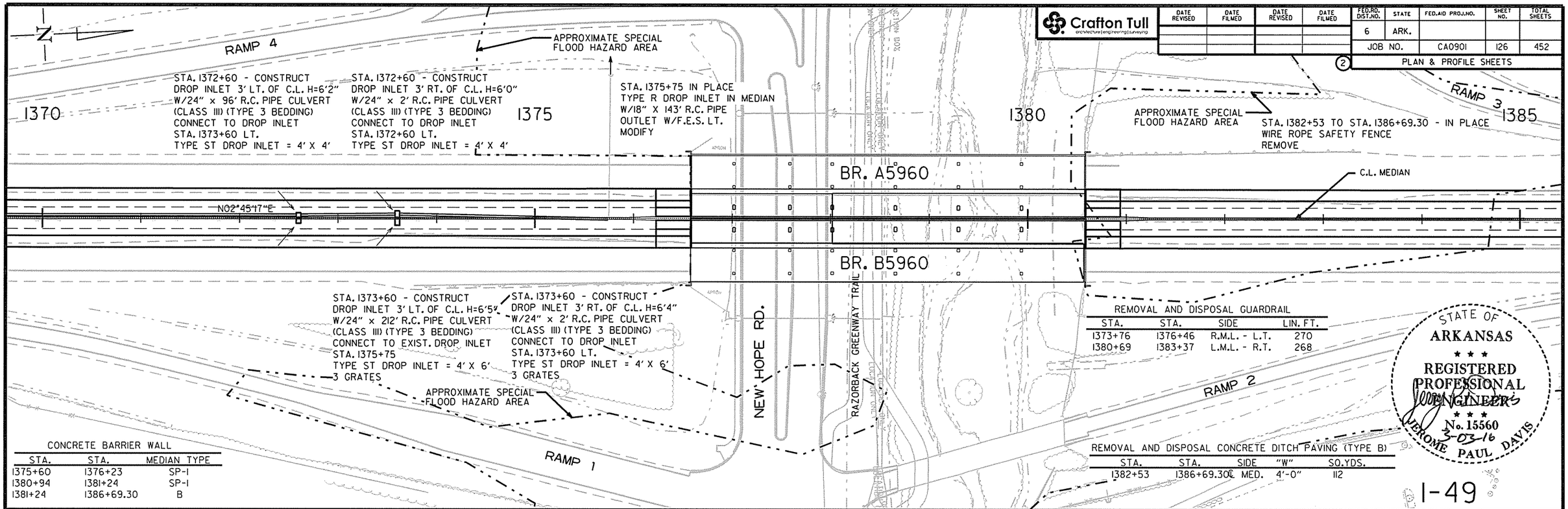

REMOVAL AND DISPOSAL GUARDRAIL

STA.	STA.	SIDE	LIN. FT.
1373+76	1376+46	R.M.L. - L.T.	270
1380+69	1383+37	L.M.L. - R.T.	268

CONCRETE BARRIER WALL

STA.	STA.	MEDIAN TYPE
1375+60	1376+23	SP-1
1380+94	1381+24	SP-1
1381+24	1386+69.30	B

REMOVAL AND DISPOSAL CONCRETE DITCH PAVING (TYPE B)

STA.	STA.	SIDE	"W"	SQ.YDS.
1382+53	1386+69.30	℄ MED.	4'-0"	112

STATE OF ARKANSAS
REGISTERED PROFESSIONAL ENGINEER
No. 15560
3-03-16
JEROME PAUL DAVIS

I-49

STREAM	STATION	STREAM TYPE	TOP OF CHANNEL ELEV.
BLOSSOM WAY CREEK	1378+30-1380+00	PERENNIAL	1,199.0 FT. MSL

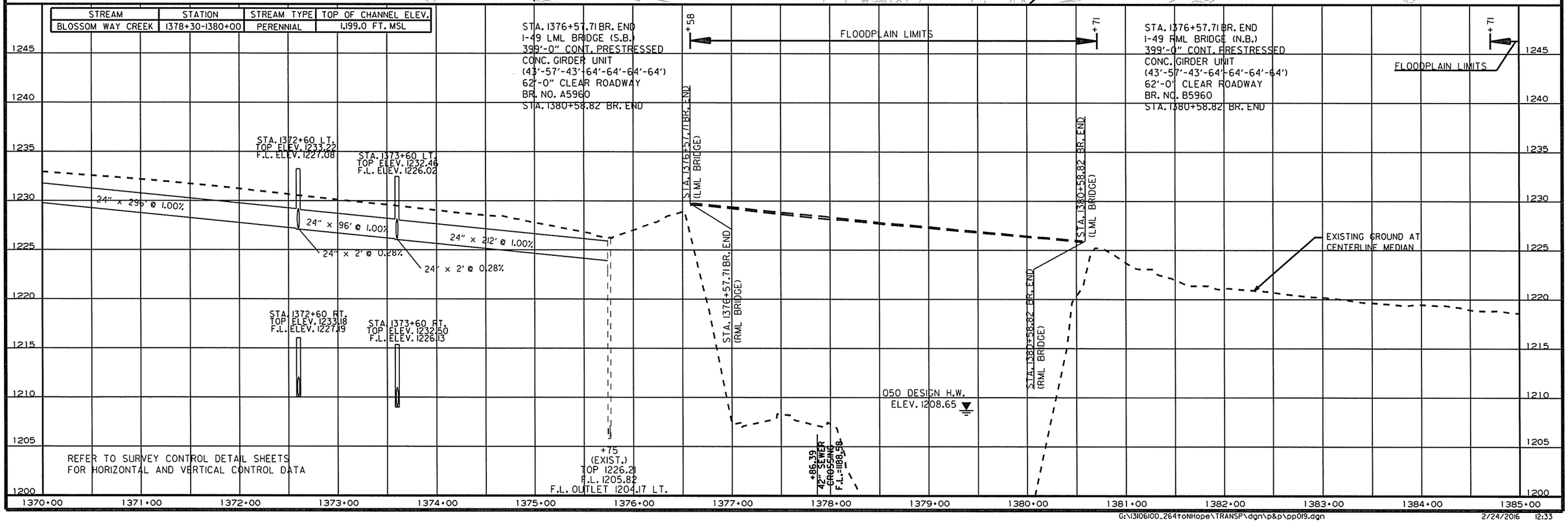

REFER TO SURVEY CONTROL DETAIL SHEETS FOR HORIZONTAL AND VERTICAL CONTROL DATA

USER: at5106
DESIGN FILE: G:\13106100_264toNHope\TRANSP\dgn\p&p\pp019.dgn MODEL: PROPOSED DESIGN
PLOTTED: 2/24/2016 12:33 SCALE: 100:1

Crafton Tull
architecture | engineering | surveying

DATE REVISED	DATE FILMED	DATE REVISED	DATE FILMED

FED.RD. DIST.NO.	STATE	FED.AID PROJ.NO.	SHEET NO.	TOTAL SHEETS
6	ARK.			
JOB NO.		CA0901	127	452

2 PLAN & PROFILE SHEETS

STATE OF ARKANSAS
REGISTERED PROFESSIONAL ENGINEER
No. 15560
3-03-16
JEROME PAUL DAVIS

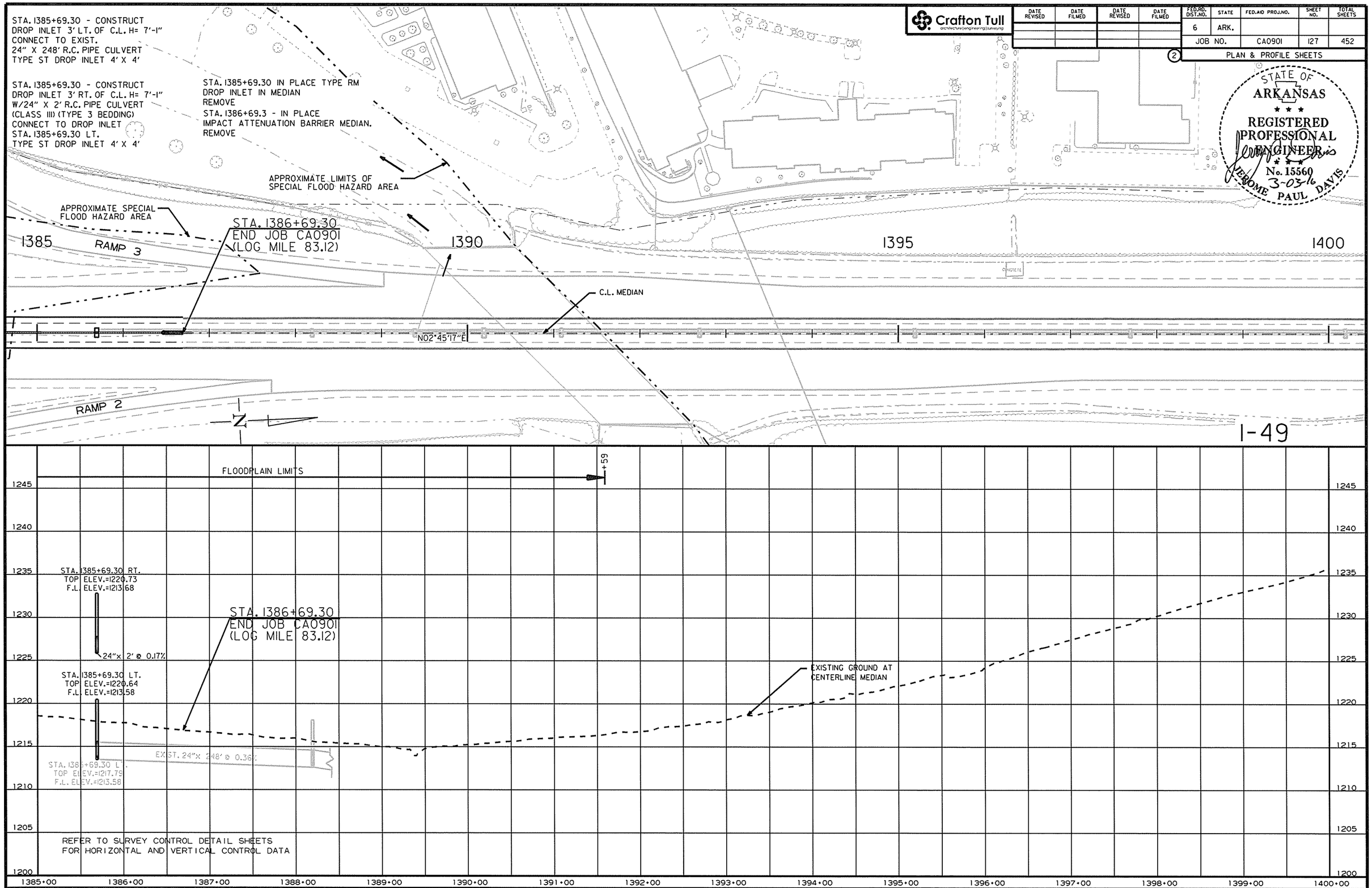

USER: at5106
DESIGN FILE: G:\13106100_264toNHope\TRANSP\dgn\p&p\pp020.dgn
PLOTTED: 2/24/2016 12:33
SCALE: 100:1
MODEL: PROPOSED DESIGN

G:\13106100_264toNHope\TRANSP\dgn\p&p\pp020.dgn 2/24/2016 12:33

DATE REVISED	DATE FILMED	DATE REVISED	DATE FILMED	FED. ROAD DIST. NO.	STATE	FED. AID PROJ. NO.	SHEET NO.	TOTAL SHEETS
				6	ARK.			
				JOB NO.		CA0901	128	452

(1) OH-049-04-02 SIGN STRUCTURE 57679A

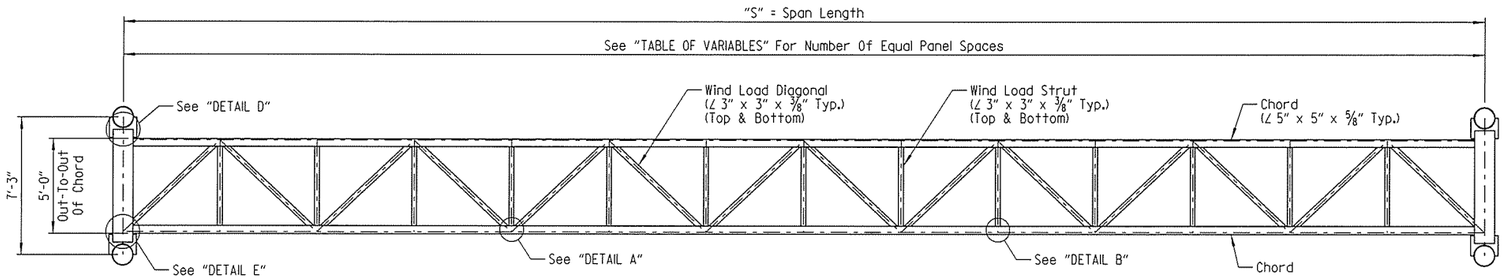

PLAN

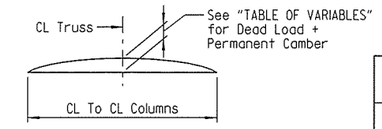

TRUSS CAMBER DIAGRAM

TABLE OF VARIABLES

Span (ft)	No. of Equal Panel Spaces	Dead Load + Permanent Camber
60' thru 65'	12	1"
66' thru 75'	14	1 1/4"
76' thru 85'	16	1 1/2"

* Note:
The Contractor shall make field measurements to determine the Column heights "H1" and "H2" that are required to maintain the minimum vertical clearance with the centerline of the sign located at the centerline of the truss. These column heights shall be shown on the shop drawings with a note stating that the Contractor has made the required field measurements. If the structure height ("H1" or "H2") exceeds 30'-0" contact the Engineer. The Contractor shall also verify that the variable span length (60'-0" to 85'-0") is sufficient to meet the minimum clearances and to fit the new structure to the existing and/or proposed conditions.

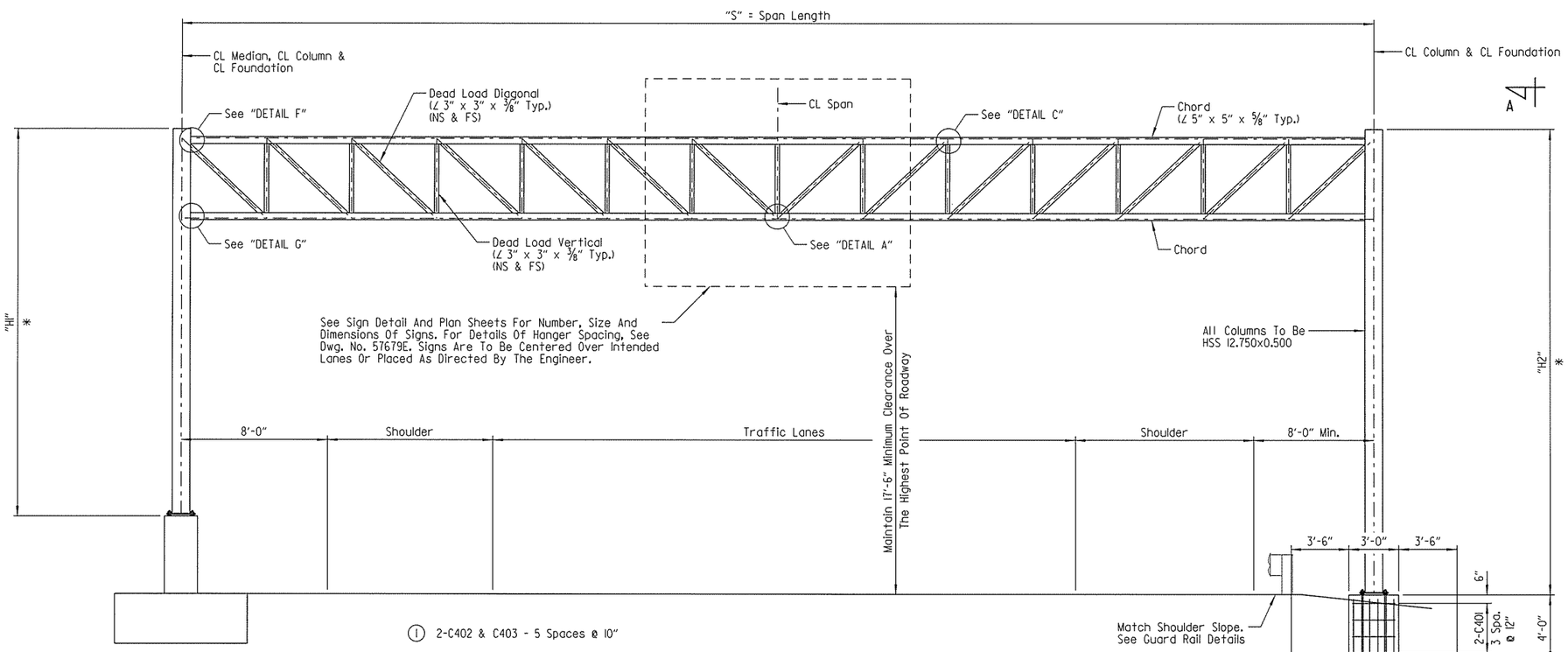

MEDIAN FOUNDATION **

Note:
For "DETAIL A" thru "DETAIL G", see Dwg. No. 57679C.

For "VIEW A-A", see Dwg. No. 57679B.

ELEVATION

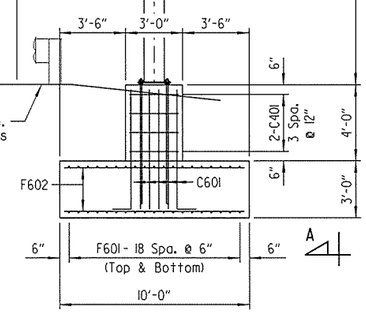

FOUNDATION A

APPROXIMATE QUANTITIES FOR FOUNDATION A FOR INFORMATION ONLY

CLASS S CONCRETE (Cu. Yards)	REINFORCING STEEL (Lbs.)	EXCAVATION (Cu. Yards)
27.6	2946	78

SPAN LENGTH TABLE

Structure No.	"S"
OH-049-04-02	72'-0"

** For median foundation details and median barrier on either side of median foundation, see roadway plans.

BAR LIST - FOUNDATION A

MARK	NO. REQ'D	LENGTH	P.D.
C401	8	20'-8"	2"
C601	56	7'-3"	4 1/2"
F601	38	19'-6"	Str.
F602	78	9'-6"	Str.

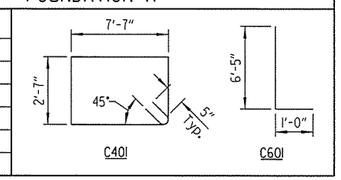

NOTE: Dimensions of bars are out-to-out.

STATE OF ARKANSAS LICENSED PROFESSIONAL ENGINEER No. 15902 PRESTON C. CAMPBELL 3-29-16

BRIDGE ENGINEER

SHEET 1 OF 5
DETAILS FOR 60' TO 85'
STEEL OVERHEAD SIGN STRUCTURES
WITH MEDIAN FOUNDATION
BENTON COUNTY
ROUTE SEC.
ARKANSAS STATE HIGHWAY COMMISSION
LITTLE ROCK, ARK.

DRAWN BY: HEW DATE: JUN. 2014 FILENAME: BCA0901_T1.DGN
CHECKED BY: AJK DATE: JUN. 2014 SCALE: NOT TO SCALE
DESIGNED BY: PCC DATE: JUN. 2014
STR. NO. OH-049-04-02 DRAWING NO. 57679A

PCCampbell 3/29/2016 9:03:04 AM
WORKSPACE: AHTD_BridgeGroup
L:\2005\0596180 - AHTD Springdale Bypass\Drawings\BRG\Sign Structure\CA0901\BCA0901xX_T1.dgn
REVISED DATE:

DATE REVISED	DATE FILMED	DATE REVISED	DATE FILMED	FED. ROAD DIST. NO.	STATE	FED. AID PROJ. NO.	SHEET NO.	TOTAL SHEETS
				6	ARK.			
				JOB NO.		CA0901	129	452
				(1)	OH-049-04-02	SIGN STRUCTURE		57679B

(1) Bolts shall be 1" dia. and slotted hole in chord angle 1 1/16" x 2 1/2". Use plate washer on chord angle side.

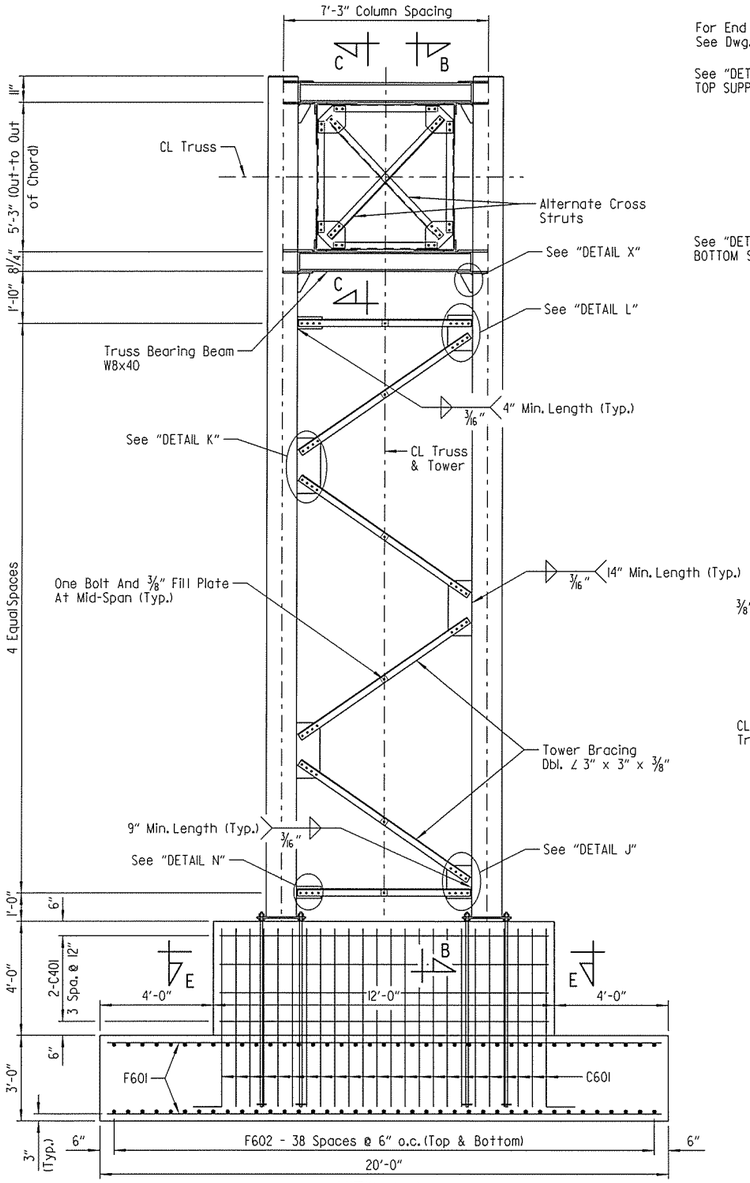

VIEW A-A

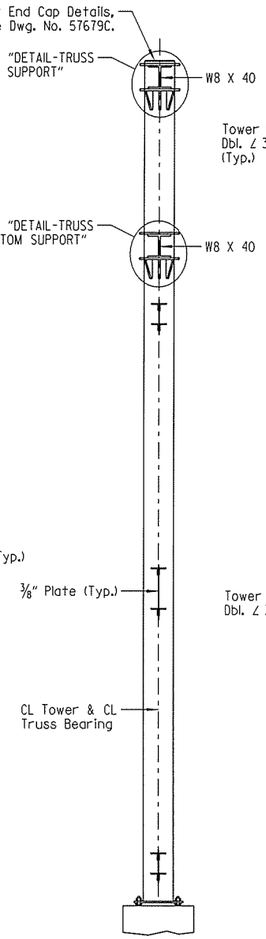

VIEW B-B

Scale: 3/8" = 1'-0"

Note:
For "SECTION E-E", see Dwg. No. 57679C.

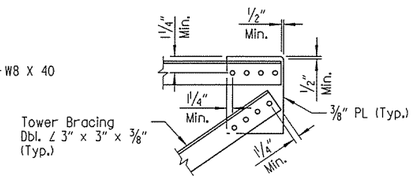

DETAIL L

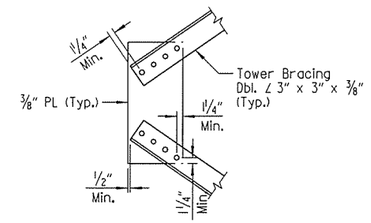

DETAIL K

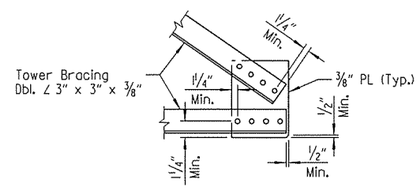

DETAIL J

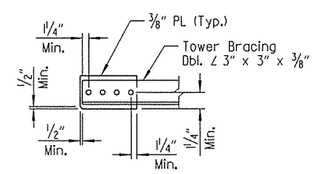

DETAIL N

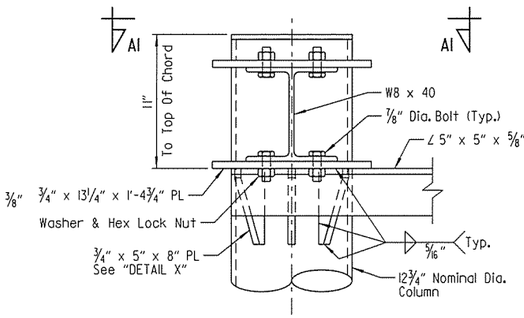

DETAIL - TRUSS TOP SUPPORT

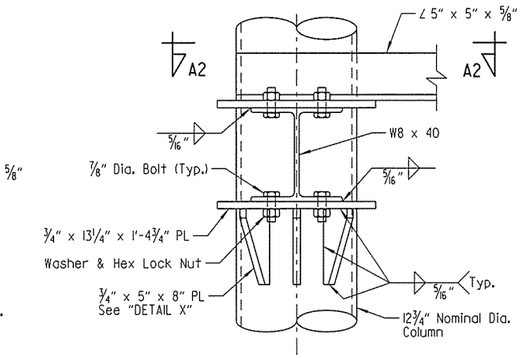

DETAIL - TRUSS BOTTOM SUPPORT

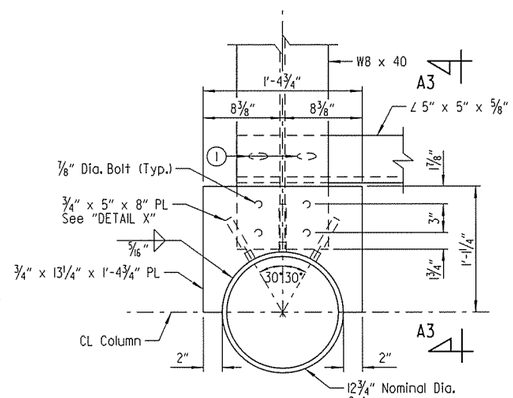

VIEW A1-A1

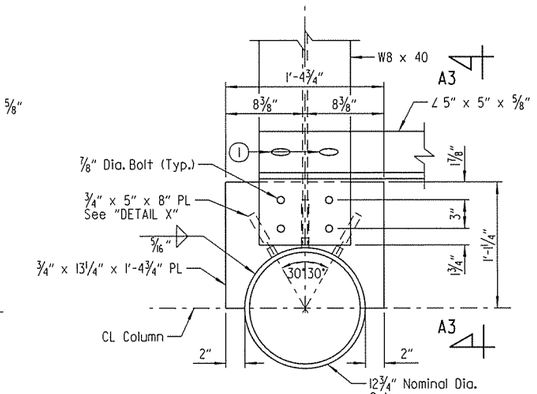

VIEW A2-A2

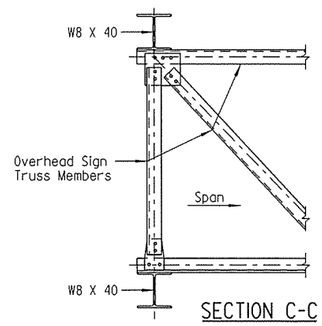

SECTION C-C

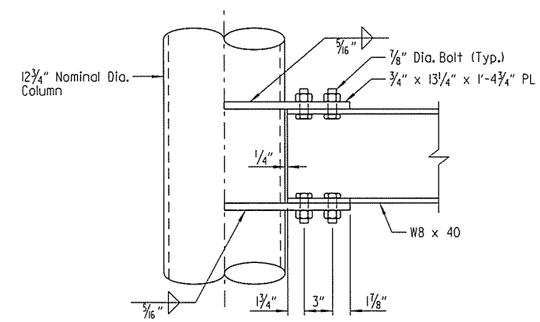

VIEW A3-A3

3/4" x 5" x 8" Plates (Not Shown For Clarity)

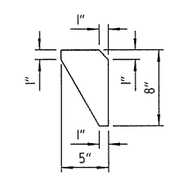

DETAIL X

STATE OF ARKANSAS
LICENSED PROFESSIONAL ENGINEER
No. 15902
3-29-16
PRESTON C. CAMPBELL

BRIDGE ENGINEER

SHEET 2 OF 5
DETAILS FOR 60' TO 85'
STEEL OVERHEAD SIGN STRUCTURES
WITH MEDIAN FOUNDATION
BENTON COUNTY
ROUTE SEC.

ARKANSAS STATE HIGHWAY COMMISSION
LITTLE ROCK, ARK.

DRAWN BY: HEW DATE: JUN. 2014 FILENAME: BCA0901_T2.DGN
CHECKED BY: AJK DATE: JUN. 2014 SCALE: NOT TO SCALE
DESIGNED BY: PCC DATE: JUN. 2014
STR. NO. OH-049-04-02 DRAWING NO. 57679B

PCCampbell 3/29/2016 9:03:04 AM
WORKSPACE: AHTD Bridge
L:\2005\059116B0 - AHTD Springdale Bypass\Drawings\BRG\Sign Structure\CA0901\BCA0901kX_T2.dgn
REVISED DATE:

DATE REVISED	DATE FILMED	DATE REVISED	DATE FILMED	FED. ROAD DIST. NO.	STATE	FED. AID PROJ. NO.	SHEET NO.	TOTAL SHEETS
				6	ARK.			
				JOB NO.		CA0901	130	452
				(1) OH-049-04-02		SIGN STRUCTURE		57679C

(1) Bolts shall be 1" dia. and slotted holes in gusset plate and chord angle 11/16" x 2½".
Use plate washer on gusset plate side.

NOTE:
Thickness of all gusset plates shall be ⅜".

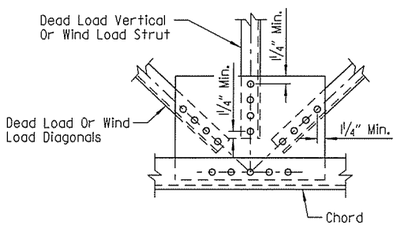

DETAIL A

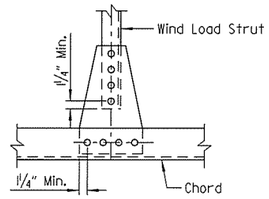

DETAIL B

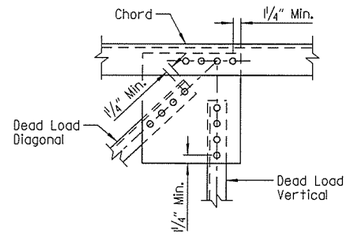

DETAIL C

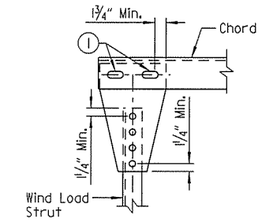

DETAIL D

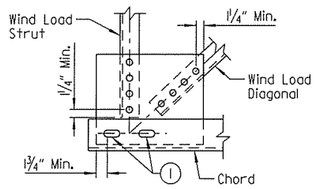

DETAIL E

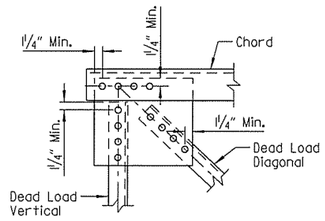

DETAIL F

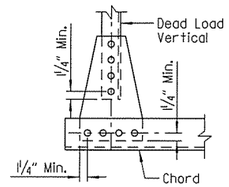

DETAIL G

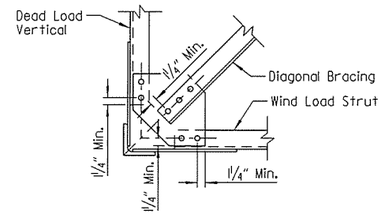

DETAIL M

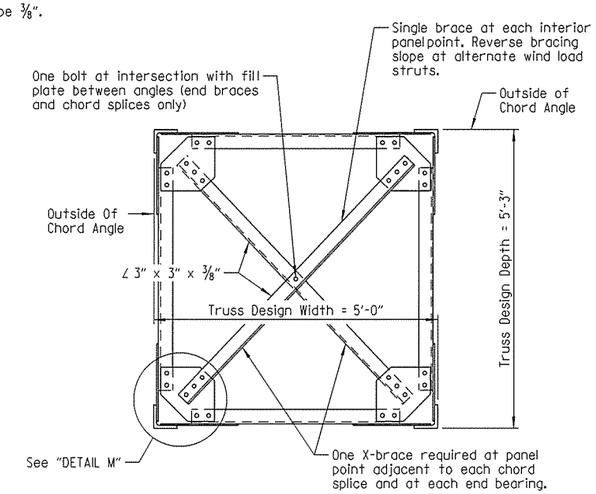

TRUSS SECTION

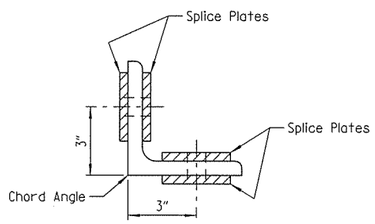

SECTION ON CL SPLICE

(2) Bolts shall be ¾" Dia. and open holes shall be 11/16". Minimum spacing shall be 2¼".

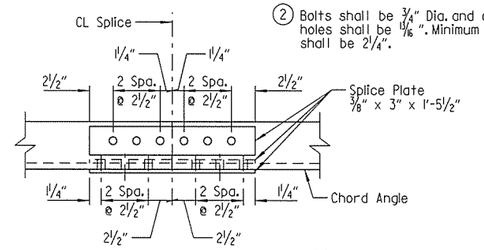

CHORD SPLICE USING PLATE (2)

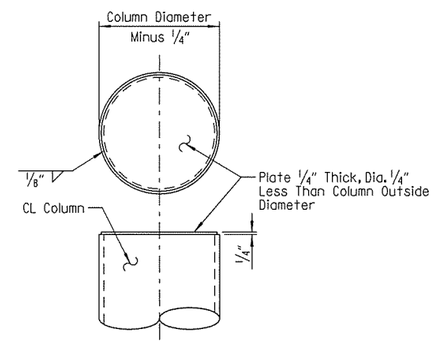

END CAP DETAILS

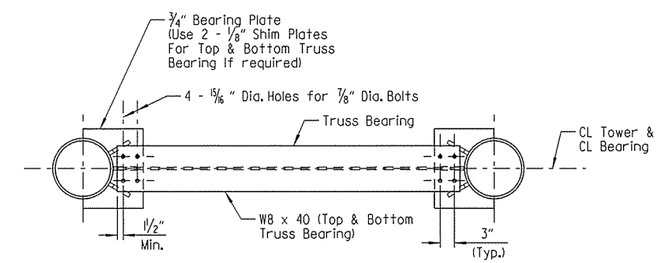

PLAN AT TRUSS BEARING

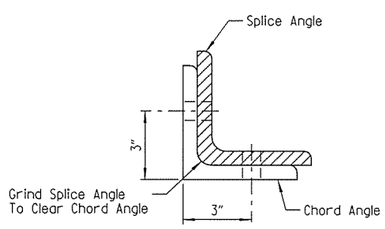

SECTION ON CL SPLICE

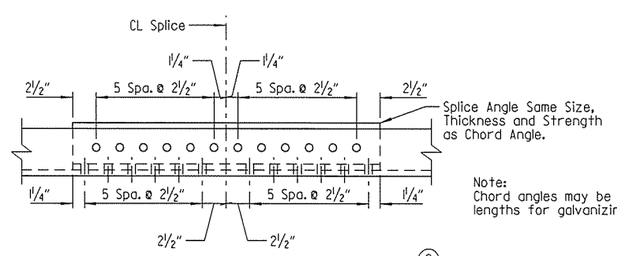

OPTIONAL CHORD SPLICE USING ANGLES (2)

Place Splice Angle on Inside of Truss

Note:
Chord angles may be spliced in convenient lengths for galvanizing and sign placement.

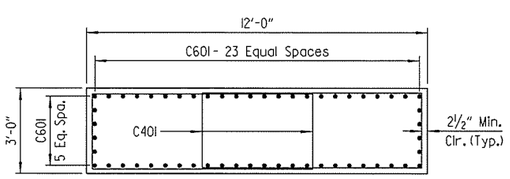

SECTION E-E

STATE OF ARKANSAS
LICENSED PROFESSIONAL ENGINEER
No. 15902
PRESTON C. CAMPBELL
3-28-16

BRIDGE ENGINEER

SHEET 3 OF 5
DETAILS FOR 60' TO 85'
STEEL OVERHEAD SIGN STRUCTURES
WITH MEDIAN FOUNDATION
BENTON COUNTY

ROUTE SEC.

ARKANSAS STATE HIGHWAY COMMISSION

LITTLE ROCK, ARK.

DRAWN BY: HEW DATE: JUN. 2014 FILENAME: BCA0901_T3.DGN
CHECKED BY: AJK DATE: JUN. 2014 SCALE: NOT TO SCALE
DESIGNED BY: PCC DATE: JUN. 2014
STR. NO. OH-049-04-02 DRAWING NO. 57679C

PCCampbell 3/29/2016 9:03:04 AM
WORKSPACE: AHTD Bridge
L:\2005\0591680 - AHTD Springdale Bypass\Drawings\BRG\Sign Structure\CA0901\BCA0901xx_T3.dgn
REVISED DATE:

DATE REVISED	DATE FILMED	DATE REVISED	DATE FILMED	FED. ROAD DIST. NO.	STATE	FED. AID PROJ. NO.	SHEET NO.	TOTAL SHEETS
				6	ARK.			
				JOB NO.		CA0901	131	452
				(1) OH-049-04-02		SIGN STRUCTURE		57679D

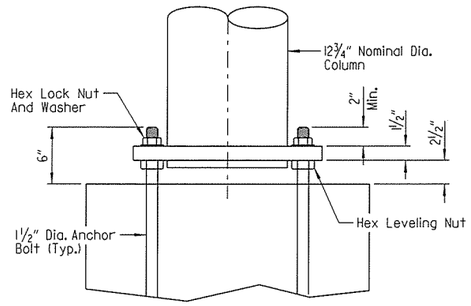

ELEVATION - COLUMN BASE

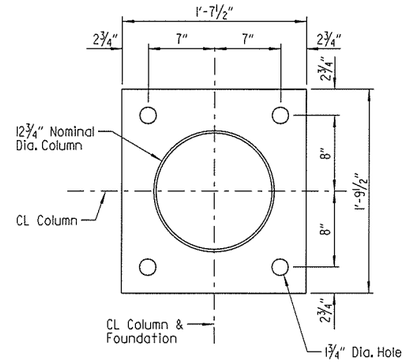

PLAN - COLUMN BASE

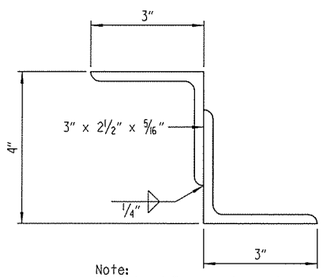

Note:
Structural Z support may be fabricated from angles as shown.

DETAILS OF ALTERNATE Z SUPPORT

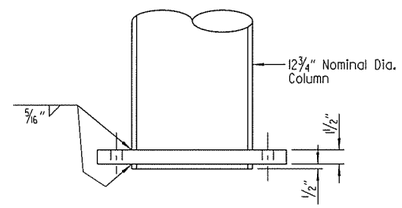

Note:
Diameter of hole in base plate to be ⅛" larger than column diameter.

DETAIL OF COLUMN CONNECTION TO BASE PLATE

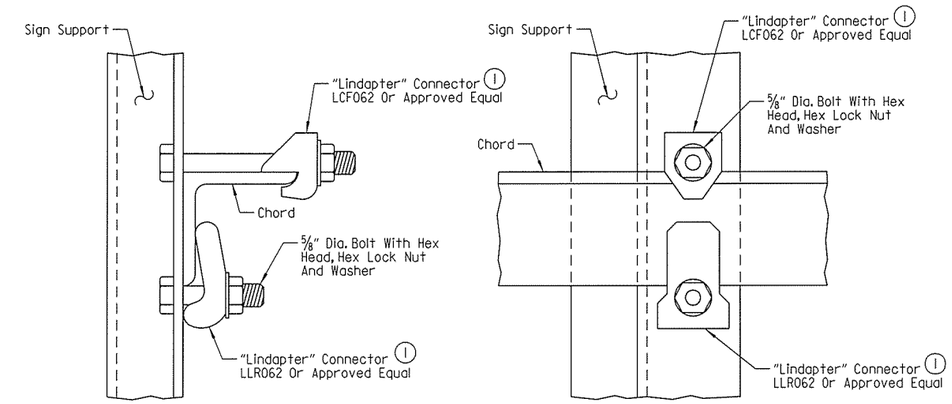

TOP CHORD

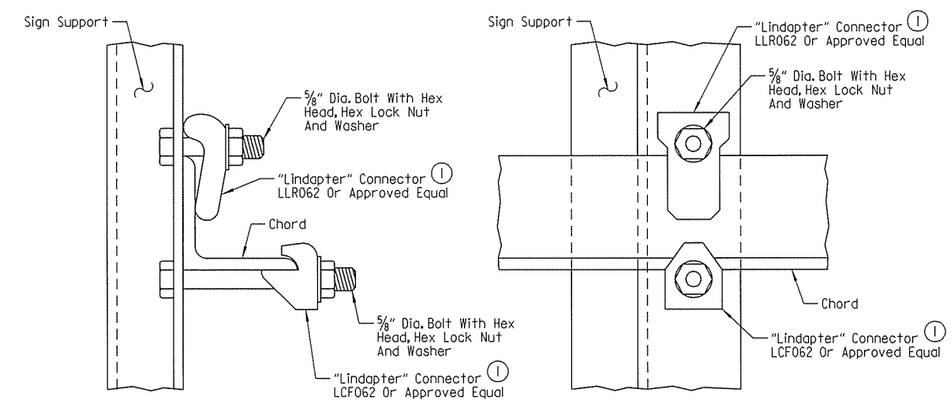

BOTTOM CHORD

(1) Note:
All "Lindapter" connectors or approved equal shall be installed according to manufacturer's recommendations. All connectors, bolts, nuts and washers shall be galvanized.

Note:
Install all support connectors clear of the gusset plates and splice locations.

DETAILS OF SIGN SUPPORT CONNECTED TO TRUSS

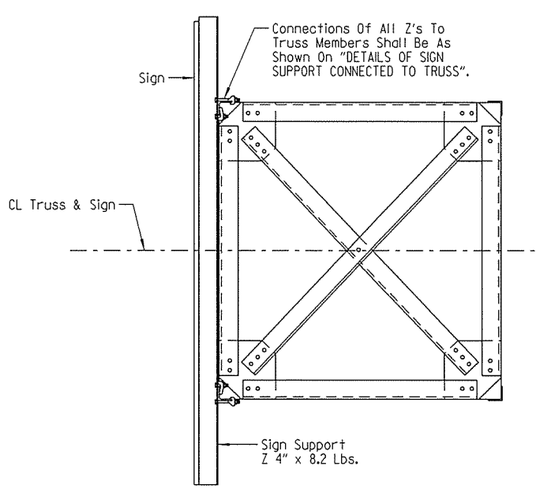

SECTION THRU TRUSS

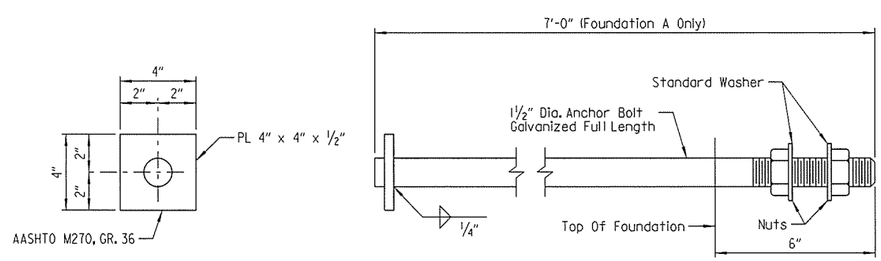

Anchor bolts shall comply with AASHTO M34, Grade 55. with Supplementary Requirement S1and galvanized according to Section 807.07. Nuts for bolts shall be as specified in Section 807.07.

ANCHOR BOLT DETAIL

STATE OF ARKANSAS
LICENSED PROFESSIONAL ENGINEER
No. 15902
3-31-16
PRESTON C. CAMPBELL

BRIDGE ENGINEER

SHEET 4 OF 5
DETAILS FOR 60' TO 85'
STEEL OVERHEAD SIGN STRUCTURES
WITH MEDIAN FOUNDATION
BENTON COUNTY
ROUTE SEC.

ARKANSAS STATE HIGHWAY COMMISSION
LITTLE ROCK, ARK.

DRAWN BY: HEW DATE: JUN. 2014 FILENAME: BCA0901_T4.DGN
CHECKED BY: AJK DATE: JUN. 2014 SCALE: NOT TO SCALE
DESIGNED BY: PCC DATE: JUN. 2014
STR. NO. OH-049-04-02 DRAWING NO. 57679D

PCCampbell 3/29/2016 9:03:04 AM
WORKSPACE: AHTD Bridge
L:\2005\05916180 - AHTD Springdale Bypass\Drawings\BRG\Sign Structure\CA0901\BCA0901xx_T4.dgn
REVISED DATE:

DATE REVISED	DATE FILMED	DATE REVISED	DATE FILMED	FED. ROAD DIST. NO.	STATE	FED. AID PROJ. NO.	SHEET NO.	TOTAL SHEETS
				6	ARK.			
				JOB NO.		CA0901	132	452

(1) OH-049-04-02 SIGN STRUCTURE 57679E

GENERAL NOTES:

CONSTRUCTION SPECIFICATIONS: Arkansas State Highway and Transportation Department Standard Specifications for Highway Construction, 2014 Edition, with applicable supplemental specifications and special provisions. Section and subsection refer to the Standard Construction Specifications unless otherwise noted in the plans.

DESIGN SPECIFICATIONS: AASHTO Standard Specifications for Structural Supports for Highway Signs, Luminaires and Traffic Signals, Sixth Edition, 2013 with current Interim Revisions.

Basic Wind Speed = 90 mph.
Fatigue Category: I

This structure is approved for a maximum sign area equal to 75% of the span length times a sign height of 15 feet with a weight of 2.5 lbs. per sq. foot and an additional load of 1200 lbs. for a Variable Message Sign panel when required under this contract or for future installation. Use of additional sign area must be approved by the Engineer. If the structure height ("H1" or "H2") exceeds 30'-0" contact the Engineer.

FOUNDATION MATERIALS AND STRENGTHS:

Class S Concrete	f'c = 3,500 psi
Reinforcing Steel (Grade 60, AASHTO M 31 or M 322, Type A)	fy = 60,000 psi

Structural steel sign support members shall comply with the following specifications:

(1) Angles:	AASHTO M 270, Grade 36 (Fy = 36,000 psi)
Plate, W-Section:	AASHTO M 270, Grade 50 (Fy = 50,000 psi)
Pipe:	ASTM A 139, Gr. C, straight-seam welded (Fy = 42,000 psi)
	ASTM A 500, Gr. B (Fy = 42,000 psi)
	ASTM A 501, Gr. B (Fy = 50,000 psi)
	ASTM A 714, Class 2, Grade II, Type E or S (Fy = 50,000 psi)
Z-Shapes:	AASHTO M 270, Grade 36 (Fy = 36,000 psi)
Shim Plates:	ASTM A 1011, SS, Grade 36, Type 2 or Grade 40
Bolts:	ASTM A 325, Type 1
Locknuts - Approved Type:	Meeting or exceeding AASHTO M 292
Washers:	ASTM F 436
Nuts:	ASTM A 563 or AASHTO M 292, Grade DH or Grade 2H

The Contractor shall make check measurements in the field and make any adjustments necessary to meet the required clearences and to fit the new structure to the existing conditions.

Drawings show general features of design only. Shop drawings shall be made in accordance with Subsection 807.04, submitted and approval secured before fabrication is begun.

Requests for substitution of structural steel shapes shown with shapes of greater size must be submitted by the Contractor to the Engineer for approval. Steels of equal or greater strengths will be accepted only when shown on the approved shop drawings. Shapes and materials shown in the plans will be the basis of payment and no additional compensation will be made for any adjustments due to substitutions.

All steel shall be galvanized according to Subsection 807.19. Steel completely encased in concrete may not be galvanized. Galvanized coating damaged during transport, handling or erection shall be field repaired in accordance with Subsection 807.88.

All main load carrying tension members greater than 1/2" in thickness shall confrom to the requirements of the Longitudinal Charpy V-Notch test specified for Zone 1 minimum service temperature. This work and materials shall be paid for in accordance with SP Job No. CA0901 "STEEL SIGN STRUCTURE".

Field splices shall be located in order to avoid sign panel connections. There shall be a maximum of two field splices and they shall be spaced a minimum of 15' apart.

Truss field sections shall be shop assembled. Entire truss shall be fully assembled and lifted into place as one unit on to tower supports. All truss member connections shall be bolted connections.

All welding that is to be done during fabrication of structural steel, including temporary welds, shall be detailed on the shop drawings and submitted for approval. If additional welds are required, wether temporary or permanent, a formal request with detailed drawings shall be subnitted to the Engineer for approval. All welding shall conform to Subsection 807.26.

No circumferential butt welds will be allowed in any pipe sections.

All fillet welds of critical members shall be tested according to AWS D1.1 Structural Welding Code - Steel using the magnetic particle method. Critical welds shall include: column to base plate and truss bottom support to column.

Connections shall be bolted with high-strength bolts. Unless otherwise noted, bolts shall be 3/4" diameter and open holes shall be 13/16". Bolt spacing shall be 2 1/2" for 3/4" diameter bolts unless otherwise noted. Bolts shall be placed with heads on the outside face of all members.

All truss frame bolts shall comply with AASHTO M 164 Type 1, galvanized according to Subsection 807.06. Nuts and washers for AASHTO M 164 Type 1 bolts shall be furnished and galvanized in accordance with Subsection 807.06.

Lock nuts to be equipped with nylon locking inserts or other approved type locking system. Lock nuts to be installed according to manufacturer's recommendations.

Anchor bolts shall comply with AASHTO M 314, Grade 55 including Supplementary Requirement S1, and galvanized according to Subsection 807.07. Nuts and washers for anchor bolts shall be furnished and galvanized in accordance with Subsection 807.07.

Shoring may be required to protect existing shoulders during excavation. Any shoring required shall not be paid for directly, but shall be considered incidental to the item "STEEL OVERHEAD SIGN STRUCTURE". The excavations for the footings shall be backfilled before the structure is attached to the foundations.

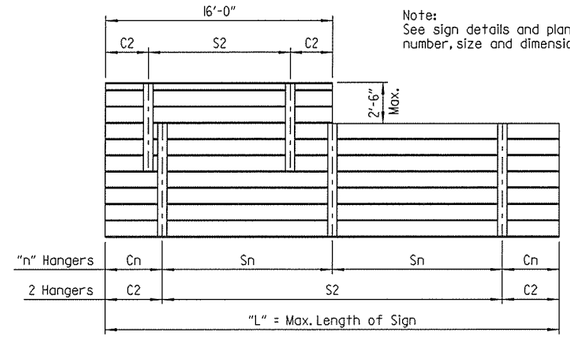

Note:
See sign details and plan sheets for number, size and dimensions of signs.

HANGER SPACING DETAILS FOR EXTRUDED PANEL SIGNS

(1) In addition to material requirements all pipe used for welded applications shall have a maximum carbon equivalency (CE) of 0.4 using the following equation: CE = %C + %Mn/6 + %Cu/40 + %Ni/20 + %Cr/10 - %Mo/50 - %V/10

HANGER VARIABLES			
Max. Length of Sign = "L"	"n" Hangers	Cantilever Length "Cn"	Hanger Spacing "Sn"
15'-0"	2 Hangers	0.21 x "L"	0.58 x "L"
30'-0"	3 Hangers	0.145 x "L"	0.355 x "L"
45'-0"	4 Hangers	0.107 x "L"	0.262 x "L"

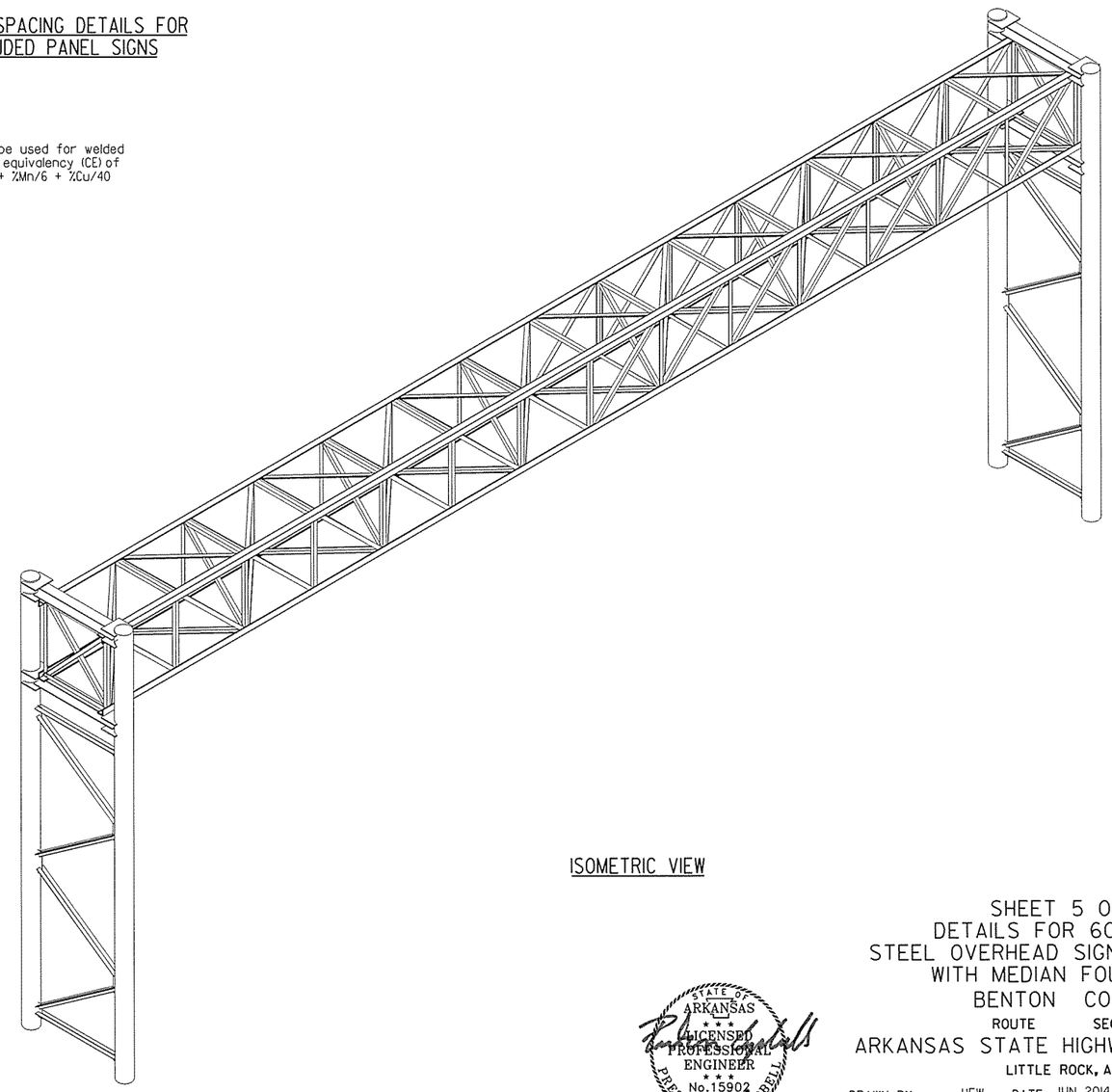

ISOMETRIC VIEW

STATE OF ARKANSAS
LICENSED PROFESSIONAL ENGINEER
No. 15902
3-29-16
PRESTON C. CAMPBELL

BRIDGE ENGINEER

SHEET 5 OF 5
DETAILS FOR 60' TO 85'
STEEL OVERHEAD SIGN STRUCTURES
WITH MEDIAN FOUNDATION
BENTON COUNTY
ROUTE SEC.

ARKANSAS STATE HIGHWAY COMMISSION
LITTLE ROCK, ARK.

DRAWN BY: HEW DATE: JUN. 2014 FILENAME: BCA0901_T5.DGN
CHECKED BY: AJK DATE: JUN. 2014 SCALE: NOT TO SCALE
DESIGNED BY: PCC DATE: JUN. 2014
STR. NO. OH-049-04-02 DRAWING NO. 57679E

PCCampbell 3/29/2016 9:03:05 AM
WORKSPACE: AHTD Bridge
L:\2005\05916B0 - AHTD Springdale Bypass\Drawings\BRG\Sign Structure\CA0901\BCA0901xx_T5.dgn
REVISED DATE:

Crafton, Tull & Associates Inc.	DATE REVISED	DATE FILMED	DATE REVISED	DATE FILMED	FED.RD. DIST.NO.	STATE	FED.AID PROJ.NO.	SHEET NO.	TOTAL SHEETS
					6	ARK.			
					JOB NO.		CA0901	133	452
					(1) A5956		LAYOUT		57680

For R/W Data, See Roadway Plans.

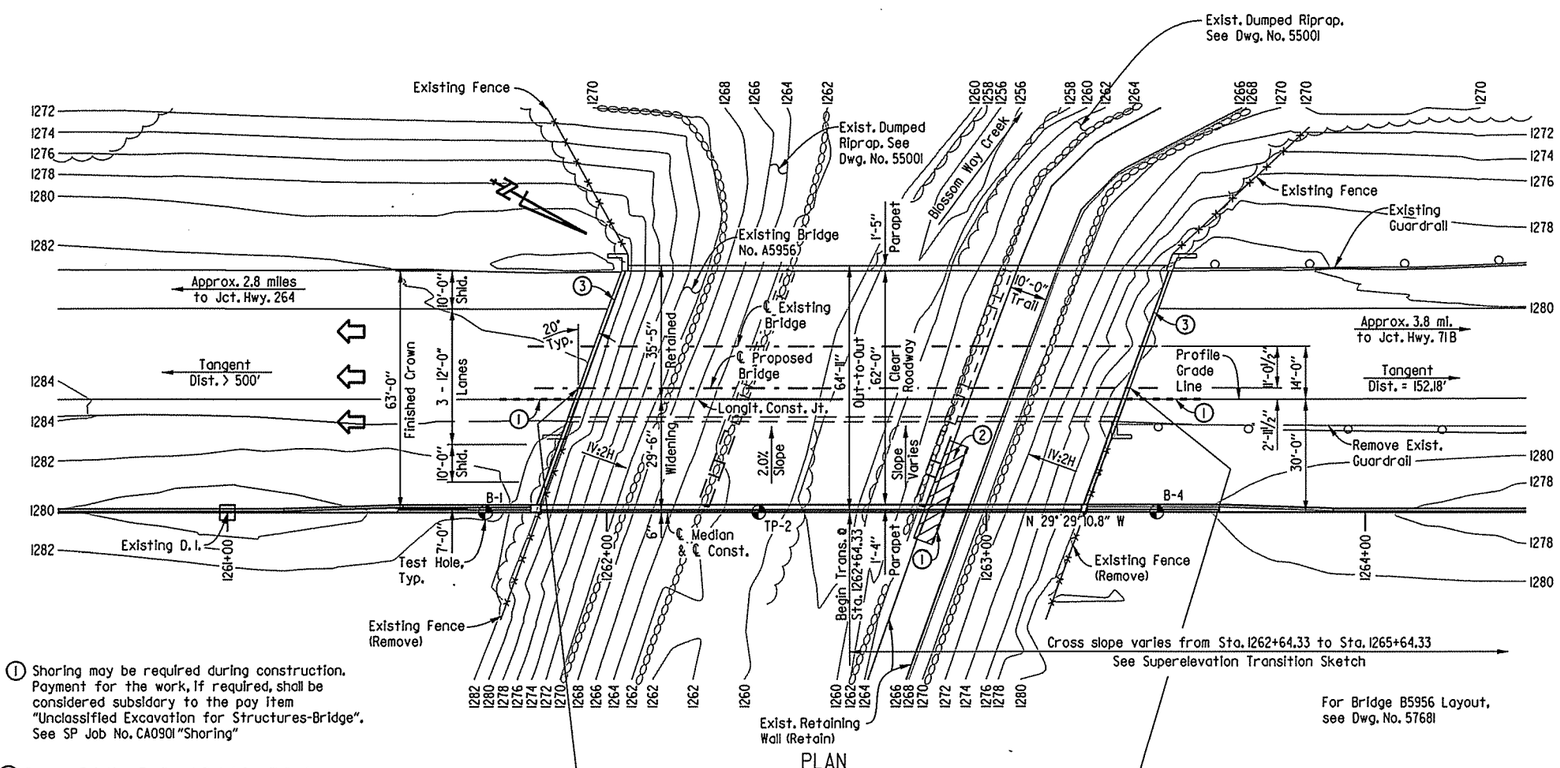

PLAN

For Bridge B5956 Layout, see Dwg. No. 57681

(1) Shoring may be required during construction. Payment for the work, if required, shall be considered subsidary to the pay item "Unclassified Excavation for Structures-Bridge". See SP Job No. CA0901 "Shoring"

(2) Remove Existing Trail and Retaining Walls & Replace with New Trail and Retaining Walls as necessary for Bent construction. Removal shall extend to the location of an existing construction joint. Payment for this work shall be considered subsidiary to the pay item "Modification of Existing Bridge Structure (Br. No. A5956)".

(3) Existing joint shall be modified to accept new silicone sealant.

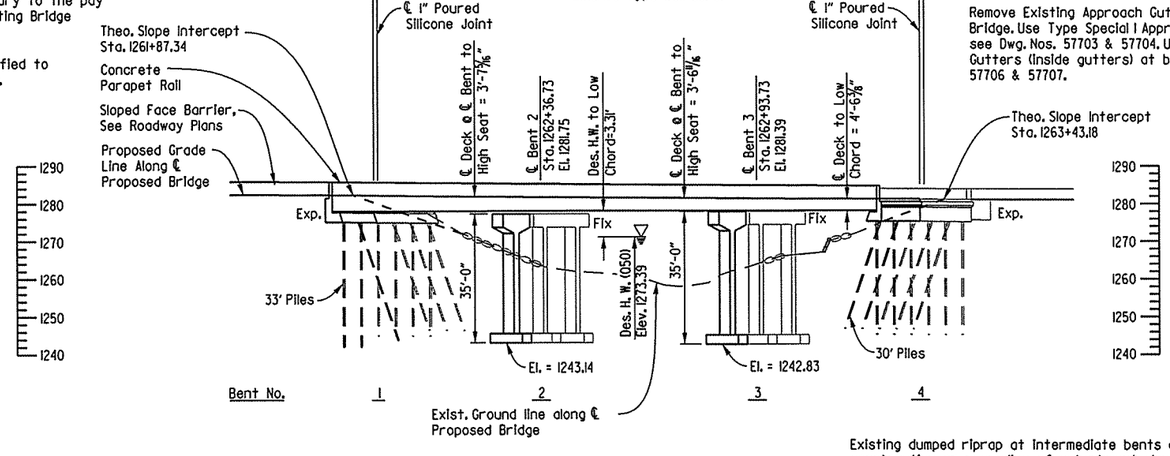

ELEVATION

Remove Existing Approach Gutters (inside gutters) at both ends of Bridge. Use Type Special I Approach Slabs at both ends of Bridge, see Dwg. Nos. 57703 & 57704. Use Type Special I Approach Gutters (inside gutters) at both ends of Bridge, see Dwg. Nos. 57706 & 57707.

Note: Elevations shown are along CL Proposed Bridge.

For Soil Boring Information, see Dwg. No. 57682.

Existing dumped riprap at intermediate bents disturbed during construction or regrading of embankment slopes shall be replaced as directed by the Engineer. This work shall be paid for at the unit price bid for "Dumped Riprap". Filter blanket disturbed shall be replaced and paid for under the item "Filter Blanket". Quantities of dumped riprap and filter blanket are estimated. Actual quantities shall be determined in the field.

GENERAL NOTES

BENCH MARK: BM 6973 67.06' RT. of Sta. 1261+55.49, Elev. 1281.82

CONSTRUCTION SPECIFICATIONS: Arkansas State Highway and Transportation Department Standard Specifications for Highway Construction (2014 edition) with applicable Supplemental Specifications and Special Provisions. Section and Subsection refer to the Standard Construction Specifications unless otherwise noted in the Plans.

DESIGN SPECIFICATIONS: AASHTO LRFD Bridge Design Specifications 6th Edition (2012) with current interim specifications. (New construction only.)

LIVE LOADING: HL-93 SEISMIC PERFORMANCE ZONE: I S_{D1}: 0.052 SITE CLASS: C

MATERIALS AND STRENGTHS:

Class S(AE) Concrete (slab, parapet, diaphragm)	f'c = 4,000 psi
Class S Concrete (prestressed girders)	f'c = 6,000 psi
Class S Concrete (substructure)	f'c = 3,500 psi
Reinforcing Steel (Grade 60 AASHTO M 31 or M 322 Type A)	fy = 60,000 psi
Prestressing Strands (AASHTO M203)	fpu = 270,000 psi
Structural Steel (AASHTO M 270, Gr. 50)	Fy = 50,000 psi
Structural Steel (AASHTO M 270, Gr. 36)	Fy = 36,000 psi

BORING LOGS: Boring logs may be obtained from the Construction Contract Procurement Section of the Program Management Division.

STEEL PILING: All piling shall be HP 12x53 (Gr. 50) and shall be driven with an approved air, steam, or diesel hammer to a minimum safe bearing capacity of 96 tons per pile into the material designated as Moderately Hard to Hard Limestone on the boring legend. Lengths shown are for estimating quantities and for use in determining payment for cut-off and build-up in accordance with the Standard Specifications. Piles in End Bent 1 & 4 to be driven after embankment to bottom of cap is in place. On all piles the contractor shall use approved steel H-Pile driving points.

FOOTINGS: Footings shall be set a minimum of 2'-0" into material designated as Moderately Hard to Hard Limestone on the boring legend and shall have a minimum cover above top of footing of 2'. Foundations for footings shall be prepared in accordance with Subsection 801.04. Rock excavations shall be made to neat lines of the concrete footings. Blasting will not be allowed. Concrete in footings shall be poured directly against excavated surfaces of rock.

BRIDGE DECK: The concrete bridge deck shall be given a tine finish as specified for final finishing in Subsection 802.19 for Class 5 Tined Bridge Roadway Surface Finish.

CLASS 2 PROTECTIVE SURFACE TREATMENT: Class 2 Protective Surface Treatment shall be applied to the roadway surface, including the existing deck surface to be retained, and roadway face and top of parapet rail of the new construction.

DETAIL DRAWINGS:	DRAWING NUMBER
Stage Construction	57683-57684
End Bents	57685-57689
Intermediate Bents	57690-57692
Elastomeric Bearings	57693
Widening Details	57694-57702
Type Special I Approach Slabs	57703-57705
Type Special I Approach Gutters	57706-57707

For Additional General Notes see Sheet No. 57682

HYDRAULIC DATA

FLOOD DESCRIPTION	FREQUENCY	DISCHARGE	*NATURAL W.S. ELEVATION	W.S. ELEVATION W/BACKWATER
	YEARS	CFS	FEET	FEET
DESIGN	50	6,984	1272.02	1273.39
BASE	100	8,057	1272.72	1274.37
EXTREME	500	9,942	1273.85	1275.03
OVERTOPPING	>500	N/A	N/A	N/A

*Unconstricted water surface elevation without structure or roadway approaches.
100 yr. backwater elevation for existing structure = 1274.37 feet
Proposed Low Bridge Chord Elev. = 1276.70 feet (Br. A), 1277.61 feet (Br. B)
Drainage Area = 7.08 sq. miles
Historical H.W. Elev. = Unknown

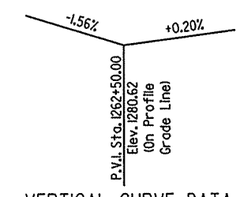

VERTICAL CURVE DATA

500' V.C.
(Bridge A & B)

STATE OF ARKANSAS
REGISTERED PROFESSIONAL ENGINEER
No. 15634
JOSE K. JOSEPH
3/8/16

SHEET 1 OF 3

LAYOUT OF BRIDGE 'A' OVER
BLOSSOM WAY CREEK
HWY. 264 - NEW HOPE RD. (WIDENING) (S)
BENTON COUNTY
ROUTE 49 SEC. 29
ARKANSAS STATE HIGHWAY COMMISSION
LITTLE ROCK, ARK.

DRAWN BY: BWC	DATE: 11-07-13	FILENAME: bca0901a1_11.dgn	
CHECKED BY: KJC	DATE: 01-12-15	SCALE: 1" = 20'	
DESIGNED BY: JKJ	DATE: 10-23-13		

BRIDGE NO. A5956 DRAWING NO. 57680

USER: lw7300
DESIGN FILE: G:\3106100_2641toNHope\TRANSP\dgn\bridge\bca0901a1_11.dgn
PLOTTED: 3/8/2016 10:03 SCALE: 40:1

Crafton, Tull & Associates Inc.	DATE REVISED	DATE FILMED	DATE REVISED	DATE FILMED	FED.RD. DIST.NO.	STATE	FED.AID PROJ.NO.	SHEET NO.	TOTAL SHEETS
					6	ARK.			
					JOB NO.		CA0901	134	452
					(1) B5956		LAYOUT		57681

For R/W Data, See Roadway Plans.

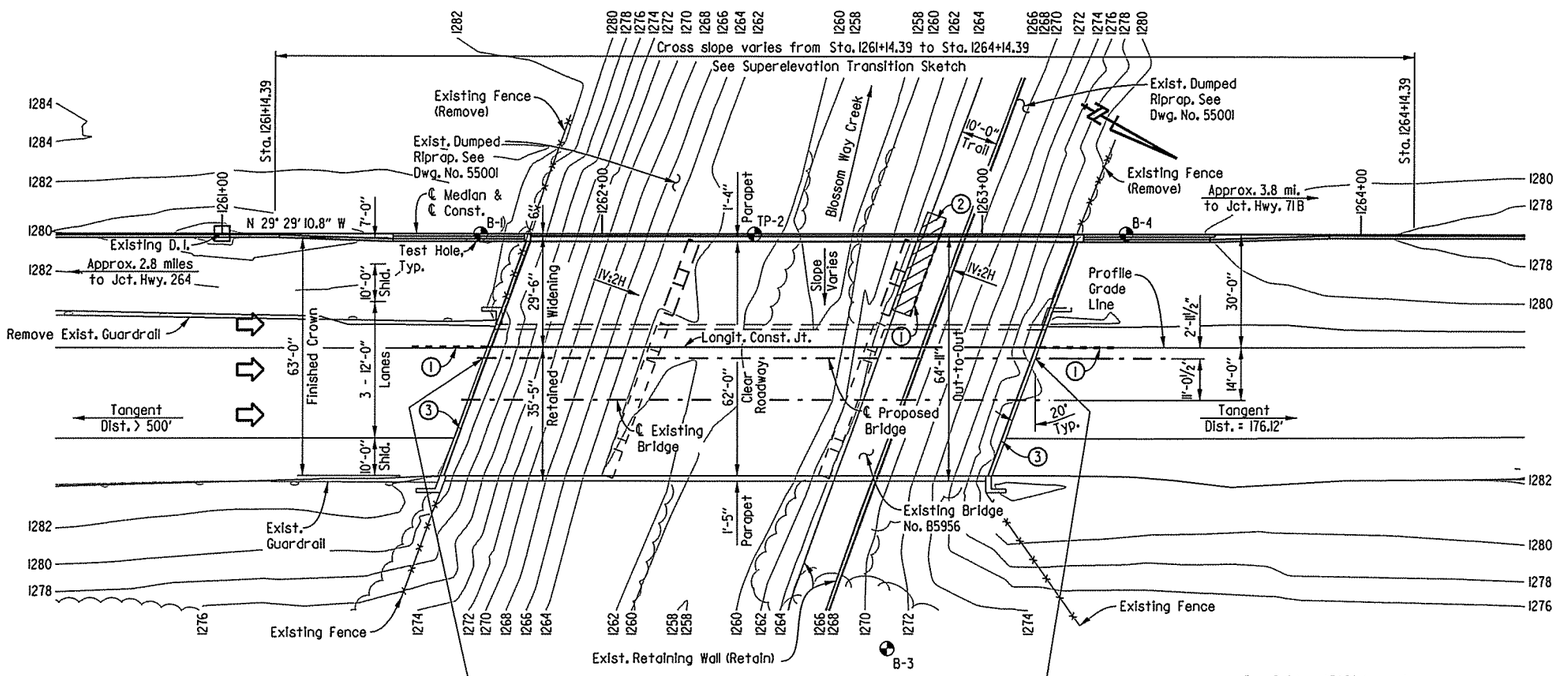

PLAN

For Bridge A5956 Layout, see Dwg. No. 57680

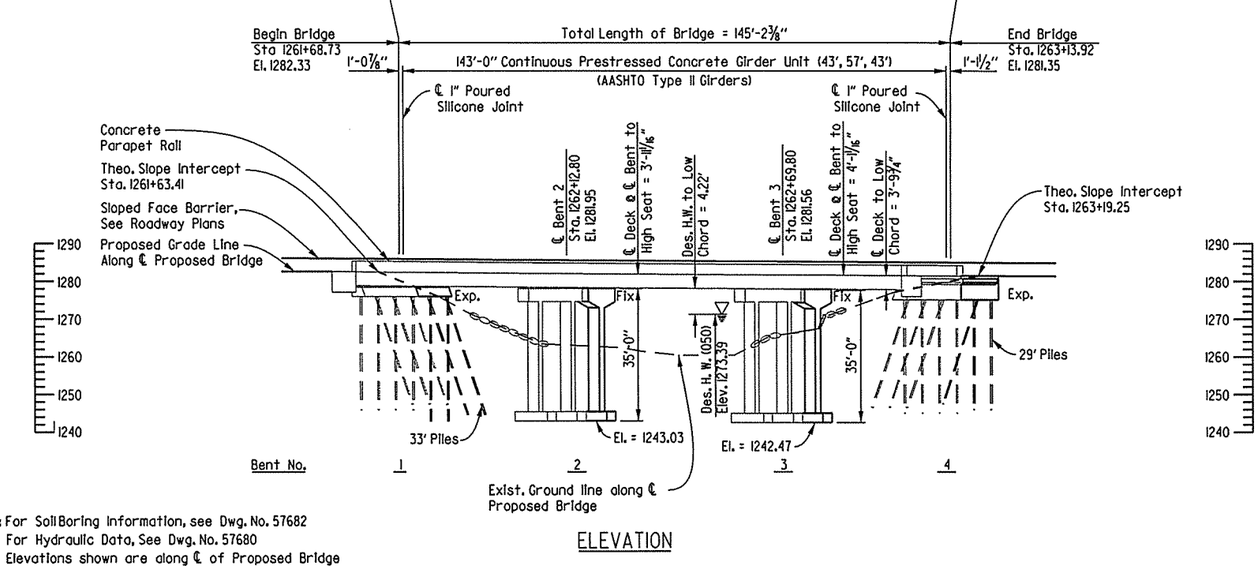

ELEVATION

Note: For Soil Boring Information, see Dwg. No. 57682
For Hydraulic Data, See Dwg. No. 57680
Elevations shown are along ℄ of Proposed Bridge

(1) Shoring may be required during construction. Payment for the work, if required, shall be considered subsidary to the pay item "Unclassified Excavation for Structures-Bridge". See SP Job No. CA0901 "Shoring"

(2) Remove Existing Trail and Retaining Walls & Replace with New Trail and Retaining Walls as necessary for Bent construction. Removal shall extend to the location of an existing construction joint. Payment for this work shall be considered subsidary to the pay item "Modification of Existing Bridge Structure (Br. No. B5956)".

(3) Existing joint shall be modified to accept new silicone sealant.

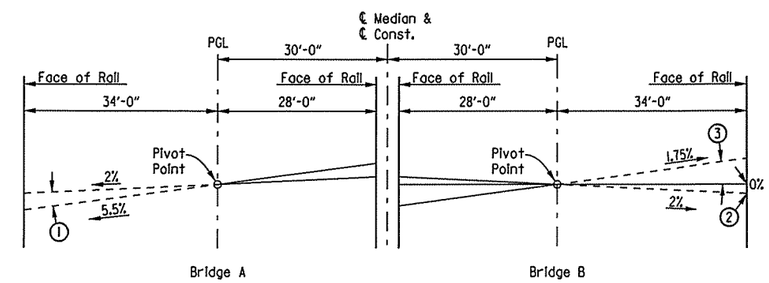

(4) SUPERELEVATION TRANSITION SKETCH

For additional Superelevation Transition details, see Existing Plans.

(1) Cross slope varies from -2% (Sta. 1262+64.33) to -5.5% (Sta. 1265+64.33)

(2) Cross slope varies from -2% (Sta. 1261+14.39) to 0% (Sta. 1263+33.49)

(3) Cross slope varies from 0% (Sta. 1263+33.49) to +1.75% (Sta. 1264+14.39)

(4) S.E. Transition Sketch based on existing plans. Contractor shall verify.

Remove Existing Approach Gutters (inside gutters) at both ends of Bridge. Use Type Special Approach Slabs at both ends of Bridge, see Dwg. Nos. 57703 & 57704. Use Type Special Approach Gutters (inside gutters) at both ends of Bridge, see Dwg. Nos. 57706 & 57707.

Existing dumped riprap at intermediate bents disturbed during construction or regrading of embankment slopes shall be replaced as directed by the Engineer. This work shall be paid for at the unit price bid for "Dumped Riprap". Filter blanket disturbed shall be replaced and paid for under the item "Filter Blanket". Quantities of dumped riprap and filter blanket are estimated. Actual quantities shall be determined in the field.

STATE OF ARKANSAS
Jose K. Joseph
REGISTERED PROFESSIONAL ENGINEER
No. 15634
JOSE K. JOSEPH
3/8/16

SHEET 2 OF 3

LAYOUT OF BRIDGE 'B' OVER BLOSSOM WAY CREEK
HWY. 264 - NEW HOPE RD. (WIDENING) (S)
BENTON COUNTY
ROUTE 49 SEC. 29
ARKANSAS STATE HIGHWAY COMMISSION
LITTLE ROCK, ARK.

DRAWN BY:	BWC	DATE:	11-07-13	FILENAME:	bca0901bl.ll.dgn
CHECKED BY:	KJC	DATE:	01-12-15	SCALE:	1" = 20'
DESIGNED BY:	JKJ	DATE:	10-23-13		

BRIDGE NO. B5956 DRAWING NO. 57681

USER: lw7300
DESIGN FILE: G:\3106100.264toNHope\TRANSP\dgn\bridge\bca0901bl.ll.dgn
PLOTTED: 3/8/2016 10:03 SCALE: 40:1

Crafton, Tull & Associates Inc.	DATE REVISED	DATE FILMED	DATE REVISED	DATE FILMED	FED.RD. DIST.NO.	STATE	FED.AID PROJ.NO.	SHEET NO.	TOTAL SHEETS
					6	ARK.			
					JOB NO.		CA0901	135	452
					(1) A&B5956		LAYOUT		57682

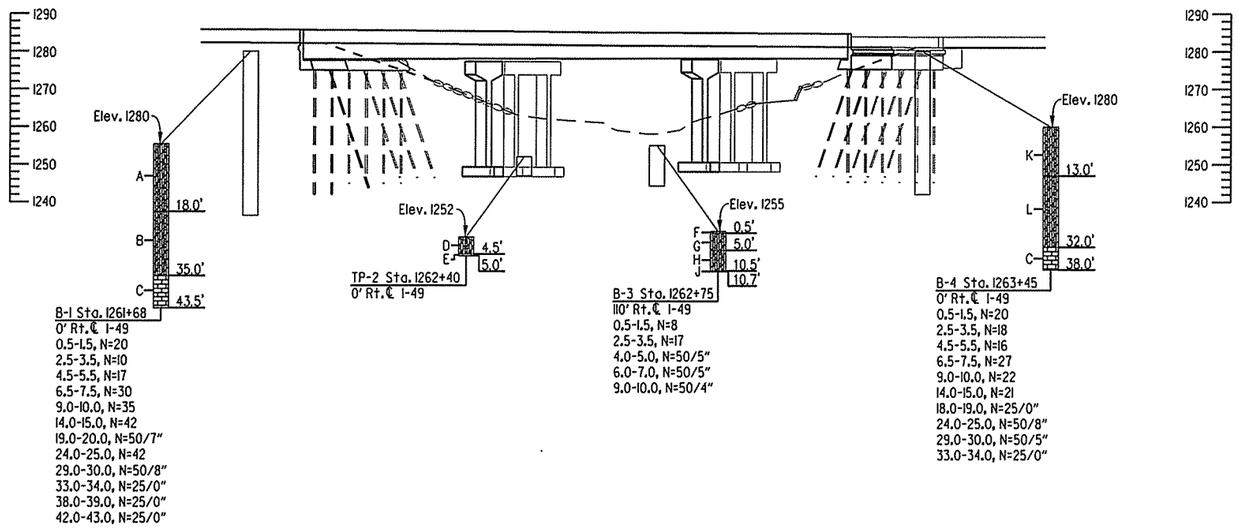

ELEVATION

BORING LEGEND

A. Stiff reddish brown silty CLAY with chert fragments - fill
B. Very stiff reddish brown silty CLAY with chert fragments, cobbles, seams and layers
C. Moderately hard to hard light gray LIMESTONE
D. Stiff reddish brown and gray silty CLAY with chert fragments and cobbles
E. Moderately hard white and gray LIMESTONE, fossiliferous with chert nodules
F. Very loose brown SILT with organics
G. Firm brown and reddish brown silty CLAY with chert fragments
H. Very stiff reddish brown silty CLAY with chert fragments and layers
J. Moderately hard to hard white CHERT, fractured
K. Stiff reddish brown and tan silty CLAY with chert fragments - fill
L. Stiff gray and reddish brown silty CLAY with chert fragments, cobbles, seams, and layers

GENERAL NOTES (Cont'd.)

THE PROPOSED WORK CONSISTS OF: Widening the existing bridge, modifying the existing end bents, constructing new intermediate bents to the median side of existing bents, removing and replacing portions of the concrete deck, removing and replacing portions of the dumped riprap, and replacing the joint seals. For additional requirements in conducting the work, see Section 821.

EXISTING BRIDGE: Existing bridges No. A5956 and B5956 are 42.83' wide and 145.20' long and consists of a 143' continuous prestressed concrete girder unit, multi-column intermediate bents with spread footing, and end bents on steel piles. Plans of the existing bridge may be obtained upon request from the Construction Contract Procurement Section of the Program Management Division.

VERIFICATION: Except as noted, components of the existing bridge are to be retained and joined to the proposed work. Information and dimensions shown are based on existing bridge plans. The Contractor is to adhere strictly to the requirements for verification of the geometry of the existing bridge and its relationship to the proposed work described in Subsection 821.02 and make necessary adjustments to fit the proposed work to the existing structure. Payment for this work shall be considered subsidiary to the pay item "Modification of Existing Bridge Structure (Br. No. A5956)" and "Modification of Existing Bridge Structure (Br. No. B5956)".

REMOVAL AND SALVAGE: All materials removed from the existing bridge under Item 821 shall be disposed of according to Section 205. All material removed from the existing bridge shall become the property of the Contractor.

MAINTENANCE OF TRAFFIC: See Roadway Plans and Special Provisions for more information.

STATE OF ARKANSAS
Jose K. Joseph
REGISTERED PROFESSIONAL ENGINEER
No. 15634
JOSE K. JOSEPH
3/8/16

SHEET 3 OF 3
LAYOUT OF BRIDGES 'A & B' OVER
BLOSSOM WAY CREEK
HWY. 264 - NEW HOPE RD. (WIDENING) (S)
BENTON COUNTY
ROUTE 49 SEC. 29
ARKANSAS STATE HIGHWAY COMMISSION
LITTLE ROCK, ARK.

DRAWN BY: BWC DATE: 11-07-13 FILENAME: bca0901bl_l2.dgn
CHECKED BY: CAW DATE: 01-15-14 SCALE: 1" = 20'
DESIGNED BY: JKJ DATE: 10-23-13
BRIDGE NO. A&B5956 DRAWING NO. 57682

USER: lw7300
DESIGN FILE: G:\13106100_264toNHope\TRANSP\dgn\bridge\bca0901bl_l2.dgn
PLOTTED: 3/8/2016 10:04 SCALE: 40:1

Crafton, Tull & Associates Inc.

DATE REVISED	DATE FILMED	DATE REVISED	DATE FILMED

FED.RD. DIST.NO.	STATE	FED.AID PROJ.NO.	SHEET NO.	TOTAL SHEETS
6	ARK.			
JOB NO.		CA0901	136	452
(1) A&B5956		STAGE CONST.		57683

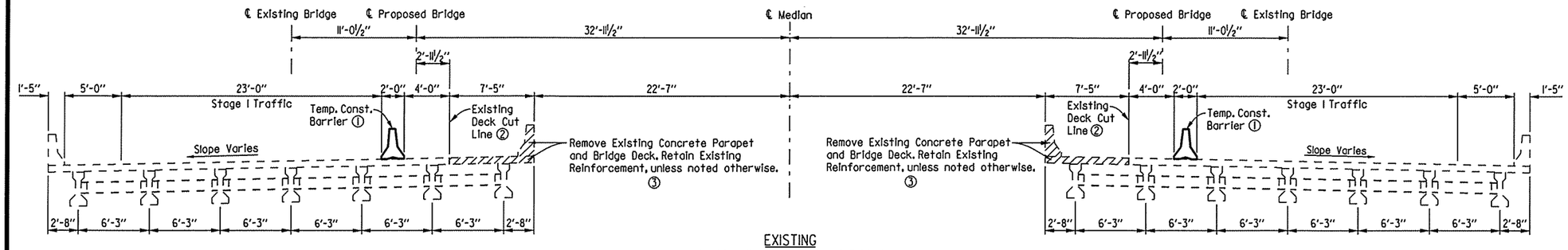

EXISTING
(Looking Ahead at Begin of Bridge)

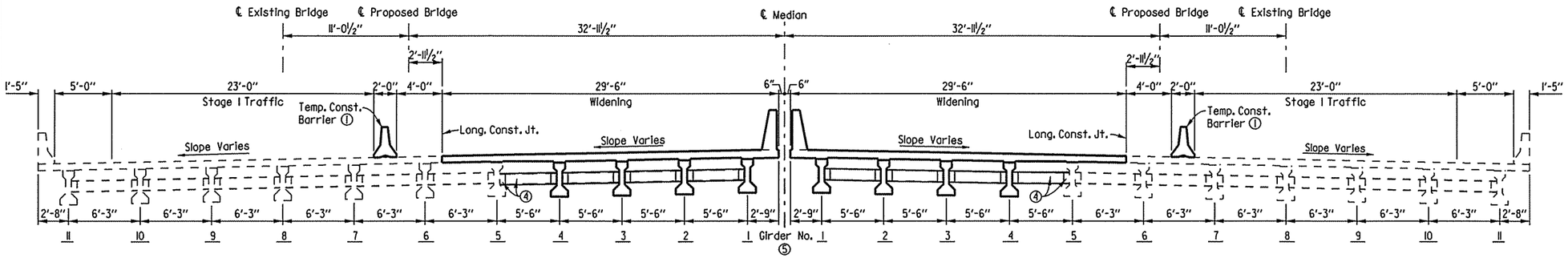

PROPOSED WIDENING
(Looking Ahead at Begin of Bridge)

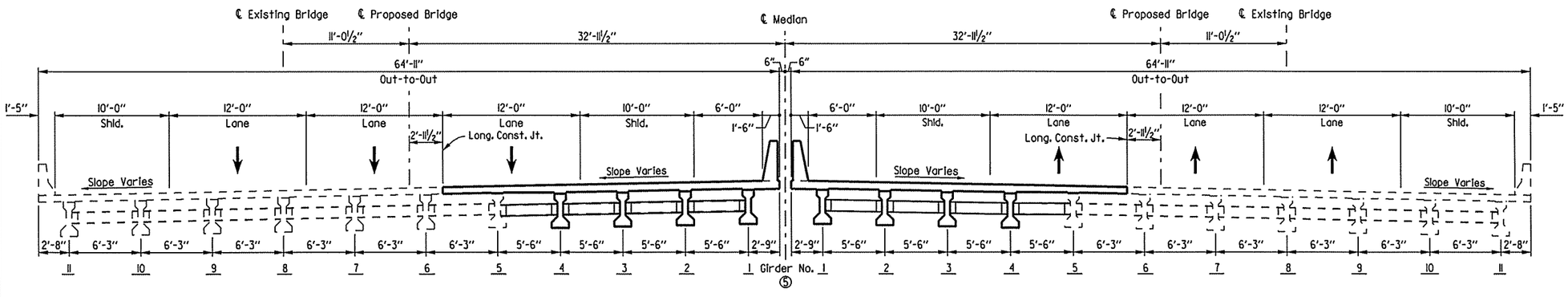

CONSTRUCTION COMPLETE
(Looking Ahead at Begin of Bridge)

SOUTHBOUND BRIDGE A5956

NORTHBOUND BRIDGE B5956

Notes:

① For Details of Temporary Precast Barrier, See Std. Dwg. No. TC-4 (Do not connect to existing Deck).

② Partial Saw Cut Depth. See Section 821.

③ Care shall be exercised during the removal of the existing deck to ensure that the girders, diaphragms, bolted connections and reinforcement are not damaged. Damaged items that are not salvageable as determined by the Engineer, shall be replaced by the Contractor at no additional payment. See Detail Y on Dwg. No. 57694 for more information.

④ Install new diaphragms prior to deck pour. The new connection shall be bolted to the existing girder. Do not tighten the connection bolts on the existing girders until after the parapet has been poured.

⑤ The girder numbers have been renumbered from the original plans to provide consistency to the plan details.

The contractor may propose a different sequence of construction to the Engineer for approval.

Note:
Details related to Maintenance of Traffic are shown on Bridge Plans for information only. For Maintenance of Traffic Plans and additional information, see Roadway Plans.

STATE OF ARKANSAS
Jose K. Joseph 3/8/16
REGISTERED PROFESSIONAL ENGINEER
No. 15634
JOSE K. JOSEPH

SHEET 1 OF 2

DETAILS OF STAGE CONSTRUCTION
BRIDGES 'A & B' OVER BLOSSOM WAY CREEK
HWY. 264 - NEW HOPE RD. (WIDENING) (S)
BENTON COUNTY
ROUTE 49 SEC. 29

ARKANSAS STATE HIGHWAY COMMISSION
LITTLE ROCK, ARK.

DRAWN BY:	LLW	DATE:	11-07-13	FILENAME:	bca090lml_13.dgn
CHECKED BY:	KJC	DATE:	01-12-15	SCALE:	1/8" = 1'-0"
DESIGNED BY:	JKJ	DATE:	10-23-13		

BRIDGE NO. A&B5956 DRAWING NO. 57683

USER: lw7300
DESIGN FILE: G:\13106100_2641toNHope\TRANSP\dgn\bridge\bca090lml_13.dgn
PLOTTED: 3/8/2016 10:04 SCALE: 10.666667:1

Crafton, Tull & Associates Inc.	DATE REVISED	DATE FILMED	DATE REVISED	DATE FILMED	FED.RD. DIST.NO.	STATE	FED.AID PROJ.NO.	SHEET NO.	TOTAL SHEETS
					6	ARK.			
					JOB NO.		CA0901	137	452
					(1) A&B5956		STAGE CONST.		57684

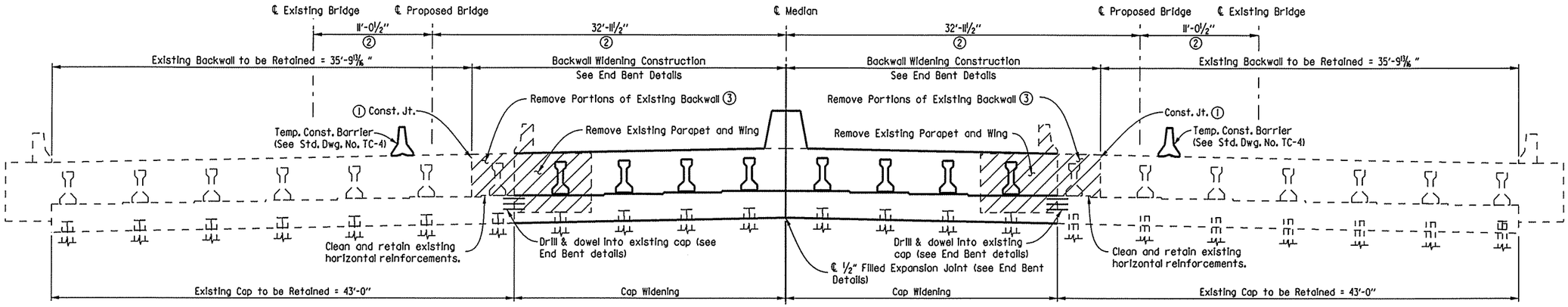

SOUTHBOUND BRIDGE A5956 Bent 4
(Looking Ahead Along ℄ Bent)
Bent 1 Similar

NORTHBOUND BRIDGE B5956 Bent 4
(Looking Ahead Along ℄ Bent)
Bent 1 Similar

(1) Saw cut and remove wing and portions of existing backwall.

(2) Dimensions are measured perpendicular to ℄ Median.

(3) Clean and retain portions of existing reinforcement. See End Bent Details.

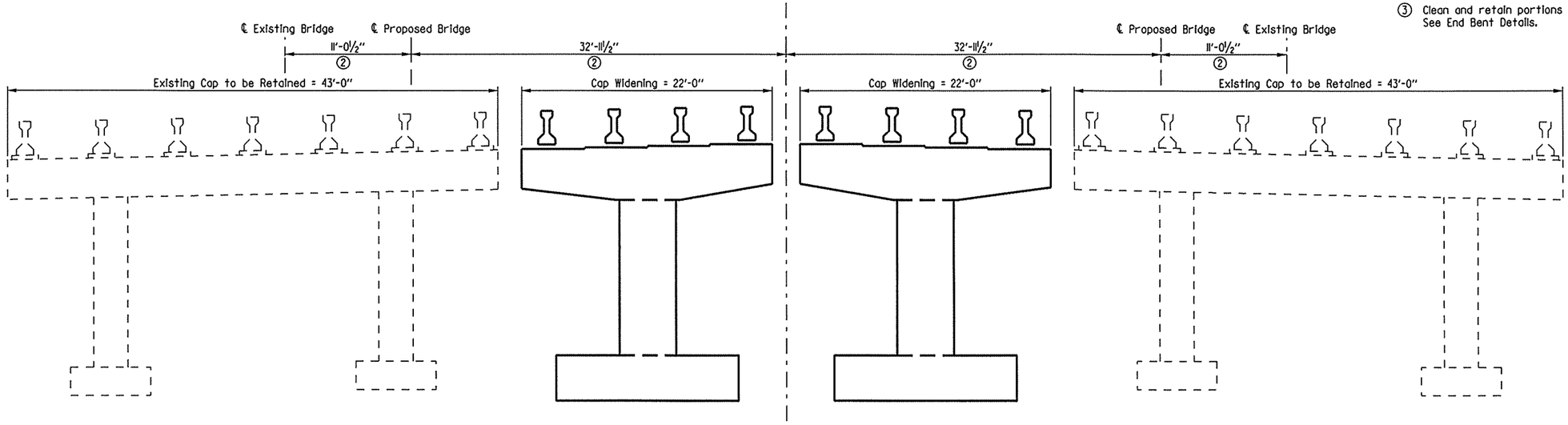

SOUTHBOUND BRIDGE A5956 INT. BTS. 2
(Looking Ahead Along ℄ Bt.)
Bent 3 Similar

NORTHBOUND BRIDGE B5956 INT. BTS. 2
(Looking Ahead Along ℄ Bt.)
Bent 3 Similar

Unless otherwise noted all dimensions shown are along ℄ Bent.

Note: See Dwg. No. 57690 and 57691 for additional details.

STATE OF ARKANSAS
REGISTERED PROFESSIONAL ENGINEER
No. 15634
JOSE K. JOSEPH
3/8/16

SHEET 2 OF 2

DETAILS OF STAGE CONSTRUCTION
BRIDGES 'A & B' OVER BLOSSOM WAY CREEK
HWY. 264 - NEW HOPE RD. (WIDENING) (S)
BENTON COUNTY
ROUTE 49 SEC. 29
ARKANSAS STATE HIGHWAY COMMISSION
LITTLE ROCK, ARK.

DRAWN BY:	LLW	DATE:	11-07-13	FILENAME:	bca090lml_14.dgn
CHECKED BY:	KJC	DATE:	01-12-15	SCALE:	3/16" = 1'-0"
DESIGNED BY:	JKJ	DATE:	10-23-13		

BRIDGE NO. A&B5956 DRAWING NO. 57684

USER: lw7300
DESIGN FILE: G:\1306100.264toNHope\TRANSP\dgn\bridge\bca090lml_14.dgn
PLOTTED: 3/8/2016 10:04 SCALE: 10.6666667:1

Crafton, Tull & Associates Inc.

DATE REVISED	DATE FILMED	DATE REVISED	DATE FILMED

FED.RD. DIST.NO.	STATE	FED.AID PROJ.NO.	SHEET NO.	TOTAL SHEETS
6	ARK.			
JOB NO.		CA0901	138	452

(1) A5956 END BENT 1 57685

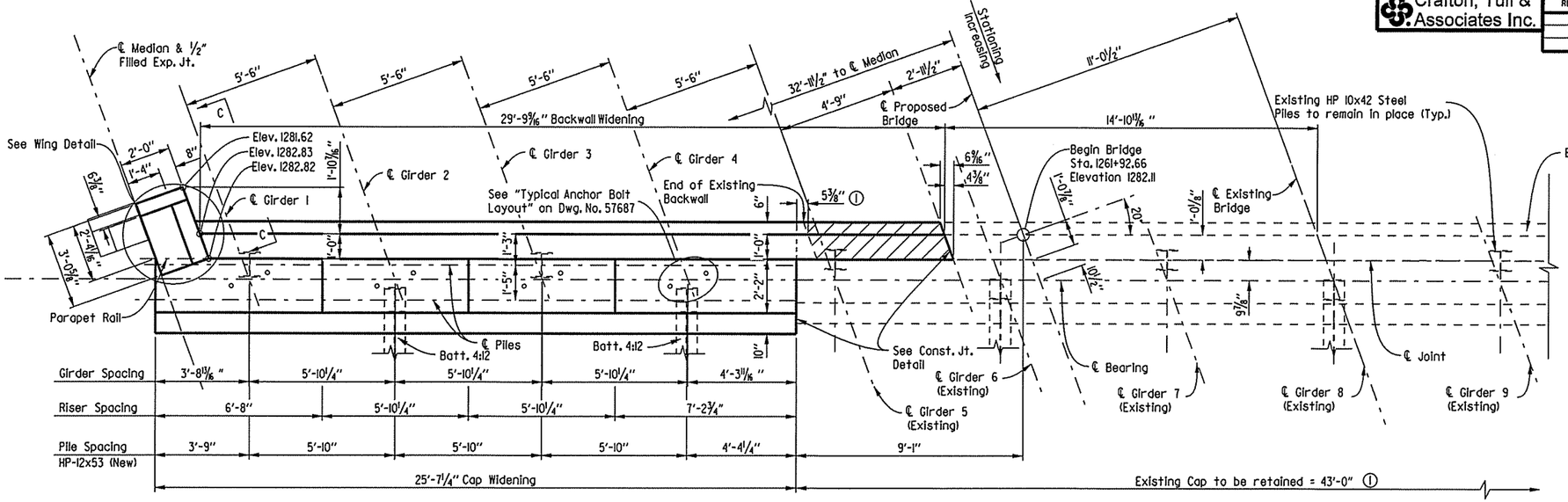

PLAN

Scale: ⅜" = 1'-0"

Note:
Class 2 Protective Surface Treatment shall be applied to the top of the backwall, roadway face and top of parapet rails.

For details of Elastomeric Bearings, See Dwg. No. 57693. For additional details and General Notes, See Dwg. No. 57687.

(1) Based on Existing plans. The Contractor shall verify dimensions in the field.

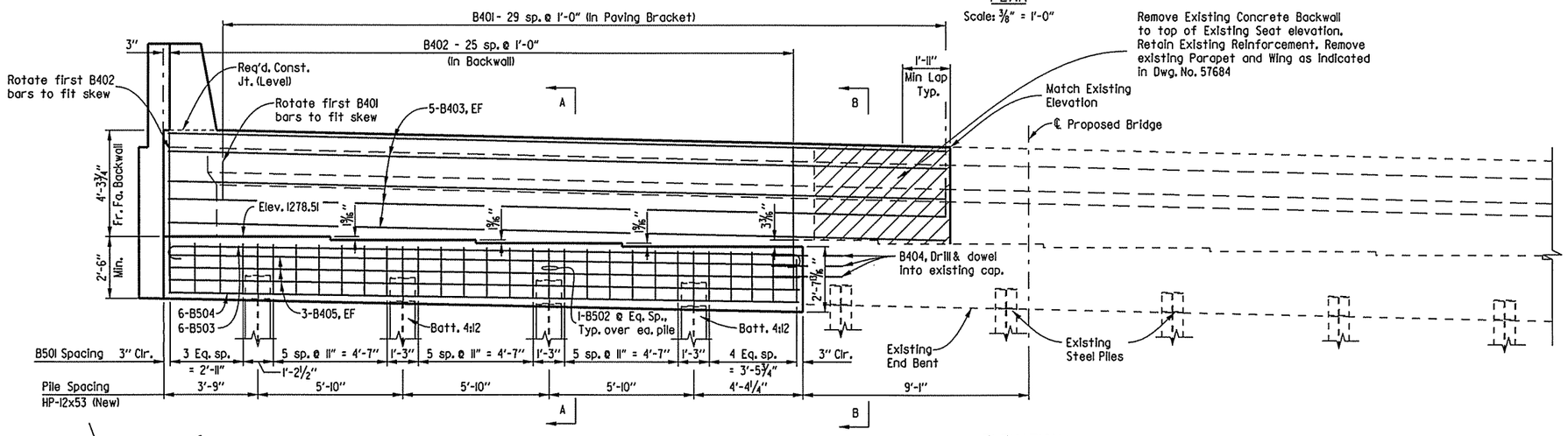

ELEVATION

(Looking Back)
Scale: ⅜" = 1'-0"

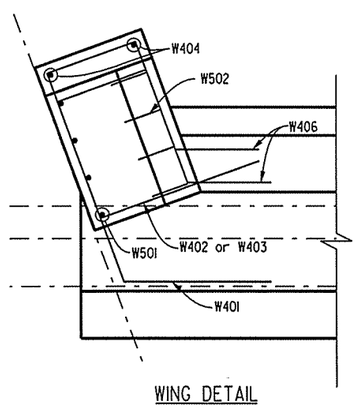

WING DETAIL

Scale: ¾" = 1'-0"

BAR LIST

MARK	NO. REQ'D.	LENGTH	P.D.
B401	30	3'-11"	3"
B402	26	11'-8"	2"
B403	10	31'-7"	Str.
B404	6	2'-11"	Str.
B405	6	25'-3"	Str.
B501	27	11'-4"	2½"
B502	4	7'-0"	2½"
B503	6	26'-5"	3¾"
B504	6	25'-3"	Str.
W401	3	5'-9"	3"
W402	2	5'-8"	3"
W403	2	5'-1"	3"
W404	2	6'-3"	3"
W405	10	2'-2"	Str.
W406	7	5'-2"	3"
W501	4	9'-10"	Str.
W502	4	9'-11"	3¾"

BENDING DIAGRAMS

Dimensions are out to out of bars.

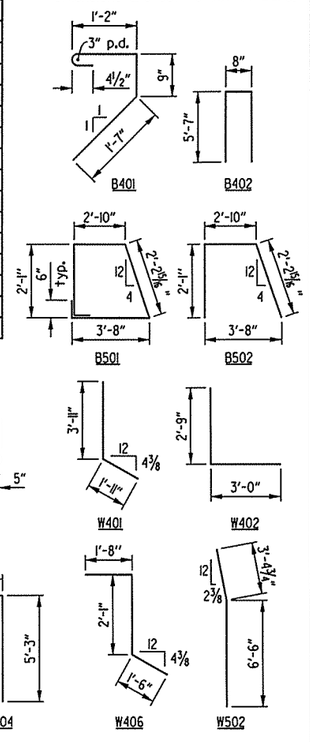

STATE OF ARKANSAS
REGISTERED PROFESSIONAL ENGINEER
No. 15634
JOSE K. JOSEPH
3/9/16

DETAILS OF END BENT 1 - BRIDGE A

ROUTE 49 SEC. 29

ARKANSAS STATE HIGHWAY COMMISSION

LITTLE ROCK, ARK.

DRAWN BY: TRM	DATE: 06-04-15	FILENAME: bca0901a1_bil.dgn	
CHECKED BY: JKJ	DATE: 08-07-15	SCALE: SEE DETAILS	
DESIGNED BY: LLW	DATE: 04-23-15		

BRIDGE NO. A5956 DRAWING NO. 57685

USER: lw7300
DESIGN FILE: G:\1306100_264toNhope\TRANSP\dgn\bridge\bca0901a1_bil.dgn
PLOTTED: 3/8/2016 15:27 SCALE: 5.333333:1

Crafton, Tull & Associates Inc.

DATE REVISED	DATE FILMED	DATE REVISED	DATE FILMED

FED.RD. DIST.NO.	STATE	FED.AID PROJ.NO.	SHEET NO.	TOTAL SHEETS
6	ARK.			
JOB NO.		CA0901	139	452
(1) B5956		END BENT 1		57686

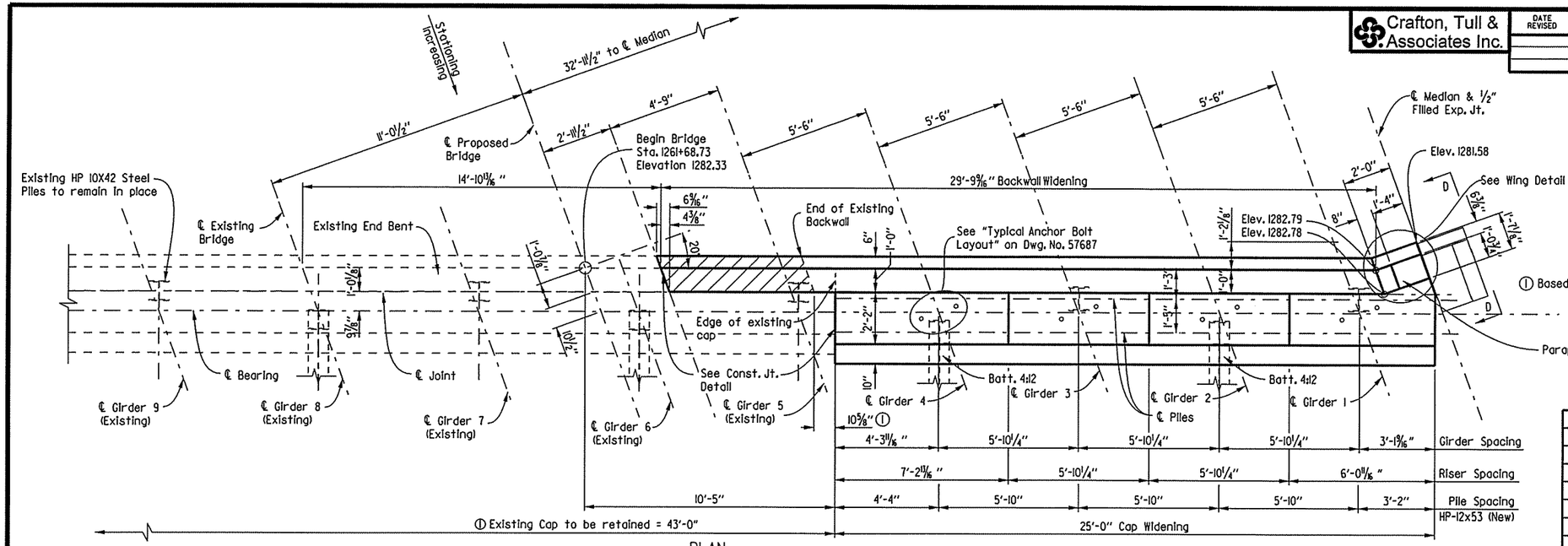

PLAN

Scale ⅜" = 1'-0"

Note:
Class 2 Protective Surface Treatment shall be applied to the top of the backwall, roadway face and top of parapet rails.

For details of Elastomeric Bearings, See Dwg. No. 57693. For additional details and General Notes, See Dwg. No. 57687.

(1) Based on Existing plans. The Contractor shall verify dimensions in the field.

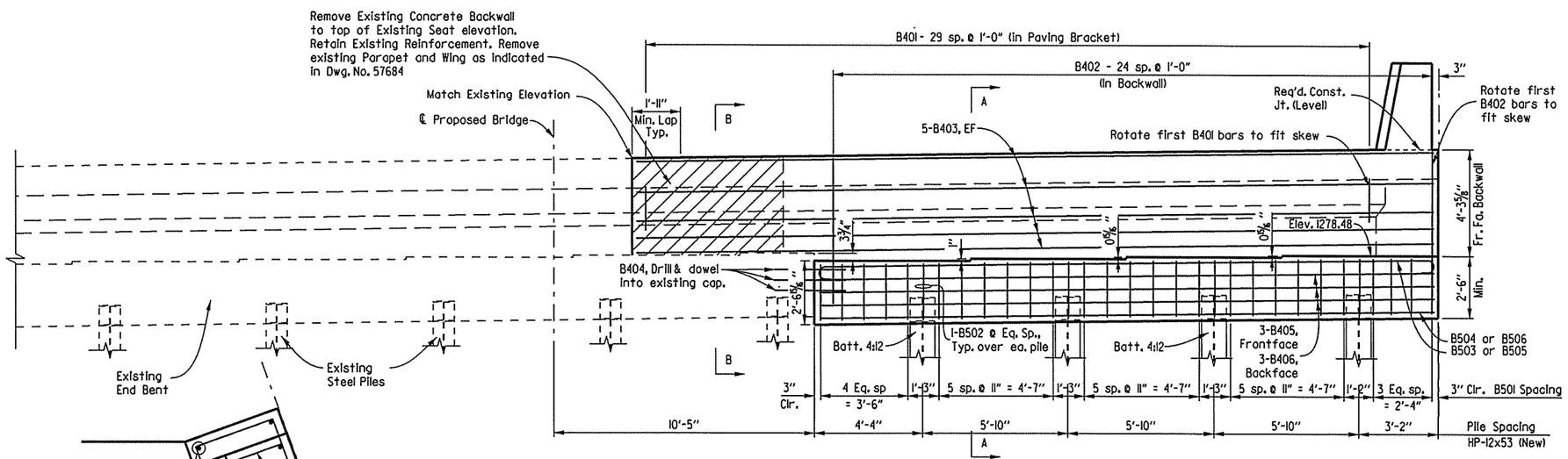

ELEVATION

(Looking Back)

Scale ⅜" = 1'-0"

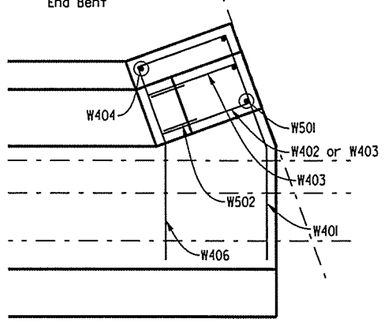

WING DETAIL

Scale: ¾" = 1'-0"

BAR LIST

MARK	NO. REQ'D.	LENGTH	P.D.
B401	30	3'-11"	3"
B402	25	11'-8"	2"
B403	10	31'-4"	2"
B404	6	2'-11"	Str.
B405	3	24'-8"	Str.
B406	3	24'-4"	Str.
B501	27	11'-4"	2½"
B502	4	7'-0"	2½"
B503	5	25'-10"	3¾"
B504	5	24'-8"	Str.
B505	1	25'-6"	3¾"
B506	1	24'-4"	Str.
W401	3	5'-7"	3"
W402	4	2'-10"	3"
W403	4	2'-4"	3"
W404	2	6'-3"	3"
W405	10	9"	Str.
W406	3	4'-11"	3"
W501	2	9'-10"	Str.
W502	2	9'-11"	3¾"

BENDING DIAGRAMS

Dimensions are out to out of bars.

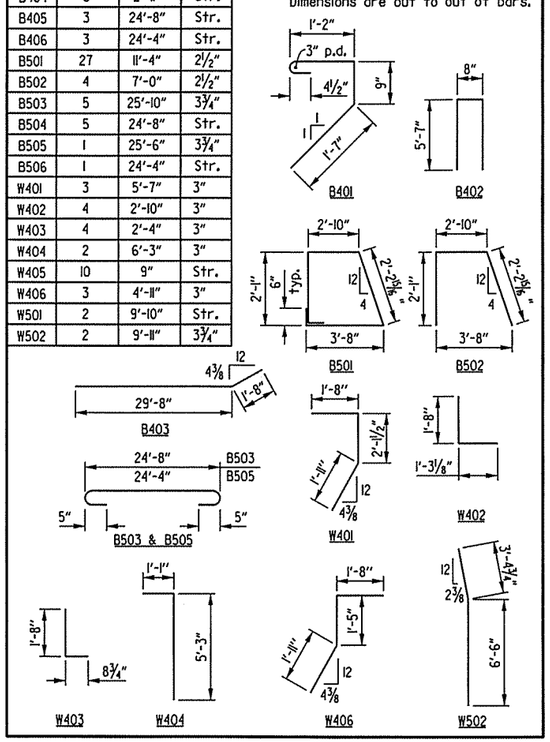

STATE OF ARKANSAS
Jose K. Joseph
REGISTERED PROFESSIONAL ENGINEER
No. 15634
JOSE K. JOSEPH
3/8/16

DETAILS OF END BENT 1 - BRIDGE B

ROUTE 49 SEC. 29

ARKANSAS STATE HIGHWAY COMMISSION

LITTLE ROCK, ARK.

DRAWN BY:	TRW	DATE:	06-04-15	FILENAME:	bca0901bl_bll.dgn
CHECKED BY:	JKJ	DATE:	08-13-15	SCALE:	SEE DETAILS
DESIGNED BY:	LLW	DATE:	04-23-15		

BRIDGE NO. B5956 DRAWING NO. 57686

USER: tw7300
DESIGN FILE: G:\13\06100_264toNHope\TRANSP\dgn\bridge\bca0901bl.bll.dgn
PLOTTED: 3/8/2016 15:27 SCALE: 5.333333:1

Crafton, Tull & Associates Inc.	DATE REVISED	DATE FILMED	DATE REVISED	DATE FILMED	FED.RD. DIST.NO.	STATE	FED.AID PROJ.NO.	SHEET NO.	TOTAL SHEETS
					6	ARK.			
					JOB NO.		CA0901	140	452
					(1) A&B5956		END BENT DETAILS		57687

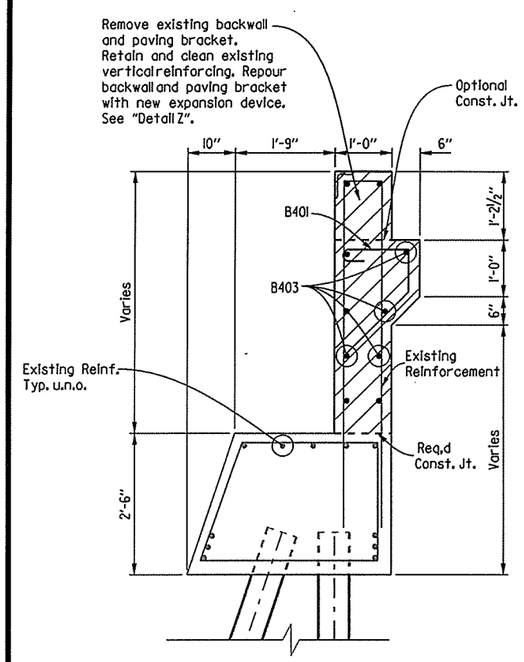

Note: Based on existing plans. Contractor verify in field.

SECTION B-B

Scale: ¾" = 1'-0"

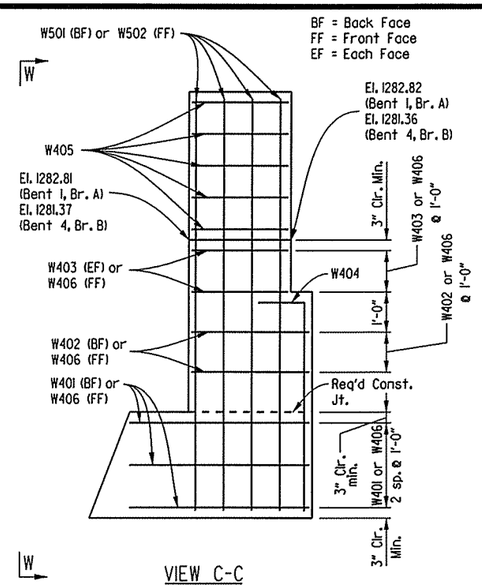

VIEW C-C

No Scale

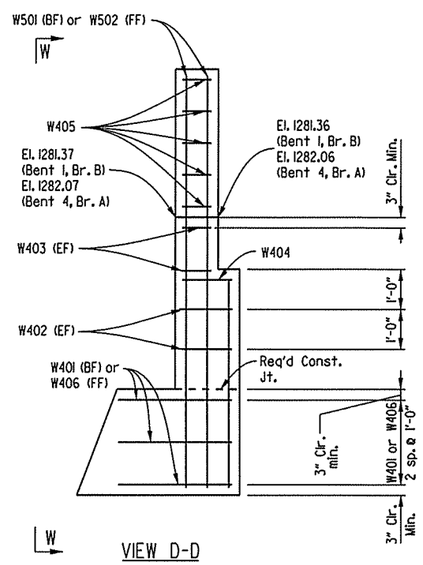

VIEW D-D

No Scale

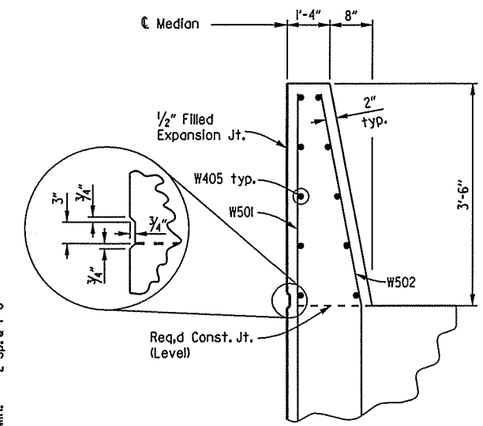

DETAIL W-W

No Scale

GENERAL NOTES

All Concrete shall be Class "S" with a minimum 28 day compressive strength of f'c = 3500 psi. Concrete shall be poured in the day. All exposed corners to be chamfered ¾" unless otherwise noted.

All Reinforcing Steel shall be Grade 60 (fy = 60,000 psi) AASHTO M 31 or M 322, Type A with mill test reports.

The backwall shall not be poured before the girders are in place. Backwall may be placed prior to placing the adjacent concrete deck only if the optional backwall construction joint is used. See Detail Z for additional information.

Structural Steel in end bents may be AASHTO M 270, Gr. 36 and shall be included in the bid item "Structural Steel in Beam Spans".

Top reinforcing bars in the cap shall be properly placed to avoid interference with anchor bolts or sheet metal sleeve.

Drill and grout bars where shown using an approved cement or epoxy system. Minimum embedment shall be 12" for cement based grout. Minimum embedment shall be per the manufacturer's recommendations for epoxy based grout.

Work required to remove & dispose portions of the existing bridge, retain and clean existing reinforcing steel, and any required doweling will not be paid for directly but will be considered subsidiary to the item "Modification of Existing Bridge Structure (Br. No. A5956)" and "Modification of Existing Bridge Structure (Br. No. B5956)".

½" filled expansion joint shall comply with Subsection 501.02(h) Type 2 and shall not be paid directly but will be considered subsidiary to "Class S Concrete-Bridge".

For additional information, see Layout.

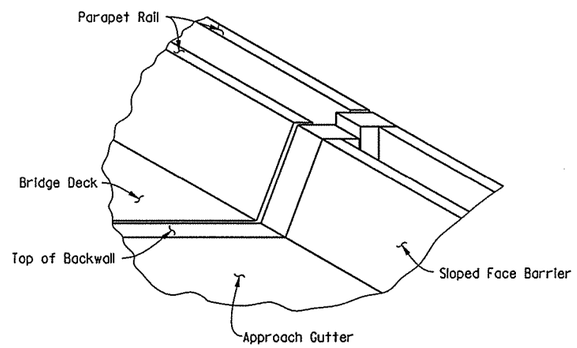

DETAIL OF BARRIER AT BRIDGE END

No Scale

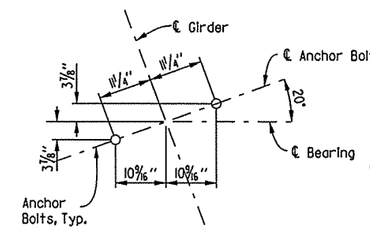

TYPICAL ANCHOR BOLT LAYOUT

Scale: ¾" = 1'-0"

Note:
For Details of Elastomeric Bearings, See Dwg. No. 57693
For Additional Details, See Dwg. No. 57702

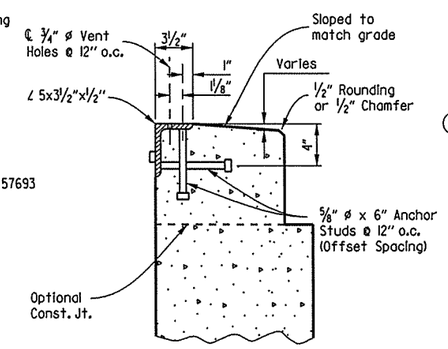

Note: For additional Joint Details, See Dwg. No. 57702

DETAIL Z

No Scale

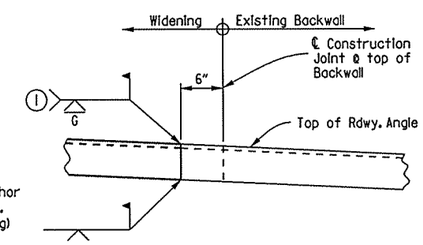

(1) Grind flush from top of deck to top of Bumper Plate.

DETAIL OF WELD LOCATION FOR JOINT ARMOR

Looking Back - Bridge A Bent 1 Shown (Others Similar)
No Scale

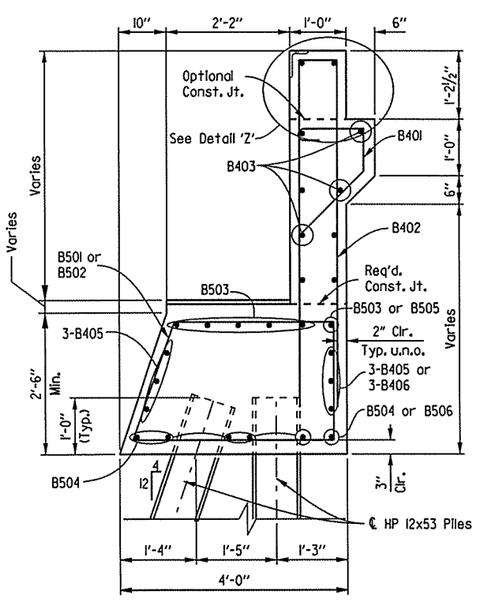

SECTION A-A

Scale: ¾" = 1'-0"

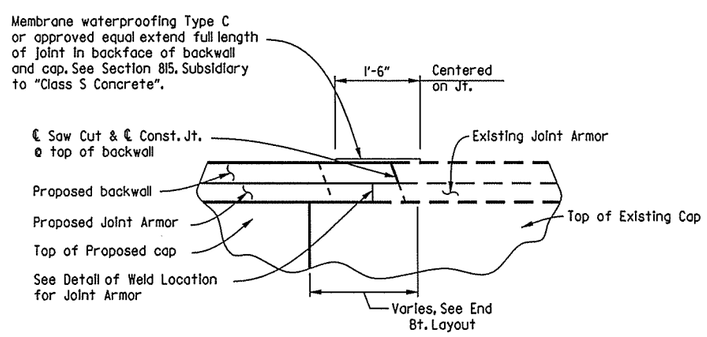

CONSTRUCTION JOINT DETAIL

(Bent 1, Bridge A Shown - Others Similar)
No Scale

Note: Concrete shall be hand packed under the joint armor in the backwall.

Note: Transverse spacing between vertical anchor studs and vent holes shall be 6".

STATE OF ARKANSAS
Jose K. Joseph
REGISTERED PROFESSIONAL ENGINEER
No. 15634
JOSE K. JOSEPH
3/8/16

DETAILS OF END BENTS 1 & 4 - BRIDGES A & B

ROUTE 49 SEC. 29

ARKANSAS STATE HIGHWAY COMMISSION

LITTLE ROCK, ARK.

DRAWN BY:	TRM	DATE:	11-03-14	FILENAME:	bca0901al_bl2.dgn
CHECKED BY:	JKJ	DATE:	09-02-15	SCALE:	SEE DETAILS
DESIGNED BY:	LLW	DATE:	04-24-15		

BRIDGE NO. A&B5956 DRAWING NO. 57687

USER: tw7300
DESIGN FILE: G:\3106100_264toNhope\TRANSP\dgn\bridge\bca0901al_bl2.dgn
PLOTTED: 3/8/2016 10:04 SCALE: 5.3333334

Crafton, Tull & Associates Inc.

DATE REVISED	DATE FILMED	DATE REVISED	DATE FILMED

FED.RD. DIST.NO.	STATE	FED.AID PROJ.NO.	SHEET NO.	TOTAL SHEETS
6	ARK.			
JOB NO.		CA0901	141	452
(1) A5956		END BENT 4		57688

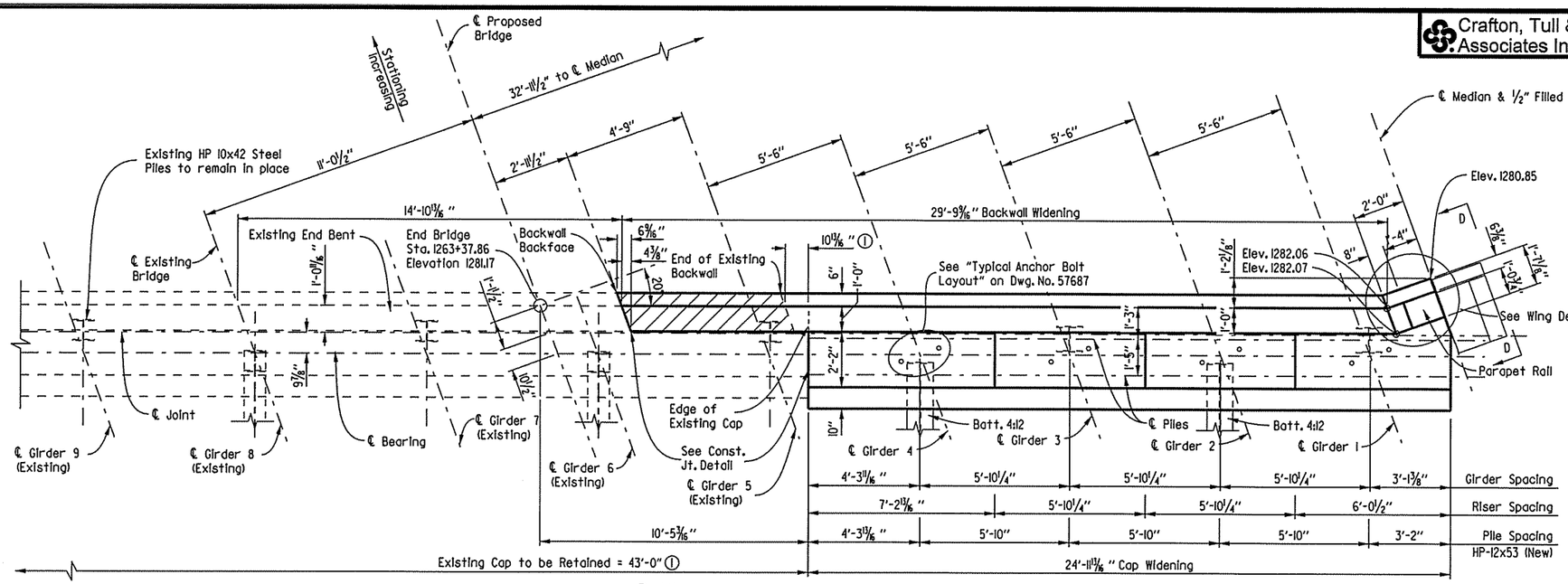

PLAN

Scale 3/8" = 1'-0"

Note:
Class 2 Protective Surface Treatment shall be applied to the top of the backwall, roadway face and top of parapet rails.

For details of Elastomeric Bearings, See Dwg. No. 57693. For additional details and General Notes, See Dwg. No. 57687.

(1) Based on Existing plans. The Contractor shall verify dimensions in the field.

BAR LIST

MARK	NO. REQ'D.	LENGTH	P.D.
B401	30	3'-11"	3"
B402	25	11'-8"	2"
B403	10	31'-4"	2"
B404	6	2'-11"	Str.
B405	6	24'-8"	Str.
B406	3	24'-4"	Str.
B501	27	11'-4"	2½"
B502	4	7'-0"	2½"
B503	5	25'-10"	3¾"
B504	5	24'-8"	Str.
B505	1	25'-6"	3¾"
B506	1	24'-4"	Str.
W401	3	5'-7"	3"
W402	4	2'-10"	3"
W403	4	2'-4"	3"
W404	2	6'-3"	3"
W405	10	9"	Str.
W406	3	4'-11"	3"
W501	2	9'-10"	Str.
W502	2	9'-11"	3¾"

BENDING DIAGRAMS

Dimensions are out to out of bars.

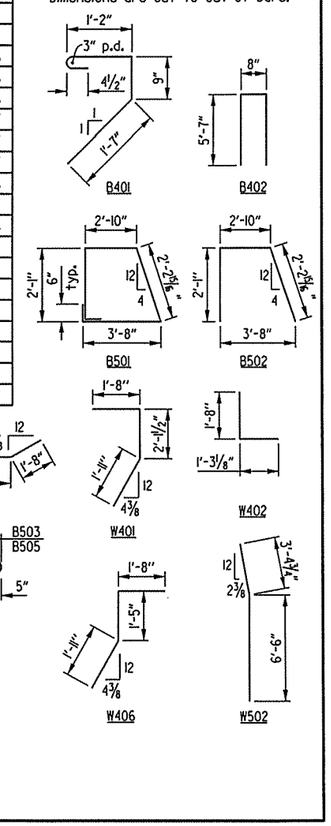

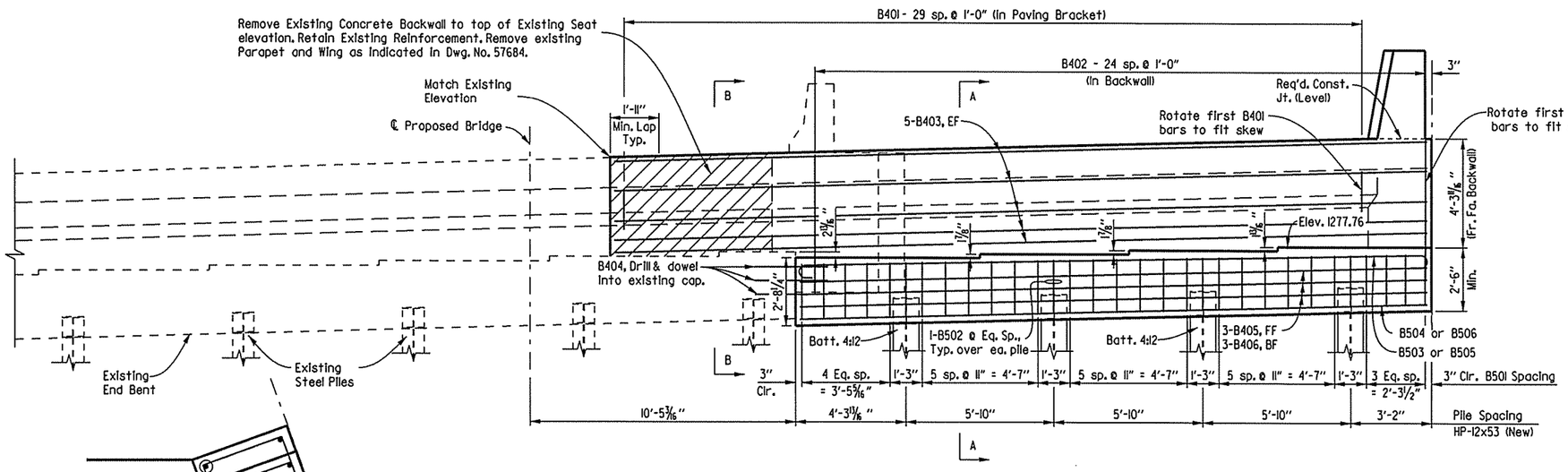

ELEVATION

(Looking Back)

Scale 3/8" = 1'-0"

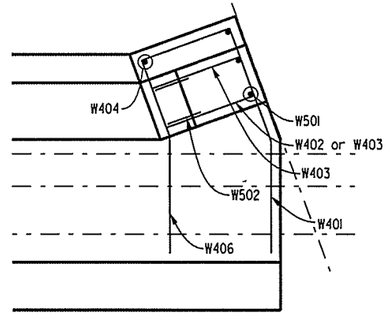

WING DETAIL

Scale: ¾" = 1'-0"

STATE OF ARKANSAS
REGISTERED PROFESSIONAL ENGINEER
No. 15631
JOSE K. JOSEPH
3/8/16

DETAILS OF END BENT 4 - BRIDGE A

ROUTE 49 SEC. 29

ARKANSAS STATE HIGHWAY COMMISSION

LITTLE ROCK, ARK.

DRAWN BY:	TRM	DATE:	06-04-15	FILENAME:	bca0901al_b4l.dgn
CHECKED BY:	JKJ	DATE:	08-07-15	SCALE:	SEE DETAILS
DESIGNED BY:	LLW	DATE:	04-23-15		

BRIDGE NO. A5956 DRAWING NO. 57688

USER: lw7300
DESIGN FILE: G:\1306100_264toNHope\TRANSP\dgn\bridge\bca0901al_b4l.dgn
PLOTTED: 3/8/2016 10:04 SCALE: 5.333333:1

Crafton, Tull & Associates Inc.

DATE REVISED	DATE FILMED	DATE REVISED	DATE FILMED

FED.RD. DIST.NO.	STATE	FED.AID PROJ.NO.	SHEET NO.	TOTAL SHEETS
6	ARK.			
JOB NO.		CA0901	142	452

(1) B5956 END BENT 4 57689

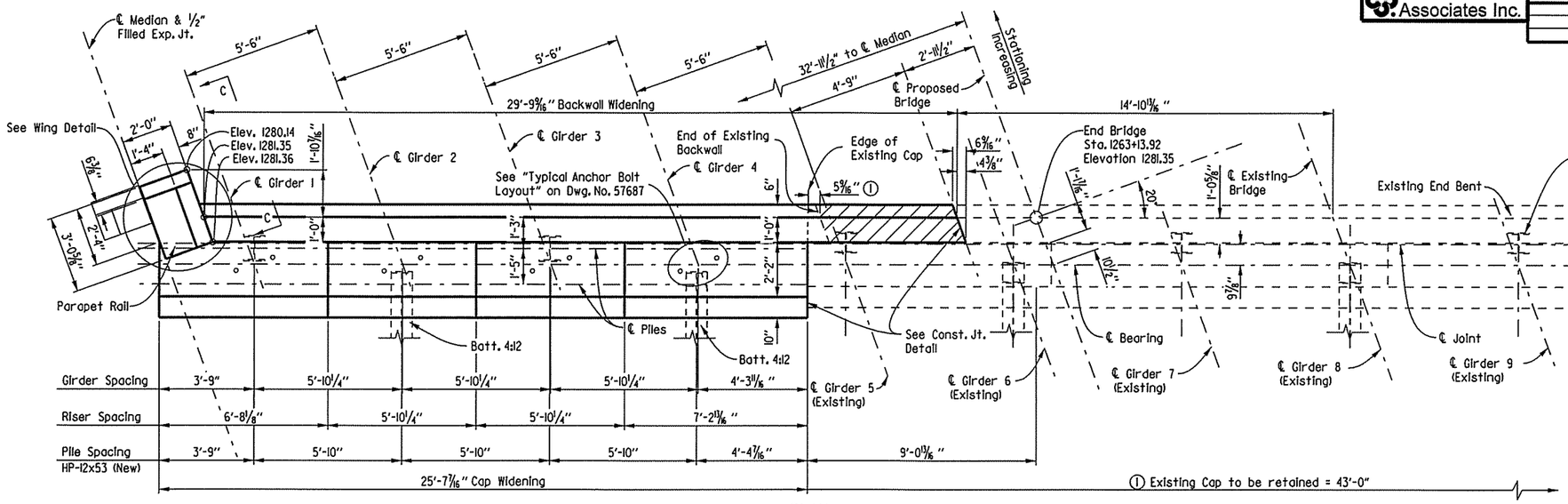

PLAN

Scale ⅜" = 1'-0"

Note:
Class 2 Protective Surface Treatment shall be applied to the top of the backwall, roadway face and top of parapet rails.

For details of Elastomeric Bearings, See Dwg. No. 57693. For additional details and General Notes, See Dwg. No. 57687.

(1) Based on Existing plans. The Contractor shall verify dimensions in the field.

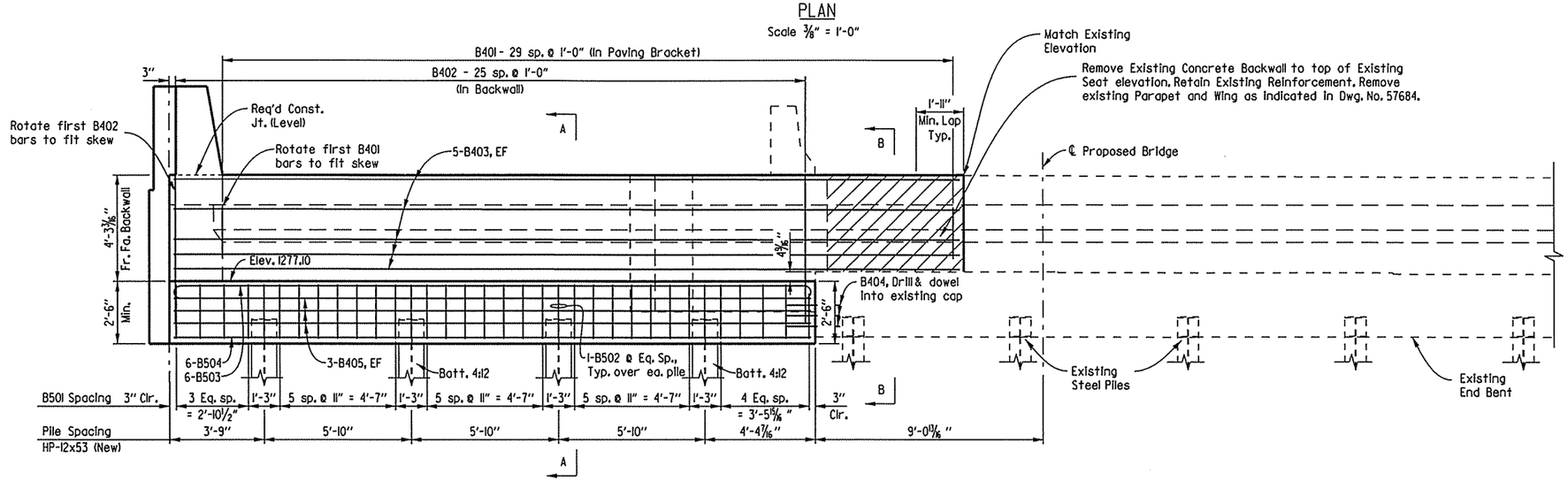

ELEVATION

(Looking Back)
Scale ⅜" = 1'-0"

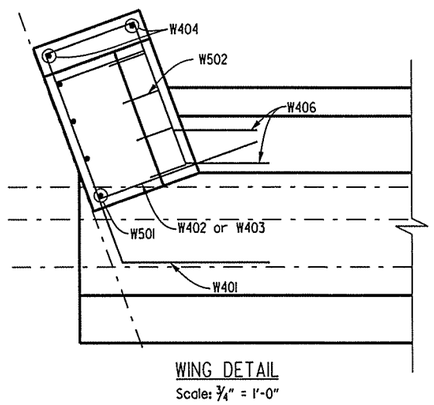

WING DETAIL

Scale: ¾" = 1'-0"

BAR LIST

MARK	NO. REQ'D.	LENGTH	P.D.
B401	30	3'-11"	3"
B402	26	11'-8"	2"
B403	10	31'-7"	Str.
B404	6	2'-11"	Str.
B405	6	25'-3"	Str.
B501	27	11'-4"	2½"
B502	4	7'-0"	2½"
B503	6	26'-5"	3¾"
B504	6	25'-3"	Str.
W401	3	5'-9"	3"
W402	2	5'-8"	3"
W403	2	5'-1"	3"
W404	2	6'-3"	3"
W405	10	2'-2"	Str.
W406	7	5'-2"	3"
W501	4	9'-10"	Str.
W502	4	9'-11"	3¾"

BENDING DIAGRAMS

Dimensions are out to out of bars.

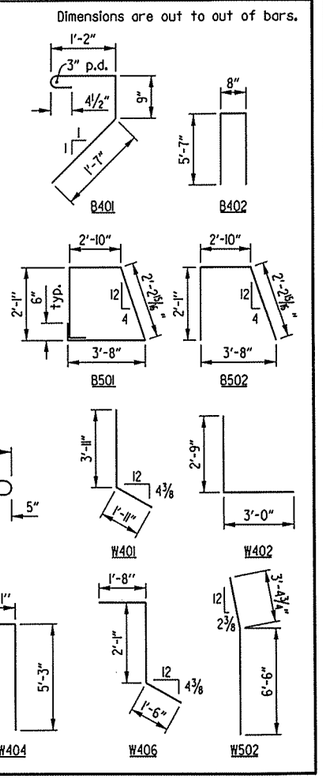

STATE OF ARKANSAS
REGISTERED PROFESSIONAL ENGINEER
No. 15634
JOSE K. JOSEPH
3/8/16

DETAILS OF END BENT 4 - BRIDGE B

ROUTE 49 SEC. 29

ARKANSAS STATE HIGHWAY COMMISSION

LITTLE ROCK, ARK.

DRAWN BY:	TRM	DATE:	06-04-15	FILENAME:	bca0901bl_b4l.dgn
CHECKED BY:	JKJ	DATE:	08-06-15	SCALE:	SEE DETAILS
DESIGNED BY:	LLW	DATE:	04-23-15		

BRIDGE NO. B5956 DRAWING NO. 57689

USER: lw7300
DESIGN FILE: G:\1306100.264toNhope\TRANSP\dgn\bridge\bca0901bl_b4l.dgn
PLOTTED: 3/8/2016 10:04 SCALE: 5.333333:1

Crafton, Tull & Associates Inc.	DATE REVISED	DATE FILMED	DATE REVISED	DATE FILMED	FED.RD. DIST.NO.	STATE	FED.AID PROJ.NO.	SHEET NO.	TOTAL SHEETS
					6	ARK.			
					JOB NO.		CA0901	143	452
					(1) A&B5956	BENTS 2 & 3 DETAILS			57690

(1) Based on the existing plans. The Contractor shall verify dimensions in the field.

Note:
For Additional Information, See Layout and Dwg. No. 57692
For Details of Elastomeric Bearings, See Dwg. No. 57693

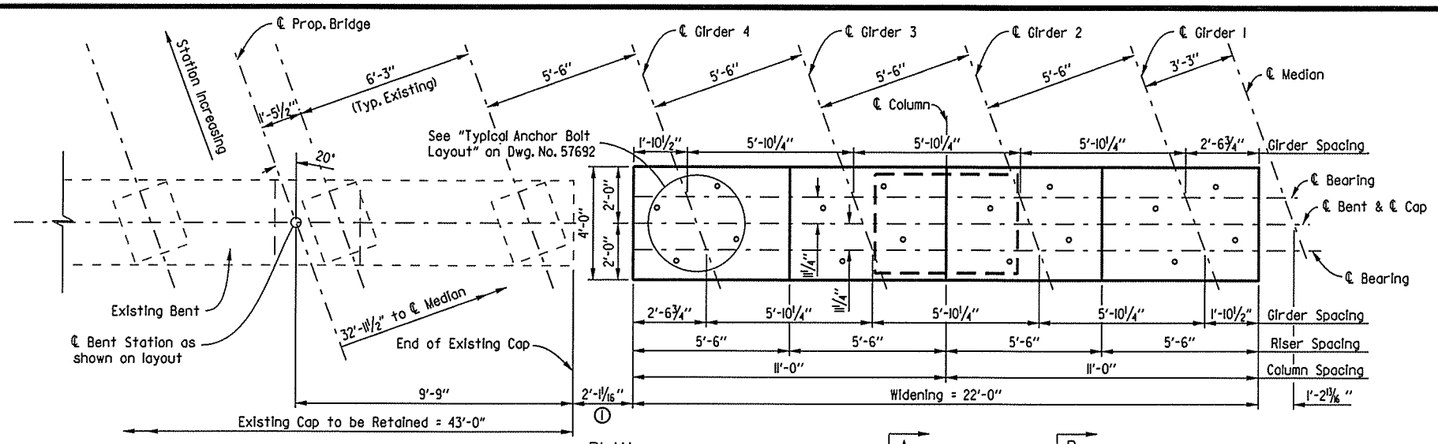

PLAN
Scale: ⅜" = 1'-0"

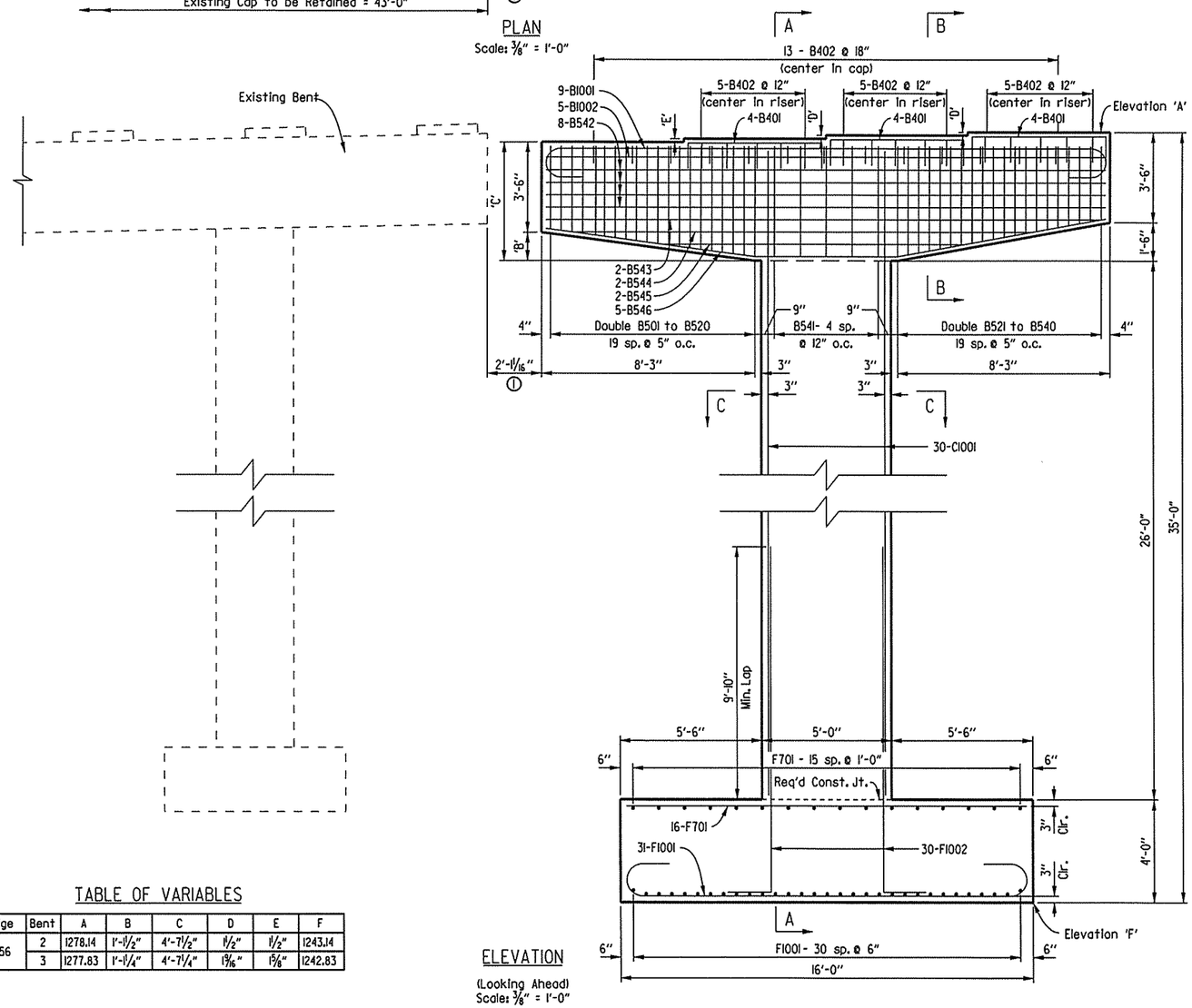

ELEVATION
(Looking Ahead)
Scale: ⅜" = 1'-0"

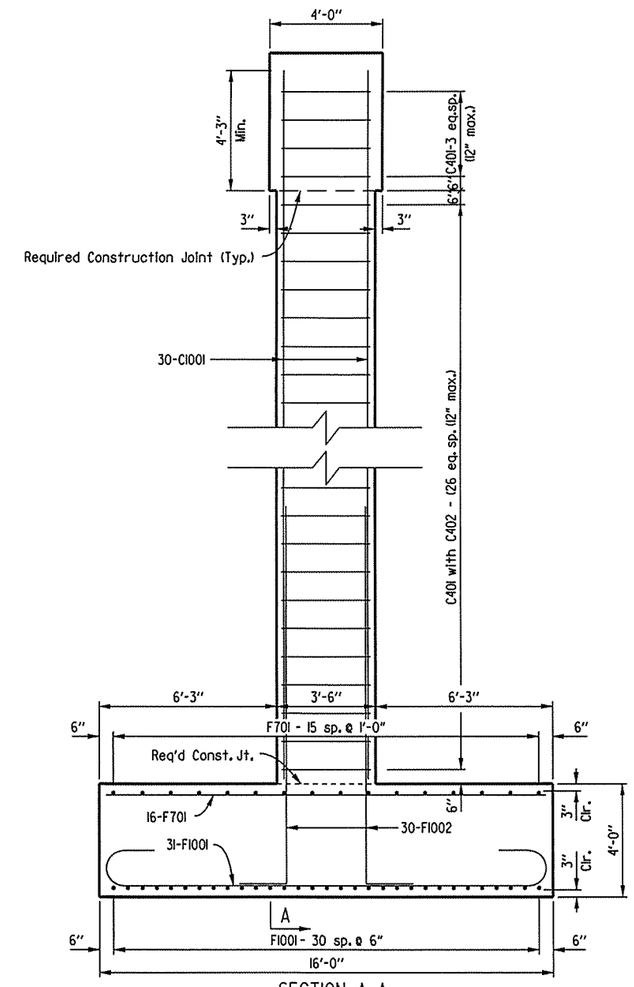

SECTION A-A
Scale: ⅜" = 1'-0"

TABLE OF VARIABLES

Bridge	Bent	A	B	C	D	E	F
A5956	2	1278.14	1'-1½"	4'-7½"	1½"	1½"	1243.14
	3	1277.83	1'-1¼"	4'-7¼"	1 9/16"	1 5/8"	1242.83

STATE OF ARKANSAS
Jose K. Joseph
REGISTERED PROFESSIONAL ENGINEER
No. 15634
JOSE K. JOSEPH
3/8/16

SHEET 1 OF 3
DETAILS OF BENTS 2 & 3 - BRIDGE A
ROUTE 49 SEC. 29
ARKANSAS STATE HIGHWAY COMMISSION
LITTLE ROCK, ARK.

DRAWN BY: LLW	DATE: 05-04-15	FILENAME: bca0901a1_b21.dgn			
CHECKED BY: JKJ	DATE: 08-03-15	SCALE: ⅜" = 1'-0"			
DESIGNED BY: LLW	DATE: 04-24-15				

BRIDGE NO. A5956 DRAWING NO. 57690

USER: lw7300
DESIGN FILE: G:\13\06100_264toNHope\TRANSP\dgn\bridge\bca0901a1_b21.dgn
PLOTTED: 3/8/2016 10:04 SCALE: 5.333333:1

Crafton, Tull & Associates Inc.	DATE REVISED	DATE FILMED	DATE REVISED	DATE FILMED	FED.RD. DIST.NO.	STATE	FED.AID PROJ.NO.	SHEET NO.	TOTAL SHEETS
					6	ARK.			
					JOB NO.		CA0901	144	452
					(1) A&B5956	BENTS 2 & 3 DETAILS			57691

(1) Based on the existing plans. The Contractor shall verify dimensions in the field.

Note:
For Additional Information, See Layout and Dwg. No. 57692
For Details of Elastomeric Bearings, See Dwg. No. 57693

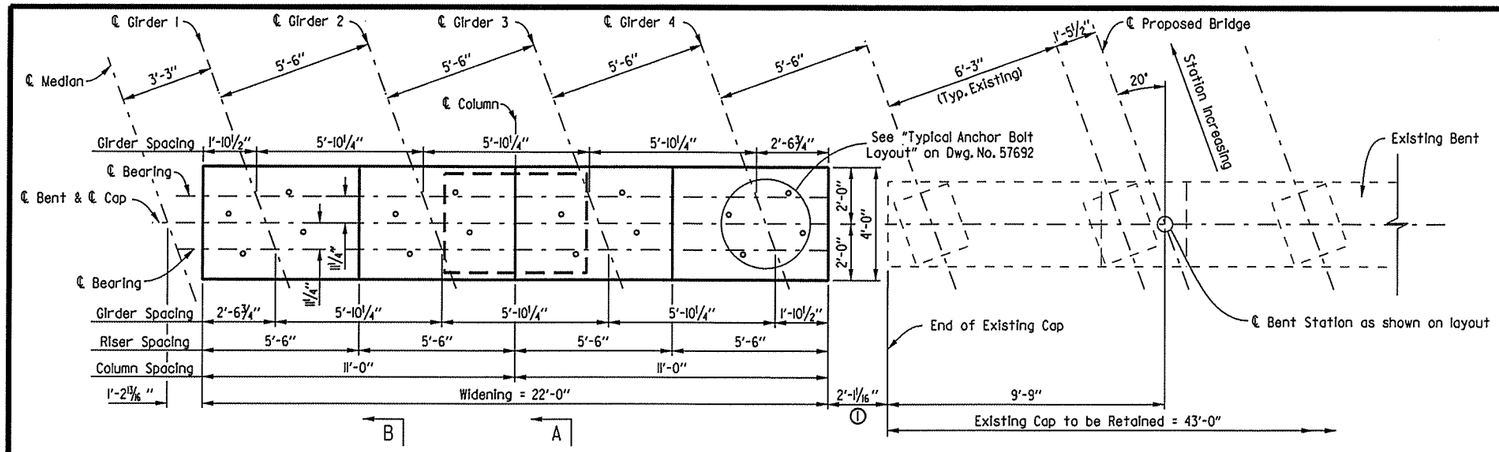

PLAN
Scale: ⅜" = 1'-0"

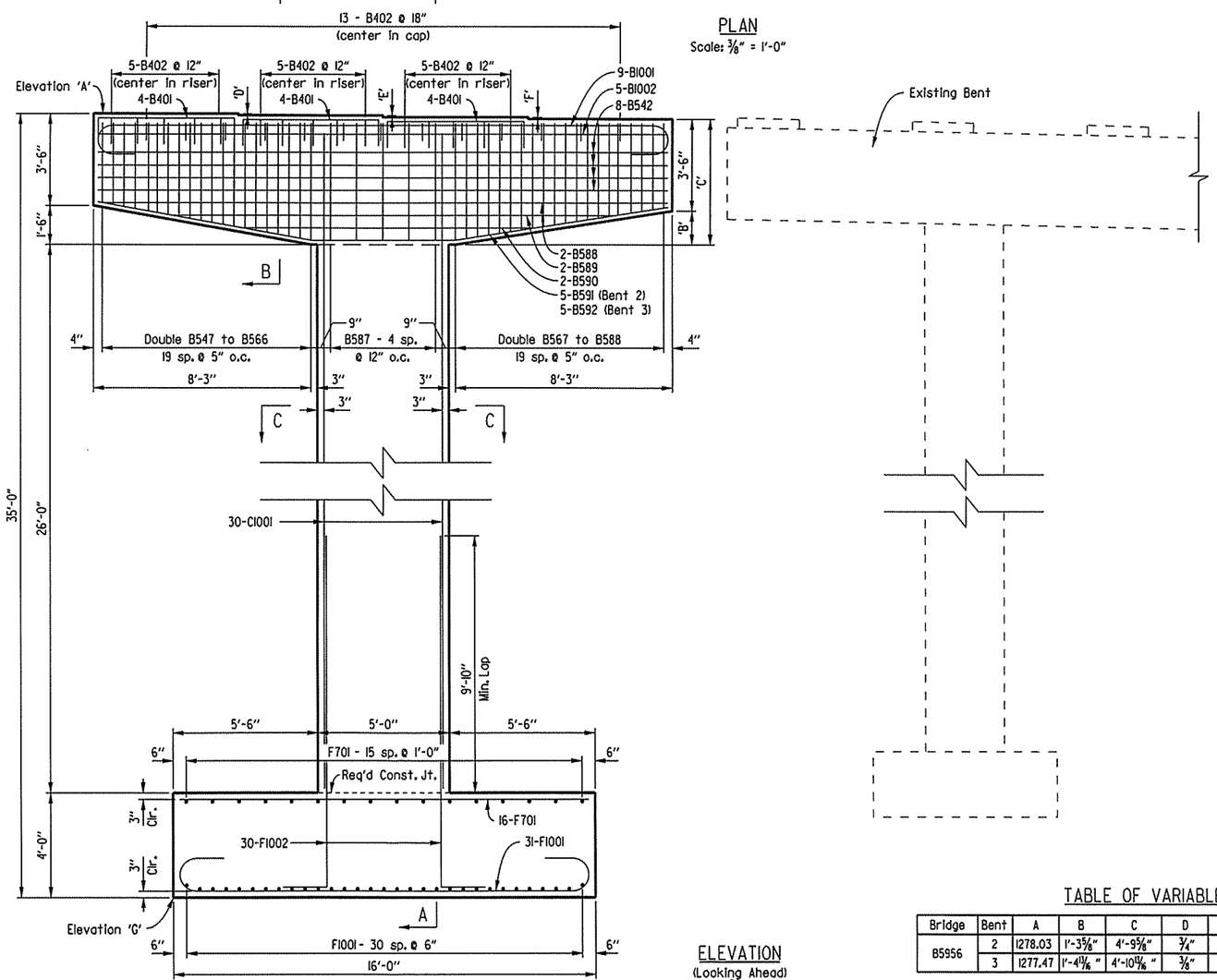

ELEVATION
(Looking Ahead)
Scale: ⅜" = 1'-0"

TABLE OF VARIABLES

Bridge	Bent	A	B	C	D	E	F	G
B5956	2	1278.03	1'-3⅝"	4'-9⅝"	¾"	13/16"	13/16"	1243.03
	3	1277.47	1'-4 13/16"	4'-10 13/16"	⅜"	⅜"	7/16"	1242.47

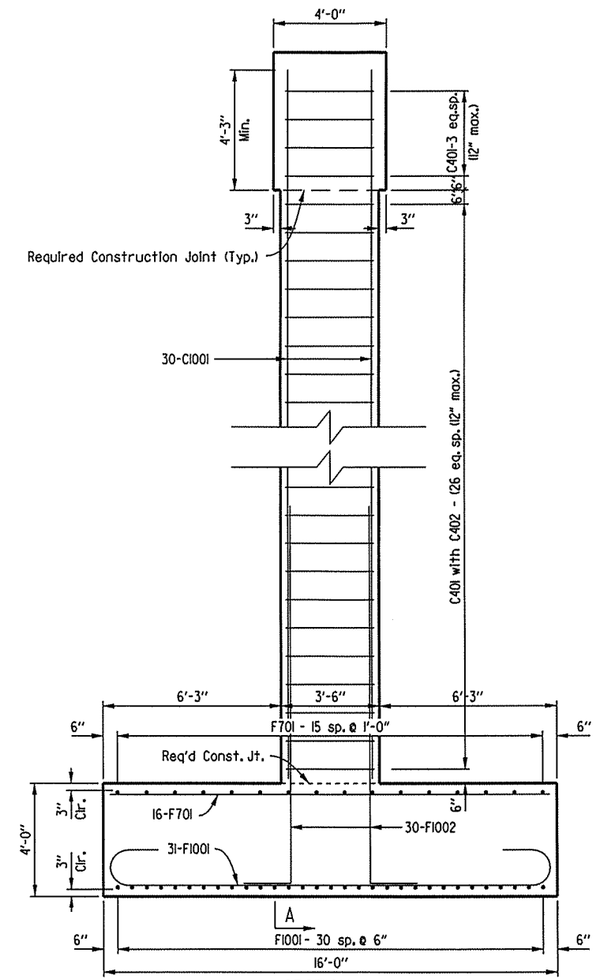

SECTION A-A
Scale: ⅜" = 1'-0"

STATE OF ARKANSAS
Jose K. Joseph
REGISTERED PROFESSIONAL ENGINEER
No. 15634
JOSE K. JOSEPH
3/8/16

SHEET 2 OF 3
DETAILS OF BENTS 2 & 3 -BRIDGE B
ROUTE 49 SEC. 29
ARKANSAS STATE HIGHWAY COMMISSION
LITTLE ROCK, ARK.

DRAWN BY: LLW DATE: 05-29-15 FILENAME: bca0901bl_b21.dgn
CHECKED BY: JKJ DATE: 08-03-15 SCALE: ⅜" = 1'-0"
DESIGNED BY: LLW DATE: 04-24-15
BRIDGE NO. B5956 DRAWING NO. 57691

USER: lw7300
DESIGN FILE: G:\3106100_2641toNHope\TRANSP\dgn\bridge\bca0901bl_b21.dgn
PLOTTED: 3/8/2016 10:04 SCALE: 5.333333:1

Crafton, Tull & Associates Inc.	DATE REVISED	DATE FILMED	DATE REVISED	DATE FILMED

FED.RD. DIST.NO.	STATE	FED.AID PROJ.NO.	SHEET NO.	TOTAL SHEETS
6	ARK.			
JOB NO.		CA0901	145	452

(1) A&B5956 INT. BENT DETAILS 57692

BAR LIST (PER BENT)

A&B5956 BENT 2							A&B5956 BENT 3						
MARK	NO. REQ'D.		LENGTH	"A"	"B"	P.D.	MARK	NO. REQ'D.		LENGTH	"A"	"B"	P.D.
	Br. A	Br. B						Br. A	Br. B				
B401	12	12	7'-0"	5'-2"	1'-0"	2"	B401	12	12	7'-0"	5'-2"	1'-0"	2"
B402	28	28	5'-6"	3'-8"	8"	2"	B402	28	28	5'-6"	3'-8"	8"	2"
B501 to B520	2 each	---	12'-6" to 14'-10"	2'-10"	3'-2" to 4'-4"	2½"	B501 to B520	2 each	---	12'-6" to 14'-9"	2'-10"	3'-2" to 4'-3"	2½"
B521 to B540	2 each	---	11'-10" to 14'-10"	2'-10"	2'-10" to 4'-4"	2½"	B521 to B540	2 each	---	11'-10" to 14'-9"	2'-10"	2'-10" to 4'-3"	2½"
B541	5	---	12'-1½"	3'-8"	4'-4"	2½"	B541	5	---	11'-11½"	3'-8"	4'-3"	2½"
B542	8	8	21'-8"	---	---	Str.	B542	8	8	21'-8"	---	---	Str.
B543	2	---	21'-6"	---	---	Str.	B543	2	---	21'-5"	---	---	Str.
B544	2	---	17'-9"	---	---	Str.	B544	2	---	17'-8"	---	---	Str.
B545	2	---	11'-4"	---	---	Str.	B545	2	---	11'-2"	---	---	Str.
B546	5	---	21'-11"	8'-2"	8'-3"	3¾"	B546	5	---	21'-11"	8'-2"	8'-3"	3¾"
B547 to B566	---	2 each	12'-2" to 15'-2"	2'-10"	3'-0" to 4'-6"	2½"	B547 to B566	---	2 each	12'-4" to 15'-4"	2'-10"	3'-1" to 4'-7"	2½"
B567 to B586	---	2 each	12'-6" to 15'-2"	2'-10"	3'-2" to 4'-6"	2½"	B567 to B586	---	2 each	12'-8" to 15'-4"	2'-10"	3'-3" to 4'-7"	2½"
B587	---	5	12'-5½"	3'-8"	4'-6"	2½"	B587	---	5	12'-7½"	3'-8"	4'-7"	2½"
B588	---	2	21'-8"	---	---	Str.	B588	---	2	21'-8"	---	---	Str.
B589	---	2	17'-6"	---	---	Str.	B589	---	2	17'-3"	---	---	Str.
B590	---	5	11'-5"	---	---	Str.	B590	---	2	11'-2"	---	---	Str.
B591	---	5	21'-11"	8'-3"	8'-2"	5¼"	B591	---	---	---	---	---	---
B592	---	---	---	---	---	---	B592	---	5	21'-11"	8'-3"	8'-2"	5¼"
B1001	9	9	23'-7"	21'-8"	11½"	10"	B1001	9	9	23'-7"	21'-8"	11½"	10"
B1002	5	5	21'-5"	---	---	Str.	B1002	5	5	21'-5"	---	---	Str.
C401	31	31	15'-10"	---	---	3"	C401	31	31	15'-10"	---	---	3"
C402	27	27	4'-0"	---	---	3"	C402	27	27	4'-0"	---	---	3"
C1001	30	30	30'-3"	---	---	Str.	C1001	30	30	30'-3"	---	---	Str.
F701	32	32	15'-6"	---	---	Str.	F701	32	32	15'-6"	---	---	Str.
F1001	62	62	18'-4"	15'-6"	11½"	10"	F1001	62	62	18'-4"	15'-6"	11½"	10"
F1002	30	30	15'-2"	---	---	10"	F1002	30	30	15'-2"	---	---	10"

BAR BENDING DIAGRAMS

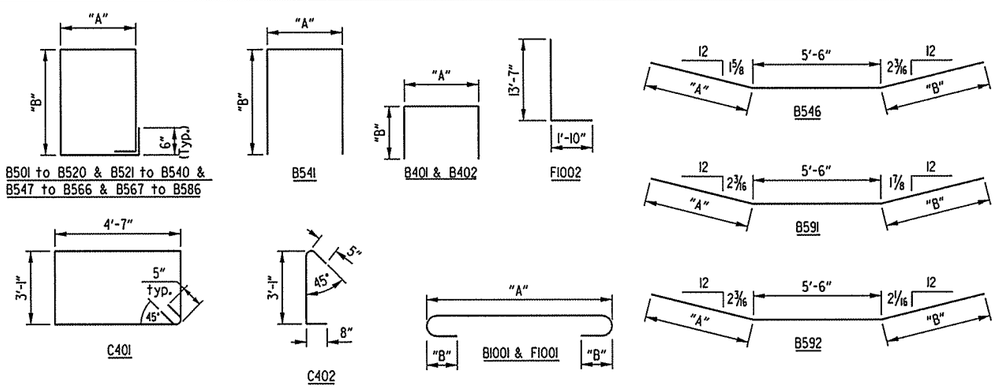

Note: Dimensions are out to out of bars.

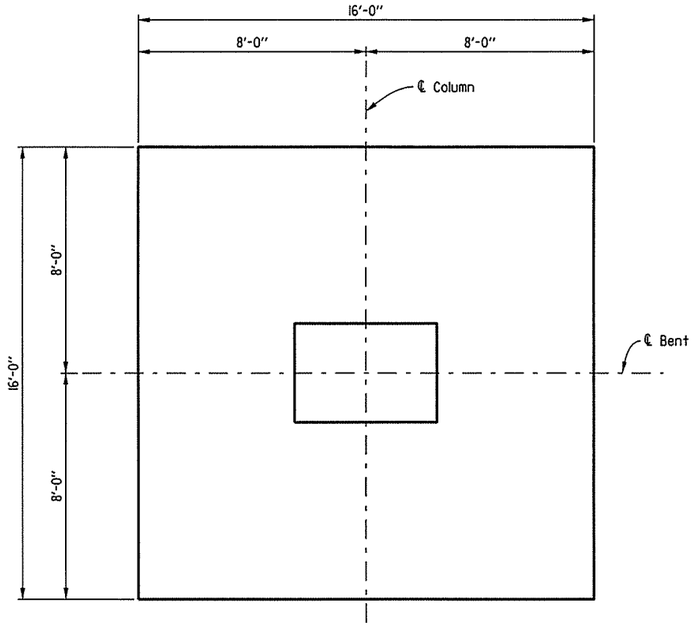

SECTION D-D
Scale: ⅜" = 1'-0"

GENERAL NOTES

Concrete shall be Class 'S' with a minimum 28 day compressive strength of f'c = 3,500 p.s.i. Concrete shall be poured in the dry. All exposed corners shall be chamfered ¾" unless otherwise noted.

All Reinforcing Steel shall be Grade 60 (fy = 60,000 psi) AASHTO M 31 or M 322, Type A with mill test reports.

Top reinforcing bars in cap shall be properly placed to avoid interference with anchor bolts or sheet metal sleeves.

For details of Elastomeric Bearings see Dwg. No. 57693.

For additional information see Layout and Dwg. No. 57690 & 57691.

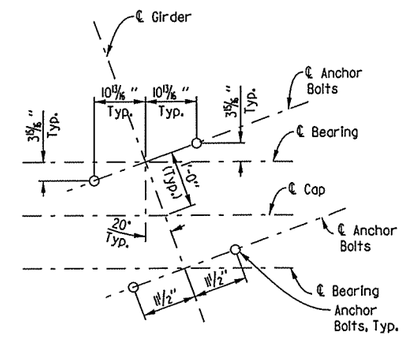

TYPICAL ANCHOR BOLT LAYOUT
Scale: ¾" = 1'-0"

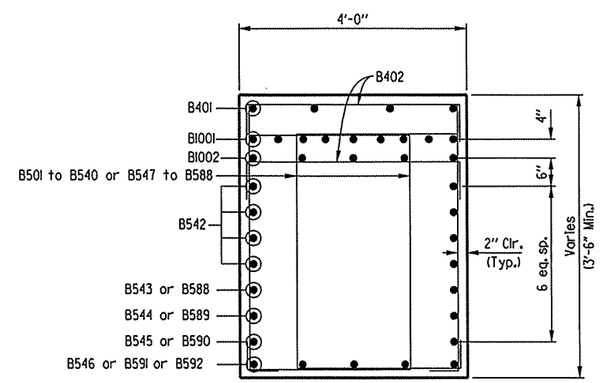

SECTION B-B
Scale: ¾" = 1'-0"

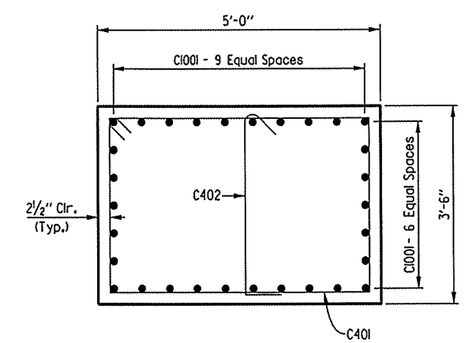

SECTION C-C
Scale: ¾" = 1'-0"

STATE OF ARKANSAS
Jose K. Joseph
REGISTERED PROFESSIONAL ENGINEER
No. 15634
JOSE K. JOSEPH
3/8/16

SHEET 3 OF 3
DETAILS OF BENTS 2 & 3 - BRIDGES A & B
ROUTE 49 SEC. 29
ARKANSAS STATE HIGHWAY COMMISSION
LITTLE ROCK, ARK.

DRAWN BY:	LLW	DATE:	05-29-15	FILENAME:	bca0901a1.b22.dgn
CHECKED BY:	JKJ	DATE:	09-02-15	SCALE:	SEE DETAILS
DESIGNED BY:	LLW	DATE:	04-24-15		

BRIDGE NO. A&B5956 DRAWING NO. 57692

USER: lw7300
DESIGN FILE: G:\13106100.2641\Hope\TRANSP\dgn\bridge\bca0901a1.b22.dgn
PLOTTED: 3/8/2016 10:04 SCALE: 5.333333:1

Crafton, Tull & Associates Inc.

DATE REVISED	DATE FILMED	DATE REVISED	DATE FILMED

FED.RD. DIST.NO.	STATE	FED.AID PROJ.NO.	SHEET NO.	TOTAL SHEETS
6	ARK.			
JOB NO.		CA0901	146	452

(1) A&B5956 BEARING DETAILS 57693

TABLE OF FABRICATOR VARIABLES

Bridge No.	Location Bent No.	Location Girder No.	Bearing Type	No. of Bearings Each Bent	*Maximum Design Load (Kips)	G	H	Elastomeric Pad A	B	N	t1	te	No. & Thickness of Steel Laminae	T	External Load Plate C	D	E	F	K	M	Ta	Tb	Tc	Anchor Bolt: Anchor Bolt (ø X L)	Grade	Pipe Sleeve Size (ø X L)	Sheet Metal Sleeve Size (ø X L)	Steel Washer Size (O.D.)
A5956	1	1-4	Expansion	4	78	8 7/16"	5 13/16"	18"	6"	6	7/16"	1/4"	7 @ 12 ga.	3 7/8"	7"	27 1/2"	2 3/4"	2"	1/2"	11 1/4"	1.97"	2.03"	2"	1 1/4" X 23"	55	1 1/4" X 6 3/16"	3" X 5"	2 1/2"
	2 BK	1-4	Fixed	4	80	8 3/4"	6"	18"	6"	6	7/16"	1/4"	7 @ 12 ga.	3 7/8"	7"	28 1/2"	2 1/4"	2 1/4"	1/2"	11 1/2"	2.17"	2.20"	2.1875"	1 1/2" X 26"	55	1 1/2" X 6 1/4"	3" X 5"	3"
	2 AH	1-4	Fixed	4	94	8 3/4"	5 13/16"	18"	6"	6	7/16"	1/4"	7 @ 12 ga.	3 7/8"	7"	28 1/2"	2 1/4"	2 1/4"	1/2"	11 1/2"	1.98"	2.02"	2"	1 1/2" X 26"	55	1 1/2" X 6 1/4"	3" X 5"	3"
	3 BK	1-4	Fixed	4	94	8 3/4"	5 13/16"	18"	6"	6	7/16"	1/4"	7 @ 12 ga.	3 7/8"	7"	28 1/2"	2 1/4"	2 1/4"	1/2"	11 1/2"	1.99"	2.01"	2"	1 1/2" X 26"	55	1 1/2" X 6 1/4"	3" X 5"	3"
	3 AH	1-4	Fixed	4	80	8 3/4"	5 13/16"	18"	6"	6	7/16"	1/4"	7 @ 12 ga.	3 7/8"	7"	28 1/2"	2 1/4"	2 1/4"	1/2"	11 1/2"	1.99"	2.01"	2"	1 1/2" X 26"	55	1 1/2" X 6 1/4"	3" X 5"	3"
	4	1-4	Expansion	4	78	8 7/16"	5 13/16"	18"	6"	6	7/16"	1/4"	7 @ 12 ga.	3 7/8"	7"	27 1/2"	2 3/4"	2"	1/2"	11 1/4"	1.99"	2.01"	2"	1 1/4" X 23"	55	1 1/4" X 6 3/16"	3" X 5"	2 1/2"
B5956	1	1-4	Expansion	4	78	8 7/16"	5 13/16"	18"	6"	6	7/16"	1/4"	7 @ 12 ga.	3 7/8"	7"	27 1/2"	2 3/4"	2"	1/2"	11 1/4"	1.97"	2.03"	2"	1 1/4" X 23"	55	1 1/4" X 6 3/16"	3" X 5"	2 1/2'
	2 BK	1-4	Fixed	4	80	8 3/4"	6"	18"	6"	6	7/16"	1/4"	7 @ 12 ga.	3 7/8"	7"	28 1/2"	2 1/4"	2 1/4"	1/2"	11 1/2"	2.17"	2.21"	2.1875"	1 1/2" X 26"	55	1 1/2" X 6 1/4"	3" X 5"	3"
	2 AH	1-4	Fixed	4	94	8 3/4"	5 13/16"	18"	6"	6	7/16"	1/4"	7 @ 12 ga.	3 7/8"	7"	28 1/2"	2 1/4"	2 1/4"	1/2"	11 1/2"	1.98"	2.02"	2"	1 1/2" X 26"	55	1 1/2" X 6 1/4"	3" X 5"	3"
	3 BK	1-4	Fixed	4	94	8 3/4"	5 13/16"	18"	6"	6	7/16"	1/4"	7 @ 12 ga.	3 7/8"	7"	28 1/2"	2 1/4"	2 1/4"	1/2"	11 1/2"	2.11"	2.14"	2.125"	1 1/2" X 26"	55	1 1/2" X 6 1/4"	3" X 5"	3"
	3 AH	1-4	Fixed	4	80	8 3/4"	5 13/16"	18"	6"	6	7/16"	1/4"	7 @ 12 ga.	3 7/8"	7"	28 1/2"	2 1/4"	2 1/4"	1/2"	11 1/2"	1.99"	2.01"	2"	1 1/2" X 26"	55	1 1/2" X 6 1/4"	3" X 5"	3"
	4	1-4	Expansion	4	78	8 7/16"	5 13/16"	18"	6"	6	7/16"	1/4"	7 @ 12 ga.	3 7/8"	7"	27 1/2"	2 3/4"	2"	1/2"	11 1/4"	1.99"	2.01"	2"	1 1/4" X 23"	55	1 1/4" X 6 3/16"	3" X 5"	2 1/2"

* Maximum Design Load = Service I limit State

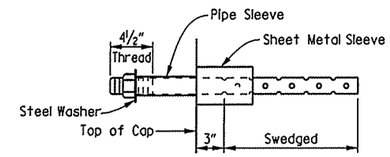

ANCHOR BOLT DETAIL
No Scale

Note: Anchor Bolts may be cast in place or drilled and grouted into place. If Anchor Bolts are to be cast in place, the Galvanized Sheet Metal Sleeves will not be required.

If Anchor Bolts are to be drilled and grouted into place, the galvanized sheet metal sleeve shall be cast in place as shown. It shall be dry packed with styrofoam or urethane foam or approved equal prior to pouring concrete. After pouring of the cap and prior to erection of Prestressed Beams the dry pack shall be removed and holes for the anchor bolts shall be accurately drilled into masonry. Bolts placed in drilled holes shall be accurately set and fixed using AHTD OPL approved epoxy or non-shrink grout that completely fills the holes. Galvanized sheet-metal sleeves will not be paid for directly, but will be considered subsidiary to the item "Structural Steel in Beam Spans, (M270, Gr. 50)"

Unless otherwise approved by the Engineer, welding of the External Load Plate at expansion bearings to the girder will be allowed only when: 1) The approximate average air temperature during the 24 hour period immediately preceding welding is between 40°F and 80°F; and 2) The slots in the external load plate are positioned to center on the anchor bolts; and 3) No horizontal deformation of the Elastomeric Pad is evident. If welding at other temperatures is required, the Engineer will provide adjustment data.

Note:
The direction of bevel of the external load plate may not be accurately depicted with respect to Ta and Tb values shown in TABLE OF FABRICATOR VARIABLES.

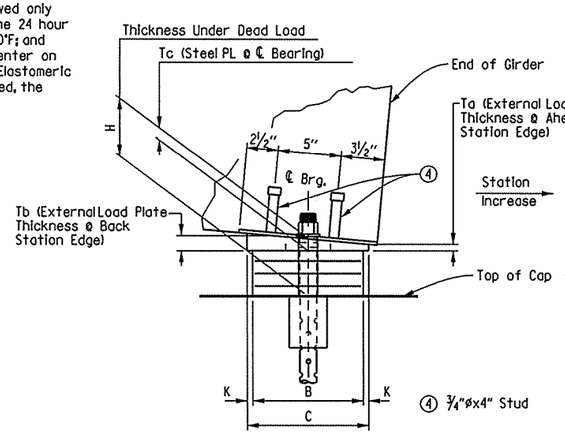

SIDE VIEW
No Scale

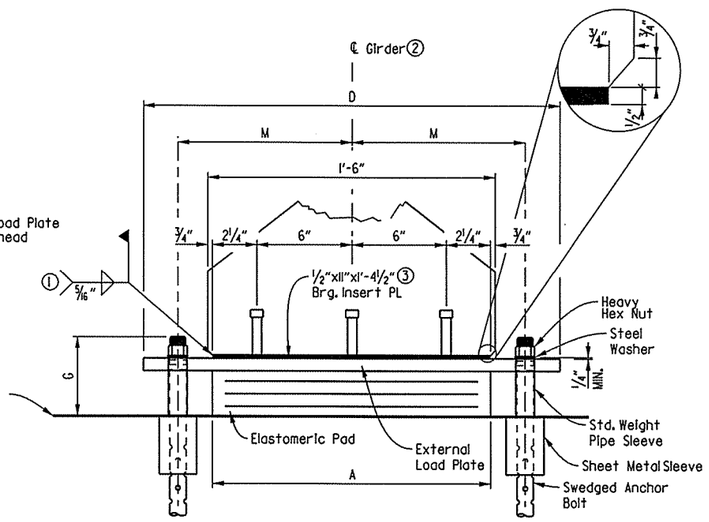

FRONT VIEW
No Scale

GENERAL NOTES

Elastomeric Bearings shall conform to Section 808 of the Standard Specifications and shall be paid for at the unit price bid for "Elastomeric Bearings." Long-duration testing of random lot samples specified in Subsection 808.05 is required.

External Load Plates shall conform to AASHTO M 270, Grade 50W. Pipe sleeves shall be ASTM A500, Grade B, and shall be galvanized to conform to AASHTO M 232, Class C or ASTM B695, Class 50.

External Load Plates shall be completely fabricated (including bevel and bolt holes) and shall be cleaned before vulcanizing to the elastomeric bearing. Surfaces in contact with the elastomeric bearing shall be cleaned in accordance with Subsection 808.03.

Anchor Bolts, Washers and Nuts shall conform to Subsection 807.07 of the Standard Specifications. The anchor bolt grade of steel shall be as specified in the "Table of Fabricator Variables". Indentations shall be circular with rounded bottoms and staggered as shown in the details.

Bearings shall be seated in accordance with Subsection 808.08. All cost of bearing assembly including work and materials are considered as subsidiary to the price bid for "Elastomeric Bearings".

Pipe Sleeves, Anchor Bolts, Washers, and Nuts shall be paid for at the unit price bid for "Structural Steel in Beam Spans (M270, Gr. 50)". The cost of all other items in the bearing assembly shall be subsidiary to the price bid for "Elastomeric Bearings".

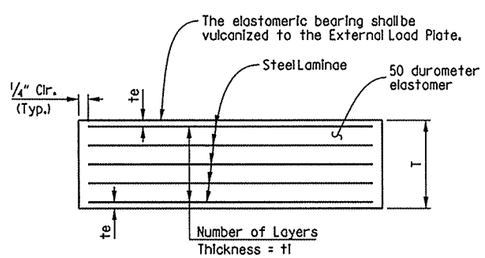

te= Thickness of elastomer cover on top and bottom of pad

t1= Thickness of elastomer between steel laminae

N= Number of elastomer layers of thickness t1

ELASTOMERIC BEARING (TYP.)
No Scale

(1) Care shall be taken to ensure that the External Load Plate is in full and complete contact with the beam or girder flange before welding begins.

(2) ℄ elastomeric pad shall be aligned with ℄ Girder

(3) Bearing insert plate (M270, Gr. 50W) & studs shall be considered subsidiary to the item "Prestressed Concrete Girders (Type III)"

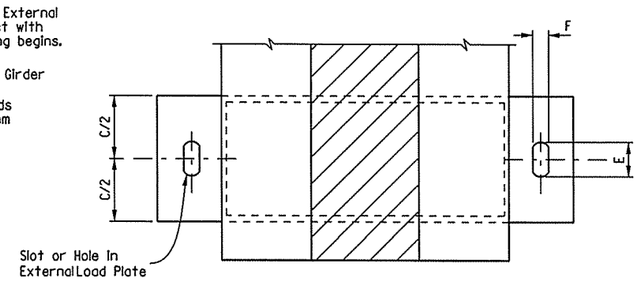

PLAN VIEW
No Scale

STATE OF ARKANSAS
Jose K. Joseph
REGISTERED PROFESSIONAL ENGINEER
No. 15634
JOSE K. JOSEPH
3/8/16

DETAILS OF ELASTOMERIC BEARINGS
ROUTE 49 SEC. 29
ARKANSAS STATE HIGHWAY COMMISSION
LITTLE ROCK, ARK.

DRAWN BY: LLW	DATE: 05-27-15	FILENAME: bca0901ml_el.dgn			
CHECKED BY: LLW	DATE: 06-25-15	SCALE: SEE DETAILS			
DESIGNED BY: JKJ	DATE: 03-27-15				

BRIDGE NO. A&B5956 DRAWING NO. 57693

USER: lw7300
DESIGN FILE: G:\13\06100.264toNlope\TRANSP\dgn\bridge\bca0901ml_el.dgn
PLOTTED: 3/8/2016 10:04 SCALE: 2:1

Crafton, Tull & Associates Inc.	DATE REVISED	DATE FILMED	DATE REVISED	DATE FILMED	FED.RD. DIST.NO.	STATE	FED.AID PROJ.NO.	SHEET NO.	TOTAL SHEETS
					6	ARK.			
					JOB NO.		CA0901	147	452
					(1) A&B5956		SPAN DETAILS		57694

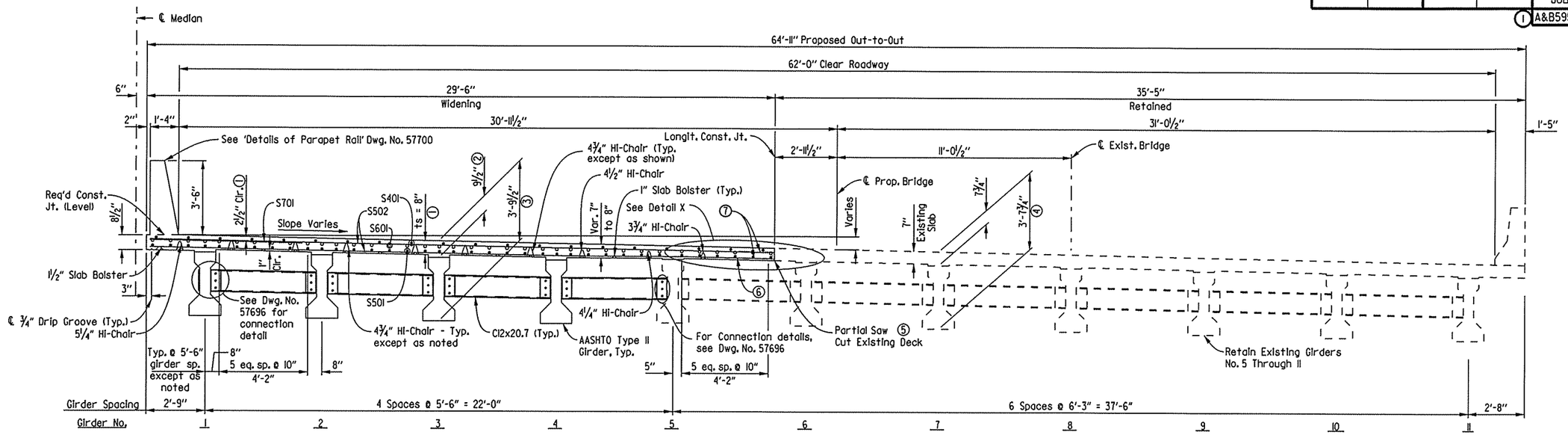

① Tolerances: Minus = ¼"
Plus = Equal to amount of slab thickening used to meet slab thickness tolerance
See "Adjustment for Slab Thickness Tolerance when Removable Deck Forming Is Used".

② See "Adjustment for Slab Thickness Tolerance when Removable Deck Forming Is Used".

③ Measured at ℄ Bearing and ℄ New Girders, Typ.

④ Measured at ℄ Bearing and ℄ Exist. Girders, Typ.

⑤ Care shall be exercised during the removal of the existing deck to ensure that the girders, diaphragms, bolted connections and reinforcement are not damaged. Damaged items that are not salvageable as determined by the Engineer, shall be replaced by the contractor at no additional payment. See Section 821.

⑥ Clean and retain existing transverse reinforcing. Remove and replace all existing longitudinal reinforcement.

⑦ Minimum Lap, with existing reinforcement (Top & Bottom). New transverse reinforcing steel shall not be tied to existing reinforcing steel.

⑧ Based on Existing plans. The Contractor shall verify dimensions in the field.

Note: Space Hi-Chairs 4'-0" o.c. long.
Space slab bolsters 4'-0" max. sp.

TYPICAL ROADWAY SECTION

Bridge B Shown (Bridge A Similar)
(Looking Ahead)
Scale: ⅜" = 1'-0"

SLAB REINFORCING:

Transverse:
S502 @ 7" o.c. in top & bottom
S701 @ 14" o.c. in top

Longitudinal:
S401 @ 18" o.c. in top (spaced as shown in Typ. Section)
S501 @ 10" o.c. in bottom (spaced as shown in Typ. Section)
S601 @ 10" o.c. in top (over interior supports)

#4 bars lapped @ 1'-5"
#5 bars lapped @ 1'-9" (u.n.o.)
#6 bars lapped @ 2'-1" (u.n.o.)

Note: Class 2 Protective Roadway Surface Treatment shall be applied to the roadway surface and roadway face and top of parapet of the new construction, including the existing deck surface to be retained.

The superstructure details shown are for use when removable deck forming is used and are the basis for measurement of Class S(AE) Concrete. See AHTD Std. Dwg. No. 55005 for allowable modifications and for tolerances when permanent steel bridge deck forms are used.

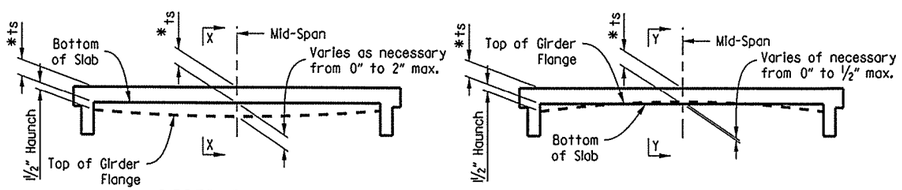

GIRDER ELEVATION
No Scale

GIRDER ELEVATION
No Scale

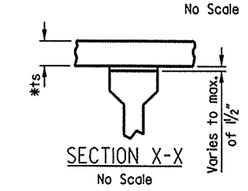

SECTION X-X
No Scale

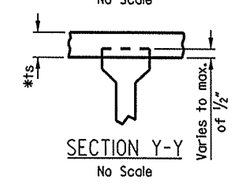

SECTION Y-Y
No Scale

Note: ts = slab thickness as shown on Superstructure Details.
See "Half-Sections of Midspan & Beam End Diaphragms".

* Tolerance when removable deck forming is used is +½", -¼". Haunch forming is required and shall be adjusted to maintain slab thickness tolerance.
See Dwg. No. 55005 for tolerances when permanent steel deckforms are used.

'Girder Elevation' sketches show the range of acceptability of the top of the girder relative to bottom of slab after the placement of the slab. When the top of the girder projects more than ½" into the slab, a raise in grade will be necessary. Girders shall be set in a sufficient number of spans so when adjustment is necessary the profile grade can be adjusted over suitable increments so the revised grade line will produce a smooth riding surface. Variation of the haunch height will be at the Contractor's expense.

ADJUSTMENT FOR SLAB THICKNESS TOLERANCE WHEN REMOVABLE DECK FORMING IS USED

No Scale

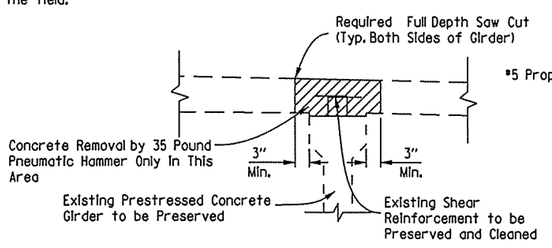

DETAIL Y
(Removal of Existing Deck at Girder 5)

Note:
Concrete removal over girders shall be restricted to 35 Pound Pneumatic Hammer. The concrete removal in this area shall be performed after the slab has been cut.

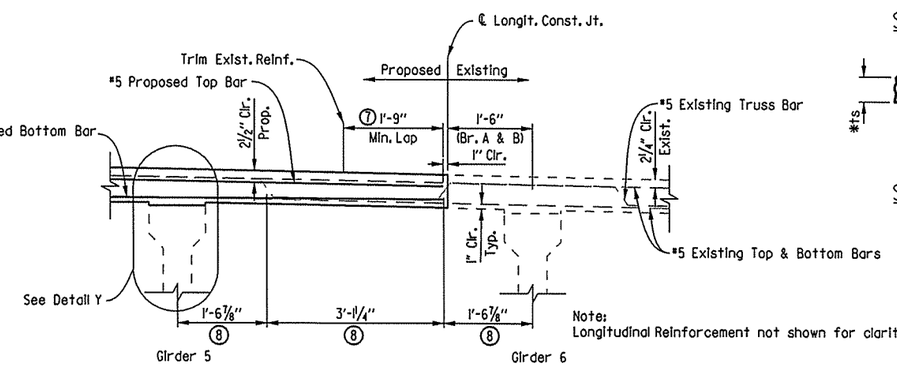

Note:
Longitudinal Reinforcement not shown for clarity.

DETAIL X
(Bridge B shown, Bridge A similar)
Scale: ¾" = 1'-0"

STATE OF ARKANSAS
Jose K. Joseph
REGISTERED PROFESSIONAL ENGINEER
No. 15634
JOSE K. JOSEPH
3/8/16

SHEET 1 OF 9

DETAILS OF 143'-0" CONTINUOUS PRESTRESSED CONCRETE GIRDER (BRIDGES A & B)
BLOSSOM WAY CREEK
ROUTE 49 SEC. 29
ARKANSAS STATE HIGHWAY COMMISSION
LITTLE ROCK, ARK.

DRAWN BY: LLW	DATE: 11-14-14	FILENAME: bca0901bl_sl.dgn			
CHECKED BY: KJC	DATE: 01-20-15	SCALE: ¾" = 1'-0"			
DESIGNED BY: JKJ	DATE: 05-22-14				

BRIDGE NO. A&B5956 DRAWING NO. 57694

USER: lw7300
DESIGN FILE: G:\13106100_264toNhope\TRANSP\dgn\bridge\bca0901bl_sl.dgn
PLOTTED: 3/8/2016 10:04 SCALE: 5.3333333:1

Expansion Device:
Rdwy. Channel-Cl2x20.7
Conn. ∠'s Cl5x33.9 (Cope One Flange)

① Dimensions are measured perpendicular to ℄ of Bridge.

For details of Poured Silicone Joint, see Dwg. No. 57702

Crafton, Tull & Associates Inc.

DATE REVISED	DATE FILMED	DATE REVISED	DATE FILMED

FED.RD. DIST.NO.	STATE	FED.AID PROJ.NO.	SHEET NO.	TOTAL SHEETS
6	ARK.			
JOB NO.		CA0901	148	452
① A&B5956		SPAN DETAILS		57695

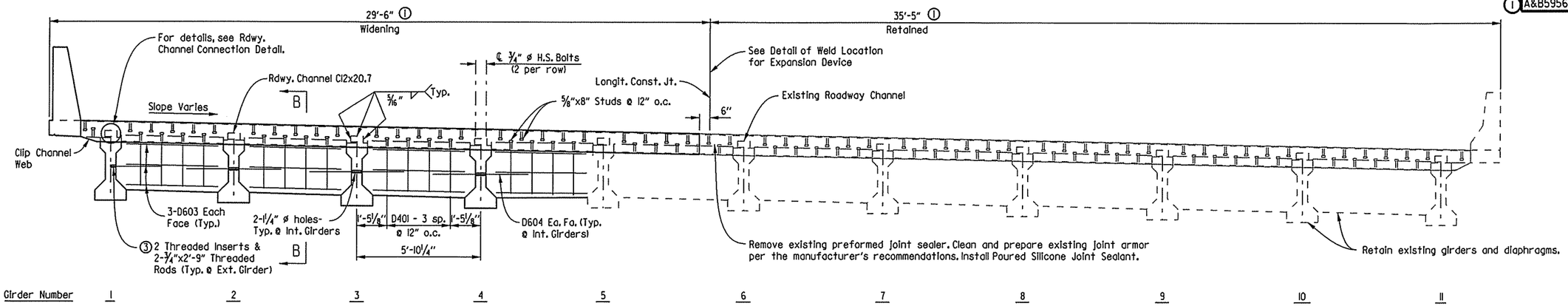

③ Galvanized threaded inserts: Dayton-Richmond F-42 loop ferrule insert or an approved equal. 3/4" ø threaded rods to be AASHTO M270, Grade 36 or AASHTO M31 or M322 Type A, Gr. 60. These are to be non-pay items-subsidiary to the item "Prestressed Concrete Girders (Type III)". Galvanizing shall be in accordance with AASHTO M232 Class C or ASTM B695 Class 50.

TYPICAL SECTION THROUGH JOINT

(Bridge 'B' - Looking Ahead at Bent 1, Bent 4 opposite hand)
(Bridge 'A' - Looking Back at Bent 4, Bent 1 opposite hand)
Scale: 3/8" = 1'-0"

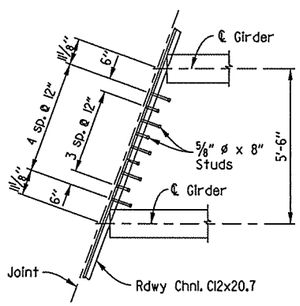

PLAN OF STUD SPACING

Scale: 3/8" = 1'-0"
(Between New Beams)

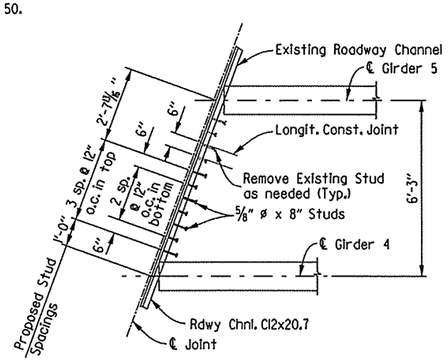

PLAN OF STUD SPACING

Scale: 3/8" = 1'-0"
(Between Existing Beams)

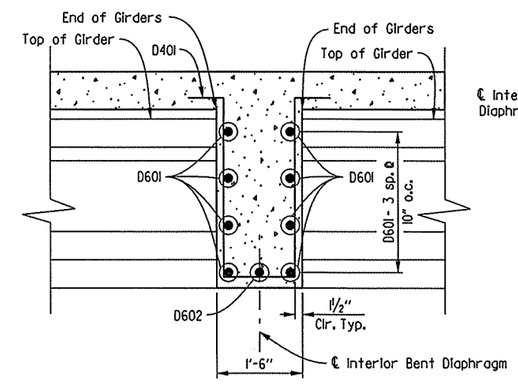

SECTION A-A

Scale: 3/4" = 1'-0"

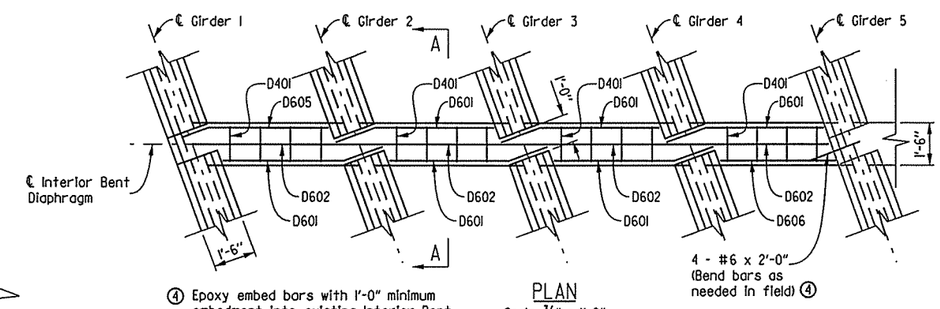

④ Epoxy embed bars with 1'-0" minimum embedment into existing Interior Bent Diaphragm. Payment shall be considered subsidiary to the item "Modification of Existing Bridge Structure (Br. No. A5956)" & "Modification of Existing Bridge Structure (Br. No. B5956)".

PLAN

Scale: 3/8" = 1'-0"

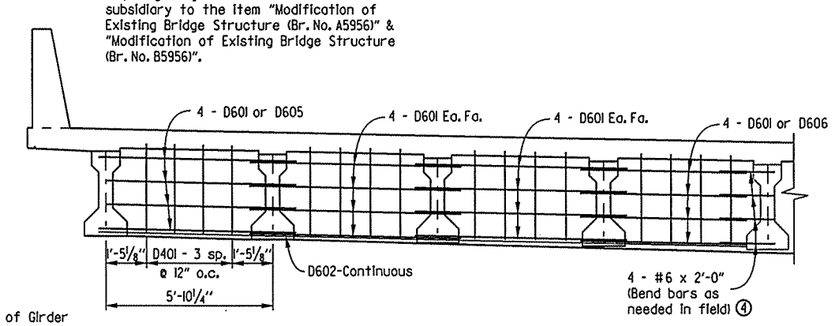

DETAILS OF INTERIOR BENT DIAPHRAGM

Scale: 3/8" = 1'-0"

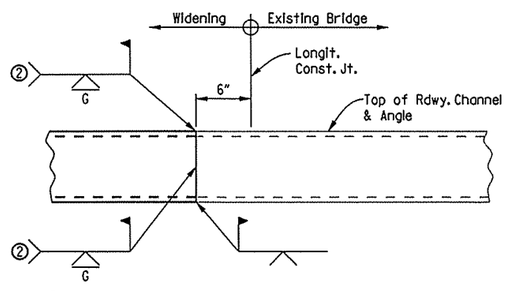

② Grind flush from top of deck to top of Bumper Bar.

DETAIL OF WELD LOCATION FOR EXPANSION DEVICE

No Scale

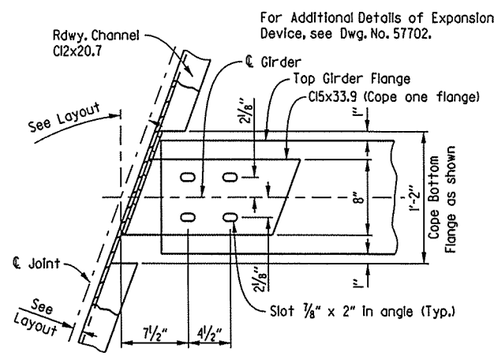

RDWY. CHANNEL CONNECTION DETAIL

(Girder 1-5)
Scale: 1 1/2" = 1'-0"

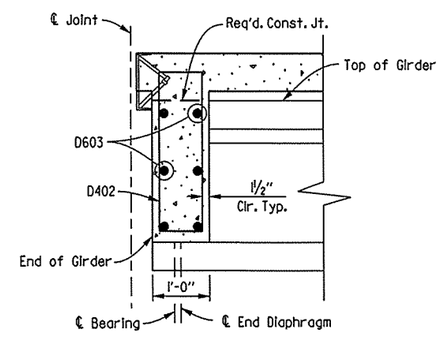

SECTION B-B

Scale: 3/4" = 1'-0"

STATE OF ARKANSAS
Jose K. Joseph
REGISTERED PROFESSIONAL ENGINEER
No. 15634
JOSE K. JOSEPH
3/8/16

SHEET 2 OF 9

DETAILS OF 143'-0" CONTINUOUS PRESTRESSED CONCRETE GIRDER (BRIDGES A & B)
BLOSSOM WAY CREEK
ROUTE 49 SEC. 29
ARKANSAS STATE HIGHWAY COMMISSION
LITTLE ROCK, ARK.

DRAWN BY:	LLW	DATE:	11-14-14	FILENAME:	bca0901bl_s2.dgn
CHECKED BY:	KJC	DATE:	01-20-15	SCALE:	3/8" = 1'-0"
DESIGNED BY:	JKJ	DATE:	05-22-14		

BRIDGE NO. A&B5956 DRAWING NO. 57695

USER: lw7300
DESIGN FILE: G:\13\06100_2647toNhope\TRANSP\dgn\bridge\bca0901bl_s2.dgn
PLOTTED: 3/8/2016 10:04 SCALE: 5.3333333:1

Crafton, Tull & Associates Inc.

DATE REVISED	DATE FILMED	DATE REVISED	DATE FILMED

FED.RD. DIST.NO.	STATE	FED.AID PROJ.NO.	SHEET NO.	TOTAL SHEETS
6	ARK.			
JOB NO.		CA0901	149	452

(1) A&B5956 SPAN DETAILS 57696

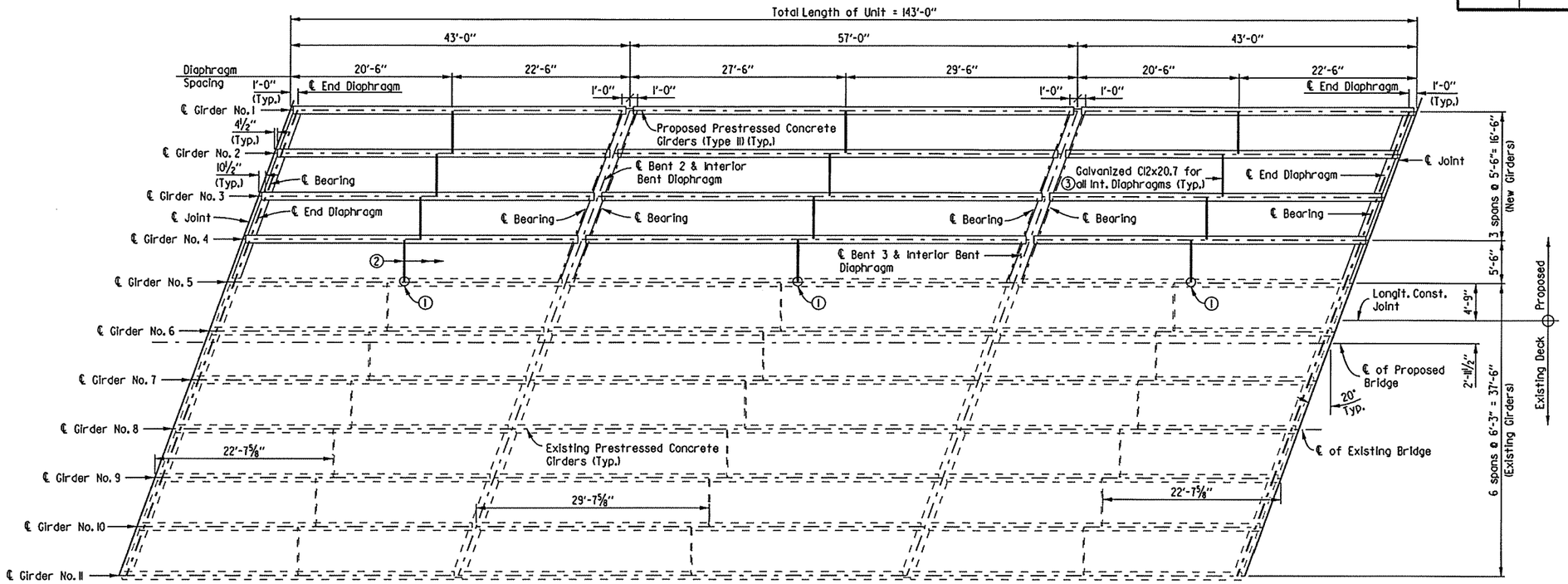

(1) Install new angle on existing Girder No. 5 after existing deck removal and prior to pouring new deck slab. (Typ.) See Typ. Int. Diaphragm Connection at Girder No. 5.

(2) Install diaphragms prior to deck pour. Tighten Bolts after all deck pours are complete. (This bay only)

(3) See Typical Int. Dia. Connection

FRAMING PLAN

Bridge B shown, Bridge A similar
Scale: ⅛" = 1'-0"

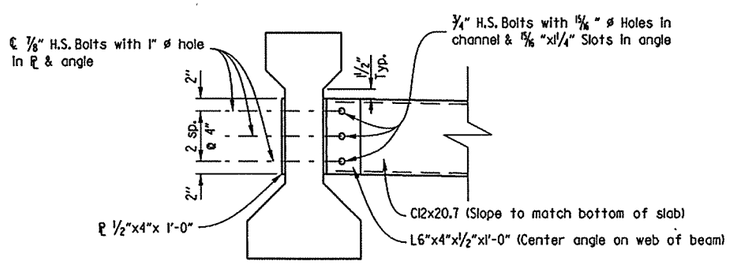

TYP. INT. DIAPHRAGM CONNECTION

Scale: 1" = 1'-0"

Note: All components of Int. Diaphragm shall be galvanized. A standard washer shall be supplied for use under both the nut and the head of the ¾" ø & ⅞" ø bolts, an additional 2½" O.D. washer shall cover the angle slots.

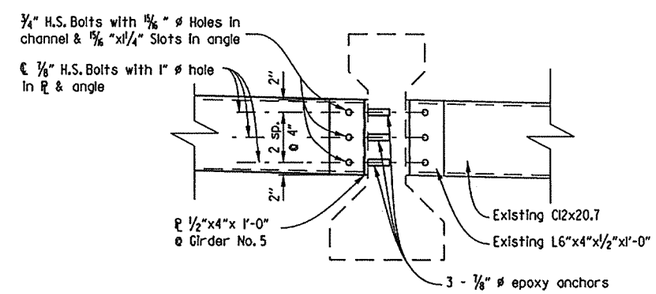

TYP. INT. DIAPHRAGM CONNECTION AT GIRDER NO. 5

Scale: 1" = 1'-0"

STATE OF ARKANSAS
Jose K. Joseph
REGISTERED PROFESSIONAL ENGINEER
No. 15634
JOSE K. JOSEPH
3/21/16

SHEET 3 OF 9

DETAILS OF 143'-0" CONTINUOUS PRESTRESSED CONCRETE GIRDER (BRIDGES A & B)
BLOSSOM WAY CREEK
ROUTE 49 SEC. 29
ARKANSAS STATE HIGHWAY COMMISSION
LITTLE ROCK, ARK.

DRAWN BY: TRN	DATE: 06-02-15	FILENAME: bca0901bl.s3.dgn	
CHECKED BY: KJC	DATE: 01-20-15	SCALE: SEE DETAILS	
DESIGNED BY: JKJ	DATE: 05-28-14		

BRIDGE NO. A&B5956 DRAWING NO. 57696

USER: lw7300
DESIGN FILE: G:\3106100.264toNHope\TRANSP\dgn\bridge\bca0901bl.s3.dgn
PLOTTED: 3/21/2016 08:55 SCALE: 16:1

Crafton, Tull & Associates Inc.

DATE REVISED	DATE FILMED	DATE REVISED	DATE FILMED	FED.RD. DIST.NO.	STATE	FED.AID PROJ.NO.	SHEET NO.	TOTAL SHEETS
				6	ARK.			
				JOB NO.		CA0901	150	452
				(1) A&B5956		SPAN DETAILS		57697

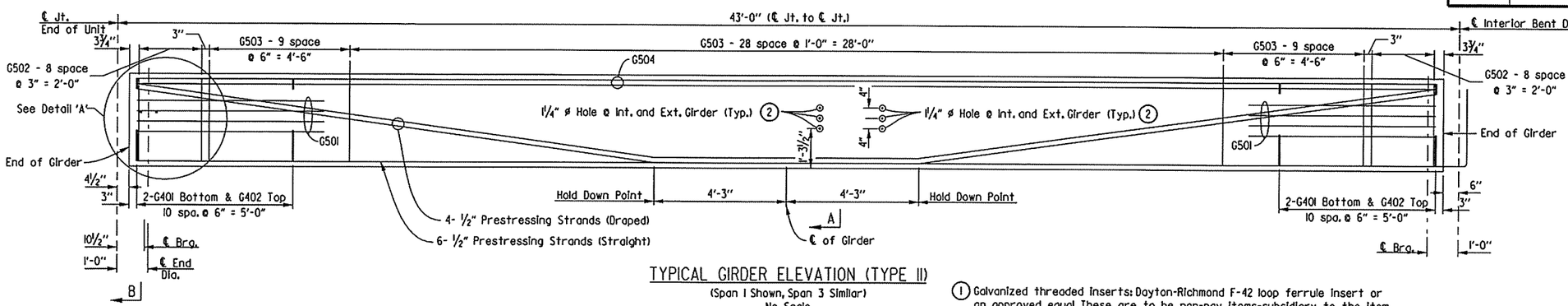

TYPICAL GIRDER ELEVATION (TYPE II)

(Span 1 Shown, Span 3 Similar)
No Scale

(1) Galvanized threaded inserts: Dayton-Richmond F-42 loop ferrule insert or an approved equal. These are to be non-pay items-subsidiary to the item "Prestressed Concrete Girders (Type II)". Galvanizing shall be in accordance with AASHTO M232 Class C or ASTM B695 Class 50.

(2) For location of diaphragm and diaphragm bolts, see Dwg. No. 57696

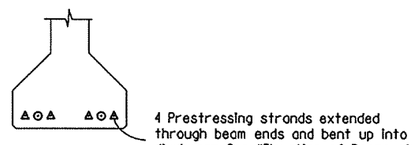

STRAND DETAIL

Scale: 1" = 1'-0"

4 Prestressing strands extended through beam ends and bent up into diaphragm. See "Elevation of Beams at Intermediate Bents".

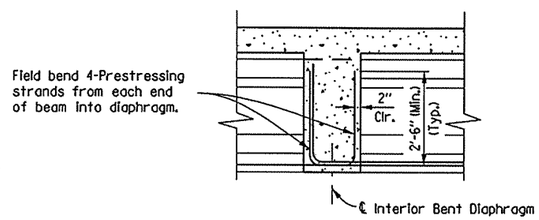

ELEVATION OF BEAMS AT INTERMEDIATE BENTS

Scale: ½" = 1'-0"

BAR LIST - PER 42'-1½" GIRDER

MARK	NO. REQ'D	LENGTH	P.D.
G401	44	2'-6"	2"
G402	22	1'-6"	3"
G501	8	10'-1"	3"
G502	36	3'-7"	2"
G503	94	4'-8"	2"
G504	4	41'-9"	Str.

BENDING DIAGRAMS (DIMENSIONS ARE OUT TO OUT OF BARS.)

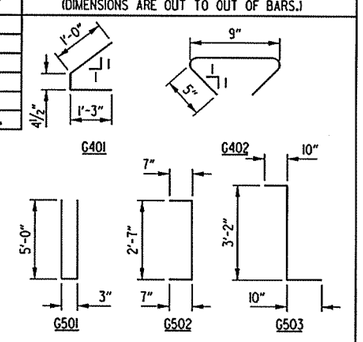

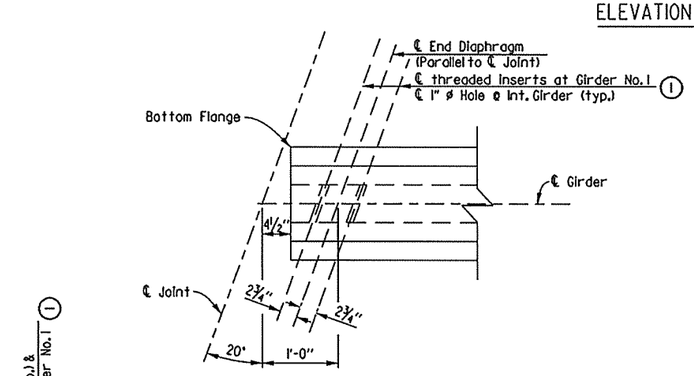

SECTION C-C

Scale: 1" = 1'-0"

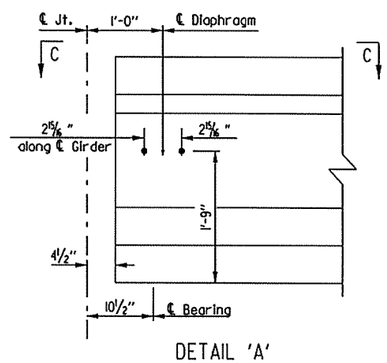

DETAIL 'A'

Scale: 1" = 1'-0"

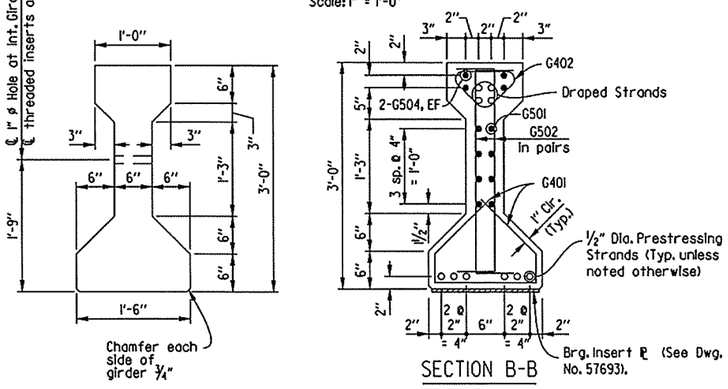

SECTION B-B

Scale: 1" = 1'-0"

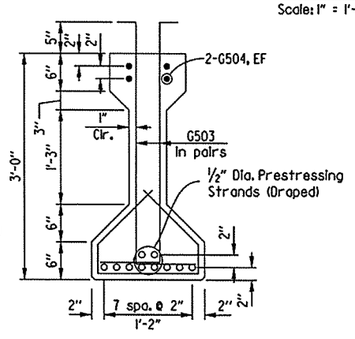

SECTION A-A

Scale: 1" = 1'-0"

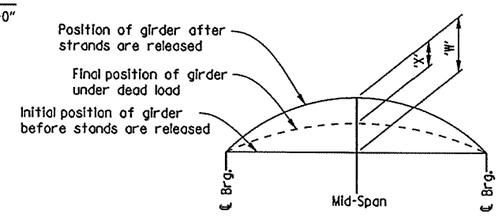

	Span 1 & 3
"W"	0.88"
"X"	0.17"

'W' is expected camber of girder at 90 days release (Prestress + Dead Load of Girder)

'X' is Dead Load Deflection of Slab + Diaphragms + Composite Dead Load.

CAMBER & DEFLECTIONS (INCHES)

STATE OF ARKANSAS
Jose K. Joseph
REGISTERED PROFESSIONAL ENGINEER
No. 15634
JOSE K. JOSEPH
3/21/16

GENERAL NOTES - GIRDERS ONLY

Pretensioning steel shall be ½" dia. low relaxation strands with a minimum ultimate strength of 270 ksi and shall conform to AASHTO M203.

All girders shall be AASHTO Type II I-Girders as shown on the details. All girders shall be cast in concrete floored pallets and in metal forms. All work and materials shall be as specified in Subsection 802.22 of the Standard Specifications.

Concrete shall be Class 'S' and shall have a minimum 28 day compressive strength f'c = 6000 PSI.

Dimensions shown are to the center of strands.

The initial tensile force applied to each ½" dia. strand shall be 31000 pounds. Transfer of this tensioning load to the girder shall not be done until the compressive strength of the concrete is 4500 psi.

The Contractor shall submit the method and sequence for release of strands to the Engineer for approval prior to casting of the girders.

The first 16" along the top of the girder at each end shall have a smooth finish. The remaining portion shall be rough floated at approximately the time of set then scrubbed transversely with a coarse wire brush to remove all laitance and to produce a roughened surface for bonding slabs.

Girder lengths shown on the design plans are net lengths measured horizontally along girder centerlines. The girder manufacturer shall make the necessary allowances for grade and shortening due to elastic shortening, creep, and shrinkage.

All exposed steel at ends of girders shall be protected against corrosion by a coating with two coats of Zinc-Rich paint.

Girders must be maintained in an upright position at all times and must be picked up from points near the girder ends. Disregardment of the requirement may lead to collapse of the girder. The Contractor's proposed lifting details shall be submitted on shop drawings to the Engineer for approval. The use of holes for lifting purposes will not be permitted.

The Contractor may submit alternate strand patterns with design calculations for review and approval in accordance with Subsection 802.22 except that only ½" diameter strands shall be allowed.

All reinforcing steel shall be Grade 60 (yield strength = 60,000 psi) conforming to AASHTO M 31 or M 322 Type A with Mill Test Reports.

Distances from the forms and spacing of the prestressing steel shall be maintained by stays, ties, hangers, spacers, or other approved supports which shall be shown on the shop drawings.

The point of support and direction of the reactions with respect to the member shall be appoximately the same during transportation and storage as when member is in its final position.

Drawings show general features of design only. Shop drawings shall be submitted to the Engineer and approval shall be secured before fabrication can begin.

SHEET 4 OF 9

DETAILS OF 143'-0" CONTINUOUS PRESTRESSED CONCRETE GIRDER (BRIDGES A & B)

BLOSSOM WAY CREEK

ROUTE 49 SEC. 29

ARKANSAS STATE HIGHWAY COMMISSION

LITTLE ROCK, ARK.

DRAWN BY: LLW	DATE: 05-27-15	FILENAME: bca0901bl_s4.dgn	
CHECKED BY: KJC	DATE: 01-20-15	SCALE: SEE DETAILS	
DESIGNED BY: JKJ	DATE: 05-04-15		

BRIDGE NO. A&B5956 DRAWING NO. 57697

USER: lw7300
DESIGN FILE: G:\3106100_2641rollHope\TRANSP\dgn\bridge\bca0901bl_s4.dgn
PLOTTED: 3/21/2016 08:55 SCALE: 4:1

Crafton, Tull & Associates Inc.

DATE REVISED	DATE FILMED	DATE REVISED	DATE FILMED	FED.RD. DIST.NO.	STATE	FED.AID PROJ.NO.	SHEET NO.	TOTAL SHEETS
				6	ARK.			
				JOB NO.		CA0901	151	452

(1) A&B5956 SPAN DETAILS 57698

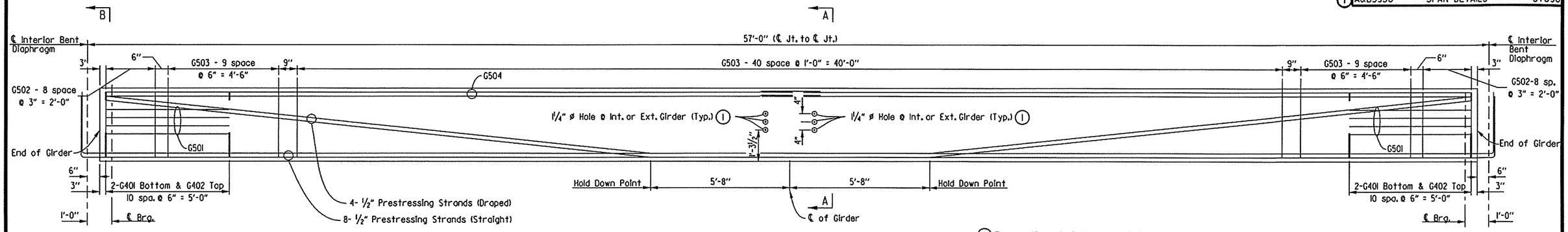

TYPICAL GIRDER ELEVATION (TYPE II)

(Span 2)
No Scale

(1) For location of diaphragm and diaphragm bolts, see Dwg. No. 57696

See Dwg. 57697 for General Notes - Girders

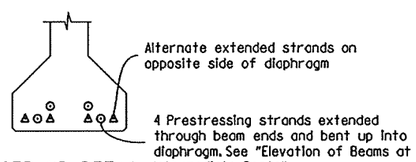

STRAND DETAIL

Scale: 1" = 1'-0"

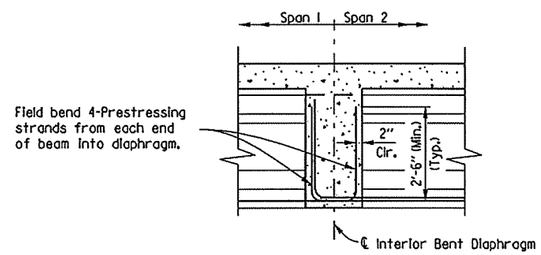

ELEVATION OF BEAMS AT INTERMEDIATE BENTS

Scale: ½" = 1'-0"

BAR LIST - PER 56' GIRDER

MARK	NO. REQ'D	LENGTH	P.D.	BENDING DIAGRAMS (DIMENSIONS ARE OUT TO OUT OF BARS.)
G401	44	2'-6"	2"	
G402	22	1'-6"	3"	
G501	8	10'-1"	3"	
G502	36	3'-7"	2"	
G503	122	4'-8"	2"	
G504	8	29'-5"	Str.	

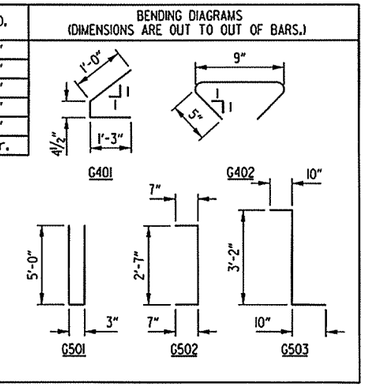

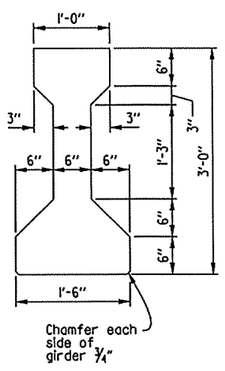

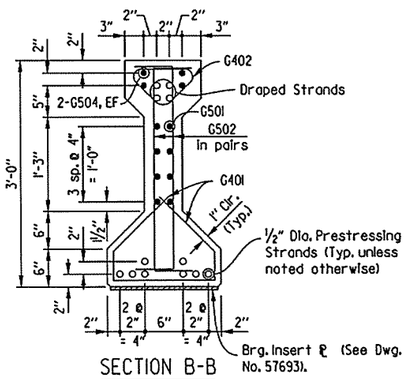

SECTION B-B

Scale: 1" = 1'-0"

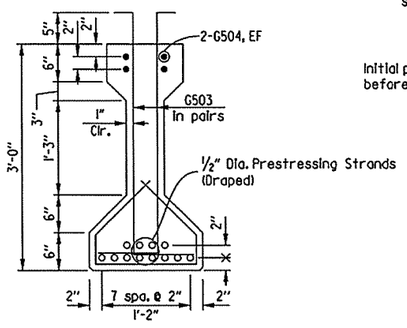

SECTION A-A

Scale: 1" = 1'-0"

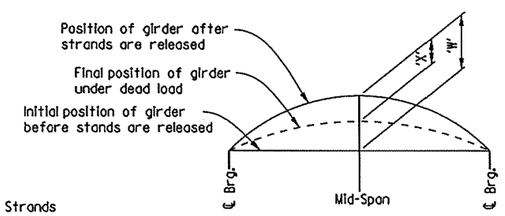

	Span 2
"W"	1.59"
"X"	0.54"

'W' is expected camber of girder at 90 days release (Prestress + Dead Load of Girder)

'X' is Dead Load Deflection of Slab + Diaphragms + Composite Dead Load.

CAMBER & DEFLECTIONS (INCHES)

STATE OF ARKANSAS
Jose K. Joseph
REGISTERED PROFESSIONAL ENGINEER
No. 15634
JOSE K. JOSEPH
3/21/16

SHEET 5 OF 9

DETAILS OF 143'-0" CONTINUOUS PRESTRESSED CONCRETE GIRDER (BRIDGES A & B)

BLOSSOM WAY CREEK

ROUTE 49 SEC. 29

ARKANSAS STATE HIGHWAY COMMISSION

LITTLE ROCK, ARK.

DRAWN BY:	LLW	DATE:	05-27-15	FILENAME:	bco0901bl_s5.dgn
CHECKED BY:	KJC	DATE:	01-20-15	SCALE:	SEE DETAILS
DESIGNED BY:	JKJ	DATE:	05-04-15		

BRIDGE NO. A&B5956 DRAWING NO. 57698

USER: lw7300
DESIGN FILE: G:\3106100_2641toNhope\TRANSP\dgn\bridge\bco0901bl_s5.dgn
PLOTTED: 3/21/2016 08:55 SCALE: 4:1

Crafton, Tull & Associates Inc.

DATE REVISED	DATE FILMED	DATE REVISED	DATE FILMED

FED.RD. DIST.NO.	STATE	FED.AID PROJ.NO.	SHEET NO.	TOTAL SHEETS
6	ARK.			
JOB NO.		CA0901	152	452
(1) B5956		143' UNIT		57699

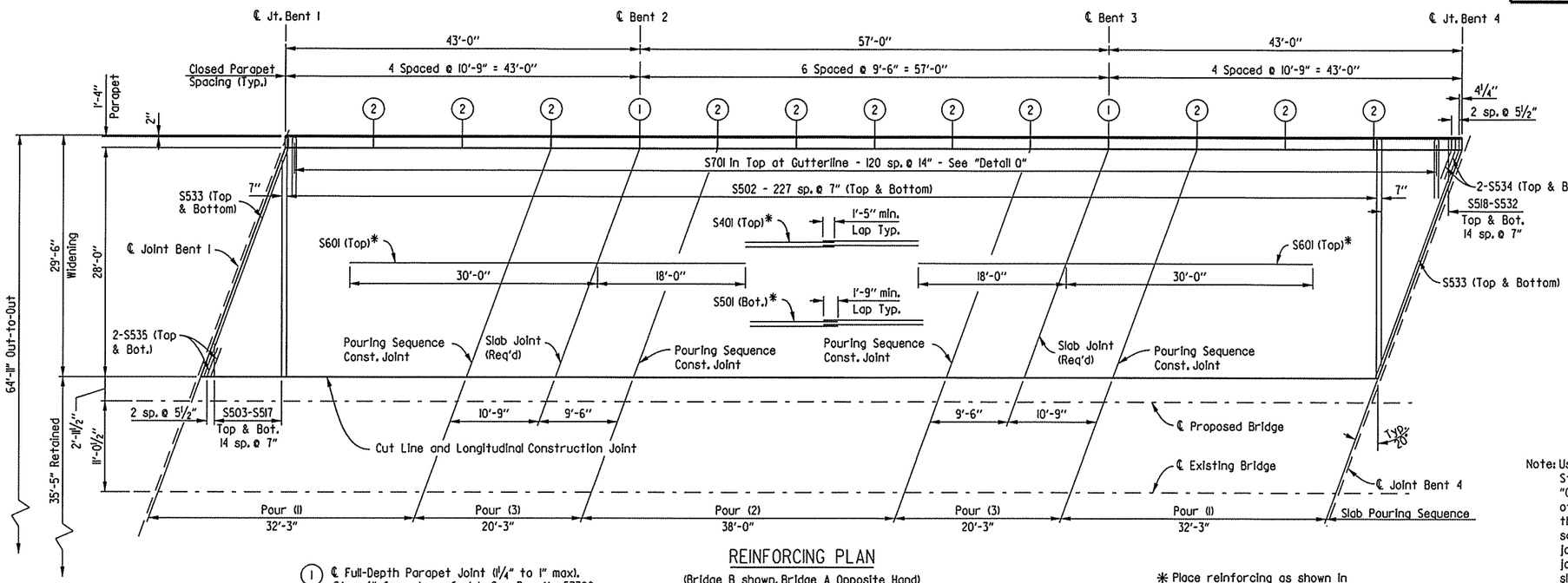

(1) ℄ Full-Depth Parapet Joint (1¼" to 1" max). Stop 4" from top of slab. See Dwg. No. 57700.

(2) ℄ Partial-Depth Parapet Joint (1¼" to 1" max). Stop 1'-6" from top of slab. See Dwg. No. 57700.

REINFORCING PLAN

(Bridge B shown, Bridge A Opposite Hand)
Scale: ⅛" = 1'-0"

* Place reinforcing as shown in "Typical Roadway Section"

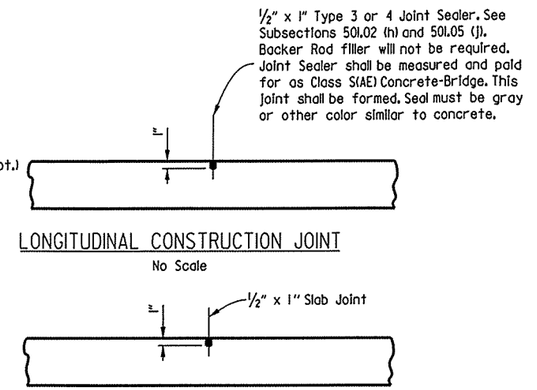

LONGITUDINAL CONSTRUCTION JOINT

No Scale

SLAB JOINT DETAIL

No Scale

Note: Use Type 3 or 4 Joint Sealer. See Subsections 501.02(h) and 501.05 (j) of the Standard Specifications. Backer Rod filler will not be required. Paid for under "Class (SAE) Concrete - Bridge". Slab joints shall extend to the outside edge of the deck slab (gutterline to gutterline). Slab joints shall be installed before the parapet railing is poured. If slab joints are to be sawed, they shall be sawed as soon as the concrete has sufficiently set to allow sawing of the joints without damage to the slab. Slab joints shall align with parapet joints. Slab joints shall be placed at all pouring sequence construction joints and required slab joint locations.

BAR LIST PER BRIDGE

Mark	Number Required	Length	Pin Diameter
S401	80	36'-9"	Str.
S501	148	37'-0"	Str.
S502	456	28'-11"	Str.
S503-S517	30	Var. 4'-0" to 26'-3"	Str.
S518-S532	30	Var. 5'-3" to 27'-8"	Str.
S533	4	31'-1"	3¾"
S534	4	5'-1"	3¾"
S535	4	5'-6"	Str.
S601	74	48'-0"	Str.
S701	121	12'-2"	5¼"
P401	8	36'-9"	Str.
P402	40	10'-4"	Str.
P403	30	9'-1"	Str.
P404	8	22'-0"	Str.
P405	4	29'-0"	Str.
P501	240	6'-8"	3¾"
P502	240	6'-9"	3¾"
D401	32	9'-1"	2"
D402	32	7'-5"	2"
D601	56	5'-10"	4½"
D602	2	22'-6"	Str.
D603	48	4'-2"	Str.
D604	12	5'-6"	Str.
D605	8	5'-1"	4½"
D606	8	4'-3"	Str.

Bending Diagrams (Dimensions are Out to Out of Bars)

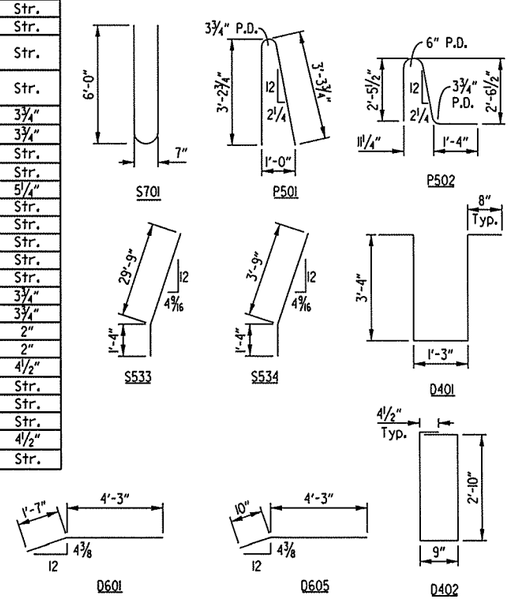

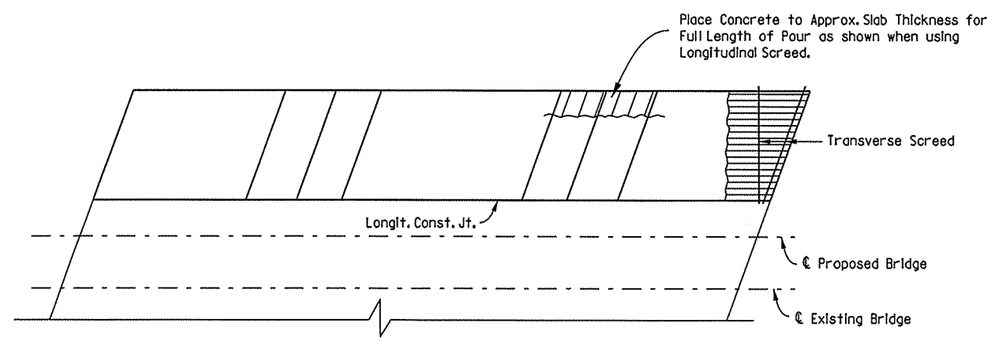

Note: At the contractor's option, the transverse screed may be placed parallel to the skew or perpendicular to the ℄ Bridge. Place concrete to approx. slab thickness parallel to skew as shown.

CONCRETE PLACEMENT PROCEDURE

No Scale

Note: For each stage of construction, pours with the same number may be placed simultaneously or separately. All Pours (1) must be placed before Pours (2) can be placed. 48 hours shall elapse between the end of a pour and the start of the next pour. 72 hours shall elapse between the end of a pour and the start of an adjacent pour. Any railing pours made before the entire slab unit for each stage has been placed must be approved by the Engineer. The Contractor must obtain approval from the Engineer for any deviations from the pouring sequence shown.

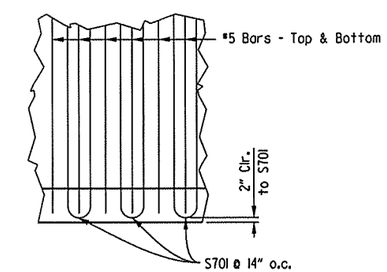

DETAIL Q

No Scale

STATE OF ARKANSAS
Jose K. Joseph
REGISTERED PROFESSIONAL ENGINEER
No. 15634
JOSE K. JOSEPH
3/8/16

SHEET 6 OF 9

DETAILS OF 143'-0" CONTINUOUS PRESTRESSED CONCRETE GIRDER (BRIDGES A & B)
BLOSSOM WAY CREEK
ROUTE 49 SEC. 29
ARKANSAS STATE HIGHWAY COMMISSION
LITTLE ROCK, ARK.

DRAWN BY: LLW	DATE: 12-03-14	FILENAME: bca0901bl_s6.dgn	
CHECKED BY: KJC	DATE: 01-20-15	SCALE: ¼" = 1'-0"	
DESIGNED BY: JKJ	DATE: 06-12-14		

BRIDGE NO. A&B5956 DRAWING NO. 57699

USER: lw7300
DESIGN FILE: G:\31061.00_264toNhope\TRANSP\dgn\bridge\bca0901bl_s6.dgn
PLOTTED: 3/8/2016 10:05 SCALE: 16:1

Crafton, Tull & Associates Inc.	DATE REVISED	DATE FILMED	DATE REVISED	DATE FILMED	FED.RD. DIST.NO.	STATE	FED.AID PROJ.NO.	SHEET NO.	TOTAL SHEETS
					6	ARK.			
					JOB NO.		CA0901	153	452
					(1) A&B5956		STAGE CONST.		57700

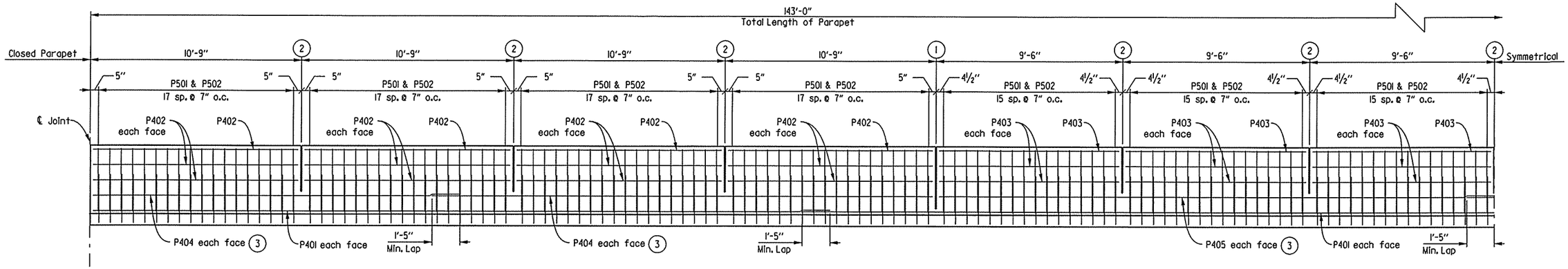

(1) ℄ Full-Depth Parapet Joint (1¼" to 1" max). Stop 4" from top of slab. See Dwg. No. 57700.

(2) ℄ Partial-Depth Parapet Joint (1¼" to 1" max). Stop 1'-6" from top of slab. See Dwg. No. 57700.

(3) Provide 1'-5" Min. Lap

DETAILS OF CLOSED PARAPET

(Bridge B shown, Bridge A similar)
Scale: ⅜" = 1'-0"

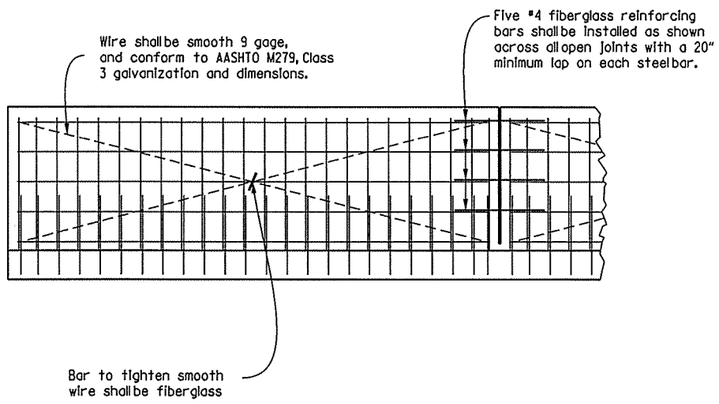

All panels shall be braced as required to prevent cracking. All open joints shall be sawed as soon as practical to a minimum width of ¼". To control cracking before sawing all joints must be grooved before the concrete is set. Sawing of the joints must be controlled so it will follow the grooved joint.

The extruded parapet shall conform to the horizontal and vertical lines shown on the plans or as directed by the Engineer and shall present a smooth, uniform appearance and texture.

DETAIL OF OPTIONAL SLIP FORMING OF CONCRETE PARAPET RAIL

No Scale

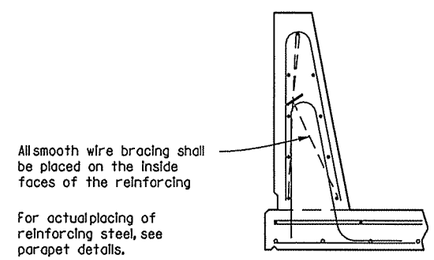

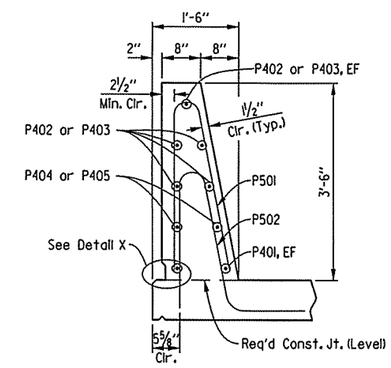

SECTION A-A

Scale: ¾"=1'-0"

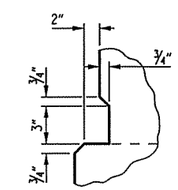

DETAIL X

Scale: 1½" = 1'-0"

Place Type D Bridge Name Plate on front face of span rail approx. 2'-0" from front face of backwall on right side (Bridge A Only) at begin of bridge

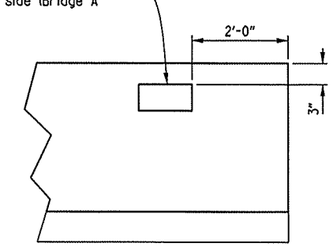

NAME PLATE DETAIL

No Scale

STATE OF ARKANSAS
REGISTERED PROFESSIONAL ENGINEER
No. 15634
JOSE K. JOSEPH
3/8/16

SHEET 7 OF 9

DETAILS OF 143'-0" CONTINUOUS PRESTRESSED CONCRETE GIRDER (BRIDGES A & B)
BLOSSOM WAY CREEK
ROUTE 49 SEC. 29
ARKANSAS STATE HIGHWAY COMMISSION
LITTLE ROCK, ARK.

DRAWN BY: TRM	DATE: 05-29-14	FILENAME: bca0901bl_s7.dgn	
CHECKED BY: KJC	DATE: 01-20-15	SCALE: ¾" 1'-0"	
DESIGNED BY: JKJ	DATE: 05-22-14		

BRIDGE NO. A&B5956 DRAWING NO. 57700

USER: lw7300
DESIGN FILE: G:\13\06100_264toNHope\TRANSP\dgn\bridge\bca0901bl_s7.dgn
PLOTTED: 3/8/2016 10:05 SCALE: 5.333333:1

GENERAL NOTES

CONSTRUCTION SPECIFICATIONS: Arkansas State Highway and Transportation Department Standard Specifications for Highway Construction (2014 edition) with applicable Supplemental Specifications and Special Provisions.

DESIGN SPECIFICATIONS: AASHTO LRFD Bridge Design Specifications, 6th edition (2012) with current interim specifications - New Construction Only

MATERIALS AND STRENGTHS:

Class S(AE) Concrete (slab, parapet, diaphragm)	f'c= 4,000 psi
Class S Concrete (Prestressed Girders)	f'c= 6,000 psi
Class S Concrete (Substructure)	f'c= 3,500 psi
Reinforcing Steel (Grade 60 AASHTO M31 or M322 Type A)	fy= 60,000 psi
Prestressing Strands (AASHTO M203)	fpu= 270,000 psi
Structural Steel (AASHTO M270, Gr. 50)	Fy= 50,000 psi
Structural Steel (AASHTO M 270, Gr. 36)	Fy= 36,000 psi

CONCRETE:
All Concrete in slabs, parapets, and diaphragms shall be Class S(AE) with a minimum of 28 day compressive strength f'c= 4000 psi. Concrete shall be poured in the dry and all exposed corners shall be chamfered ¾" unless otherwise noted. All end of unit diaphragms shall be cast in place and poured a minimum of 48 hours before the slab is poured, unless otherwise noted. Interior bent diaphragms shall be cast monolithically with the slab, and shall not be poured until at least 90 days after the release of the prestressing strands.

The Superstructure details shown are for use when removable deck forming is used and are the basis for measurement of Class S(AE) concrete. See Standard Drawing No. 55005 for allowable modifications and for tolerances when Permanent Steel Bridge Deck Forms are used.

Concrete in bridge superstructure shall be placed, consolidated and screeded off for the entire pour before any concrete has taken its initial set. This may require the use of a retarding agent. The contractor must obtain approval from the Engineer for any deviations from the pouring sequence shown.

The concrete deck shall be given a tine finish in accordance with Subsection 802.19 for Class 5 Tined Bridge Roadway Surface Finish. Movement of the finishing machine across new concrete shall be on planks placed on the surface and shall be prohibited for 72 hours after finishing the pour. Sufficient concrete must be placed ahead of the strike-off to fully load the girder. Use of longitudinal screed is prohibited. Slab Joints from new construction shall align with Slab Joints from existing construction. Required Slab Joints shall align with the Parapet Open Joints.

REINFORCING STEEL:
All reinforcing steel shall be Grade 60 (Yield Strength = 60,000 psi) conforming to AASHTO M 31 or M 322 Type A with mill test reports.

The reinforcing steel shall be accurately located in the forms and firmly held in place by steel wire supports sufficient in size and number to prevent displacement during the course of construction. The wire supports will not be paid for directly but will be considered subsidiary to the Item of "Reinforcing Steel (Grade 60)".

STRUCTURAL STEEL:
All Structural Steel shall be AASHTO M270, Gr. 50 unless otherwise noted and shall be paid for as "Structural Steel in Beam Spans (M270, Gr. 50)". Structural steel completely embedded in concrete may be AASHTO M270, Gr. 36.

The roadway channels and end bent joint armor shall be cleaned and painted in accordance with Section 638. All other exposed surfaces shall be cleaned in accordance with Section 807 unless noted otherwise. This work will not be paid for separately but will be considered subsidiary to The Item "Structural Steel in Beam Spans (M270, Gr. 50)".

Requests for substitution of structural steel shapes shown with shapes of greater size must be submitted by the Contractor to the Engineer for approval. Steels of equal or greater strengths will be accepted only when shown on the approved shop drawings. Shape and materials shown in the plans will be the basis of payment and no additional compensation will be made for any adjustments due to substitutions.

All welding that is to be done during fabrication of structural steel, including temporary welds, shall be detailed on the shop drawing and submitted for approval. If additional welds are required, whether permanent or temporary, a formal request with detailed drawings shall be submitted to the Engineer for approval; However, additional welds used for attaching falsework support devices or screed rail supports to the structural steel that do not exceed the limitations of Subsection 802.13 will not require approval prior to construction. All welding shall conform to Subsection 807.26.

Drawings show general features of design only. Shop drawings shall be made in accordance with the Specifications, submitted, and approval secured before fabrication is begun.

Elastomeric bearings shall be firmly seated in accordance with Subsection 808.08 of the Specifications. This work to be considered subsidiary to the item "Elastomeric Bearings" and will not be paid for directly.

REMOVAL OF EXISTING DECK:
Care shall be exercised during the removal of the existing deck to ensure that the existing girders, including shear reinforcements, are not damaged. Damaged items that are not salvageable, as determined by the Engineer, shall be replaced at the Contractor's expense.

The deck removal shall progress in a manner that will ensure the stability of the existing structure. The concrete deck in the end spans shall not be removed before the deck in the interior spans have been removed.

The existing concrete deck shall be completely removed to the top flange of the existing girders. Care should be exercised during the removal of the existing deck to ensure that the existing girders, diaphragms and reinforcement is not damaged. This work will not be paid for directly but will be considered subsidiary to this item "Modification of Existing Bridge Structure (Br. No. A5956)" and "Modification of Existing Bridge Structure (Br. No. B5956)".

METHOD OF WORK:
The Contractor shall remove portions of the existing deck as shown in "Details of Stage Construction" on Dwg. No. 57683. After Construction of all bents and removal of portions of the existing slab have been performed to the satisfaction of the Engineer, the Contractor shall drill and install the new angle and bolts to Girder No. 5, as shown in the plans, to facilitate diaphragm construction. This work will not be paid for directly but will be considered subsidiary to the item "Modification of Existing Bridge Structure (Br. No. A5956)" & "Modification of Existing Bridge Structure (Br. No. B5956)".

All applicable provisions of Section 205, as determined by the Engineer, shall be followed.

The Contractor may submit an alternate Method of Work. The plan shall be submitted to the Engineer for information and record keeping purposes at least three weeks prior to any work being performed. The submittal shall be prepared and/or approved by an Arkansas Professional Engineer and shall include sufficient details and information to the Engineer's satisfaction. The Contractor shall be responsible for the results obtained by the use of the alternate Method of Work. All work, materials, and labor required for the Contractor to develop and execute the plan will not be paid for directly but will be considered subsidiary to the item "Modification of Existing Bridge Structure (Br. No. A5956)" & "Modification of Existing Bridge Structure (Br. No. B5956)".

STATE OF ARKANSAS
Jose K. Joseph
REGISTERED PROFESSIONAL ENGINEER
No. 15634
JOSE K. JOSEPH
3/8/16

SHEET 8 OF 9

DETAILS OF 143'-0" CONTINUOUS PRESTRESSED CONCRETE GIRDER (BRIDGES A & B)
BLOSSOM WAY CREEK
ROUTE 49 SEC. 29
ARKANSAS STATE HIGHWAY COMMISSION
LITTLE ROCK, ARK.

DRAWN BY:	LLW	DATE:	11-14-14	FILENAME:	bca0901bl_s8.dgn
CHECKED BY:	KJC	DATE:	01-20-15	SCALE:	NO SCALE
DESIGNED BY:	JKJ	DATE:	05-22-14		

BRIDGE NO. A&B5956 DRAWING NO. 57701

Crafton, Tull & Associates Inc.

DATE REVISED	DATE FILMED	DATE REVISED	DATE FILMED	FED.RD. DIST.NO.	STATE	FED.AID PROJ.NO.	SHEET NO.	TOTAL SHEETS
				6	ARK.			
				JOB NO.		CA0901	155	452
				(1) A&B5956		SPAN DETAILS		57702

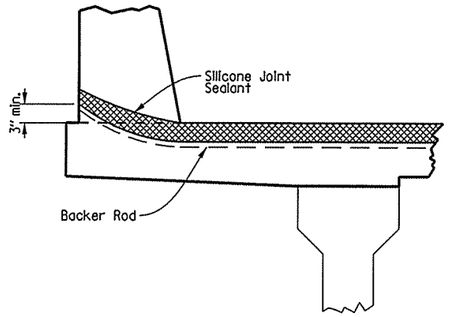

JOINT SEAL PLACEMENT AT PARAPET

No Scale

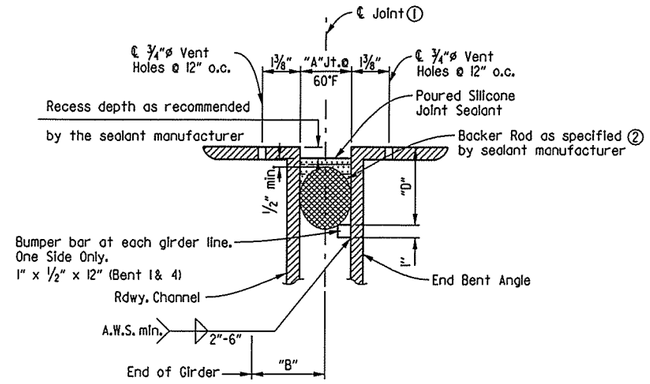

DETAIL OF POURED SILICONE JOINT SEAL

At End Bents
No Scale

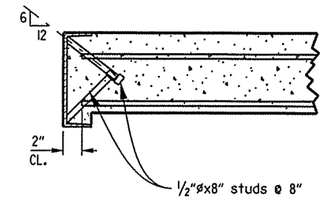

Note: As an alternate to ⅝"ø studs, ½"øx8" studs spaced as shown may be used. Use weight of ⅝"ø stud as basis of measurement of structural steel in anchors.

DETAILS OF ALTERNATE ANCHORS

No Scale

EXPANSION DEVICE INSTALLATION

The Contractor may elect to install the expansion device for the end bents using one of the following two alternatives:

1) The concrete span pour adjacent to joint shall be placed before the end bent backwall is placed. After the end bent backwall forms are in place and the girders erected, the blocked expansion device shall be installed and adjusted for grade. All connection bolts shall be fully tightened prior to placing the deck concrete adjacent to the bent. Immediately prior to pouring the backwall concrete, the blocking shall be removed, the opening adjusted for temperature, and the backwall constructed.

2) The backwall portion shall be poured to the optional construction joint after girders are erected. The blocked expansion device shall be installed and adjusted for grade. All connection bolts shall be fully tightened prior to placing the deck concrete adjacent to the bent. The concrete span pour adjacent to joint shall be placed prior to pouring the remainder of the backwall. Immediately prior to pouring the remainder of the backwall concrete, the blocking shall be removed and the opening adjusted for temperature. Backfill shall not be placed behind the backwall until the deck concrete on the adjacent span has been placed.

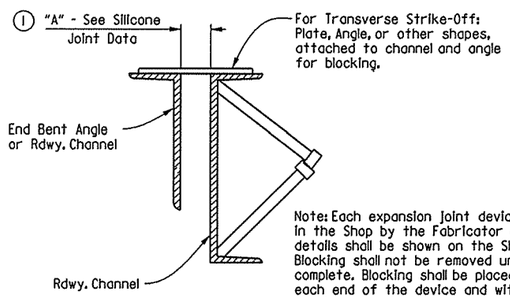

Note: Each expansion joint device shall be blocked in the Shop by the Fabricator and the blocking details shall be shown on the Shop Drawings. Blocking shall not be removed until the slab is complete. Blocking shall be placed within 2 feet of each end of the device and with a maximum spacing of 8 feet.

DETAILS FOR BLOCKING EXPANSION JOINT DEVICE

No Scale

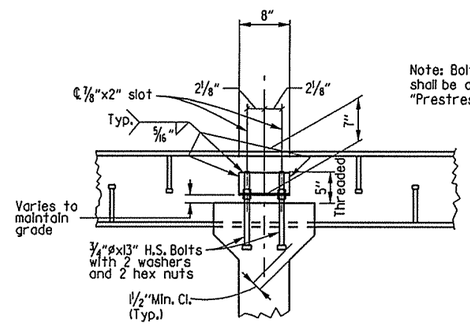

Note: Bolts, washers & hex nuts shall be considered subsidiary to the item "Prestressed Concrete Girders (Type II)".

SECTION A-A

No Scale

TABLE FOR WELDS

Material Thickness of Thicker Part Joined (Inches)	Minimum Size of Fillet Weld (Inches)	
To ¾" Inclusive	¼"	Single Pass Weld Must Be Used
Over ¾"	5/16"	

NOTE: When A Fillet Weld size, as shown on the Plans, is larger than the minimum, the first pass shall be that specified for minimum size of Fillet Weld.

SILICONE JOINT DATA

Bent Number	"A" Width Perpendicular to Joint at 24 Hour Average Temperature (1) Of:			"B" Perpendicular to Joint at 60°F	"D"
	40°F	60°F	80°F		
1	1⅛"	1"	⅞"	4½"	2¼"
4	1⅛"	1"	⅞"	4½"	2¼"

(1) The temperature used to set the joint opening shall be the approximate average air temperature during the 24 hour period immediately before the bolts are tightened. The Engineer shall establish the temperature. Interpolation of the table may be necessary.

Notes: The temperature limitations recommended by the sealant manufacturer shall be observed.

The sealant shall be installed only when the average 24 hour air temperature is between 40°and 80°F.

(2) BACKER ROD NOTE:

Use an appropriately sized backer rod at the depth shown in the manufacturer's literature based on the joint width at the time of sealing.

Except as noted, do not install more backer rod than that which can be sealed in the same day.

The contractor shall verify separation of the backer rod from the joint material after the joint material has set.

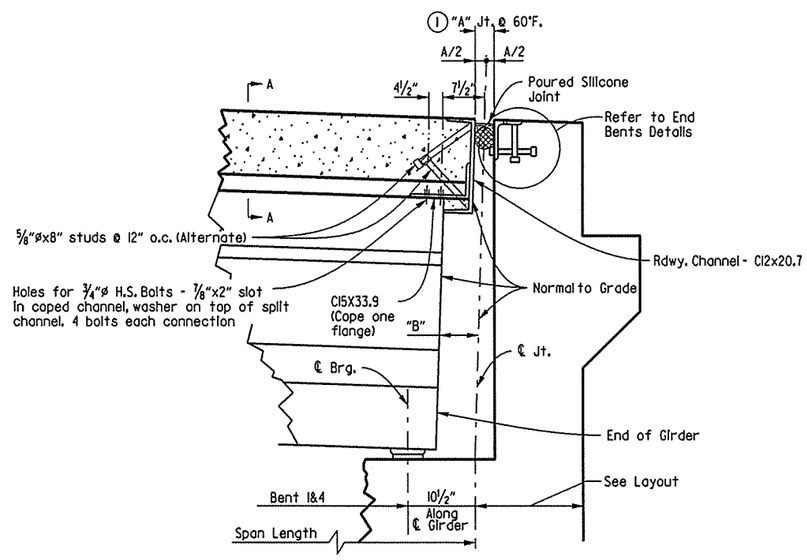

JOINT AT END BENTS

No Scale

Note: End Diaphragm not shown for clarity

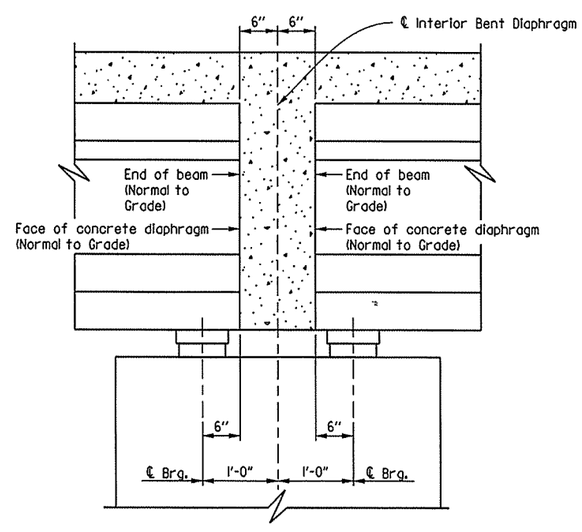

VIEW AT INTERMEDIATE BENT

(At Beam, Normal to Grade)

STATE OF ARKANSAS
Jose K. Joseph
REGISTERED PROFESSIONAL ENGINEER
No. 15634
JOSE K. JOSEPH
3/8/16

SHEET 9 OF 9

DETAILS OF 143'-0" CONTINUOUS PRESTRESSED CONCRETE GIRDER (BRIDGES A & B)
BLOSSOM WAY CREEK
ROUTE 49 SEC. 29
ARKANSAS STATE HIGHWAY COMMISSION
LITTLE ROCK, ARK.

DRAWN BY: TRM DATE: 05-14-14 FILENAME: bca0901bl_s9.dgn
CHECKED BY: KJC DATE: 01-20-15 SCALE: ⅜" 1'-0"
DESIGNED BY: JKJ DATE: 04-28-14
BRIDGE NO. A&B5956 DRAWING NO. 57702

USER: tw7300
DESIGN FILE: G:\13106100_2641toNhope\TRANSP\dgn\bridge\bca0901bl_s9.dgn
PLOTTED: 3/8/2016 10:05 SCALE: 2:1

Crafton, Tull & Associates Inc.	DATE REVISED	DATE FILMED	DATE REVISED	DATE FILMED	FED.RD. DIST.NO.	STATE	FED.AID PROJ.NO.	SHEET NO.	TOTAL SHEETS
					6	ARK.			
					JOB NO.		CA0901	156	452
					(1) A5956		APPR. SLAB		57703

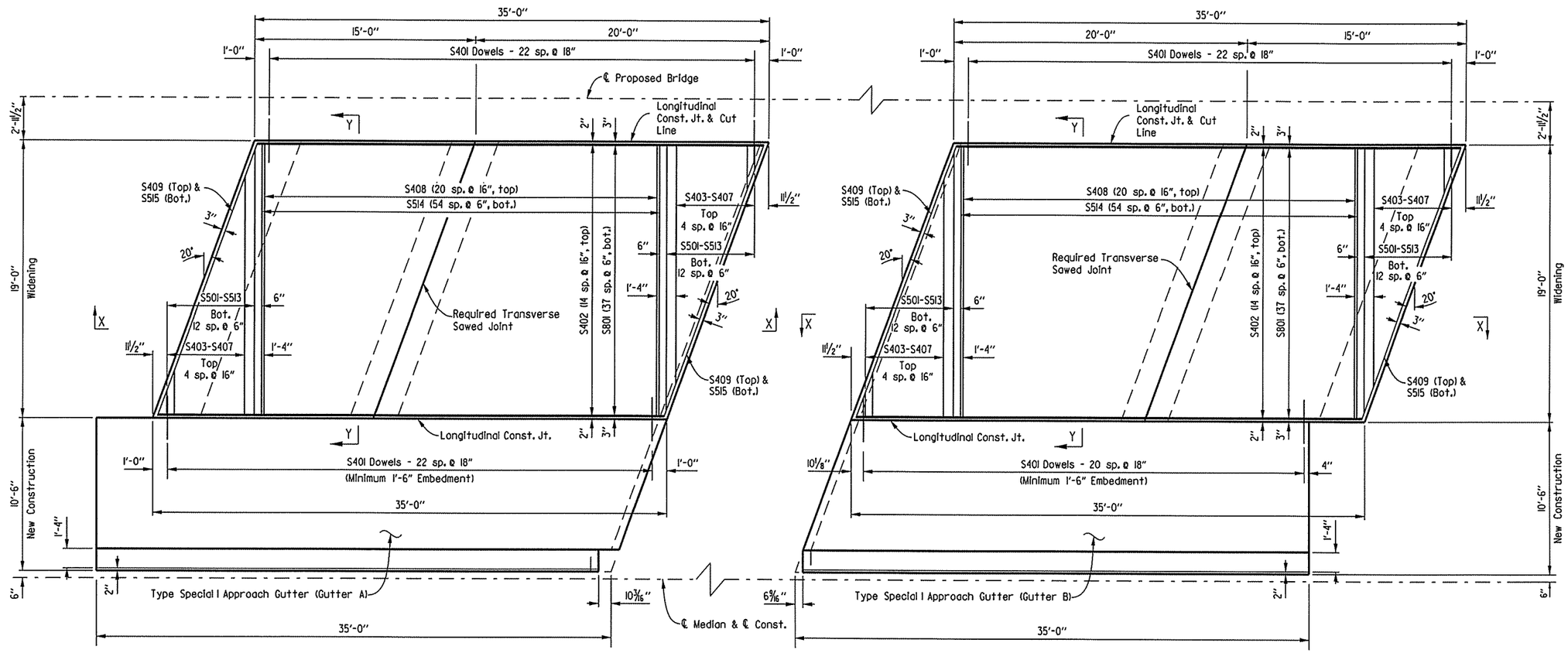

PLAN - APPROACH SLAB
(BEGIN BRIDGE A)

PLAN - APPROACH SLAB
(END BRIDGE A)

Note: Surface finish for approach slab shall match that used on bridge deck.

For General Notes, Sections, Bar List, and additional details See Dwg. No. 57705
For details of Type Special I Approach Gutters, See Dwg. No. 57706

STATE OF ARKANSAS
Jose K. Joseph
REGISTERED PROFESSIONAL ENGINEER
No. 15634
JOSE K. JOSEPH
3/8/16

SHEET 1 OF 3

DETAILS OF TYPE SPECIAL I
APPROACH SLABS
ROUTE 49 SEC. 29
ARKANSAS STATE HIGHWAY COMMISSION
LITTLE ROCK, ARK.

DRAWN BY: LLW	DATE: 09-15-14	FILENAME: bca0901ml_al.dgn	
CHECKED BY: JKJ	DATE: 08-10-15	SCALE: 1/4" = 1'-0"	
DESIGNED BY: LLW	DATE: 09-15-14		

BRIDGE NO. A5956 DRAWING NO. 57703

USER: lw7300
DESIGN FILE: G:\13106100.26ftoNHope\TRANSP\dgn\bridge\bca0901ml_al.dgn
PLOTTED: 3/8/2016 10:05 SCALE: 8:1

Crafton, Tull & Associates Inc.	DATE REVISED	DATE FILMED	DATE REVISED	DATE FILMED	FED.RD. DIST.NO.	STATE	FED.AID PROJ.NO.	SHEET NO.	TOTAL SHEETS
					6	ARK.			
					JOB NO.		CA0901	157	452
					(1) B5956		APPR. SLAB		57704

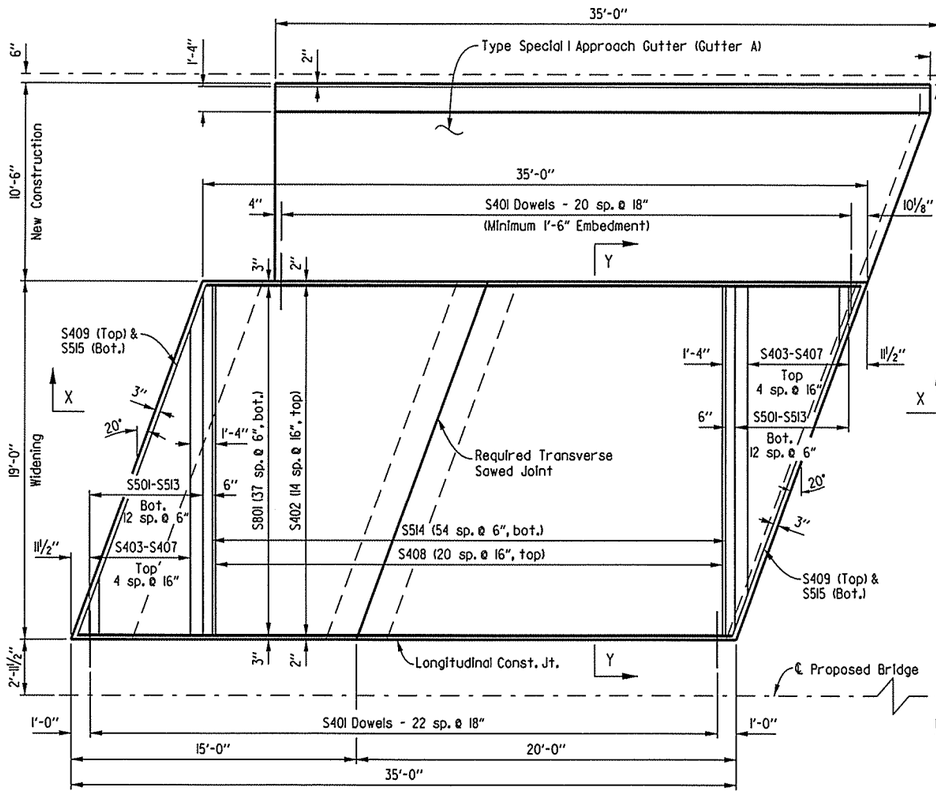

PLAN - APPROACH SLAB
(BEGIN BRIDGE B)

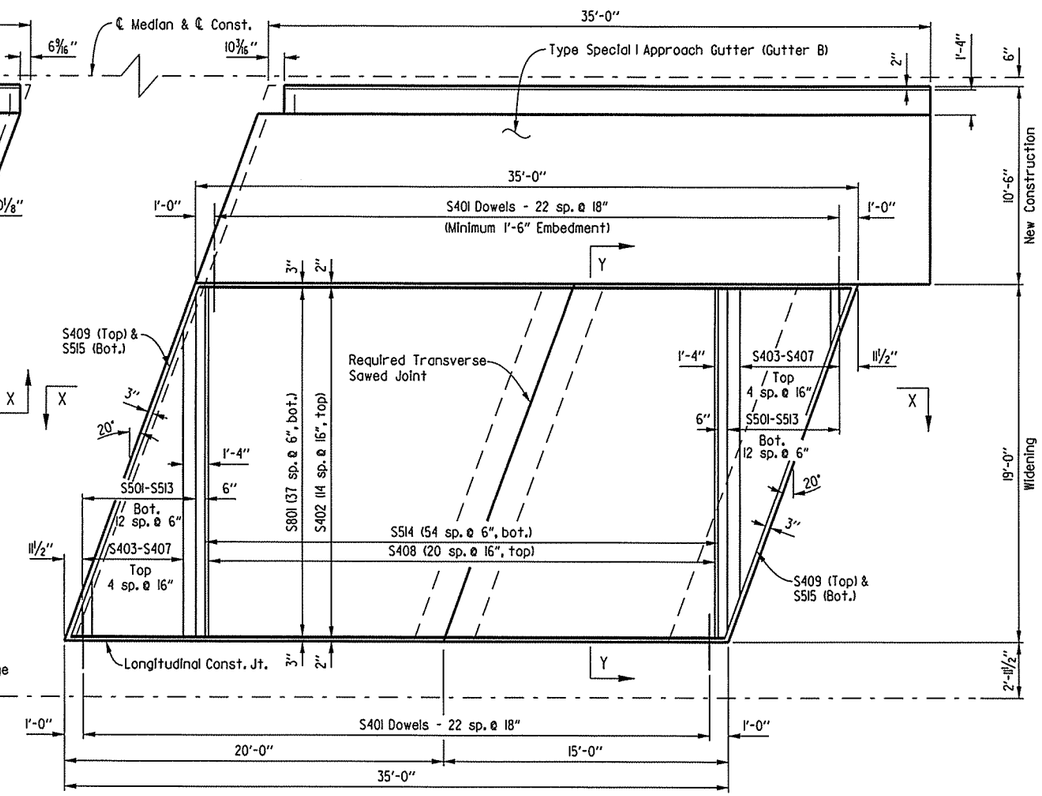

PLAN - APPROACH SLAB
(END BRIDGE B)

Note: Surface finish for approach slab shall match that used on bridge deck.

For General Notes, Sections, Bar List, and additional details See Dwg. No. 57705
For details of Type Special I Approach Gutters, See Dwg. No. 57707

STATE OF ARKANSAS
Jose K. Joseph
REGISTERED PROFESSIONAL ENGINEER
No. 15634
JOSE K. JOSEPH
3/8/16

SHEET 2 OF 3
DETAILS OF TYPE SPECIAL I
APPROACH SLABS
ROUTE 49 SEC. 29
ARKANSAS STATE HIGHWAY COMMISSION
LITTLE ROCK, ARK.

DRAWN BY: LLW	DATE: 09-15-14	FILENAME: bca0901ml_a2.dgn	
CHECKED BY: JKJ	DATE: 08-10-15	SCALE: 1/4" = 1'-0"	
DESIGNED BY: LLW	DATE: 09-15-14		

BRIDGE NO. B5956 DRAWING NO. 57704

USER: lw7300
DESIGN FILE: G:\3106100_264toNHope\TRANSP\dgn\bridge\bca0901ml_a2.dgn
PLOTTED: 3/8/2016 10:05 SCALE: 8:1

Crafton, Tull & Associates Inc.

DATE REVISED	DATE FILMED	DATE REVISED	DATE FILMED	FED.RD. DIST.NO.	STATE	FED.AID PROJ.NO.	SHEET NO.	TOTAL SHEETS
				6	ARK.			
				JOB NO.		CA0901	158	452
				(1) A&B5956		APPR. SLAB		57705

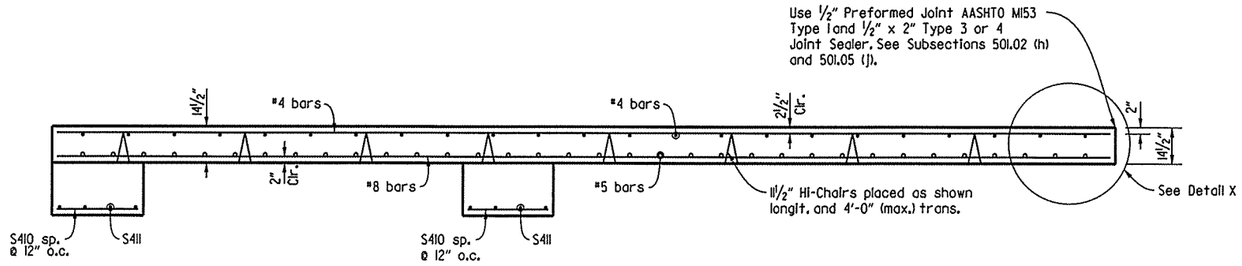

SECTION X - X
No Scale

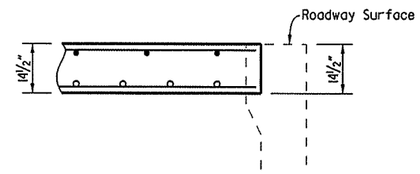

DETAIL X
No Scale

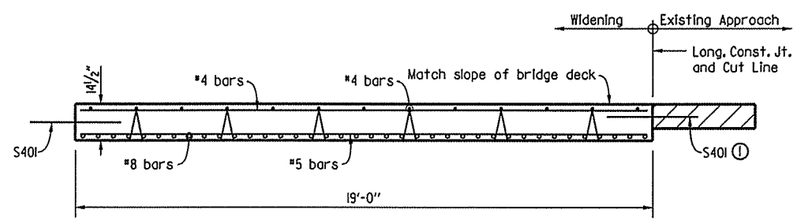

SECTION Y - Y
No Scale

(1) Drill and grout bars where shown using an approved cement or epoxy system from the OPL. Minimum embedment shall be 12" for cement based grout. Minimum embedment shall be per the manufacturer's recommendations for epoxy based grout.

BAR LIST- APPROACH A

MARK	NO. REQ'D. Beg. Br.	NO. REQ'D. End Br.	LENGTH
S401	46	44	3'-0"
S402	15	15	34'-6"
S403-S407	2 each	2 each	1'-9" to 16'-5"
S408	21	21	18'-8"
S409	2	2	19'-10"
S410	19	19	2'-8"
S411	8	8	19'-10"
S501-S513	2 each	2 each	1'-9" to 18'-3"
S514	55	55	18'-8"
S515	2	2	19'-10"
S801	38	38	34'-6"

BAR LIST - APPROACH B

MARK	NO. REQ'D. Beg. Br.	NO. REQ'D. End Br.	LENGTH
S401	44	46	3'-0"
S402	15	15	34'-6"
S403-S407	2 each	2 each	1'-9" to 16'-5"
S408	21	21	18'-8"
S409	2	2	19'-10"
S410	19	19	2'-8"
S411	8	8	19'-10"
S501-S513	2 each	2 each	1'-9" to 18'-3"
S514	55	55	18'-8"
S515	2	2	19'-10"
S801	38	38	34'-6"

TABLE OF QUANTITIES FOR TYPE SPECIAL I APPROACH SLABS
(for information only)

		Slab Width	Reinforcing Steel (lbs.)	Concrete (Cu. Yds.)
Bridge A	Beg. of Bridge	19'-0"	5808	37.5
	End of Bridge	19'-0"	5804	37.5
Bridge B	Beg. of Bridge	19'-0"	5804	37.5
	End of Bridge	19'-0"	5808	37.5

GENERAL NOTES

Concrete shall be Class S(AE) (f'c = 4,000 psi)

All reinforcing steel shall be Grade 60 (yield strength = 60,000 psi) conforming to AASHTO M31 or M322, Type A, with mill test reports.

Approach Slabs will be measured and paid for in accordance with Section 504.

Preformed joint and joint sealer included in the pay item "Approach Slabs".

Work required to remove & dispose portions of the existing approach slab & gutter, retain and clean existing reinforcing steel, and any required doweling will not be paid for directly but will be considered subsidiary to the item "Modification of Existing Bridge Structure (Br. No. A5956)" and "Modification of Existing Bridge Structure (Br. No. B5956)".

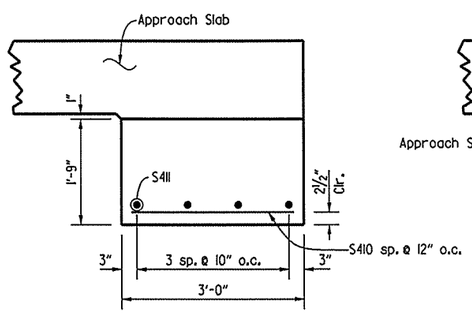

DETAILS OF SUPPORT AT END OF SLAB
No Scale

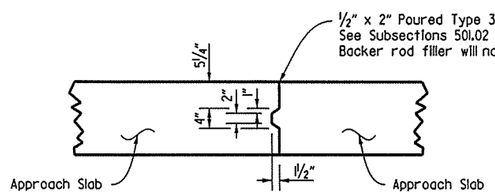

DETAILS OF LONGITUDINAL CONSTRUCTION JOINT
No Scale

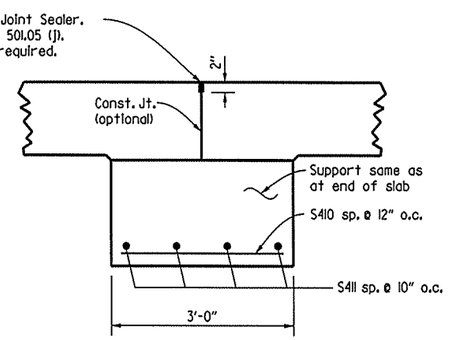

DETAILS OF REQUIRED TRANSVERSE SAWED JOINT
No Scale

STATE OF ARKANSAS
Jose K. Joseph
REGISTERED PROFESSIONAL ENGINEER
No. 15634
JOSE K. JOSEPH
3/8/16

SHEET 3 OF 3
DETAILS OF TYPE SPECIAL I APPROACH SLABS
ROUTE 49 SEC. 29
ARKANSAS STATE HIGHWAY COMMISSION
LITTLE ROCK, ARK.

DRAWN BY: LLW DATE: 09-15-14 FILENAME: bca0901ml_a3.dgn
CHECKED BY: JKJ DATE: 08-10-15 SCALE: NO SCALE
DESIGNED BY: LLW DATE: 09-15-14
BRIDGE NO. A&B5956 DRAWING NO. 57705

USER: tw7300
DESIGN FILE: G:\13\06100.264toNHope\TRANSP\dgn\bridge\bca0901ml_a3.dgn
PLOTTED: 3/8/2016 10:05 SCALE: 8:1

Crafton, Tull & Associates Inc.	DATE REVISED	DATE FILMED	DATE REVISED	DATE FILMED	FED.RD. DIST.NO.	STATE	FED.AID PROJ.NO.	SHEET NO.	TOTAL SHEETS
					6	ARK.			
					JOB NO.		CA0901	159	452
					(1) A5956		APPR. GUTTER		57706

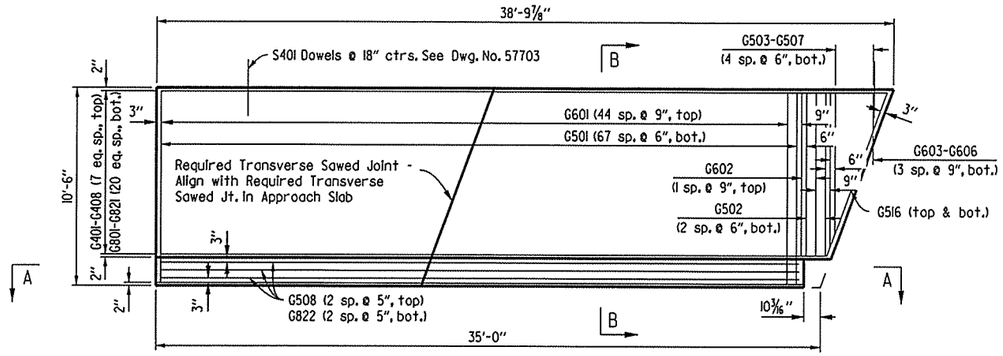

GUTTER A
(BEGIN BRIDGE A)

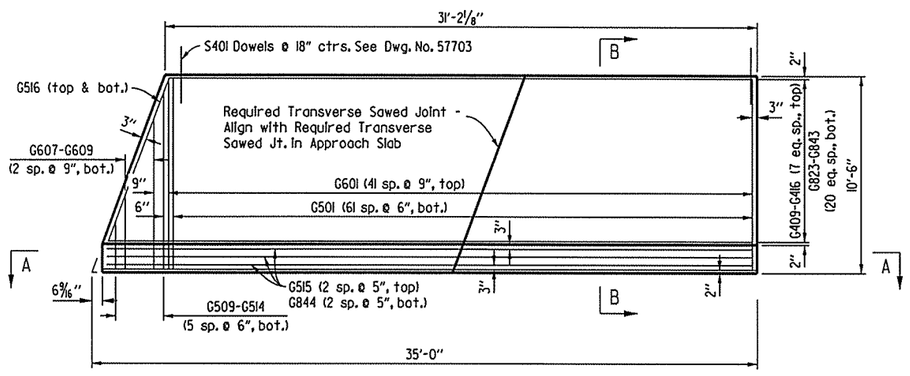

GUTTER B
(END BRIDGE A)

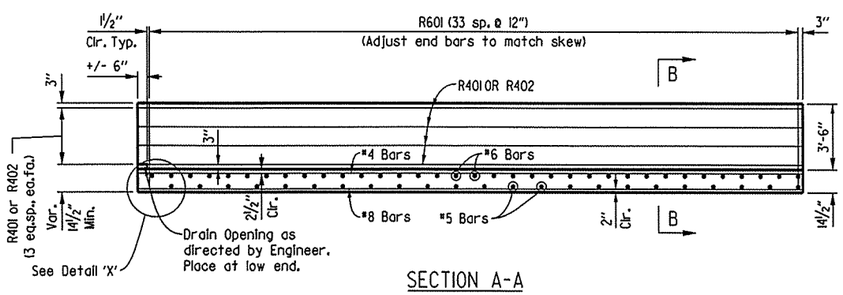

SECTION A-A
No Scale

BAR LIST

MARK	NO. REQ'D. Beg. Br.	NO. REQ'D. End Br.	LENGTH
G401-G408	8	---	35'-1" to 38'-3"
G409-G416	---	8	30'-9" to 33'-11"
G501	68	62	10'-2"
G502	3	---	8'-8"
G503-G507	5	---	2'-1" to 7'-7"
G508	3	---	33'-8"
G509-G514	---	6	2'-7" to 9'-5"
G515	---	3	34'-0"
G516	2	2	9'-3"
G601	45	42	10'-10"
G602	2	---	8'-8"
G603-G606	4	---	2'-1" to 8'-3"
G607-G609	---	3	3'-11" to 8'-0"
G801-G821	21	---	35'-1" to 38'-3"
G822	3	---	33'-8"
G823-G843	---	21	30'-9" to 33'-11"
G844	---	3	34'-0"
R401	---	8	34'-2"
R402	8	---	33'-10"
R601	34	34	9'-5"

Bending Diagram

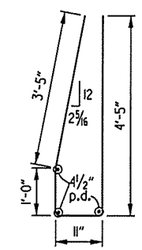

R601

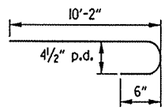

G601

TABLE OF QUANTITIES FOR TYPE SPECIAL I APPROACH GUTTERS

(for information only)

		Reinforcing Steel (lbs.)	Concrete (Cu. Yds.)
Bridge A	Gutter A	4873	17.3
	Gutter B	4451	15.5

GENERAL NOTES

Concrete shall be Class S(AE) (f'c = 4,000 psi)

All reinforcing steel shall be Grade 60 (yield strength = 60,000 psi) conforming to AASHTO M31 or M322, Type A, with mill test reports.

Approach Gutters will be measured and paid for in accordance with Section 504 of the Standard Specifications.

Concrete Ditch Paving shall be subsidiary to other bid items.

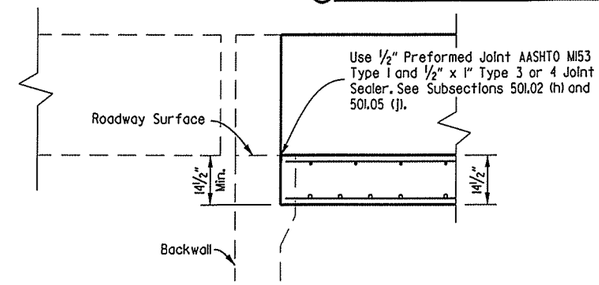

DETAIL X
No Scale

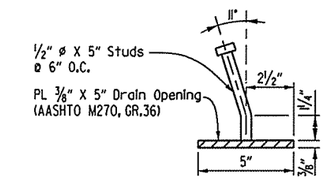

DETAIL Y
No Scale

NOTE:

Parapet studs shall be 5" long, granular flux filled, solid fluxed, or equal, and automatically end welded to the plate. Studs and plate shall meet the requirements of Section 807. Studs and plate shall be subsidiary to other bid items.

The surfaces of the 3/8" plates which will not be in contact with concrete shall be painted in accordance with Section 638, or as approved by the Engineer. Only one coat is required and shall be applied in the fabricator's shop. Painting will not be paid for directly, but will be considered subsidiary to other bid items.

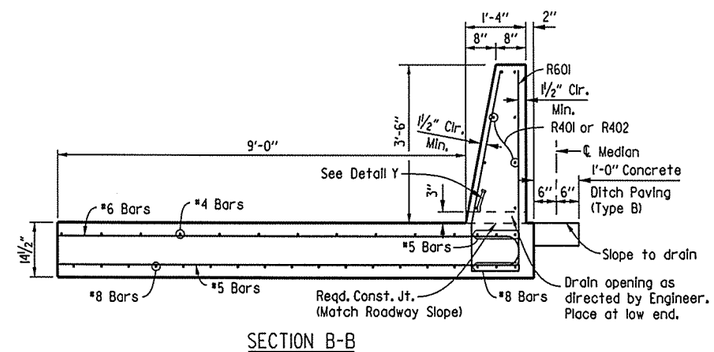

SECTION B-B
No Scale

STATE OF ARKANSAS
Jose K. Joseph
REGISTERED PROFESSIONAL ENGINEER
No. 15634
3/8/16
JOSE K. JOSEPH

SHEET 1 OF 2

DETAILS OF TYPE SPECIAL I APPROACH GUTTERS

ROUTE 49 SEC. 29

ARKANSAS STATE HIGHWAY COMMISSION

LITTLE ROCK, ARK.

DRAWN BY:	TRM	DATE:	09-17-14	FILENAME:	bca090ml_a4.dgn
CHECKED BY:	JKJ	DATE:	08-10-15	SCALE:	1/4" = 1'-0"
DESIGNED BY:	LLW	DATE:	09-15-14		

BRIDGE NO. A5956 DRAWING NO. 57706

USER: lw7300
DESIGN FILE: G:\3106100.264toNhope\TRANSP\dgn\bridge\bca090ml_a4.dgn
PLOTTED: 3/8/2016 10:05 SCALE: 8:1

Crafton, Tull & Associates Inc.

DATE REVISED	DATE FILMED	DATE REVISED	DATE FILMED

FED.RD. DIST.NO.	STATE	FED.AID PROJ.NO.	SHEET NO.	TOTAL SHEETS
6	ARK.			
JOB NO.		CA0901	160	452
(1) B5956		APPR. GUTTER		57707

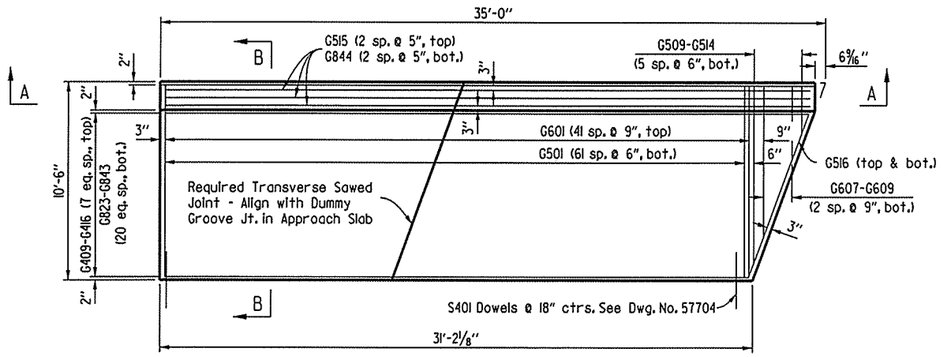

GUTTER A
(BEGIN BRIDGE B)

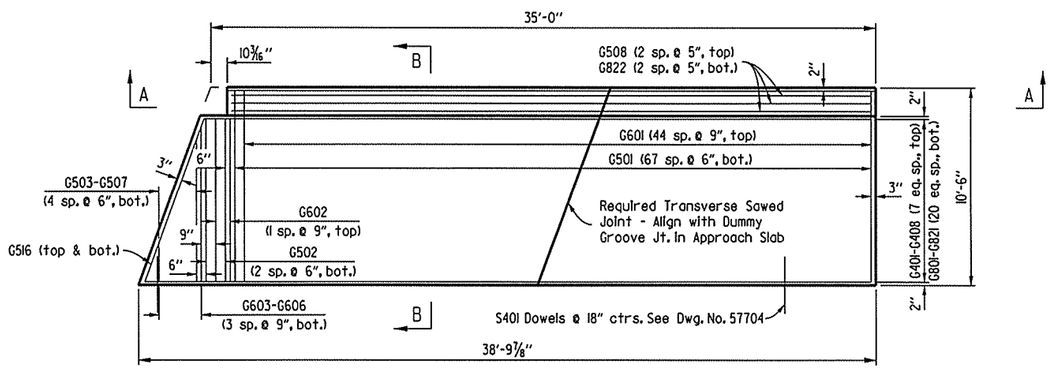

GUTTER B
(END BRIDGE B)

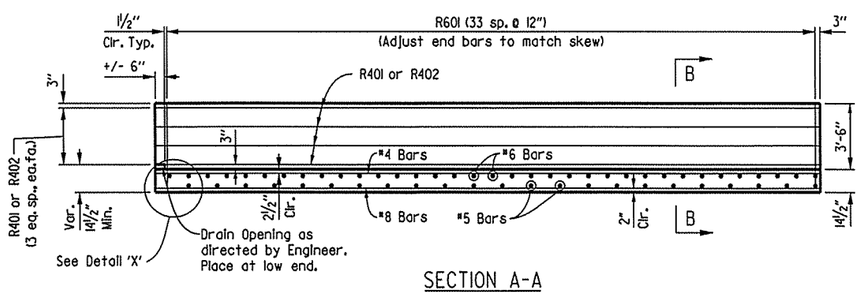

SECTION A-A
No Scale

BAR LIST

MARK	NO. REQ'D. Beg. Br.	NO. REQ'D. End Br.	LENGTH
G401-G408	---	8	35'-1" to 38'-3"
G409-G416	8	---	30'-9" to 33'-11"
G501	62	68	10'-2"
G502	---	3	8'-8"
G503-G507	---	5	2'-1" to 7'-7"
G508	---	3	33'-8"
G509-G514	6	---	2'-7" to 9'-5"
G515	3	---	34'-0"
G516	2	2	9'-3"
G601	42	45	10'-10"
G602	---	2	8'-8"
G603-G606	---	4	2'-1" to 8'-3"
G607-G609	3	---	3'-11" to 8'-0"
G801-G821	---	21	35'-1" to 38'-3"
G822	---	3	33'-8"
G823-G843	21	---	30'-9" to 33'-11"
G844	3	---	34'-0"
R401	8	---	34'-2"
R402	---	8	33'-10"
R601	34	34	9'-5"

Bending Diagram

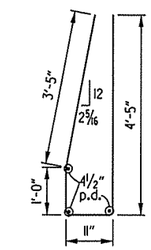

R601

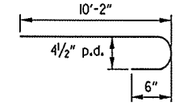

G601

TABLE OF QUANTITIES FOR TYPE SPECIAL I APPROACH GUTTERS

(for information only)

		Reinforcing Steel (lbs.)	Concrete (Cu. Yds.)
Bridge B	Gutter A	4451	15.5
	Gutter B	4873	17.3

For additional information, see Dwg. No. 57706.

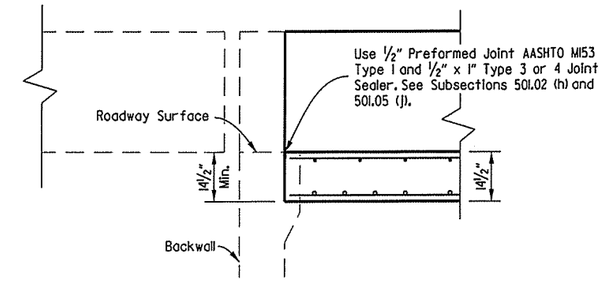

DETAIL X
No Scale

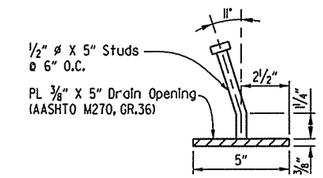

DETAIL Y
No Scale

NOTE:

Parapet studs shall be 5" long, granular flux filled, solid fluxed, or equal, and automatically end welded to the plate. Studs and plate shall meet the requirements of Section 807. Studs and plate shall be subsidiary to other bid items.

The surfaces of the 3/8" plates which will not be in contact with concrete shall be painted in accordance with Section 638, or as approved by the Engineer. Only one coat is required and shall be applied in the fabricator's shop. Painting will not be paid for directly, but will be considered subsidiary to other bid items.

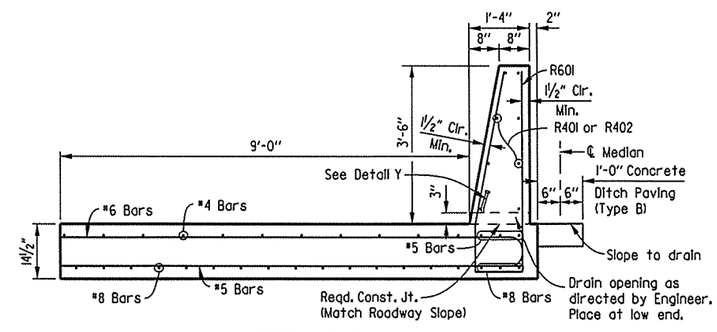

SECTION B-B
No Scale

STATE OF ARKANSAS
REGISTERED PROFESSIONAL ENGINEER
No. 15634
JOSE K. JOSEPH
3/8/16

SHEET 2 OF 2

DETAILS OF TYPE SPECIAL I APPROACH GUTTERS

ROUTE 49 SEC. 29

ARKANSAS STATE HIGHWAY COMMISSION

LITTLE ROCK, ARK.

DRAWN BY:	TRM	DATE:	09-17-14	FILENAME:	bca0901ml_a5.dgn
CHECKED BY:	JKJ	DATE:	08-10-15	SCALE:	1/4" = 1'-0"
DESIGNED BY:	LLW	DATE:	09-15-14		

BRIDGE NO. B5956 DRAWING NO. 57707

USER: lw7300
DESIGN FILE: G:\13106100.264toNhope\TRANSP\dgn\bridge\bca0901ml_a5.dgn
PLOTTED: 3/8/2016 10:05 SCALE: 8:1

PARSONS TRANSPORTATION GROUP	DATE REVISED	DATE FILMED	DATE REVISED	DATE FILMED
	6/9/16			

FED. RD. DIST. NO.	STATE	FED. AID PROJ. NO.	SHEET NO.	TOTAL SHEETS
6	ARK.			
JOB NO.		CA0901	161	452
A5958		LAYOUT		57708

1 REVISED SHORING LOCATIONS DRN, 6/9/16

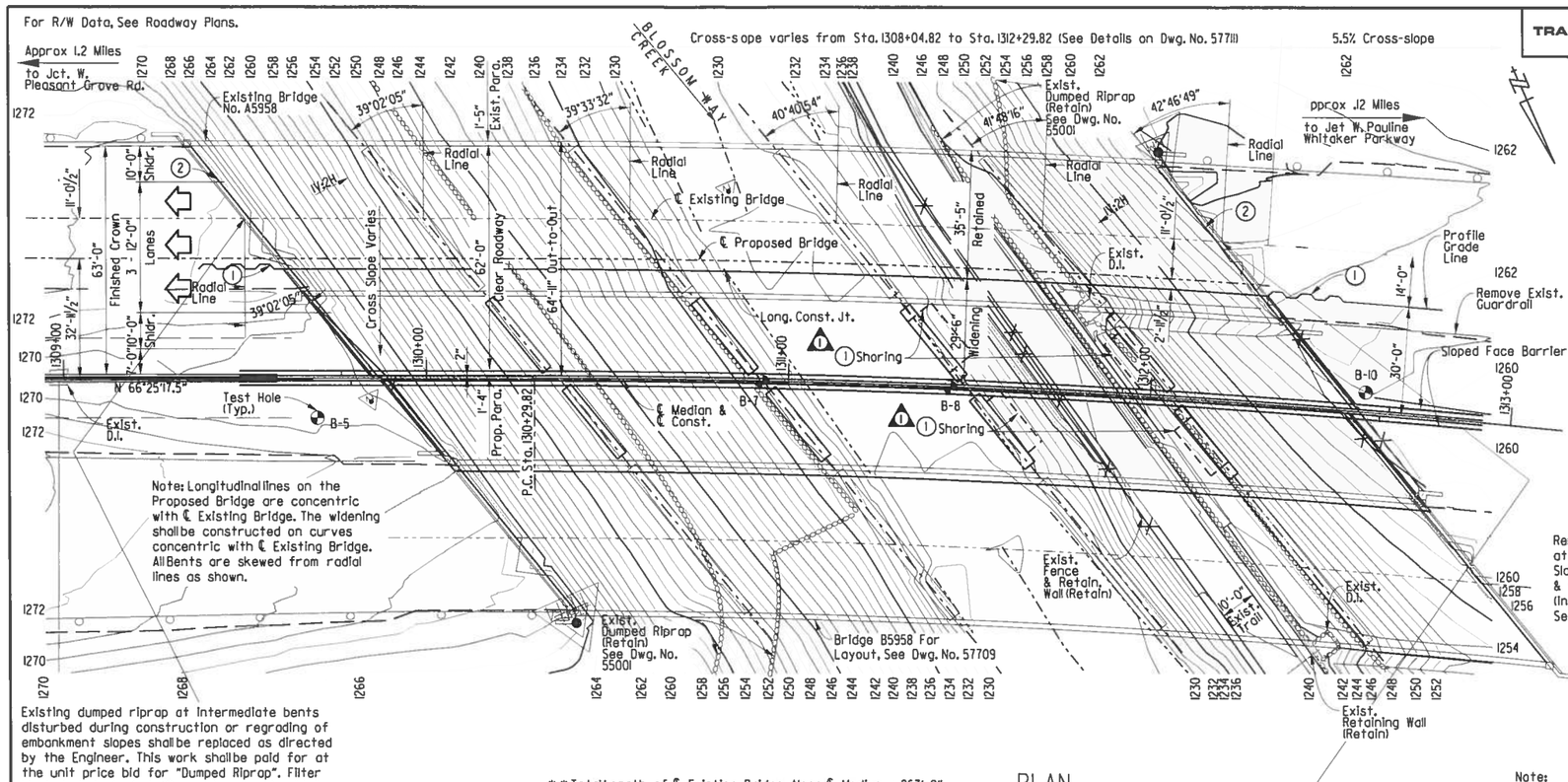

Existing dumped riprap at intermediate bents disturbed during construction or regrading of embankment slopes shall be replaced as directed by the Engineer. This work shall be paid for at the unit price bid for "Dumped Riprap". Filter blanket disturbed shall be replaced and paid for under the item "Filter Blanket". Quantities of dumped riprap and filter blanket are estimated. Actual quantities shall be determined in the field.

PLAN

** Total Length of ℄ Existing Bridge Along ℄ Median = 267'-0"

** Total Length of Bridge = 269'-10 9/16" (Along ℄ Existing Bridge)

1'-3 11/16" | 267'-0" Continuous Composite W-Beam Unit (48', 57', 57', 57', 48')(Along ℄ Existing Bridge) | 1'-6 3/4"

-3.00%

℄ 2" Silicone Joint

Begin Bridge Sta 1309+50.12 El. 1272.10

End Bridge Sta 1312+17.12 El. 1264.63

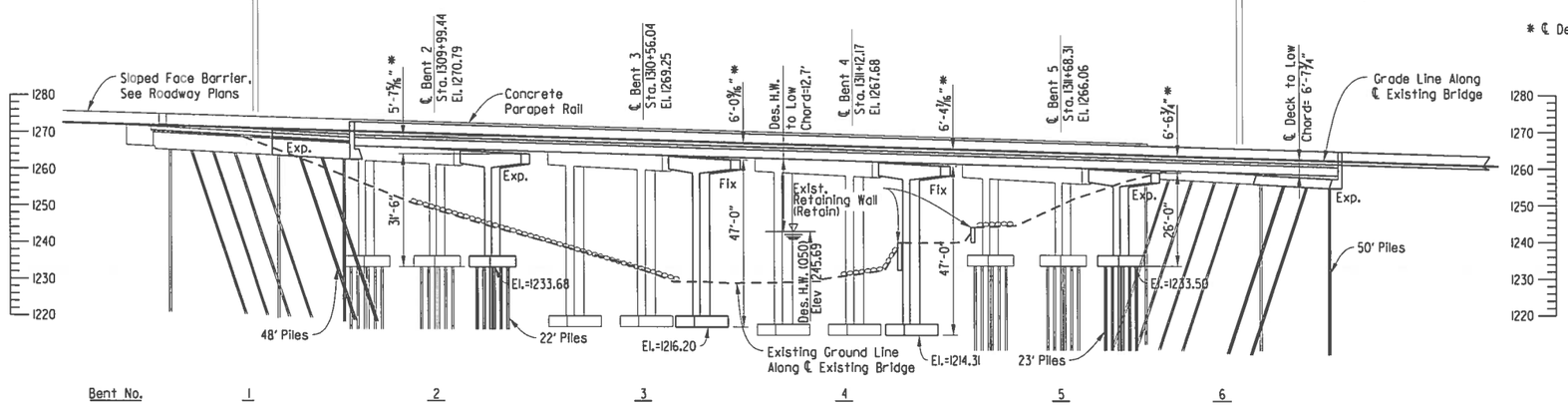

ELEVATION

GENERAL NOTES

BENCH MARKS: TBM 9906 SQ Cut in South East Corner of Bridge #5958, LM 81.65 67.41' RT. Of Sta. 1310+41.40 Elevation = 1267.02
BM 9907 AHTD Cap North West Corner Bridge #5958, LM 81.65 67.57' LT. OF Sta. 1311+98.55 Elevation = 1265.79

CONSTRUCTION SPECIFICATIONS: Arkansas State Highway and Transportation Department Standard Specifications for Highway Construction (2014 edition) with applicable Supplemental Specifications and Special Provisions. Section and Subsection refer to the Standard Construction Specifications unless otherwise noted in the Plans.

DESIGN SPECIFICATIONS: AASHTO LRFD Bridge Design Specifications 6th Edition (2012) with current interim specifications. (New construction only).

LIVE LOADING: HL-93 SEISMIC PERFORMANCE ZONE: 1 SDI=0.088 Site Class: C

MATERIALS AND STRENGTHS:

Class S(AE) Concrete (superstructure)	f'c = 4,000 psi
Class S Concrete (substructure)	f'c = 3,500 psi
Reinforcing Steel (Grade 60 AASHTO M 31 or M 322 Type A)	fy = 60,000 psi
Structural Steel (AASHTO M 270, Gr. 50)	Fy = 50,000 psi
Structural Steel (AASHTO M 270, Gr. 36)	Fy = 36,000 psi

BORING LOGS: Boring logs may be obtained from the Construction Contract Procurement section of the Program Management Division.

For Additional General Notes see Dwg No. 57710

Remove Existing Approach Gutters (Inside gutters) at both ends of Bridge. Use Type Special Approach Slabs At both ends of Bridge, See Dwg Nos. 57736, 57737 & 57738. Use Type Special Approach Gutters (Inside gutters) at both ends of Bridge, See Dwg. No.s 57739 & 57740.

1 Shoring may be required during construction. Payment for work, if required, shall be considered subsidary to the pay item "Unclassified Excavation For Structure - Bridge" See SP Job No. CA0901 "Shoring" and SP Job No. CA901 "Special Safety Requirements for Bridges".

2 Existing joint shall be modified to accept new silicone joint sealant.

Note:
Stationing for the project is along the ℄ Median. The bent stations shown are determined by projecting a radial line from ℄ Median to ℄ Existing Bridge. The total bridge length, span lengths, and ℄ Joint to Beginning and End of Bridge dimensions are measured along ℄ Existing Bridge. Deck Elevations and the ℄ Deck to Low Steel and to Low Seat of Cap Dimensions are from ℄ Existing Bridge.

For Horizontal Curve Data, see Dwg. No. 57709.
For Hydraulic Data, see Dwg. No. 57709.
For Soil Boring Information, see Dwg. No. 57710.

* ℄ Deck @ ℄ Bent to Low Seat of Cap

Remove Existing Trail, Fence and Retaining Walls & replace with New Trail, Fence and Retaining Walls as necessary for Bent construction. Removal shall extend to the location of an existing construction joint. Payment for the work shall be considered subsidiary to the pay item "Modification of Exisitng Bridge Structure (Br. No. A5958)".

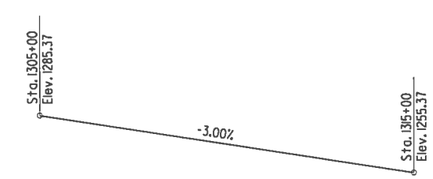

PROFILE GRADE LINE
(30' Left of ℄ Median)
(From Current Survey)

STATE OF ARKANSAS REGISTERED PROFESSIONAL ENGINEER No. 7673 DAVID R. NOLTE

SHEET 1 OF 4
LAYOUT OF BRIDGE 'A' OVER
BLOSSOM WAY CREEK
HWY. 264 - NEW HOPE RD.
(WIDENING) (S)
BENTON COUNTY
ROUTE 49 SEC. 29
ARKANSAS STATE HIGHWAY COMMISSION
LITTLE ROCK, ARK.

DRAWN BY:	DR	DATE:	03-10-15	FILENAME:	bca0901a2_l1.dgn
CHECKED BY:	DRN	DATE:	03-10-15	SCALE:	SEE DETAILS
DESIGNED BY:	JBM	DATE:	03-03-15		

BRIDGE NO. A5958 DRAWING NO. 57708

USER: PARSONS
DESIGN FILE: R:\BRIDGES 1540\BRIDGE 5958 ca901\100% DESIGN FILES\161 bca0901a2_l1.dgn SCALE: 40.00 ' / in.
PLOTTED: 6/13/2016 3:45:13 PM

R:\BRIDGES 1540\BRIDGE 5958 ca901\100% DESIGN FILES\161 bca0901a2_l1.dgn6/13/2016 3:45:13 PM

PARSONS TRANSPORTATION GROUP	DATE REVISED	DATE FILMED	DATE REVISED	DATE FILMED	FED.RD. DIST.NO.	STATE	FED.AID PROJ.NO.	SHEET NO.	TOTAL SHEETS
	6/9/16				6	ARK.			
					JOB NO.		CA0901	162	452
					1	B5958	LAYOUT		57709

1 REVISED SHORING LOCATIONS DRN, 6/9/16

For General Notes see Dwg. Nos. 57708 & 57710

1 (1) Shoring may be required during construction. Payment for work, if required, shall be considered subsidary to the pay item "Unclassified Excavation For Structure - Bridge" See SP Job No. CA0901 "Shoring" and SP Job No. CA901 "Special Safety Requirements for Bridges".

(2) Existing joint shall be modified to accept new silicone joint sealant.

(3) Low Chord is located on Bridge 'A'.

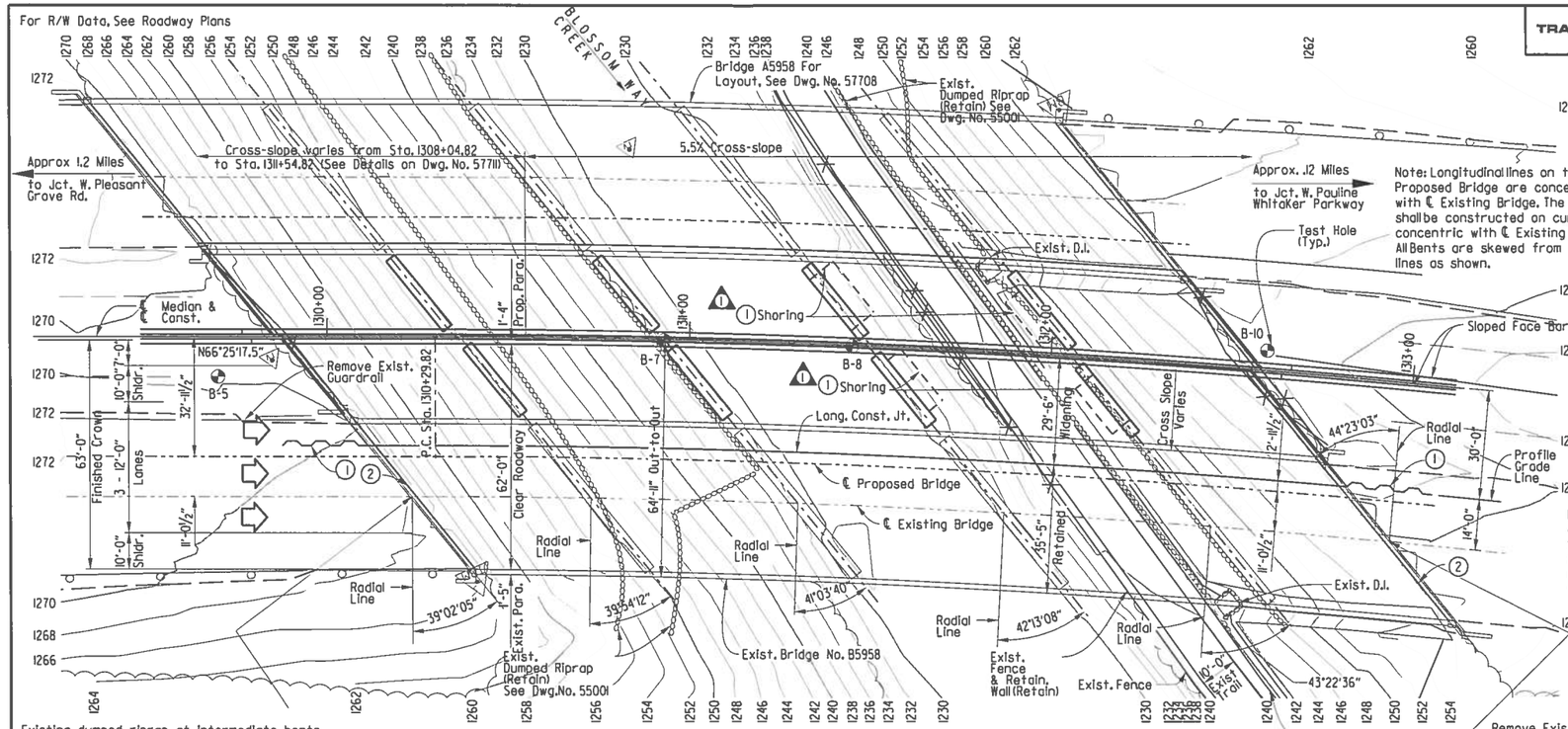

Note: Longitudinal lines on the Proposed Bridge are concentric with ℄ Existing Bridge. The widening shall be constructed on curves concentric with ℄ Existing Bridge. All Bents are skewed from radial lines as shown.

HORIZONTAL CURVE DATA

(At ℄ Median)

P.I. STA. 1319+89.81
DELTA= 37° 03' 06.9" RT
D= 2° 00' 00"
T= 959.99
L= 1852.60'

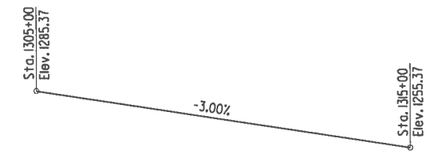

PROFILE GRADE LINE

(30' Right of ℄ Median)
(From Current Survey)

Remove Existing Approach Gutters (inside gutters) at both ends of Bridge. Use Type Special Approach Slabs At both ends of Bridge, See Dwg Nos. 57736, 57737 & 57738. Use Type Special Approach Gutters (inside gutters) at both ends of Bridge, See Dwg. No.s 57739 & 57740.

Note:
Stationing for the project is along the ℄ Median. The bent stations shown are determined by projecting a radial line from ℄ Median to ℄ Existing Bridge. The total bridge length, span lengths, and ℄ Joint to Beginning and End of Bridge dimensions are measured along ℄ Existing Bridge. Deck Elevations and the ℄ Deck to Low Steel and to Low Seat of Cap Dimensions are from ℄ Existing Bridge.
For Soil Boring Information, see Dwg. No. 57710

Existing dumped riprap at intermediate bents disturbed during construction or regrading of embankment slopes shall be replaced as directed by the Engineer. This work shall be paid for at the unit price bid for "Dumped Riprap". Filter blanket disturbed shall be replaced and paid for under the item "Filter Blanket". Quantities of dumped riprap and filter blanket are estimated. Actual quantities shall be determined in the field.

Remove Existing Trail, Fence and Retaining Walls & replace with New Trail, Fence and Retaining Walls as necessary for Bent construction. Removal shall extend to the location of an existing construction joint. Payment for the work shall be considered subsidiary to the pay item "Modification of Exisitng Bridge Structure (Br. No. B5958)".

PLAN

** Total Length of ℄ Existing Bridge Along ℄ Median = 274'-0 1/8"

** Total Length of Bridge = 269'-10 7/8" (Along ℄ Existing Bridge)

1'-3 11/16" | 267'-0" Continuous Composite W-Beam Unit (48', 57', 57', 57', 48') Along ℄ Existing Bridge | 1'-7 3/16"

* ℄ Deck @ ℄ Bent to Low Seat of Cap

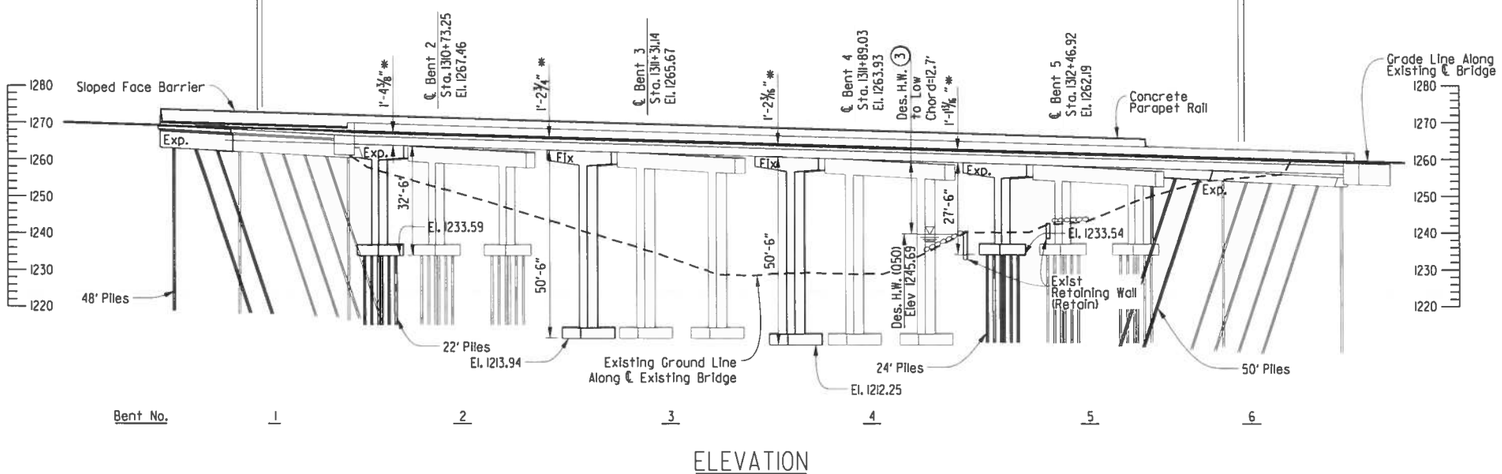

ELEVATION

HYDRAULIC DATA

FLOOD DESCRIPTION	FREQUENCY	DISCHARGE	*NATURAL WATER SURFACE ELEVATION	WATER SURFACE ELEVATION WITH BACKWATER
	YEARS	CFS	FEET	FEET
DESIGN	50	9,836	1244.79	1245.69
BASE	100	11,218	1245.92	1246.47
EXTREME	500	14,115	1247.62	1247.97
OVERTOPPING	>500	N/A	N/A	N/A

*Unconstricted Water Surface Without Structure Or Roadway Approaches.

Q100 Backwater Elevation For Existing Structure = 1246.47 Feet
Proposed Low Bridge Chord Elev. Bridge A= 1258.44 Feet
Proposed Low Bridge Chord Elev. Bridge B= 1261.23 Feet

Drainage Area = 10.84 Sq. Miles.
Historical High Water Elev. = Unknown.

STATE OF ARKANSAS REGISTERED PROFESSIONAL ENGINEER No. 7673 DAVID R. WOLFE

SHEET 2 OF 4

LAYOUT OF BRIDGE 'B' OVER BLOSSOM WAY CREEK
HWY. 264 - NEW HOPE RD. (WIDENING) (S)
BENTON COUNTY
ROUTE 49 SEC. 29
ARKANSAS STATE HIGHWAY COMMISSION
LITTLE ROCK, ARK.

DRAWN BY: DR	DATE: 03-10-15	FILENAME: bca0901b2_12.dgn		
CHECKED BY: DRN	DATE: 03-10-15	SCALE: SEE DETAILS		
DESIGNED BY: JBW	DATE: 03-03-15			

BRIDGE NO. B5958 DRAWING NO. 57709

USER: PARSONS
DESIGN FILE: R:\BRIDGES 1540\BRIDGE 5958 ca901\100% DESIGN FILES\162 bca0901b2_12.dgn
PLOTTED: 6/13/2016 3:49:53 PM SCALE: 40.0 '/' / in.

R:\BRIDGES 1540\BRIDGE 5958 ca901\100% DESIGN FILES\162 bca0901b2_12.dgn6/13/2016 3:49:53 PM

PARSONS TRANSPORTATION GROUP	DATE REVISED	DATE FILMED	DATE REVISED	DATE FILMED	FED.RD. DIST.NO.	STATE	FED.AID PROJ.NO.	SHEET NO.	TOTAL SHEETS
					6	ARK.			
					JOB NO.		CA0901	163	452
					(1) A&B5958		LAYOUT		57710

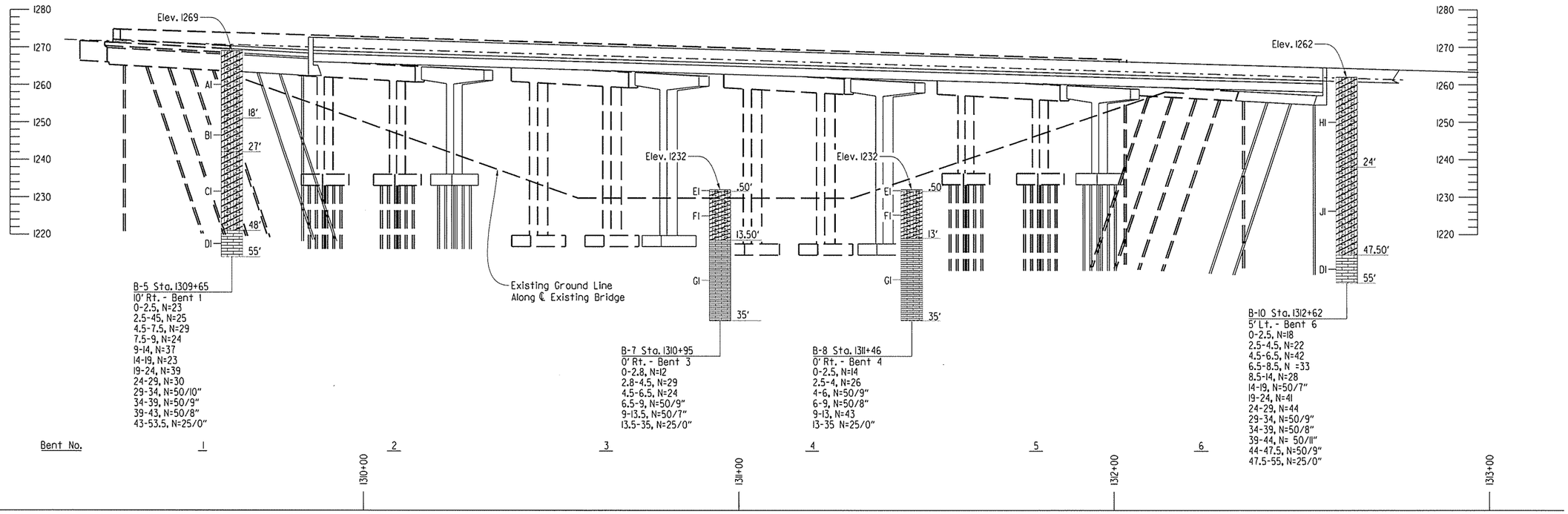

ELEVATION

GENERAL NOTES (cont'd)

STEEL PILING: All piling shall be HP 12x53 (Gr. 50) and shall be driven with an approved air, steam, or diesel hammer to a minimum safe bearing capacity of 96 tons per pile into the material designated as Moderately Hard to Hard Light Gray Limestone on the boring legend. Lengths shown are for estimating quantities and for use in determining payment for cut-off and build-up in accordance with the Standard Specifications. Piles in End Bent 1 & 6 to be driven after embankment to bottom of cap is in place. On all piles the contractor shall use approved steel H-Pile driving points.

PREBORING: Preboring will be required at all bents and shall extend from bottom of footing or bottom of cap to top of Hard Limestone. A preboring depth of 48 feet is anticipated at all End Bents (Bridges A & B), a preboring depth of 21 feet at Bridge A Bent 2, 22 feet at Bridge A Bent 5, 22 feet at Bridge B Bent 2, and 23 feet at Bridge B Bent 5 is anticipated. The quantities for preboring shown are for bidding purposes only. The actual size and depth of preboring are to be determined in the field by the Engineer. The length of prebored hole shall be backfilled in accordance with Subsection 805.08(a) to completely fill the remaining voids. The contractor shall be responsible for keeping prebored holes free from debris prior to backfilling which may require the use of temporary casings or other methods. Pile casings and backfill will not be paid for directly but shall be considered subsidiary to the item Preboring.

FOOTINGS: Footings for Bents 3 and 4 shall be set a minimum of 2'-0" into material designated as Moderately Hard to Hard Light Gray Limestone on the boring legend and shall have a minimum cover above top of footing of 2'-0". Foundations for footings for Bents 3 and 4 shall be prepared in accordance with Subsection 801.04 of the Standard Specifications. Rock excavations shall be made to neat lines of the concrete footings. Blasting will not be allowed. Concrete in footings shall be poured directly against excavated surfaces of rock. Footings for Bents 2 and 5 shall have a minimum cover above top of footing of 2'-0". Foundations for Bents 2 & 3 shall be prepared in accordance with Subsection 801.04 and backfilled according to Subsection 801.08.

BRIDGE DECK: The concrete bridge deck shall be given a tine finish as specified for final finishing in Subsection 802.19 for Class 5 Tined Bridge Roadway Surface Finish.

CLASS 2 PROTECTIVE SURFACE TREATMENT: Class 2 Protective Surface Treatment shall be applied to the roadway surface, roadway face, and top of parapet rail of the new construction, including the existing deck surface to be retained.

PAINTING: All new Structural Steel except galvanized members, surfaces in contact with concrete, and as otherwise noted, shall be painted as specified in Subsection 807.75. The color of paint shall match color of existing beams.

DETAIL DRAWINGS:	DRAWING NUMBER
Stage Construction	57712 - 57713
End Bents	57714 - 57718
Intermediate Bents	57719 - 57724
Elastomeric Bearings	57725
Widening Details	57726 - 57735
Type Special Approach Slab	57736 - 57738
Type Special Approach Gutters	57739 - 57740

GENERAL NOTES (cont'd)

THE PROPOSED WORK CONSISTS OF: Widening the existing bridge, modifying the existing end bents, constructing new intermediate bents to the median side of existing bents, removing and replacing portions of the concrete deck, removing and replacing portions of the existing dumped riprap, and replacing the joint seals. For additional requirements in conducting the work, see Section 821.

EXISTING BRIDGE: The Existing Bridge Nos. A5958 & B5958 are approximately 42.8' wide and 269.8' long and consists of a 267' continuous composite W-beam and reinforced concrete slab span, multi-column intermediate bents on spread footings and pile footings, and steel pile end bents. Plans of the existing structure may be obtained upon request to the Construction Contract Procurement Section of the Program Management Division.

VERIFICATION: Except as noted, components of the existing bridge are to be retained and joined to proposed work. Information and dimensions shown are based on existing bridge plans. The Contractor is to adhere strictly to requirements for verification of the geometry of the existing bridge and its relationship to the proposed work described in Subsection 821.02 and make necessary adjustments to fit the proposed work to the existing structure. Payment for this work shall be considered subsidiary to the pay item "Modification of Existing Bridge Structure (Br. No. A5958)" and "Modification of Existing Bridge Structure (Br. No. B5958)".

REMOVAL AND SALVAGE: All material removed from the existing bridge under item 821 shall be disposed of according to Section 205. All material removed from the existing bridge shall become the property of the Contractor.

MAINTENANCE OF TRAFFIC: See Roadway Plans and Special Provisions for more information.

BORING LEGEND

A1. Stiff reddish brown silty clay with chert fragments and cobbles (fill)
B1. Very stiff reddish brown silty clay with chert fragments, cobbles and seams
C1. Very stiff reddish brown silty clay with chert fragments, seams and layers
D1. Moderately hard to hard light gray limestone
E1. Chert gravel and cobbles
F1. Stiff reddish brown silty clay with chert fragments and seams
G1. Moderately hard to hard light gray limestone with chert nodules and inclusions
H1. Stiff dark brown and reddish brown silty clay with chert fragments and cobbles (fill)
J1. Very stiff red silty clay with chert fragments, seams and layers

STATE OF ARKANSAS
REGISTERED PROFESSIONAL ENGINEER
No. 7673
DAVID R. MOSE

SHEET 3 OF 4

LAYOUT OF BRIDGE 'A & B' OVER
BLOSSOM WAY CREEK
HWY. 264 - NEW HOPE RD.
(WIDENING) (S)
BENTON COUNTY
ROUTE 49 SEC. 29

ARKANSAS STATE HIGHWAY COMMISSION
LITTLE ROCK, ARK.

DRAWN BY:	DR	DATE:	01-16-14	FILENAME:	bca0901x2_13.dgn
CHECKED BY:	DRN	DATE:	03-10-15	SCALE:	SEE DETAILS
DESIGNED BY:	JBM	DATE:	01-16-14		

BRIDGE NO. A&B5958 DRAWING NO. 57710

USER: PARSONS
DESIGN FILE: R:\BRIDGES 1540\BRIDGE 5958 ca901\100% DESIGN FILES\163 bca0901x2_13.dgn
PLOTTED: 3/1/2016 5:28:59 PM SCALE: 30.00 ' / in.

R:\BRIDGES 1540\BRIDGE 5958 ca901\100% DESIGN FILES\163 bca0901x2_13.dgn 3/1/2016 5:28:59 PM

PARSONS TRANSPORTATION GROUP	DATE REVISED	DATE FILMED	DATE REVISED	DATE FILMED	FED.RD. DIST.NO.	STATE	FED.AID PROJ.NO.	SHEET NO.	TOTAL SHEETS
					6	ARK.			
					JOB NO.		CA0901	164	452
					(1) A&B5958		LAYOUT		57711

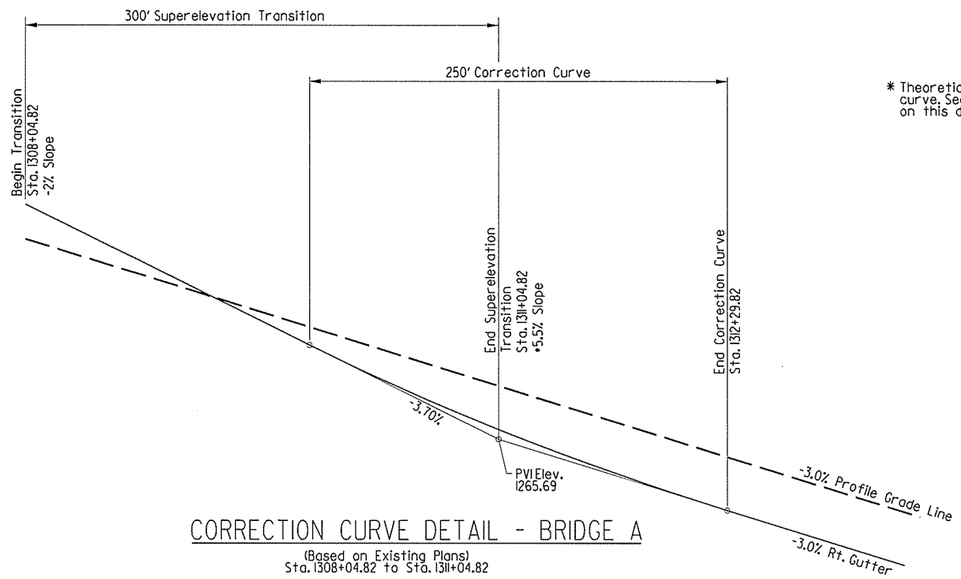

CORRECTION CURVE DETAIL - BRIDGE A

(Based on Existing Plans)
Sta. 1308+04.82 to Sta. 1311+04.82

* Theoretical value without correction curve. See SUPERELEVATION TRANSITION SKETCH on this drawing for additional information.

NOTE:
The right gutterline of Bridge A, at the location shown, has been smoothed with a correction curve. The roadway slope at any station within the correction curve is a straight line between the right gutterline and the left gutterline.

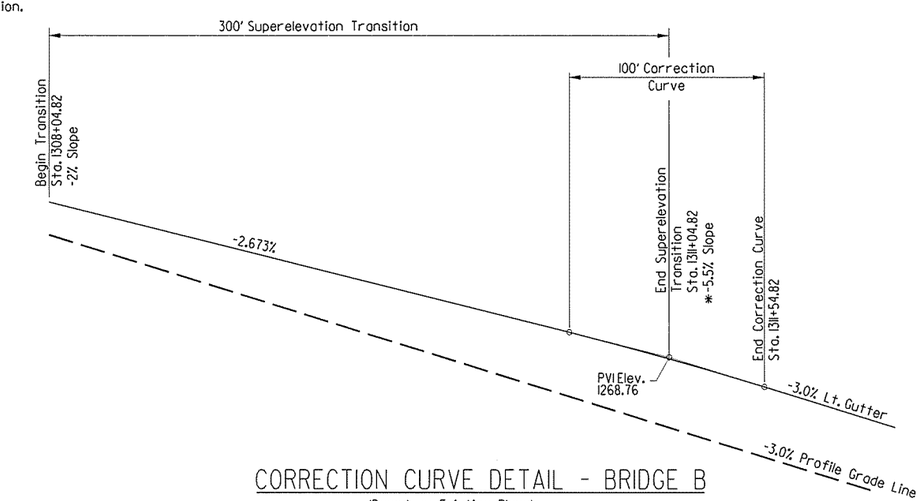

CORRECTION CURVE DETAIL - BRIDGE B

(Based on Existing Plans)
Sta. 1308+04.82 to Sta. 1311+04.82

NOTE:
The left gutterline of Bridge B, at the location shown, has been smoothed with a correction curve. The roadway slope at any station within the correction curve is a straight line between the left gutterline and the right gutterline.

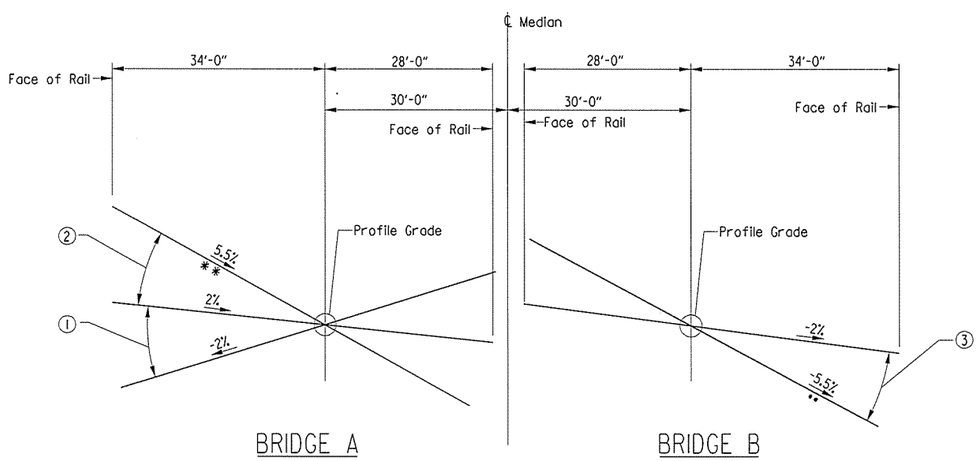

BRIDGE A

BRIDGE B

** Theoretical value without correction curve. See correction curve detail on this drawing for additional information.

(4) SUPERELEVATION TRANSITION SKETCH

(Based on Existing Plans)

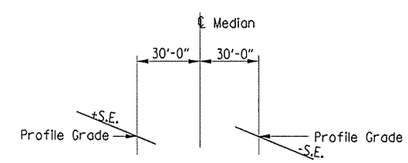

SUPERELEVATION

(1) Cross Slope Varies From -2% (Sta. 1308+04.82) to 2% (Sta. 1309+64.82)
(2) Cross Slope Varies From 2% (Sta. 1309+64.82) to 5.5% (Sta. 1312+29.82)
(3) Cross Slope Varies From -2% (Sta. 1308+04.82) to -5.5% (Sta. 1311+54.82)
(4) SE Transition Detail Based on Existing Plans Contractor Shall Verify.

STATE OF ARKANSAS
REGISTERED PROFESSIONAL ENGINEER
No. 7678
DAVID R. NOLTE

SHEET 4 OF 4

LAYOUT OF BRIDGE 'A & B' OVER
BLOSSOM WAY CREEK
HWY. 264 - NEW HOPE RD.
(WIDENING) (S)
BENTON COUNTY
ROUTE 49 SEC. 29
ARKANSAS STATE HIGHWAY COMMISSION
LITTLE ROCK, ARK.

DRAWN BY:	DR	DATE:	1-16-14	FILENAME:	bca0901x2_14.dgn
CHECKED BY:	DRN	DATE:	03-10-15	SCALE:	SEE DETAILS
DESIGNED BY:	JBM	DATE:	1-16-14		

BRIDGE NO. A&B5958 DRAWING NO. 57711

USER: PARSONS
DESIGN FILE: R:\BRIDGES 1540\BRIDGE 5958 ca901\100% DESIGN FILES\164 bca0901x2_14.dgn
PLOTTED: 3/1/2016 5:29:45 PM SCALE: 30.00 ' / in.

R:\BRIDGES 1540\BRIDGE 5958 ca901\100% DESIGN FILES\164 bca0901x2_14.dgn 3/1/2016 5:29:45 PM

PARSONS TRANSPORTATION GROUP	DATE REVISED	DATE FILMED	DATE REVISED	DATE FILMED	FED.RD. DIST.NO.	STATE	FED.AID PROJ.NO.	SHEET NO.	TOTAL SHEETS
					6	ARK.			
					JOB NO.		CA0901	165	452
					(1) A&B5958		STAGE CONST.		57712

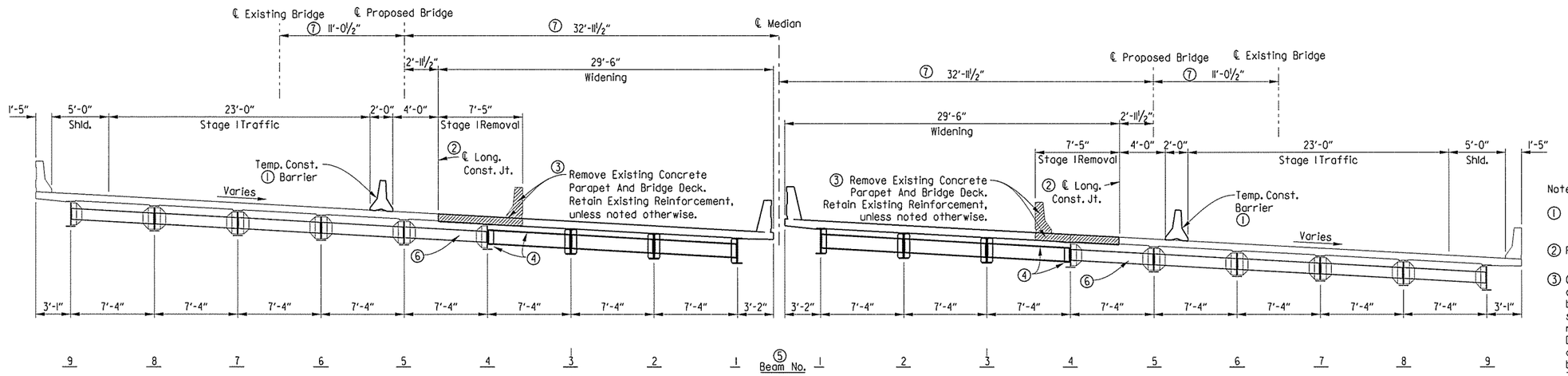

PROPOSED WIDENING
(Looking Ahead)

Note:
Existing Joint Replacement can occur during Temporary Lane Closures at Night before Final Stage.

Details related to Maintenance of Traffic are shown on Bridge Plans for information only. For Maintenance of Traffic Plans and additional information, see Roadway Plans.

The contractor may propose a different sequence of construction to the Engineer for approval.

Notes:

① For Details of Temporary Precast Barrier, See Std. Dwg. TC-4. (Do not connect to existing deck.)

② Partial Saw Cut Depth. See Section 821.

③ Care shall be exercised during the removal of the existing deck to ensure that the bolted field splices, beams, diaphragms, shear studs and connection plates and existing reinforcement to remain are not damaged. Damaged items that are not salvageable, as determined by the Engineer, shall be replaced by the Contractor at no additional payment. The interior spans of the existing deck shall be removed before the end spans are removed in order to ensure stability of the existing bridge.

④ Install new diaphragm and connection plate prior to deck pour. The new connection plate shall be field welded to the existing beam.

⑤ The beam numbers have been renumbered from the original plans to provide consistency to the plan details.

⑥ Bolts in the existing diaphragms and end struts may be loosened to the satisfaction of Engineer at Beam Nos. 4 & 5 during deck removal. Any existing bolt that is loosened or removed shall be replaced with a new high-strength bolt. The diaphragm and end strut bolts located in the bay between Beam Nos. 4 & 5 shall be tightened after the completion of all deck pours.

⑦ Dimensions are measured perpendicular to ℄ Median.

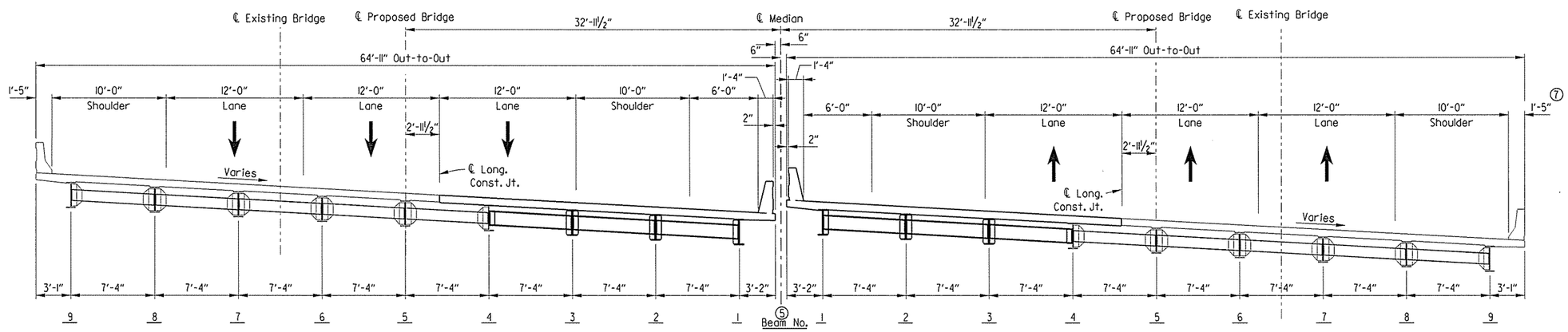

SOUTHBOUND BRIDGE A5958

CONSTRUCTION COMPLETE
(Looking Ahead)

NORTHBOUND BRIDGE B5958

STATE OF ARKANSAS REGISTERED PROFESSIONAL ENGINEER No. 7673 DAVID R. INGLETON
3/1/16

SHEET 1 OF 2

DETAILS OF STAGE CONSTRUCTION
BRIDGES 'A & B' OVER BLOSSON WAY CREEK
HWY. 264 - NEW HOPE RD. (WIDENING) (S)
ROUTE 49 SEC. 29
ARKANSAS STATE HIGHWAY COMMISSION
LITTLE ROCK, ARK.

DRAWN BY:	DR	DATE:	03-10-15	FILENAME:	bca0901x2_15.dgn
CHECKED BY:	DRN	DATE:	03-10-15	SCALE:	SEE DETAILS
DESIGNED BY:	JBM	DATE:	03-03-15		

BRIDGE NO. A&B5958 DRAWING NO. 57712

USER: PARSONS
DESIGN FILE: R:\BRIDGES 1540\BRIDGE 5958 ca901\100% DESIGN FILES\165 bca0901x2_15.dgn
PLOTTED: 3/1/2016 5:32:39 PM SCALE: 10:8 ':' / in.

R:\BRIDGES 1540\BRIDGE 5958 ca901\100% DESIGN FILES\165 bca0901x2_15.dgn 3/1/2016 5:32:39 PM

PARSONS TRANSPORTATION GROUP	DATE REVISED	DATE FILMED	DATE REVISED	DATE FILMED	FED.RD. DIST.NO.	STATE	FED.AID PROJ.NO.	SHEET NO.	TOTAL SHEETS
					6	ARK.			
					JOB NO.		CA0901	166	452
					(1) A&B5958		STAGE CONSTR.		57713

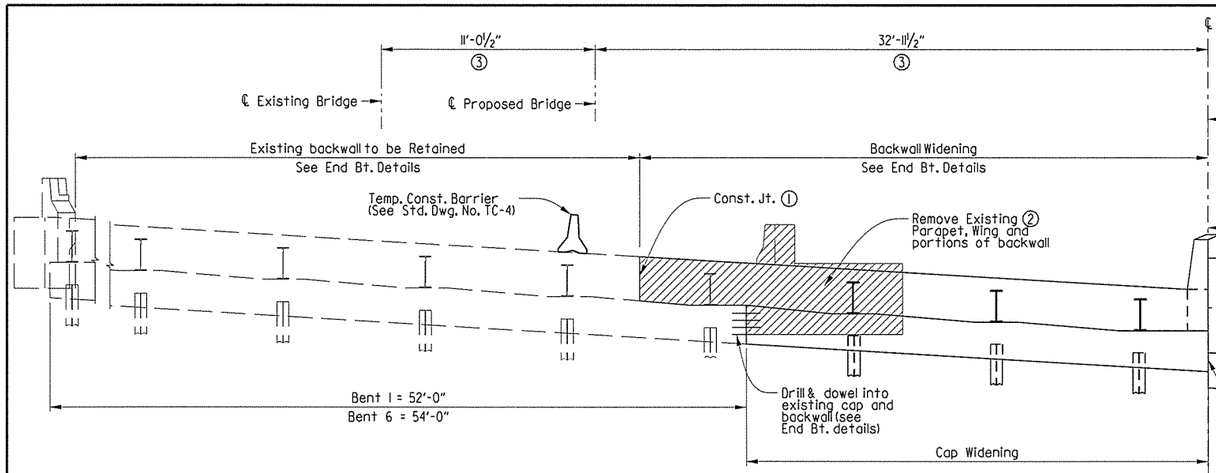

SOUTHBOUND BRIDGE A5958 BENT 6

Looking Ahead
Dimensions Along ℄ Bt.
Bent 1 Similar

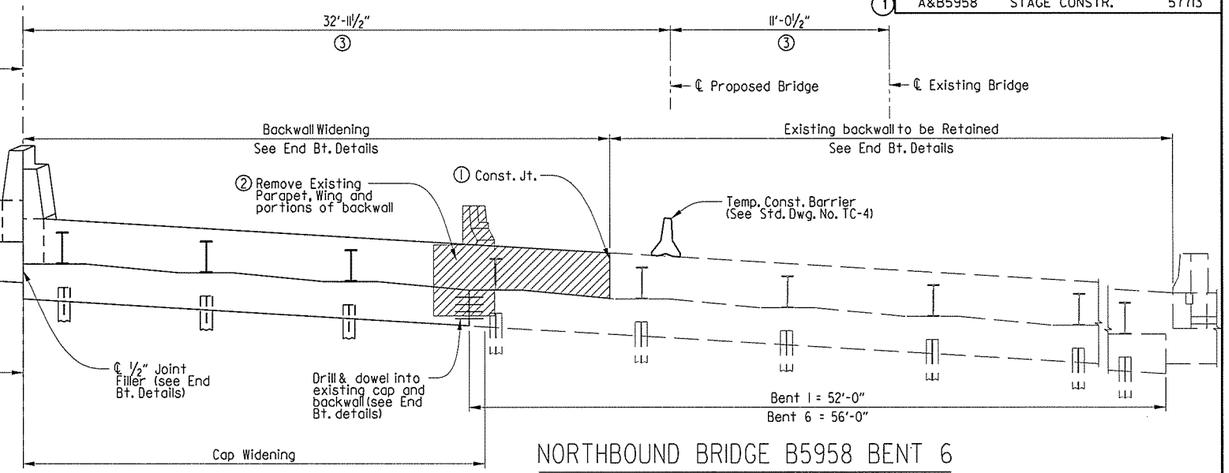

NORTHBOUND BRIDGE B5958 BENT 6

Looking Ahead
Dimensions Along ℄ Bt.
Bent 1 Similar

(1) Saw cut and remove wing and portions of existing backwall.

(2) Clean, retain, and straighten existing reinforcement as required to lap with new reinforcement.

(3) Dimensions are measured perpendicular to ℄ Median.

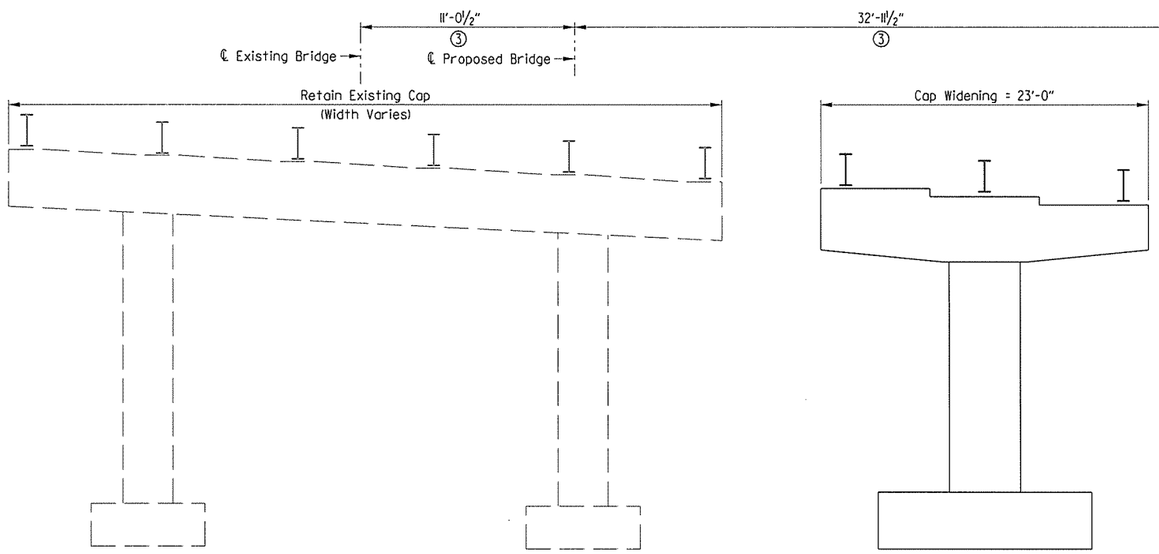

SOUTHBOUND BRIDGE A5958 INT. BENTS 2, 3, 4 & 5

Looking Ahead
Dimensions Along ℄ Bent

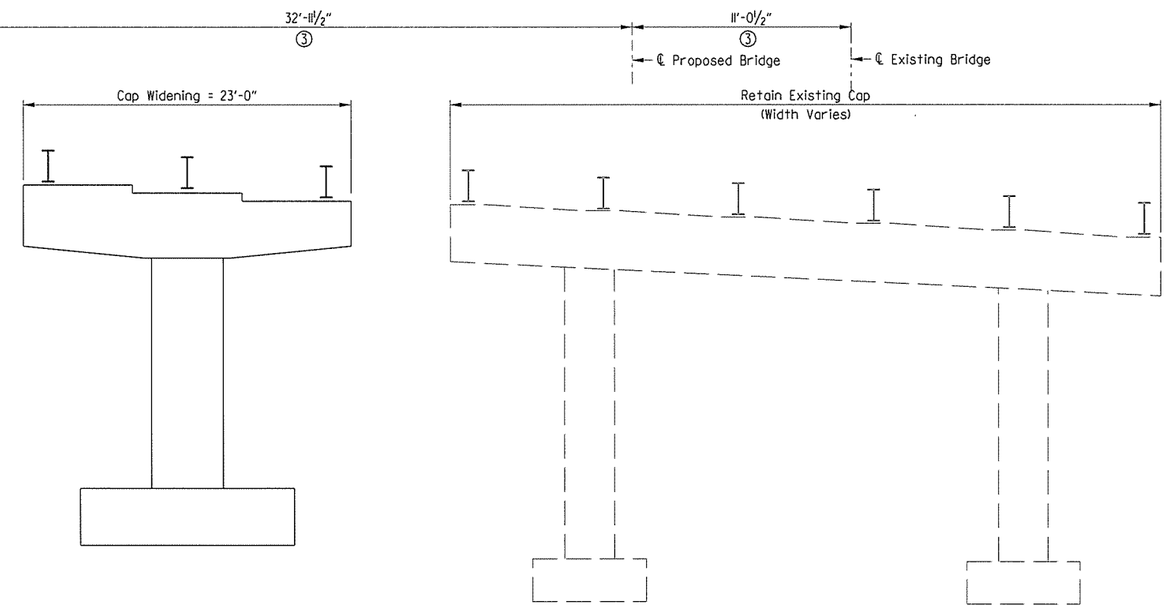

NORTHBOUND BRIDGE B5958 INT. BENTS 2, 3, 4 & 5

Looking Ahead
Dimensions Along ℄ Bent

STATE OF ARKANSAS ★★★ REGISTERED PROFESSIONAL ENGINEER ★★★ No. 7673 DAVID R. MYLE

SHEET 2 OF 2

DETAILS OF STAGE CONSTRUCTION
BRIDGE 'A & B' OVER BLOSSOM WAY CREEK
HWY. 264 - NEW HOPE ROAD (WIDENING) (S)
BENTON COUNTY
ROUTE 49 SEC. 29
ARKANSAS STATE HIGHWAY COMMISSION
LITTLE ROCK, ARK.

DRAWN BY:	DR	DATE:	03-10-15	FILENAME:	bca0901x2.16.dgn
CHECKED BY:	DRN	DATE:	03-10-15	SCALE:	SEE DETAILS
DESIGNED BY:	JBM	DATE:	03-03-15		

BRIDGE NO. A&B5958 DRAWING NO. 57713

USER: PARSONS
DESIGN FILE: R:\BRIDGES 1540\BRIDGE 5958 ca901\100% DESIGN FILES\166 bca0901x2.16.dgn
PLOTTED: 3/1/2016 5:34:15 PM SCALE: 1.08 '=' / in.

R:\BRIDGES 1540\BRIDGE 5958 ca901\100% DESIGN FILES\166 bca0901x2_16.dgn3/1/2016 5:34:15 PM

PARSONS TRANSPORTATION GROUP	DATE REVISED	DATE FILMED	DATE REVISED	DATE FILMED	FED.RD. DIST.NO.	STATE	FED.AID PROJ.NO.	SHEET NO.	TOTAL SHEETS
					6	ARK.			
					JOB NO.		CA0901	167	452
					(1) A5958		END BENT 1		57714

(1) Wingwall, rail and end post shall be constructed on curves concentric with ℄ Existing Bridge.

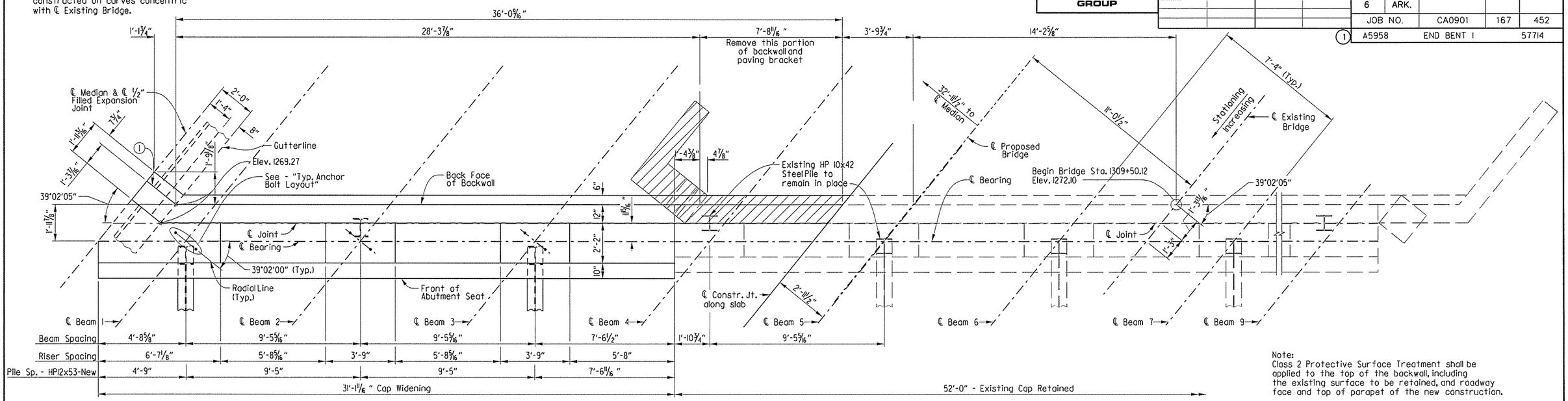

Note:
Class 2 Protective Surface Treatment shall be applied to the top of the backwall, including the existing surface to be retained, and roadway face and top of parapet of the new construction.

For additional details and General Notes, See Dwg. No. 57716.

For details of Elastomeric Bearings, See Dwg. No. 57725.

* These dimensions and elevations are based on the original plans. The contractor shall verify these in the field.

PLAN

Scale: 3/8" = 1'-0"

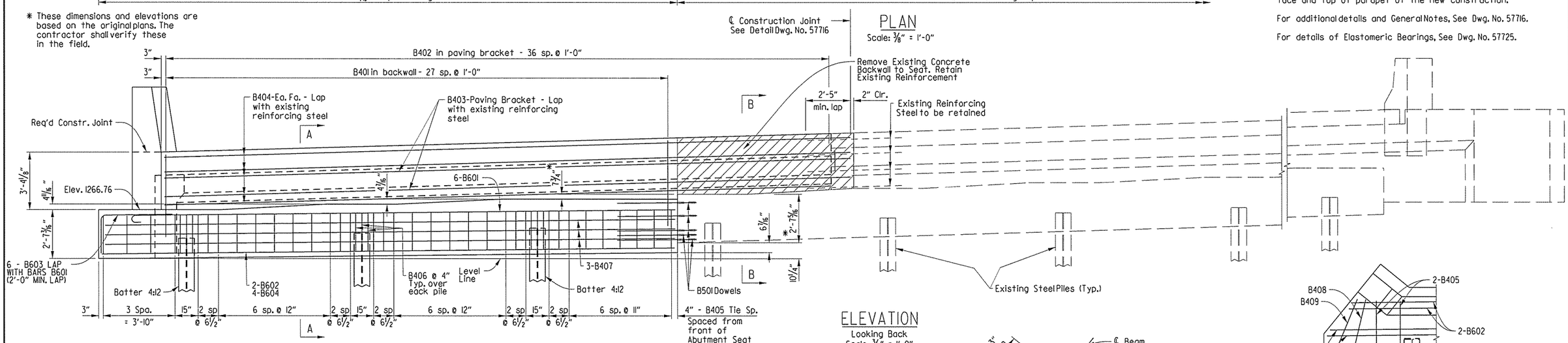

ELEVATION

Looking Back
Scale: 3/8" = 1'-0"

BAR LIST - END BENT 1, BRIDGE A

MARK	NO. REQ'D.	LENGTH	P.D.	MARK	NO. REQ'D.	LENGTH	P.D.
B401	28	10'-6"	2"	W401	3	5'-6 1/2"	3"
B402	37	4'-0"	3"	W402	6	3'-1 3/4"	3"
B403	2	35'-7"	Str	W403	4	2'-6 1/4"	3"
B404	10	35'-7"	Str	W404	2	5'-11 3/4"	3"
B405	35	11'-1"	2"	W405	8	11"	Str
B406	9	7'-1"	2"	W406	3	5'-2 3/4"	3"
B407	6	29'-2"	Str				
B408	1	11'-5"	2"	W501	2	9'-4"	Str
B409	1	11'-9"	2"	W502	2	9'-4 3/4"	3 3/4"
B501	14	4'-0"	Str				
B601	6	29'-10"	4 1/2"				
B602	2	29'-2"	Str				
B603	6	5'-11 1/4"	4 1/2"				
B604	4	30'-9"	Str				

BENDING DIAGRAMS

Dimensions are out to out of bars.

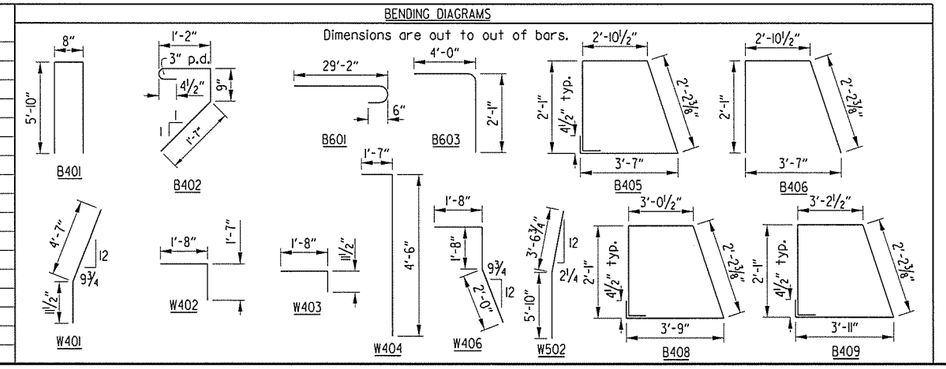

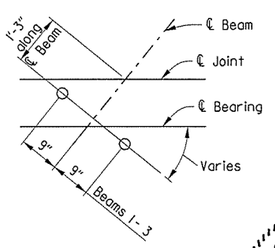

TYP. ANCHOR BOLT LAYOUT

No Scale
For details of elastomeric bearings, see Dwg. No. 57725

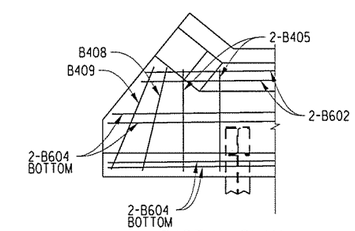

PARTIAL PLAN STIRRUP LAYOUT

STATE OF ARKANSAS ★★★ REGISTERED PROFESSIONAL ENGINEER ★★★ No. 7673 DAVID R. DRAKE

DETAILS OF END BENT 1 - BRIDGE A

ROUTE 49 SEC. 29

ARKANSAS STATE HIGHWAY COMMISSION

LITTLE ROCK, ARK.

DRAWN BY: DR	DATE: 05-20-15	FILENAME: bca0901a2.bll.dgn			
CHECKED BY: JBM	DATE: 06-03-15	SCALE: SEE DETAILS			
DESIGNED BY: DRN	DATE: 04-21-15				

BRIDGE NO. A5958 DRAWING NO. 57714

PARSONS TRANSPORTATION GROUP	DATE REVISED	DATE FILMED	DATE REVISED	DATE FILMED	FED.RD. DIST.NO.	STATE	FED.AID PROJ.NO.	SHEET NO.	TOTAL SHEETS
					6	ARK.			
					JOB NO.		CA0901	168	452
					(1) B5958		END BENT 1		57715

(1) Wingwall, rail and end post shall be constructed on curves concentric with ℄ Existing Bridge.

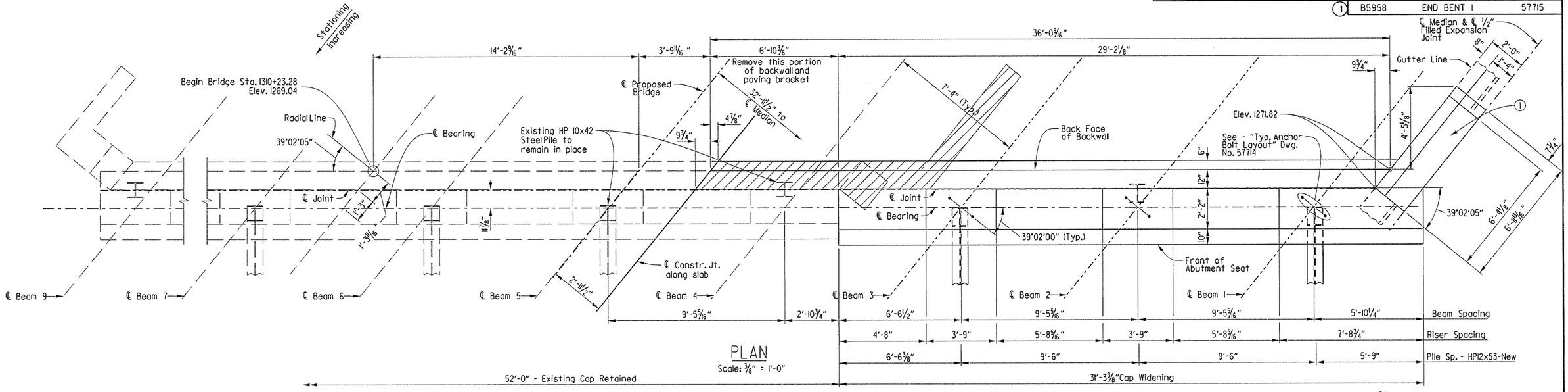

PLAN
Scale: 3/8" = 1'-0"

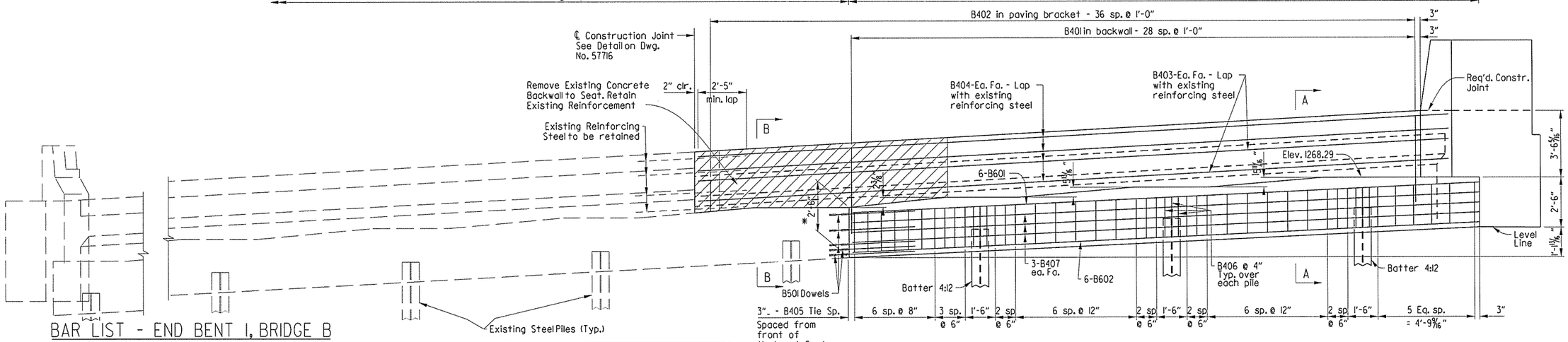

ELEVATION
Looking Back
Scale: 3/8" = 1'-0"

Note:
Class 2 Protective Surface Treatment Shall be applied to the top of the backwall, roadway face, and top of parapet of the new construction.

For additional details and General Notes, See Dwg. No. 57716.

For details of Elastomeric Bearings, See Dwg. No. 57725.

* These dimensions and elevations are based on the original plans. The contractor shall verify these in the field.

BAR LIST - END BENT 1, BRIDGE B

MARK	NO. REQ'D.	LENGTH	P.D.
B401	29	10'-6"	2"
B402	37	4'-0"	3"
B403	2	35'-7"	Str
B404	10	35'-7"	Str
B405	38	11'-1"	2"
B406	9	7'-1"	2"
B407	6	31'-0"	Str
B501	14	4'-0"	Str
B601	6	31'-8"	4 1/2"
B602	6	31'-0"	Str
W401	3	9'-9"	3"
W402	3	9'-5 3/4"	3"
W403	2	8'-10 3/4"	3"
W404	2	5'-11 3/4"	3"
W405	8	6'-0"	Str
W406	8	8'-5 3/4"	3"
W501	8	9'-4"	Str
W502	8	9'-4 3/4"	3 3/4"

BENDING DIAGRAMS
Dimensions are out to out of bars.

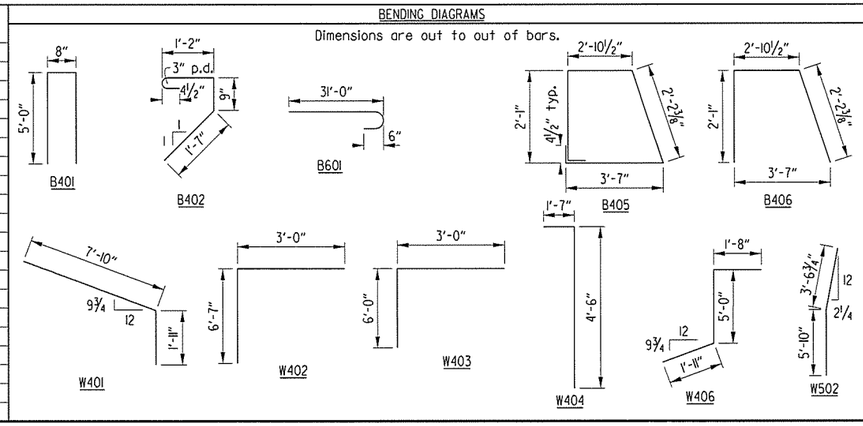

STATE OF ARKANSAS REGISTERED PROFESSIONAL ENGINEER No. 16713 DAVID R. WHITE 3/1/16

DETAILS OF END BENT 1- BRIDGE B
ROUTE 49 SEC. 29
ARKANSAS STATE HIGHWAY COMMISSION
LITTLE ROCK, ARK.

DRAWN BY: DR	DATE: 05-21-15	FILENAME: bca0901b2_b12.dgn	
CHECKED BY: DRN	DATE: 6-04-15	SCALE: SEE DETAILS	
DESIGNED BY: JBM	DATE: 04-21-15		

BRIDGE NO. B5958 DRAWING NO. 57715

PARSONS TRANSPORTATION GROUP	DATE REVISED	DATE FILMED	DATE REVISED	DATE FILMED	FED.RD. DIST.NO.	STATE	FED.AID PROJ.NO.	SHEET NO.	TOTAL SHEETS
					6	ARK.			
					JOB NO.		CA0901	169	452
					(1) A&B5958		END BENT DETAILS		57716

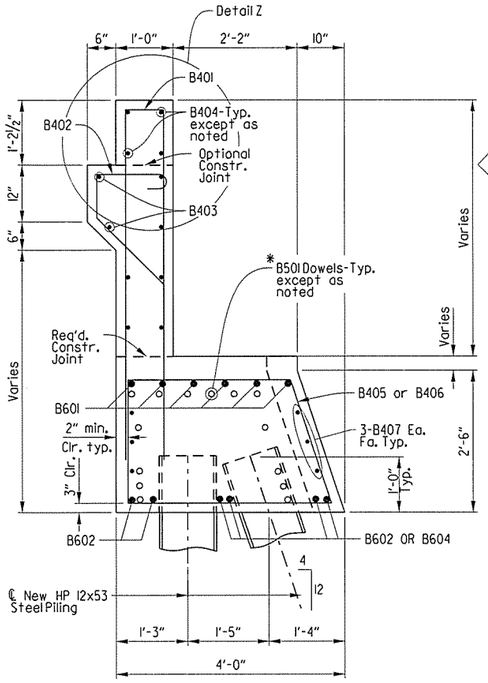

SECTION A-A

Scale: ¾" = 1'-0"

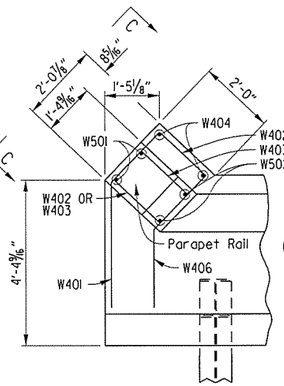

PARTIAL PLAN

BENT 6 (Br. B)

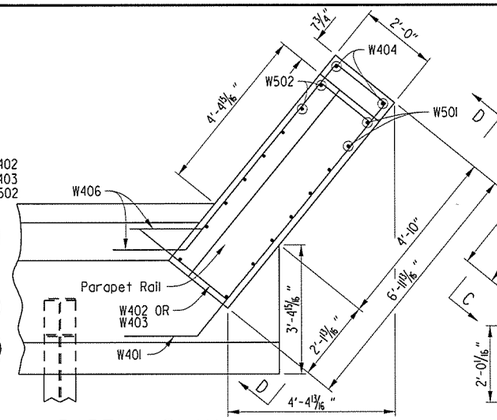

PARTIAL PLAN

BENT 1 (Br. B)

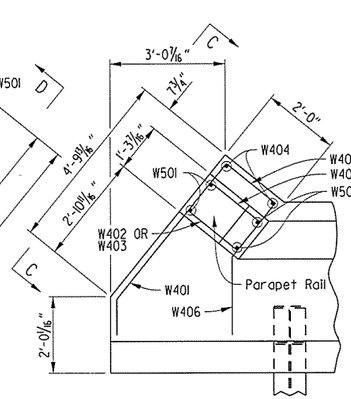

PARTIAL PLAN

BENT 1 (Br. A)

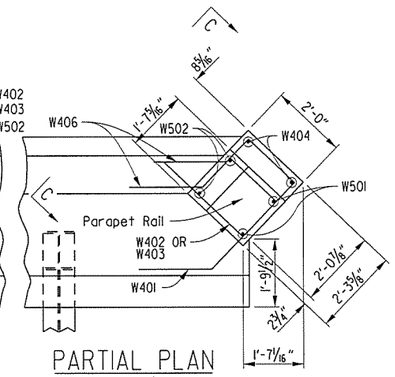

PARTIAL PLAN

BENT 6 (Br. A)

GENERAL NOTES:

All Concrete shall be Class "S" and poured in the dry. All exposed corners to be chamfered ¾" unless otherwise noted.

All Reinforcing Steel shall conform to Grade 60 (fy = 60,000 psi) AASHTO M 31 or M 322, Type A with mill test reports.

The backwall shall not be poured before the beams are in place. Backwall may be placed prior to placing the adjacent concrete deck only if the optional backwall construction joint is used. See Detail Z for additional information.

Structural steel in end bents may be AASHTO M 270, Gr. 36 and shall be included in the bid item "Structural Steel in Beam Spans (M 270, Gr. 50)."

If anchor bolts are drilled into cap, top reinforcing bars shall be properly placed to avoid damage.

Drill and grout bars where shown using an approved cement or epoxy system from the OPL. Minimum embedment shall be 12" for cement based grout. Minimum embedment shall be per the manufacturer's recommendations for epoxy based grout.

Work required to remove and dispose portions of the existing bridge, retain and clean existing reinforcing steel, and any required doweling will not be paid for directly but will be considered as subsidiary to the item "Modification of Existing Bridge Structure (Br. No. A5958)" and "Modification of Existing Bridge Structure (Br. No. B5958)".

½" filled expansion joint shall comply with Subsection 501.02(h) Type 2 and shall not be paid for directly but will be considered subsidiary to "Class S Concrete - Bridge".

For additional information, see Layout.

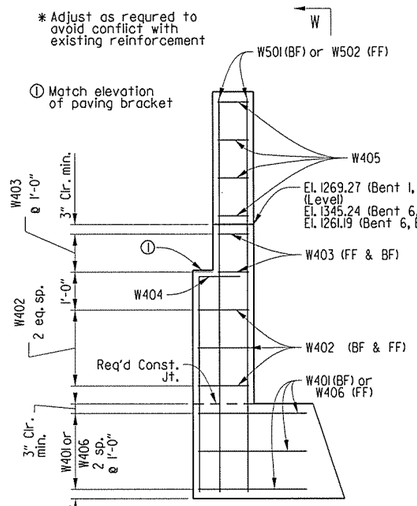

VIEW C-C

Scale: ½" = 1'-0"

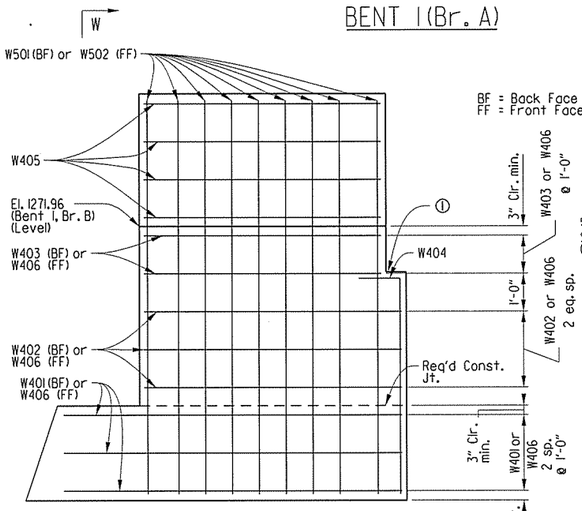

VIEW D-D

Scale: ½" = 1'-0"

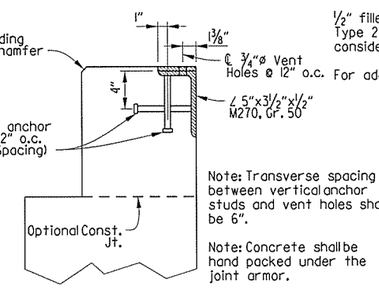

Note: Transverse spacing between vertical anchor studs and vent holes shall be 6".

Note: Concrete shall be hand packed under the joint armor.

Note: For additional joint details, see Dwg. No. 57727

DETAIL Z

Scale: 1½" = 1'-0"

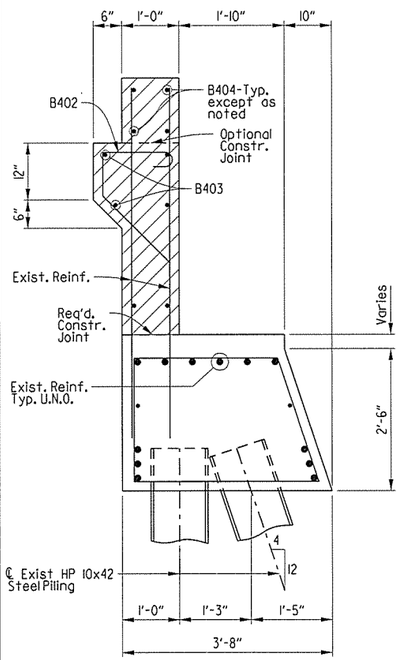

SECTION B-B

Scale: ¾" = 1'-0"

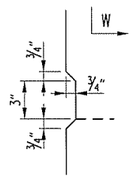

DETAIL X

No Scale

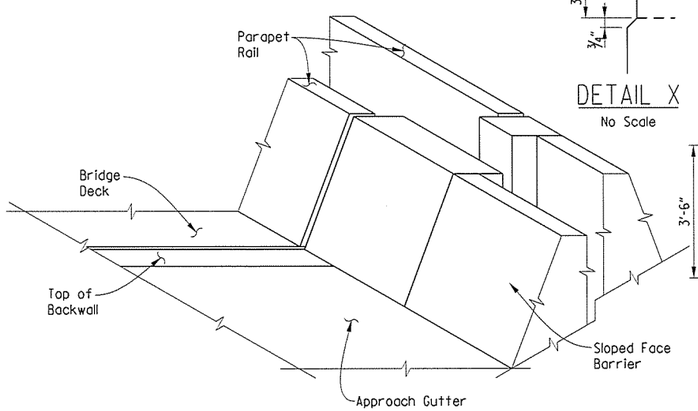

DETAIL OF BARRIER AT BRIDGE END

No Scale

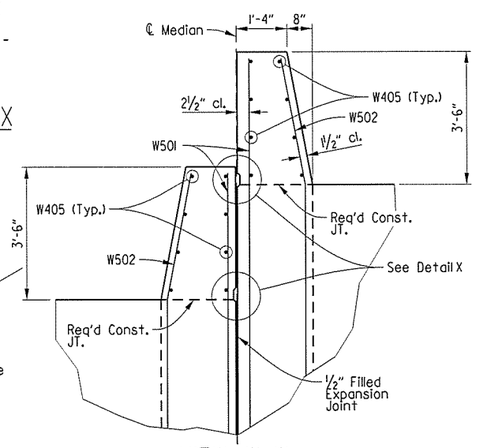

VIEW W-W

Scale: ½" = 1'-0"

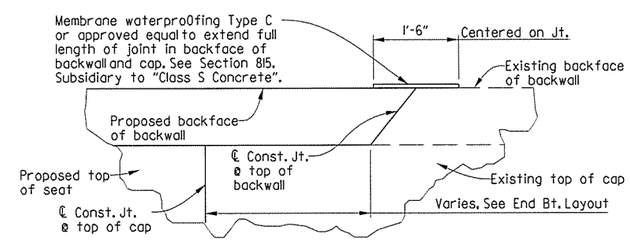

CONSTRUCTION JOINT DETAIL

Not to Scale

STATE OF ARKANSAS REGISTERED PROFESSIONAL ENGINEER No. 7673 DAVID R. HANDLEY

DETAILS OF END BENTS 1 & 6 - BRIDGES A & B

ROUTE 49 SEC. 29

ARKANSAS STATE HIGHWAY COMMISSION

LITTLE ROCK, ARK.

DRAWN BY: DR	DATE: 07-08-15	FILENAME: bca0901x2_b13.dgn	
CHECKED BY: JBM	DATE: 07-12-15	SCALE: SEE DETAILS	
DESIGNED BY: DRN	DATE: 07-08-15		

BRIDGE NO. A&B5958 DRAWING NO. 57716

USER: PARSONS
DESIGN FILE: R:\BRIDGES 1540\BRIDGE 5958 ca901\100% DESIGN FILES\169 bca0901x2.b13.dgn
PLOTTED: 3/1/2016 5:38:10 PM SCALE: 4.0 ':' / in.

R:\BRIDGES 1540\BRIDGE 5958 ca901\100% DESIGN FILES\169 bca0901x2_b13.dgn3/1/2016 5:38:10 PM

PARSONS TRANSPORTATION GROUP	DATE REVISED	DATE FILMED	DATE REVISED	DATE FILMED	FED.RD. DIST.NO.	STATE	FED.AID PROJ.NO.	SHEET NO.	TOTAL SHEETS
					6	ARK.			
					JOB NO.		CA0901	170	452
					(1) A5958		END BENT 6		57717

* These dimensions and elevations are based on the original plans. The contractor shall verify these in the field.

(1) Wingwall, rail and end post shall be constructed on curves concentric with ℄ Existing Bridge.

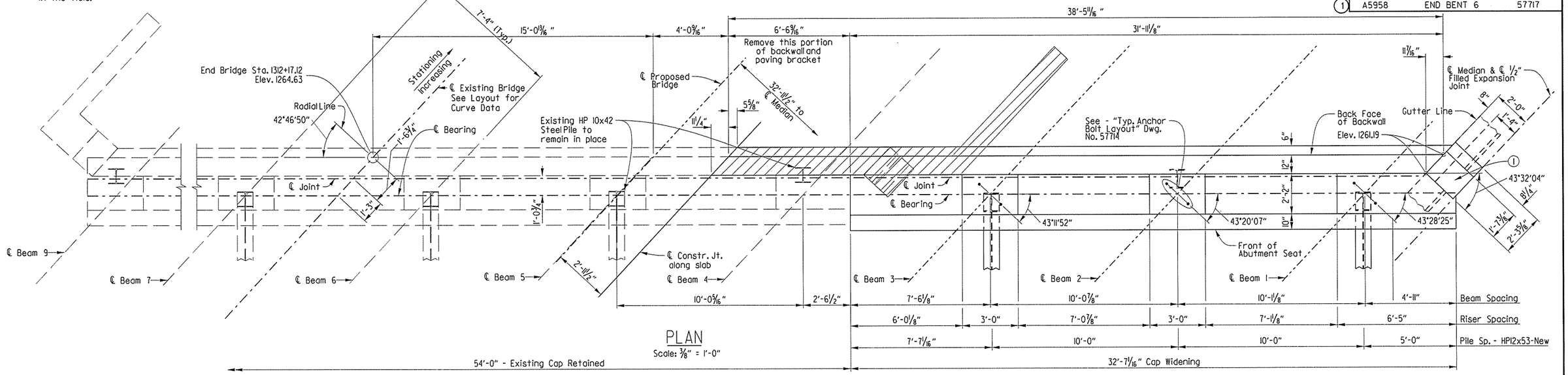

PLAN

Scale: 3/8" = 1'-0"

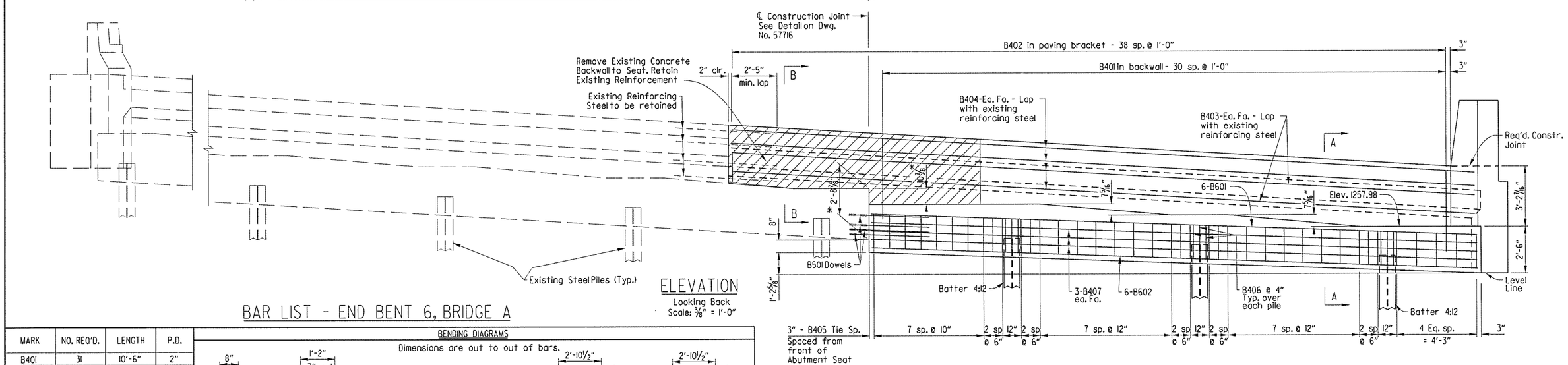

ELEVATION

Looking Back

Scale: 3/8" = 1'-0"

BAR LIST - END BENT 6, BRIDGE A

MARK	NO. REQ'D.	LENGTH	P.D.
B401	31	10'-6"	2"
B402	39	4'-0"	3"
B403	2	38'-1"	Str
B404	10	38'-1"	Str
B405	38	11'-1"	2"
B406	9	7'-1"	2"
B407	6	32'-3"	Str
B501	14	4'-0"	Str
B601	6	32'-11"	4 1/2"
B602	6	32'-3"	Str
W401	3	5'-1"	3"
W402	3	4'-7 3/4"	3"
W403	2	3'-11 3/4"	3"
W404	2	5'-9 3/4"	3"
W405	8	1'-3"	Str
W406	3	5'-2 3/4"	3"
W501	2	9'-4"	Str
W502	2	9'-4 3/4"	3 3/4"

BENDING DIAGRAMS

Dimensions are out to out of bars.

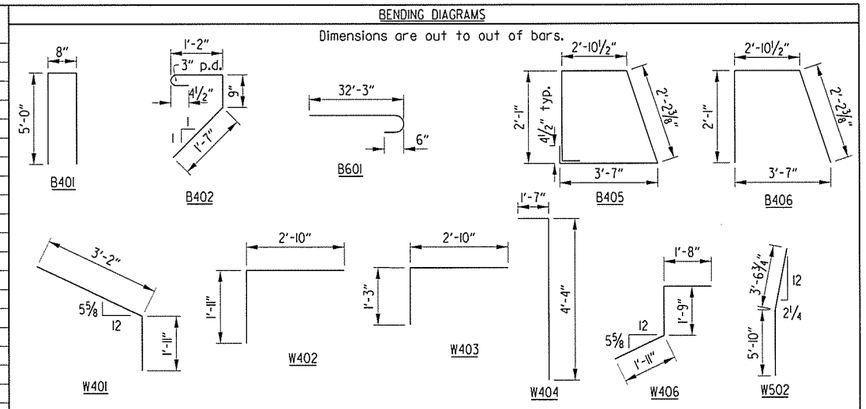

Note:
Class 2 Protective Surface Treatment shall be applied to the top of the backwall, roadway face, and top of parapet of the new construction.

For additional details and General Notes, See Dwg. No. 57716.

For details of Elastomeric Bearing, See Dwg. No. 57725

STATE OF ARKANSAS REGISTERED PROFESSIONAL ENGINEER No. 7673 DAVID R. NOLTE

3/1

DETAILS OF END BENT 6 - BRIDGE A

ROUTE 49 SEC. 29

ARKANSAS STATE HIGHWAY COMMISSION

LITTLE ROCK, ARK.

DRAWN BY: DR	DATE: 05-22-15	FILENAME: bca0901a2_b61.dgn			
CHECKED BY: DRN	DATE: 06-04-15	SCALE: SEE DETAILS			
DESIGNED BY: JBM	DATE: 04-21-15				

BRIDGE NO. A5958 DRAWING NO. 57717

USER: PARSONS
DESIGN FILE: R:\BRIDGES 1540\BRIDGE 5958 ca901\100% DESIGN FILES\170 bca0901a2_b61.dgn
PLOTTED: 3/1/2016 5:39:05 PM SCALE: 5:4 ': / in.

R:\BRIDGES 1540\BRIDGE 5958 ca901\100% DESIGN FILES\170 bca0901a2_b61.dgn3/1/2016 5:39:05 PM

PARSONS TRANSPORTATION GROUP	DATE REVISED	DATE FILMED	DATE REVISED	DATE FILMED	FED.RD. DIST.NO.	STATE	FED.AID PROJ.NO.	SHEET NO.	TOTAL SHEETS
					6	ARK.			
					JOB NO.		CA0901	171	452
					(1) B5958		END BENT 6		57718

(1) Wingwall, rail and end post shall be constructed on curves concentric with ℄ Existing Bridge.

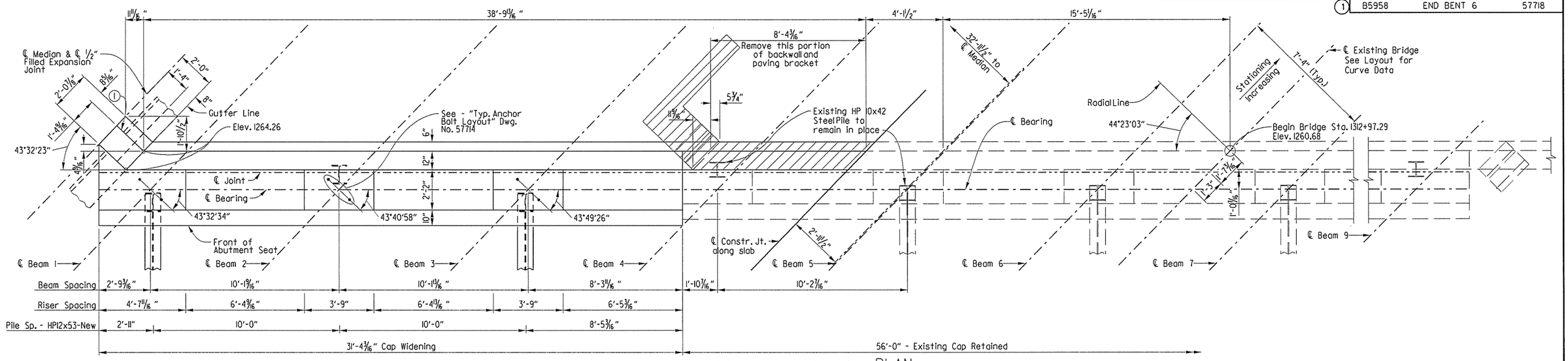

℄ Construction Joint See Detail on Dwg. No. 57716

PLAN
Scale: 3/8" = 1'-0"

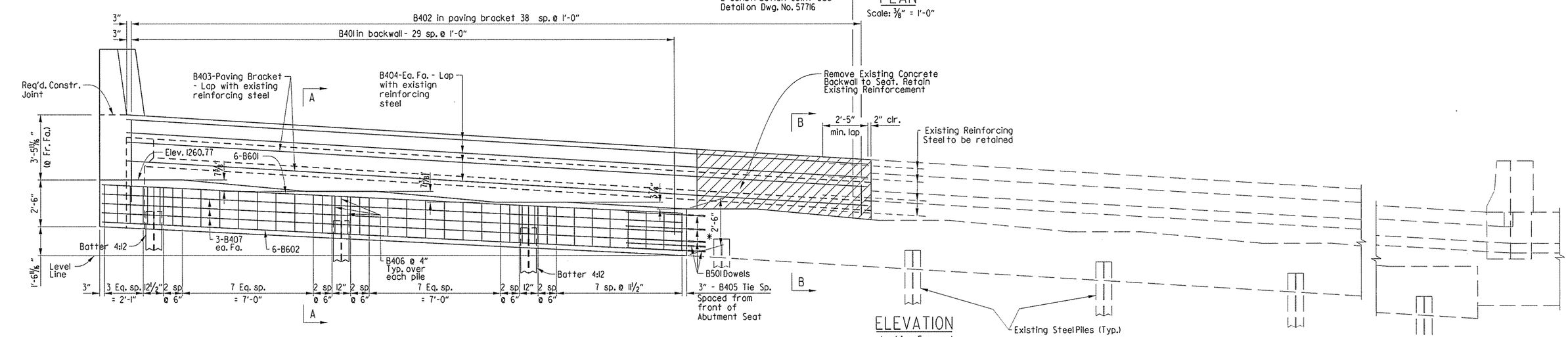

ELEVATION
Looking Forward
Scale: 3/8" = 1'-0"

Note:
Class 2 Protective Surface Treatment Shall be applied to the top of the backwall, roadway face, and top of parapet of the new construction.

For additional details and General Notes, See Dwg. No. 57716.

For details of Elastomeric Bearing, See Dwg. No. 57725.

* These dimensions and elevations are based on the original plans. The contractor shall verify these in the field.

BAR LIST - END BENT 6, BRIDGE B

MARK	NO. REQ'D.	LENGTH	P.D.	MARK	NO. REQ'D.	LENGTH	P.D.
B401	30	10'-6"	2"	W401	3	5'-10"	3"
B402	39	4'-0"	3"	W402	6	3'-2 3/4"	3"
B403	2	38'-6"	Str	W403	4	2'-6 3/4"	3"
B404	10	38'-6"	Str	W404	2	5'-11 3/4"	3"
B405	38	11'-1"	2"	W405	8	1'-0"	Str
B406	9	7'-1"	2"	W406	3	5'-6 3/4"	3"
B407	6	31'-0"	Str				
				W501	2	9'-2"	Str
B501	14	4'-0"	Str	W502	2	9'-2 3/4"	3 3/4"
B601	6	31'-8"	4 1/2"				
B602	6	31'-0"	Str				

BENDING DIAGRAMS
Dimensions are out to out of bars.

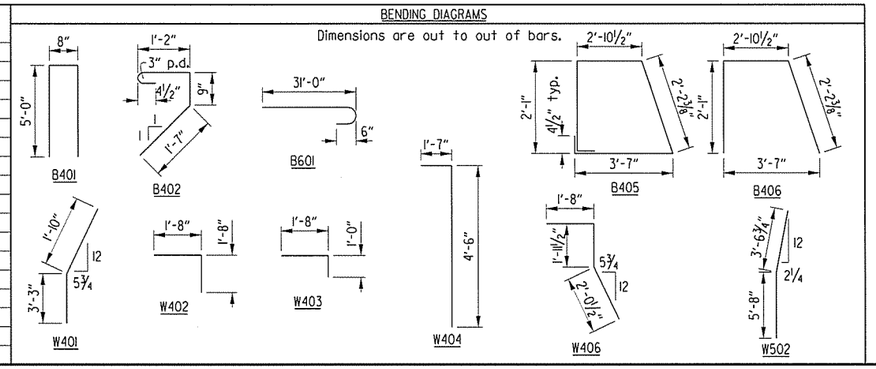

STATE OF ARKANSAS REGISTERED PROFESSIONAL ENGINEER No. 7673 DAVID R. WOLTE

DETAILS OF END BENT 6 - BRIDGE B
ROUTE 49 SEC. 29
ARKANSAS STATE HIGHWAY COMMISSION
LITTLE ROCK, ARK.

DRAWN BY:	DR	DATE:	05-22-15	FILENAME:	bca0901b2_b62.dgn
CHECKED BY:	DRN	DATE:	06-04-15	SCALE:	SEE DETAILS
DESIGNED BY:	JBM	DATE:	04-21-15		

BRIDGE NO. B5958 DRAWING NO. 57718

USER: PARSONS
DESIGN FILE: R:\BRIDGES 1540\BRIDGE 5958 co901\100% DESIGN FILES\171bca0901b2.b62.dgn
PLOTTED: 3/1/2016 5:39:48 PM SCALE: 5:4 ':' / in.

R:\BRIDGES 1540\BRIDGE 5958 co901\100% DESIGN FILES\171 bca0901b2_b62.dgn3/1/2016 5:39:48 PM

Note: Angles shown are to a line radial to ℄ Existing Bridge (Typ.)

For additional information see Layout and Dwg. No. 57721.

PARSONS TRANSPORTATION GROUP

DATE REVISED	DATE FILMED	DATE REVISED	DATE FILMED	FED.RD. DIST.NO.	STATE	FED.AID PROJ.NO.	SHEET NO.	TOTAL SHEETS
				6	ARK.			
				JOB NO.		CA0901	172	452
				(1) A5958	BENT 2 & 5 DETAILS			57719

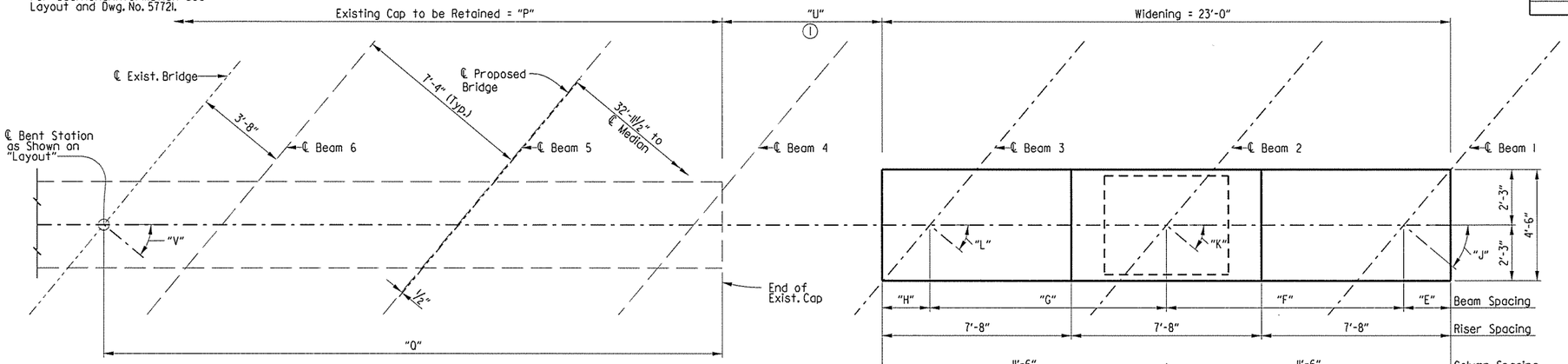

PLAN

Looking Ahead Bridge A
Scale: ⅜" = 1'-0"

BRIDGE A TABLE OF VARIABLES

	Bent 2	Bent 5
A	4'-0⅞"	4'-4½"
B	24'-0"	18'-6"
C	31'-6"	26'-0"
D	7"	9/16"
E	2'-0 11/16"	1'-6¾"
F	9'-5 5/16"	9'-11¼"
G	9'-5 5/16"	9'-11"
H	2'-0 11/16"	1'-7"
J	39°04'52"	42°31'44"
K	39°02'05"	42°23'42"
L	39°02'05"	42°15'44"
M	1266.08	1260.71
N	1265.18	1259.50
O	1233.68	1233.50
P	50'-0"	52'-0"
Q	25'-0"	26'-0"
R	25	19
S	5 5/16"	7¼"
T	5½"	7¼"
U	5'-11 13/16"	6'-11 11/16"
V	39°02'05"	41°48'16"

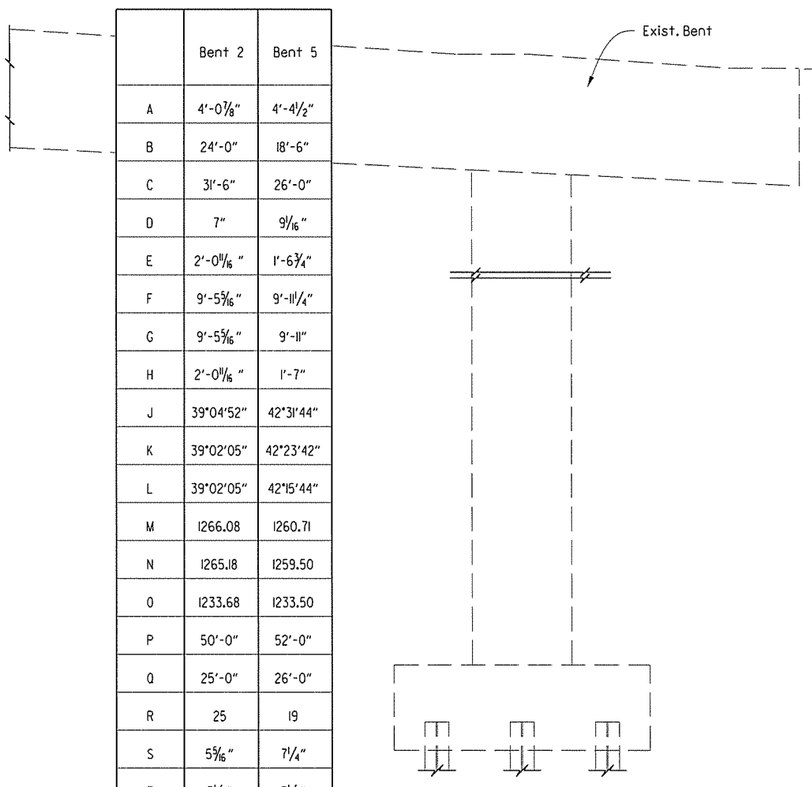

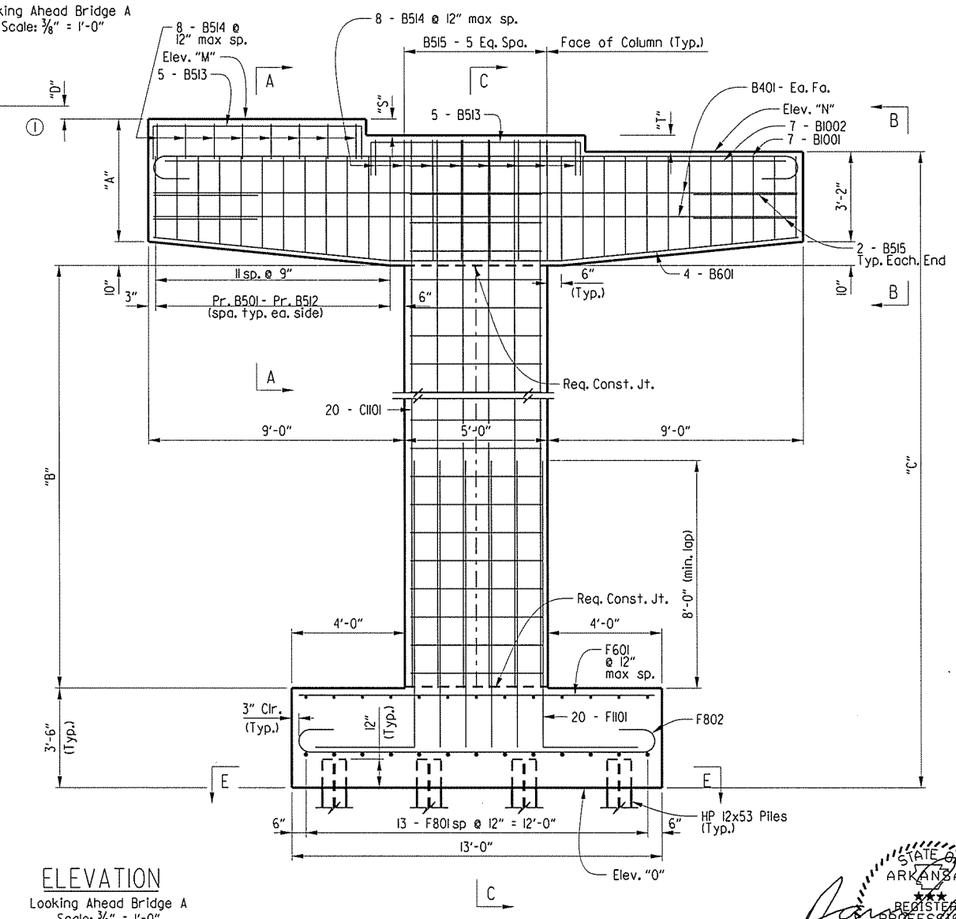

ELEVATION

Looking Ahead Bridge A
Scale: ⅜" = 1'-0"

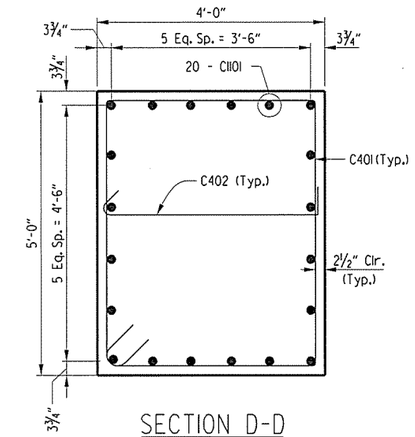

SECTION D-D

Scale: ¾" = 1'-0"

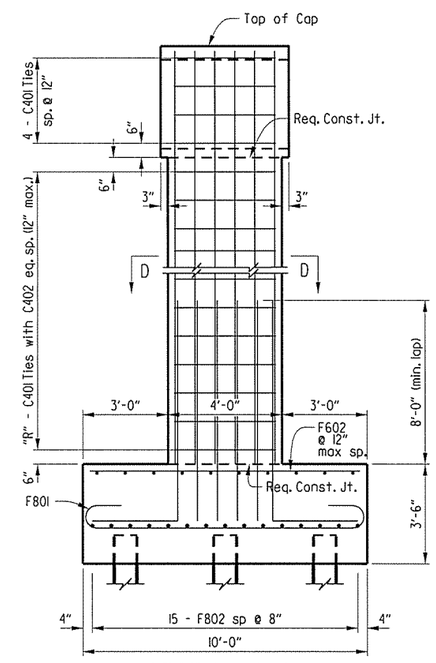

SECTION C-C

Scale: ⅜" = 1'-0"

STATE OF ARKANSAS REGISTERED PROFESSIONAL ENGINEER No. 7673 DAVID R. HOLT

SHEET 1 OF 3

DETAILS OF BENTS 2 & 5 - BRIDGE A

ROUTE 49 SEC. 29

ARKANSAS STATE HIGHWAY COMMISSION

LITTLE ROCK, ARK.

DRAWN BY:	DR	DATE:	7-06-15	FILENAME:	bca0901a2.b21.dgn
CHECKED BY:	DRN	DATE:	07-20-15	SCALE:	SEE DETAILS
DESIGNED BY:	JBM	DATE:	06-29-15		

BRIDGE NO. A5958 DRAWING NO. 57719

(1) These dimensions are based on the current survey data and original plan dimensions. The contractor shall verify these in the field.

USER: PARSONS
DESIGN FILE: R:\BRIDGES 1540\BRIDGE 5958 ca901\100% DESIGN FILES\172 bca0901a2.b21.dgn
PLOTTED: 2/28/2016 9:18:49 PM SCALE: 5:4 ":" / in.

PARSONS TRANSPORTATION GROUP	DATE REVISED	DATE FILMED	DATE REVISED	DATE FILMED	FED.RD. DIST.NO.	STATE	FED.AID PROJ.NO.	SHEET NO.	TOTAL SHEETS
					6	ARK.			
					JOB NO.		CA0901	173	452
					(1) B5958	BENT 2 & 5 DETAILS			57720

Note: Angles shown are to a line radial to ℄ Existing Bridge (Typ.)

For additional information see Layout and Dwg. No. 57721.

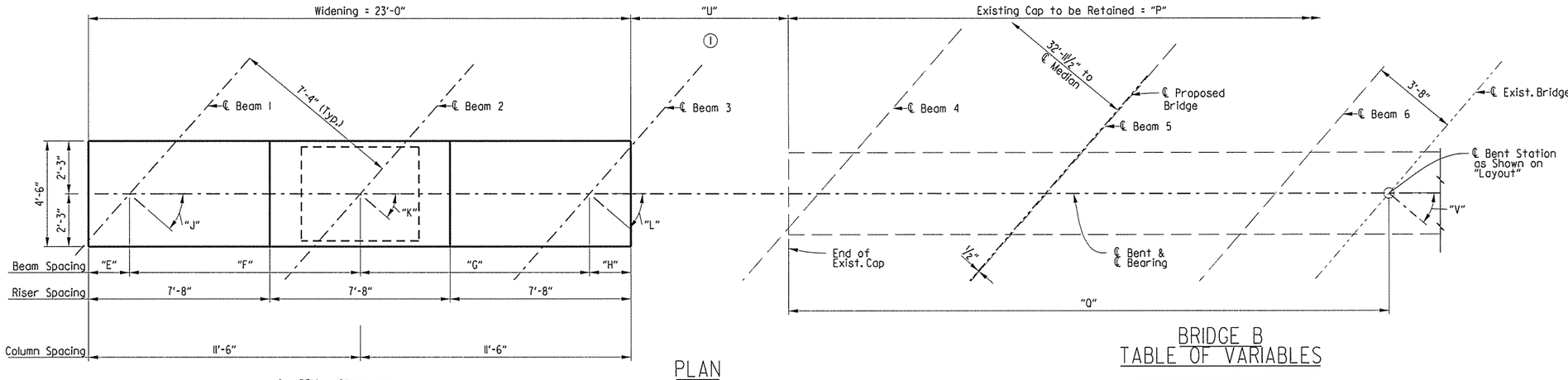

PLAN

Looking Ahead Bridge B
Scale: ⅜" = 1'-0"

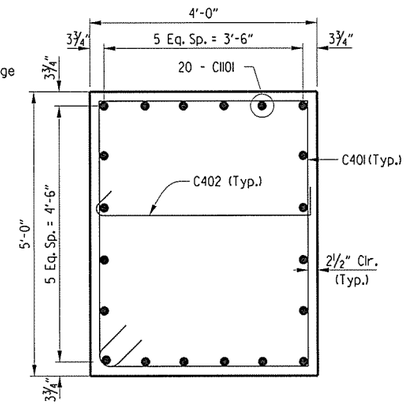

SECTION D-D

Scale: ¾" = 1'-0"

BRIDGE B TABLE OF VARIABLES

	Bent 2	Bent 5
A	4'-2½"	4'-4 9/16"
B	25'-0"	20'-0"
C	32'-6"	27'-6"
D	4 9/16"	5 7/16"
E	2'-0 5/16"	1'-6 5/16"
F	9'-5 11/16"	9'-11 11/16"
G	9'-5⅞"	10'-0"
H	2'-0⅛"	1'-6"
J	39°13'52"	42°37'06"
K	39°21'06"	42°45'14"
L	39°28'22"	42°53'26"
M	1266.09	1261.04
N	1267.14	1262.25
O	1233.59	1233.54
P	51'-0"	53'-0"
Q	25'-6"	26'-6"
R	26	21
S	6 5/16"	7 5/16"
T	6 3/16"	7¼"
U	5'-10⅛"	7'-2"
V	39°54'12"	43°22'36"

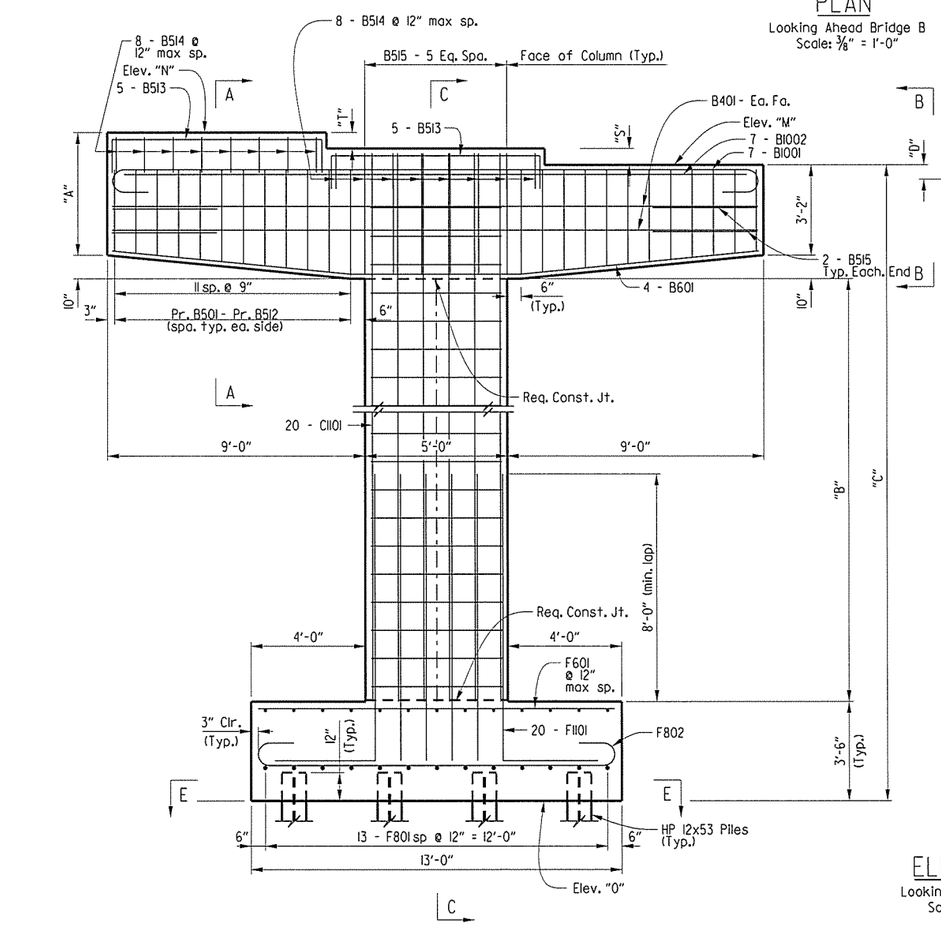

ELEVATION

Looking Ahead Bridge B
Scale: ⅜" = 1'-0"

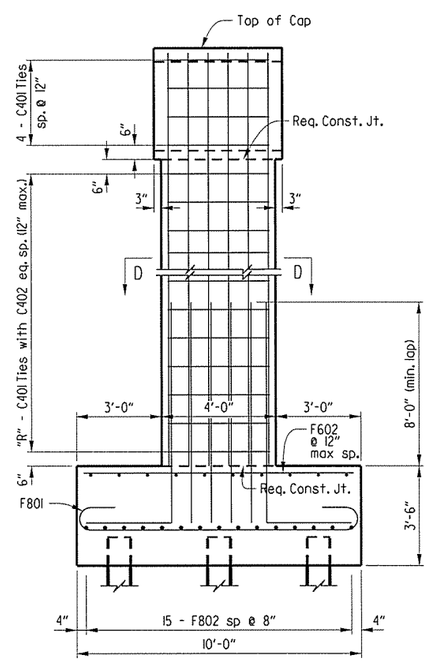

SECTION C-C

Scale: ⅜" = 1'-0"

(1) These dimensions are based on the current survey data and original plan dimensions. The contractor shall verify these in the field.

STATE OF ARKANSAS REGISTERED PROFESSIONAL ENGINEER No. 7673 DAVID R. HOLLEY

3/29/16

SHEET 2 OF 3

DETAILS OF BENTS 2 & 5 - BRIDGE B

ROUTE 49 SEC. 29

ARKANSAS STATE HIGHWAY COMMISSION

LITTLE ROCK, ARK.

DRAWN BY:	DR	DATE:	7-06-15	FILENAME:	bca0901b2_b22.dgn
CHECKED BY:	DRN	DATE:	07-20-15	SCALE:	SEE DETAILS
DESIGNED BY:	JBM	DATE:	06-29-15		

BRIDGE NO. B5958 DRAWING NO. 57720

USER: PARSONS
DESIGN FILE: R:\BRIDGES 1540\BRIDGE 5958 ca901\100% DESIGN FILES\173 bca0901b2_b22.dgn
PLOTTED: 2/28/2016 9:24:38 PM SCALE: 5:4 ':' / in.

R:\BRIDGES 1540\BRIDGE 5958 ca901\100% DESIGN FILES\173 bca0901b2_b22.dgn 3/28/2016 9:21:38 PM

PARSONS TRANSPORTATION GROUP	DATE REVISED	DATE FILMED	DATE REVISED	DATE FILMED	FED.RD. DIST.NO.	STATE	FED.AID PROJ.NO.	SHEET NO.	TOTAL SHEETS
					6	ARK.			
					JOB NO.		CA0901	174	452
					1	A&B5958 BENT 2 & 5 DETAILS			57721

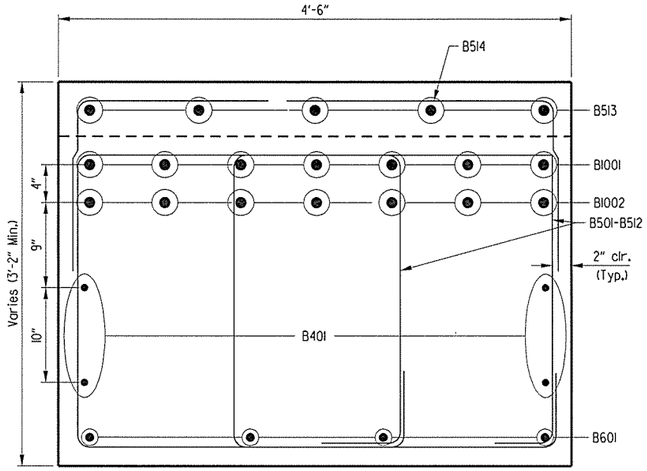

SECTION A-A

Scale: 1½" = 1'-0"

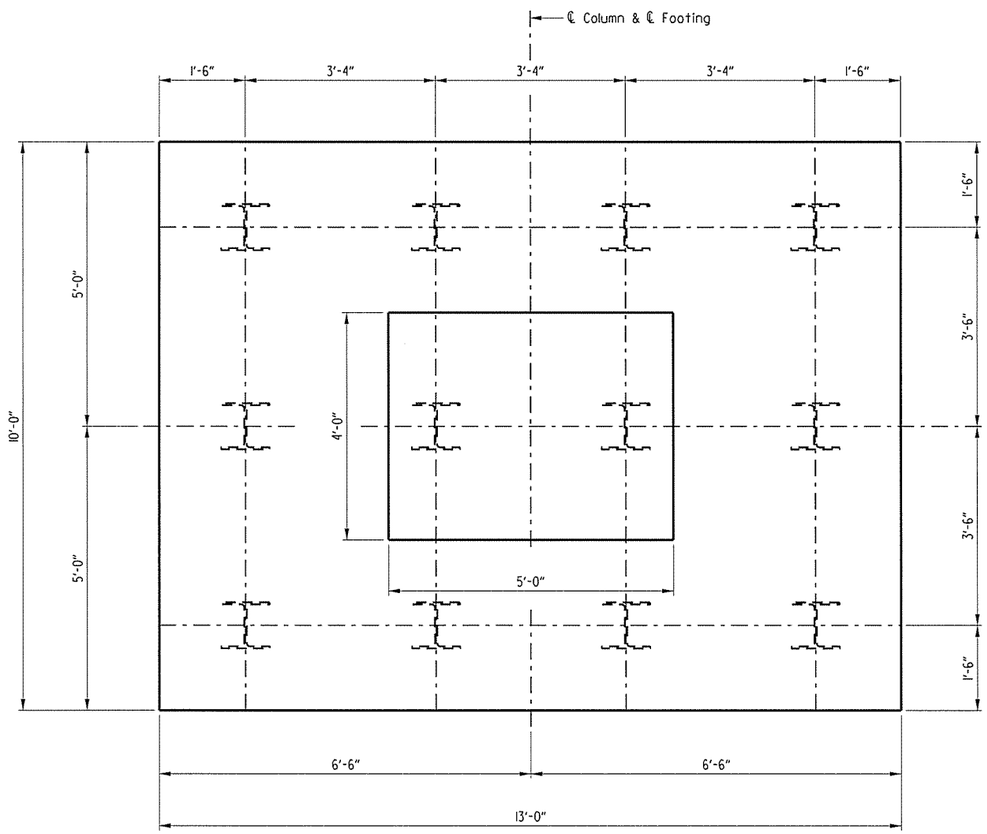

SECTION E-E

Scale: ¾" = 1'-0"

BAR LIST - PER BENT

MARK	BR. A NO. REQ'D. BENT 2	BR. A NO. REQ'D. BENT 5	BR. B NO. REQ'D. BENT 2	BR. B NO. REQ'D. BENT 5	LENGTH	P.D.
B401	4	4	4	4	22'-8"	Str.
B501-B512	4 each	4 each	4 each	4 each	Var. 11'-8" to 13'-4"	2½"
B513	10	10	10	10	11'-1½"	2½"
B514	16	16	16	16	7'-11½"	2½"
B515	10	10	10	10	11'-3½"	2½"
B601	4	4	4	4	22'-9"	4½"
B1001	7	7	7	7	24'-5"	10"
B1002	7	7	7	7	21'-10"	Str.
C401	29	23	30	25	16'-10"	3"
C402	25	19	26	21	4'-7¾"	3"
C1101	20	20	20	20	"B"	Str.
F601	13	13	13	13	12'-6"	Str.
F602	10	10	10	10	9'-6"	Str.
F801	13	13	13	13	11'-3"	6"
F802	15	15	15	15	14'-4"	6"
F1101	20	20	20	20	13'-1¾"	11¼"

BENDING DIAGRAMS

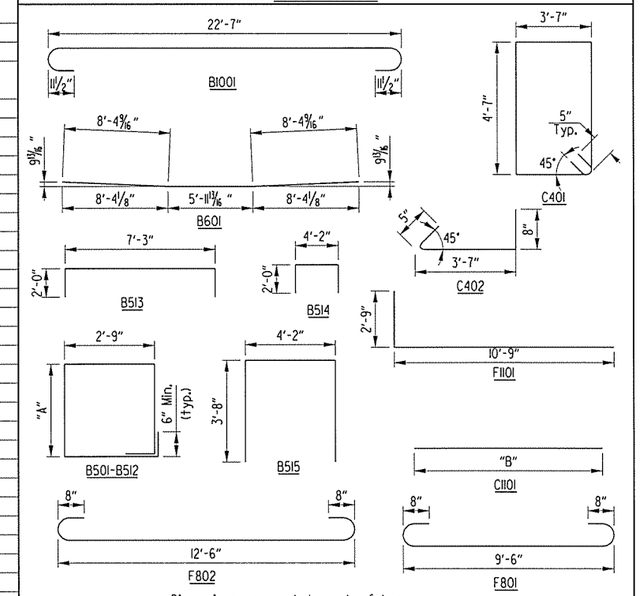

Dimensions are out to out of bars.

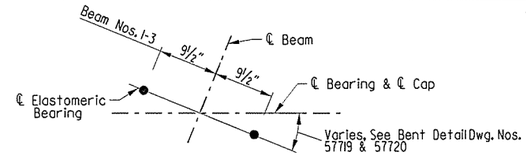

BENT 2 & 5 ANCHOR BOLT LAYOUT

Not to Scale

Bar C1101

BENT	"B"
BR. A BENT 2	27'-4"
BR. A BENT 5	21'-10"
BR. B BENT 2	28'-4"
BR. B BENT 5	23'-4"

MARK	"A"
B501	2'-10"
B502	2'-11"
B503	3'-0"
B504	3'-1"
B505	3'-2"
B506	3'-2¾"
B507	3'-3½"
B508	3'-4½"
B509	3'-5"
B510	3'-6"
B511	3'-7"
B512	3'-8"

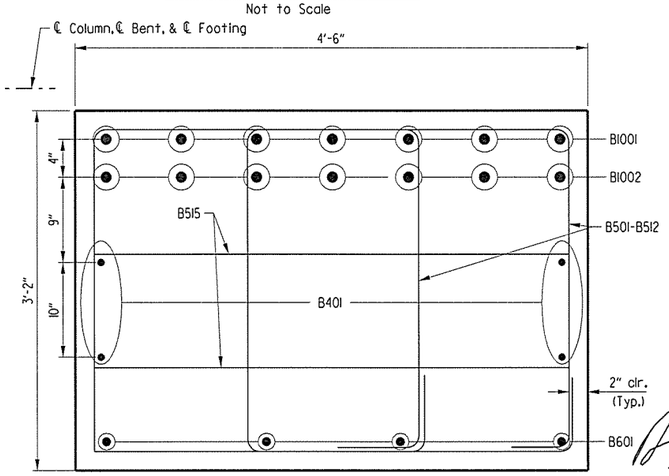

SECTION B-B

Scale: 1½" = 1'-0"

GENERAL NOTES

Concrete shall be Class "S" with a minimum 28 day compressive strength of f'c = 3500 psi. Concrete shall be poured in the dry. All exposed corners to be chamfered ¾" unless otherwise noted.

All reinforcing steel shall be Grade 60 (fy = 60,000 psi) conforming to AASHTO M31 or M 322, Type A with mill test reports.

Top reinforcing bars in cap shall be properly placed to avoid interference with anchor bolts or sheet metal sleeves.

For details of Elastomeric Bearings see Dwg. No. 57725.

For additional information, See Layout and Dwg. No. 57719 and 57720.

STATE OF ARKANSAS ★★★ REGISTERED PROFESSIONAL ENGINEER ★★★ No. 7673 DAVID B. NOLL

3/7/16

SHEET 3 OF 3

DETAILS OF BENTS 2 & 5 - BRIDGES A & B

ROUTE 49 SEC. 29

ARKANSAS STATE HIGHWAY COMMISSION

LITTLE ROCK, ARK.

DRAWN BY:	DR	DATE:	7-06-15	FILENAME:	bca0901x2_b23.dgn
CHECKED BY:	DRN	DATE:	7-20-15	SCALE:	SEE DETAILS
DESIGNED BY:	JBM	DATE:	06-29-15		

BRIDGE NO. A&B5958 DRAWING NO. 57721

USER: PARSONS
DESIGN FILE: R:\BRIDGES 1540\BRIDGE 5958 ca901\100% DESIGN FILES\174 bca0901x2_b23.dgn
PLOTTED: 2/28/2016 9:23:44 PM SCALE: 1:4 ":" / in.

R:\BRIDGES 1540\BRIDGE 5958 ca901\100% DESIGN FILES\174 bca0901x2_b23.dgn 2/28/2016 9:23:44 PM

Note: Angles shown are to a line radial to ℄ Existing Bridge (Typ.)

For additional information see Layout and Dwg. No. 57724.

PARSONS TRANSPORTATION GROUP

DATE REVISED	DATE FILMED	DATE REVISED	DATE FILMED

FED.RD. DIST.NO.	STATE	FED.AID PROJ.NO.	SHEET NO.	TOTAL SHEETS
6	ARK.			
JOB NO.		CA0901	175	452
(1) A5958	BENT 3 & 4 DETAILS			57722

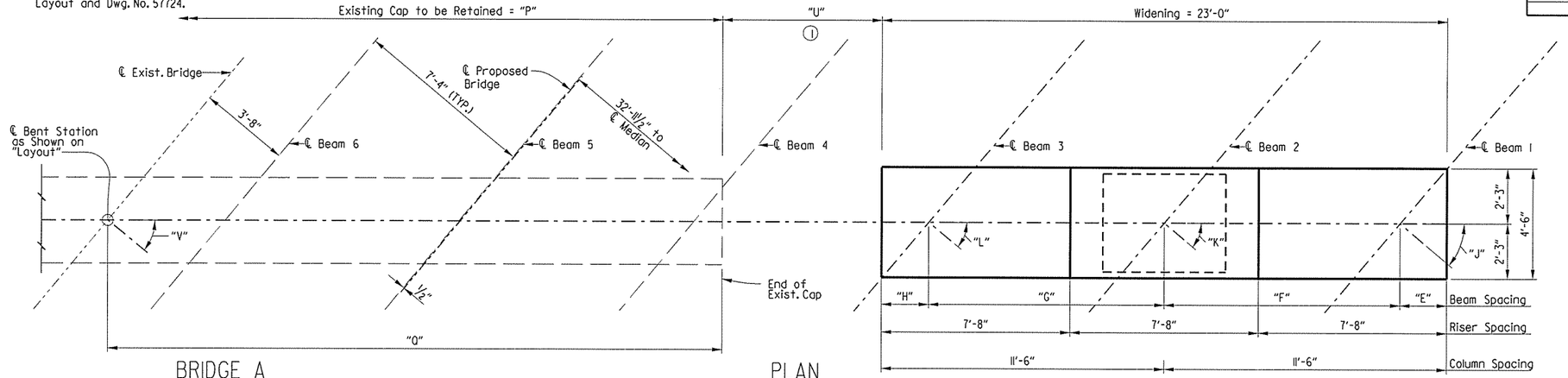

PLAN

Looking Ahead Bridge A
Scale: ⅜" = 1'-0"

BRIDGE A TABLE OF VARIABLES

	Bent 3	Bent 4
A	4'-2⅝"	4'-3 11/16"
B	39'-0"	39'-0"
C	47'-0"	47'-0"
D	8⅞"	9⅝"
E	2'-2⅞"	1'-8⅞"
F	9'-7⅛"	9'-9⅛"
G	9'-6 15/16"	9'-8 15/16"
H	1'-7"	1'-9 1/16"
J	40°13'39"	41°22'40"
K	40°06'15"	41°14'57"
L	39°58'53"	41°07'18"
M	1264.26	1262.46
N	1263.20	1261.31
O	1216.20	1214.31
P	50'-0"	51'-0"
Q	25'-0"	25'-6"
R	39	39
S	6¼"	6⅞"
T	6⅜"	7"
U	6'-9 11/16"	6'-8⅜"
V	39°33'32"	40°40'54"

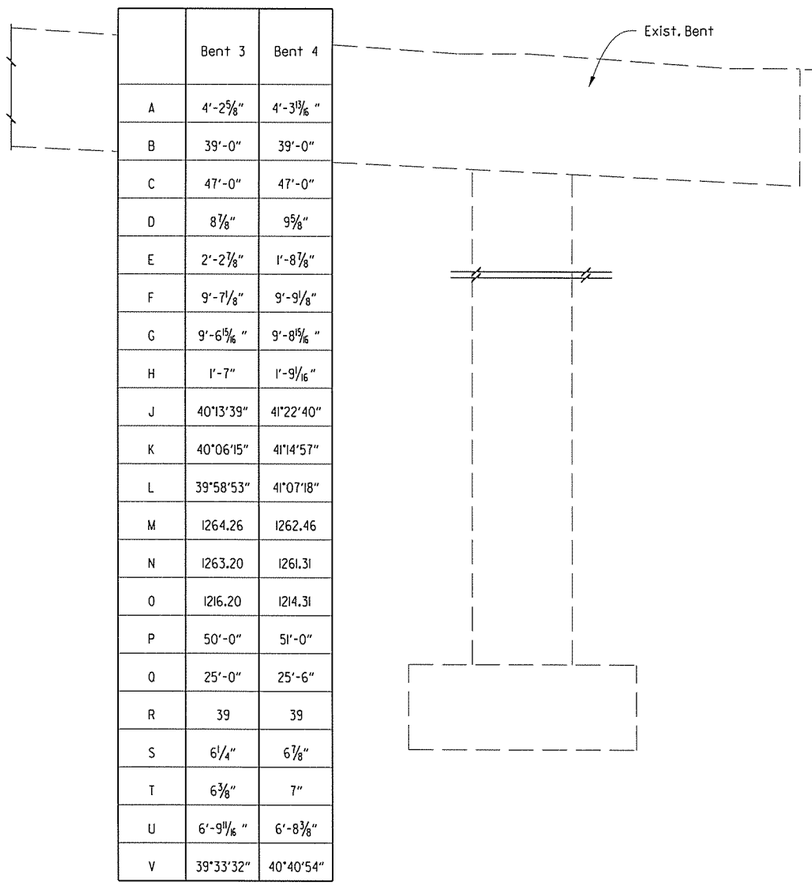

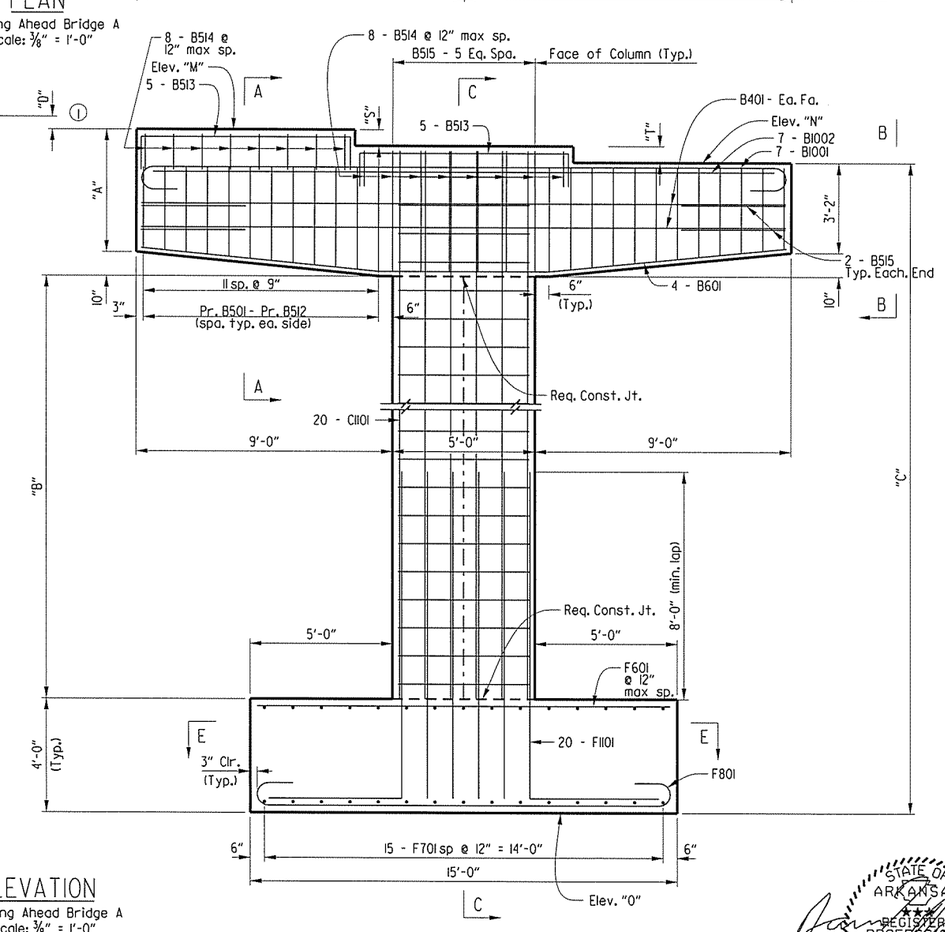

ELEVATION

Looking Ahead Bridge A
Scale: ⅜" = 1'-0"

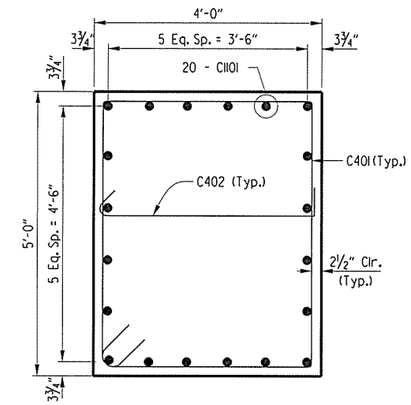

SECTION D-D

Scale: ¾" = 1'-0"

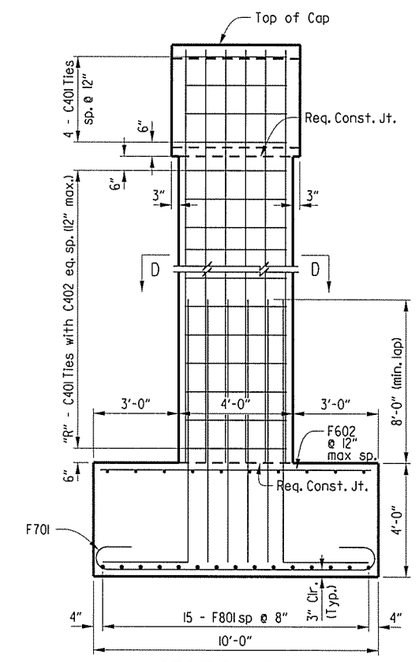

SECTION C-C

Scale: ⅜" = 1'-0"

STATE OF ARKANSAS REGISTERED PROFESSIONAL ENGINEER No. 7603 DAVID R. NOLTE 3-1-01

SHEET 1 OF 3

DETAILS OF BENTS 3 & 4 - BRIDGE A

ROUTE 49 SEC. 29

ARKANSAS STATE HIGHWAY COMMISSION

LITTLE ROCK, ARK.

DRAWN BY:	DR	DATE:	7-06-15	FILENAME:	bca0901a2_b31.dgn
CHECKED BY:	DRN	DATE:	07-20-15	SCALE:	SEE DETAILS
DESIGNED BY:	JBM	DATE:	06-29-15		

BRIDGE NO. A5958 DRAWING NO. 57722

(1) These dimensions are based on the current survey data and original plan dimensions. The contractor shall verify these in the field.

USER: PARSONS
DESIGN FILE: R:\BRIDGES 1540\BRIDGE 5958 ca901\100% DESIGN FILES\175 bca0901a2_b31.dgn
PLOTTED: 3/21/2016 9:27:01 AM SCALE: 5:4 ":" / in.

PARSONS TRANSPORTATION GROUP	DATE REVISED	DATE FILMED	DATE REVISED	DATE FILMED	FED.RD. DIST.NO.	STATE	FED.AID PROJ.NO.	SHEET NO.	TOTAL SHEETS
					6	ARK.			
					JOB NO.		CA0901	176	452
					(1) B5958	BENT 3 & 4 DETAILS			57723

Note: Angles shown are to a line radial to ℄ Existing Bridge (Typ.)

For additional information see Layout and Dwg. No. 57724.

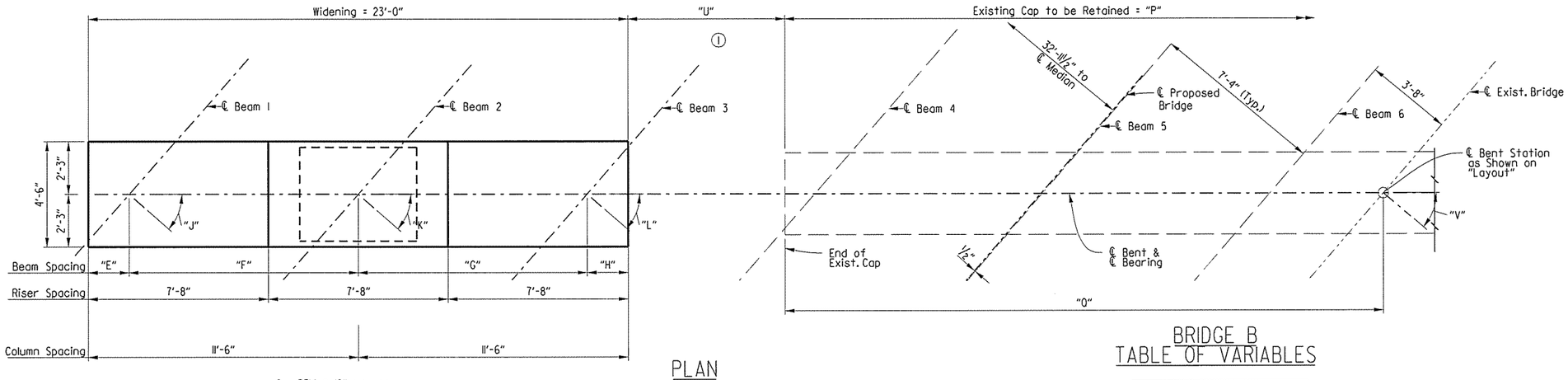

PLAN

Looking Ahead Bridge B
Scale: ⅜" = 1'-0"

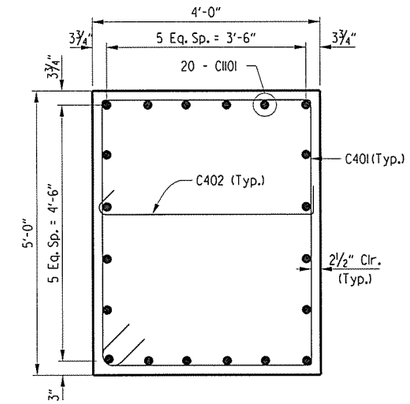

SECTION D-D

Scale: ¾" = 1'-0"

BRIDGE B TABLE OF VARIABLES

	Bent 3	Bent 4
A	4'-3¾"	4'-4⅜"
B	42'-6"	42'-6"
C	50'-6"	50'-6"
D	4³⁄₁₆"	4⁷⁄₁₆"
E	1'-10⅜"	1'-8⅜"
F	9'-7⅝"	9'-9⅝"
G	9'-7¹³⁄₁₆"	9'-9¹³⁄₁₆"
H	1'-10⅜"	1'-8⅜"
J	40°21'40"	41°29'25"
K	40°29'11"	41°37'14"
L	40°36'45"	41°45'07"
M	1265.59	1263.95
N	1264.44	1262.75
O	1213.94	1231.25
P	51'-0"	52'-0"
Q	25'-6"	25'-0"
R	43	43
S	6¹³⁄₁₆"	7³⁄₁₆"
T	6¹⁵⁄₁₆"	7³⁄₁₆"
U	6'-6¹⁵⁄₁₆"	6'-10¹³⁄₁₆"
V	41°03'40"	42°13'08"

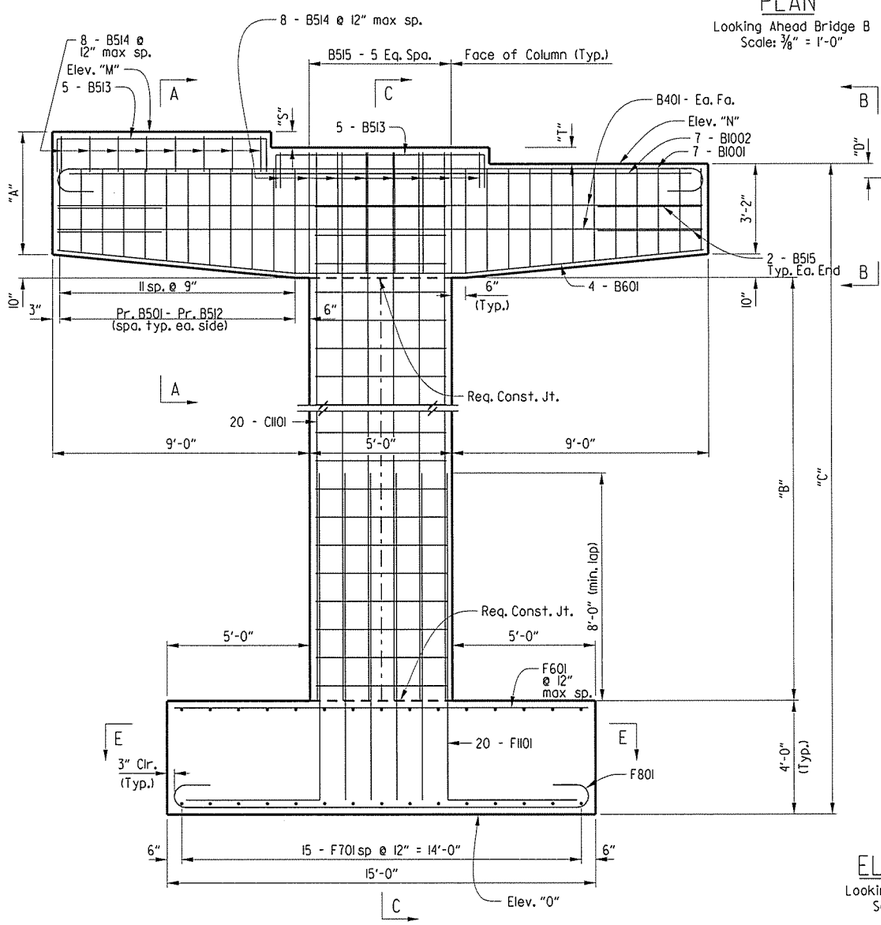

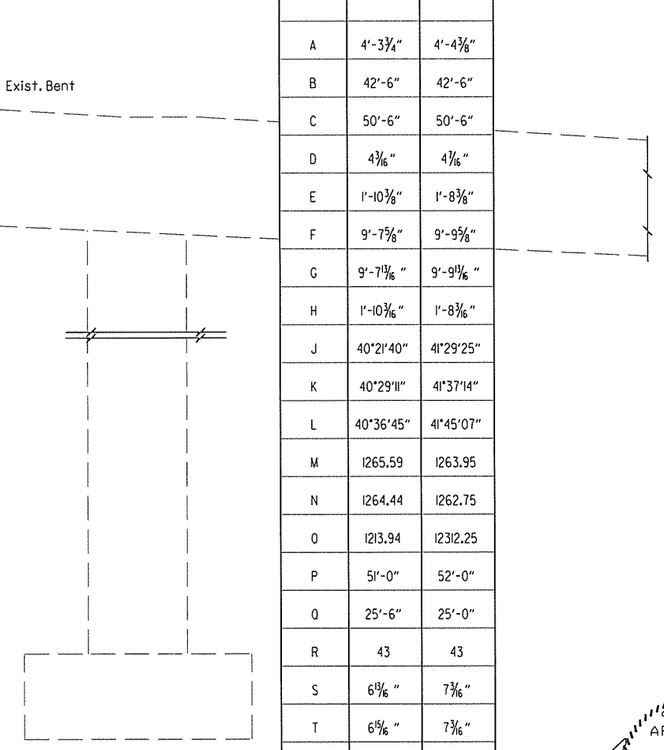

ELEVATION

Looking Ahead Bridge B
Scale: ⅜" = 1'-0"

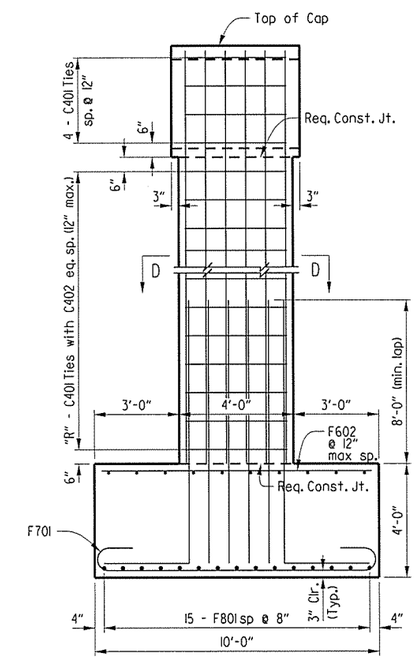

SECTION C-C

Scale: ⅜" = 1'-0"

(1) These dimensions are based on the current survey data and original plan dimensions. The contractor shall verify these in the field.

STATE OF ARKANSAS ★★★ REGISTERED PROFESSIONAL ENGINEER ★★★ No. 7673 DAVID P. NOLTE

SHEET 2 OF 3

DETAILS OF BENTS 3 & 4 - BRIDGE B

ROUTE 49 SEC. 29

ARKANSAS STATE HIGHWAY COMMISSION

LITTLE ROCK, ARK.

DRAWN BY: DR	DATE: 7-06-15	FILENAME: bca0901b2_b32.dgn			
CHECKED BY: DRN	DATE: 07-06-15	SCALE: SEE DETAILS			
DESIGNED BY: JBM	DATE: 06-29-15				

BRIDGE NO. B5958 DRAWING NO. 57723

USER: PARSONS
DESIGN FILE: R:\BRIDGES 1540\BRIDGE 5958 ca901\100% DESIGN FILES\176 bca0901b2_b32.dgn
PLOTTED: 2/28/2016 9:30:41 PM SCALE: 5:4 ":" / in.

R:\BRIDGES 1540\BRIDGE 5958 ca901\100% DESIGN FILES\176 bca0901b2_b32.dgn 8/28/2016 9:30:11 PM

PARSONS TRANSPORTATION GROUP	DATE REVISED	DATE FILMED	DATE REVISED	DATE FILMED	FED.RD. DIST.NO.	STATE	FED.AID PROJ.NO.	SHEET NO.	TOTAL SHEETS
					6	ARK.			
					JOB NO.		CA0901	177	452
					(1) A&B5958		BENT 3 & 4 DETAILS		57724

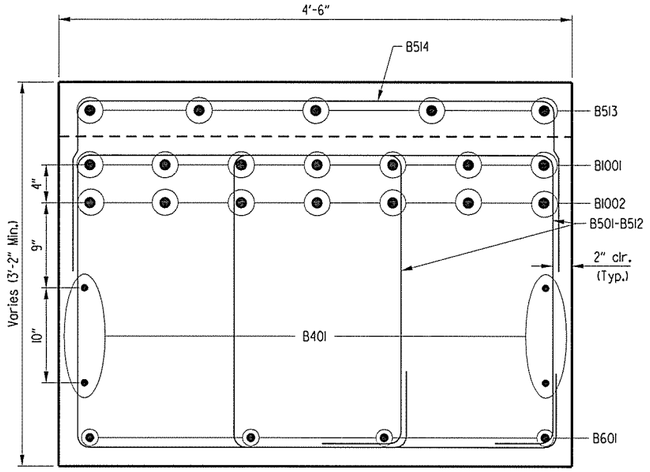

SECTION A-A
Scale: 1½" = 1'-0"

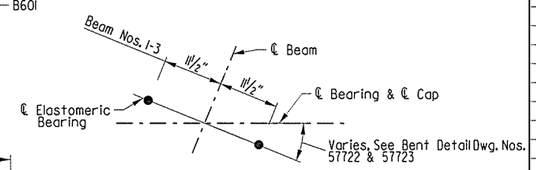

BENT 3 & 4
ANCHOR BOLT LAYOUT
Not to Scale

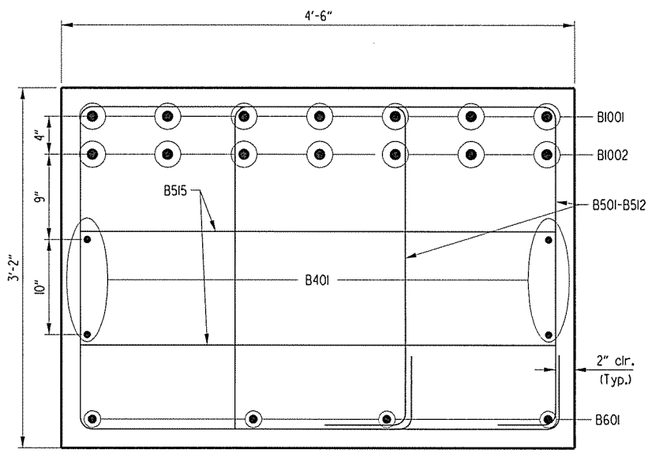

SECTION B-B
Scale: 1½" = 1'-0"

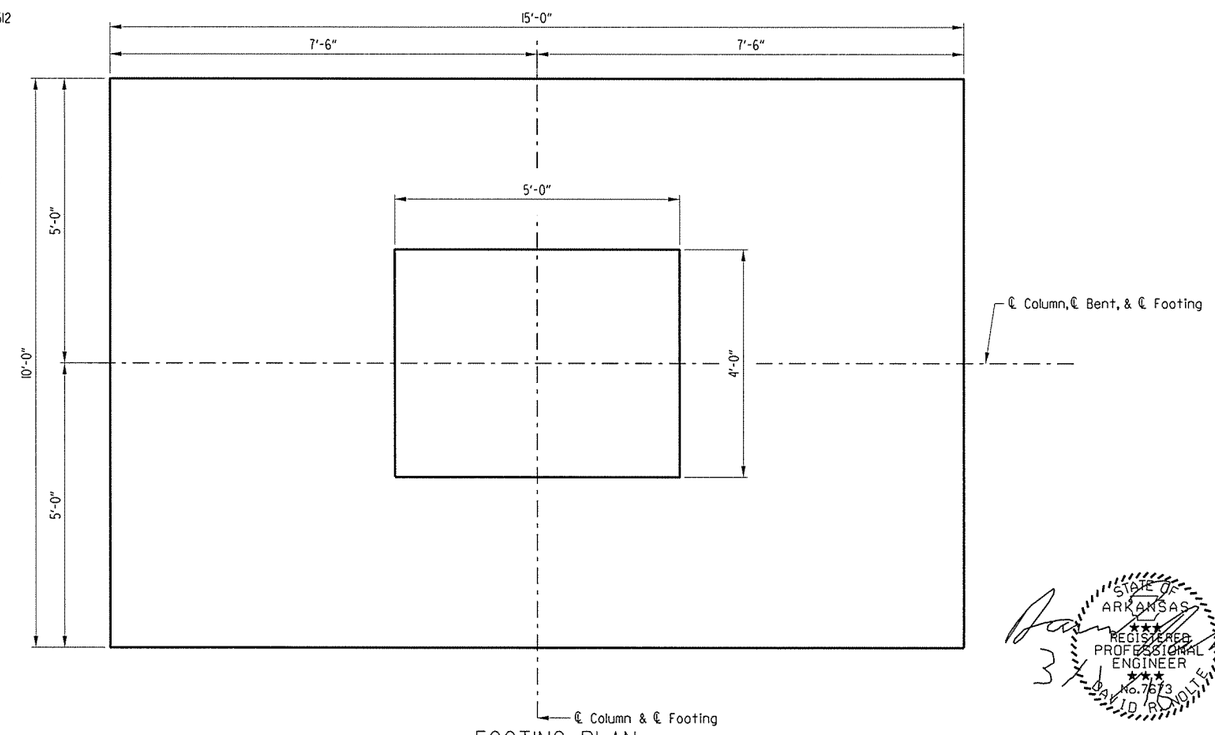

FOOTING PLAN
Scale: ¾" = 1'-0"

BAR LIST - PER BENT

MARK	BR. A NO. REQ'D. BENT 3	BR. A NO. REQ'D. BENT 4	BR. B NO. REQ'D. BENT 3	BR. B NO. REQ'D. BENT 4	LENGTH	P.D.
B401	4	4	4	4	22'-8"	Str.
B501-B512	4 each	4 each	4 each	4 each	Var. 11'-8" to 13'-4"	2½"
B513	10	10	10	10	10'-11½"	2½"
B514	16	16	16	16	6'-11½"	2½"
B515	10	10	10	10	11'-3½"	2½"
B601	4	4	4	4	22'-9"	4½"
B1001	7	7	7	7	24'-5"	10"
B1002	7	7	7	7	21'-10"	Str.
C401	43	43	47	47	16'-10"	3"
C402	39	39	43	43	4'-7¾"	3"
C1101	20	20	20	20	"B"	Str.
F601	10	10	10	10	14'-6"	Str.
F602	15	15	15	15	9'-6"	Str.
F701	15	15	15	15	11'-2"	5¼"
F801	15	15	15	15	16'-4"	6"
F1101	20	20	20	20	16'-2"	11¼"

BENDING DIAGRAMS

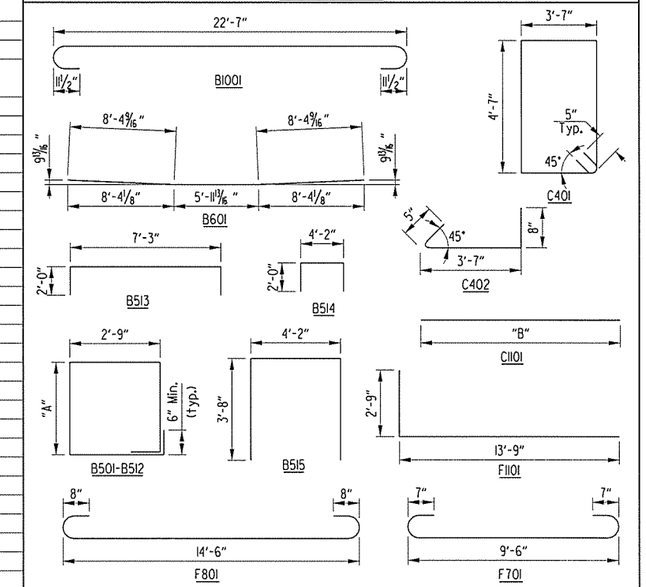

Dimensions are out to out of bars.

Bar C1101

BENT	"B"
BR. A BENT 3	42'-4"
BR. A BENT 4	42'-4"
BR. B BENT 3	45'-10"
BR. B BENT 4	45'-10"

MARK	"A"
B501	2'-10"
B502	2'-11"
B503	3'-0"
B504	3'-1"
B505	3'-2"
B506	3'-2¾"
B507	3'-3½"
B508	3'-4½"
B509	3'-5"
B510	3'-6"
B511	3'-7"
B512	3'-8"

GENERAL NOTES

Concrete shall be Class "S" with a minimum 28 day compressive strength of f'c = 3500 psi. Concrete shall be poured in the dry. All exposed corners to be chamfered ¾" unless otherwise noted.

All reinforcing steel shall be Grade 60 (fy = 60,000 psi) conforming to AASHTO M31 or M 322, Type A with mill test reports.

Top reinforcing bars in cap shall be properly placed to avoid interference with anchor bolts or sheet metal sleeves.

For details of Elastomeric Bearings see Dwg. No. 57725.

For additional information, See Layout and Dwg. No. 57722 and 57723.

STATE OF ARKANSAS
REGISTERED PROFESSIONAL ENGINEER
No. 7673
DAVID BOWLES

SHEET 3 OF 3
DETAILS OF BENTS 3 & 4 - BRIDGES A & B
ROUTE 49 SEC. 29
ARKANSAS STATE HIGHWAY COMMISSION
LITTLE ROCK, ARK.

DRAWN BY:	DR	DATE:	07-07-15	FILENAME:	bca0901x2_b33.dgn
CHECKED BY:	DRN	DATE:	07-20-15	SCALE:	SEE DETAILS
DESIGNED BY:	JBM	DATE:	06-29-15		

BRIDGE NO. A&B5958 DRAWING NO. 57724

USER: PARSONS
DESIGN FILE: R:\BRIDGES 1540\BRIDGE 5958 ca901\100% DESIGN FILES\177 bca0901x2_b33.dgn
PLOTTED: 2/28/2016 9:32:18 PM SCALE: 1:4 ":" / in.
R:\BRIDGES 1540\BRIDGE 5958 ca901\100% DESIGN FILES\177 bca0901x2_b33.dgn 2/28/2016 9:32:18 PM

PARSONS TRANSPORTATION GROUP	DATE REVISED	DATE FILMED	DATE REVISED	DATE FILMED	FED.RD. DIST.NO.	STATE	FED.AID PROJ.NO.	SHEET NO.	TOTAL SHEETS
					6	ARK.			
					JOB NO.		CA0901	178	452
					A&B5958		BEARING DETAILS		57725

TABLE OF FABRICATOR VARIABLES

Brg. No.	Location: Bent No.	Location: Beam No.	Bearing Type	No. of Bearing Each Bent	* Maximum Design Load (kips)	G	H	Elastomeric Pad: A	B	N	T_i	T_e	No. & Thickness of Steel Laminae	T
A&B5958	1	1-3	Exp.	3	104	8"	5½"	14"	8"	3	½"	¼"	4 @ 12 Ga.	2 7/16"
	2	1-3	Exp.	3	214	7⅜"	4⅜"	14"	13"	3	½"	¼"	4 @ 12 Ga.	2 7/16"
	3	1-3	Fix	3	215	6⅞"	4⅜"	14"	13"	3	½"	¼"	4 @ 12 Ga.	2 7/16"
	4	1-3	Fix	3	215	6⅞"	4⅜"	14"	13"	3	½"	¼"	4 @ 12 Ga.	2 7/16"
	5	1-3	Exp.	3	214	7⅜"	4⅜"	14"	13"	3	½"	¼"	4 @ 12 Ga.	2 7/16"
	6	1-3	Exp.	3	104	8"	5½"	14"	8"	3	½"	¼"	4 @ 12 Ga.	2 7/16"

Brg. No.	External Load Plate: C	D	E	F	J	K	M	Ta	Tb	Anchor Bolt: Anchor Bolt ø x L	Grade	Pipe Sleeve Size (ø x L)	Sheet Metal Sleeve Size (ø x L)	Steel washer Size (O.D.)
A&B5958	9"	23"	4⅛"	2"	--	½"	9"	1.865"	2.135"	1¼" x 24 "	55	1¼" x 5¾"	3" x 15½"	2½"
	14"	25"	3 7/16"	2⅝"	--	½"	9½"	1.790"	2.210"	1¾" x 31"	55	2" x 4⅞"	4" x 20"	3⅜"
	14"	31"	2"	2"	1 5/16"	½"	11½"	1.790"	2.210"	1¼" x 25"	55	1¼" x 4⅝"	3" x 20"	2½"
	14"	31"	2"	2"	1 5/16"	½"	11½"	1.790"	2.210"	1¼" x 25"	55	1¼" x 4⅝"	3" x 20"	2½"
	14"	25"	3 7/16"	2⅝"	--	½"	9½"	1.790"	2.210"	1¾" x 31"	55	2" x 4⅞"	4" x 20"	3⅜"
	9"	23"	4⅛"	2"	--	½"	9"	1.865"	2.135"	1¼" x 24 "	55	1¼" x 5¾"	3" x 15½"	2½"

* Maximum Design load = Service I Limit State

(1) Care shall be taken to ensure that the External Load Plate is in full and complete contact with the Beam Flange before welding begins

(2) Center line of beam shall be aligned with center line of Elastometric pad.

(3) Includes 1" Masonry Plate and ⅛" Bearing Pad under Masonry plate.

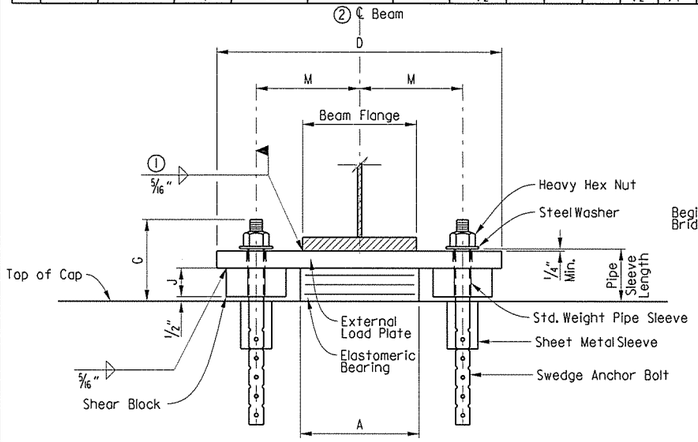

FRONT VIEW - AT BENT NOS. 3 & 4

No Scale

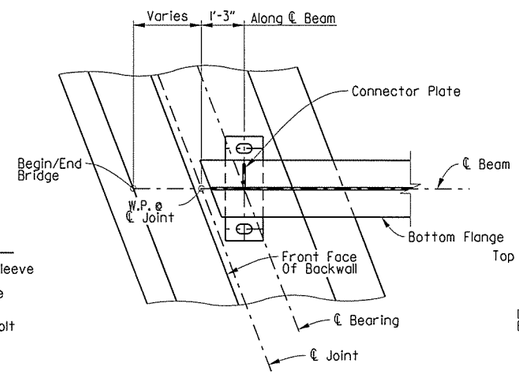

BEARING PLAN AT END BENT

Scale: ¼" = 1'-0"

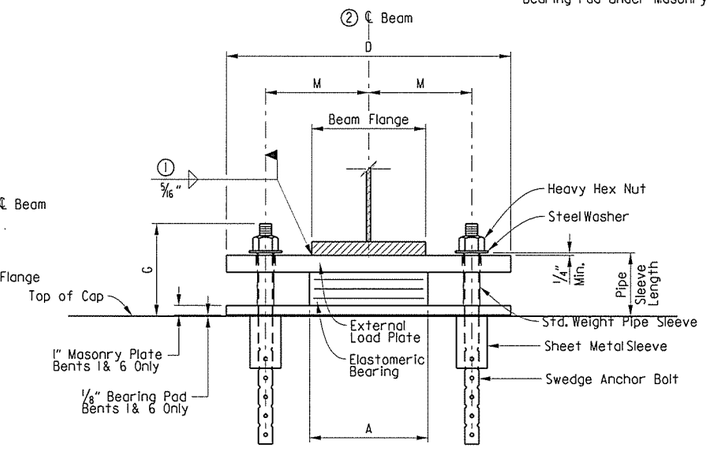

FRONT VIEW - AT BENT NOS. 1, 2, 5 & 6

No Scale

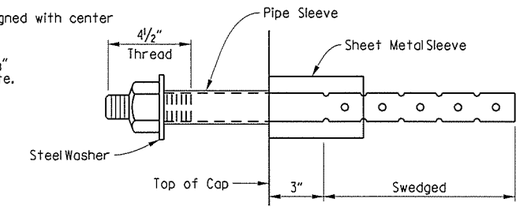

ANCHOR BOLT DETAIL

No Scale

Anchor Bolts may be cast in place or drilled and grouted into place. If Anchor Bolts are to be cast in place, the galvanized Sheet Metal Sleeve will not be required.

If Anchor Bolts are to be drilled and grouted in place, the galvanized Sheet Metal Sleeves shall be cast in place as shown. Sleeves shall be dry packed with styrofoam, urethane foam or approved equal prior to pouring of concrete. After pouring of the cap and prior to erection of structural steel, the dry pack shall be removed and holes for the Anchor Bolts shall be accurately drilled into the masonry. Bolts placed in drilled holes shall be accurately set and fixed using an AHTD QPL approved epoxy or non-shrink grout that completely fills the holes. Galvanized sheet metal sleeves will not be paid for directly, but will be considered subsidiary to the items "Structural Steel in Beam Spans, (M 270, Gr. 50)".

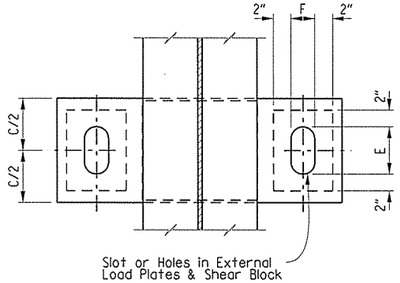

PLAN VIEW - AT BENT NOS. 3 & 4

No Scale

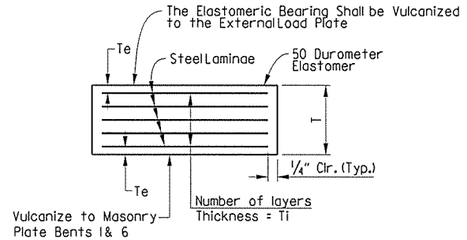

Te = thickness of Elastomer cover on top and bottom of pad
Ti = thickness of Elastomer between Steel Laminae
N = number of Elastomer layers of thickness Ti

ELASTOMERIC BEARING

No Scale

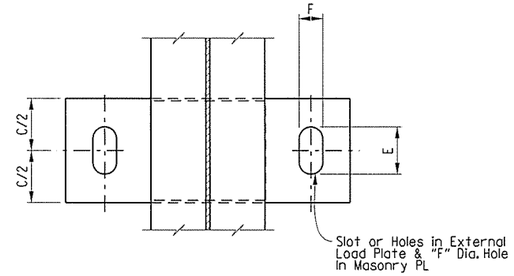

PLAN VIEW - AT BENT NOS. 1, 2, 5 & 6

No Scale

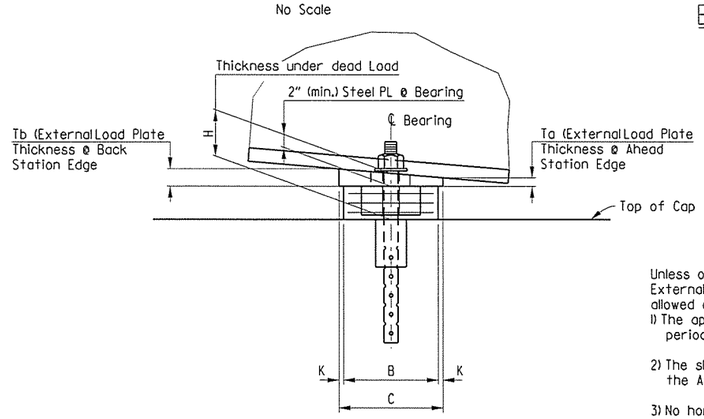

SIDE VIEW - AT BENT NOS. 3 & 4

No Scale

Note: The direction of bevel of the external load plate may not be accurately depicted with respect to Ta and Tb values shown in TABLE OF FABRICATOR VARIABLES.

Unless otherwise approved by the Engineer, Welding of the External Load Plate at expansion bearings to the Girder will be allowed only when:

1) The approximate average air temperature during the 24 hour period immediately preceding welding is between 40°F and 80°F.

2) The slots in the External Load Plate are positioned to center on the Anchor Bolts.

3) No horizontal deformation at the Elastomeric pad is evident. If welding at other temperature is required, the Engineer will provide adjustment data.

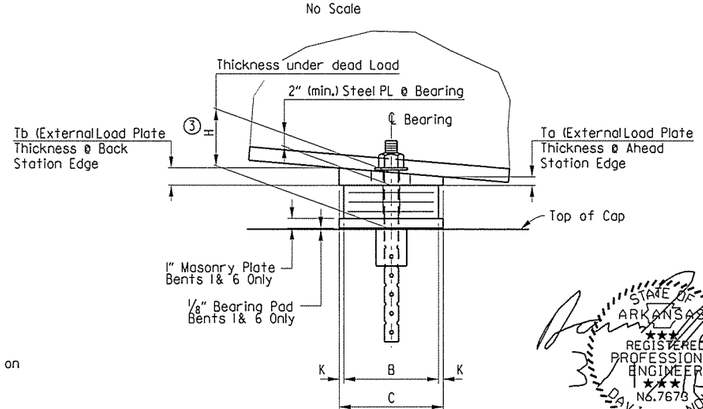

SIDE VIEW - AT BENT NOS. 1, 2, 5 & 6

No Scale

GENERAL NOTES

Elastomeric bearing shall conform to Section 808 of the Standard Specifications and shall be paid for at the unit price bid for "Elastomeric Bearing". Long-duration testing of random lot samples specified in Subsection 808.05 is required.

External Load Plates, Masonry Plates, and Shear Blocks shall conform to AASHTO M 270, Grade 50. Pipe Sleeve shall be ASTM A500, Grade B, and shall be galvanized to conform to AASHTO M 232, Class C or ASTM B695, Class 50.

External Load Plates, Masonry Plates, and Shear Blocks shall be completely fabricated (including bevel and bolt holes) and shall be cleaned before vulcanizing to the elastomeric bearing. Surfaces in contact with the elastomeric bearing shall be cleaned in accordance with Subsection 808.03. Other surfaces shall be blast cleaned in accordance with Subsection 807.84(b) and painted according to Subsection 807.75. The color of paint to match existing paint on existing beams.

Anchor Bolts, washers and Nuts shall conform to Subsection 807.07 of the Std. Specs. The anchor bolt grade of steel shall be as specified in the "Table of Fabricator Variables". Indentations shall be circular with rounded bottoms and staggered as shown in the details.

Bearings shall be seated in accordance with Subsection 808.08.

Pipe Sleeves, Anchor bolts, Washers, and Nuts shall be paid for at the unit price bid for "Structural Steel in Beam Spans (M270, Grade 50)". External Load Plates, Masonry Plates, and Shear Blocks will not be measured or paid for separately but will be considered included in the unit bid price bid for "Elastomeric Bearings".

STATE OF ARKANSAS REGISTERED PROFESSIONAL ENGINEER No. 7676 DAVID R. NOLEN

DETAILS OF ELASTOMERIC BEARINGS

ROUTE 49 SEC. 29

ARKANSAS STATE HIGHWAY COMMISSION

LITTLE ROCK, ARK.

DRAWN BY:	DR	DATE:	07-07-15	FILENAME:	bca0901x2.el.dgn
CHECKED BY:	DRN	DATE:	07-18-15	SCALE:	
DESIGNED BY:	JBM	DATE:	07-06-15		

BRIDGE NO. A&B5958 DRAWING NO. 57725

Note: Class 2 Protective Roadway Surface treatment shall be applied to the roadway surface, including the existing deck surface to be retained, roadway face and top of parapet rail of new construction.

PARSONS TRANSPORTATION GROUP	DATE REVISED	DATE FILMED	DATE REVISED	DATE FILMED

FED.RD. DIST.NO.	STATE	FED.AID PROJ.NO.	SHEET NO.	TOTAL SHEETS
6	ARK.			
JOB NO.		CA0901	179	452
(1) A&B5958	SPAN DETAILS			57726

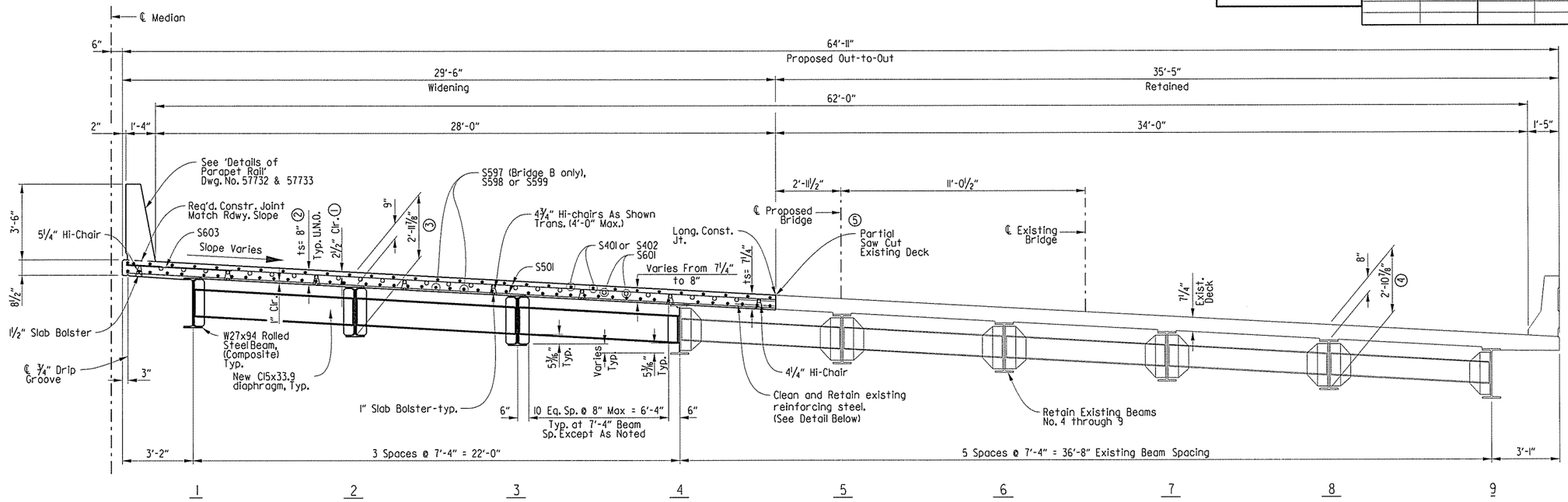

Notes:

For details of alternate anchors see Dwg. No. 57735.

For Bearing Plan at End Bent detail see Dwg. No. 57725.

TYPICAL ROADWAY SECTION

Bridge B Shown (Bridge A Similar)
(Looking Ahead)
Scale: ¾" = 1'-0"

Notes:

(1) Tolerances: Minus = ¼"
Plus = Equal to amount of slab thickening used to meet slab thickness tolerance
See "Adjustment for Slab Thickness Tolerance when Removable Deck Forming is Used".

(2) See "Adjustment for Slab Thickness Tolerance when Removable Deck Forming is Used".

(3) Measured at ℄ Bearing and ℄ New Beams, Typ. at Interior Bent.

(4) Measured at ℄ Bearing and ℄ Exist Beams, Typ. at Interior Bent.

(5) Care shall be exercised during the removal of the existing deck to ensure that the bolted field splices, beams, diaphragms, shear studs and connection plates and existing reinforcement to remain are not damaged. Damaged items that are not salvageable, as determined by the Engineer, shall be replaced by the Contractor at no additional payment. See Section 821

* Tolerance when removable deck forming is used, is +½", -¼". Haunch forming is required and shall be adjusted to maintain slab thickness tolerance.

Note: ts = slab thickness as shown in "Typical Section at Midspan".

Haunch dimension may vary within the following limits to maintain the grade and slab thickness tolerance: Minimum - occurs when top flange contacts bottom reinforcing steel; Maximum - top flange thickness plus 1½". No increase in concrete and structural steel quantities will be made to maintain tolerances.

Tolerances shown are applicable only when removable deck forming is used. See Std. Dwg. No. 55005 for tolerances when permanent steel deck forms are used. Payment for concrete shall be based on removable deck forming.

SLAB REINFORCING

Transverse:
S501 @ 6" o.c.-Top & Bottom
S603 @ 12" In Top At Gutterline

Longitudinal:
S401 or S402 @ 12" o.c. Top
S597 (Bridge B only), S598 or S599 As Shown Bottom (8" Max.) S601 As shown at Interior suppports

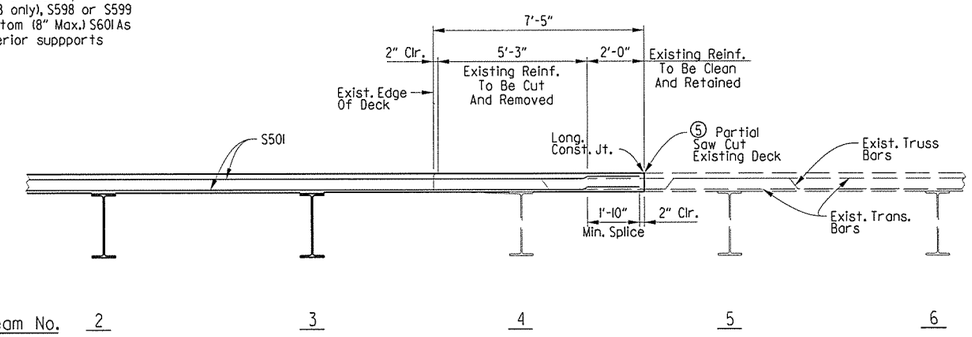

TYPICAL EXISTING REINFORCING SPLICE DETAIL

Bridge B Shown (Bridge A Similar)
(Looking Ahead)
Scale: ¾" = 1'-0"

Note: New transverse reinforcement steel shall not be tied to existing transverse reinforcement steel.

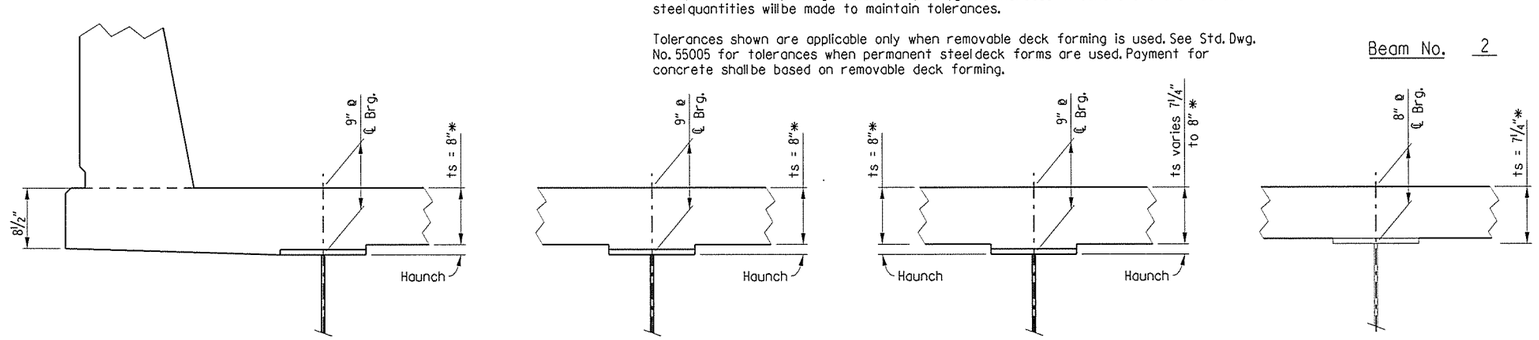

EXTERIOR BEAM
Beam No. 1

INTERIOR BEAM
Beam No. 2

INTERIOR BEAM
Beam No. 3

INTERIOR BEAM
Beam No. 4-9

ADJUSTMENT FOR SLAB THICKNESS TOLERANCE WHEN REMOVABLE DECK FORMING IS USED

No Scale

STATE OF ARKANSAS
REGISTERED PROFESSIONAL ENGINEER
No. 7873
DAVID R. CANOLTE
3-1-16

SHEET 1 OF 10

DETAILS OF 267'-0" CONTINUOUS COMPOSITE W-BEAM UNIT OVER BLOSSOM WAY CREEK
ROUTE 49 SEC. 29
ARKANSAS STATE HIGHWAY COMMISSION
LITTLE ROCK, ARK.

DRAWN BY:	DR	DATE:	05-21-15	FILENAME:	bca0901x2_sl.dgn
CHECKED BY:	DRN	DATE:	06-13-15	SCALE:	SEE DETAILS
DESIGNED BY:	JBM	DATE:	05-20-15		

BRIDGE NO. A&B5958 DRAWING NO. 57726

USER: PARSONS
DESIGN FILE: R:\BRIDGES 1540\BRIDGE 5958 ca901\100% DESIGN FILES\179 bca0901x2_sl.dgn
PLOTTED: 3/1/2016 5:41:00 PM SCALE: 5:4 ": / in.

R:\BRIDGES 1540\BRIDGE 5958 ca901\100% DESIGN FILES\179 bca0901x2_sl.dgn 3/1/2016 5:41:00 PM

PARSONS TRANSPORTATION GROUP	DATE REVISED	DATE FILMED	DATE REVISED	DATE FILMED	FED.RD. DIST.NO.	STATE	FED.AID PROJ.NO.	SHEET NO.	TOTAL SHEETS
					6	ARK.			
					JOB NO.		CA0901	180	452
					(1) A&B5958		SPAN DETAILS		57727

(2) Measured Radial to ℄ Existing Bridge

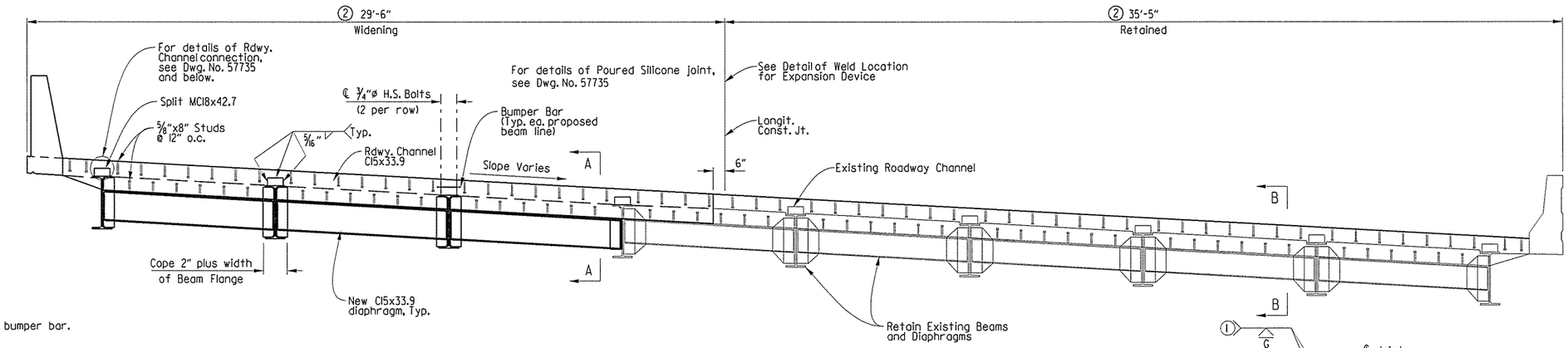

Expansion Device:

Rdwy. Channel - C15x33.9
Conn. ∠'s split MC18x42.7
Detail Device 1/8" high & provide 1/4" shims using 2-1/16" & 1-1/8" PL's.

(1) Grind flush from top of deck to top of bumper bar.

TYPICAL SECTION THROUGH JOINT

Bridge B Shown (Bridge A Similar)
(Looking Ahead @ Bent 1)
(Not to Scale)

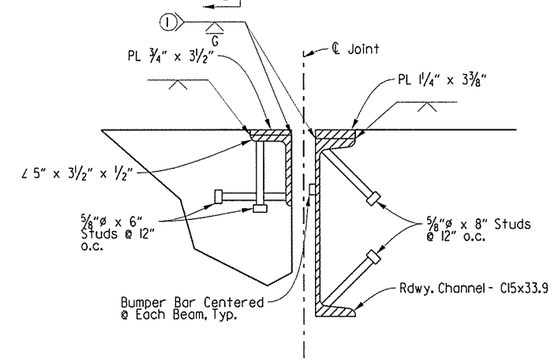

SECTION A-A

No Scale

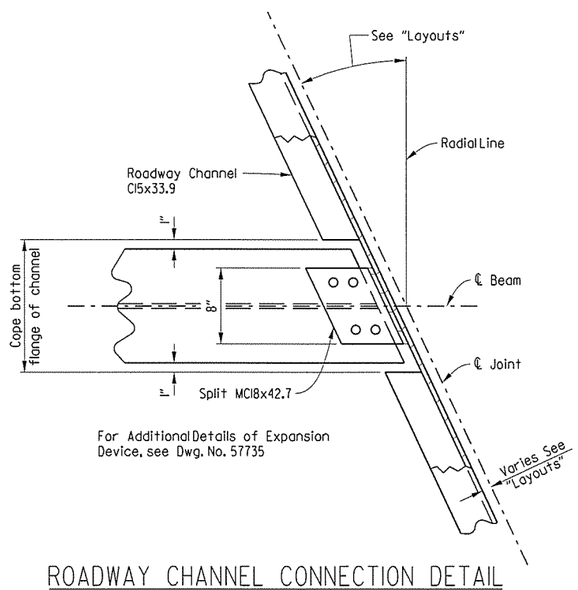

For Additional Details of Expansion Device, see Dwg. No. 57735

ROADWAY CHANNEL CONNECTION DETAIL

No Scale

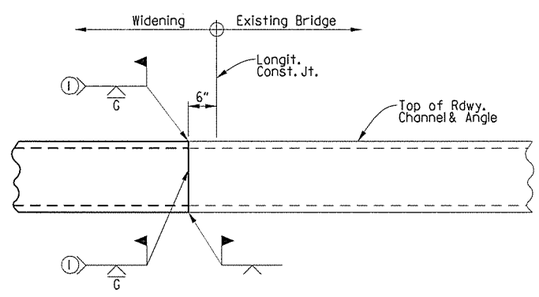

DETAIL OF WELD LOCATION FOR EXPANSION DEVICE

No Scale

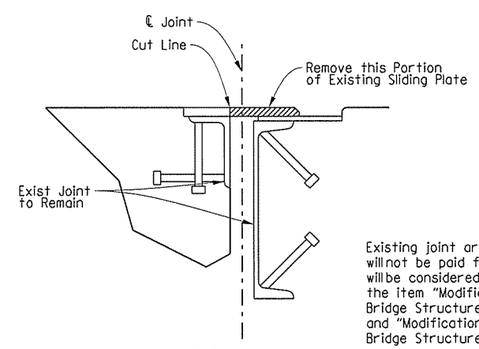

REMOVAL SKETCH

No Scale

Existing joint armor modification will not be paid for directly but will be considered subsidiary to the item "Modification of Existing Bridge Structure (Br. No. A5958)" and "Modification of Existing Bridge Structure (Br. No. B5958)"

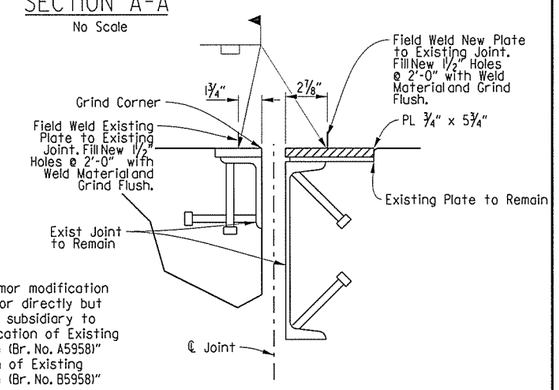

SECTION B-B

No Scale

Note: See Dwg. No. 57734 for Table of Minimum Weld Sizes.

STATE OF ARKANSAS REGISTERED PROFESSIONAL ENGINEER No. 7673 DAVID R. NOLLE

SHEET 2 OF 10

DETAILS OF 267'-0" CONTINUOUS COMPOSITE W-BEAM UNIT OVER BLOSSOM WAY CREEK

ROUTE 49 SEC. 29

ARKANSAS STATE HIGHWAY COMMISSION

LITTLE ROCK, ARK.

DRAWN BY:	DR	DATE:	03-10-15	FILENAME:	bca0901x2_s2.dgn
CHECKED BY:	DRN	DATE:	07-20-15	SCALE:	3/4" = 1'-0"
DESIGNED BY:	JBM	DATE:	03-10-15		

BRIDGE NO. A&B5958 DRAWING NO. 57727

USER: PARSONS
DESIGN FILE: R:\BRIDGES 1540\BRIDGE 5958 ca901\100% DESIGN FILES\180 bca0901x2_s2.dgn
PLOTTED: 3/1/2016 5:41:33 PM SCALE: 5:4 '-' / in.

R:\BRIDGES 1540\BRIDGE 5958 ca901\100% DESIGN FILES\180 bca0901x2_s2.dgn3/1/2016 5:41:33 PM

PARSONS TRANSPORTATION GROUP	DATE REVISED	DATE FILMED	DATE REVISED	DATE FILMED	FED.RD. DIST.NO.	STATE	FED.AID PROJ.NO.	SHEET NO.	TOTAL SHEETS
					6	ARK.			
					JOB NO.		CA0901	181	452
					A5958	SPAN DETAILS			57728

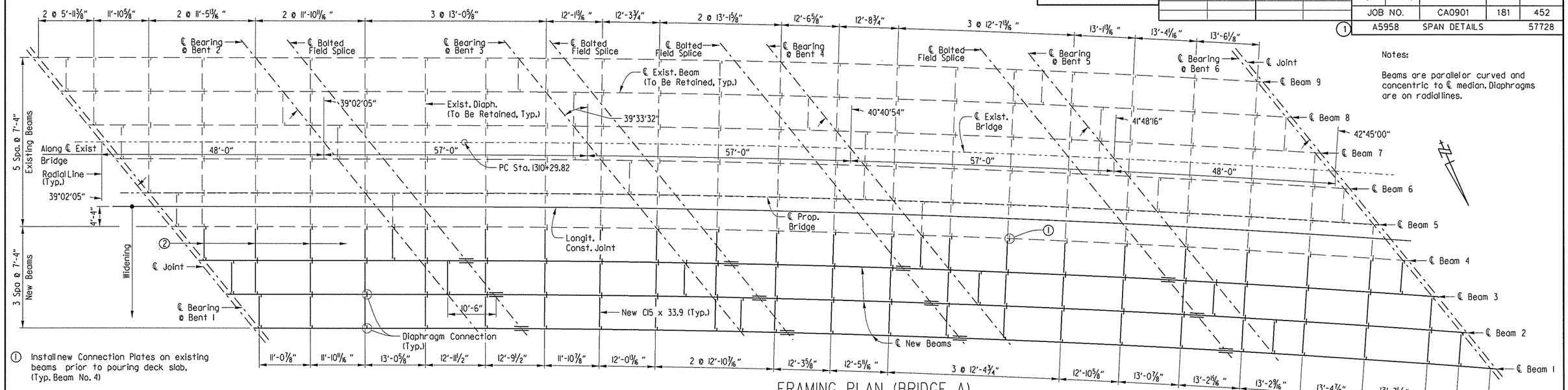

Notes:

Beams are parallel or curved and concentric to ℄ median. Diaphragms are on radial lines.

① Install new Connection Plates on existing beams prior to pouring deck slab. (Typ. Beam No. 4)

② Install diaphragms and Tighten Bolts after all deck pours are complete. (This bay only)

FRAMING PLAN (BRIDGE A)

Scale: 3/16" = 1'-0"

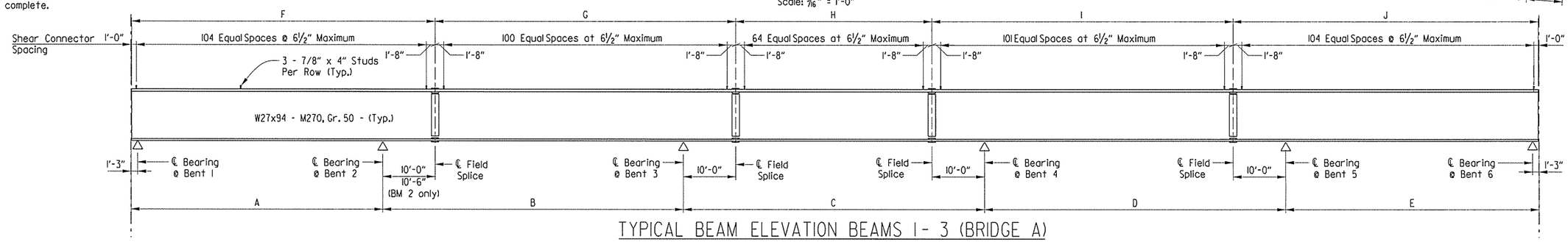

TYPICAL BEAM ELEVATION BEAMS 1- 3 (BRIDGE A)

N.T.S.

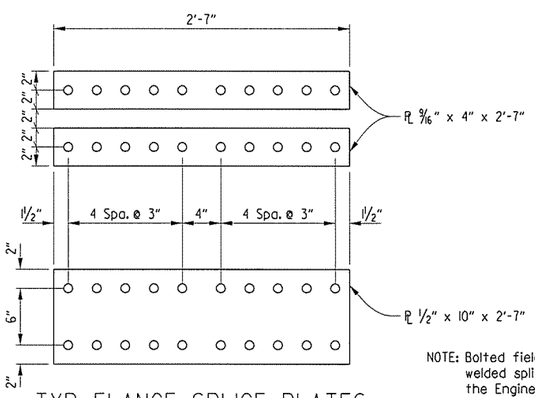

TYP. FLANGE SPLICE PLATES

Scale: 1 1/2" = 1'-0"

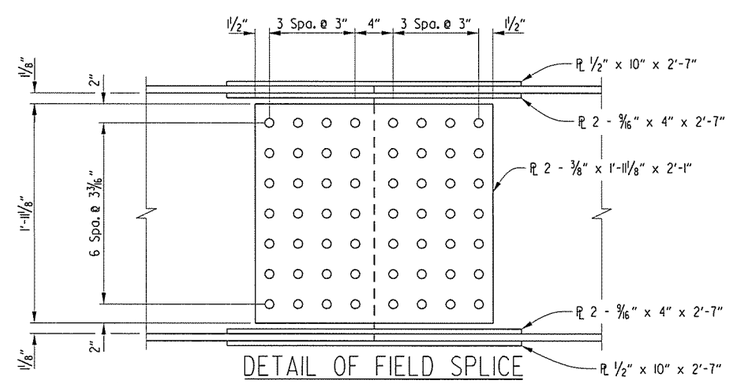

DETAIL OF FIELD SPLICE

Scale: 1 1/2" = 1'-0"

NOTE: Bolted field splices shown may be eliminated or shop welded splices may be substituted with approval of the Engineer. payment will be made on the basis of the plan quantities.

All field splices bolts shall be 7/8"ø Hi-str. bolts
All holes for splice bolts shall be 15/16 "ø
All field splice plates shall be AASHTO M270 Gr. 50 steel.

Note: See Dwg. No. 57725 for Bearing Plan at End Bent.

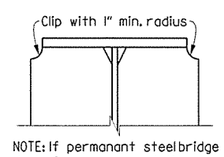

NOTE: If permanant steel bridge deck forms are used, the fabricator shall clip the plate as necessary to accomadate the deck form support.

PLATE CLIP DETAIL

N.T.S.

TABLE OF VARIABLES

VARIABLE	Beam 1	Beam 2	Beam 3
A	48'-0 1/16"	48'-0"	48'-0"
B	57'-4 15/16"	57'-3 3/4"	57'-2 11/16"
C	57'-6 7/8"	57'-5 9/16"	57'-4 5/16"
D	57'-7 5/8"	57'-6 3/16"	57'-4 3/4"
E	48'-6 11/16"	48'-5 9/16"	48'-4 1/4"

TABLE OF VARIABLES

VARIABLE	Beam 1	Beam 2	Beam 3
F	58'-0 1/16"	58'-6"	58'-0"
G	57'-4 15/16"	56'-9 3/4"	57'-2 11/16"
H	37'-6 7/8"	37'-5 9/16"	37'-4 5/16"
I	57'-7 5/8"	57'-6 3/16"	57'-4 3/4"
J	58'-6 13/16"	58'-5 9/16"	58'-4 1/4"

STATE OF ARKANSAS
REGISTERED PROFESSIONAL ENGINEER
No. 7673
DAVID R. NOLAN

SHEET 3 OF 10

DETAILS OF 267'-0" CONTINUOUS COMPOSITE W-BEAM UNIT OVER BLOSSOM WAY CREEK

ROUTE 49 SEC. 29

ARKANSAS STATE HIGHWAY COMMISSION

LITTLE ROCK, ARK.

DRAWN BY: DR DATE: 06-29-15 FILENAME: bca0901a2_s3.dgn
CHECKED BY: JBM DATE: 07-10-15 SCALE: SEE DETAILS
DESIGNED BY: DRN DATE: 06-29-15

BRIDGE NO. A5958 DRAWING NO. 57728

USER: PARSONS
DESIGN FILE: R:\BRIDGES 1540\BRIDGE 5958 ca901\100% DESIGN FILES\181bca0901a2_s3.dgn
PLOTTED: 3/1/2016 5:42:09 PM SCALE: 2:1 " / in.

R:\BRIDGES 1540\BRIDGE 5958 ca901\100% DESIGN FILES\181 bca0901a2_s3.dgn 3/1/2016 5:42:09 PM

PARSONS TRANSPORTATION GROUP	DATE REVISED	DATE FILMED	DATE REVISED	DATE FILMED	FED.RD. DIST.NO.	STATE	FED.AID PROJ.NO.	SHEET NO.	TOTAL SHEETS
					6	ARK.			
					JOB NO.		CA0901	182	452
					1	A5958	SPAN DETAILS		57729

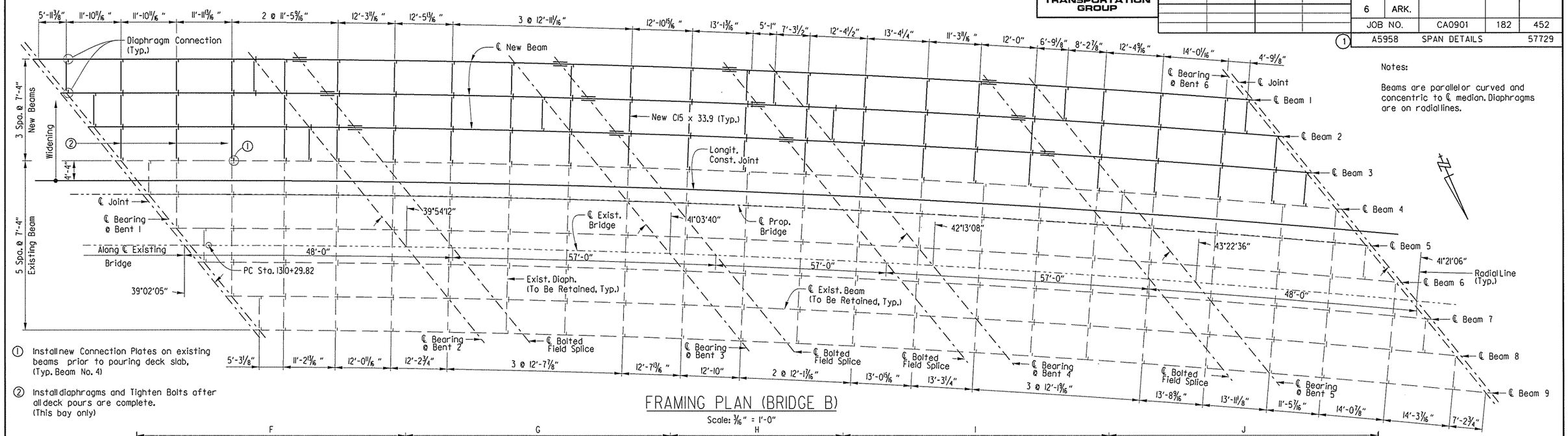

Notes:

Beams are parallel or curved and concentric to ℄ median. Diaphragms are on radial lines.

① Install new Connection Plates on existing beams prior to pouring deck slab. (Typ. Beam No. 4)

② Install diaphragms and Tighten Bolts after all deck pours are complete. (This bay only)

FRAMING PLAN (BRIDGE B)

Scale: 3/16" = 1'-0"

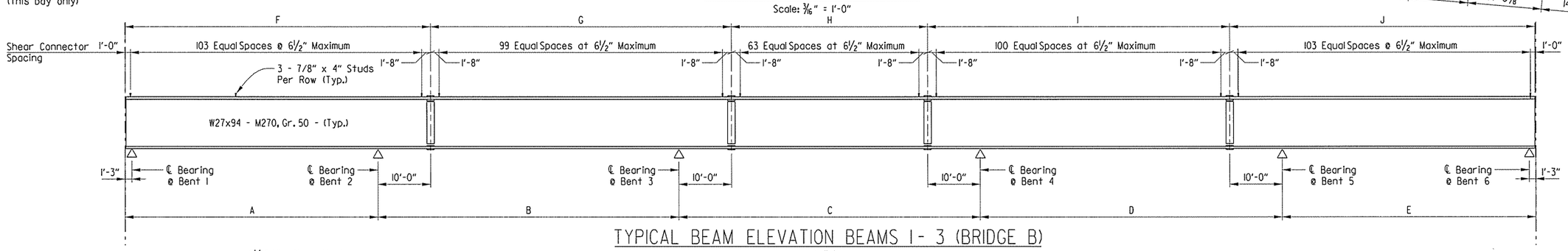

TYPICAL BEAM ELEVATION BEAMS 1- 3 (BRIDGE B)

N.T.S.

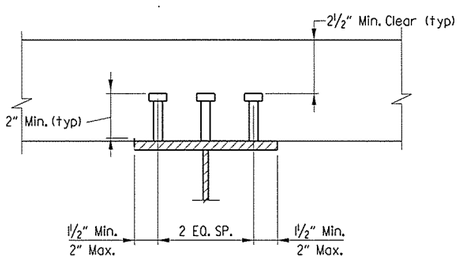

Stud Shear Connectors shall be 7/8"ø x 4" long, granular fluxed filled, solid fluxed or equal and automatically end welded to Beam flange in accordance with recommendations of the manufacturer. 3/4" ø studs may be used in place of the 7/8" ø studs shown at the ratio of 1.588 - 3/4" studs in place of one 7/8 " ø stud. 7/8" ø studs will be used as basis for measurement of structural steel in shear connectors. Maximum stud spacing = 24"

SHEAR CONNECTOR DETAIL

N.T.S.

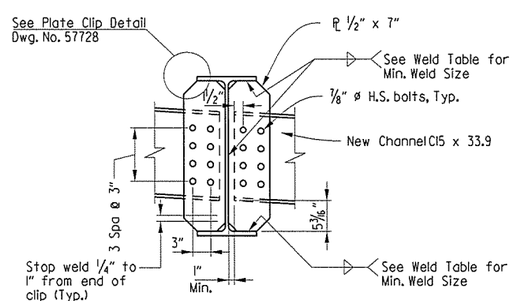

TYP. CONNECTION PLATE

Beams 1, 2 & 3
(One side only Beam 1)

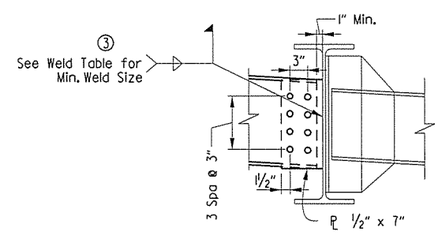

TYP. INT. CONNECTION PLATE

Beam 4

DIAPHRAGM CONNECTION DETAILS

Scale 1" = 1'-0"

③ Field weld to existing Beam No. 4 after deck removal and prior to deck pour.

Note: See Dwg. No. 57734 for Table of Minimum Weld Sizes.

TABLE OF VARIABLES

VARIABLE	Beam 1	Beam 2	Beam 3
A	47'-8 15/16"	47'-9 3/16"	47'-9 9/16"
B	56'-5 1/8"	56'-6 3/8"	56'-7 9/16"
C	56'-4 9/16"	56'-5 7/8"	56'-7 3/16"
D	56'-3 15/16"	56'-5 3/8"	56'-6 13/16"
E	47'-4 11/16"	47'-5 15/16"	47'-7 1/4"

TABLE OF VARIABLES

VARIABLE	Beam 1	Beam 2	Beam 3
F	57'-8 15/16"	57'-9 3/16"	57'-9 9/16"
G	56'-5 1/8"	56'-6 3/8"	56'-7 9/16"
H	36'-4 9/16"	56'-5 7/8"	36'-7 3/16"
I	56'-3 15/16"	56'-5 3/8"	56'-6 13/16"
J	57'-4 11/16"	57'-5 15/16"	57'-7 1/4"

STATE OF ARKANSAS REGISTERED PROFESSIONAL ENGINEER No. 7673 DAVID R. WHITE

SHEET 4 OF 10

DETAILS OF 267'-0" CONTINUOUS COMPOSITE W-BEAM UNIT OVER BLOSSOM WAY CREEK

ROUTE 49 SEC. 29

ARKANSAS STATE HIGHWAY COMMISSION

LITTLE ROCK, ARK.

DRAWN BY: DR	DATE: 06-29-15	FILENAME: bca0901b2_s4.dgn			
CHECKED BY: JBM	DATE: 07-10-15	SCALE: SEE DETAILS			
DESIGNED BY: DRN	DATE: 06-29-15				

BRIDGE NO. B5958 DRAWING NO. 57729

USER: PARSONS
DESIGN FILE: R:\BRIDGES 1540\BRIDGE 5958 co901\100% DESIGN FILES\182 bca0901b2_s4.dgn
PLOTTED: 3/1/2016 5:42:45 PM SCALE: 21:4 ":" / in.

R: \BRIDGES 1540\BRIDGE 5958 co901\100% DESIGN FILES\182 bca0901b2_s4.dgn3/1/2016 5: 42: 45 PM

PARSONS TRANSPORTATION GROUP	DATE REVISED	DATE FILMED	DATE REVISED	DATE FILMED	FED.RD. DIST.NO.	STATE	FED.AID PROJ.NO.	SHEET NO.	TOTAL SHEETS
					6	ARK.			
					JOB NO.		CA0901	183	452
					(1) A5958		SPAN DETAILS		57730

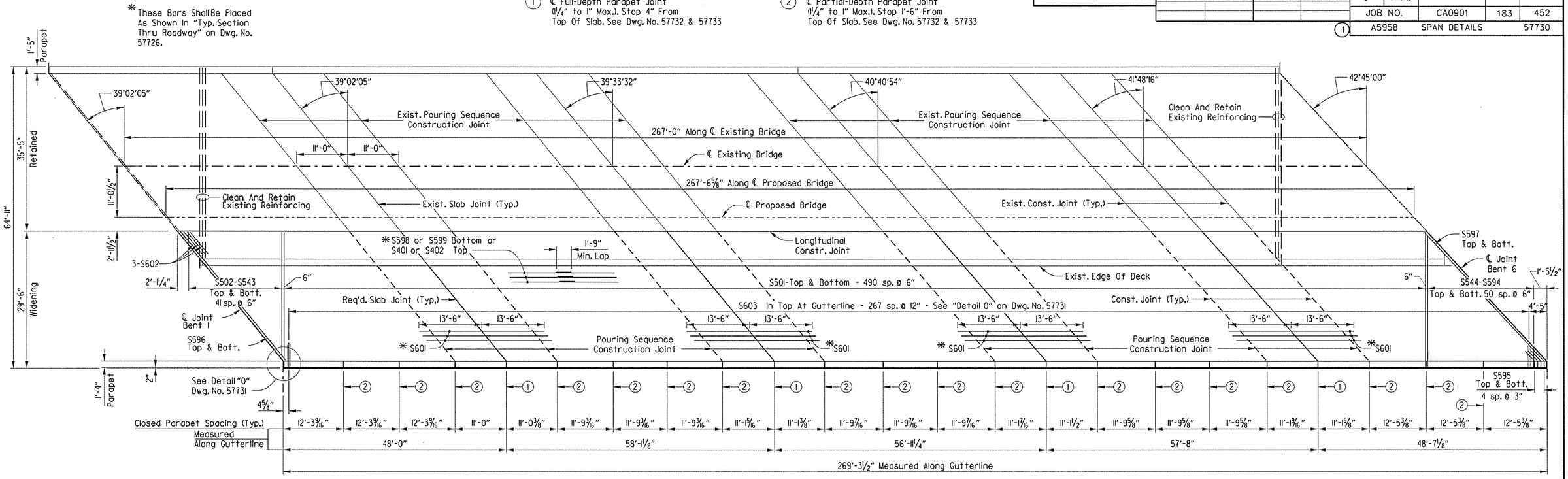

REINFORCING PLAN - BRIDGE A

No Scale
(Looking Ahead)

Note:
All tranverse reinforcing steel is placed on radial lines and measures along ℄ Existing Bridge.

All longitudinal lines and reinforcing steel shall be placed on curve concentric with ℄ Existing Bridge.

Required slab joints and pouring sequence construction joints shall align with open joints at the front face of the parapets.

Notes on Dwg. No. 57731 shall apply.

BAR LIST - PER BRIDGE

Mark	Number Required	Length	Pin Diameter	Bending Diagrams (Dimensions are Out to Out of Bars)
S501	982	28'-11"	Str.	
S502 to S543	2 Ea.	2'-1" to 27'-5"	Str.	
S544 to S594	2 Ea.	28'-77" to 2'-7"	Str.	
S595	10	4'-8"	3¾"	
S596	2	35'-10"	Str.	
S597	2	38'-2"	Str.	
S598	176	60'-0"	Str.	
S599	44	35'-8"	Str.	
S401	120	60'-0"	Str.	
S402	30	35'-8"	Str.	
S601	112	27'-0"	Str.	
S602	3	6'-0"	Str.	
S603	268	10'-3"	5¼"**	
P401	16	25'-0"	Str.	
P402	18	11'-11"	Str.	
P403	48	10'-8"	Str.	
P404	54	11'-5"	Str.	
P405	18	12'-1"	Str.	
P406	48	29'-9"	Str.	
P501	534	6'-8"	3¾"	
P502	534	6'-9"	3¾"	

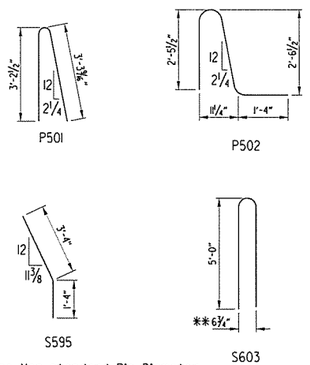

** Use Non-standard Pin Diameter to achieve Out to Out Dimension

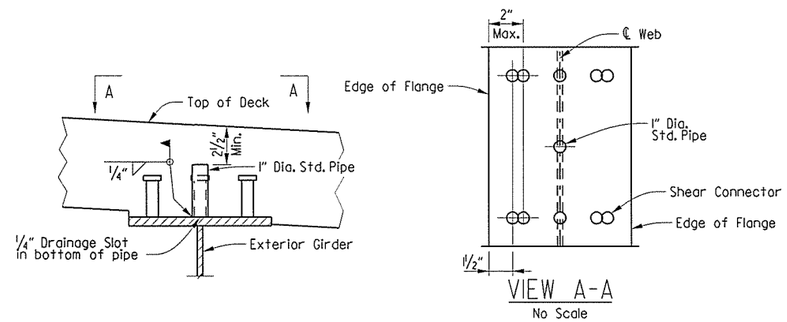

VIEW A-A
No Scale

TRANSVERSE SCREED RAIL SUPPORT DETAIL

No Scale

Notes: The transverse screed rail supports shall be centered over the beam web and centered longitudinally between adjacent rows of shear connectors.

The pipe shall not interfere with proper vertical position of the deck reinforcing steel.

The pipe shall be free of dirt, grease, rust or other foreign substance before the deck is poured.

Care shall be exercised so as air voids do not exist in the pipe after placement of the deck concrete.

All welding shall be performed by a certified welder and in accordance with subsections 802.13 and 807.26

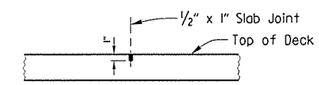

SLAB JOINT DETAIL

No Scale

Note:
Use Type 3 or 4 joint sealer. See Sections 501.02(h) and 501.05(j) of the Standard Specifications. Backer rod filler will not be required. Joint sealer shall be measured and paid for under "Class (SAE) Concrete-Bridge". Slab joints shall extend to the outside edge of the deck slab (gutterline to gutterline) Slab joints shall be installed before the parapet railing is poured. If slab joints are to be sawed, they shall be sawed as soon as the concrete has sufficiently set to allow sawing of the joints without damage to the slab. Slab joints shall align with parapet joints. Slab joints shall be placed at all pouring sequence joints and required slab joint locations.

STATE OF ARKANSAS
REGISTERED PROFESSIONAL ENGINEER
No. 7673
DAVID R. NOLDE

SHEET 5 OF 10

DETAILS OF 267'-0" CONTINUOUS COMPOSITE W-BEAM UNIT OVER BLOSSOM WAY CREEK

ROUTE 49 SEC. 29

ARKANSAS STATE HIGHWAY COMMISSION

LITTLE ROCK, ARK.

DRAWN BY: DR	DATE: 06-05-15	FILENAME: bca901a2_s5.dgn	
CHECKED BY: DRN	DATE: 06-20-15	SCALE: 1/20" = 1'-0"	
DESIGNED BY: JBM	DATE: 05-21-15		

BRIDGE NO. A5958 DRAWING NO. 57730

USER: PARSONS
DESIGN FILE: R:\BRIDGES 1540\BRIDGE 5958 ca901\100% DESIGN FILES\183 bca901a2_s5.dgn
PLOTTED: 3/2/2016 9:34:22 AM SCALE: 2:1 ':' / in.

R:\BRIDGES 1540\BRIDGE 5958 ca901\100% DESIGN FILES\183 bca901a2_s5.dgn 3/2/2016 9:34:22 AM

PARSONS TRANSPORTATION GROUP	DATE REVISED	DATE FILMED	DATE REVISED	DATE FILMED	FED.RD. DIST.NO.	STATE	FED.AID PROJ.NO.	SHEET NO.	TOTAL SHEETS
					6	ARK.			
					JOB NO.		CA0901	184	452
					(1) A5958		SPAN DETAILS		57731

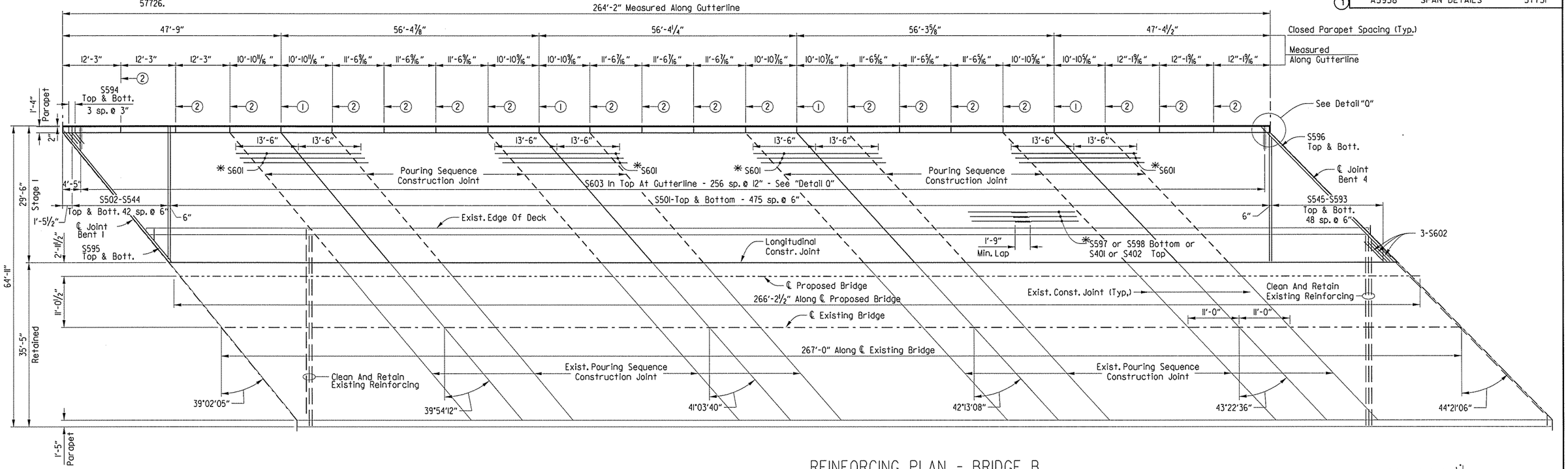

REINFORCING PLAN - BRIDGE B

No Scale
(Looking Ahead)

Note:
All tranverse reinforcing steel is placed on radial lines and measures along ℄ Existing Bridge.

All longitudinal lines and reinforcing steel shall be placed on curve concentric with ℄ Existing Bridge.

Required slab joints and pouring sequence construction joints shall align with open joints at the front face of the parapets.

BAR LIST - PER BRIDGE

Mark	Number Required	Length	Pin Diameter
S501	952	28'-11"	Str.
S502 to S544	2 Ea.	2'-10" to 28'-9"	Str.
S545 to S593	2 Ea.	27'-3" to 1'-11"	Str.
S594	8	4'-8"	3¾"
S595	2	35'-10"	Str.
S596	2	38'-7"	Str.
S597	176	60'-0"	Str.
S598	44	30'-8"	Str.
S401	120	60'-0"	Str.
S402	30	30'-8"	Str.
S601	112	27'-0"	Str.
S602	3	6'-0"	Str.
S603	257	10'-3"	5¼" **
P401	16	25'-0"	Str.
P402	18	11'-11"	Str.
P403	48	10'-6"	Str.
P404	54	11'-2"	Str.
P405	18	11'-9"	Str.
P406	48	28'-11"	Str.
P501	531	6'-8"	3¾"
P502	531	6'-9"	3¾"

Bending Diagrams (Dimensions are Out to Out of Bars)

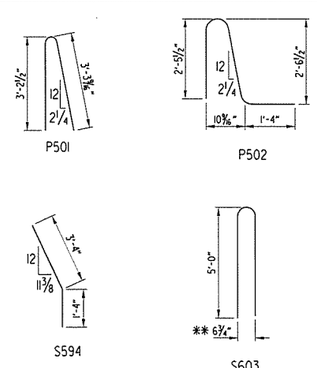

** Use Non-standard Pin Diameter to achieve Out to Out Dimension

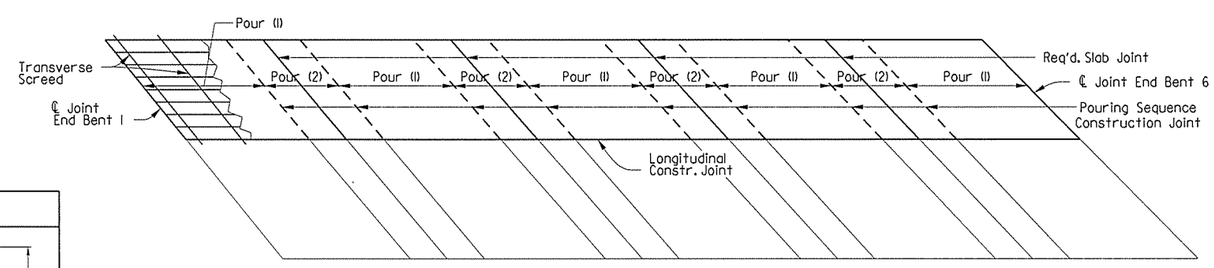

Note: For each stage of construction, pours with the same number may be placed simultaneously or separately. All Pours (1) must be placed before Pours (2) can be placed. 48 hours shall elapse between the end of a pour and the start of an adjacent pour. Any railing pours made before the entire slab unit for each stage has been placed must be approved by the engineer. The Contractor must obtain approval from the Engineer for any deviations from the pouring sequence shown.

CONCRETE POURING SEQUENCE & PLACEMENT PROCEDURE

No Scale

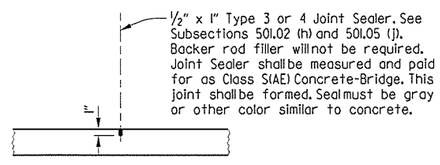

LONGITUDINAL CONSTRUCTION JOINT

No Scale

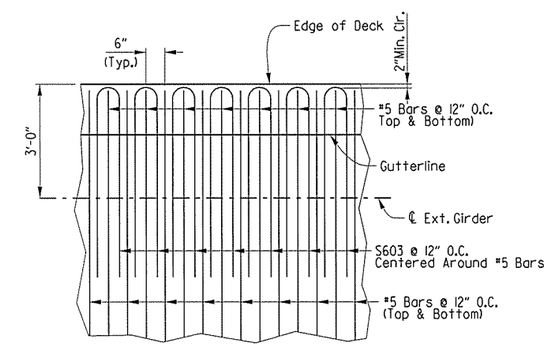

DETAIL Q

No Scale

STATE OF ARKANSAS REGISTERED PROFESSIONAL ENGINEER No. 7671 DAVID R. DUTTE 3/1/16

SHEET 6 OF 10

DETAILS OF 267'-0" CONTINUOUS COMPOSITE W-BEAM UNIT OVER BLOSSOM WAY CREEK

ROUTE 49 SEC. 29

ARKANSAS STATE HIGHWAY COMMISSION

LITTLE ROCK, ARK.

DRAWN BY:	DR	DATE:	06-08-15	FILENAME:	bca901b2_s6.dgn
CHECKED BY:	DRN	DATE:	06-21-15	SCALE:	⅜" = 1'-0"
DESIGNED BY:	JBM	DATE:	05-20-15		

BRIDGE NO. B5958 DRAWING NO. 57731

USER: PARSONS
DESIGN FILE: R:\BRIDGES 1540\BRIDGE 5958 ca901\100% DESIGN FILES\184 bca901b2_s6.dgn
PLOTTED: 3/2/2016 9:35:42 AM SCALE: 2in4 1:" / in.

PARSONS TRANSPORTATION GROUP	DATE REVISED	DATE FILMED	DATE REVISED	DATE FILMED	FED.RD. DIST.NO.	STATE	FED.AID PROJ.NO.	SHEET NO.	TOTAL SHEETS
					6	ARK.			
					JOB NO.		CA0901	185	452
					(1) A&B5958		SPAN DETAILS		57732

① C.L. Full Depth Parapet Joint (1/4" to 1" max.) Stop 4" from top of slab.

② C.L. Partial Depth Parapet Joint (1/4" to 1" max.) Stop 1'-6" from top of slab

* Minimum splice length for P401 and P404 bars = 1'-5"

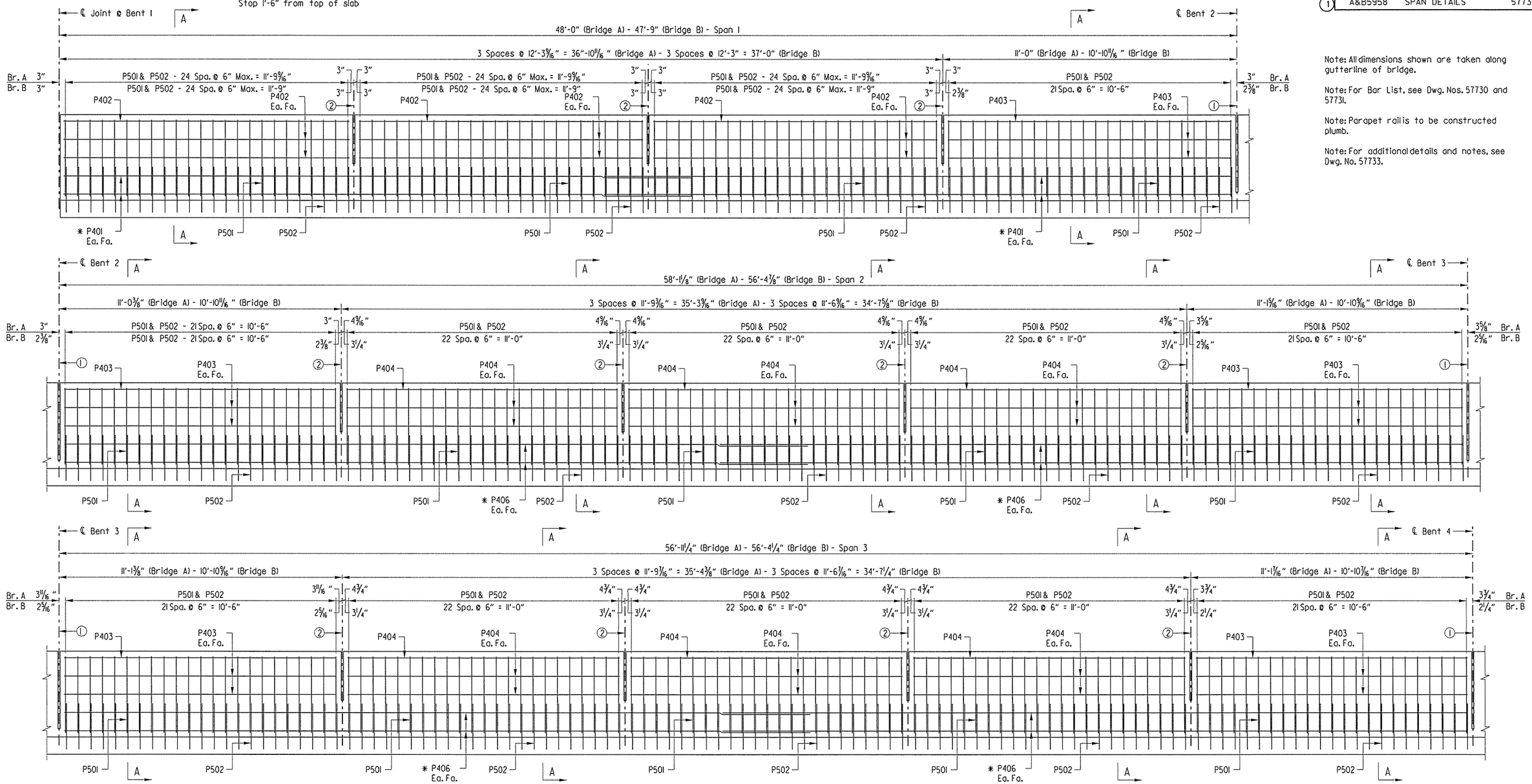

Note: All dimensions shown are taken along gutterline of bridge.

Note: For Bar List, see Dwg. Nos. 57730 and 57731.

Note: Parapet rail is to be constructed plumb.

Note: For additional details and notes, see Dwg. No. 57733.

DETAILS OF PARAPET RAIL - SPANS 1-3

Scale: 1/2" = 1'-0"

STATE OF ARKANSAS REGISTERED PROFESSIONAL ENGINEER No. 7673 DAVID R. WHITE 3/1/2016

SHEET 7 OF 10

DETAILS OF 267'-0" CONTINUOUS COMPOSITE W-BEAM UNIT OVER BLOSSOM WAY CREEK

ROUTE 49 SEC. 29

ARKANSAS STATE HIGHWAY COMMISSION

LITTLE ROCK, ARK.

DRAWN BY:	DR	DATE:	05-21-15	FILENAME:	bca0901x2_s7.dgn
CHECKED BY:	DRN	DATE:	07-08-15	SCALE:	1" = 20'
DESIGNED BY:	JBM	DATE:	05-20-15		

BRIDGE NO. A&B5958 DRAWING NO. 57732

USER: PARSONS
DESIGN FILE: R:\BRIDGES 1540\BRIDGE 5958 ca901\100% DESIGN FILES\185 bca0901x2.s7.dgn
PLOTTED: 3/2/2016 9:36:24 AM SCALE: 4:0 ':" / in.

R:\BRIDGES 1540\BRIDGE 5958 ca901\100% DESIGN FILES\185 bca0901x2_s7.dgn3/2/2016 9:36:24 AM

PARSONS TRANSPORTATION GROUP	DATE REVISED	DATE FILMED	DATE REVISED	DATE FILMED	FED.RD. DIST.NO.	STATE	FED.AID PROJ.NO.	SHEET NO.	TOTAL SHEETS
					6	ARK.			
					JOB NO.		CA0901	186	452
					(1) A&B5958		SPAN DETAILS		57733

① C.L. Full Depth Parapet Joint (1/4" to 1" max.) Stop 4" from top of slab.

② C.L. Partial Depth Parapet Joint (1/4" to 1" max.) Stop 1'-6" from top of slab.

* Minimum splice length for P401 and P404 bars = 1'-5"

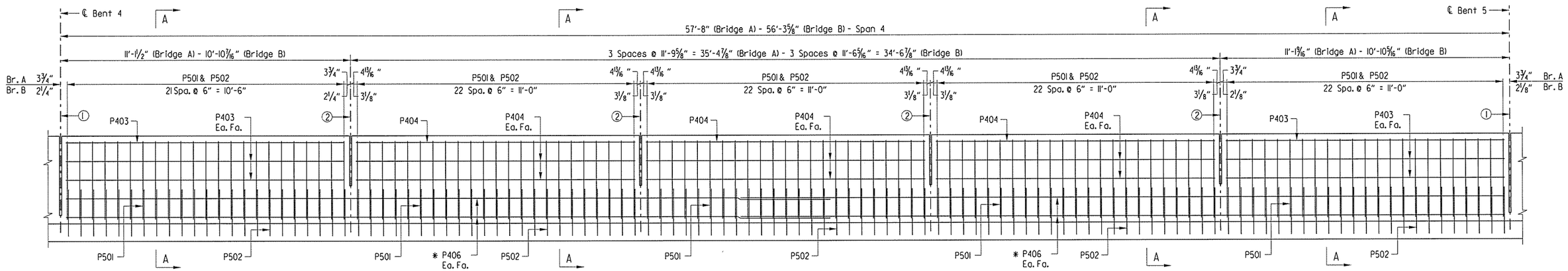

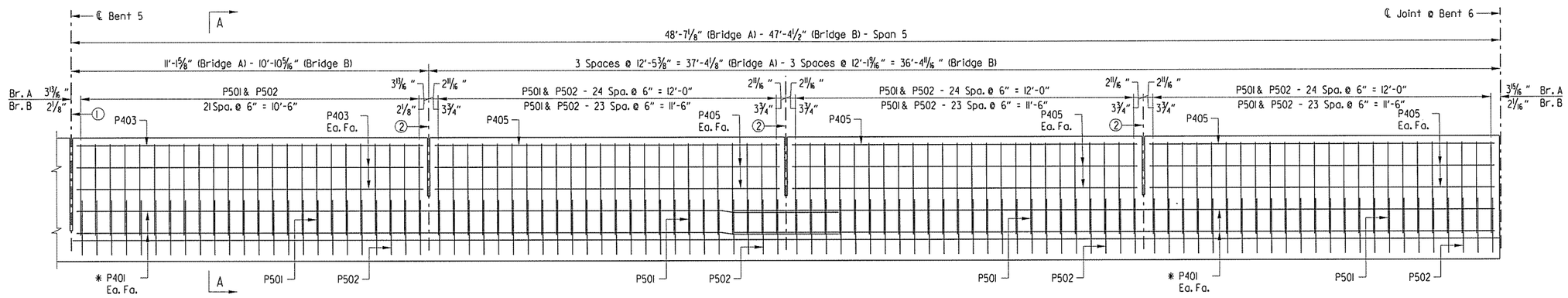

DETAILS OF PARAPET RAIL - SPANS 4 & 5

Scale: 1/2" = 1'-0"

Note: All dimensions shown are taken along gutterline of bridge.

Note: For Bar List, see Dwg. Nos. 57730 and 57731.

Note: Parapet rails to be constructed plumb.

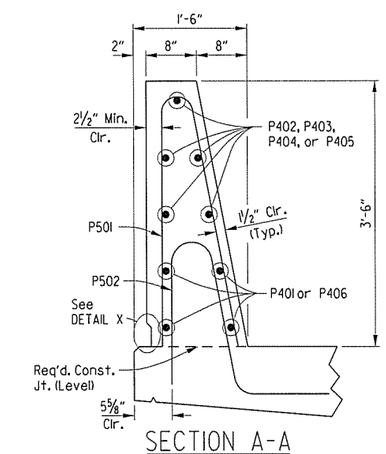

SECTION A-A

1" = 1'-0"

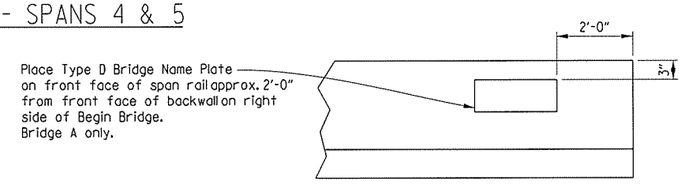

NAME PLATE DETAIL

No Scale

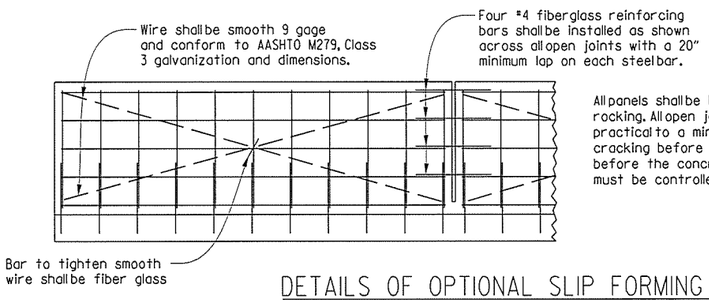

All panels shall be braced as required to prevent rocking. All open joints shall be sawed as soon as practical to a minimum width of 1/4". To control cracking before sawing all joints must be grooved before the concrete is set. Sawing of the joints must be controlled so it will follow the grooved joint.

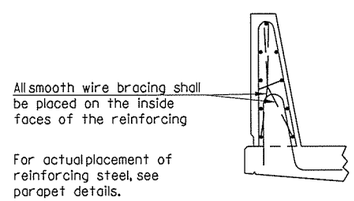

For actual placement of reinforcing steel, see parapet details.

The extruded parapet shall conform to the horizontal and vertical lines shown on the plans or as directed by the Engineer and shall present a smooth, uniform appearance and texture.

DETAILS OF OPTIONAL SLIP FORMING OF CONCRETE PARAPET RAIL

No Scale

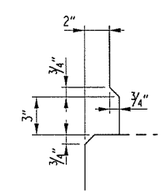

DETAIL X

No Scale

STATE OF ARKANSAS REGISTERED PROFESSIONAL ENGINEER No. 7673

3/2/16 DATE

SHEET 8 OF 10

DETAILS OF 267'-0" CONTINUOUS COMPOSITE W-BEAM UNIT OVER BLOSSOM WAY CREEK

ROUTE 49 SEC. 29

ARKANSAS STATE HIGHWAY COMMISSION

LITTLE ROCK, ARK.

DRAWN BY: DR	DATE: 05-21-15	FILENAME: bca0401x3.s7.dgn	
CHECKED BY: DRN	DATE: 07-09-15	SCALE: AS SHOWN	
DESIGNED BY: JBM	DATE: 05-20-15		

BRIDGE NO. A&B5958 DRAWING NO. 57733

USER: PARSONS
DESIGN FILE: R:\BRIDGES 1540\BRIDGE 5958 ca901\100% DESIGN FILES\186 bca0401x3_s7.dgn
PLOTTED: 3/2/2016 9:37:07 AM SCALE: 40 '-" / in.

R:\BRIDGES 1540\BRIDGE 5958 ca901\100% DESIGN FILES\186 bca0401x3_s7.dgn3/2/2016 9:37:07 AM

GENERAL NOTES

CONSTRUCTION SPECIFICATIONS: Arkansas State Highway and Transportation Department Standard Specifications for Highway Construction (2014 Edition) with applicable supplemental specifications and special provisions.

DESIGN SPECIFICATIONS: AASHTO LRFD Bridge Design Specifications (2012 Edition) with current supplemental specifications and special provisions.

MATERIALS AND STRENGTHS:

Class S(AE) Concrete	f'c = 4,000 psi
Reinforcing Steel (Grade 60 AASHTO M 31 or M 322 Type A)	fy = 60,000 psi
Structural Steel (AASHTO M 270, Gr. 50)	fy = 50,000 psi
Structural Steel (AASHTO M 270, Gr. 36)	fy = 36,000 psi

CONCRETE:
All concrete shall be Class S(AE) with a minimum 28 day compressive strength f'c = 4000 psi. Concrete shall be poured in the dry and all exposed corners to be chamfered 3/4".

The Superstructure Details shown are for use when removable deck forming is used and are the basis for measurement of Class S(AE) concrete. See Standard Drawing No. 55005 for allowable modifications and for tolerances when Permanent Steel Deck Forms are used.

Concrete in bridge superstructure shall be placed, consolidated, and screeded off for the entire pour before any concrete has taken its initial set. This may require the use of a retarding agent. The Contractor must obtain approval from the Engineer for any deviations from the pouring sequence shown.

The Concrete Deck shall be given a tine finish in accordance with Subsection 802.19 for Class 5 Tined Bridge Roadway surface finish. Movement of the finishing machine across new concrete shall be on planks placed on the surface and shall be prohibited for 72 hours after finishing the pour. Sufficient concrete must be placed ahead of the strike-off to fully load the Beam. Use of a longitudinal screed is prohibited.

Slab joints shall align with slab joints from existing construction. Required Slab Joints shall align with the parapet open joint.

REINFORCING STEEL:
All Reinforcing Steel shall be Grade 60 (yield strength = 60,000 psi) conforming to AASHTO M 31 or M 322 Type A with mill test reports. The Reinforcing Steel is to be accurately located in the forms and firmly held in place by steel wire supports, sufficient in number and size to prevent displacement during the course of construction. The wire supports will not be paid for directly, but will be considered subsidiary to the item "Reinforcing Steel (Grade 60)" or "Epoxy Coated Reinforcing Steel (Grade 60)".

NEW STRUCTURAL STEEL:
All new Structural Steel shall be AASHTO M270, Grade 50 unless otherwise noted and shall be paid for as "Structural Steel in Beam Spans (M 270, Gr. 50)". All exposed surfaces shall be cleaned in accordance with Subsection 807.84 unless otherwise noted. Structural Steel completely embedded in concrete may be AASHTO M 270, Grade 36.

Drawings show general features of design only. Shop drawings shall be made in accordance with the specifications, submitted and approval secured before fabrication is begun.

Requests for substitution of structural steel shapes shown with shapes of greater size must be submitted by the Contractor to the Engineer for approval. Steels of equal or greater strengths will be accepted only when shown on the approved shop drawings. Shapes and materials shown in the plans will be the basis of payment and no additional compensation will be made for any adjustments due to substitutions.

Bolted field splices shown may be eliminated or shop welded splices may be substituted with approval of the Engineer. Payment will be made on the basis of plan quantities.

Beams, field splice plates, diaphragms and connection plates are considered main load carrying members and shall meet the Longitudinal Charpy V-Notch Test specified in Subsection 807.05. This work and material will not be paid for directly, but shall be considered as subsidiary to the item "Structural Steel in Beam Spans (M 270, Gr. 50)".

All beams shall be blocked in their true position in the shop in groups of a minimum of three sections. Beams shall be blocked with webs horizontal and as specified in Subsection 807.54(b)(2). The camber, length of sections, distance between bearings and opening of joints shall be measured with the beams in their true positions and this information shall become part of the permanent records. The component parts shall be match marked in this assembly and those marks shall be shown on the erection diagram. All beam dimensions are based on a temperature of 60°F. A tolerance of 1/4" (plus or minus) allowed for camber.

Flange Field Splice Plates for main members shall be cut and fabricated so that the primary direction of rolling is parallel to the direction of the main tensile and/or compressive stresses.

All welding that is to be done during fabrication of structural steel, including temporary welds, shall be detailed on the shop drawings and submitted for approval. If additional welds are required, whether permanent or temporary, a formal request with detailed drawings shall be submitted to the Engineer for approval; however, additional welds used for attaching falsework support devices to the structural steel that do not exceed the limitations of Subsection 802.13 will not require approval prior to construction. Field welding of new diaphragm connection plates to the existing Beams shall be as shown in the plans. All welding shall conform to Subsection 807.26.

Unless noted otherwise, field connections and splices shall be bolted with High-Strength Bolts and shall be 7/8" ø with 15/16" open holes at a spacing of 3" o.c. Bolts shall be placed with heads on the outside face of the exterior Beam Webs and on the bottom of the Beam Flanges. Any existing bolt that is loosened or removed shall be replaced by new high-strength bolts, nuts and washers.

Diaphragms shall be installed as Beams are erected. All bolts in Diaphragms and Field Splices shall be installed and tightened in accordance with Subsection 807.71 prior to pouring the Concrete Deck unless noted otherwise.

All stud shear connectors shall be granular flux filled, solid flux, or equal and shall be automatically end welded in accordance with recommendations of the manufacturer.

All new bearings, Beams 1-3 shall be seated in accordance with Subsection 808.08. This work and material are to be considered as subsidiary to the item "Elastomeric Bearings" and will not be paid for directly.

Anchor bolts shall be AASHTO designation M314 Gr. 55, including supplemental requirement S1, and shall be galvanized to conform to AASHTO M232, Class C or ASTM B695, Class 50. Anchor bolts will be paid for at the contract unit price bid for "Structural Steel in Beam Spans (M 270, Gr. 50)".

PAINTING STRUCTURAL STEEL:
All new structural steel except galvanized steel and steel which is completely encased in concrete shall be painted in accordance with Subsection 807.75. The color of paint shall match color of existing beams.

The existing paint system used on the existing beams may consist of a lead based paint system. The Contractor shall take all necessary steps to protect the workers modifying the existing beams.

The area of the existing beams where new diaphragm connection plates will be field welded shall be cleaned and painted in accordance with Section 638.

The elastomeric bearing pads shall be protected against overspray.

REMOVAL OF EXISTING DECK:
Care shall be exercised during the removal of the existing deck to ensure that the existing paint system and the existing structural steel, including shear connectors, are not damaged. Damaged items that are not salvageable, as determined by the Engineer, shall be replaced at the Contractor's expense.

The deck removal shall progress in a manner that will ensure the stability of the existing structure. The concrete deck in the end spans shall not be removed before the deck in the interior spans have been removed.

The existing concrete deck shall be completely removed to the top flange of the existing beams. The portions of the top flange that will be embedded in new concrete shall be cleaned and free of laitance and protected until the new deck is placed for the respective Stage of Construction. This work will not be paid for directly but will be considered subsidiary to the item "Modification of Existing Bridge Structure (Br. No. A5958)" and "Modification of Existing Bridge Structure (Br. No. B5958)".

METHOD OF WORK:
The Contractor shall remove portions of the existing deck in Stages as shown in "Details of Stage Construction" Dwg. No. 57712. The Contractor may loosen the diaphragm and end strut bolts adjacent to Beam Nos. 4 & 5 as shown in plans, to facilitate construction. This work will not be paid for directly but will be considered subsidiary to the item "Modification of Existing Bridge Structure (Br. No. A5958)" and "Modification of Existing Bridge Structure (Br. No. B5958)".

The existing structural steel, except top of beam flanges embedded in concrete, shall be cleaned and painted upon completion of all required modifications and deferred until the adjoining concrete work has been placed and finished.

All applicable provisions of Section 807, as determined by the Engineer, shall be followed. See Special Provision Job No. CA0901 "Special Safety Requirements for Bridges" for additional information.

The Contractor may submit an alternate Method of Work. The plan shall be submitted to the Engineer for information and record keeping purposed at least three weeks prior to any work being performed. The submittal shall be prepared and/or approved by an Arkansas Professional Engineer and shall include sufficient details and information to the Engineer's satisfaction. The Contractor shall be responsible for the results obtained by the use the alternate Method of Work. All work, materials and labor required for the Contractor to develop and execute the plan will not be paid directly but will be considered subsidiary to the item "Modification of Existing Bridge Structure (Br. No. A5958)" and "Modification of Existing Bridge Structure (Br. No. B5958)".

TABLE OF WELDS

Material Thickness of Thicker Part Joined (inches)	Minimum size of Fillet Weld (inches)	Single Pass Weld Must Be Used
To 3/4" Inclusive	1/4"	
Over 3/4"	5/16"	

NOTE: When A Fillet Weld size, as shown on the Plans, is larger than the minimum, the first pass shall be that specified for minimum size of Fillet Weld.

TABLE OF DEAD LOAD DEFLECTIONS - INCHES

Beam NO. 1, 2 & 3

Span	Piont of Deflection	Structural Steel		Structural Steel + Slab		Structural Steel + Slab + Parapet	
		Interior	Exterior	Interior	Exterior	Interior	Exterior
1	0	0	0	0	0	0	0
	0.1	0.026	0.027	0.172	0.182	0.181	0.198
	0.2	0.046	0.048	0.311	0.323	0.327	0.351
	0.3	0.061	0.063	0.412	0.424	0.434	0.461
	0.4	0.068	0.072	0.456	0.483	0.48	0.526
	0.5	0.066	0.07	0.446	0.475	0.47	0.518
	0.6	0.059	0.061	0.393	0.409	0.414	0.447
	0.7	0.044	0.046	0.296	0.311	0.312	0.34
	0.8	0.026	0.03	0.171	0.2	0.18	0.219
	0.9	0.013	0.009	0.083	0.061	0.088	0.067
2	0	0	0	0	0	0	0
	0.1	0.003	0.004	0.024	0.03	0.026	0.034
	0.2	0.02	0.017	0.136	0.117	0.146	0.131
	0.3	0.034	0.035	0.235	0.243	0.252	0.271
	0.4	0.049	0.048	0.334	0.332	0.356	0.368
	0.5	0.056	0.055	0.381	0.374	0.406	0.414
	0.6	0.053	0.053	0.359	0.364	0.382	0.403
	0.7	0.043	0.042	0.292	0.286	0.311	0.317
	0.8	0.028	0.026	0.188	0.178	0.2	0.199
	0.9	0.009	0.013	0.061	0.091	0.065	0.102
3	0	0	0	0	0	0	0
	0.1	0.008	0.006	0.051	0.044	0.055	0.048
	0.2	0.021	0.024	0.145	0.164	0.154	0.18
	0.3	0.04	0.04	0.273	0.273	0.29	0.3
	0.4	0.054	0.054	0.369	0.37	0.392	0.407
	0.5	0.059	0.063	0.404	0.427	0.428	0.469

Note:
Camber for Dead Load Deflection plus Vertical curve 1/4" tolerance.
Deflections shown are off a chord from ℄ Brg. to ℄ Brg.
Vertical curve corrections not included. Negative sign (-) indicates upward deflections.

Dead Load Deflections based on use of removable forms.

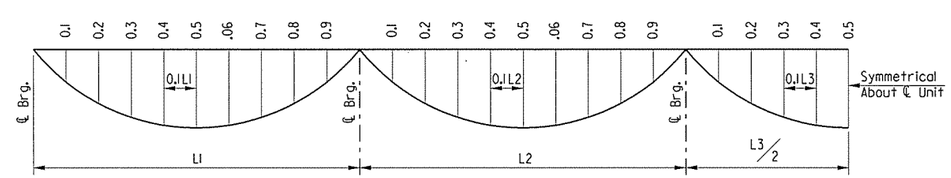

DEAD LOAD DEFLECTION DIAGRAM

N.T.S.

STATE OF ARKANSAS REGISTERED PROFESSIONAL ENGINEER No. 7873 DAVID R. NOLL

SHEET 9 OF 10

DETAILS OF 267'-0" CONTINUOUS COMPOSITE W-BEAM UNIT OVER BLOSSOM WAY CREEK

ROUTE 49 SEC. 29

ARKANSAS STATE HIGHWAY COMMISSION

LITTLE ROCK, ARK.

DRAWN BY: DR	DATE: 07-10-15	FILENAME: bca0901x2_s9.dgn			
CHECKED BY: JBM	DATE: 07-10-15	SCALE: 1/4" = 1'-0"			
DESIGNED BY: DRN	DATE: 07-10-15				

BRIDGE NO. A&B5958 DRAWING NO. 57734

PARSONS TRANSPORTATION GROUP	DATE REVISED	DATE FILMED	DATE REVISED	DATE FILMED	FED.RD. DIST.NO.	STATE	FED.AID PROJ.NO.	SHEET NO.	TOTAL SHEETS
					6	ARK.			
					JOB NO.		CA0901	188	452
					① A&B5958		SPAN DETAILS		57735

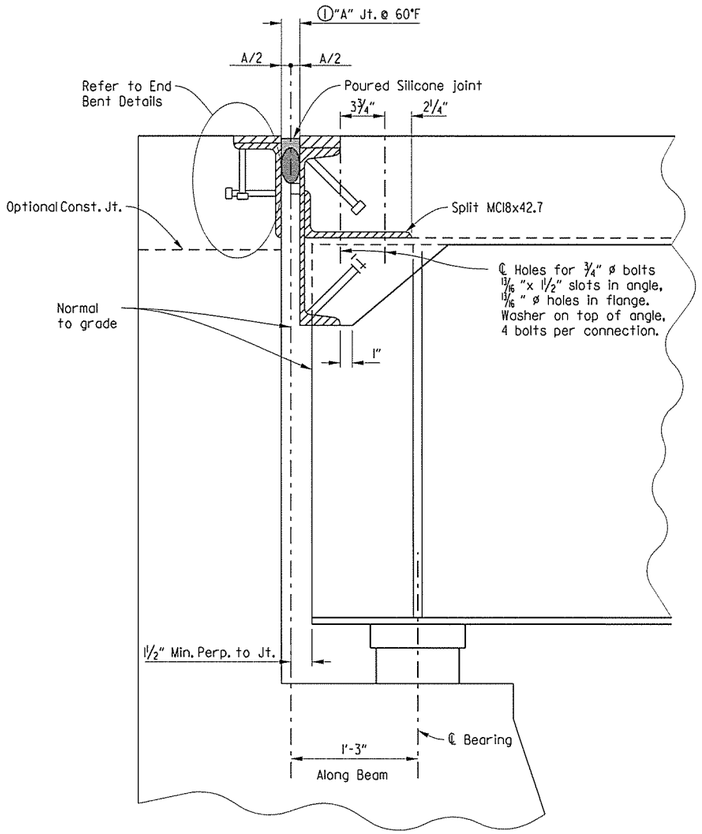

SECTION THRU JOINT AT END BENTS

No Scale

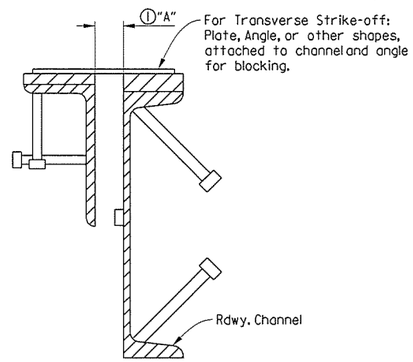

Note: Each expansion joint device shall be blocked in the shop by the Fabricator and the blocking details shall be shown on the Shop Drawings. Blocking shall not be removed until the slab is complete. Blocking shall be placed within 2 feet of each end of the device and with a maximum spacing of 8 feet.

DETAILS FOR BLOCKING EXPANSION JOINT DEVICE

No Scale

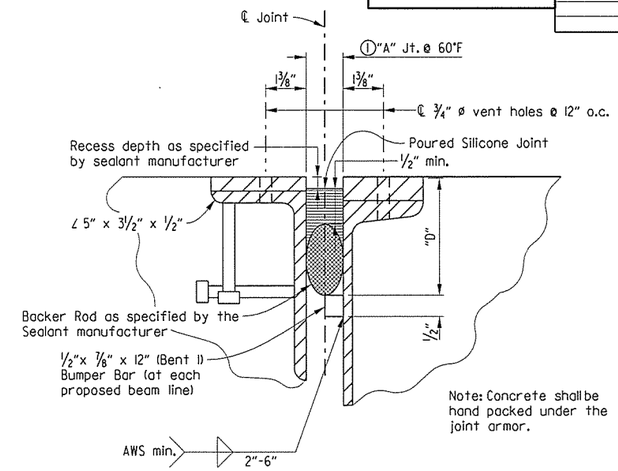

DETAIL OF POURED SILICONE JOINT

No Scale

JOINT ERECTION DIMENSIONS

"A" Width perpendicular to joint at 24 hour average temperature of:				"D"
Bent No.	40° F	60° F	80° F	
1	2 3/16"	2"	1 13/16"	3¼"
6	2 3/16"	2"	1 13/16"	3¼"

① The temperature used to set the joint opening shall be the approximate average air temperature during the 24 hour period immediately before the bolts are tightened. The Engineer shall establish the temperature. Interpolation of the table may be necessary.

Notes: The temperature limitations recommended by the sealant manufacturer shall be observed.

The sealant shall be installed only when the average 24 hour air temperature is between 40° and 80°F.

② BACKER ROD NOTE:

Use an appropriately sized backer rod at the depth shown in the manufacturer's literature based on the joint width at the time of sealing.

Except as noted, do not install more backer rod than that which can be sealed in the same day.

The contractor shall verify separation of the backer rod from the joint material after the material has set.

EXPANSION DEVICE INSTALLATION

The Contractor may elect to install the expansion device using one of the following two alternatives:

1) The concrete span pour adjacent to joint shall be placed before the end bent backwall is placed. After the end bent backwall forms are in place and the beams erected, the blocked expansion device shall be installed and adjusted for grade. All connection bolts shall be fully tightended prior to placing the deck concrete adjacent to the bent. Immediately prior to pouring the backwall concrete, the blocking shall be removed, the opening adjusted for temperature, and the backwall constructed.

2) The backwall shall be poured to the optional construction joint after beams are erected. The blocked expansion device shall be installed and adjusted for grade. All connection bolts shall be fully tightened prior to placing the deck concrete adjacent to the bent. Immediately prior to pouring the remainder of the backwall concrete, the blocking shall be removed and the opening adjusted for temperature. Backfill shall not be placed behind the backwall until the deck concrete on the adjacent span has been placed.

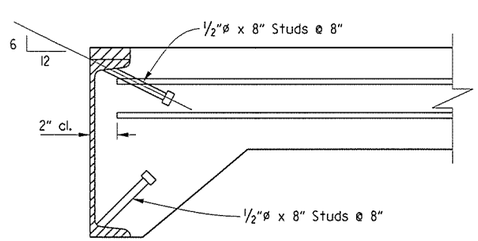

Note: As an alternate to ⅝"ø studs, ½"ø x 8" studs spaced as shown may be used. Use weight of ⅝" stud as basis of measurement of structure steel in anchors.

DETAILS OF ALTERNATE ANCHORS

No Scale

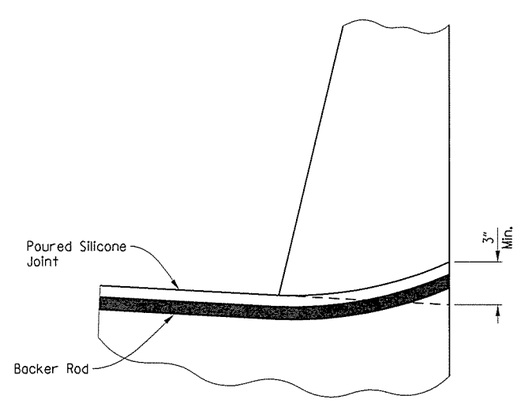

JOINT SEAL PLACEMENT AT PARAPET

No Scale

STATE OF ARKANSAS
REGISTERED PROFESSIONAL ENGINEER
No. 7673
DAVID R. NOCK

SHEET 10 OF 10

DETAILS OF 267'-0" CONTINUOUS COMPOSITE W-BEAM UNIT OVER BLOSSOM WAY CREEK

ROUTE 49 SEC. 29

ARKANSAS STATE HIGHWAY COMMISSION

LITTLE ROCK, ARK.

DRAWN BY:	DR	DATE:	03-10-15	FILENAME:	bca0901x2.s10.dgn
CHECKED BY:	DRN	DATE:	07-10-15	SCALE:	1" = 20'
DESIGNED BY:	JBM	DATE:	03-10-15		

BRIDGE NO. A&B5958 DRAWING NO. 57735

PARSONS TRANSPORTATION GROUP	DATE REVISED	DATE FILMED	DATE REVISED	DATE FILMED	FED.RD. DIST.NO.	STATE	FED.AID PROJ.NO.	SHEET NO.	TOTAL SHEETS
					6	ARK.			
					JOB NO.		CA0901	189	452
					(1) A5958		APPR. SLAB		57736

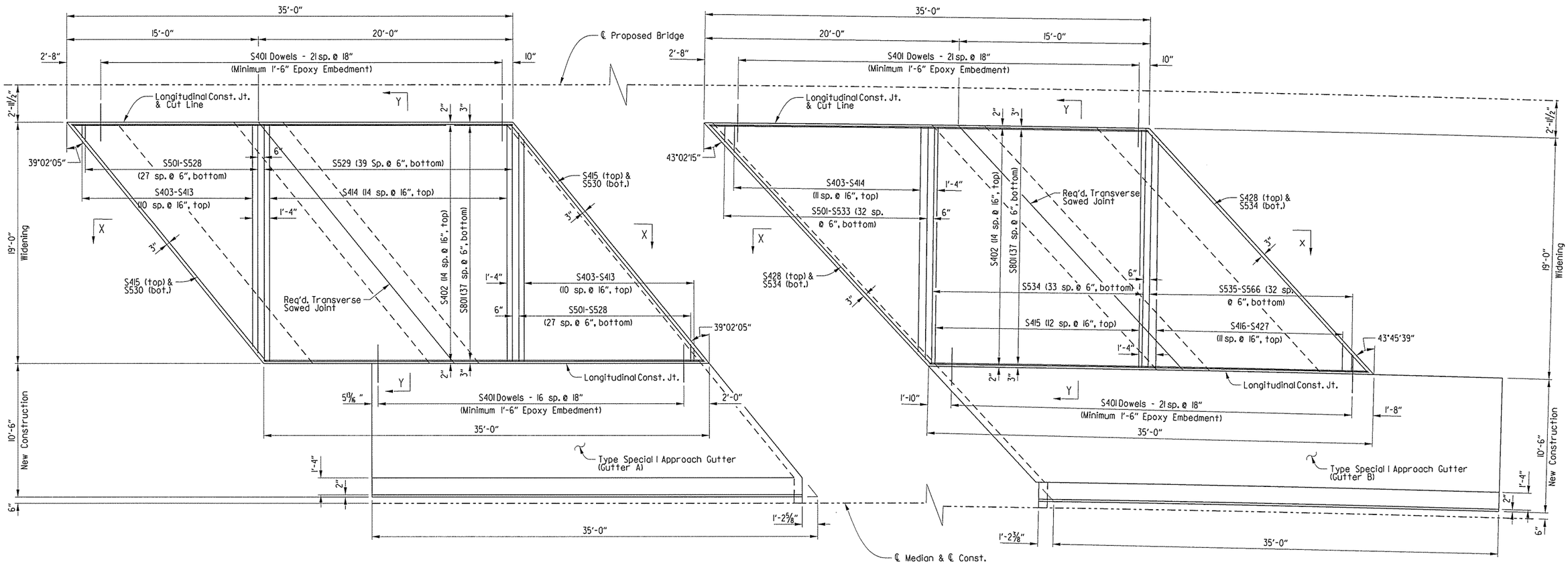

PLAN - APPROACH SLAB
(BEGIN BRIDGE A)

PLAN - APPROACH SLAB
(END BRIDGE A)

Note: All longitudinal line and longitudinal reinforcing steel shall be placed on curves concentric with ℄ Existing Bridge. All transverse reinforcing steel shall be placed on radial lines and shall be measured along Existing GutterLine

Notes: Surface finish for Approach Slabs shall match that used on the bridge deck.

Note: For General Notes, Sections, Bar List, and additional details, see Dwg. No. 57738.

For details of Type Special I Approach Gutters, see Dwg. No. 57739.

STATE OF ARKANSAS REGISTERED PROFESSIONAL ENGINEER No. 7673 DAVID R. NOLE

SHEET 1 OF 3

DETAILS OF TYPE SPECIAL I APPROACH SLABS

ROUTE 49 SEC. 29

ARKANSAS STATE HIGHWAY COMMISSION

LITTLE ROCK, ARK.

DRAWN BY:	DR	DATE:	06-29-15	FILENAME:	bca0901a2_a1.dgn
CHECKED BY:	JBM	DATE:	07-13-15	SCALE:	¼" = 1'-0"
DESIGNED BY:	DRN	DATE:	06-25-15		

BRIDGE NO. A5958 DRAWING NO. 57736

PARSONS TRANSPORTATION GROUP	DATE REVISED	DATE FILMED	DATE REVISED	DATE FILMED	FED.RD. DIST.NO.	STATE	FED.AID PROJ.NO.	SHEET NO.	TOTAL SHEETS
					6	ARK.			
					JOB NO.		CA0901	190	452
					(1) B5958		APPR. SLAB		57737

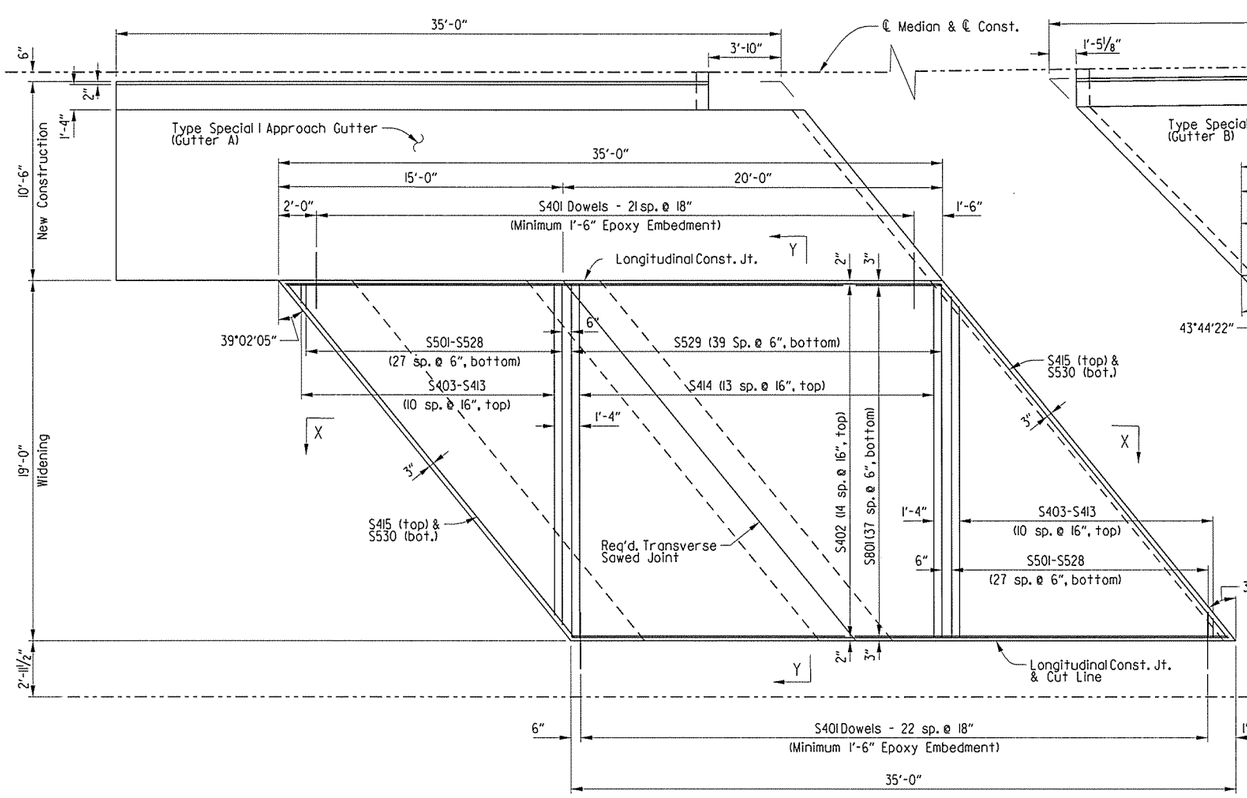

PLAN - APPROACH SLAB
(BEGIN BRIDGE B)

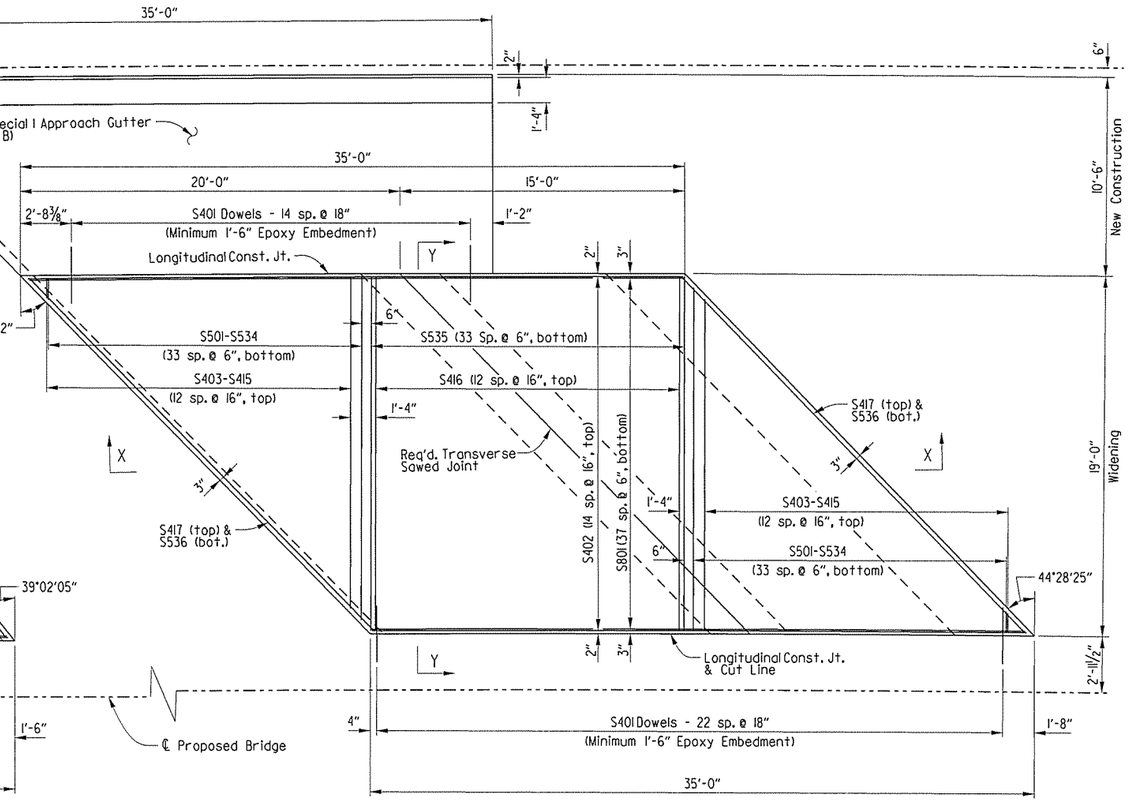

PLAN - APPROACH SLAB
(END BRIDGE B)

Note: All longitudinal line and longitudinal reinforcing steel shall be placed on curves concentric with ℄ Existing Bridge. All transverse reinforcing steel shall be placed on radial lines and shall be measured along Existing Gutter Line

Notes: Surface finish for Approach Slabs shall match that used on the bridge deck.

Note: For General Notes, Sections, Bar List, and additional details, see Dwg. No. 57738.

For details of Type Special I Approach Gutters, see Dwg. No. 57740.

STATE OF ARKANSAS
REGISTERED PROFESSIONAL ENGINEER
No. 9673
DAVID R. NOVAK

SHEET 2 OF 3

DETAILS OF TYPE SPECIAL I APPROACH SLABS

ROUTE 49 SEC. 29

ARKANSAS STATE HIGHWAY COMMISSION

LITTLE ROCK, ARK.

DRAWN BY:	DR	DATE:	07-10-15	FILENAME:	bca0901a2_a2.dgn
CHECKED BY:	JBM	DATE:	07-13-15	SCALE:	¼" - 1'-0"
DESIGNED BY:	DRN	DATE:	06-25-15		

BRIDGE NO. B5958 DRAWING NO. 57737

PARSONS TRANSPORTATION GROUP	DATE REVISED	DATE FILMED	DATE REVISED	DATE FILMED	FED.RD. DIST.NO.	STATE	FED.AID PROJ.NO.	SHEET NO.	TOTAL SHEETS
					6	ARK.			
					JOB NO.		CA0901	191	452
					(1) B5958		APPR. SLAB		57738

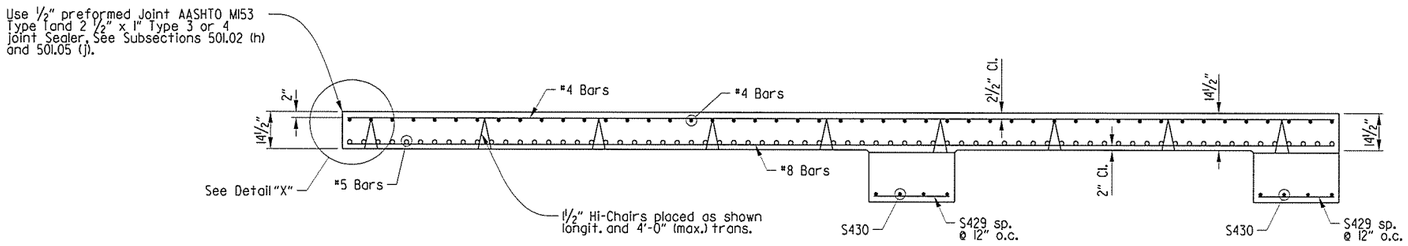

SECTION X-X

Not to Scale

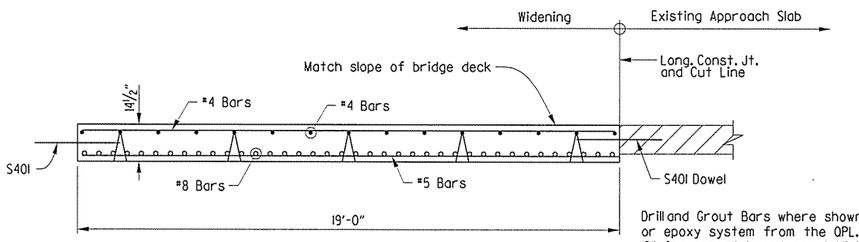

Drill and Grout Bars where shown using an approved cement or epoxy system from the OPL. Minimum embedment shall be 12" for cement based grout. Minimum embedment shall be per the manufacturer's recommendations for epoxy based grout.

SECTION Y-Y

Not to Scale

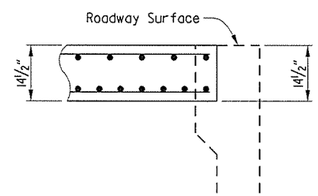

DETAIL X

Not to Scale

GENERAL NOTES

Concrete shall be Class S(AE) (f'c = 4000 psi).

All reinforcing steel shall be Grade 60 (yield strength = 60,000 psi) conforming to AASHTO M31 or M322, Type A, with mill test reports.

Approach Slabs will be measured and paid for in accordance with Section 504.

Preformed Joint and Joint Sealer included in the pay item "Approach Slabs".

BAR LIST

Begin Bridge A

MARK	NO. REQ'D. Beg. Br.	LENGTH
S401	39	3'-0"
S402	15	34'-6"
S403 to S413	2 Ea.	1'-0⅝" to 17'-6"
S414	22	18'-8"
S415	2	24'-0"
S429	19	2'-8"
S430	8	24'-0"
S501 to S528	2 Ea.	1'-4" to 18'-0"
S529	40	18'-8"
S530	2	24'-0"
S801	38	34'-6"

BAR LIST

End Bridge A

MARK	NO. REQ'D. End Br.	LENGTH
S401	44	3'-0"
S402	15	34'-6"
S403 to S414	1 Ea.	2'-2" to 17'-0½"
S415	13	18'-8"
S416 to S427	1 Ea	17'-9½" to 2'-2"
S428	2	25'-7"
S429	19	2'-8"
S430	8	25'-7"
S501 to S533	1 Ea.	2'-2" to 18'-4"
S534	34	18'-8"
S535 to S566	1 Ea.	18'-3¾" to 1'-5"
S567	2	25'-7"
S801	38	34'-6"

QUANTITIES FOR TYPE SPECIAL I APPROACH SLABS

(FOR INFORMATION ONLY)

		Slab Width	Reinforcing Steel (lbs.)	Concrete (cu. yds.)
Bridge A	Beg. of Bridge	19'-0"	5885	37.7
	End of Bridge	19'-0"	5845	37.7
Bridge B	Beg. of Bridge	19'-0"	5813	37.7
	End of Bridge	19'-0"	5897	37.7

BAR LIST

Begin Bridge B

MARK	NO. REQ'D. Beg. Br.	LENGTH
S401	45	3'-0"
S402	15	34'-6"
S403 to S413	2 Ea.	1'-0⅝" to 17'-6"
S414	22	18'-8"
S415	2	24'-0"
S429	19	2'-8"
S430	8	24'-0"
S501 to S528	2 Ea.	1'-4" to 18'-0"
S529	40	18'-8"
S530	2	24'-0"
S801	38	34'-6"

BAR LIST

End Bridge B

MARK	NO. REQ'D. End Br.	LENGTH
S401	38	3'-0"
S402	15	34'-6"
S403 to S415	2 Ea.	1'-0½" to 17'-6"
S416	13	18'-8"
S417	2	25'-11"
S429	19	2'-8"
S430	8	25'-11"
S501 to S534	2 Ea.	1'-1½" to 18'-1"
S535	34	18'-8"
S536	2	25'-11"
S801	38	34'-6"

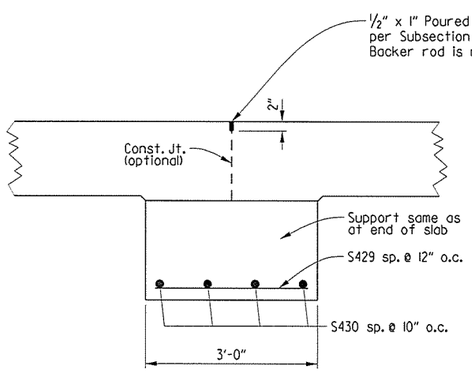

DETAILS OF TRANSVERSE SAWED JOINT

Not to Scale

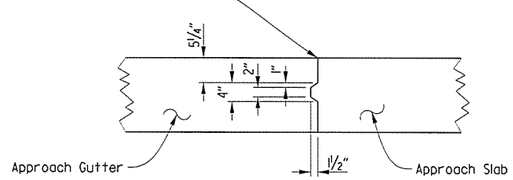

DETAILS OF LONGITUDINAL CONSTRUCTION JOINT

Not to Scale

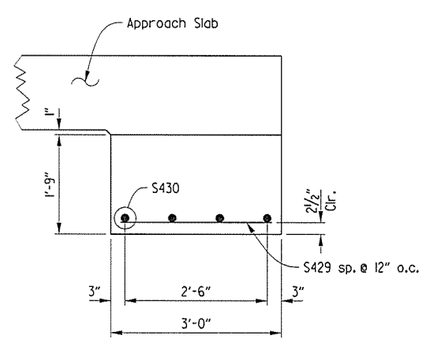

DETAILS OF SUPPORT AT END OF SLAB

Not to Scale

STATE OF ARKANSAS REGISTERED PROFESSIONAL ENGINEER No. 7673 DAVID R. NOLAN

SHEET 3 OF 3

DETAILS OF TYPE SPECIAL I APPROACH SLABS

ROUTE 49 SEC. 29

ARKANSAS STATE HIGHWAY COMMISSION

LITTLE ROCK, ARK.

DRAWN BY: DR	DATE: 07-11-15	FILENAME: bca0901x2.a3.dgn	
CHECKED BY: JBM	DATE: 07-13-15	SCALE: ¼" - 1'-0"	
DESIGNED BY: DRN	DATE: 06-25-15		

BRIDGE NO. A&B5958 DRAWING NO. 57738

USER: PARSONS
DESIGN FILE: R:\BRIDGES 1540\BRIDGE 5958 ca901\100% DESIGN FILES\191bca0901x2.a3.dgn
PLOTTED: 3/2/2016 9:43:16 AM SCALE: 5:4 ":" / in.

PARSONS TRANSPORTATION GROUP	DATE REVISED	DATE FILMED	DATE REVISED	DATE FILMED	FED.RD. DIST.NO.	STATE	FED.AID PROJ.NO.	SHEET NO.	TOTAL SHEETS
					6	ARK.			
					JOB NO.		CA0901	192	452
					(1) A5958		APPR. SLAB		57739

Note: All longitudinal line and longitudinal reinforcing steel shall be placed on curves concentric with ℄ Existing Bridge. All transverse reinforcing steel shall be placed on radial lines and shall be measured along Existing Gutter Line

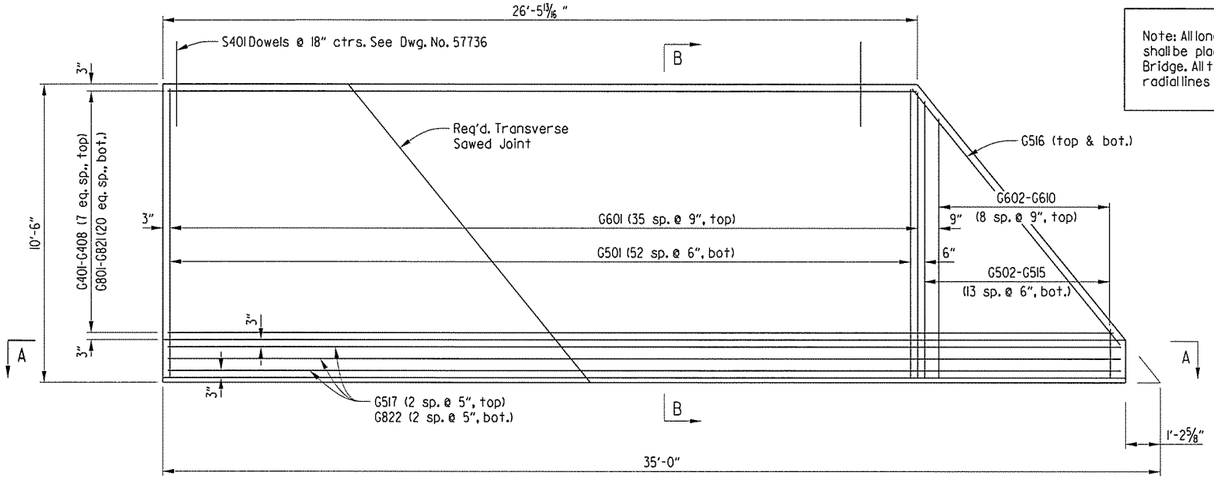

GUTTER A

(Beg. Bridge A)

QUANTITIES FOR TYPE SPECIAL 1 APPROACH GUTTERS

(FOR INFORMATION ONLY)

Location	Gutter	Reinforcing Steel (lbs.)	Concrete (cu. yds.)	Textured Coating Finish (sq. yds.)
Bridge A	Gutter A	4202	14.4	35.8
	Gutter B	5248	18.8	46.6
Bridge B	Gutter A	5008	18.2	45.1
	Gutter B	4032	14	34.8

GENERAL NOTES

Concrete shall be Class S(AE) (f'c = 4000 psi).

All reinforcing steel shall be Grade 60 (yield strength = 60,000 psi) conforming to AASHTO M31 or M322, Type A, with mill test reports.

Approach Gutters will be measured and paid for in accordance with Section 504 of the Standard Specifications.

Concrete Ditch Paving shall be Subsidiary to other bid items.

BAR LIST

MARK	NO. REQ'D. Beg. Br.	NO. REQ'D. End Br.	LENGTH
G401-G408	1 Ea.	---	26'-4" to 33'-2"
G409-G416	---	8	44'-6" to 34'-4"
G501	53	72	10'-2"
G502-G515	1 Ea.	---	9'-4" to 1'-9"
G516	2	---	11'-7"
G517	3	---	33'-5"
G518-G532	---	1 Ea.	8'-8" to 1'-8"
G533	---	3	35'-10"
G534	---	2	12'-1"
G601	36	49	10'-10"
G602-G610	1 Ea.	---	9'-1 1/2" to 1'-9"
G611-G620	---	10	1'-11" to 8'-8"
G801-G821	1 Ea.	---	26'-4" to 33'-2"
G822	3	---	33'-5"
G823-G843	---	1 Ea.	44'-6" to 34'-4"
G844	---	3	35'-10"
R401	8	---	33'-5"
R402	8	---	35'-10"
R601	35	35	9'-5"

BENDING DIAGRAMS

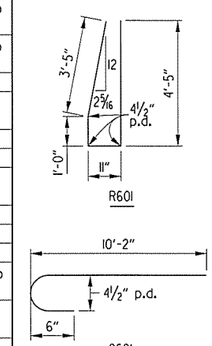

Dimensions are out to out of bars.

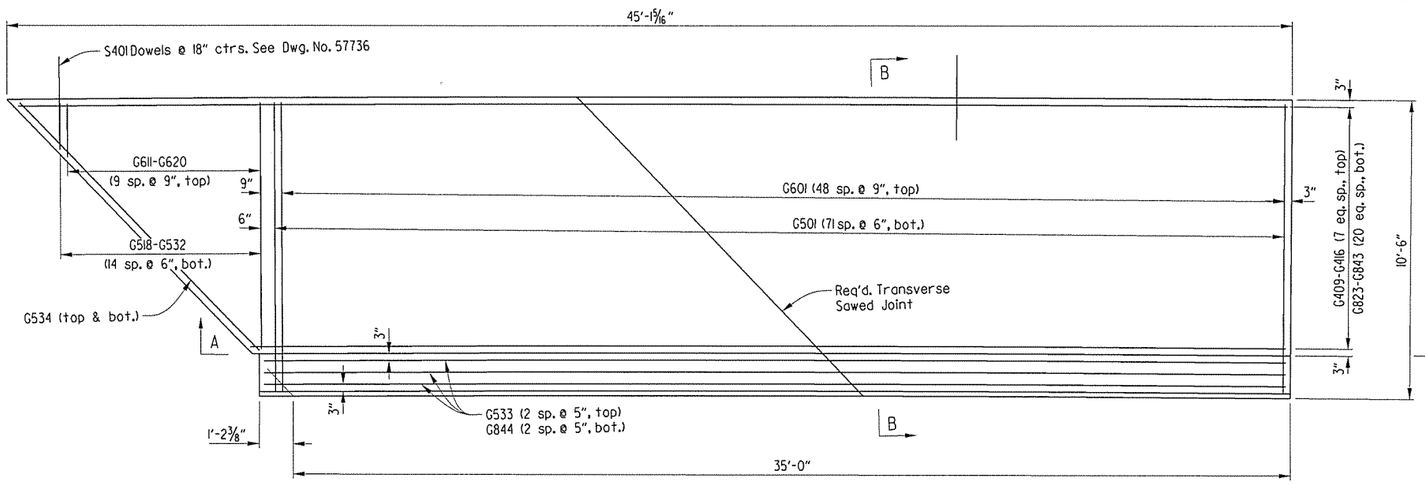

GUTTER B

(End Bridge A)

Use 1/2" Preformed Jt. AASHTO M153 Type 1 and 1/2" x 1" Type 3 or 4 joint sealer. See Subsection 501.02(h) and 501.05(j).

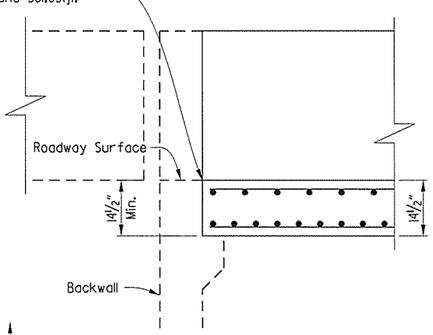

DETAIL X

Scale: N.T.S.

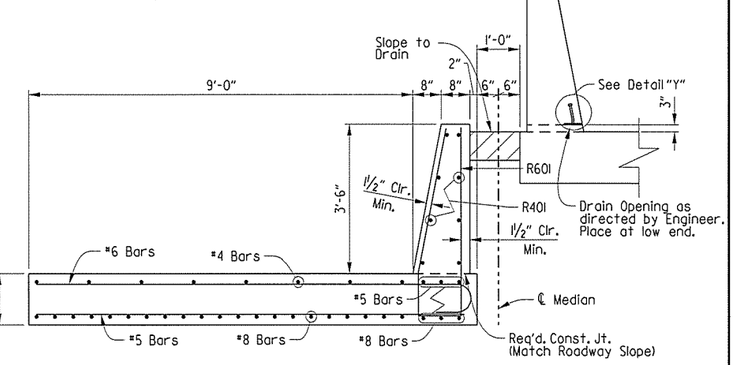

SECTION B-B

Scale: N.T.S.

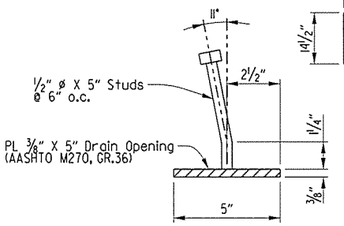

DETAIL Y

Scale: N.T.S.

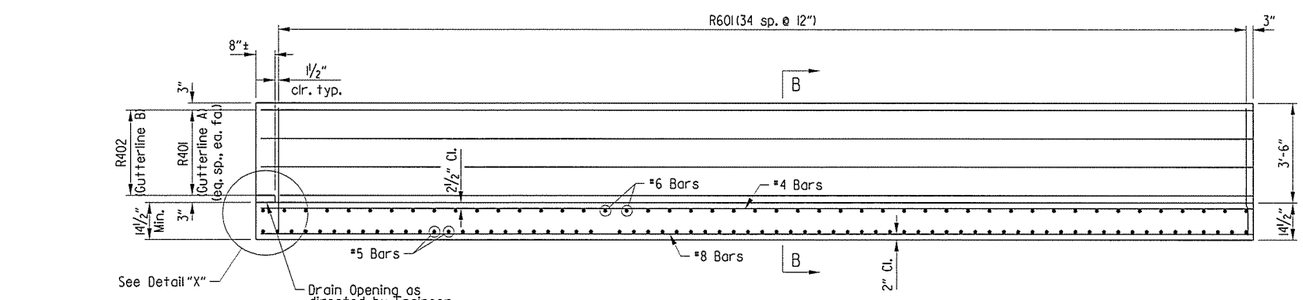

SECTION A-A

Scale: N.T.S.

Parapet studs shall be 5" long, granular flux filled, solid fluxed, or equal, and automatically end welded to the plate. Studs and plate shall meet the requirements of Section 807. Studs and plate shall be subsidiary to other bid items.

The surfaces of the 3/8" plates which will not be in contact with concrete shall be painted in accordance with Section 638, or as approved by the Engineer. Only one coat is required and shall be applied in the fabricator's shop. painting will not be paid for directly, but will be considered subsidiary to other bid items.

STATE OF ARKANSAS REGISTERED PROFESSIONAL ENGINEER No. 7673 DAVID R. NOTE

SHEET 1 OF 2

DETAILS OF TYPE SPECIAL 1 APPROACH GUTTERS

ROUTE 49 SEC. 29

ARKANSAS STATE HIGHWAY COMMISSION

LITTLE ROCK, ARK.

DRAWN BY: DR	DATE: 07-06-15	FILENAME: bca0901b2_a4.dgn			
CHECKED BY: JBM	DATE: 07-13-45	SCALE: 1/4" - 1'-0"			
DESIGNED BY: DRN	DATE: 07-06-15				

BRIDGE NO. A5958 DRAWING NO. 57739

USER: PARSONS
DESIGN FILE: R:\BRIDGES 1540\BRIDGE 5958 ca901\100% DESIGN FILES\192 bca0901b2.a4.dgn
PLOTTED: 3/2/2016 9:43:57 AM SCALE: 5:4 ":" / in.

R:\BRIDGES 1540\BRIDGE 5958 ca901\100% DESIGN FILES\192 bca0901b2_a4.dgn3/2/2016 9:43:57 AM

PARSONS TRANSPORTATION GROUP

DATE REVISED	DATE FILMED	DATE REVISED	DATE FILMED

FED.RD. DIST.NO.	STATE	FED.AID PROJ.NO.	SHEET NO.	TOTAL SHEETS
6	ARK.			
JOB NO.		CA0901	193	452
(1) B5958		APPR. SLAB		57740

Note: All longitudinal line and longitudinal reinforcing steel shall be placed on curves concentric with ℄ Existing Bridge. All transverse reinforcing steel shall be placed on radial lines and shall be measured along Existing GutterLine

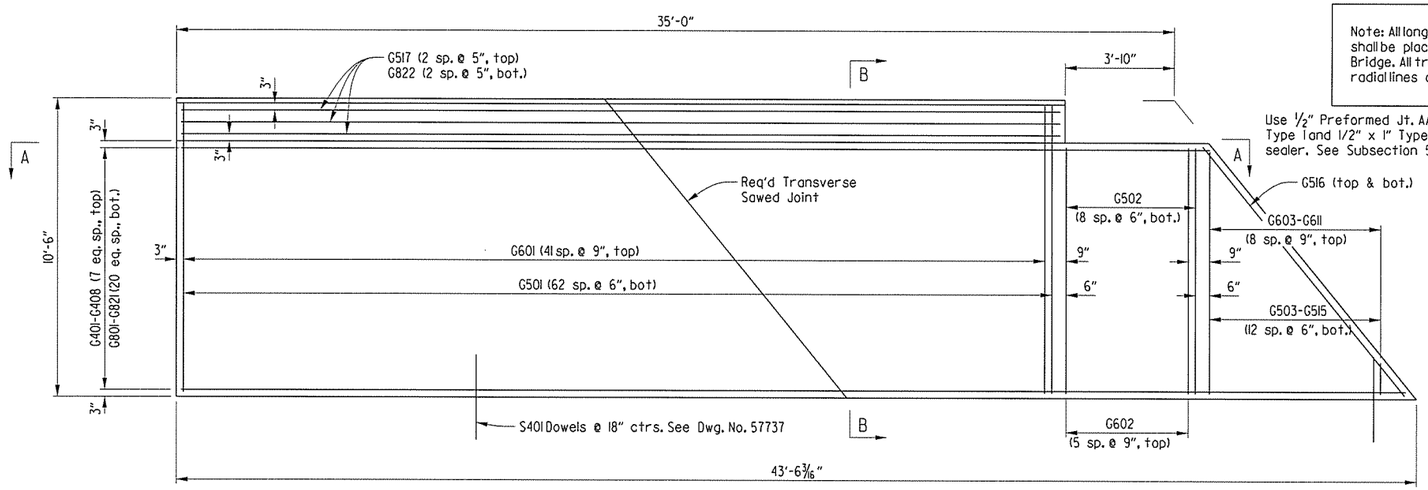

GUTTER A
(Beg. Bridge B)

Use 1/2" Preformed Jt. AASHTO M153 Type 1 and 1/2" x 1" Type 3 or 4 joint sealer. See Subsection 501.02(h) and 501.05(j).

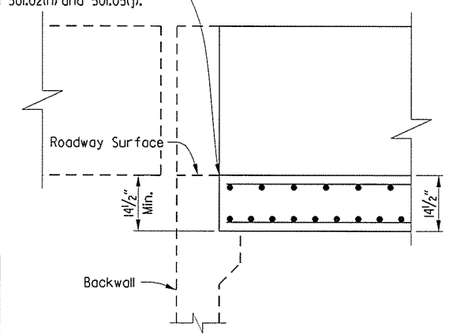

DETAIL X
Scale: N.T.S.

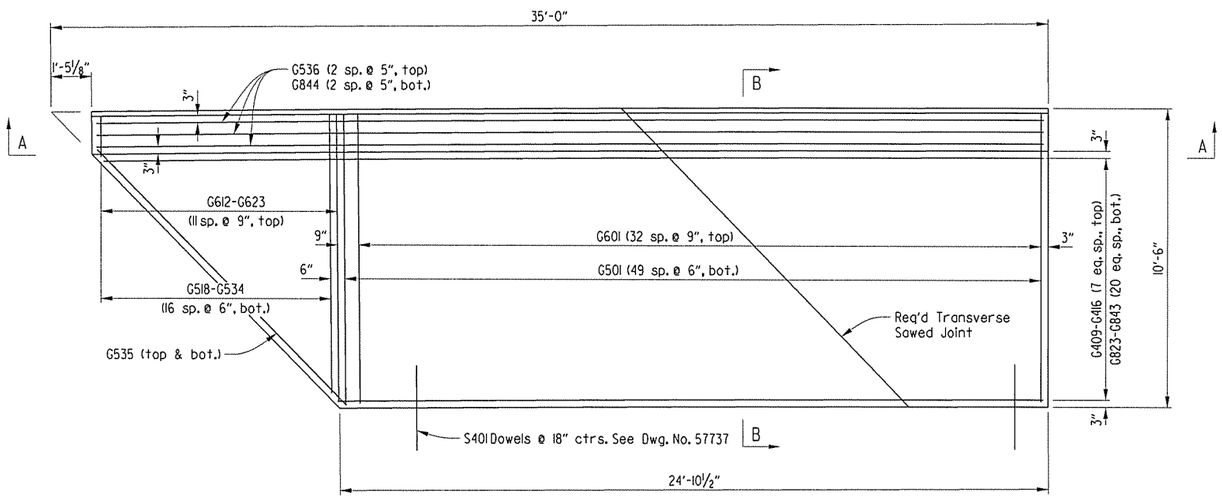

GUTTER B
(End Bridge B)

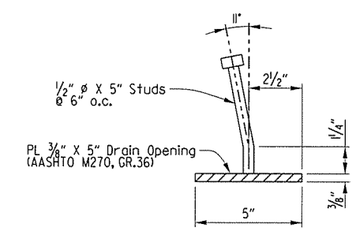

DETAIL Y
Scale: N.T.S.

Parapet studs shall be 5" long, granular flux filled, solid fluxed, or equal, and automatically end welded to the plate. Studs and plate shall meet the requirements of Section 807. Studs and plate shall be subsidiary to other bid items.

The surfaces of the 3/8" plates which will not be in contact with concrete shall be painted in accordance with Section 638, or as approved by the Engineer. Only one coat is required and shall be applied in the fabricator's shop. painting will not be paid for directly, but will be considered subsidiary to other bid items.

BAR LIST

MARK	NO. REQ'D. Beg. Br.	NO. REQ'D. End Br.	LENGTH
G401-G408	1 Ea.	---	36'-1" to 43'-0"
G409-G416	---	1 Ea.	33'-0" to 24'-9"
G501	63	50	10'-2"
G503-G515	1 Ea.	---	8'-6" to 1'-2"
G516	2	---	11'-3"
G517	3	---	31'-4"
G518-G534	---	1 Ea.	1'-5" to 9'-10"
G536	---	3	33'-3"
G535	---	2	12'-6"
G502	9	---	8'-8"
G601	42	33	10'-10"
G603-G611	1 Ea.	---	8'-6" to 1'-2"
G612-G623	---	1 Ea.	1'-5" to 10'-0"
G602	6	---	8'-8"
G801-G821	1 Ea.	---	36'-1" to 43'-0"
G822	3	---	31'-4"
G823-G843	---	1 Ea.	33'-0" to 24'-9"
G844	---	3	33'-3"
R401	8	---	31'-4"
R402	---	8	33'-4"
R601	34	34	9'-5"

BENDING DIAGRAMS

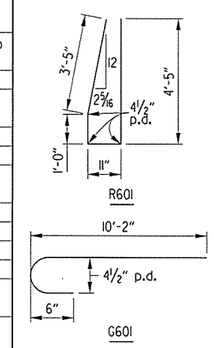

Dimensions are out to out of bars.

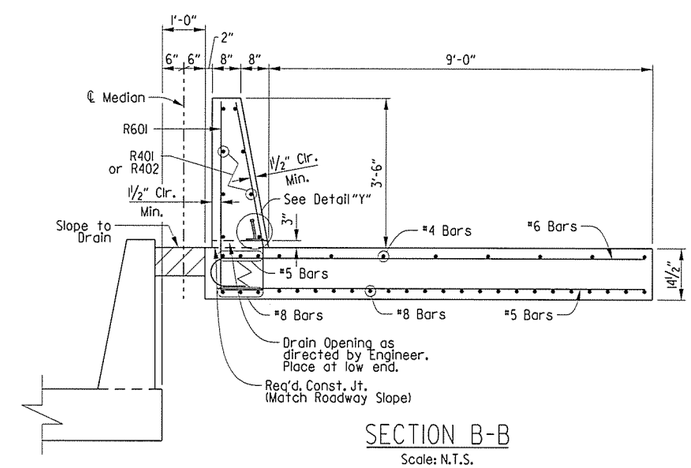

SECTION B-B
Scale: N.T.S.

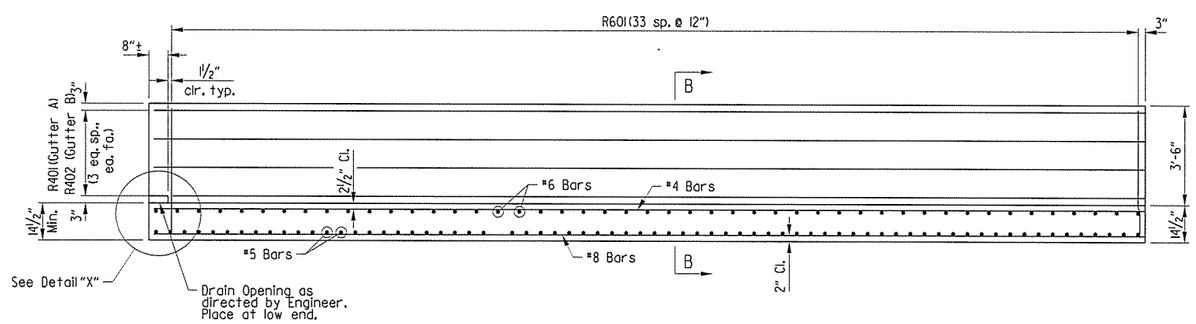

SECTION A-A
Scale: N.T.S.

STATE OF ARKANSAS REGISTERED PROFESSIONAL ENGINEER No. 7673 DAVID R. NOLTE

SHEET 2 OF 2

DETAILS OF TYPE SPECIAL I APPROACH GUTTERS

ROUTE 49 SEC. 29

ARKANSAS STATE HIGHWAY COMMISSION

LITTLE ROCK, ARK.

DRAWN BY: DR	DATE: 07-07-15	FILENAME: bca0901b2_a5.dgn		
CHECKED BY: JBM	DATE: 07-13-15	SCALE: 3/8" = 1'-0"		
DESIGNED BY: DRN	DATE: 07-07-15			

BRIDGE NO. B5958 DRAWING NO. 57740

USER: PARSONS
DESIGN FILE: R:\BRIDGES 1540\BRIDGE 5958 ca901\100% DESIGN FILES\193 bca0901b2_a5.dgn
PLOTTED: 3/2/2016 9:47:24 AM SCALE: 5:4 ":" / in.

R:\BRIDGES 1540\BRIDGE 5958 ca901\100% DESIGN FILES\193 bca0901b2_a5.dgn3/2/2016 9:47:24 AM

DATE REVISED	DATE FILMED	DATE REVISED	DATE FILMED
06/09/16			

FED.RD. DIST.NO.	STATE	FED.AID PROJ.NO.	SHEET NO.	TOTAL SHEETS
6	ARK.			
JOB NO.		CA0901	194	452
(1) A5960		LAYOUT		57741

Crafton, Tull & Associates Inc.

For R/W Data, See Rdwy. Plans

(1) REVISED SHORING LOCATION. CAW, 06/09/16

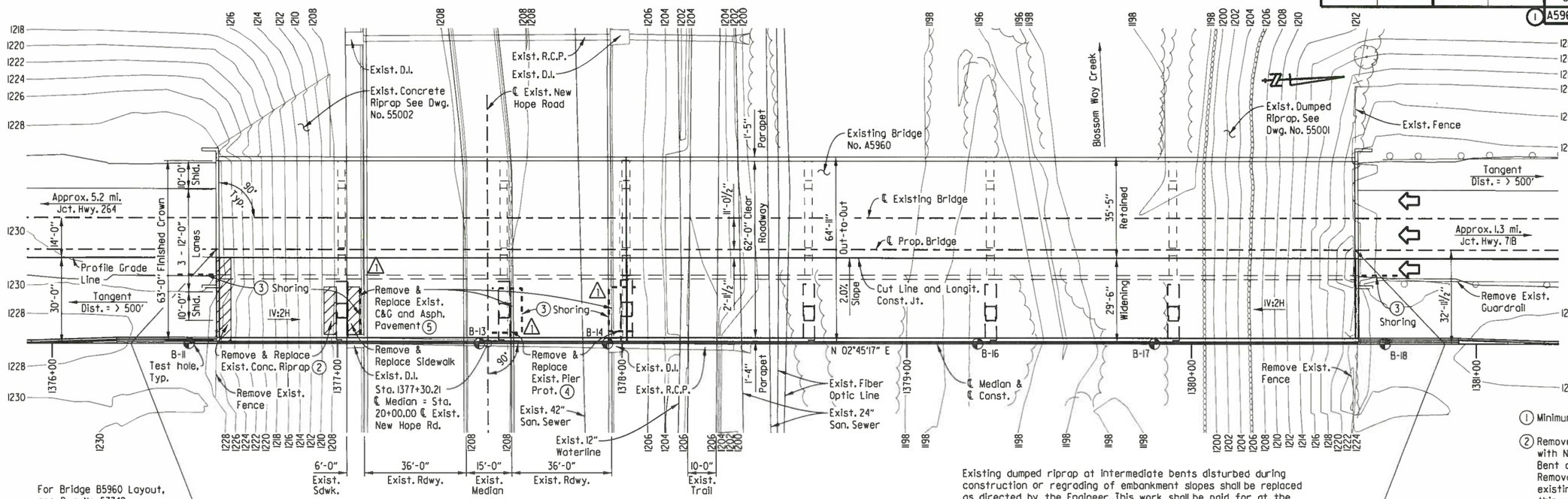

For Bridge B5960 Layout, see Dwg. No. 57742

Remove Existing Approach Gutters (inside gutters) at both ends of Bridge. Use Type Special I Approach Slabs at both ends of Bridge, see Dwg. Nos. 57775. Use Type Special I Approach Gutters (inside gutters) at both ends of Bridge, see Dwg. Nos. 57777.

PLAN

Note: Elevations are shown on ℄ Proposed Bridge

Existing dumped riprap at intermediate bents disturbed during construction or regrading of embankment slopes shall be replaced as directed by the Engineer. This work shall be paid for at the unit price bid for "Dumped Riprap". Filter blanket disturbed shall be replaced and paid for under the item "Filter Blanket". Quantities of dumped riprap and filter blanket are estimated. Actual quantities shall be determined in the field.

(1) Minimum Vertical Clearance

(2) Remove Existing Concrete Riprap & Replace with New Concrete Riprap as necessary for Bent construction (See Std. Dwg. No. 55002). Removal shall extend to the location of an existing construction joint. Payment for this work shall be considered subsidiary to the pay item "Modification of Existing Bridge Structure (Br. No. A5960)".

(3) Shoring may be required during construction. Payment for this work, if required, shall be considered subsidiary to the pay item "Unclassified Excavation for Structures - Bridge". See SP Job No. CA0901 "Shoring".

(4) Remove Existing Pier Protection & Replace with New Pier Protection as necessary for Bent construction (See Rdwy. Std. Dwg. No. GR-11). Removal shall extend to the location of an existing construction joint. Payment for this work shall be considered subsidiary to the pay item "Modification of Existing Bridge Structure (Br. No. A5960)".

(5) Remove Existing Curb & Gutter & Replace with New Curb & Gutter as necessary for Bent construction (See Rdwy. Std. Dwg. No. CG-1). Removal shall extend to the location of an existing construction joint. Remove Existing Asph. Pavement & Replace with Asph. Pavement, as necessary for Bent construction. See Rdwy plans for details. Payment for this work shall be considered subsidiary to the pay item "Modification of Existing Bridge Structure (Br. No. A5960)".

(6) Based on Existing plans. Contractor shall verify in the field.

Begin Bridge Sta 1376+57.71 El. 1229.57

1'-0½"

143'-0" Continuous Prestressed Concrete Girder Unit (43'-57'-43') (AASHTO Type II Girders)

Total Length of Bridge = 401'-1⅝"

256'-0" Continuous Prestressed Concrete Girder Unit (64'-64'-64'-64') (AASHTO Type III Girders)

1'-0¹³⁄₁₆"

End Bridge Sta. 1380+58.82 El. 1225.68

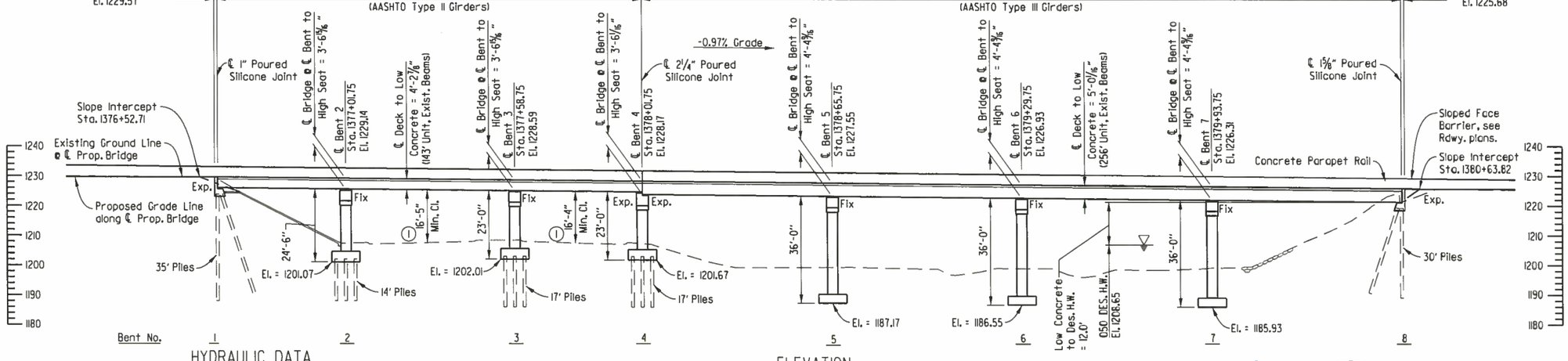

ELEVATION

HYDRAULIC DATA

FLOOD DESCRIPTION	FREQUENCY YEARS	DISCHARGE CFS	*NATURAL WATER SURFACE ELEV. FEET	W.S. ELEV. WITH BACKWATER FEET
DESIGN	50	10,822	1208.05	1208.65
BASE	100	13,120	1209.38	1209.91
EXTREME	500	16,865	1211.72	1212.17
OVERTOPPING	>500	N/A	N/A	N/A

*Unconstricted water surface elevation without structure or roadway approaches.
100 yr. backwater elevation for existing structure = 1209.91 feet
Proposed Low Bridge Chord Elev. = 1220.69 feet (Br. A), 1220.85 feet (Br. B)
Drainage Area = 12.82 sq. miles
Historical H.W. Elev. = Unknown

Note: See Dwg. No. 57743 for General Notes

Note: For Soil Boring information, see Dwg. No. 57743.

STATE OF ARKANSAS REGISTERED PROFESSIONAL ENGINEER No. 11856 CHARLES A. WIPF

06/09/16

SHEET 1 OF 3

LAYOUT OF BRIDGE 'A' OVER NEW HOPE ROAD & BLOSSOM WAY CREEK
HWY. 264 - NEW HOPE RD. (WIDENING) (S)
BENTON COUNTY
ROUTE 49 SEC. 29

ARKANSAS STATE HIGHWAY COMMISSION
LITTLE ROCK, ARK.

DRAWN BY:	BWC	DATE:	12-20-13	FILENAME:	bca0901a3_ll.dgn
CHECKED BY:	CAW	DATE:	01-15-14	SCALE:	1" = 20'
DESIGNED BY:	KJC	DATE:	12-17-13		

BRIDGE NO. A5960 DRAWING NO. 57741

USER: bc5100 DESIGN FILE: G:\3106100_2641oNHope\TRANSP\dgn\bridge\bca0901a3_ll.dgn PLOTTED: 6/9/2016 16:03 SCALE: 40:1

Crafton, Tull & Associates Inc.	DATE REVISED	DATE FILMED	DATE REVISED	DATE FILMED
	06/09/16			

FED.RD. DIST.NO.	STATE	FED.AID PROJ.NO.	SHEET NO.	TOTAL SHEETS
6	ARK.			
JOB NO.		CA0901	195	452
(1) B5960		LAYOUT		57742

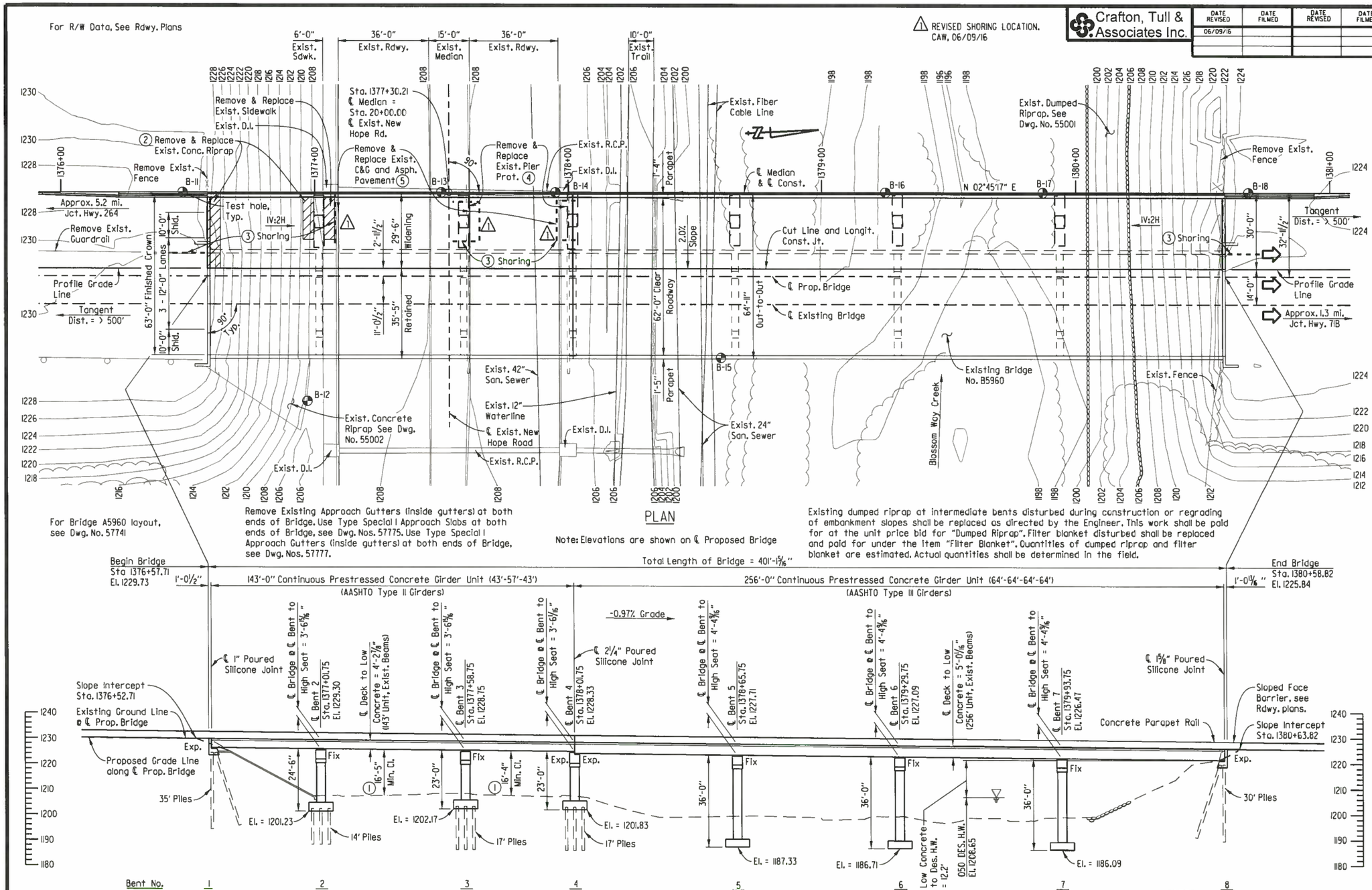

For Bridge A5960 layout, see Dwg. No. 57741

Remove Existing Approach Gutters (inside gutters) at both ends of Bridge. Use Type Special I Approach Slabs at both ends of Bridge, see Dwg. Nos. 57775. Use Type Special I Approach Gutters (inside gutters) at both ends of Bridge, see Dwg. Nos. 57777.

Note: Elevations are shown on ℄ Proposed Bridge

Existing dumped riprap at intermediate bents disturbed during construction or regrading of embankment slopes shall be replaced as directed by the Engineer. This work shall be paid for at the unit price bid for "Dumped Riprap". Filter blanket disturbed shall be replaced and paid for under the item "Filter Blanket". Quantities of dumped riprap and filter blanket are estimated. Actual quantities shall be determined in the field.

Note: See Dwg. No. 57743 for General Notes

Note: For Soil Boring Information, see Dwg. No. 57743.

For Hydraulic Data See Bridge 'A' Layout

(1) Minimum Vertical Clearance

(2) Remove Existing Concrete Riprap & Replace with New Concrete Riprap as necessary for Bent construction (See Std. Dwg. No. 55002). Removal shall extend to the location of an existing construction joint. Payment for this work shall be considered subsidiary to the pay item "Modification of Existing Bridge Structure (Br. No. B5960)".

(3) Shoring may be required during construction. Payment for this work, if required, shall be considered subsidiary to the pay item "Unclassified Excavation for Structures - Bridge". See SP Job No. CA0901 "Shoring".

(4) Remove Existing Pier Protection & Replace with New Pier Protection as necessary for Bent construction (See Rdwy. Std. Dwg. No. GR-11). Removal shall extend to the location of an existing construction joint. Payment for this work shall be considered subsidiary to the pay item "Modification of Existing Bridge Structure (Br. No. B5960)".

(5) Remove Existing Curb & Gutter & Replace with New Curb & Gutter as necessary for Bent construction (See Rdwy. Std. Dwg. No. CG-1). Removal shall extend to the location of an existing construction joint. Remove Existing Asph. Pavement & Replace with Asph. Pavement, as necessary for Bent construction. See Rdwy plans for details. Payment for this work shall be considered subsidiary to the pay item "Modification of Existing Bridge Structure (Br. No. B5960)".

(6) Based on Existing plans. Contractor shall verify in the field.

STATE OF ARKANSAS
REGISTERED PROFESSIONAL ENGINEER
No. 11856
CHARLES A. WIPF
06/09/16

SHEET 2 OF 3

LAYOUT OF BRIDGE 'B' OVER NEW HOPE ROAD & BLOSSOM WAY CREEK HWY. 264 - NEW HOPE RD. (WIDENING) (S) BENTON COUNTY

ROUTE 49 SEC. 29

ARKANSAS STATE HIGHWAY COMMISSION

LITTLE ROCK, ARK.

DRAWN BY: BWC	DATE: 12-20-13	FILENAME: bcc0901b3.ll.dgn	
CHECKED BY: CAW	DATE: 01-15-14	SCALE: 1" = 20'	
DESIGNED BY: KJC	DATE: 12-17-13		

BRIDGE NO. B5960 DRAWING NO. 57742

USER: bc5100
DESIGN FILE: G:\1306100_264toNHope\TRANSP\dgn\bridge\bcc0901b3_ll.dgn
PLOTTED: 6/9/2016 16:03 SCALE: 40:1

Crafton, Tull & Associates Inc.

DATE REVISED	DATE FILMED	DATE REVISED	DATE FILMED

FED.RD. DIST.NO.	STATE	FED.AID PROJ.NO.	SHEET NO.	TOTAL SHEETS
6	ARK.			
JOB NO.		CA0901	196	452
1 A&B5960		LAYOUT		57743

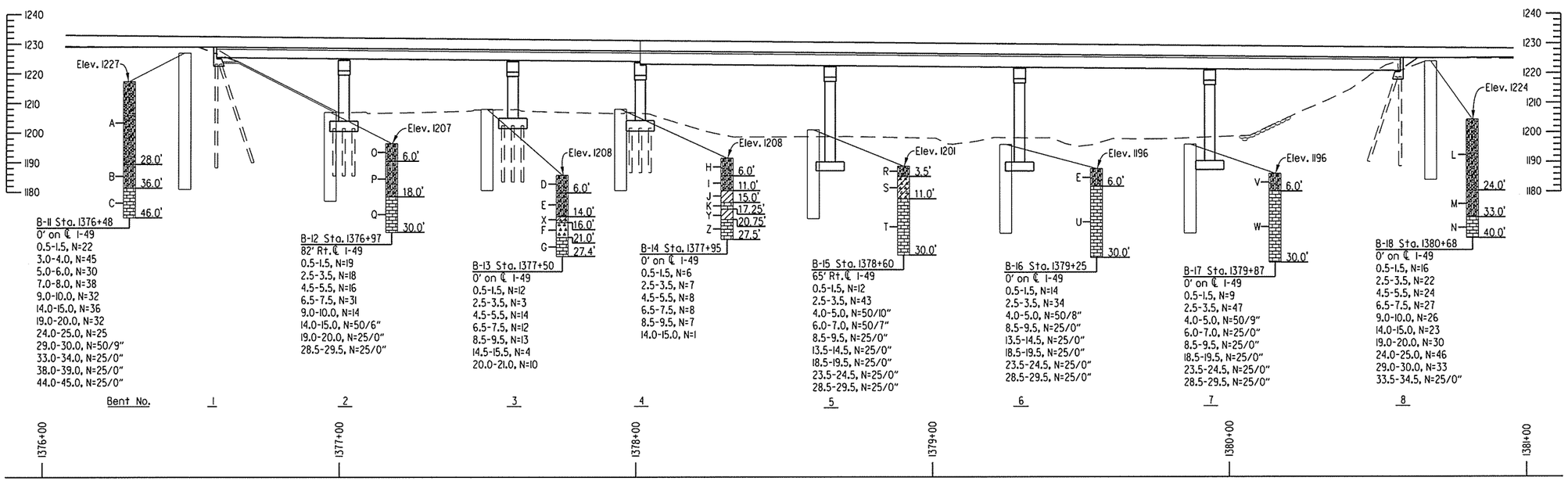

ELEVATION

GENERAL NOTES

BENCH MARK: BM 6980, 67.92' Rt. Centerline, Sta. 1376+56.96, Elev. 1228.98.

CONSTRUCTION SPECIFICATIONS: Arkansas State Highway and Transportation Department Standard Specifications for Highway Construction (2014 edition) with applicable Supplemental Specifications and Special Provisions. Section and Subsection refer to the Standard Construction Specifications unless otherwise noted in the Plans.

DESIGN SPECIFICATIONS: AASHTO LRFD Bridge Design Specifications 6th Edition (2012) with current interim specifications (new construction only).

LIVE LOADING: HL-93 SEISMIC PERFORMANCE ZONE: I S_{D1} :0.088 SITE CLASS: C

MATERIALS AND STRENGTHS:

Class S(AE) Concrete (slab, parapet, diaphragm)	f'c = 4,000 psi
Class S Concrete (Prestressed Girders)	f'c = 6,000 psi
Class S Concrete (substructure)	f'c = 3,500 psi
Reinforcing Steel (Grade 60 AASHTO M 31 or M 322 Type A)	fy = 60,000 psi
Prestressing Strands (AASHTO M203)	fpu = 270,000 psi
Structural Steel (AASHTO M 270, Gr. 50W)	Fy = 50,000 psi
Structural Steel (AASHTO M 270, Gr. 36)	Fy = 36,000 psi

BORING LOGS: Boring logs may be obtained from the Construction Contract Procurement Section of the Program Management Division.

STEEL PILING: All piling shall be HP 12x53 (Gr. 50) and shall be driven with an approved air, steam, or diesel hammer to a minimum safe bearing capacity of 96 tons per pile into the material designated as Moderately Hard to Hard Limestone on the boring legend. Lengths shown are for estimating quantities and for use in determining payment for cut-off and build-up in accordance with the Standard Specifications. Piles in End Bent 1 & 8 to be driven after embankment to bottom of cap is in place. On all piles the contractor shall use approved steel H-Pile driving points.

PREBORING: Preboring will be required for all piling at Bent 4 and shall extend from bottom of footing to top of rock. A preboring depth of 12' is anticipated. The quantities for preboring shown are for bidding purposes only. The actual size and depth of preboring are to be determined in the field by the Engineer. The length of prebored hole shall be backfilled in accordance with Subsection 805.08(a) to completely fill the remaining voids. The Contractor shall be responsible for keeping prebored holes free from debris prior to back filling which may require the use of temporary casings or other methods. Pile casings and backfill will not be paid for directly but shall be considered subsidiary to the item "Preboring".

FOOTINGS: Footings shall be set a minimum of 2'-0" into material designated as Moderately Hard to Hard Limestone on the boring legend and shall have a minimum 2' cover above top of footing. Foundations for footings for Bents 4-7 shall be prepared in accordance with Subsection 801.04. Rock excavations shall be made to neat lines of the concrete footings. Blasting will not be allowed. Concrete in footings shall be poured directly against excavated surfaces of rock. Footings for Bents 2 & 3 shall have a minimum cover above top of footing of 2'-0". Foundations for Bents 2 & 3 shall be prepared in accordance with Subsection 801.04 and backfilled according to Subsection 801.08.

BRIDGE DECK: The concrete bridge deck shall be given a tine finish as specified for final finishing in Subsection 802.19 for Class 5 Tined Bridge Roadway Surface Finish.

CLASS 2 PROTECTIVE SURFACE TREATMENT: Class 2 Protective Surface Treatment shall be applied to the roadway surface including the existing deck surface to be retained, and roadway face and top of parapet rail of the new construction.

DETAIL DRAWINGS:	DRAWING NUMBER
Stage Construction	57744-57747
End Bents	57748-57750
Intermediate Bents	57751-57756
Elastomeric Bearings	57757
Widening Details	57758-57774
Type Special I Approach Slab	57775-57776
Type Special I Approach Gutters	57777

THE PROPOSED WORK CONSISTS OF: Widening the existing bridge, modifying the existing end bents, constructing new intermediate bents to the median side of existing bents, removing and replacing portions of the concrete deck, removing and replacing portions of the existing concrete riprap and dumped riprap, and replacing the joint seals. For additional requirements in conducting the work, see Section 821.

EXISTING BRIDGE: The Existing Bridge Nos. A&B5960 are approximately 42.83' wide and 401.1' long and consist of a 143' continuous prestressed concrete girder and 256' continuous prestressed concrete girder unit, multi-column intermediate bents on spread footings and pile caps, and steel pile end bents. Plans of the existing structure may be obtained upon request to the Construction Contract Procurement Section of the Program Management Division.

VERIFICATION: Except as noted, components of the existing bridge are to be retained and joined to proposed work. Information and dimensions shown are based on existing bridge plans. The Contractor is to adhere strictly to requirements for verification of the geometry of the existing bridge and its relationship to the proposed work described in Subsection 821.02 and make necessary adjustments to fit the proposed work to the existing structure. Payment for this work shall be considered subsidiary to the pay item "Modification of Existing Bridge Structure (Br. No. A5960)" and "Modification of Existing Bridge Structure (Br. No. B5960)".

REMOVAL AND SALVAGE: All material removed from the existing bridge under Item 821 shall be disposed of according to Section 205. All material removed from the existing bridge shall become the property of the Contractor.

MAINTENANCE OF TRAFFIC: See Roadway Plans and Special Provisions for more information.

BORING LEGEND

A. Stiff to very stiff brown, tan and reddish brown silty CLAY with chert fragments and cobbles - fill
B. Very stiff reddish brown CLAY with chert fragments, seams and layers and silty clay seams
C. Hard light gray LIMESTONE
D. Stiff reddish brown silty CLAY with chert fragments - fill
E. Stiff brown silty CLAY with chert fragments
F. Low hardness tan highly weathered CHERT, highly fractured with interbedded reddish brown clay seams and layers
G. Hard white and gray LIMESTONE with chert nodules and inclusions
H. Soft reddish brown silty CLAY with chert fragments and clay seams - fill
I. Firm dark gray silty CLAY with chert fragments
J. Very soft reddish brown CLAY
K. Hard dark gray LIMESTONE with chert nodules and inclusions
L. Stiff to very stiff reddish brown silty CLAY with chert fragments - fill
M. Very stiff brown and reddish brown silty CLAY with chert framents, seams and layers
N. Moderately hard to hard light gray LIMESTONE
O. Stiff reddish brown and brown silty CLAY with chert fragments - fill
P. Very stiff reddish brown silty CLAY with chert fragments
Q. Hard light gray LIMESTONE with chert nodules and inclusions
R. Stiff brown silty CLAY with chert fragments - fill
S. Very stiff reddish brown CLAY with chert fragments and silty clay seams and layers
T. Moderately hard to hard light gray LIMESTONE with chert nodules and inclusions
U. Moderately hard light gray LIMESTONE
V. Firm brown silty CLAY with chert fragments
W. Moderately hard to hard light gray LIMESTONE with occasional chert nodules and inclusions
X. Soft red CLAY with chert fragments
Y. Soft to firm red CLAY
Z. Hard gray LIMESTONE

STATE OF ARKANSAS
REGISTERED PROFESSIONAL ENGINEER
No. 11856
CHARLES A. WIPF
03/08/16

SHEET 3 OF 3

LAYOUT OF BRIDGES 'A & B' OVER NEW HOPE ROAD & BLOSSOM WAY CREEK
HWY. 264 - NEW HOPE RD. (WIDENING) (S)
BENTON COUNTY
ROUTE 49 SEC. 29
ARKANSAS STATE HIGHWAY COMMISSION
LITTLE ROCK, ARK.

DRAWN BY:	BWC	DATE:	12-20-13	FILENAME:	bca090lb3_12.dgn
CHECKED BY:	CAW	DATE:	01-15-14	SCALE:	1" = 20'
DESIGNED BY:	KJC	DATE:	12-17-13		

BRIDGE NO. A&B5960 DRAWING NO. 57743

USER: bc5100
DESIGN FILE: G:\3106100.264toNhope\TRANSP\dgn\bridge\bca090lb3_12.dgn
PLOTTED: 3/8/2016 09:40 SCALE: 40:1

Crafton, Tull & Associates Inc.	DATE REVISED	DATE FILMED	DATE REVISED	DATE FILMED	FED.RD. DIST.NO.	STATE	FED.AID PROJ.NO.	SHEET NO.	TOTAL SHEETS
					6	ARK.			
					JOB NO.		CA0901	197	452
					(1) A&B5960		STAGE CONST.		57744

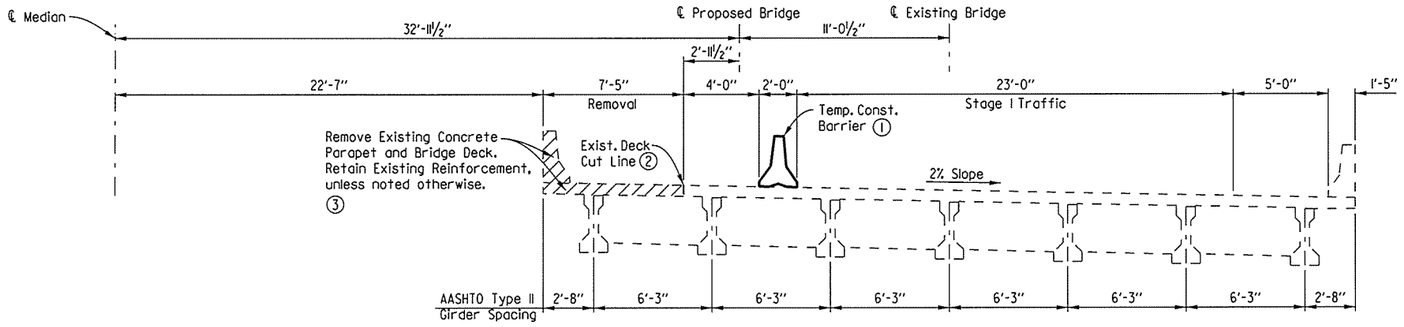

EXISTING
(Looking Ahead)
(Bridge B shown, Bridge A opposite hand)

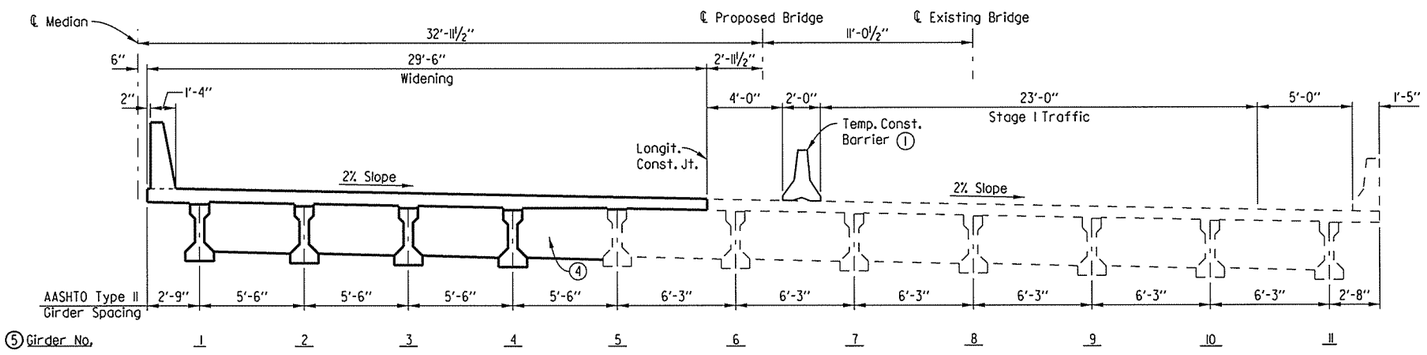

PROPOSED WIDENING
(Looking Ahead)
(Bridge B shown, Bridge A opposite hand)

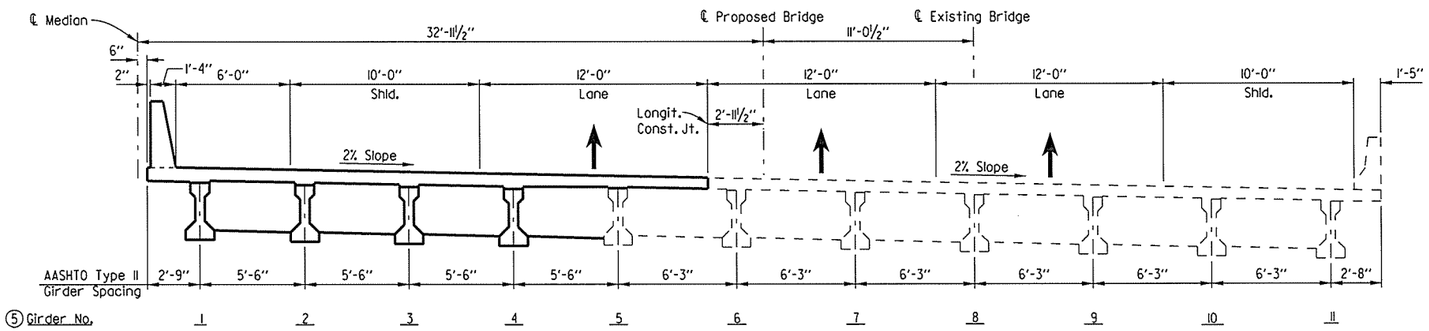

CONSTRUCTION COMPLETE
(Looking Ahead)
(Bridge B shown, Bridge A opposite hand)

Notes:

(1) For Details of Temporary Precast Barrier, See Std. Dwg. No. TC-4. (Do not connect to deck).

(2) Partial Saw Cut Depth. See Section 821.

(3) Care shall be exercised during the removal of the existing deck to ensure that the girders, diaphragms, and reinforcement are not damaged. Damaged items that are not salvageable as determined by the Engineer, shall be replaced by the contractor at no additional payment. See Detail Y on Dwg. No. 57758 for more information.

(4) Install new diaphragms prior to deck pour.

(5) The girder numbers have been renumbered from the original plans to provide consistency to the plan details.

The Contractor may propose a different sequence of construction to the Engineer for approval.

Note:

Details related to Maintence of Traffic are shown on Bridge Plans for Information only. For Maintence of Traffic Plans and addiditional information, See Roadway Plans.

STATE OF ARKANSAS
REGISTERED PROFESSIONAL ENGINEER
No. 11856
CHARLES A. WIPF
03/08/16

SHEET 1 OF 4

DETAILS OF STAGE CONSTRUCTION
BRIDGES 'A & B' OVER NEW HOPE RD. & BLOSSOM WAY CREEK (143' UNIT)
HWY. 264 - NEW HOPE RD. (WIDENING) (S)
BENTON COUNTY
ROUTE 49 SEC. 29
ARKANSAS STATE HIGHWAY COMMISSION
LITTLE ROCK, ARK.

DRAWN BY:	BWC	DATE:	11-08-13	FILENAME:	bca090tb3.13.dgn
CHECKED BY:	CAW	DATE:	01-15-14	SCALE:	¼" = 1'-0"
DESIGNED BY:	KJC	DATE:	10-30-13		

BRIDGE NO. A&B5960 DRAWING NO. 57744

USER: bc5100
DESIGN FILE: G:\13106100_264toNHope\TRANSP\dgn\bridge\bca090tb3_13.dgn
PLOTTED: 3/8/2016 09:40 SCALE: 8:1

Crafton, Tull & Associates Inc.	DATE REVISED	DATE FILMED	DATE REVISED	DATE FILMED	FED.RD. DIST.NO.	STATE	FED.AID PROJ.NO.	SHEET NO.	TOTAL SHEETS
					6	ARK.			
					JOB NO.		CA0901	198	452
					(1) A&B5960		STAGE CONST.		57745

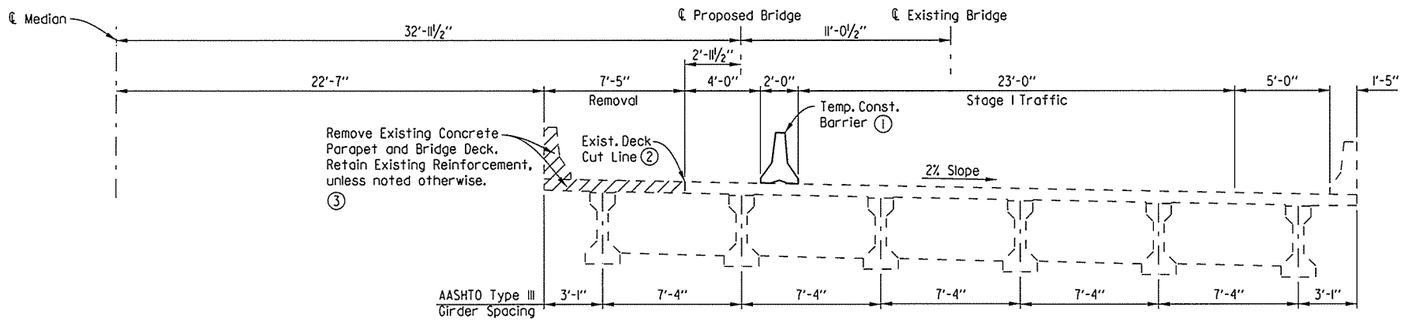

EXISTING
(Looking Ahead)
(Bridge B shown, Bridge A opposite hand)

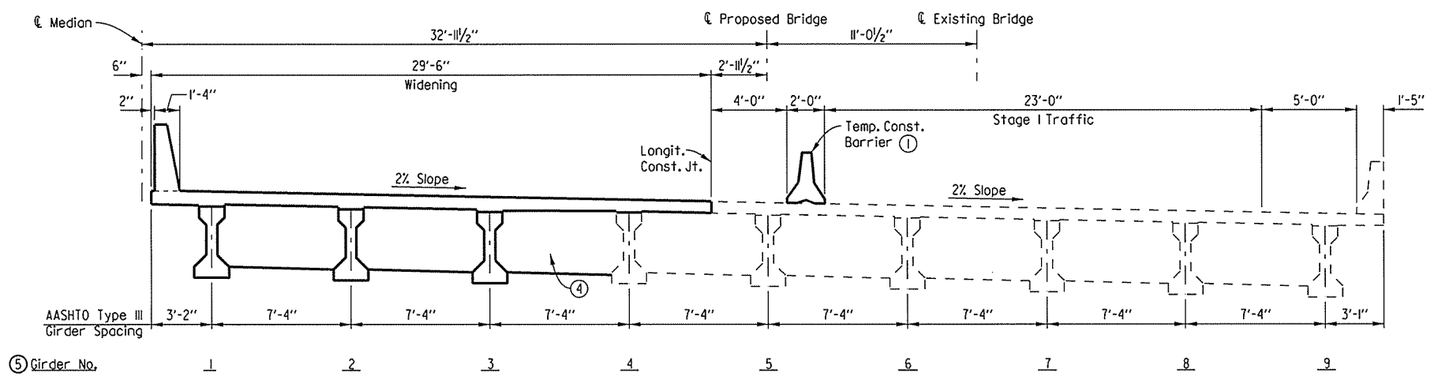

PROPOSED WIDENING
(Looking Ahead)
(Bridge B shown, Bridge A opposite hand)

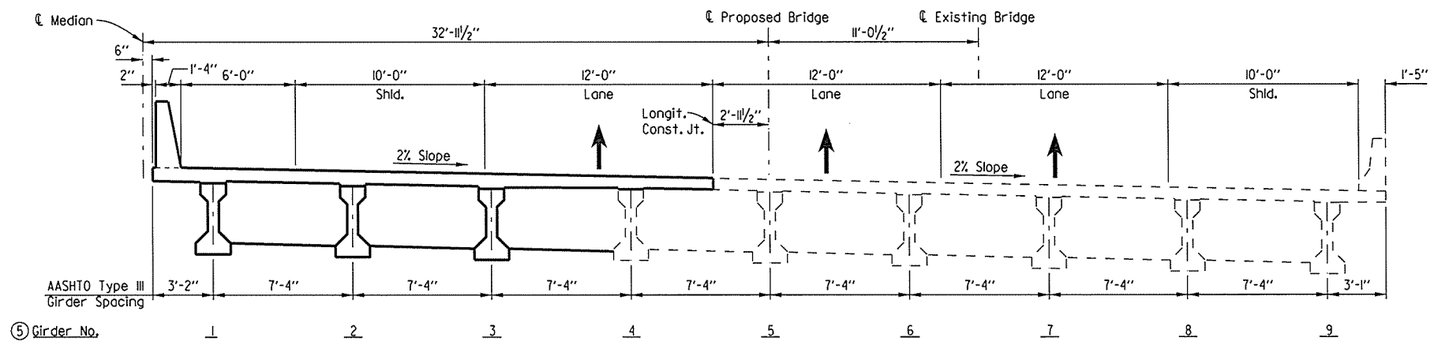

CONSTRUCTION COMPLETE
(Looking Ahead)
(Bridge B shown, Bridge A opposite hand)

Notes:

(1) For Details of Temporary Precast Barrier, See Std. Dwg. No. TC-4. (Do not connect to deck).

(2) Partial Saw Cut Depth. See Section 821.

(3) Care shall be exercised during the removal of the existing deck to ensure that the girders, diaphragms, and reinforcement are not damaged. Damaged items that are not salvageable as determined by the Engineer, shall be replaced by the contractor at no additional payment. See Detail Y on Dwg. No. 57768 for more information.

(4) Install new diaphragms prior to deck pour.

(5) The girder numbers have been renumbered from the original plans to provide consistency to the plan details.

The contractor may propose a different sequence of construction to the Engineer for approval.

Note:

Details related to Maintence of Traffic are shown on Bridge Plans for Information only. For Maintence of Traffic Plans and addidtional information, See Roadway Plans.

STATE OF ARKANSAS
REGISTERED PROFESSIONAL ENGINEER
No. 11856
CHARLES A. WIPF
03/09/16

SHEET 2 OF 4

DETAILS OF STAGE CONSTRUCTION
BRIDGES 'A & B' OVER NEW HOPE RD. & BLOSSOM WAY CREEK (256' UNIT)
HWY. 264 - NEW HOPE RD. (WIDENING) (S)
BENTON COUNTY
ROUTE 49 SEC. 29
ARKANSAS STATE HIGHWAY COMMISSION
LITTLE ROCK, ARK.

DRAWN BY:	BWC	DATE:	11-08-13	FILENAME:	bca0901b3_14.dgn
CHECKED BY:	CAW	DATE:	01-15-14	SCALE:	1/4" = 1'-0"
DESIGNED BY:	KJC	DATE:	10-30-13		

BRIDGE NO. A&B5960 DRAWING NO. 57745

USER: bc5100
DESIGN FILE: G:\31061100.264toNHope\TRANSP\dgn\bridge\bca0901b3_14.dgn
PLOTTED: 3/8/2016 09:40 SCALE: 8:1

Crafton, Tull & Associates Inc.

DATE REVISED	DATE FILMED	DATE REVISED	DATE FILMED

FED.RD. DIST.NO.	STATE	FED.AID PROJ.NO.	SHEET NO.	TOTAL SHEETS
6	ARK.			
JOB NO.		CA0901	199	452
(1) A&B5960		STAGE CONST.		57746

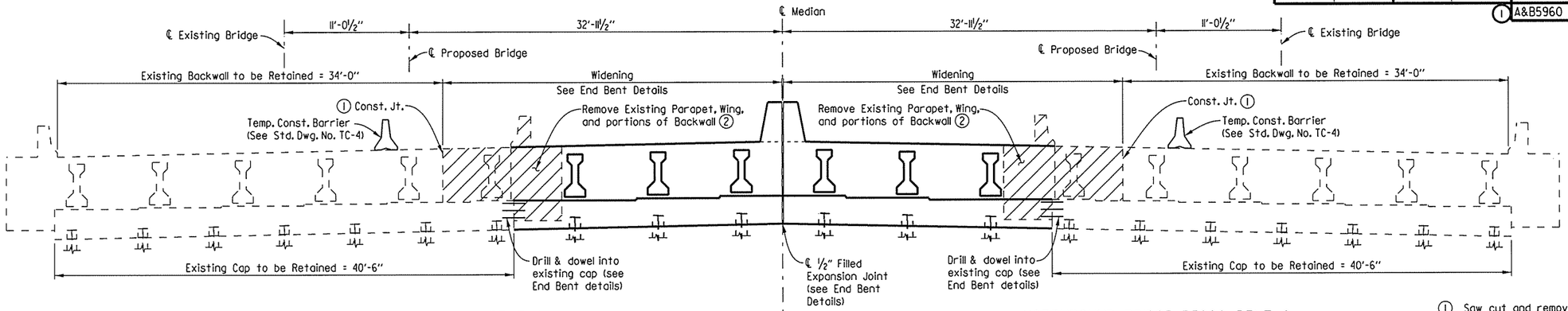

SOUTHBOUND BRIDGE A5960 BENT 8

Looking Ahead
Note: Dimensions along ℄ Bent, U.N.O.
Bent 1 Similar

NORTHBOUND BRIDGE B5960 BENT 8

Looking Ahead
Note: Dimensions along ℄ Bent, U.N.O.
Bent 1 Similar

(1) Saw cut and remove wing and portions of existing backwall.

(2) Clean & retain portions of existing reinforcement. See End Bent Details.

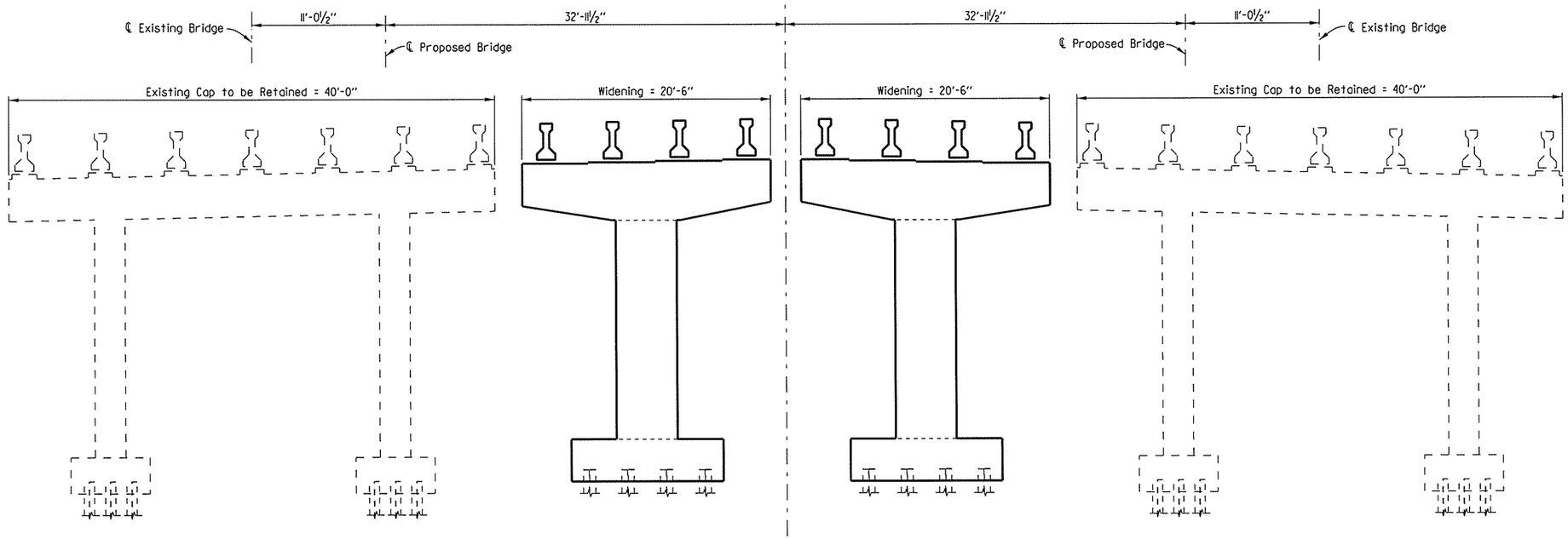

SOUTHBOUND BRIDGE A5960 INT. BTS. 2 & 3

Looking Ahead
Note: Dimensions along ℄ Bent, U.N.O.

NORTHBOUND BRIDGE B5960 INT. BTS. 2 & 3

Looking Ahead
Note: Dimensions along ℄ Bent, U.N.O.

Unless otherwise noted all dimensions shown are along ℄ Bent.

STATE OF ARKANSAS
REGISTERED PROFESSIONAL ENGINEER
No. 11856
CHARLES A. WIPF
03/08/16

SHEET 3 OF 4

DETAILS OF STAGE CONSTRUCTION
BRIDGES 'A & B' OVER NEW HOPE RD. & BLOSSOM WAY CREEK
HWY. 264 - NEW HOPE RD. (WIDENING) (S)
BENTON COUNTY
ROUTE 49 SEC. 29
ARKANSAS STATE HIGHWAY COMMISSION
LITTLE ROCK, ARK.

DRAWN BY:	BWC	DATE:	12-20-13	FILENAME:	bca090lb3_15.dgn
CHECKED BY:	CAW	DATE:	01-15-14	SCALE:	⅛" = 1'-0"
DESIGNED BY:	KJC	DATE:	10-30-13		

BRIDGE NO. A&B5960 DRAWING NO. 57746

USER: bc5100
DESIGN FILE: G:\3106100_264toNHope\TRANSP\dgn\bridge\bca090lb3_15.dgn
PLOTTED: 3/8/2016 09:40 SCALE: 10.666667:1

Crafton, Tull & Associates Inc.

DATE REVISED	DATE FILMED	DATE REVISED	DATE FILMED

FED.RD. DIST.NO.	STATE	FED.AID PROJ.NO.	SHEET NO.	TOTAL SHEETS
6	ARK.			
JOB NO.		CA0901	200	452
1 A&B5960		STAGE CONST.		57747

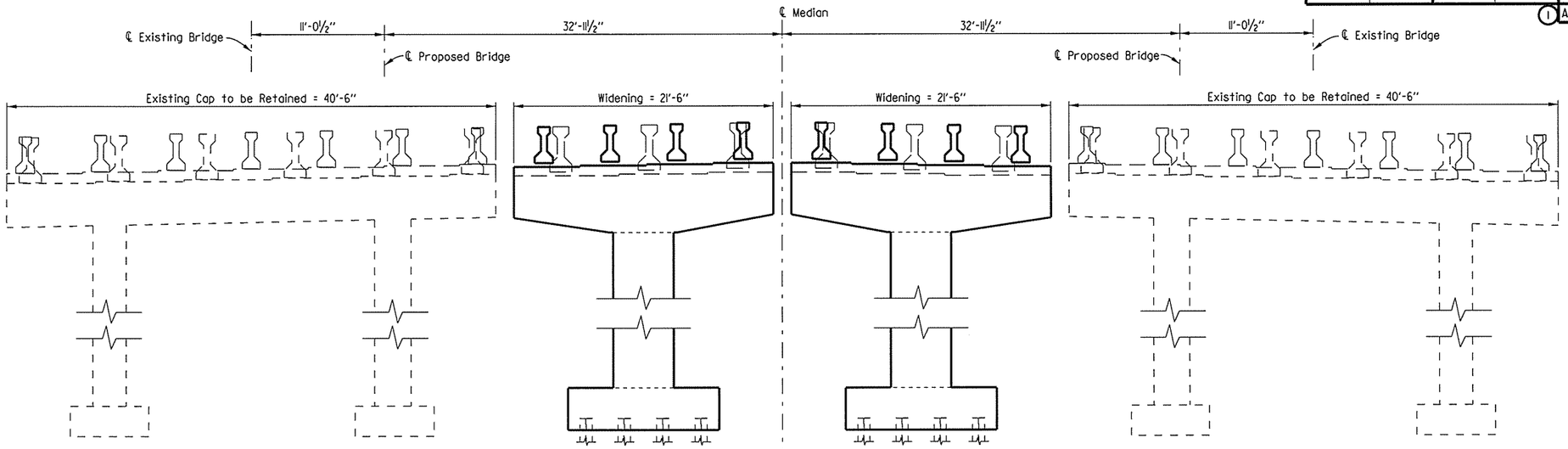

SOUTHBOUND BRIDGE A5960 INT. BT. 4
Looking Ahead
Note: Dimensions along ℄ Bent, U.N.O.

NORTHBOUND BRIDGE B5960 INT. BT. 4
Looking Ahead
Note: Dimensions along ℄ Bent, U.N.O.

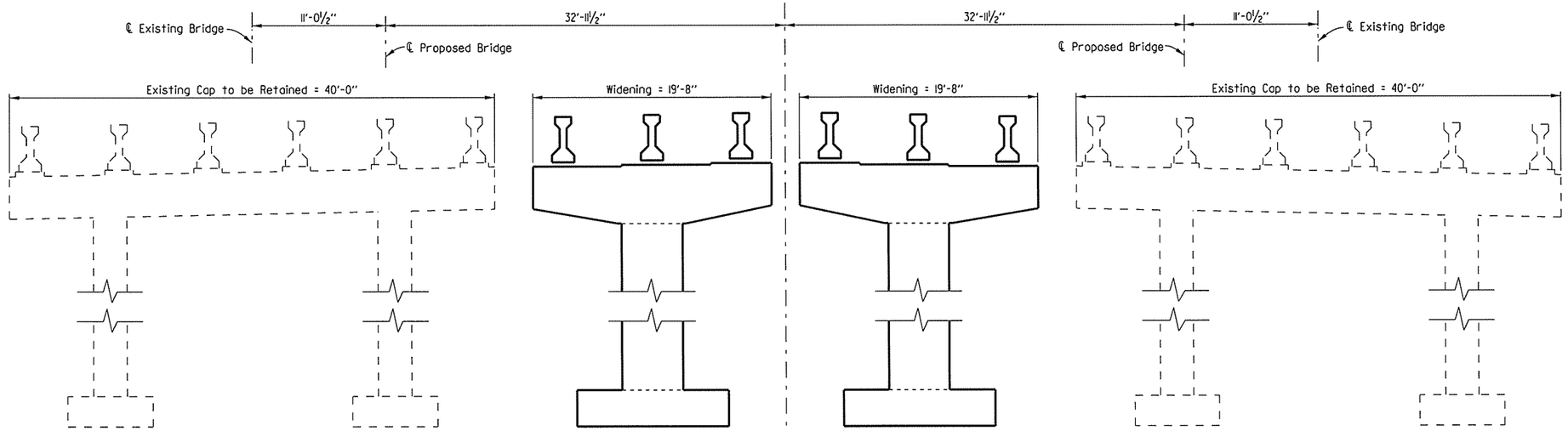

SOUTHBOUND BRIDGE A5960 INT. BTS. 5, 6 & 7
Looking Ahead
Note: Dimensions along ℄ Bent, U.N.O.

NORTHBOUND BRIDGE B5960 INT. BTS. 5, 6 & 7
Looking Ahead
Note: Dimensions along ℄ Bent, U.N.O.

STATE OF ARKANSAS
REGISTERED PROFESSIONAL ENGINEER
No. 11856
CHARLES A. WIPF
03/04/16

SHEET 4 OF 4

DETAILS OF STAGE CONSTRUCTION
BRIDGES 'A & B' OVER NEW HOPE RD. &
BLOSSOM WAY CREEK
HWY. 264 - NEW HOPE RD. (WIDENING) (S)
BENTON COUNTY
ROUTE 49 SEC. 29
ARKANSAS STATE HIGHWAY COMMISSION
LITTLE ROCK, ARK.

DRAWN BY: BWC DATE: 12-20-13 FILENAME: bca0901b3_16.dgn
CHECKED BY: CAW DATE: 01-15-14 SCALE: ⅛" = 1'-0"
DESIGNED BY: KJC DATE: 10-30-13
BRIDGE NO. A&B5960 DRAWING NO. 57747

USER: bc5100
DESIGN FILE: G:\3106100_264toNHope\TRANSP\dgn\bridge\bca0901b3_16.dgn
PLOTTED: 3/8/2016 09:40 SCALE: 10.666667:1

Crafton, Tull & Associates Inc.	DATE REVISED	DATE FILMED	DATE REVISED	DATE FILMED	FED.RD. DIST.NO.	STATE	FED.AID PROJ.NO.	SHEET NO.	TOTAL SHEETS
					6	ARK.			
					JOB NO.		CA0901	201	452
					(1) A&B5960		END BENT 1		57748

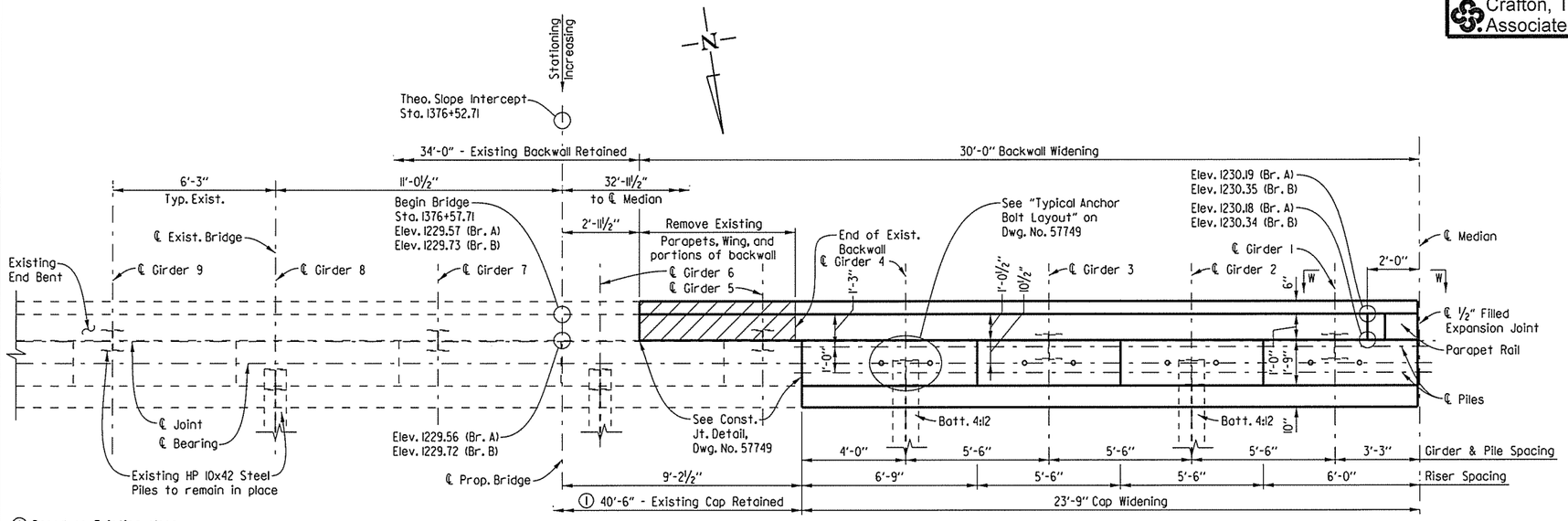

PLAN

(Bridge B Shown, Bridge A, opposite hand)
Scale: ⅜" = 1'-0"

(1) Based on Existing plans. The Contractor shall verify dimensions in the field.

Note:
Class 2 Protective Surface Treatment shall be applied to the top of the backwall including the existing surface to be retained, and roadway face and top of parapet of the new construction.

Note:
For Details of Elastomeric Bearings, See Dwg. No. 57757
For additional details and General Notes, See Dwg. No. 57749

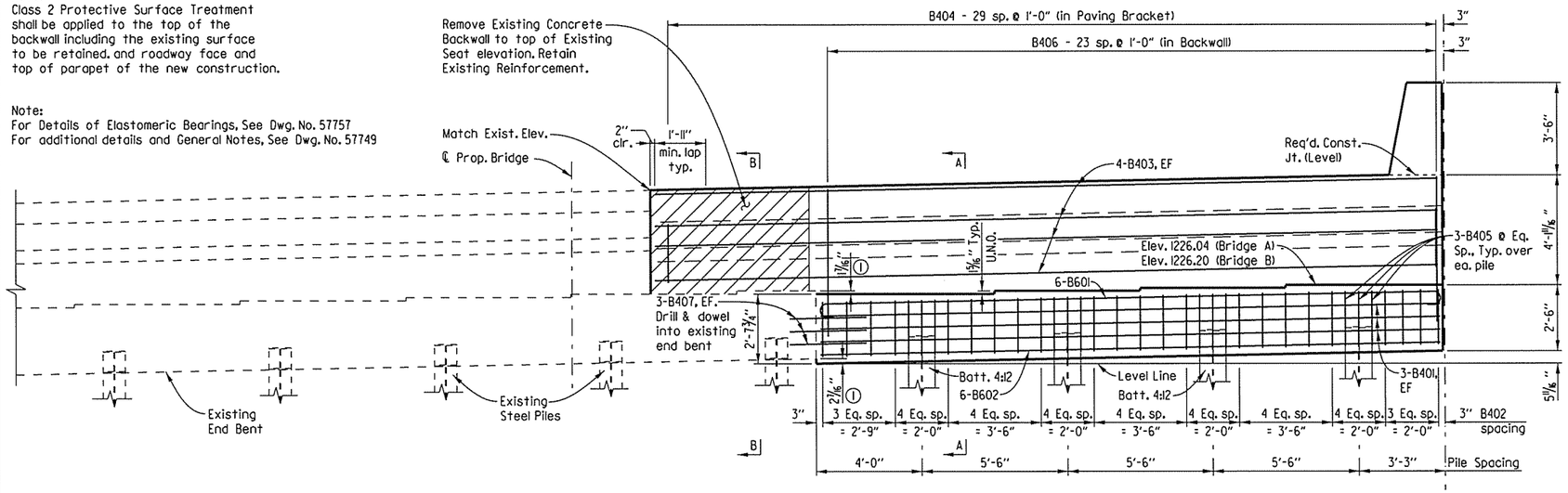

ELEVATION

(Bridge B Shown, Bridge A, opposite hand)
(Looking Back)
Scale: ⅜" = 1'-0"

BAR LIST - END BENT IB SHOWN (END BENT IA SIMILAR)

MARK	NO. REQ'D.	LENGTH	"A"	"B"	P.D.
B401	6	23'-4"			Str.
B402	23	10'-3"			2"
B403	8	29'-8"			Str.
B404	30	3'-11"			2"
B405	12	6'-6"			2"
B406	24	10'-8"	5'-1"		2"
B407	6	2'-11"			Str.
B601	6	24'-9"	23'-5"	6"	4½"
B602	6	23'-5"			Str.
W401	10	10"			Str.
W501	3	4'-8"			Str.
W502	3	4'-8"			3¾"

BENDING DIAGRAMS

Dimensions are out to out of bars.

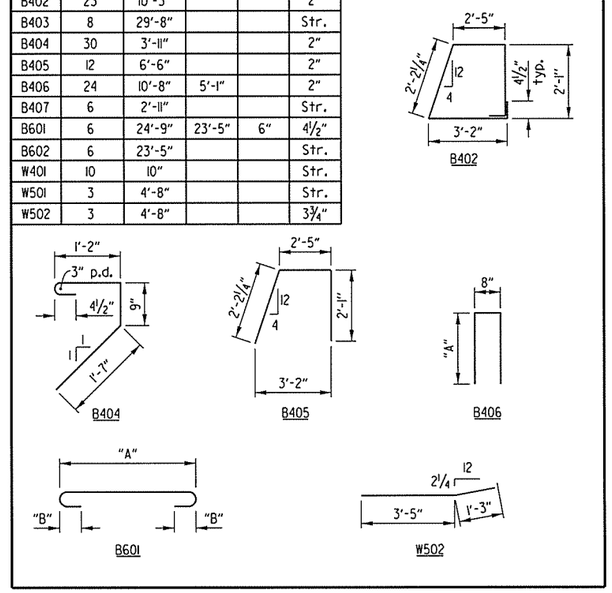

USER: bc5100
DESIGN FILE: G:\31106100_264toNhope\TRANSP\dgn\bridge\bca0901b3_bil.dgn
PLOTTED: 3/8/2016 09:40 SCALE: 5.3333331

STATE OF ARKANSAS REGISTERED PROFESSIONAL ENGINEER No. 11856 CHARLES A. WIPF
03/08/16

DETAILS OF END BENT 1 - BRIDGES A & B
ROUTE 49 SEC. 29
ARKANSAS STATE HIGHWAY COMMISSION
LITTLE ROCK, ARK.

DRAWN BY: BWC DATE: 07-24-15 FILENAME: bca0901b3_bil.dgn
CHECKED BY: CAW DATE: 08-22-15 SCALE: SEE DETAILS
DESIGNED BY: KRM DATE: 06-05-15
BRIDGE NO. A&B5960 DRAWING NO. 57748

Crafton, Tull & Associates Inc.	DATE REVISED	DATE FILMED	DATE REVISED	DATE FILMED	FED.RD. DIST.NO.	STATE	FED.AID PROJ.NO.	SHEET NO.	TOTAL SHEETS
					6	ARK.			
					JOB NO.		CA0901	202	452
					(1) A&B5960		END BENT DETAILS		57749

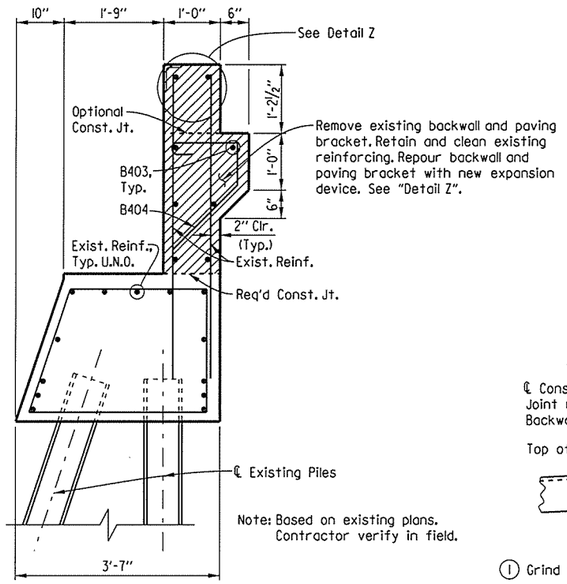

Note: Based on existing plans. Contractor verify in field.

SECTION B-B
Scale: ¾" = 1'-0"

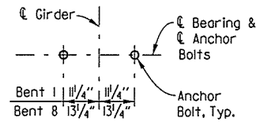

TYPICAL ANCHOR BOLT LAYOUT
Scale: ½" = 1'-0"

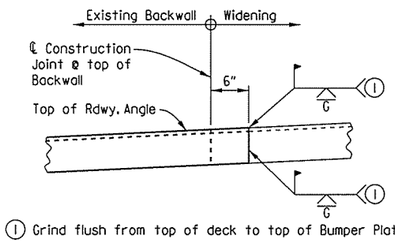

(1) Grind flush from top of deck to top of Bumper Plate.

DETAIL OF WELD LOCATION FOR JOINT ARMOR
(Looking Back - Bridge B Bent 1 Shown. Others similar)
No Scale

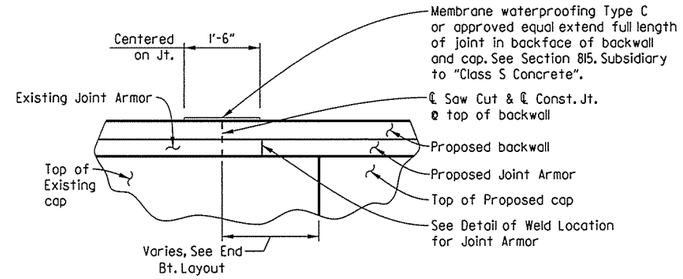

CONSTRUCTION JOINT DETAIL
(Bent 1, Bridge B Shown. Others similar)
No Scale

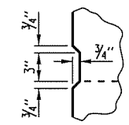

DETAIL X
No Scale

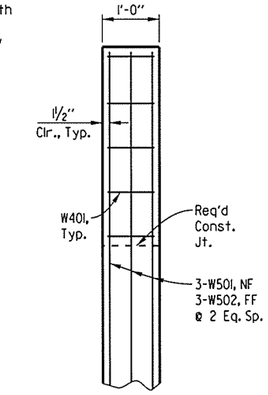

SECTION D-D
No Scale

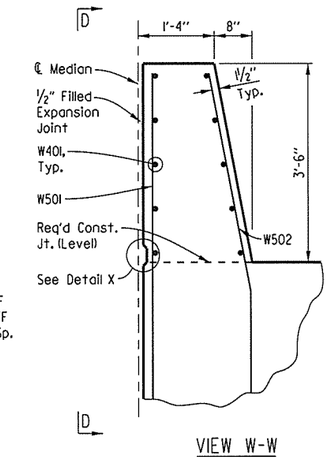

VIEW W-W
No Scale

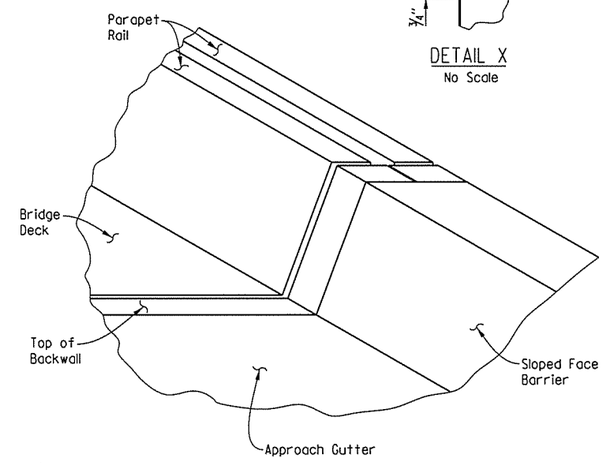

DETAIL OF BARRIER AT BRIDGE END
No Scale

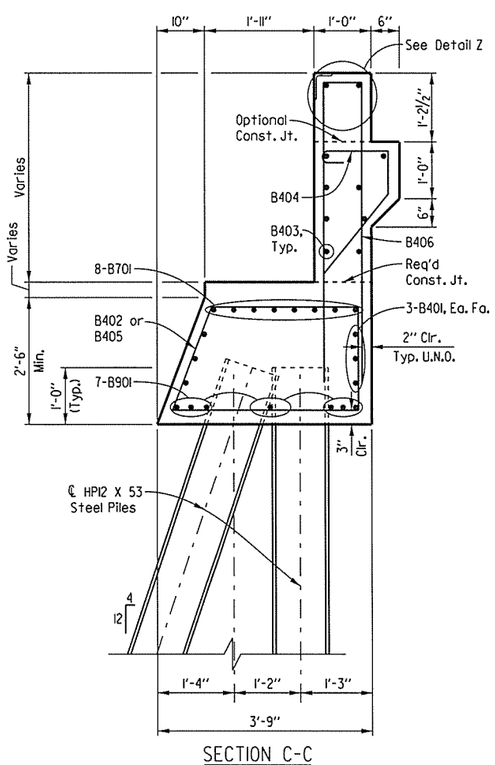

SECTION C-C
(Bent 8)
Scale: ¾" = 1'-0"

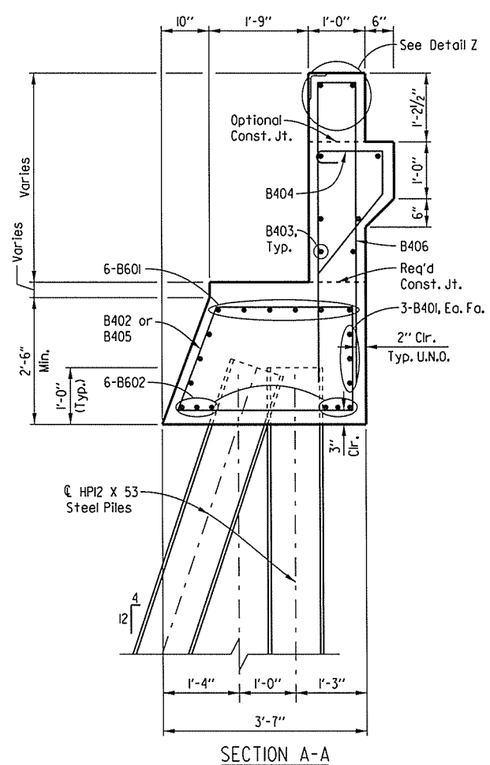

SECTION A-A
(Bent 1)
Scale: ¾" = 1'-0"

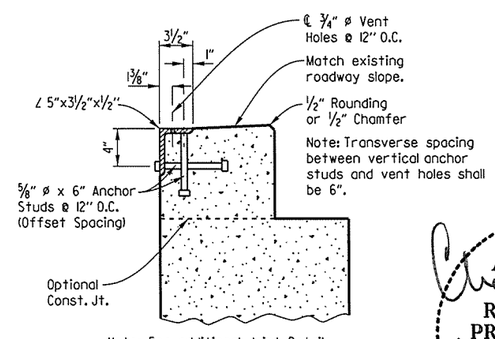

Note: For additional Joint Details, See Dwg. No. 57767

DETAIL Z
No Scale

Note: Concrete shall be hand packed under the joint armor in the backwall.

GENERAL NOTES

Concrete shall be Class 'S' with a minimum 28 day compressive strength of f'c = 3,500 p.s.i. Concrete shall be poured in the dry. All exposed corners shall be chamfered ¾" unless otherwise noted.

All Reinforcing Steel shall be Grade 60 (fy = 60,000 psi) AASHTO M 31 or M 322, Type A with mill test reports.

The backwall shall not be poured before the girders are in place. Backwall may be placed prior to placing the adjacent concrete deck only if the optional backwall construction joint is used. See Detail Z for additional information.

Structural Steel in end bents may be AASHTO M 270, Gr. 36 and shall be included in the bid item "Structural Steel in Girder Spans (M270, Gr. 50)."

Top reinforcing bars in cap shall be properly placed to avoid interference with anchor bolts or sheet metal sleeves.

Drill and grout bars where shown using an approved cement or epoxy system from the OPL. Minimum embedment shall be 12" for cement based grout. Minimum embedment shall be per the manufacturer's recommendations for epoxy based grout.

Work required to remove & dispose portions of the existing bridge, retain and clean existing reinforcing steel, and any required doweling will not be paid for directly but will be considered subsidiary to the item "Modification of Existing Bridge Structure (Br. No. A5960)" and "Modification of Existing Bridge Structure (Br. No. B5960)".

½" Filled Expansion Joint shall comply with Subsection 501.02 (h) Type 2 and will not be paid for directly but will be considered subsidiary to item "Class S Concrete - Bridge".

For additional information, see Layout.

STATE OF ARKANSAS
REGISTERED PROFESSIONAL ENGINEER
No. 11856
CHARLES A. WIPF
03/08/16

DETAILS OF END BENTS 1 & 8 - BRIDGES A & B

ROUTE 49 SEC. 29

ARKANSAS STATE HIGHWAY COMMISSION

LITTLE ROCK, ARK.

DRAWN BY:	BWC	DATE:	09-01-15	FILENAME:	bca0901b3.bl2.dgn
CHECKED BY:	CAW	DATE:	08-22-15	SCALE:	See Details
DESIGNED BY:	KRM	DATE:	06-05-15		

BRIDGE NO. A&B5960 DRAWING NO. 57749

USER: bc5100
DESIGN FILE: G:\13106100.264toNhope\TRANSP\dgn\bridge\bca0901b3.bl2.dgn
PLOTTED: 3/8/2016 09:40 SCALE: 8:1

Crafton, Tull & Associates Inc.

DATE REVISED	DATE FILMED	DATE REVISED	DATE FILMED

FED.RD. DIST.NO.	STATE	FED.AID PROJ.NO.	SHEET NO.	TOTAL SHEETS
6	ARK.			
JOB NO.		CA0901	203	452
(1) A&B5960		END BENT 8		57750

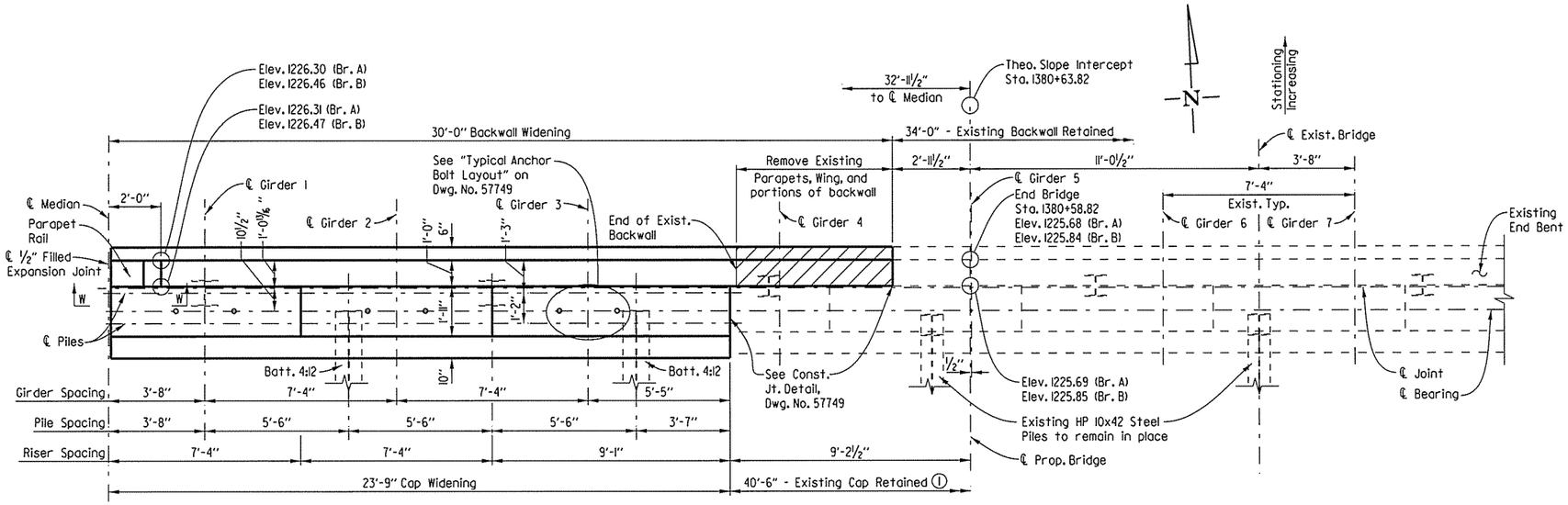

PLAN

Scale: ⅜" = 1'-0"

(1) Based on Existing plans. The Contractor shall verify dimensions in the field.

BAR LIST - END BENT 8B SHOWN (END BENT 8A SIMILAR)

MARK	NO. REQ'D.	LENGTH	"A"	"B"	P.D.
B401	6	23'-4"			Str.
B402	23	10'-7"			2"
B403	10	29'-8"			Str.
B404	30	3'-11"			2"
B405	12	6'-8"			2"
B406	24	10'-8"	5'-1"		2"
B407	6	2'-11"			Str.
B701	8	25'-1"	23'-5"	7"	5¼"
B901	7	23'-5"			Str.
W401	10	10"			Str.
W501	3	4'-8"			Str.
W502	3	4'-8"			3¾"

BENDING DIAGRAMS

Dimensions are out to out of bars.

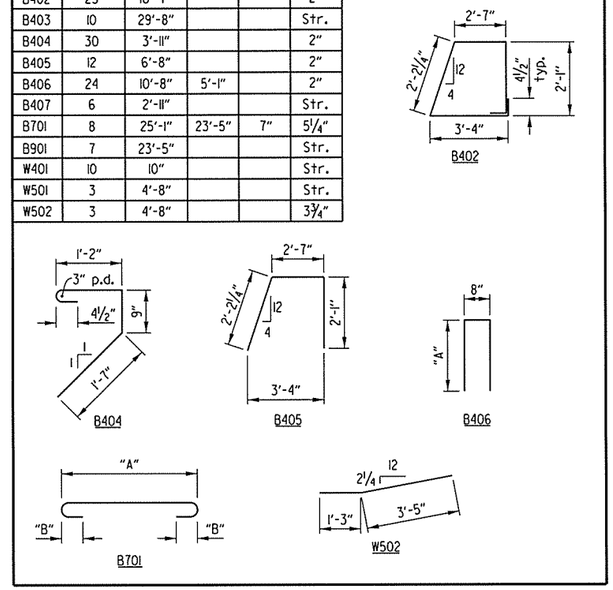

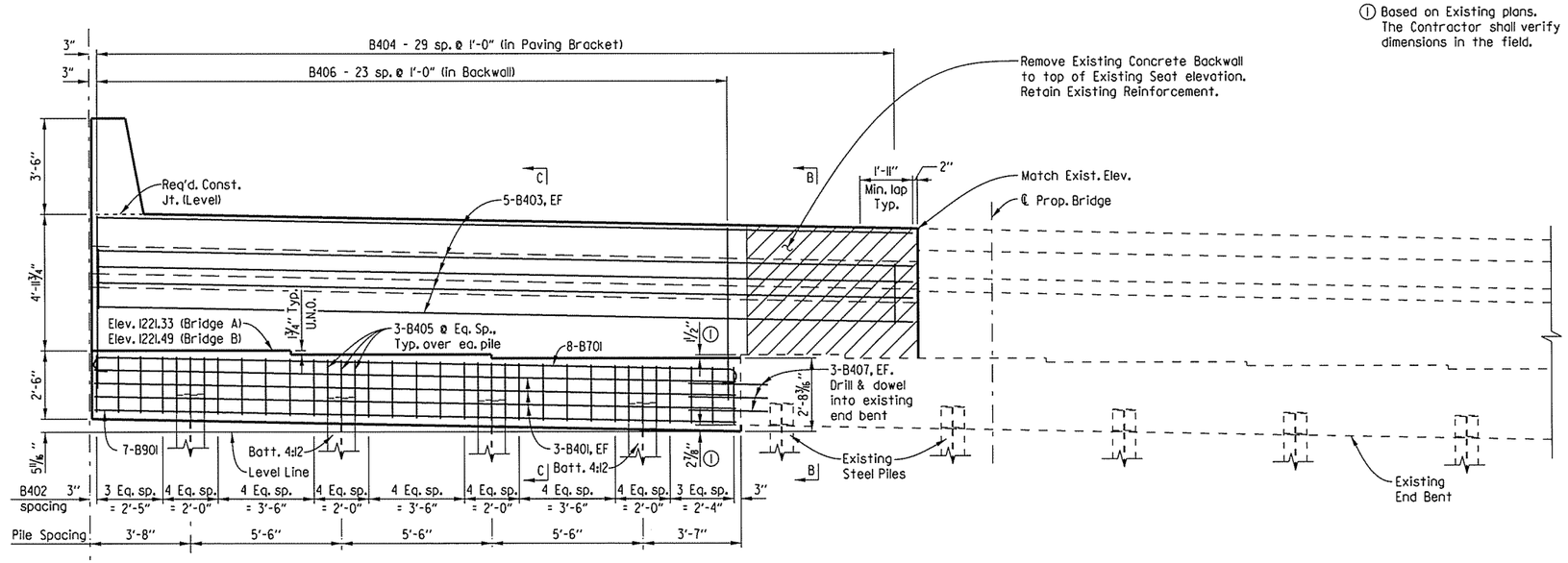

ELEVATION

(Bridge B Shown, Bridge A, opposite hand)
(Looking Ahead)
Scale: ⅜" = 1'-0"

Note:
Class 2 Protective Surface Treatment shall be applied to the top of the backwall including the existing surface to be retained. and roadway face and top of parapet of the new construction.

Note:
For Details of Elastomeric Bearings, See Dwg. No. 57757
For additional details and General Notes, See Dwg. No. 57749

STATE OF ARKANSAS
REGISTERED PROFESSIONAL ENGINEER
No. 11856
CHARLES A. WIPF
03/08/16

DETAILS OF END BENT 8 - BRIDGES A & B
ROUTE 49 SEC. 29
ARKANSAS STATE HIGHWAY COMMISSION
LITTLE ROCK, ARK.

DRAWN BY:	BWC	DATE:	07-24-15	FILENAME:	bca0901b3_b8l.dgn
CHECKED BY:	CAW	DATE:	08-22-15	SCALE:	SEE DETAILS
DESIGNED BY:	KRM	DATE:	06-05-15		

BRIDGE NO. A&B5960 DRAWING NO. 57750

USER: bc5100
DESIGN FILE: G:\13106100_264toWhope\TRANSP\dgn\bridge\bca0901b3_b8l.dgn
PLOTTED: 3/8/2016 09:40 SCALE: 5.333333:1

Crafton, Tull & Associates Inc.	DATE REVISED	DATE FILMED	DATE REVISED	DATE FILMED	FED.RD. DIST.NO.	STATE	FED.AID PROJ.NO.	SHEET NO.	TOTAL SHEETS
					6	ARK.			
					JOB NO.		CA0901	204	452
					(1) A&B5960	BENTS 2 & 3 DETAILS			57751

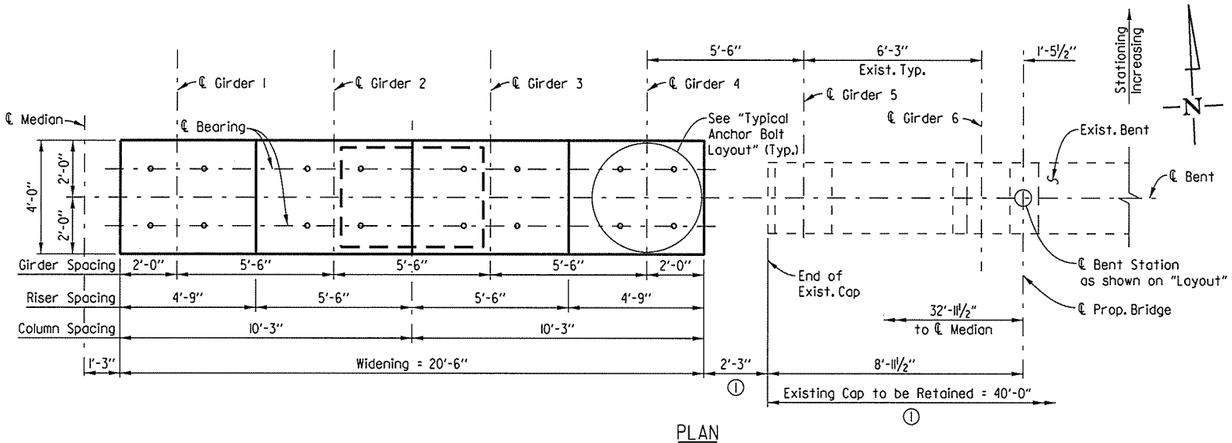

PLAN
Scale: ⅜" = 1'-0"

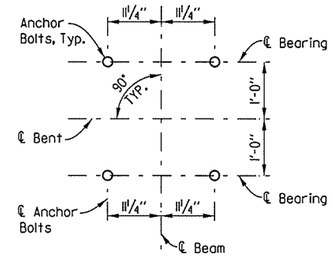

TYPICAL ANCHOR BOLT LAYOUT
Scale: ¾" = 1'-0"

(1) Based on Existing plans. The Contractor shall verify dimensions in the field.

GENERAL NOTES

Concrete shall be Class 'S' with a minimum 28 day compressive strength of f'c = 3,500 p.s.i. Concrete shall be poured in the dry. All exposed corners shall be chamfered ¾" unless otherwise noted.

All Reinforcing Steel shall be Grade 60 (fy = 60,000 psi) AASHTO M 31 or M 322, Type A with mill test reports.

Top reinforcing bars in cap shall be properly placed to avoid interference with anchor bolts or sheet metal sleeves.

For details of Elastomeric Bearings see Dwg. No. 57757

For additional information see Dwg. No. 57752

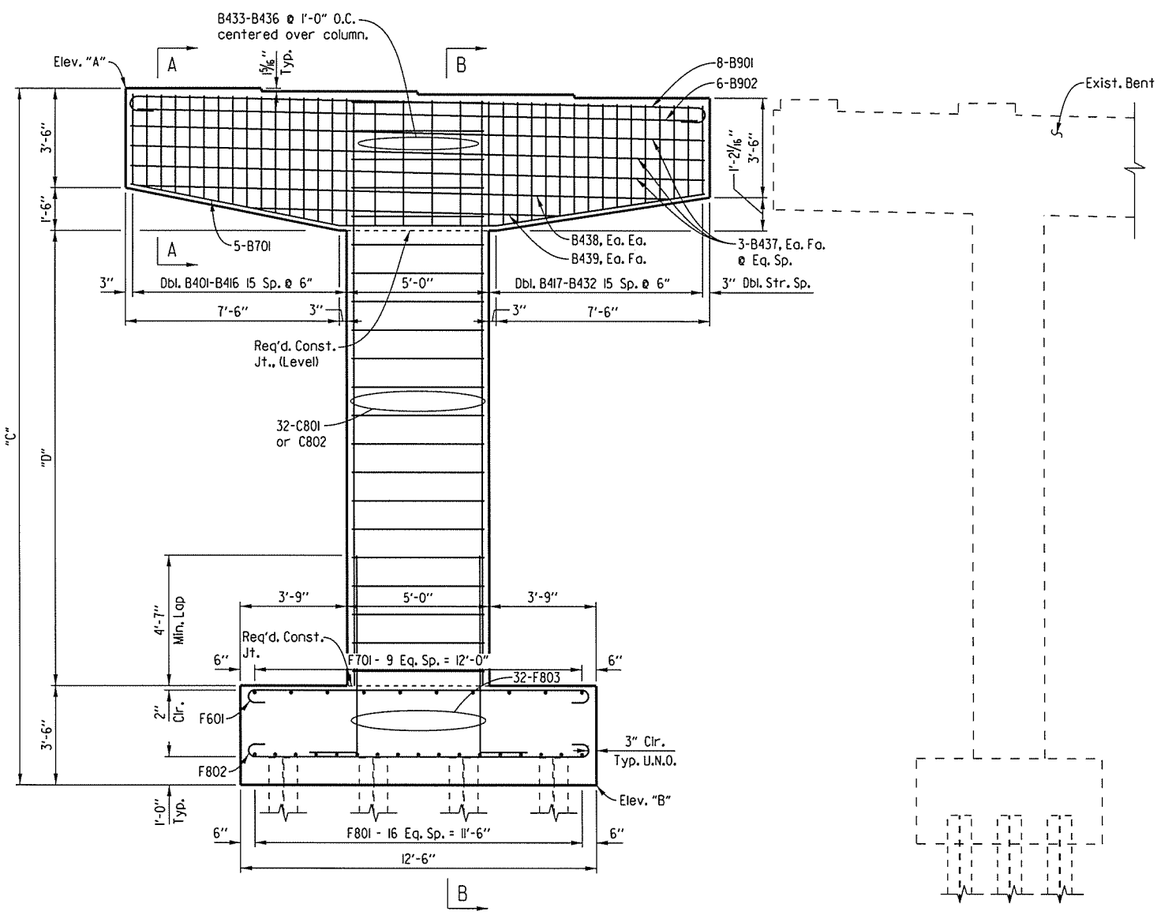

ELEVATION
(Looking Ahead)
(Bridge B Shown, Bridge A, opposite hand)
Scale: ⅜" = 1'-0"

TABLE OF VARIABLES

Bent No.	A	B	C	D
2A	1225.57	1201.07	24'-6"	16'-0"
2B	1225.73	1201.23	24'-6"	16'-0"
3A	1225.01	1202.01	23'-0"	14'-6"
3B	1225.17	1202.17	23'-0"	14'-6"

STATE OF ARKANSAS
REGISTERED PROFESSIONAL ENGINEER
No. 11856
CHARLES A. WIPF
03/08/16

SHEET 1 OF 2
DETAILS OF BENTS 2 & 3 - BRIDGES A & B
ROUTE 49 SEC. 29
ARKANSAS STATE HIGHWAY COMMISSION
LITTLE ROCK, ARK.

DRAWN BY:	BWC	DATE:	07-24-15	FILENAME:	bca0901b3_b2.dgn
CHECKED BY:	CAW	DATE:	08-24-15	SCALE:	SEE DETAILS
DESIGNED BY:	KRM	DATE:	06-05-15		

BRIDGE NO. A&B5960 DRAWING NO. 57751

USER: bc5100
DESIGN FILE: G:\13106100_264toNHope\TRANSP\dgn\bridge\bca0901b3_b2.dgn
PLOTTED: 3/8/2016 09:40 SCALE: 5.3333331

Crafton, Tull & Associates Inc.	DATE REVISED	DATE FILMED	DATE REVISED	DATE FILMED	FED.RD. DIST.NO.	STATE	FED.AID PROJ.NO.	SHEET NO.	TOTAL SHEETS
					6	ARK.			
					JOB NO.		CA0901	205	452

(1) A&B5960 BENTS 2 & 3 DETAILS 57752

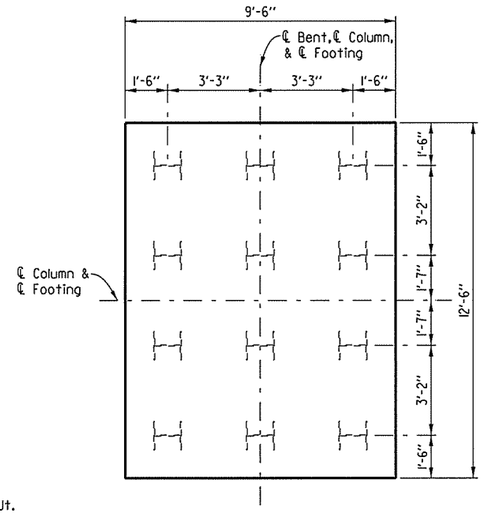

SECTION D-D
Scale: 3/8" = 1'-0"

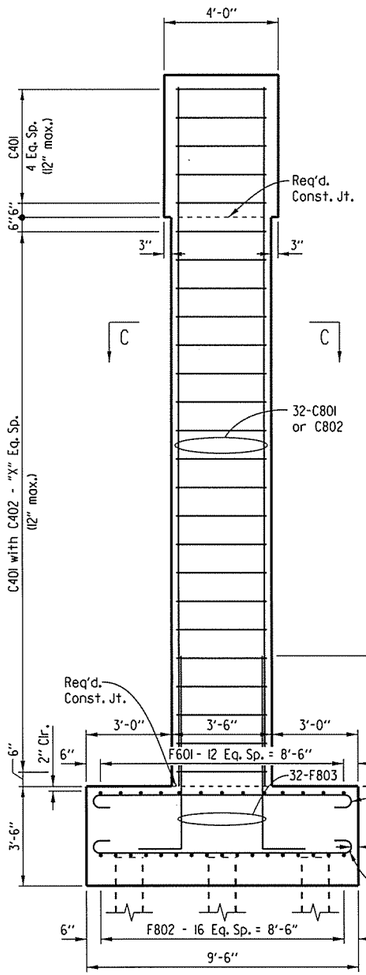

SECTION B-B
Scale: 3/8" = 1'-0"

TABLE OF VARIABLES

Bridge	Bent	"X"
A	2	15
	3	15
B	2	14
	3	14

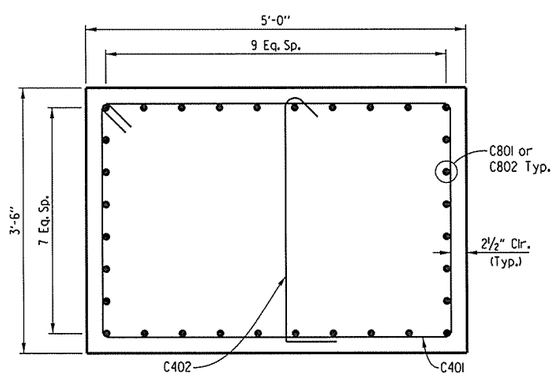

SECTION C-C
Scale: 1" = 1'-0"

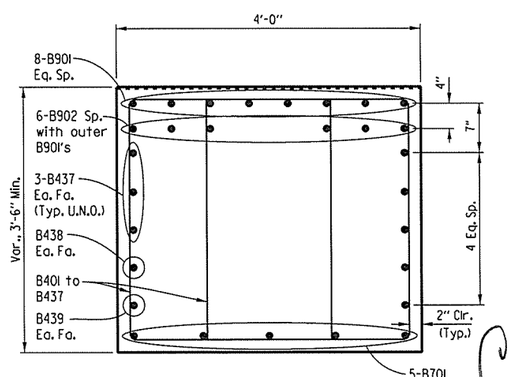

SECTION A-A
Scale: 1" = 1'-0"

BENDING DIAGRAMS

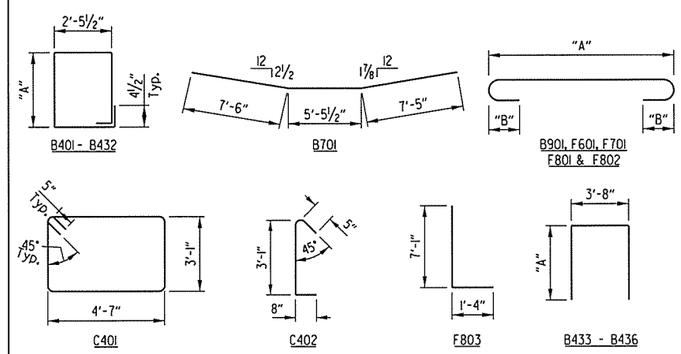

Dimensions are out to out of bars.

BAR LIST

A&B5960 BENT 2

TABLE SHOWS BAR LIST FOR BENT 2A, BENT 2B SIMILAR.

MARK	NO. REQ'D.	LENGTH	"A"	"B"	P.D.
B401 TO B416	2 EA.	VAR. 11'-8" TO 14'-3"	VAR. 3'-2" TO 4'-5¾"		2"
B417 TO B432	2 EA.	VAR. 11'-6" TO 14'-0"	VAR. 3'-1½" TO 4'-4½"		2"
B433 TO B436	1 EA.	VAR. 12'-4" TO 12'-5"	VAR. 4'-4¾" TO 4'-5½"		2"
B437	6	20'-2"			Str.
B438	2	18'-8"			Str.
B439	2	10'-9"			Str.
B701	5	20'-5"			5¼"
B901	8	22'-8"	20'-2"	10"	9"
B902	6	19'-5"			Str.
C401	21	15'-10"			3"
C402	16	4'-0"			3"
C801	32	19'-5"			Str.
F601	13	13'-4"	12'-0"	6"	4½"
F701	10	10'-8"	9'-0"	7"	5¼"
F801	17	10'-10"	9'-0"	8"	6"
F802	17	13'-10"	12'-0"	8"	6"
F803	32	8'-3"			6"

A&B5960 BENT 3

TABLE SHOWS BAR LIST FOR BENT 3A ONLY, BENT 3B SIMILAR.

MARK	NO. REQ'D.	LENGTH	"A"	"B"	P.D.
B401 TO B416	2 EA.	VAR. 11'-8" TO 14'-3"	VAR. 3'-2" TO 4'-5¾"		2"
B417 TO B432	2 EA.	VAR. 11'-6" TO 14'-0"	VAR. 3'-1½" TO 4'-4½"		2"
B433 TO B436	1 EA.	VAR. 12'-4" TO 12'-5"	VAR. 4'-4¾" TO 4'-5½"		2"
B437	6	20'-2"			Str.
B438	2	18'-8"			Str.
B439	2	10'-9"			Str.
B701	5	20'-5"	5'-6"		5¼"
B901	8	22'-8"	20'-2"	10"	9"
B902	6	19'-5"			Str.
C401	20	15'-10"			3"
C402	15	4'-0"			3"
C802	32	18'-6"			Str.
F601	13	13'-4"	12'-0"	6"	4½"
F701	10	10'-8"	9'-0"	7"	5¼"
F801	17	10'-10"	9'-0"	8"	6"
F802	17	13'-10"	12'-0"	8"	6"
F803	32	8'-3"			6"

STATE OF ARKANSAS
REGISTERED PROFESSIONAL ENGINEER
No. 11856
CHARLES A. WIPF
03/08/16

SHEET 2 OF 2
DETAILS OF BENTS 2 & 3 - BRIDGES A & B
ROUTE 49 SEC. 29
ARKANSAS STATE HIGHWAY COMMISSION
LITTLE ROCK, ARK.

DRAWN BY: BWC DATE: 07-24-15 FILENAME: bca090ib3.b3.dgn
CHECKED BY: CAW DATE: 08-24-15 SCALE: SEE DETAILS
DESIGNED BY: KRM DATE: 06-05-15
BRIDGE NO. A&B5960 DRAWING NO. 57752

USER: bc5100
DESIGN FILE: G:\3106100.264toNHope\TRANSPX\dgn\bridge\bca090ib3.b3.dgn
PLOTTED: 3/8/2016 09:40 SCALE: 5.3333333:1

Crafton, Tull & Associates Inc.	DATE REVISED	DATE FILMED	DATE REVISED	DATE FILMED	FED.RD. DIST.NO.	STATE	FED.AID PROJ.NO.	SHEET NO.	TOTAL SHEETS
					6	ARK.			
					JOB NO.		CA0901	206	452
					(1) A&B5960		BENT 4 DETAILS		57753

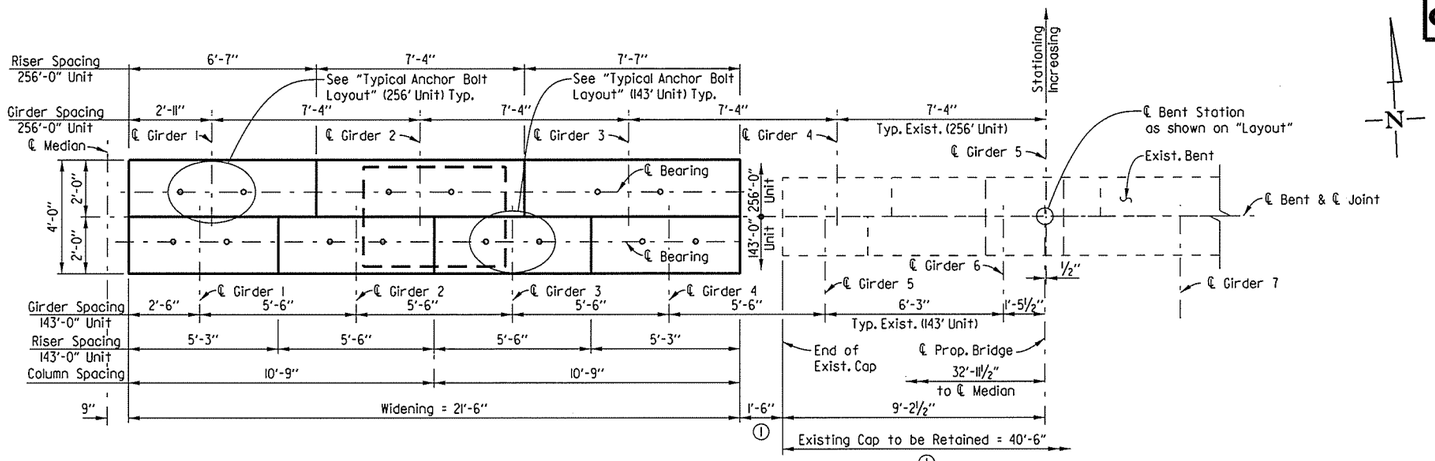

PLAN
Scale: 3/8" = 1'-0"

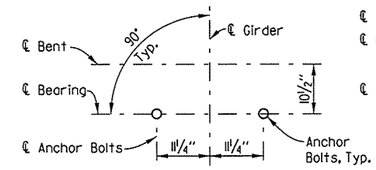

TYPICAL ANCHOR BOLT LAYOUT
(143' Unit)
Scale: 3/4" = 1'-0"

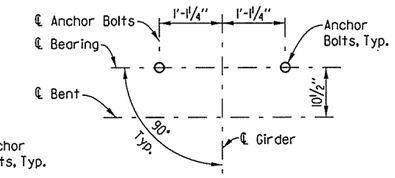

TYPICAL ANCHOR BOLT LAYOUT
(256' Unit)
Scale: 3/4" = 1'-0"

(1) Based on Existing plans. The Contractor shall verify dimensions in the field.

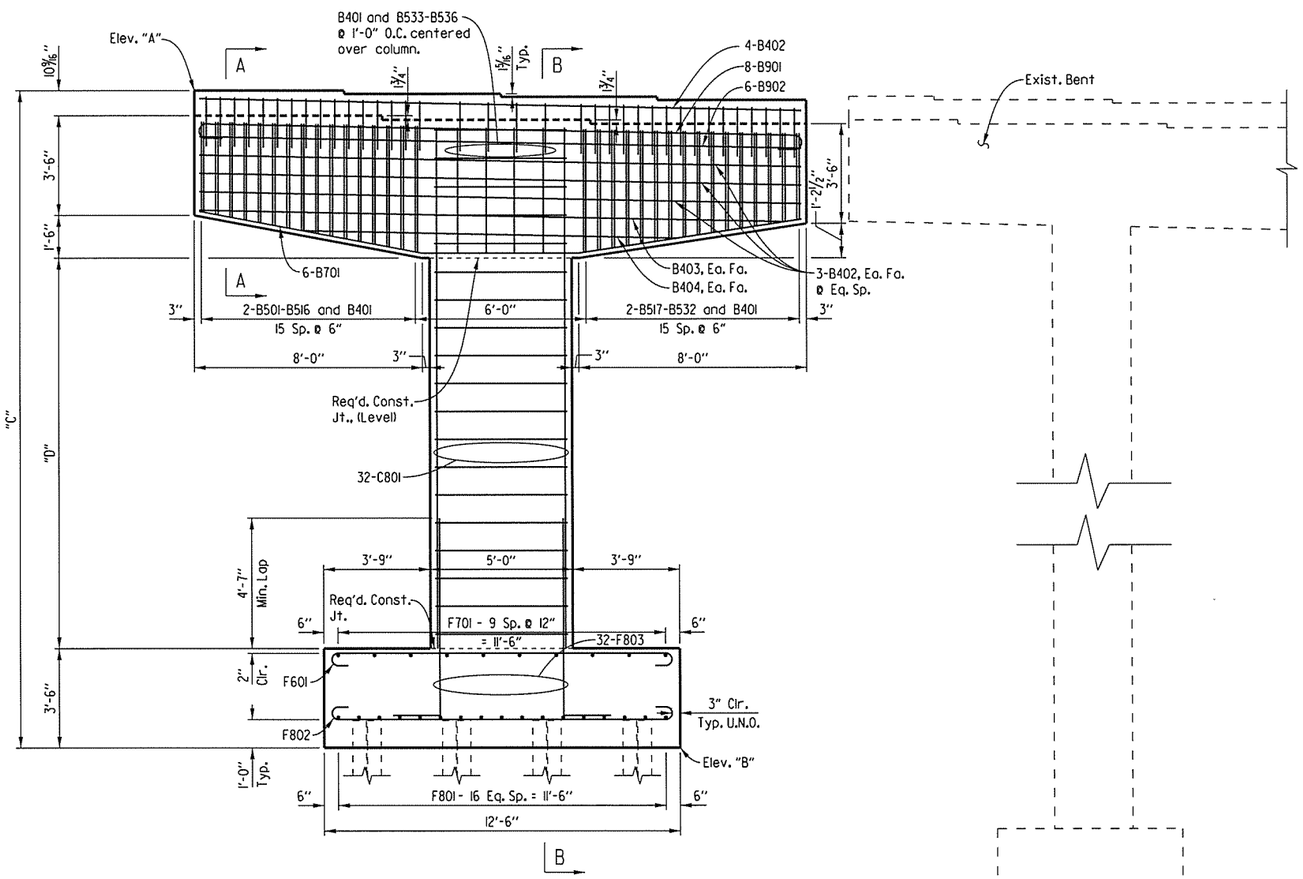

ELEVATION
(Looking Ahead)
(Bridge B Shown, Bridge A opposite hand)
Scale: 3/8" = 1'-0"

TABLE OF VARIABLES

Bent No.	A	B	C	D
4A	1224.67	1201.67	23'-0"	13'-7 7/16"
4B	1224.83	1201.83	23'-0"	13'-7 7/16"

GENERAL NOTES

Concrete shall be Class 'S' with a minimum 28 day compressive strength of f'c = 3,500 p.s.i. Concrete shall be poured in the dry. All exposed corners shall be chamfered 3/4" unless otherwise noted.

All Reinforcing Steel shall be Grade 60 (fy = 60,000 psi) AASHTO M 31 or M 322, Type A with mill test reports.

Top reinforcing bars in cap shall be properly placed to avoid interference with anchor bolts or sheet metal sleeves.

For details of Elastomeric Bearings see Dwg. No. 57757

For additional information see Dwg. No. 57754

STATE OF ARKANSAS
REGISTERED PROFESSIONAL ENGINEER
No. 11856
CHARLES A. WIPF
03/08/16

SHEET 1 OF 2
DETAILS OF BENT 4 - BRIDGES A & B
ROUTE 49 SEC. 29
ARKANSAS STATE HIGHWAY COMMISSION
LITTLE ROCK, ARK.

DRAWN BY: BWC	DATE: 07-24-15	FILENAME: bca0901b3_b4.dgn			
CHECKED BY: CAW	DATE: 08-26-15	SCALE: SEE DETAILS			
DESIGNED BY: KRM	DATE: 06-05-15				

BRIDGE NO. A&B5960 DRAWING NO. 57753

USER: bc5100
DESIGN FILE: G:\13106100_2641ofNHope\TRANSP\dgn\bridge\bca0901b3_b4.dgn
PLOTTED: 3/8/2016 09:40 SCALE: 5.333333:1

Crafton, Tull & Associates Inc.	DATE REVISED	DATE FILMED	DATE REVISED	DATE FILMED	FED.RD. DIST.NO.	STATE	FED.AID PROJ.NO.	SHEET NO.	TOTAL SHEETS
					6	ARK.			
					JOB NO.		CA0901	207	452
					(1) A&B5960		BENT 4 DETAILS		57754

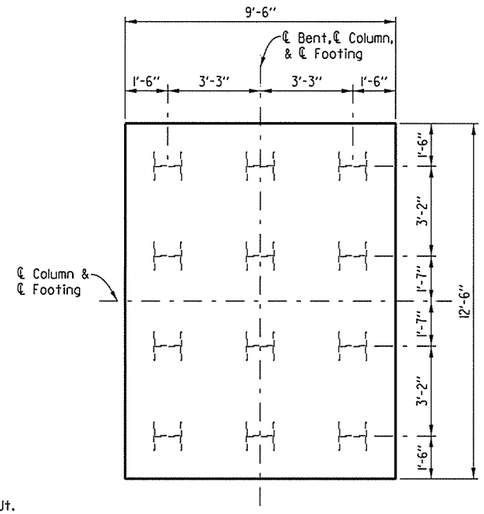

SECTION D-D
Scale: 3/8" = 1'-0"

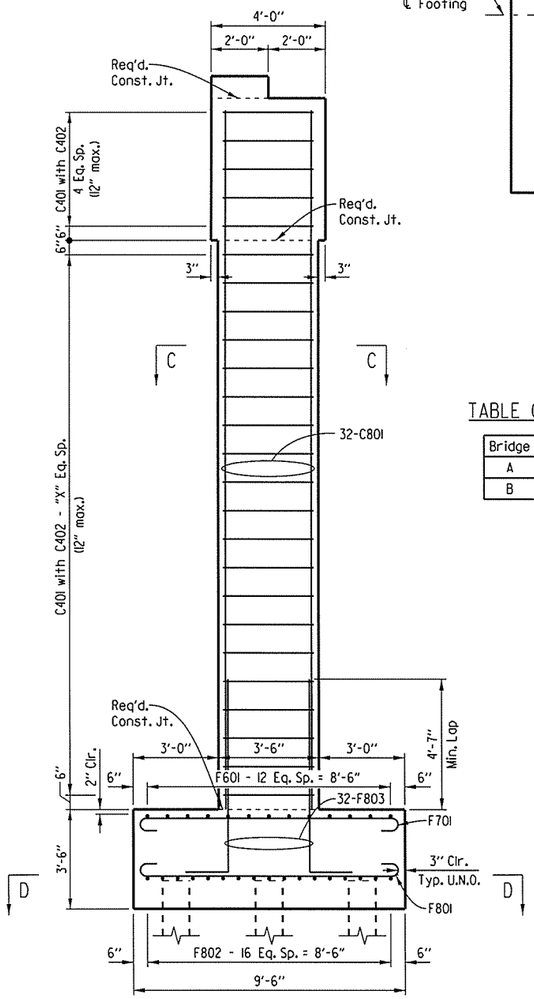

SECTION B-B
Scale: 3/8" = 1'-0"

TABLE OF VARIABLES

Bridge	Bent	"X"
A	4	13
B	4	13

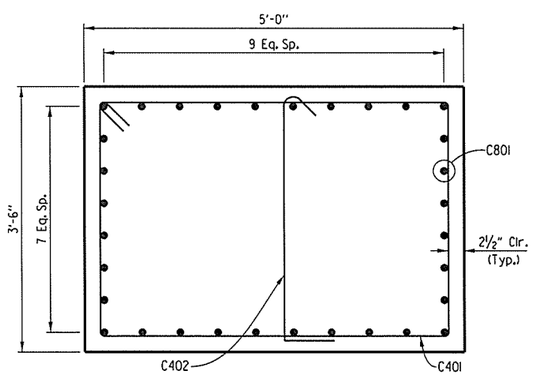

SECTION C-C
Scale: 1" = 1'-0"

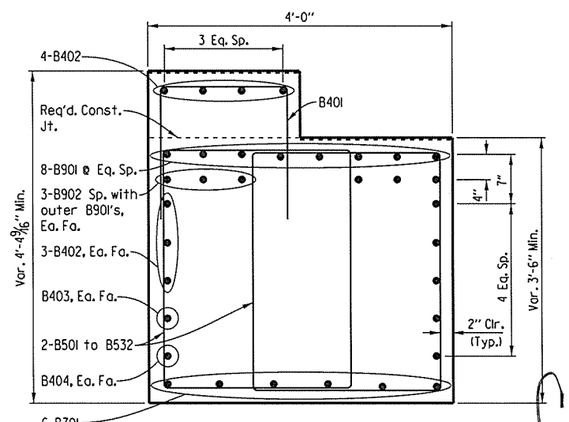

SECTION A-A
Scale: 1" = 1'-0"

BAR LIST

BENDING DIAGRAMS

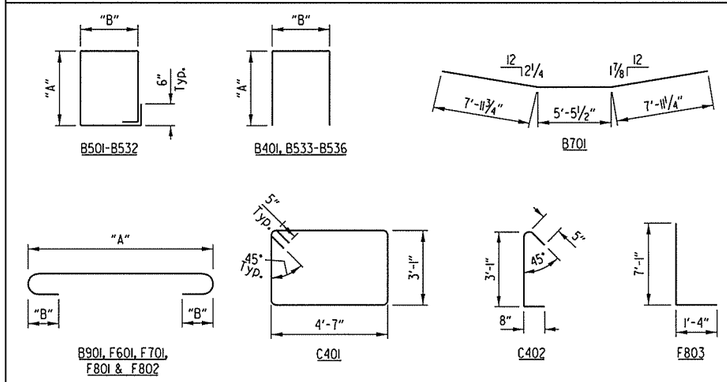

Dimensions are out to out of bars.

A&B5960 BENT 4

TABLE SHOWS BAR LIST FOR BENT 4A, BENT 4B SIMILAR.

MARK	NO. REQ'D.	LENGTH	"A"	"B"	P.D.
B401	36	5'-0"	1'-9"	1'-8"	2"
B402	10	21'-2"			Str.
B403	2	20'-6"			Str.
B404	2	13'-1"			Str.
B501 TO B516	2 EA.	VAR. 11'-9" TO 14'-4"	VAR. 3'-2" TO 4'-5¼"	2'-5½"	2½"
B517 TO B532	2 EA.	VAR. 11'-6" TO 14'-1"	VAR. 3'-0½" TO 4'-3¾"	2'-5½"	2½"
B533 TO B536	1 EA.	VAR. 12'-3" TO 12'-4½"	VAR. 4'-4¾" TO 4'-5½"	3'-8"	2½"
B701	6	21'-4"			5¼"
B901	8	23'-8"	21'-2"	10"	9"
B902	6	20'-5"			Str.
C401	19	15'-10"			3"
C402	14	4'-0"	3'-1"		3"
C801	32	17'-10"			Str.
F601	13	13'-4"	12'-0"	6"	4½"
F701	10	10'-8"	9'-0"	7"	5¼"
F801	17	10'-10"	9'-0"	8"	6"
F802	17	13'-10"	12'-0"	8"	6"
F803	32	8'-3"			6"

STATE OF ARKANSAS
REGISTERED PROFESSIONAL ENGINEER
No. 11856
CHARLES A. WIPF
03/08/16

SHEET 2 OF 2
DETAILS OF BENT 4 - BRIDGES A & B
ROUTE 49 SEC. 29
ARKANSAS STATE HIGHWAY COMMISSION
LITTLE ROCK, ARK.

DRAWN BY:	BWC	DATE:	07-24-15	FILENAME:	bca0901b3_b5.dgn
CHECKED BY:	CAW	DATE:	08-26-15	SCALE:	SEE DETAILS
DESIGNED BY:	KRM	DATE:	06-05-15		

BRIDGE NO. A&B5960 DRAWING NO. 57754

USER: bc5100
DESIGN FILE: G:\31061001_264toNHope\TRANSP\dgn\bridge\bca0901b3_b5.dgn
PLOTTED: 3/8/2016 09:40 SCALE: 5.3333333:1

Crafton, Tull & Associates Inc.	DATE REVISED	DATE FILMED	DATE REVISED	DATE FILMED	FED.RD. DIST.NO.	STATE	FED.AID PROJ.NO.	SHEET NO.	TOTAL SHEETS
					6	ARK.			
					JOB NO.		CA0901	208	452
					(1) A&B5960	BENTS 5 - 7 DETAILS			57755

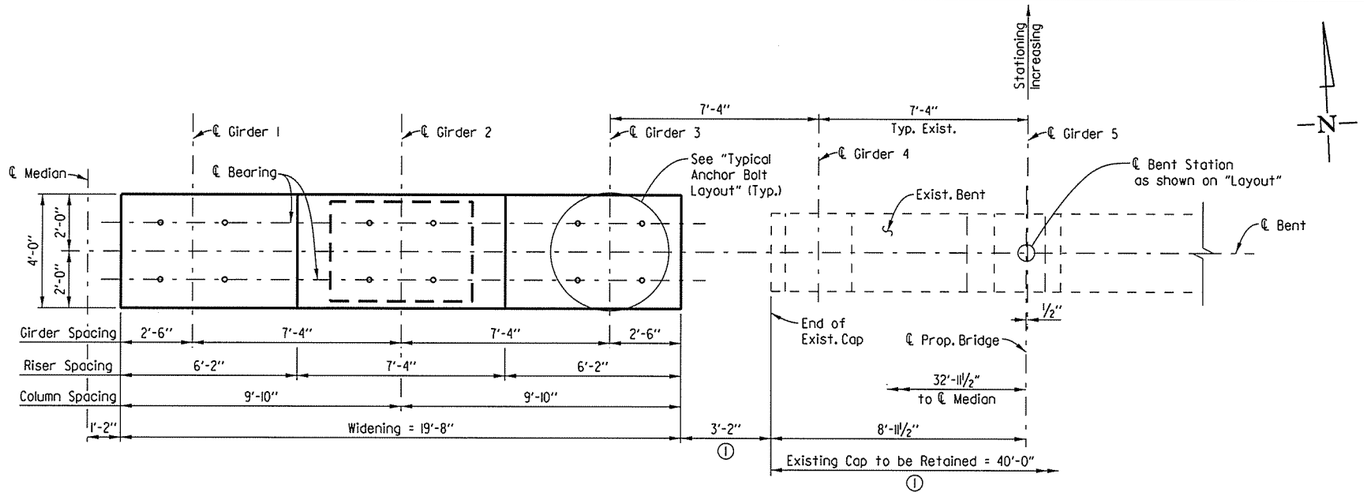

PLAN
Scale: 3/8" = 1'-0"

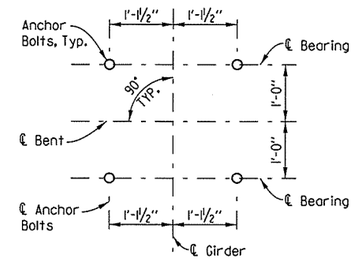

TYPICAL ANCHOR BOLT LAYOUT
Scale: 3/4" = 1'-0"

(1) Based on Existing plans. The Contractor shall verify dimensions in the field.

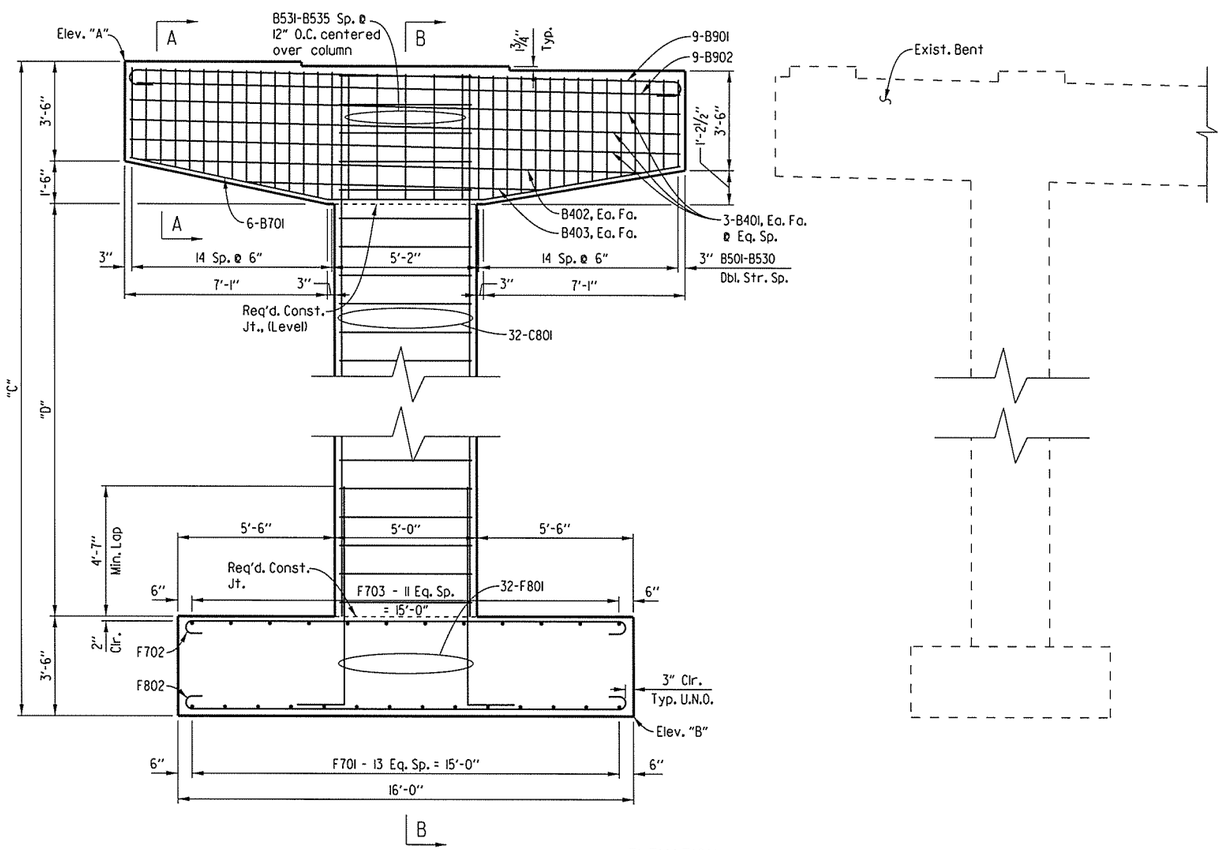

ELEVATION
(Looking Ahead)
(Bridge B Shown, Bridge A, opposite hand)
Scale: 3/8" = 1'-0"

TABLE OF VARIABLES

Bent No.	A	B	C	D
5A	1223.17	1187.17	36'-0"	27'-6"
5B	1223.33	1187.33	36'-0"	27'-6"
6A	1222.55	1186.55	36'-0"	27'-6"
6B	1222.71	1186.71	36'-0"	27'-6"
7A	1221.93	1185.93	36'-0"	27'-6"
7B	1222.09	1186.09	36'-0"	27'-6"

GENERAL NOTES

Concrete shall be Class 'S' with a minimum 28 day compressive strength of f'c = 3,500 p.s.i. Concrete shall be poured in the dry. All exposed corners shall be chamfered 3/4" unless otherwise noted.

All Reinforcing Steel shall be Grade 60 (fy = 60,000 psi) AASHTO M 31 or M 322, Type A with mill test reports.

Top reinforcing bars in cap shall be properly placed to avoid interference with anchor bolts or sheet metal sleeves.

For details of Elastomeric Bearings see Dwg. No. 57757

For additional information see Dwg. No. 57756

STATE OF ARKANSAS
REGISTERED PROFESSIONAL ENGINEER
No. 11856
CHARLES A. WIPF
03/08/16

SHEET 1 OF 2
DETAILS OF BENTS 5 - 7 - BRIDGES A & B
ROUTE 49 SEC. 29
ARKANSAS STATE HIGHWAY COMMISSION
LITTLE ROCK, ARK.

DRAWN BY:	BWC	DATE:	07-24-15	FILENAME:	bca0901b3_b6.dgn
CHECKED BY:	CAW	DATE:	08-27-15	SCALE:	SEE DETAILS
DESIGNED BY:	KRM	DATE:	06-05-15		

BRIDGE NO. A&B5960 DRAWING NO. 57755

USER: bc5100
DESIGN FILE: G:\13106100_2641oNHope\TRANSP\dgn\bridge\bca0901b3_b6.dgn
PLOTTED: 3/8/2016 09:40 SCALE: 5.333333:1

Crafton, Tull & Associates Inc.

DATE REVISED	DATE FILMED	DATE REVISED	DATE FILMED

FED.RD. DIST.NO.	STATE	FED.AID PROJ.NO.	SHEET NO.	TOTAL SHEETS
6	ARK.			
JOB NO.		CA0901	209	452
(1) A&B5960	BENTS 5 - 7 DETAILS			57756

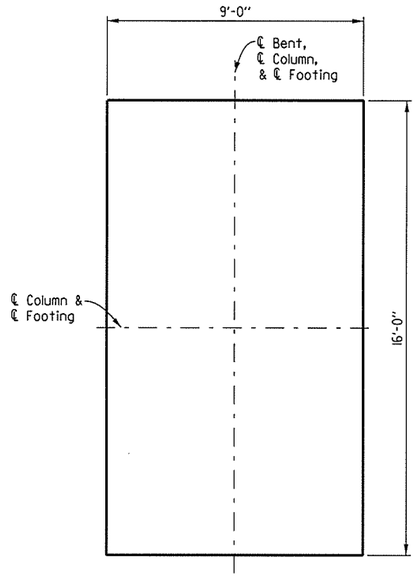

SECTION D-D
Scale: 3/8" = 1'-0"

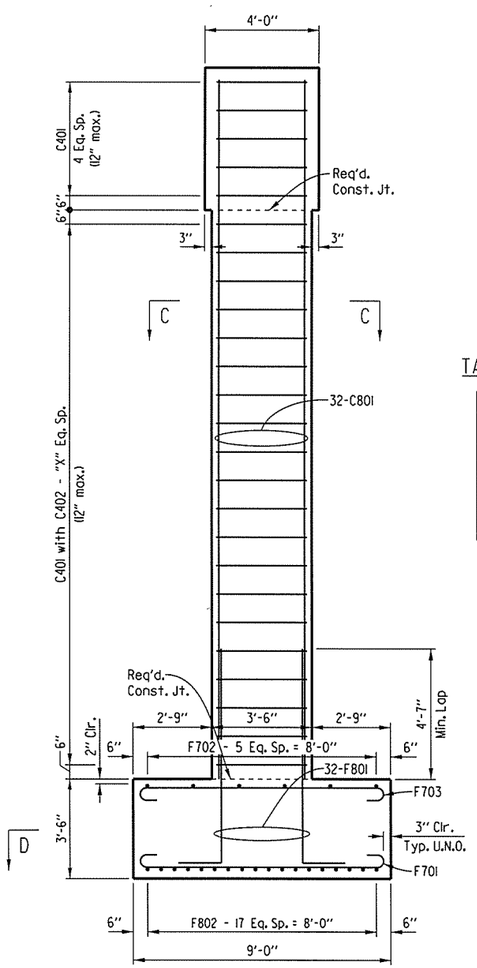

SECTION B-B
Scale: 3/8" = 1'-0"

TABLE OF VARIABLES

Bridge	Bent	"X"
A	5	27
	6	27
	7	27
B	5	27
	6	27
	7	27

BENDING DIAGRAMS

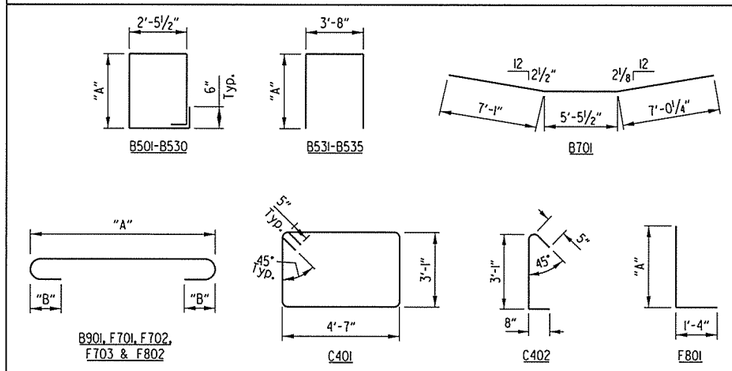

Dimensions are out to out of bars.

A&B5960 BENT 5-7

TABLE SHOWS BAR LIST
FOR BENT 5A, BENT 5B, 6A, 6B, 7A AND 7B SIMILAR

MARK	NO. REQ'D.	LENGTH	"A"	"B"	P.D.
B401	6	19'-4"			Str.
B402	2	17'-7"			Str.
B403	2	10'-4"			Str.
B501 TO B515	2 EA.	VAR. 11'-10" TO 14'-5"	VAR. 3'-2½" TO 4'-6¼"		2½"
B516 TO B530	2 EA.	VAR. 11'-7" TO 14'-3"	VAR. 4'-5" TO 3'-1"		2½"
B531 TO B535	1 EA.	VAR. 12'-5" TO 12'-3"	VAR. 4'-5¾" TO 4'-4¾"		2½"
B701	6	19'-7"	---		5¼"
B901	9	21'-10"	19'-4"	10"	9"
B902	9	18'-7"			Str.
C401	33	15'-10"			3"
C402	28	4'-0"			3"
C801	32	31'-6"			Str.
F701	14	10'-2"	8'-6"	7"	5¼"
F702	6	17'-2"	15'-6"	7"	5¼"
F703	12	10'-2"	8'-6"	7"	5¼"
F801	32	10'-10"	9'-8"		6"
F802	18	17'-4"	15'-6"	8"	6"

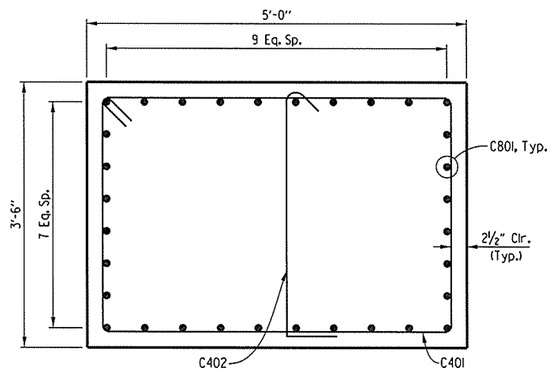

SECTION C-C
Scale: 1" = 1'-0"

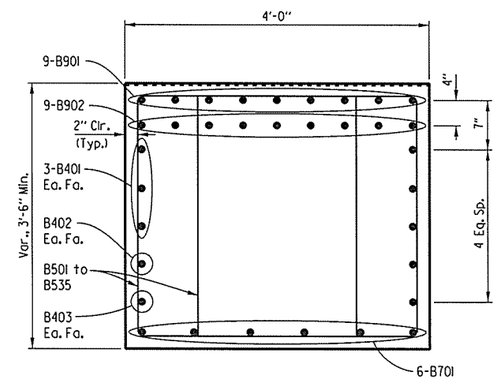

SECTION A-A
Scale: 1" = 1'-0"

STATE OF ARKANSAS
REGISTERED PROFESSIONAL ENGINEER
No. 11856
CHARLES A. WIPF
03/08/16

SHEET 2 OF 2
DETAILS OF BENTS 5 - 7 - BRIDGES A & B
ROUTE 49 SEC. 29
ARKANSAS STATE HIGHWAY COMMISSION
LITTLE ROCK, ARK.

DRAWN BY: BWC DATE: 07-24-15 FILENAME: bca0901b3_b7.dgn
CHECKED BY: CAW DATE: 09-02-15 SCALE: SEE DETAILS
DESIGNED BY: KRM DATE: 06-05-15
BRIDGE NO. A&B5960 DRAWING NO. 57756

USER: bc5100
DESIGN FILE: G:\3106100_2641toNHope\TRANSP\dgn\bridge\bca0901b3_b7.dgn
PLOTTED: 3/8/2016 09:40 SCALE: 5.3333333:1

Crafton, Tull & Associates Inc.

DATE REVISED	DATE FILMED	DATE REVISED	DATE FILMED

FED.RD. DIST.NO.	STATE	FED.AID PROJ.NO.	SHEET NO.	TOTAL SHEETS
6	ARK.			
JOB NO.		CA0901	210	452

(1) A&B5960 BEARING DETAILS 57757

TABLE OF FABRICATOR VARIABLES

Brg. No.	Location Bent No.	Location Beam No.	Bearing Type	No. of Bearings Each Bent	• Maximum Design Load (Kips)	G	H	Elastomeric Pad A	B	N	T_i	T_e	No. & Thickness of Steel Laminae	T	External Load Plate C	D	E	F	K	M	Ta	Tb	Anchor Bolt ø X L	Grade	Pipe Sleeve Size (ø X L)	Sheet Metal Sleeve Size (ø X L)	Steel Washer Size (O.D.)
A&B5960	1	1-4	Exp.	4	74	6 5/16"	3 13/16"	18"	6"	2	1/2"	1/4"	3 @ 12 Ga.	1 7/8"	7"	27 1/2"	2 3/4"	2"	1/2"	11 1/4"	1.99"	2.01"	1 1/4" X 21"	55	1 1/4" X 4 1/16"	3" X 5"	2 1/2"
	2 BK	1-4	Fix.	4	75	7 1/8"	4 5/8"	18"	6"	3	1/2"	1/4"	4 @ 12 Ga.	2 7/16"	7"	27 1/2"	2"	2"	1/2"	11 1/4"	2.18"	2.28"	1 1/4" X 22"	55	1 1/4" X 4 7/8"	3" X 5"	2 1/2"
	2 AH	1-4	Fix.	4	89	6 7/8"	4 7/16"	18"	6"	3	1/2"	1/4"	4 @ 12 Ga.	2 7/16"	7"	27 1/2"	2"	2"	1/2"	11 1/4"	1.99"	2.01"	1 1/4" X 21"	55	1 1/4" X 4 5/8"	3" X 5"	2 1/2"
	3 BK	1-4	Fix.	4	89	7 1/8"	4 5/8"	18"	6"	3	1/2"	1/4"	4 @ 12 Ga.	2 7/16"	7"	27 1/2"	2"	2"	1/2"	11 1/4"	2.18"	2.28"	1 1/4" X 22"	55	1 1/4" X 4 7/8"	3" X 5"	2 1/2"
	3 AH	1-4	Fix.	4	75	6 15/16"	4 7/16"	18"	6"	3	1/2"	1/4"	4 @ 12 Ga.	2 7/16"	7"	27 1/2"	2"	2"	1/2"	11 1/4"	1.99"	2.01"	1 1/4" X 21"	55	1 1/4" X 4 11/16"	3" X 5"	2 1/2"
	4 BK	1-4	Exp.	4	74	6 5/16"	3 13/16"	18"	6"	2	1/2"	1/4"	3 @ 12 Ga.	1 7/8"	7"	27 1/2"	2 3/4"	2"	1/2"	11 1/4"	1.95"	2.05"	1 1/4" X 21"	55	1 1/4" X 4 1/16"	3" X 5"	2 1/2"
	4 AH	1-3	Exp.	3	124	7 1/2"	5"	22"	8"	4	1/2"	1/4"	5 @ 12 Ga.	3 1/16"	9"	31 1/2"	3 3/4"	2"	1/2"	13 1/4"	1.99"	2.01"	1 1/4" X 22"	55	1 1/4" X 5 1/4"	3" X 5"	2 1/2"
	5 BK	1-3	Fix.	3	124	8"	5 1/4"	22"	8"	4	1/2"	1/4"	5 @ 12 Ga.	3 1/16"	9"	32 1/2"	2 1/4"	2 1/4"	1/2"	13 1/2"	2.16"	2.30"	1 1/2" X 25"	55	1 1/2" X 5 1/2"	3" X 5"	3"
	5 AH	1-3	Fix.	3	124	7 3/4"	5"	22"	8"	4	1/2"	1/4"	5 @ 12 Ga.	3 1/16"	9"	32 1/2"	2 1/4"	2 1/4"	1/2"	13 1/2"	1.99"	2.01"	1 1/2" X 25"	55	1 1/2" X 5 1/4"	3" X 5"	3"
	6 BK	1-3	Fix.	3	124	8"	5 1/4"	22"	8"	4	1/2"	1/4"	5 @ 12 Ga.	3 1/16"	9"	32 1/2"	2 1/4"	2 1/4"	1/2"	13 1/2"	2.16"	2.30"	1 1/2" X 25"	55	1 1/2" X 5 1/2"	3" X 5"	3"
	6 AH	1-3	Fix.	3	124	7 3/4"	5"	22"	8"	4	1/2"	1/4"	5 @ 12 Ga.	3 1/16"	9"	32 1/2"	2 1/4"	2 1/4"	1/2"	13 1/2"	1.99"	2.01"	1 1/2" X 25"	55	1 1/2" X 5 1/4"	3" X 5"	3"
	7 BK	1-3	Fix.	3	124	8"	5 1/4"	22"	8"	4	1/2"	1/4"	5 @ 12 Ga.	3 1/16"	9"	32 1/2"	2 1/4"	2 1/4"	1/2"	13 1/2"	2.16"	2.30"	1 1/2" X 25"	55	1 1/2" X 5 1/2"	3" X 5"	3"
	7 AH	1-3	Fix.	3	124	7 3/4"	5"	22"	8"	4	1/2"	1/4"	5 @ 12 Ga.	3 1/16"	9"	32 1/2"	2 1/4"	2 1/4"	1/2"	13 1/2"	1.99"	2.01"	1 1/2" X 25"	55	1 1/2" X 5 1/4"	3" X 5"	3"
	8	1-3	Exp.	3	123	7 1/2"	5"	22"	8"	4	1/2"	1/4"	5 @ 12 Ga.	3 1/16"	9"	31 1/2"	3 3/4"	2"	1/2"	13 1/4"	1.93"	2.07"	1 1/4" X 22"	55	1 1/4" X 5 1/4"	3" X 5"	2 1/2"

• Maximum Design Load = Service I Limit State

(1) Care shall be taken to ensure that the External Load plate is in full and complete contact with the Beam Flange before welding begins

(2) Center line of Girder shall be aligned with center line of Elastometric pad.

(3) Bearing insert plate (M270, Gr. 50) & studs shall be considered subsidiary to the item "Prestressed Concrete Girders (Type II) and "Prestressed Concrete Girders (Type III)".

Note:
The direction of bevel of the external load plate may not be accurately depicted with respect to Ta and Tb values shown in TABLE OF FABRICATOR VARIABLES.

Unless otherwise approved by the Engineer, welding of the External Load Plate at expansion bearings to the girder will be allowed only when: 1) The approximate average air temperature during the 24 hour period immediately preceding welding is between 40°F and 80°F; and 2) The slots in the external load plate are positioned to center on the anchor bolts; and 3) No horizontal deformation of the Elastomeric Pad is evident. If welding at other temperatures is required, the Engineer will provide adjustment data.

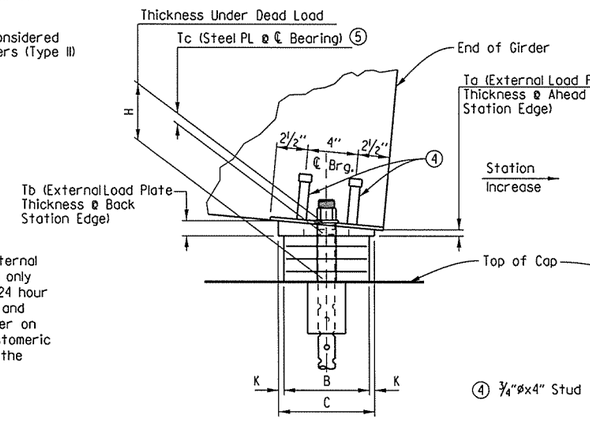

SIDE VIEW
No Scale

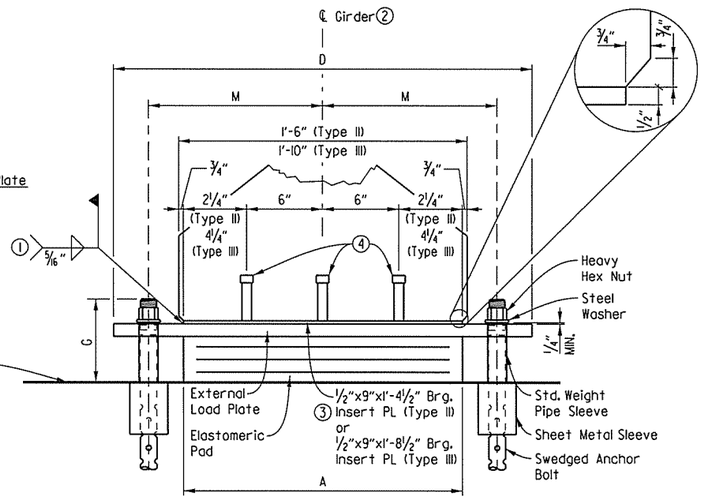

FRONT VIEW
No Scale

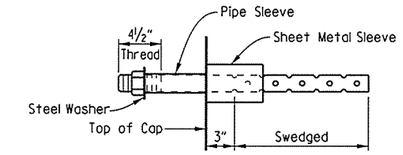

ANCHOR BOLT DETAIL
No Scale

Anchor Bolts may be cast in place or drilled and grouted into place. If Anchor Bolts are to be cast in place, the galvanized Sheet Metal Sleeves will not be required.

If Anchor Bolts are to be drilled and grouted in place, the galvanized Sheet Metal Sleeves shall be cast in place as shown. Sleeves shall be dry packed with styrofoam, urethane foam or approved equal prior to pouring of concrete. After pouring of the cap and prior to erection of structural steel, the dry pack shall be removed and holes for the Anchor Bolts shall be accurately drilled into the masonry. Bolts placed in drilled holes shall be accurately set and fixed using an AHTD OPL approved epoxy or non-shrink grout that completely fills the holes. Galvanized sheet metal sleeves will not be paid for directly, but will be considered subsidiary to the items "Structural Steel in Beam Spans, (M 270, Gr.50)".

GENERAL NOTES

Elastomeric bearings shall conform to Section 808 of the standard specifications and shall be paid for at the unit price bid for "Elastomeric Bearings".

External load plates shall conform to AASHTO M 270, Grade 50. Pipe sleeves shall be ASTM A500, Grade B, and shall be galvanized to conform to AASHTO M 232, Class C or ASTM B695, Class 50.

External load plates shall be completely fabricated (including bevel and bolt holes) and shall be cleaned before vulcanizing to the elastomeric bearing. Surfaces in contact with the elastomeric bearing shall be cleaned in accordance with Subsection 808.03. Other surfaces shall be blast cleaned in accordance with Subsection 807.84(b) and painted according to Subsection 807.75.

Anchor Bolts, Washers and Nuts shall conform to Subsection 807.07. The anchor bolt grade of steel shall be as specified in the "Table of Fabricator Variables". Indentations shall be circular with rounded bottoms and staggered as shown in the details.

Bearings shall be seated in accordance with Subsection 808.08.

Pipe sleeves, anchor bolts, washers and nuts shall be paid for at the unit price bid for "Structural Steel in Beam Spans (M270, Gr. 50)". External load plates and shear blocks will not be measured or paid for separately but will be considered included in the unit bid price for "ELASTOMERIC BEARINGS".

TABLE OF VARIABLES

	Bent No.	Brng.	Tc
(5)	1		2.00"
	2	BK	2.23"
		AH	2.00"
	3	BK	2.23"
		AH	2.00"
	4	BK	2.23"
		AH	2.00"
	5	BK	2.23"
		AH	2.00"
	6	BK	2.23"
		AH	2.00"
	7	BK	2.23"
		AH	2.00"
	8		2.00"

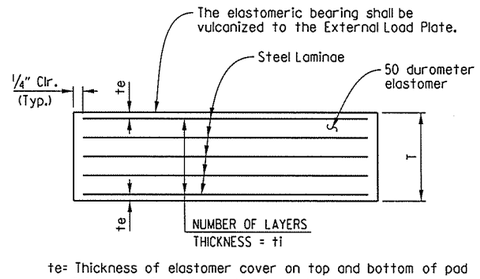

te= Thickness of elastomer cover on top and bottom of pad
ti= Thickness of elastomer between steel laminae
N= Number of elastomer layers of thickness ti

ELASTOMERIC BEARING
No Scale

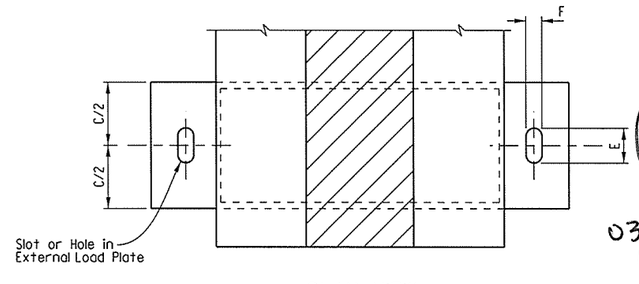

PLAN VIEW
No Scale

STATE OF ARKANSAS
REGISTERED PROFESSIONAL ENGINEER
No. 11856
CHARLES A. WIPF
03/08/16

DETAILS OF
ELASTOMERIC BEARINGS
ROUTE 49 SEC. 29
ARKANSAS STATE HIGHWAY COMMISSION
LITTLE ROCK, ARK.

DRAWN BY: BWC DATE: 07-24-15 FILENAME: bca0901b3.el.dgn
CHECKED BY: CAW DATE: 09-01-15 SCALE: NO SCALE
DESIGNED BY: KJC DATE: 08-12-14

BRIDGE NO. A&B5960 DRAWING NO. 57757

USER: bc5100
DESIGN FILE: G:\3106100.2641toNHope\TRANSP\dgn\bridge\bca0901b3_el.dgn
PLOTTED: 3/8/2016 09:40 SCALE: 16:1

Note: Class 2 Protective Surface Treatment shall be applied to the roadway surface, including the existing deck surface to be retained, and roadway face and top of parapet rail of the new construction.

Crafton, Tull & Associates Inc.

DATE REVISED	DATE FILMED	DATE REVISED	DATE FILMED

FED.RD. DIST.NO.	STATE	FED.AID PROJ.NO.	SHEET NO.	TOTAL SHEETS
6	ARK.			
JOB NO.		CA0901	211	452
(1) A&B5960		SPAN DETAILS		57758

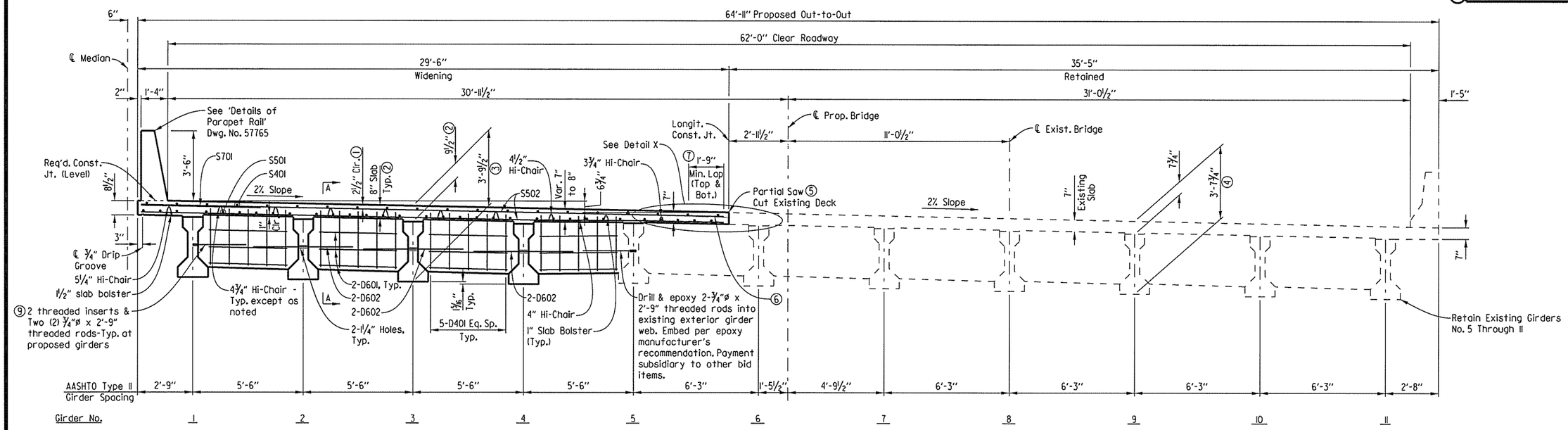

Note: The superstructure details shown are for use when removable deck forming is used and are the basis for measurement of Class S(AE) Concrete. See AHTD Std. Dwg. No. 55005 for allowable modifications and for tolerances when permanent steel bridge deck forms are used.

TYPICAL SECTION AT MIDSPAN

(Bridge 'A' - Looking Back)
(Bridge 'B' - Looking Ahead)
Scale: ⅜" = 1'-0"

(1) Tolerances: Minus = ¼"
Plus = Equal to amount of slab thickening used to meet slab thickness tolerance
See "Adjustment for Slab Thickness Tolerance" when Removable Deck Forming is Used.

(2) See "Adjustment for Slab Thickness Tolerance" when Removable Deck Forming is Used.

(3) Measured at ℄ Bearing and ℄ New Girders, Typ.

(4) Measured at ℄ Bearing and ℄ Exist. Girders, Typ.

(5) Care shall be exercised during the removal of the existing deck to ensure that the girders, diaphragms, bolted connections and reinforcement are not damaged. Damaged items that are not salvageable as determined by the Engineer, shall be replaced by the contractor at no additional payment. See Section 821.

(6) Clean and retain existing transverse reinforcing. Remove and replace existing longitudinal reinforcement.

(7) Minimum lap with existing reinforcement (Top & Bottom). New transverse reinforcing steel shall not be tied to existing reinforcing steel.

(8) Based on existing plans. Contractor shall verify dimensions in the field.

(9) Galvanized threaded inserts: Dayton-Richmond F-42 loop ferrule insert or an approved equal. ¾" ø threaded rods to be AASHTO M270, Grade 36 or AASHTO M31 or M322 Type A, Gr. 60. These are to be non-pay items-subsidiary to the item "Prestressed Concrete Girders (Type II)". Galvanizing shall be in accordance with AASHTO M232 Class C or ASTM B695 Class 50.

SLAB REINFORCING:

Transverse:
S502 @ 7" o.c. in top and bottom
S701 @ 14" o.c. in top
#4 bars lapped @ 1'-5"
#5 bars lapped @ 1'-9" (u.n.o.)

Longitudinal:
S401 as shown in top (18" max)
S501 as shown in bottom (10" max)
S601 as shown in top (10" o.c. over interior supports)

Note: Space Hi-Chairs 4'-0" o.c. long.
Space slab bolsters 4'-0" max. sp.

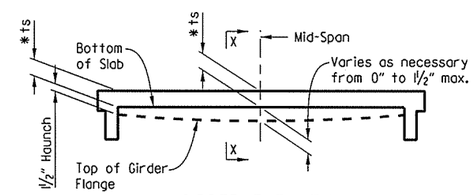

GIRDER ELEVATION

No Scale

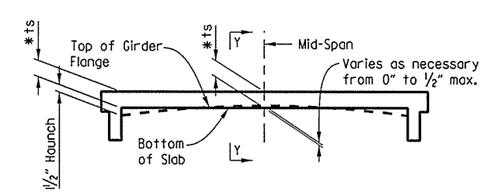

GIRDER ELEVATION

No Scale

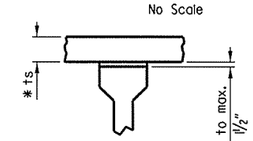

SECTION X-X

No Scale

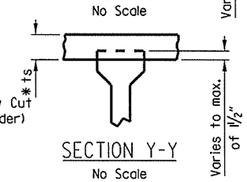

SECTION Y-Y

No Scale

Note: ts = slab thickness as shown on Superstructure Details. See "Typical Sections".

* Tolerance when removable deck forming is used is +½", -¼". Haunch forming is required and shall be adjusted to maintain slab thickness tolerance. See Std. Dwg. No. 55005 for tolerances when permanent steel deckforms are used.

'Girder Elevation' sketches show the range of acceptability of the top of the girder relative to bottom of slab after the placement of the slab. When the top of the girder projects more than ½" into the slab, a raise in grade will be necessary. Girders shall be set in a sufficient number of spans so when adjustment is necessary the profile grade can be adjusted over suitable increments so the revised grade line will produce a smooth riding surface. Variation of the haunch height will be at the Contractor's expense.

ADJUSTMENT FOR SLAB THICKNESS TOLERANCE WHEN REMOVABLE DECK FORMING IS USED

No Scale

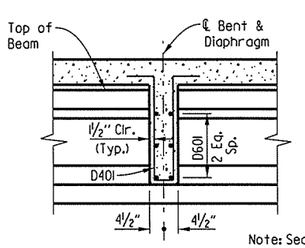

SECTION A-A

Interior Diaphragm
(Normal to Grade)
Scale: ½" = 1'-0"

Note: Section A-A is cut normal to Diaphragms.

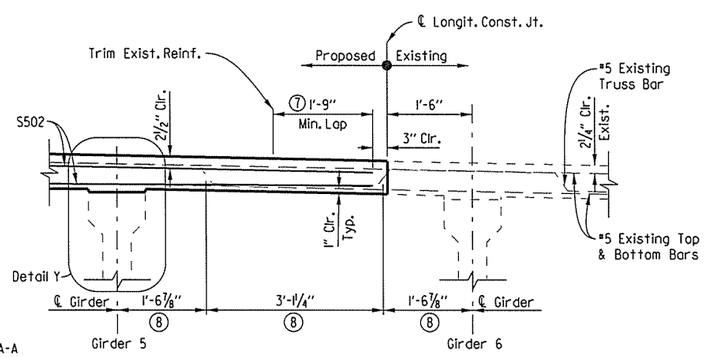

DETAIL X

Scale: ¾" = 1'-0"

Note: Longitudinal Reinforcement not shown for clarity.

Note: Bridge B shown, Bridge A similar.

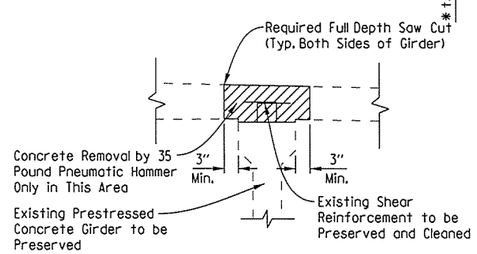

DETAIL Y

(Removal of Existing Deck at Girder 5)

Note: Concrete removal over girders shall be restricted to 35 Pound Pneumatic Hammer. The concrete removal in this area shall be performed after the slab has been cut.

STATE OF ARKANSAS
REGISTERED PROFESSIONAL ENGINEER
No. 11856
CHARLES A. WIPF
03/08/16

SHEET 1 OF 8

DETAILS OF 143'-0" CONTINUOUS PRESTRESSED CONCRETE GIRDER UNIT
NEW HOPE ROAD & BLOSSOM WAY CREEK - BRIDGES A & B
ROUTE 49 SEC. 29
ARKANSAS STATE HIGHWAY COMMISSION
LITTLE ROCK, ARK.

DRAWN BY: BWC	DATE: 01-03-14	FILENAME: bca0901b3_sll.dgn	
CHECKED BY: CAW	DATE: 08-23-15	SCALE: SEE DETAILS	
DESIGNED BY: KJC	DATE: 12-31-13		

BRIDGE NO. A&B5960 DRAWING NO. 57758

USER: bc5100
DESIGN FILE: G:\1310600_264toNHope\TRANSP\dgn\bridge\bca0901b3_sll.dgn
PLOTTED: 3/8/2016 09:40 SCALE: 5.3333333:1

Crafton, Tull & Associates Inc.	DATE REVISED	DATE FILMED	DATE REVISED	DATE FILMED	FED.RD. DIST.NO.	STATE	FED.AID PROJ.NO.	SHEET NO.	TOTAL SHEETS
					6	ARK.			
					JOB NO.		CA0901	212	452
					(1) A&B5960		SPAN DETAILS		57759

For additional details, see Dwg. No. 57758

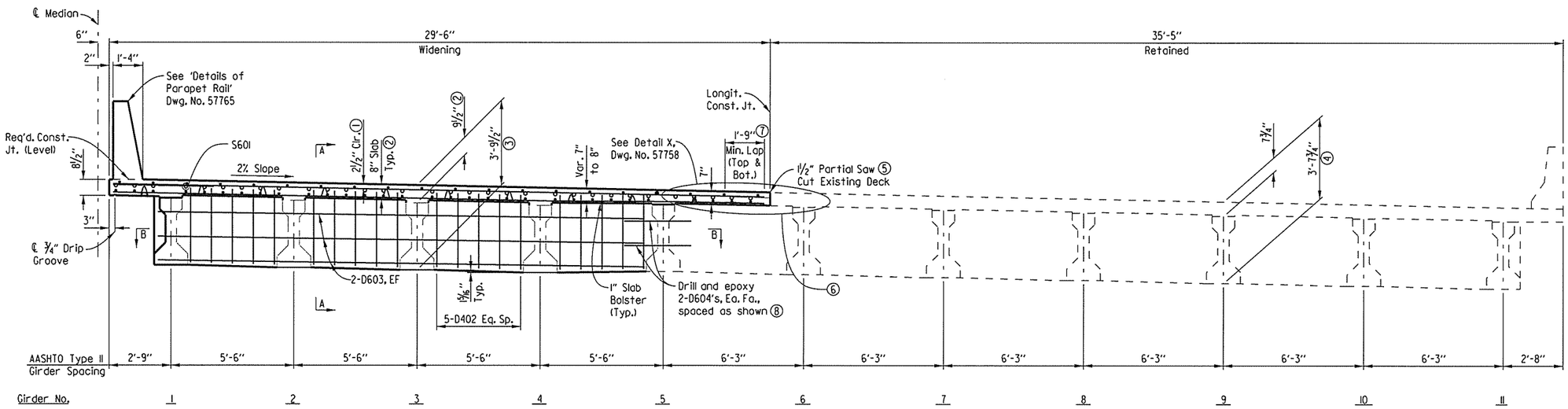

TYPICAL SECTION AT FIXED BENTS

(Bridge 'A' - Looking Back)
(Bridge 'B' - Looking Ahead)
Scale: ⅜" = 1'-0"

(1) Tolerances: Minus = ¼"
Plus = Equal to amount of slab thickening used to meet slab thickness tolerance
See "Adjustment for Slab Thickness Tolerance when Removable Deck Forming is Used".

(2) See "Adjustment for Slab Thickness Tolerance when Removable Deck Forming is Used".

(3) Measured at ℄ Bearing and ℄ New Beams, Typ.

(4) Measured at ℄ Bearing and ℄ Exist. Beams, Typ.

(5) Care shall be exercised during the removal of the existing deck to ensure that the beams, diaphragms, bolted connections and reinforcement are not damaged. Damaged items that are not salvageable as determined by the Engineer, shall be replaced by the contractor at no additional payment. The interior spans of the existing deck shall be removed before the end spans are removed in order to ensure stability of the existing bridge.

Note: The superstructure details shown are for use when removable deck forming is used and are the basis for measurement of Class S(AE) Concrete. See AHTD Std. Dwg. No. 55005 for allowable modifications and for tolerances when permanent steel bridge deck forms are used.

(6) Clean and retain existing transverse reinforcing. Remove and replace existing longitudinal reinforement.

(7) Minimum lap with existing reinforcement (Top and Bottom). New transverse reinforcing steel shall not be tied to existing reinforing steel.

(8) Epoxy embed bars with 1'-0" minimum embedment into existing Fixed Bent Diaphragm. Payment shall be considered subsidiary to the item "Modification of Existing Bridge Structure (Br. No. A5960)" & "Modification of Existing Bridge Structure (Br. No. B5960)".

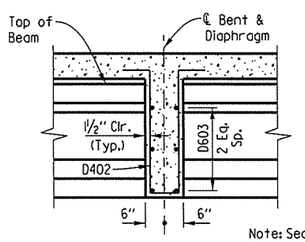

Note: Section A-A is cut normal to Diaphragms.

SECTION A-A

Interior Bent Diaphragm
(Normal to Grade)
Scale: ½" = 1'-0"

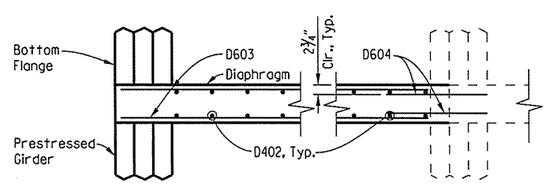

SECTION B-B

Scale: ½" = 1'-0"

STATE OF ARKANSAS
REGISTERED PROFESSIONAL ENGINEER
No. 11856
CHARLES A. WIPF
03/08/16

SHEET 2 OF 8

DETAILS OF 143'-0" CONTINUOUS PRESTRESSED CONCRETE GIRDER UNIT
NEW HOPE ROAD & BLOSSOM WAY CREEK
- BRIDGES A & B

ROUTE 49 SEC. 29

ARKANSAS STATE HIGHWAY COMMISSION

LITTLE ROCK, ARK.

DRAWN BY: BWC	DATE: 01-03-14	FILENAME: bca090ib3_sl2.dgn	
CHECKED BY: CAW	DATE: 08-23-15	SCALE: SEE DETAILS	
DESIGNED BY: KJC	DATE: 12-31-13		

BRIDGE NO. A&B5960 DRAWING NO. 57759

USER: bc5100
DESIGN FILE: G:\13061100_2641oNHope\TRANSP\dgn\bridge\bca090ib3_sl2.dgn
PLOTTED: 3/8/2016 09:40 SCALE: 5.333333:1

Crafton, Tull & Associates Inc.	DATE REVISED	DATE FILMED	DATE REVISED	DATE FILMED	FED.RD. DIST.NO.	STATE	FED.AID PROJ.NO.	SHEET NO.	TOTAL SHEETS
					6	ARK.			
					JOB NO.		CA0901	213	452
					(1) A&B5960		SPAN DETAILS		57760

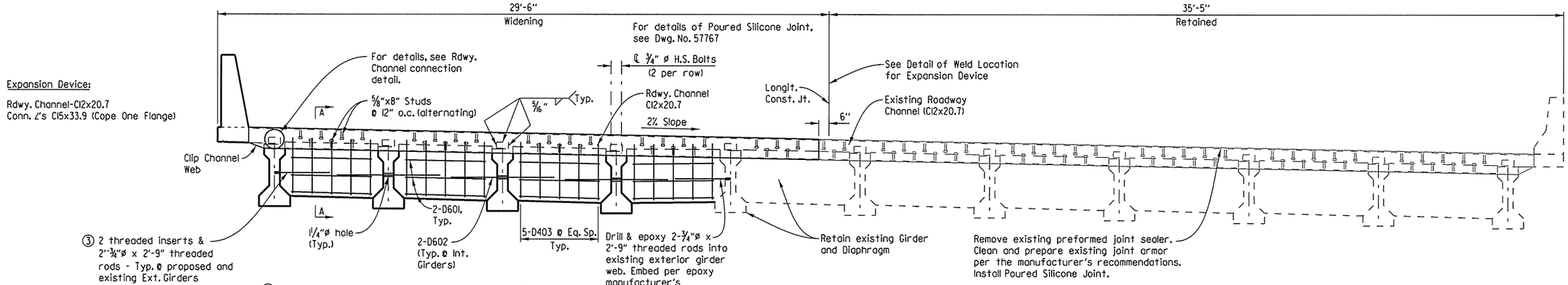

(3) Galvanized threaded inserts: Dayton-Richmond F-42 loop ferrule insert or an approved equal. 3/4"ø threaded rods to be AASHTO M270, Grade 36 or AASHTO M31 or M322 Type A, Gr. 60. These are to be non-pay items-subsidiary to the item "Prestressed Concrete Girders (Type III)". Galvanizing shall be in accordance with AASHTO M232 Class C or ASTM B695 Class 50.

TYPICAL SECTION THROUGH JOINT

(Bridge 'A' - Looking Back @ Bent 4, Bent 1 opposite hand)
(Bridge 'B' - Looking Ahead @ Bent 1, Bent 4 opposite hand)
No Scale

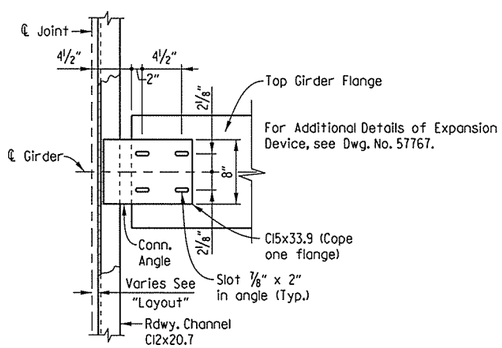

ROADWAY CHANNEL CONNECTION DETAIL

No Scale

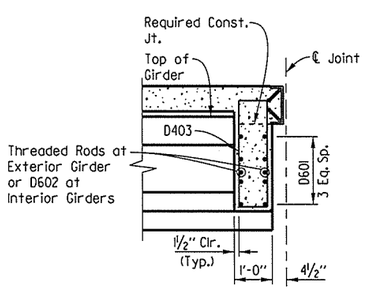

SECTION A-A

End of Unit Diaphragm
(Normal to Grade)
Scale: 1/2" = 1'-0"

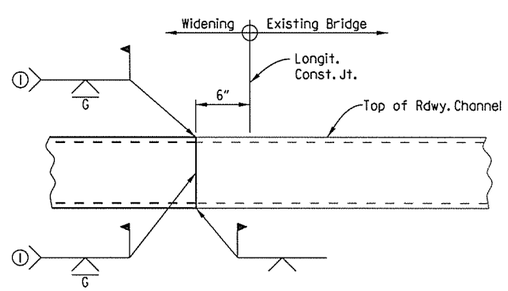

(1) Grind flush from top of deck to top of Bumper Bar.

DETAIL OF WELD LOCATION FOR EXPANSION DEVICE

(Bridge 'A' - Looking Back @ Bent 4, Bent 1 opposite hand)
(Bridge 'B' - Looking Ahead @ Bent 1, Bent 4 opposite hand)
No Scale

STATE OF ARKANSAS
REGISTERED PROFESSIONAL ENGINEER
No. 11856
CHARLES A. WIPF
03/08/16

SHEET 3 OF 8

DETAILS OF 143'-0" CONTINUOUS PRESTRESSED CONCRETE GIRDER UNIT
NEW HOPE ROAD & BLOSSOM WAY CREEK
- BRIDGES A & B

ROUTE 49 SEC. 29

ARKANSAS STATE HIGHWAY COMMISSION

LITTLE ROCK, ARK.

DRAWN BY:	BWC	DATE:	01-03-14	FILENAME:	bca0901b3_sl3.dgn
CHECKED BY:	CAW	DATE:	08-23-15	SCALE:	SEE DETAILS
DESIGNED BY:	KJC	DATE:	12-31-13		

BRIDGE NO. A&B5960 DRAWING NO. 57760

USER: bc5100
DESIGN FILE: G:\3106100_264toNHope\TRANSP\dgn\bridge\bca0901b3_sl3.dgn
PLOTTED: 3/8/2016 09:40 SCALE: 5.3333333:1

Crafton, Tull & Associates Inc.	DATE REVISED	DATE FILMED	DATE REVISED	DATE FILMED	FED.RD. DIST.NO.	STATE	FED.AID PROJ.NO.	SHEET NO.	TOTAL SHEETS
					6	ARK.			
					JOB NO.		CA0901	214	452
					(1) A&B5960		SPAN DETAILS		57761

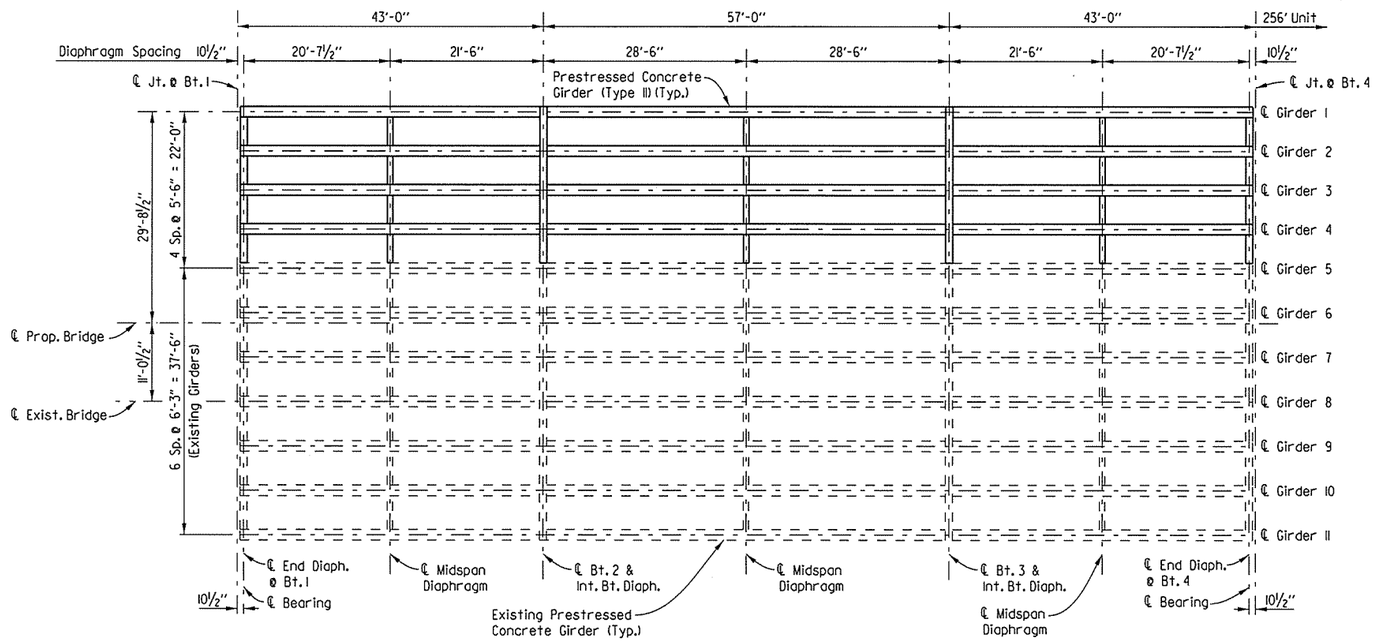

FRAMING PLAN

Scale: 3/32" = 1'-0"

STATE OF ARKANSAS
REGISTERED PROFESSIONAL ENGINEER
No. 11856
CHARLES A. WIPF
03/08/16

SHEET 4 OF 8

DETAILS OF 143'-0" CONTINUOUS PRESTRESSED CONCRETE GIRDER UNIT
NEW HOPE ROAD & BLOSSOM WAY CREEK
- BRIDGES A & B

ROUTE 49 SEC. 29

ARKANSAS STATE HIGHWAY COMMISSION

LITTLE ROCK, ARK.

DRAWN BY:	BWC	DATE:	07-24-15	FILENAME:	bca0901b3_sl4.dgn
CHECKED BY:	CAW	DATE:	09-02-15	SCALE:	SEE DETAILS
DESIGNED BY:	KJC	DATE:	10-31-13		

BRIDGE NO. A&B5960 DRAWING NO. 57761

USER: bc5100
DESIGN FILE: G:\13061100.264toNhope\TRANSP\dgn\bridge\bca0901b3_sl4.dgn
PLOTTED: 3/8/2016 09:40 SCALE: 21.333333:1

Crafton, Tull & Associates Inc.	DATE REVISED	DATE FILMED	DATE REVISED	DATE FILMED	FED.RD. DIST.NO.	STATE	FED.AID PROJ.NO.	SHEET NO.	TOTAL SHEETS
					6	ARK.			
					JOB NO.		CA0901	215	452
					(1) A&B5960		SPAN DETAILS		57762

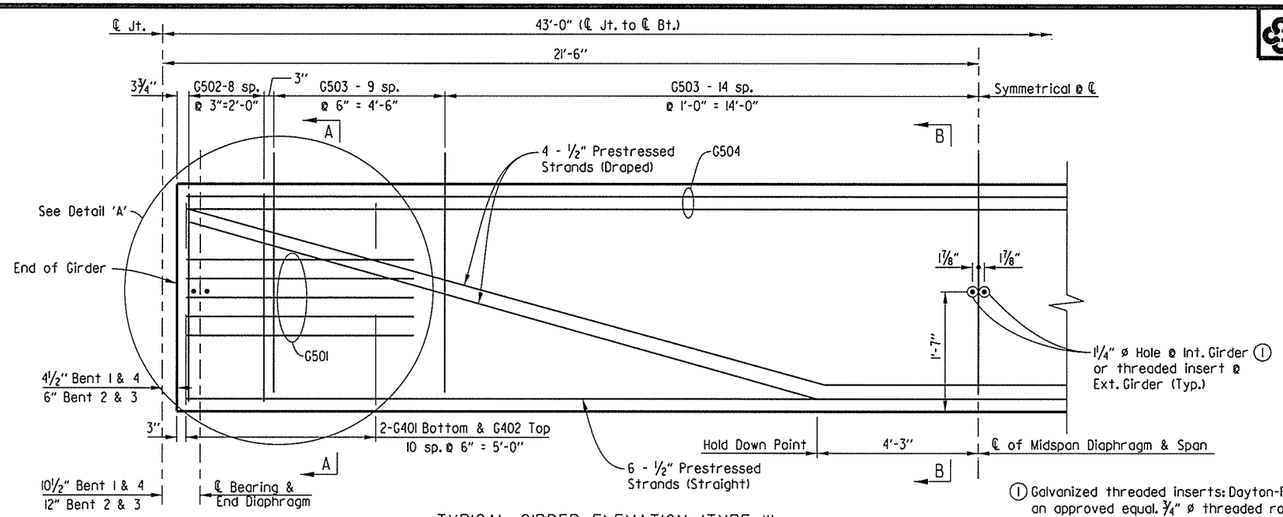

TYPICAL GIRDER ELEVATION (TYPE II)

(Span 1 shown, Span 3 opposite hand)
No Scale

(1) Galvanized threaded inserts: Dayton-Richmond F-42 loop ferrule insert or an approved equal. ¾" ø threaded rods to be AASHTO M270, Grade 50 or AASHTO M31 or M322 Type A, Gr. 60. These are to be non-pay items-subsidiary to the item "Prestressed Concrete Girders (Type II)". Galvanizing shall be in accordance with AASHTO M232 Class C or ASTM B695 Class 50.

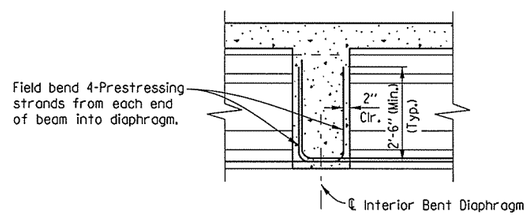

ELEVATION OF BEAMS AT INTERMEDIATE BENTS

Scale: ½" = 1'-0"

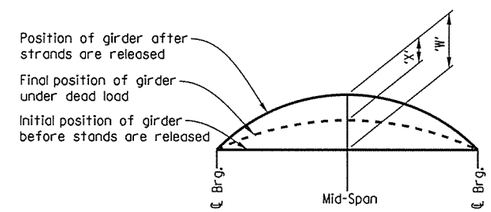

"W"	0.86"
"X"	0.19"

'W' is expected camber of girder at 90 days release (Prestress + Dead Load of Girder)

'X' is Dead Load Deflection of Slab + Diaphragms + Composite Dead Load.

CAMBER & DEFLECTIONS (INCHES)

No Scale

(2) Detail 'A' applies to the BK end of Span 1 and AH end of Span 3 Girders only.

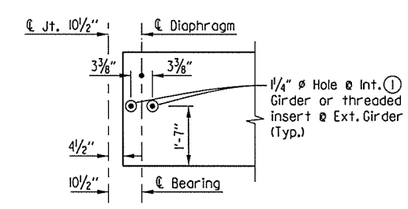

DETAIL 'A'

Scale: ½" = 1'-0"

GENERAL NOTES - GIRDERS ONLY

Pretensioning steel shall be ½" dia. low relaxation strands with a minimum ultimate strength of 270 ksi and shall conform to AASHTO M203.

All girders shall be AASHTO Type III-Girders as shown on the details. All girders shall be cast in concrete floored pallets and in metal forms. All work and materials shall be as specified in Subsection 802.22 of the Standard Specifications.

Concrete shall be Class 'S' and shall have a minimum 28 day compressive strength f'c = 6000 PSI.

Dimensions shown are to the center of strands.

The initial tensile force applied to each ½" dia. strand shall be 31000 pounds. Transfer of this tensioning load to the girder shall not be done until the compressive strength of the concrete is at least 4500 psi.

The Contractor shall submit the method and sequence for release of strands to the Engineer for approval prior to casting of the girders.

The first 16" along the top of the girder at each end shall have a smooth finish. The remaining portion shall be rough floated at approximately the time of set then scrubbed transversely with a coarse wire brush to remove all laitance and to produce a roughened surface for bonding slabs.

Girder lengths shown on the design plans are net lengths measured horizontally along girder centerlines. The girder manufacturer shall make the necessary allowances for grade and shortening due to elastic shortening, creep, and shrinkage.

All exposed steel at ends of girders shall be protected against corrosion by a coating with two coats of Zinc-Rich paint.

Girders must be maintained in an upright position at all times and must be picked up from points near the girder ends. Disregard of the requirement may lead to collapse of the girder. The Contractor's proposed lifting details shall be submitted on shop drawings to the Engineer for approval. The use of holes for lifting purposes will not be permitted.

The Contractor may submit alternate strand patterns with design calculations for review and approval in accordance with Subsection 802.22 except that only ½" diameter strands shall be allowed.

All reinforcing steel shall be Grade 60 (yield strength = 60,000 psi) conforming to AASHTO M 31 or M 322 Type A with Mill Test Reports.

Distances from the forms and spacing of the prestressing steel shall be maintained by stays, ties, hangers, spacers, or other approved supports which shall be shown on the shop drawings.

The point of support and direction of the reactions with respect to the member shall be appoximately the same during transportation and storage as when member is in its final position.

Drawings show general features of design only. Shop drawings shall be submitted to the Engineer and approval shall be secured before fabrication can begin.

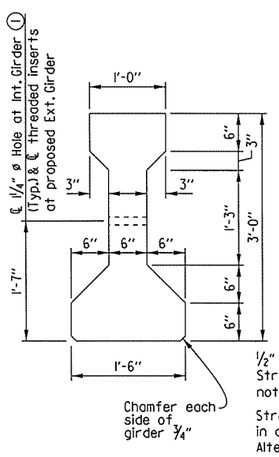

TYPICAL SECTION

Scale: 1" = 1'-0"

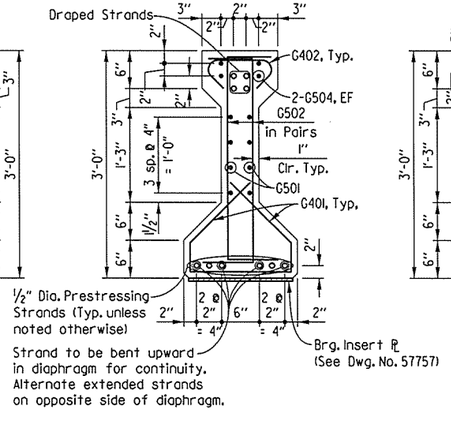

SECTION A-A

Scale: 1" = 1'-0"

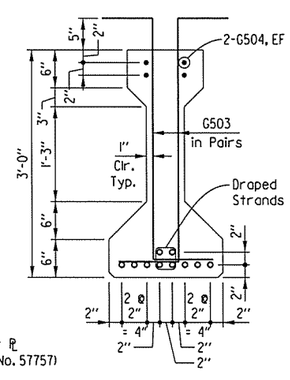

SECTION B-B

Scale: 1" = 1'-0"

BAR LIST - PER 42'-1½" GIRDER

MARK	NO. REQ'D	LENGTH	P.D.
G401	44	2'-6"	2"
G402	22	1'-6"	3"
G501	8	10'-1"	3"
G502	36	3'-7"	2"
G503	94	4'-8"	2"
G504	4	41'-9"	Str.

BENDING DIAGRAMS (DIMENSIONS ARE OUT TO OUT OF BARS.)

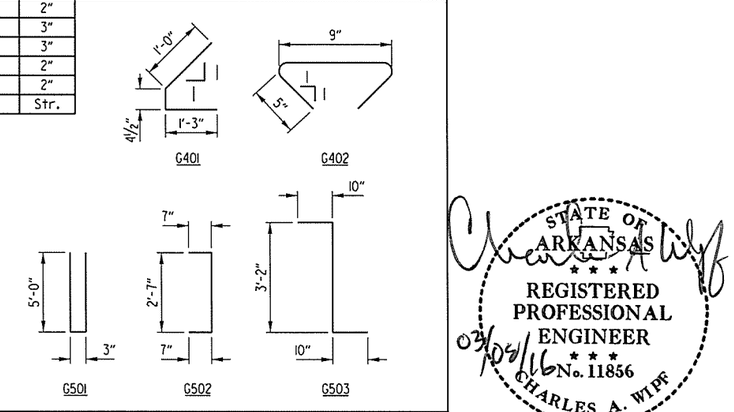

STATE OF ARKANSAS
REGISTERED PROFESSIONAL ENGINEER
No. 11856
CHARLES A. WIPF
03/04/16

SHEET 5 OF 8

DETAILS OF 143'-0" CONTINUOUS PRESTRESSED CONCRETE GIRDER UNIT
NEW HOPE ROAD & BLOSSOM WAY CREEK
- BRIDGES A & B

ROUTE 49 SEC. 29

ARKANSAS STATE HIGHWAY COMMISSION

LITTLE ROCK, ARK.

DRAWN BY:	BWC	DATE:	07-24-15	FILENAME:	bca090lb3_sl5.dgn
CHECKED BY:	CAW	DATE:	09-01-15	SCALE:	SEE DETAILS
DESIGNED BY:	KJC	DATE:	03-14-14		

BRIDGE NO. A&B5960 DRAWING NO. 57762

USER: bc5100
DESIGN FILE: G:\31061100_264toNHope\TRANSP\dgn\bridge\bca090lb3_sl5.dgn
PLOTTED: 3/8/2016 09:40 SCALE: 8:1

Crafton, Tull & Associates Inc.	DATE REVISED	DATE FILMED	DATE REVISED	DATE FILMED	FED.RD. DIST.NO.	STATE	FED.AID PROJ.NO.	SHEET NO.	TOTAL SHEETS
					6	ARK.			
					JOB NO.		CA0901	216	452
					(1) A&B5960		SPAN DETAILS		57763

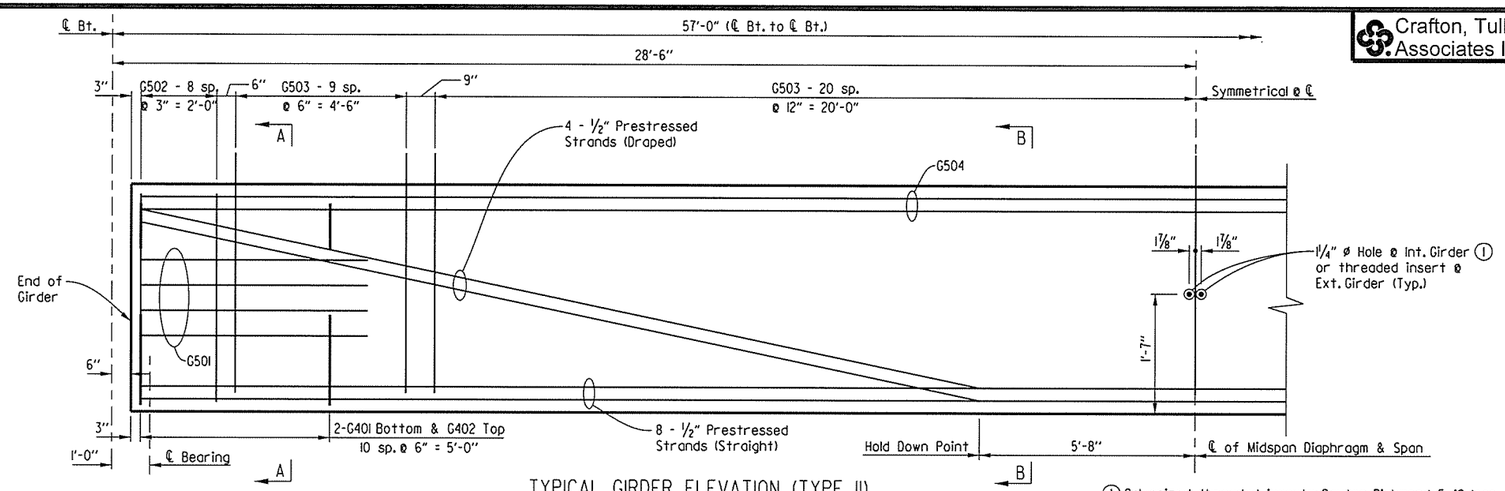

TYPICAL GIRDER ELEVATION (TYPE II)

(Span 2)
No Scale

(1) Galvanized threaded inserts: Dayton-Richmond F-42 loop ferrule insert or an approved equal. 3/4" ø threaded rods to be AASHTO M270, Grade 50 or AASHTO M31 or M322 Type A, Gr. 60. These are to be non-pay items-subsidiary to the item "Prestressed Concrete Girders (Type II)". Galvanizing shall be in accordance with AASHTO M232 Class C or ASTM B695 Class 50.

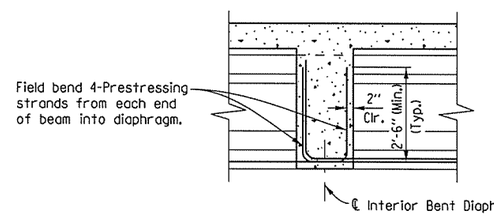

ELEVATION OF BEAMS AT INTERMEDIATE BENTS

Scale: 1/2" = 1'-0"

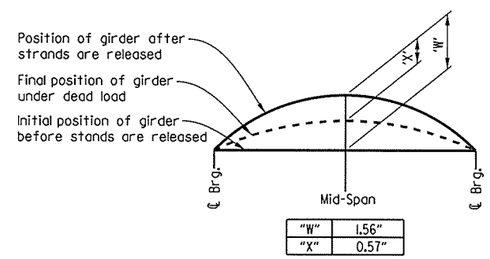

"W"	1.56"
"X"	0.57"

'W' is expected camber of girder at 90 days release (Prestress + Dead Load of Girder)

'X' is Dead Load Deflection of Slab + Diaphragms + Composite Dead Load.

CAMBER & DEFLECTIONS (INCHES)

No Scale

GENERAL NOTES - GIRDERS ONLY

Pretensioning steel shall be 1/2" dia. low relaxation strands with a minimum ultimate strength of 270 ksi and shall conform to AASHTO M203.

All girders shall be AASHTO Type II I-Girders as shown on the details. All girders shall be cast in concrete floored pallets and in metal forms. All work and materials shall be as specified in Subsection 802.22 of the Standard Specifications.

Concrete shall be Class 'S' and shall have a minimum 28 day compressive strength f'c = 6000 PSI.

Dimensions shown are to the center of strands.

The initial tensile force applied to each 1/2" dia. strand shall be 31000 pounds. Transfer of this tensioning load to the girder shall not be done until the compressive strength of the concrete is at least 4500 psi.

The Contractor shall submit the method and sequence for release of strands to the Engineer for approval prior to casting of the girders.

The first 16" along the top of the girder at each end shall have a smooth finish. The remaining portion shall be rough floated at approximately the time of set then scrubbed transversely with a coarse wire brush to remove all laitance and to produce a roughened surface for bonding slabs.

Girder lengths shown on the design plans are net lengths measured horizontally along girder centerlines. The girder manufacturer shall make the necessary allowances for grade and shortening due to elastic shortening, creep, and shrinkage.

All exposed steel at ends of girders shall be protected against corrosion by a coating with two coats of Zinc-Rich paint.

Girders must be maintained in an upright position at all times and must be picked up from points near the girder ends. Disregard of the requirement may lead to collapse of the girder. The Contractor's proposed lifting details shall be submitted on shop drawings to the Engineer for approval. The use of holes for lifting purposes will not be permitted.

The Contractor may submit alternate strand patterns with design calculations for review and approval in accordance with Subsection 802.22 except that only 1/2" diameter strands shall be allowed.

All reinforcing steel shall be Grade 60 (yield strength = 60,000 psi) conforming to AASHTO M 31 or M 322 Type A with Mill Test Reports.

Distances from the forms and spacing of the prestressing steel shall be maintained by stays, ties, hangers, spacers, or other approved supports which shall be shown on the shop drawings.

The point of support and direction of the reactions with respect to the member shall be appoximately the same during transportation and storage as when member is in its final position.

Drawings show general features of design only. Shop drawings shall be submitted to the Engineer and approval shall be secured before fabrication can begin.

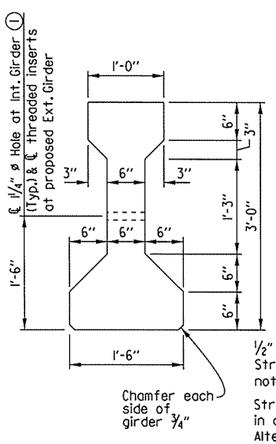

TYPICAL SECTION

Scale: 1" = 1'-0"

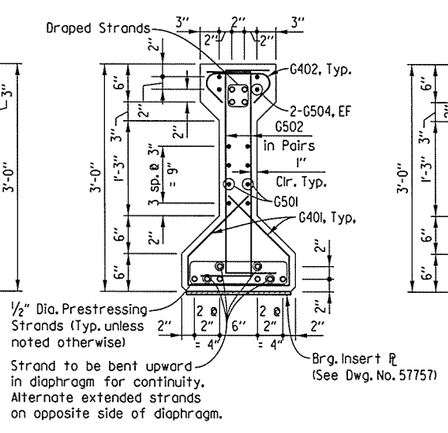

SECTION A-A

Scale: 1" = 1'-0"

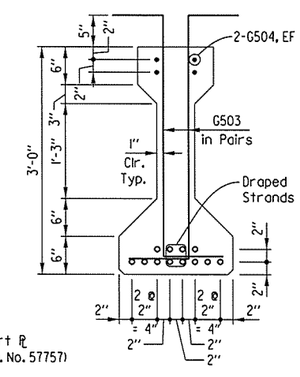

SECTION B-B

Scale: 1" = 1'-0"

BAR LIST - PER 56' GIRDER

MARK	NO. REQ'D	LENGTH	P.D.	BENDING DIAGRAMS (DIMENSIONS ARE OUT TO OUT OF BARS.)
G401	44	2'-6"	2"	
G402	22	1'-6"	3"	
G501	8	10'-1"	3"	
G502	36	3'-7"	2"	
G503	122	4'-8"	2"	
G504	8	29'-5"	Str.	

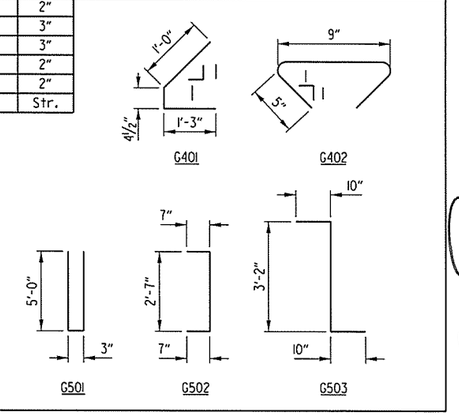

STATE OF ARKANSAS REGISTERED PROFESSIONAL ENGINEER No. 11856 CHARLES A. WIPF 08/08/16

SHEET 6 OF 8

DETAILS OF 143'-0" CONTINUOUS PRESTRESSED CONCRETE GIRDER UNIT
NEW HOPE ROAD & BLOSSOM WAY CREEK - BRIDGES A & B

ROUTE 49 SEC. 29

ARKANSAS STATE HIGHWAY COMMISSION

LITTLE ROCK, ARK.

DRAWN BY:	BWC	DATE:	07-24-15	FILENAME:	bca0901b3_sl6.dgn
CHECKED BY:	CAW	DATE:	09-01-15	SCALE:	SEE DETAILS
DESIGNED BY:	KJC	DATE:	03-04-14		

BRIDGE NO. A&B5960 DRAWING NO. 57763

USER: bc5100
DESIGN FILE: G:\13\06100_264toNHope\TRANSP\dgn\bridge\bca0901b3_sl6.dgn
PLOTTED: 3/8/2016 09:40 SCALE: 8:1

① ℄ Full-Depth Parapet Joint (1/4" to 1" max.). Stop 4" from top of slab. See Dwg. No. 57765.

② ℄ Partial-Depth Parapet Joint (1/4" to 1" max.). Stop 1'-6" from top of slab. See Dwg. No. 57765.

Crafton, Tull & Associates Inc.

DATE REVISED	DATE FILMED	DATE REVISED	DATE FILMED

FED.RD. DIST.NO.	STATE	FED.AID PROJ.NO.	SHEET NO.	TOTAL SHEETS
6	ARK.			
JOB NO.		CA0901	217	452
① A&B5960		SPAN DETAILS		57764

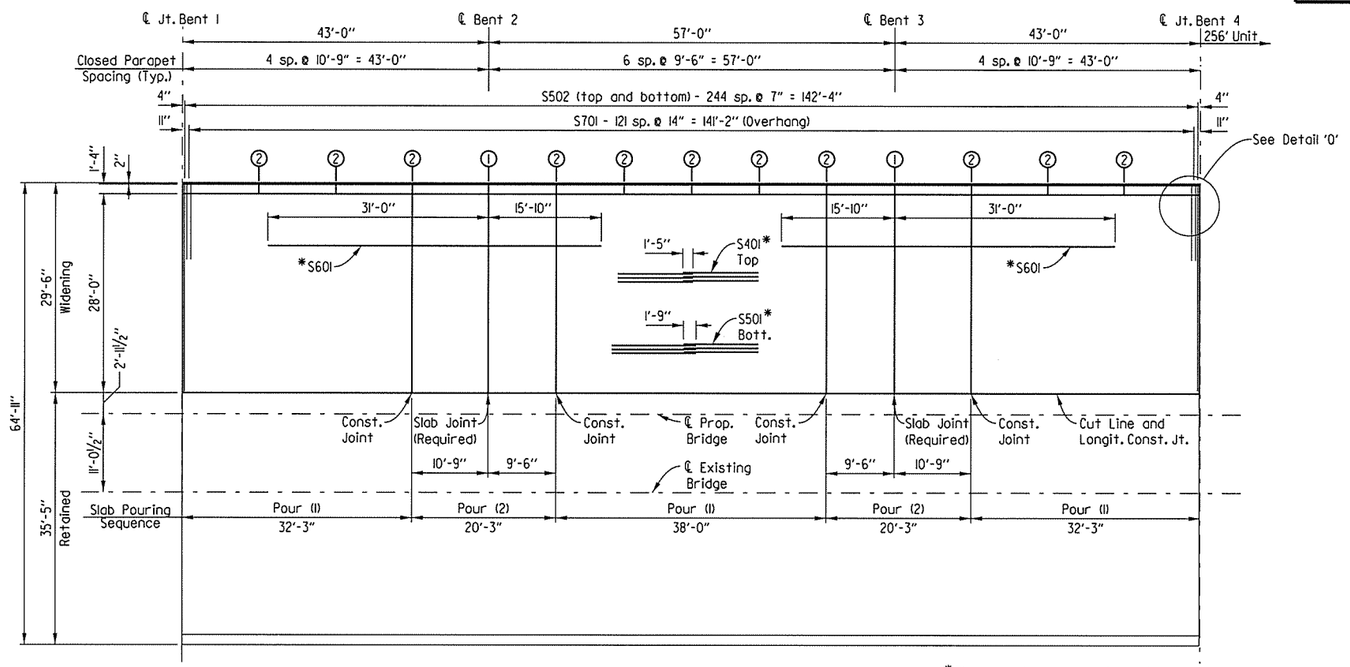

REINFORCING PLAN

Bridge B shown, Bridge A opposite hand.
No Scale

*Place reinforcing as shown in Typical Section at Interior Bents.

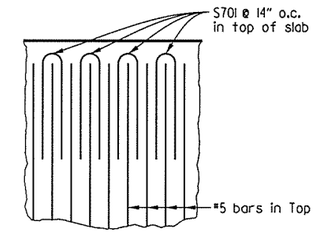

DETAIL O

No Scale

Notes:

Required slab joints and Pouring Sequence Joints near intermediate bents shall align with joints in parapet rail at the gutterline.

Pours with the same number may be placed simultaneously or separately. All Pours (1) must be placed before Pours (2) can be placed. 48 hours shall elapse between the end of a pour and the start of the next pour. 72 hours shall elapse between the end of a pour and the start of an adjacent pour. Any railing pours made before the entire slab in the respective stage has been placed must be approved by the Engineer.

The Contractor must obtain approval from the Engineer for any deviations from the pouring sequence shown.

BAR LIST (Bridge B shown, Bridge A similar)

Mark	Number Required	Length	"A"	"B"	Pin Diameter
D401	60	6'-7"	2'-10"	6"	2"
D402	40	7'-10"	3'-4"	9"	2"
D403	40	7'-6"			2"
D601	120	4'-0"			Str.
D602	30	3'-6"			Str.
D603	12	21'-9"			Str.
D604	8	3'-0"			Str.
P401	8	36'-9"			Str.
P402	8	22'-1"			Str.
P403	4	29'-1"			Str.
P404	40	10'-5"			Str.
P405	30	9'-2"			Str.
P501	254	6'-8"			3 3/4"
P502	254	6'-9"			3 3/4"
S401	80	36'-9"			Str.
S501	96	48'-9"			Str.
S502	490	28'-11"			Str.
S601	64	46'-10"			Str.
S701	122	9'-3"			6 1/8"

Bending Diagrams (Dimensions are Out to Out of Bars)

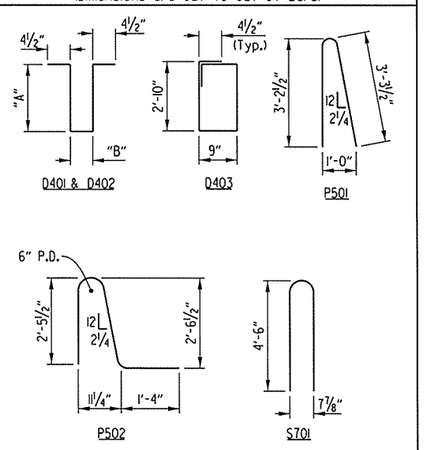

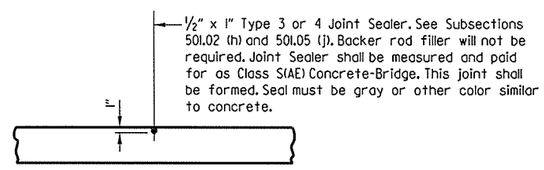

LONGITUDINAL CONSTRUCTION JOINT

No Scale

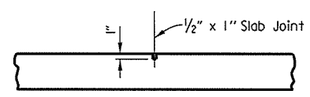

SLAB JOINT DETAIL

No Scale

Note:
Use Type 3 or 4 joint sealer. See Sections 501.02(h) and 501.05 (j) of the Standard Specifications. Backer rod filler will not be required. Paid for under "Class S(AE) Concrete - Bridge". Slab joints shall extend to the outside edge of the deck slab. Slab joints shall be installed before the parapet railing or sidewalk is poured. If slab joints are to be sawed, they shall be sawed as soon as the concrete has sufficiently set to allow sawing of the joints without damage to the slab. Slab joints shall align with parapet joints. Slab joints shall be placed at all pouring sequence construction joints and required slab joint locations.

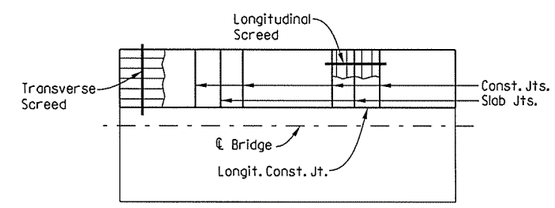

Note: Place Concrete to Approx. Slab Thickness when using Transverse or Longitudinal Screed.

CONCRETE PLACEMENT PROCEDURE

No Scale

STATE OF ARKANSAS
REGISTERED PROFESSIONAL ENGINEER
No. 11856
CHARLES A. WIPF
03/08/16

SHEET 7 OF 8

DETAILS OF 143'-0" CONTINUOUS PRESTRESSED CONCRETE GIRDER UNIT
NEW HOPE ROAD & BLOSSOM WAY CREEK - BRIDGES A & B

ROUTE 49 SEC. 29

ARKANSAS STATE HIGHWAY COMMISSION

LITTLE ROCK, ARK.

DRAWN BY:	BWC	DATE:	07-28-15	FILENAME:	bca0901b3.sl7.dgn
CHECKED BY:	CAW	DATE:	08-31-15	SCALE:	NO SCALE
DESIGNED BY:	KJC	DATE:	03-14-14		

BRIDGE NO. A&B5960 DRAWING NO. 57764

USER: bc5100
DESIGN FILE: G:\13106100.264toNHope\TRANSP\dgn\bridge\bca0901b3.sl7.dgn
PLOTTED: 3/8/2016 09:40 SCALE: 21.333333:1

① ℄ Full-Depth Parapet Joint (1/4" to 1" max.). Stop 4" from top of slab.

② ℄ Partial-Depth Parapet Joint (1/4" to 1" max.). Stop 1'-6" from top of slab.

Crafton, Tull & Associates Inc.

DATE REVISED	DATE FILMED	DATE REVISED	DATE FILMED	FED.RD. DIST.NO.	STATE	FED.AID PROJ.NO.	SHEET NO.	TOTAL SHEETS
				6	ARK.			
				JOB NO.		CA0901	218	452
				① A&B5960		SPAN DETAILS		57765

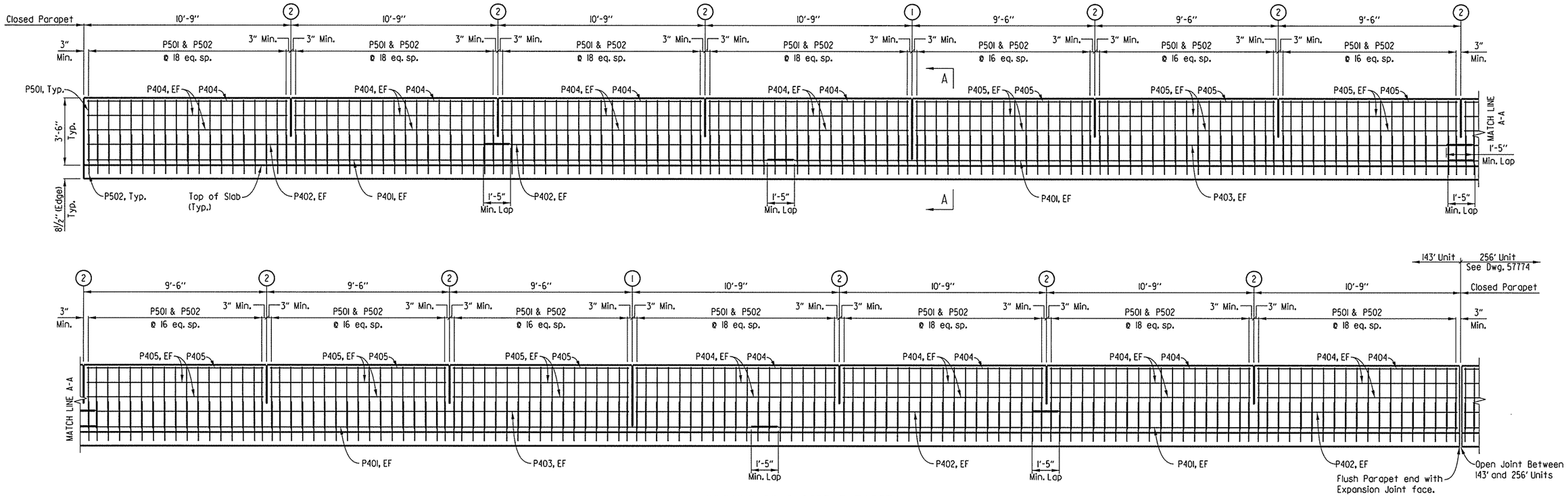

DETAILS OF CLOSED PARAPET

(Bridge B Shown, Bridge A Similiar)
Scale: 3/8" = 1'-0"

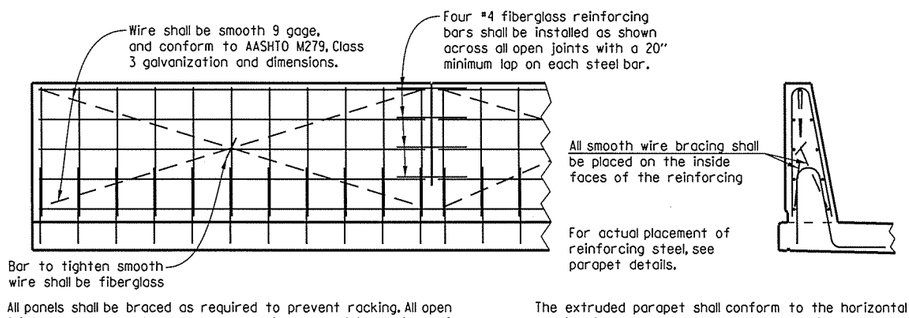

All panels shall be braced as required to prevent racking. All open joints shall be sawed as soon as practical to a minimum width of 1/4". To control cracking before sawing all joints must be grooved before the concrete is set. Sawing of the joints must be controlled so it will follow the grooved joint.

The extruded parapet shall conform to the horizontal and vertical lines shown on the plans or as directed by the Engineer and shall present a smooth, uniform appearance and texture.

DETAILS OF OPTIONAL SLIP FORMING OF CONCRETE PARAPET RAIL

No Scale

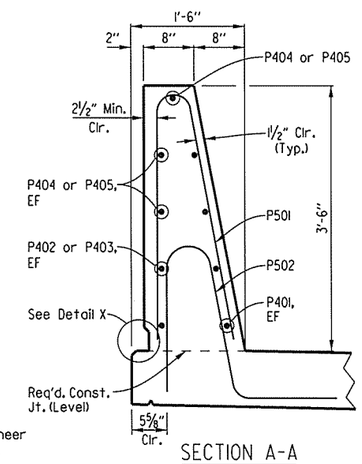

SECTION A-A

Scale: 1" = 1'-0"

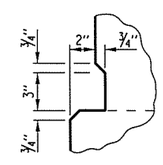

DETAIL X

Scale: 1 1/2" = 1'-0"

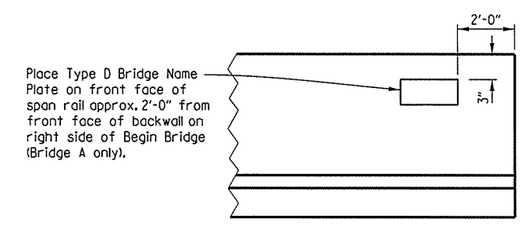

NAME PLATE DETAIL

No Scale

STATE OF ARKANSAS REGISTERED PROFESSIONAL ENGINEER No. 11856 CHARLES A. WIPF
03/08/16

SHEET 8 OF 8

DETAILS OF 143'-0" CONTINUOUS PRESTRESSED CONCRETE GIRDER UNIT
NEW HOPE ROAD & BLOSSOM WAY CREEK - BRIDGES A & B

ROUTE 49 SEC. 29

ARKANSAS STATE HIGHWAY COMMISSION

LITTLE ROCK, ARK.

DRAWN BY:	BWC	DATE:	07-24-15	FILENAME:	bca0901b3_sl8.dgn
CHECKED BY:	CAW	DATE:	08-28-15	SCALE:	SEE DETAILS
DESIGNED BY:	KJC	DATE:	03-14-14		

BRIDGE NO. A&B5960 DRAWING NO. 57765

USER: bc5100 DESIGN FILE: G:\3106100_264toNhope\TRANSP\dgn\bridge\bca0901b3_sl8.dgn PLOTTED: 3/8/2016 09:40 SCALE: 5.3333333:1

GENERAL NOTES

CONSTRUCTION SPECIFICATIONS: Arkansas State Highway and Transportation Department Standard Specifications for Highway Construction (2014 edition) with applicable Supplemental Specifications and Special Provisions.

DESIGN SPECIFICATIONS: AASHTO LRFD Bridge Design Specifications, 6th edition (2012) with current interim specifications (New Construction only)

MATERIALS AND STRENGTHS:

Class S(AE) Concrete (slab, parapet, diaphragm)	f'c= 4,000 psi
Class S Concrete (Prestressed Girders)	f'c= 6,000 psi
Class S Concrete (Substructure)	f'c= 3,500 psi
Reinforcing Steel (Grade 60 AASHTO M31 or M322 Type A)	fy= 60,000 psi
Prestressing Strands (AASHTO M203)	fpu= 270,000 psi
Structural Steel (AASHTO M270, GR. 50)	Fy= 50,000 psi
Structural Steel (AASHTO M 270, Gr. 36)	Fy= 36,000 psi

CONCRETE:
All Concrete in slabs, parapets, and diaphragms shall be Class S(AE) with a minimum of 28 day compressive strength f'c= 4000 psi. Concrete shall be poured in the dry and all exposed corners shall be chamfered ¾" unless otherwise noted. All end of unit and midspan diaphragms shall be cast in place and poured a minimum of 48 hours before the slab is poured, unless otherwise noted. Interior bent diaphragms shall be cast monolithically with the slab, and shall not be poured until at least 90 days after the release of the prestressing strands.

The Superstructure details shown are for use when removable deck forming is used and are the basis for measurement of Class S(AE) concrete. See Standard Drawing No. 55005 for allowable modifications and for tolerances when Permanent Steel Bridge Deck Forms are used.

Concrete in bridge superstructure shall be placed, consolidated and screeded off for the entire pour before any concrete has taken its initial set. This may require the use of a retarding agent. The Contractor must obtain approval from the Engineer for any deviations from the pouring sequence shown.

The concrete deck shall be given a tine finish in accordance with Subsection 802.19 for Class 5 Tined Bridge Roadway Surface Finish. Movement of the finishing machine across new concrete shall be on planks placed on the surface and shall be prohibited for 72 hours after finishing the pour. Sufficient concrete must be placed ahead of the strike-off to fully load the girder. Slab Joints from new construction shall align with Slab Joints from existing construction. Required Slab Joints shall align with the Parapet Open Joints.

REINFORCING STEEL:
All reinforcing steel shall be Grade 60 (Yield Strength = 60,000 psi) conforming to AASHTO M 31 or M 322 Type A with mill test reports.

The reinforcing steel shall be accurately located in the forms and firmly held in place by steel wire supports sufficient in size and number to prevent displacement during the course of construction. The wire supports will not be paid for directly but will be considered subsidiary to the item of "Reinforcing Steel (Grade 60)".

STRUCTURAL STEEL:
All Structural Steel shall be AASHTO M270, GR. 50 unless otherwise noted and shall be paid for as "Structural Steel in Beam Spans (M270, GR. 50)". Structural steel completely embedded in concrete may be AASHTO M270, GR. 36.

The roadway channels and end bent joint armor shall be cleaned and painted in accordance with Section 638. All other exposed surfaces shall be cleaned in accordance with Section 807 unless noted otherwise. This work will not be paid for separately but will be considered subsidiary to The item "Structural Steel in Beam Spans (M270, GR 50)".

Requests for substitution of structural steel shapes shown with shapes of greater size must be submitted by the Contractor to the Engineer for approval. Steels of equal or greater strengths will be accepted only when shown on the approved shop drawings. Shape and materials shown in the plans will be the basis of payment and no additional compensation will be made for any adjustments due to substitutions.

All welding that is to be done during fabrication of structural steel, including temporary welds, shall be detailed on the shop drawing and submitted for approval. If additional welds are required, whether permanent or temporary, a formal request with detailed drawings shall be submitted to the Engineer for approval; However, additional welds used for attaching falsework support devices or screed rail supports to the structural steel that do not exceed the limitations of Subsection 802.13 will not require approval prior to construction. All welding shall conform to Subsection 807.26.

Drawings show general features of design only. Shop drawings shall be made in accordance with the Specifications, submitted, and approval secured before fabrication is begun.

Elastomeric bearings shall be firmly seated in accordance with Subsection 808.08 of the Specifications. This work to be considered subsidiary to the item "Elastomeric Bearings" and will not be paid for directly.

REMOVAL OF EXISTING DECK:
Care shall be exercised during the removal of the existing deck to ensure that the existing girders, diaphragms, bolted connections and reinforcement are not damaged. Damaged items that are not salvageable, as determined by the Engineer, shall be replaced by the Contractor's at no additional payment.

The deck removal shall progress in a manner that will ensure the stability of the existing structure. The concrete deck in the end spans shall not be removed before the deck in the interior spans have been removed.

The existing concrete deck shall be completely removed to the top flange of the existing girders. Care should be exercised during the removal of the existing deck to ensure that the existing girders, diaphragms and reinforcement is not damaged. This work will not be paid for directly but will be considered subsidiary to this item "Modification of Existing Bridge Structure (Br. No. A5960)" and "Modification of Existing Bridge Structure (Br. No. B5960)".

METHOD OF WORK:
The Contractor shall remove portions of the existing deck as shown in "Details of Stage Construction" on Dwg. No. 57744 & 57745. After Construction of all bents and removal of portions of the existing slab have been performed to the satisfaction of the Engineer, the Contractor shall drill and dowel the interior diaphragm reinforcing to Girder No. 5 (143' Unit) and Girder No. 4 (256' Unit), as shown in the plans, to facilitate diaphragm construction. This work will not be paid for directly but will be considered subsidiary to the item "Modification of Existing Bridge Structure (Br. No. A5960)" & "Modification of Existing Bridge Structure (Br. No. B5960)".

All applicable provisions of Section 205, as determined by the Engineer, shall be followed.

The Contractor may submit an alternate Method of Work. The plan shall be submitted to the Engineer for information and record keeping purposes at least three weeks prior to any work being performed. The submittal shall be prepared and/or approved by an Arkansas Professional Engineer and shall include sufficient details and information to the Engineer's satisfaction. The Contractor shall be responsible for the results obtained by the use of the alternate Method of Work. All work, materials, and labor required for the Contractor to develop and execute the plan will not be paid for directly but will be considered subsidiary to the item "Modification of Existing Bridge Structure (Br. No. A5960)" & "Modification of Existing Bridge Structure (Br. No. B5960)".

STATE OF ARKANSAS
REGISTERED PROFESSIONAL ENGINEER
No. 11856
CHARLES A. WIPF
03/08/16

SHEET 1 OF 2

DETAILS OF 143'-0" & 256'-0" CONTINUOUS PRESTRESSED CONCRETE GIRDER UNIT
NEW HOPE ROAD & BLOSSOM WAY CREEK
- BRIDGES A & B

ROUTE 49 SEC. 29

ARKANSAS STATE HIGHWAY COMMISSION

LITTLE ROCK, ARK.

DRAWN BY:	BWC	DATE:	07-24-15	FILENAME:	bca0901b3_sl9.dgn
CHECKED BY:	CAW	DATE:	08-31-15	SCALE:	NO SCALE
DESIGNED BY:	KRM	DATE:	06-05-15		

BRIDGE NO. A&B5960 DRAWING NO. 57766

Crafton, Tull & Associates Inc.	DATE REVISED	DATE FILMED	DATE REVISED	DATE FILMED	FED.RD. DIST.NO.	STATE	FED.AID PROJ.NO.	SHEET NO.	TOTAL SHEETS
					6	ARK.			
					JOB NO.		CA0901	220	452
					(1) A&B5960		SPAN DETAILS		57767

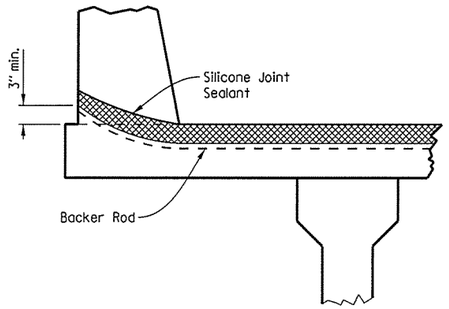

JOINT SEAL PLACEMENT AT PARAPET

No Scale

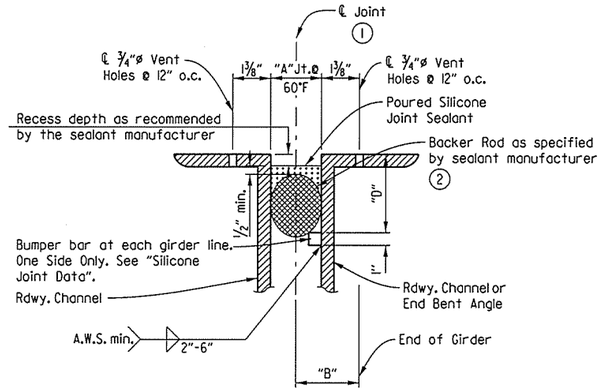

DETAIL OF POURED SILICONE JOINT SEAL

No Scale

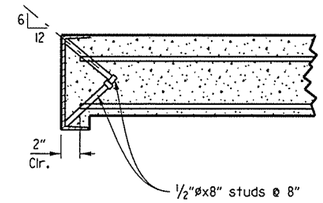

Note: As an alternate to ⅝"ø studs, ½"øx8" studs spaced as shown may be used. Use weight of ⅝"ø stud as basis of measurement of structural steel in anchors.

DETAILS OF ALTERNATE ANCHORS

No Scale

EXPANSION DEVICE INSTALLATION

The Contractor may elect to install the expansion device for the end bents using one of the following two alternatives:

1) The concrete span pour adjacent to joint shall be placed before the end bent backwall is placed. After the end bent backwall forms are in place and the girders erected, the blocked expansion device shall be installed and adjusted for grade. All connection bolts shall be fully tightened prior to placing the deck concrete adjacent to the bent. Immediately prior to pouring the backwall concrete, the blocking shall be removed, the opening adjusted for temperature, and the backwall constructed.

2) The backwall portion shall be poured to the optional construction joint after girders are erected. The blocked expansion device shall be installed and adjusted for grade. All connection bolts shall be fully tightened prior to placing the deck concrete adjacent to the bent. The concrete span pour adjacent to joint shall be placed prior to pouring the remainder of the backwall. Immediately prior to pouring the remainder of the backwall concrete, the blocking shall be removed and the opening adjusted for temperature. Backfill shall not be placed behind the backwall until the deck concrete on the adjacent span has been placed.

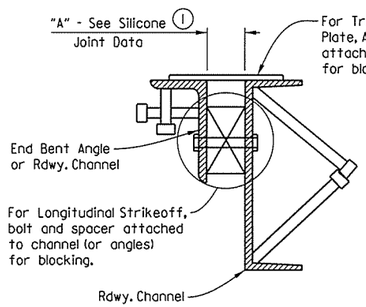

Note: Each expansion joint device shall be blocked in the Shop by the Fabricator and the blocking details shall be shown on the Shop Drawings. Blocking shall not be removed until the slab is complete. Blocking shall be placed within 2 feet of each end of the device and with a maximum spacing of 8 feet.

DETAILS FOR BLOCKING EXPANSION JOINT DEVICE

No Scale

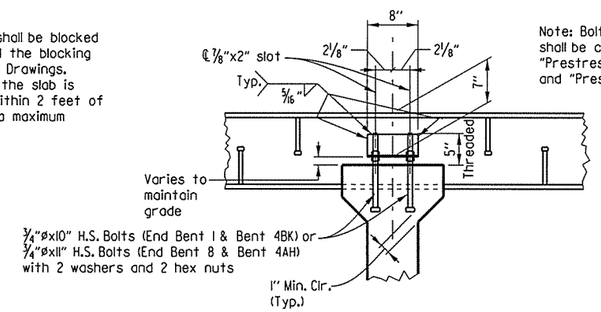

Note: Bolts, washers & hex nuts shall be considered subsidiary to the item "Prestressed Concrete Girders (Type II) and "Prestressed Concrete Girders (Type III)".

SECTION B-B

No Scale

TABLE FOR WELDS

Material Thickness of Thicker Part Joined (inches)	Minimum Size of Fillet Weld (inches)	Single Pass Weld Must Be Used
To ¾" Inclusive	¼"	
Over ¾"	5/16"	

NOTE: When A Fillet Weld size, as shown on the Plans, is larger than the minimum, the first pass shall be that specified for minimum size of Fillet Weld.

SILICONE JOINT DATA

Bent Number	"A" Width Perpendicular to Joint at 24 Hour Average Temperature (1) Of:			"B" Perpendicular to Joint at 60°F	Bumper Bar Size	"D"
	40°F	60°F	80°F			
1	1⅛"	1"	⅞"	4½"	1"x½"x12"	2½"
4	2½"	2¼"	2"	4½"	1"x1⅛"x12"	3⅝"
8	1⅞"	1⅝"	1½"	4½"	1"x⅞"x12"	3⅛"

(1) The temperature used to set the joint opening shall be the approximate average air temperature during the 24 hour period immediately before the bolts are tightened. The Engineer shall establish the temperature. Interpolation of the table may be necessary.

Notes: The temperature limitations recommended by the sealant manufacturer shall be observed.

The sealant shall be installed only when the average 24 hour air temperature is between 40°and 80°F.

(2) BACKER ROD NOTE:

Use an appropriately sized backer rod at the depth shown in the manufacturer's literature based on the joint width at the time of sealing.

Except as noted, do not install more backer rod than that which can be sealed in the same day.

The contractor shall verify separation of the backer rod from the joint material after the joint material has set.

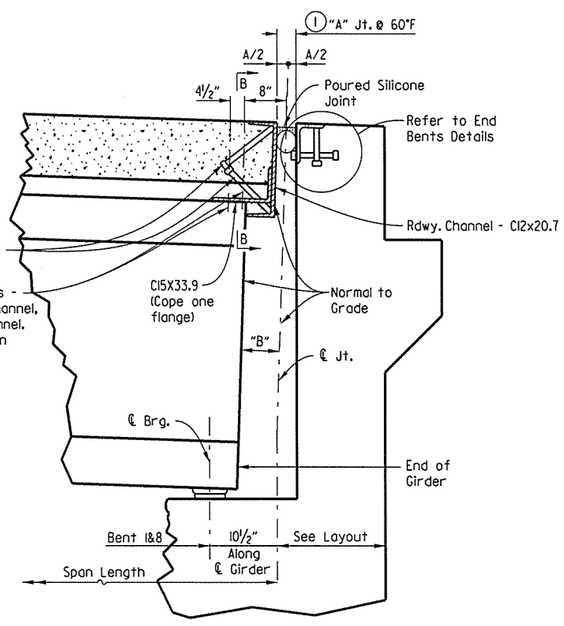

JOINT AT END BENTS 1 & 8

No Scale

Note: End Diaphragm not shown for clarity

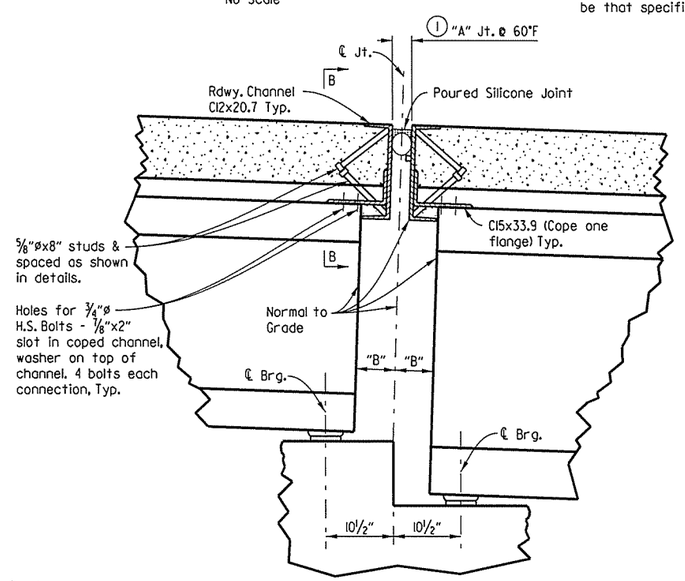

JOINT AT BENT 4

No Scale

STATE OF ARKANSAS
REGISTERED PROFESSIONAL ENGINEER
No. 11856
CHARLES A. WIPF
03/08/16

SHEET 2 OF 2

DETAILS OF 143'-0" & 256'-0" CONTINUOUS PRESTRESSED CONCRETE GIRDER UNIT
NEW HOPE ROAD & BLOSSOM WAY CREEK - BRIDGES A & B

ROUTE 49 SEC. 29

ARKANSAS STATE HIGHWAY COMMISSION

LITTLE ROCK, ARK.

DRAWN BY: BWC	DATE: 07-24-15	FILENAME: bca0901b3_s21.dgn			
CHECKED BY: CAW	DATE: 08-31-15	SCALE: SEE DETAILS			
DESIGNED BY: KJC	DATE: 03-14-14				

BRIDGE NO. A&B5960 DRAWING NO. 57767

USER: bc5100
DESIGN FILE: G:\13106100.2641\NHope\TRANSP\dgn\bridge\bca0901b3_s21.dgn
PLOTTED: 3/8/2016 09:40 SCALE: 2:1

Note: Class 2 Protective Surface Treatment shall be applied to the roadway surface, including the existing deck surface to be retained, and roadway face and top of parapet rail of the new construction.

Crafton, Tull & Associates Inc.

DATE REVISED	DATE FILMED	DATE REVISED	DATE FILMED

FED.RD. DIST.NO.	STATE	FED.AID PROJ.NO.	SHEET NO.	TOTAL SHEETS
6	ARK.			
JOB NO.		CA0901	221	452
① A&B5960		SPAN DETAILS		57768

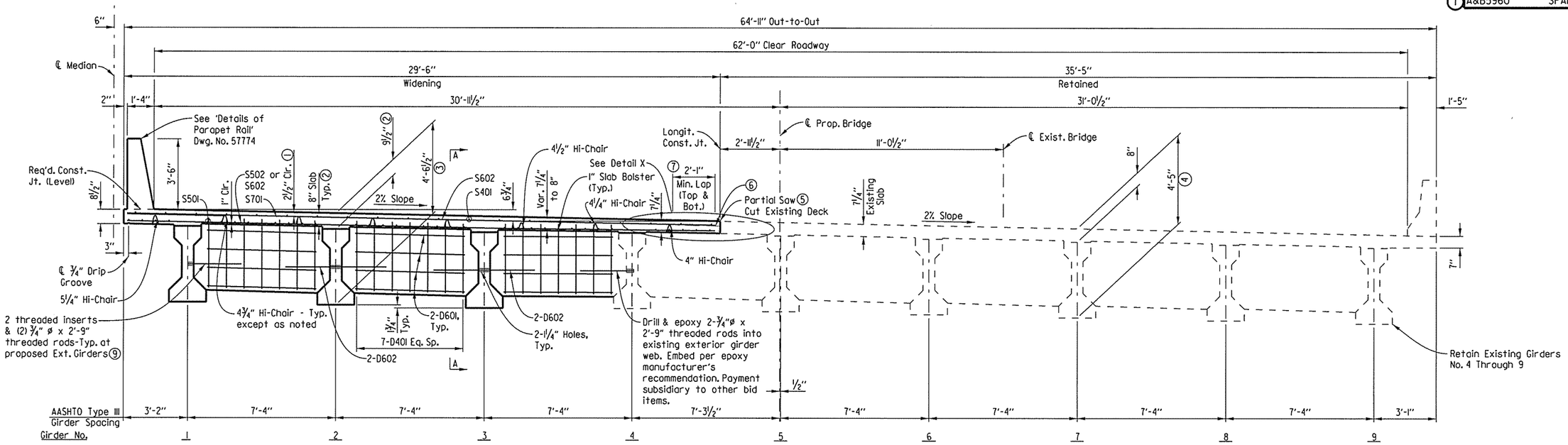

TYPICAL SECTION AT MIDSPAN

(Bridge 'A' - Looking Back)
(Bridge 'B' - Looking Ahead)
Scale: ⅜" = 1'-0"

① Tolerances: Minus = ¼"
Plus = Equal to amount of slab thickening used to meet slab thickness tolerance
See "Adjustment for Slab Thickness Tolerance" when Removable Deck Forming is Used.

② See "Adjustment for Slab Thickness Tolerance" when Removable Deck Forming is Used.

③ Measured at ℄ Bearing and ℄ New Girders, Typ.

④ Measured at ℄ Bearing and ℄ Exist. Girders, Typ.

⑤ Care shall be exercised during the removal of the existing deck to ensure that the girders, diaphragms, bolted connections and reinforcement are not damaged. Damaged items that are not salvageable as determined by the Engineer, shall be replaced by the contractor at no additional payment. See Section 821.

Note: The superstructure details shown are for use when removable deck forming is used and are the basis for measurement of Class S(AE) Concrete. See AHTD Std. Dwg. No. 55005 for allowable modifications and for tolerances when permanent steel bridge deck forms are used.

⑥ Clean and retain existing transverse reinforcing. Remove and replace existing longitudinal reinforcement.

⑦ Minimum lap with existing reinforcement (Top & Bottom). New transverse reinforcing steel shall not be tied to existing reinforcing steel.

⑧ Based on existing plans. Contractor shall verify dimensions in the field.

⑨ Galvanized threaded inserts: Dayton-Richmond F-42 loop ferrule insert or an approved equal. ¾" ø threaded rods to be AASHTO M270, Grade 50 or AASHTO M31 or M322 Type A, Gr. 60. These are to be non-pay items-subsidiary to the item "Prestressed Concrete Girders (Type III)". Galvanizing shall be in accordance with AASHTO M232 Class C or ASTM B695 Class 50.

SLAB REINFORCING:

Transverse:
S502 ø 15" o.c. in bottom } Alternate
S602 ø 15" o.c. in bottom
S602 ø 7½" o.c. in top
S701 ø 15" o.c. in top

Longitudinal:
S401 as shown in top (18" max)
S501 as shown in bottom (8" max)
S601 as shown in top (10" o.c. over interior supports)

#4 bars lapped @ 1'-5"
#5 bars lapped @ 1'-9" (u.n.o.)
#6 bars lapped @ 2'-1" (u.n.o.)

Note: Space Hi-Chairs 4'-0" o.c. long.
Space slab bolsters 4'-0" max. sp.

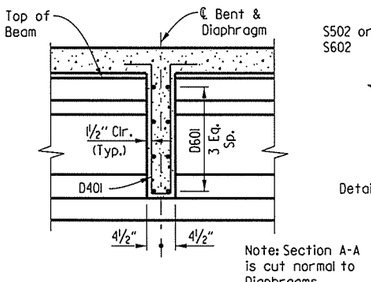

Note: Section A-A is cut normal to Diaphragms.

SECTION A-A

Interior Diaphragm
(Normal to Grade)
Scale: ½" = 1'-0"

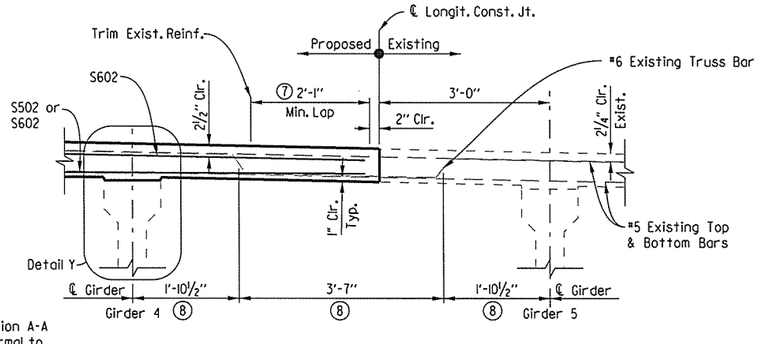

DETAIL X

Scale: ¾" = 1'-0"

Note:
Longitudinal Reinforcement not shown for clarity.

Note:
Bridge B shown,
Bridge A similar.

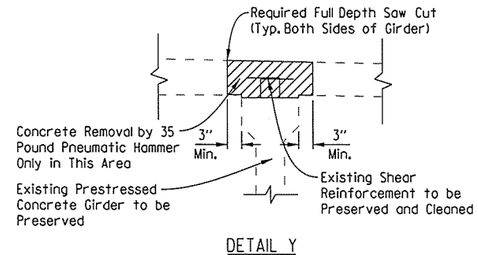

DETAIL Y

(Removal of Existing Deck at Girder 4)

Note:
Concrete removal over girders shall be restricted to 35 Pound Pneumatic Hammer. The concrete removal in this area shall be performed after the slab has been cut.

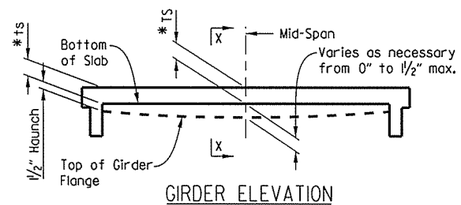

GIRDER ELEVATION

No Scale

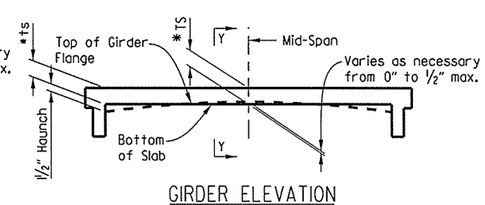

GIRDER ELEVATION

No Scale

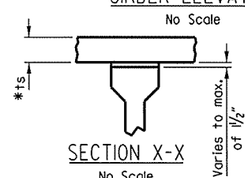

SECTION X-X

No Scale

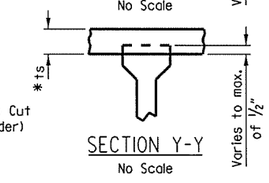

SECTION Y-Y

No Scale

Note: ts = slab thickness as shown on Superstructure Details. See "Typical Sections".

Tolerance when removable deck forming is used is +½", -¼". Haunch forming is required and shall be adjusted to maintain slab thickness tolerance.

* See Std. Dwg. No. 55005 for tolerances when permanent steel deckforms are used.

'Girder Elevation' sketches show the range of acceptability of the top of the girder relative to bottom of slab after the placement of the slab. When the top of the girder projects more than ½" into the slab, a raise in grade will be necessary. Girders shall be set in a sufficient number of spans so when adjustment is necessary the profile grade can be adjusted over suitable increments so the revised grade line will produce a smooth riding surface. Variation of the haunch height will be at the Contractor's expense.

ADJUSTMENT FOR SLAB THICKNESS TOLERANCE WHEN REMOVABLE DECK FORMING IS USED

No Scale

STATE OF ARKANSAS
REGISTERED PROFESSIONAL ENGINEER
No. 11856
CHARLES A. WIPF
03/08/16

SHEET 1 OF 7

DETAILS OF 256'-0" CONTINUOUS PRESTRESSED CONCRETE GIRDER UNIT
NEW HOPE ROAD & BLOSSOM WAY CREEK - BRIDGES A & B
ROUTE 49 SEC. 29
ARKANSAS STATE HIGHWAY COMMISSION
LITTLE ROCK, ARK.

DRAWN BY: BWC	DATE: 01-14-14	FILENAME: bca0901b3_s22.dgn		
CHECKED BY: CAW	DATE: 08-23-15	SCALE: SEE DETAILS		
DESIGNED BY: KJC	DATE: 01-09-14			

BRIDGE NO. A&B5960 DRAWING NO. 57768

USER: bc5100
DESIGN FILE: G:\3106100.2641toNhope\TRANSP\dgn\bridge\bca0901b3_s22.dgn
PLOTTED: 3/8/2016 09:40 SCALE: 5.3333331

Crafton, Tull & Associates Inc.	DATE REVISED	DATE FILMED	DATE REVISED	DATE FILMED	FED.RD. DIST.NO.	STATE	FED.AID PROJ.NO.	SHEET NO.	TOTAL SHEETS
					6	ARK.			
					JOB NO.		CA0901	222	452
					(1) A&B5960		SPAN DETAILS		57769

For additional details, see Dwg. No. 57768

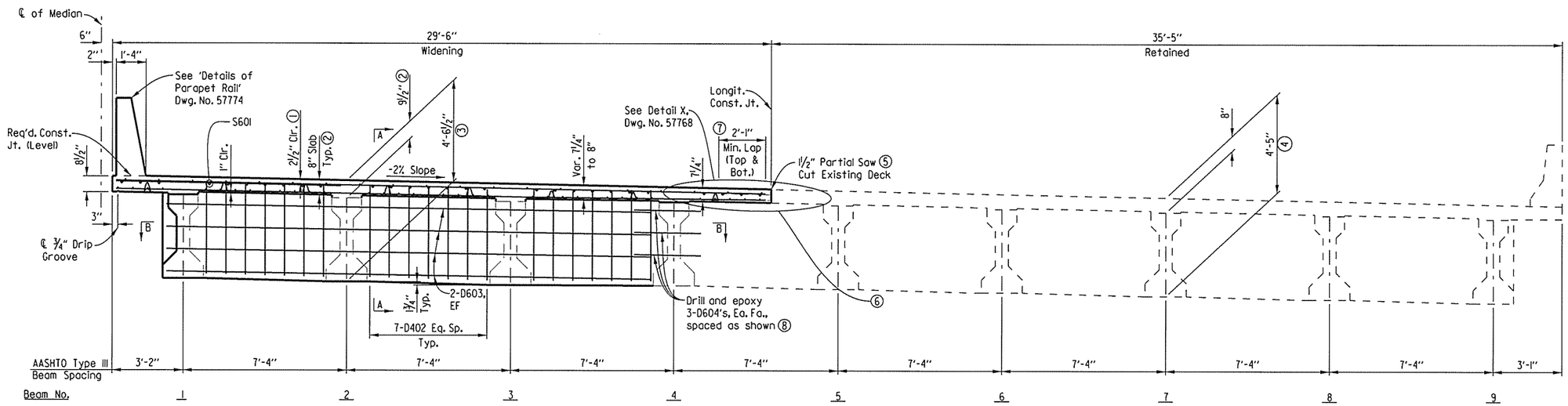

TYPICAL SECTION AT FIXED BENTS

(Bridge 'A' - Looking Back)
(Bridge 'B' - Looking Ahead)
Scale: ⅜" = 1'-0"

(1) Tolerances: Minus = ¼"
Plus = Equal to amount of slab thickening used to meet slab thickness tolerance
See "Adjustment for Slab Thickness Tolerance when Removable Deck Forming is Used".

(2) See "Adjustment for Slab Thickness Tolerance when Removable Deck Forming is Used".

(3) Measured at ℄ Bearing and ℄ New Beams, Typ.

(4) Measured at ℄ Bearing and ℄ Exist. Beams, Typ.

(5) Care shall be exercised during the removal of the existing deck to ensure that the beams, diaphragms, bolted connections and reinforcement are not damaged. Damaged items that are not salvageable as determined by the Engineer, shall be replaced by the contractor at no additional payment. The interior spans of the existing deck shall be removed before the end spans are removed in order to ensure stability of the existing bridge.

Note: The superstructure details shown are for use when removable deck forming is used and are the basis for measurement of Class S(AE) Concrete. See AHTD Std. Dwg. No. 55005 for allowable modifications and for tolerances when permanent steel bridge deck forms are used.

(6) Clean and retain existing transverse reinforcing. Remove and replace existing longitudinal reinforcement.

(7) Minimum lap with existing reinforcement (Top & Bottom). New transverse reinforcing steel shall not be tied to existing reinforcing steel.

(8) Epoxy embed bars with 1'-0" minimum embedment into existing Fixed Bent Diaphragm. Payment shall be considered subsidiary to the item "Modification of Existing Bridge Structure (Br. No. A5960)" & "Modification of Existing Bridge Structure (Br. No. B5960)".

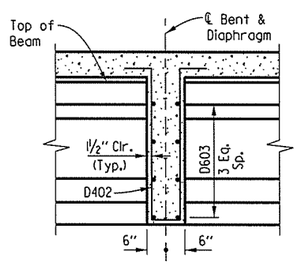

SECTION A-A

Interior Bent Diaphragm
(Normal to Grade)
Scale: ½" = 1'-0"

Note: Section A-A is cut normal to Diaphragms.

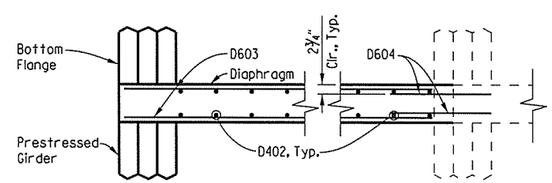

SECTION B-B

Scale: ½" = 1'-0"

STATE OF ARKANSAS
REGISTERED PROFESSIONAL ENGINEER
No. 11856
CHARLES A. WIPF
03/09/16

SHEET 2 OF 7

DETAILS OF 256'-0" CONTINUOUS PRESTRESSED CONCRETE GIRDER UNIT
NEW HOPE ROAD & BLOSSOM WAY CREEK
- BRIDGES A & B

ROUTE 49 SEC. 29

ARKANSAS STATE HIGHWAY COMMISSION

LITTLE ROCK, ARK.

DRAWN BY: BWC	DATE: 01-14-14	FILENAME: bca0901b3_s23.dgn			
CHECKED BY: CAW	DATE: 08-23-15	SCALE: SEE DETAILS			
DESIGNED BY: KJC	DATE: 01-09-14				

BRIDGE NO. A&B5960 DRAWING NO. 57769

USER: bc5100
DESIGN FILE: G:\3106100_2641toNHope\TRANSP\dgn\bridge\bca0901b3_s23.dgn
PLOTTED: 3/8/2016 09:40 SCALE: 5.333333:1

Crafton, Tull & Associates Inc.	DATE REVISED	DATE FILMED	DATE REVISED	DATE FILMED	FED.RD. DIST.NO.	STATE	FED.AID PROJ.NO.	SHEET NO.	TOTAL SHEETS
					6	ARK.			
					JOB NO.		CA0901	223	452
					(1) A&B5960		SPAN DETAILS		57770

Expansion Device:

Rdwy. Channel-C12x20.7
Conn. ∠'s C15x33.9 (Cope One Flange)

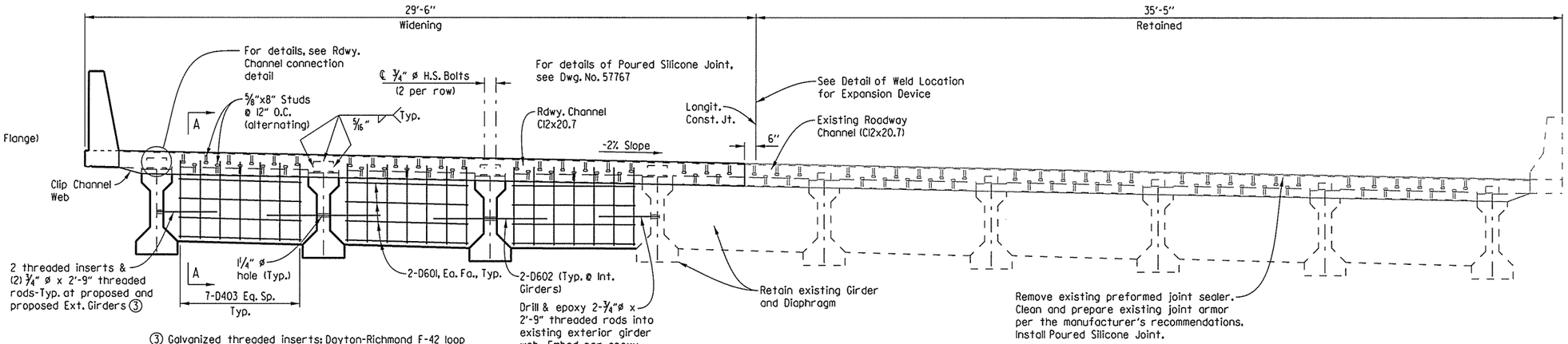

(3) Galvanized threaded inserts: Dayton-Richmond F-42 loop ferrule insert or an approved equal, 3/4" ø threaded rods to be AASHTO M270, Grade 36 or AASHTO M31 or M322 Type A, Gr. 60. These are to be non-pay items-subsidiary to the item "Prestressed Concrete Girders (Type III)". Galvanizing shall be in accordance with AASHTO M232 Class C or ASTM B695 Class 50.

TYPICAL SECTION THROUGH JOINT

(Bridge 'A' - Looking Back @ Bent 8, Bent 4 opposite hand)
(Bridge 'B' - Looking Ahead @ Bent 4, Bent 8 opposite hand)
No Scale

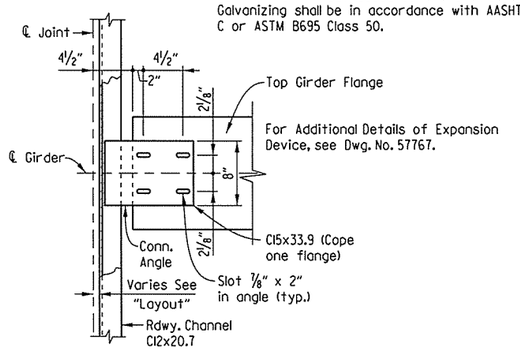

ROADWAY CHANNEL CONNECTION DETAIL

No Scale

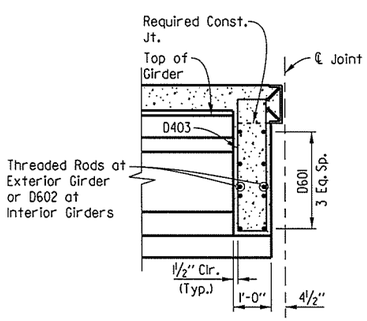

SECTION A-A

End of Unit Diaphragm
(Normal to Grade)
Scale: 1/2" = 1'-0"

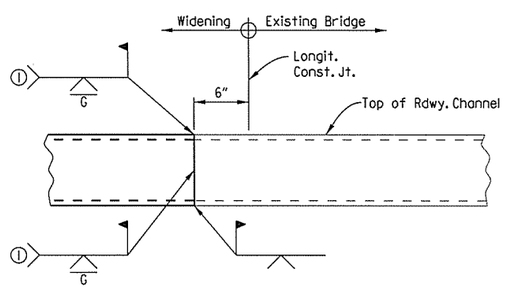

(1) Grind flush from top of deck to top of Bumper Bar.

DETAIL OF WELD LOCATION FOR EXPANSION DEVICE

(Bridge 'A' - Looking Back @ Bent 8, Bent 4 opposite hand)
(Bridge 'B' - Looking Ahead @ Bent 4, Bent 8 opposite hand)
No Scale

STATE OF ARKANSAS
REGISTERED PROFESSIONAL ENGINEER
No. 11856
CHARLES A. WIPF
03/08/16

SHEET 3 OF 7

DETAILS OF 256'-0" CONTINUOUS PRESTRESSED CONCRETE GIRDER UNIT
NEW HOPE ROAD & BLOSSOM WAY CREEK - BRIDGES A & B

ROUTE 49 SEC. 29

ARKANSAS STATE HIGHWAY COMMISSION

LITTLE ROCK, ARK.

DRAWN BY:	BWC	DATE:	01-14-14	FILENAME:	bca0901b3_s24.dgn
CHECKED BY:	CAW	DATE:	08-23-15	SCALE:	SEE DETAILS
DESIGNED BY:	KJC	DATE:	01-09-14		

BRIDGE NO. A&B5960 DRAWING NO. 57770

USER: bc5100
DESIGN FILE: G:\3106100_2641toNHope\TRANSP\dgn\bridge\bca0901b3_s24.dgn
PLOTTED: 3/8/2016 09:40 SCALE: 5.3333333:1

Crafton, Tull & Associates Inc.	DATE REVISED	DATE FILMED	DATE REVISED	DATE FILMED	FED.RD. DIST.NO.	STATE	FED.AID PROJ.NO.	SHEET NO.	TOTAL SHEETS
					6	ARK.			
					JOB NO.		CA0901	224	452
					(1) A&B5960		SPAN DETAILS		57771

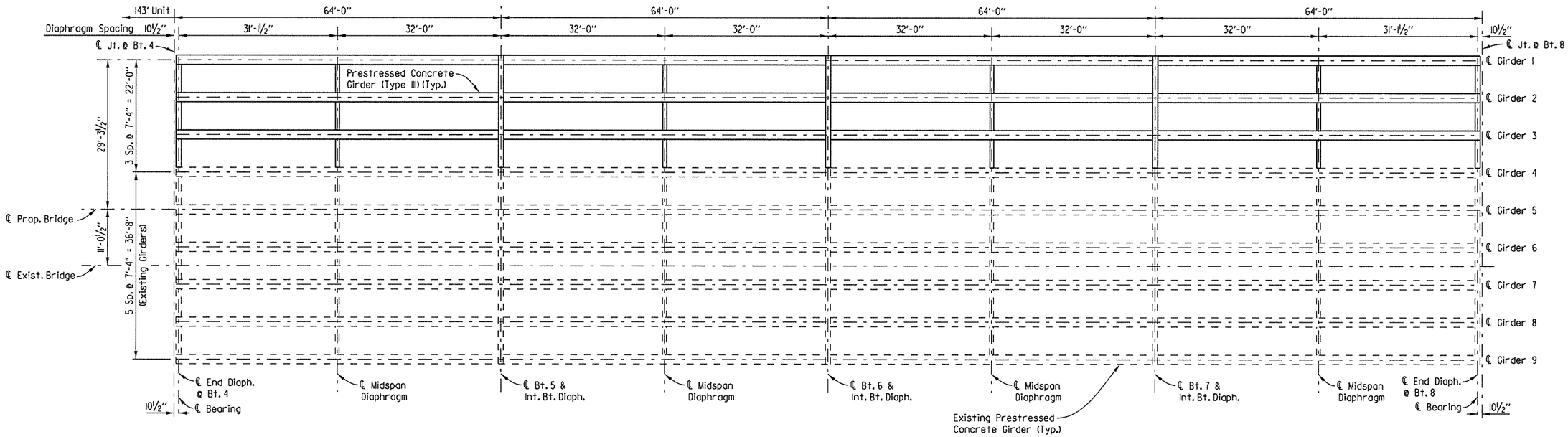

FRAMING PLAN

Scale: 3/32" = 1'-0"

STATE OF ARKANSAS
REGISTERED PROFESSIONAL ENGINEER
No. 11856
CHARLES A. WIPF
03/08/16

SHEET 4 OF 7

DETAILS OF 256'-0" CONTINUOUS PRESTRESSED CONCRETE GIRDER UNIT
NEW HOPE ROAD & BLOSSOM WAY CREEK
- BRIDGES A & B

ROUTE 49 SEC. 29

ARKANSAS STATE HIGHWAY COMMISSION

LITTLE ROCK, ARK.

DRAWN BY:	BWC	DATE:	07-24-15	FILENAME:	bca0901b3_s25.dgn
CHECKED BY:	CAW	DATE:	08-27-15	SCALE:	SEE DETAILS
DESIGNED BY:	KJC	DATE:	10-31-13		

BRIDGE NO. A&B5960 DRAWING NO. 57771

USER: bc5100
DESIGN FILE: G:\13106100_2641oNHope\TRANSP\dgn\bridge\bca0901b3_s25.dgn
PLOTTED: 3/8/2016 09:40 SCALE: 21.3333334

Crafton, Tull & Associates Inc.

DATE REVISED	DATE FILMED	DATE REVISED	DATE FILMED

FED.RD. DIST.NO.	STATE	FED.AID PROJ.NO.	SHEET NO.	TOTAL SHEETS
6	ARK.			
JOB NO.		CA0901	225	452
(1) A&B5960		SPAN DETAILS		57772

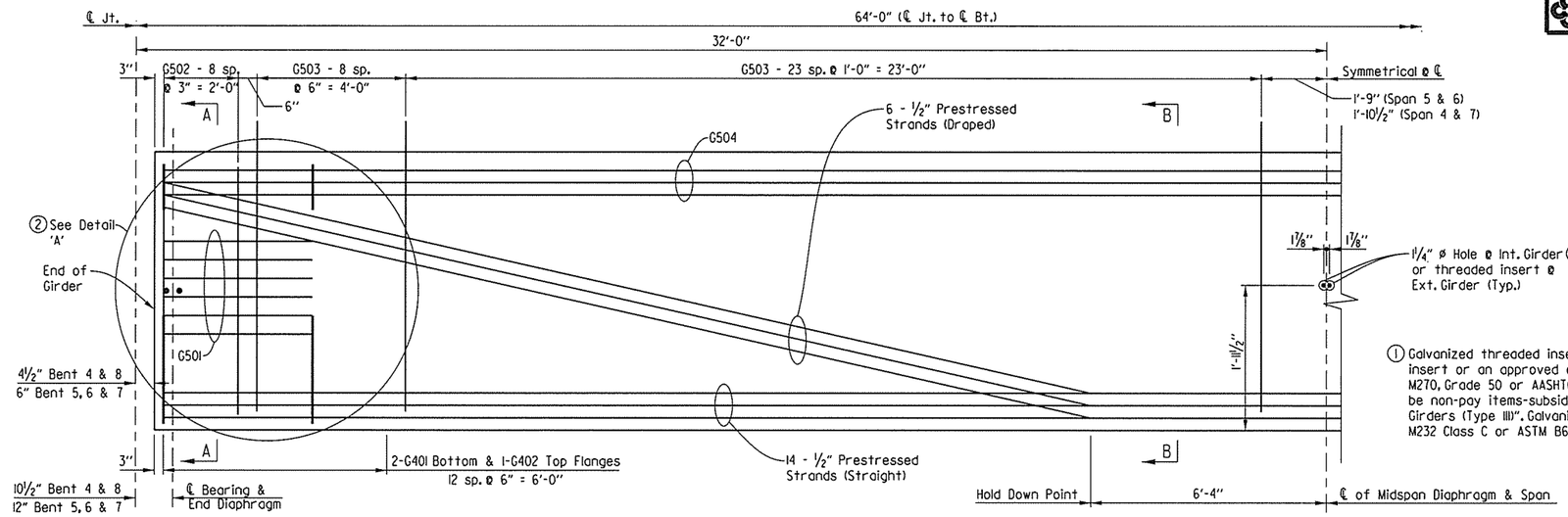

(1) Galvanized threaded inserts: Dayton-Richmond F-42 loop ferrule insert or an approved equal. ¾" ø threaded rods to be AASHTO M270, Grade 50 or AASHTO M31 or M322 Type A, Gr. 60. These are to be non-pay items-subsidiary to the item "Prestressed Concrete Girders (Type III)". Galvanizing shall be in accordance with AASHTO M232 Class C or ASTM B695 Class 50.

TYPICAL GIRDER ELEVATION (TYPE III)

(Span 4 shown, Span 5-7 similar)
No Scale

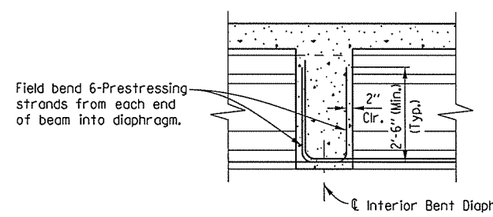

ELEVATION OF BEAMS AT INTERMEDIATE BENTS

Scale: ½" = 1'-0"

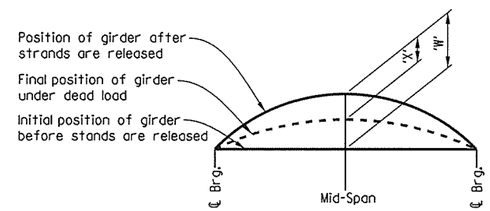

"W"	1.80"
"X"	0.59"

'W' is expected camber of girder at 90 days release (Prestress + Dead Load of Girder)

'X' is Dead Load Deflection of Slab + Diaphragms + Composite Dead Load.

CAMBER & DEFLECTIONS (INCHES)

No Scale

(2) Detail 'A' applies to the BK end of Span 4 and AH end of Span 7 Girders only.

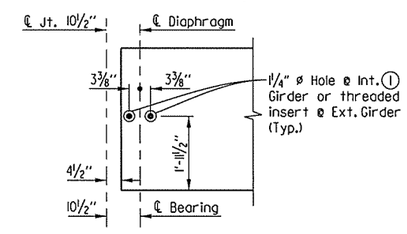

DETAIL 'A'

Scale: ½" = 1'-0"

GENERAL NOTES - GIRDERS ONLY

Pretensioning steel shall be ½" dia. low relaxation strands with a minimum ultimate strength of 270 ksi and shall conform to AASHTO M203.

All girders shall be AASHTO Type III I-Girders as shown on the details. All girders shall be cast in concrete floored pallets and in metal forms. All work and materials shall be as specified in Subsection 802.22 of the Standard Specifications.

Concrete shall be Class 'S' and shall have a minimum 28 day compressive strength f'c = 6000 PSI.

Dimensions shown are to the center of strands.

The initial tensile force applied to each ½" dia. strand shall be 31000 pounds. Transfer of this tensioning load to the girder shall not be done until the compressive strength of the concrete is at least 4500 psi.

The Contractor shall submit the method and sequence for release of strands to the Engineer for approval prior to casting of the girders.

The first 16" along the top of the girder at each end shall have a smooth finish. The remaining portion shall be rough floated at approximately the time of set then scrubbed transversely with a coarse wire brush to remove all laitance and to produce a roughened surface for bonding slabs.

Girder lengths shown on the design plans are net lengths measured horizontally along girder centerlines. The girder manufacturer shall make the necessary allowances for grade and shortening due to elastic shortening, creep, and shrinkage.

All exposed steel at ends of girders shall be protected against corrosion by a coating with two coats of Zinc-Rich paint.

Girders must be maintained in an upright position at all times and must be picked up from points near the girder ends. Disregard of the requirement may lead to collapse of the girder. The Contractor's proposed lifting details shall be submitted on shop drawings to the Engineer for approval. The use of holes for lifting purposes will not be permitted.

The Contractor may submit alternate strand patterns with design calculations for review and approval in accordance with Subsection 802.22 except that only ½" diameter strands shall be allowed.

All reinforcing steel shall be Grade 60 (yield strength = 60,000 psi) conforming to AASHTO M 31 or M 322 Type A with Mill Test Reports.

Distances from the forms and spacing of the prestressing steel shall be maintained by stays, ties, hangers, spacers, or other approved supports which shall be shown on the shop drawings.

The point of support and direction of the reactions with respect to the member shall be appoximately the same during transportation and storage as when member is in its final position.

Drawings show general features of design only. Shop drawings shall be submitted to the Engineer and approval shall be secured before fabrication can begin.

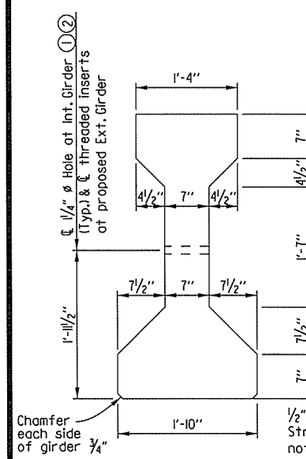

TYPICAL SECTION

Scale: 1" = 1'-0"

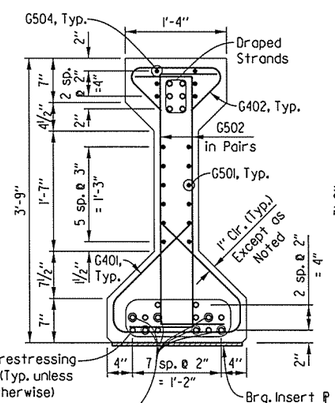

SECTION A-A

Scale: 1" = 1'-0"

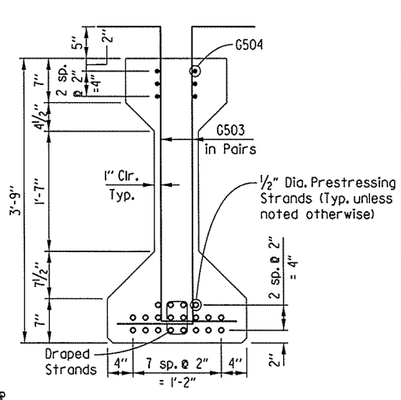

SECTION B-B

Scale: 1" = 1'-0"

BAR LIST - PER GIRDER

MARK	NO. REQ'D	LENGTH	P.D.
G401	52	3'-4"	2"
G402	26	2'-4"	2"
G501	12	12'-2"	3"
G502	36	4'-9"	2"
G503	128	5'-7"	2"
G504	12	33'-0"	Str.

BENDING DIAGRAMS (DIMENSIONS ARE OUT TO OUT OF BARS.)

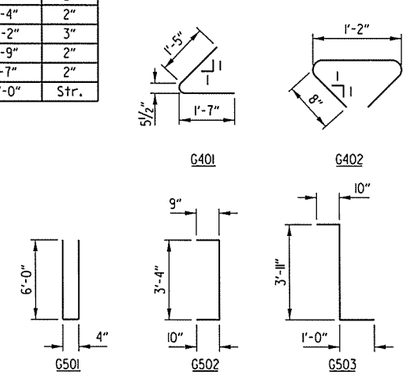

STATE OF ARKANSAS REGISTERED PROFESSIONAL ENGINEER No. 11856 CHARLES A. WIPF
03/09/16

SHEET 5 OF 7

DETAILS OF 256'-0" CONTINUOUS PRESTRESSED CONCRETE GIRDER UNIT NEW HOPE ROAD & BLOSSOM WAY CREEK - BRIDGES A & B

ROUTE 49 SEC. 29

ARKANSAS STATE HIGHWAY COMMISSION

LITTLE ROCK, ARK.

DRAWN BY: BWC	DATE: 07-24-15	FILENAME: bca0901b3.s26.dgn			
CHECKED BY: CAW	DATE: 09-01-15	SCALE: SEE DETAILS			
DESIGNED BY: KJC	DATE: 03-13-14				

BRIDGE NO. A&B5960 DRAWING NO. 57772

USER: bc5100
DESIGN FILE: G:\3106100.264toNHope\TRANSP\dgn\bridge\bca0901b3.s26.dgn
PLOTTED: 3/8/2016 09:40 SCALE: 8:1

Crafton, Tull & Associates Inc.	DATE REVISED	DATE FILMED	DATE REVISED	DATE FILMED	FED.RD. DIST.NO.	STATE	FED.AID PROJ.NO.	SHEET NO.	TOTAL SHEETS
					6	ARK.			
					JOB NO.		CA0901	226	452
					A&B5960		SPAN DETAILS		57773

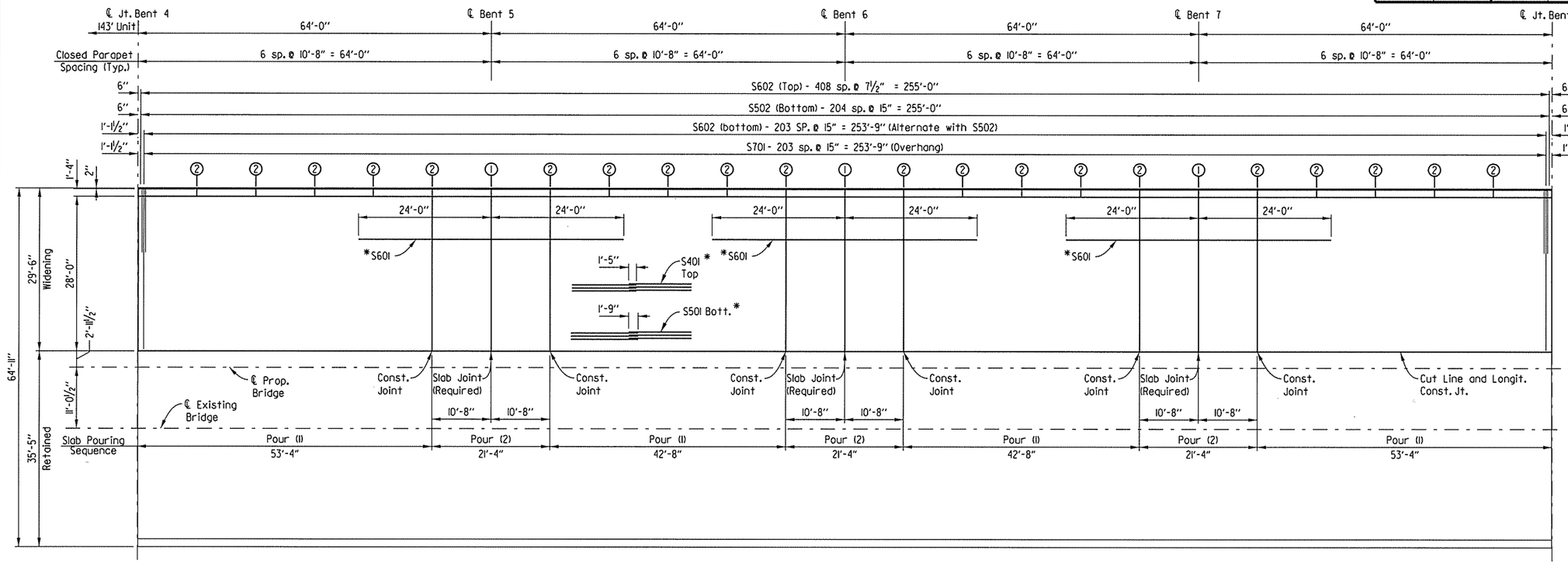

REINFORCING PLAN

Bridge B shown, Bridge A opposite hand.
No Scale

*Place reinforcing as shown in Typical Section at Interior Bents.

① ℄ Full-Depth Parapet Joint (¼" to 1" max.). Stop 4" from top of slab. See Dwg. No. 57774.

② ℄ Partial-Depth Parapet Joint (¼" to 1" max.). Stop 1'-6" from top of slab. See Dwg. No. 57774.

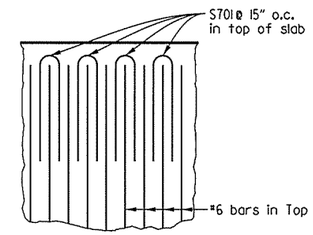

DETAIL Q

No Scale

Notes:

Required slab joints and Pouring Sequence Joints near intermediate bents shall align with joints in parapet rail at the gutterline.

Pours with the same number may be placed simultaneously or separately. All Pours (1) must be placed before Pours (2) can be placed. 48 hours shall elapse between the end of a pour and the start of the next pour. 72 hours shall elapse between the end of a pour and the start of an adjacent pour. Any railing pours made before the entire slab in the respective stage has been placed must be approved by the Engineer.

The Contractor must obtain approval from the Engineer for any deviations from the pouring sequence shown.

BAR LIST (Bridge B shown, Bridge A similar)

Mark	Number Required	Length	"A"	"B"	Pin Diameter
D401	84	7'-11"	3'-6"	6"	2"
D402	63	9'-4"	4'-1"	9"	2"
D403	42	8'-10"			2"
D601	144	5'-6"			Str.
D602	24	3'-7"			Str.
D603	24	21'-9"			Str.
D604	12	3'-0"			Str.
P401	14	37'-9"			Str.
P402	8	32'-7"			Str.
P403	102	10'-4"			Str.
P501	408	6'-8"			3¾"
P502	408	6'-9"			3¾"
S401	140	37'-9"			Str.
S502	205	29'-2"			Str.
S601	96	48'-0"			Str.
S602	613	29'-2"			Str.
S701	204	10'-1"			6½"

Bending Diagrams (Dimensions are Out to Out of Bars)

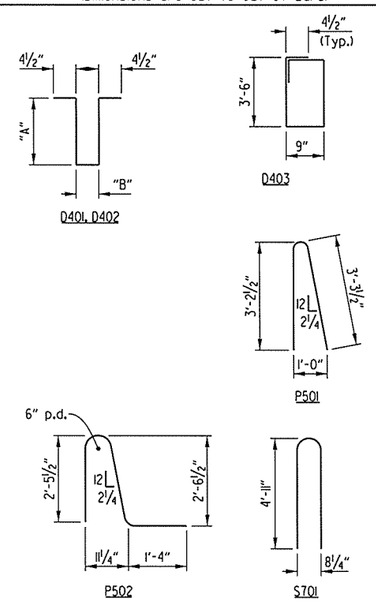

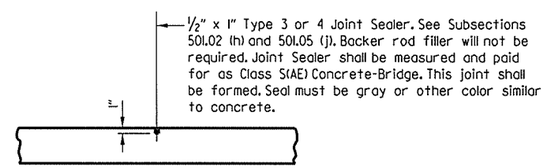

LONGITUDINAL CONSTRUCTION JOINT

No Scale

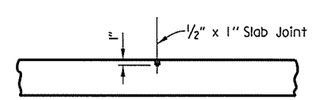

SLAB JOINT DETAIL

No Scale

Note:
Use Type 3 or 4 joint sealer. See Sections 501.02(h) and 501.05 (j) of the Standard Specifications. Backer rod filler will not be required. Paid for under "Class S(AE) Concrete - Bridge". Slab joints shall extend to the outside edge of the deck slab. Slab joints shall be installed before the parapet railing or sidewalk is poured. If slab joints are to be sawed, they shall be sawed as soon as the concrete has sufficiently set to allow sawing of the joints without damage to the slab. Slab joints shall align with parapet joints. Slab joints shall be placed at all pouring sequence construction joints and required slab joint locations.

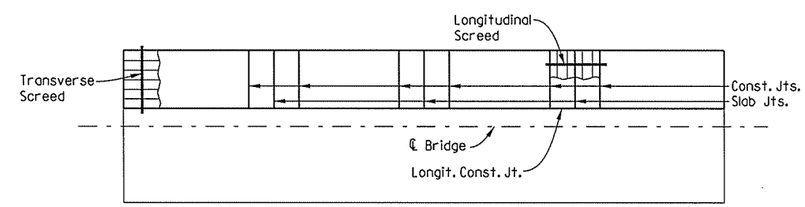

Note: Place Concrete to Approx. Slab Thickness when using Transverse or Longitudinal Screed.

CONCRETE PLACEMENT PROCEDURE

No Scale

STATE OF ARKANSAS
REGISTERED PROFESSIONAL ENGINEER
No. 11856
CHARLES A. WIPF
03/08/16

SHEET 6 OF 7

DETAILS OF 256'-0" CONTINUOUS PRESTRESSED CONCRETE GIRDER UNIT
NEW HOPE ROAD & BLOSSOM WAY CREEK - BRIDGES A & B

ROUTE 49 SEC. 29

ARKANSAS STATE HIGHWAY COMMISSION

LITTLE ROCK, ARK.

DRAWN BY: BWC	DATE: 07-24-15	FILENAME: bca0901b3.s27.dgn			
CHECKED BY: CAW	DATE: 08-31-15	SCALE: SEE DETAILS			
DESIGNED BY: KJC	DATE: 03-14-14				

BRIDGE NO. A&B5960 DRAWING NO. 57773

USER: bc5100
DESIGN FILE: G:\13\06100.2641\NHope\TRANSP\dgn\bridge\bca0901b3.s27.dgn
PLOTTED: 3/8/2016 09:40 SCALE: 21.3333333:1

① ℄ Full-Depth Parapet Joint (1/4" to 1" max.). Stop 4" from top of slab.

② ℄ Partial-Depth Parapet Joint (1/4" to 1" max.). Stop 1'-6" from top of slab.

Crafton, Tull & Associates Inc.

DATE REVISED	DATE FILMED	DATE REVISED	DATE FILMED

FED.RD. DIST.NO.	STATE	FED.AID PROJ.NO.	SHEET NO.	TOTAL SHEETS
6	ARK.			
JOB NO.		CA0901	227	452
① A&B5960		SPAN DETAILS		57774

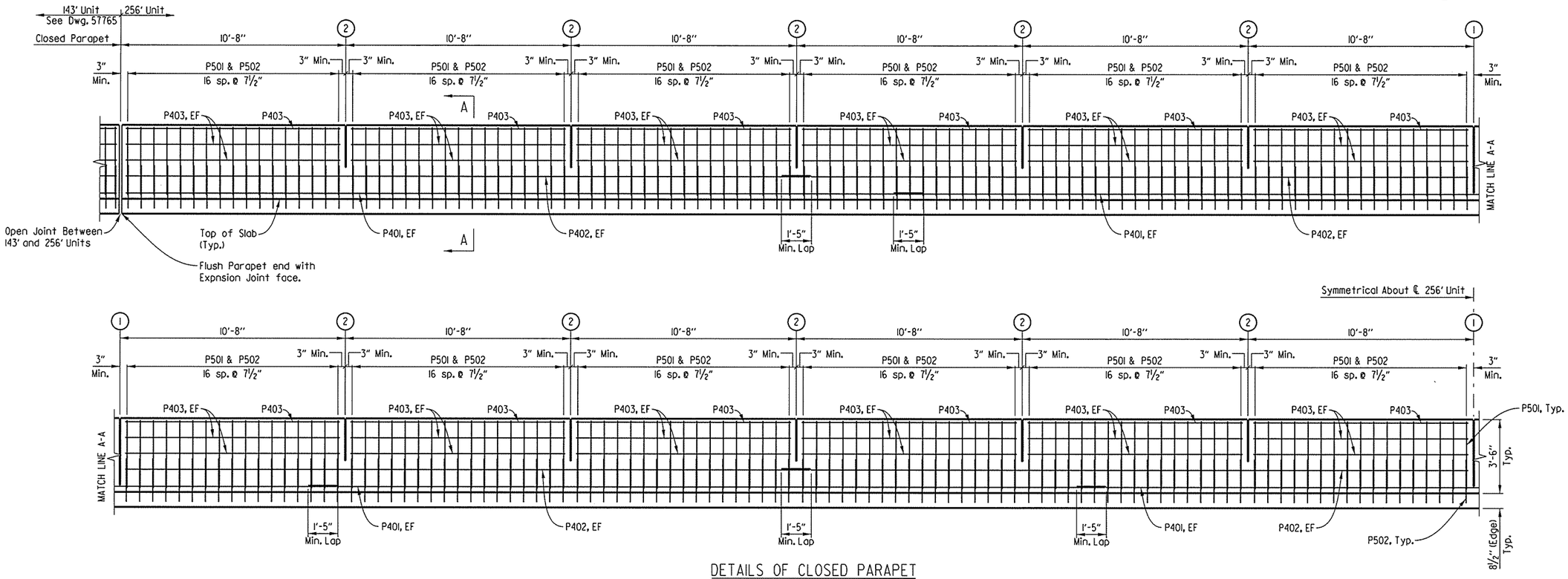

DETAILS OF CLOSED PARAPET

(Bridge B Shown, Bridge A Similiar)

Scale: 3/8" = 1'-0"

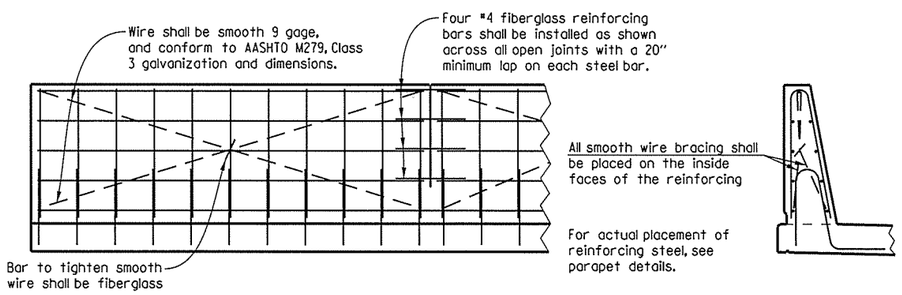

All panels shall be braced as required to prevent racking. All open joints shall be sawed as soon as practical to a minimum width of 1/4". To control cracking before sawing all joints must be grooved before the concrete is set. Sawing of the joints must be controlled so it will follow the grooved joint.

The extruded parapet shall conform to the horizontal and vertical lines shown on the plans or as directed by the Engineer and shall present a smooth, uniform appearance and texture.

DETAILS OF OPTIONAL SLIP FORMING OF CONCRETE PARAPET RAIL

No Scale

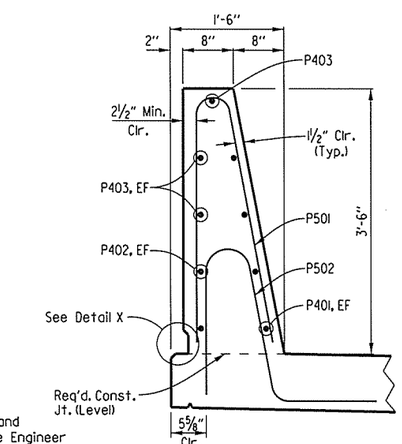

SECTION A-A

Scale: 1" = 1'-0"

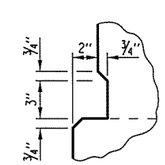

DETAIL X

Scale: 1 1/2" = 1'-0"

STATE OF ARKANSAS
REGISTERED PROFESSIONAL ENGINEER
No. 11856
CHARLES A. WIPF
03/08/16

SHEET 7 OF 7

DETAILS OF 256'-0" CONTINUOUS PRESTRESSED CONCRETE GIRDER UNIT

NEW HOPE ROAD & BLOSSOM WAY CREEK - BRIDGES A & B

ROUTE 49 SEC. 29

ARKANSAS STATE HIGHWAY COMMISSION

LITTLE ROCK, ARK.

DRAWN BY:	BWC	DATE:	07-24-15	FILENAME:	bca0901b3_s28.dgn
CHECKED BY:	CAW	DATE:	08-28-15	SCALE:	SEE DETAILS
DESIGNED BY:	KJC	DATE:	03-14-14		

BRIDGE NO. A&B5960 DRAWING NO. 57774

USER: bc5100
DESIGN FILE: G:\13106100.264toNhope\TRANSP\dgn\bridge\bca0901b3_s28.dgn
PLOTTED: 3/8/2016 09:41 SCALE: 5.333333:1

Crafton, Tull & Associates Inc.

DATE REVISED	DATE FILMED	DATE REVISED	DATE FILMED

FED.RD. DIST.NO.	STATE	FED.AID PROJ.NO.	SHEET NO.	TOTAL SHEETS
6	ARK.			
JOB NO.		CA0901	228	452
1 A&B5960		APPR. SLAB		57775

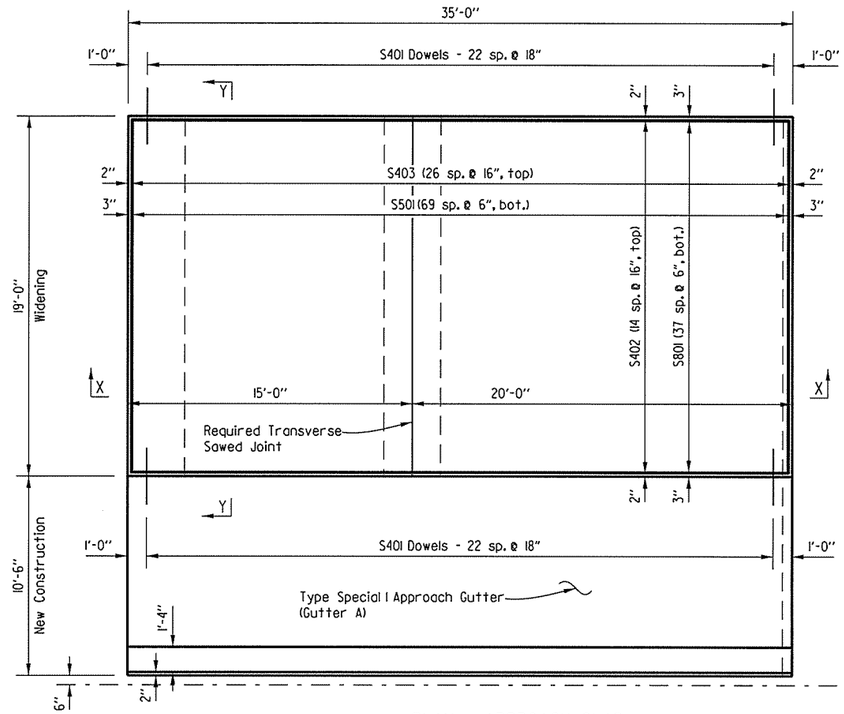

PLAN - APPROACH SLAB
(BEGIN BRIDGE A)

℄ Median & ℄ Const.

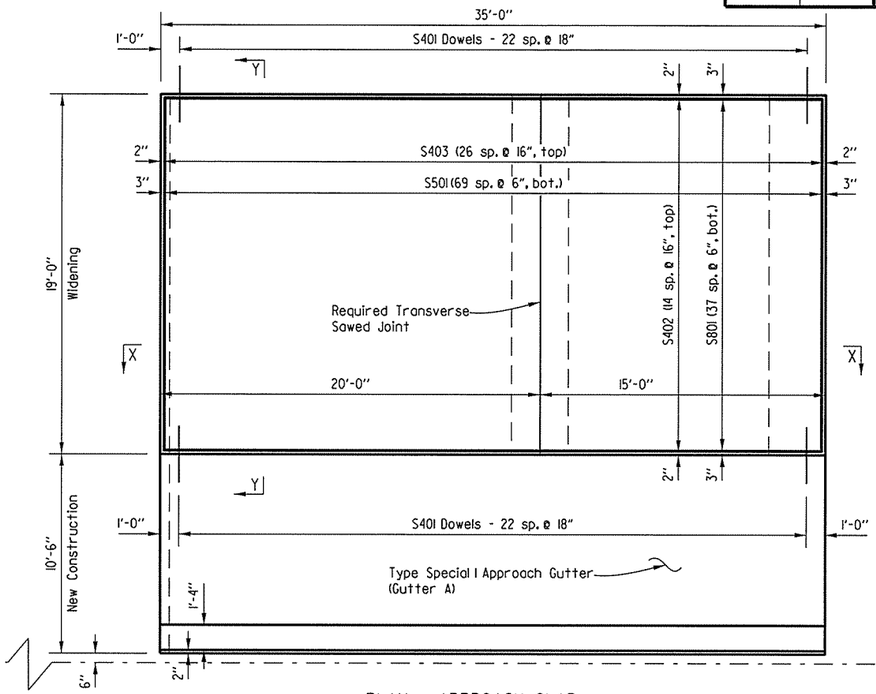

PLAN - APPROACH SLAB
(END BRIDGE A)

℄ Median & ℄ Const.

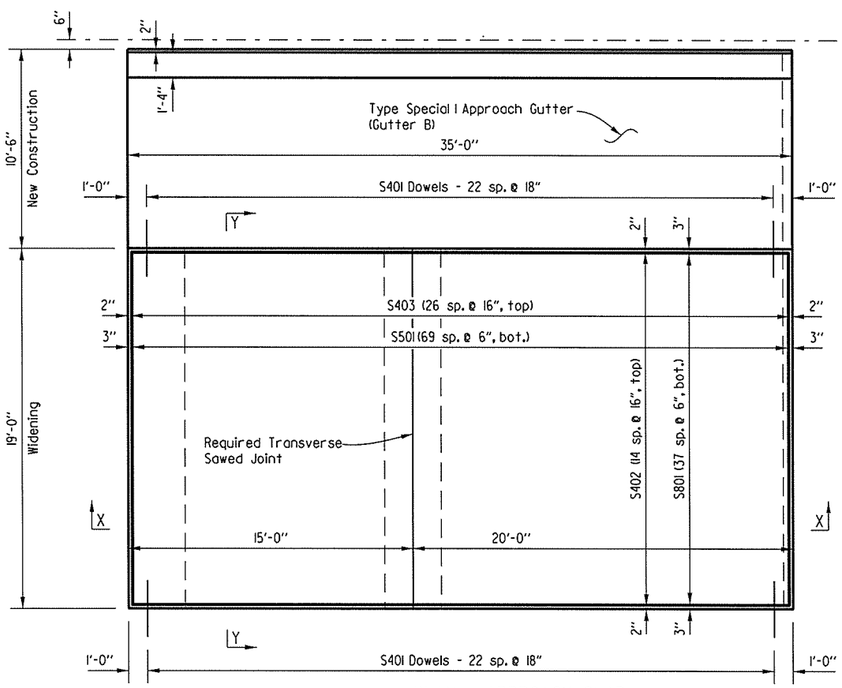

PLAN - APPROACH SLAB
(BEGIN BRIDGE B)

℄ Median & ℄ Const.

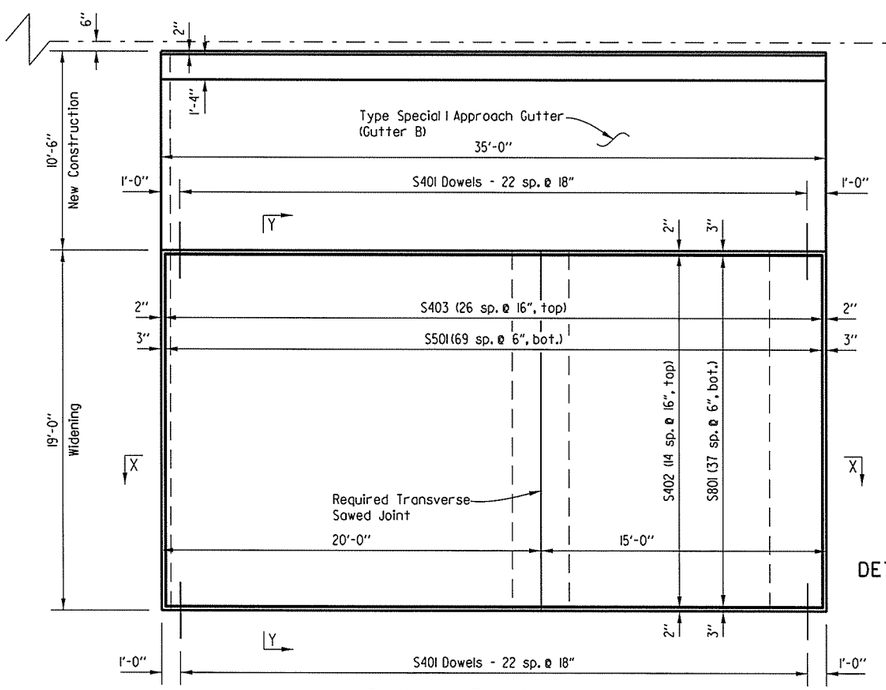

PLAN - APPROACH SLAB
(END BRIDGE B)

STATE OF ARKANSAS
REGISTERED PROFESSIONAL ENGINEER
No. 11856
CHARLES A. WIPF
03/08/16

SHEET 1 OF 2

DETAILS OF TYPE SPECIAL I APPROACH SLABS

ROUTE 49 SEC. 29

ARKANSAS STATE HIGHWAY COMMISSION

LITTLE ROCK, ARK.

DRAWN BY: TRM	DATE: 09-16-14	FILENAME: bca0901a3_a1.dgn		
CHECKED BY: CAW	DATE: 09-01-15	SCALE: 1/4" = 1'-0"		
DESIGNED BY: JKJ	DATE: 09-15-14			

BRIDGE NO. A&B5960 DRAWING NO. 57775

USER: bc5100
DESIGN FILE: G:\13061100.264toNhope\TRANSP\dgn\bridge\bca0901a3_a1.dgn
PLOTTED: 3/8/2016 09:41 SCALE: 8:1

Crafton, Tull & Associates Inc.	DATE REVISED	DATE FILMED	DATE REVISED	DATE FILMED	FED.RD. DIST.NO.	STATE	FED.AID PROJ.NO.	SHEET NO.	TOTAL SHEETS
					6	ARK.			
					JOB NO.		CA0901	229	452
					(1) A&B5960		APPR. SLAB		57776

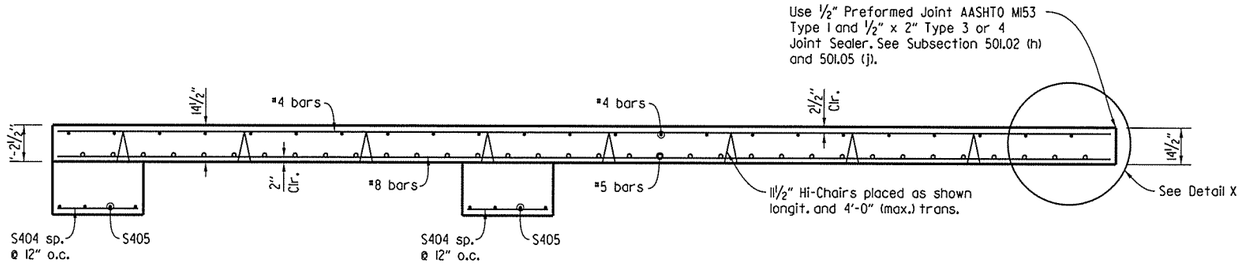

SECTION X - X
No Scale

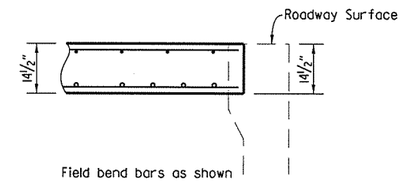

DETAIL X
No Scale

BAR LIST- APPROACH A

MARK	NO. REQ'D. Beg. Br.	NO. REQ'D. End Br.	LENGTH
S401	46	46	3'-0"
S402	15	15	34'-8"
S403	27	27	18'-8"
S404	19	19	2'-8"
S405	8	8	18'-8"
S501	70	70	18'-8"
S801	38	38	34'-8"

BAR LIST - APPROACH B

MARK	NO. REQ'D. Beg. Br.	NO. REQ'D. End Br.	LENGTH
S401	46	46	3'-0"
S402	15	15	34'-8"
S403	27	27	18'-8"
S404	19	19	2'-8"
S405	8	8	18'-8"
S501	70	70	18'-8"
S801	38	38	34'-8"

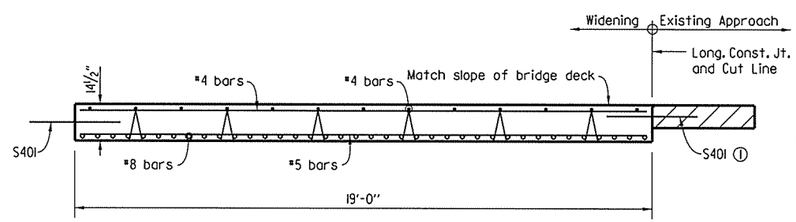

SECTION Y - Y
No Scale

(1) Drill and grout bars where shown using an approved cement or epoxy system from the QPL. Minimum embedment shall be 12" for cement based grout. Minimum embedment shall be per the manufacturer's recommendations for epoxy based grout.

TABLE OF QUANTITIES FOR
TYPE SPECIAL I APPROACH SLABS
(for information only)

		Slab Width	Reinforcing Steel (lbs.)	Concrete (Cu. Yds.)
Bridge A	Beg. of Bridge	19'-0"	5478	37.5
	End of Bridge	19'-0"	5478	37.5
Bridge B	Beg. of Bridge	19'-0"	5478	37.5
	End of Bridge	19'-0"	5478	37.5

GENERAL NOTES

Concrete shall be Class S(AE) (f'c = 4,000 psi)

All reinforcing steel shall be Grade 60 (yield strength = 60,000 psi) conforming to AASHTO M31 or M322, Type A, with mill test reports.

Approach Slabs will be measured and paid for in accordance with Section 504.

Preformed joint and joint sealer included in the pay item "Approach Slabs".

Work required to remove & dispose portions of the existing approach slab & gutter, retain and clean existing reinforcing steel, and any required doweling will not be paid for directly but will be considered subsidiary to the item "Modification of Existing Bridge Structure (Br. No. A5960)" and "Modification of Existing Bridge Structure (Br. No. B5960)".

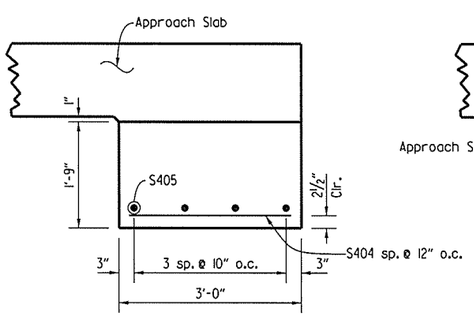

DETAILS OF SUPPORT
AT END OF SLAB
No Scale

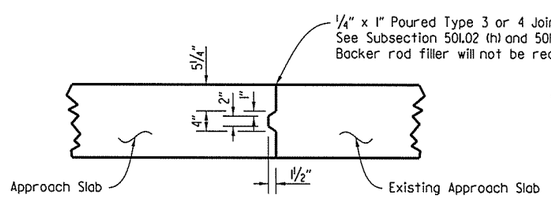

DETAILS OF LONGITUDINAL
CONSTRUCTION JOINT
No Scale

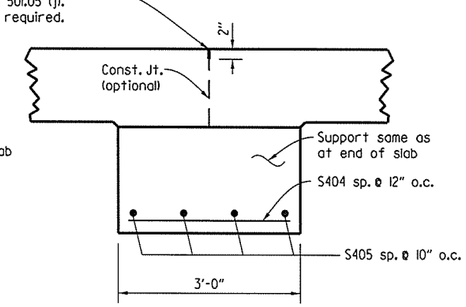

DETAILS OF REQUIRED
TRANSVERSE SAWED JOINT
No Scale

STATE OF ARKANSAS
REGISTERED PROFESSIONAL ENGINEER
No. 11856
CHARLES A. WIPF
03/08/16

SHEET 2 OF 2
DETAILS OF TYPE SPECIAL I APPROACH SLABS
ROUTE 49 SEC. 29
ARKANSAS STATE HIGHWAY COMMISSION
LITTLE ROCK, ARK.

DRAWN BY: TRM DATE: 09-16-14 FILENAME: bca0901a3.a2.dgn
CHECKED BY: CAW DATE: 09-01-15 SCALE: NO SCALE
DESIGNED BY: JKJ DATE: 09-15-14
BRIDGE NO. A&B5960 DRAWING NO. 57776

USER: bc5100
DESIGN FILE: G:\3106100.264toNHope\TRANSP\dgn\bridge\bca0901a3.a2.dgn
PLOTTED: 3/8/2016 09:41 SCALE: 8:1

Crafton, Tull & Associates Inc.

DATE REVISED	DATE FILMED	DATE REVISED	DATE FILMED

FED.RD. DIST.NO.	STATE	FED.AID PROJ.NO.	SHEET NO.	TOTAL SHEETS
6	ARK.			
JOB NO.		CA0901	230	452
1 A&B5960		APPR. GUTTER		57777

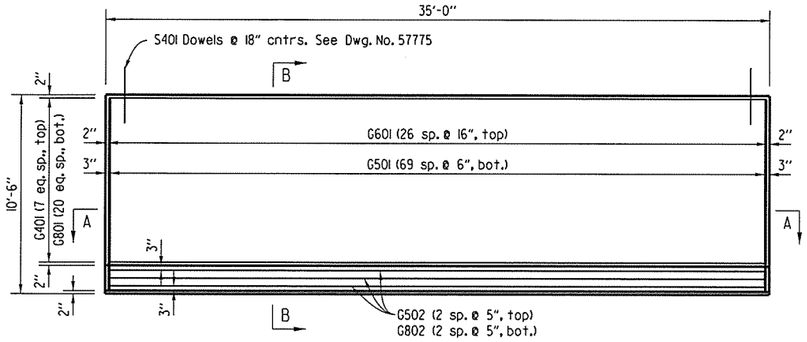

PLAN - APPROACH GUTTER
(BEGIN BRIDGE A)

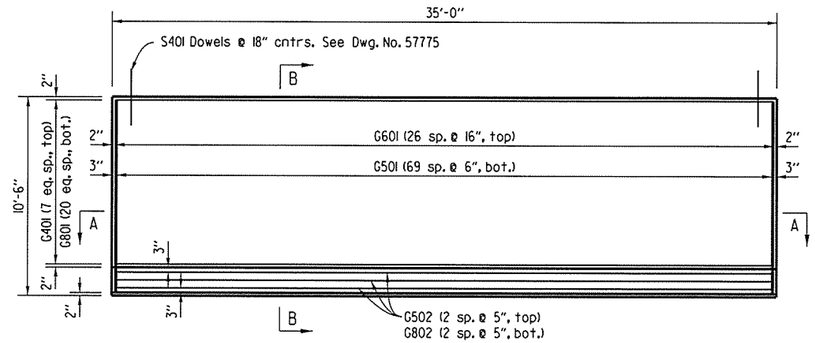

PLAN - APPROACH GUTTER
(END BRIDGE A)

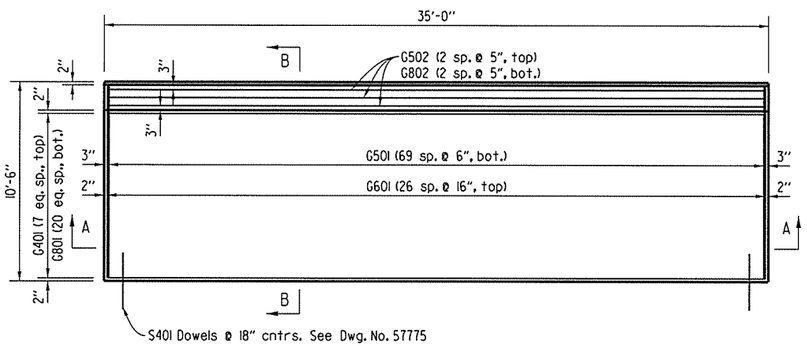

PLAN - APPROACH GUTTER
(BEGIN BRIDGE B)

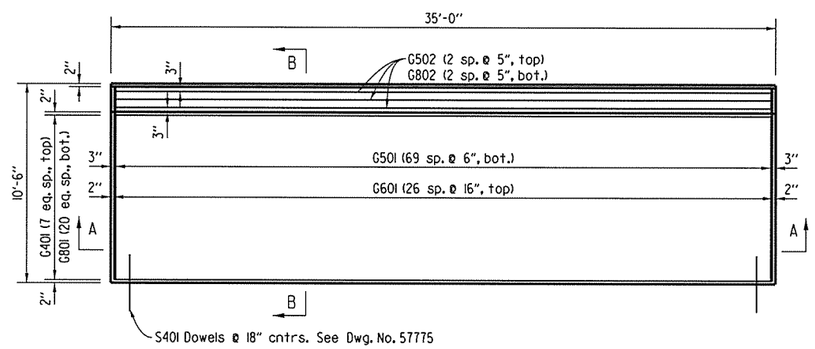

PLAN - APPROACH GUTTER
(END BRIDGE B)

BAR LIST

MARK	NO. REQ'D. Beg. Br.	NO. REQ'D. End Br.	LENGTH
G401	8	8	34'-8"
G501	70	70	10'-2"
G502	3	3	34'-8"
G601	27	27	10'-10"
G801	21	21	34'-8"
G802	3	3	34'-8"
R401	8	8	34'-8"
R601	35	35	9'-5"

Bending Diagram

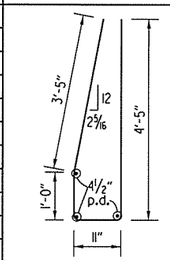

R601

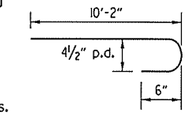

G601

Dimensions are out to out of bars.

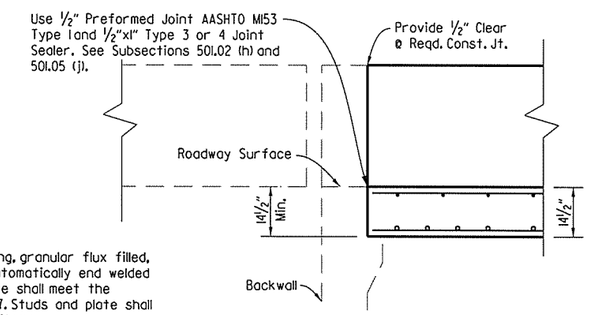

DETAIL X
No Scale

TABLE OF QUANTITIES FOR TYPE SPECIAL I APPROACH GUTTERS

(for information only)

		Reinforcing Steel (lbs.)	Concrete (Cu. Yds.)
Bridge A	Gutter A	4375	21
	Gutter B	4375	21
Bridge B	Gutter A	4375	21
	Gutter B	4375	21

GENERAL NOTES

Concrete shall be Class S(AE) (f'c = 4,000 psi)

All reinforcing steel shall be Grade 60 (yield strength = 60,000 psi) conforming to AASHTO M31 or M322, Type A, with mill test reports.

Approach Gutters will be measured and paid for in accordance with Section 504 of the Standard Specifications.

Concrete Ditch Paving shall be subsidiary to other bid items.

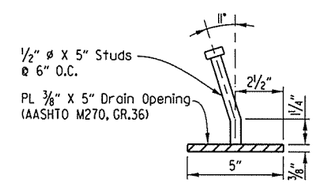

DETAIL Y
No Scale

NOTE:
Parapet studs shall be 5" long, granular flux filled, solid fluxed, or equal, and automatically end welded to the plate. Studs and plate shall meet the requirements of Section 807. Studs and plate shall be subsidiary to other bid items.

The surfaces of the 3/8" plates which will not be in contact with concrete shall be painted in accordance with Section 638, or as approved by the Engineer. Only one coat is required and shall be applied in the fabricator's shop. Painting will not be paid for directly, but will be considered subsidiary to other bid items.

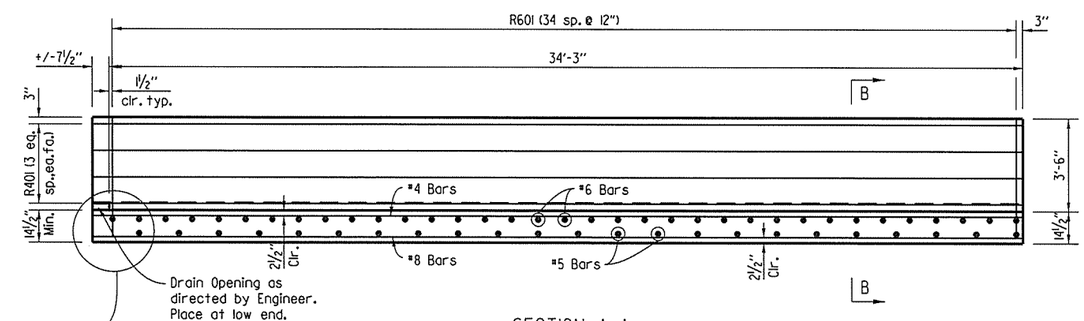

SECTION A-A
No Scale

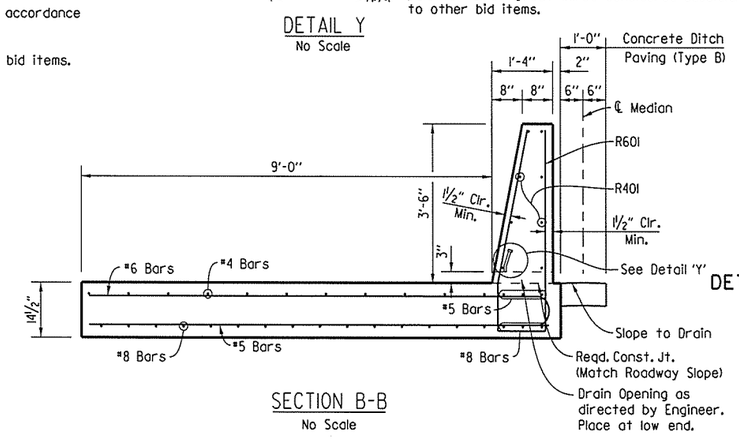

SECTION B-B
No Scale

STATE OF ARKANSAS
REGISTERED PROFESSIONAL ENGINEER
No. 11856
CHARLES A. WIPF
03/10/16

SHEET 1 OF 1

DETAILS OF TYPE SPECIAL I APPROACH GUTTERS

ROUTE 49 SEC. 29

ARKANSAS STATE HIGHWAY COMMISSION

LITTLE ROCK, ARK.

DRAWN BY: TRM	DATE: 09-16-14	FILENAME: bca0901a3_a3.dgn		
CHECKED BY: CAW	DATE: 09-01-15	SCALE: 1/4" = 1'-0"		
DESIGNED BY: JKJ	DATE: 09-15-14			

BRIDGE NO. A&B5960 DRAWING NO. 57777

USER: bc5100
DESIGN FILE: G:\13106100_264toNHope\TRANSP\dgn\bridge\bca0901a3_a3.dgn
PLOTTED: 3/8/2016 09:41 SCALE: 8:1

DATE REVISED	DATE FILMED	DATE REVISED	DATE FILMED	FED. ROAD DIST. NO.	STATE	FED. AID PROJ. NO.	SHEET NO.	TOTAL SHEETS
				6	ARK.		231	
				JOB NO.				
				1	EMBANKMENT & BACKFILL		55000	

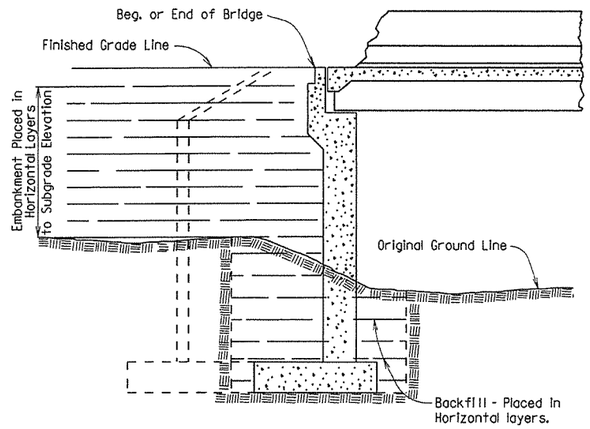

EMBANKMENT CONSTRUCTION AND FOOTING BACKFILL AT VERTICAL WALL ABUTMENTS

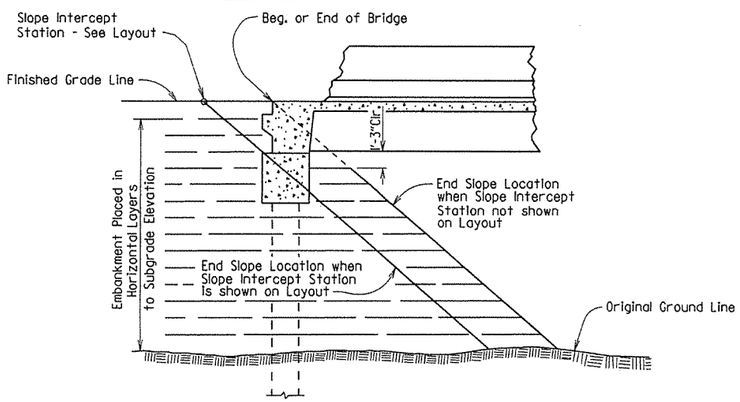

EMBANKMENT CONSTRUCTION AT SPILL-THROUGH PILE END BENTS

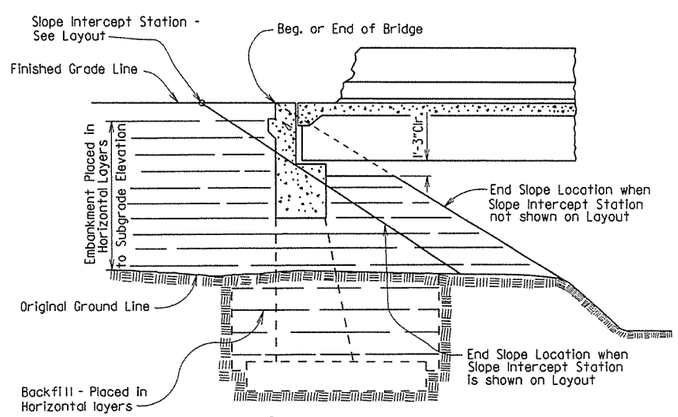

EMBANKMENT CONSTRUCTION AND FOOTING BACKFILL AT SPILL-THROUGH END BENTS

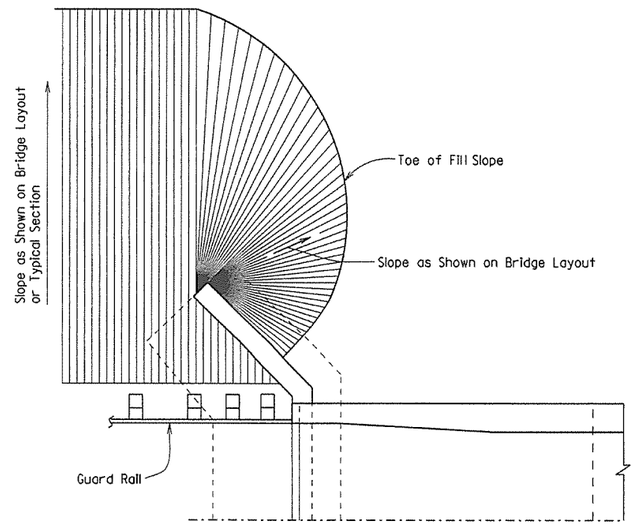

VERTICAL WALL ABUTMENTS

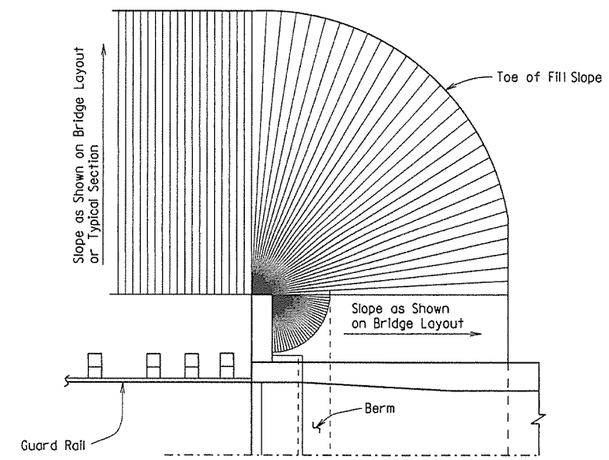

SPILL-THROUGH END BENTS WITH STUB WING

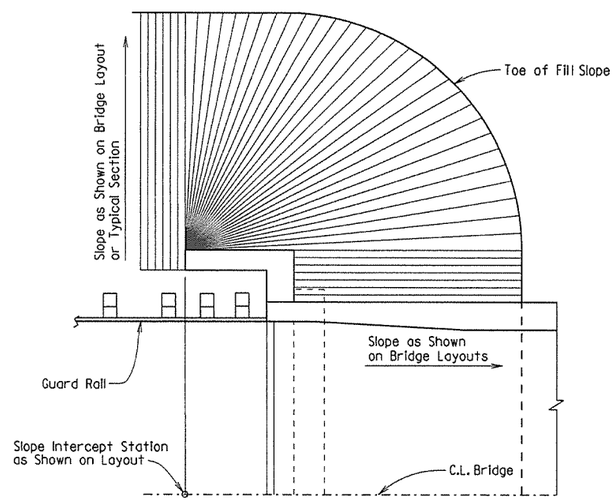

SPILL-THROUGH END BENTS WITH TURNBACK WING

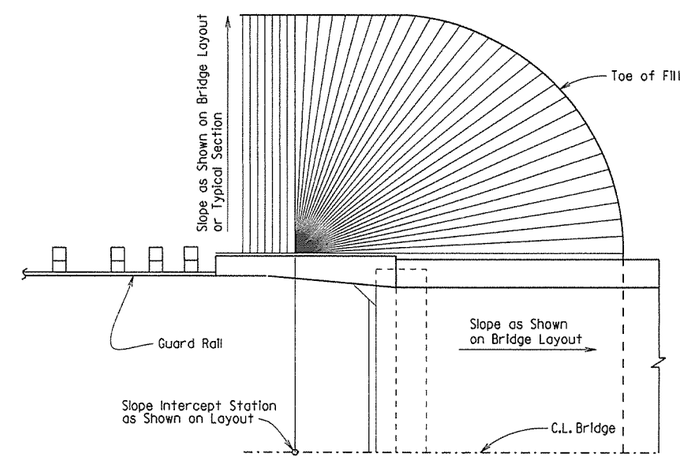

SPILL-THROUGH END BENTS WITH TRANSITION WING

METHOD OF DETERMINING FILL SLOPE LOCATION AT BRIDGE ENDS

GENERAL NOTES

The Bridge End Embankment shall be defined as a section of embankment, not less than 20 feet long adjacent to the bridge end, together with the side slopes and slopes under the bridge end including around the end of wingwalls. Embankment adjacent to structures shall be constructed in 6 inch horizontal layers (loose measure) and compacted by the use of mechanical equipment to the satisfaction of the Engineer. Refer to Subsections 210.09, 210.10 and 801.08 for construction requirements.

STANDARD DETAILS FOR EMBANKMENT CONSTRUCTION AND BACKFILL AT BRIDGE ENDS

ARKANSAS STATE HIGHWAY COMMISSION
LITTLE ROCK, ARK.

DRAWN BY: KDH DATE: 2-27-2014 FILENAME: b55000.dgn
CHECKED BY: BEF DATE: 2-27-2014 SCALE: NO SCALE
DESIGNED BY: STD. DATE: -

DRAWING NO. 55000

DATE REVISED	DATE FILMED	DATE REVISED	DATE FILMED	FED. ROAD DIST. NO.	STATE	FED. AID PROJ. NO.	SHEET NO.	TOTAL SHEETS
				6	ARK.		23	
				JOB NO.				
				① RIPRAP & EXCAV. 55001				

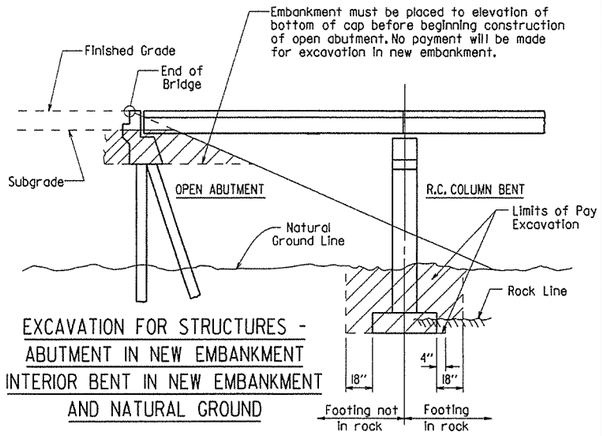

EXCAVATION FOR STRUCTURES - ABUTMENT IN NEW EMBANKMENT INTERIOR BENT IN NEW EMBANKMENT AND NATURAL GROUND

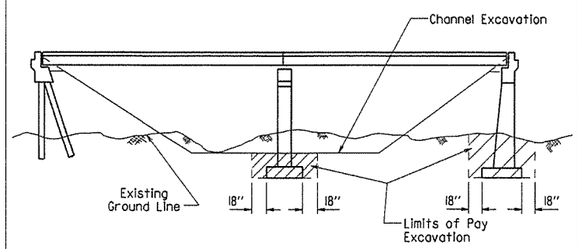

EXCAVATION FOR STRUCTURES - BRIDGE LOCATION WITH DESIGNATED CHANNEL CHANGE

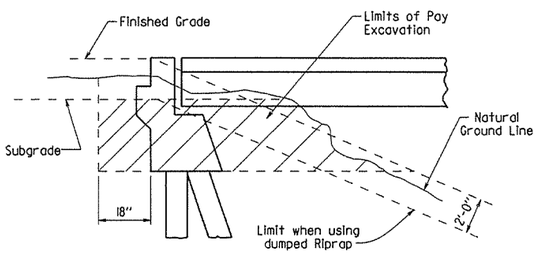

EXCAVATION FOR STRUCTURES - ABUTMENT IN NATURAL GROUND

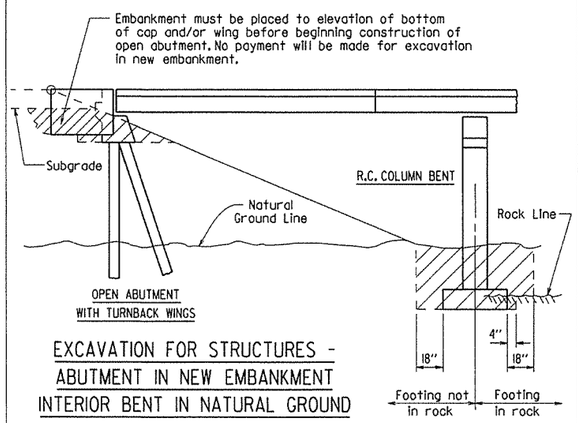

EXCAVATION FOR STRUCTURES - ABUTMENT IN NEW EMBANKMENT INTERIOR BENT IN NATURAL GROUND

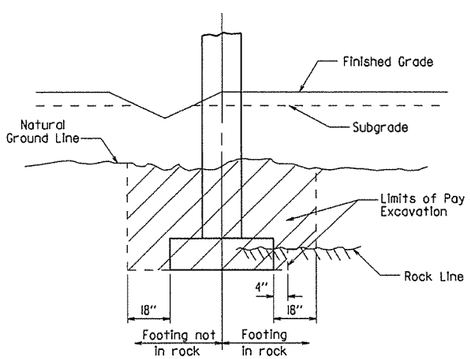

EXCAVATION FOR STRUCTURES - BENT IN ROADWAY FILL SECTION AND NATURAL GROUND

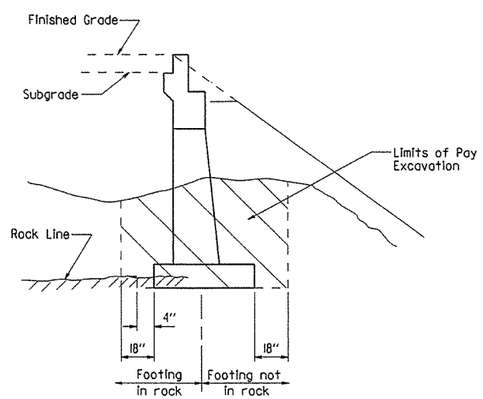

EXCAVATION FOR STRUCTURES - ABUTMENT IN NATURAL GROUND AND NEW EMBANKMENT

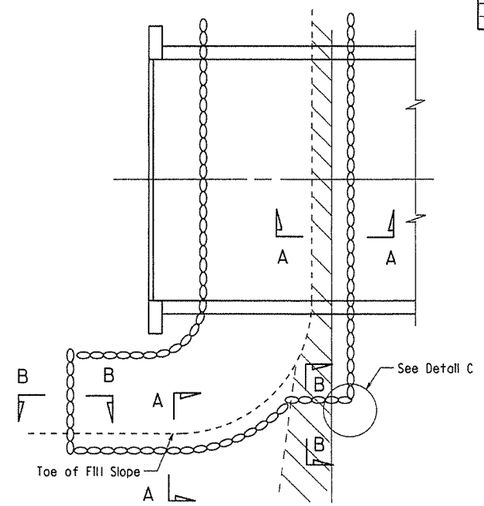

PLAN OF DUMPED RIPRAP

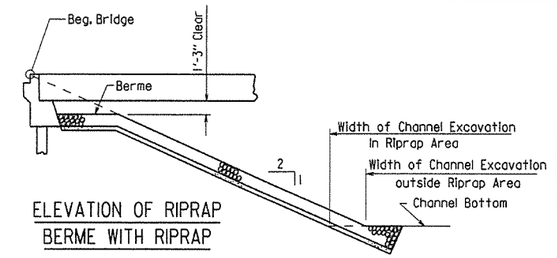

ELEVATION OF RIPRAP BERME WITH RIPRAP

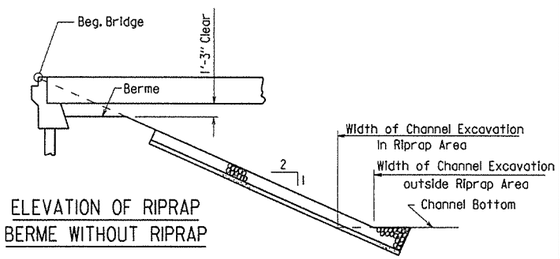

ELEVATION OF RIPRAP BERME WITHOUT RIPRAP

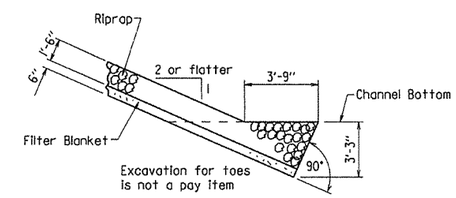

SECTION A-A

(Toe Excavation in Soil)

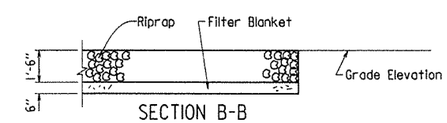

SECTION B-B

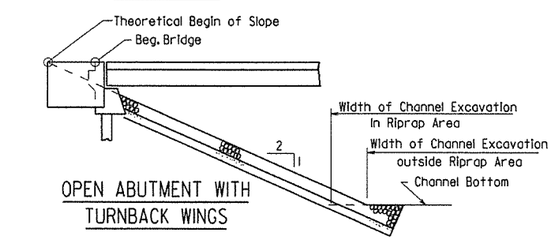

OPEN ABUTMENT WITH TURNBACK WINGS

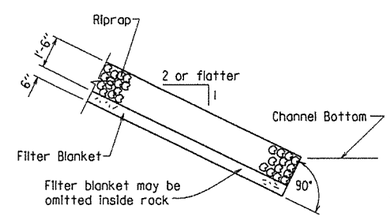

SECTION A-A

(Toe Excavation in Rock)

Note : Use this type of toe when rock is encountered which is in a stable condition.

Note : In lieu of an aggregate filter blanket, a synthetic fiber geotextile fabric complying with the requirements of Subsection 816.02(e) may be used.

Note : Details for computing excavation for structures are included for information as to how plan quantities were calculated and for use when adjusting quantities when changing footing elevation.

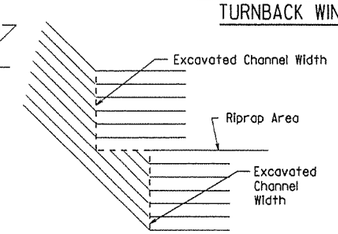

DETAIL C

STANDARD DETAILS FOR DUMPED RIPRAP AND FILTER BLANKET AND COMPUTING EXCAVATION FOR STRUCTURES

ARKANSAS STATE HIGHWAY COMMISSION

LITTLE ROCK, ARK.

DRAWN BY: KDH DATE: 2-27-2014 FILENAME: b55001.dgn
CHECKED BY: BEF DATE: 2-27-2014 SCALE: NO SCALE
DESIGNED BY: STD. DATE:

DRAWING NO. 55001

DATE REVISED	DATE FILMED	DATE REVISED	DATE FILMED	FED. ROAD DIST. NO.	STATE	FED. AID PROJ. NO.	SHEET NO.	TOTAL SHEETS
				6	ARK.		233	
				JOB NO.				

① CONCRETE RIPRAP 55002

Note:
Sloped surfaces of concrete riprap to be marked off into blocks (construction joints optional) with an approved grooving tool, spacing the grooved lines about 5' apart.

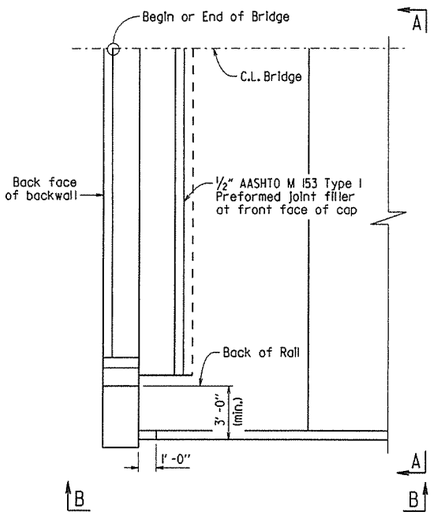

PLAN OF CONCRETE RIPRAP PERPENDICULAR TO WING
¼" = 1'-0"

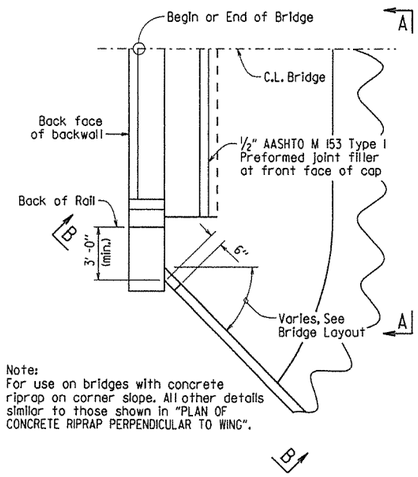

Note:
For use on bridges with concrete riprap on corner slope. All other details similar to those shown in "PLAN OF CONCRETE RIPRAP PERPENDICULAR TO WING".

PLAN OF CONCRETE RIPRAP AT ANGLE TO WING
¼" = 1'-0"

Note:
For use on bridges with turned back wings. All other details similar to those shown in "PLAN OF CONCRETE RIPRAP PERPENDICULAR TO WING".

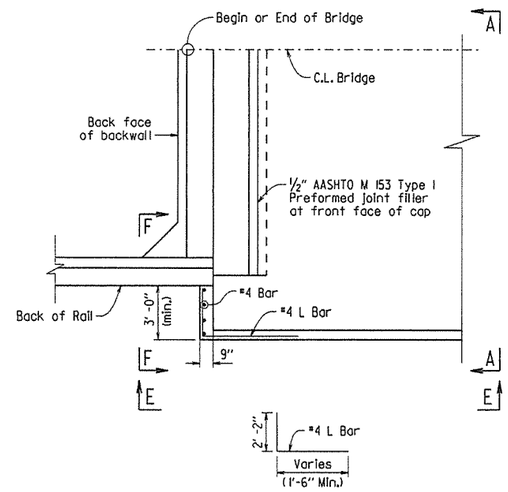

PLAN OF CONCRETE RIPRAP PERPENDICULAR TO TURNED BACK WING
¼" = 1'-0"

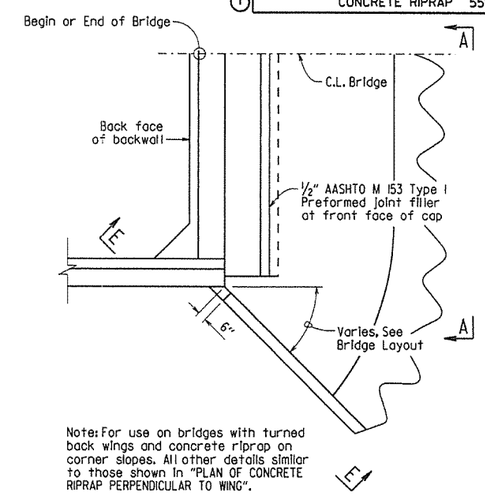

Note: For use on bridges with turned back wings and concrete riprap on corner slopes. All other details similar to those shown in "PLAN OF CONCRETE RIPRAP PERPENDICULAR TO WING".

PLAN OF CONCRETE RIPRAP AT ANGLE FROM TURNED BACK WING
¼" = 1'-0"

Note:
Wing is shown perpendicular to concrete riprap. Details are similar when wing is at an angle to riprap.

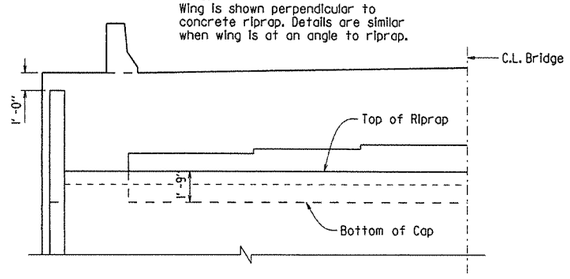

VIEW A-A
¼" = 1'-0"

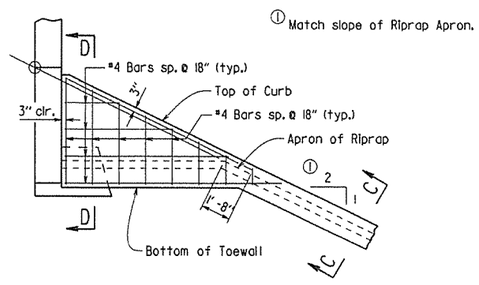

VIEW B-B
¼" = 1'-0"

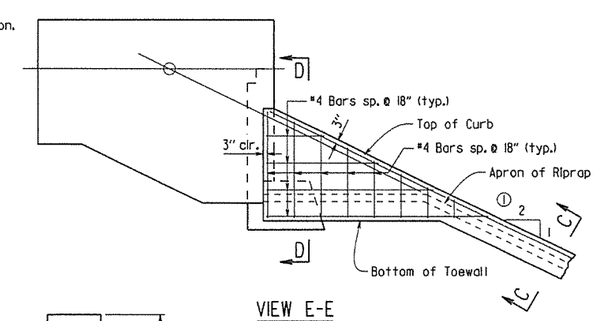

VIEW E-E
¼" = 1'-0"

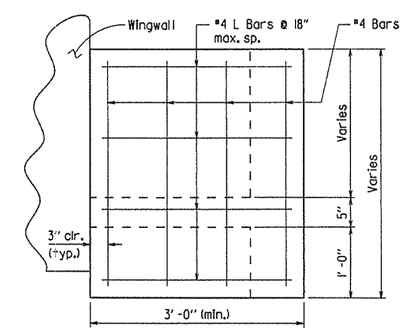

VIEW F-F
1" = 1'-0"

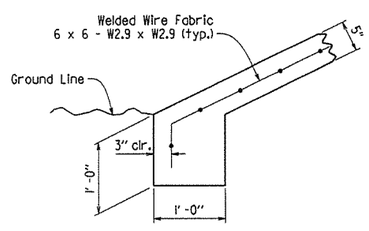

TOE OF CONCRETE RIPRAP
1" = 1'-0"

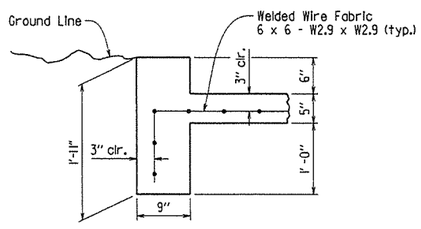

SECTION C-C
1" = 1'-0"

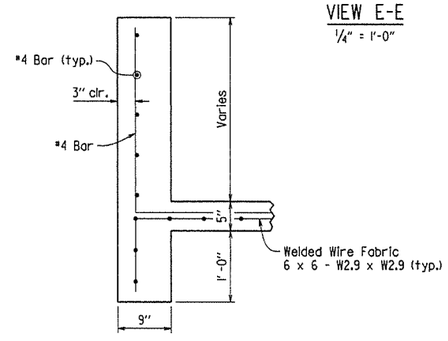

SECTION D-D
1" = 1'-0"

GENERAL NOTES

All concrete shall be Class A with a minimum compressive strength, f'c = 2,100 psi.

Welded wire fabric shall conform to AASHTO M55 or M221.

STANDARD DETAILS FOR CONCRETE RIPRAP

ARKANSAS STATE HIGHWAY COMMISSION
LITTLE ROCK, ARK.

DRAWN BY:	ACP	DATE:	2/27/2014	FILENAME:	b55002.dgn
CHECKED BY:	BEF	DATE:	2/27/2014	SCALE:	AS SHOWN
DESIGNED BY:	Std.	DATE:	---		

DRAWING NO. 55002

DATE REVISED	DATE FILMED	DATE REVISED	DATE FILMED	FED. ROAD DIST. NO.	STATE	FED. AID PROJ. NO.	SHEET NO.	TOTAL SHEETS
3/24/16				6	ARK.		234	
				JOB NO.				
				① BRIDGE DECK FORMS 55005				

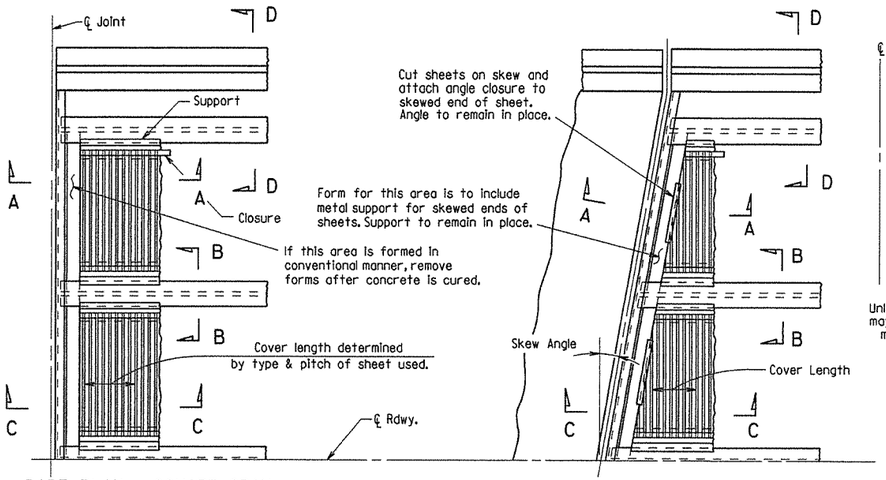

PART PLAN - SQUARE SPAN

3/8" = 1'-0"

PART PLAN - SKEWED SPAN

3/8" = 1'-0"

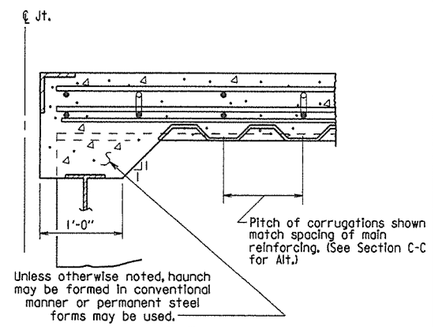

SECTION A-A

N.T.S.

(Angle at end of span)

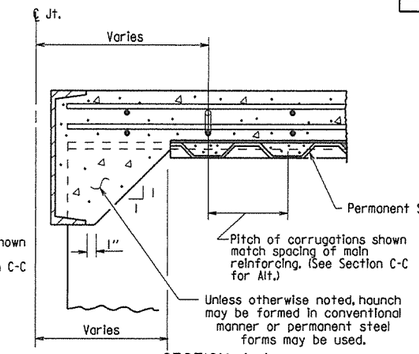

SECTION A-A

N.T.S.

(Channel at end of span)

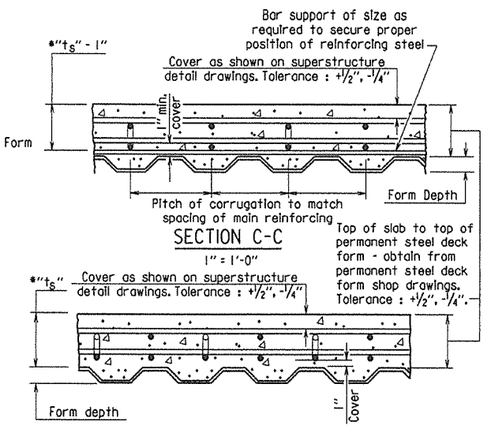

SECTION C-C

1" = 1'-0"

SECTION C-C - ALTERNATE

1" = 1'-0"

(Applicable when corrugations do not match spacing of main reinforcement)

*t_s = slab thickness as shown on superstructure detail drawings.

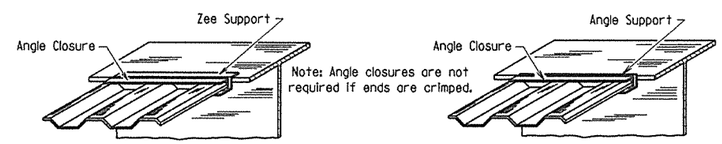

SKETCH OF PERMISSIBLE SUPPORTS

N.T.S.

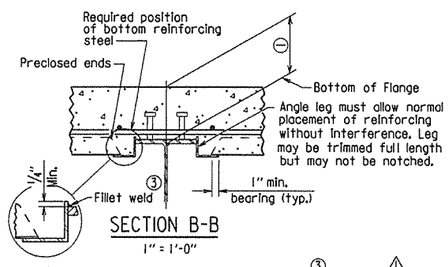

SECTION B-B

1" = 1'-0"

(Showing permissible support for tension flange where shear connectors are used, and for all compression flanges)

③ Minimum weld: 1/8" x 1" @ 18". More weld may be required; maximum length per weld = 1 1/2" (typ.)

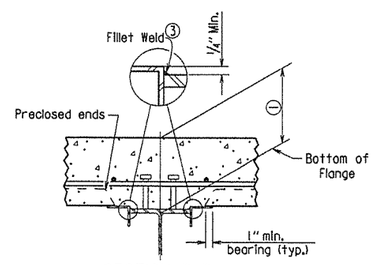

SECTION B-B

1" = 1'-0"

(Showing permissible support for tension flange where shear connectors are used and for all compression flanges)

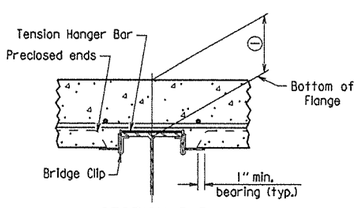

SECTION B-B

1" = 1'-0"

(Showing permissible support for tension flange where shear connectors are not used)

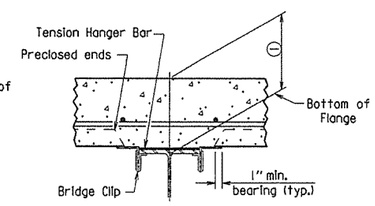

SECTION B-B

1" = 1'-0"

(Showing permissible support for tension flange where shear connectors are not used)

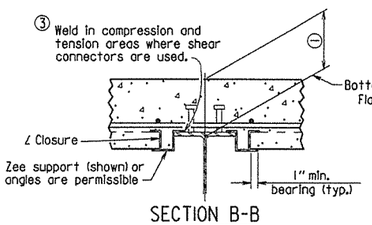

SECTION B-B

1" = 1'-0"

(Showing ∠ Closure)

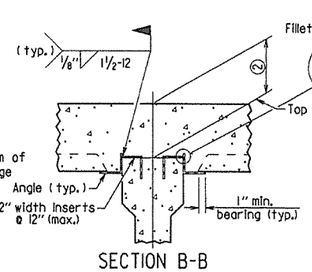

SECTION B-B

(FOR CONCRETE GIRDERS)

1" = 1'-0"

(Showing support by insert cast in girder)

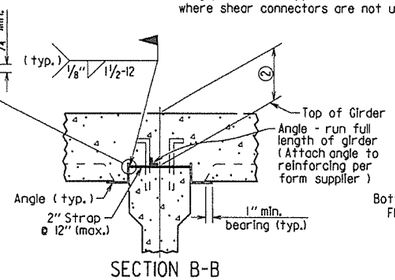

SECTION B-B

(FOR CONCRETE GIRDERS)

1" = 1'-0"

(Showing support by Strap)

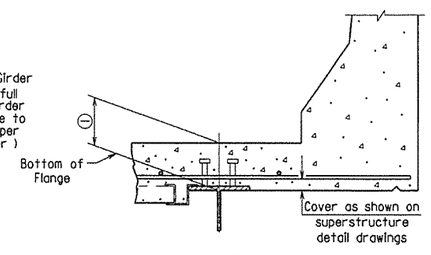

SECTION D-D

1" = 1'-0"

Note: Only Bottom Reinforcing is shown.

① Distance from top of slab to bottom of top flange as measured at centerline girder and as shown on superstructure detail drawings. This dimension may vary within the following limits to maintain the grade and slab thickness tolerances : Minimum - occurs when either the top flange or the support angle leg contacts the bottom reinforcing steel; Maximum = t_s + 1 3/4" + flange thickness. See Section C-C for slab thickness tolerance between adjacent girder flanges.

② Distance from top of slab to top of girder as measured at centerline girder and as shown on superstructure detail drawings. This dimension may vary within the following limits to maintain the grade and slab thickness tolerances : Minimum - occurs when either the top of girder or the support angle leg contacts the bottom reinforcing steel; Maximum - value shown on the superstructure detail drawings when removable forms are used. See Section C-C for slab thickness tolerance between adjacent girder flanges.

⚠ Revised weld dimension by KWY, Ck'd. by BEF, 3/24/16.

GENERAL NOTES

Permanent steel deck forms may be used at the Contractor's option and shall be at no additional cost to the Department. Such use may result in changes to the dead load deflection of the girder. Any cost for adjustments due to a change in the dead load deflection will be borne by the Contractor. Payment for deck concrete and structural steel will not be increased due to use of permanent steel deck forms.

Permanent steel deck forms shall conform to Subsection 802.14(b). Detailed plans, including detailed calculations and manufacturer's technical brochure, shall be submitted to and approved by the Engineer before work of forming the bridge deck is started.

Welding of form supports to the tension flange of steel girders will be permitted only in areas where shear connectors are used. When welding is not allowed, the method of fastening Z or ∠ supports to the flange must be approved by the Engineer.

Form sheets shall be fastened to supporting members and to each other with galvanized metal screws sufficient in size and number to provide a secure attachment. Alternate methods of attachment must be approved by the Engineer.

When the pitch of form corrugations match the reinforcing spacing, transversely align form sheets across the bridge to maintain the correct orientation of continuous reinforcing bars in the corrugations.

Bar support rods, when used, shall be sized and spaced to adequately support the bottom reinforcing mat at the required position.

High chairs shall be sized to support the top mat of reinforcing at the proper position. High chairs shall be placed at locations shown on the detail drawings.

Specifications: Arkansas State Highway and Transportation Department Standard Specifications for Highway Construction (2014 Edition), with applicable Supplemental Specifications and Special Provisions.

STANDARD DETAILS FOR PERMANENT STEEL BRIDGE DECK FORMS FOR STEEL & CONCRETE GIRDER SPANS

ARKANSAS STATE HIGHWAY COMMISSION

LITTLE ROCK, ARK.

DRAWN BY: KDH	DATE: 2-27-2014	FILENAME: b55005.dgn	
CHECKED BY: BEF	DATE: 2-27-2014	SCALE: NONE	
DESIGNED BY: STD.	DATE: —		

DRAWING NO. 55005

DATE REVISED	DATE FILMED	DATE REVISED	DATE FILMED	FED. ROAD DIST. NO.	STATE	FED. AID PROJ. NO.	SHEET NO.	TOTAL SHEETS
12-1-14				6	ARK.		235	
1-14-15				JOB NO.				
				1	TYPE D NAME PLATE		55010	

The name of the bridge as shown on the plans shall be placed on Lines 1 - 3 using 1/8" raised letters and numerals 3/8" high.

	Example 1	Example 2	Example 3	Example 4
Line 1	Red River	Southern	Saline	
Line 2	Relief	Railroad	River	Highway 5
Line 3		Overpass	Relief	

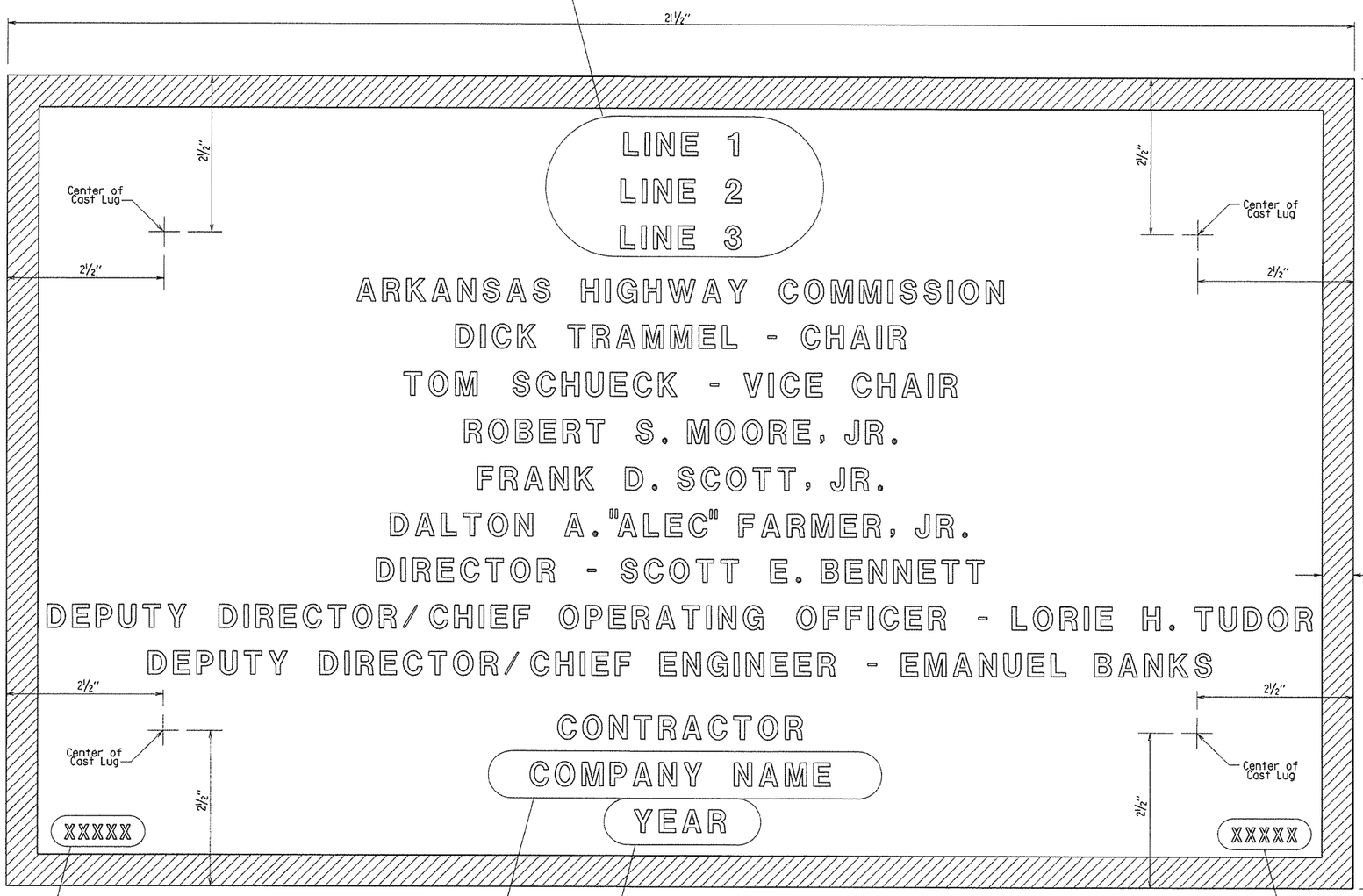

Place the design live loading here using 1/8" raised letters and numerals 1/4" high. Examples : HS 20
HL-93

Place the Year in which Contract was awarded here using 1/8" raised numerals 3/8" high. Example : 2001

Place the name of the company awarded the construction contract here using 1/8" raised letters and numerals 3/8" high. Example : ABCD CONSTRUCTION, INC.

Place the Bridge number here using 1/8" raised letters and numerals 1/4" high. Examples : A1234
05432

TYPICAL BRIDGE NAME PLATE

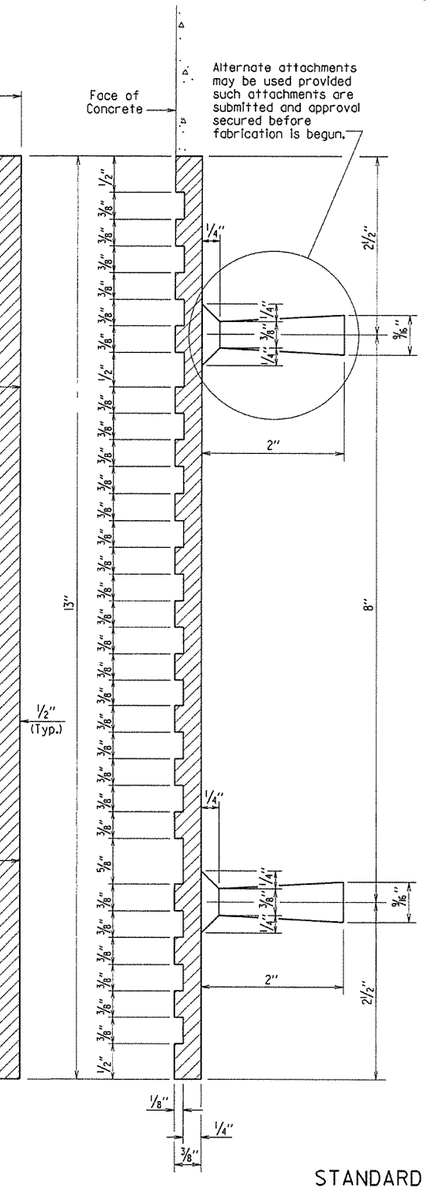

GENERAL NOTES

Specifications: Arkansas State Highway and Transportation Department Standard Specifications for Highway Construction, (2014 Edition) with applicable Supplemental Specifications and Special Provisions.

Name plates shall be cast bronze and shall meet the material requirements as specified in Section 812.

Body of plate shall be 1/4" thick and shall include four tapering cone lugs 3/8" to 9/16" x 2" long. The border and all lettering shall be raised 1/8" above the face of plate and shall be polished.

All lettering shall be plain gothic, square cut and not tapered.

The number of plates required and the location and name on the plate for each bridge shall be as designated on the plans.

2 Revised Chair and Vice Chair
Added New Commissioner
1-14-15 KDH Checked By: CRE

1 Revised Deputy Director/
Chief Engineer
Added Deputy Director/
Chief Operating Officer
12-1-14 KDH Checked By: CRE

STANDARD DETAILS FOR
TYPE D BRIDGE NAME PLATE

ARKANSAS STATE HIGHWAY COMMISSION
LITTLE ROCK, ARK.

DRAWN BY: KDH DATE: 2-27-2014 FILENAME: b55010.dgn
CHECKED BY: BEF DATE: 2-27-2014 SCALE: NO SCALE
DESIGNED BY: STD. DATE: —

DRAWING NO. 55010

DATE REVISED	DATE FILMED	DATE REVISED	DATE FILMED	FED. ROAD DIST. NO.	STATE	FED. AID PROJ. NO.	SHEET NO.	TOTAL SHEETS
3/24/16				6	ARK.		236	
				JOB NO.				
				①		STEEL H-PILES		55020

GENERAL NOTES FOR STEEL H-PILES:

Steel H-Piles shall conform to AASHTO M 270, Grade 36 or greater.

See Bridge Layout and Bent Details for pile size, estimated length, spacing, pile anchorage (if required) and for driving information.

Steel H-Piles that extend above the ground and are not protected by pile encasement shall be painted in accordance with Subsection 805.02.

Brackets, lugs, cap plates, pile tips, driving points, pile painting, splicing and welding shall not be paid for directly, but shall be considered subsidiary to the item "Steel Piling".

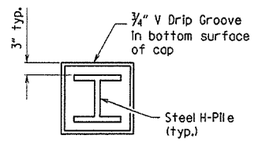

VIEW X-X

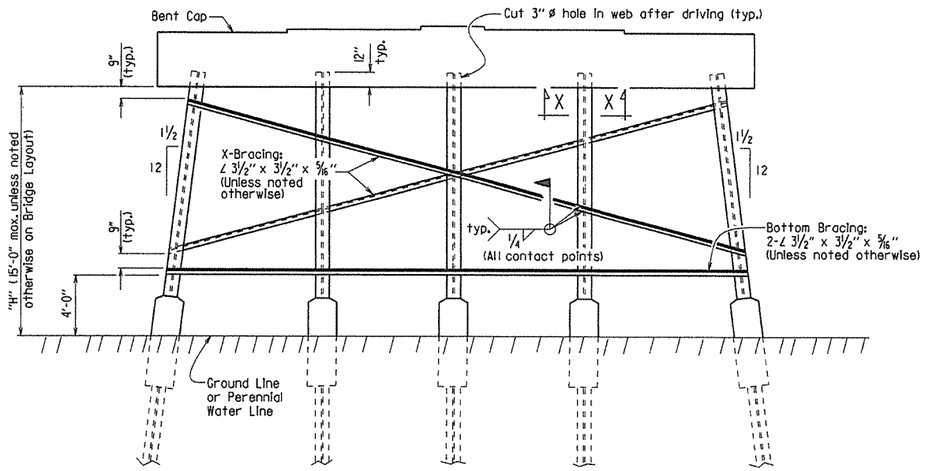

Notes:
All bracing shall be cut and welded in the field. Each brace shall be furnished in one piece. Payment shall be made under item 807.

Unless noted otherwise, omit X-Bracing when "H" is less than 8 feet.

Omit X-Bracing and Bottom Bracing when "H" is 5 feet or less.

When required on the Bridge Layout sheet, pile encasements shall be constructed. See Notes and Details for H-Pile Encasements.

Omit all bracing (and V-groove in cap) when pile encasement is extended to bottom of bent cap.

TYPICAL DETAILS OF H-PILE TRESTLE INTERMEDIATE BENT

(Shown with Partial Height Encasement)

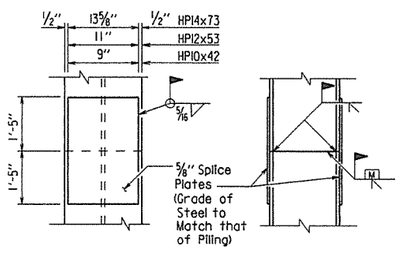

The Contractor may for his own convenience and at his own expense provide as many as three splices per pile. Minimum spacing between splices shall be 5 feet.

TYPICAL SPLICE DETAILS

⚠ H-pile splicers manufactured by Associated Pile and Fitting Corporation, LB Foster Piling, Skyline Steel or equivalent may be used in lieu of the "Typical Splice Details" shown. H-pile splicers shall match the same grade of steel specified for the piling and shall be welded to the pile with a ⅝" fillet weld around the entire perimeter of the splice. Flanges shall be welded with a complete penetration groove weld complying with AASHTO/AWS Joint Designation B-U4a or B-U4b. All welding shall conform to Subsection 807.26 of the AHTD Standard Specifcations for Highway Construction (2014 Edition).

Notes:
Steel pile tip reinforcing not required when approved H-Pile driving points are used.

Steel pile tip reinforcing shall not be paid for directly, but shall be considered subsidiary to the item "Steel Piling".

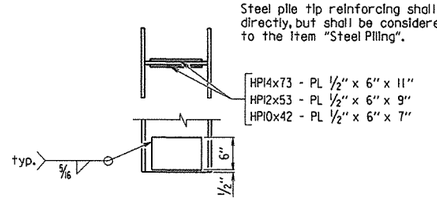

REINFORCING DETAIL FOR STEEL H-PILE TIP

GENERAL NOTES FOR H-PILE ENCASEMENTS:

⚠ See Bridge Layout for additional notes, any pile encasement restrictions and required location of pile encasements.

All concrete shall be Class S with a minimum 28-day compressive strength, f'c = 3,500 psi. If concrete cannot be placed in the dry, Seal Concrete may be used from top to bottom of encasement.

Reinforcing steel shall be Grade 60 conforming to AASHTO M 31 or M 322, Type A.

Welded Wire Fabric shall conform to AASHTO M 55 or M 221. Galvanized Corrugated Steel Pipe shall conform to AASHTO M 36 and M 218.

Concrete, welded wire fabric or reinforcing steel and galvanized pipe shall not be paid for directly, but shall be considered subsidiary to the item "Pile Encasement".

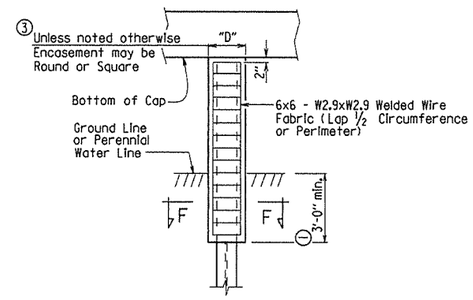

PILE ENCASEMENT DETAIL FOR STEEL H-PILES

④ (Shown with Encasement to Bottom of Cap)

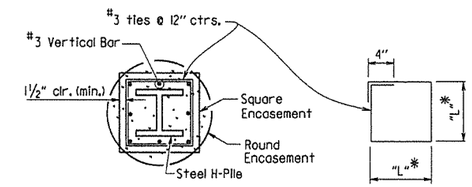

SECTION F-F

*Measured out-to-out of bar.

TABLE OF VARIABLES FOR PILE ENCASEMENT

Pile Size	"D" Square Encsmt.	"D" Round Encsmt.	"L"*
HP10x42	1'-7"	2'-0"	1'-4"
HP12x53	1'-8"	2'-2"	1'-5"
HP14x73	1'-11"	2'-6"	1'-8"

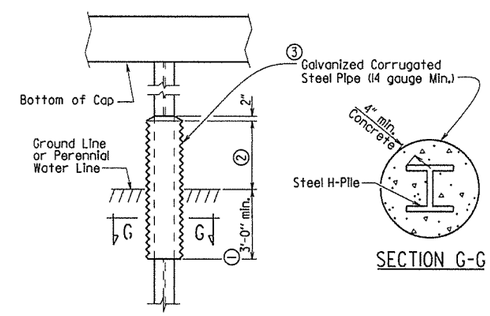

SECTION G-G

ALTERNATE PILE ENCASEMENT DETAIL FOR STEEL H-PILES

(Shown with Partial Height Encasement)

① Unless otherwise noted on Bridge Layout.

② 3'-0" minimum or as shown on Bridge Layout.

③ Encasement dimensions shall be sized to maintain a minimum concrete cover of 4" from the H-Pile. Reinforcement shall be sized to provide a minimum concrete cover of 1½" and a minimum clearance of 1¼" from the pile.

④ Alternate pile encasement, when not extended to bottom of cap, shall have 2" concrete taper for water runoff as shown in the Partial Height Encasement detail.

⚠ Added alternate method of splicing H-piles and revised pile encasement note.
3/24/2016 AMS

This document was originally issued and sealed by Charles R. Ellis, PE No. 9235, on March 24, 2016. This copy is not a signed and sealed document.

STATE OF ARKANSAS
REGISTERED PROFESSIONAL ENGINEER
No. 9235
CHARLES R. ELLIS

BRIDGE ENGINEER

STANDARD DETAILS FOR STEEL H-PILES AND PILE ENCASEMENTS

ARKANSAS STATE HIGHWAY COMMISSION
LITTLE ROCK, ARK.

DRAWN BY: A.M.S. DATE: 2/27/2014 FILENAME: b55020.dgn
CHECKED BY: B.E.F. DATE: 2/27/2014 SCALE: NO SCALE
DESIGNED BY: STD. DATE: —

DRAWING NO. 55020

REFER TO TABULATION OF QUANTITIES
FOR 'W' & 'B' DIMENSIONS

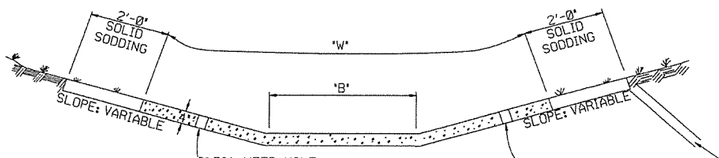

EXCAVATE TO NEAT LINES TO CONSTRUCT DITCH PAVING AND SOLID SODDING.

TYPE A

REFER TO TABULATION OF QUANTITIES
FOR 'W' DIMENSIONS

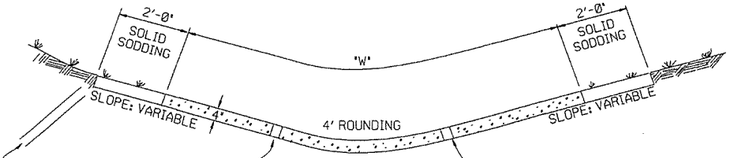

TYPE B

THE STEEL AND ADDITIONAL CONCRETE FOR THE WALLS SHALL NOT BE PAID FOR DIRECTLY, BUT SHALL BE CONSIDERED TO BE INCLUDED IN THE PRICE BID FOR 'CONCRETE DITCH PAVING.'

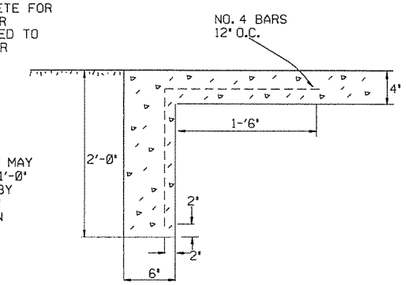

TOE WALL DEPTH MAY BE ALTERED TO 1'-0" WHEN DIRECTED BY THE ENGINEER IN ROCK EXCAVATION

TOE WALL DETAIL FOR
CONCRETE DITCH PAVING

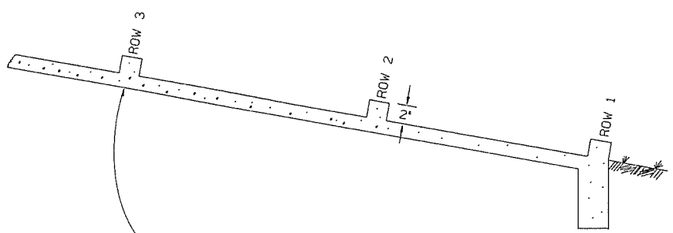

NUMBER OF ELEMENTS PER ROW VARIES WITH WIDTH OF PAVING SPECIFIED

ENERGY DISSIPATORS TO BE USED FOR THE ENTIRE LENGTH OF DITCH WHEN SLOPE OF DITCH PAVING EXCEEDS 7%. THE DISSIPATORS WILL NOT BE PAID FOR DIRECTLY, BUT SHALL BE CONSIDERED TO BE UNCLUDED IN THE PRICE BID FOR CONCRETE DITCH PAVING.

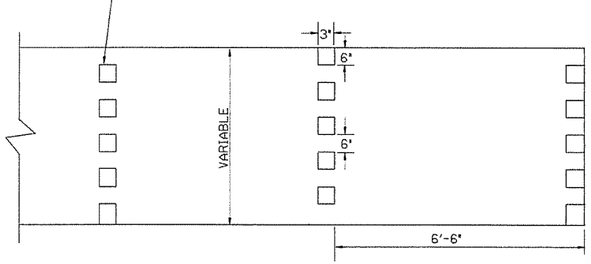

ENERGY DISSIPATORS
(NO SCALE)

GENERAL NOTES:

THE FULL WIDTH OF EACH SECTION SHALL BE POURED MONOLITHICALLY.

TOE WALLS TO BE CONSTRUCTED FULL WIDTH AT EACH END OF DITCH PAVING, AND POURED MONOLITHICALLY.

SOLID SOD ALONG DITCH PAVING TO BE PLACED WITHIN 14 DAYS OF DITCH PAVING CONSTRUCTION.

1" WIDE TRANSVERSE EXPANSION JOINTS SHALL BE PLACED IN CONCRETE DITCH PAVING AT 45' INTERVALS. THE SPACE SHALL BE FILLED WITH APPROVED JOINT FILLER COMPLYING WITH AASHTO M213.

DATE	REVISION	DATE FILM'D
11-17-10	ADDED GENERAL NOTE	
6-2-94	ADDED GENERAL NOTE ABOUT SOLID SODDING	
11-30-8	ELIMINATED MIN. ROWS OF ELEMENTS	111-30-89
7-15-88	REVISED DISSIPATOR NOTE	653-7-15-88
4-3-87	REVISED ENERGY DISSIPATOR	671-4-3-87
1-9-87	MODIFIED NOTE ON ENERGY DISS.	532-1-9-87
11-3-86	ADDED NOTE TO ENERGY DISS.	599-12-1-86
11-1-84	ENERGY DISSIPATOR DETAILS ADDED	508-11-1-84
11-1-84	EXCAVATION DETAILS ADDED TYPED A & B	
10-2-72	REVISED AND REDRAWN	508-10-2-72

ARKANSAS STATE HIGHWAY COMMISSION

CONCRETE DITCH PAVING

STANDARD DRAWING CDP-1

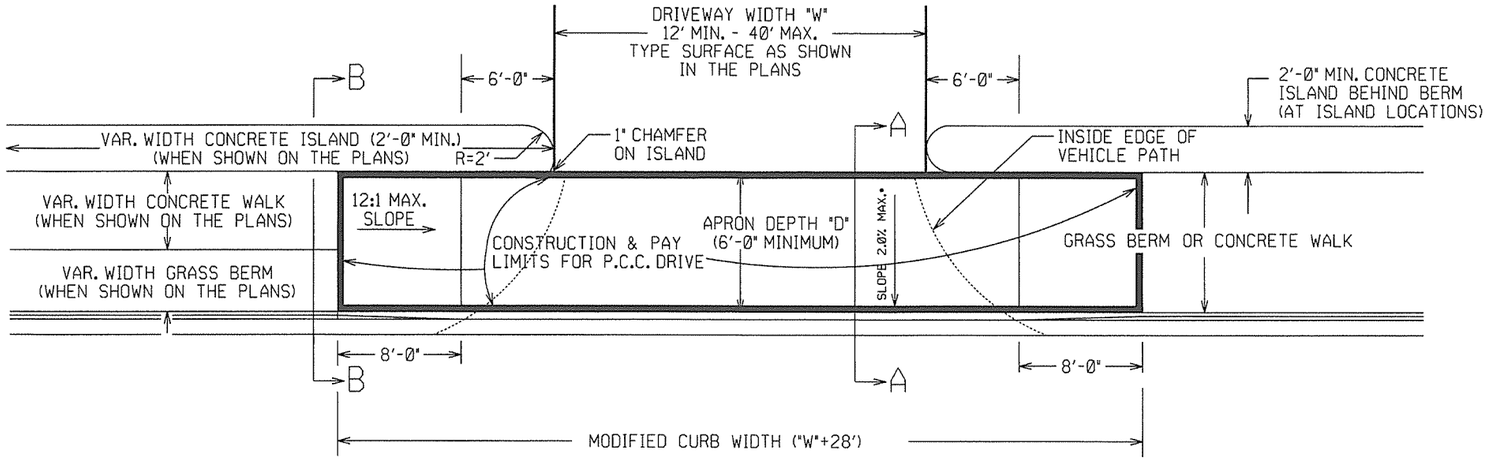

PLAN VIEW

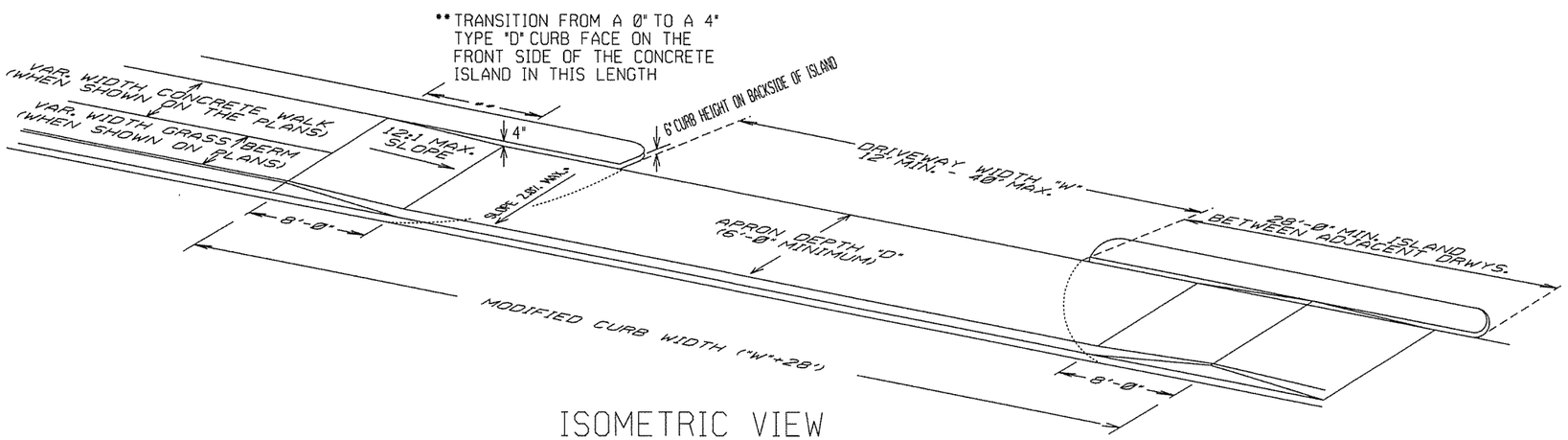

ISOMETRIC VIEW

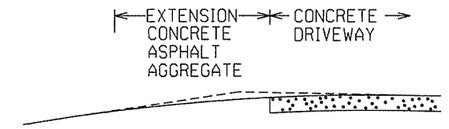

EXTENSION TYPICAL SECTIONS

1: CONCRETE - 6" P.C. CONCRETE DRIVEWAY

2: ASPHALT - 2" ACHM SURFACE COURSE (1/2")
4" ACHM BINDER COURSE.(1") OR
4" ACHM BASE COURSE (1-1/2")

3: ASPHALT - 2" ACHM SURFACE COURSE (1/2")
7" AGGREGATE BASE COURSE

4: AGGREGATE - 6" AGGREGATE BASE COURSE

THE TYPE OF EXTENSION SHALL BE AS SHOWN IN THE PLANS. THE CONTRACTOR MAY, WITH THE APPROVAL OF THE ENGINEER, SUBSTITUTE A LOWER NUMBERED TYPE OF EXTENSION IN LIEU OF THE TYPE SPECIFIED IN THE PLANS, BUT AT NO ADDITIONAL COST TO THE DEPARTMENT.

DRIVEWAY EXTENSION DETAILS

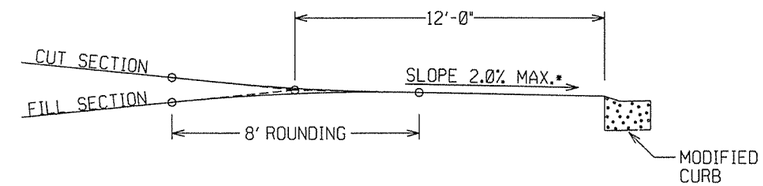

DRIVEWAY VERTICAL ALIGNMENT DETAILS

* NOTE: DRIVEWAYS MAY NOT BE SLOPED AWAY FROM THE ROADWAY UNLESS APPROVED BY THE ENGINEER.

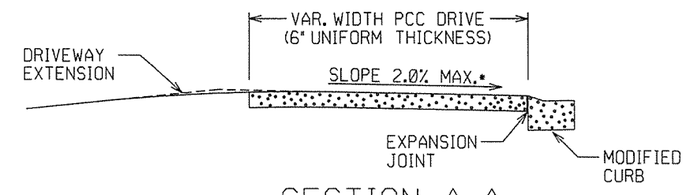

SECTION A-A

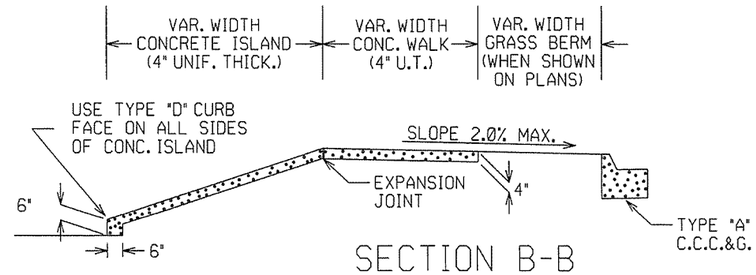

SECTION B-B
CURBED ISLAND BEHIND WALK

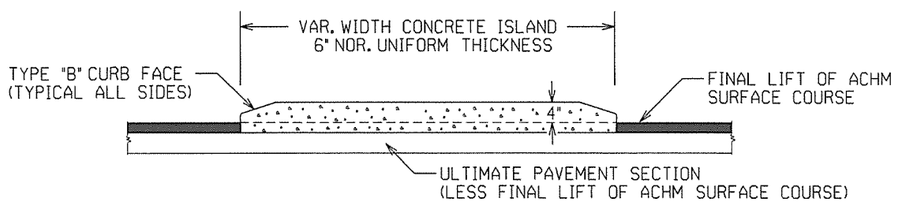

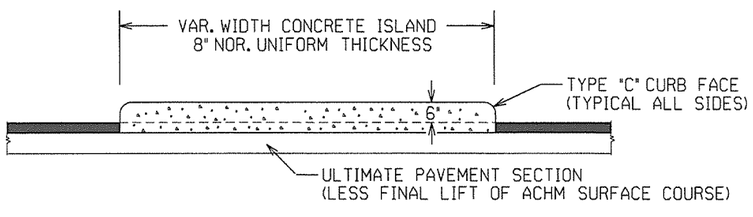

CURBED ISLANDS FOR CHANNELIZATION

REFER TO PLANS FOR TYPE OF CURB FACE TO BE USED. NO DIRECT PAYMENT WILL BE MADE FOR THE CURB FACES SHOWN ON THE ISLAND DETAILS. PAYMENT FOR THE CURB FACE WILL BE INCLUDED IN THE UNIT PRICE BID FOR THE ITEM "CONCRETE ISLAND".

DATE REV	DATE FILMED	DESCRIPTION
2-27-14		REVISED PLAN & ISOMETRIC VIEW
11-29-07		ADDED CHANNELIZATION ISLAND WITH TYPE C CURB FACE & REVISED DRIVEWAY SLOPE NOTE & VERTICAL ALIGNMENT DETAIL
11-10-05		REV. APRON SLOPE & DEPTH OF AGG. BASE.
8-22-02		ADDED ISLAND DETAILS & NOTES
3-30-00		REV. MOD. CURB WIDTH & TRANS. NOTE
11-19-98		REVISED NOTES
11-18-98		REDRAWN AND REISSUED

ARKANSAS STATE HIGHWAY COMMISSION

DETAILS OF DRIVEWAYS & ISLANDS

STANDARD DRAWING DR-1

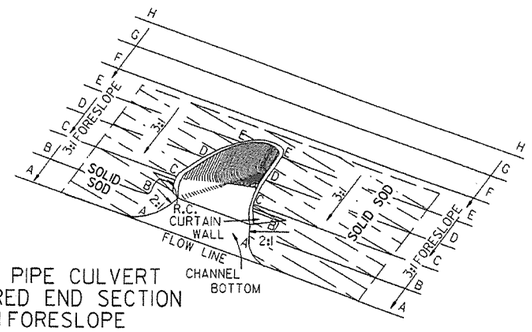

TYPICAL PIPE CULVERT
WITH FLARED END SECTION
& 3:1 FORESLOPE

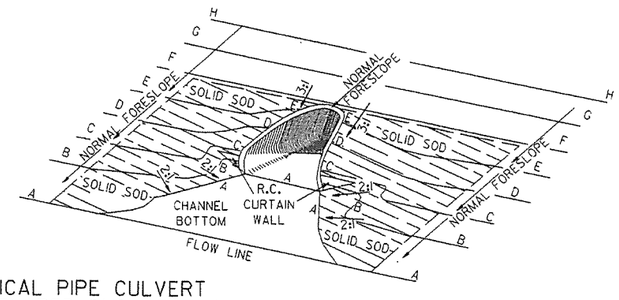

TYPICAL PIPE CULVERT
WITH FLARED END SECTION
& FLATTENED ADJACENT SLOPES

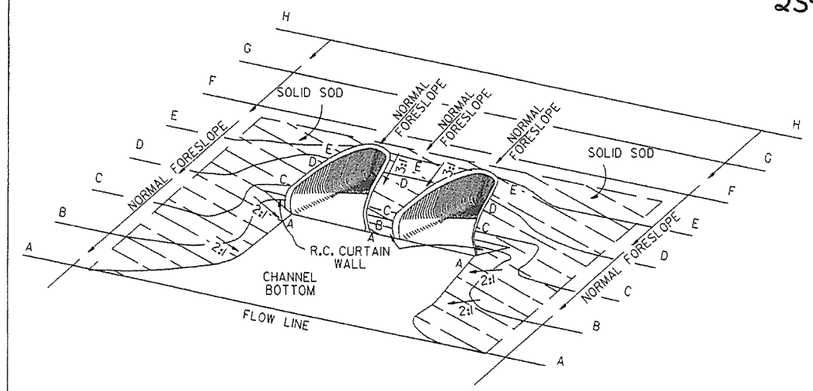

TYPICAL MULTIPLE PIPE CULVERT
WITH FLARED END SECTIONS
& FLATTENED ADJACENT SLOPES

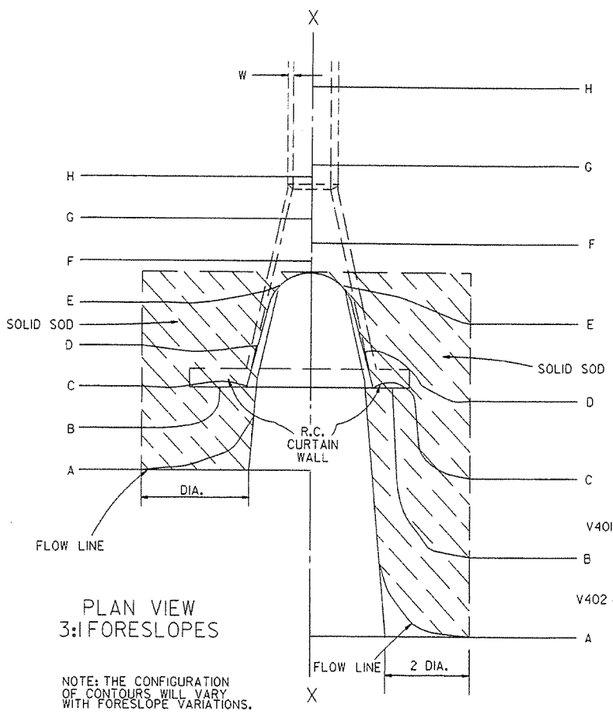

PLAN VIEW
3:1 FORESLOPES

NOTE: THE CONFIGURATION OF CONTOURS WILL VARY WITH FORESLOPE VARIATIONS.

PLAN VIEW
FLATTENED FORESLOPES

R.C. CURTAIN WALL DIMENSIONS & QUANTITIES

PIPE DIA.	H_1	L_1	L	L (DBL.)/2	SINGLE R.C.P.C. CONC.	SINGLE R.C.P.C. REINF. STEEL	DOUBLE R.C.P.C. CONC.	DOUBLE R.C.P.C. REINF. STEEL
					CU. YDS.	LBS.	CU. YDS.	LBS.
18"	11½"	3'-5"	8'-0"	6'-3"	0.31	27.7	0.45	39.5
24"	1'-0½"	4'-6"	9'-6"	7'-6"	0.37	33.4	0.53	48.0
30"	1'-3½"	5'-7"	11'-0"	9'-0"	0.45	39.0	0.67	59.0
36"	1'-7"	6'-8"	13'-0"	10'-6"	0.58	52.6	0.83	73.9
42"	2'-1½"	7'-3"	15'-6"	12'-0"	0.82	77.1	1.10	100.7
48"	2'-5"	7'-10"	17'-0"	13'-0"	0.98	94.9	1.27	120.4
54"	2'-9½"	8'-5"	18'-6"	14'-0"	1.16	115.8	1.47	143.7
60"	3'-4"	9'-0"	20'-6"	15'-6"	1.47	149.7	1.84	180.3
72"	4'-5"	10'-2"	25'-6"	18'-6"	2.31	232.6	2.73	271.0

NOTE: QUANTITIES SHOWN ARE FOR ONE (1) CURTAIN WALL.

REINFORCING STEEL SCHEDULE

PIPE DIA.	SINGLE R.C. PIPE CULVERT H401 L	H401 NO.	H402 L	H402 NO.	V401 L	V401 NO.	V402 L	V402 NO.	DOUBLE R.C. PIPE CULVERT H401 L	H401 NO.	H402 L	H402 NO.	H403 L	H403 NO.	V401 L	V401 NO.	V402 L	V402 NO.
18"	7'-8"	2	1'-11½"	4	1'-7½"	8	8"	8	12'-2"	2	1'-11½"	4	8"	2	1'-7½"	10	8"	14
24"	9'-2"	2	2'-2"	4	1'-8½"	10	8"	9	14'-8"	2	2'-2"	4	8"	2	1'-8½"	12	8"	18
30"	10'-8"	2	2'-4½"	4	1'-11½"	10	8"	12	17'-8"	2	2'-4½"	4	8"	2	1'-11½"	14	8"	22
36"	12'-8"	2	2'-10"	6	2'-3"	12	8"	14	20'-8"	2	2'-10"	6	8"	3	2'-3"	14	8"	28
42"	15'-2"	2	3'-9½"	8	2'-9½"	16	8"	15	23'-8"	2	3'-9½"	8	8"	4	2'-9½"	18	8"	30
48"	16'-8"	2	4'-3"	10	3'-1"	18	8"	16	25'-8"	2	4'-3"	10	8"	5	3'-1"	20	8"	32
54"	18'-2"	2	4'-8½"	12	3'-5½"	20	8"	17	27'-8"	2	4'-9"	12	8"	6	3'-5½"	22	8"	34
60"	20'-2"	2	5'-5"	14	4'-0"	24	8"	18	30'-8"	2	5'-5"	14	8"	7	4'-0"	26	8"	36
72"	25'-2"	2	7'-4"	18	5'-1"	30	8"	20	36'-8"	2	7'-4"	18	8"	9	5'-1"	33	8"	40

ALL REINFORCING STEEL #4 BARS @ 6" O.C.

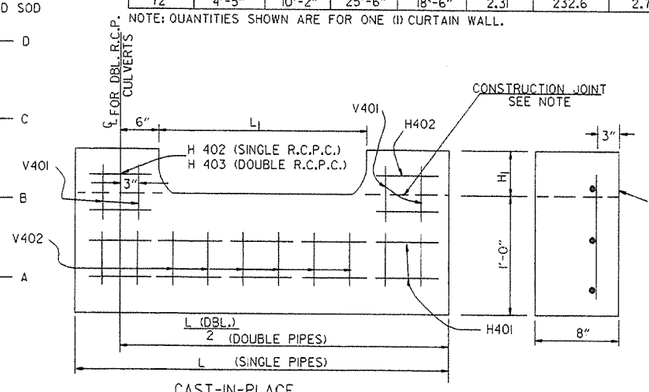

CAST-IN-PLACE

NOTE: THE PORTION OF THE R.C. CURTAIN WALL BENEATH THE FLARED END SECTION (LOWER 1'-0") SHALL BE PLACED MONOLITHICALLY. THE FLARED END SECTION SHALL THEN BE SET IN PLACE & THE REMAINING PORTIONS OF THE R.C. CURTAIN WALL PLACED.

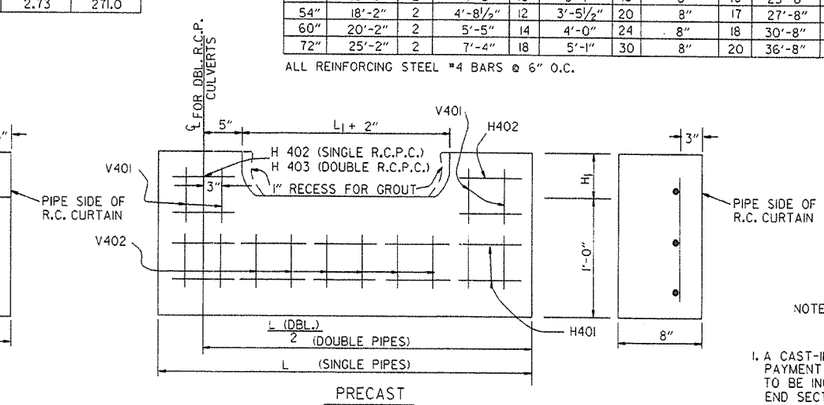

PRECAST

NOTE: THE PRECAST CURTAIN WALL WILL BE SET AND BACKFILLED WITH COMPACTED MATERIAL. THE FLARED END SECTION SHALL THEN BE SET IN PLACE AND THE 1" RECESS FILLED WITH GROUT. WHERE "L" EXCEEDS 11' THE CURTAIN WALL MAY BE CAST IN TWO (2) OR MORE SECTIONS. THE METHOD OF JOINING THE SECTIONS FOR INSTALLATION SHALL BE APPROVED BY THE ENGINEER.

R.C. CURTAIN WALL DETAILS

SOLID SODDING

PIPE DIA.	SINGLE R.C.P.C. 3:1	SINGLE R.C.P.C. 4:1	SINGLE R.C.P.C. 6:1	DOUBLE R.C.P.C. 3:1	DOUBLE R.C.P.C. 4:1	DOUBLE R.C.P.C. 6:1
	SQ. YDS.			SQ. YDS.		
18"	5	7	12	6	8	13
24"	8	12	19	9	13	20
30"	13	18	29	14	19	30
36"	17	26	41	18	28	43
42"	23	35	55	25	37	57
48"	29	46	68	31	48	70
54"	35	57	85	37	59	87
60"	45	62	104	48	65	107
72"	64	92	156	67	95	159

NOTE: QUANTITIES SHOWN ABOVE ARE FOR ONE (1) END OF F.E.S.

GENERAL NOTES

1. A CAST-IN-PLACE OR PRECAST CURTAIN WALL MAY BE USED. PAYMENT FOR THE CURTAIN WALL SHALL BE CONSIDERED TO BE INCLUDED IN THE UNIT PRICE BID EACH FOR FLARED END SECTIONS OF THE SEVERAL SIZES, WHICH PRICE SHALL BE FULL COMPENSATION FOR FURNISHING ALL MATERIALS INCLUDING REINFORCING STEEL AND CONCRETE; FOR FORMS, MIXING AND PLACING; FOR EXCAVATION AND BACKFILL, AND FOR ALL LABOR, TOOLS, EQUIPMENT AND INCIDENTALS NECESSARY TO COMPLETE THE WORK.
2. ALL EXPOSED EDGES SHALL BE CHAMFERED ¾".
3. CONCRETE FOR CURTAIN WALL SHALL MEET THE REQUIREMENTS FOR CLASS A OR S CONCRETE AS PROVIDED IN SECTION 802 OF THE STANDARD SPECIFICATIONS OR FOR PAVING CONCRETE AS PROVIDED IN SECTION 501 OF THE STANDARD SPECIFICATIONS.
4. WELDED WIRE MESH 3 x 3 W/10 x W10 MAY BE USED IN LIEU OF REINFORCING BARS.

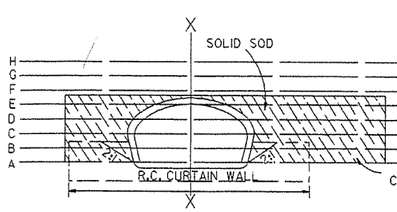

END VIEW

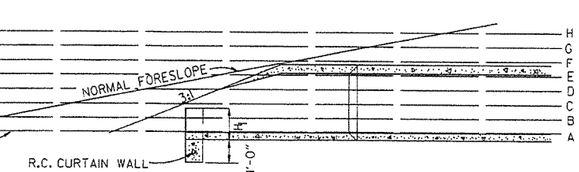

SECTIONAL VIEW "X-X"

DATE	REVISION	FILMED
10-18-96	ADDED NOTE TO SOLID SODDING	10-18-96
10-12-95	CORRECTED SPELLING	
11-3-94	ADDED GENERAL NOTE NO. 4	
8-15-91	REV. CURTAIN WALL QUANT. STEEL SCH. & SOLID SOD QUANT.	
3-2-81	ALLOW PRECAST IN 2 OR MORE PIECES CHAMFER EDGES	
5-15-80	ADDED PRECAST WALL & GENERAL NOTES	
10-2-72	REVISED AND REDRAWN	

ARKANSAS STATE HIGHWAY COMMISSION

FLARED END SECTION

STANDARD DRAWING FES-1

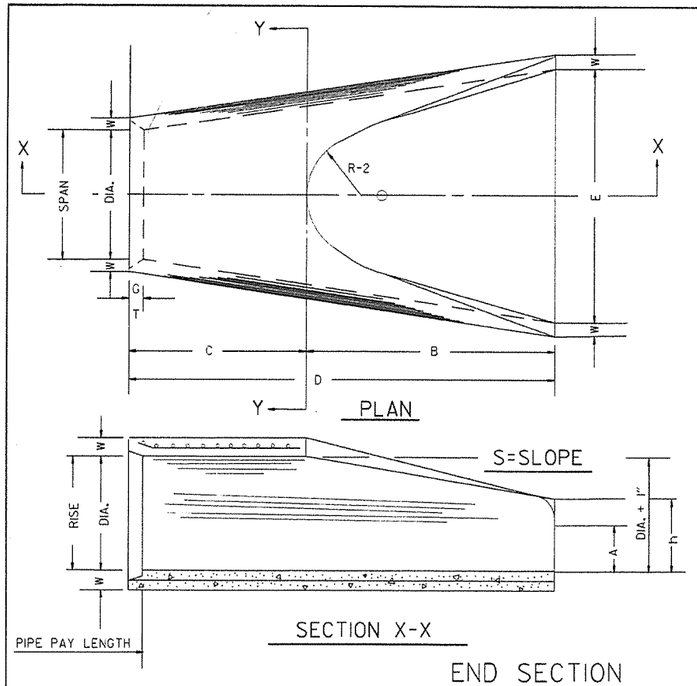

TABLE OF DIMENSIONS

DIA.	WALL	A	B	C	D	E	S	DIA. + 1"	P	R-1	R-2	G-T	WT.	h
18"	2 1/2"	9"	2'-3"	3'-10"	6'-1"	3'-0"	3:1	19"	29"	15 1/2"	12"	2"	1000	1'-0 1/2"
24"	3"	9 1/2"	3'-7 1/2"	2'-6"	6'-1 1/2"	4'-0"	3:1	25"	33 3/16"	16 13/16"	14"	2 1/2"	1600	1'-1 1/2"
30"	3 1/2"	1'-0"	4'-6"	1'-7 3/4"	6'-1 3/4"	5'-0"	3:1	31"	37"	18 1/2"	15"	3 1/4"	1940	1'-4 5/8"
36"	4"	1'-3"	5'-3"	2'-10 3/4"	8'-1 3/4"	6'-0"	3:1	37"	47 11/16"	24 5/16"	20"	3 1/2"	4100	1'-8"
42"	4 1/2"	1'-9"	5'-3"	2'-11"	8'-2"	6'-6"	3:1	43"	53 7/8"	27 1/2"	22"	3 1/2"	5380	2'-2 1/2"
48"	5"	2'-0"	6'-0"	2'-2"	8'-2"	7'-0"	3:1	49"	56 1/2"	28 1/2"	22"	3 1/2"	6550	2'-6"
54"	5 1/2"	2'-4"	6'-6"	1'-10"	8'-4"	7'-6"	3:1	55"	65 1/2"	33 1/8"	24"	4"	8750	2'-10 1/2"
60"	6"	2'-10"	6'-6"	1'-10"	8'-4"	8'-0"	3:1	61"	72 1/2"	36 11/8"	24"	4"	9270	3'-5"
72"	7"	3'-10"	6'-6"	1'-10"	8'-4"	9'-0"	3:1	73"	77 13/16"	38 15/16"	24"	5"	13250	4'-6"

ARCH PIPE

EQUIV. DIA.	* SPAN AASHTO M 206	* SPAN AHD NOMINAL	* RISE AASHTO M 206	* RISE AHD NOMINAL	W	A	B	C	D	E	P	R2	G-T	S
INCHES														
15	18	18	11	11	2"	4"	2'-0"	4'-0"	6'-0"	3'-0"	29"	12"	1 1/2"	2 1/2:1
18	22	22	13 1/2	14	2 1/2"	5"	2'-0"	4'-1"	6'-1"	3'-6"	32 1/8"	13"	2 1/2"	2 1/2:1
21	26	26	15 1/2	16	2 3/4"	7"	2'-3"	3'-10"	6'-1"	4'-0"	34 1/8"	14"	2 1/2"	2 1/2:1
24	28 1/2	29	18	18	3"	9"	2'-3"	3'-10"	6'-1"	5'-0"	36 13/16"	15"	2 1/2"	2 1/2:1
30	36 1/4	36	22 1/2	23	3 1/2"	10"	3'-1"	3'-0 1/2"	6'-1 1/2"	6'-0"	47 13/16"	20"	3"	2 1/2:1
36	43 3/4	44	26 5/8	27	4"	10 1/2"	4'-0"	2'-11 1/2"	6'-1 1/2"	6'-6"	54 5/16"	22"	3 1/2"	2 1/2:1
42	51 1/8	51	31 5/16	31	4 1/2"	11 1/2"	4'-7"	1-10 1/4"	6'-5 1/4"	7'-2"	59 1/2"	23"	3 3/4"	2 1/2:1
48	58 1/2	59	36	36	5"	1'-3"	5'-3"	2'-10 3/4"	8'-1 3/4"	7'-10"	70 5/16"	24"	4 1/4"	2 1/2:1
54	65	65	40	40	5 1/2"	1'-7"	5'-3"	2'-11"	8'-2"	8'-6"	72 1/16"	24"	4 3/4"	2 1/4:1
60	73	73	45	45	6"	1'-10"	5'-6"	2'-8"	8'-2"	9'-0"	77 13/16"	24"	5"	2 1/4:1

* THE MEASURED SPAN AND RISE SHALL NOT VARY MORE THAN ± 2 PER CENT FROM THE VALUES SPECIFIED BY AASHTO M 206.

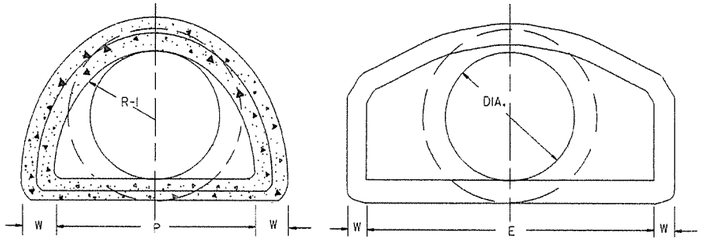

SECTION Y-Y

END VIEW

NOTE: TONGUE END ON UPSTREAM SECTION
GROOVE END ON DOWNSTREAM SECTION

END SECTION
FOR REINFORCED CONCRETE PIPE CULVERTS

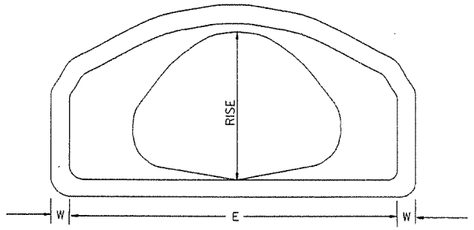

END VIEW
CONCRETE ARCH PIPE

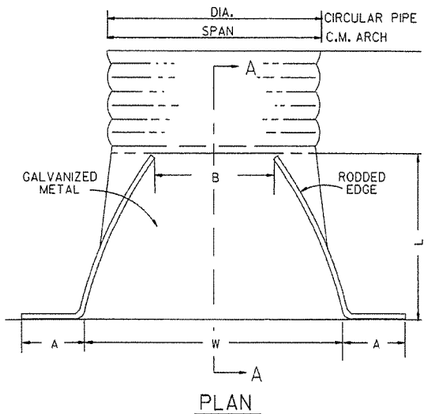

PLAN

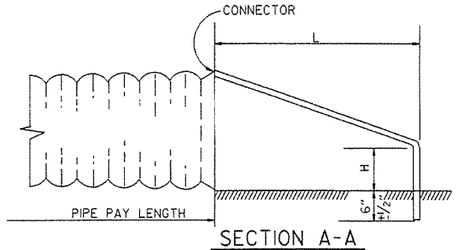

SECTION A-A

NOTE: ALTERNATE CONNECTIONS TO THE PIPE CULVERTS, IN ACCORDANCE WITH MANUFACTURER'S STANDARD PRACTICES, MAY BE MADE SUBJECT TO THE APPROVAL OF THE ENGINEER.

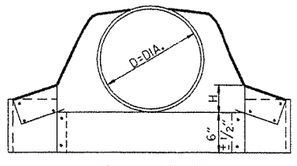

CIRCULAR PIPE

CIRCULAR PIPE

D. DIA.	GAUGE	A 1" ±	B. MAX.	H 1" ±	L 1 1/2" ±	W 2" ±	S
INCHES							
12	16	6	6	6	21	24	2 1/2:1
15	16	7	8	6	26	30	2 1/2:1
18	16	8	10	6	31	36	2 1/2:1
21	16	9	12	6	36	42	2 1/2:1
24	16	10	13	6	41	48	2 1/2:1
30	14	12	16	8	51	60	2 1/2:1
36	14	14	19	9	60	72	2 1/2:1
42	12	16	22	11	69	84	2 1/2:1
48	12	18	27	12	78	90	2 1/2:1
54	12	18	30	12	84	102	2:1
60	12	18	33	12	87	114	1 3/4:1
66	12	18	36	12	87	120	1 1/2:1
72	12	18	39	12	87	126	1 1/3:1

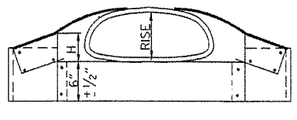

C.M. ARCH PIPE

C.M. ARCH PIPE

EQUIV. DIA.	SPAN	RISE	A 1" ±	B MAX.	H 1" ±	L 1 1/2" ±	W 2" ±	S	GAUGE
INCHES									
15"	17	13	7	9	6	19	30	2 1/2:1	16
18"	21	15	7	10	6	23	36	2 1/2:1	16
21"	24	18	8	12	6	28	42	2 1/2:1	16
24"	28	20	9	14	6	32	48	2 1/2:1	16
30"	35	24	10	16	6	39	60	2 1/2:1	14
36"	42	29	12	18	8	46	75	2 1/2:1	14
42"	49	33	13	21	9	53	85	2 1/2:1	12
48"	57	38	18	26	12	63	90	2 1/2:1	12
54"	64	43	18	30	12	70	102	2 1/4:1	12
60"	71	47	18	33	12	77	114	2 1/4:1	12

END SECTIONS FOR CORRUGATED METAL PIPE CULVERTS

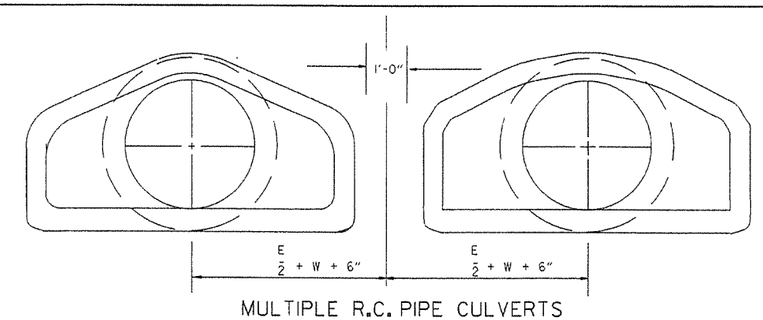

MULTIPLE R.C. PIPE CULVERTS

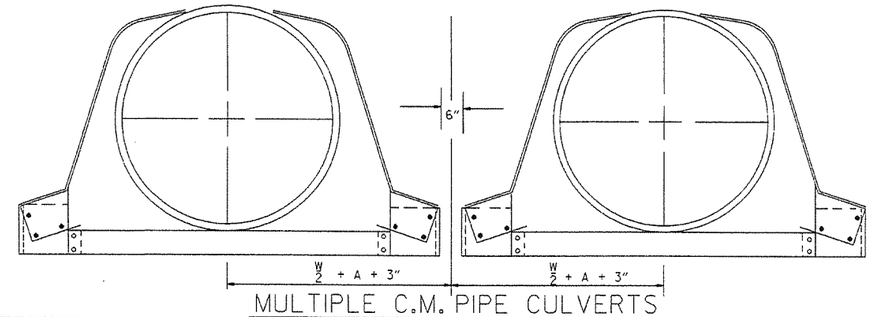

MULTIPLE C.M. PIPE CULVERTS

DATE	REVISION	FILMED
10-18-96	REVISED ASTM REF. TO AASHTO	10-18-96
5-15-80	REVISED DISTANCE BETWEEN MULTIPLE R.C.P. F.E.S.	664-5-15-80
7-14-78	C.M. ARCH SIZES TO CONFORM WITH AASHTO SIZES	752-7-14-78
8-22-75	ADDED MULTIPLE PIPE CULVERTS	517-8-22-75
12-5-74	REMOVED NOTE RE REINF. FOR R.C. F.E.S.	500-12-5-74
5-24-73	CMP END SECTION, SHOW PIPE PAY LENGTH	627-5-24-73
10-2-72	REVISED AND REDRAWN	760-10-2-72

ARKANSAS STATE HIGHWAY COMMISION

FLARED END SECTION

STANDARD DRAWING FES-2

stdfes2.dgn

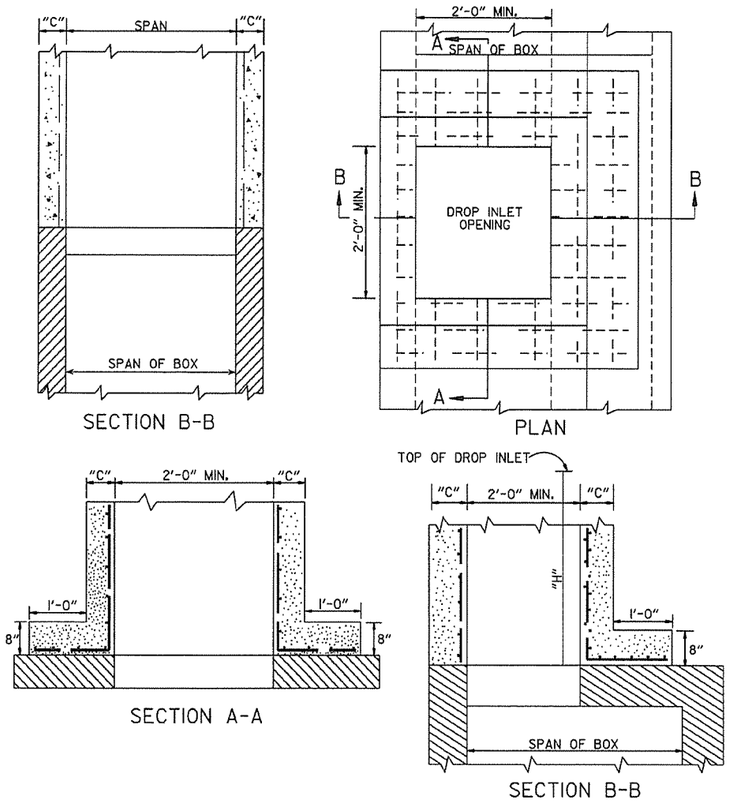

METHOD OF CONSTRUCTING DROP INLET ON EXISTING R.C. BOX CULVERT

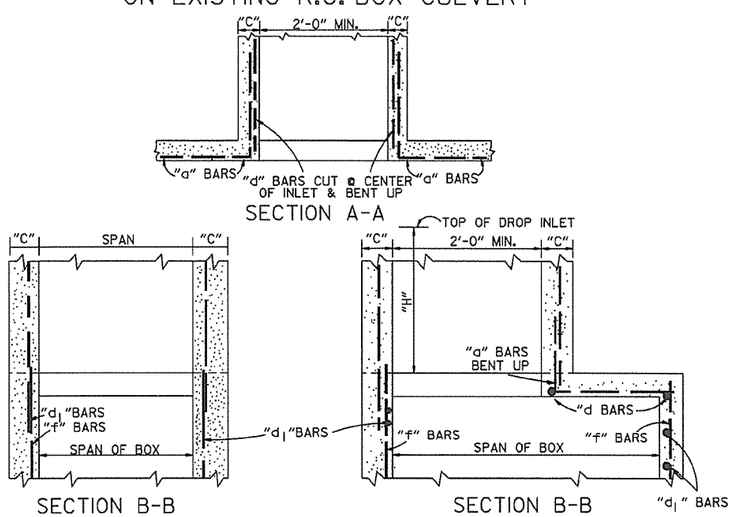

METHOD OF CONSTRUCTING DROP INLET ON NEW R.C. BOX CULVERT

NOTE: "C" DIMENSIONS AND REINFORCING BAR SIZES, SHALL CONFORM TO THOSE SHOWN ON STANDARD DRAWING FOR DROP INLET.

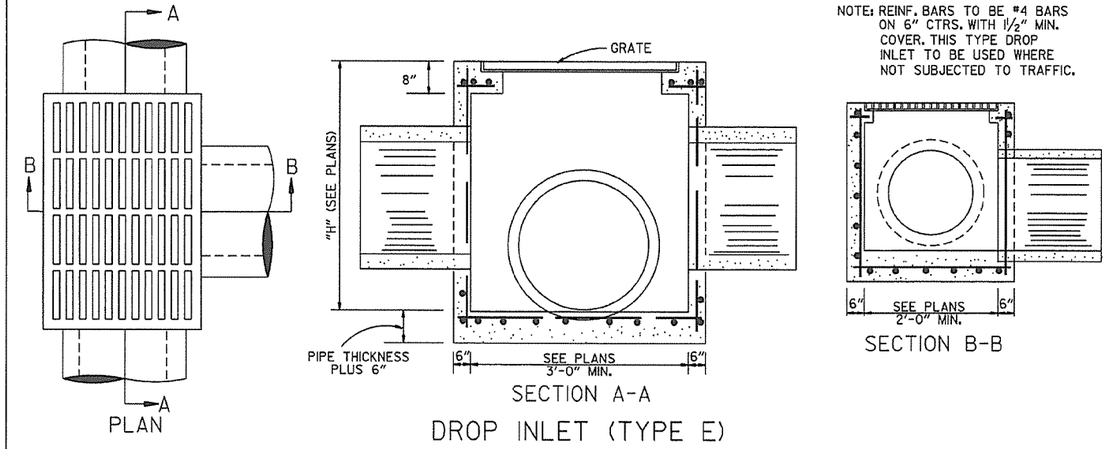

DROP INLET (TYPE E)

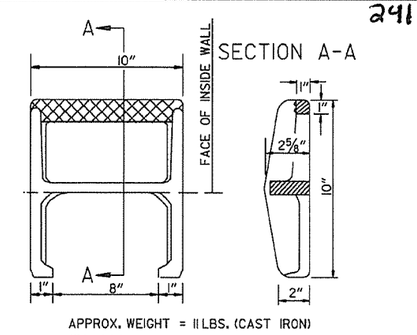

NOTE: THIS DETAIL IS TYPICAL. OTHERS MAY BE USED WITH PRIOR APPROVAL OF THE ENGINEER.

DETAIL OF STEP FOR DROP INLET

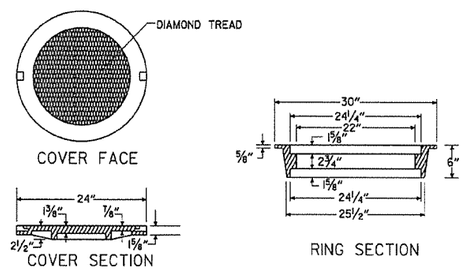

APPROXIMATE TOTAL WEIGHT = 333 LBS.

HEAVY DUTY RING & COVER

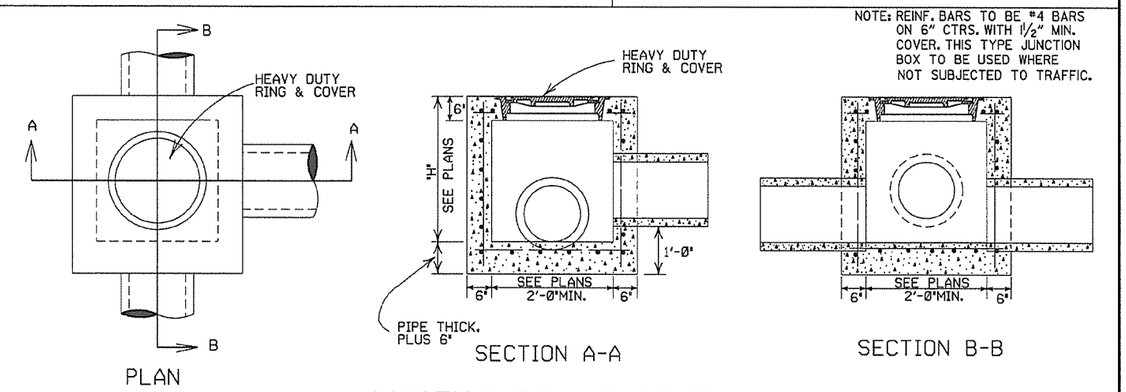

JUNCTION BOX (TYPE E)

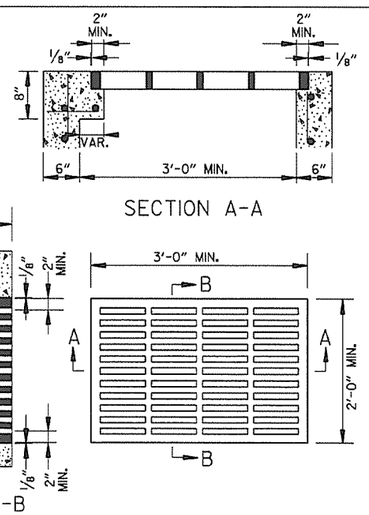

APPROXIMATE MINIMUM WATERWAY OPENING = 260 SQ. IN.

GRATE FOR TYPE E DROP INLET

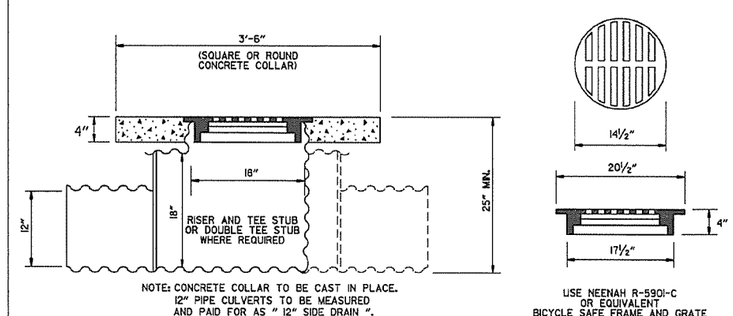

DETAIL OF YARD DRAIN

GENERAL NOTES:

1. ALL EXPOSED CORNERS SHALL BE ¾" CHAMFERED.
2. STEPS SHALL BE INSTALLED ON 16" CENTERS ON ALL INLETS 4'-0" HIGH OR OVER, OR AS APPROVED BY THE ENGINEER.
3. EXPANSION JOINT MATERIAL SHALL BE ¾" PREFORMED FIBER.
4. GRATE OR GRATE AND FRAME SHALL BE CONSTRUCTED OF CAST IRON AND SHALL CONFORM TO THE REQUIREMENTS OF THE STANDARD SPECIFICATIONS FOR GRAY IRON CASTINGS AASHTO M 105 CLASS 35B. GRATE MAY BE USED WITHOUT FRAME.
5. GRATE AND FRAME SHALL NOT BE PAINTED.
6. GRATE SHALL BE BICYCLE SAFE.
7. HEAVY DUTY RING SHALL ALWAYS BE INSTALLED WITH FLANGE ON TOP.
8. HEAVY DUTY RING AND COVER SHALL BE CONSTRUCTED OF CAST IRON AND SHALL CONFORM TO THE REQUIREMENTS OF THE STANDARD SPECIFICATIONS FOR GRAY IRON CASTINGS AASHTO M105 CLASS 35B & AASHTO M306.
9. HEAVY DUTY RING AND COVER SHALL NOT BE PAINTED.
10. DIMENSIONS SHOWN FOR RING AND COVER ARE TYPICAL. THE CONTRACTOR MAY SUBSTITUTE SIMILAR CASTINGS WITH THE APPROVAL OF THE ENGINEER. REQUESTING APPROVAL FOR CASTING DESIGNS MAY BE MADE BY REFERRING TO PREVIOUSLY APPROVED DRAWINGS.

DATE REV.	REVISION	DATE FILMED
11-16-01	ADDED NOTE 10	
1-12-00	REVISED HEAVY DUTY RING & COVER	
7-02-98	CHANGED GRATE DETAIL, DELETED DI (TYPE D), REPLACED RING & COVER W/HEAVY DUTY RING & COVER, ADDED JUNCTION BOX (TYPE E)	
6-26-97	ADDED DIMENSION TO TYPE IV-A	
10-18-96	ADDED DETAIL OF YARD DRAIN	
8-15-91	DELETE TYPE IV GRATE	
7-15-88	REVISED STEP DETAIL	
5-20-83	REVISED DETAILS OF GRATES (TYPE IV & IV-A)	
2-4-83	ADDED GENERAL NOTE NO. 4	
3-2-81	ADDED TYPE IV-A GRATE	
5-22-74	DELETED INLET (TYPE F) & GRATE (TYPE III)	
10-2-72	REVISED AND REDRAWN	

ARKANSAS STATE HIGHWAY COMMISSION

DETAILS OF DROP INLETS & JUNCTION BOXES

STANDARD DRAWING FPC-9

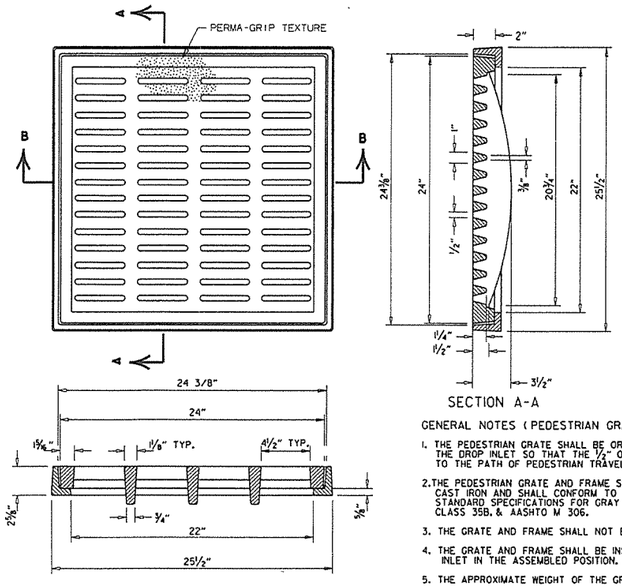

SECTION B-B

SECTION A-A

GENERAL NOTES (PEDESTRIAN GRATE & FRAME)

1. THE PEDESTRIAN GRATE SHALL BE ORIENTED IN THE TOP OF THE DROP INLET SO THAT THE 1/2" OPENINGS ARE PERPENDICULAR TO THE PATH OF PEDESTRIAN TRAVEL.
2. THE PEDESTRIAN GRATE AND FRAME SHALL BE CONSTRUCTED OF CAST IRON AND SHALL CONFORM TO THE REQUIREMENTS OF THE STANDARD SPECIFICATIONS FOR GRAY IRON CASTINGS AASHTO M 105, CLASS 35B, & AASHTO M 306.
3. THE GRATE AND FRAME SHALL NOT BE PAINTED.
4. THE GRATE AND FRAME SHALL BE INSTALLED IN THE DROP INLET IN THE ASSEMBLED POSITION.
5. THE APPROXIMATE WEIGHT OF THE GRATE AND FRAME SHALL BE 211 LBS.
6. THE MINIMUM WATERWAY OPENING SHALL BE 122 SQ. IN.

DETAILS OF PEDESTRIAN GRATE AND FRAME

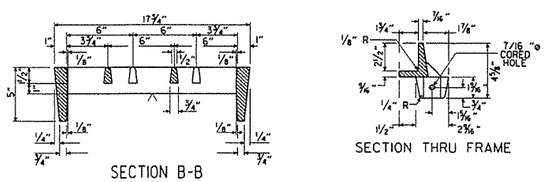

SECTION B-B

SECTION THRU FRAME

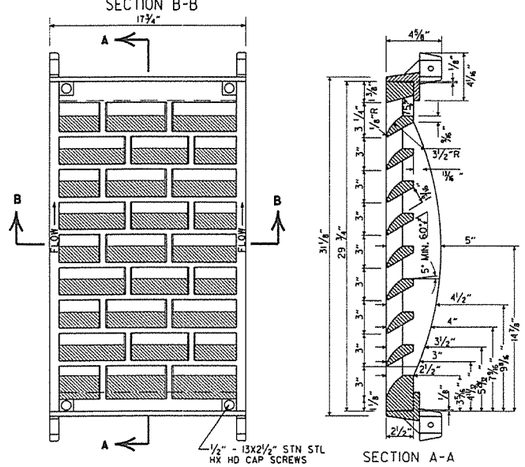

SECTION A-A

DETAILS OF RIBBED VANE GRATE AND FRAME

GENERAL NOTES (RIBBED VANE GRATE & FRAME)

1. RIBBED VANE GRATE AND FRAME SHALL BE CONSTRUCTED OF CAST IRON AND SHALL CONFORM TO THE REQUIREMENTS OF THE STANDARD SPECIFICATIONS FOR GRAY IRON CASTINGS AASHTO M 105, CLASS 35B, & AASHTO M 306.
2. GRATE AND FRAME SHALL NOT BE PAINTED.
3. GRATE AND FRAME SHALL BE INSTALLED IN DROP INLET IN ASSEMBLED POSITION.
4. APPROXIMATE WEIGHT OF GRATE SHALL BE 170 LBS.

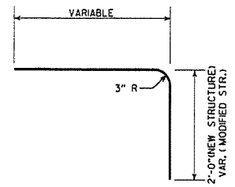

DETAIL OF BENT "b" BAR

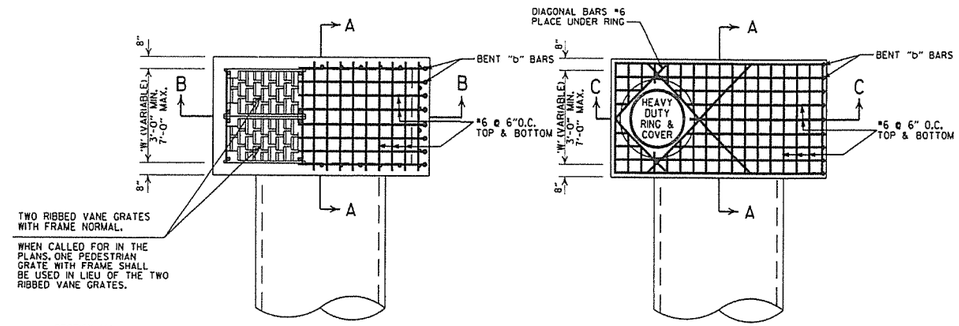

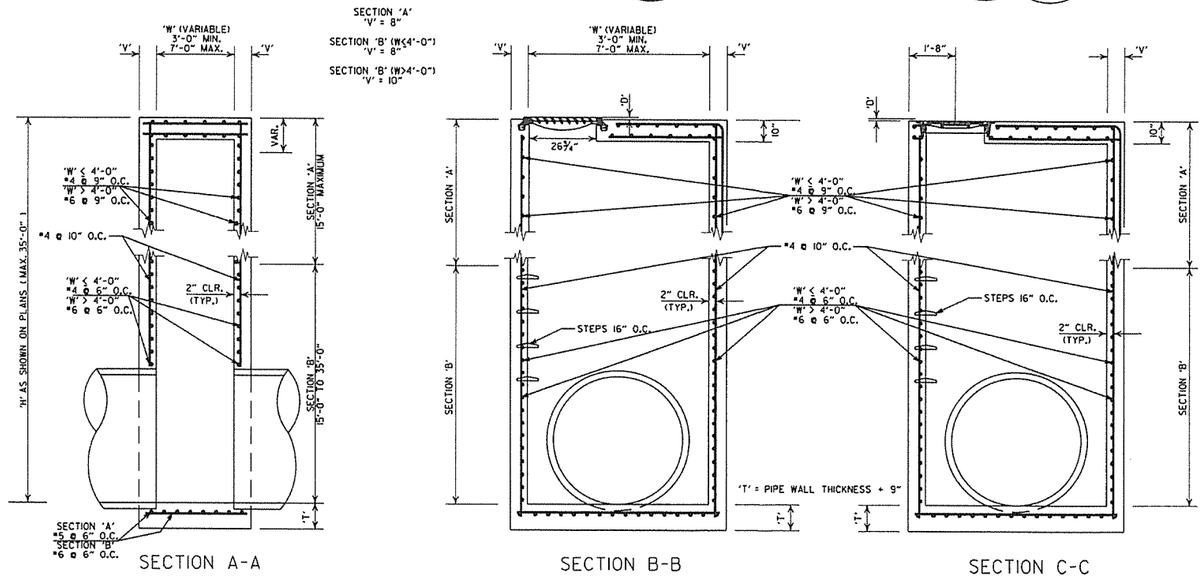

SECTION A-A

DETAILS OF DROP INLET (TYPE ST)

SECTION B-B

SECTION C-C

DETAILS OF JUNCTION BOX (TYPE ST)

GENERAL NOTES (TYPE ST DROP INLET & JUNCTION BOX)

1. THE 'D' DIMENSION SHALL MATCH THE FINAL LIFT OF ACHM SURFACE COURSE SHOWN IN THE PLANS WHEN ASPHALT PAVING SURROUNDS THE GRATE OR RING COVER, AND SHALL BE 0" AT OTHER INSTALLATIONS.
2. THE STEPS SHALL BE OMITTED WHERE 'H' IS LESS THAN 4'-0".
3. ALL EXPOSED CORNERS ARE TO HAVE A 3/4" CHAMFER.

GENERAL NOTES (HEAVY DUTY RING & COVER):

1. HEAVY DUTY RING AND COVER SHALL BE CONSTRUCTED OF CAST IRON AND SHALL CONFORM TO THE REQUIREMENTS OF THE STANDARD SPECIFICATIONS FOR GRAY IRON CASTINGS AASHTO M 105, CLASS 35B, & AASHTO M 306.
2. HEAVY DUTY RING AND COVER SHALL NOT BE PAINTED.
3. HEAVY DUTY RING SHALL ALWAYS BE INSTALLED WITH FLANGE ON TOP.
4. DIMENSIONS SHOWN FOR RING AND COVER ARE TYPICAL. THE CONTRACTOR MAY SUBSTITUTE SIMILAR CASTINGS WITH THE APPROVAL OF THE ENGINEER. REQUESTING APPROVAL FOR CASTING DESIGNS MAY BE MADE BY REFERRING TO PREVIOUSLY APPROVED DRAWINGS.

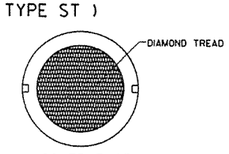

COVER FACE

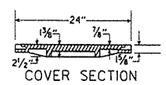

COVER SECTION

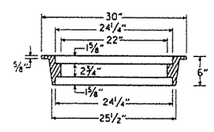

RING SECTION

HEAVY DUTY RING & COVER

APPROXIMATE TOTAL WEIGHT = 333 LBS.

DATE REVISED	DATE FILMED	DESCRIPTION
7-26-12		REMOVED NOTE 4, REVISED 'T', REVISED BOTTOM SLAB REBAR FOR SECTION 'A', SHOWED REBAR CLEARANCE IN SECTIONS
11-16-01		ADDED NOTE 4
1-12-00		REVISED HEAVY DUTY RING & COVER
5-13-99		ADDED PEDESTRIAN FRAME & GRATE
7-02-98		REMOVED NOTE 5, REV. DIMENSIONS, ADDED HEAVY DUTY RING & COVER ADDED AASHTO REF. REVISED GRATE
10-18-96		REVISED ASTM REF. TO AASHTO
10-1-92		REVISED & REISSUED
8-15-91	8-15-91	REVISED & REISSUED

ARKANSAS STATE HIGHWAY COMMISSION

DETAILS OF DROP INLET & JUNCTION BOX (TYPE ST)

STANDARD DRAWING FPC-9S

2429

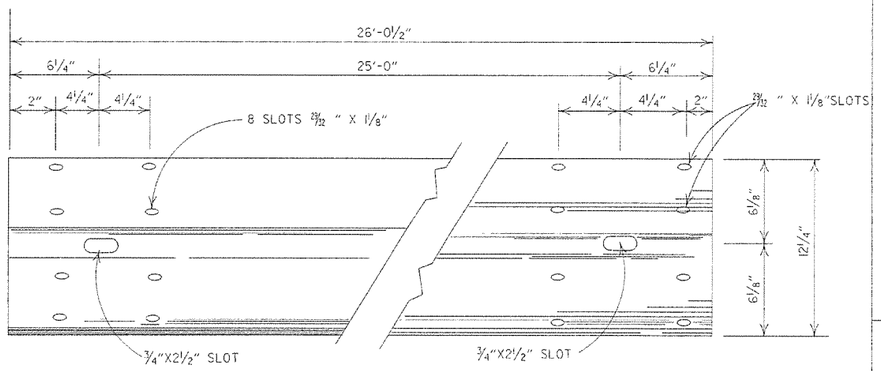

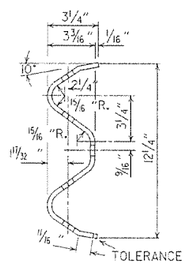

DETAILS OF W-BEAM GUARD RAIL

RAIL SECTION OF CLOSELY SIMILAR DIMENSIONS AND COMPARABLE STRENGTH MAY BE SUBSTITUTED IF APPROVED BY THE ENGINEER.

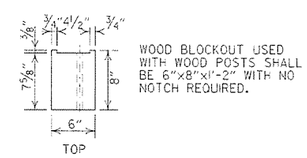

WOOD BLOCKOUT USED WITH WOOD POSTS SHALL BE 6"x8"x1'-2" WITH NO NOTCH REQUIRED.

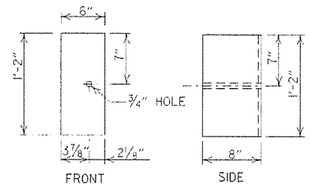

WOOD BLOCKOUT (W-BEAM)

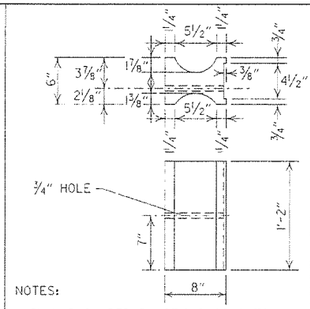

NOTES:

1. SIMILAR SHAPED PLASTIC BLOCKOUTS MAY BE USED AS LONG AS THEY MEET NCHRP-350 TEST LEVEL 3 SPECIFICATIONS OR REQUIREVENTS FOR MANUAL FOR ASSESSING SAFETY HARDWARE (MASH).
2. DIMENSIONS ARE SUBJECT TO MANUFACTURERS TOLERANCES.

PLASTIC BLOCKOUT (W-BEAM)

HOLES IN POSTS AND BLOCKS TO BE 3/4" DIA.

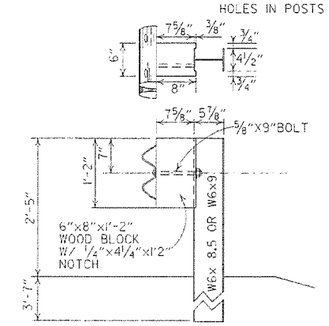

WOOD BLOCKOUT CONNECTIONS

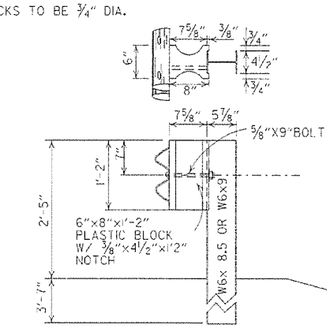

PLASTIC BLOCKOUT CONNECTIONS

DETAILS OF STEEL LINE POST CONNECTIONS (W-BEAM)

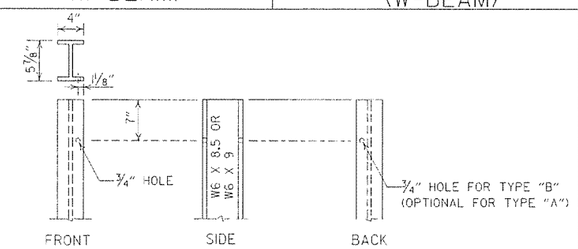

STEEL POST

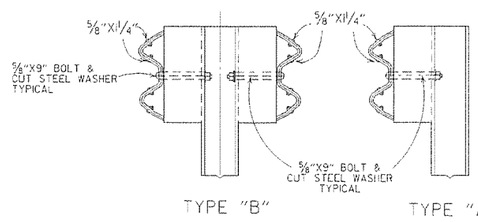

DETAILS OF STEEL LINE POST CONNECTIONS (W-BEAM)

HOLES IN POSTS AND BLOCKS TO BE 3/4" DIA.

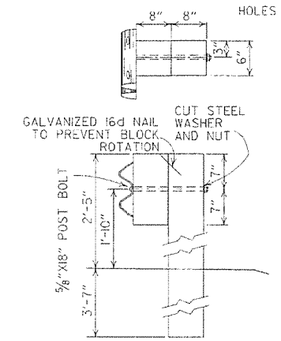

POSTS AND BLOCKS TO BE ROUGH SAWN 6"X8" WITH A TOLERANCE OF + OR - 1/4".

WOOD BLOCKOUT CONNECTIONS

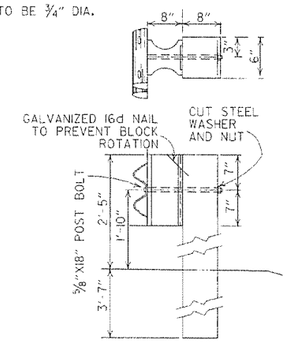

PLASTIC BLOCKOUT CONNECTIONS

DETAILS OF WOOD LINE POST CONNECTIONS (W-BEAM)

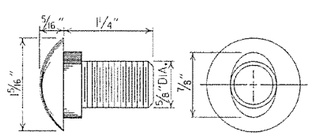

SPLICE BOLT
POST BOLT - SAME EXCEPT LENGTH

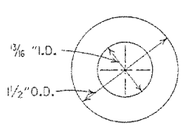

CUT STEEL WASHER

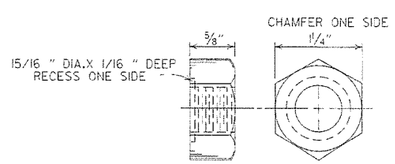

NUT

-GENERAL NOTES-

ALL BOLTS SHALL BE SUFFICIENT LENGTH TO EXTEND THROUGH THE FULL THICKNESS OF THE NUT AND NO MORE THAN 3/4" BEYOND IT.

WHERE W-BEAM GUARD RAIL CONTINUES, THE INTERMEDIATE SECTIONS SHALL HAVE A POST SPACING OF 6'-3" UNLESS OTHERWISE NOTED.

W-BEAM GUARD RAIL REPRESENTING INTERMEDIATE SECTIONS WILL BE MEASURED ALONG THE ROADWAY FACE FROM CENTERLINE OF POST TO CENTERLINE OF POST.

USE W-BEAM GUARD RAIL COMPONENTS OF SAME MATERIAL FOR ENTIRE JOB. FOR EXTENSIONS OR MODIFICATION OF EXISTING GUARD RAIL, W-BEAM GUARD RAIL COMPONENTS OF THE SAME TYPE AS THOSE EXISTING SHALL BE USED.

ANY BACKFILLING UNDER OR AROUND POST SHALL BE DAMP SAND THOROUGHLY TAMPED IN PLACE.

WOOD POSTS & WOOD BLOCKS SHALL BE EITHER DENSE NO. 1 STRUCTURAL OR BETTER 9.7# (1400 f) OR NO. 1 (1350 f SOUTHERN PINE.

CONTRACTOR SHALL HAVE THE OPTION OF USING WOOD BLOCKOUTS FOR W-BEAM GUARD RAIL OR PLASTIC BLOCKOUTS, AS LONG AS BLOCKOUT USED MEETS NCHRP-350 TEST LEVEL 3 SPECIFICATIONS OR REQUIREMENTS FOR MANUAL FOR ASSESSING SAFETY HARDWARE (MASH) FOR W-BEAM GUARD RAIL.

DATE	REVISION	DATE FILM
7-14-10	RAISED HEIGHT OF GUARD RAIL 1"	
0-15-09	ADDED REFERENCE TO MASH	
4-10-03	REVISED GENERAL NOTES	
9-22-02	REVISED DIMENSION ON WOOD & PLASTIC BLOCKOUT CONNECTIONS & ON STEEL POST	
8-16-01	REVISED WOOD BLOCKOUT & DETAILS OF WOOD LINE POST CONNECTIONS	
3-30-00	REMOVED GUARD RAIL AT BRIDGE ENDS	
1-12-00	ADDED PLASTIC BLOCKOUT	
8-12-98	REV. BLOCKOUTS TO WOOD, DELETED CONC. POST & REV. GENERAL NOTE, DELETED DET. OF GUARD RAIL REPLACE. BEHIND CURB & DET. OF POST PLACE. IN SOLID ROCK, & ADDED DETAILS OF STEEL LINE POST CONN. REMOVED BACK-UP PLATE, REVISED HOLES IN STEEL POLES	
4-3-97	REMOVED "LAP IN DIRECTION OF TRAFFIC" NOTE & PLACED ARROWS ON WASHERS	
10-18-96	REVISED WOOD POST NOTE	
6-2-94	ADDED ALT. STEEL POST SIZE	
8-5-93	REVISED STEEL POST SIZE	8-5-93
10-1-92	REDRAWN & REVISED	10-1-92
8-15-91	REVISED WASHER NOTE	8-15-91
8-2-90	REV. GEN. NOTE & DEPHT OF ANC. POST IN ROCK	8-2-90
7-15-88	REVISED SECTION 3 & GENERAL NOTES	
3-4-88	REV. ANCHOR POST, ELEV. NOTES & POST IN ROCK	780-3-4-88
10-30-87	REVISED WOOD LINE POST DETAIL	546-10-30-87
10-9-87	REDRAWN & REVISED	802-10-9-87

ARKANSAS STATE HIGHWAY COMMISSION

GUARD RAIL DETAILS

STANDARD DRAWING GR-8

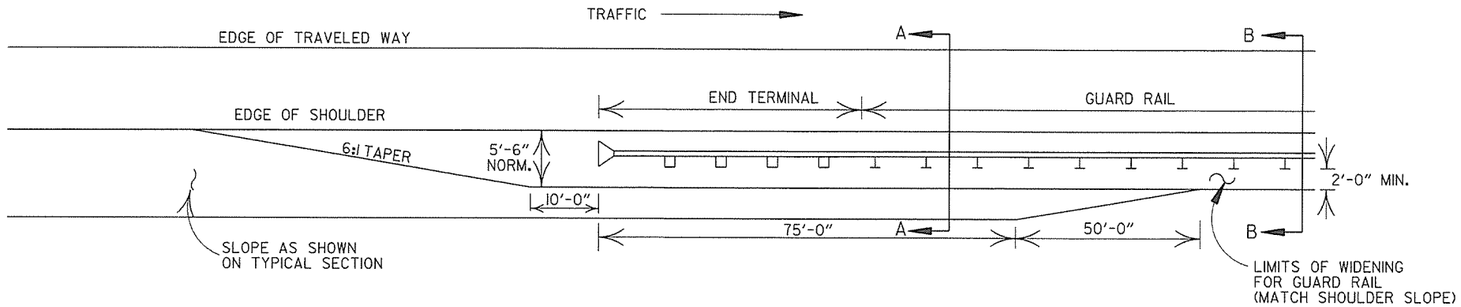

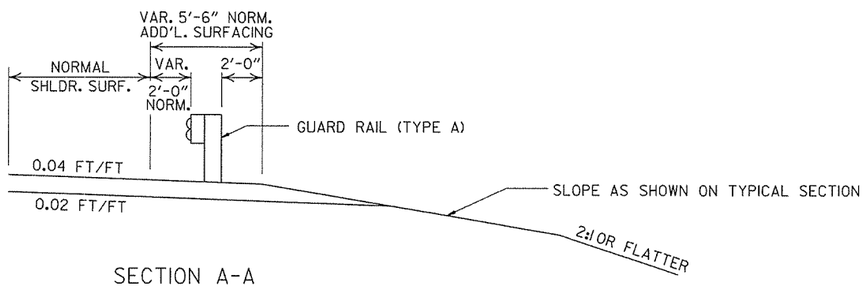

SECTION A-A

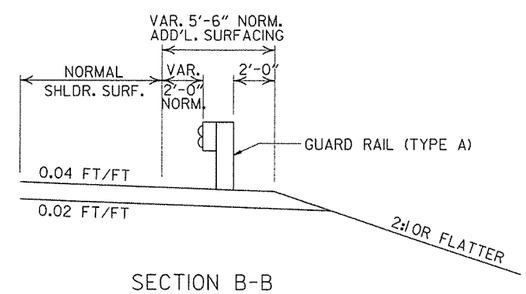

SECTION B-B

DETAILS OF WIDENING FOR GUARD RAIL

NOTE: NORMAL SECTION TO BE WIDENED APPROX. 5'-6" EACH SIDE TO SUPPORT GUARD RAIL.

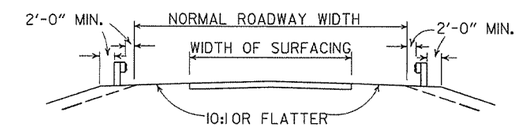

SECTION ON TANGENT

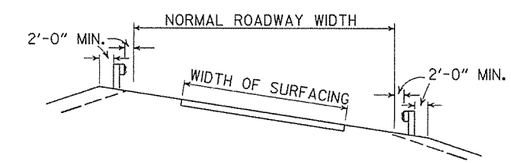

SECTION ON CURVE

DETAILS SHOWING POSITION OF GUARD RAIL ON HIGHWAY

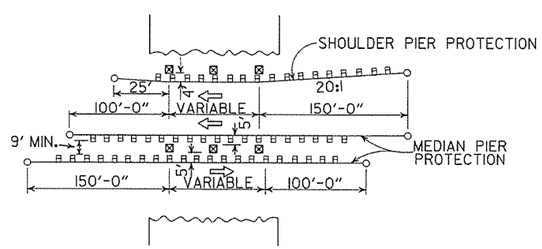

METHOD OF INSTALLATION OF GUARD RAIL AT FIXED OBSTACLE

DATE	REVISION	DATE FILM
4-17-08	MINOR REVISION	
11-10-05	DRAWN	

ARKANSAS STATE HIGHWAY COMMISSION

GUARD RAIL DETAILS

STANDARD DRAWING GR-9A

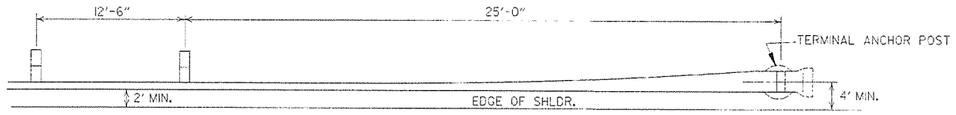

PLAN - GUARD RAIL TERMINAL (TYPE I)

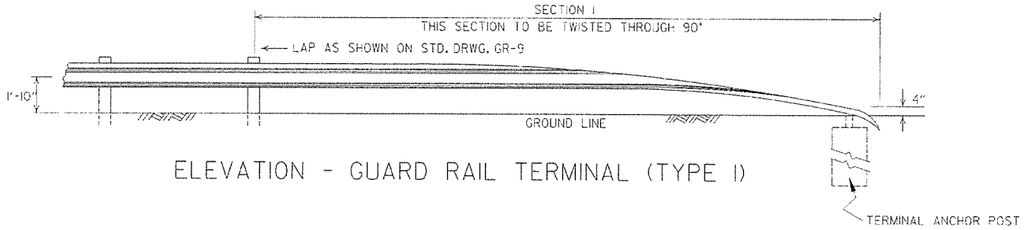

ELEVATION - GUARD RAIL TERMINAL (TYPE I)

NOTE:
SECTIONS 1 AND 2 OF GUARD RAIL TERMINAL SHALL BE PAID FOR AT THE PRICE BID PER LINEAR FOOT OF THE TYPE OF GUARD RAIL SPECIFIED.

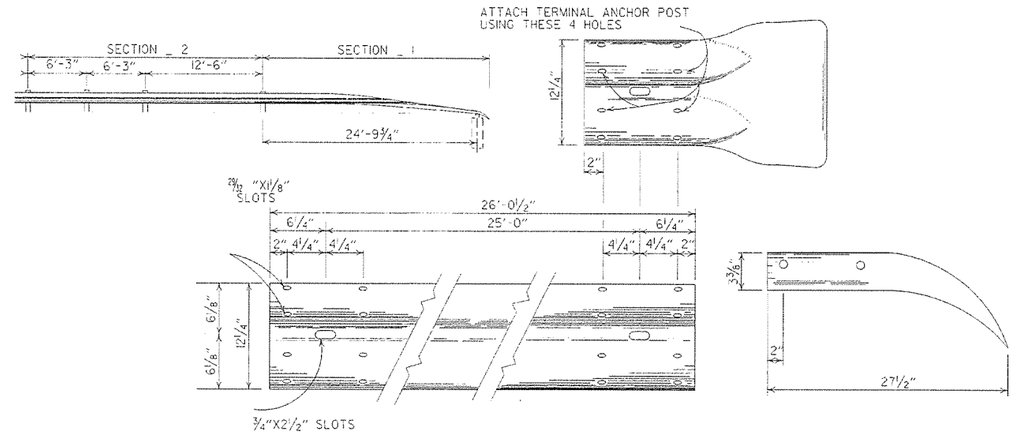

SECTION 1

TERMINAL SECTION

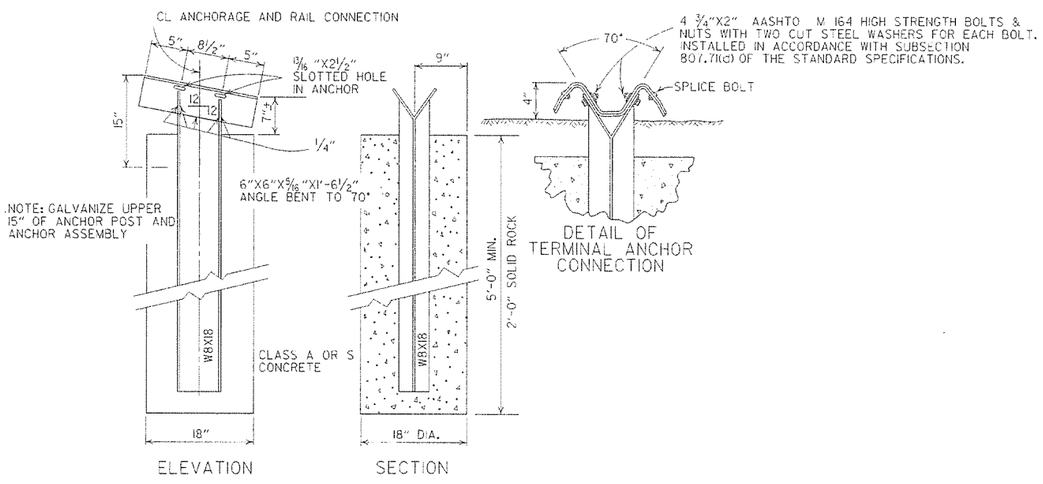

ELEVATION

SECTION

DETAIL OF TERMINAL ANCHOR CONNECTION

NOTE: RAIL MEMBERS MAY BE BOLTED TO ANGLE AT TERMINAL ANCHOR AND THE TWO ASSEMBLIES POSITIONED TO PROPER ALIGNMENT PRIOR TO PLACING CONCRETE AROUND 8 WF 17 POST IF CONTRACTOR SO DESIRES.

DETAIL OF TERMINAL ANCHOR POST (TYPE I)

DATE	REVISION	DATE FILM
7-14-10	RAISED HEIGHT OF GUARD RAIL 1"	
6-26-97	REVISED LAP NOTE	
10-18-96	REVISED ASTM REF. TO AASHTO	
11-3-94	DIMENSION TERMINAL DETAIL	
11-11-92	ADDED NOTE FOR PAYMENT	11-11-92
10-1-92	DRAWN & ISSUED	10-1-92

ARKANSAS STATE HIGHWAY COMMISSION

GUARD RAIL DETAILS

STANDARD DRAWING GRT-1

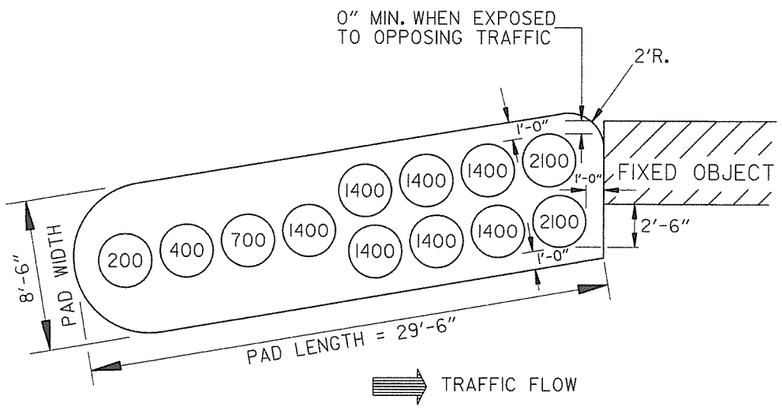

(TYPE C)

BARRIER LENGTH = 27'-6"
DESIGN IMPACT SPEED = 50 M.P.H.= 73.3 fps

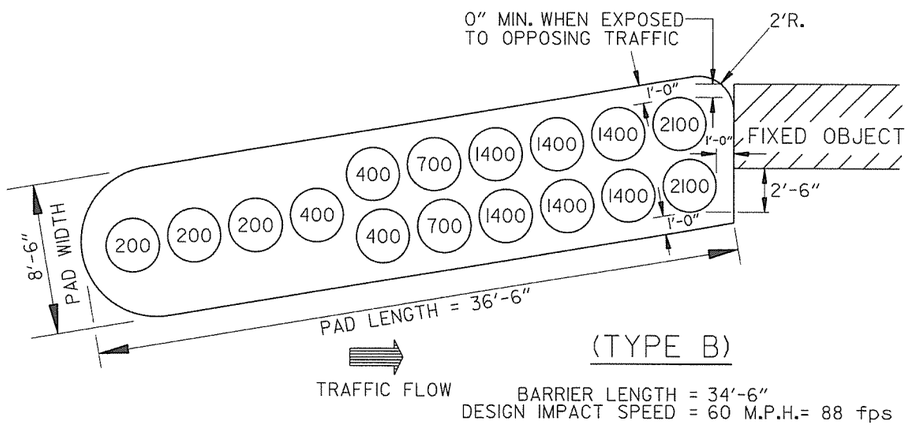

(TYPE B)

BARRIER LENGTH = 34'-6"
DESIGN IMPACT SPEED = 60 M.P.H.= 88 fps

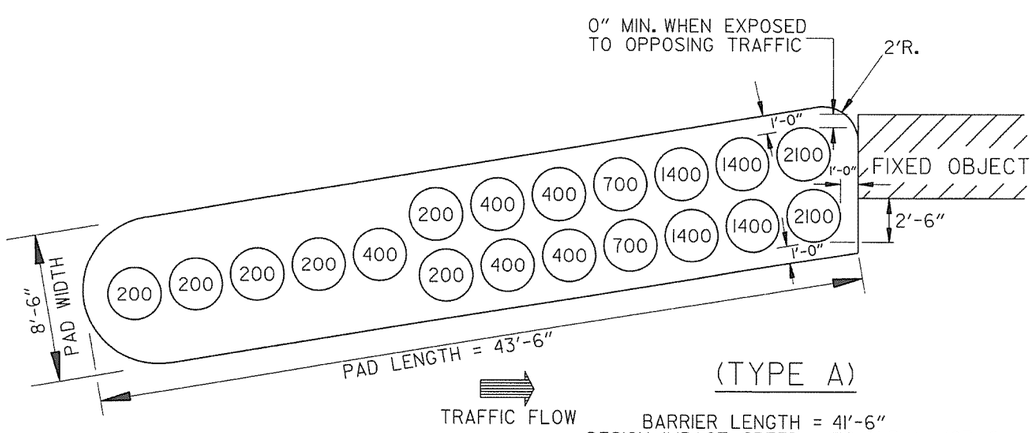

(TYPE A)

BARRIER LENGTH = 41'-6"
DESIGN IMPACT SPEED = 70 M.P.H.= 103 fps

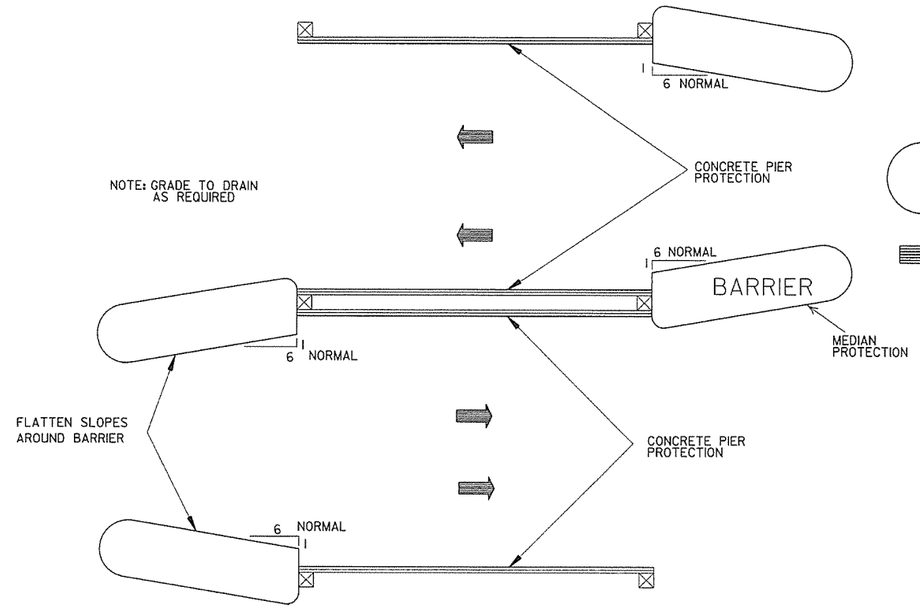

METHOD OF INSTALLATION OF IMPACT ATTENUATION BARRIER FOR PIER PROTECTION

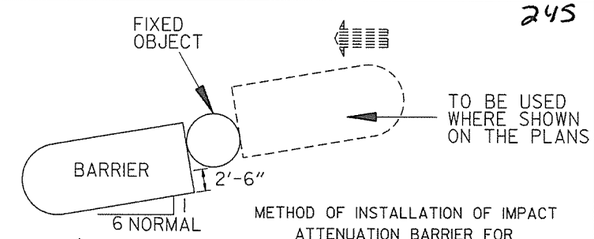

METHOD OF INSTALLATION OF IMPACT ATTENUATION BARRIER FOR SHIELDING INDIVIDUAL HAZARDS

APPROXIMATE QUANTITIES PER PAD

TYPE	ALTERNATE #1		ALTERNATE #2
	AGGR. BASE COURSE	A.C.H.M. SURFACE COURSE	P.C.CONC. BASE (4"U.T.)
	TONS	TONS	SQ.YDS.
A	9.7	4.6	41.6
B	8.1	3.8	34.9
C	6.6	3.1	28.3

NOTE: APPROXIMATE QUANTITIES SHOWN ARE FOR INFORMATIONAL PURPOSES ONLY. PAYMENT TO BE INCLUDED IN UNIT PRICE BID FOR IMPACT ATTENUATION BARRIER.

GENERAL NOTES

1. DIMENSIONS SHOWN ARE TO TOP OF PLASTIC MODULES.
2. SPACING BETWEEN PLASTIC MODULES SHALL NOT EXCEED 6" AT THE TOP.
3. PLASTIC MODULES SHALL MEET THE REQUIREMENTS OF NCHRP-350 OR MANUAL FOR ASSESSING SAFETY HARDWARE (MASH).

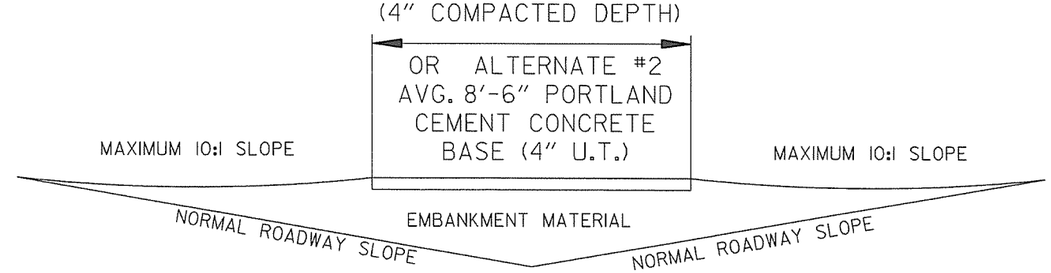

DETAIL OF BARRIER PAD

NOTE: BARRIER PAD TO BE SKEWED TOWARD ONCOMING TRAFFIC A MAXIMUM OF 6:1 WITH 6:1 BEING NORMAL

DATE	REVISION	DATE FILMED
10-15-09	ADDED REFERENCE TO MASH	
11-29-07	REVISED TY. A & TY. C ARRAYS	
11-19-98	REVISED FIXED OBJECT	
11-18-98	REV. NOTES & TYPE A MOD. WTS.	
10-18-96	REDRAWN	
7-15-88	CONFORMED TO 1988 SPECS	
7-29-87	REDRAWN	

ARKANSAS STATE HIGHWAY COMMISSION

IMPACT ATTENUATION BARRIER

STANDARD DRAWING IB-1

REINFORCED CONCRETE ARCH PIPE DIMENSIONS

EQUIV. DIA.	SPAN		RISE	
	AASHTO M 206	AHTD NOMINAL	AASHTO M 206	AHTD NOMINAL
INCHES	INCHES			
15	18	18	11	11
18	22	22	13½	14
21	26	26	15½	16
24	28½	29	18	18
30	36¼	36	22½	23
36	43⅜	44	26⅝	27
42	51⅛	51	31 7/16	31
48	58½	59	36	36
54	65	65	40	40
60	73	73	45	45
72	88	88	54	54
84	102	102	62	62
90	115	115	72	72
96	122	122	77½	77
108	138	138	87⅛	87
120	154	154	96⅞	97
132	168¾	169	106½	107

THE MEASURED SPAN AND RISE SHALL NOT VARY MORE THAN ± 2 PERCENT FROM THE VALUES SPECIFIED BY AASHTO M206.

REINFORCED CONCRETE HORIZONTAL ELLIPTICAL PIPE DIMENSIONS

EQUIV. DIA.	AASHTO M 207	
	SPAN	RISE
INCHES	INCHES	
18	23	14
24	30	19
27	34	22
30	38	24
33	42	27
36	45	29
39	49	32
42	53	34
48	60	38
54	68	43
60	76	48
66	83	53
72	91	58
78	98	63
84	106	68

THE MEASURED SPAN AND RISE SHALL NOT VARY MORE THAN ± 2 PERCENT FROM THE VALUES SPECIFIED BY AASHTO M207.

CONSTRUCTION SEQUENCE

1. PLACE STRUCTURAL BEDDING MATERIAL TO GRADE. DO NOT COMPACT.
2. INSTALL PIPE TO GRADE.
3. COMPACT STRUCTURAL BEDDING OUTSIDE THE MIDDLE THIRD OF THE PIPE.
4. PLACE AND COMPACT THE HAUNCH AREA UP TO THE MIDDLE OF THE PIPE.
5. COMPLETE BACKFILL ACCORDING TO SUBSECTION 606.03.(f)(1).

NOTE: HAUNCH AND STRUCTURAL BEDDING MATERIAL WILL NOT BE PAID FOR SEPARATELY, BUT COMPENSATION WILL BE CONSIDERED TO BE INCLUDED IN THE PRICE BID PER LINEAR FOOT OF CONCRETE PIPE.

- LEGEND -

D_1 = NORMAL INSIDE DIAMETER OF PIPE
D_o = OUTSIDE DIAMETER OF PIPE
H = FILL COVER HEIGHT OVER PIPE (FEET)
MIN. = MINIMUM
= UNDISTURBED SOIL

INSTALLATION TYPE	MATERIAL REQUIREMENTS FOR HAUNCH AND STRUCTURAL BEDDING
TYPE 1	AGGREGATE BASE COURSE (CLASS 5 OR CLASS 7)
TYPE 2	SELECTED MATERIALS (CLASS SM-1, SM-2, OR SM-4) OR TYPE 1 INSTALLATION MATERIAL*
TYPE 3**	AASHTO CLASSIFICATION A-1 THRU A-6 SOIL OR TYPE 1 OR 2 INSTALLATION MATERIAL

* SM-3 WILL NOT BE ALLOWED.

** MATERIALS SHALL NOT INCLUDE ORGANIC MATERIALS OR STONES LARGER THAN 3 INCHES.

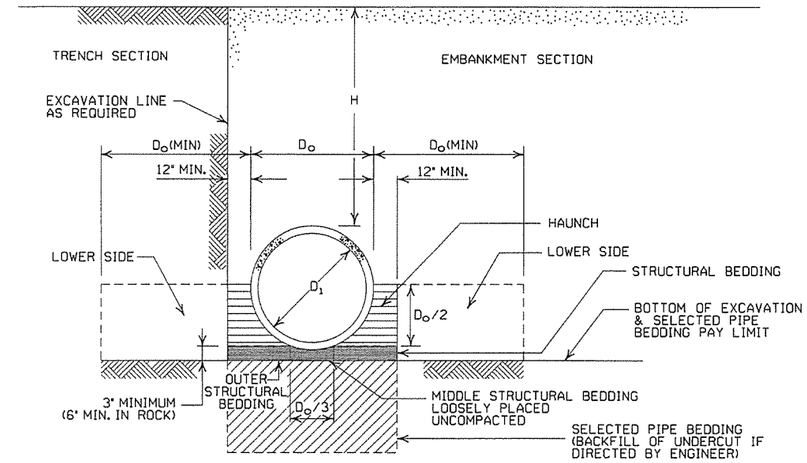

EMBANKMENT AND TRENCH INSTALLATIONS

1. MATERIAL IN THE HAUNCH AND OUTER STRUCTURAL BEDDING SHALL BE COMPACTED TO 95% OF THE MAXIMUM DENSITY ACCORDING TO THE TYPE OR CLASS OF MATERIAL USED.
2. FOR TRENCHES WITH WALLS OF NATURAL SOIL, THE DENSITY OF THE SOIL IN THE LOWER SIDE ZONE SHALL BE AS FIRM AS THE 95% DENSITY REQUIRED FOR THE HAUNCH. IF THE EXISTING SOIL DOES NOT MEET THIS CRITERIA, IT SHALL BE REMOVED AND RECOMPACTED TO 95% OF THE MAXIMUM DENSITY ACCORDING TO THE TYPE OF MATERIAL USED.
3. FOR EMBANKMENTS, THE MATERIAL IN THE LOWER SIDE ZONE SHALL BE COMPACTED TO 95% OF THE MAXIMUM DENSITY ACCORDING TO THE TYPE OR CLASS OF MATERIAL USED.

MINIMUM HEIGHT OF FILL "H" OVER CIRCULAR R.C. PIPE CULVERTS

	CLASS OF PIPE			
	CLASS III		CLASS IV	CLASS V
INSTALLATION TYPE	TYPE 1 OR 2	TYPE 3	ALL	ALL
PIPE ID (IN.)	FEET			
12-15	2	2.5	2	1
18-24	2.5	3	2	1
27-33	3	4	2	1
36-42	3.5	5	2	1
48	4.5	5.5	2	1
54-60	5	7	2	1
66-78	6	8	2	1
84-108	7.5	8	2	1

NOTE: FOR MINIMUM COVER VALUES, "H" SHALL INCLUDE A MINIMUM OF 12" OF PAVEMENT AND/OR BASE.

MAXIMUM HEIGHT OF FILL "H" OVER CIRCULAR R.C. PIPE CULVERTS

INSTALLATION TYPE	CLASS OF PIPE		
	CLASS III	CLASS IV	CLASS V
	FEET		
TYPE 1	21	32	50
TYPE 2	16	25	39
TYPE 3	12	20	30

NOTE: IF FILL HEIGHT EXCEEDS 50 FEET, A SPECIAL DESIGN CONCRETE PIPE WILL BE REQUIRED USING TYPE 1 INSTALLATION.

GENERAL NOTES

1. CONCRETE PIPE CULVERT CONSTRUCTION SHALL CONFORM TO ARKANSAS STATE HIGHWAY AND TRANSPORTATION DEPARTMENT STANDARD SPECIFICATIONS FOR HIGHWAY CONSTRUCTION (CURRENT EDITION), WITH APPLICABLE SUPPLEMENTAL SPECIFICATIONS AND SPECIAL PROVISIONS. UNLESS OTHERWISE NOTED IN THE PLANS, SECTION AND SUBSECTION REFER TO THE STANDARD CONSTRUCTION SPECIFICATIONS.
2. CONCRETE PIPE CULVERT DESIGN SHALL CONFORM TO AASHTO LRFD BRIDGE DESIGN SPECIFICATIONS, FIFTH EDITION (2010) WITH 2010 INTERIMS.
3. ALL PIPE SHALL CONFORM TO SECTION 606. CIRCULAR R.C. PIPE CULVERTS SHALL CONFORM TO AASHTO M170, R.C. ARCH PIPE CULVERTS SHALL CONFORM TO AASHTO M206 AND HORIZONTAL ELLIPTICAL PIPE CULVERTS SHALL CONFORM TO AASHTO M207.
4. ALL PIPE SHALL BE PROTECTED DURING CONSTRUCTION BY A COVER SUFFICIENT TO PREVENT DAMAGE FROM PASSAGE OF EQUIPMENT.
5. THE MINIMUM TRENCH WIDTH SHALL BE THE OUTSIDE DIAMETER OF THE PIPE PLUS 24 INCHES. THE MAXIMUM ALLOWABLE TRENCH WIDTH SHALL BE THE MINIMUM WIDTH PRACTICABLE FOR WORKING CONDITIONS.
6. MULTIPLE PIPE CULVERTS SHALL BE INSTALLED WITH A MINIMUM CLEARANCE OF 24 INCHES BETWEEN STRINGS OF PIPE. REFER TO STD. DWG. FES-2 FOR MINIMUM CLEARANCE WHERE FLARED END SECTIONS ARE USED.
7. IMPERVIOUS MATERIAL SHOULD BE PLACED AS DIRECTED BY THE ENGINEER AT THE ENDS OF THE CULVERT TO PREVENT LOSS OF STRUCTURAL BEDDING WHEN PERVIOUS MATERIAL IS USED FOR STRUCTURAL BEDDING AND/OR BACKFILL.
8. NOT MORE THAN ONE LIFTING HOLE MAY BE PROVIDED IN CONCRETE PIPE TO FACILITATE HANDLING. HOLE MAY BE CAST IN PLACE, CUT INTO THE FRESH CONCRETE AFTER FORMS ARE REMOVED, OR DRILLED. THE HOLE SHALL NOT BE MORE THAN TWO INCHES IN DIAMETER OR TWO INCHES SQUARE. CUTTING OR DISPLACEMENT OF REINFORCEMENT WILL NOT BE PERMITTED. SPALLED AREAS AROUND THE HOLE SHALL BE REPAIRED IN A WORKMANLIKE MANNER. LIFTING HOLE SHALL BE FILLED WITH MORTAR, CONCRETE, OR OTHER METHOD AS APPROVED BY THE ENGINEER.
9. WHEN DIRECTED BY THE ENGINEER, UNSUITABLE MATERIAL THAT IS ENCOUNTERED AT THE BOTTOM OF THE EXCAVATED TRENCH (BELOW THE AREA IDENTIFIED AS "STRUCTURAL BEDDING" ABOVE) WILL BE EXCAVATED AND REPLACED WITH SELECTED PIPE BEDDING. THE QUANTITY OF MATERIAL REQUIRED TO BACKFILL THE UNDERCUT AREA UP TO THE SELECTED PIPE BEDDING PAY LIMIT DESIGNATED ABOVE WILL BE MEASURED AND PAID FOR AS "SELECTED PIPE BEDDING."
10. WHEN THE EXISTING MATERIAL EXCAVATED FOR THE PIPE TRENCH IS DETERMINED BY THE ENGINEER TO BE UNSUITABLE FOR BACKFILLING THE PIPE (ABOVE THE AREA IDENTIFIED ABOVE AS THE HAUNCH), BORROW MATERIAL OR MATERIAL FROM THE ROADWAY EXCAVATION WILL BE USED TO BACKFILL THE PIPE. IF SUITABLE MATERIAL IS NOT AVAILABLE, THE ENGINEER MAY AUTHORIZE THE USE OF "SELECTED PIPE BACKFILL."

MINIMUM HEIGHT OF FILL "H" OVER R.C. ARCH & HORIZONTAL ELLIPTICAL PIPE CULVERTS

INSTALLATION TYPE	CLASS OF PIPE	
	CLASS III	CLASS IV
	FEET	
TYPE 2 OR TYPE 3	2.5	1.5

NOTE: TYPE 1 INSTALLATION WILL NOT BE ALLOWED FOR ARCH & HORIZONTAL ELLIPTICAL PIPE CULVERTS.

NOTE: FOR MINIMUM COVER VALUES, "H" SHALL INCLUDE A MINIMUM OF 12" OF PAVEMENT AND/OR BASE.

MAXIMUM HEIGHT OF FILL "H" OVER R.C. ARCH & HORIZONTAL ELLIPTICAL PIPE CULVERTS

INSTALLATION TYPE	CLASS OF PIPE	
	CLASS III	CLASS IV
	FEET	
TYPE 2	13	21
TYPE 3	10	16

NOTE: TYPE 1 INSTALLATION WILL NOT BE ALLOWED FOR ARCH & HORIZONTAL ELLIPTICAL PIPE CULVERTS.

DATE	REVISION	DATE FILMED
2-27-14	REVISED GENERAL NOTE 1.	
12-15-11	REVISED FOR LRFD DESIGN SPECIFICATIONS	
5-18-00	REVISED TYPE 3 BEDDING & ADDED NOTE	
3-30-00	REVISED INSTALLATIONS	
11-06-97	ISSUED	

ARKANSAS STATE HIGHWAY COMMISSION

CONCRETE PIPE CULVERT FILL HEIGHTS & BEDDING

STANDARD DRAWING PCC-1

CORRUGATED STEEL PIPE (ROUND)

PIPE DIAMETER (INCHES)	① MINUMUM COVER TOP OF PIPE TO TOP OF GROUND "H" (FEET)	MAX. FILL HEIGHT "H" ABOVE TOP OF PIPE (FEET)				
		METAL THICKNESS (INCHES)				
		0.064	0.079	0.109	0.138	0.168
2⅔ INCH BY ½ INCH CORRUGATION RIVETED, WELDED, OR HELICAL LOCK-SEAM						
12	1	84	91			
15	1	67	73			
18	1	56	61			
24	1	42	46	59		
30	2	34	36	47		
36	2		30	39	41	
42	2		43	67	70	73
48	2		37	58	61	64
② 3 INCH BY 1 INCH OR 5 INCH BY 1 INCH CORRUGATION RIVETED, WELDED, BOLTED, OR HELICAL LOCK-SEAM						
36	1	48	60	88	111	118
42	1	41	51	72	90	102
48	1	36	45	64	77	85
54	2	32	40	59	71	79
60	2	29	36	53	64	71
66	2	26	33	47	58	64
72	2	24	30	44	53	59
78	2		28	41	49	54
84	2		26	38	45	51
90	2		24	35	43	45
96	2		22	33	40	44
102	2			31	38	42
108	2			30	35	39
114	2			28	34	37
120	2			27	32	35

CORRUGATED ALUMINUM PIPE (ROUND)

PIPE DIAMETER (INCHES)	① MINUMUM COVER TOP OF PIPE TO TOP OF GROUND "H" (FEET)	MAX. FILL HEIGHT "H" ABOVE TOP OF PIPE (FEET)				
		METAL THICKNESS IN INCHES				
		0.060	0.075	0.105	0.135	0.164
		2 ⅔ INCH BY ½ INCH CORRUGATION RIVETED OR HELICAL LOCK-SEAM				
12	1	45	45			
18	2	30	30	52		
24	2	22	22	39	41	
30	2		18	31	32	34
36	2.5		15	26	27	28
42	2			43	43	44
48	2			40	41	43
54	2			35	37	38
60	2				33	34
66	2					31
72	2					29

CORRUGATED METAL PIPE ARCHES

EQUIV. DIA. (INCHES)	PIPE DIMENSION SPAN X RISE (INCHES)	MINUMUM CORNER RADIUS (INCHES)	STEEL: MIN. THICKNESS REQUIRED INCHES	STEEL: ① MIN. HEIGHT OF FILL, "H" (FT.) INSTALLATION TYPE 1	STEEL: MAX. HEIGHT OF FILL, "H" (FT.) INSTALLATION TYPE 1	ALUMINUM: MIN. THICKNESS REQUIRED INCHES	ALUMINUM: ① MIN. HEIGHT OF FILL, "H" (FT.) INSTALLATION TYPE 1	ALUMINUM: MAX. HEIGHT OF FILL, "H" (FT.) INSTALLATION TYPE 1
			2 ⅔ INCH BY ½ INCH CORRUGATION RIVETED, WELDED, OR HELICAL LOCK-SEAM			2 ⅔ INCH BY ½ INCH CORRUGATION RIVETED OR HELICAL LOCK-SEAM		
15	17x13	3	0.064	2	15	0.060	2	15
18	21x15	3	0.064	2	15	0.060	2	15
21	24x18	3	0.064	2.25	15	0.060	2.25	15
24	28x20	3	0.064	2.5	15	0.075	2.5	15
30	35x24	3	0.079	3	12	0.075	3	12
36	42x29	3½	0.079	3	12	0.105	3	12
42	49x33	4	0.079	3	12	0.105	3	12
48	57x38	5	0.109	3	13	0.135	3	13
54	64x43	6	0.109	3	14	0.135	3	14
60	71x47	7	0.138	3	15	0.164	3	15
66	77x52	8	0.168	3	15			
72	83x57	9	0.168	3	15			
			② 3 INCH BY 1 INCH OR 5 INCH BY 1 INCH CORRUGATION RIVETED, WELDED, OR HELICAL LOCK-SEAM					
				INSTALLATION TYPE 2	INSTALLATION TYPE 1	INSTALLATION TYPE 2	INSTALLATION TYPE 1	
36	40x31	5	0.079	3	2	12	15	
42	46x36	6	0.079	3	2	13	15	
48	53x41	7	0.079	3	2	13	15	
54	60x46	8	0.079	3	2	13	15	
60	66x51	9	0.079	3	2	13	15	
66	73x55	12	0.079	3	2	15	15	
72	81x59	14	0.079	3	2	15	15	
78	87x63	14	0.079	3	2	15	15	
84	95x67	16	0.109	3	2	15	15	
90	103x71	16	0.109	3	2	15	15	
96	112x75	18	0.109	3	2	15	15	
102	117x79	18	0.109	3	2	15	15	
108	128x83	18	0.138	3	2	15	15	

CONSTRUCTION SEQUENCE

1. PLACE STRUCTURAL BEDDING MATERIAL TO GRADE. DO NOT COMPACT.
2. INSTALL PIPE TO GRADE.
3. COMPACT STRUCTURAL BEDDING OUTSIDE THE MIDDLE THIRD OF THE PIPE.
4. COMPLETE STRUCTURAL BACKFILL OPERATION BY WORKING FROM SIDE TO SIDE OF THE PIPE. THE SIDE TO SIDE STRUCTURAL BACKFILL DIFFERENTIAL SHALL NOT EXCEED 24 INCHES OR 1/3 THE SIZE OF THE PIPE, WHICHEVER IS LESS.

NOTE: STRUCTURAL BACKFILL AND STRUCTURAL BEDDING MATERIAL WILL NOT BE PAID FOR SEPARATELY, BUT COMPENSATION WILL BE CONSIDERED TO BE INCLUDED IN THE PRICE BID PER LINEAR FOOT OF METAL PIPE.

INSTALLATION TYPE	MATERIAL REQUIREMENTS FOR STRUCTURAL BACKFILL AND STRUCTURAL BEDDING
TYPE 1	AGGREGATE BASE COURSE (CLASS 4, 5, 6, OR 7)
TYPE 2	SELECTED MATERIALS (CLASS SM-1, SM-2, OR SM-4) OR TYPE 1 INSTALLATION MATERIAL ③

③ SM-3 WILL NOT BE ALLOWED.

EQUIVALENT METAL THICKNESSES AND GAUGES

METAL THICKNESS IN INCHES			GAUGE NUMBER
STEEL			
ZINC COATED	UNCOATED	ALUMINUM	
0.064	0.0598	0.060	16
0.079	0.0747	0.075	14
0.109	0.1046	0.105	12
0.138	0.1345	0.135	10
0.168	0.1644	0.164	8

- LEGEND -

D_o = OUTSIDE DIAMETER OF PIPE
MAX. = MAXIMUM
MIN. = MINIMUM
= STRUCTURAL BACKFILL MATERIAL
= UNDISTURBED SOIL
EQUIV. DIA. = EQUIVALENT DIAMETER
H = FILL COVER HEIGHT OVER PIPE (FEET)

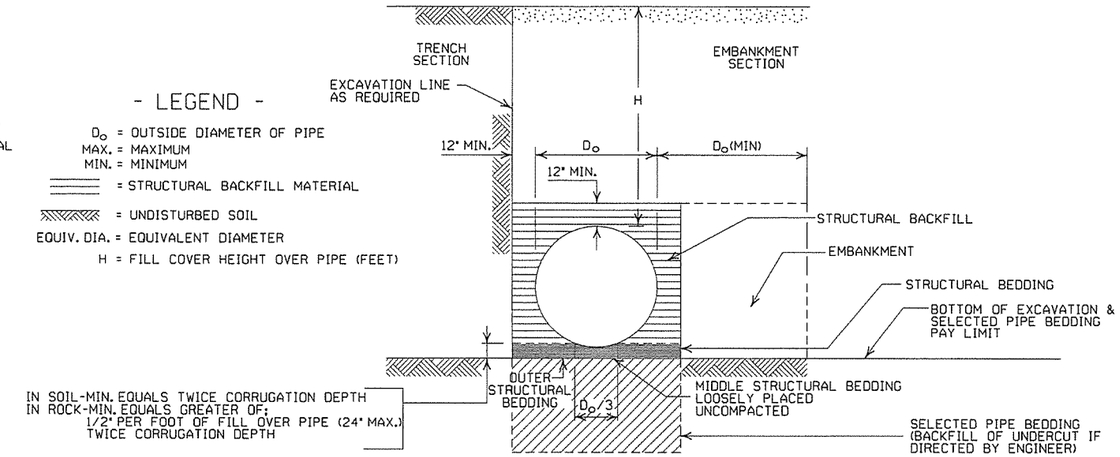

EMBANKMENT AND TRENCH INSTALLATIONS

1. STRUCTURAL BACKFILL, EMBANKMENT, AND OUTER STRUCTURAL BEDDING MATERIAL SHALL BE COMPACTED TO 95% OF THE MAXIMUM DENSITY ACCORDING TO THE TYPE OR CLASS OF MATERIAL USED.
2. INSTALLATION TYPE 1 OR 2 MAY BE USED FOR CORRUGATED STEEL OR ALUMINUM PIPE (ROUND).
3. INSTALALTION TYPE 1 SHALL BE USED FOR CORRUGATED STEEL OR ALUMINUM PIPE ARCHES WITH 2⅔" X ½" CORRUGATION.
4. INSTALLATION TYPE 1 OR 2 MAY BE USED FOR CORRUGATED STEEL OR ALUMINUM PIPE ARCHES WITH 3" X 1" OR 5" X 1" CORRUGATION.

GENERAL NOTES

1. METAL PIPE CULVERT CONSTRUCTION SHALL CONFORM TO ARKANSAS STATE HIGHWAY AND TRANSPORTATION DEPARTMENT STANDARD SPECIFICATIONS FOR HIGHWAY CONSTRUCTION (CURRENT EDITION), WITH APPLICABLE SUPPLEMENTAL SPECIFICATIONS AND SPECIAL PROVISIONS. UNLESS OTHERWISE NOTED IN THE PLANS, SECTION AND SUBSECTION REFER TO THE STANDARD CONSTRUCTION SPECIFICATIONS.
2. METAL PIPE CULVERT DESIGN SHALL CONFORM TO AASHTO LRFD BRIDGE DESIGN SPECIFICATIONS, FIFTH EDITION (2010) WITH 2010 INTERIMS.
3. METAL PIPE CULVERT MATERIALS AND INSTALLATIONS SHALL CONFORM TO SECTION 606 AND JOB SPECIAL PROVISION "METAL PIPE".
4. ALL PIPE SHALL BE PROTECTED DURING CONSTRUCTION BY A COVER SUFFICIENT TO PREVENT DAMAGE FROM PASSAGE OF EQUIPMENT.
5. THE MINIMUM TRENCH WIDTH SHALL BE THE OUTSIDE DIAMETER OF THE PIPE PLUS 24 INCHES. THE MAXIMUM ALLOWABLE TRENCH WIDTH SHALL BE THE MINIMUM WIDTH PRACTICABLE FOR WORKING CONDITIONS.
6. MULTIPLE PIPE CULVERTS SHALL BE INSTALLED WITH A MINIMUM CLEARANCE OF 24 INCHES BETWEEN STRINGS OF PIPE. REFER TO STD. DWG. FES-2 FOR MINIMUM CLEARANCE WHERE FLARED END SECTIONS ARE USED.
7. IMPERVIOUS MATERIAL SHOULD BE PLACED AS DIRECTED BY THE ENGINEER AT THE ENDS OF THE CULVERT TO PREVENT LOSS OF STRUCTURAL BEDDING WHEN PERVIOUS MATERIAL IS USED FOR STRUCTURAL BEDDING AND/OR BACKFILL.
8. WHEN DIRECTED BY THE ENGINEER, UNSUITABLE MATERIAL THAT IS ENCOUNTERED AT THE BOTTOM OF THE EXCAVATED TRENCH (BELOW THE AREA IDENTIFIED AS "STRUCTURAL BEDDING" ABOVE) WILL BE EXCAVATED AND REPLACED WITH SELECTED PIPE BEDDING. THE QUANTITY OF MATERIAL REQUIRED TO BACKFILL THE UNDERCUT AREA UP TO THE SELECTED PIPE BEDDING PAY LIMIT DESIGNATED ABOVE WILL BE MEASURED AND PAID FOR AS "SELECTED PIPE BEDDING."
9. WHEN THE EXISTING MATERIAL EXCAVATED FOR THE PIPE TRENCH IS DETERMINED BY THE ENGINEER TO BE UNSUITABLE FOR BACKFILLING THE PIPE (ABOVE THE AREA IDENTIFIED AS STRUCTURAL BACKFILL), BORROW MATERIAL OR MATERIAL FROM THE ROADWAY EXCAVATION WILL BE USED TO BACKFILL THE PIPE. IF SUITABLE MATERIAL IS NOT AVAILABLE, THE ENGINEER MAY AUTHORIZE THE USE OF "SELECTED PIPE BACKFILL."

① FOR MINIMUM COVER VALUES, "H" SHALL INCLUDE A MINIMUM 12" OF PAVEMENT AND/OR BASE.

② WHERE THE STANDARD 2 2/3" x ½" CORRUGATION AND GAUGE IS SPECIFIED FOR A GIVEN DIAMETER, A PIPE OF THE SAME DIAMETER WITH A 3" x 1" OR 5" x 1" CORRUGATION MAY BE SUBSTITUTED, PROVIDING IT IS GAUGED FOR A FILL HEIGHT CONDITION EQUAL TO OR GREATER THAN THE MAXIMUM FILL HEIGHT CONDITION FOR THE SPECIFIED GAUGE AND CORRUGATION.

DATE	REVISION	DATE FILMED
2-27-14	REVISED GENERAL NOTE 1.	
12-15-11	REVISED FOR LRFD DESIGN SPECS	
3-30-00	REVISED INSTALLATIONS	
11-06-97	ISSUED	

ARKANSAS STATE HIGHWAY COMMISSION

METAL PIPE CULVERT FILL HEIGHTS & BEDDING

STANDARD DRAWING PCM-1

248 & 452

NOTES:
1. REFER TO THE STRIPING DETAILS FOR PAVEMENT MARKING LINE WIDTHS.
2. THIS DRAWING SHALL BE USED IN CONJUNCTION WITH THE LATEST REVISED ADDITION OF THE "MANUAL ON UNIFORM TRAFFIC CONTROL DEVICES."
3. RAISED PAVEMENT MARKERS SHALL BE PLACED ON AN 80 FEET SPACING UNLESS OTHERWISE SHOWN IN THE PLANS.

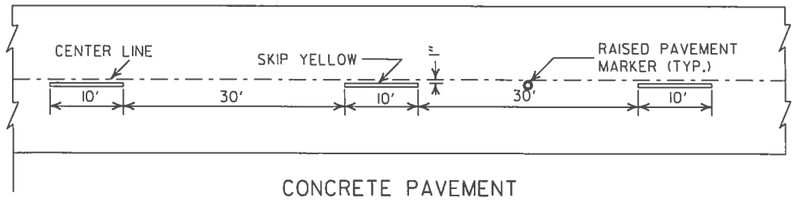

CONCRETE PAVEMENT

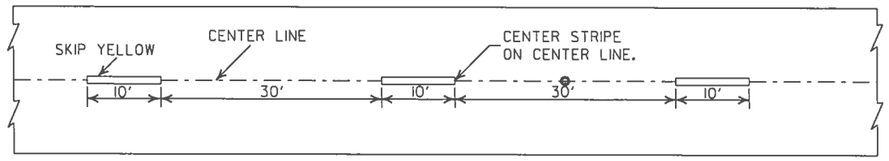

ASPHALT PAVEMENT

BROKEN LINE STRIPING

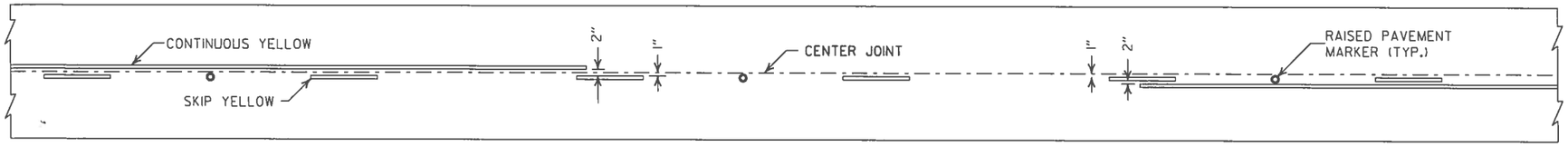

SOLID LINE STRIPING ON CONCRETE PAVEMENT

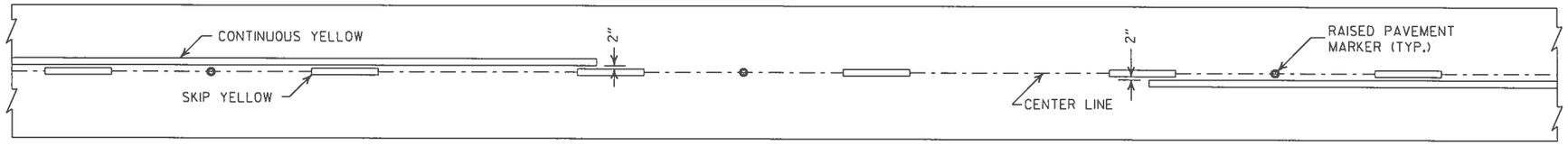

SOLID LINE STRIPING ON ASPHALT PAVEMENT

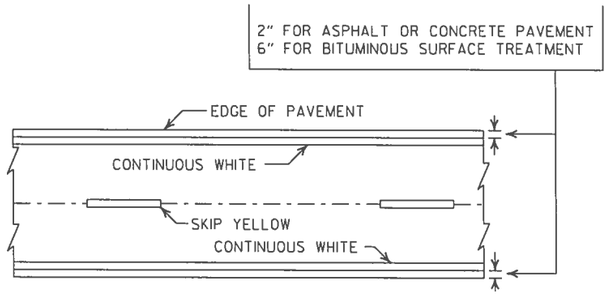

PAVEMENT EDGE LINE MARKING

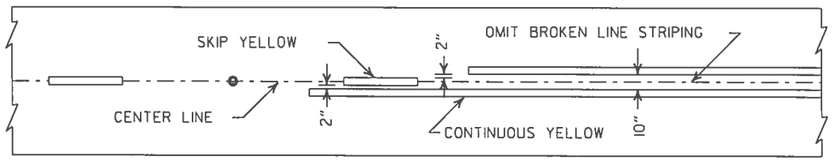

ASPHALT PAVEMENT

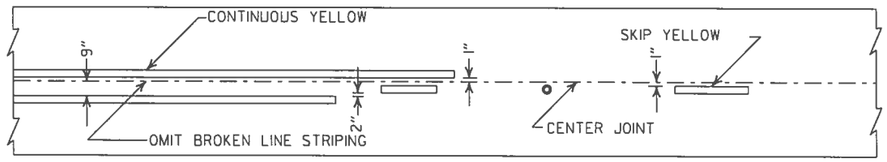

CONCRETE PAVEMENT

STRIPING AT ADJACENT NO PASSING LANES

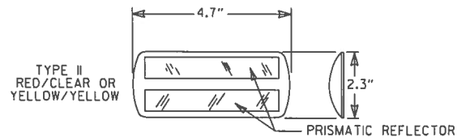

NOTE:
THE RED LENS OF THE TYPE II R.P.M. SHALL FACE THE INCORRECT TRAFFIC MOVEMENT.

DETAIL OF STANDARD RAISED PAVEMENT MARKERS

NOTE:
DIMENSIONS SHOWN FOR RAISED PAVEMENT MARKERS ARE TYPICAL. THE CONTRACTOR MAY SUBSTITUTE SIMILAR MARKERS WITH THE APPROVAL OF THE ENGINEER. REQUESTING APPROVAL FOR SIMILAR MARKERS MAY BE MADE BY REFERRING TO THE AHTD QUALIFIED PRODUCTS LIST.

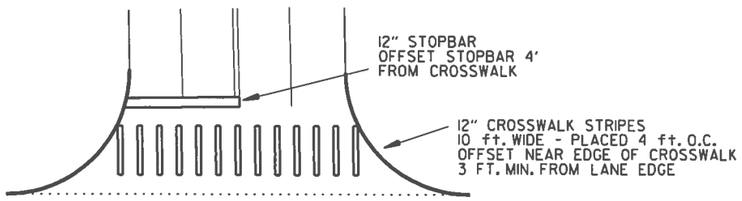

CROSSWALK AND STOPBAR DETAILS

DATE	REVISION	FILMED
5-12-16	REVISED LINE WIDTHS, SPACING, & NOTES	
9-12-13	REVISED DETAIL OF STANDARD RAISED PAVEMENT MARKERS	
11-17-10	REVISED GENERAL NOTES & REMOVED PLOWABLE PVMT MRKRS	
11-18-04	REVISED NOTE 2 & GENERAL NOTES	
8-22-02	ADDED CROSSWALK & STOPBAR DTLS.	
7-02-98	ADDED DETAILS OF STD. RAISED PAV'T. MARKERS	
4-26-96	REV. NOTES 3&4; ADDED R.P.M.	
9-30-80	DRAWN	1-9-30-80

ARKANSAS STATE HIGHWAY COMMISSION

PAVEMENT MARKING DETAILS

STANDARD DRAWING PM-1

PAVEMENT MARKING QUANTITIES
(BASED ON 700' ACCEL. LANE + 300' TAPER)

ENTRANCE RAMP

8" WHITE = 228 LIN. FT.
RAISED PAVEMENT MARKERS TYPE II (WHITE/RED) = 38 EACH

EXIT RAMP

4" WHITE = 280 LIN. FT.
8" WHITE = 655 LIN. FT.
RAISED PAVEMENT MARKERS TYPE II (WHITE/RED) = 38 EACH
RAISED PAVEMENT MARKERS TYPE II (WHITE/RED) = 48 EACH
RAISED PAVEMENT MARKERS TYPE II (WHITE/RED) = 38 EACH

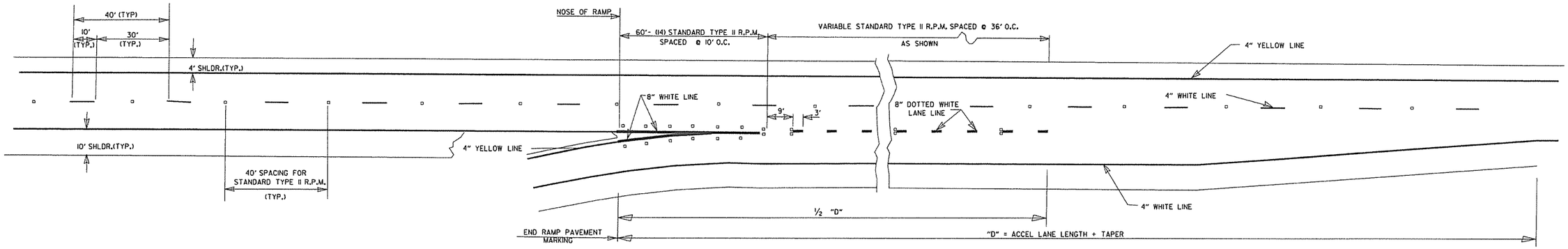

ENTRANCE RAMPS

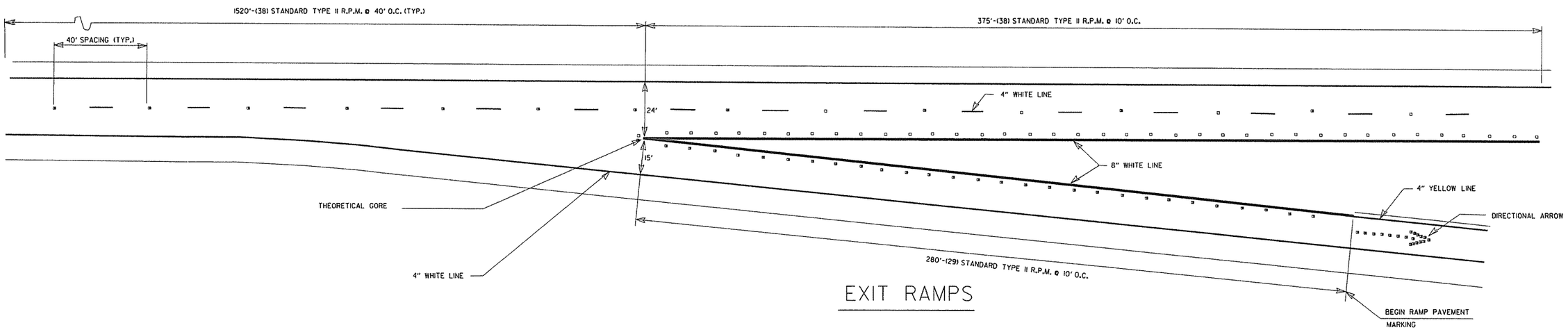

EXIT RAMPS

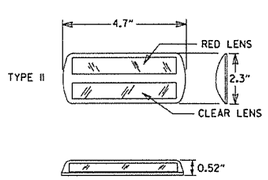

DETAIL OF
STANDARD
RAISED PAVEMENT MARKERS

NOTE:
THE RED LENS OF THE TYPE II R.P.M. SHALL FACE THE INCORRECT TRAFFIC MOVEMENT.

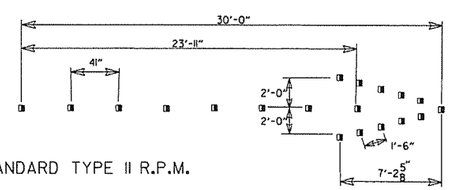

(19) STANDARD TYPE II R.P.M.

DIRECTIONAL ARROWS

GENERAL NOTES:

THIS DRAWING SHOULD BE CONSIDERED AS TYPICAL ONLY AND THE FINAL LOCATION OF THE STRIPING AND PAVEMENT MARKERS SHALL BE DETERMINED BY THE ENGINEER.

THIS DRAWING SHOULD BE USED IN CONJUNCTION WITH THE "MANUAL ON UNIFORM TRAFFIC CONTROL DEVICES", LATEST REVISION.

NOTE:
DIMENSIONS SHOWN FOR RAISED PAVEMENT MARKERS ARE TYPICAL. THE CONTRACTOR MAY SUBSTITUTE SIMILAR MARKERS WITH THE APPROVAL OF THE ENGINEER. REQUESTING APPROVAL FOR SIMILAR MARKERS MAY BE MADE BY REFERRING TO THE AHTD QUALIFIED PRODUCTS LIST.

DATE	REVISION	FILMED
9-12-13	REVISED DETAIL OF STANDARD RAISED PAVEMENT MARKERS	
7-26-12	REVISED RPM NOTATION	
12-15-11	REVISED RPMs ACCORDING TO LATEST POLICY	
11-17-10	REMOVED PLOWABLE PAVEMENT MARKERS	
6-3-10	REVISED PER 2009 MUTCD	
11-18-04	REVISED NOTES	
8-22-02	ADDED & REVISED NOTES; REV. ENTRANCE & EXIT RAMPS	
5-18-00	REMOVED HASHMARKS	
7-02-98	CHANGED TYPES TO ROMAN NUMERALS	
4-26-96	ADDED DIMENSIONS & QUANTITIES; REVISED LANE WIDTH ON EXIT RAMP	
2-2-95	PLACED IN USE	2-2-95

ARKANSAS STATE HIGHWAY COMMISSION

PERMANENT PAVEMENT MARKING
ON ACCESS CONTROLLED ROADWAYS

STANDARD DRAWING PM-2

NOTE:
1. GRANULAR BACKFILL TO BE SUBSIDIARY TO PIPE UNDERDRAIN.
2. UNLESS OTHERWISE SPECIFIED ON THE PLANS, THE UNDERDRAIN COVER SHALL BE THOROUGHLY COMPACTED EARTH AND SHALL BE SUBSIDIARY TO PIPE UNDERDRAIN.
3. GRANULAR MATERIAL SHALL BE WRAPPED WITH GEOTEXTILE FABRIC. LAP FABRIC 12" OR THE WIDTH OF THE TRENCH AT THE TOP.

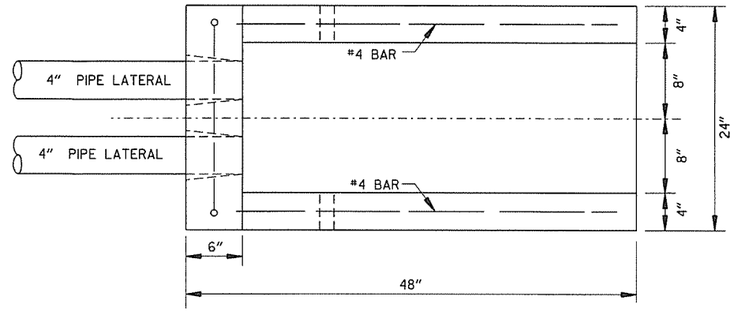

PLAN VIEW

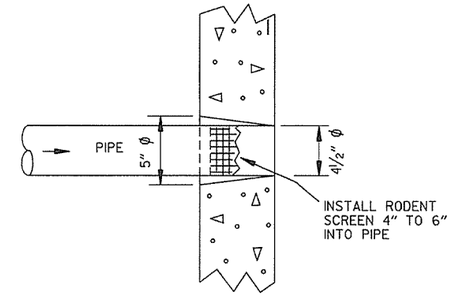

DETAIL OF HOLE FOR 4" PIPE

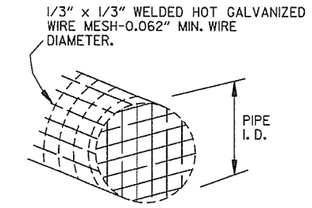

DETAIL OF RODENT SCREEN

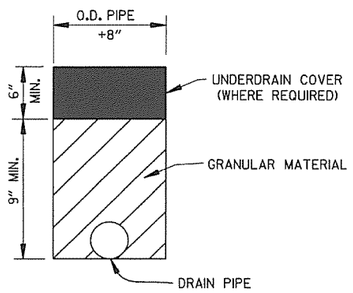

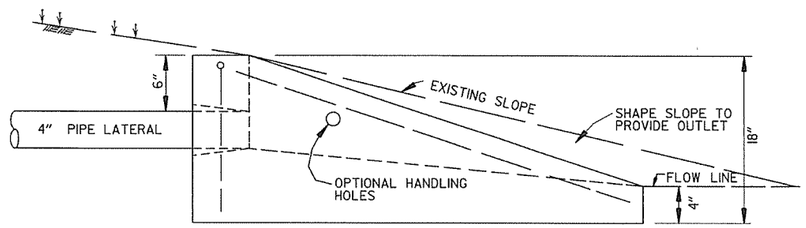

SIDE VIEW

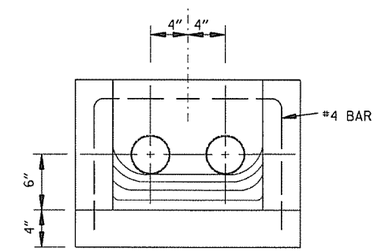

FRONT VIEW

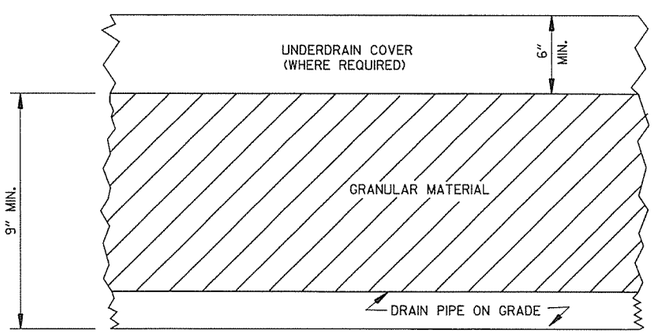

DETAILS OF PIPE UNDERDRAIN

UNDERDRAIN OUTLET PROTECTORS

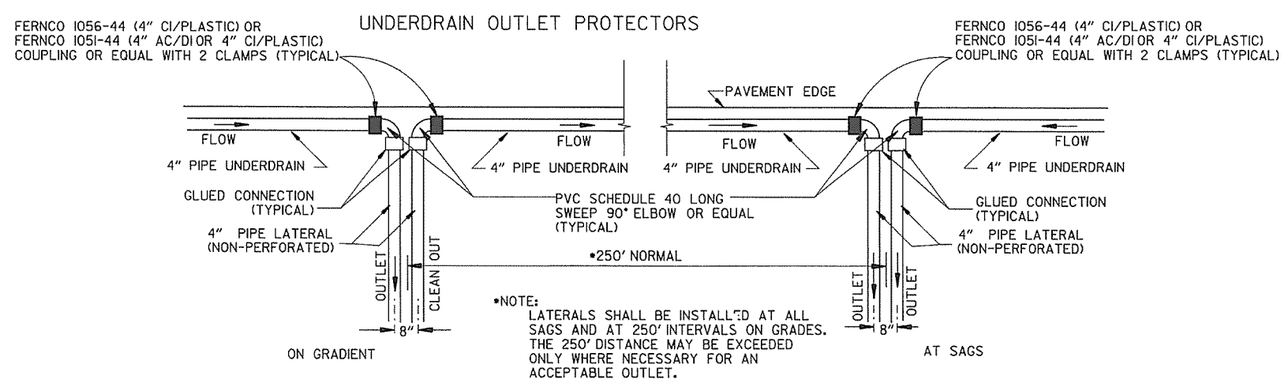

DETAIL OF PIPE UNDERDRAIN LATERALS WHEN PLACED ALONG PAVEMENT EDGE

NOTE: PVC PIPE FOR LATERALS SHALL MEET THE REQUIREMENTS OF ASTM D 1785 (LATEST REVISION) FOR SCHEDULE 40 PIPE.

DATE	REVISION	DATE FILMED
4-10-03	REVISED NOTE 3	
1-12-00	REVISED DETAIL OF UNDERDRAIN LATERALS	
11-18-98	REVISED NOTE	
10-18-96	REVISED MIN. DEPTH & GEOTEXTILE FABRIC	
4-26-96	ADDED LATERAL NOTE; 5 1/2" TO 5"	
11-22-95	REVISED LATERALS	
7-20-95	REVISED LATERALS & ADDED NOTE	
11- 3-94	REVISED FOR DUAL LATERALS	11- 3-94
10- 1-92	SUBSTITUTED GEOTEXTILE	10- 1-92
8-15-91	ADDED POLYEDTHYLENE PIPE	8-15-91
11- 8-90	DELETED ALTERNATE NOTE	11- 8-90
1-25-90	ADDED 4" SNAP ADAPTER	1-25-90
11-30-89	DEL. (SUBGRADE); ADDED (WHERE REQUIRED)	11-30-89
7-15-88	ISSUED P.L.M.	647-7-15-88

ARKANSAS STATE HIGHWAY COMMISSION

DETAILS OF PIPE UNDERDRAIN

STANDARD DRAWING PU-1

7-20-95 INSTD.PUI

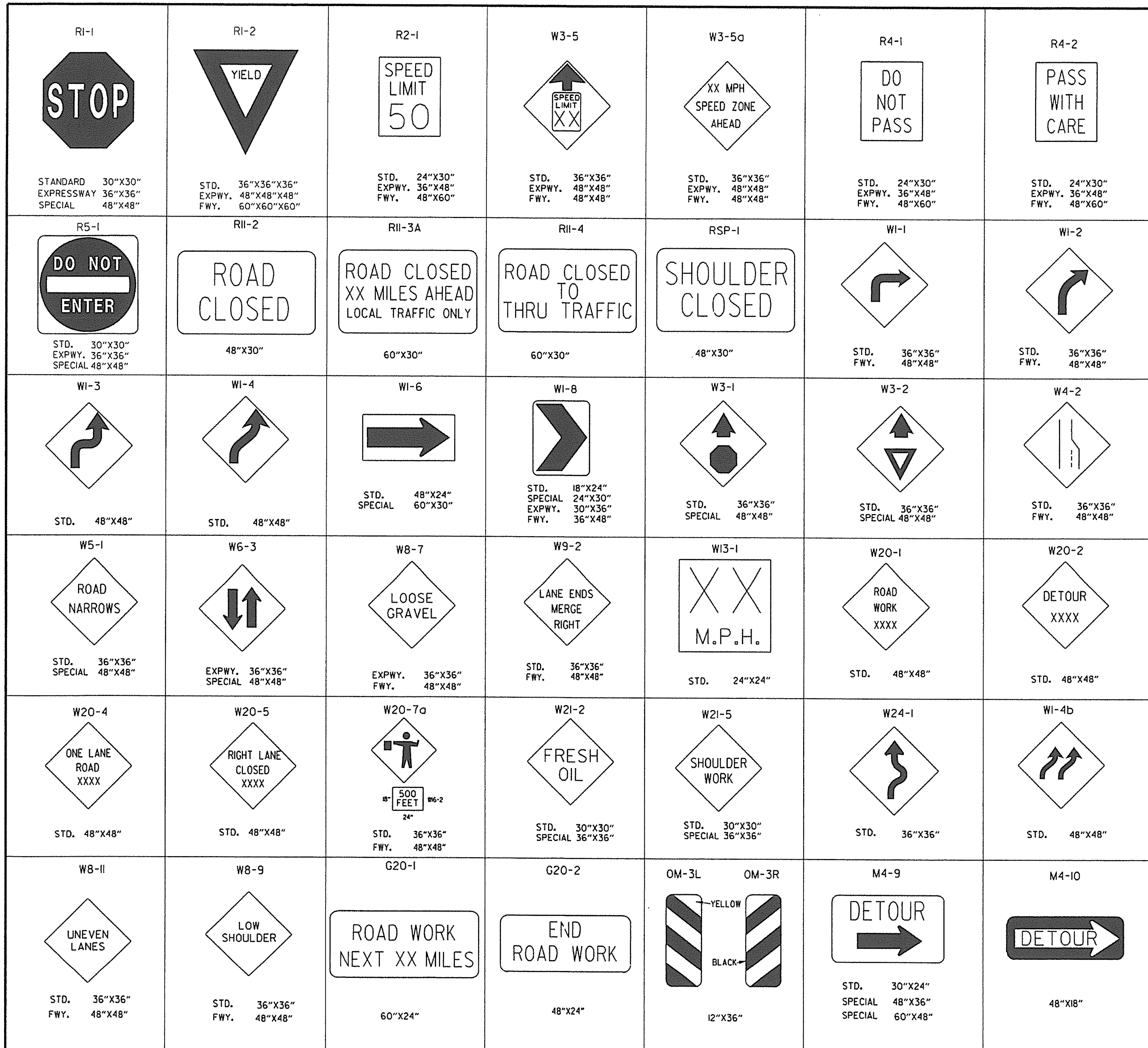

ADVANCE DISTANCES
(XXXX)

500 FT	½ MILE
1000 FT	¾ MILE
1500 FT	1 MILE AHEAD

GENERAL NOTES:

1. ALL TRAFFIC CONTROL DEVICES USED ON ROAD CONSTRUCTION SHALL CONFORM TO THE MANUAL ON UNIFORM TRAFFIC CONTROL DEVICES, LATEST EDITION, AND TO THE STANDARD HIGHWAY SIGNS, LATEST EDITION, OR AS APPROVED BY THE FEDERAL HIGHWAY ADMINISTRATION.

2. TRAFFIC CONTROL DEVICES SHALL BE SET UP JUST BEFORE THE START OF CONSTRUCTION OPERATIONS AND SHALL BE PROPERLY MAINTAINED DURING THE TIME SUCH CONDITIONS EXIST. THEY SHALL REMAIN IN PLACE ONLY AS LONG AS NEEDED AND REMOVED THEREAFTER.

3. EXISTING SIGNS AND CONSTRUCTION SIGNS SHALL BE KEPT IN PROPER POSITION, AND BE CLEAN AND LEGIBLE AT ALL TIMES. SIGNS THAT DO NOT APPLY TO EXISTING CONDITIONS SHALL BE REMOVED. SIGNS THAT ARE DAMAGED, DEFACED, OR THAT ACCUMULATE DIRT DURING CONSTRUCTION SHALL BE CLEANED, REPAIRED, OR REPLACED.

• 4. SIGNS ARE USUALLY MOUNTED ON A SINGLE POST, ALTHOUGH THOSE WIDER THAN 36" OR LARGER THAN 10 SQ. FT. SHALL BE MOUNTED ON TWO POSTS OR ABOVE A TYPE III BARRICADE.

• 5. SIGN POSTS DIRECT BURIED IN SOIL SHALL BE 2 LB. MINIMUM CHANNEL POST OR 4"x4" WOOD POSTS. CHANNEL POSTS SHALL BE PAINTED GREEN. WOOD POSTS SHALL BE PAINTED WHITE. ALL POSTS SHALL BE NEATLY CONSTRUCTED, AND SHALL BE REPLUMBED, CLEANED, OR REPAIRED AS NEEDED FOR THE DURATION OF THE JOB. THERE SHALL NOT BE MORE THAN 2 POSTS IN A 7' PATH FOR WOOD OR CHANNEL POSTS. ANY CHANNEL POST SPLICE SHALL BE IN ACCORDANCE WITH STANDARD DRAWING TC-3.

6. POST MOUNTED SIGNS IN RURAL AREAS SHALL BE CONSTRUCTED WITH THE NEAR EDGE OF THE SIGN FROM 6 TO 12 FEET FROM THE PAVEMENT EDGE. SIGNS IN URBAN AREAS AND BARRICADE MOUNTED SIGNS SHALL BE MOUNTED A MINIMUM OF 2 FEET FROM THE PAVEMENT EDGE.

7. ALL POST AND BARRICADE MOUNTED SIGNS MOUNTED IN URBAN AREAS SHALL BE MOUNTED A MINIMUM DISTANCE OF 7' FROM THE BOTTOM OF THE SIGN TO THE ROADWAY SURFACE. ALL POST AND BARRICADE MOUNTED SIGNS MOUNTED IN RURAL AREAS SHALL BE MOUNTED A MINIMUM DISTANCE OF 7' FROM THE BOTTOM OF THE SIGN TO THE ROADWAY SURFACE, EXCEPT A MINIMUM OF 6' SHALL BE USED WHEN MOUNTING AN ADVISORY SIGN BELOW A WARNING SIGN. TEMPORARY SIGNS MAY BE MOUNTED ON PORTABLE SUPPORTS FOR INTERMEDIATE TERM STATIONARY WORK CONDITIONS. THE SIGNS MINIMUM MOUNTING HEIGHT SHALL BE 5'. RETROREFLECTIVE DEVICES SHALL BE USED. TEMPORARY SIGNS MAY BE MOUNTED ON PORTABLE SUPPORTS FOR SHORT-TERM, SHORT DURATION, AND MOBILE CONDITIONS. THEY SHALL BE NO LESS THAN ONE (1) FOOT ABOVE THE TRAVELED WAY. LONG-TERM STATIONARY SIGNS SHALL BE DIRECT BURIED IN SOIL, UNLESS CONDITIONS NECESSITATE THE USE OF PORTABLE SIGNS, OR AS APPROVED BY THE ENGINEER. CONCRETE PADS, CONCRETE OR ROCK BALLAST, OR OTHER SOLID MATERIALS SHALL NOT BE UTILIZED WITH PORTABLE SIGN SUPPORTS.

8. FLAGGERS SHALL USE REFLECTORIZED STOP-SLOW PADDLES. FLAGS MAY BE USED ONLY FOR EMERGENCY SITUATIONS.

9. MOST OF THE SIGNS SHOWN ARE ORIENTED TO THE RIGHT. HOWEVER, THIS DOES NOT PRECLUDE THE USE OF MIRROR IMAGES OF THESE SIGNS WHERE THE REVERSE ORIENTATION MIGHT BETTER CONVEY TO MOTORISTS THE PROPER DIRECTION OF MOVEMENT.

10. R55-1 SIGNS SHALL BE PLACED AT LEAST 1500' BUT NOT MORE THAN 1 MILE IN ADVANCE OF THE WORK ZONE. IF A SPEED LIMIT REDUCTION IS IN EFFECT, THE SIGN SHALL BE PLACED A MINIMUM OF 500' IN ADVANCE OF THE "REDUCED SPEED AHEAD" SIGN.

• NOTE: SUPPORTS FOR SIGNS, BARRICADES, AND VERTICAL PANELS THAT ARE DIFFERENT FROM THE REQUIREMENTS SHOWN IN NOTES 4 & 5, BUT MEET THE REQUIREMENTS OF NCHRP-350 OR MANUAL FOR ASSESSING SAFETY HARDWARE (MASH), WILL BE ACCEPTED. COMPLIANCE WITH THE REQUIREMENTS OF NCHRP-350 OR MANUAL FOR ASSESSING SAFETY HARDWARE (MASH) IS REQUIRED FOR ALL PROJECTS.

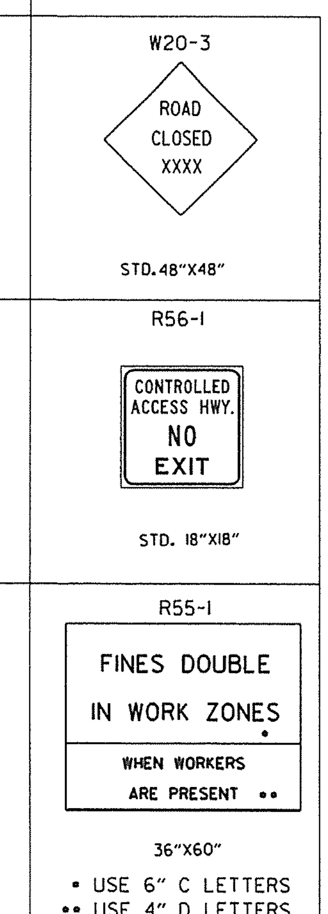

DATE	REVISION	FILMED
9-2-15	REVISED REDUCED SPEED LIMIT AHEAD SIGNS REVISED ROAD WORK NEXT XX MILES	
12-15-11	REVISED W24-1	
11-17-10	DELETED W8-9a & ADDED W8-9	
10-15-09	ADDED REFERENCE TO MASH & ADDED SIGN W24-1	
4-17-08	REVISED SIGN DESIGNATIONS	
11-18-04	REVISED NOTES	
10-9-03	REVISED NOTE 1	
11-16-01	REVISED NOTE 7	
9-28-00	REVISED NOTE	
11-18-98	ADDED NOTE	
6-26-97	REVISED NOTE 5	
4-03-97	REVISED NOTE 5	
10-18-96	ADDED CONTROLLED ACCESS HWY. SIGN & TO NOTE 7	
10-12-95	ADDED R55-1	
6-8-95	REVISED TO CORRECT SIGN ILLUSTRATIONS	6-8-95
2-2-95	REVISED PER PART VI, MUTCD SEPT. 3, 1993	
8-15-91	DRAWN AND PLACED IN USE	

ARKANSAS STATE HIGHWAY COMMISSION

STANDARD TRAFFIC CONTROLS FOR HIGHWAY CONSTRUCTION

STANDARD DRAWING TC-1

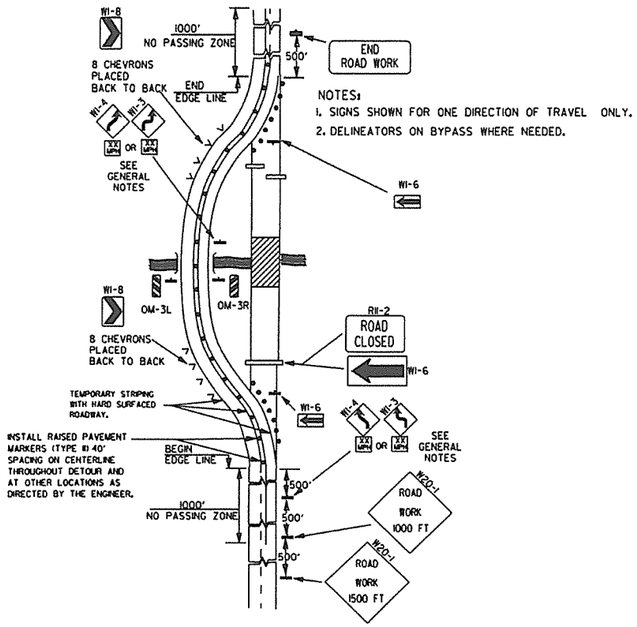

NOTES:
1. SIGNS SHOWN FOR ONE DIRECTION OF TRAVEL ONLY.
2. DELINEATORS ON BYPASS WHERE NEEDED.

(A) TYPICAL APPLICATION OF TRAFFIC CONTROL DEVICES ON A 2-LANE HIGHWAY WHERE THE ENTIRE ROADWAY IS CLOSED AND A BYPASS DETOUR IS PROVIDED.

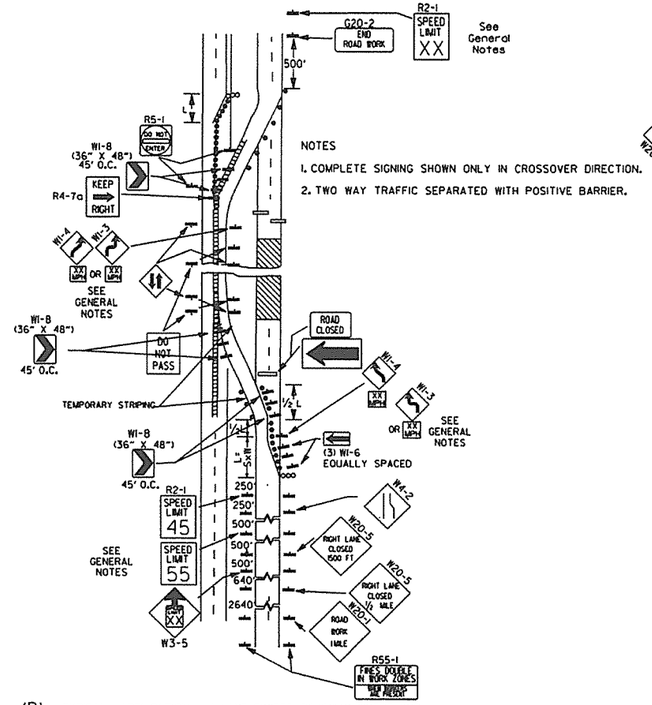

NOTES
1. COMPLETE SIGNING SHOWN ONLY IN CROSSOVER DIRECTION.
2. TWO WAY TRAFFIC SEPARATED WITH POSITIVE BARRIER.

(B) TYPICAL APPLICATION - 4-LANE DIVIDED ROADWAY WHERE ONE ROADWAY IS CLOSED.

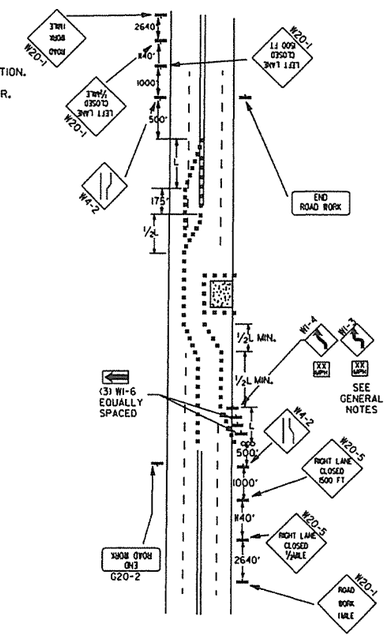

(C) TYPICAL APPLICATION - 4-LANE UNDIVIDED ROADWAY WHERE HALF OF THE ROADWAY IS CLOSED.

KEY:
- FLAGGER
- POSITIVE BARRIER
- ARROW PANEL (IF REQUIRED)
- TYPE III BARRICADE
- CHANNELIZING DEVICE
- TRAFFIC DRUM
- RAISED PAVEMENT MARKER

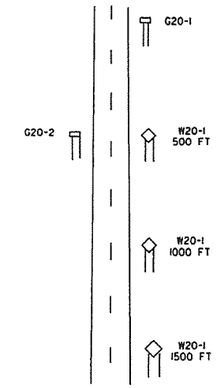

TYPICAL ADVANCE WARNING SIGN PLACEMENT

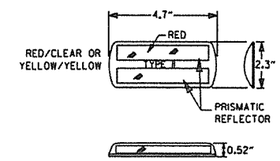

DETAIL OF RAISED PAVEMENT MARKERS

TAPER FORMULAE:

L=SXW FOR SPEEDS OF 45MPH OR MORE.

$L = \frac{WS^2}{60}$ FOR SPEEDS OF 40MPH OR LESS.

WHERE:

L= MINIMUM LENGTH OF TAPER.

S= NUMERICAL VALUE OF POSTED SPEED LIMIT PRIOR TO WORK OR 85TH PERCENTILE SPEED.

W= WIDTH OF OFFSET.

GENERAL NOTES:
1. ADVISORY SPEED POSTED ON W1-3 OR W1-4 CURVE WARNING SIGNS TO BE DETERMINED AT SITE. USE W1-4 WHEN SPEED IS GREATER THAN 30MPH AND W1-3 WHEN 30MPH OR LESS.
2. WHEN THE EXISTING SPEED LIMIT IS 55MPH AND THE PLANS REQUIRE A SPEED LIMIT OF 45MPH, THE R2-1(55) SHALL BE OMITTED AND THE W3-5 SHALL BE INSTALLED AT THAT LOCATION. ADDITIONAL R2-1 45MPH SPEED LIMIT SIGNS SHALL BE INSTALLED AT A MAXIMUM OF 1MILE INTERVALS. AT THE END OF THE WORK AREA A R2-1(XX) SHALL BE INSTALLED TO MATCH ORIGINAL SPEED LIMIT.
3. WHEN THE EXISTING SPEED LIMIT IS 65MPH AND THE PLANS REQUIRE A SPEED LIMIT OF 55MPH, THE R2-1(45) SHALL BE OMITTED. ADDITIONAL R2-1 55MPH SPEED LIMIT SIGNS SHALL BE INSTALLED AT A MAXIMUM OF 1MILE INTERVALS. AT THE END OF THE WORK AREA A R2-1(XX) SHALL BE INSTALLED TO MATCH ORIGINAL SPEED LIMIT.
4. THE MAXIMUM SPACING BETWEEN CHANNELIZING DEVICES IN A TAPER SHOULD BE APPROXIMATELY EQUAL IN FEET TO THE SPEED LIMIT. BEYOND THE TAPER, MAXIMUM SPACING SHALL BE TWO TIMES THE SPEED LIMIT, OR AS DIRECTED BY THE ENGINEER.
5. WARNING LIGHTS AND/OR FLAGS MAY BE MOUNTED TO SIGNS OR CHANNELIZING DEVICES AT NIGHT AS NEEDED.
6. PAVEMENT MARKINGS NO LONGER APPLICABLE WHICH MIGHT CREATE CONFUSION IN THE MINDS OF VEHICLE OPERATORS SHALL BE REMOVED OR OBLITERATED AS SOON AS PRACTICABLE.
7. TRAILER MOUNTED DEVICES SUCH AS ARROW PANELS AND PORTABLE CHANGEABLE MESSAGE SIGNS SHALL BE DELINEATED BY AFFIXING CONSPICUITY MATERIAL IN A CONTINUOUS LINE ON THE FACE OF THE TRAILER. WHEN PLACED ON OR ADJACENT TO THE SHOULDER AND NOT BEHIND A POSITIVE BARRIER, THESE DEVICES SHALL BE DELINEATED BY PLACING FIVE (5) TRAFFIC DRUMS, EQUALLY SPACED ALONG THE TRAFFIC SIDE OF THE DEVICE.
8. DIMENSIONS SHOWN FOR RAISED PAVEMENT MARKERS ARE TYPICAL. THE CONTRACTOR MAY SUBSTITUTE SIMILAR MARKERS WITH THE APPROVAL OF THE ENGINEER. REQUESTING APPROVAL FOR SIMILAR MARKERS MAY BE MADE BY REFERRING TO THE AHTD QUALIFIED PRODUCTS LIST.

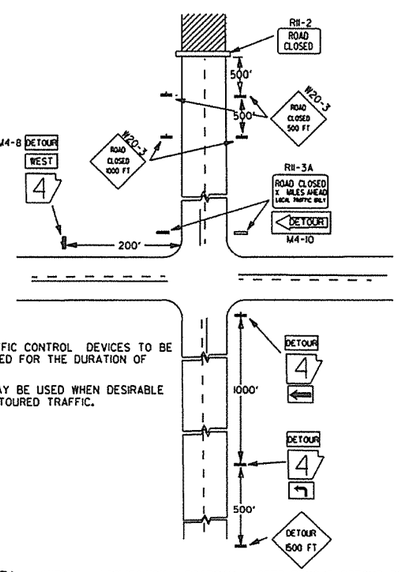

NOTES:
1. REGULATORY TRAFFIC CONTROL DEVICES TO BE MODIFIED AS NEEDED FOR THE DURATION OF THE DETOUR.
2. STREET NAMES MAY BE USED WHEN DESIRABLE FOR DIRECTING DETOURED TRAFFIC.

(D) TYPICAL APPLICATION - ROADWAY CLOSED BEYOND DETOUR POINT.

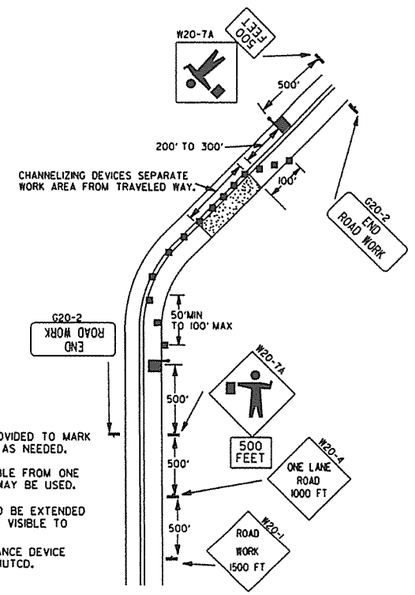

NOTES:
1. FLOOD LIGHTS SHOULD BE PROVIDED TO MARK FLAGGER STATIONS AT NIGHT AS NEEDED.
2. IF ENTIRE WORK AREA IS VISIBLE FROM ONE STATION, A SINGLE FLAGGER MAY BE USED.
3. CHANNELIZING DEVICES ARE TO BE EXTENDED TO A POINT WHERE THEY ARE VISIBLE TO APPROACHING TRAFFIC.
4. AUTOMATED FLAGGER ASSISTANCE DEVICE (AFAD) OPTIONAL. REFER TO MUTCD.

(E) TYPICAL APPLICATION OF TRAFFIC CONTROL DEVICES ON 2-LANE HIGHWAY WHERE ONE LANE IS CLOSED AND FLAGGING IS PROVIDED.

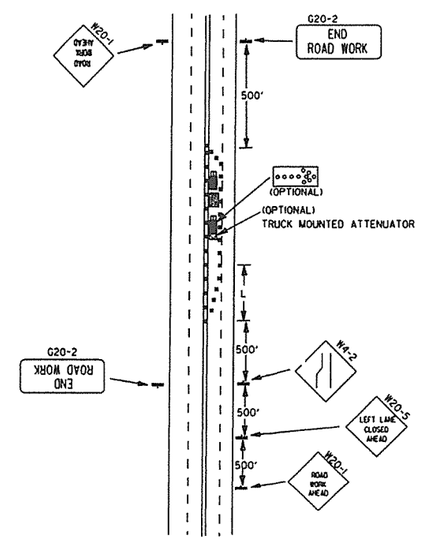

(F) TYPICAL APPLICATION - 4-LANE UNDIVIDED ROADWAY WITH INSIDE LANE CLOSED.

DATE	REVISION	FILMED
9-2-15	REVISED NOTE 2, ADDED NOTE 8, REVISED DRAWING (A) & REPLACED R2-5A WITH W3-5	
9-12-13	REVISED DETAIL OF RAISED PAVEMENT MARKERS	
3-8-10	ADDED (AFAD)	
11-20-08	REVISED SIGN DESIGNATIONS	
11-18-04	ADDED GENERAL NOTE	
10-18-96	ADDED R55-1	
4-26-96	CORRECTED (G) BEHIND G20-2	
6-8-95	CORRECTED SIGN IDENT. ON W1-4A	6-8-95
2-2-95	REVISED PER PART VI, MUTCD, SEPT. 3, 1993	
8-15-91	DRAWN AND PLACED IN USE	

ARKANSAS STATE HIGHWAY COMMISSION

STANDARD TRAFFIC CONTROLS FOR HIGHWAY CONSTRUCTION

STANDARD DRAWING TC-2

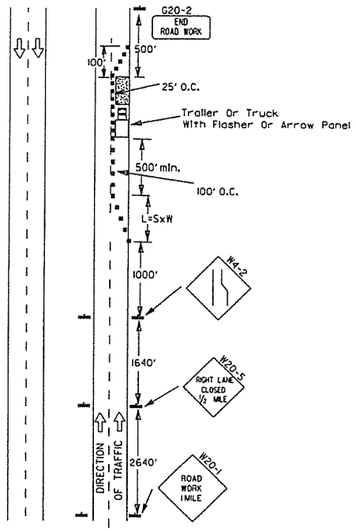

(A) Typical application - daytime maintenance operations of short duration on a 4-lane divided roadway where half of the roadway is closed.

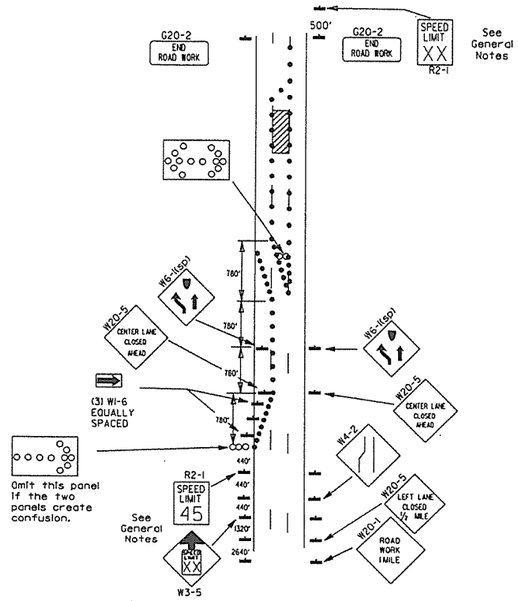

(B) Typical application - 3-lane oneway roadway where center lane is closed.

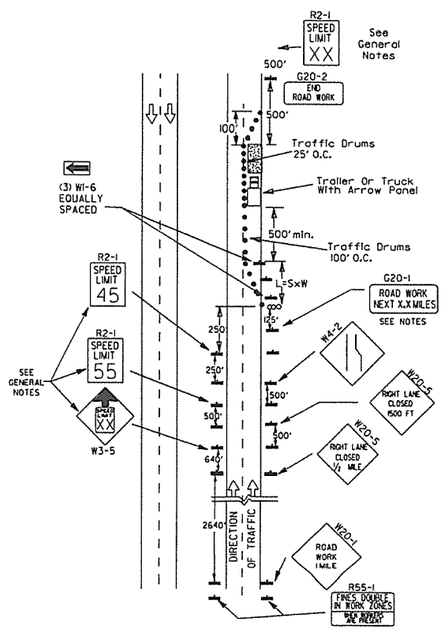

(C) Typical application - construction operations of intermediate to long term duration on a 4-lane divided roadway where half of the roadway is closed.

KEY:

ooo Arrow Panel (If Required)

■ Channelizing Device

● Traffic drum

GENERAL NOTES:

1. A speed limit reduction may be implemented ONLY when designated in the plan or when recommended by the Roadway Design Division.
2. When the existing speed limit is 55mph and the plans require a speed limit of 45mph, the R2-1(55) shall be omitted and the W3-5 shall be installed at that location. Additional R2-1 45mph speed limit signs shall be installed at a maximum of 1 mile intervals. At the end of the work area a R2-1(XX) shall be installed to match original speed limit.
3. When the existing speed limit is 65mph and the plans require a speed limit of 55mph, the R2-1(45) shall be omitted. Additional R2-1 55mph speed limit signs shall be installed at a maximum of 1 mile intervals. At the end of the work area a R2-1(XX) shall be installed to match original speed limit.
4. The maximum spacing between channelizing devices in a taper should be approximately equal in feet to the speed limit. Beyond the taper, maximum spacing shall be two times the speed limit or as directed by the Engineer.
5. Warning lights and/or flags may be mounted to signs or channelizing devices at night as needed.
6. Pavement markings no longer applicable which might create confusion in the minds of vehicle operators shall be removed or obliterated as soon as practicable.
7. The G20-1 sign will be required on jobs of over two miles in length. When the lane closure is not at the beginning of the project, the G20-1 sign shall be erected 125' in advance of the job limit. Additional W20-1 (1 MILE) signs are not required in advance of lane closures that begin inside the project limits.
8. Flaggers shall use STOP/SLOW paddles for controlling traffic through work zones. Flags may be used only for emergency situations.
9. All plastic drums and cones shall meet the requirements of NCHRP-350 or Manual For Assessing Safety Hardware (MASH).
10. Trailer mounted devices such as arrow panels and portable changeable message signs shall be delineated by affixing conspicuity material in a continuous line on the face of the trailer. When placed on or adjacent to the shoulder and not behind a positive barrier, these devices shall be delineated by placing five (5) traffic drums, equally spaced along the traffic side of the device.

Channelizing devices

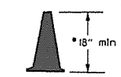

• When cones are used on freeways and multi-lane highways, they shall be 28" min. During hours of darkness, 28" cones shall be used on all roadways, and shall be reflectorized in accordance with the M.U.T.C.D.

CONES

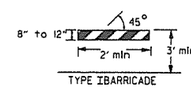

TYPE I BARRICADE

PLASTIC DRUM

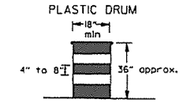

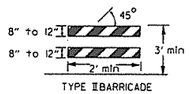

TYPE II BARRICADE

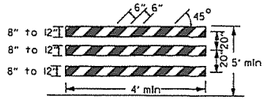

TYPE III BARRICADE

NOTE:
For all road closures, the Type III barricades shall be of sufficient length to extend across entire roadway.

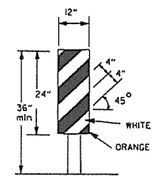

VERTICAL PANEL
VP-1R

TRAFFIC CONTROL DEVICES
FOR
VERTICAL PAVEMENT DIFFERENTIALS

VERTICAL DIFFERENTIAL	LOCATIONS	TRAFFIC CONTROL
1" to 3"	Centerline, lane lines	W8-11
1" to 3"	Edge of shoulder	W8-9
Greater than 3"	Lane lines	Standard lane closure required
Greater than 3"	Edge of traveled lane	•RSP-1 and vertical panels, drums or concrete barrier
Greater than 3"	Edge of shoulder	•Vertical panels, drums or concrete barrier

• When shown on the plans concrete barrier will be used.

When the shoulder area is used as part of the traveled lane and there is insufficient width to place drums on the remaining shoulder width, then vertical panels shall be used.

FLAG

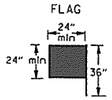

Flag shall be of good grade red material

STOP SLOW PADDLE

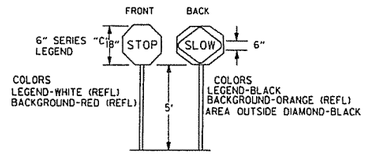

VERTICAL PANEL PLACEMENT

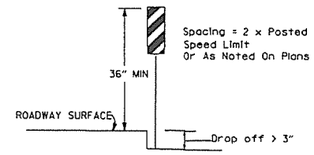

Spacing = 2 x Posted Speed Limit Or As Noted On Plans

DETAIL OF SPLICES

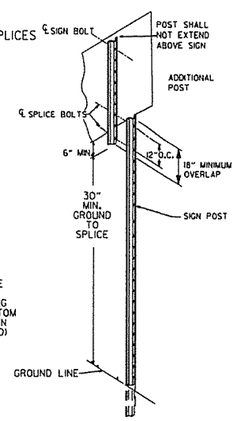

NOTES: USE SPLICES ONLY WHEN NECESSARY FOR INSTALLATION. TYPICAL INSTALLATION SHOULD HAVE NO SPLICES (SEE STD. DRAWING NO. SHS-2)

NORMAL INSTALLATIONS WILL REQUIRE 1/4" DIA. BOLTS TO MOUNT SIGNS TO POST AND 5/16" DIA. BOLTS TO ASSEMBLE THE VARIOUS POST SUPPORTS. EACH OF THESE BOLTS SHALL BE CARRIAGE BOLTS.

SIGN POSTS SHALL BE PAINTED GREEN; SIGNS SHALL NOT BE PAINTED, AND ALL SIGN POSTS SHALL BE PLUMB.

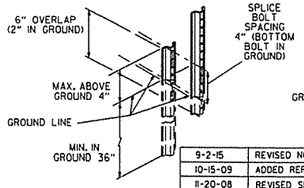

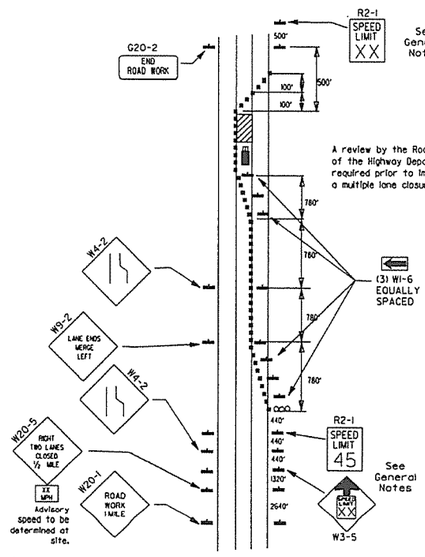

(D) Typical application - closing multiple lanes of a multilane highway.

DATE	REVISION	FILMED
9-2-15	REVISED NOTE 2 & REPLACED R2-5A WITH W3-5	
10-15-09	ADDED REFERENCE TO MASH	
11-20-08	REVISED SIGN DESIGNATIONS	
11-18-04	ADDED NOTE	
10-1-98	ADDED NOTE	
4-03-97	ADDED (SP) TO W6-1& REVISED TRAFFIC CONTROL DEVICES NOTE	
10-18-96	ADDED R55-1	
10-12-95	MOVED UPPER SPLICE	
6-8-95	REVISED SPLICE DETAIL, TEXT	6-8-95
2-2-95	REVISED PER PART VI, MUTCD, SEPT. 3, 1993	
8-15-91	DRAWN AND PLACED IN USE	

ARKANSAS STATE HIGHWAY COMMISSION

STANDARD TRAFFIC CONTROLS FOR HIGHWAY CONSTRUCTION

STANDARD DRAWING TC-3

REINFORCING BAR TABLE PER BARRIER UNIT

MARK	LOCATION	BAR SIZE	(NO. BARS)	SKETCH
H-1	HORIZONTAL IN BARRIER TIED INSIDE V-1 BARS	#5	(6)	19'-3"
H-2	CENTERED ABOVE DRAIN SLOTS LONG. & TRANSVERSELY	#5	(6)	6'-6"
H-3	TIED ABOVE H-1 BARS TO SUPPORT H-2. TIED TO V-1	#4	(2)	1'-6"
S-1	OVER LIFT HOLES	#4	(2)	2'-5", 90°, 3 3/8" R, LIFTING HOLE
S-2	HORIZ. AROUND SLOTS BETWEEN V-1'S @ DRAIN SLOTS	#4	(2)	1 1/2" R, SLOTS, 1" MIN. CLEAR TO BAR, 5'-1" BAR W/(4) 1 1/2" R BENDS & MIN. 1'-0" OVERLAP, 1'-6"
V-1	VERTICAL IN BARRIER(3) EACH END & (2) AT EACH DRAIN SLOTS	#5	(16)	TOTAL LENGTH 4'-9", 2 3/16" R, 12°, 9 1/2", 2'-1 3/8", 4 3/8"

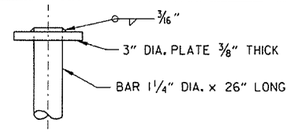

CONNECTING PIN

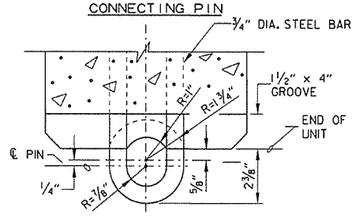

SECTION E-E

CONNECTION DETAILS

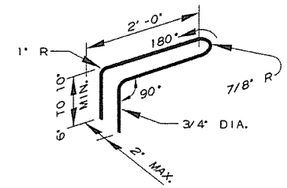

CONNECTION LOOP

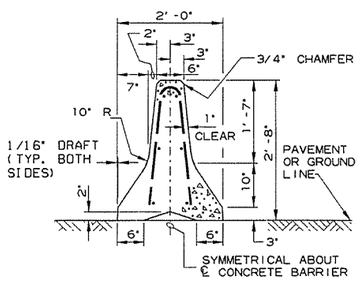

SECTION A-A

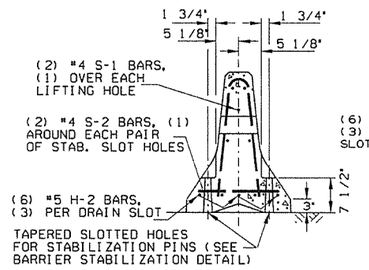

SECTION B-B

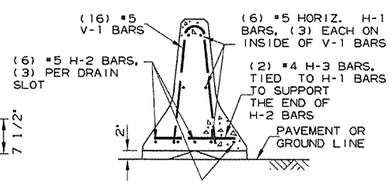

SECTION C-C

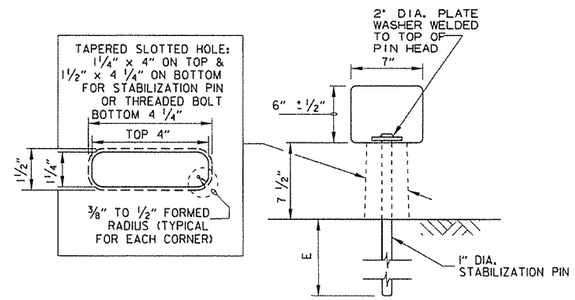

BARRIER STABILIZATION DETAIL

ROADWAY SECTION

(E) 4" - Concrete Pavement
8" - Asphalt Pavement
12" - Shoulder Areas

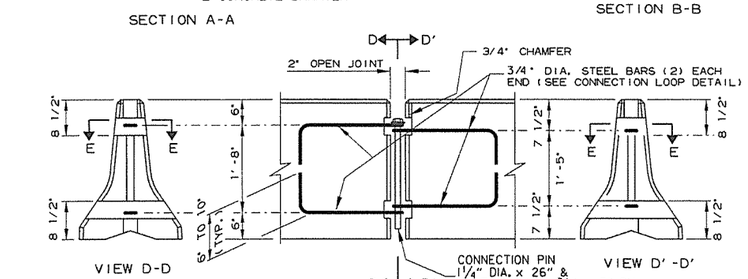

ELEVATION

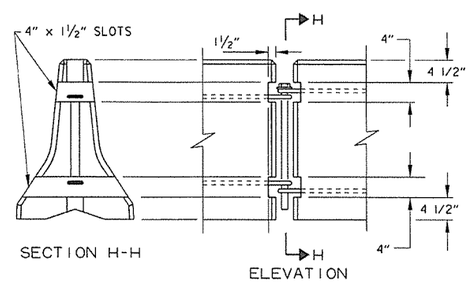

SECTION H-H

ELEVATION

BARRIER REMOVAL SLOT DETAILS

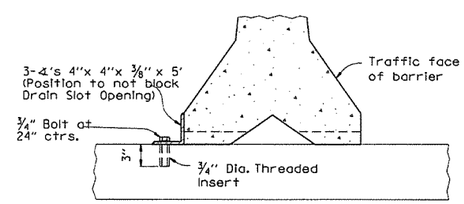

NOTE: 3/4" Threaded inserts shall be cast in place for all new bridge decks and drilled and grouted for existing bridge decks. Inserts shall have a minimum ultimate load capacity of 8000 lbs. in tension. After removal of barrier, bolts, and angles, the inserts shall be filled with approved non-shrink epoxy.

BARRIER STABILIZATION DETAIL

BRIDGE DECKS

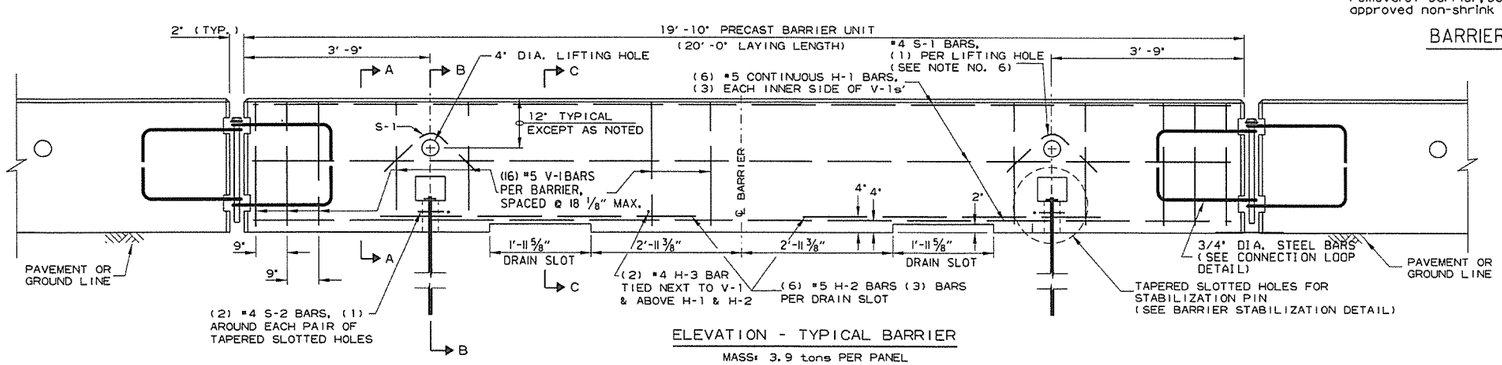

ELEVATION - TYPICAL BARRIER

MASS: 3.9 tons PER PANEL

General Notes

1. The contractor shall furnish the Precast Concrete Barrier Units and shall be responsible for the manufacture, shipment, storage, placement and removal. At the completion of the project, the precast units will remain the property of the contractor.

2. Materials shall meet the following minimum requirements:
   Concrete: 2500 psi compressive strength at 28 days.
   Reinforcing Steel: AASHTO M 31 or M 53, Grade 60
   Structural Steel: AASHTO-M270 Grade 36 shall be used for the Connection Pin, Connection Loops, and Stabilization Pins. A One Piece Pin with a 3" rounded top may be used in place of the detailed Connection Pin.
   Delineators: Delineators shall be mounted at 10' spacing on top of precast barrier.

   In applications where barrier wall is within 6 feet of a traffic lane, additional delineators shall be placed on the barrier at 10' spacing approximately one (1) foot from the top of the barrier. Delineators shall be on the AHTD Qualified Products List for Construction Concrete Barrier Markers.
   Delineator color shall be in accordance with the Manual on Uniform Traffic Control Devices.
   Payment for delineators shall be considered included in the price bid per Lin. Ft. for "Furnishing and Installing Precast Concrete Barrier". The contractor shall certify to the Engineer that the material and the design used in the precast barrier units meets the requirements as shown on this standard drawing.

3. Other Precast Concrete Barriers that have been crash tested and approved by the Federal Highway Administration to meet the requirements of NCHRP-350 test level 3 or Manual For Assessing Safety Hardware (MASH) will be accepted in lieu of the barrier shown. Drain slots shall be provided as needed or as directed by the Engineer. The Contractor shall furnish a certification of NCHRP Report 350 or Manual For Assessing Safety Hardware (MASH) compliance for any other types of precast barrier to be used. The certification shall state that the precast concrete barrier meets the requirements of NCHRP Report 350 or Manual For Assessing Safety Hardware (MASH) and include a copy of the Federal Highway Administration's (FHWA) approval letter with all attachments. Precast concrete barrier units shall be fabricated and installed in accordance with crash testing and documentation provided in the FHWA approval letter. Mixing of shapes will not be allowed in a continuous line of units.

4. Dowel holes in pavement or bridge slabs that are to remain in place shall be filled. Holes in concrete pavement and bridge slabs shall be filled with an approved non-shrink epoxy grout. Holes in asphalt pavement shall be filled with an approved asphalt joint filler. Payment for drilling and filling holes to be included in the price for various barrier items.

5. Attach Units To Roadway Surface with Stabilization Pins and to Deck Slabs using bolts when required.

6. A 4" White PVC Sleeve may be used to form the Lifting Hole and if used the Sleeve is to be left in place.

DATE	REVISION	FILMED
2-27-14	REVISED BARRIER STABILIZATION DETAIL	
10-15-09	ADDED REFERENCE TO MASH	
8-5-09	REV. NOTE 3 CONCERNING DRAIN SLOTS	
11-29-07	REVISED NOTE 3	
5-25-06	DELETED GENERAL NOTE 7	
11-18-04	REVISED BARRIER STABILIZATION DETAIL BRIDGE DECKS	
4-10-03	REVISED GENERAL NOTE 2	
8-22-02	ISSUED NEW DRAWING	

ARKANSAS STATE HIGHWAY COMMISSION

STANDARD TRAFFIC CONTROLS FOR HIGHWAY CONSTRUCTION - TEMPORARY PRECAST BARRIER

STANDARD DRAWING TC-4

Ⓐ 4 feet or greater preferred. If less than 4 feet, Precast Units shall be connected to slab (SEE BARRIER STABILIZATION DETAIL-BRIDGE DECKS STD. DRWG. TC-4)

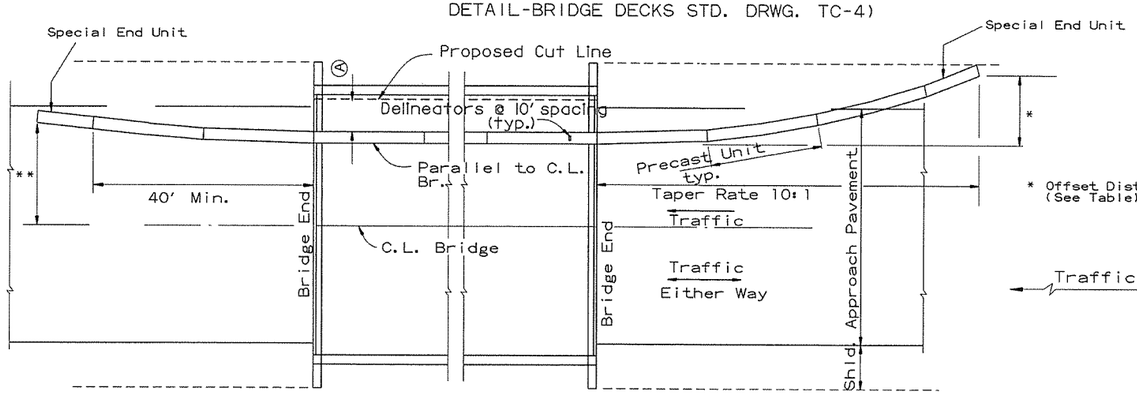

* Offset Distance (See Table)

BARRIER PLACEMENT ALONG BRIDGE WITH OFFSET

No Scale

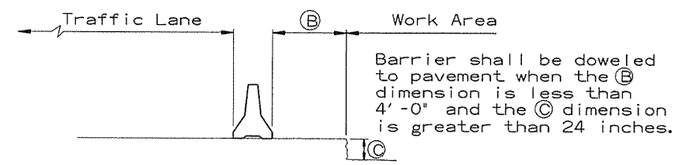

Barrier shall be doweled to pavement when the Ⓑ dimension is less than 4'-0" and the Ⓒ dimension is greater than 24 inches.

SECTION J-J

No Scale

** Offset Distance for Two Way Traffic Only

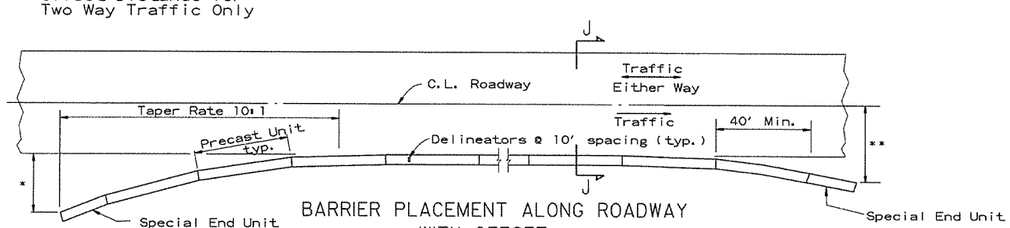

BARRIER PLACEMENT ALONG ROADWAY WITH OFFSET

No Scale

** Offset Distance For Two Way Traffic Only

* Offset Distance (See Table)

Offset Distance Table

Speed (MPH)	Offset Distance (FT.)
≤ 45	12
> 45	18

If offset distance is not attainable, then see 'Barrier Placement With Attenuator' Detail shown below.

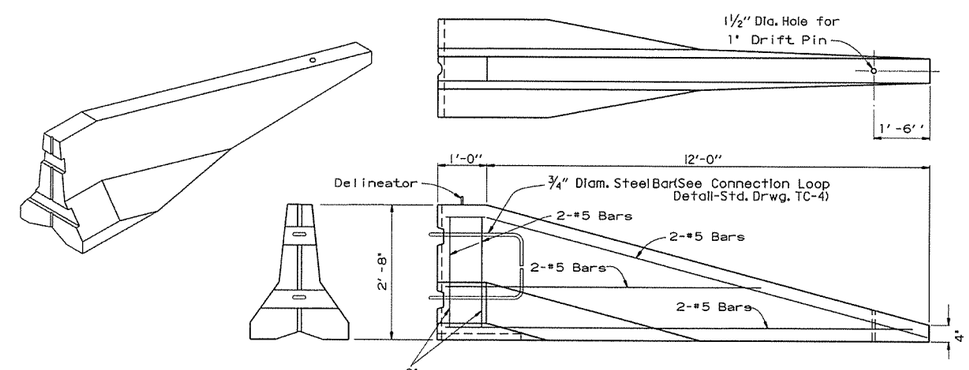

SPECIAL END UNIT

No Scale

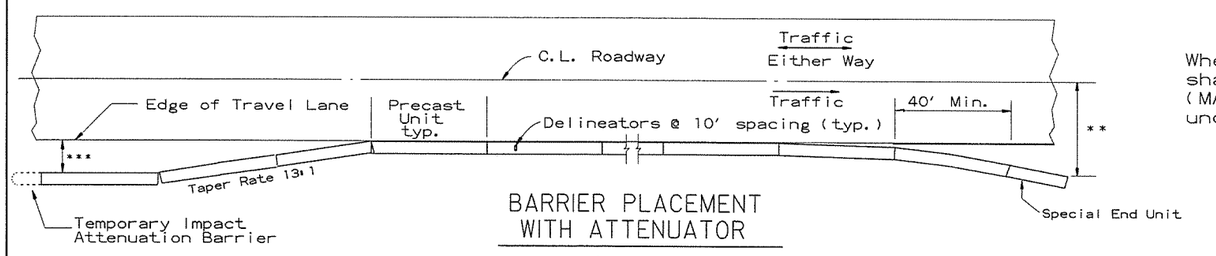

BARRIER PLACEMENT WITH ATTENUATOR

No Scale

** Offset Distance For Two Way Traffic Only

***Min. 3'-0" From Edge of Travel Lane to Nearest Edge of Attenuator

General Notes

When shown on the Plans, the ends of the Temporary Precast Concrete Barrier shall be protected with an NCHRP-350 or Manual For Assessing Safety Hardware (MASH) approved Crash Cushion. Payment for Crash Cushions shall be made under the item of "Temporary Impact Attenuation Barrier."

DATE	REVISION	FILMED
10-15-09	ADDED REFERENCE TO MASH	
5-25-06	REVISED BARRIER PLACEMENT	
8-22-02	ISSUED NEW DRAWING	

ARKANSAS STATE HIGHWAY COMMISSION

STANDARD TRAFFIC CONTROLS FOR HIGHWAY CONSTRUCTION - TEMPORARY PRECAST BARRIER

STANDARD DRAWING TC-5

GENERAL NOTES

INSTALL A MINIMUM OF 2 UPSLOPE STAKES AND 4 DOWNSLOPE STAKES AT AN ANGLE TO WEDGE WATTLE TO BOTTOM OF DITCH.

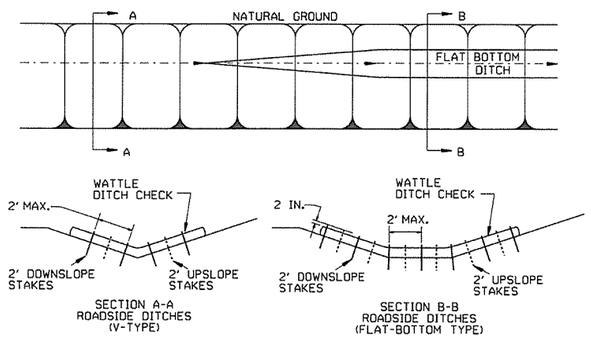

WATTLE DITCH CHECK (E-1)

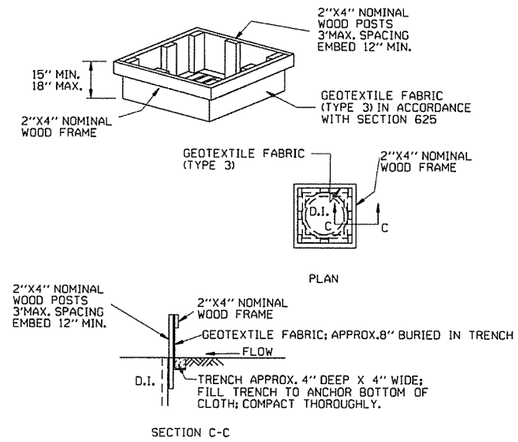

DROP INLET SILT FENCE (E-7)

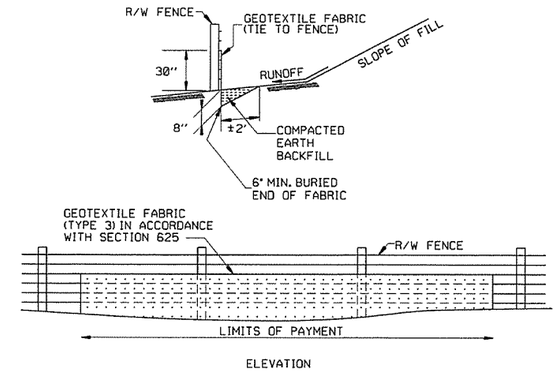

SILT FENCE ON R/W FENCE (E-4)

GENERAL NOTES

GEOTEXTILE FABRIC SHALL BE SPLICED TOGETHER WITH A SEWN SEAM ONLY AT A SUPPORT POST, OR TWO SECTIONS OF FENCE MAY BE OVERLAPPED INSTEAD. PAYMENT OF ADDITIONAL MATERIAL FOR OVERLAP WILL NOT BE MADE.

GENERAL NOTES

1. STRAW BALES SHALL BE INSTALLED SO THAT THE BINDINGS ARE ORIENTED AROUND THE SIDES RATHER THAN ALONG THE TOPS AND BOTTOMS OF THE BALES. THE BALES SHALL BE A MINIMUM OF 30 INCHES IN LENGTH.
2. NO GAPS SHALL BE LEFT BETWEEN BALES.
3. BALED STRAW FILTER BARRIERS COMPLETED AND ACCEPTED WILL BE MEASURED BY THE BALE IN PLACE AS AUTHORIZED BY THE ENGINEER AND WILL BE PAID FOR AT THE CONTRACT UNIT PRICE BID PER BALE FOR BALED STRAW DITCH CHECKS.

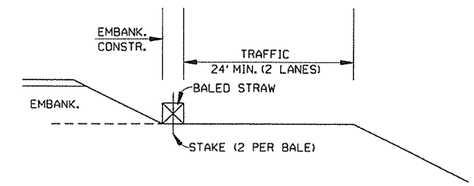

BALED STRAW FILTER BARRIER (E-2)

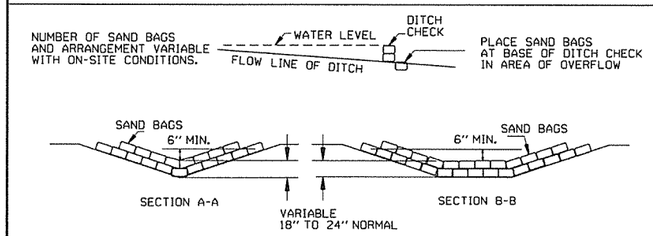

SAND BAG DITCH CHECK (E-5)

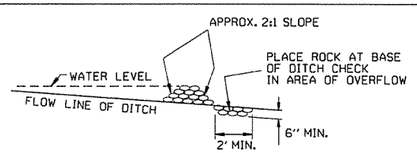

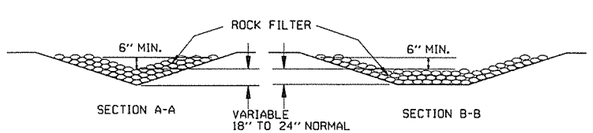

ROCK DITCH CHECK (E-6)

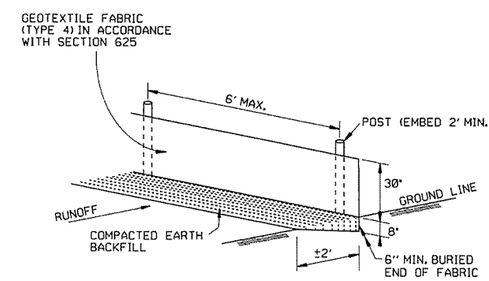

SILT FENCE (E-11)

GENERAL NOTES

GEOTEXTILE FABRIC SHALL BE SPLICED TOGETHER WITH A SEWN SEAM ONLY AT A SUPPORT POST OR TWO SECTIONS OF FENCE MAY BE OVERLAPPED INSTEAD. PAYMENT OF ADDITIONAL MATERIAL FOR OVERLAP WILL NOT BE MADE.

DATE	REVISION	FILMED
12-15-11	DELETED BALED STRAW DITCH CHECK & ADDED WATTLE DITCH CHECK	
11-18-98	ADDED NOTES	
7-02-98	ADDED BALED STRAW FILTER BARRIER (E-2)	
7-20-95	REVISED SILT FENCE E-4 AND E-11	7-20-95
7-15-94	REV. E-4 & E-11 MIN. 13" BURIED END OF FABRIC	
6-2-94	REVISED E-1,4,7 & 11; DELETED E-2 & 3	6-2-94
4-1-93	REDRAWN	
10-1-92	REDRAWN	
8-2-76	ISSUED R.D.M.	298-7-28-76

ARKANSAS STATE HIGHWAY COMMISSION

TEMPORARY EROSION CONTROL DEVICES

STANDARD DRAWING TEC-1

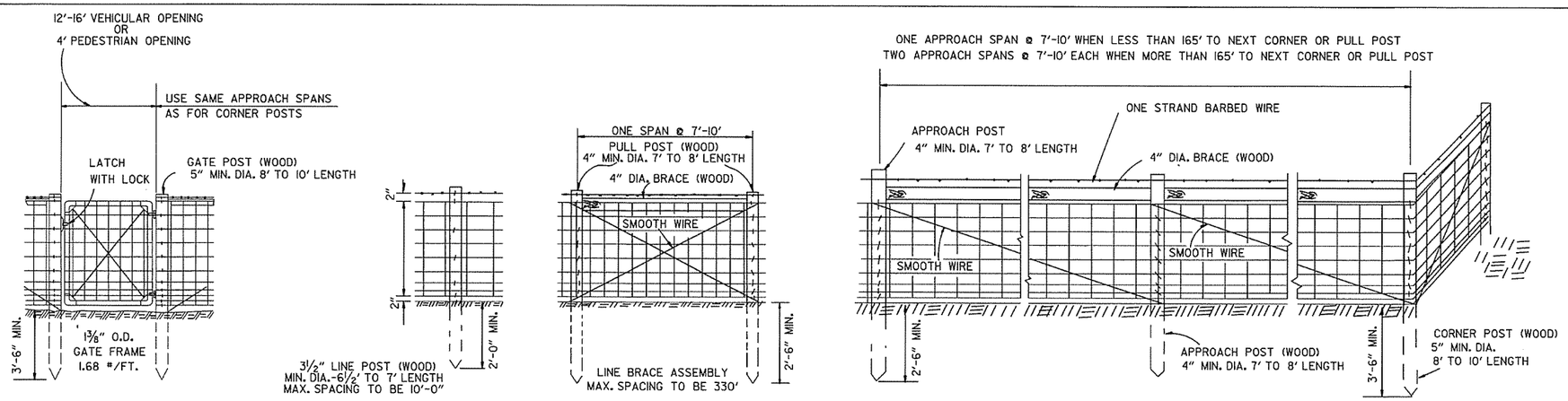

NOTE: STAPLE AT LEAST TOP, BOTTOM AND ALTERNATE WIRES OF WOVEN FABRIC FOR WOOD LINE POSTS.

TYPE A FENCE (WOOD POSTS)

GENERAL NOTES:

STEEL LINE POSTS SHALL BE GALVANIZED, 7 FT. IN LENGTH.

TUBULAR END, CORNER, PULL, OR DIAGONAL BRACES MUST CONFORM TO THE DIMENSIONS AND WEIGHTS SPECIFIED ON STANDARD DRAWING WF-3 (CHAIN LINK).

THE CONTRACTOR SHALL FURNISH AT LEAST 25% OF WOOD LINE POSTS OF 7' LENGTHS IN ORDER TO PROVIDE SUFFICIENT SET IN SOFT GROUND OR SMALL DEPRESSIONS.

GATE HINGES AND LATCHES WITH LOCKS TO BE OF A TYPE APPROVED BY THE ENGINEER. DRIVEWAY GATES, EITHER SINGLE 12' OR 16' OR DOUBLE 6' TO 8' OPENINGS OF THE SAME TYPE AS THE PEDESTRIAN GATE, SHALL BE INSTALLED ON THE RIGHT SIDE OF EACH THROUGH LANE ROAD AT LARGE CULVERTS OR BRIDGE CROSS FENCE FOR USE BY MAINTENANCE EQUIPMENT. LOCATION OF GATES TO BE SHOWN ON THE PLANS OR AS DESIGNATED BY THE ENGINEER.

AT STREAM CROSSINGS THE FENCE SHALL NOT BE CONSTRUCTED ACROSS LARGE STREAMS. WHERE CLEARANCE IS SUFFICIENT FROM THE TOP OF BANK TO THE BRIDGE STRUCTURE, A CROSS CONNECTION SHALL BE CONSTRUCTED BETWEEN THE FENCE ON EACH SIDE OF THE ROAD. WHERE THE CLEARANCE IS NOT SUFFIEICNT, THE FENCE SHALL BE TERMINATED WITH CROSS CONNECTIONS AND END POSTS ADJACENT TO THE BRIDGE ABUTMENTS OR CULVERT WINGWALLS.

SPLICE FOR WOVEN WIRE BETWEEN PULL POST SHALL BE BY THE "WESTERN UNION METHOD" AS DESCRIBED AS FOLLOWS: THE VERTICAL WIRES FOR EACH END OF THE FENCE FABRIC SHALL BE PLACED SIDE BY SIDE AND THE PROJECTING HORIZONTAL WIRES SHALL BE WRAPPED A MINIMUM OF 4 TIMES AROUND THE HORIZONTAL WIRES OF THE FIRST WEB.

SPLICE FOR BARBED WIRE BETWEEN PULL POST ASSEMBLY SHALL BE BY THE "EYE METHOD": AS DESCRIBED AS FOLLOWS: THE ENDS OF THE BARBED WIRE SHALL BE BENT TO FORM A LOOP. THE LOOPS SHALL BE CONNECTED. AFTER THE LOOPS ARE CONNECTED THE ENDS OF THE WIRE SHALL BE WRAPPED AROUND THE PROJECTING WIRE A MINIMUM OF 4 TIMES FOR EACH WIRE LOOP.

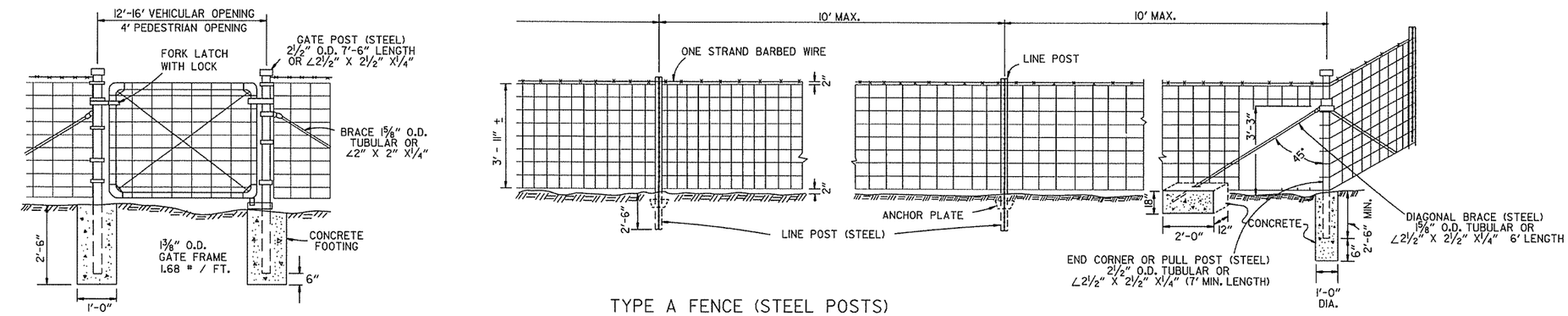

TYPE A FENCE (STEEL POSTS)

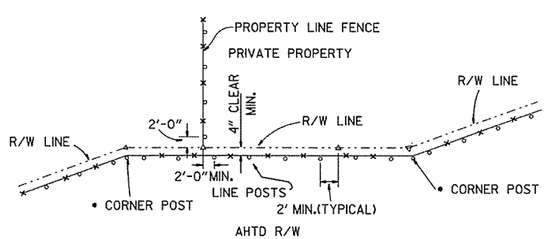

*NOTE: RIGHT-OF-WAY MONUMENTS SHALL NOT BE DISTURBED BY FENCE CONSTRUCTION. CORNER POSTS SHALL BE CONSTRUCTED 2' FROM THE RIGHT-OF-WAY MONUMENT OR AS DIRECTED BY THE ENGINEER.

△ - R/W MONUMENTS
○ - FENCE POSTS

RIGHT-OF-WAY FENCE LOCATION

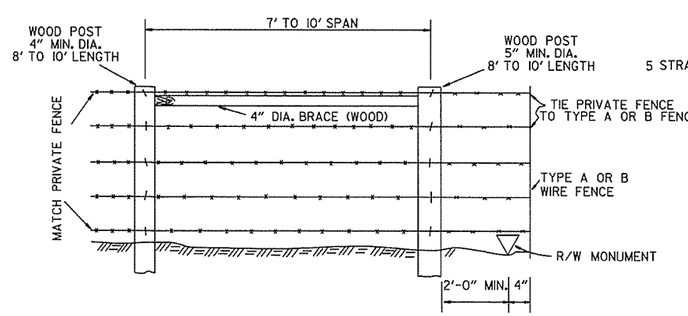

WHERE EXISTING PRIVATE FENCE CONSISTS OF STEEL POSTS, USE END POST ASSEMBLY AS SHOWN WITH TYPE A FENCE OR OTHER END POST ASSEMBLY AS APPROVED BY THE ENGINEER.

PRIVATE FENCE
TERMINAL INSTALLATION

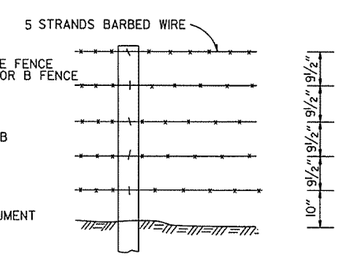

SPACING AND SIZE OF POSTS FOR TYPE B FENCE SHALL BE THE SAME AS TYPE A FENCE.

TYPE B FENCE

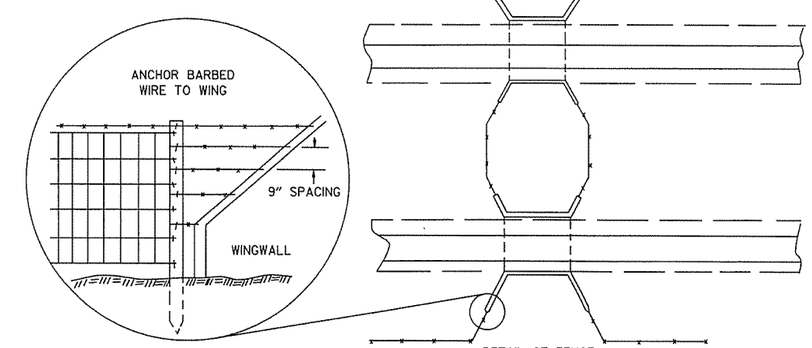

DETAIL OF FENCE
CONSTRUCTION AT LARGE
CULVERTS (5' IN HEIGHT AND OVER)

DATE	REVISION	DATE FILMED
8-22-02	REVISED GENERAL NOTES	
10-18-96	REVISED ASTM REF. TO AASHTO	
11-22-95	REVISED R-O-W LOCATION DETAIL	
6-2-94	ADDED CORNER POST NOTE	6-2-94
8-5-93	REVISED R-O-W LOCATION DETAIL	8-5-93
10-1-92	ADDED STAPLE NOTE	
8-2-90	REV'D PULL POST LENGTH	
11-30-89	D'LETED CLASS CONC.	
7-15-88	ADDED SPLICE NOTES	
7-15-88	ADDED HEIGHT DIMENSION	
4-3-87	REVISED VARIOUS NOTES	
	AND GENERAL NOTES	
11-1-84	MAX. POST SPACING	
1-4-83	MIN. DIA. LINE POST	
10-2-72	REVISED & REDRAWN	

ARKANSAS STATE HIGHWAY COMMISSION

WIRE FENCE
TYPE A AND B

STANDARD DRAWING WF-1

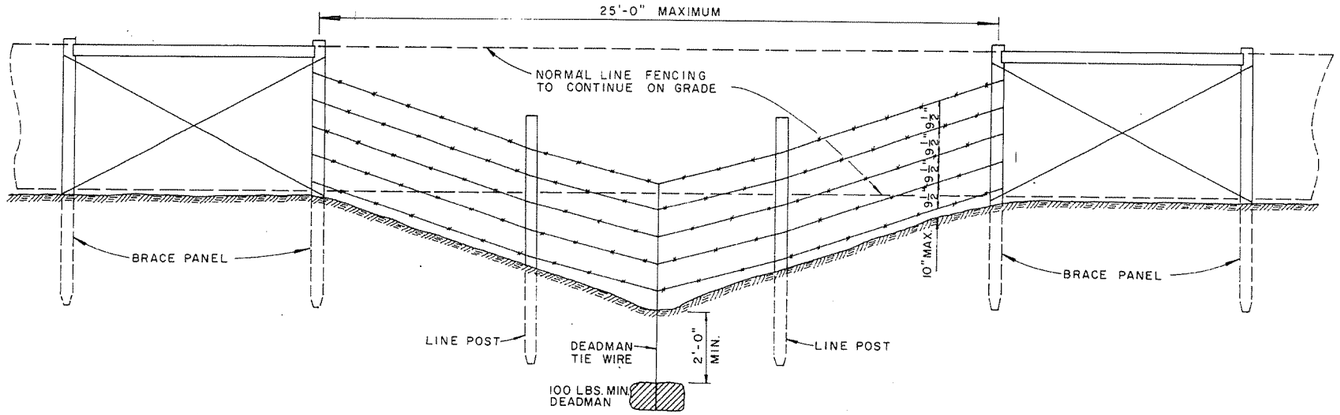

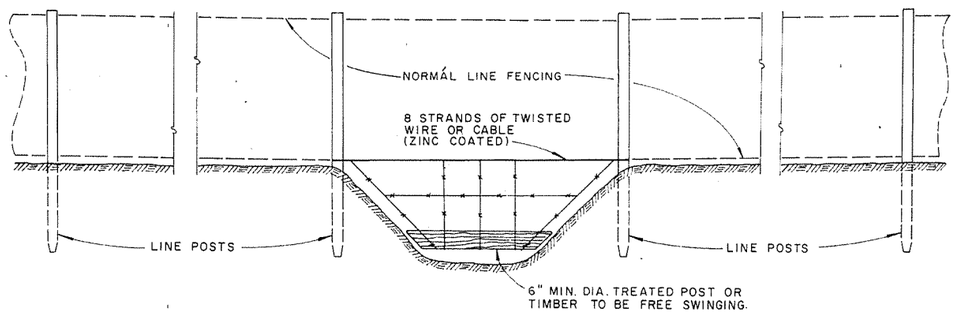

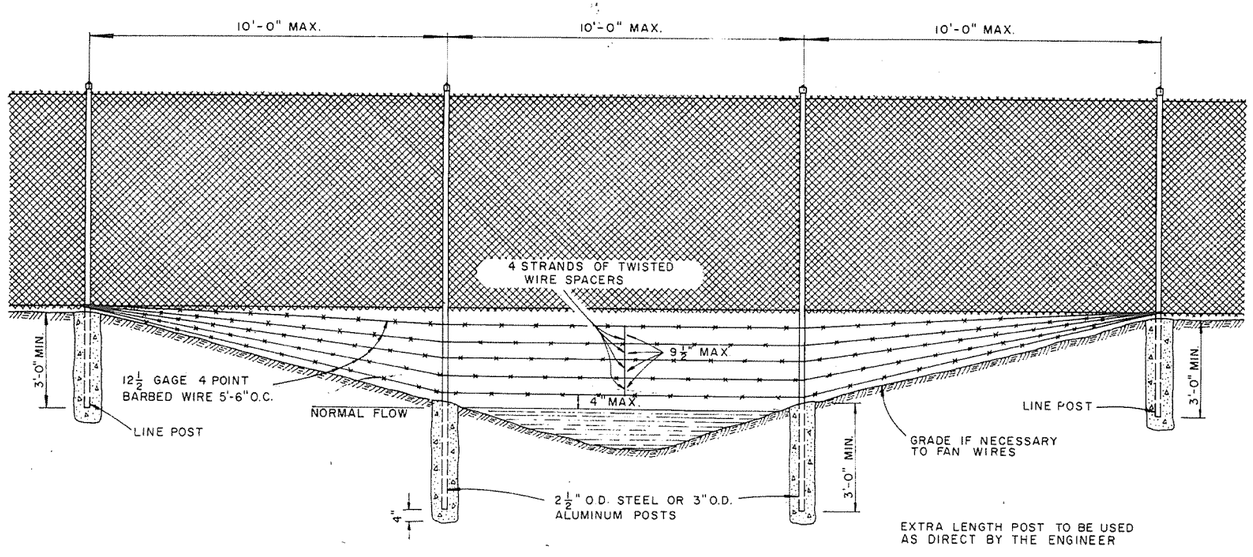

GENERAL NOTES:

THESE INSTALLATIONS TO BE USED WHERE NORMAL FENCING INSTALLATION WOULD CAUSE THE COLLECTING OF DRIFT IN THE CHANNEL OR THE DEPRESSION WILL NOT PERMIT NORMAL INSTALLATION. INSTALLATIONS WILL BE MADE ONLY WHERE DIRECTED BY THE ENGINEER.

WHEN A FENCE LINE APPROACHES A DITCH, GULLY OR DEPRESSION, THE LAST POST ON LEVEL GROUND SHALL BE PLACED CLOSE ENOUGH TO THE EDGE OF THE DROP OFF THAT THE FENCE MAY BE STRUNG TO THE POST IN THE DEPRESSION WITHOUT TOUCHING THE GROUND.

IN TERRAIN OF SUCH EXTREME IRREGULARITY THAT MINOR GRADING WILL NOT BE FEASIBLE, THE NORMAL FENCE SHALL CONTINUE ON GRADE AND THE GULLIES OR DEPRESSIONS TREATED BY AUXILIARY FENCES AS SHOWN.

PAYMENT FOR THE TYPE INSTALLATION USED WILL NOT BE MADE DIRECTLY BUT WILL BE INCLUDED IN THE CONTRACT UNIT PRICE BID FOR WIRE FENCE OR CHAIN LINK FENCE.

DATE	REVISION	DATE FILM'D.
4-20-79	REVISED TOP RAIL & TENSION WIRE	676 4-20-79
10-2-72	REVISED & REDRAWN	529 10-2-72

ARKANSAS STATE HIGHWAY COMMISSION

WIRE FENCE WATER GAPS

STANDARD DRAWING

WF-2

1M—11-71—67001—PPASCo

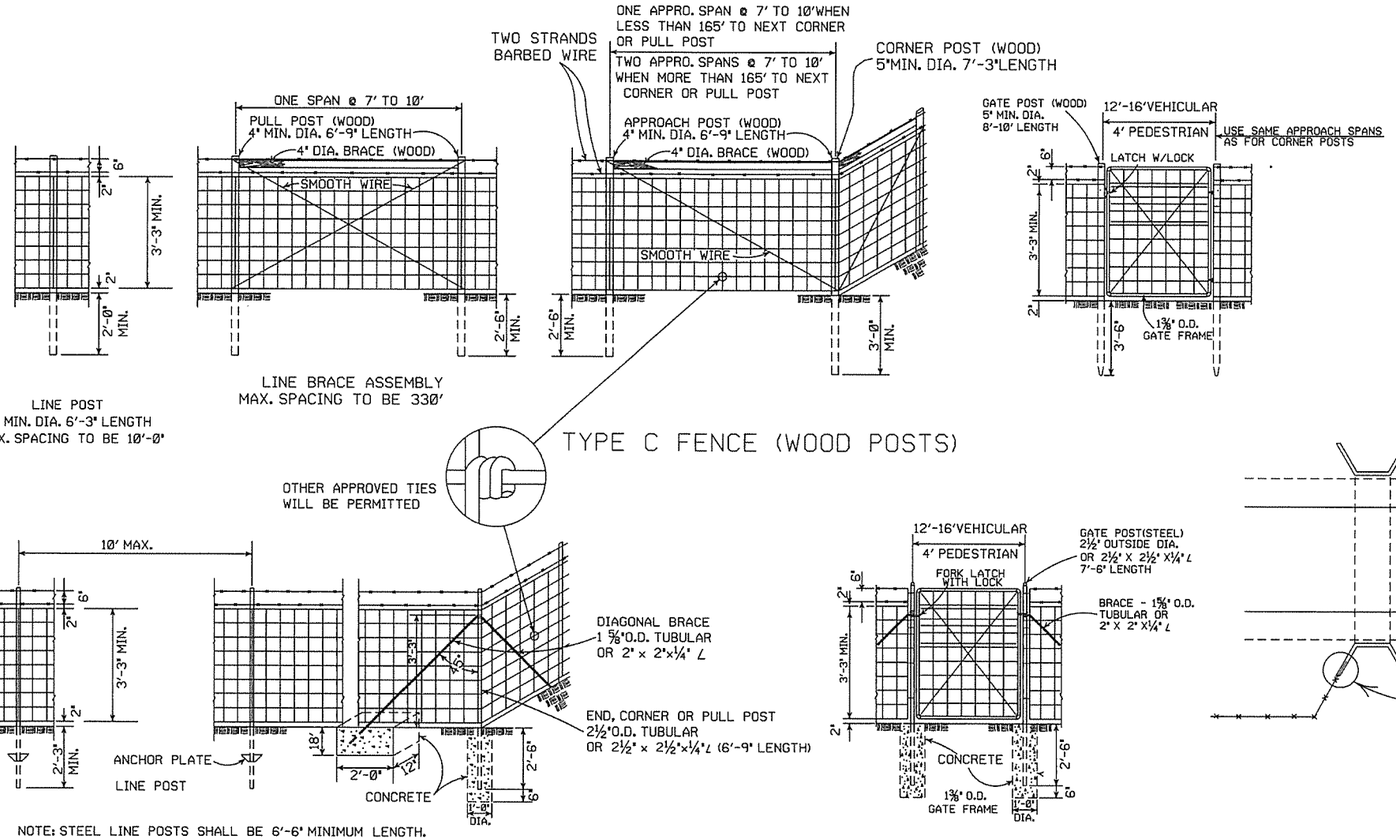

TYPE C FENCE (WOOD POSTS)

GENERAL NOTES:

STEEL LINE POSTS SHALL BE PAINTED OR GALVANIZED. TUBULAR END, CORNER, PULL, OR DIAGONAL BRACES MUST CONFORM TO THE DIMENSIONS AND WEIGHTS SPECIFIED ON STANDARD DRAWING WF-3 (CHAIN LINK). APPROVED ALTERNATES ARE ACCEPTABLE.
AN ACCEPTABLE TOLERANCE IN LENGTH OF TUBULAR OR WOODEN POSTS SHALL BE - 1" TO +2".
TUBULAR POSTS MUST BE PAINTED OR GALVANIZED.

THE CONTRACTOR SHALL FURNISH AT LEAST 25% OF TIMBER LINE POSTS OF 7 FOOT LENGTHS IN ORDER TO PROVIDE SUFFICIENT SET IN SOFT GROUND OR SMALL DEPRESSIONS.

DRIVEWAY GATES, EITHER SINGLE 12' TO 16' OR DOUBLE 6' TO 8' OPENING OF THE SAME TYPE AS THE PEDESTRIAN GATE, SHALL BE INSTALLED ON THE RIGHT SIDE OF EACH THROUGH LANE ROAD AT LARGE CULVERTS OR BRIDGE CROSS FENCE, FOR USE OF MAINTENANCE EQUIPMENT. LOCATION OF GATES TO BE SHOWN ON PLANS OR AS DESIGNATED BY THE ENGINEER.

AT STREAM CROSSINGS, THE FENCE SHALL NOT BE CONSTRUCTED ACROSS LARGE STREAMS. WHERE CLEARANCE IS SUFFICIENT FROM THE TOP OF THE BANK TO THE BRIDGE STRUCTURE A CROSS CONNECTION SHALL BE CONSTRUCTED BETWEEN THE FENCE ON EACH SIDE OF THE ROAD. WHERE THE CLEARANCE IS NOT SUFFICIENT, THE FENCE SHALL BE TERMINATED WITH CROSS CONNECTIONS AND END POSTS ADJACENT TO BRIDGE ABUTMENTS OR CULVERT WINGWALLS.

NOTE: STEEL LINE POSTS SHALL BE 6'-6" MINIMUM LENGTH.

TYPE C FENCE (STEEL POSTS)

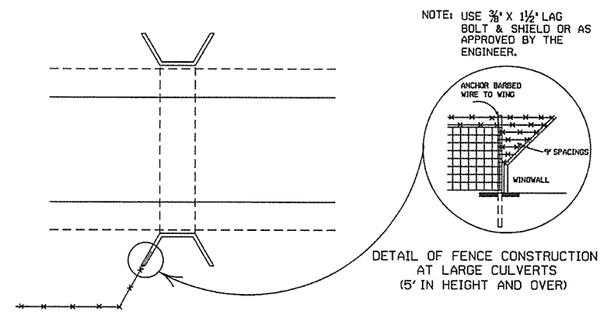

DETAIL OF FENCE CONSTRUCTION AT LARGE CULVERTS (5' IN HEIGHT AND OVER)

SPLICE FOR BARBED WIRE BETWEEN PULL POST ASSEMBLY SHALL BE BY THE 'EYE METHOD' AS DESCRIBED AS FOLLOWS:
THE ENDS OF THE BARBED WIRE SHALL BE BENT TO FORM A LOOP. THE LOOPS SHALL BE CONNECTED. AFTER THE LOOPS ARE CONNECTED THE ENDS OF THE WIRE SHALL BE WRAPPED AROUND THE PROJECTING WIRES A MINIMUM OF 4 TIMES FOR EACH WIRE LOOP.

SPLICE FOR WOVEN WIRE BETWEEN PULL POST SHALL BE BY THE "WESTERN UNION METHOD" AS DESCRIBED AS FOLLOWS: THE VERTICAL WIRES FOR EACH END OF THE FENCE FABRIC SHALL BE PLACED SIDE BY SIDE AND THE PROJECTING HORIZONTAL WIRES SHALL BE WRAPPED A MINIMUM OF 4 TIMES AROUND THE HORIZONTAL WIRES OF THE FIRST WEB.

STAPLE AT LEAST TOP, BOTTOM AND ALTERNATE WIRES OF WOVEN FABRIC FOR WOOD LINE POSTS.

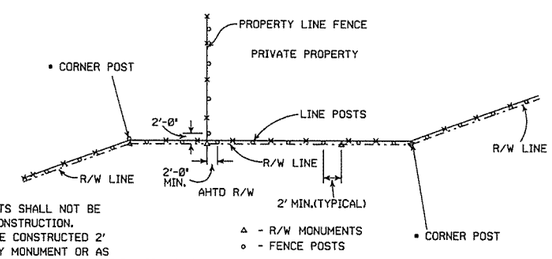

• NOTE: RIGHT-OF-WAY MONUMENTS SHALL NOT BE DISTURBED BY FENCE CONSTRUCTION. CORNER POSTS SHALL BE CONSTRUCTED 2' FROM THE RIGHT-OF-WAY MONUMENT OR AS DIRECTED BY THE ENGINEER.

RIGHT-OF-WAY FENCE LOCATION

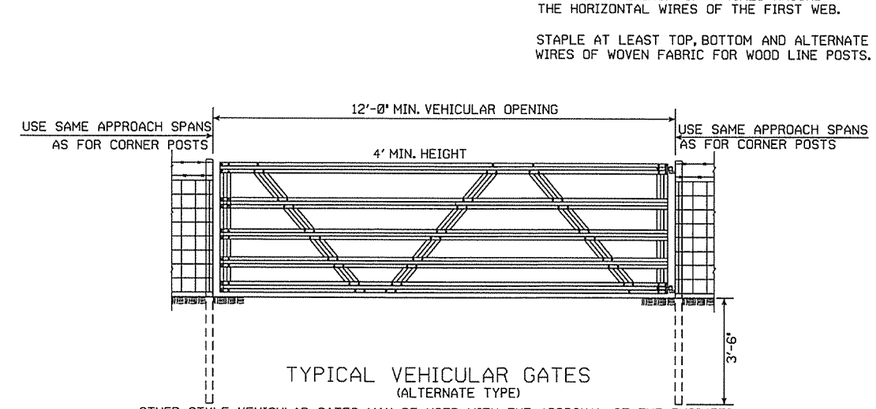

TYPICAL VEHICULAR GATES
(ALTERNATE TYPE)

OTHER STYLE VEHICULAR GATES MAY BE USED WITH THE APPROVAL OF THE ENGINEER.
THE METHOD OF SECURING GATE (LATCH AND/OR LOCK) SHALL MEET THE APPROVAL OF THE ENGINEER.

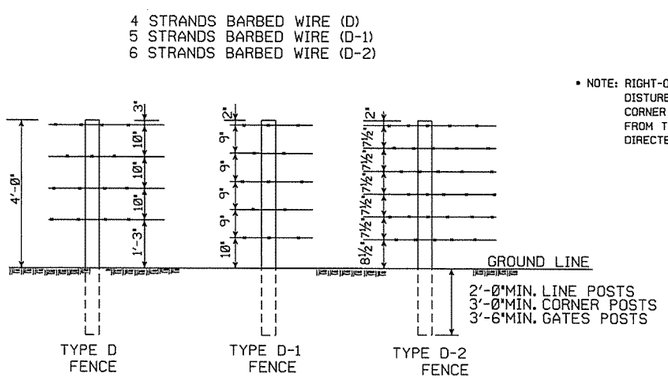

NOTE: SPACING AND SIZE (EXCEPT LENGTH) OF POSTS, APPROACH SPANS, PULL POST ASSEMBLIES, AND CORNER BRACING FOR TYPE D FENCE SHALL CONFORM TO TYPE C FENCE. USE GALVANIZED STAPLES ON WOOD POSTS AND APPROVED FASTENERS ON STEEL POSTS.

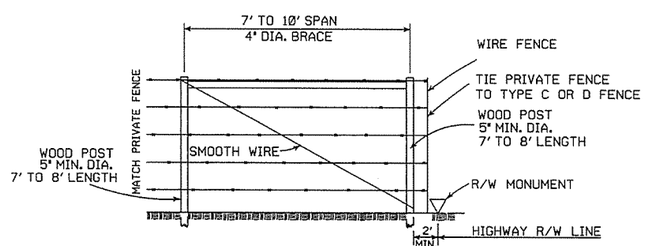

PRIVATE FENCE TERMINAL INSTALLATION
WHERE EXISTING FENCE CONSISTS OF STEEL POSTS, USE END POST ASSEMBLY AS SHOWN IN TYPE C FENCE OR OTHER END POST ASSEMBLY AS APPROVED BY THE ENGINEER.

DATE	REVISION	FILMED
8-22-02	REVISED GENERAL NOTES	
10-18-96	REVISED AASHTO	
11-22-95	REVISED R-O-W LOCATION DETAIL	
6-2-94	REVISED BARB WIRE AND	6-2-94
	ADDED CORNER POST NOTES	
8-5-93	REVISED R/W INSTALLATION FENCE	8-5-93
10-1-92	ADDED STAPLE NOTE	10-1-92
8-15-91	ADDED TYPE D-2 FENCE	8-15-91
11-30-89	DELETED CLASS CONCRETE	11-30-89
7-15-88	ADDED SPLICE NOTE	700-7-15-88
10-30-87	GENERAL REVISIONS	549-10-30-87
11-1-84	MAX. POST SPACING MIN. WIRE GAUGE	507-11-1-84
1-4-83	MIN. DIA. LINE POST	648-1-4-83
3-2-81	TOLERANCE FOR POST LENGTH	722-3-2-81
12-1-72	ADDED D-1 & FENCE INSTALLATION	564-12-1-72
10-2-72	REVISED AND REDRAWN	540-10-2-72

ARKANSAS STATE HIGHWAY COMMISSION

WIRE FENCE TYPE C AND D

STANDARD DRAWING WF-4

Crafton, Tull & Associates Inc.

DATE REVISED	DATE FILMED	DATE REVISED	DATE FILMED

FED.RD. DIST.NO.	STATE	FED.AID PROJ.NO.	SHEET NO.	TOTAL SHEETS
6	ARK.			
JOB NO.		CA0901	260	452

2 CROSS SECTIONS

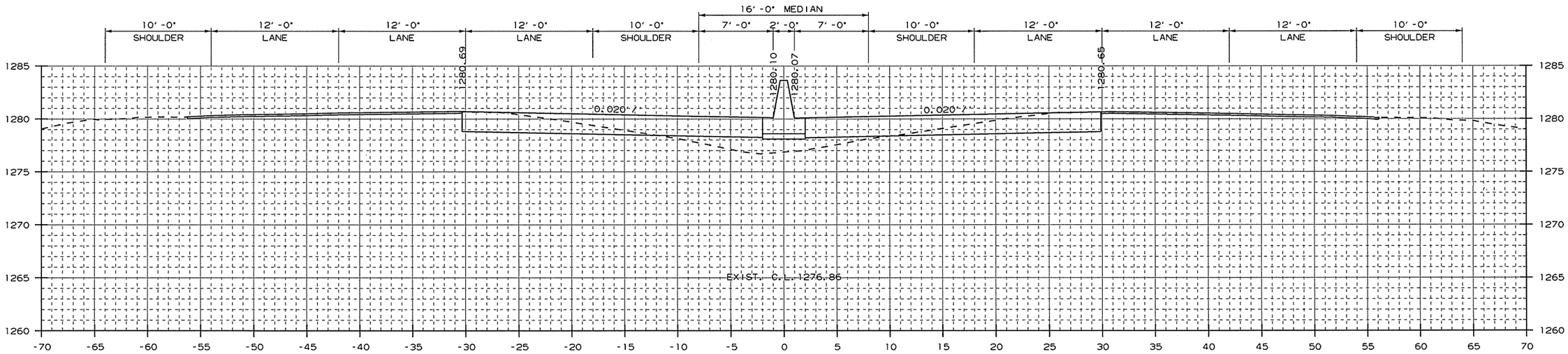

AREA CUT : 44.6
AREA FILL : 17.3

1108+78.59

CUT VOLUME : 24
FILL VOLUME : 9

STA. 1108+78.59 - BEGIN JOB CA0901

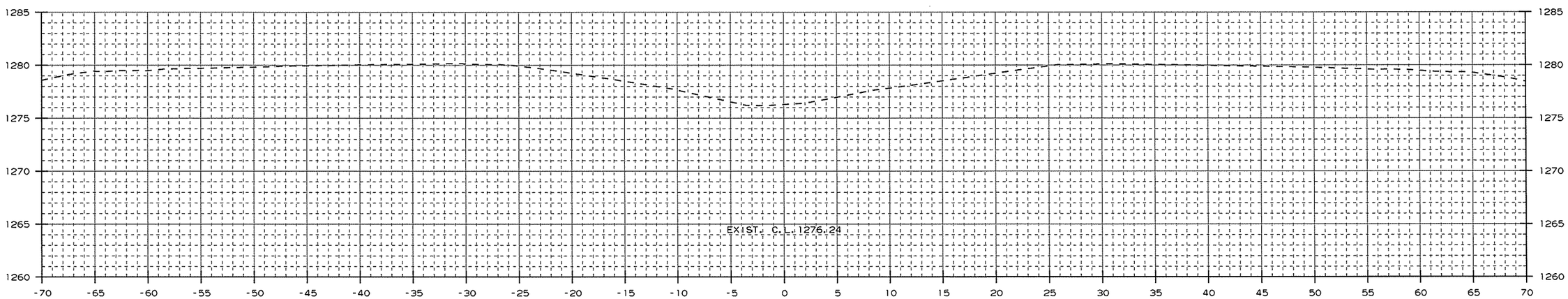

AREA CUT : 0.0
AREA FILL : 0.0

1108+50.00

CUT VOLUME : 0
FILL VOLUME : 0

CROSS SECTION STA. 1108+50 TO STA. 1108+79

USER: at5106
DESIGN FILE: G:\13106100_264toNHope\TRANSP\dgn\xsect\rCA0901_CX_01.dgn
PLOTTED: 1/13/2016 09:30
SCALE: 1:01
MODEL: CROSS SECTION SHEETS

Crafton, Tull & Associates Inc.

DATE REVISED	DATE FILMED	DATE REVISED	DATE FILMED

FED.RD. DIST.NO.	STATE	FED.AID PROJ.NO.	SHEET NO.	TOTAL SHEETS
6	ARK.			
JOB NO.		CA0901	261	452

2 CROSS SECTIONS

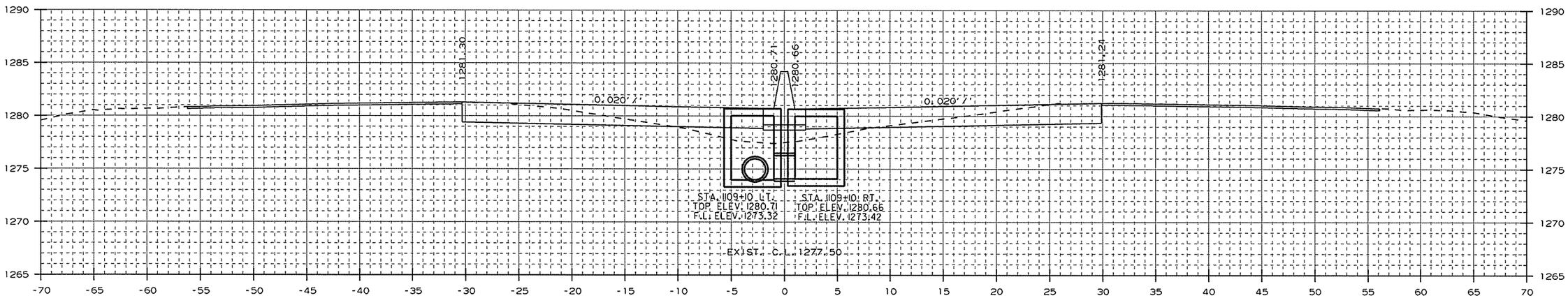

AREA CUT : 47.5
AREA FILL : 14.8

STA. 1109+10 - CONSTRUCT
DROP INLET 3' LT. OF C.L. H=7'5"
W/ 24" X 10' R.C. PIPE CULVERT
(CLASS III) (TYPE 3 BEDDING)
CONNECT TO EXIST. DROP INLET
STA. 1108+96.59
TYPE ST DROP INLET = 4' X 4'

1109+10.00

STA. 1109+10 - CONSTRUCT
DROP INLET 3' RT. OF C.L. H=7'3"
W/ 24" X 2' R.C. PIPE CULVERT
(CLASS III) (TYPE 3 BEDDING)
CONNECT TO DROP INLET
STA. 1109+10 LT.
TYPE ST DROP INLET = 4' X 4'

CUT VOLUME : 18
FILL VOLUME : 6

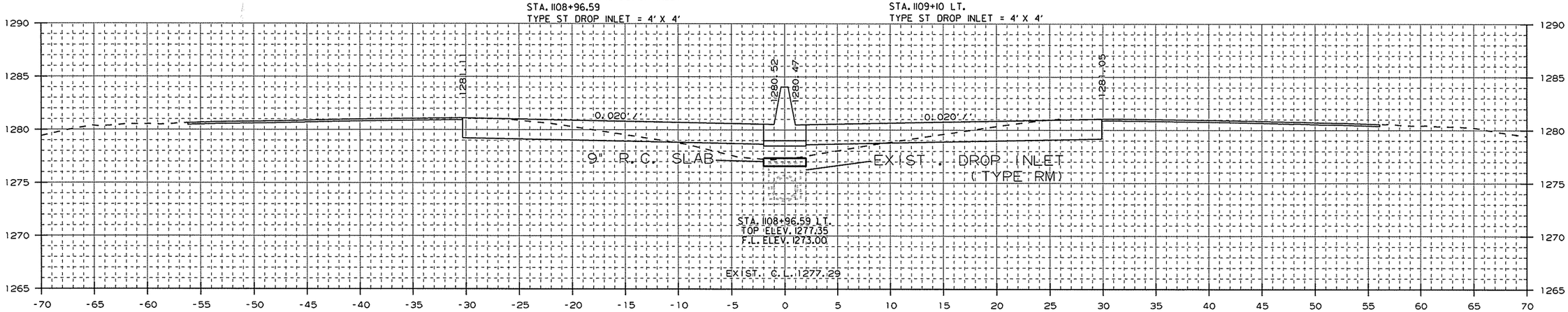

AREA CUT : 48.1
AREA FILL : 15.6

STA. 1108+96.59 IN PLACE TYPE RM
DROP INLET IN MEDIAN
W/ 18" X 214' R.C. PIPE CULVERT
MODIFY

1109+00.00

CUT VOLUME : 37
FILL VOLUME : 13

CROSS SECTION STA. 1109+00 TO STA. 1109+10

USER: at5106
DESIGN FILE: G:\13106100_264toNHope\TRANSP\dgn\xsect\rCA0901_CX_01.dgn
PLOTTED: 1/13/2016 09:30
SCALE: 10:1
MODEL: CROSS SECTION SHEETS

Crafton, Tull & Associates Inc.

DATE REVISED	DATE FILMED	DATE REVISED	DATE FILMED

FED.RD. DIST.NO.	STATE	FED.AID PROJ.NO.	SHEET NO.	TOTAL SHEETS
6	ARK.			
JOB NO.		CA0901	262	452

2 CROSS SECTIONS

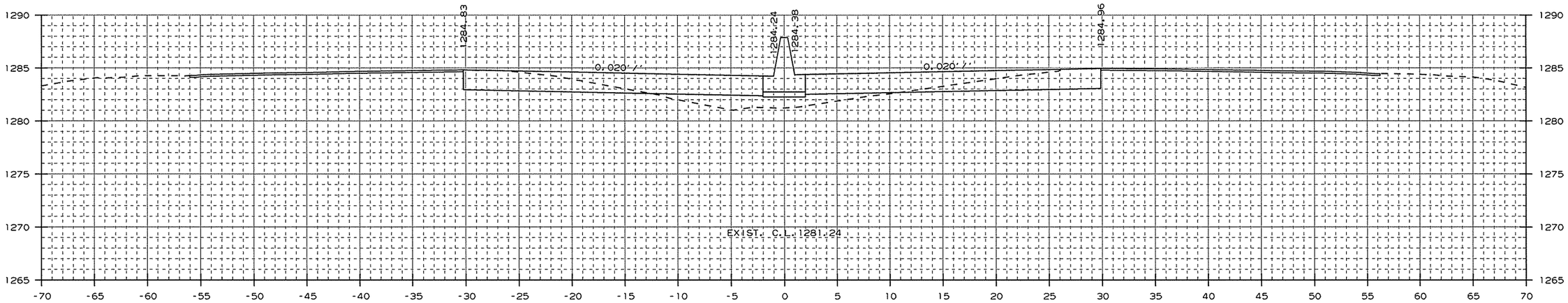

AREA CUT : 42.4
AREA FILL : 18.0

1111+00.00

CUT VOLUME : 162
FILL VOLUME : 64

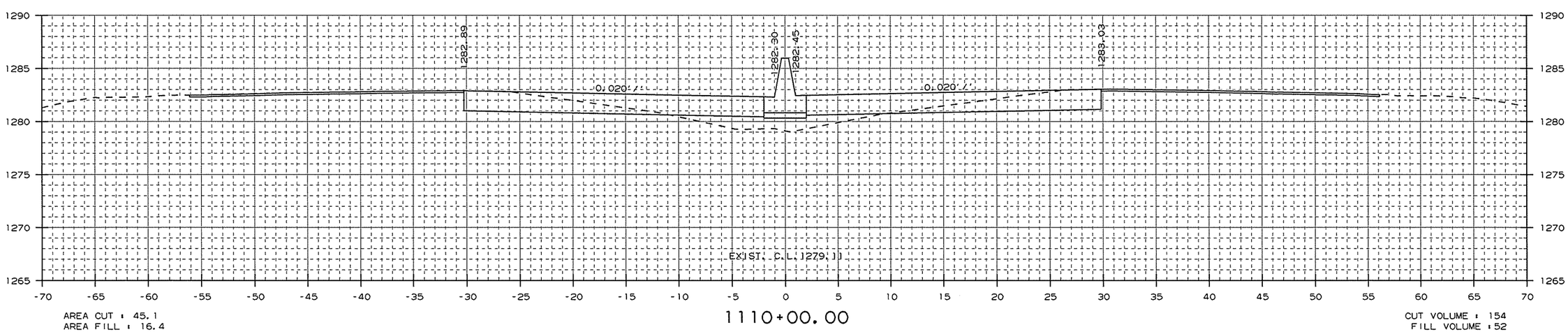

AREA CUT : 45.1
AREA FILL : 16.4

1110+00.00

CUT VOLUME : 154
FILL VOLUME : 52

CROSS SECTION STA. 1110+00 TO STA. 1111+00

USER: at5106
DESIGN FILE: G:\13106100_264toNHope\TRANSP\dgn\xsect\rCA0901_CX_01.dgn
PLOTTED: 1/13/2016 09:30
SCALE: 10:1
MODEL: CROSS SECTION SHEETS

Crafton, Tull & Associates Inc.

DATE REVISED	DATE FILMED	DATE REVISED	DATE FILMED

FED.RD. DIST.NO.	STATE	FED.AID PROJ.NO.	SHEET NO.	TOTAL SHEETS
6	ARK.			
JOB NO.		CA0901	263	452

2 CROSS SECTIONS

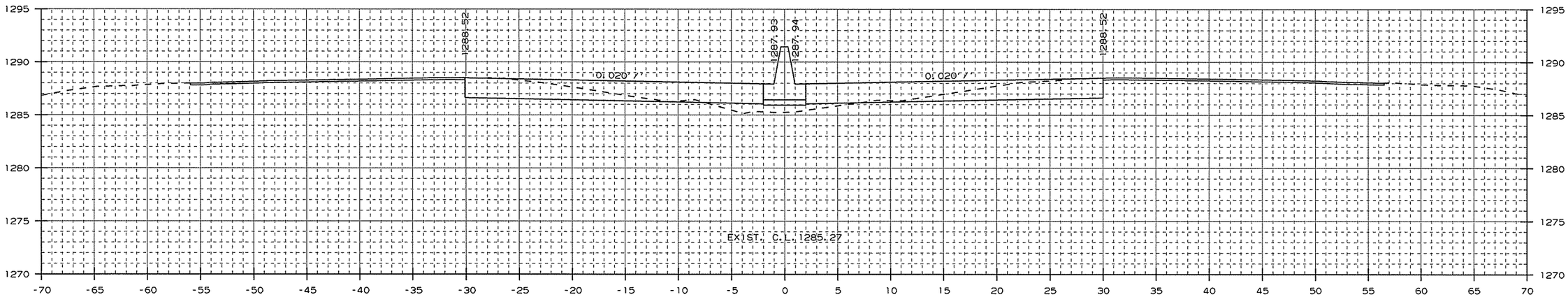

AREA CUT : 46.4
AREA FILL : 7.5

1113+00.00

CUT VOLUME : 167
FILL VOLUME : 41

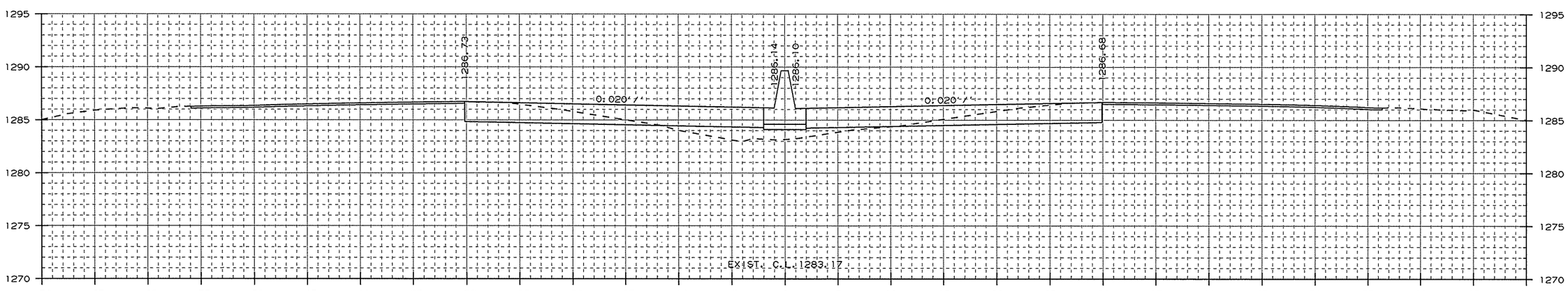

AREA CUT : 43.8
AREA FILL : 14.8

1112+00.00

CUT VOLUME : 160
FILL VOLUME : 61

CROSS SECTION STA. 1112+00 TO STA. 1113+00

USER: at5106
DESIGN FILE: G:\13106100_264toNHope\TRANSP\dgn\xsect\rCA0901_CX_01.dgn
PLOTTED: 1/13/2016 09:30
SCALE: 10:1
MODEL: CROSS SECTION SHEETS

Crafton, Tull & Associates Inc.	DATE REVISED	DATE FILMED	DATE REVISED	DATE FILMED	FED.RD. DIST.NO.	STATE	FED.AID PROJ.NO.	SHEET NO.	TOTAL SHEETS
					6	ARK.			
					JOB NO.		CA0901	264	452

(2) CROSS SECTIONS

STA. 1113+85 - CONSTRUCT
DROP INLET 4'-11" LT. OF C.L. H=3'11"
W/ 24" X 12' R.C. PIPE CULVERT
(CLASS IV) (TYPE 3 BEDDING)
CONNECT TO EXIST. DROP INLET
STA. 1113+71
TYPE ST DROP INLET = 4' X 6'
3 GRATES

STA. 1113+85 - CONSTRUCT
DROP INLET 4'-11" RT. OF C.L. H=3'9"
W/ 24" X 6' R.C. PIPE CULVERT
(CLASS IV) (TYPE 3 BEDDING)
CONNECT TO DROP INLET
STA. 1113+85 LT.
TYPE ST DROP INLET = 4' X 6'
3 GRATES

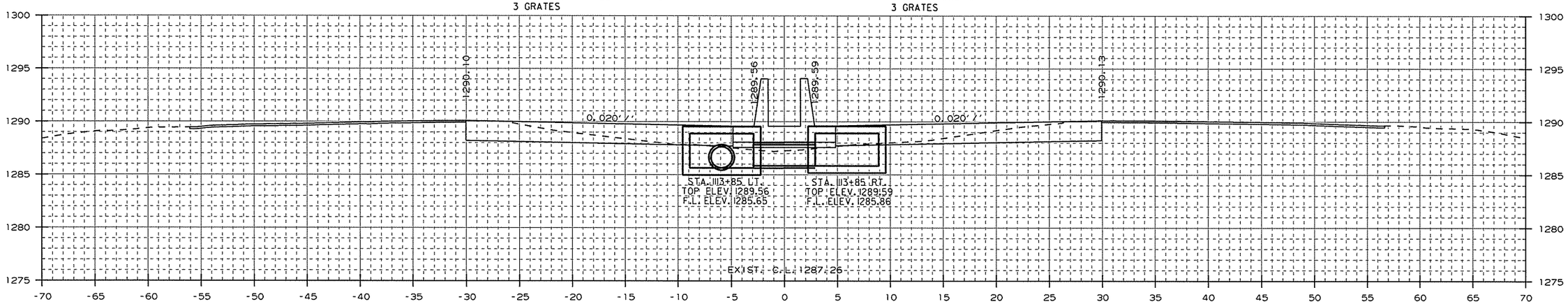

AREA CUT = 42.0
AREA FILL = 2.4

1113+85.00

CUT VOLUME = 22
FILL VOLUME = 2

STA. 1113+71 IN PLACE TYPE R
DROP INLET IN MEDIAN
W/ 18" X 91' R.C. PIPE OUTLET
TO RT. W/ FES
MODIFY

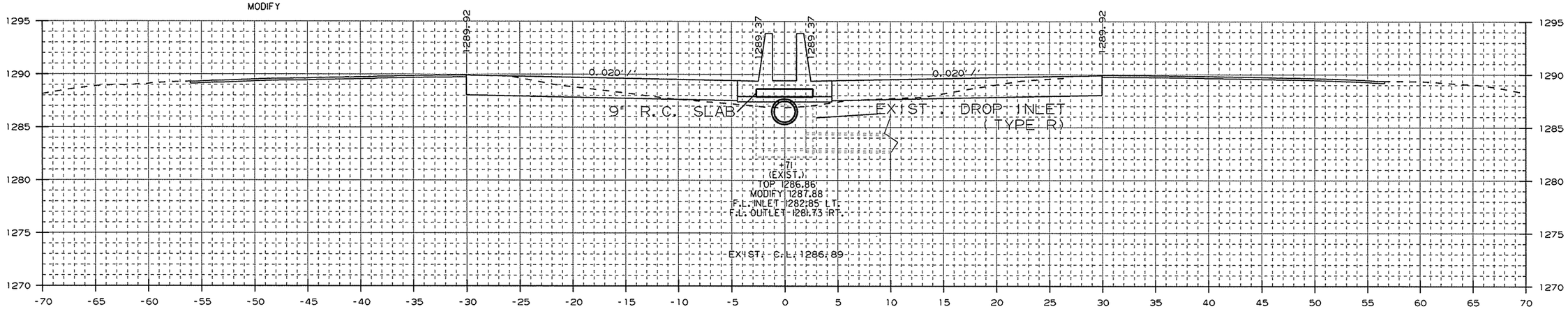

AREA CUT = 41.8
AREA FILL = 4.9

1113+71.00

CUT VOLUME = 116
FILL VOLUME = 16

CROSS SECTION STA. 1113+71 TO STA. 1113+85

USER: a+5106
DESIGN FILE: G:\13106100_264toNHope\TRANSP\dgn\xsect\rCA0901_CX_01.dgn
PLOTTED: 1/13/2016 09:30
SCALE: 10:1
MODEL: CROSS SECTION SHEETS

G:\13106100_264toNHope\TRANSP\dgn\xsect\rCA0901_CX_01.dgn 1/13/2016 09:30

Crafton, Tull & Associates Inc.

DATE REVISED	DATE FILMED	DATE REVISED	DATE FILMED

FED.RD. DIST.NO.	STATE	FED.AID PROJ.NO.	SHEET NO.	TOTAL SHEETS
6	ARK.			
JOB NO.		CA0901	265	452

2 CROSS SECTIONS

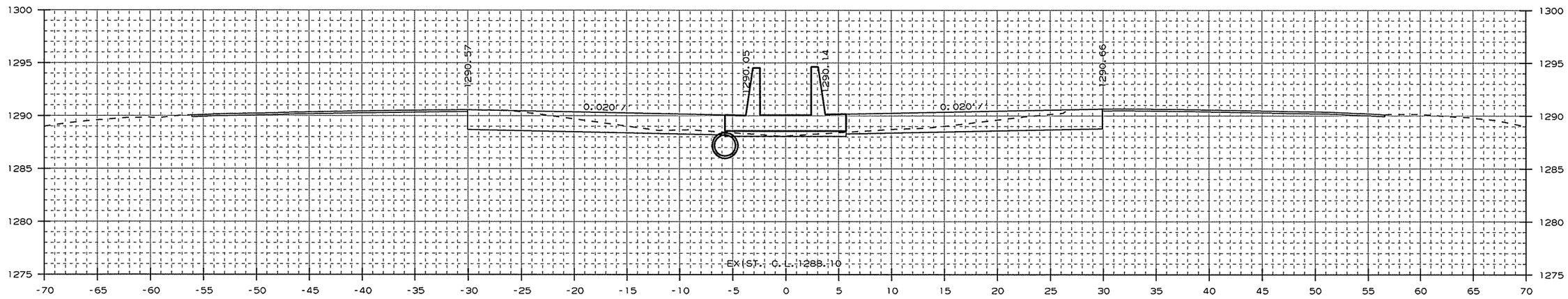

AREA CUT : 47.8
AREA FILL : 0.5

1114+17.11

CUT VOLUME : 29
FILL VOLUME : 0

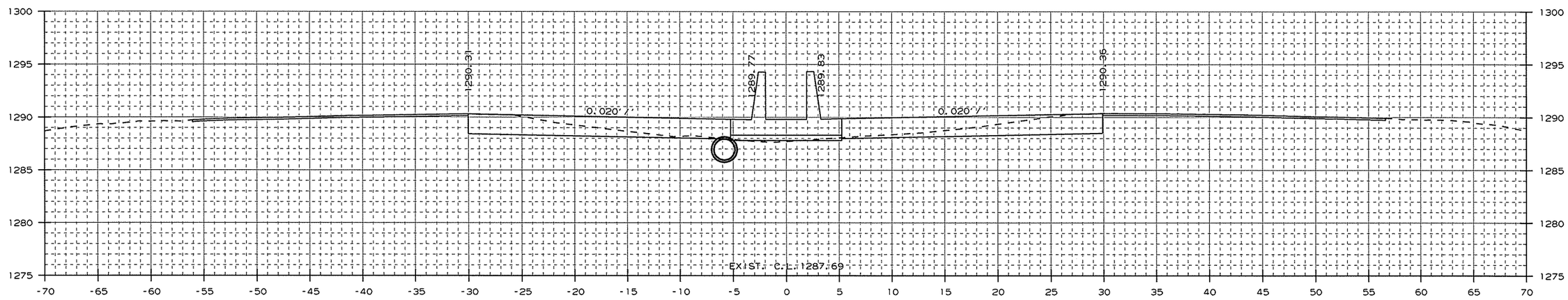

AREA CUT : 44.8
AREA FILL : 0.6

1114+00.00

CUT VOLUME : 24
FILL VOLUME : 1

CROSS SECTION STA. 1114+00 TO STA. 1114+17

USER: a15106
DESIGN FILE: G:\13106100_264toNHope\TRANSP\dgn\xsect\rCA0901_CX_01.dgn
PLOTTED: 1/13/2016 09:30
SCALE: 10:1
MODEL: CROSS SECTION SHEETS

Crafton, Tull & Associates Inc.

DATE REVISED	DATE FILMED	DATE REVISED	DATE FILMED

FED.RD. DIST.NO.	STATE	FED.AID PROJ.NO.	SHEET NO.	TOTAL SHEETS
6	ARK.			
JOB NO.		CA0901	266	452

2 CROSS SECTIONS

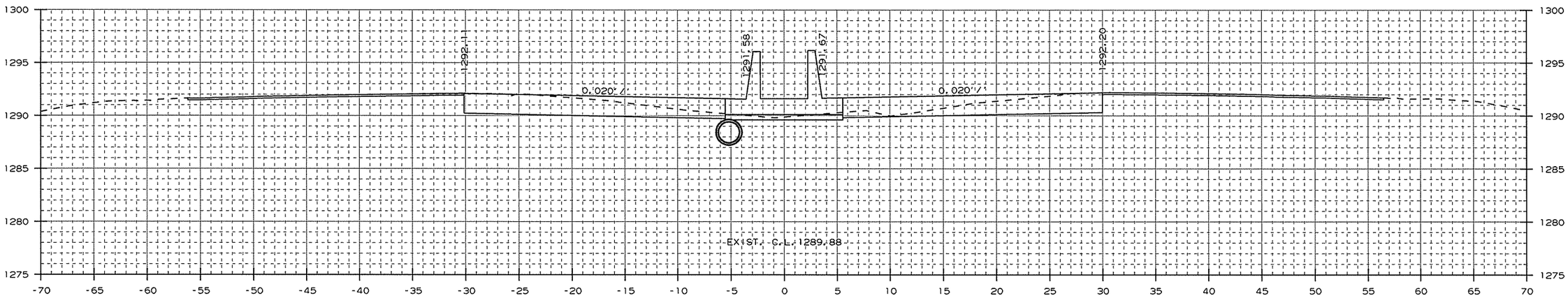

AREA CUT : 63.9
AREA FILL : 0.0

1115+00.00

CUT VOLUME : 16
FILL VOLUME : 0

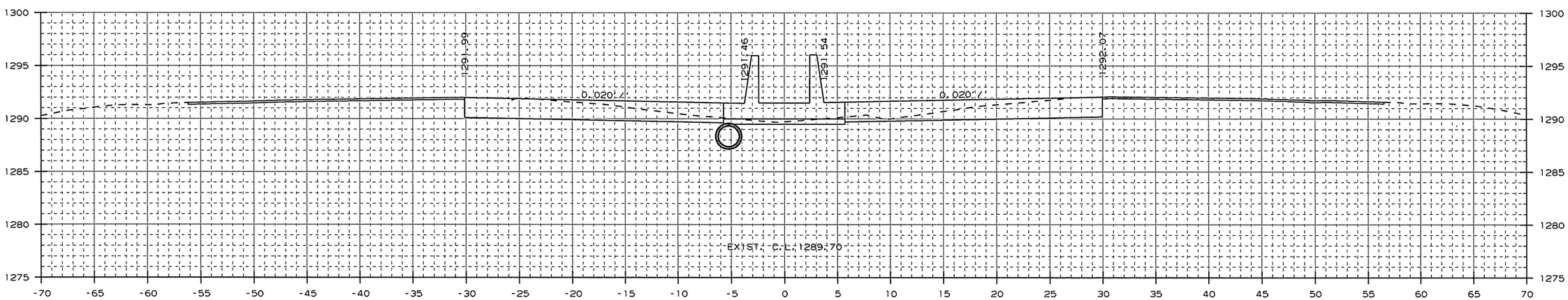

AREA CUT : 64.6
AREA FILL : 0.0

1114+93.46

CUT VOLUME : 159
FILL VOLUME : 1

CROSS SECTION STA. 1114+93 TO STA. 1115+00

USER: at5106
DESIGN FILE: G:\13106100_264toNHope\TRANSP\dgn\xsect\rCA0901_CX_01.dgn
PLOTTED: 1/13/2016 09:30
SCALE: 10:1
MODEL: CROSS SECTION SHEETS

Crafton, Tull & Associates Inc.

DATE REVISED	DATE FILMED	DATE REVISED	DATE FILMED

FED.RD. DIST.NO.	STATE	FED.AID PROJ.NO.	SHEET NO.	TOTAL SHEETS
6	ARK.			
JOB NO.		CA0901	267	452

2 CROSS SECTIONS

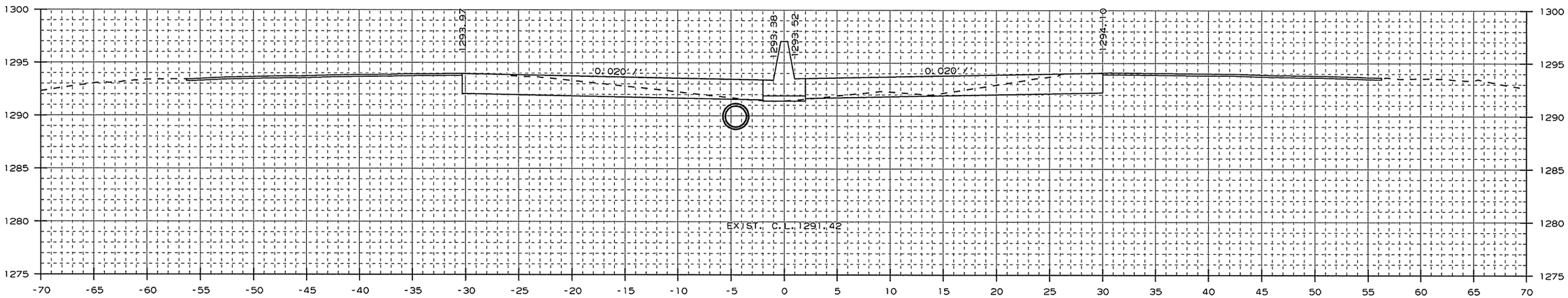

AREA CUT : 51.4
AREA FILL : 0.2

1116+00.00

CUT VOLUME : 13
FILL VOLUME : 0

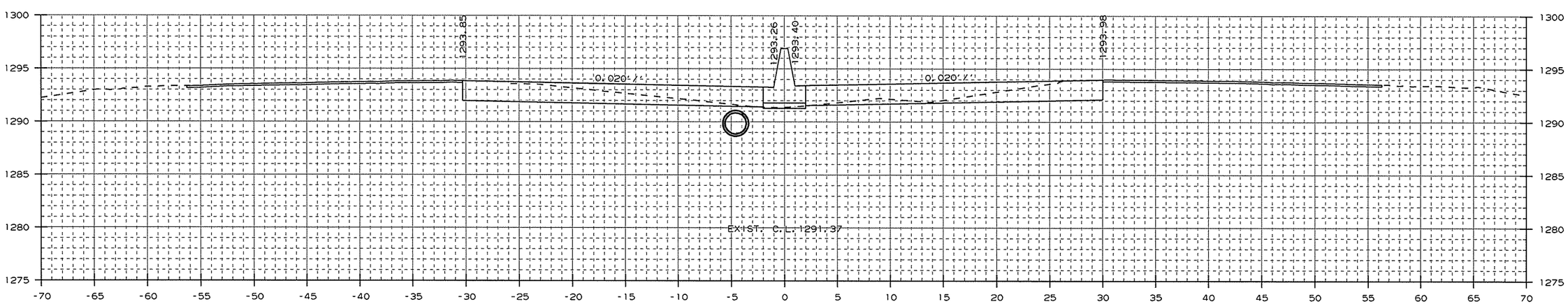

AREA CUT : 51.9
AREA FILL : 0.0

1115+93.46

CUT VOLUME : 200
FILL VOLUME : 0

CROSS SECTION STA. 1115+93 TO STA. 1116+00

USER: a+5106
DESIGN FILE: G:\13106100_264toNHope\TRANSP\dgn\xsect\rCA0901_CX_01.dgn
PLOTTED: 1/13/2016 09:30
SCALE: 10:1
MODEL: CROSS SECTION SHEETS

Crafton, Tull & Associates Inc.

DATE REVISED	DATE FILMED	DATE REVISED	DATE FILMED

FED.RD. DIST.NO.	STATE	FED.AID PROJ.NO.	SHEET NO.	TOTAL SHEETS
6	ARK.			
JOB NO.		CA0901	268	452

2 CROSS SECTIONS

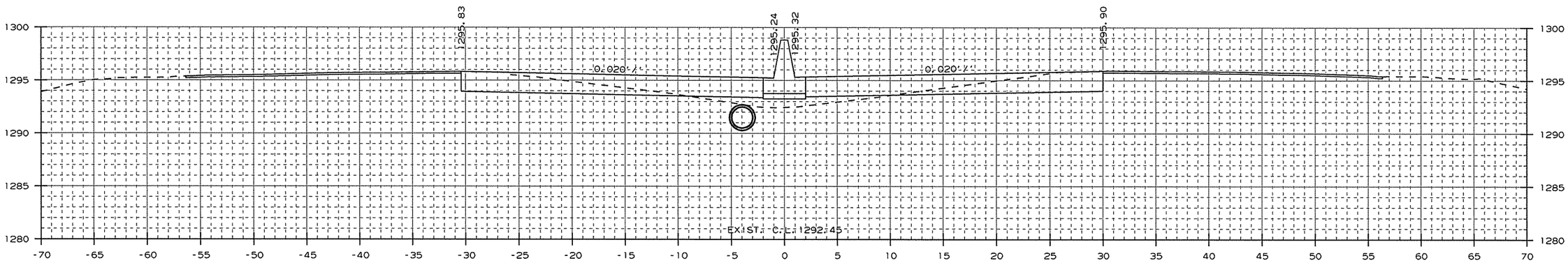

AREA CUT : 45.4
AREA FILL : 10.3

1117+00.00

CUT VOLUME : 25
FILL VOLUME : 5

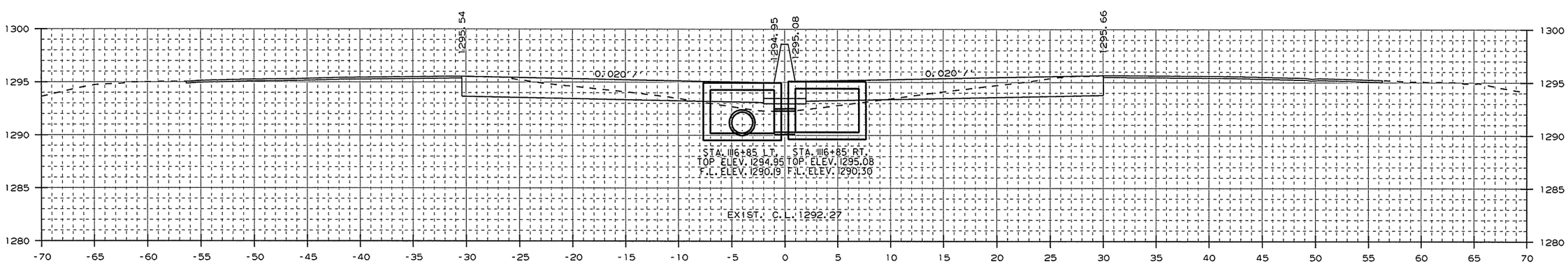

AREA CUT : 46.1
AREA FILL : 8.6

STA. 1116+85 - CONSTRUCT
DROP INLET 3' LT. OF C.L. H=4'9"
W/ 24" x 296' R.C. PIPE CULVERT
(CLASS IV) (TYPE 3 BEDDING)
CONNECT TO DROP INLET
STA. 1113+85 LT.
TYPE ST DROP INLET = 4' X 6'
3 GRATES

1116+85.00

STA. 1116+85 - CONSTRUCT
DROP INLET 3' RT. OF C.L. H=4'9"
W/ 24" x 2' R.C. PIPE CULVERT
(CLASS III) (TYPE 3 BEDDING)
CONNECT TO DROP INLET
STA. 1116+85 LT.
TYPE ST DROP INLET = 4' X 6'
3 GRATES

CUT VOLUME : 153
FILL VOLUME : 14

CROSS SECTION STA. 1116+85 TO STA. 1117+00

USER: ct5106
DESIGN FILE: G:\13106100_264toNHope\TRANSP\dgn\xsect\rCA0901_CX_01.dgn
PLOTTED: 1/13/2016 09:30
SCALE: 10:1
MODEL: CROSS SECTION SHEETS

Crafton, Tull & Associates Inc.

DATE REVISED	DATE FILMED	DATE REVISED	DATE FILMED

FED.RD. DIST.NO.	STATE	FED.AID PROJ.NO.	SHEET NO.	TOTAL SHEETS
6	ARK.			
JOB NO.		CA0901	269	452

2 CROSS SECTIONS

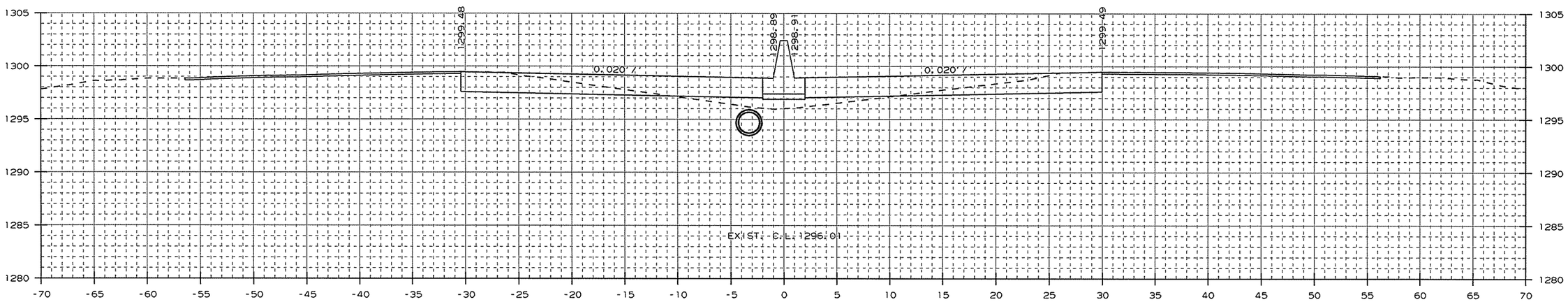

AREA CUT : 42.0
AREA FILL : 11.9

1119+00.00

CUT VOLUME : 163
FILL VOLUME : 43

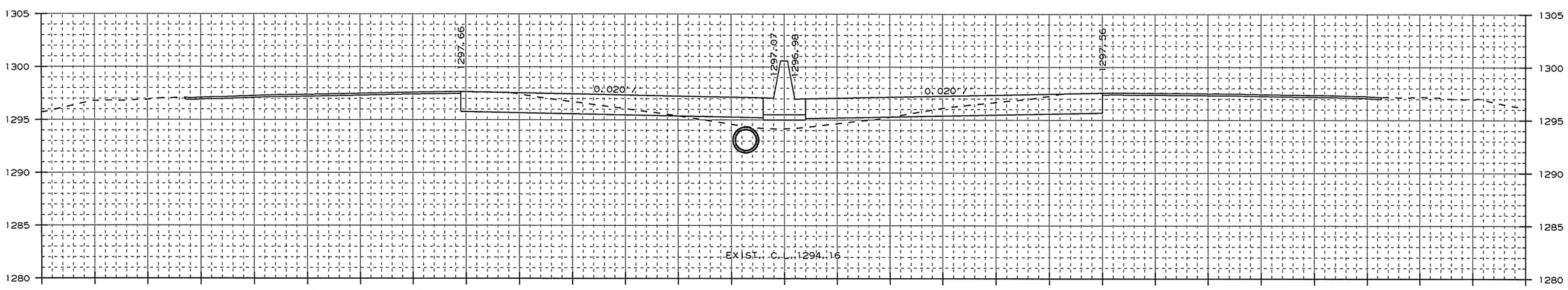

AREA CUT : 45.9
AREA FILL : 11.2

1118+00.00

CUT VOLUME : 169
FILL VOLUME : 40

CROSS SECTION STA. 1118+00 TO STA. 1119+00

USER: a15106
DESIGN FILE: G:\13106100_264toNHope\TRANSP\dgn\xsect\rCA0901_CX_01.dgn
PLOTTED: 1/13/2016 09:30
SCALE: 10:1
MODEL: CROSS SECTION SHEETS

Crafton, Tull & Associates Inc.

DATE REVISED	DATE FILMED	DATE REVISED	DATE FILMED

FED.RD. DIST.NO.	STATE	FED.AID PROJ.NO.	SHEET NO.	TOTAL SHEETS
6	ARK.			
JOB NO.		CA0901	270	452

2 CROSS SECTIONS

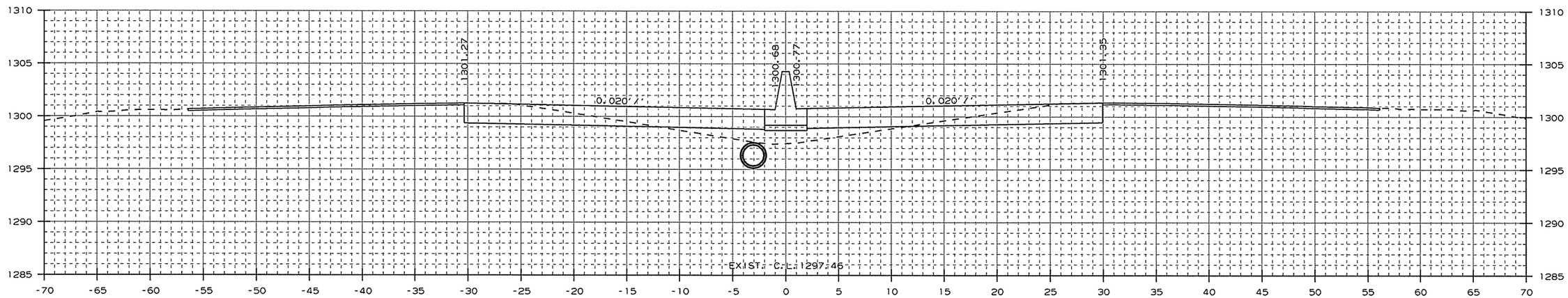

AREA CUT : 43.0
AREA FILL : 17.8

1120+00.00

CUT VOLUME : 24
FILL VOLUME : 10

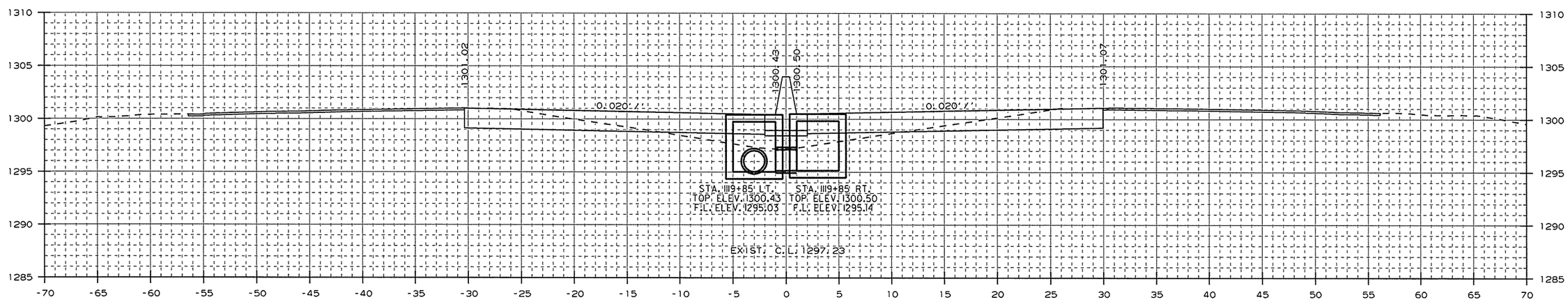

AREA CUT : 42.8
AREA FILL : 17.3

STA. 1119+85 - CONSTRUCT
DROP INLET 3' LT. OF C.L. H=5'5"
W/ 24" x 296' R.C. PIPE CULVERT
(CLASS III) (TYPE 3 BEDDING)
CONNECT TO DROP INLET
STA. 1116+85 LT.
TYPE ST DROP INLET = 4' X 4'

1119+85.00

STA. 1119+85 - CONSTRUCT
DROP INLET 3' RT. OF C.L. H=5'4"
W/ 24" x 2' R.C. PIPE CULVERT
(CLASS III) (TYPE 3 BEDDING)
CONNECT TO DROP INLET
STA. 1119+85 LT.
TYPE ST DROP INLET = 4' X 4'

CUT VOLUME : 133
FILL VOLUME : 46

CROSS SECTION STA. 1119+85 TO STA. 1120+00

USER: at5106
DESIGN FILE: G:\13106100_264toNHope\TRANSP\dgn\xsect\rCA0901_CX_01.dgn
PLOTTED: 1/13/2016 09:30
SCALE: 10:1
MODEL: CROSS SECTION SHEETS

Crafton, Tull & Associates Inc.

DATE REVISED	DATE FILMED	DATE REVISED	DATE FILMED

FED.RD. DIST.NO.	STATE	FED.AID PROJ.NO.	SHEET NO.	TOTAL SHEETS
6	ARK.			
JOB NO.		CA0901	271	452

2 CROSS SECTIONS

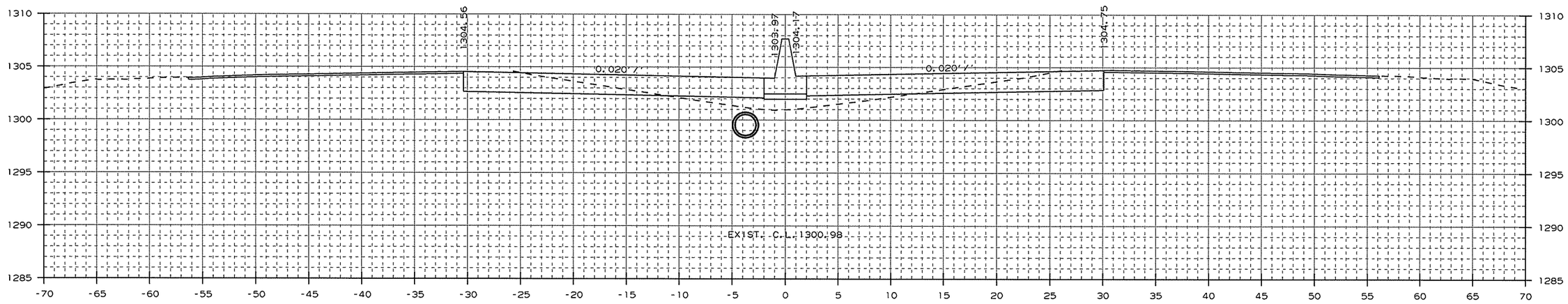

AREA CUT : 42.8
AREA FILL : 15.7

1122+00.00

CUT VOLUME : 154
FILL VOLUME : 69

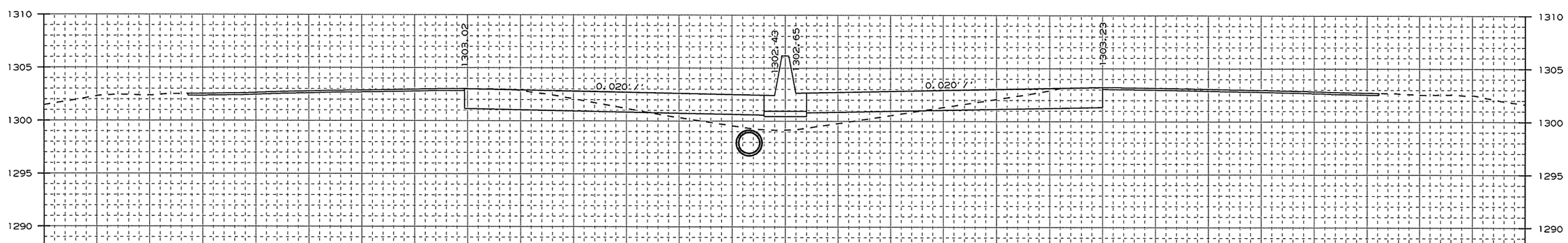

AREA CUT : 40.3
AREA FILL : 21.4

1121+00.00

CUT VOLUME : 154
FILL VOLUME : 73

CROSS SECTION STA. 1121+00 TO STA. 1122+00

USER: at5106
DESIGN FILE: G:\13106100_264toNHope\TRANSP\dgn\xsect\rCA0901_CX_01.dgn MODEL: CROSS SECTION SHEETS
PLOTTED: 1/13/2016 09:30 SCALE: 10:1

Crafton, Tull & Associates Inc.

DATE REVISED	DATE FILMED	DATE REVISED	DATE FILMED

FED.RD. DIST.NO.	STATE	FED.AID PROJ.NO.	SHEET NO.	TOTAL SHEETS
6	ARK.			
JOB NO.		CA0901	272	452

2 CROSS SECTIONS

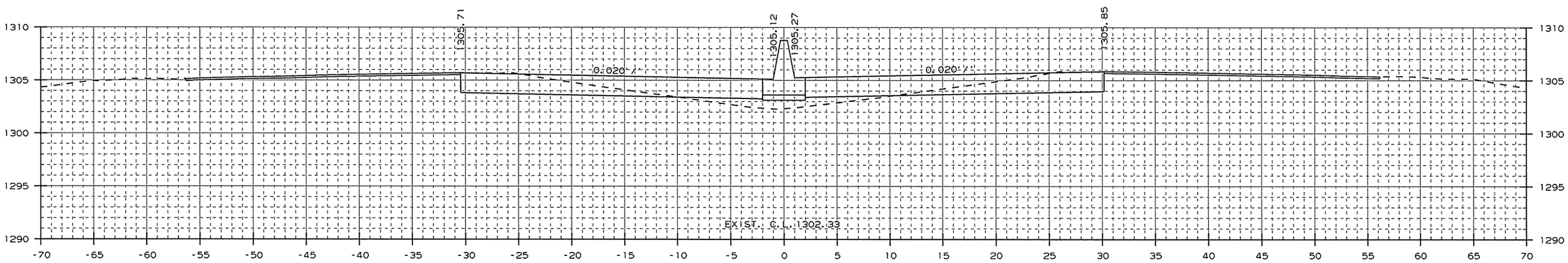

AREA CUT : 46.2
AREA FILL : 10.7

1123+00.00

CUT VOLUME : 26
FILL VOLUME : 6

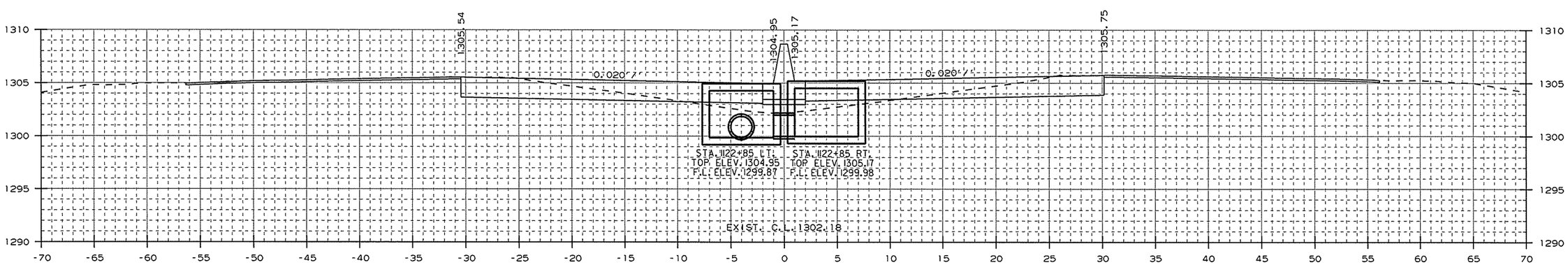

AREA CUT : 46.1
AREA FILL : 10.8

STA. 1122+85 - CONSTRUCT
DROP INLET 3' LT. OF C.L. H=5'1"
W/ 24" x 296' R.C. PIPE CULVERT
(CLASS III) (TYPE 3 BEDDING)
CONNECT TO DROP INLET
STA. 1119+85 LT.
TYPE ST DROP INLET = 4' X 6'
3 GRATES

1122+85.00

STA. 1122+85 - CONSTRUCT
DROP INLET 3' RT. OF C.L. H=5'2"
W/ 24" x 2' R.C. PIPE CULVERT
(CLASS III) (TYPE 3 BEDDING)
CONNECT TO DROP INLET
STA. 1122+85 LT.
TYPE ST DROP INLET = 4' X 6'
3 GRATES

CUT VOLUME : 140
FILL VOLUME : 42

CROSS SECTION STA. 1122+85 TO STA. 1123+00

USER: a15106
DESIGN FILE: G:\13106100_264toNHope\TRANSP\dgn\xsect\rCA0901_CX_01.dgn
PLOTTED: 1/13/2016 09:30
SCALE: 1:01
MODEL: CROSS SECTION SHEETS

Crafton, Tull & Associates Inc.

DATE REVISED	DATE FILMED	DATE REVISED	DATE FILMED

FED.RD. DIST.NO.	STATE	FED.AID PROJ.NO.	SHEET NO.	TOTAL SHEETS
6	ARK.			
JOB NO.		CA0901	273	452

2 CROSS SECTIONS

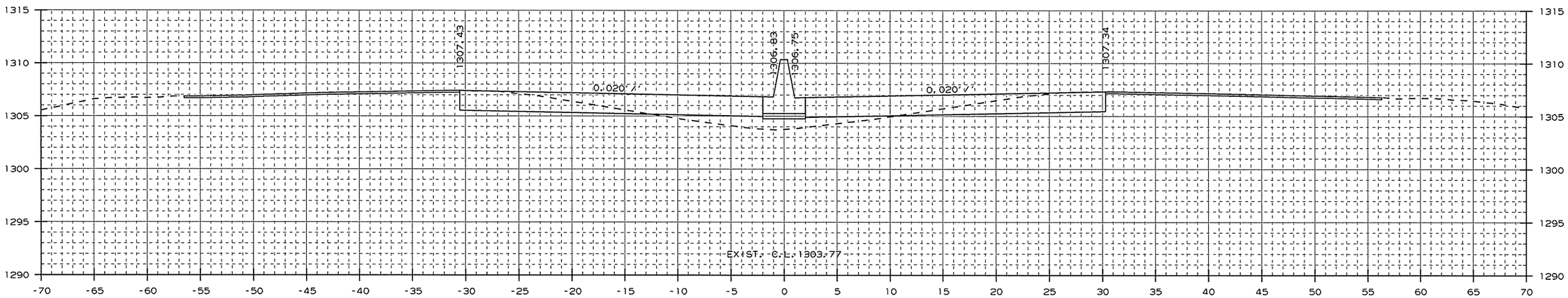

AREA CUT : 44.3
AREA FILL : 15.3

1125+00.00

CUT VOLUME : 166
FILL VOLUME : 51

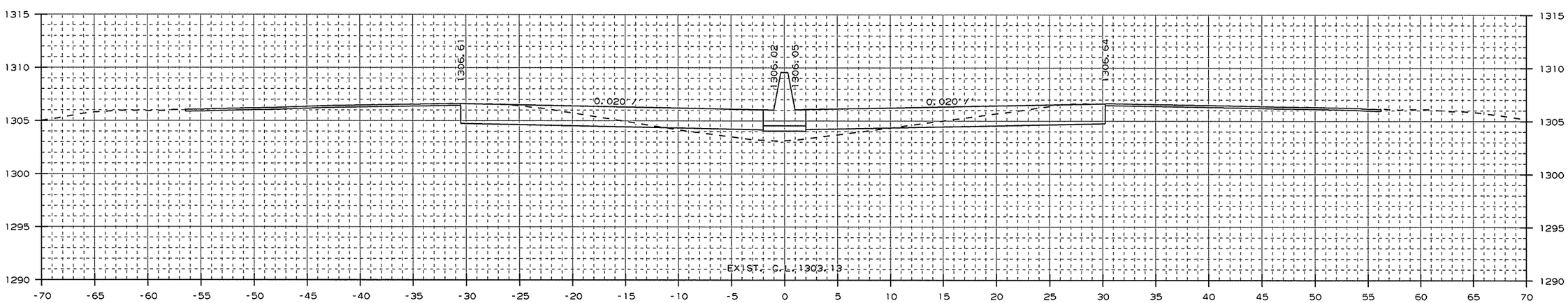

AREA CUT : 45.5
AREA FILL : 12.2

1124+00.00

CUT VOLUME : 170
FILL VOLUME : 42

CROSS SECTION STA. 1124+00 TO STA. 1125+00

USER: at5106
DESIGN FILE: G:\13106100_264toNHope\TRANSP\dgn\xsect\rCA0901_CX_01.dgn
PLOTTED: 1/13/2016 09:30
SCALE: 10:1
MODEL: CROSS SECTION SHEETS

Crafton, Tull & Associates Inc.

DATE REVISED	DATE FILMED	DATE REVISED	DATE FILMED

FED.RD. DIST.NO.	STATE	FED.AID PROJ.NO.	SHEET NO.	TOTAL SHEETS
6	ARK.			
JOB NO.		CA0901	274	452

2 CROSS SECTIONS

STA. 1125+85 IN PLACE TRIPLE
6' X 4' X 44' R.C. BOX CULVERT
(23° RT. FWD. SKEW) RETAIN
(SPAN 20'-4")

STA. 1125+85 IN PLACE
TYPE T DROP INLET
IN MEDIAN
MODIFY

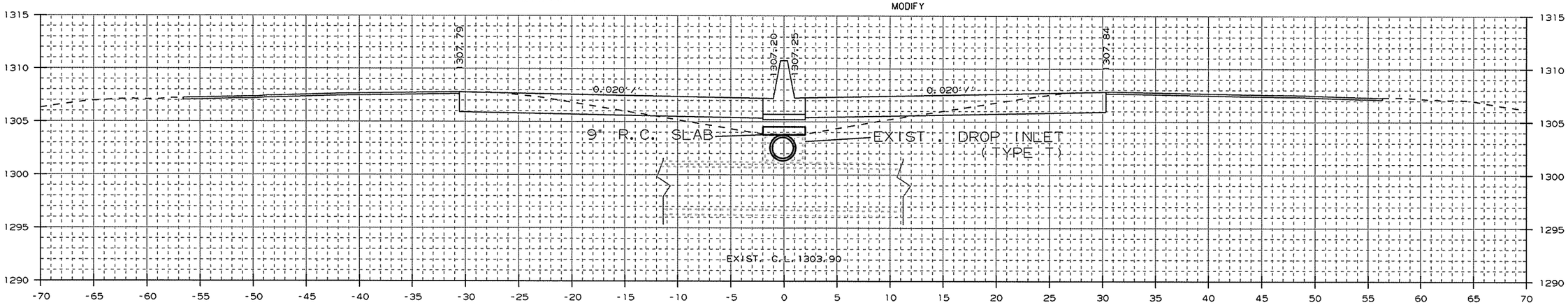

AREA CUT : 42.5
AREA FILL : 21.0

1125+85.00

CUT VOLUME : 116
FILL VOLUME : 49

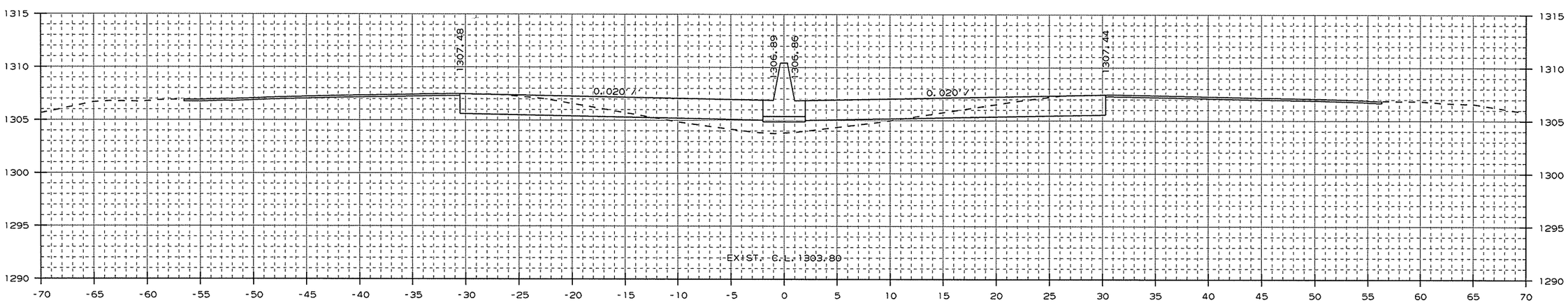

AREA CUT : 44.5
AREA FILL : 16.1

1125+13.00

CUT VOLUME : 21
FILL VOLUME : 8

CROSS SECTION STA. 1125+13 TO STA. 1125+85

USER: at5106
DESIGN FILE: G:\13106100_264toNHope\TRANSP\dgn\xsect\rCA0901_CX_01.dgn
PLOTTED: 1/13/2016 09:30
SCALE: 10:1
MODEL: CROSS SECTION SHEETS

Crafton, Tull & Associates Inc.

DATE REVISED	DATE FILMED	DATE REVISED	DATE FILMED

FED.RD. DIST.NO.	STATE	FED.AID PROJ.NO.	SHEET NO.	TOTAL SHEETS
6	ARK.			
JOB NO.		CA0901	275	452

2 CROSS SECTIONS

STA. 1126+15 - CONSTRUCT
DROP INLET 3' LT. OF C.L. H=5'8"
W/ 24" x 24' R.C. PIPE CULVERT
(CLASS III) (TYPE 3 BEDDING)
CONNECT TO EXIST. DROP INLET
STA. 1125+85
TYPE ST DROP INLET = 4' X 6'
3 GRATES

STA. 1126+15 - CONSTRUCT
DROP INLET 3' RT. OF C.L. H=5'7"
W/ 24" x 2' R.C. PIPE CULVERT
(CLASS III) (TYPE 3 BEDDING)
CONNECT TO DROP INLET
STA. 1126+15 LT.
TYPE ST DROP INLET = 4' X 6'
3 GRATES

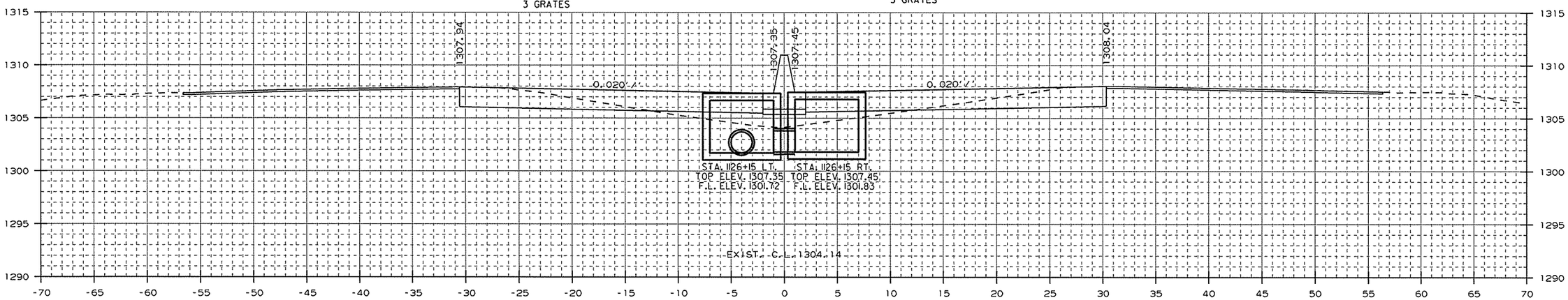

AREA CUT : 41.2
AREA FILL : 18.2

1126+15.00

CUT VOLUME : 23
FILL VOLUME : 10

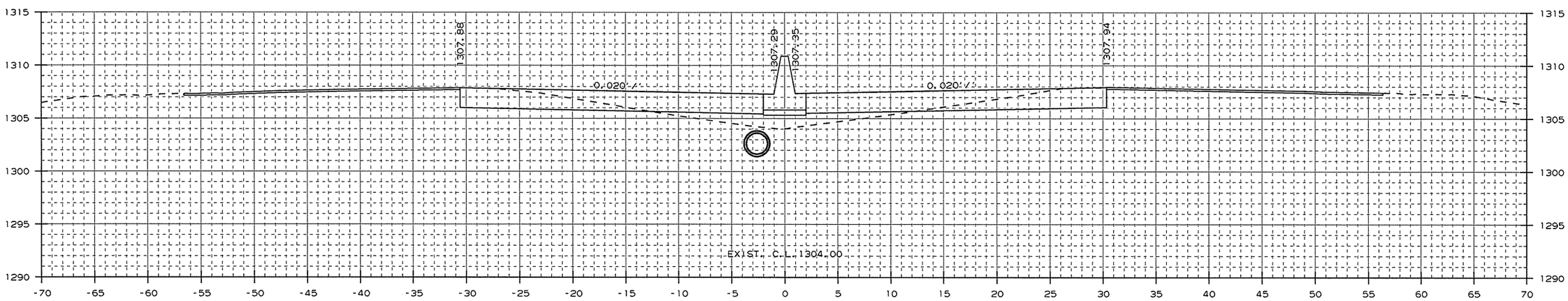

AREA CUT : 41.4
AREA FILL : 18.4

1126+00.00

CUT VOLUME : 23
FILL VOLUME : 11

CROSS SECTION STA. 1126+00 TO STA. 1126+15

USER: a15106
DESIGN FILE: G:\13106100_264toNHope\TRANSP\dgn\xsect\rCA0901_CX_01.dgn
PLOTTED: 1/13/2016 09:30
SCALE: 10:1
MODEL: CROSS SECTION SHEETS

Crafton, Tull & Associates Inc.

DATE REVISED	DATE FILMED	DATE REVISED	DATE FILMED

FED.RD. DIST.NO.	STATE	FED.AID PROJ.NO.	SHEET NO.	TOTAL SHEETS
6	ARK.			
JOB NO.		CA0901	276	452

2 CROSS SECTIONS

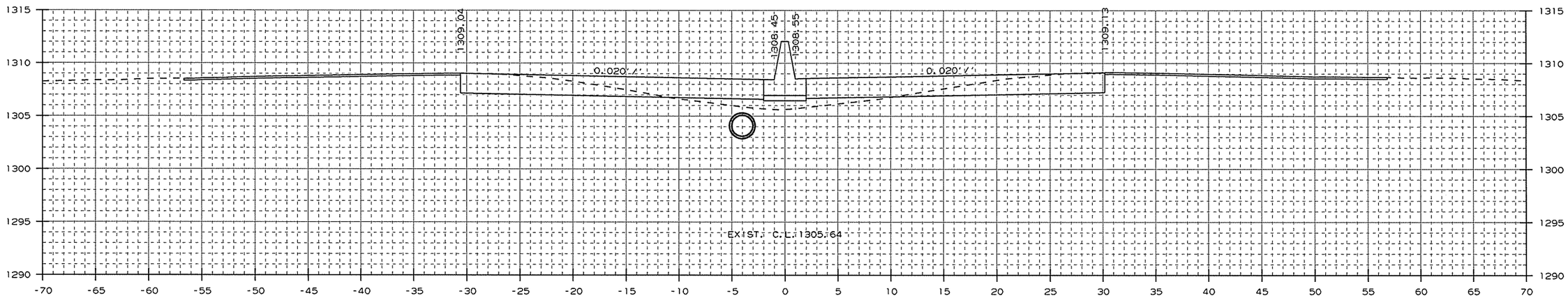

AREA CUT : 48.4
AREA FILL : 11.5

1128+00.00

CUT VOLUME : 173
FILL VOLUME : 52

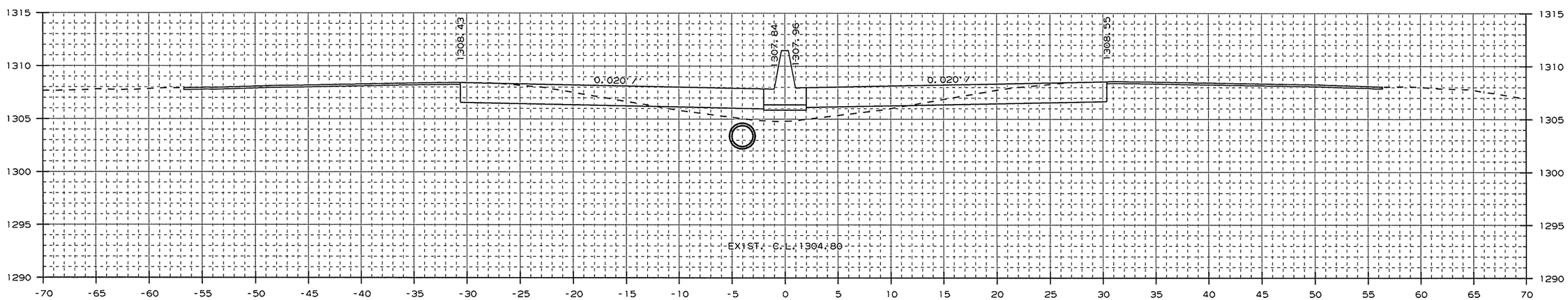

AREA CUT : 45.2
AREA FILL : 16.4

1127+00.00

CUT VOLUME : 136
FILL VOLUME : 54

CROSS SECTION STA. 1127+00 TO STA. 1128+00

USER: at5106
DESIGN FILE: G:\13106100_264toNHope\TRANSP\dgn\xsect\rCA0901_CX_01.dgn
PLOTTED: 1/13/2016 09:30
SCALE: 101
MODEL: CROSS SECTION SHEETS

Crafton, Tull & Associates Inc.

DATE REVISED	DATE FILMED	DATE REVISED	DATE FILMED

FED.RD. DIST.NO.	STATE	FED.AID PROJ.NO.	SHEET NO.	TOTAL SHEETS
6	ARK.			
JOB NO.		CA0901	277	452

2 CROSS SECTIONS

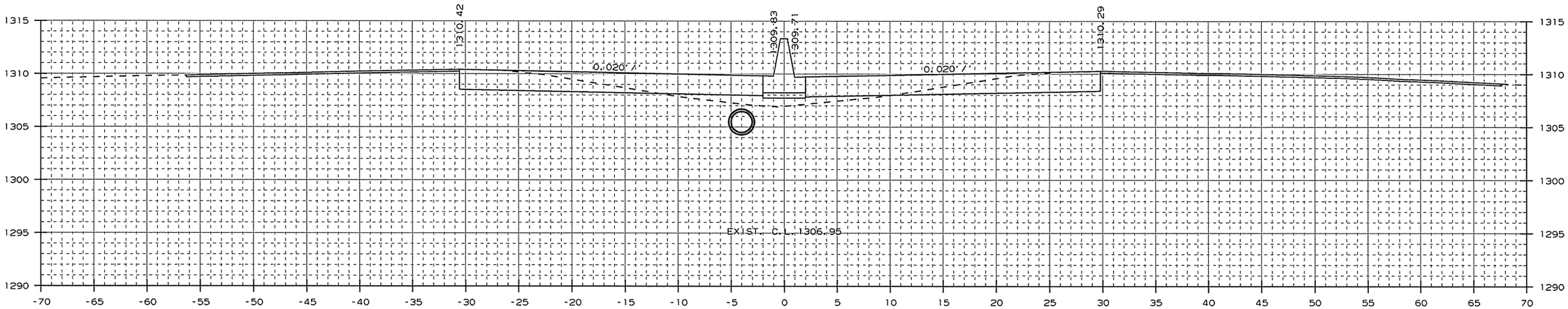

AREA CUT : 46.2
AREA FILL : 11.5

1130+00.00

CUT VOLUME : 172
FILL VOLUME : 45

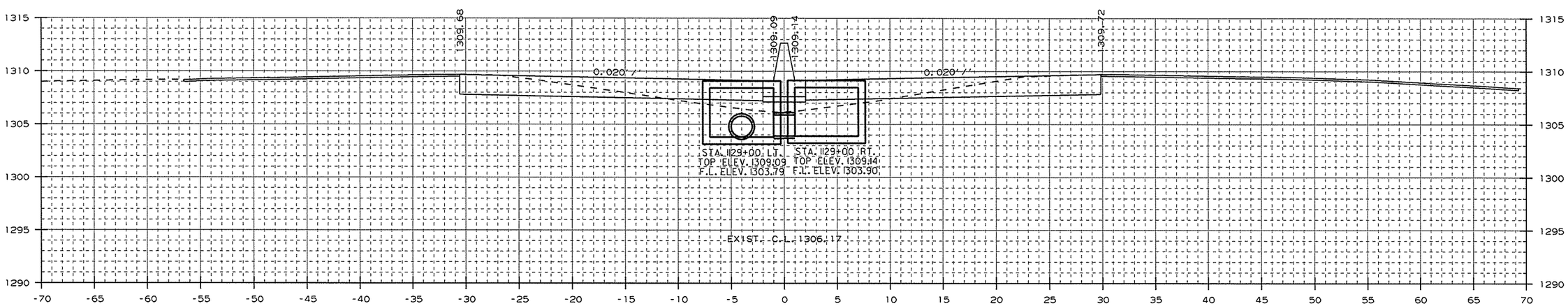

AREA CUT : 46.7
AREA FILL : 12.7

STA. 1129+00 - CONSTRUCT
DROP INLET 3' LT. OF C.L. H=5'4"
W/ 24" x 281' R.C. PIPE CULVERT
(CLASS III) (TYPE 3 BEDDING)
CONNECT TO EXIST DROP INLET
STA. 1126+15 LT.
TYPE ST DROP INLET = 4' X 6'
3 GRATES

1129+00.00

STA. 1129+00 - CONSTRUCT
DROP INLET 3' RT. OF C.L. H=5'3"
W/ 24" x 2' R.C. PIPE CULVERT
(CLASS III) (TYPE 3 BEDDING)
CONNECT TO DROP INLET
STA. 1129+00 LT.
TYPE ST DROP INLET = 4' X 6'
3 GRATES

CUT VOLUME : 176
FILL VOLUME : 45

CROSS SECTION STA. 1129+00 TO STA. 1130+00

USER: at5106
DESIGN FILE: G:\13106100_264toNHope\TRANSP\dgn\xsect\rCA0901_CX_01.dgn
PLOTTED: 1/13/2016 09:31
SCALE: 10:1
MODEL: CROSS SECTION SHEETS

Crafton, Tull & Associates Inc.

DATE REVISED	DATE FILMED	DATE REVISED	DATE FILMED

FED.RD. DIST.NO.	STATE	FED.AID PROJ.NO.	SHEET NO.	TOTAL SHEETS
6	ARK.			
JOB NO.		CA0901	278	452

2 CROSS SECTIONS

STA. 1132+00 - CONSTRUCT
DROP INLET 3' LT. OF C.L. H=5'4"
W/ 24" x 296' R.C. PIPE CULVERT
(CLASS III) (TYPE 3 BEDDING)
CONNECT TO DROP INLET
STA. 1129+00 LT.
TYPE ST DROP INLET = 4' X 6'
3 GRATES

STA. 1132+00 - CONSTRUCT
DROP INLET 3' RT. OF C.L. H=5'3"
W/ 24" x 2' R.C. PIPE CULVERT
(CLASS III) (TYPE 3 BEDDING)
CONNECT TO DROP INLET
STA. 1132+00 LT.
TYPE ST DROP INLET = 4' X 6'
3 GRATES

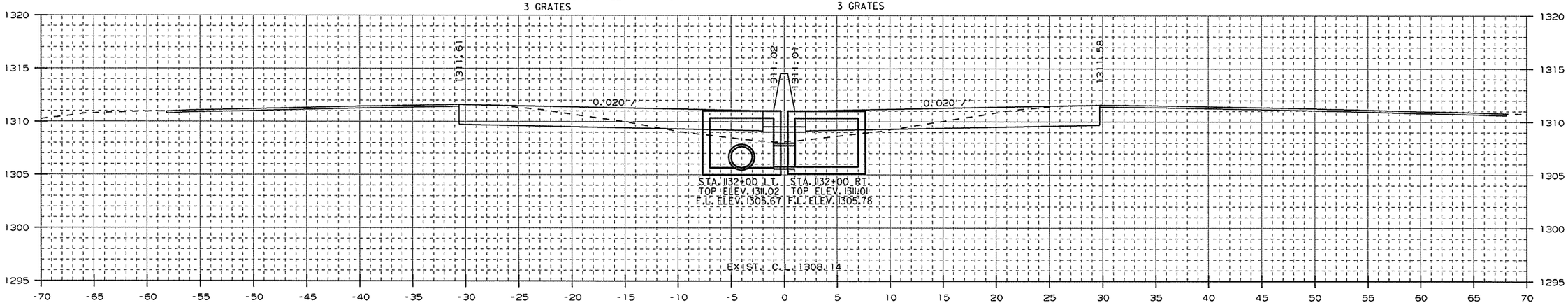

AREA CUT : 46.2
AREA FILL : 12.6

1132+00.00

CUT VOLUME : 172
FILL VOLUME : 42

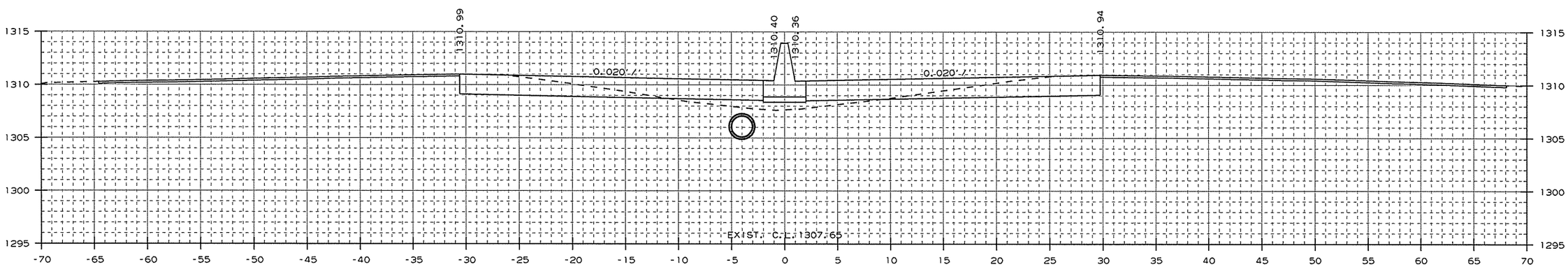

AREA CUT : 46.7
AREA FILL : 9.9

1131+00.00

CUT VOLUME : 172
FILL VOLUME : 40

CROSS SECTION STA. 1131+00 TO STA. 1132+00

USER: a15106
DESIGN FILE: G:\13106100_264toNHope\TRANSP\dgn\xsect\rCA0901_CX_01.dgn
PLOTTED: 1/13/2016 09:31
SCALE: 10:1
MODEL: CROSS SECTION SHEETS

Crafton, Tull & Associates Inc.

DATE REVISED	DATE FILMED	DATE REVISED	DATE FILMED

FED.RD. DIST.NO.	STATE	FED.AID PROJ.NO.	SHEET NO.	TOTAL SHEETS
6	ARK.			
JOB NO.		CA0901	279	452

2 CROSS SECTIONS

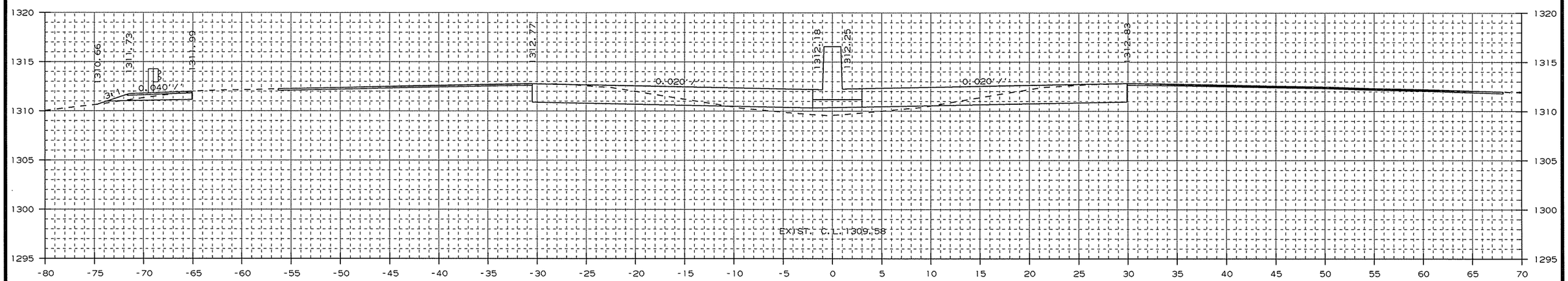

AREA CUT : 48.9
AREA FILL : 9.4

1134+00.00

CUT VOLUME : 180
FILL VOLUME : 35

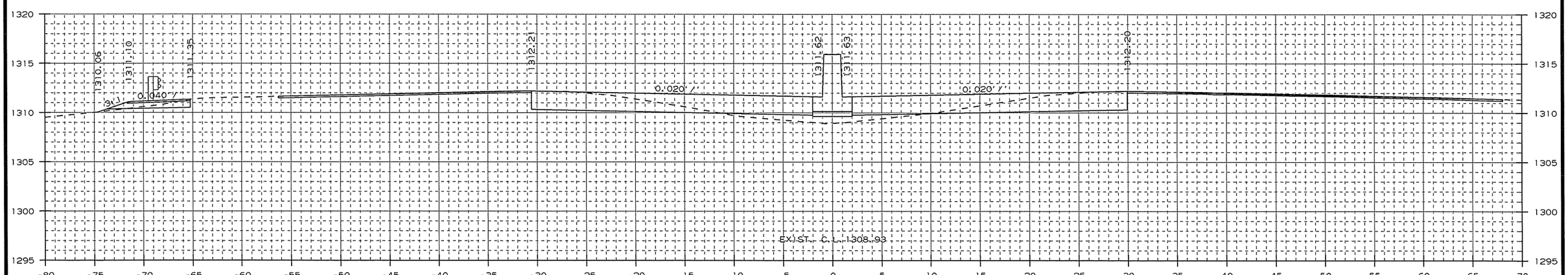

AREA CUT : 48.1
AREA FILL : 9.4

1133+00.00

CUT VOLUME : 175
FILL VOLUME : 41

CROSS SECTION STA. 1133+00 TO STA. 1134+00

USER: fs513
DESIGN FILE: G:\13106100_264toNHope\TRANSP\dgn\xsect\r-CA0901_CX_01.dgn
PLOTTED: 2/8/2016 07:45
SCALE: 10:1
MODEL: CROSS SECTION SHEETS

Crafton, Tull & Associates Inc.

DATE REVISED	DATE FILMED	DATE REVISED	DATE FILMED

FED.RD. DIST.NO.	STATE	FED.AID PROJ.NO.	SHEET NO.	TOTAL SHEETS
6	ARK.			
JOB NO.		CA0901	280	452

2 CROSS SECTIONS

STA. 1135+15 - CONSTRUCT
DROP INLET 3' LT. OF C.L. H=5'7"
W/ 24" x 12' R.C. PIPE CULVERT
(CLASS III) (TYPE 3 BEDDING)
CONNECT TO EXIST. DROP INLET
STA. 1135+00
TYPE ST DROP INLET = 4' X 4'

STA. 1135+15 - CONSTRUCT
DROP INLET 3' RT. OF C.L. H=5'6"
W/ 24" x 2' R.C. PIPE CULVERT
(CLASS III) (TYPE 3 BEDDING)
CONNECT TO DROP INLET
STA. 1135+15 LT.
TYPE ST DROP INLET = 4' X 4'

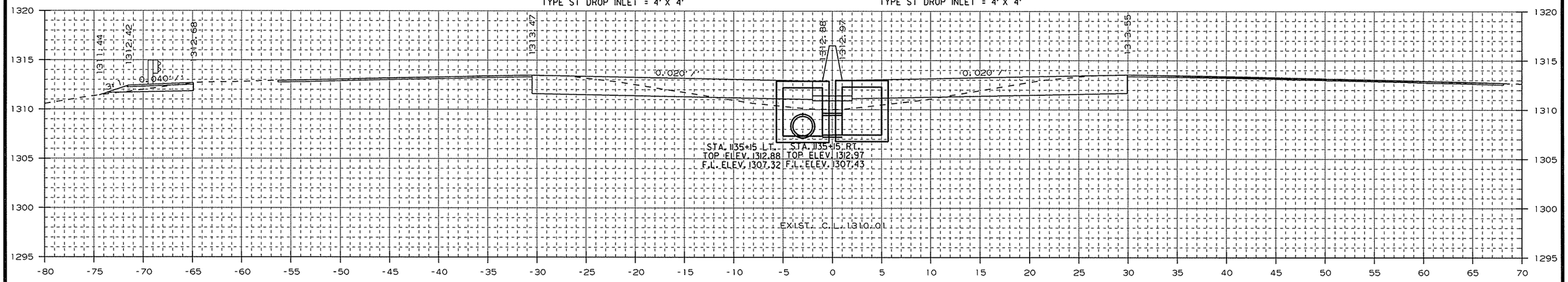

AREA CUT : 44.5
AREA FILL : 13.9

1135+15.00

CUT VOLUME : 25
FILL VOLUME : 8

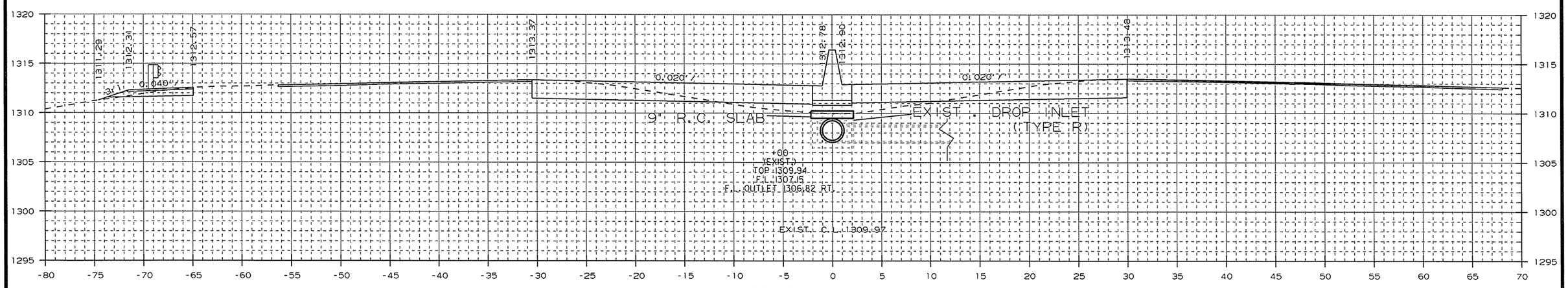

AREA CUT : 45.2
AREA FILL : 13.3

STA. 1135+00 IN PLACE
TYPE R DROP INLET IN MEDIAN
W/ 18" X 93' R.C. PIPE OUTLET
W/ F.E.S.
MODIFY

1135+00.00

CUT VOLUME : 174
FILL VOLUME : 42

CROSS SECTION STA. 1135+00 TO STA. 1135+15

USER: fs513
DESIGN FILE: G:\13106100_264toNHope\TRANSP\dgn\xsect\rCA0901_CX_01.dgn
PLOTTED: 2/8/2016 07:45
SCALE: 10:1
MODEL: CROSS SECTION SHEETS

G:\13106100_264toNHope\TRANSP\dgn\xsect\rCA0901_CX_01.dgn 2/8/2016 07:45

Crafton, Tull & Associates Inc.

DATE REVISED	DATE FILMED	DATE REVISED	DATE FILMED

FED.RD. DIST.NO.	STATE	FED.AID PROJ.NO.	SHEET NO.	TOTAL SHEETS
6	ARK.			
JOB NO.		CA0901	281	452

2 CROSS SECTIONS

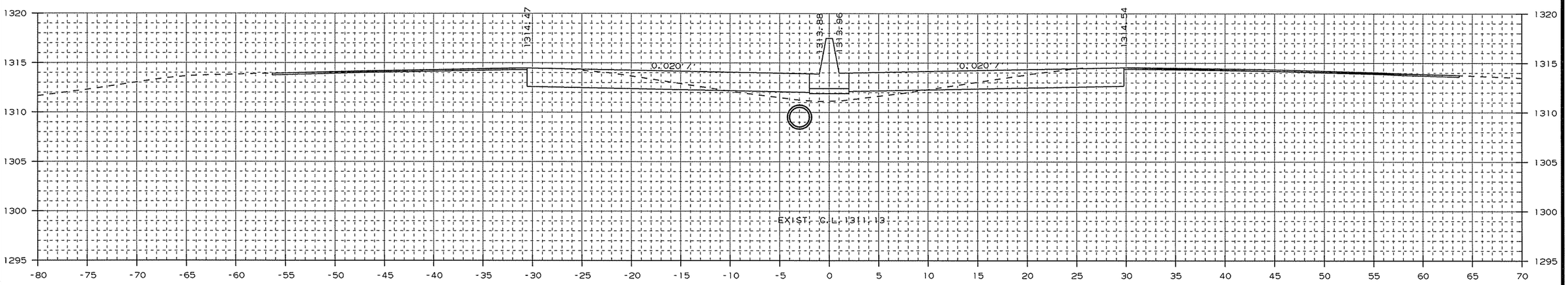

AREA CUT : 48.2
AREA FILL : 10.3

1137+00.00

CUT VOLUME : 174
FILL VOLUME : 46

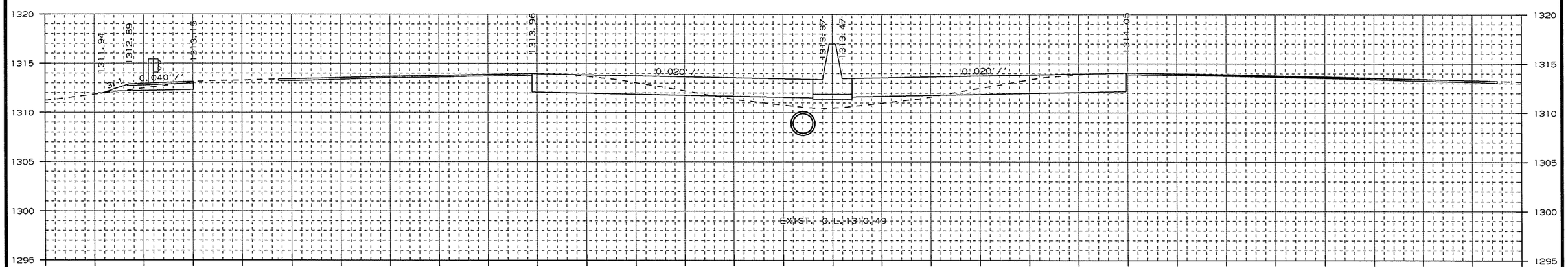

AREA CUT : 45.5
AREA FILL : 14.4

1136+00.00

CUT VOLUME : 142
FILL VOLUME : 45

CROSS SECTION STA. 1136+00 TO STA. 1137+00

USER: fs513
DESIGN FILE: G:\13106100_264toNHope\TRANSP\dgn\xsect\rCA0901_CX_01.dgn
PLOTTED: 2/8/2016 07:46
SCALE: 10:1
MODEL: CROSS SECTION SHEETS

Crafton, Tull & Associates Inc.

DATE REVISED	DATE FILMED	DATE REVISED	DATE FILMED

FED.RD. DIST.NO.	STATE	FED.AID PROJ.NO.	SHEET NO.	TOTAL SHEETS
6	ARK.			
JOB NO.		CA0901	282	452

2 CROSS SECTIONS

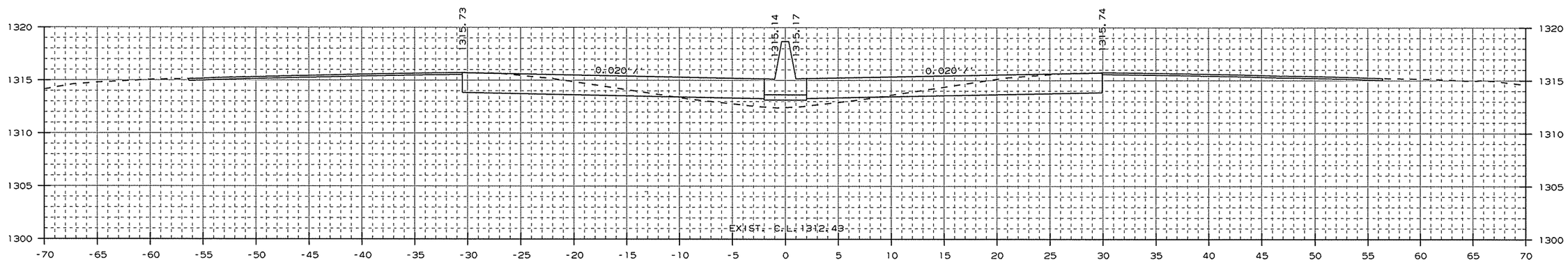

AREA CUT : 49.1
AREA FILL : 9.1

1139+00.00

CUT VOLUME : 180
FILL VOLUME : 31

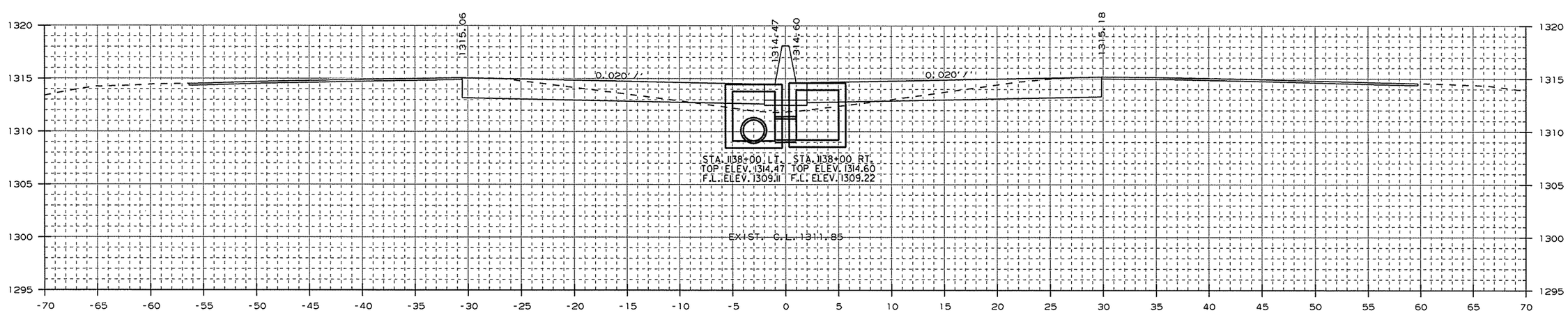

AREA CUT : 48.1
AREA FILL : 7.7

STA. 1138+00 - CONSTRUCT
DROP INLET 3' LT. OF C.L. H=5'4"
W/ 24" x 28' R.C. PIPE CULVERT
(CLASS III) (TYPE 3 BEDDING)
CONNECT TO DROP INLET
STA. 1135+15 LT.
TYPE ST DROP INLET = 4' X 4'

1138+00.00

STA. 1138+00 - CONSTRUCT
DROP INLET 3' RT. OF C.L. H=5'5"
W/ 24" x 2' R.C. PIPE CULVERT
(CLASS III) (TYPE 3 BEDDING)
CONNECT TO DROP INLET
STA. 1138+00 LT.
TYPE ST DROP INLET = 4' X 4'

CUT VOLUME : 178
FILL VOLUME : 33

CROSS SECTION STA. 1138+00 TO STA. 1139+00

USER: at5106
DESIGN FILE: G:\13106100_264toNHope\TRANSP\dgn\xsect\rCA0901_CX_01.dgn
PLOTTED: 1/13/2016 09:31
SCALE: 10:1
MODEL: CROSS SECTION SHEETS

Crafton, Tull & Associates Inc.

DATE REVISED	DATE FILMED	DATE REVISED	DATE FILMED

FED.RD. DIST.NO.	STATE	FED.AID PROJ.NO.	SHEET NO.	TOTAL SHEETS
6	ARK.			
JOB NO.		CA0901	283	452

2 CROSS SECTIONS

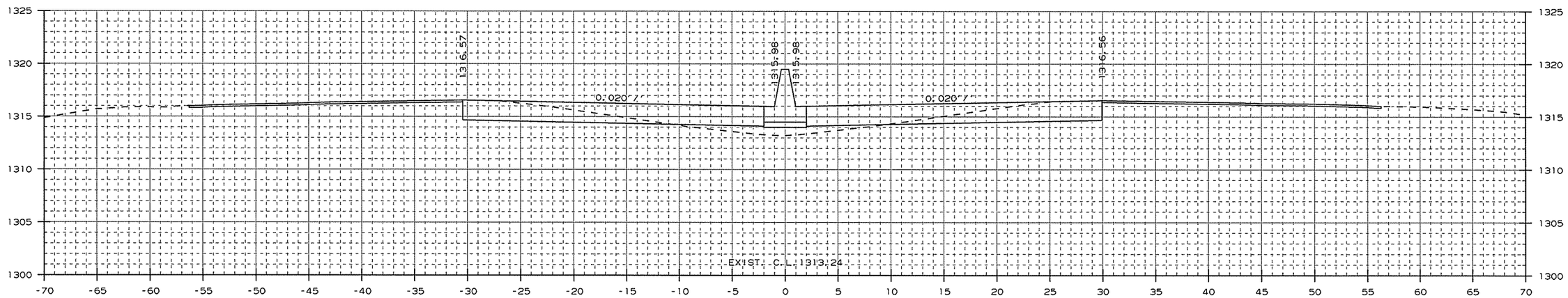

AREA CUT : 46.2
AREA FILL : 9.8

1141+00.00

CUT VOLUME : 177
FILL VOLUME : 31

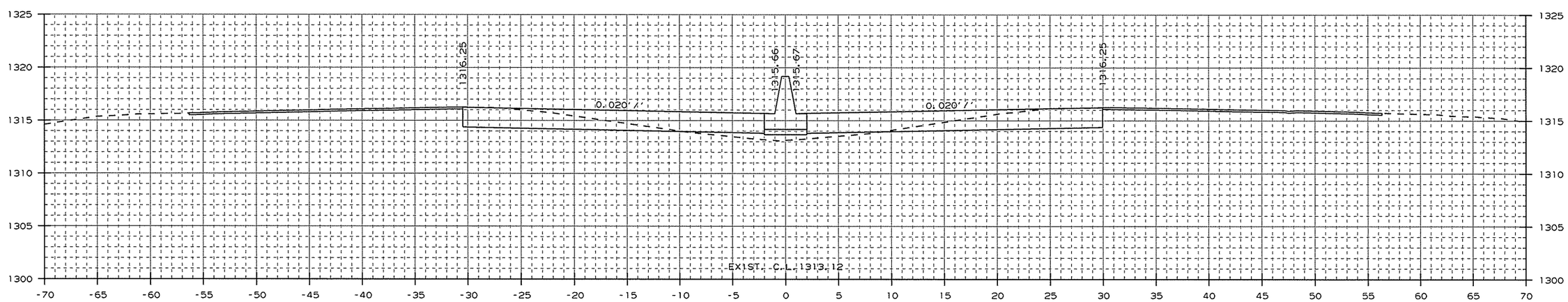

AREA CUT : 49.5
AREA FILL : 6.8

1140+00.00

CUT VOLUME : 183
FILL VOLUME : 29

CROSS SECTION STA. 1140+00 TO STA. 1141+00

USER: a15106
DESIGN FILE: G:\13106100_264toNHope\TRANSP\dgn\xsect\rCA0901_CX_01.dgn
PLOTTED: 1/13/2016 09:31
SCALE: 10:1
MODEL: CROSS SECTION SHEETS

Crafton, Tull & Associates Inc.

DATE REVISED	DATE FILMED	DATE REVISED	DATE FILMED

FED.RD. DIST.NO.	STATE	FED.AID PROJ.NO.	SHEET NO.	TOTAL SHEETS
6	ARK.			
JOB NO.		CA0901	284	452

2 CROSS SECTIONS

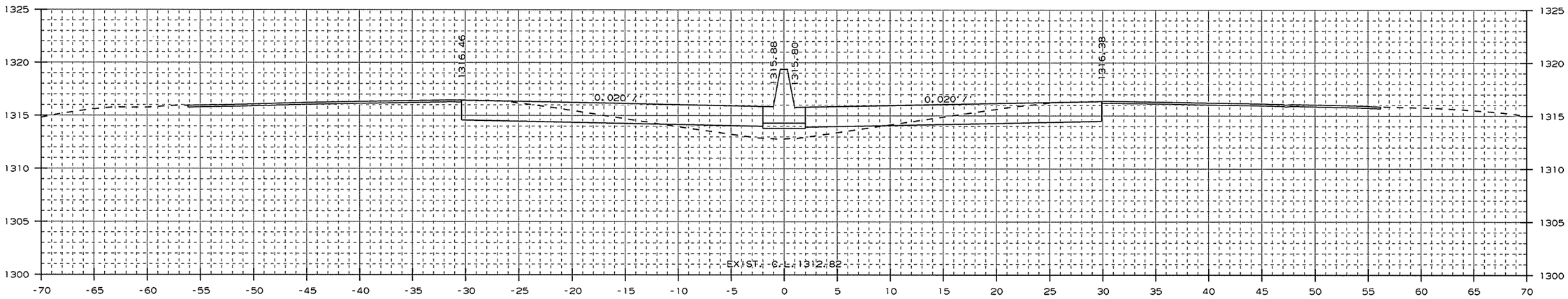

AREA CUT : 45.5
AREA FILL : 13.4

1143+00.00

CUT VOLUME : 170
FILL VOLUME : 50

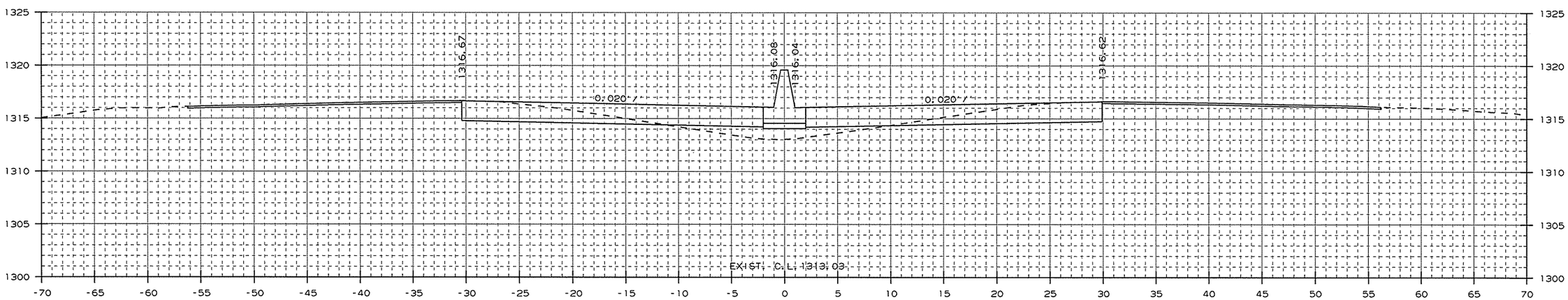

AREA CUT : 46.2
AREA FILL : 13.5

1142+00.00

CUT VOLUME : 171
FILL VOLUME : 43

CROSS SECTION STA. 1142+00 TO STA. 1143+00

USER: at5106
DESIGN FILE: G:\13106100_264toNHope\TRANSP\dgn\xsect\rCA0901_CX_01.dgn
PLOTTED: 1/13/2016 09:31
SCALE: 10:1
MODEL: CROSS SECTION SHEETS

Crafton, Tull & Associates Inc.

DATE REVISED	DATE FILMED	DATE REVISED	DATE FILMED	FED.RD. DIST.NO.	STATE	FED.AID PROJ.NO.	SHEET NO.	TOTAL SHEETS
				6	ARK.			
				JOB NO.		CA0901	285	452

2 CROSS SECTIONS

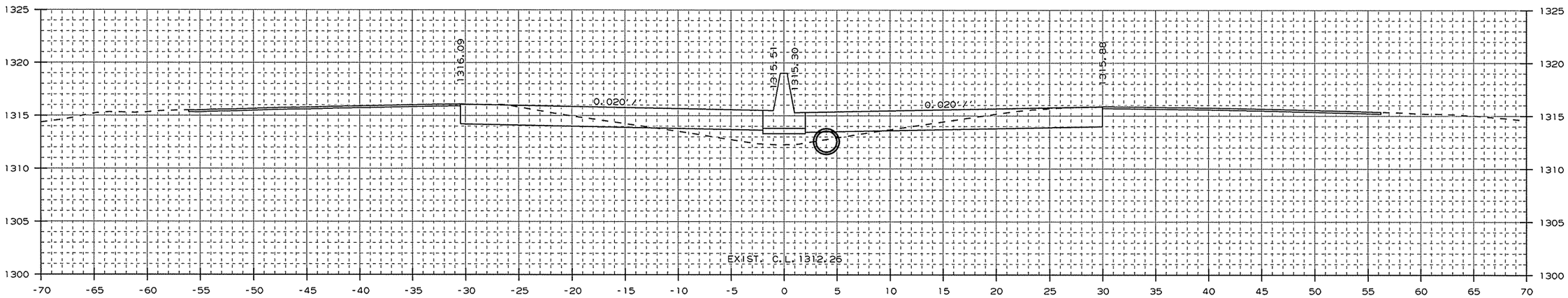

AREA CUT : 45.1
AREA FILL : 14.6

1145+00.00

CUT VOLUME : 168
FILL VOLUME : 50

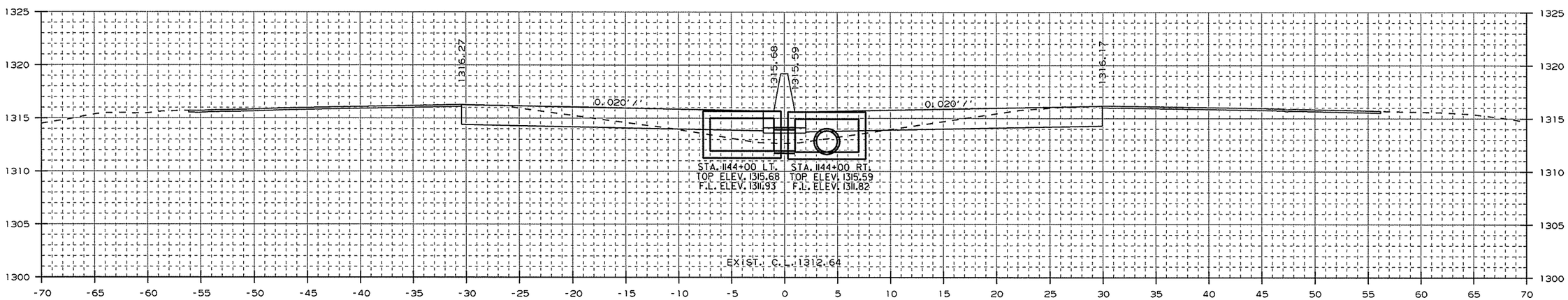

AREA CUT : 45.8
AREA FILL : 12.5

STA. 1144+00 - CONSTRUCT
DROP INLET 3' LT. OF C.L. H=3'9"
W/ 24" x 2' R.C. PIPE CULVERT
(CLASS III) (TYPE 1 OR 2 BEDDING)
CONNECT TO DROP INLET
STA. 1144+00 RT.
TYPE ST DROP INLET = 4' X 6'
3 GRATES

1144+00.00

STA. 1144+00 - CONSTRUCT
DROP INLET 3' RT. OF C.L. H=3'9"
W/ 24" x 246' R.C. PIPE CULVERT
(CLASS IV) (TYPE 1 OR 2 BEDDING)
CONNECT TO DROP INLET
STA. 1146+50 RT.
TYPE ST DROP INLET = 4' X 6'
3 GRATES

CUT VOLUME : 169
FILL VOLUME : 48

CROSS SECTION STA. 1144+00 TO STA. 1145+00

USER: gt5106
DESIGN FILE: G:\13106100_264toNHope\TRANSP\dgn\xsect\rCA0901_CX_01.dgn
PLOTTED: 1/13/2016 09:31
SCALE: 10:1
MODEL: CROSS SECTION SHEETS

Crafton, Tull & Associates Inc.

DATE REVISED	DATE FILMED	DATE REVISED	DATE FILMED

FED.RD. DIST.NO.	STATE	FED.AID PROJ.NO.	SHEET NO.	TOTAL SHEETS
6	ARK.			
JOB NO.		CA0901	286	452

2 CROSS SECTIONS

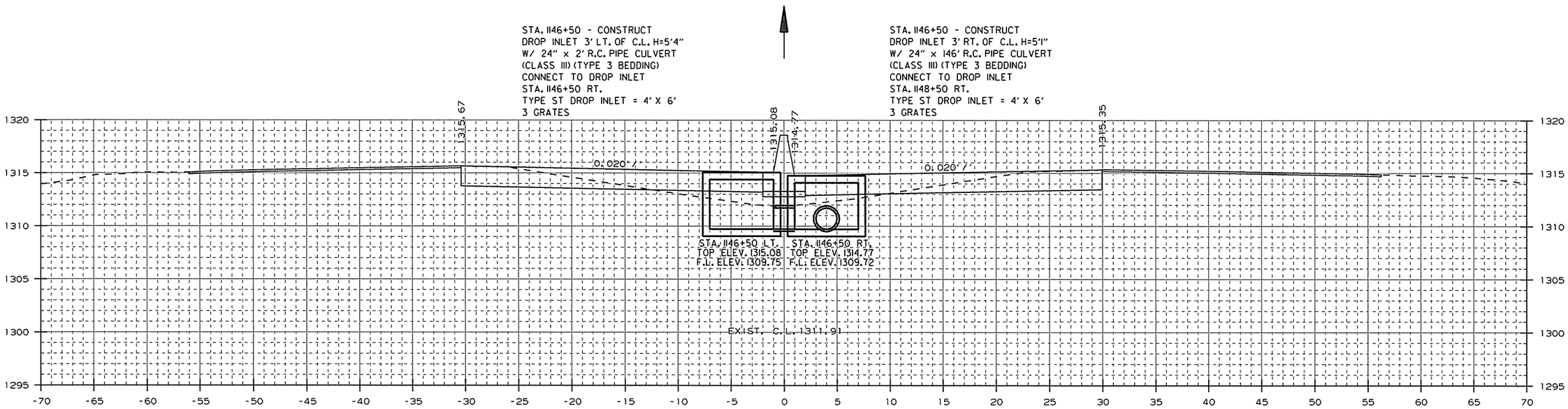

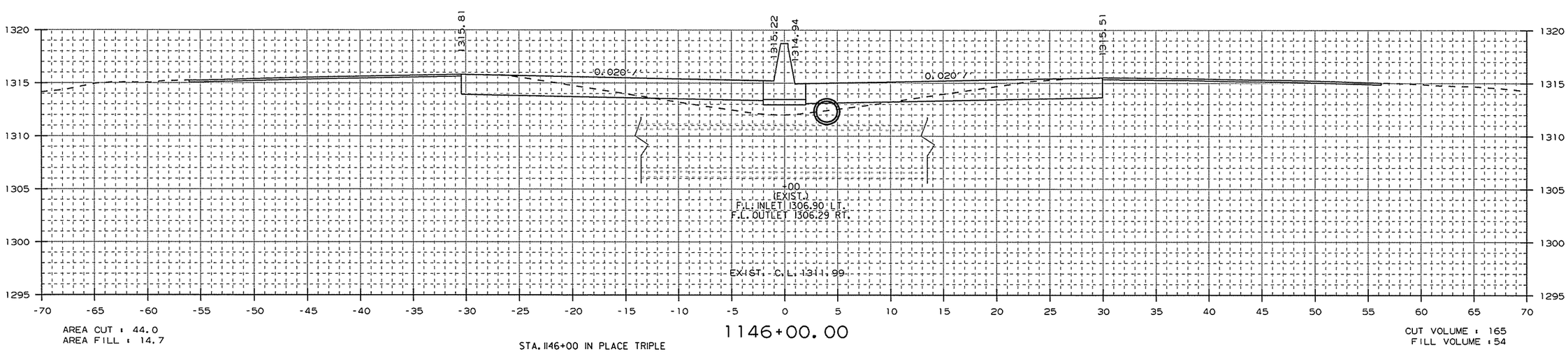

STA. 1146+00 IN PLACE TRIPLE
6' X 4' X 170' R.C. BOX CULVERT
RETAIN

CROSS SECTION STA. 1146+00 TO STA. 1146+50

USER: at5106
DESIGN FILE: G:\13106100_264toNHope\TRANSP\dgn\xsect\rCA0901_CX_01.dgn
PLOTTED: 1/13/2016 09:31
SCALE: 10:1
MODEL: CROSS SECTION SHEETS

Crafton, Tull & Associates Inc.

DATE REVISED	DATE FILMED	DATE REVISED	DATE FILMED

FED.RD. DIST.NO.	STATE	FED.AID PROJ.NO.	SHEET NO.	TOTAL SHEETS
6	ARK.			
JOB NO.		CA0901	287	452

2 CROSS SECTIONS

STA. 1148+00 - CONSTRUCT
DROP INLET 3' LT. OF C.L. H=5'8"
W/ 24" x 2' R.C. PIPE CULVERT
(CLASS III) (TYPE 3 BEDDING)
CONNECT TO DROP INLET
STA. 1148+00 RT.
TYPE ST DROP INLET = 4' X 6'
3 GRATES

STA. 1148+00 - CONSTRUCT
DROP INLET 3' RT. OF C.L. H=5'7"
W/ 24" x 146' R.C. PIPE CULVERT
(CLASS III) (TYPE 3 BEDDING)
CONNECT TO DROP INLET
STA. 1149+50 RT.
TYPE ST DROP INLET = 4' X 6'
3 GRATES

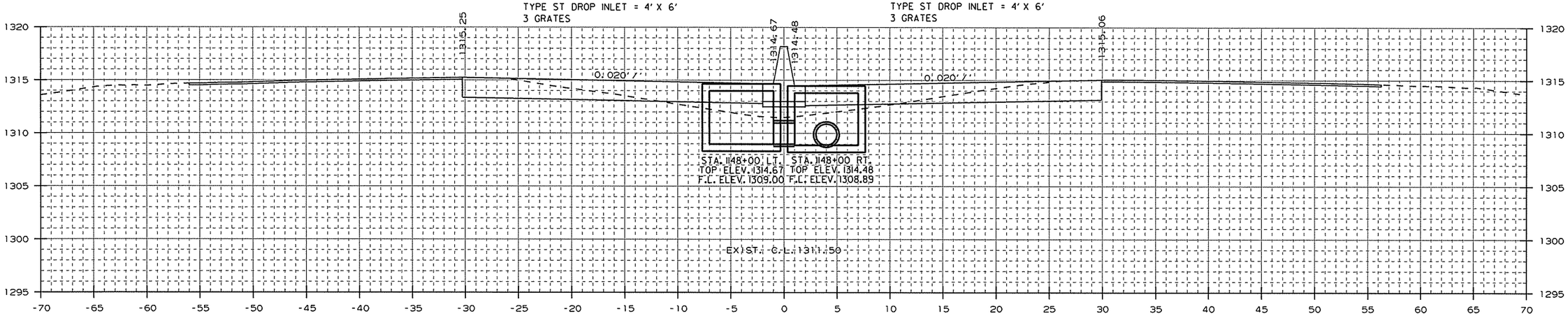

AREA CUT : 43.9
AREA FILL : 14.6

1148+00.00

CUT VOLUME : 164
FILL VOLUME : 53

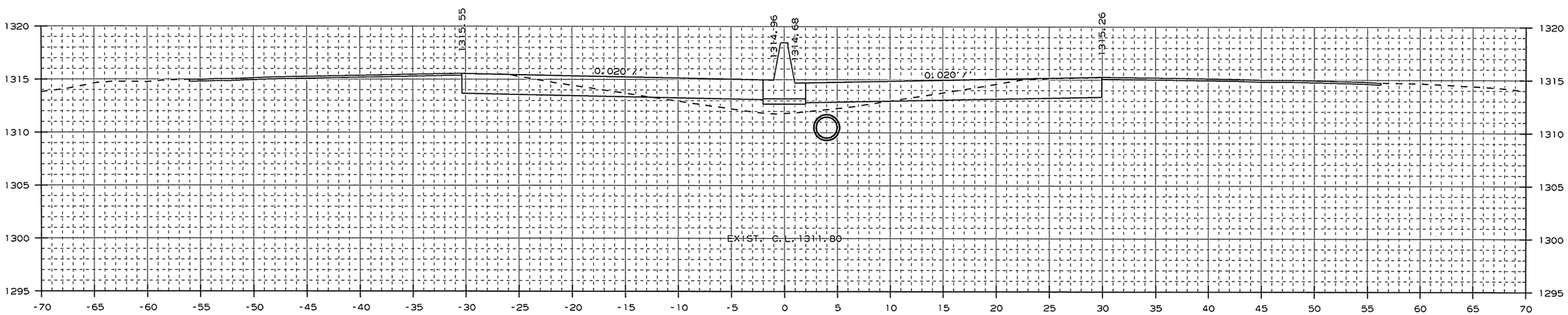

AREA CUT : 44.6
AREA FILL : 14.2

1147+00.00

CUT VOLUME : 83
FILL VOLUME : 26

CROSS SECTION STA. 1147+00 TO STA. 1148+00

USER: a15106
DESIGN FILE: G:\13106100_264toNHope\TRANSP\dgn\xsect\rCA0901_CX_01.dgn
PLOTTED: 1/13/2016 09:31
SCALE: 10:1
MODEL: CROSS SECTION SHEETS

G:\13106100_264toNHope\TRANSP\dgn\xsect\rCA0901_CX_01.dgn 1/13/2016 09:31

Crafton, Tull & Associates Inc.

DATE REVISED	DATE FILMED	DATE REVISED	DATE FILMED

FED.RD. DIST.NO.	STATE	FED.AID PROJ.NO.	SHEET NO.	TOTAL SHEETS
6	ARK.			
JOB NO.		CA0901	288	452

2 CROSS SECTIONS

STA. 1149+50 - CONSTRUCT
DROP INLET 3' LT. OF C.L. H=6'3"
W/ 24" x 2' R.C. PIPE CULVERT
(CLASS III) (TYPE 3 BEDDING)
CONNECT TO DROP INLET
STA. 1149+50 RT.
TYPE ST DROP INLET = 4' X 6'
3 GRATES

STA. 1149+50 - CONSTRUCT
DROP INLET 3' RT. OF C.L. H=6'2"
W/ 24" x 146' R.C. PIPE CULVERT
(CLASS III) (TYPE 3 BEDDING)
CONNECT TO DROP INLET
STA. 1151+00 RT.
TYPE ST DROP INLET = 4' X 6'
3 GRATES

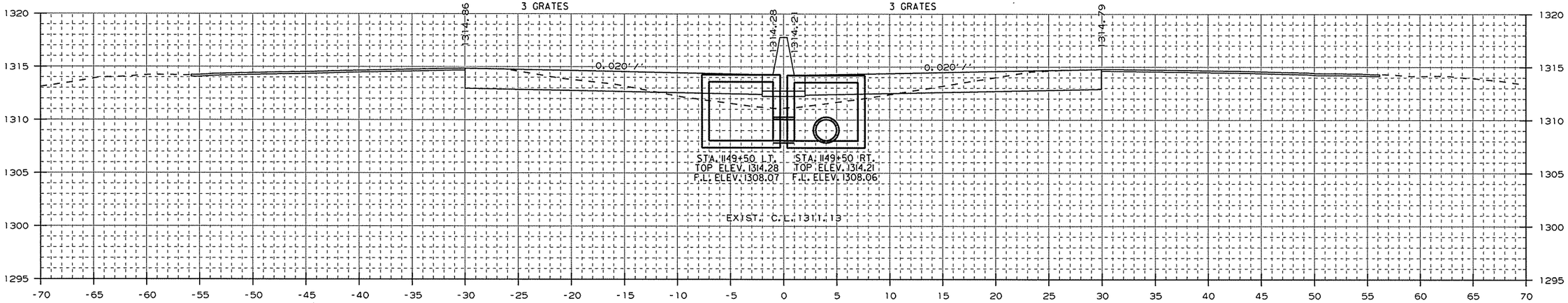

AREA CUT : 43.9
AREA FILL : 16.1

1149+50.00

CUT VOLUME : 81
FILL VOLUME : 30

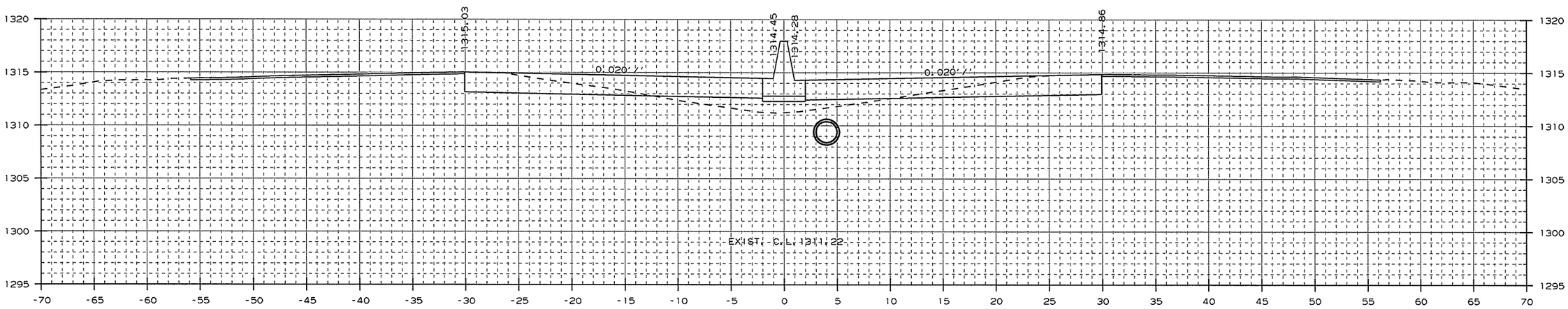

AREA CUT : 44.1
AREA FILL : 16.0

1149+00.00

CUT VOLUME : 163
FILL VOLUME : 57

CROSS SECTION STA. 1149+00 TO STA. 1149+50

USER: at5106
DESIGN FILE: G:\13106100_264toNHope\TRANSP\dgn\xsect\rCA0901_CX_01.dgn
PLOTTED: 1/13/2016 09:31
SCALE: 10:1
MODEL: CROSS SECTION SHEETS

Crafton, Tull & Associates Inc.

DATE REVISED	DATE FILMED	DATE REVISED	DATE FILMED

FED.RD. DIST.NO.	STATE	FED.AID PROJ.NO.	SHEET NO.	TOTAL SHEETS
6	ARK.			
JOB NO.		CA0901	289	452

2 CROSS SECTIONS

STA. 1151+00 - CONSTRUCT
DROP INLET 3' LT. OF C.L. H=6'7"
W/ 24" x 2' R.C. PIPE CULVERT
(CLASS III) (TYPE 3 BEDDING)
CONNECT TO DROP INLET
STA. 1151+00 RT.
TYPE ST DROP INLET = 4' X 6'
3 GRATES

STA. 1151+00 - CONSTRUCT
DROP INLET 3' RT. OF C.L. H=6'7"
W/ 24" x 146' R.C. PIPE CULVERT
(CLASS III) (TYPE 3 BEDDING)
CONNECT TO DROP INLET
STA. 1152+50 RT.
TYPE ST DROP INLET = 4' X 6'
3 GRATES

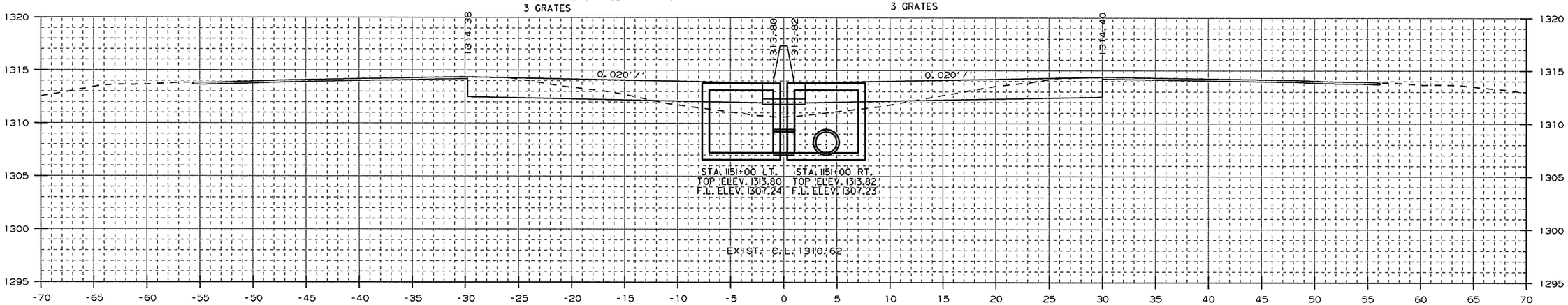

AREA CUT : 41.8
AREA FILL : 18.5

1151+00.00

CUT VOLUME : 159
FILL VOLUME : 63

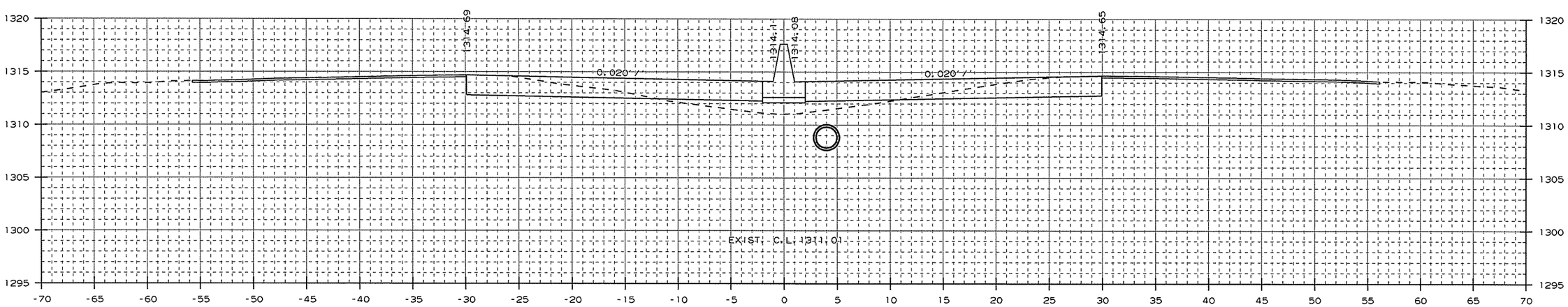

AREA CUT : 44.0
AREA FILL : 15.4

1150+00.00

CUT VOLUME : 81
FILL VOLUME : 29

CROSS SECTION STA. 1150+00 TO STA. 1151+00

USER: at5106
DESIGN FILE: G:\13106100_264toNHope\TRANSP\dgn\xsect\rCA0901_CX_01.dgn
PLOTTED: 1/13/2016 09:31
SCALE: 10:1
MODEL: CROSS SECTION SHEETS

Crafton, Tull & Associates Inc.

DATE REVISED	DATE FILMED	DATE REVISED	DATE FILMED	FED.RD. DIST.NO.	STATE	FED.AID PROJ.NO.	SHEET NO.	TOTAL SHEETS
				6	ARK.			
				JOB NO.		CA0901	290	452

2 CROSS SECTIONS

STA. 1152+50 - CONSTRUCT
DROP INLET 3' LT. OF C.L. H=6'10"
W/ 24" x 2' R.C. PIPE CULVERT
(CLASS III) (TYPE 3 BEDDING)
CONNECT TO DROP INLET
STA. 1152+50 RT.
TYPE ST DROP INLET = 4' X 6'
3 GRATES

STA. 1152+50 - CONSTRUCT
DROP INLET 3' RT. OF C.L. H=6'11"
W/ 24" x 48' R.C. PIPE CULVERT
(CLASS III) (TYPE 3 BEDDING)
CONNECT TO EXIST. DROP INLET
AT STA. 1153+00
TYPE ST DROP INLET = 4' X 6'
3 GRATES

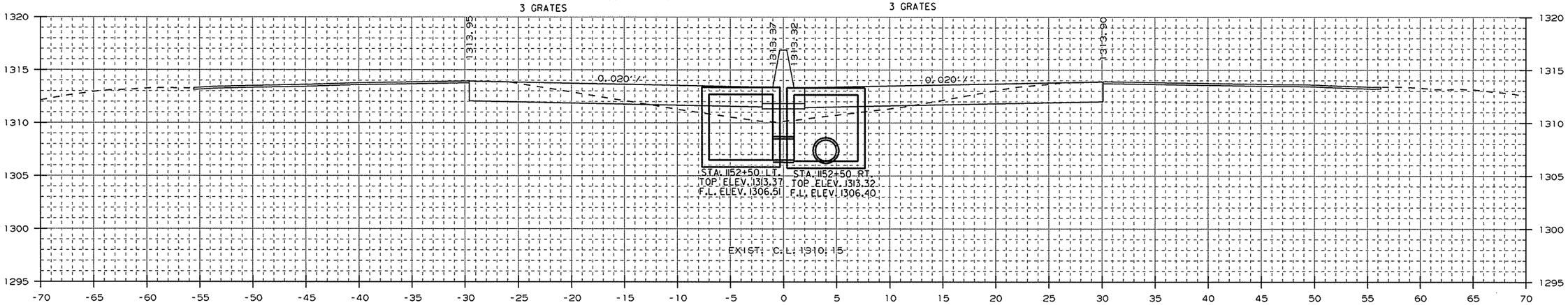

AREA CUT : 41.0
AREA FILL : 18.2

1152+50.00

CUT VOLUME : 78
FILL VOLUME : 33

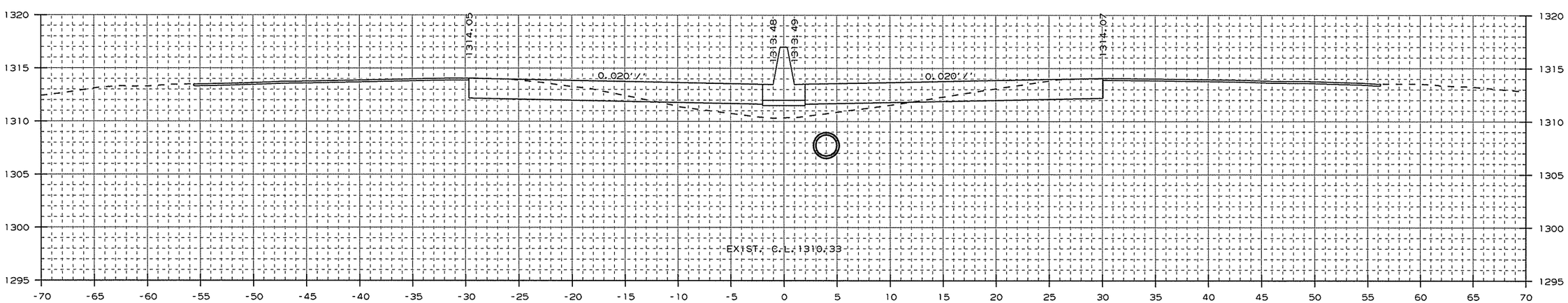

AREA CUT : 42.7
AREA FILL : 17.6

1152+00.00

CUT VOLUME : 156
FILL VOLUME : 67

CROSS SECTION STA. 1152+00 TO STA. 1152+50

USER: ot5106
DESIGN FILE: G:\13106100_264toNHope\TRANSP\dgn\xsect\rCA0901_CX_01.dgn
PLOTTED: 1/13/2016 09:31
SCALE: 10:1
MODEL: CROSS SECTION SHEETS

Crafton, Tull & Associates Inc.

DATE REVISED	DATE FILMED	DATE REVISED	DATE FILMED

FED.RD. DIST.NO.	STATE	FED.AID PROJ.NO.	SHEET NO.	TOTAL SHEETS
6	ARK.			
JOB NO.		CA0901	291	452

(2) CROSS SECTIONS

STA. 1153+50 - CONSTRUCT
DROP INLET 3'-10" LT. OF C.L. H=6'1"
W/ 24" x 4' R.C. PIPE CULVERT
(CLASS III) (TYPE 3 BEDDING)
CONNECT TO DROP INLET
STA. 1153+50 RT.
TYPE ST DROP INLET = 4' X 6'
3 GRATES

STA. 1153+50 - CONSTRUCT
DROP INLET 3'-10" RT. OF C.L. H=6'1"
W/ 24" x 47' R.C. PIPE CULVERT
(CLASS III) (TYPE 3 BEDDING)
CONNECT TO EXIST. DROP INLET
AT STA. 1153+00
TYPE ST DROP INLET = 4' X 6'
3 GRATES

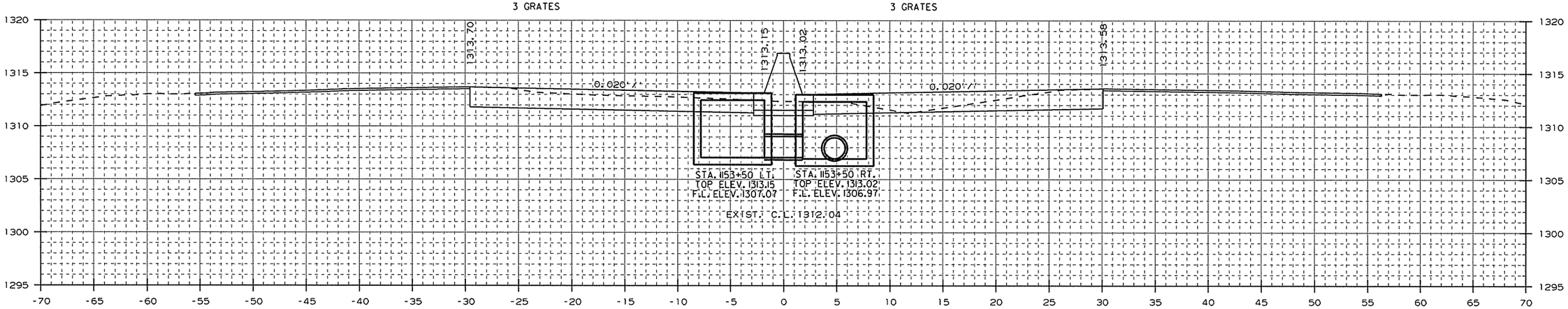

AREA CUT : 72.0
AREA FILL : 0.1

1153+50.00

CUT VOLUME : 106
FILL VOLUME : 19

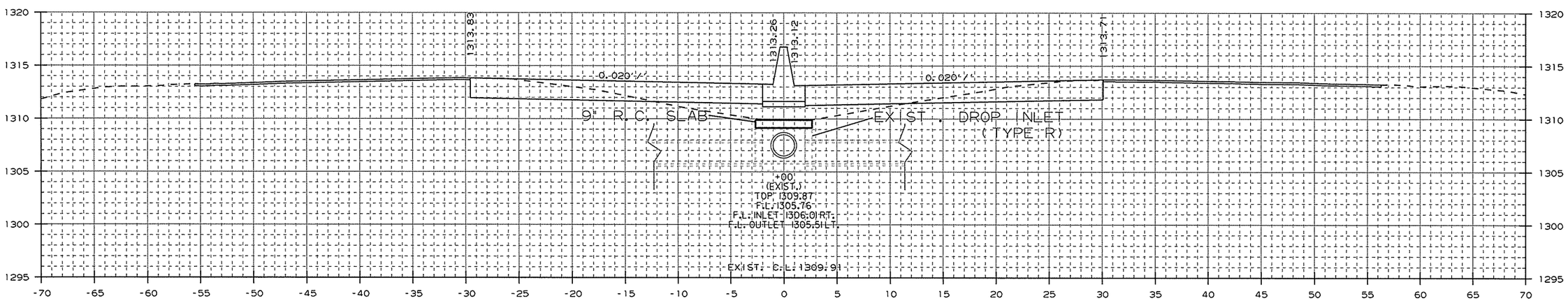

AREA CUT : 43.0
AREA FILL : 20.3

STA. 1153+00 IN PLACE
TYPE R DROP INLET IN MEDIAN
W/ 24" X 87' PIPE INLET AND
24" X 86' PIPE OUTLET
W/ FES LT. AND RT.
MODIFY

1153+00.00

CUT VOLUME : 78
FILL VOLUME : 36

CROSS SECTION STA. 1153+00 TO STA. 1153+50

USER: at5106
DESIGN FILE: G:\13106100_264toNHope\TRANSP\dgn\xsect\rCA0901_CX_01.dgn
PLOTTED: 1/13/2016 09:31
SCALE: 10:1
MODEL: CROSS SECTION SHEETS

Crafton, Tull & Associates Inc.

DATE REVISED	DATE FILMED	DATE REVISED	DATE FILMED

FED.RD. DIST.NO.	STATE	FED.AID PROJ.NO.	SHEET NO.	TOTAL SHEETS
6	ARK.			
JOB NO.		CA0901	292	452

2 CROSS SECTIONS

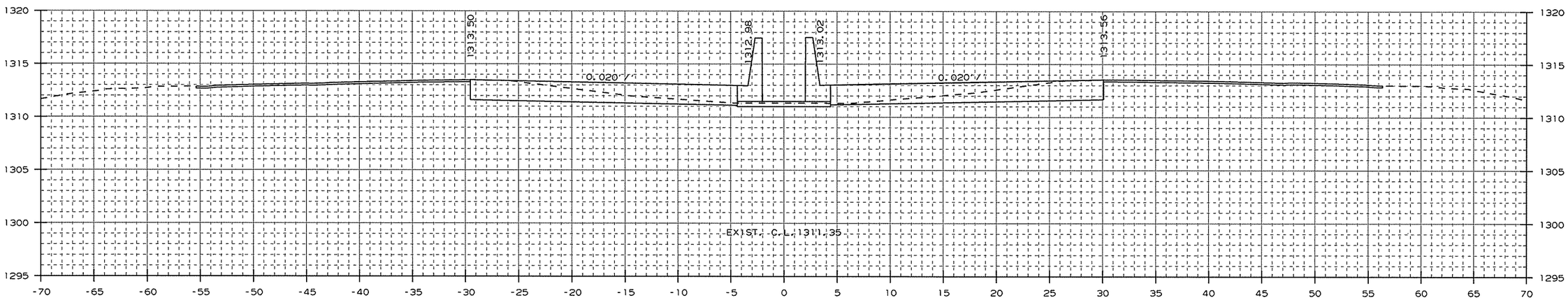

AREA CUT : 52.7
AREA FILL : 0.0

1154+16.28

CUT VOLUME : 32
FILL VOLUME : 0

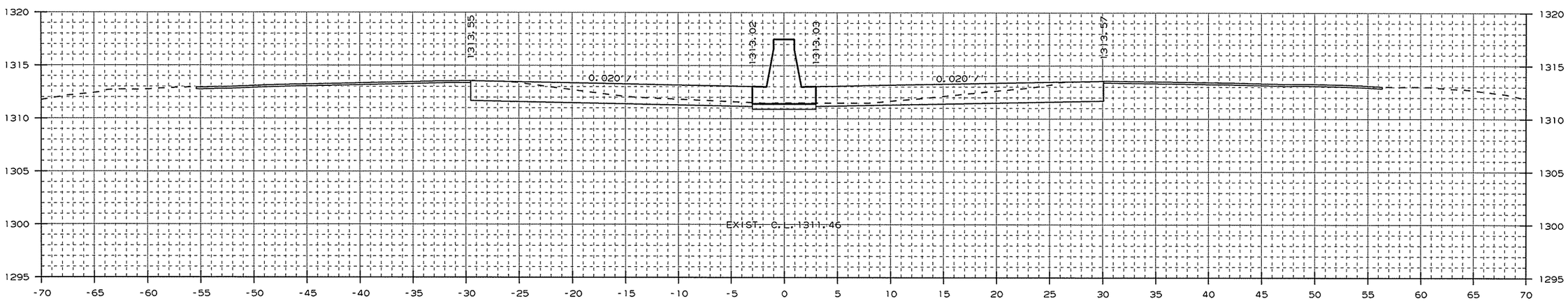

AREA CUT : 52.4
AREA FILL : 0.0

1154+00.00

CUT VOLUME : 115
FILL VOLUME : 0

CROSS SECTION STA. 1154+00 TO STA. 1154+16

USER: at5106
DESIGN FILE: G:\13106100_264toNHope\TRANSP\dgn\xsect\rCA0901_CX_01.dgn
PLOTTED: 1/13/2016 09:31
SCALE: 10:1
MODEL: CROSS SECTION SHEETS

Crafton, Tull & Associates Inc.

DATE REVISED	DATE FILMED	DATE REVISED	DATE FILMED

FED.RD. DIST.NO.	STATE	FED.AID PROJ.NO.	SHEET NO.	TOTAL SHEETS
6	ARK.			
JOB NO.		CA0901	293	452

2 CROSS SECTIONS

STA. 1154+85 - CONSTRUCT
DROP INLET 3' LT. OF C.L. H=6'6"
W/ 36" x 196' R.C. PIPE CULVERT
(CLASS III) (TYPE 3 BEDDING)
CONNECT TO DROP INLET
STA. 1156+85 LT.
TYPE ST DROP INLET = 4' X 6'
3 GRATES

STA. 1154+85 - CONSTRUCT
DROP INLET 3' RT. OF C.L. H=5'5"
W/ 24" x 4' R.C. PIPE CULVERT
(CLASS III) (TYPE 3 BEDDING)
CONNECT TO DROP INLET
STA. 1154+85 LT.
TYPE ST DROP INLET = 4' X 6'
3 GRATES

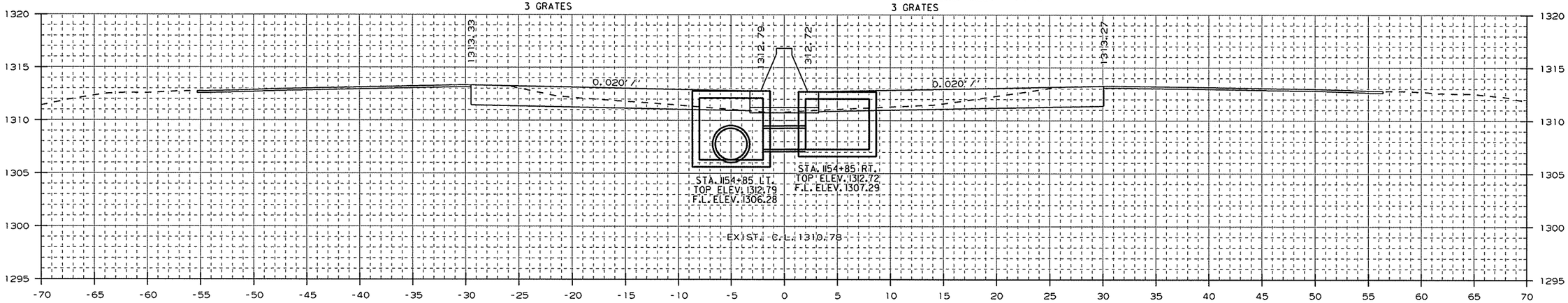

AREA CUT : 46.4
AREA FILL : 0.0

1154+85.00

CUT VOLUME : 87
FILL VOLUME : 0

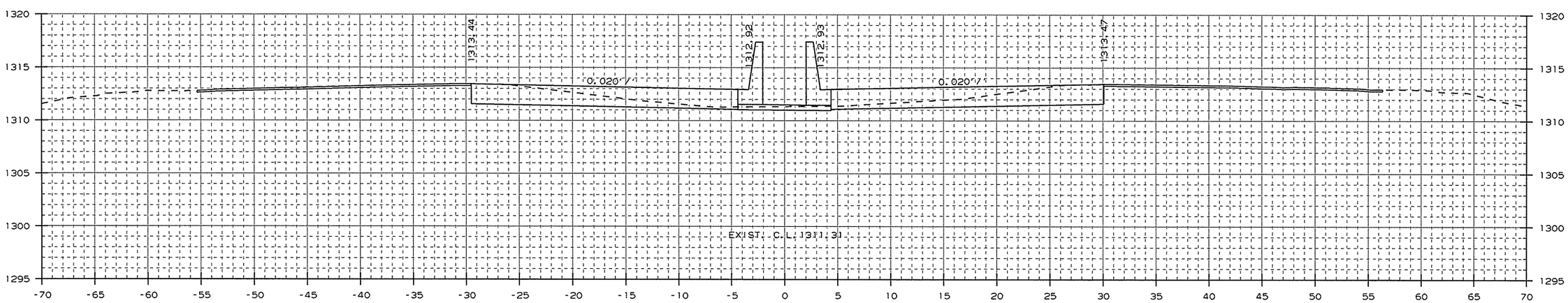

AREA CUT : 50.4
AREA FILL : 0.0

1154+36.27

CUT VOLUME : 38
FILL VOLUME : 0

CROSS SECTION STA. 1154+36 TO STA. 1154+85

USER: at5106
DESIGN FILE: G:\13106100_264toNHope\TRANSP\dgn\xsect\rCA0901_CX_01.dgn
PLOTTED: 1/13/2016 09:31
SCALE: 10:1
MODEL: CROSS SECTION SHEETS

Crafton, Tull & Associates Inc.

DATE REVISED	DATE FILMED	DATE REVISED	DATE FILMED

FED.RD. DIST.NO.	STATE	FED.AID PROJ.NO.	SHEET NO.	TOTAL SHEETS
6	ARK.			
JOB NO.		CA0901	294	452

2 CROSS SECTIONS

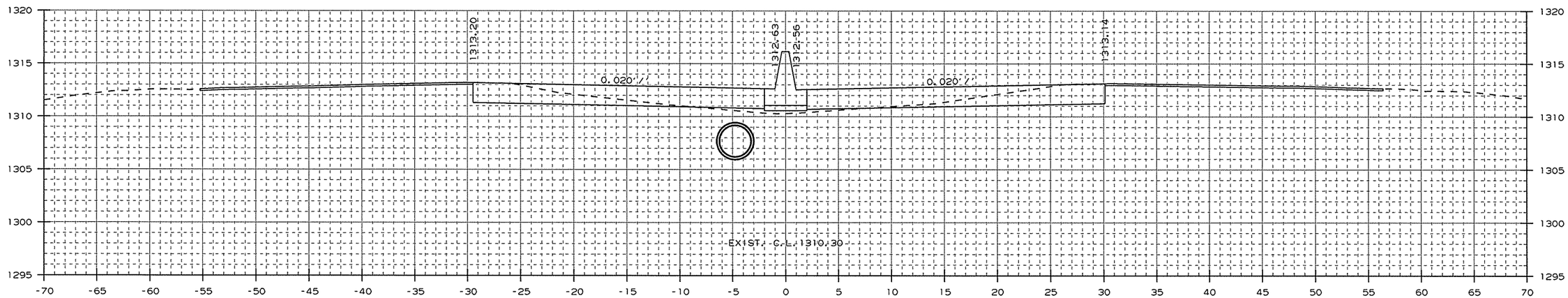

AREA CUT : 41.1
AREA FILL : 3.4

1155+36.27

CUT VOLUME : 57
FILL VOLUME : 3

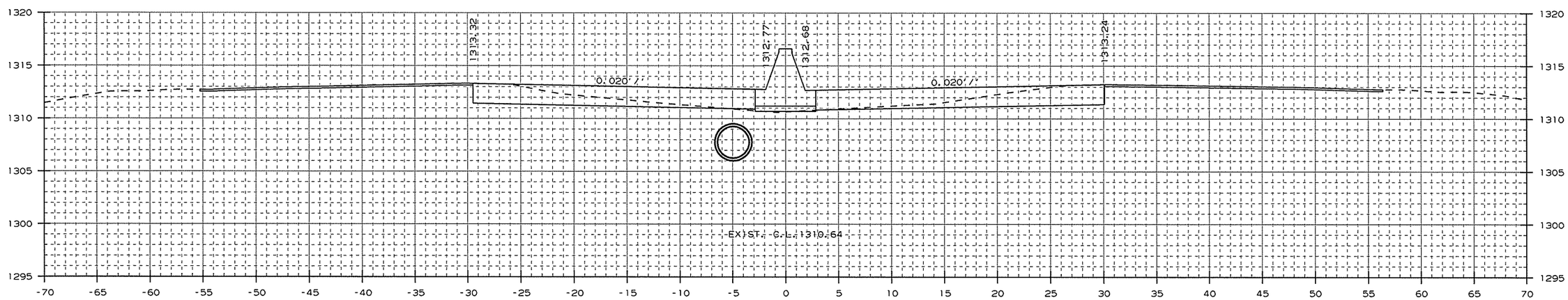

AREA CUT : 44.2
AREA FILL : 0.4

1155+00.00

CUT VOLUME : 25
FILL VOLUME : 0

CROSS SECTION STA. 1155+00 TO STA. 1155+36

USER: a15106
DESIGN FILE: G:\13106100_264toNHope\TRANSP\dgn\xsect\rCA0901_CX_01.dgn
PLOTTED: 1/13/2016 09:31
SCALE: 10:1
MODEL: CROSS SECTION SHEETS

Crafton, Tull & Associates Inc.

DATE REVISED	DATE FILMED	DATE REVISED	DATE FILMED	FED.RD. DIST.NO.	STATE	FED.AID PROJ.NO.	SHEET NO.	TOTAL SHEETS
				6	ARK.			
				JOB NO.		CA0901	295	452

2 CROSS SECTIONS

STA. 1156+85 - CONSTRUCT
DROP INLET 3' LT. OF C.L. H=6'4"
W/ 36" x 196' R.C. PIPE CULVERT
(CLASS III) (TYPE 3 BEDDING)
CONNECT TO DROP INLET
STA. 1158+85 LT.
TYPE ST DROP INLET = 4' X 6'
3 GRATES

STA. 1156+85 - CONSTRUCT
DROP INLET 3' RT. OF C.L. H=5'4"
W/ 24" x 2' R.C. PIPE CULVERT
(CLASS III) (TYPE 3 BEDDING)
CONNECT TO DROP INLET
STA. 1156+85 LT.
TYPE ST DROP INLET = 4' X 6'
3 GRATES

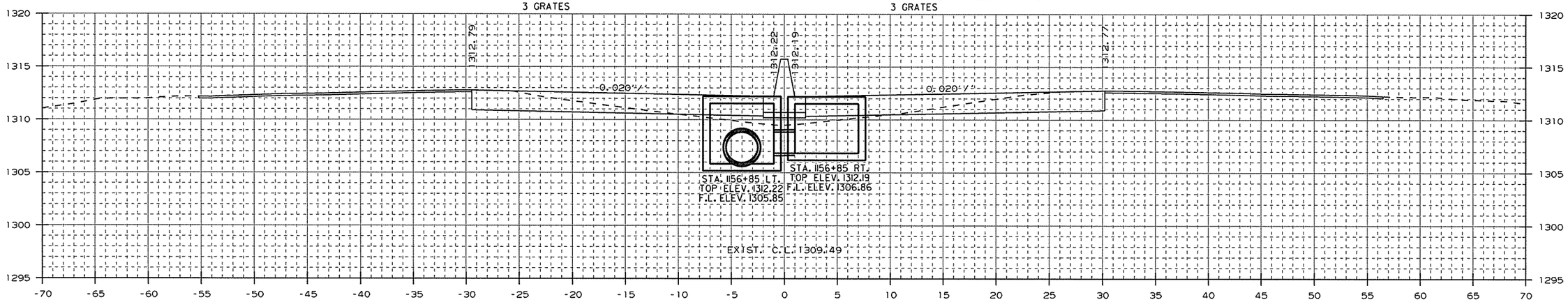

AREA CUT : 44.1
AREA FILL : 8.4

1156+85.00

CUT VOLUME : 138
FILL VOLUME : 25

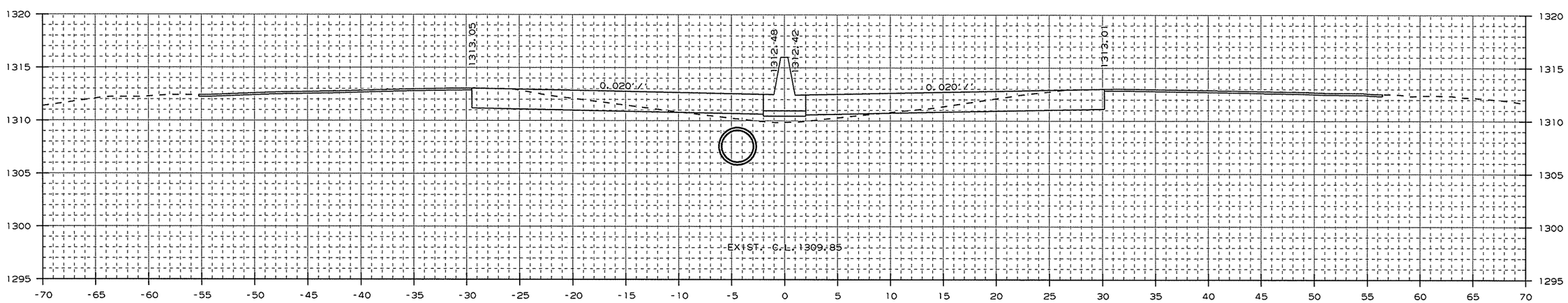

AREA CUT : 43.4
AREA FILL : 7.3

1156+00.00

CUT VOLUME : 100
FILL VOLUME : 13

CROSS SECTION STA. 1156+00 TO STA. 1156+85

USER: at5106
DESIGN FILE: G:\13106100_264toNHope\TRANSP\dgn\xsect\rCA0901_CX_01.dgn
PLOTTED: 1/13/2016 09:32
SCALE: 10:1
MODEL: CROSS SECTION SHEETS

Crafton, Tull & Associates Inc.

DATE REVISED	DATE FILMED	DATE REVISED	DATE FILMED

FED.RD. DIST.NO.	STATE	FED.AID PROJ.NO.	SHEET NO.	TOTAL SHEETS
6	ARK.			
JOB NO.		CA0901	296	452

2 CROSS SECTIONS

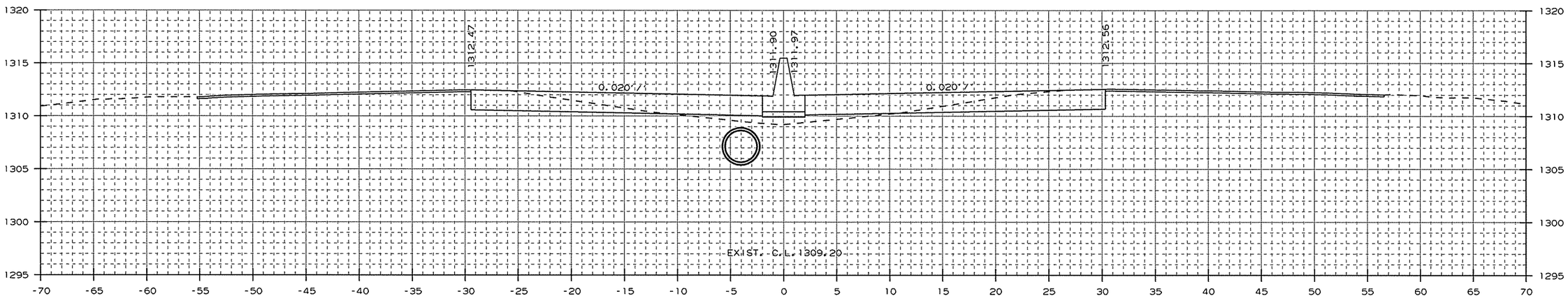

AREA CUT : 43.3
AREA FILL : 9.1

1158+00.00

CUT VOLUME : 161
FILL VOLUME : 33

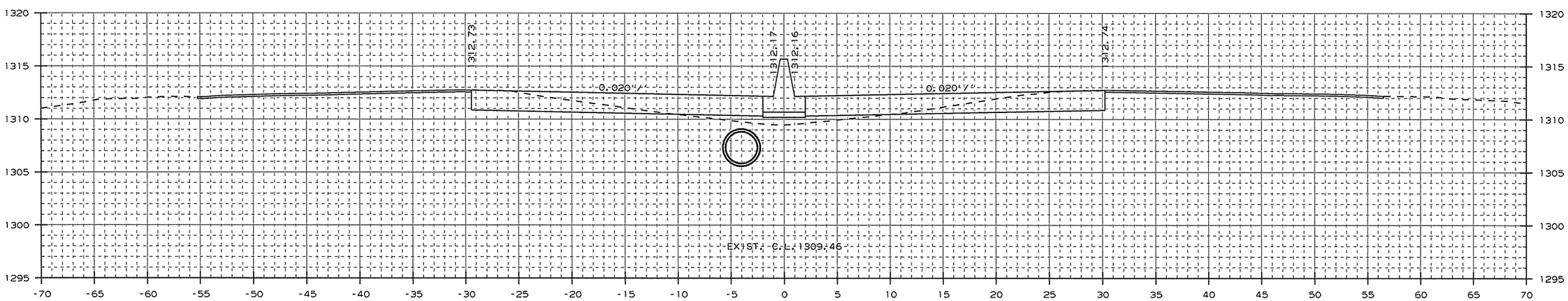

AREA CUT : 43.8
AREA FILL : 8.8

1157+00.00

CUT VOLUME : 24
FILL VOLUME : 5

CROSS SECTION STA. 1157+00 TO STA. 1158+00

USER: a15106
DESIGN FILE: G:\13106100_264toNHope\TRANSP\dgn\xsect\rCA0901_CX_01.dgn
PLOTTED: 1/13/2016 09:32
SCALE: 1:01
MODEL: CROSS SECTION SHEETS

Crafton, Tull & Associates Inc.

DATE REVISED	DATE FILMED	DATE REVISED	DATE FILMED

FED.RD. DIST.NO.	STATE	FED.AID PROJ.NO.	SHEET NO.	TOTAL SHEETS
6	ARK.			
JOB NO.		CA0901	297	452

2 CROSS SECTIONS

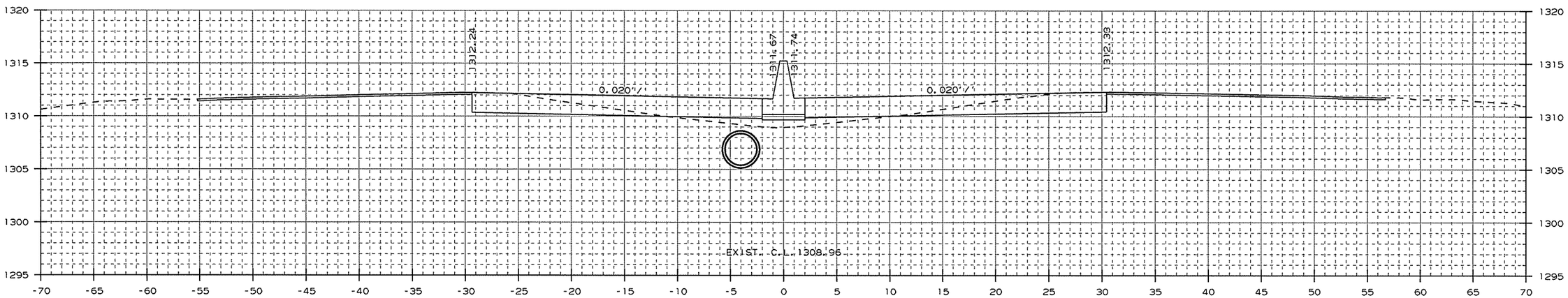

AREA CUT : 43.2
AREA FILL : 10.0

1159+00.00

CUT VOLUME : 24
FILL VOLUME : 5

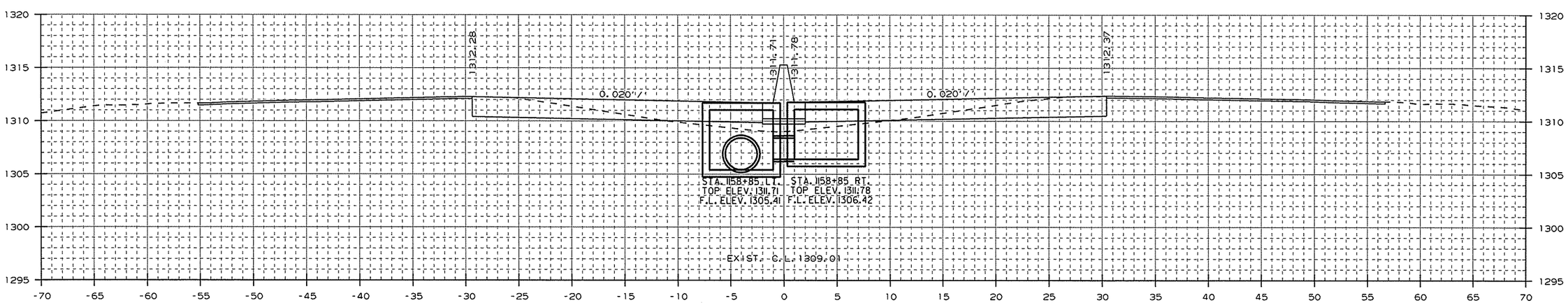

AREA CUT : 43.8
AREA FILL : 9.8

STA. 1158+85 - CONSTRUCT
DROP INLET 3' LT. OF C.L. H=6'4"
W/ 36" x 196' R.C. PIPE CULVERT
(CLASS III) (TYPE 3 BEDDING)
CONNECT TO DROP INLET
STA. 1160+85 LT.
TYPE ST DROP INLET = 4' X 6'
3 GRATES

1158+85.00

STA. 1158+85 - CONSTRUCT
DROP INLET 3' RT. OF C.L. H=5'4"
W/ 24" x 2' R.C. PIPE CULVERT
(CLASS III) (TYPE 3 BEDDING)
CONNECT TO DROP INLET
STA. 1158+85 LT.
TYPE ST DROP INLET = 4' X 6'
3 GRATES

CUT VOLUME : 137
FILL VOLUME : 30

CROSS SECTION STA. 1158+85 TO STA. 1159+00

USER: a15106
DESIGN FILE: G:\13106100_264toNHope\TRANSP\dgn\xsect\rCA0901_CX_01.dgn
PLOTTED: 1/13/2016 09:32
SCALE: 10:1
MODEL: CROSS SECTION SHEETS

Crafton, Tull & Associates Inc.

DATE REVISED	DATE FILMED	DATE REVISED	DATE FILMED

FED.RD. DIST.NO.	STATE	FED.AID PROJ.NO.	SHEET NO.	TOTAL SHEETS
6	ARK.			
JOB NO.		CA0901	298	452

2 CROSS SECTIONS

STA. 1160+85 - CONSTRUCT
DROP INLET 3' LT. OF C.L. H=6'4"
W/ 36" x 196' R.C. PIPE CULVERT
(CLASS III) (TYPE 3 BEDDING)
CONNECT TO DROP INLET
STA. 1162+85 LT.
TYPE ST DROP INLET = 4' X 6'
3 GRATES

STA. 1160+85 - CONSTRUCT
DROP INLET 3' RT. OF C.L. H=5'2"
W/ 24" x 2' R.C. PIPE CULVERT
(CLASS III) (TYPE 3 BEDDING)
CONNECT TO DROP INLET
STA. 1160+85 LT.
TYPE ST DROP INLET = 4' X 6'
3 GRATES

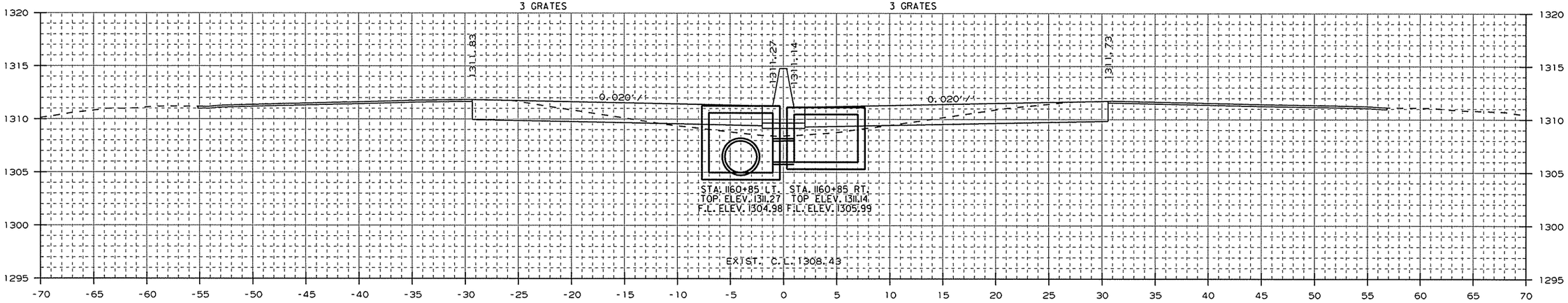

AREA CUT : 43.7
AREA FILL : 11.0

1160+85.00

CUT VOLUME : 137
FILL VOLUME : 35

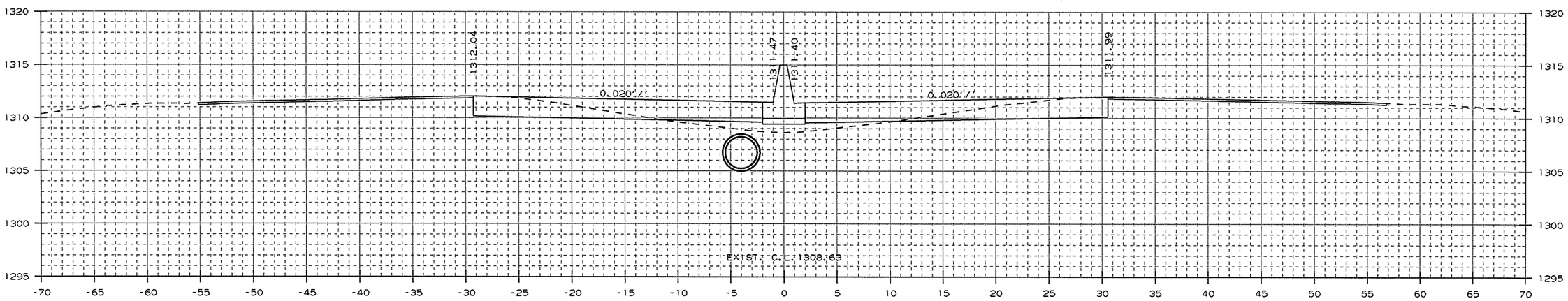

AREA CUT : 43.6
AREA FILL : 11.3

1160+00.00

CUT VOLUME : 161
FILL VOLUME : 39

CROSS SECTION STA. 1160+00 TO STA. 1160+85

USER: at5106
DESIGN FILE: G:\13106100_264toNHope\TRANSP\dgn\xsect\rCA0901_CX_01.dgn
PLOTTED: 1/13/2016 09:32
SCALE: 10:1
MODEL: CROSS SECTION SHEETS

Crafton, Tull & Associates Inc.

DATE REVISED	DATE FILMED	DATE REVISED	DATE FILMED

FED.RD. DIST.NO.	STATE	FED.AID PROJ.NO.	SHEET NO.	TOTAL SHEETS
6	ARK.			
JOB NO.		CA0901	299	452

2 CROSS SECTIONS

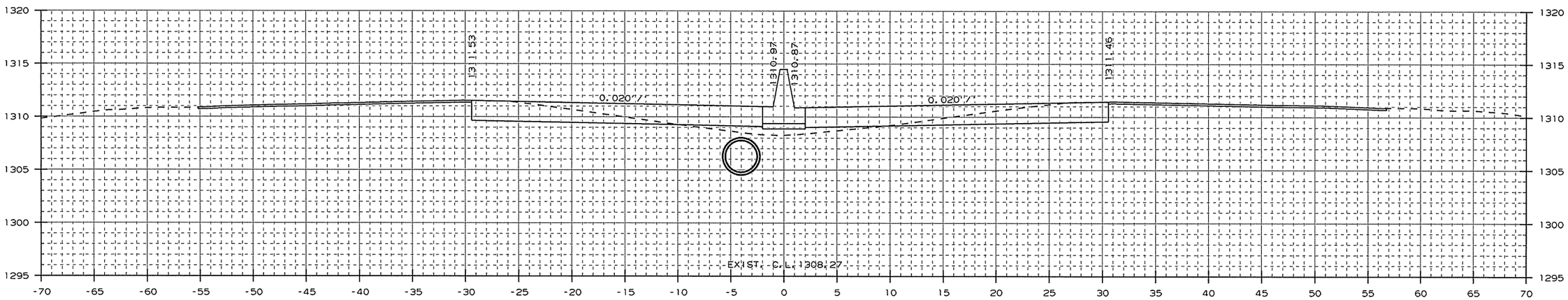

AREA CUT : 45.8
AREA FILL : 7.9

1162+00.00

CUT VOLUME : 167
FILL VOLUME : 33

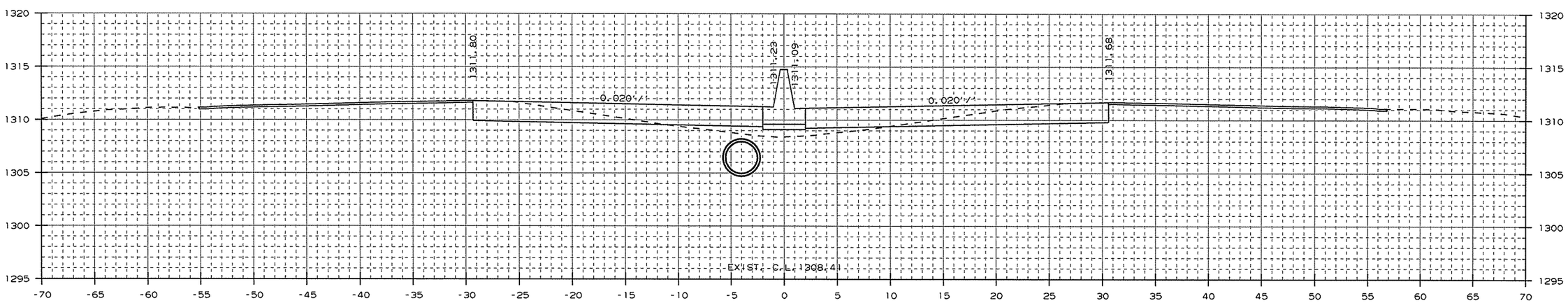

AREA CUT : 44.6
AREA FILL : 10.2

1161+00.00

CUT VOLUME : 25
FILL VOLUME : 6

CROSS SECTION STA. 1161+00 TO STA. 1162+00

USER: at5106
DESIGN FILE: G:\13106100_264toNHope\TRANSP\dgn\xsect\rCA0901_CX_01.dgn
PLOTTED: 1/13/2016 09:32
SCALE: 10:1
MODEL: CROSS SECTION SHEETS

Crafton, Tull & Associates Inc.

DATE REVISED	DATE FILMED	DATE REVISED	DATE FILMED

FED.RD. DIST.NO.	STATE	FED.AID PROJ.NO.	SHEET NO.	TOTAL SHEETS
6	ARK.			
JOB NO.		CA0901	300	452

2 CROSS SECTIONS

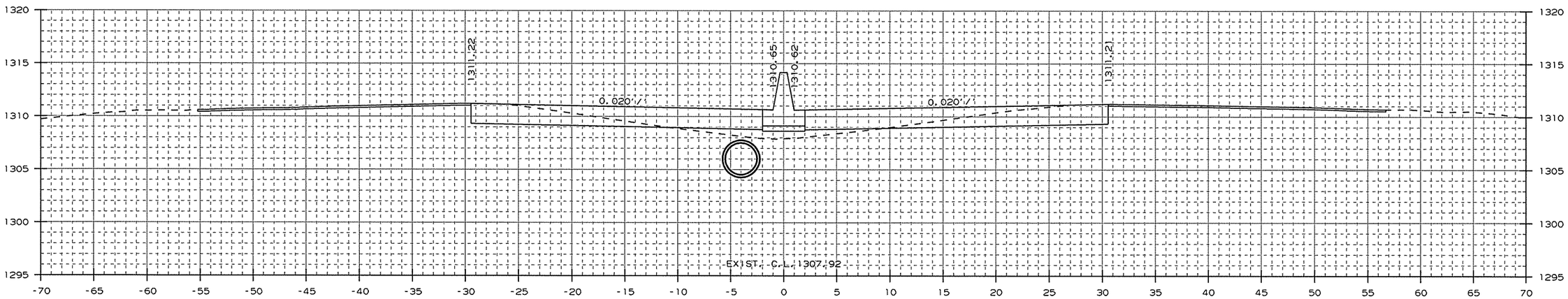

AREA CUT : 45.0
AREA FILL : 9.4

1163+00.00

CUT VOLUME : 25
FILL VOLUME : 5

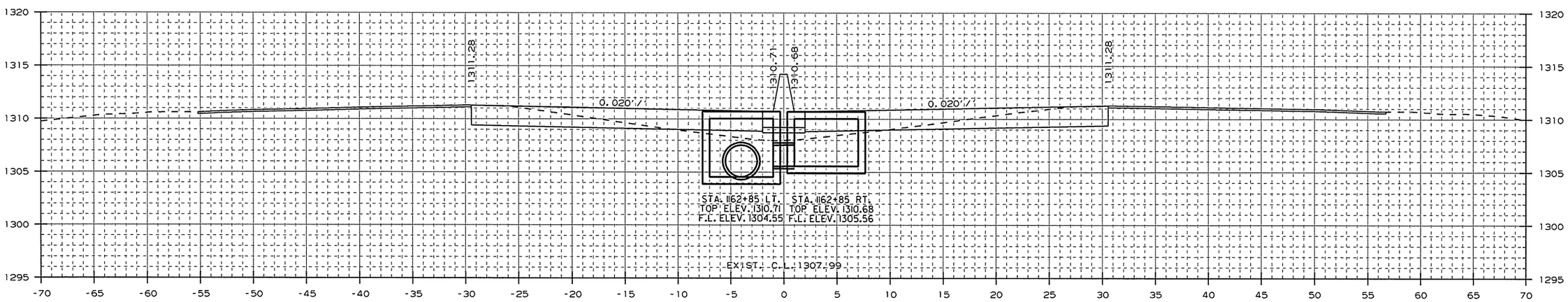

AREA CUT : 43.7
AREA FILL : 9.4

STA. 1162+85 - CONSTRUCT
DROP INLET 3' LT. OF C.L. H=6'2"
W/ 36" x 196' R.C. PIPE CULVERT
(CLASS III) (TYPE 3 BEDDING)
CONNECT TO DROP INLET
STA. 1164+85 LT.
TYPE ST DROP INLET = 4' X 6'
3 GRATES

1162+85.00

STA. 1162+85 - CONSTRUCT
DROP INLET 3' RT. OF C.L. H=5'2"
W/ 24" x 2' R.C. PIPE CULVERT
(CLASS III) (TYPE 3 BEDDING)
CONNECT TO DROP INLET
STA. 1162+85 LT.
TYPE ST DROP INLET = 4' X 6'
3 GRATES

CUT VOLUME : 141
FILL VOLUME : 27

CROSS SECTION STA. 1162+85 TO STA. 1163+00

USER: at5106
DESIGN FILE: G:\13106100_264toNHope\TRANSP\dgn\xsect\rCA0901_CX_01.dgn
PLOTTED: 1/13/2016 09:32
SCALE: 10:1
MODEL: CROSS SECTION SHEETS

Crafton, Tull & Associates Inc.

DATE REVISED	DATE FILMED	DATE REVISED	DATE FILMED

FED.RD. DIST.NO.	STATE	FED.AID PROJ.NO.	SHEET NO.	TOTAL SHEETS
6	ARK.			
JOB NO.		CA0901	301	452

2 CROSS SECTIONS

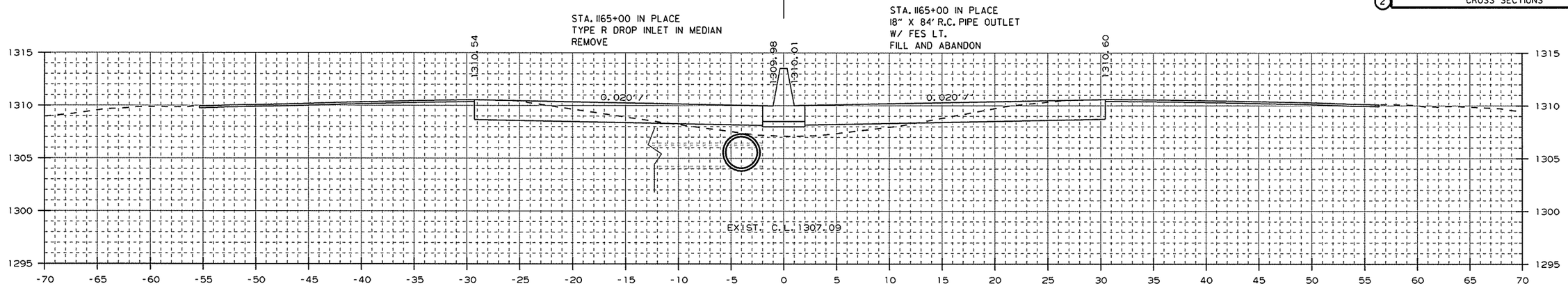

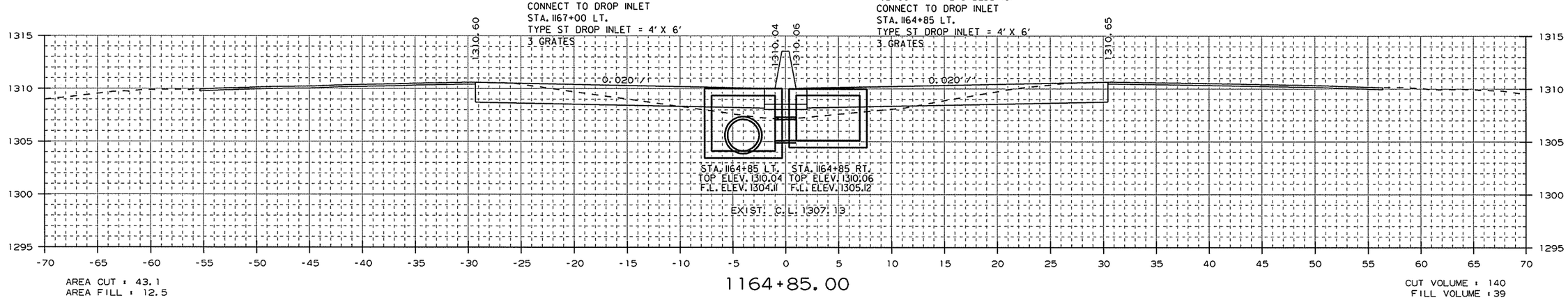

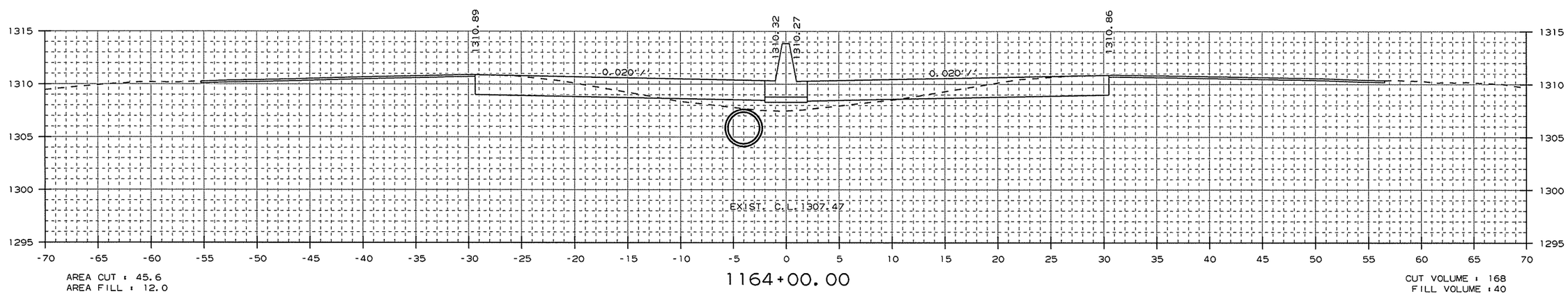

CROSS SECTION STA. 1164+00 TO STA. 1165+00

USER: at5106
DESIGN FILE: G:\13106100_264toNHope\TRANSP\dgn\xsect\rCA0901_CX_01.dgn
PLOTTED: 1/13/2016 09:33
SCALE: 10:1
MODEL: CROSS SECTION SHEETS

Crafton, Tull & Associates Inc.

DATE REVISED	DATE FILMED	DATE REVISED	DATE FILMED

FED.RD. DIST.NO.	STATE	FED.AID PROJ.NO.	SHEET NO.	TOTAL SHEETS
6	ARK.			
JOB NO.		CA0901	302	452

2 CROSS SECTIONS

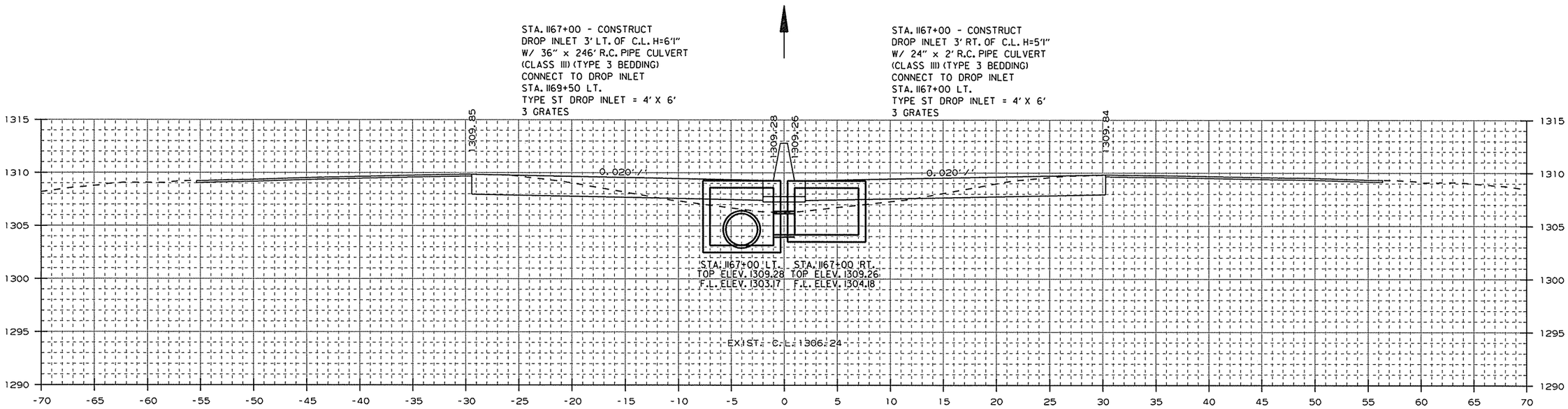

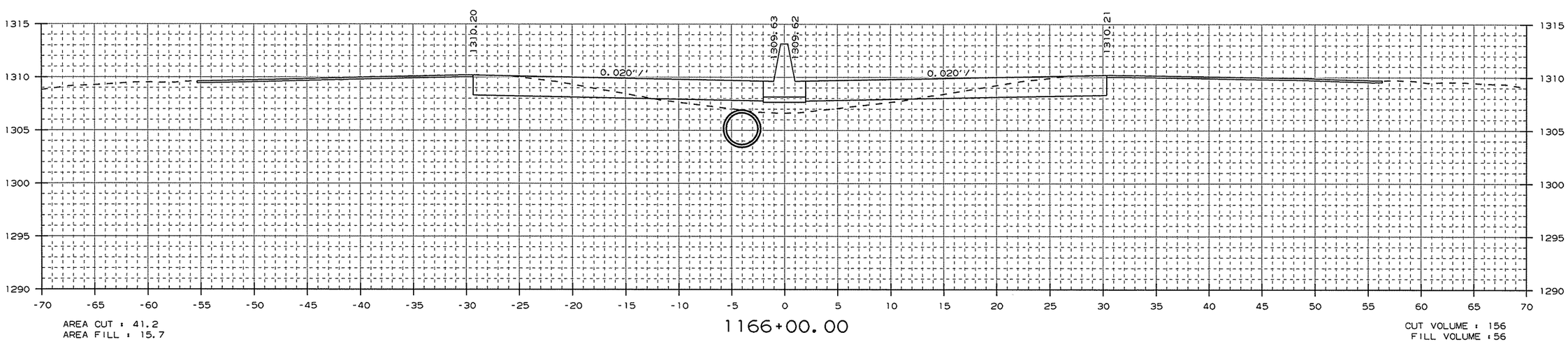

CROSS SECTION STA. 1166+00 TO STA. 1167+00

USER: at5106
DESIGN FILE: G:\13106100_264toNHope\TRANSP\dgn\xsect\rCA0901_CX_01.dgn
PLOTTED: 1/13/2016 09:33
SCALE: 10:1
MODEL: CROSS SECTION SHEETS

Crafton, Tull & Associates Inc.

DATE REVISED	DATE FILMED	DATE REVISED	DATE FILMED

FED.RD. DIST.NO.	STATE	FED.AID PROJ.NO.	SHEET NO.	TOTAL SHEETS
6	ARK.			
JOB NO.		CA0901	303	452

2 CROSS SECTIONS

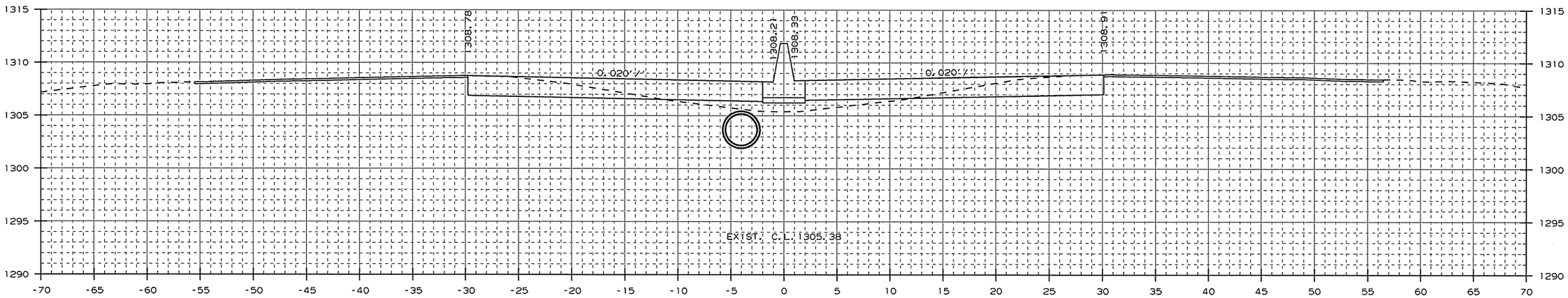

AREA CUT : 44.1
AREA FILL : 13.3

1169+00.00

CUT VOLUME : 165
FILL VOLUME : 50

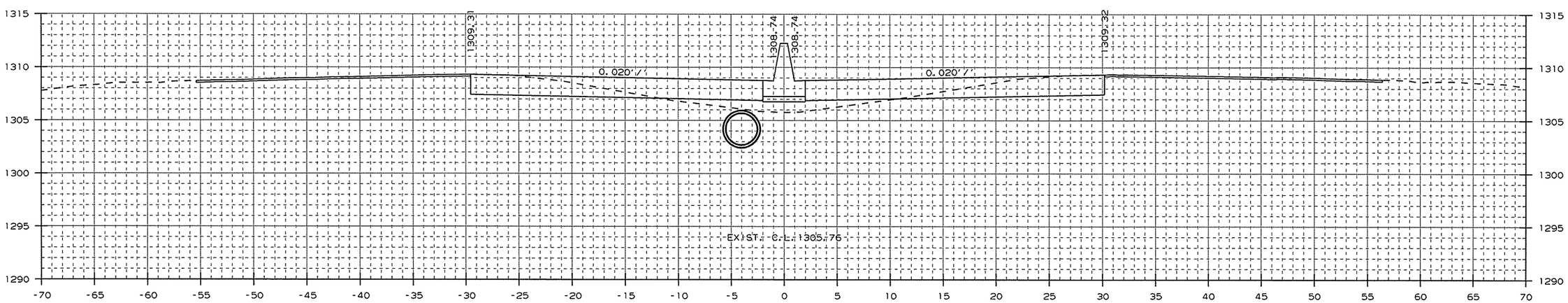

AREA CUT : 45.2
AREA FILL : 13.8

1168+00.00

CUT VOLUME : 163
FILL VOLUME : 54

CROSS SECTION STA. 1168+00 TO STA. 1169+00

USER: at5106
DESIGN FILE: G:\13106100_264toNHope\TRANSP\dgn\xsect\rCA0901_CX_01.dgn
PLOTTED: 1/13/2016 09:33 SCALE: 10:1 MODEL: CROSS SECTION SHEETS

Crafton, Tull & Associates Inc.

DATE REVISED	DATE FILMED	DATE REVISED	DATE FILMED

FED.RD. DIST.NO.	STATE	FED.AID PROJ.NO.	SHEET NO.	TOTAL SHEETS
6	ARK.			
JOB NO.		CA0901	304	452

2 CROSS SECTIONS

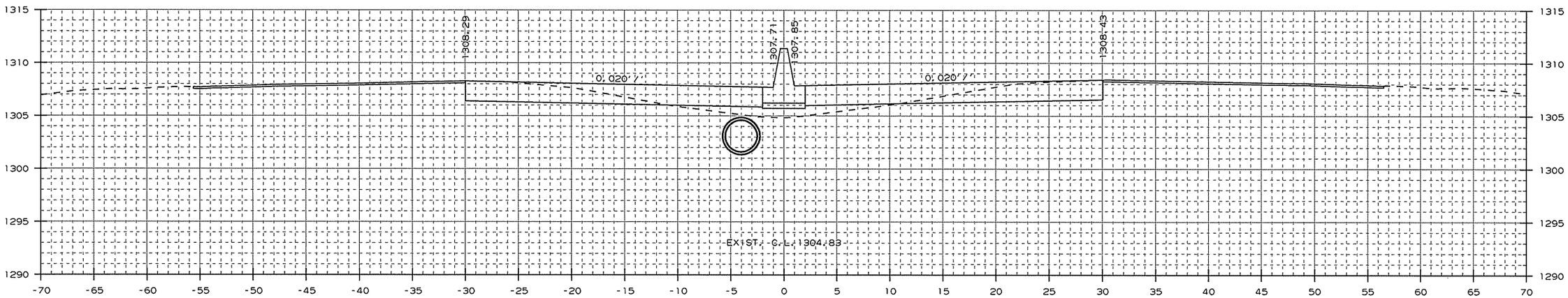

AREA CUT : 47.7
AREA FILL : 12.4

1170+00.00

CUT VOLUME : 87
FILL VOLUME : 23

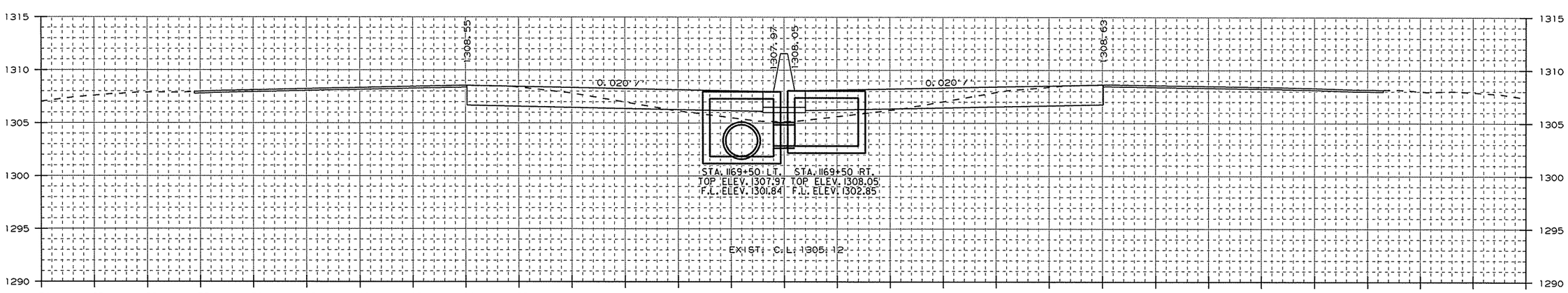

AREA CUT : 46.1
AREA FILL : 12.4

STA. 1169+50 - CONSTRUCT
DROP INLET 3' LT. OF C.L. H=6'2"
W/ 36" x 246' R.C. PIPE CULVERT
(CLASS III) (TYPE 3 BEDDING)
CONNECT TO DROP INLET
STA. 1172+00 LT.
TYPE ST DROP INLET = 4' X 6'
3 GRATES

1169+50.00

STA. 1169+50 - CONSTRUCT
DROP INLET 3' RT. OF C.L. H=5'2"
W/ 24" x 2' R.C. PIPE CULVERT
(CLASS III) (TYPE 3 BEDDING)
CONNECT TO DROP INLET
STA. 1169+50 LT.
TYPE ST DROP INLET = 4' X 6'
3 GRATES

CUT VOLUME : 84
FILL VOLUME : 24

CROSS SECTION STA. 1169+50 TO STA. 1170+00

USER: a+5106
DESIGN FILE: G:\13106100_264toNHope\TRANSP\dgn\xsect\rCA0901_CX_01.dgn
PLOTTED: 1/13/2016 09:33
SCALE: 10:1
MODEL: CROSS SECTION SHEETS

Crafton, Tull & Associates Inc.

DATE REVISED	DATE FILMED	DATE REVISED	DATE FILMED

FED.RD. DIST.NO.	STATE	FED.AID PROJ.NO.	SHEET NO.	TOTAL SHEETS
6	ARK.			
JOB NO.		CA0901	305	452

2 CROSS SECTIONS

STA. 1172+00 - CONSTRUCT
DROP INLET 3' LT. OF C.L. H=6'5"
W/ 36" x 196' R.C. PIPE CULVERT
(CLASS III) (TYPE 3 BEDDING)
CONNECT TO DROP INLET
STA. 1174+00 LT.
TYPE ST DROP INLET = 4' X 6'
3 GRATES

STA. 1172+00 - CONSTRUCT
DROP INLET 3' RT. OF C.L. H=5'6"
W/ 24" x 2' R.C. PIPE CULVERT
(CLASS III) (TYPE 3 BEDDING)
CONNECT TO DROP INLET
STA. 1172+00 LT.
TYPE ST DROP INLET = 4' X 6'
3 GRATES

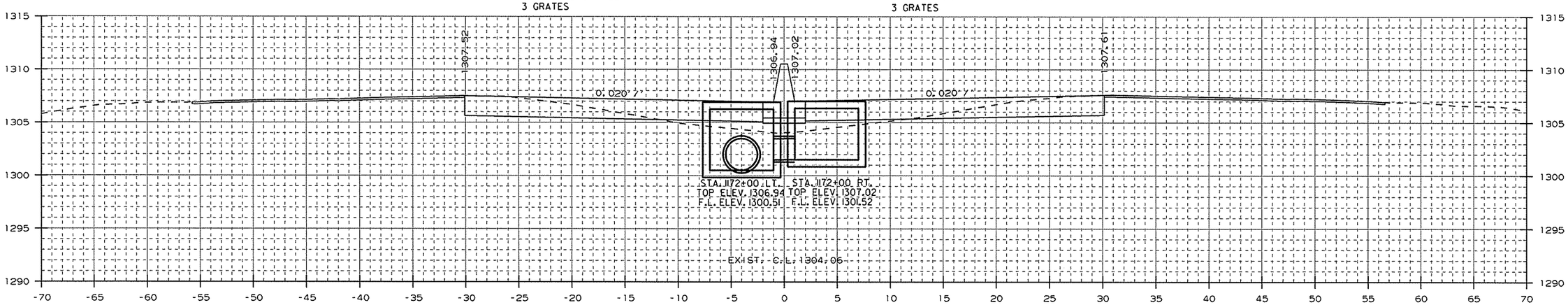

AREA CUT : 43.8
AREA FILL : 13.4

1172+00.00

CUT VOLUME : 163
FILL VOLUME : 48

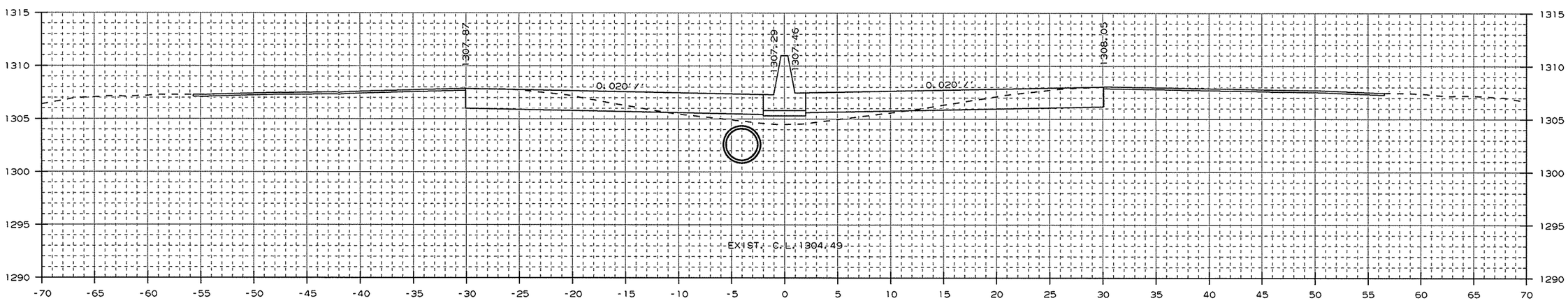

AREA CUT : 44.4
AREA FILL : 12.3

1171+00.00

CUT VOLUME : 171
FILL VOLUME : 46

CROSS SECTION STA. 1171+00 TO STA. 1172+00

USER: at5106
DESIGN FILE: G:\13106100_264toNHope\TRANSP\dgn\xsect\rCA0901_CX_01.dgn
PLOTTED: 1/13/2016 09:33
SCALE: 10:1
MODEL: CROSS SECTION SHEETS

Crafton, Tull & Associates Inc.	DATE REVISED	DATE FILMED	DATE REVISED	DATE FILMED	FED.RD. DIST.NO.	STATE	FED.AID PROJ.NO.	SHEET NO.	TOTAL SHEETS
					6	ARK.			
					JOB NO.		CA0901	306	452
					2	CROSS SECTIONS			

STA. 1174+00 - CONSTRUCT
DROP INLET 3' LT. OF C.L. H=6'7"
W/ 36" x 166' R.C. PIPE CULVERT
(CLASS III) (TYPE 3 BEDDING)
CONNECT TO DROP INLET
STA. 1175+70 LT.
TYPE ST DROP INLET = 4' X 6'
3 GRATES

STA. 1174+00 - CONSTRUCT
DROP INLET 3' RT. OF C.L. H=5'7"
W/ 24" x 2' R.C. PIPE CULVERT
(CLASS III) (TYPE 3 BEDDING)
CONNECT TO DROP INLET
STA. 1174+00 LT.
TYPE ST DROP INLET = 4' X 6'
3 GRATES

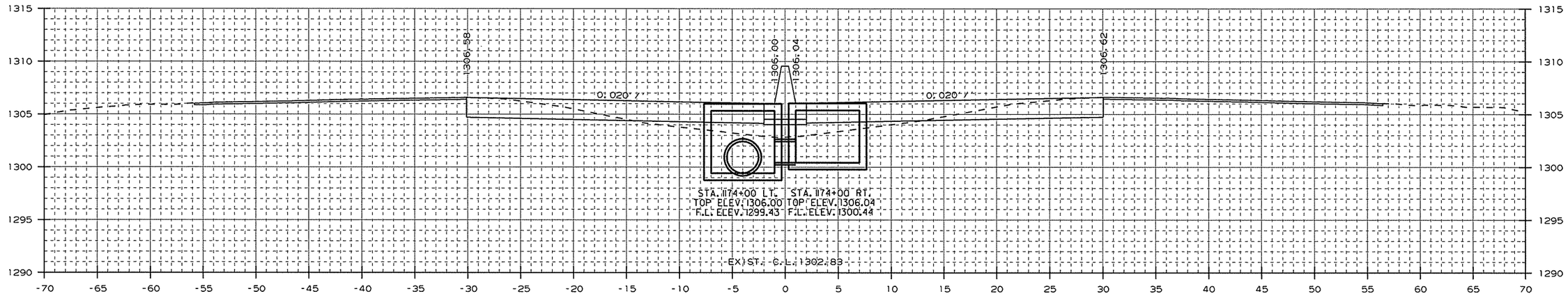

AREA CUT : 39.1
AREA FILL : 19.7

1174+00.00

CUT VOLUME : 147
FILL VOLUME : 66

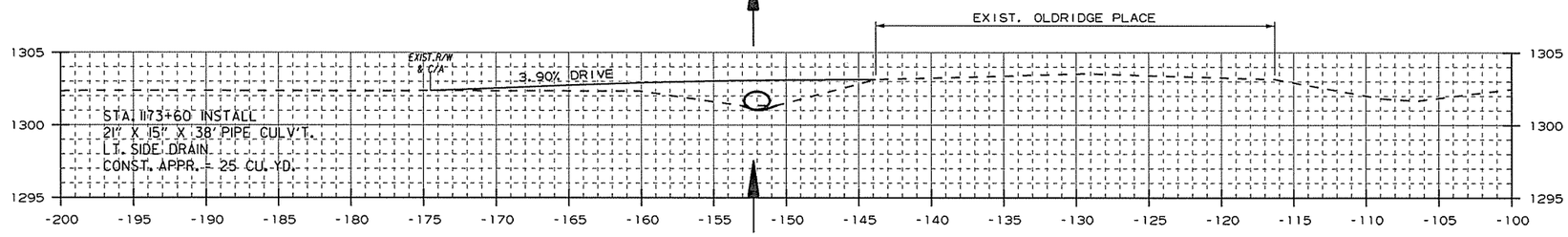

1173+60
(DRIVEWAY LT.)

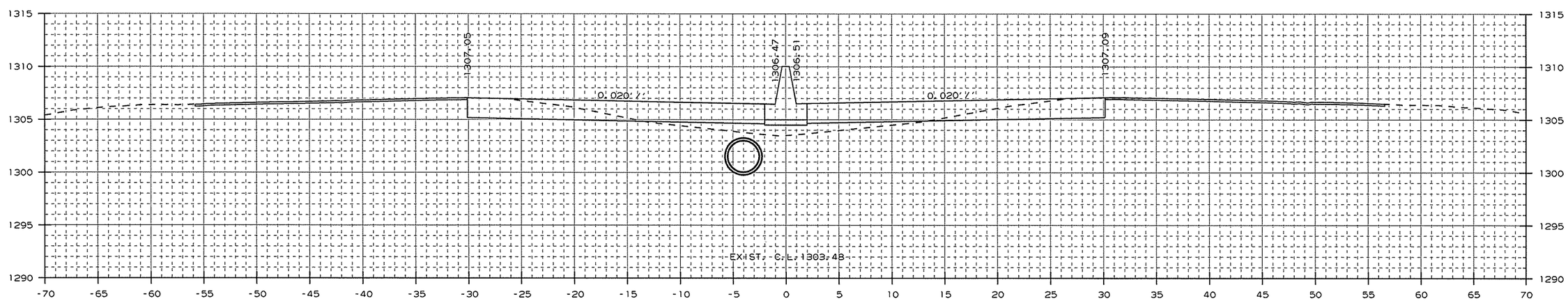

AREA CUT : 40.2
AREA FILL : 16.0

1173+00.00

CUT VOLUME : 156
FILL VOLUME : 54

CROSS SECTION STA. 1173+00 TO STA. 1174+00

USER: at5106
DESIGN FILE: G:\13106100_264toNHope\TRANSP\dgn\xsect\rCA0901_CX_01.dgn
PLOTTED: 1/13/2016 09:33
SCALE: 1:1
MODEL: CROSS SECTION SHEETS

Crafton, Tull & Associates Inc.

DATE REVISED	DATE FILMED	DATE REVISED	DATE FILMED

FED.RD. DIST.NO.	STATE	FED.AID PROJ.NO.	SHEET NO.	TOTAL SHEETS
6	ARK.			
JOB NO.		CA0901	307	452

2 CROSS SECTIONS

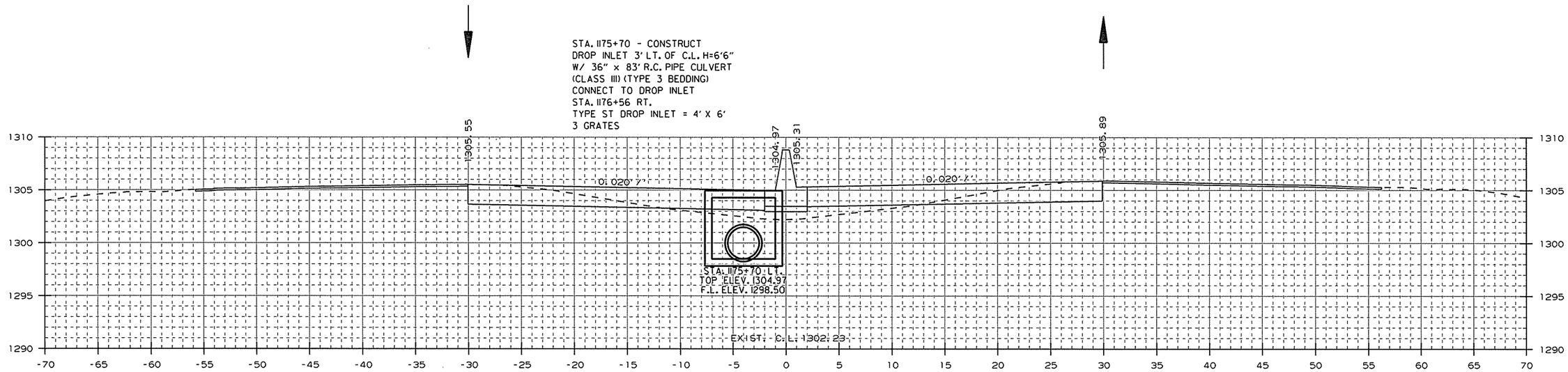

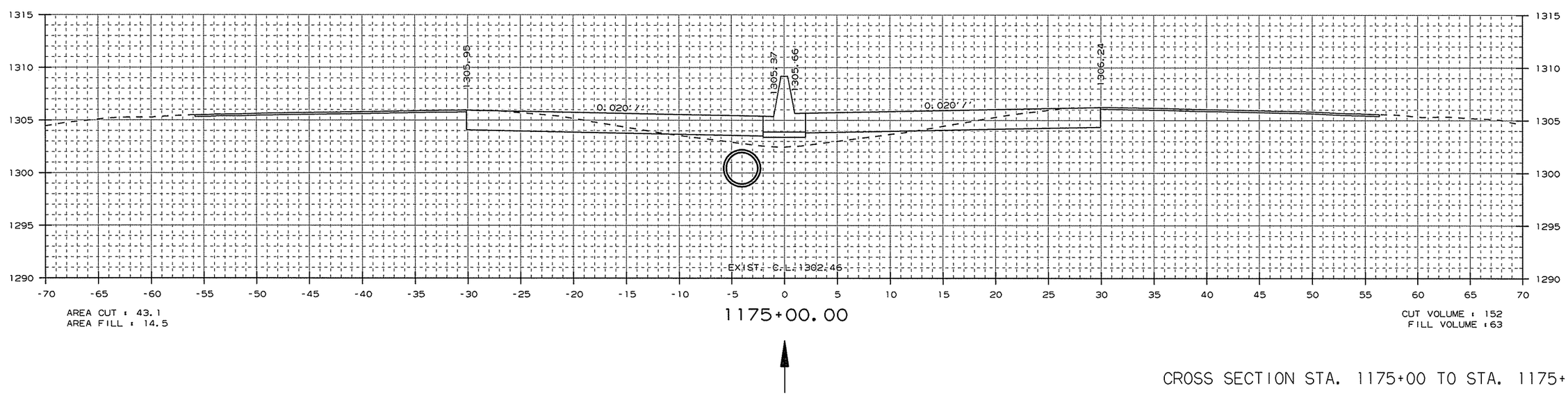

CROSS SECTION STA. 1175+00 TO STA. 1175+70

USER: at5106
DESIGN FILE: G:\13106100_264toNHope\TRANSP\dgn\xsect\rCA0901_CX_01.dgn
PLOTTED: 1/13/2016 09:33
SCALE: 101
MODEL: CROSS SECTION SHEETS

Crafton, Tull & Associates Inc.

DATE REVISED	DATE FILMED	DATE REVISED	DATE FILMED

FED.RD. DIST.NO.	STATE	FED.AID PROJ.NO.	SHEET NO.	TOTAL SHEETS
6	ARK.			
JOB NO.		CA0901	308	452

(2) CROSS SECTIONS

STA. 1176+56 - CONSTRUCT
DROP INLET 3' RT. OF C.L. H=6'6"
W/ 36" x 86' R.C. PIPE CULVERT
& 36" X 80' R.C. PIPE CULVERT
W/ F.E.S. LT. & RT.
(CLASS V)
JACK AND BORE BOTH PIPES
TYPE ST DROP INLET = 4' X 6'
5 CU. YD. DUMPED RIPRAP BOTH PIPES
3 GRATES

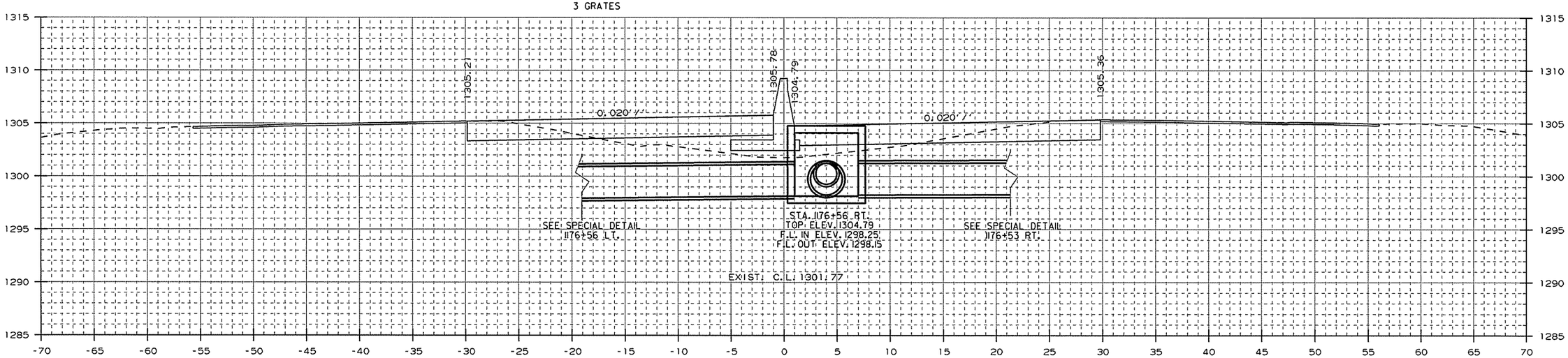

AREA CUT = 35.1
AREA FILL = 23.2

1176+56.00

CUT VOLUME = 77
FILL VOLUME = 43

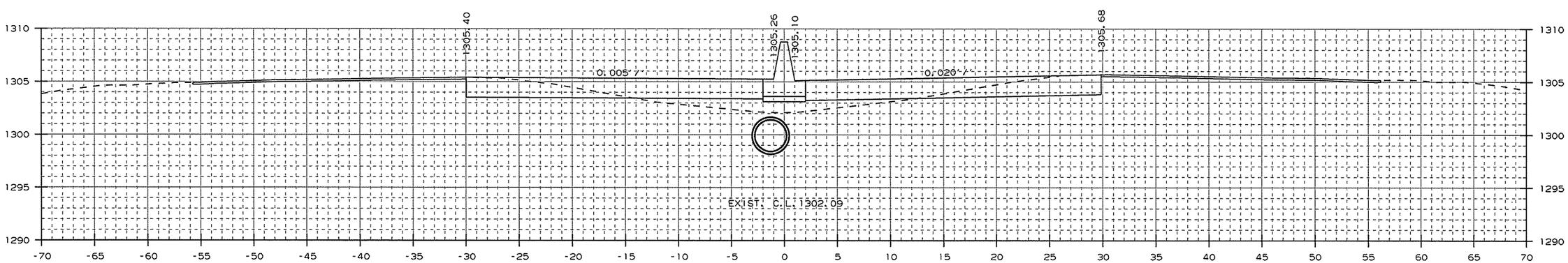

AREA CUT = 38.9
AREA FILL = 18.5

1176+00.00

CUT VOLUME = 45
FILL VOLUME = 18

CROSS SECTION STA. 1176+00 TO STA. 1176+56

USER: at5106
DESIGN FILE: G:\13106100_264toNHope\TRANSP\dgn\xsect\rCA0901_CX_01.dgn
PLOTTED: 1/13/2016 09:33
SCALE: 10:1
MODEL: CROSS SECTION SHEETS

Crafton, Tull & Associates Inc.

DATE REVISED	DATE FILMED	DATE REVISED	DATE FILMED

FED.RD. DIST.NO.	STATE	FED.AID PROJ.NO.	SHEET NO.	TOTAL SHEETS
6	ARK.			
JOB NO.		CA0901	309	452

2 CROSS SECTIONS

STA. 1177+85 - CONSTRUCT
DROP INLET 3' RT. OF C.L. H=4'9"
W/ 36" X 125' R.C. PIPE CULVERT
(CLASS III) (TYPE 3 BEDDING)
CONNECT TO DROP INLET
STA. 1176+56 RT.
TYPE ST DROP INLET = 4' X 6'
3 GRATES

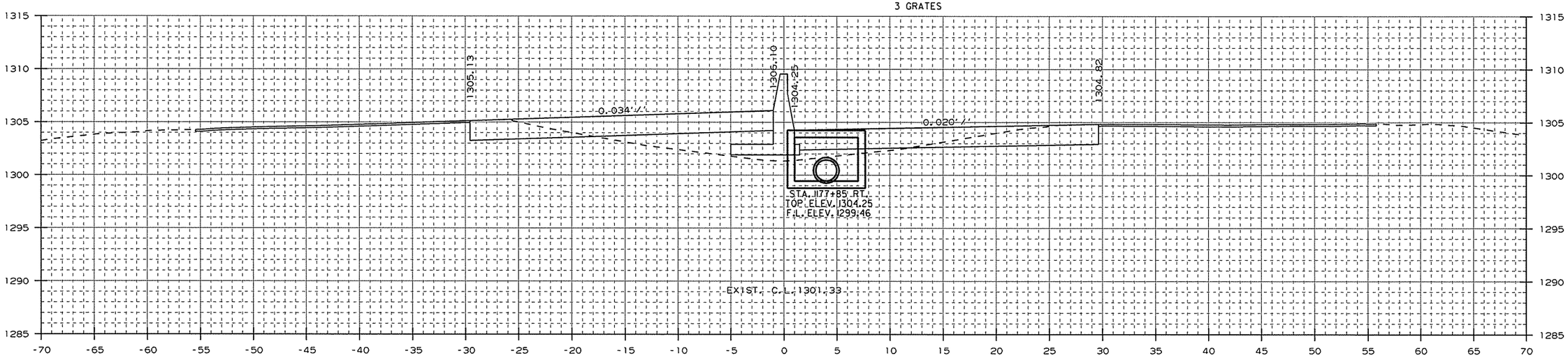

AREA CUT : 35.0
AREA FILL : 28.7

1177+85.00

CUT VOLUME : 111
FILL VOLUME : 86

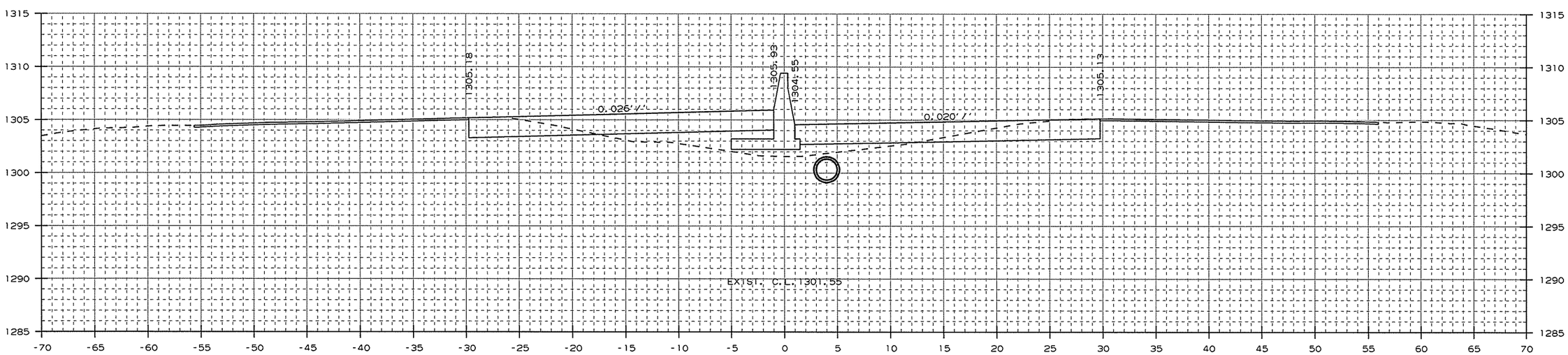

AREA CUT : 35.8
AREA FILL : 25.8

1177+00.00

CUT VOLUME : 58
FILL VOLUME : 40

CROSS SECTION STA. 1177+00 TO STA. 1177+85

USER: a15106
DESIGN FILE: G:\13106100_264toNHope\TRANSP\dgn\xsect\rCA0901_CX_01.dgn
PLOTTED: 1/13/2016 09:33
SCALE: 10:1
MODEL: CROSS SECTION SHEETS

Crafton, Tull & Associates Inc.

DATE REVISED	DATE FILMED	DATE REVISED	DATE FILMED

FED.RD. DIST.NO.	STATE	FED.AID PROJ.NO.	SHEET NO.	TOTAL SHEETS
6	ARK.			
JOB NO.		CA0901	310	452

2 CROSS SECTIONS

STA. 1178+10 IN PLACE
TYPE T DROP INLET
IN MEDIAN
MODIFY

STA. 1178+10 IN PLACE TRIPLE
6' X 4' X 196' R.C. BOX CULVERT
(30° LT. FWD. SKEW) (SPAN 20'-4")
RETAIN

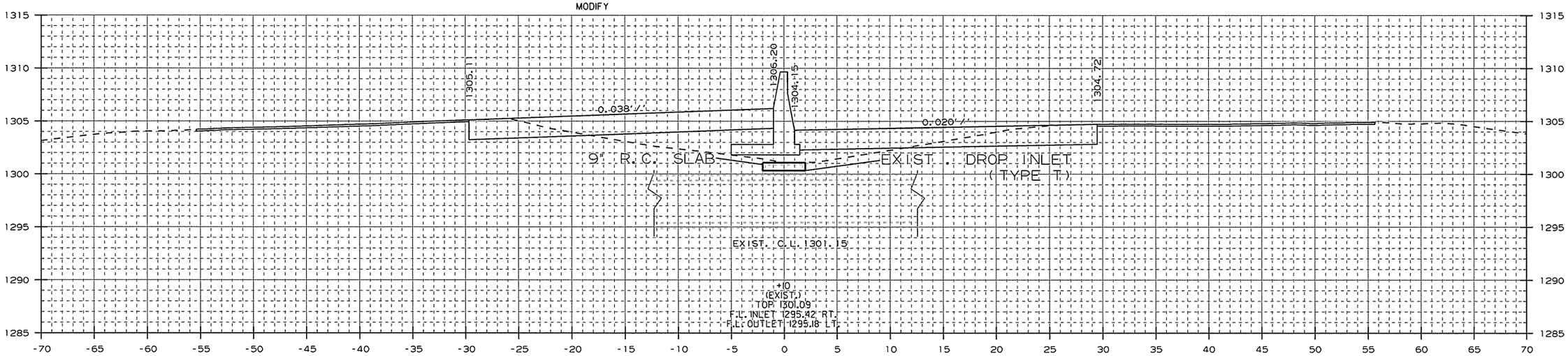

AREA CUT : 35.6
AREA FILL : 32.3

1178+10.00

CUT VOLUME : 13
FILL VOLUME : 11

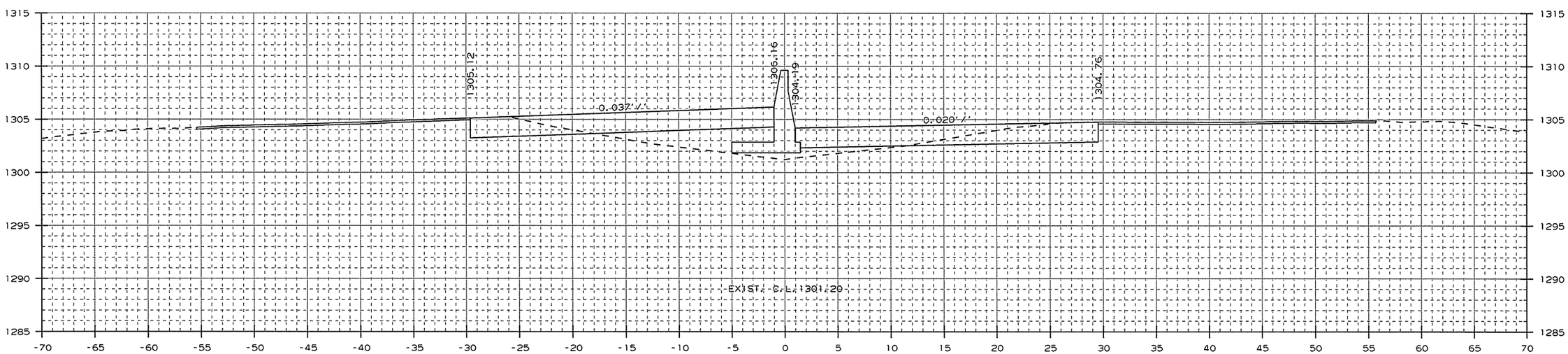

AREA CUT : 35.4
AREA FILL : 29.2

1178+00.00

CUT VOLUME : 20
FILL VOLUME : 16

CROSS SECTION STA. 1178+00 TO STA. 1178+10

USER: ot5106
DESIGN FILE: G:\13106100_264toNHope\TRANSP\dgn\xsect\rCA0901_CX_01.dgn
PLOTTED: 1/13/2016 09:33
SCALE: 10:1
MODEL: CROSS SECTION SHEETS

Crafton, Tull & Associates Inc.

DATE REVISED	DATE FILMED	DATE REVISED	DATE FILMED

FED.RD. DIST.NO.	STATE	FED.AID PROJ.NO.	SHEET NO.	TOTAL SHEETS
6	ARK.			
JOB NO.		CA0901	311	452

2 CROSS SECTIONS

STA. 1180+00 IN PLACE
18" X 86' R.C. PIPE CULVERT
W/ F.E.S.
FILL AND ABANDON

STA. 1180+00 IN PLACE
TYPE R DROP INLET
IN MEDIAN
REMOVE

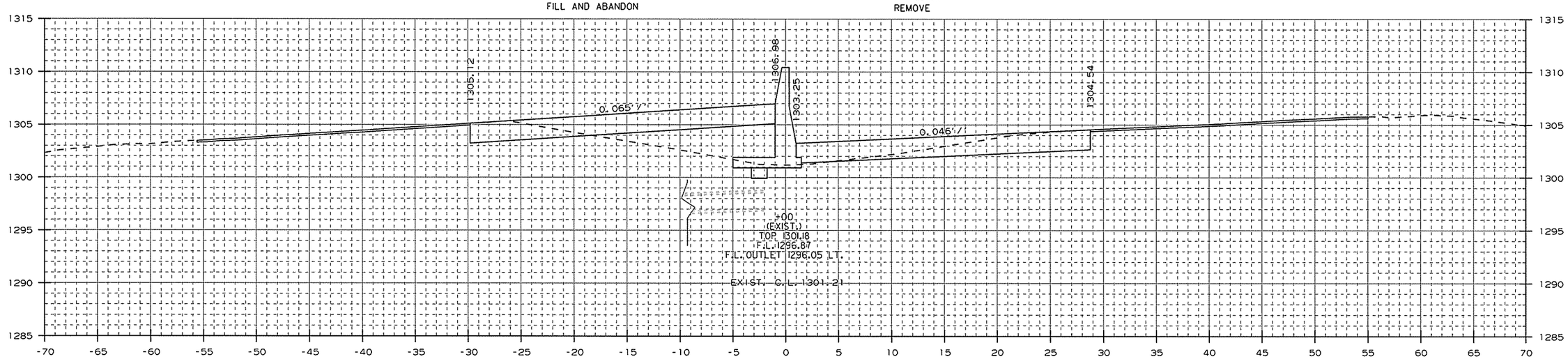

AREA CUT : 44.0
AREA FILL : 33.3

1180+00.00

CUT VOLUME : 150
FILL VOLUME : 116

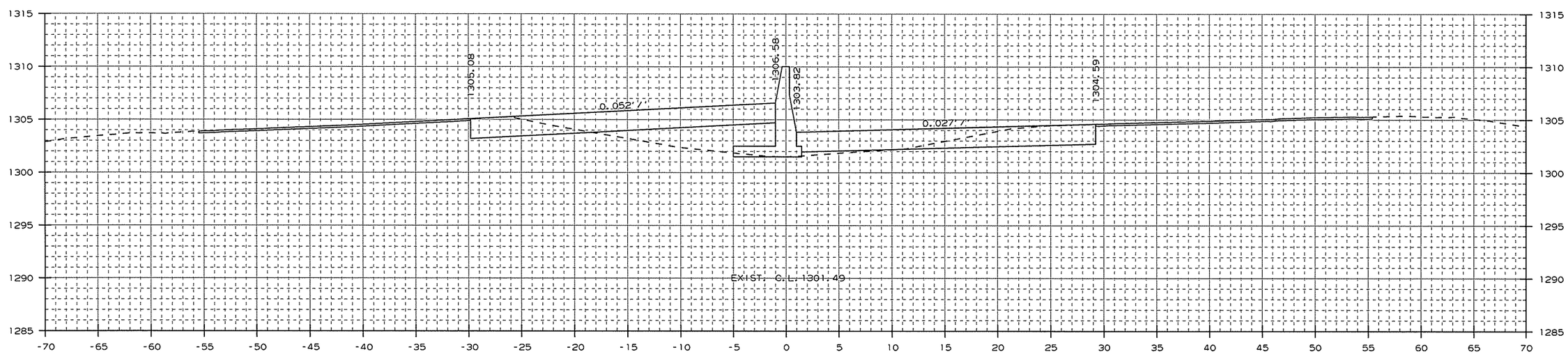

AREA CUT : 37.2
AREA FILL : 29.4

1179+00.00

CUT VOLUME : 121
FILL VOLUME : 103

CROSS SECTION STA. 1179+00 TO STA. 1180+00

USER: at5106
DESIGN FILE: G:\13106100_264toNHope\TRANSP\dgn\xsect\rCA0901_CX_01.dgn
PLOTTED: 1/13/2016 09:33
SCALE: 10:1
MODEL: CROSS SECTION SHEETS

Crafton, Tull & Associates Inc.

DATE REVISED	DATE FILMED	DATE REVISED	DATE FILMED

FED.RD. DIST.NO.	STATE	FED.AID PROJ.NO.	SHEET NO.	TOTAL SHEETS
6	ARK.			
JOB NO.		CA0901	312	452

2 CROSS SECTIONS

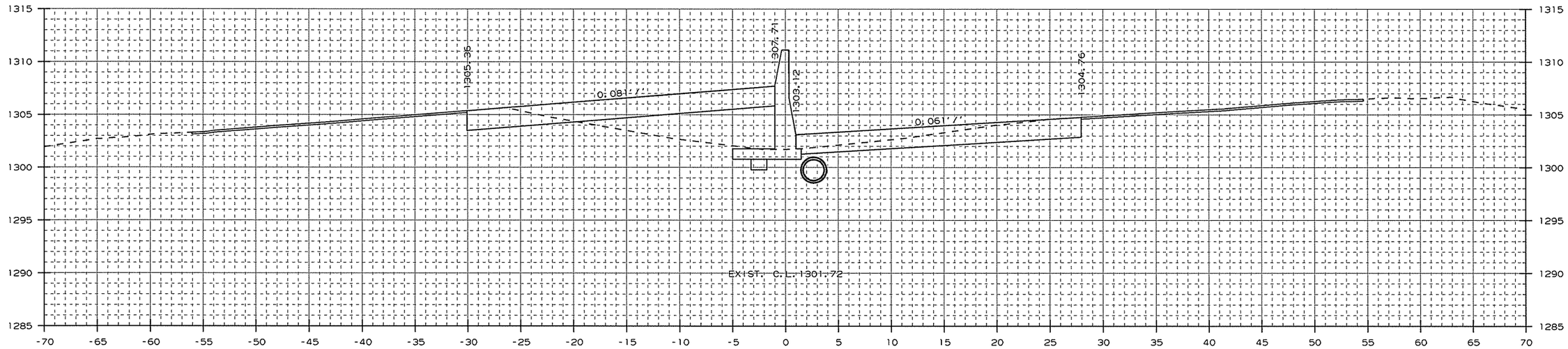

AREA CUT : 52.7
AREA FILL : 41.9

1181+00.00

CUT VOLUME : 149
FILL VOLUME : 114

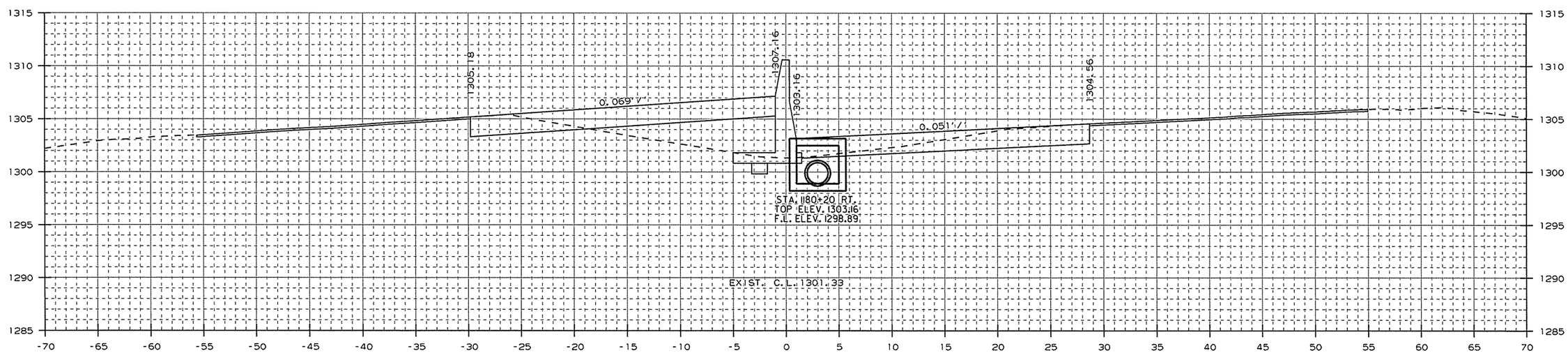

AREA CUT : 48.2
AREA FILL : 35.2

1180+20.00

STA. 1180+20 - CONSTRUCT
DROP INLET 3' RT. OF C.L. H=4'3"
W/ 24" x172' R.C. PIPE CULVERT
(CLASS III) (TYPE 3 BEDDING)
CONNECT TO DROP INLET
STA. 1181+96 RT.
TYPE ST DROP INLET = 4' X 4'

CUT VOLUME : 34
FILL VOLUME : 25

CROSS SECTION STA. 1180+20 TO STA. 1181+00

USER: at5106
DESIGN FILE: G:\13106100_264toNHope\TRANSP\dgn\xsect\rCA0901_CX_01.dgn MODEL: CROSS SECTION SHEETS
PLOTTED: 1/13/2016 09:33 SCALE: 10:1

Crafton, Tull & Associates Inc.

DATE REVISED	DATE FILMED	DATE REVISED	DATE FILMED	FED.RD. DIST.NO.	STATE	FED.AID PROJ.NO.	SHEET NO.	TOTAL SHEETS
				6	ARK.			
				JOB NO.		CA0901	313	452

2 CROSS SECTIONS

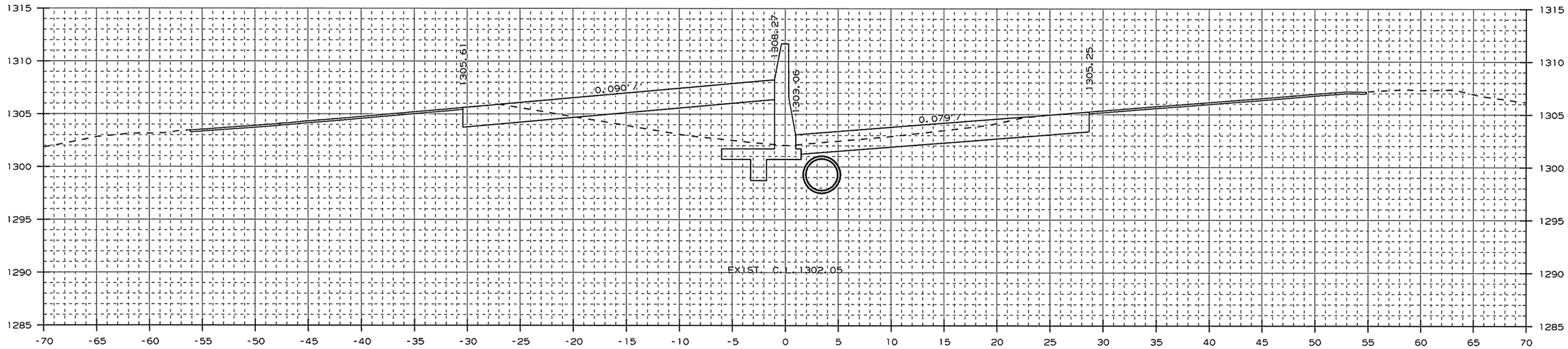

AREA CUT : 59.9
AREA FILL : 42.7

1183+00.00

CUT VOLUME : 223
FILL VOLUME : 157

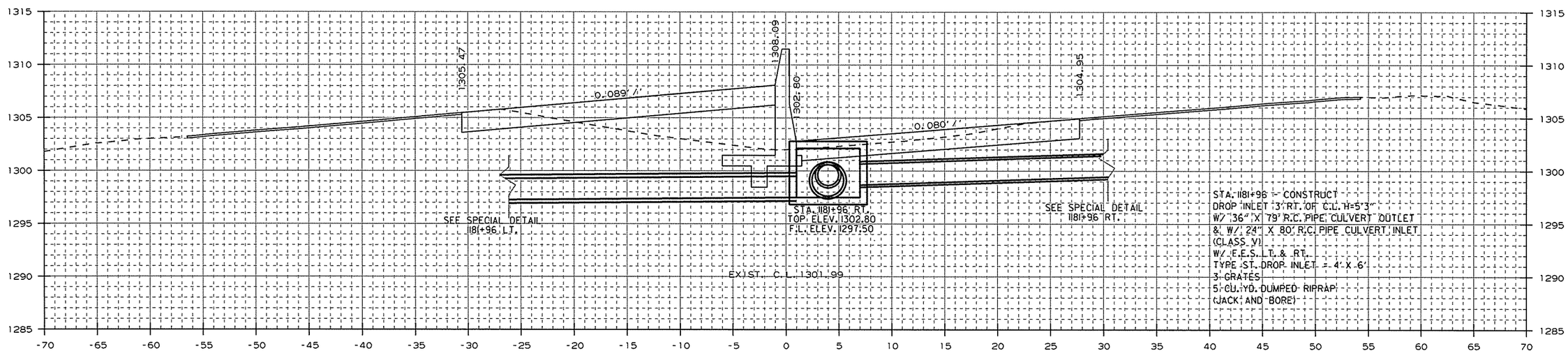

AREA CUT : 60.4
AREA FILL : 42.0

1182+00.00

CUT VOLUME : 209
FILL VOLUME : 155

CROSS SECTION STA. 1182+00 TO STA. 1183+00

USER: at5106
DESIGN FILE: G:\13106100_264toNHope\TRANSP\dgn\xsect\rCA0901_CX_01.dgn
PLOTTED: 1/13/2016 09:33
SCALE: 10:1
MODEL: CROSS SECTION SHEETS

Crafton, Tull & Associates Inc.

DATE REVISED	DATE FILMED	DATE REVISED	DATE FILMED

FED.RD. DIST.NO.	STATE	FED.AID PROJ.NO.	SHEET NO.	TOTAL SHEETS
6	ARK.			
JOB NO.		CA0901	314	452

2 CROSS SECTIONS

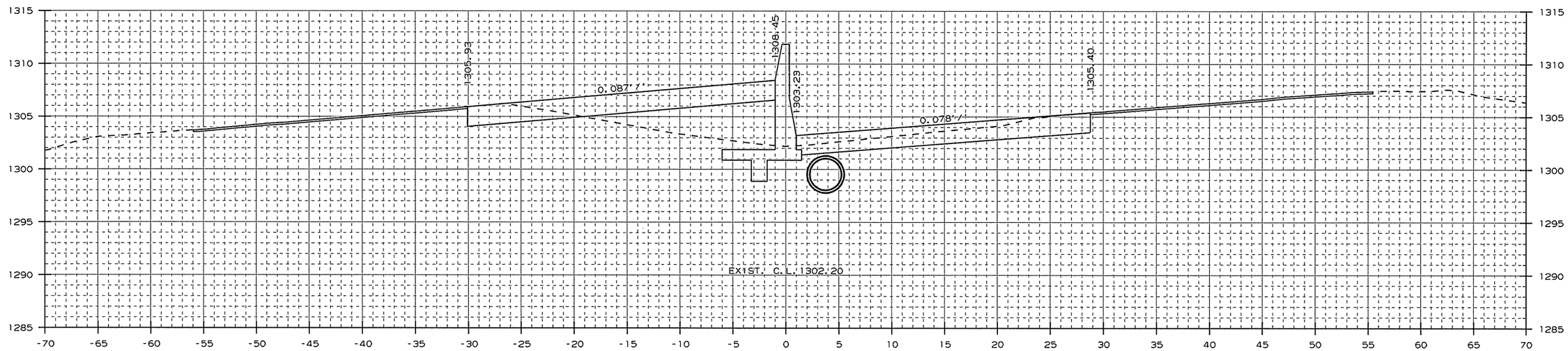

AREA CUT : 60.0
AREA FILL : 42.0

1184+00.00

CUT VOLUME : 115
FILL VOLUME : 78

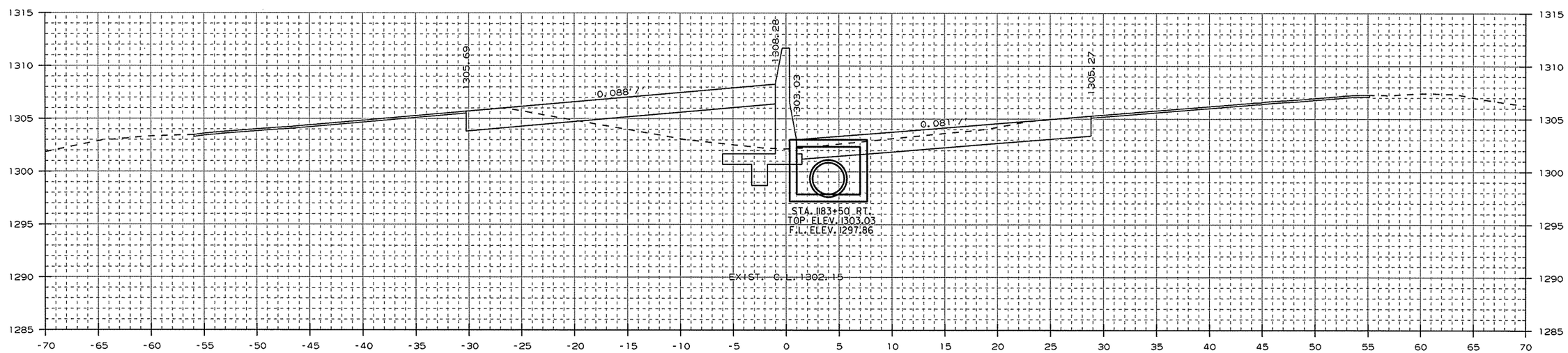

AREA CUT : 64.2
AREA FILL : 42.6

1183+50.00

STA. 1183+50 - CONSTRUCT
DROP INLET 3' RT. OF C.L. H=5'2"
W/ 36" x 149' R.C. PIPE CULVERT
(CLASS IV) (TYPE 3 BEDDING)
CONNECT TO DROP INLET
STA. 1181+96 RT.
TYPE ST DROP INLET = 4' X 6'
3 GRATES

CUT VOLUME : 115
FILL VOLUME : 79

CROSS SECTION STA. 1183+50 TO STA. 1184+00

USER: at5106
DESIGN FILE: G:\13106100_264toNHope\TRANSP\dgn\xsect\rCA0901_CX_01.dgn
PLOTTED: 1/13/2016 09:33
SCALE: 10:1
MODEL: CROSS SECTION SHEETS

Crafton, Tull & Associates Inc.

DATE REVISED	DATE FILMED	DATE REVISED	DATE FILMED

FED.RD. DIST.NO.	STATE	FED.AID PROJ.NO.	SHEET NO.	TOTAL SHEETS
6	ARK.			
JOB NO.		CA0901	315	452

2 CROSS SECTIONS

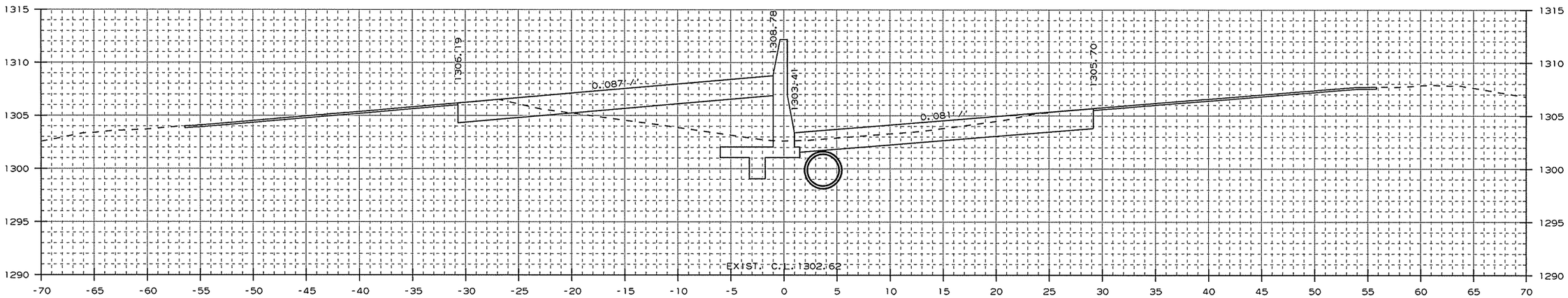

AREA CUT : 61.4
AREA FILL : 40.6

1186+00.00

CUT VOLUME : 234
FILL VOLUME : 152

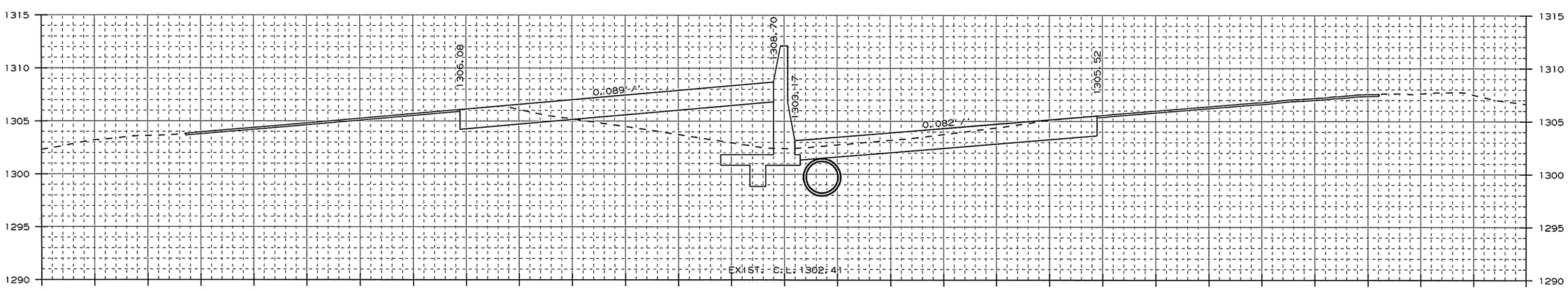

AREA CUT : 64.8
AREA FILL : 41.6

1185+00.00

CUT VOLUME : 231
FILL VOLUME : 155

CROSS SECTION STA. 1185+00 TO STA. 1186+00

USER: a15106
DESIGN FILE: G:\13106100_264toNHope\TRANSP\dgn\xsect\rCA0901_CX_01.dgn
PLOTTED: 1/13/2016 09:33
SCALE: 10:1
MODEL: CROSS SECTION SHEETS

Crafton, Tull & Associates Inc.

DATE REVISED	DATE FILMED	DATE REVISED	DATE FILMED

FED.RD. DIST.NO.	STATE	FED.AID PROJ.NO.	SHEET NO.	TOTAL SHEETS
6	ARK.			
JOB NO.		CA0901	316	452

2 CROSS SECTIONS

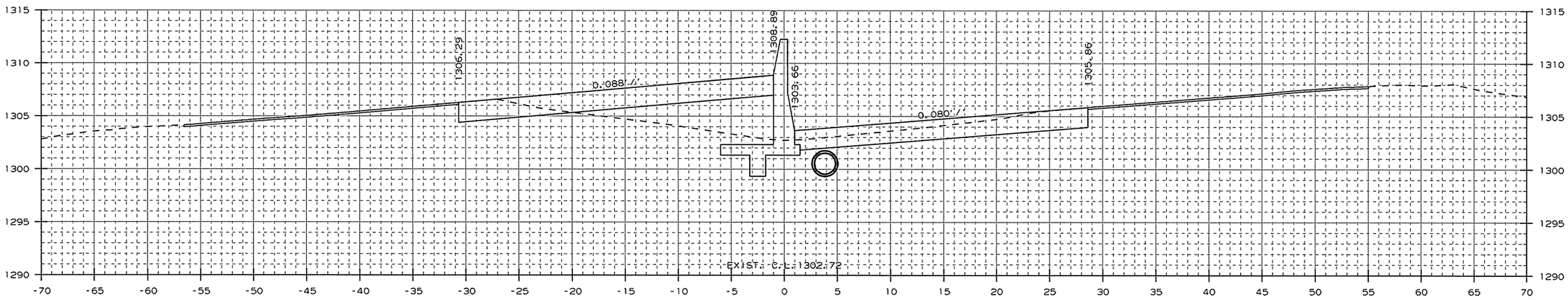

AREA CUT : 60.6
AREA FILL : 39.4

1187+00.00

CUT VOLUME : 114
FILL VOLUME : 74

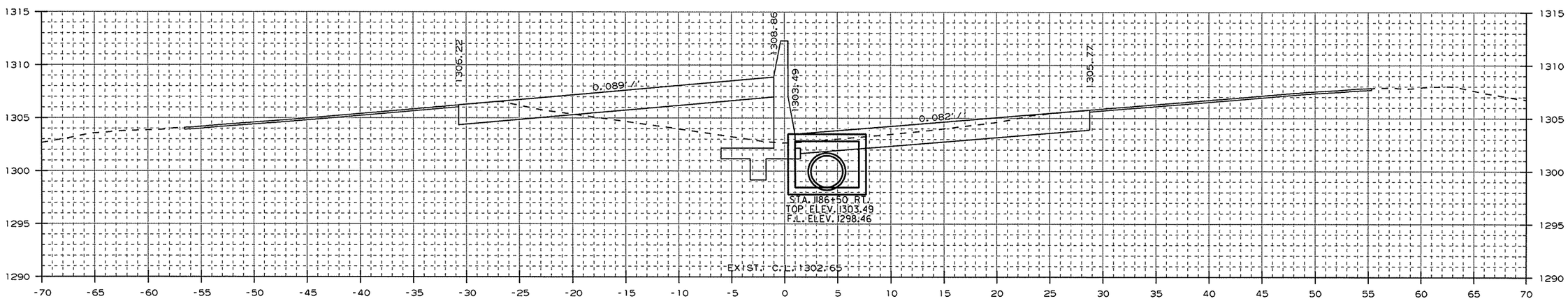

AREA CUT : 62.2
AREA FILL : 40.3

1186+50.00

STA. 1186+50 - CONSTRUCT
DROP INLET 3' RT. OF C.L. H=5'0"
W/ 36" x 296' R.C. PIPE CULVERT
(CLASS IV) (TYPE 3 BEDDING)
CONNECT TO DROP INLET
STA. 1183+50 RT.
TYPE ST DROP INLET = 4' X 6'
3 GRATES

CUT VOLUME : 114
FILL VOLUME : 75

CROSS SECTION STA. 1186+50 TO STA. 1187+00

USER: a15106
DESIGN FILE: G:\13106100_264toNHope\TRANSP\dgn\xsect\rCA0901_CX_01.dgn
PLOTTED: 1/13/2016 09:33
SCALE: 10:1
MODEL: CROSS SECTION SHEETS

Crafton, Tull & Associates Inc.

DATE REVISED	DATE FILMED	DATE REVISED	DATE FILMED

FED.RD. DIST.NO.	STATE	FED.AID PROJ.NO.	SHEET NO.	TOTAL SHEETS
6	ARK.			
JOB NO.		CA0901	317	452

2 CROSS SECTIONS

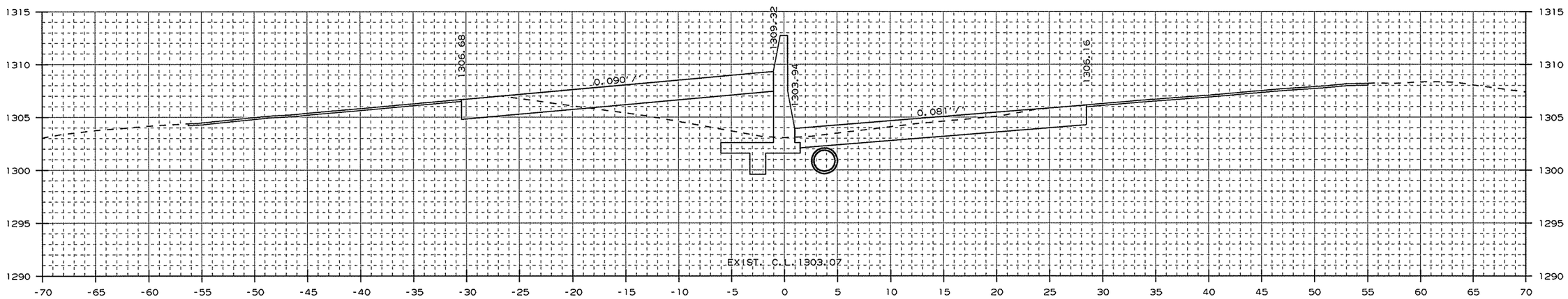

AREA CUT : 65.1
AREA FILL : 37.5

1189+00.00

CUT VOLUME : 233
FILL VOLUME : 142

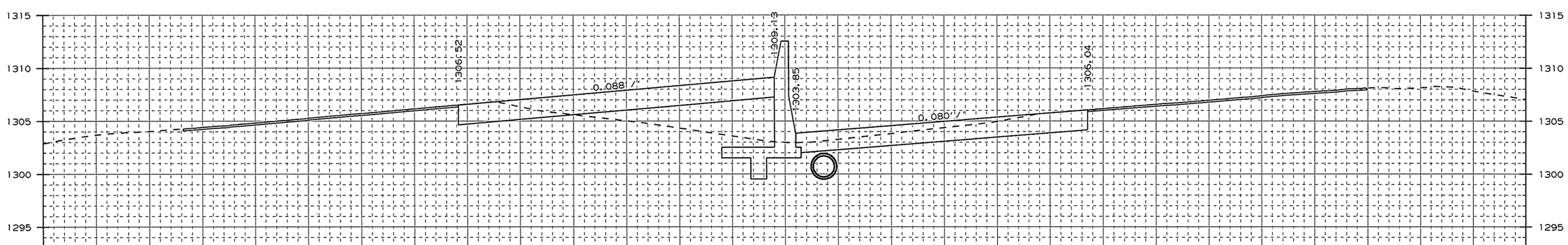

AREA CUT : 60.9
AREA FILL : 39.2

1188+00.00

CUT VOLUME : 225
FILL VOLUME : 146

CROSS SECTION STA. 1188+00 TO STA. 1189+00

USER: a15106
DESIGN FILE: G:\13106100_264toNHope\TRANSP\dgn\xsect\rCA0901_CX_01.dgn
PLOTTED: 1/13/2016 09:34
SCALE: 10:1
MODEL: CROSS SECTION SHEETS

Crafton, Tull & Associates Inc.

DATE REVISED	DATE FILMED	DATE REVISED	DATE FILMED

FED.RD. DIST.NO.	STATE	FED.AID PROJ.NO.	SHEET NO.	TOTAL SHEETS
6	ARK.			
JOB NO.		CA0901	318	452

2 CROSS SECTIONS

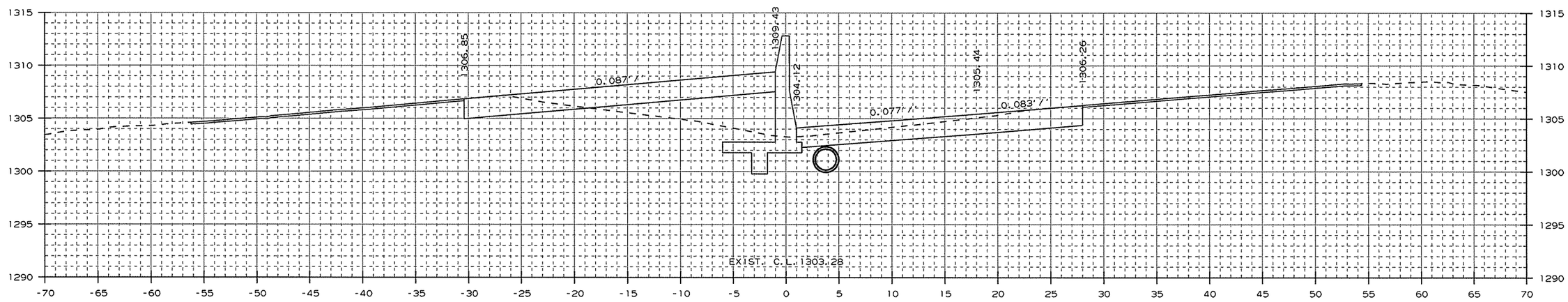

AREA CUT : 64.1
AREA FILL : 34.7

1190+00.00

CUT VOLUME : 120
FILL VOLUME : 64

STA. 1189+50
BEGIN R.M.L. SHOULDER
SLOPE TRANSITION

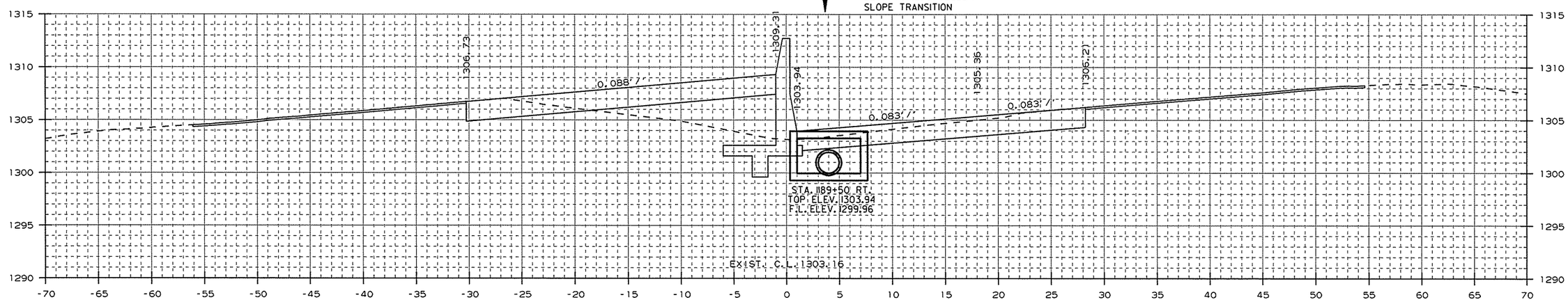

AREA CUT : 65.4
AREA FILL : 34.4

1189+50.00

STA. 1189+50 - CONSTRUCT
DROP INLET 3' RT. OF C.L. H=4'0"
W/ 24" x 296' R.C. PIPE CULVERT
(CLASS IV) (TYPE 3 BEDDING)
CONNECT TO DROP INLET
STA. 1186+50 RT.
TYPE ST DROP INLET = 4' X 6'
3 GRATES

CUT VOLUME : 121
FILL VOLUME : 67

CROSS SECTION STA. 1189+50 TO STA. 1190+00

USER: a15106
DESIGN FILE: G:\13106100_264toNHope\TRANSP\dgn\xsect\rCA0901_CX_01.dgn
PLOTTED: 1/13/2016 09:34
SCALE: 10:1
MODEL: CROSS SECTION SHEETS

Crafton, Tull & Associates Inc.	DATE REVISED	DATE FILMED	DATE REVISED	DATE FILMED	FED.RD. DIST.NO.	STATE	FED.AID PROJ.NO.	SHEET NO.	TOTAL SHEETS
					6	ARK.			
					JOB NO.		CA0901	319	452
					(2)	CROSS SECTIONS			

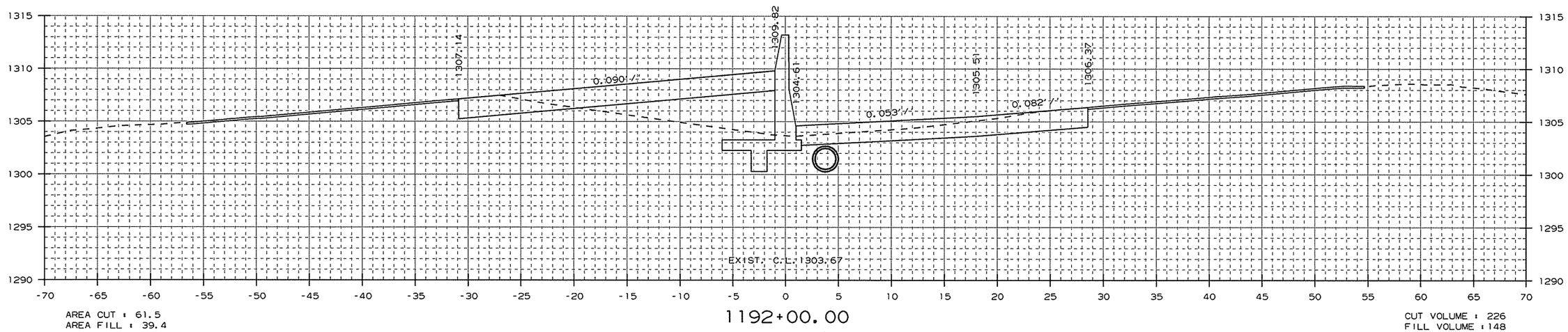

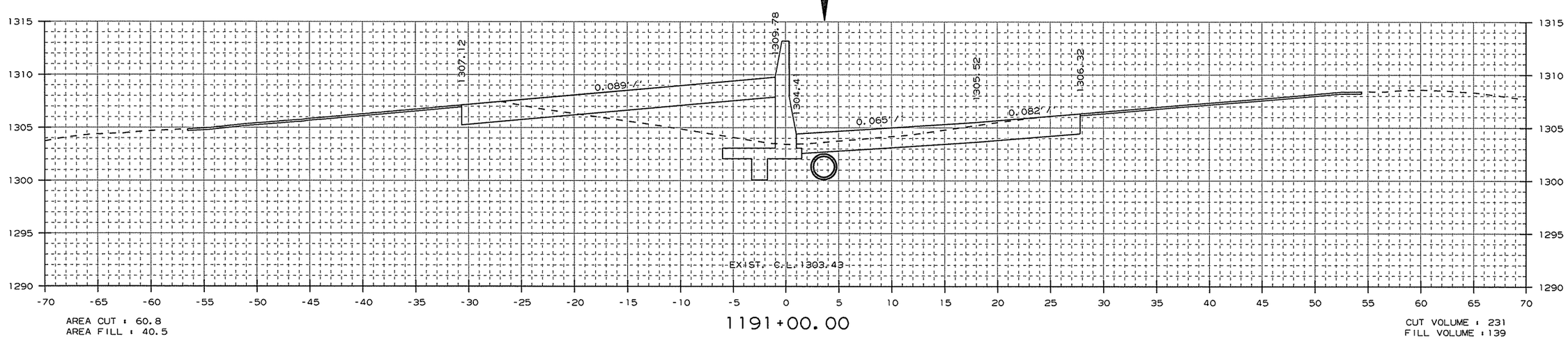

CROSS SECTION STA. 1191+00 TO STA. 1192+00

USER: at5106
DESIGN FILE: G:\13106100_264toNHope\TRANSP\dgn\xsect\rCA0901_CX_01.dgn
PLOTTED: 1/13/2016 09:34
SCALE: 10:1
MODEL: CROSS SECTION SHEETS

Crafton, Tull & Associates Inc.

DATE REVISED	DATE FILMED	DATE REVISED	DATE FILMED

FED.RD. DIST.NO.	STATE	FED.AID PROJ.NO.	SHEET NO.	TOTAL SHEETS
6	ARK.			
JOB NO.		CA0901	320	452

2 CROSS SECTIONS

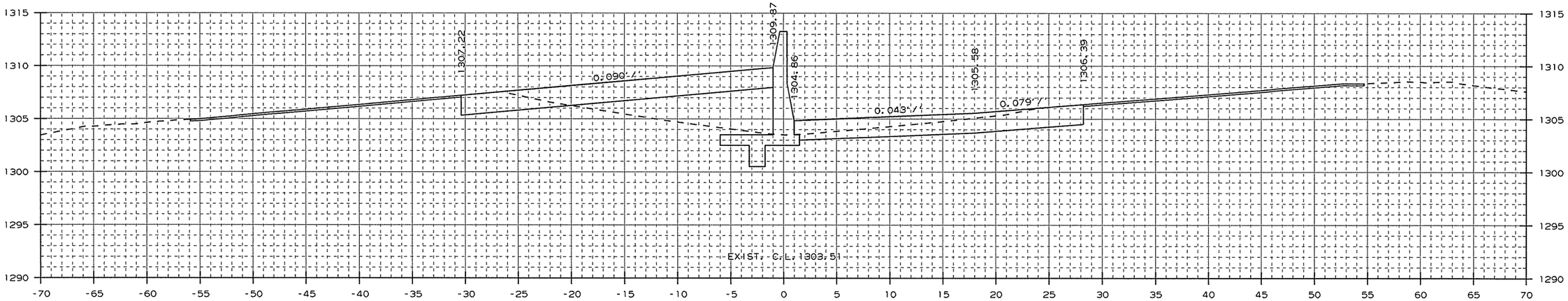

AREA CUT : 56.0
AREA FILL : 43.7

1193+00.00

CUT VOLUME : 108
FILL VOLUME : 77

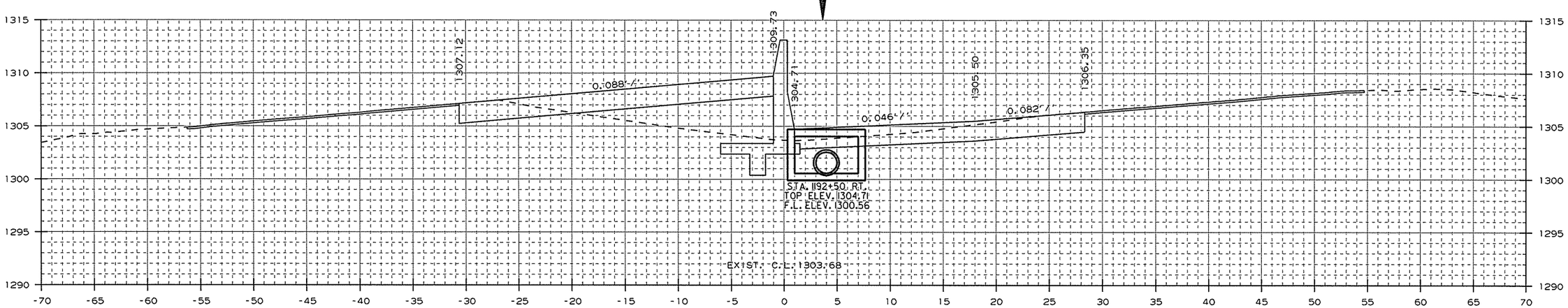

AREA CUT : 60.1
AREA FILL : 39.6

1192+50.00

STA. 1192+50 - CONSTRUCT
DROP INLET 3' RT. OF C.L. H=4'2"
W/ 24" x 296' R.C. PIPE CULVERT
(CLASS IV) (TYPE 3) BEDDING
CONNECT TO DROP INLET
STA. 1189+50 RT.
TYPE ST DROP INLET = 4' X 6'
3 GRATES

CUT VOLUME : 113
FILL VOLUME : 73

CROSS SECTION STA. 1192+50 TO STA. 1193+00

USER: a+5106
DESIGN FILE: G:\13106100_264toNHope\TRANSP\dgn\xsect\rCA0901_CX_01.dgn
PLOTTED: 1/13/2016 09:34
SCALE: 10:1
MODEL: CROSS SECTION SHEETS

Crafton, Tull & Associates Inc.

DATE REVISED	DATE FILMED	DATE REVISED	DATE FILMED

FED.RD. DIST.NO.	STATE	FED.AID PROJ.NO.	SHEET NO.	TOTAL SHEETS
6	ARK.			
JOB NO.		CA0901	321	452

2 CROSS SECTIONS

STA. 1195+91
END R.M.L. SHOULDER
SLOPE TRANSITION

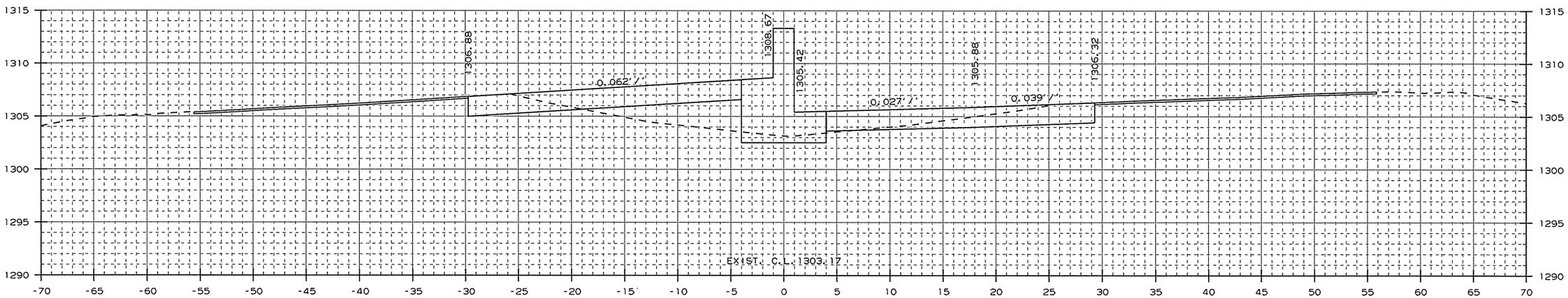

AREA CUT : 42.0
AREA FILL : 25.4

1195+00.00

CUT VOLUME : 163
FILL VOLUME : 123

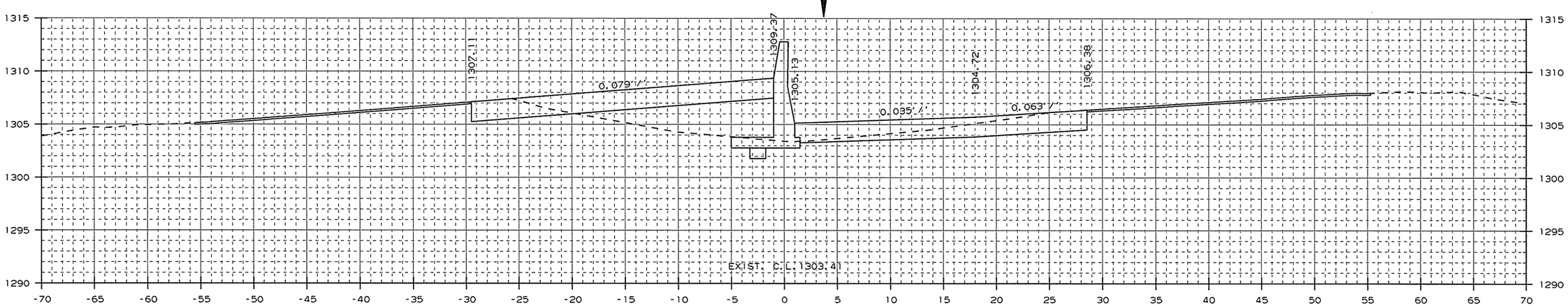

AREA CUT : 46.0
AREA FILL : 41.0

1194+00.00

CUT VOLUME : 189
FILL VOLUME : 157

CROSS SECTION STA. 1194+00 TO STA. 1195+00

USER: a15106
DESIGN FILE: G:\13106100_264toNHope\TRANSP\dgn\xsect\rCA0901_CX_01.dgn
PLOTTED: 1/13/2016 09:34
SCALE: 10:1
MODEL: CROSS SECTION SHEETS

Crafton, Tull & Associates Inc.

DATE REVISED	DATE FILMED	DATE REVISED	DATE FILMED

FED.RD. DIST.NO.	STATE	FED.AID PROJ.NO.	SHEET NO.	TOTAL SHEETS
6	ARK.			
JOB NO.		CA0901	322	452

2 CROSS SECTIONS

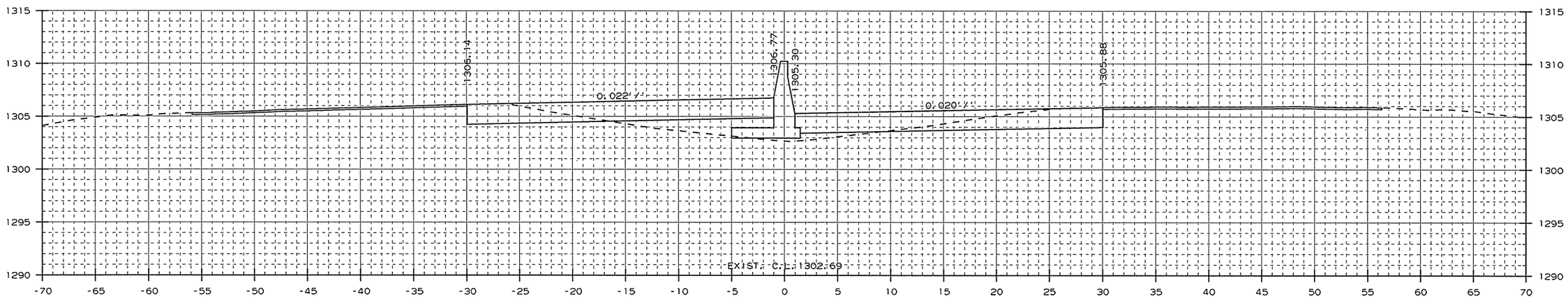

AREA CUT : 39.4
AREA FILL : 17.7

1197+00.00

CUT VOLUME : 136
FILL VOLUME : 89

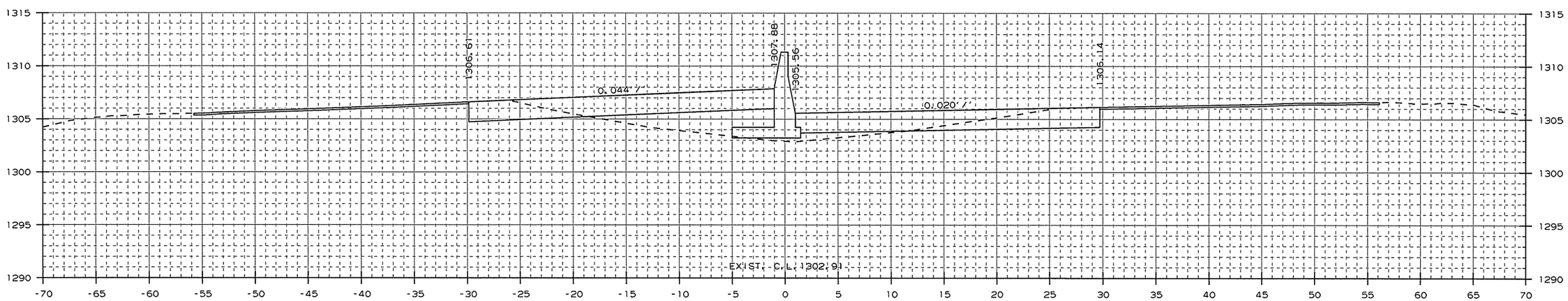

AREA CUT : 34.2
AREA FILL : 30.1

1196+00.00

CUT VOLUME : 141
FILL VOLUME : 103

CROSS SECTION STA. 1196+00 TO STA. 1197+00

USER: at5106
DESIGN FILE: G:\13106100_264toNHope\TRANSP\dgn\xsect\rCA0901_CX_01.dgn
PLOTTED: 1/13/2016 09:35
SCALE: 10:1
MODEL: CROSS SECTION SHEETS

Crafton, Tull & Associates Inc.

DATE REVISED	DATE FILMED	DATE REVISED	DATE FILMED

FED.RD. DIST.NO.	STATE	FED.AID PROJ.NO.	SHEET NO.	TOTAL SHEETS
6	ARK.			
JOB NO.		CA0901	323	452

2 CROSS SECTIONS

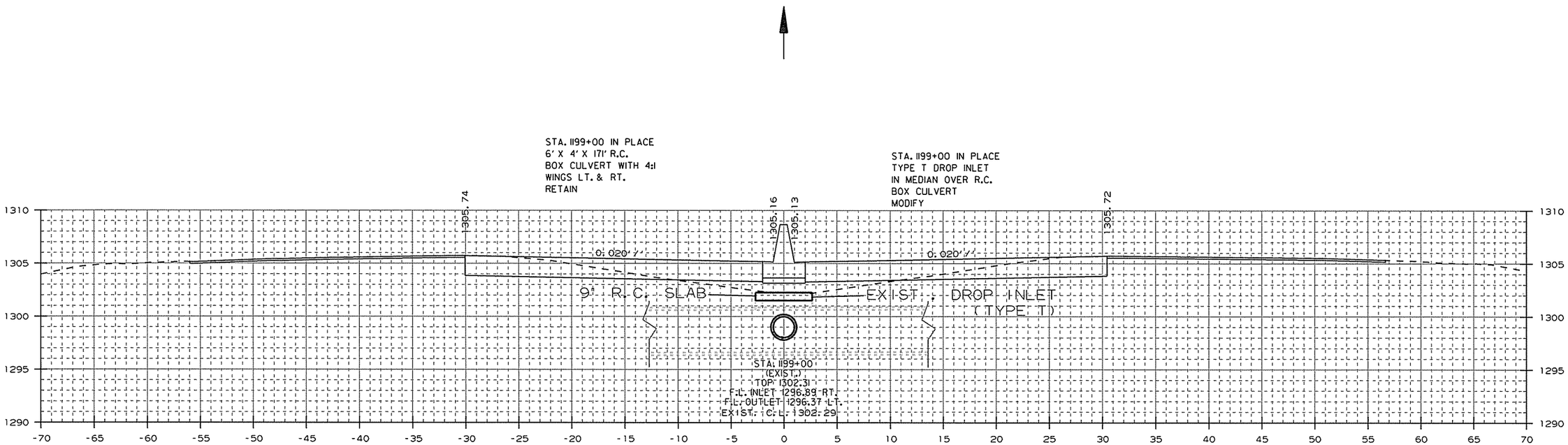

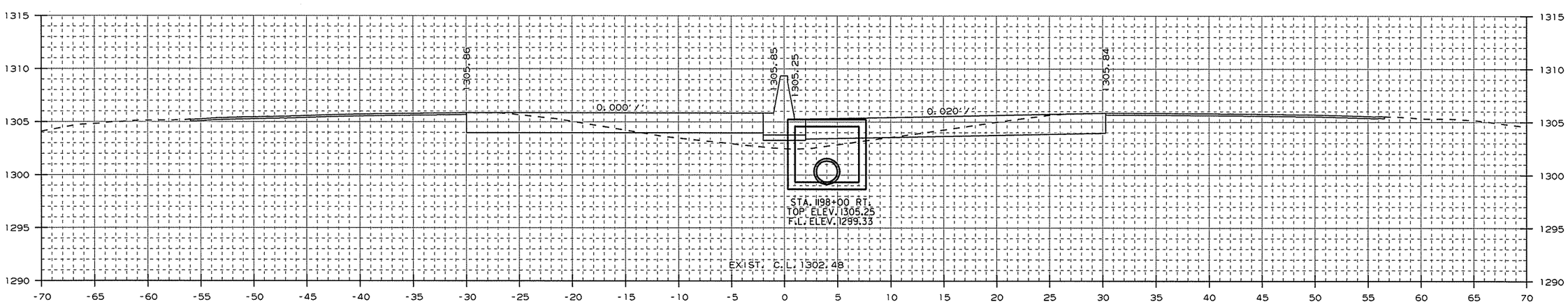

STA. 1198+00 - CONSTRUCT
DROP INLET 3' RT. OF C.L. H=5'11"
W/ 24" x 94' R.C. PIPE CULVERT
(CLASS III) (TYPE 3 BEDDING)
CONNECT TO EXIST. DROP INLET
STA. 1199+00
TYPE ST DROP INLET = 4' X 6'
3 GRATES

CROSS SECTION STA. 1198+00 TO STA. 1199+00

USER: a15106
DESIGN FILE: G:\13106100_264toNHope\TRANSP\dgn\xsect\rCA0901_CX_01.dgn
PLOTTED: 1/13/2016 09:35
SCALE: 10:1
MODEL: CROSS SECTION SHEETS

Crafton, Tull & Associates Inc.

DATE REVISED	DATE FILMED	DATE REVISED	DATE FILMED

FED.RD. DIST.NO.	STATE	FED.AID PROJ.NO.	SHEET NO.	TOTAL SHEETS
6	ARK.			
JOB NO.		CA0901	324	452

2 CROSS SECTIONS

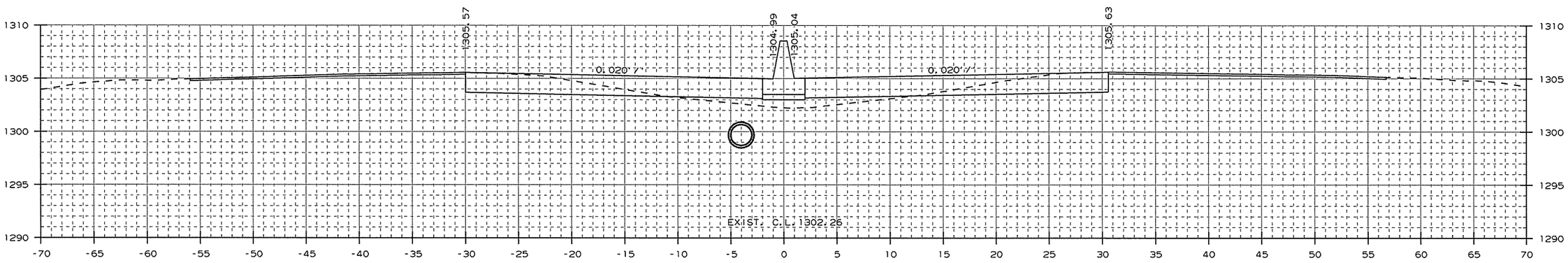

AREA CUT : 44.6
AREA FILL : 11.3

1200+00.00

CUT VOLUME : 41
FILL VOLUME : 10

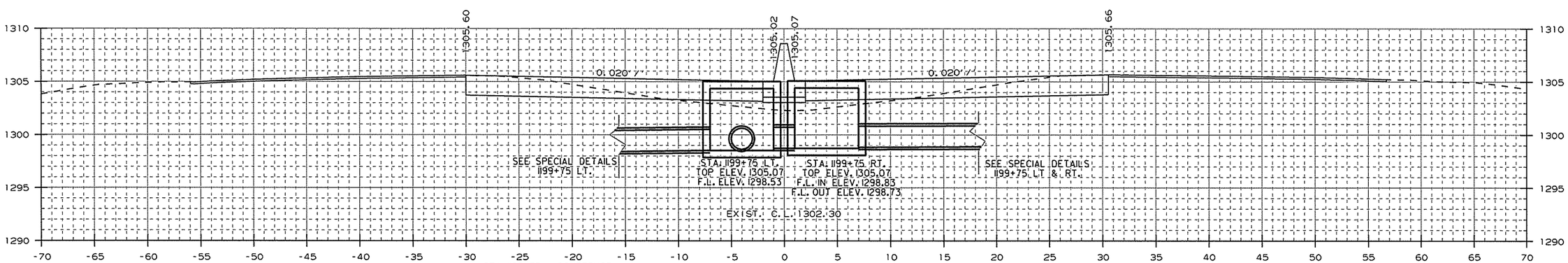

AREA CUT : 44.2
AREA FILL : 10.6

STA. 1199+75 - CONSTRUCT
DROP INLET 3' LT. OF C.L. H=7'11"
W/ 24" x 85' R.C. PIPE CULVERT OUTLET
(CLASS V)
W/ F.E.S. LT.
TYPE ST DROP INLET = 4' X 6'
(JACK AND BORE)
5 CU. YD. DUMPED RIPRAP
3 GRATES

1199+75.00

STA. 1199+75 - CONSTRUCT
DROP INLET 3' RT. OF C.L. H=6'4"
W/ 24" x 78' R.C. PIPE CULVERT INLET
(CLASS V)
W/ F.E.S. RT.
(JACK AND BORE)
5 CU. YD. DUMPED RIPRAP

& 24" x 2' R.C. PIPE CULVERT OUTLET
(CLASS III) (TYPE 3) BEDDING
CONNECT TO DROP INLET
STA. 1199+75 LT.
TYPE ST DROP INLET = 4' X 6'
3 GRATES

CUT VOLUME : 125
FILL VOLUME : 33

CROSS SECTION STA. 1199+75 TO STA. 1200+00

USER: at5106
DESIGN FILE: G:\13106100_264toNHope\TRANSP\dgn\xsect\rCA0901_CX_01.dgn
PLOTTED: 1/13/2016 09:35
SCALE: 10:1
MODEL: CROSS SECTION SHEETS

Crafton, Tull & Associates Inc.

DATE REVISED	DATE FILMED	DATE REVISED	DATE FILMED

FED.RD. DIST.NO.	STATE	FED.AID PROJ.NO.	SHEET NO.	TOTAL SHEETS
6	ARK.			
JOB NO.		CA0901	325	452

2 CROSS SECTIONS

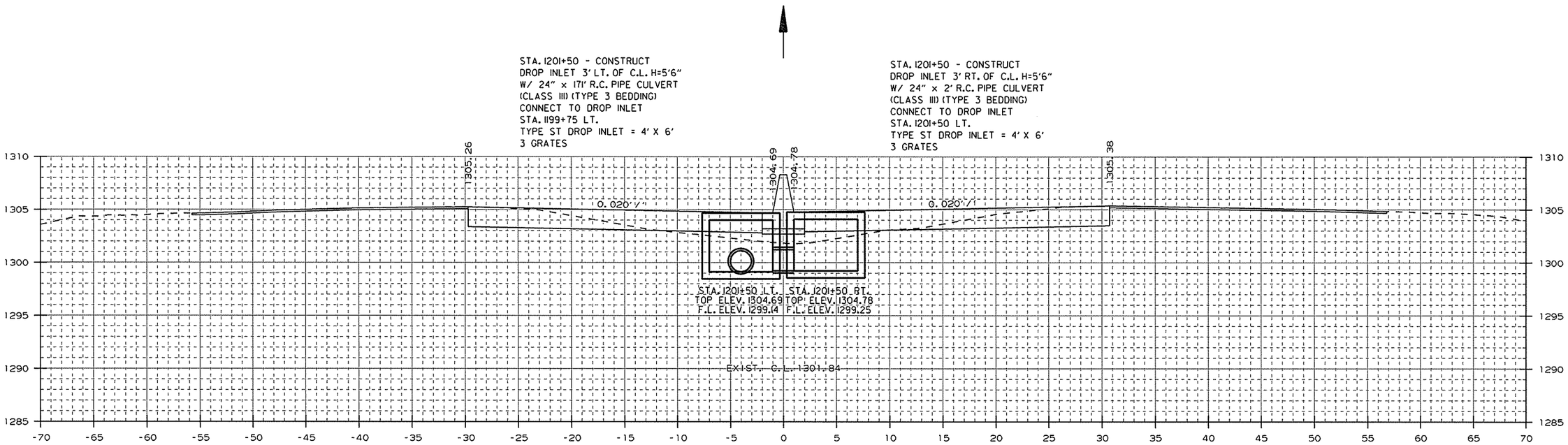

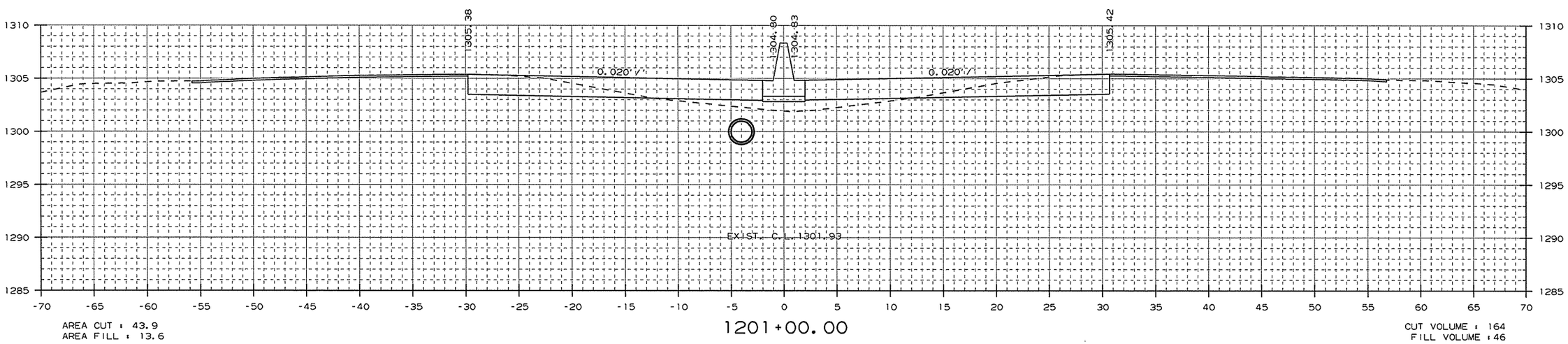

CROSS SECTION STA. 1201+00 TO STA. 1201+50

USER: at5106
DESIGN FILE: G:\13106100_264toNHope\TRANSP\dgn\xsect\rCA0901_CX_01.dgn
PLOTTED: 1/13/2016 09:35
SCALE: 101
MODEL: CROSS SECTION SHEETS

Crafton, Tull & Associates Inc.

DATE REVISED	DATE FILMED	DATE REVISED	DATE FILMED

FED.RD. DIST.NO.	STATE	FED.AID PROJ.NO.	SHEET NO.	TOTAL SHEETS
6	ARK.			
JOB NO.		CA0901	326	452

2 CROSS SECTIONS

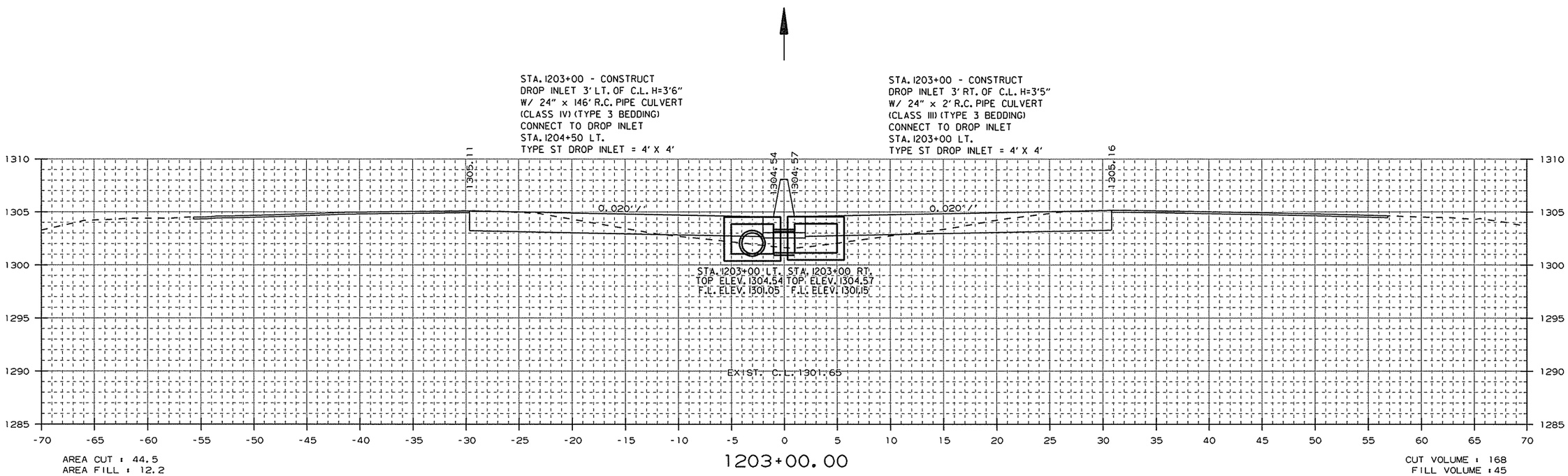

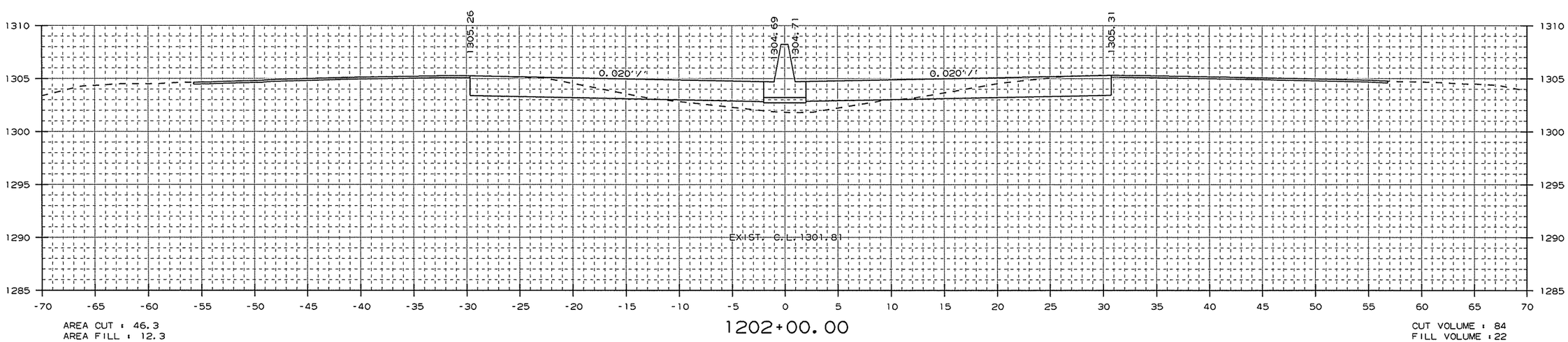

CROSS SECTION STA. 1202+00 TO STA. 1203+00

USER: at5106
DESIGN FILE: G:\13106100_264toNHope\TRANSP\dgn\xsect\rCA0901_CX_01.dgn
PLOTTED: 1/13/2016 09:35
SCALE: 10:1
MODEL: CROSS SECTION SHEETS

Crafton, Tull & Associates Inc.

DATE REVISED	DATE FILMED	DATE REVISED	DATE FILMED	FED.RD. DIST.NO.	STATE	FED.AID PROJ.NO.	SHEET NO.	TOTAL SHEETS
				6	ARK.			
				JOB NO.		CA0901	327	452

2 CROSS SECTIONS

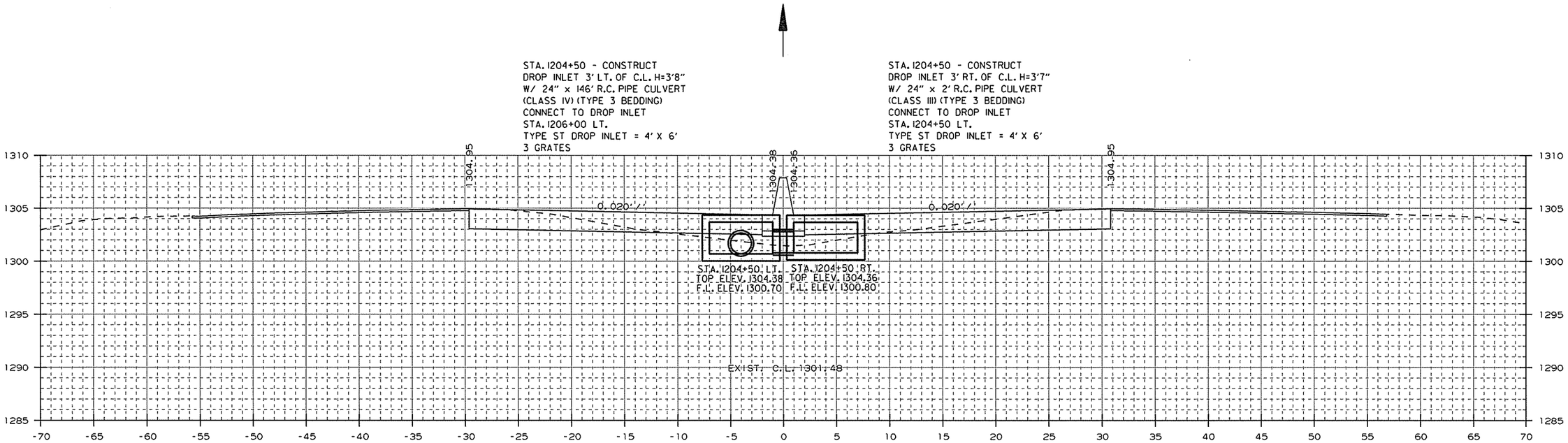

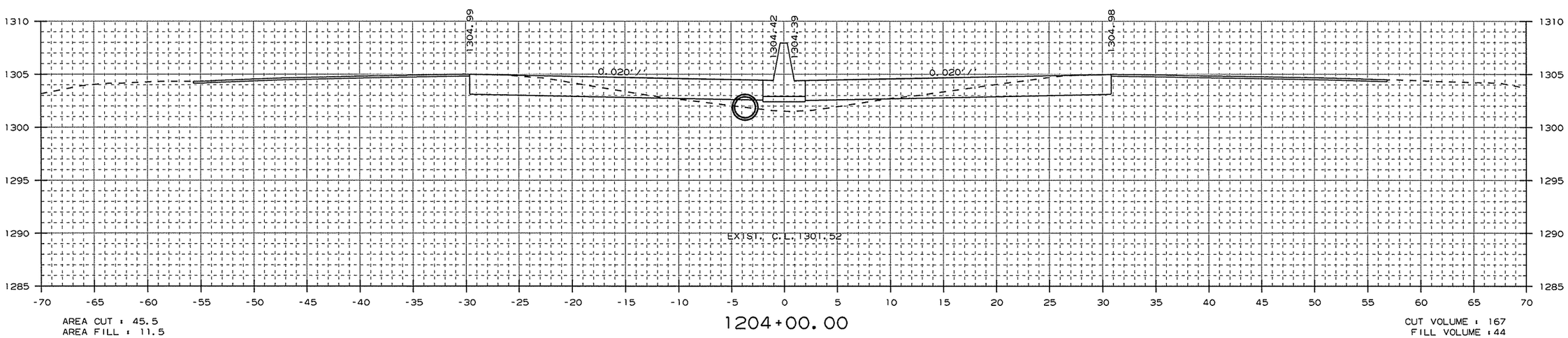

CROSS SECTION STA. 1204+00 TO STA. 1204+50

USER: a15106
DESIGN FILE: G:\13106100_264toNHope\TRANSP\dgn\xsect\rCA0901_CX_01.dgn
PLOTTED: 1/13/2016 09:35
SCALE: 10:1
MODEL: CROSS SECTION SHEETS

Crafton, Tull & Associates Inc.

DATE REVISED	DATE FILMED	DATE REVISED	DATE FILMED

FED.RD. DIST.NO.	STATE	FED.AID PROJ.NO.	SHEET NO.	TOTAL SHEETS
6	ARK.			
JOB NO.		CA0901	328	452

2 CROSS SECTIONS

STA. 1206+00 - CONSTRUCT
DROP INLET 3' LT. OF C.L. H=3'11"
W/ 24" x 146' R.C. PIPE CULVERT
(CLASS III) (TYPE 1 OR 2 BEDDING)
CONNECT TO DROP INLET
STA. 1207+50 LT.
TYPE ST DROP INLET = 4' X 6'
3 GRATES

STA. 1206+00 - CONSTRUCT
DROP INLET 3' RT. OF C.L. H=3'9"
W/ 24" x 2' R.C. PIPE CULVERT
(CLASS III) (TYPE 3 BEDDING)
CONNECT TO DROP INLET
STA. 1206+00 LT.
TYPE ST DROP INLET = 4' X 6'
3 GRATES

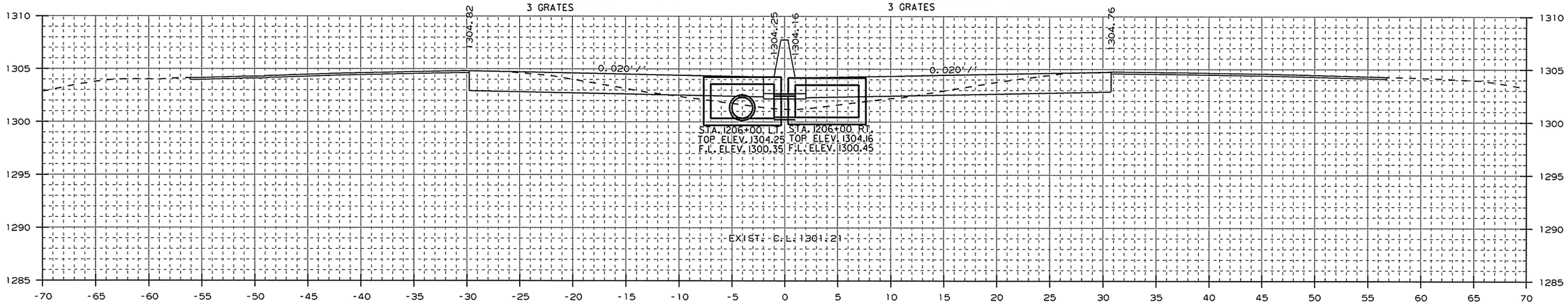

AREA CUT : 43.8
AREA FILL : 14.1

1206+00.00

CUT VOLUME : 161
FILL VOLUME : 49

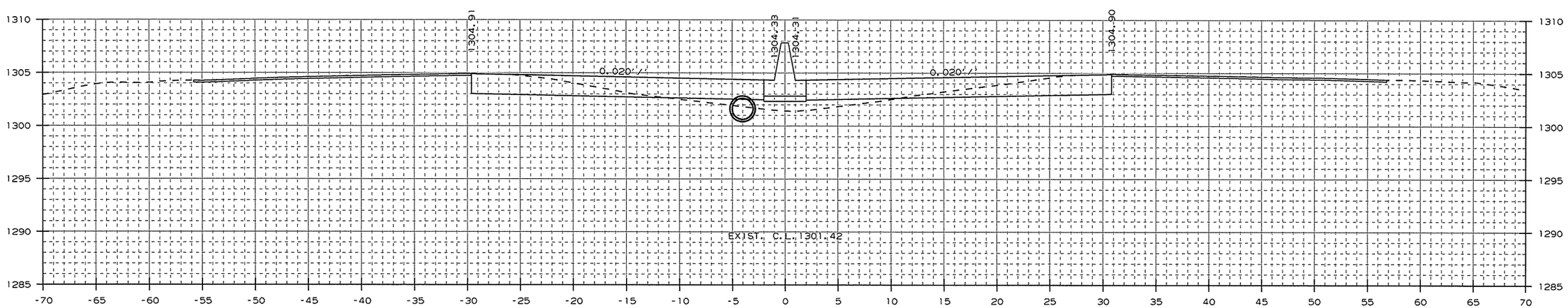

AREA CUT : 43.3
AREA FILL : 12.4

1205+00.00

CUT VOLUME : 81
FILL VOLUME : 22

CROSS SECTION STA. 1205+00 TO STA. 1206+00

USER: at5106
DESIGN FILE: G:\13106100_264toNHope\TRANSP\dgn\xsect\rCA0901_CX_01.dgn
PLOTTED: 1/13/2016 09:35
SCALE: 10:1
MODEL: CROSS SECTION SHEETS

Crafton, Tull & Associates Inc.

DATE REVISED	DATE FILMED	DATE REVISED	DATE FILMED

FED.RD. DIST.NO.	STATE	FED.AID PROJ.NO.	SHEET NO.	TOTAL SHEETS
6	ARK.			
JOB NO.		CA0901	329	452

2 CROSS SECTIONS

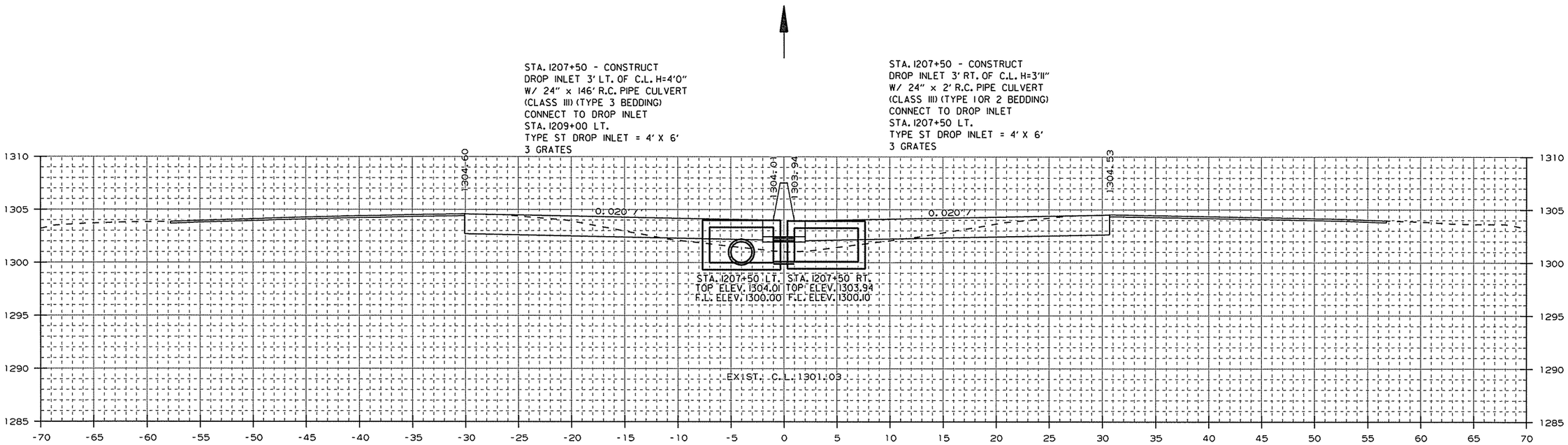

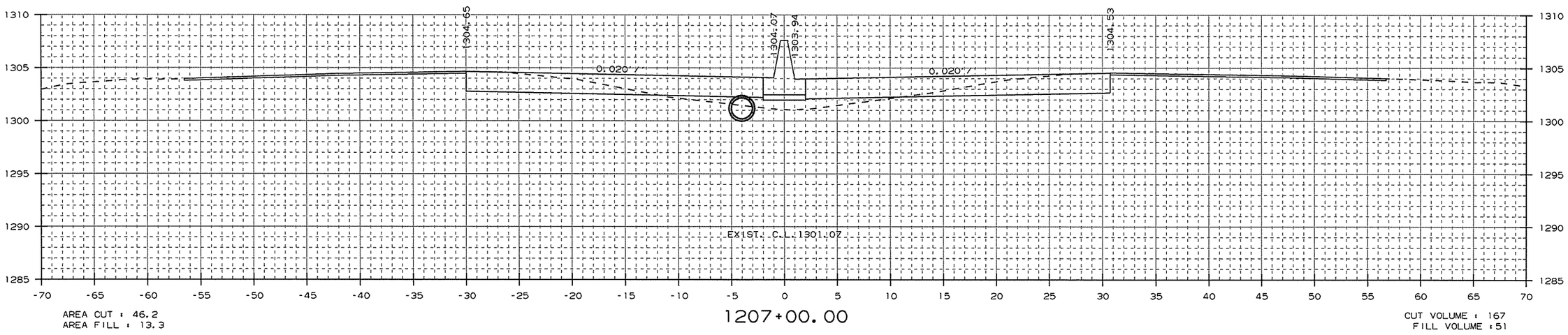

CROSS SECTION STA. 1207+00 TO STA. 1207+50

USER: at5106
DESIGN FILE: G:\13106100_264toNHope\TRANSP\dgn\xsect\rCA0901_CX_01.dgn
PLOTTED: 1/13/2016 09:35
SCALE: 10:1
MODEL: CROSS SECTION SHEETS

Crafton, Tull & Associates Inc.

DATE REVISED	DATE FILMED	DATE REVISED	DATE FILMED

FED.RD. DIST.NO.	STATE	FED.AID PROJ.NO.	SHEET NO.	TOTAL SHEETS
6	ARK.			
JOB NO.		CA0901	330	452

2 CROSS SECTIONS

STA. 1209+00 - CONSTRUCT
DROP INLET 3' LT. OF C.L. H=4'0"
W/ 24" x 146' R.C. PIPE CULVERT
(CLASS III) (TYPE 3 BEDDING)
CONNECT TO DROP INLET
STA. 1210+50 LT.
TYPE ST DROP INLET = 4' X 6'
3 GRATES

STA. 1209+00 - CONSTRUCT
DROP INLET 3' RT. OF C.L. H=4'0"
W/ 24" x 2' R.C. PIPE CULVERT
(CLASS III) (TYPE 3 BEDDING)
CONNECT TO DROP INLET
STA. 1209+00 LT.
TYPE ST DROP INLET = 4' X 6'
3 GRATES

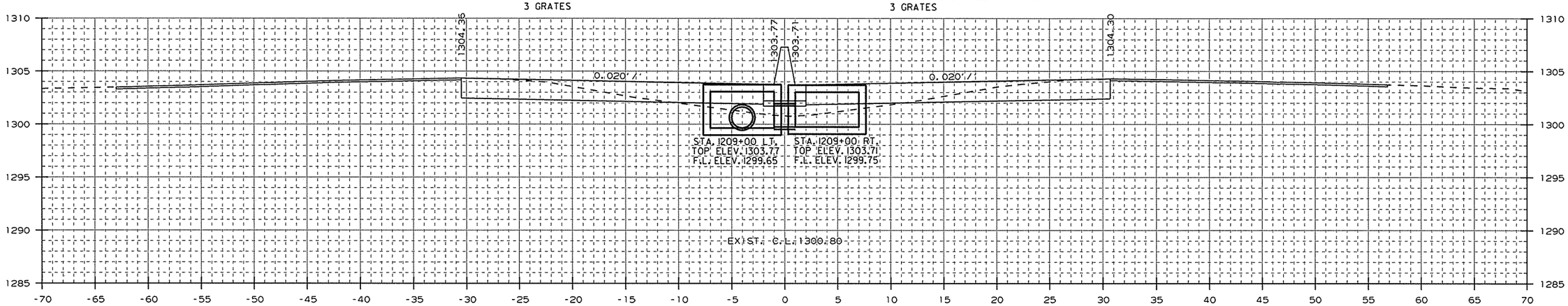

AREA CUT : 47.2
AREA FILL : 12.7

1209+00.00

CUT VOLUME : 173
FILL VOLUME : 46

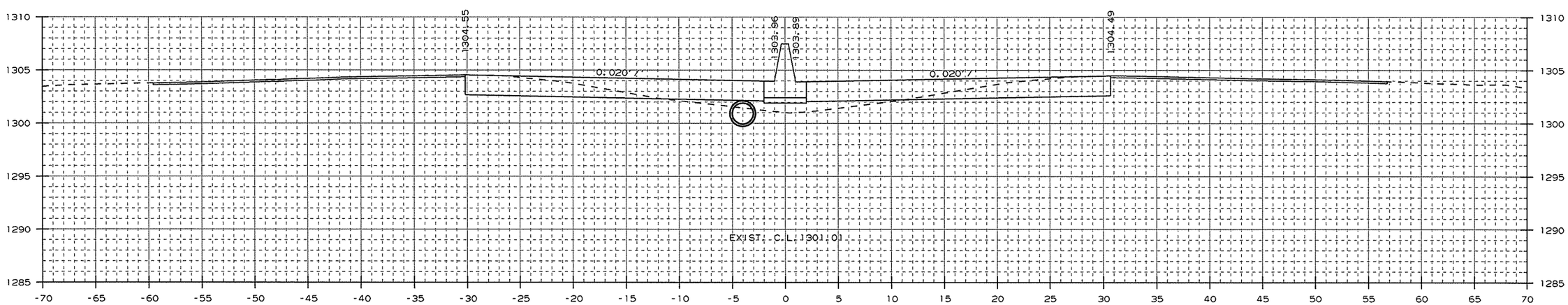

AREA CUT : 46.1
AREA FILL : 12.4

1208+00.00

CUT VOLUME : 85
FILL VOLUME : 24

CROSS SECTION STA. 1208+00 TO STA. 1209+00

USER: a15106
DESIGN FILE: G:\13106100_264toNHope\TRANSP\dgn\xsect\rCA0901_CX_01.dgn
PLOTTED: 1/13/2016 09:35
SCALE: 10:1
MODEL: CROSS SECTION SHEETS

Crafton, Tull & Associates Inc.

DATE REVISED	DATE FILMED	DATE REVISED	DATE FILMED

FED.RD. DIST.NO.	STATE	FED.AID PROJ.NO.	SHEET NO.	TOTAL SHEETS
6	ARK.			
JOB NO.		CA0901	331	452

2 CROSS SECTIONS

STA. 1210+50 - CONSTRUCT
DROP INLET 3' LT. OF C.L. H=4'4"
W/ 24" x 146' R.C. PIPE CULVERT
(CLASS III) (TYPE 3 BEDDING)
CONNECT TO DROP INLET
STA. 1212+00 LT.
TYPE ST DROP INLET = 4' X 6'
3 GRATES

STA. 1210+50 - CONSTRUCT
DROP INLET 3' RT. OF C.L. H=4'2"
W/ 24" x 2' R.C. PIPE CULVERT
(CLASS III) (TYPE 3 BEDDING)
CONNECT TO DROP INLET
STA. 1210+50 LT.
TYPE ST DROP INLET = 4' X 6'
3 GRATES

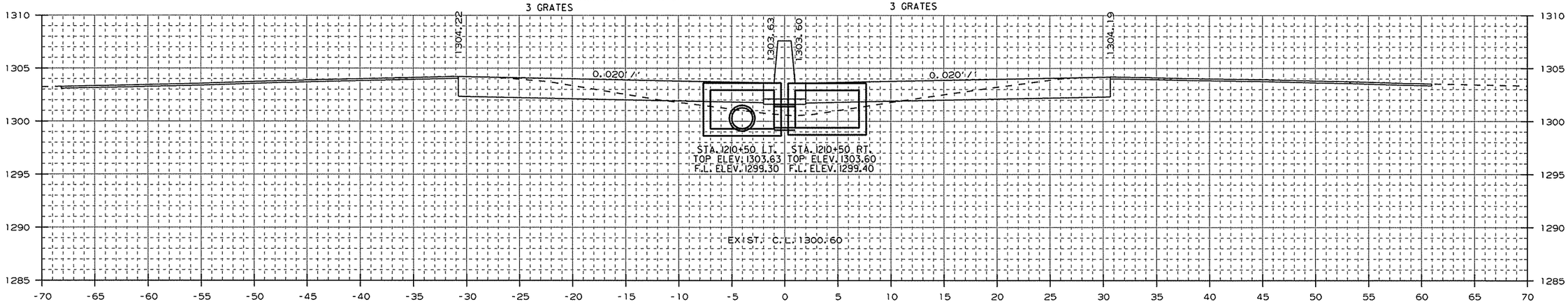

AREA CUT : 46.0
AREA FILL : 14.0

1210+50.00

CUT VOLUME : 87
FILL VOLUME : 25

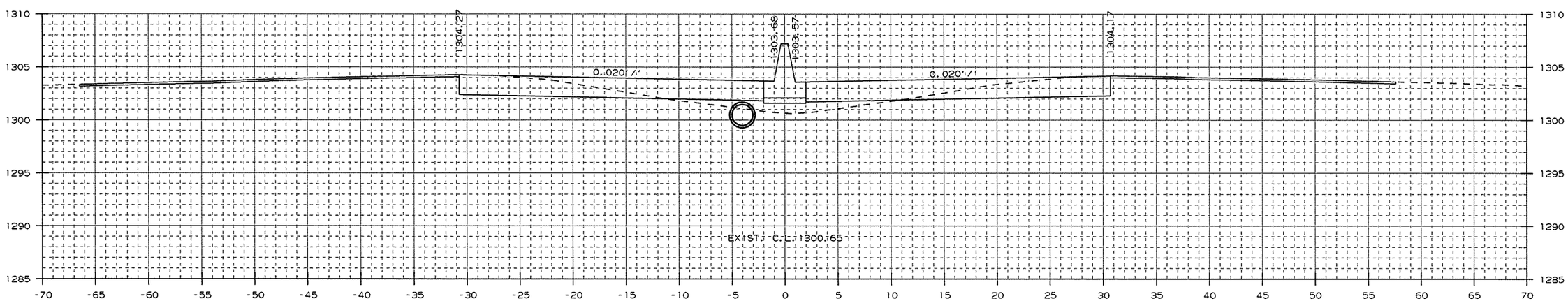

AREA CUT : 47.5
AREA FILL : 13.0

1210+00.00

CUT VOLUME : 175
FILL VOLUME : 48

CROSS SECTION STA. 1210+00 TO STA. 1210+50

USER: at5106
DESIGN FILE: G:\13106100_264toNHope\TRANSP\dgn\xsect\rCA0901_CX_01.dgn
PLOTTED: 1/13/2016 09:35
SCALE: 10:1
MODEL: CROSS SECTION SHEETS

Crafton, Tull & Associates Inc.	DATE REVISED	DATE FILMED	DATE REVISED	DATE FILMED	FED.RD. DIST.NO.	STATE	FED.AID PROJ.NO.	SHEET NO.	TOTAL SHEETS
					6	ARK.			
					JOB NO.		CA0901	332	452
					(2)	CROSS SECTIONS			

STA. 1212+00 - CONSTRUCT
DROP INLET 3' LT. OF C.L. H=4'6"
W/ 24" x 146' R.C. PIPE CULVERT
(CLASS III) (TYPE 3 BEDDING)
CONNECT TO DROP INLET
STA. 1213+50 LT.
TYPE ST DROP INLET = 4' X 6'
3 GRATES

STA. 1212+00 - CONSTRUCT
DROP INLET 3' RT. OF C.L. H=4'2"
W/ 24" x 2' R.C. PIPE CULVERT
(CLASS III) (TYPE 3 BEDDING)
CONNECT TO DROP INLET
STA. 1212+00 LT.
TYPE ST DROP INLET = 4' X 6'
3 GRATES

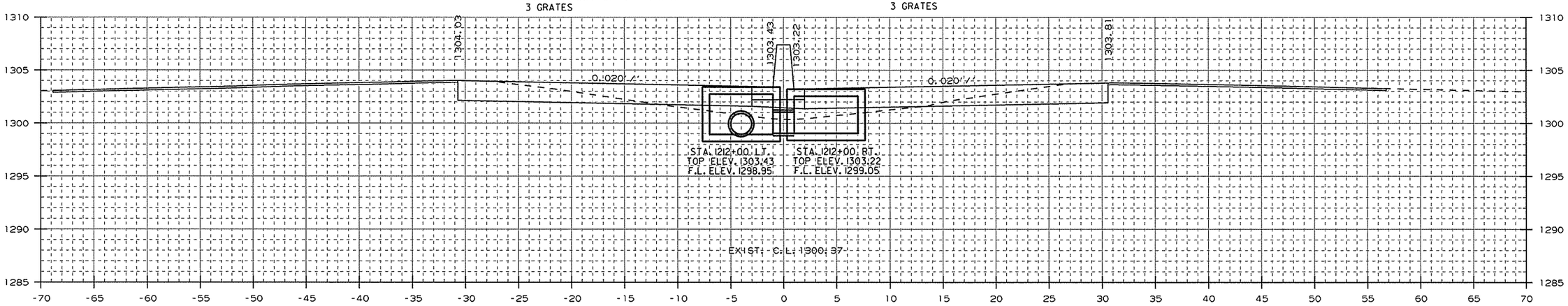

AREA CUT : 41.9
AREA FILL : 14.8

1212+00.00

CUT VOLUME : 160
FILL VOLUME : 50

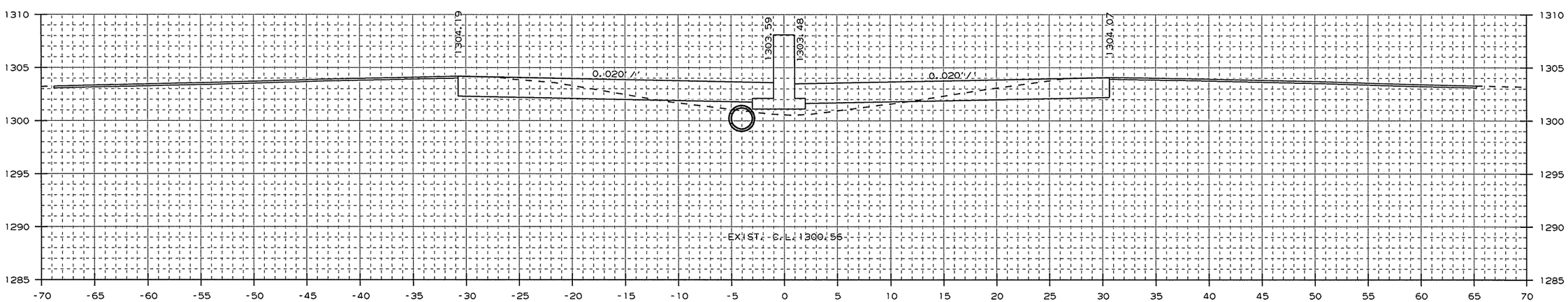

AREA CUT : 44.6
AREA FILL : 12.1

1211+00.00

CUT VOLUME : 84
FILL VOLUME : 24

CROSS SECTION STA. 1211+00 TO STA. 1212+00

USER: at5106
DESIGN FILE: G:\13106100_264toNHope\TRANSP\dgn\xsect\rCA0901_CX_01.dgn
PLOTTED: 1/13/2016 09:35
SCALE: 10:1
MODEL: CROSS SECTION SHEETS

Crafton, Tull & Associates Inc.

DATE REVISED	DATE FILMED	DATE REVISED	DATE FILMED	FED.RD. DIST.NO.	STATE	FED.AID PROJ.NO.	SHEET NO.	TOTAL SHEETS
				6	ARK.			
				JOB NO.		CA0901	333	452

2 CROSS SECTIONS

STA. 1213+50 - CONSTRUCT
DROP INLET 3' LT. OF C.L. H=4'7"
W/ 24" x 84' R.C. PIPE CULVERT
(CLASS V)
CONNECT TO DROP INLET
STA. 1213+50 93.3' LT.
TYPE ST DROP INLET = 4' X 6'
3 GRATES
(JACK AND BORE)
5 CU. YD. DUMPED RIPRAP

STA. 1213+50 - CONSTRUCT
DROP INLET 3' RT. OF C.L. H=4'10"
W/ 24" x 112' R.C. PIPE CULVERT INLET
(CLASS V)
W/ F.E.S. RT.
(JACK AND BORE)
5 CU. YD. DUMPED RIPRAP
& 24" x 2' R.C. PIPE CULVERT OUTLET
(CLASS III) (TYPE 3) BEDDING
CONNECT TO DROP INLET STA. 1213+50 LT.
TYPE ST DROP INLET = 4' X 6'
3 GRATES

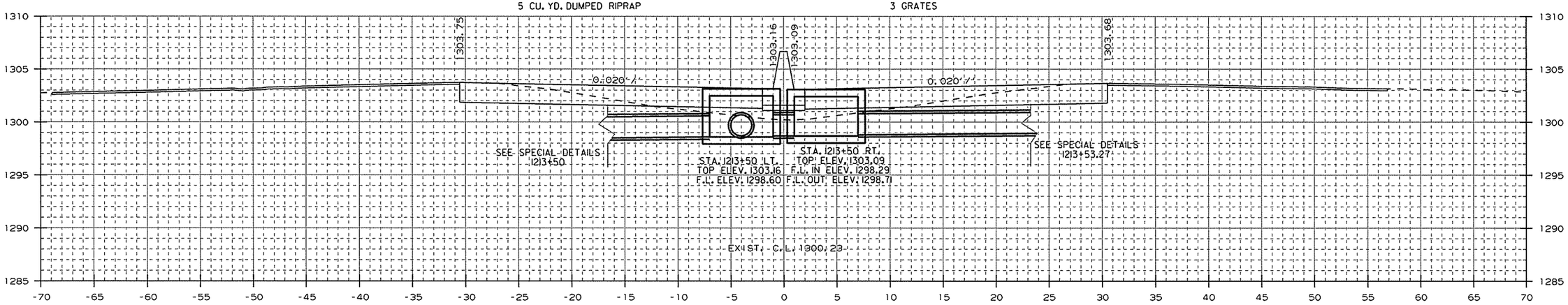

AREA CUT : 43.9
AREA FILL : 13.1

1213+50.00

CUT VOLUME : 79
FILL VOLUME : 27

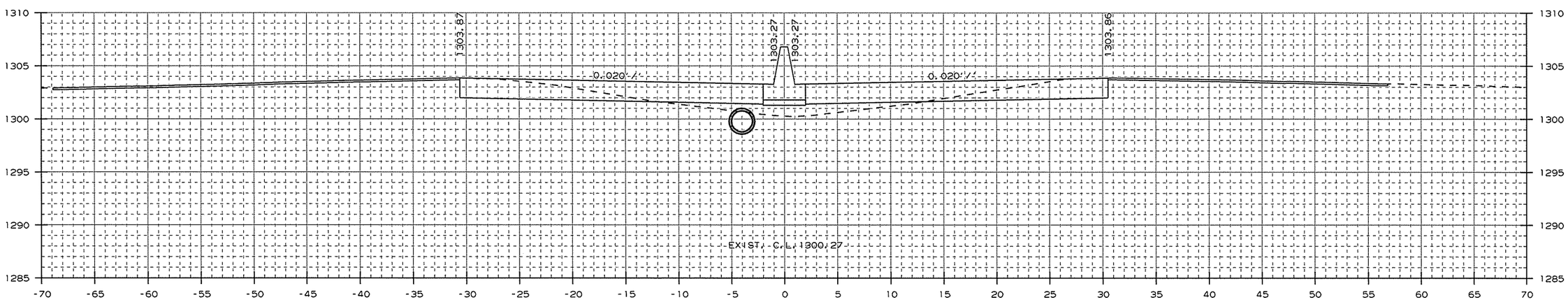

AREA CUT : 41.5
AREA FILL : 15.7

1213+00.00

CUT VOLUME : 154
FILL VOLUME : 56

CROSS SECTION STA. 1213+00 TO STA. 1213+50

USER: at5106
DESIGN FILE: G:\13106100_264toNHope\TRANSP\dgn\xsect\rCA0901_CX_01.dgn
PLOTTED: 1/13/2016 09:35
SCALE: 10:1
MODEL: CROSS SECTION SHEETS

Crafton, Tull & Associates Inc.

DATE REVISED	DATE FILMED	DATE REVISED	DATE FILMED

FED.RD. DIST.NO.	STATE	FED.AID PROJ.NO.	SHEET NO.	TOTAL SHEETS
6	ARK.			
JOB NO.		CA0901	334	452

2 CROSS SECTIONS

STA. 1215+00 - CONSTRUCT
DROP INLET 3' LT. OF C.L. H=3'8"
W/ 24" x 146' R.C. PIPE CULVERT
(CLASS III) (TYPE 3 BEDDING)
CONNECT TO DROP INLET
STA. 1213+50 LT.
TYPE ST DROP INLET = 4' X 6'
3 GRATES

STA. 1215+00 - CONSTRUCT
DROP INLET 3' RT. OF C.L. H=3'9"
W/ 24" x 2' R.C. PIPE CULVERT
(CLASS III) (TYPE 3 BEDDING)
CONNECT TO DROP INLET
STA. 1215+00 LT.
TYPE ST DROP INLET = 4' X 6'
3 GRATES

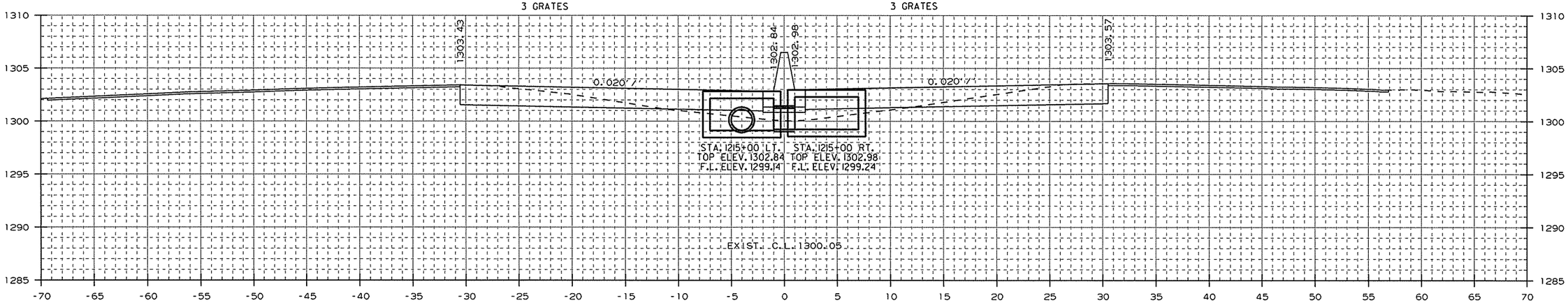

AREA CUT : 43.5
AREA FILL : 12.0

1215+00.00

CUT VOLUME : 162
FILL VOLUME : 46

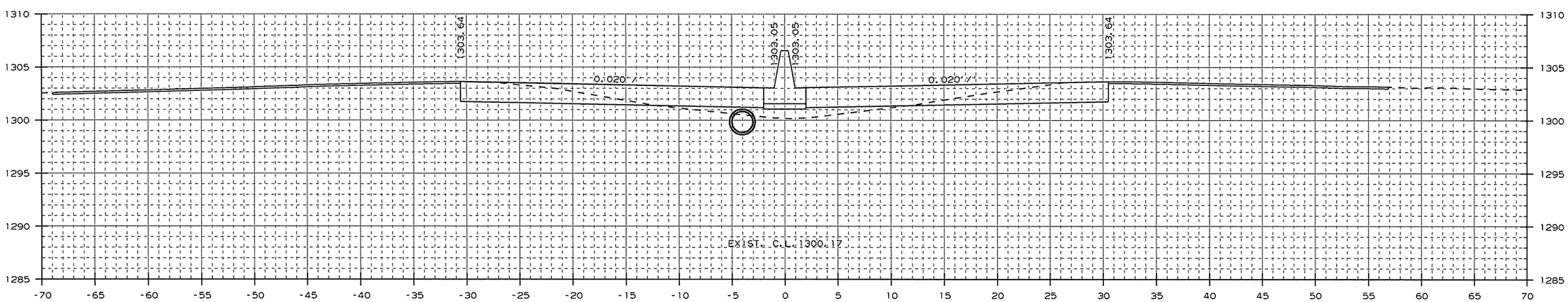

AREA CUT : 43.8
AREA FILL : 13.0

1214+00.00

CUT VOLUME : 81
FILL VOLUME : 24

CROSS SECTION STA. 1214+00 TO STA. 1215+00

USER: a15106
DESIGN FILE: G:\13106100_264toNHope\TRANSP\dgn\xsect\rCA0901_CX_01.dgn
PLOTTED: 1/13/2016 09:35
SCALE: 1:01
MODEL: CROSS SECTION SHEETS

Crafton, Tull & Associates Inc.

DATE REVISED	DATE FILMED	DATE REVISED	DATE FILMED

FED.RD. DIST.NO.	STATE	FED.AID PROJ.NO.	SHEET NO.	TOTAL SHEETS
6	ARK.			
JOB NO.		CA0901	335	452

2 CROSS SECTIONS

STA. 1216+00 IN PLACE
24"X26' R.C. PIPE CULVERT
ON RT. W/ FES CONNECTED TO
R.C. BOX
RETAIN

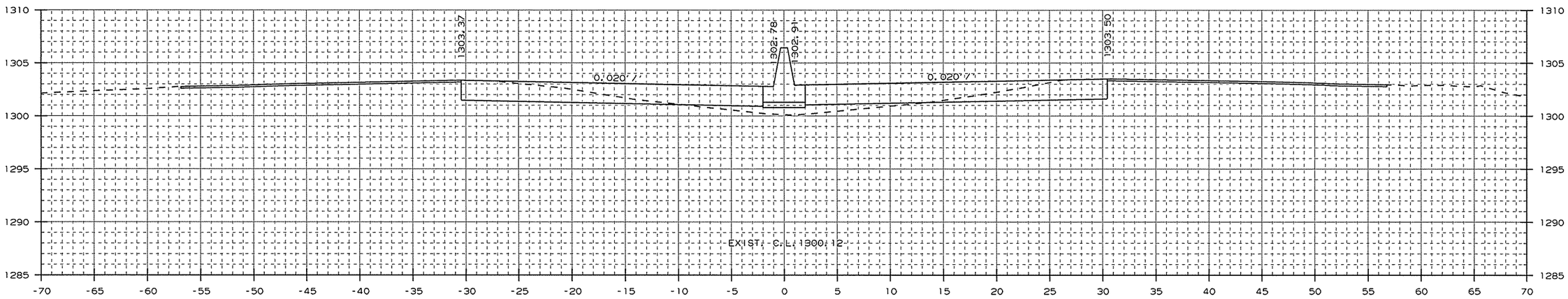

AREA CUT : 41.6
AREA FILL : 10.7

1216+00.00

CUT VOLUME : 39
FILL VOLUME : 12

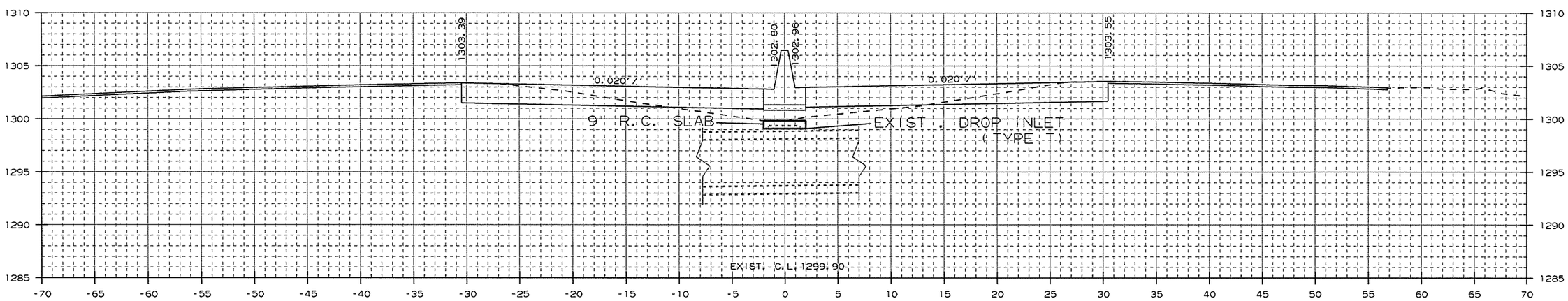

AREA CUT : 42.2
AREA FILL : 14.4

1215+75.00

CUT VOLUME : 119
FILL VOLUME : 37

STA. 1215+75 IN PLACE
TYPE T DROP INLET
IN MEDIAN OVER R.C. BOX
MODIFY

STA. 1215+75 IN PLACE
TRIPLE 6' X 4' X 227' R.C.
BOX CULVERT WITH 4:1
WINGS LT. & RT.
RETAIN

CROSS SECTION STA. 1215+75 TO STA. 1216+00

USER: at5106
DESIGN FILE: G:\13106100_264toNHope\TRANSP\dgn\xsect\rCA0901_CX_02.dgn
PLOTTED: 1/13/2016 09:35
SCALE: 10:1
MODEL: CROSS SECTION SHEETS

Crafton, Tull & Associates Inc.

DATE REVISED	DATE FILMED	DATE REVISED	DATE FILMED

FED.RD. DIST.NO.	STATE	FED.AID PROJ.NO.	SHEET NO.	TOTAL SHEETS
6	ARK.			
JOB NO.		CA0901	336	452

2 CROSS SECTIONS

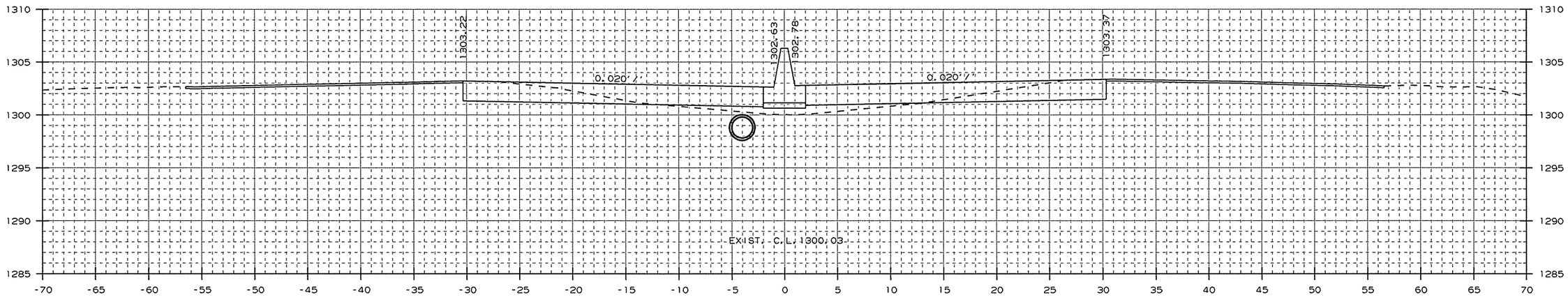

AREA CUT : 40.6
AREA FILL : 10.7

1217+00.00

CUT VOLUME : 76
FILL VOLUME : 18

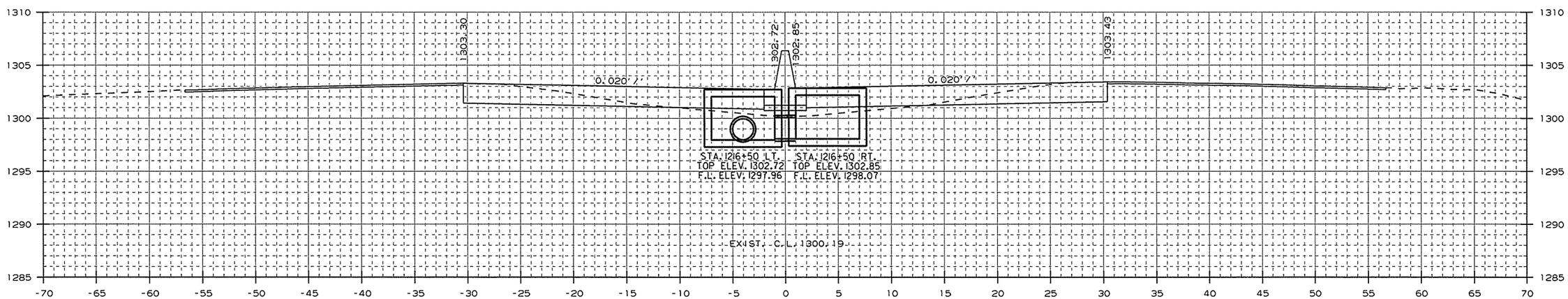

AREA CUT : 41.6
AREA FILL : 9.2

STA. 1216+50 - CONSTRUCT
DROP INLET 3' LT. OF C.L. H=4'9"
W/ 24" x 121' R.C. PIPE CULVERT
(CLASS III) (TYPE 3 BEDDING)
CONNECT TO DROP INLET
STA. 1217+75 LT.
TYPE ST DROP INLET = 4' X 6'
3 GRATES

1216+50.00

STA. 1216+50 - CONSTRUCT
DROP INLET 3' RT. OF C.L. H=4'9"
W/ 24" x 2' R.C. PIPE CULVERT
(CLASS III) (TYPE 3 BEDDING)
CONNECT TO DROP INLET
STA. 1216+50 LT.
TYPE ST DROP INLET = 4' X 6'
3 GRATES

CUT VOLUME : 77
FILL VOLUME : 18

CROSS SECTION STA. 1216+50 TO STA. 1217+00

USER: at5106
DESIGN FILE: G:\13106100_264toNHope\TRANSP\dgn\xsect\rCA0901_CX_02.dgn
PLOTTED: 1/13/2016 09:35
SCALE: 10:1
MODEL: CROSS SECTION SHEETS

Crafton, Tull & Associates Inc.

DATE REVISED	DATE FILMED	DATE REVISED	DATE FILMED	FED.RD. DIST.NO.	STATE	FED.AID PROJ.NO.	SHEET NO.	TOTAL SHEETS
				6	ARK.			
				JOB NO.		CA0901	337	452

2 CROSS SECTIONS

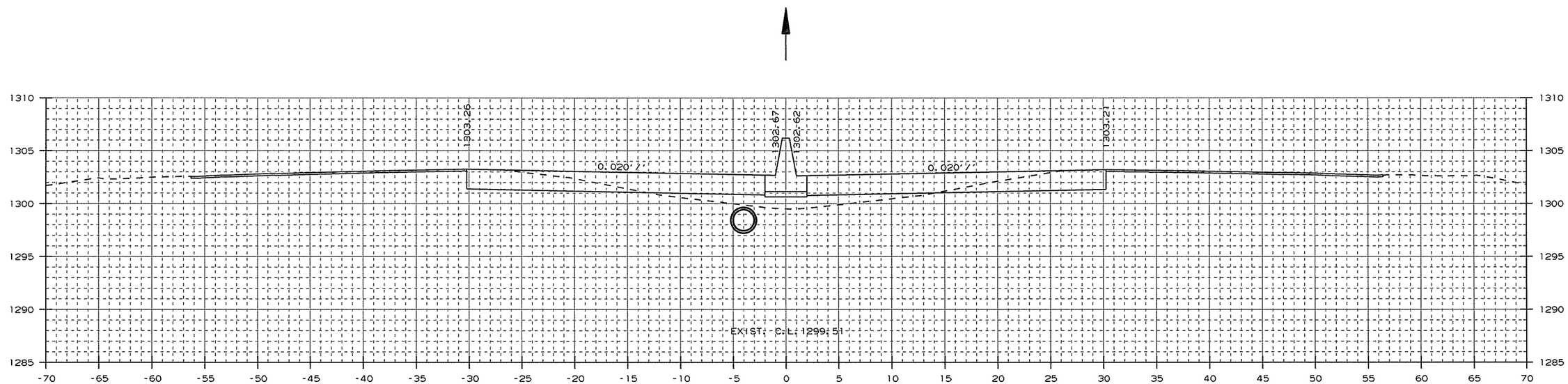

AREA CUT : 40.6
AREA FILL : 19.2

1218+00.00

CUT VOLUME : 38
FILL VOLUME : 17

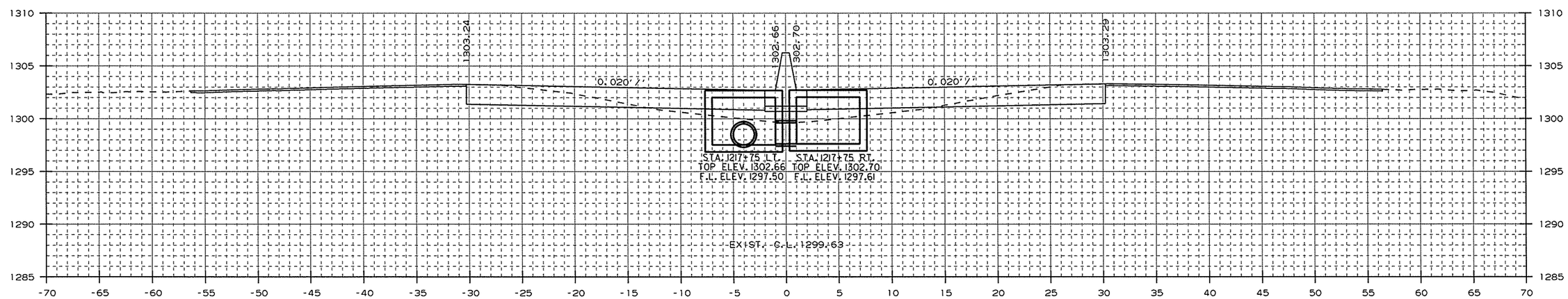

AREA CUT : 40.6
AREA FILL : 17.7

STA. 1217+75 - CONSTRUCT
DROP INLET 3' LT. OF C.L. H=5'2"
W/ 24" x 121' R.C. PIPE CULVERT
(CLASS III) (TYPE 3 BEDDING)
CONNECT TO DROP INLET
STA. 1219+00 LT.
TYPE ST DROP INLET = 4' X 6'
3 GRATES

1217+75.00

STA. 1217+75 - CONSTRUCT
DROP INLET 3' RT. OF C.L. H=5'1"
W/ 24" x 2' R.C. PIPE CULVERT
(CLASS III) (TYPE 3 BEDDING)
CONNECT TO DROP INLET
STA. 1217+75 LT.
TYPE ST DROP INLET = 4' X 6'
3 GRATES

CUT VOLUME : 113
FILL VOLUME : 39

CROSS SECTION STA. 1217+75 TO STA. 1218+00

USER: at5106
DESIGN FILE: G:\13106100_264toNHope\TRANSP\dgn\xsect\rCA0901_CX_02.dgn
PLOTTED: 2/24/2016 14:37
SCALE: 10:1
MODEL: CROSS SECTION SHEETS

Crafton, Tull & Associates Inc.

DATE REVISED	DATE FILMED	DATE REVISED	DATE FILMED

FED.RD. DIST.NO.	STATE	FED.AID PROJ.NO.	SHEET NO.	TOTAL SHEETS
6	ARK.			
JOB NO.		CA0901	338	452

2 CROSS SECTIONS

STA. 1219+85 - CONSTRUCT
DROP INLET 3' LT. OF C.L. H=5'5"
W/ 24" x 2' R.C. PIPE CULVERT
(CLASS III) (TYPE 3 BEDDING)
CONNECT TO DROP INLET
STA. 1219+85 RT.
TYPE ST DROP INLET = 4' X 6'
3 GRATES

STA. 1219+85 - CONSTRUCT
DROP INLET 3' RT. OF C.L. H=5'8"
W/ 24" x 76' R.C. PIPE CULVERT
W/ F.E.S. RT.
(CLASS V)
TYPE ST DROP INLET = 4' X 6'
3 GRATES
(JACK AND BORE)
5 CU. YD. DUMPED RIPRAP

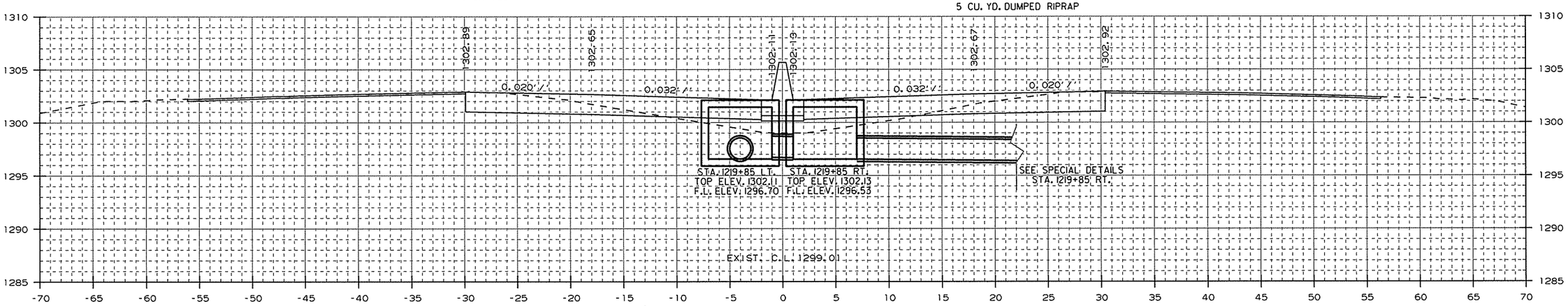

AREA CUT : 43.5
AREA FILL : 20.4

1219+85.00

CUT VOLUME : 132
FILL VOLUME : 64

STA. 1219+00
BEGIN L.M.L. SHOULDER
SLOPE TRANSITION

STA. 1219+00
BEGIN R.M.L. SHOULDER
SLOPE TRANSITION

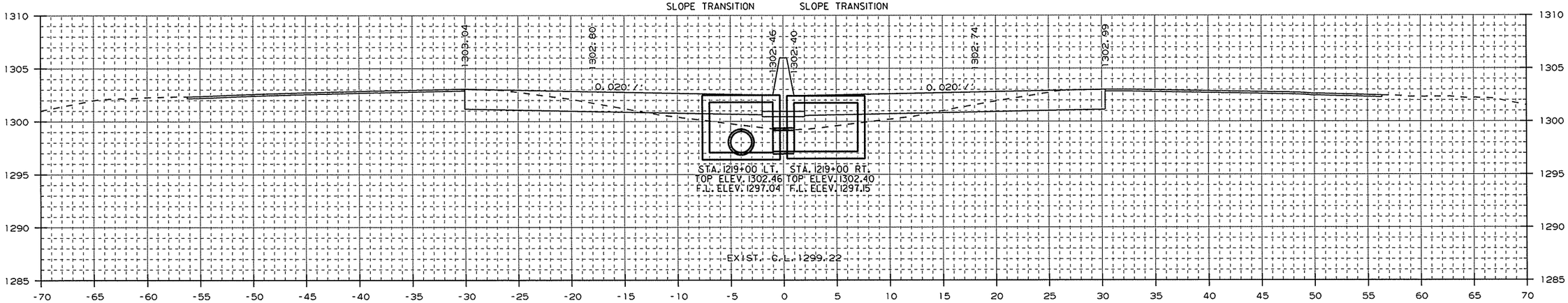

AREA CUT : 40.2
AREA FILL : 20.1

STA. 1219+00 - CONSTRUCT
DROP INLET 3' LT. OF C.L. H=5'5"
W/ 24" x 81' R.C. PIPE CULVERT
(CLASS III) (TYPE 3 BEDDING)
CONNECT TO DROP INLET
STA. 1219+85 LT.
TYPE ST DROP INLET = 4' X 6'
3 GRATES

1219+00.00

STA. 1219+00 - CONSTRUCT
DROP INLET 3' RT. OF C.L. H=5'3"
W/ 24" x 2' R.C. PIPE CULVERT
(CLASS III) (TYPE 3)BEDDING)
CONNECT TO DROP INLET
STA. 1219+00 LT.
TYPE ST DROP INLET = 4' X 6'
3 GRATES

CUT VOLUME : 150
FILL VOLUME : 73

CROSS SECTION STA. 1219+00 TO STA. 1219+85

USER: a15106
DESIGN FILE: G:\13106100_264toNHope\TRANSP\dgn\xsect\rCA0901_CX_02.dgn
PLOTTED: 2/24/2016 14:37
SCALE: 10d
MODEL: CROSS SECTION SHEETS

Crafton, Tull & Associates Inc.

DATE REVISED	DATE FILMED	DATE REVISED	DATE FILMED

FED.RD. DIST.NO.	STATE	FED.AID PROJ.NO.	SHEET NO.	TOTAL SHEETS
6	ARK.			
JOB NO.		CA0901	339	452

2 CROSS SECTIONS

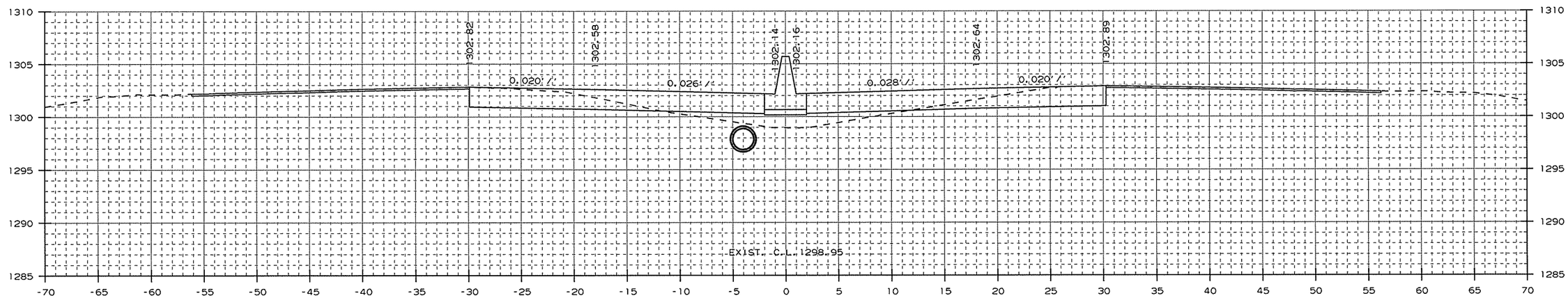

AREA CUT : 44.7
AREA FILL : 20.9

1221+00.00

CUT VOLUME : 165
FILL VOLUME : 78

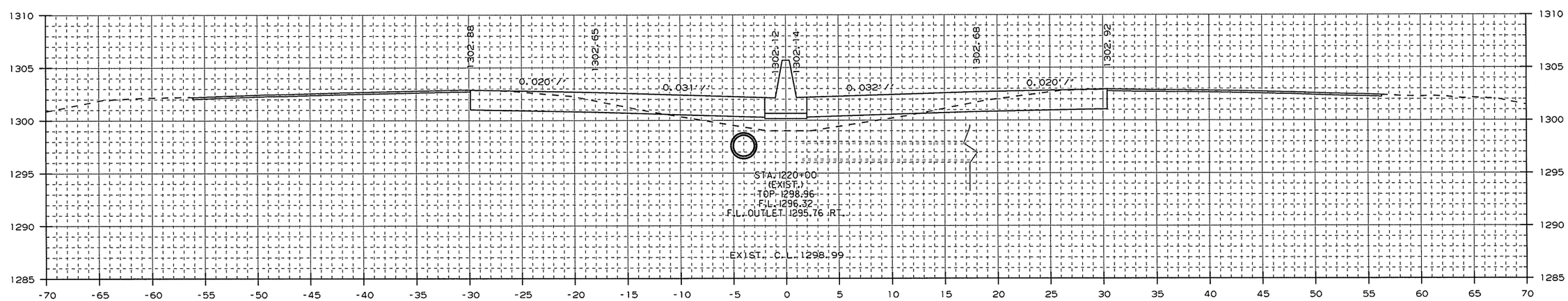

AREA CUT : 44.5
AREA FILL : 21.0

1220+00.00

CUT VOLUME : 24
FILL VOLUME : 12

STA. 1220+00 IN PLACE
W/ 18" X 85' R.C. PIPE OUTLET
W/ FES ON RT.
FILL AND ABANDON

STA. 1220+00 IN PLACE
TYPE R DROP INLET IN MEDIAN
REMOVE

CROSS SECTION STA. 1220+00 TO STA. 1221+00

USER: at5106
DESIGN FILE: G:\13106100_264toNHope\TRANSP\dgn\xsect\rCA0901_CX_02.dgn
PLOTTED: 2/24/2016 14:37
MODEL: CROSS SECTION SHEETS
SCALE: 10:1

Crafton, Tull & Associates Inc.

DATE REVISED	DATE FILMED	DATE REVISED	DATE FILMED

FED.RD. DIST.NO.	STATE	FED.AID PROJ.NO.	SHEET NO.	TOTAL SHEETS
6	ARK.			
JOB NO.		CA0901	340	452

2 CROSS SECTIONS

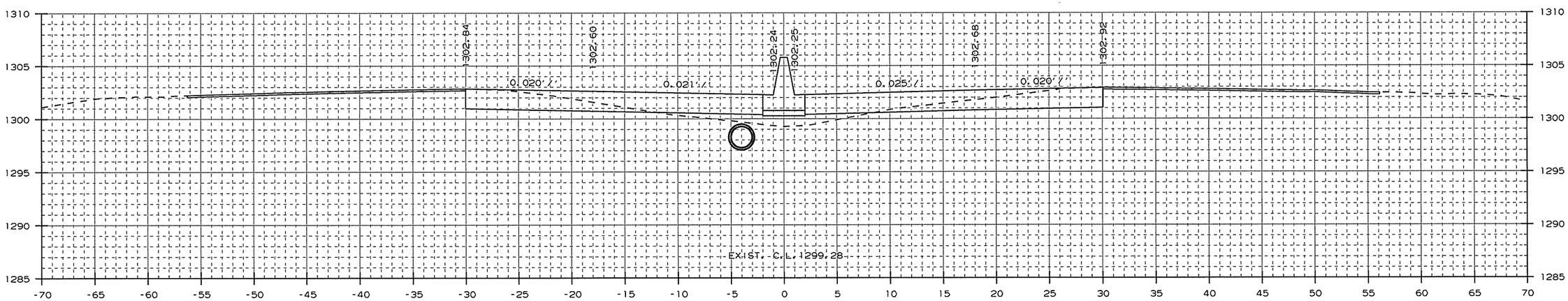

AREA CUT : 44.0
AREA FILL : 15.1

1222+00.00

CUT VOLUME : 80
FILL VOLUME : 31

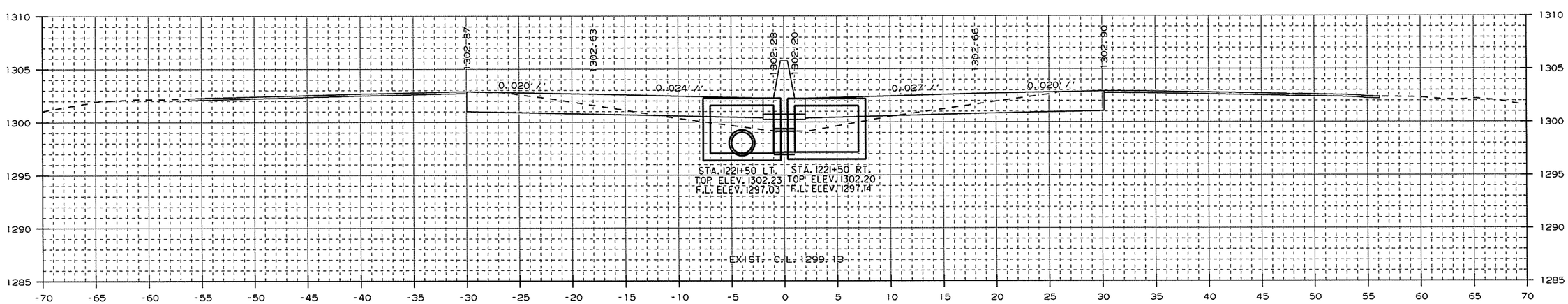

AREA CUT : 42.2
AREA FILL : 18.6

STA. 1221+50 - CONSTRUCT
DROP INLET 3' LT. OF C.L. H=5'3"
W/ 24" x 161' R.C. PIPE CULVERT
(CLASS III) (TYPE 3 BEDDING)
CONNECT TO DROP INLET
STA. 1219+85 LT.
TYPE ST DROP INLET = 4' X 6'
3 GRATES

1221+50.00

STA. 1221+50 - CONSTRUCT
DROP INLET 3' RT. OF C.L. H=5'1"
W/ 24" x 2' R.C. PIPE CULVERT
(CLASS III) (TYPE 3 BEDDING)
CONNECT TO DROP INLET
STA. 1221+50 LT.
TYPE ST DROP INLET = 4' X 6'
3 GRATES

CUT VOLUME : 80
FILL VOLUME : 37

CROSS SECTION STA. 1221+50 TO STA. 1222+00

USER: at5106
DESIGN FILE: G:\13106100_264toNHope\TRANSP\dgn\xsect\rCA0901_CX_02.dgn
PLOTTED: 2/24/2016 14:38
SCALE: 10:1
MODEL: CROSS SECTION SHEETS

Crafton, Tull & Associates Inc.

DATE REVISED	DATE FILMED	DATE REVISED	DATE FILMED	FED.RD. DIST.NO.	STATE	FED.AID PROJ.NO.	SHEET NO.	TOTAL SHEETS
				6	ARK.			
				JOB NO.		CA0901	341	452

2 CROSS SECTIONS

STA. 1222+50 - CONSTRUCT
DROP INLET 3' LT. OF C.L. H=4'11"
W/ 24" x 96' R.C. PIPE CULVERT
(CLASS III) (TYPE 3 BEDDING)
CONNECT TO DROP INLET
STA. 1221+50 LT.
TYPE ST DROP INLET = 4' X 6'
3 GRATES

STA. 1222+50 - CONSTRUCT
DROP INLET 3' RT. OF C.L. H=4'10"
W/ 24" x 2' R.C. PIPE CULVERT
(CLASS III) (TYPE 3 BEDDING)
CONNECT TO DROP INLET
STA. 1222+50 LT.
TYPE ST DROP INLET = 4' X 6'
3 GRATES

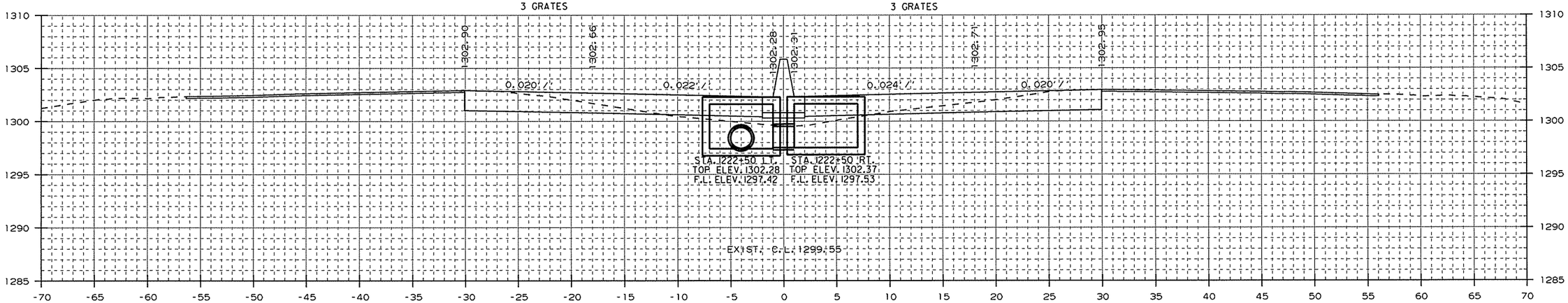

AREA CUT : 44.6
AREA FILL : 12.3

1222+50.00

CUT VOLUME : 50
FILL VOLUME : 15

STA. 1222+20
END/BEGIN L.M.L. SHOULDER
SLOPE TRANSITION

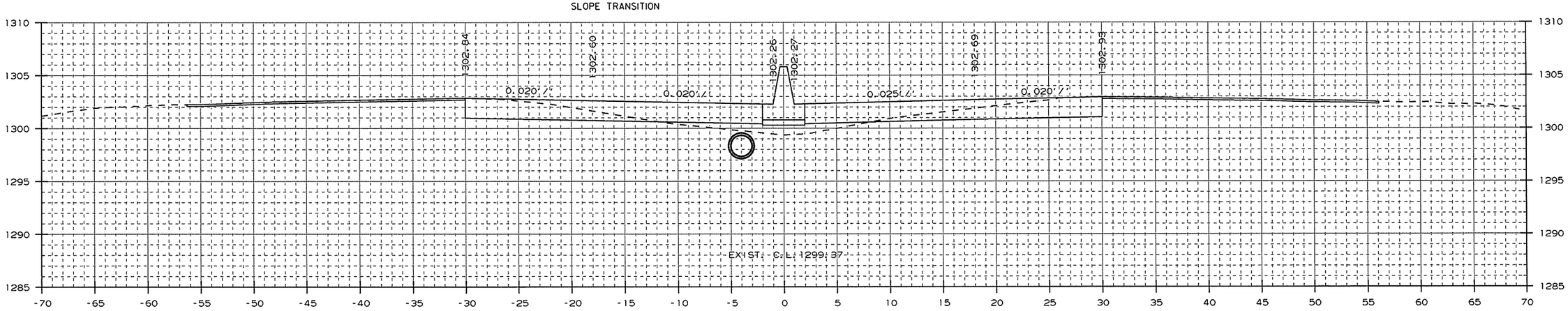

AREA CUT : 45.7
AREA FILL : 13.9

1222+20.00

CUT VOLUME : 33
FILL VOLUME : 11

CROSS SECTION STA. 1222+20 TO STA. 1222+50

USER: at5106
DESIGN FILE: G:\13106100_264toNHope\TRANSP\dgn\xsect\rCA0901_CX_02.dgn
PLOTTED: 2/24/2016 14:38 SCALE: 10:1 MODEL: CROSS SECTION SHEETS

Crafton, Tull & Associates Inc.

DATE REVISED	DATE FILMED	DATE REVISED	DATE FILMED

FED.RD. DIST.NO.	STATE	FED.AID PROJ.NO.	SHEET NO.	TOTAL SHEETS
6	ARK.			
JOB NO.		CA0901	342	452

2 CROSS SECTIONS

STA. 1223+65.14
END R.M.L. SHOULDER
SLOPE TRANSITION

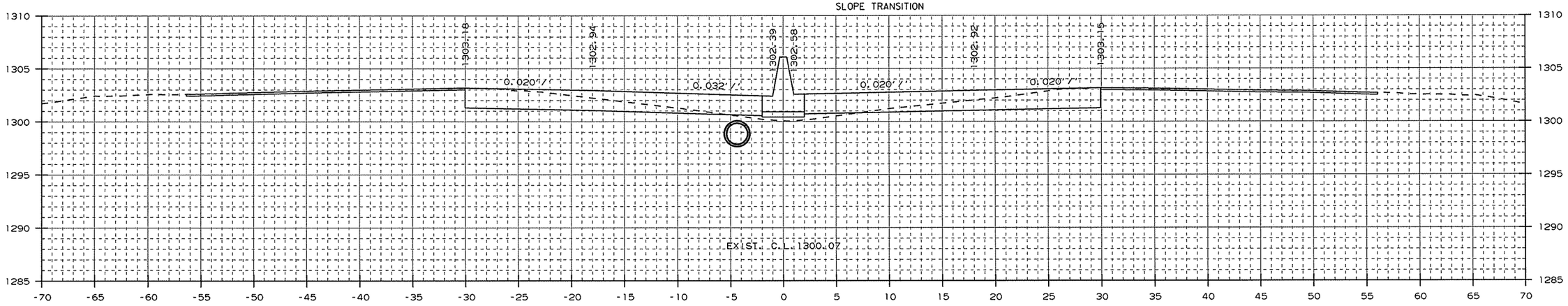

AREA CUT : 49.7
AREA FILL : 5.7

1223+65.14

CUT VOLUME : 113
FILL VOLUME : 19

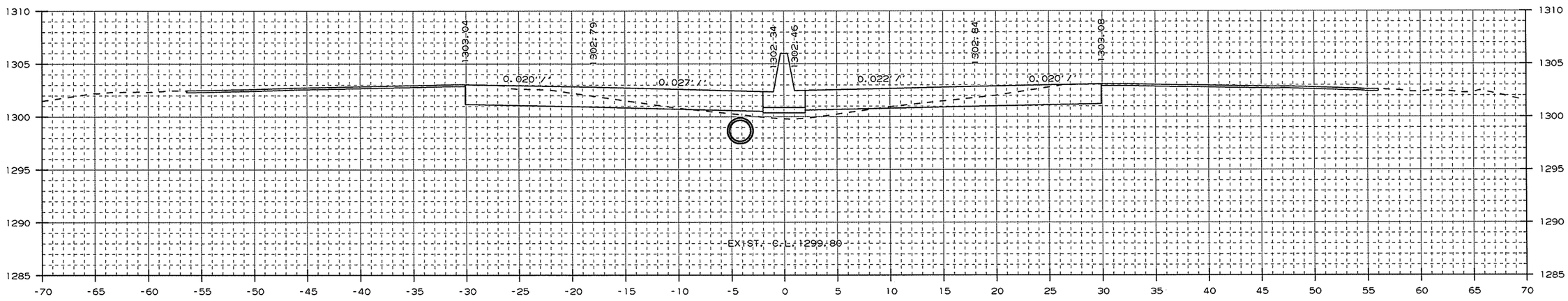

AREA CUT : 44.2
AREA FILL : 9.7

1223+00.00

CUT VOLUME : 82
FILL VOLUME : 20

CROSS SECTION STA. 1223+00 TO STA. 1223+65

USER: at5106
DESIGN FILE: G:\13106100_264toNHope\TRANSP\dgn\xsect\rCA0901_CX_02.dgn
PLOTTED: 2/24/2016 14:38
SCALE: 10:1
MODEL: CROSS SECTION SHEETS

Crafton, Tull & Associates Inc.

DATE REVISED	DATE FILMED	DATE REVISED	DATE FILMED	FED.RD. DIST.NO.	STATE	FED.AID PROJ.NO.	SHEET NO.	TOTAL SHEETS
				6	ARK.			
				JOB NO.		CA0901	343	452

2 CROSS SECTIONS

STA. 1224+40 - CONSTRUCT
DROP INLET 4'-9" LT. OF C.L. H=4'7"
W/ 24" x 186' R.C. PIPE CULVERT
(CLASS III) (TYPE 3 BEDDING)
CONNECT TO DROP INLET
STA. 1222+50 LT.
TYPE ST DROP INLET = 4' X 6'
3 GRATES

STA. 1224+40
END L.M.L. SHOULDER
SLOPE TRANSITION

STA. 1224+40 - CONSTRUCT
DROP INLET 4'-9" RT. OF C.L. H=4'7"
W/ 24" x 6' R.C. PIPE CULVERT
(CLASS III) (TYPE 3 BEDDING)
CONNECT TO DROP INLET
STA. 1224+40 LT.
TYPE ST DROP INLET = 4' X 6'
3 GRATES

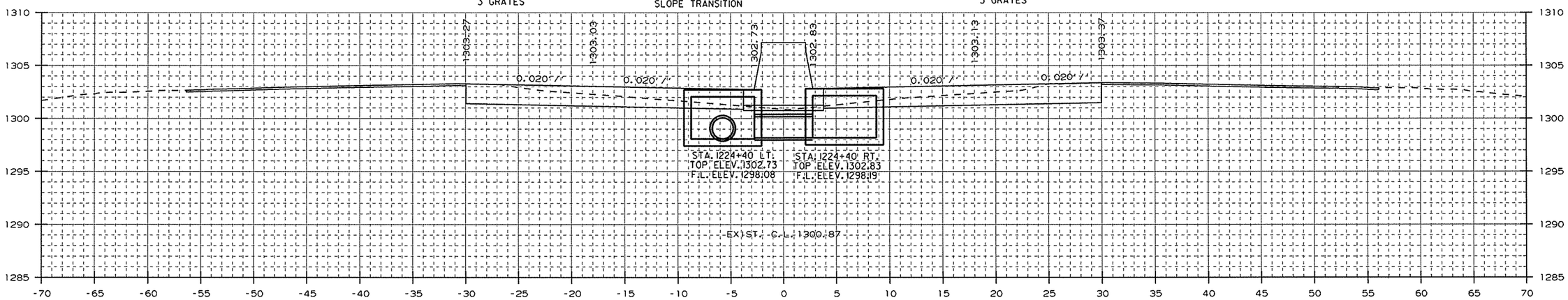

AREA CUT : 59.8
AREA FILL : 0.0

1224+40.00

CUT VOLUME : 82
FILL VOLUME : 3

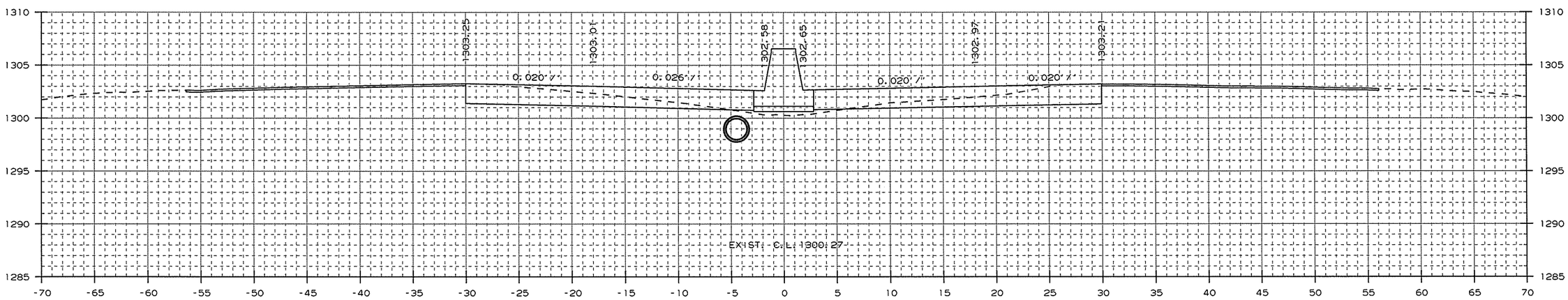

AREA CUT : 50.6
AREA FILL : 3.8

1224+00.00

CUT VOLUME : 65
FILL VOLUME : 6

CROSS SECTION STA. 1224+00 TO STA. 1224+40

USER: at5106
DESIGN FILE: G:\13106100_264toNHope\TRANSP\dgn\xsect\rCA0901_CX_02.dgn
PLOTTED: 2/24/2016 14:38
SCALE: 10:1
MODEL: CROSS SECTION SHEETS

Crafton, Tull & Associates Inc.

DATE REVISED	DATE FILMED	DATE REVISED	DATE FILMED

FED.RD. DIST.NO.	STATE	FED.AID PROJ.NO.	SHEET NO.	TOTAL SHEETS
6	ARK.			
JOB NO.		CA0901	344	452

2 CROSS SECTIONS

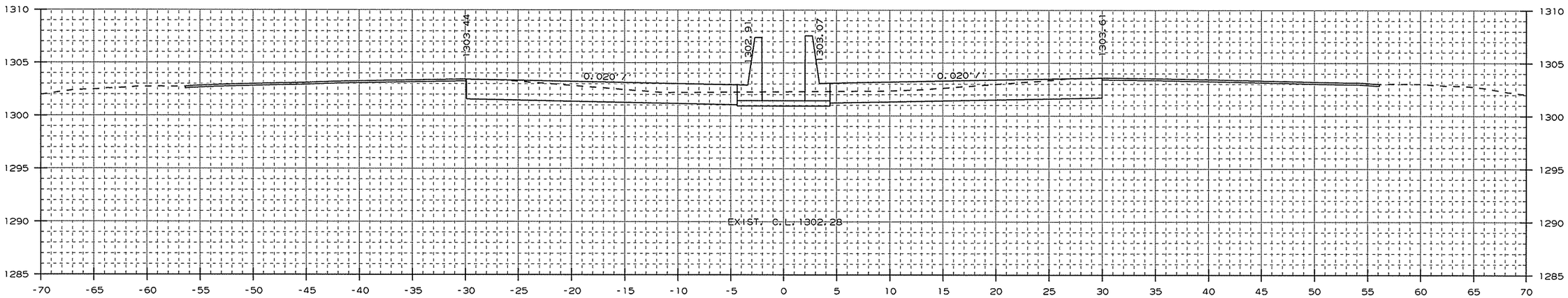

AREA CUT : 82.2
AREA FILL : 0.0

1225+00.00

CUT VOLUME : 96
FILL VOLUME : 0

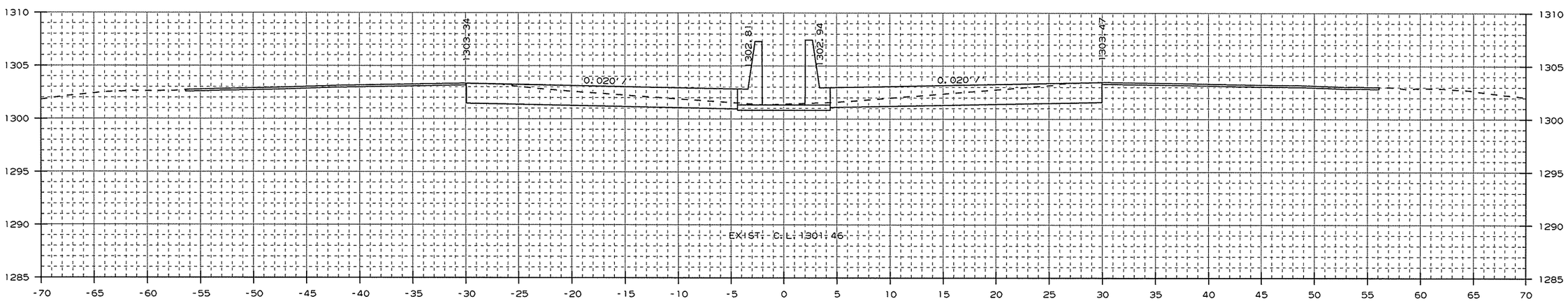

AREA CUT : 66.8
AREA FILL : 0.0

1224+65.14

CUT VOLUME : 59
FILL VOLUME : 0

CROSS SECTION STA. 1224+65 TO STA. 1225+00

USER: at5106
DESIGN FILE: G:\13106100_264toNHope\TRANSP\dgn\xsect\rCA0901_CX_02.dgn
PLOTTED: 1/13/2016 09:37
SCALE: 10:1
MODEL: CROSS SECTION SHEETS

Crafton, Tull & Associates Inc.

DATE REVISED	DATE FILMED	DATE REVISED	DATE FILMED

FED.RD. DIST.NO.	STATE	FED.AID PROJ.NO.	SHEET NO.	TOTAL SHEETS
6	ARK.			
JOB NO.		CA0901	345	452

2 CROSS SECTIONS

STA. 1227+00 IN PLACE
6' X 3' X 195' R.C.
BOX CULVERT
(30° LT. FWD. SKEW)
WITH 4:1 WINGS LT. & RT.
RETAIN

STA. 1227+00 IN PLACE
TYPE T DROP INLET
IN MEDIAN OVER R.C. BOX
MODIFY

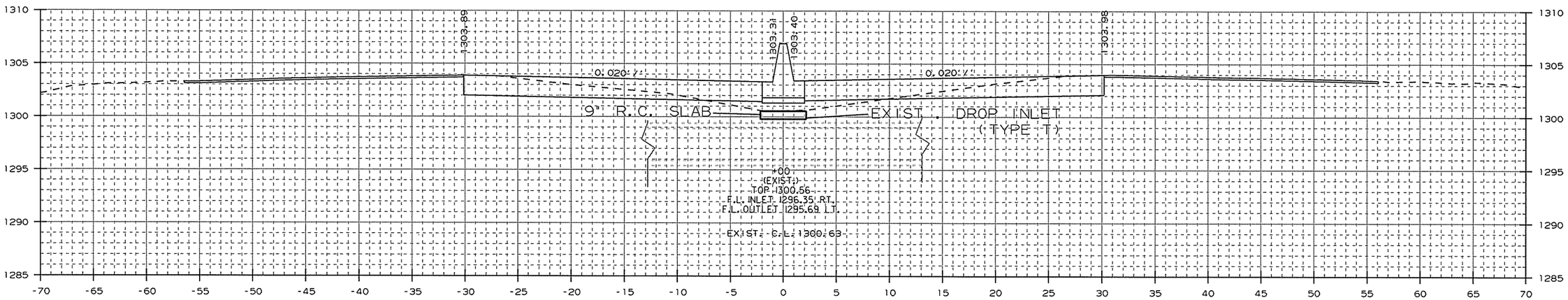

AREA CUT : 49.0
AREA FILL : 8.9

1227+00.00

CUT VOLUME : 224
FILL VOLUME : 16

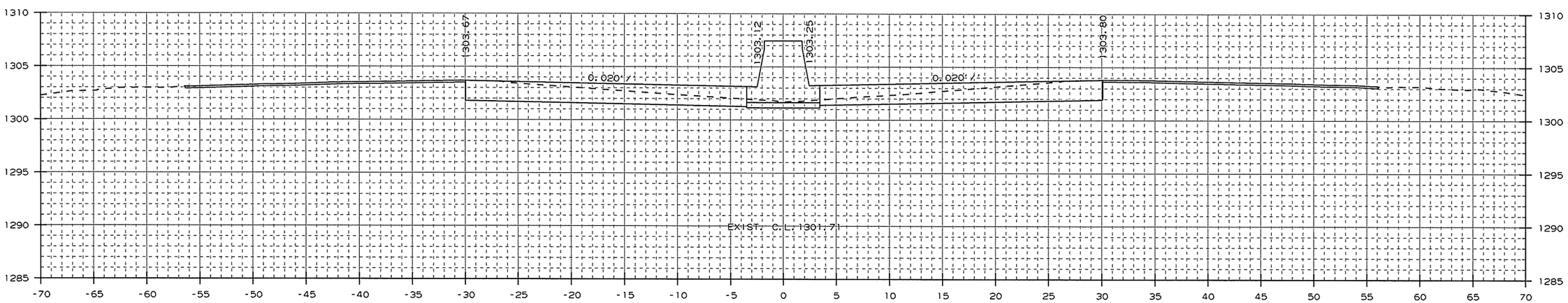

AREA CUT : 71.9
AREA FILL : 0.0

1226+00.00

CUT VOLUME : 285
FILL VOLUME : 0

CROSS SECTION STA. 1226+00 TO STA. 1227+00

USER: a15106
DESIGN FILE: G:\13106100_264toNHope\TRANSP\dgn\xsect\rCA0901_CX_02.dgn
PLOTTED: 1/13/2016 09:38
SCALE: 10:1
MODEL: CROSS SECTION SHEETS

Crafton, Tull & Associates Inc.

DATE REVISED	DATE FILMED	DATE REVISED	DATE FILMED

FED.RD. DIST.NO.	STATE	FED.AID PROJ.NO.	SHEET NO.	TOTAL SHEETS
6	ARK.			
JOB NO.		CA0901	346	452

2 CROSS SECTIONS

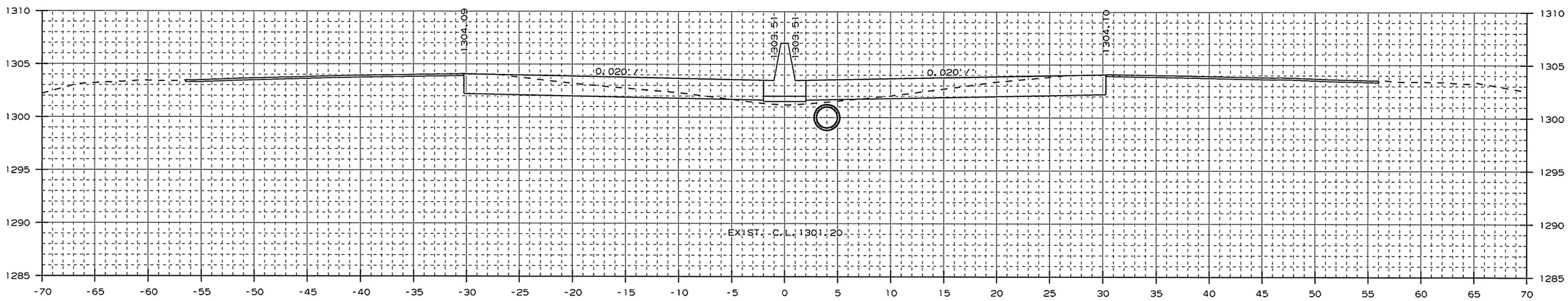

AREA CUT : 52.0
AREA FILL : 2.6

1228+00.00

CUT VOLUME : 158
FILL VOLUME : 17

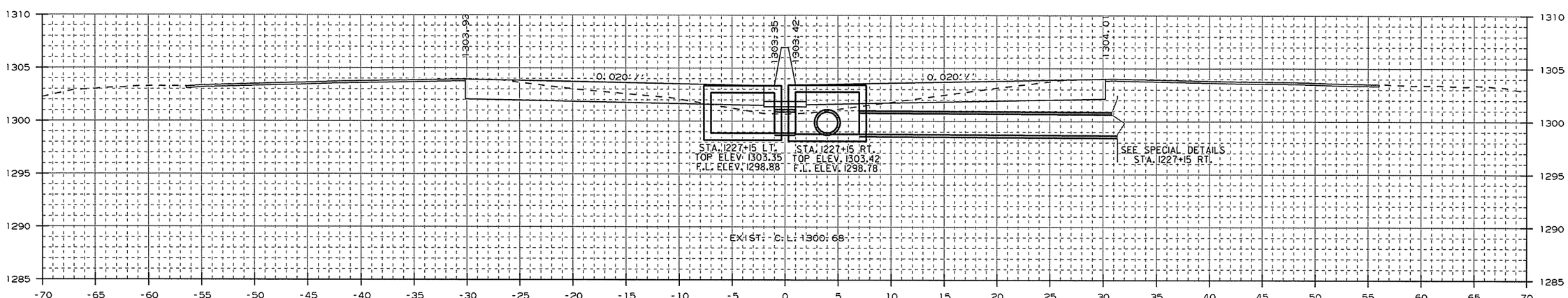

AREA CUT : 48.6
AREA FILL : 7.9

STA. 1227+15 - CONSTRUCT
DROP INLET 3' LT. OF C.L. H=4'6"
W/ 24" x 2' R.C. PIPE CULVERT
(CLASS III) (TYPE 3 BEDDING)
CONNECT TO DROP INLET
STA. 1227+15 RT.
TYPE ST DROP INLET = 4' X 6'
3 GRATES

1227+15.00

STA. 1227+15 - CONSTRUCT
DROP INLET 3' RT. OF C.L. H=4'8"
W/ 24" x 73' R.C. PIPE CULVERT
(CLASS V)
W/ F.E.S. RT.
TYPE ST DROP INLET = 4' X 6'
3 GRATES
(JACK AND BORE)
5 CU. YD. DUMPED RIPRAP

CUT VOLUME : 27
FILL VOLUME : 5

CROSS SECTION STA. 1227+15 TO STA. 1228+00

USER: at5106
DESIGN FILE: G:\13106100_264toNHope\TRANSP\dgn\xsect\rCA0901_CX_02.dgn MODEL: CROSS SECTION SHEETS
PLOTTED: 1/13/2016 09:38 SCALE: 1:1

Crafton, Tull & Associates Inc.

DATE REVISED	DATE FILMED	DATE REVISED	DATE FILMED

FED.RD. DIST.NO.	STATE	FED.AID PROJ.NO.	SHEET NO.	TOTAL SHEETS
6	ARK.			
JOB NO.		CA0901	347	452

2 CROSS SECTIONS

STA. 1229+00 - CONSTRUCT
DROP INLET 3' LT. OF C.L. H=4'5"
W/ 24" x 2' R.C. PIPE CULVERT
(CLASS III) (TYPE 3 BEDDING)
CONNECT TO DROP INLET
STA. 1229+00 RT.
TYPE ST DROP INLET = 4' X 6'
3 GRATES

STA. 1229+00 - CONSTRUCT
DROP INLET 3' RT. OF C.L. H=4'6"
W/ 24" x 86' R.C. PIPE CULVERT
(CLASS III) (TYPE 3 BEDDING)
CONNECT TO DROP INLET
STA. 1228+10 RT.
TYPE ST DROP INLET = 4' X 6'
3 GRATES

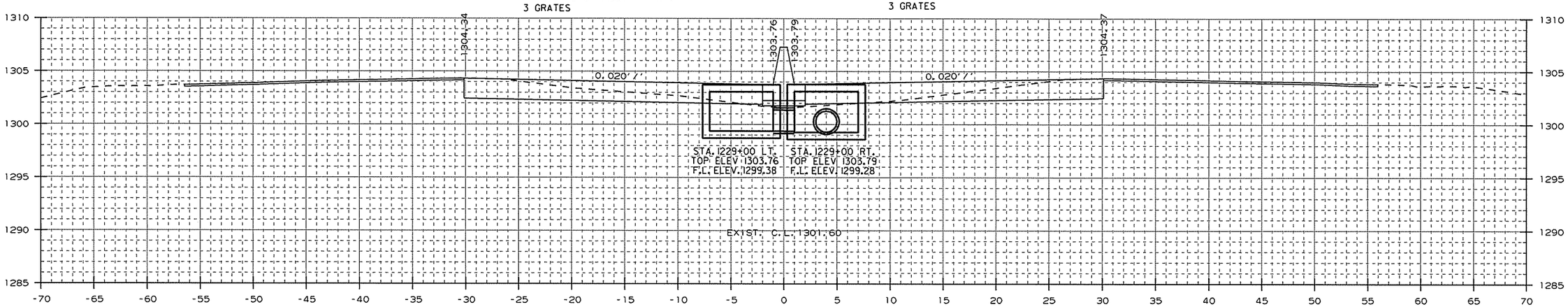

AREA CUT : 50.5
AREA FILL : 1.4

1229+00.00

CUT VOLUME : 168
FILL VOLUME : 6

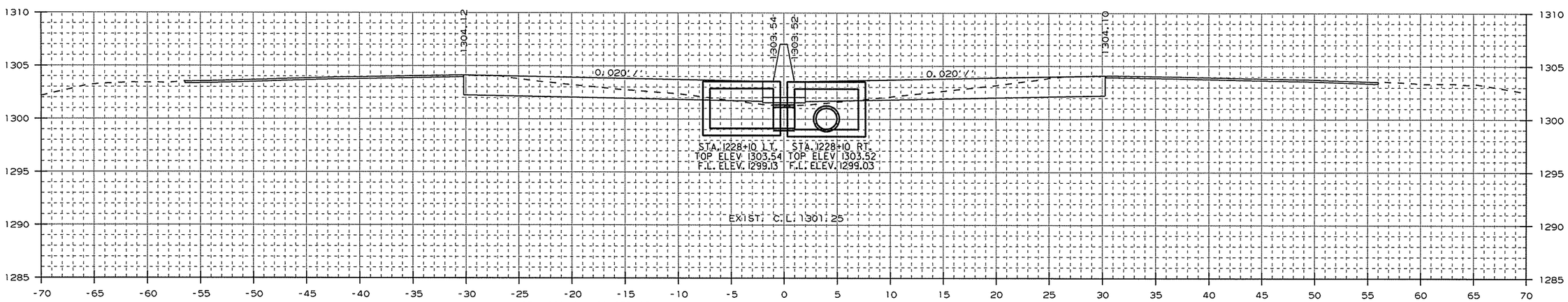

AREA CUT : 50.4
AREA FILL : 2.3

STA. 1228+10 - CONSTRUCT
DROP INLET 3' LT. OF C.L. H=4'5"
W/ 24" x 2' R.C. PIPE CULVERT
(CLASS III) (TYPE 3 BEDDING)
CONNECT TO DROP INLET
STA. 1228+10 RT.
TYPE ST DROP INLET = 4' X 6'
3 GRATES

1228+10.00

STA. 1228+10 - CONSTRUCT
DROP INLET 3' RT. OF C.L. H=4'6"
W/ 24" x 91' R.C. PIPE CULVERT
(CLASS III) (TYPE 3 BEDDING)
CONNECT TO DROP INLET
STA. 1227+15 RT.
TYPE ST DROP INLET = 4' X 6'
3 GRATES

CUT VOLUME : 19
FILL VOLUME : 1

CROSS SECTION STA. 1228+10 TO STA. 1229+00

USER: ot5106
DESIGN FILE: G:\13106100_264toNHope\TRANSP\dgn\xsect\rCA0901_CX_02.dgn
PLOTTED: 1/13/2016 09:38
SCALE: 10:1
MODEL: CROSS SECTION SHEETS

Crafton, Tull & Associates Inc.

DATE REVISED	DATE FILMED	DATE REVISED	DATE FILMED

FED.RD. DIST.NO.	STATE	FED.AID PROJ.NO.	SHEET NO.	TOTAL SHEETS
6	ARK.			
JOB NO.		CA0901	348	452

2 CROSS SECTIONS

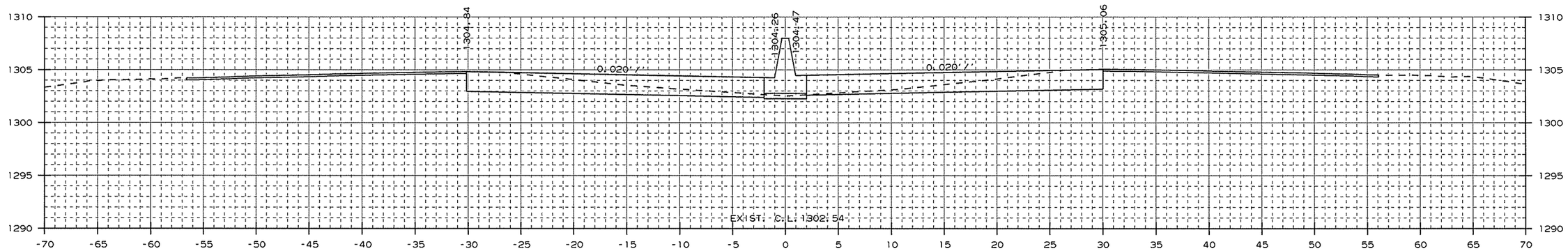

AREA CUT : 56.1
AREA FILL : 0.0

STA. 1230+75 - CONSTRUCT
DROP INLET 3' LT. OF C.L. H=4'5"
W/ 24" x 2' R.C. PIPE CULVERT
(CLASS III) (TYPE 3 BEDDING)
CONNECT TO DROP INLET
STA. 1230+75 RT.
TYPE ST DROP INLET = 4' X 6'
3 GRATES

1231+00.00

STA. 1230+75 - CONSTRUCT
DROP INLET 3' RT. OF C.L. H=4'9"
W/ 24" x 171' R.C. PIPE CULVERT
(CLASS III) (TYPE 3 BEDDING)
CONNECT TO DROP INLET
STA. 1229+00 RT.
TYPE ST DROP INLET = 4' X 6'
3 GRATES

CUT VOLUME : 51
FILL VOLUME : 0

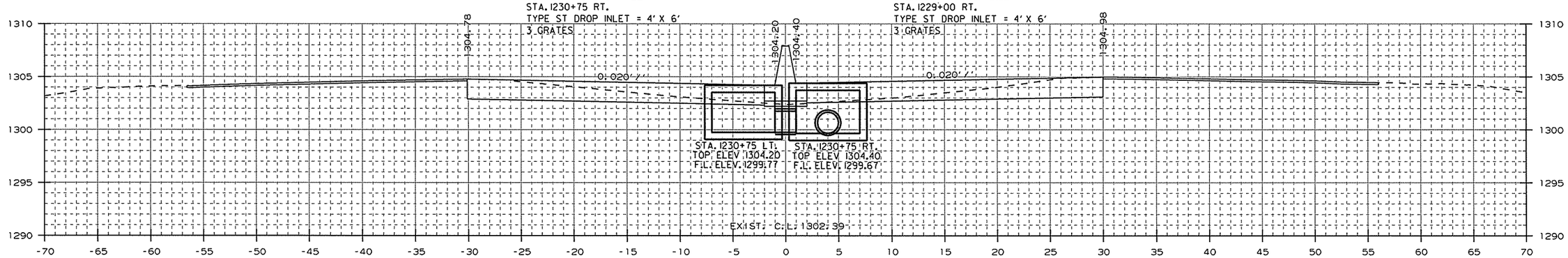

AREA CUT : 54.6
AREA FILL : 0.0

1230+75.00

CUT VOLUME : 143
FILL VOLUME : 1

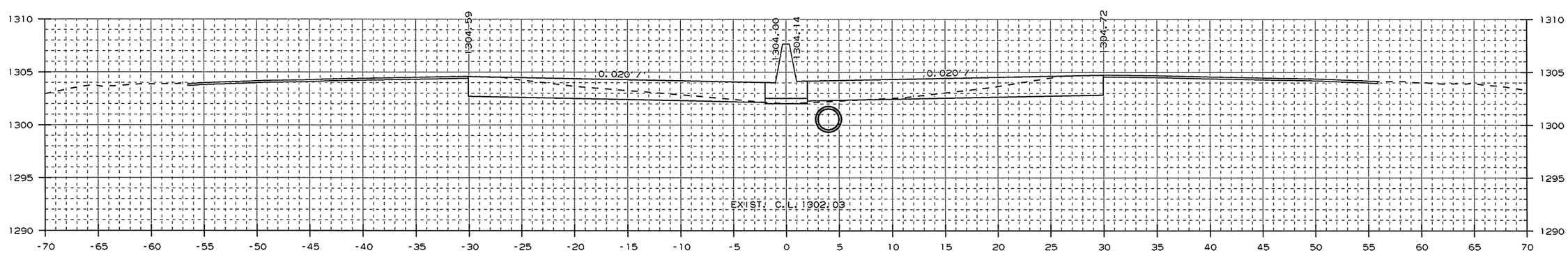

AREA CUT : 48.1
AREA FILL : 0.5

1230+00.00

CUT VOLUME : 183
FILL VOLUME : 4

CROSS SECTION STA. 1230+00 TO STA. 1231+00

USER: at5106
DESIGN FILE: G:\13106100_264toNHope\TRANSP\dgn\xsect\rCA0901_CX_02.dgn
PLOTTED: 1/13/2016 09:38
SCALE: 10:1
MODEL: CROSS SECTION SHEETS

Crafton, Tull & Associates Inc.

DATE REVISED	DATE FILMED	DATE REVISED	DATE FILMED

FED.RD. DIST.NO.	STATE	FED.AID PROJ.NO.	SHEET NO.	TOTAL SHEETS
6	ARK.			
JOB NO.		CA0901	349	452

2 CROSS SECTIONS

STA. 1232+50 - CONSTRUCT
DROP INLET 3' LT. OF C.L. H=6'10"
W/ 24" x 147' R.C. PIPE CULVERT
(CLASS V)
W/ F.E.S. LT.
TYPE ST DROP INLET = 4' X 6'
3 GRATES
(JACK AND BORE)
5 CU. YD. DUMPED RIPRAP

STA. 1232+50 - CONSTRUCT
DROP INLET 3' RT. OF C.L. H=5'1"
W/ 24" x 2' R.C. PIPE CULVERT
(CLASS III) (TYPE 3 BEDDING)
CONNECT TO DROP INLET
STA. 1232+50 LT.
TYPE ST DROP INLET = 4' X 6'
3 GRATES

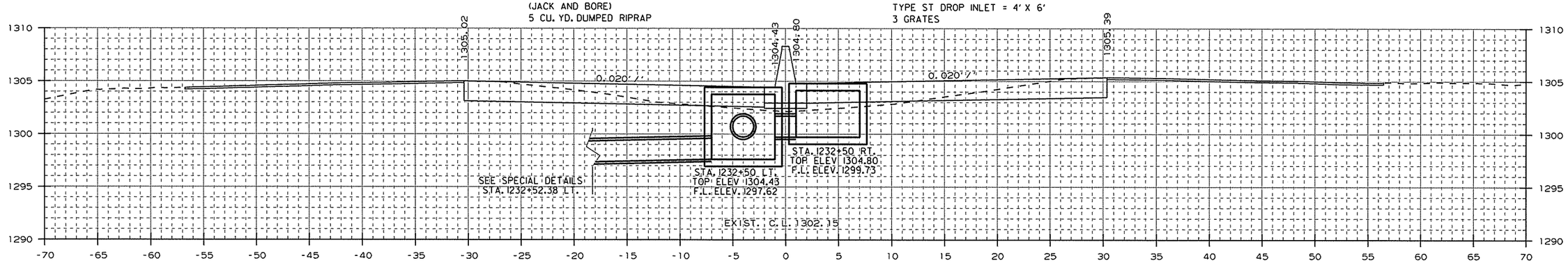

AREA CUT : 43.5
AREA FILL : 6.3

1232+50.00

CUT VOLUME : 85
FILL VOLUME : 7

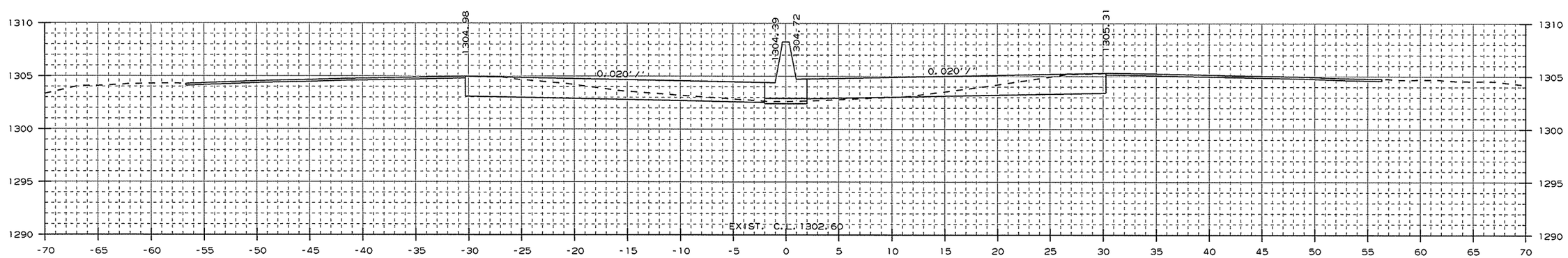

AREA CUT : 48.8
AREA FILL : 0.9

1232+00.00

CUT VOLUME : 194
FILL VOLUME : 2

CROSS SECTION STA. 1232+00 TO STA. 1232+50

USER: at5106
DESIGN FILE: G:\13106100_264toNHope\TRANSP\dgn\xsect\rCA0901_CX_02.dgn
PLOTTED: 1/13/2016 09:38
SCALE: 10:1
MODEL: CROSS SECTION SHEETS

Crafton, Tull & Associates Inc.

DATE REVISED	DATE FILMED	DATE REVISED	DATE FILMED

FED.RD. DIST.NO.	STATE	FED.AID PROJ.NO.	SHEET NO.	TOTAL SHEETS
6	ARK.			
JOB NO.		CA0901	350	452

2 CROSS SECTIONS

STA. 1234+00 IN PLACE
6' X 3' X 182' R.C.
BOX CULVERT WITH 4:1
WINGS LT. & RT.
RETAIN

STA. 1234+00 IN PLACE
TYPE T DROP INLET
IN MEDIAN
MODIFY

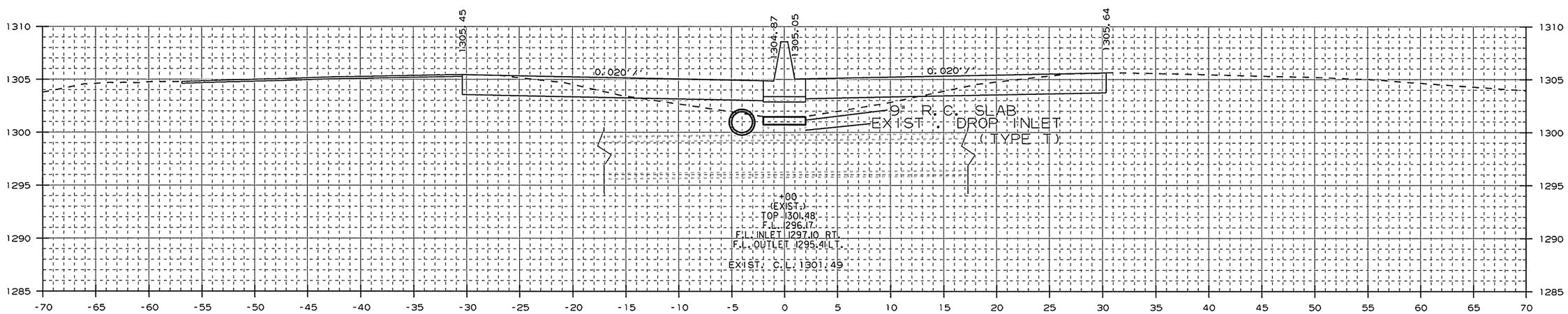

AREA CUT : 42.3
AREA FILL : 24.3

1234+00.00

CUT VOLUME : 157
FILL VOLUME : 72

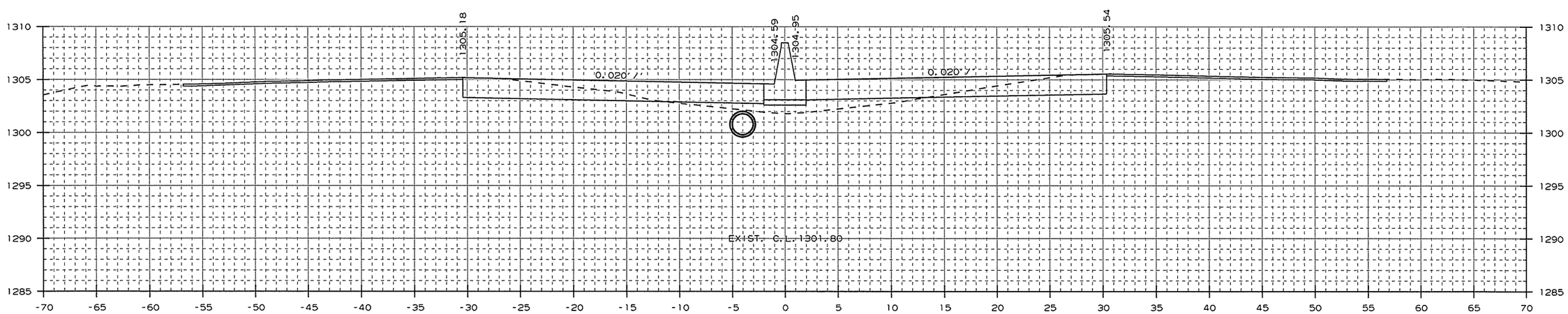

AREA CUT : 42.5
AREA FILL : 14.4

1233+00.00

CUT VOLUME : 80
FILL VOLUME : 19

CROSS SECTION STA. 1233+00 TO STA. 1234+00

USER: at5106
DESIGN FILE: G:\13106100_264toNHope\TRANSP\dgn\xsect\rCA0901_CX_02.dgn
PLOTTED: 1/13/2016 09:38
SCALE: 10:1
MODEL: CROSS SECTION SHEETS

Crafton, Tull & Associates Inc.

DATE REVISED	DATE FILMED	DATE REVISED	DATE FILMED

FED.RD. DIST.NO.	STATE	FED.AID PROJ.NO.	SHEET NO.	TOTAL SHEETS
6	ARK.			
JOB NO.		CA0901	351	452

2 CROSS SECTIONS

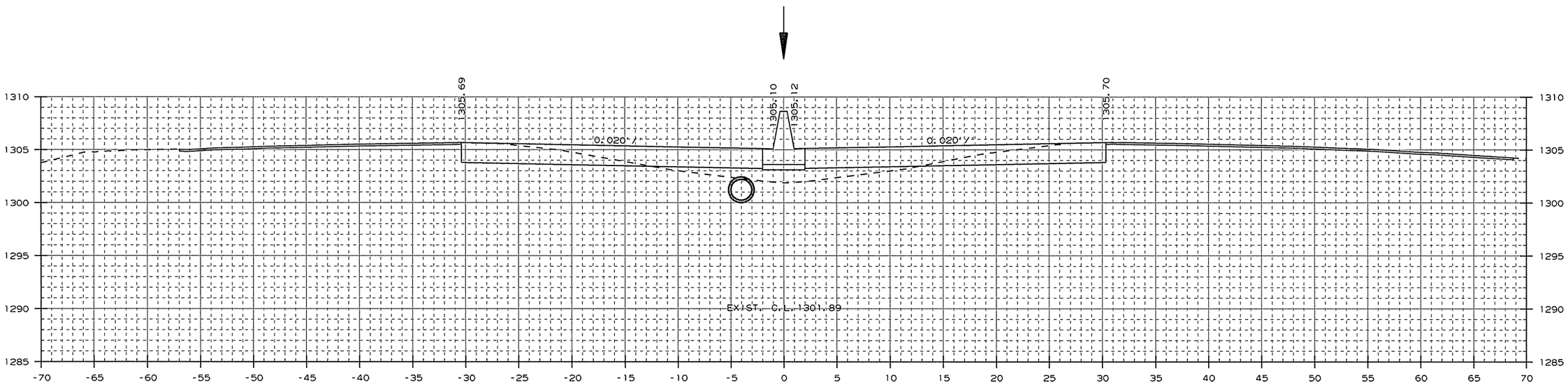

AREA CUT : 42.8
AREA FILL : 19.0

1235+00.00

CUT VOLUME : 126
FILL VOLUME : 61

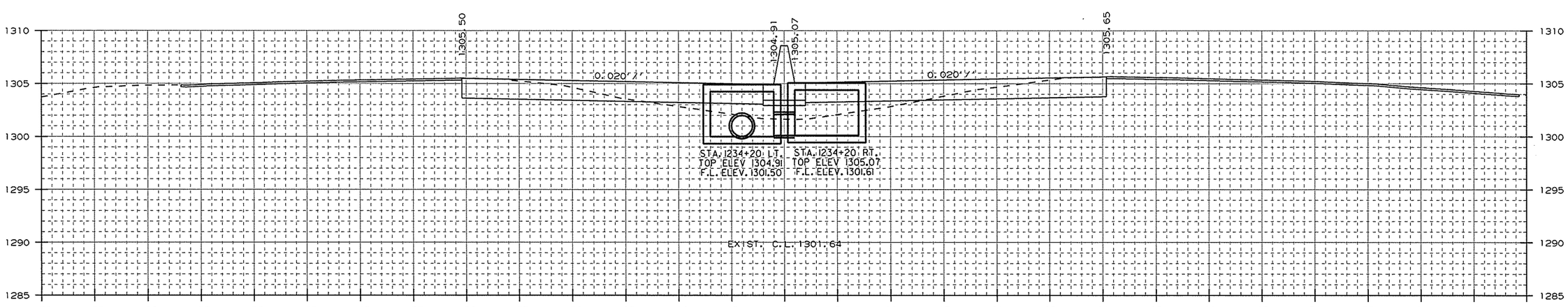

AREA CUT : 42.0
AREA FILL : 22.3

STA. 1234+20 - CONSTRUCT
DROP INLET 3' LT. OF C.L. H=3'5"
W/ 24" x 166' R.C. PIPE CULVERT
(CLASS IV) (TYPE 3 BEDDING)
CONNECT TO DROP INLET
STA. 1232+50 LT.
TYPE ST DROP INLET = 4' X 6'
3 GRATES

1234+20.00

STA. 1234+20 - CONSTRUCT
DROP INLET 3' RT. OF C.L. H=3'6"
W/ 24" x 2' R.C. PIPE CULVERT
(CLASS IV) (TYPE 3 BEDDING)
CONNECT TO DROP INLET
STA. 1234+20 LT.
TYPE ST DROP INLET = 4' X 6'
3 GRATES

CUT VOLUME : 31
FILL VOLUME : 17

CROSS SECTION STA. 1234+20 TO STA. 1235+00

USER: at5106
DESIGN FILE: G:\13106100_264toNHope\TRANSP\dgn\xsect\rCA0901_CX_02.dgn
PLOTTED: 1/13/2016 09:38
SCALE: 10:1
MODEL: CROSS SECTION SHEETS

Crafton, Tull & Associates Inc.

DATE REVISED	DATE FILMED	DATE REVISED	DATE FILMED

FED.RD. DIST.NO.	STATE	FED.AID PROJ.NO.	SHEET NO.	TOTAL SHEETS
6	ARK.			
JOB NO.		CA0901	352	452

2 CROSS SECTIONS

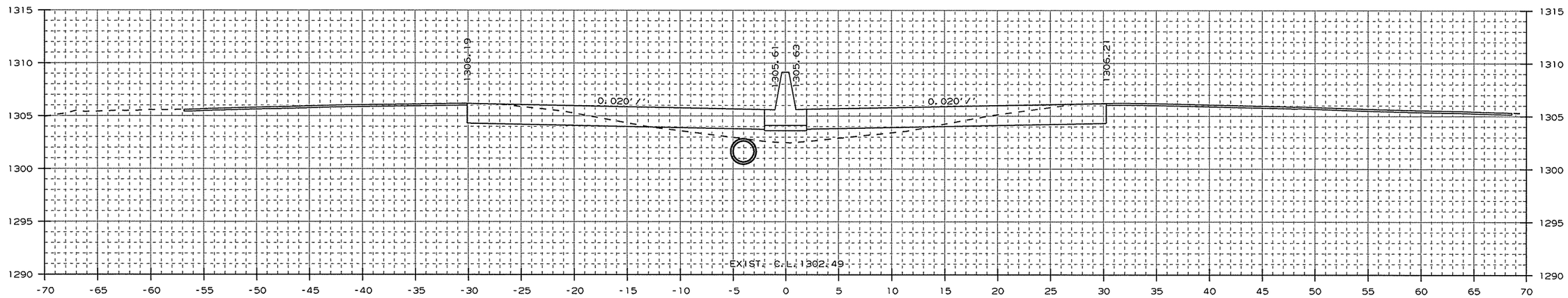

AREA CUT : 39.9
AREA FILL : 18.6

1237+00.00

CUT VOLUME : 150
FILL VOLUME : 70

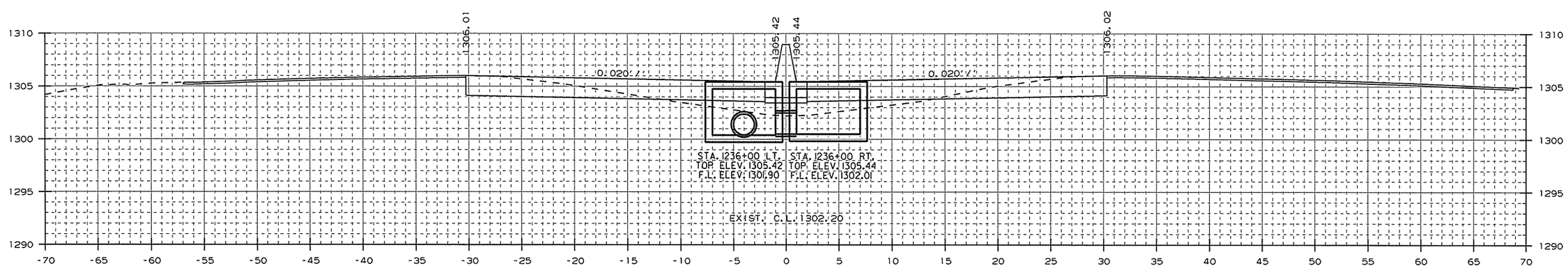

AREA CUT : 41.3
AREA FILL : 19.4

STA. 1236+00 - CONSTRUCT
DROP INLET 3' LT. OF C.L. H=5'0"
W/ 24" x 176' R.C. PIPE CULVERT
(CLASS IV) (TYPE 3 BEDDING)
CONNECT TO DROP INLET
STA. 1234+20 LT.
TYPE ST DROP INLET = 4' X 6'
3 GRATES

1236+00.00

STA. 1236+00 - CONSTRUCT
DROP INLET 3' RT. OF C.L. H=4'11"
W/ 24" x 2' R.C. PIPE CULVERT
(CLASS IV) (TYPE 3 BEDDING)
CONNECT TO DROP INLET
STA. 1236+00 LT.
TYPE ST DROP INLET = 4' X 6'
3 GRATES

CUT VOLUME : 156
FILL VOLUME : 71

CROSS SECTION STA. 1236+00 TO STA. 1237+00

USER: at5106
DESIGN FILE: G:\13106100_264toNHope\TRANSP\dgn\xsect\rCA0901_CX_02.dgn
PLOTTED: 1/13/2016 09:38
SCALE: 1:01
MODEL: CROSS SECTION SHEETS

Crafton, Tull & Associates Inc.

DATE REVISED	DATE FILMED	DATE REVISED	DATE FILMED

FED.RD. DIST.NO.	STATE	FED.AID PROJ.NO.	SHEET NO.	TOTAL SHEETS
6	ARK.			
JOB NO.		CA0901	353	452

2 CROSS SECTIONS

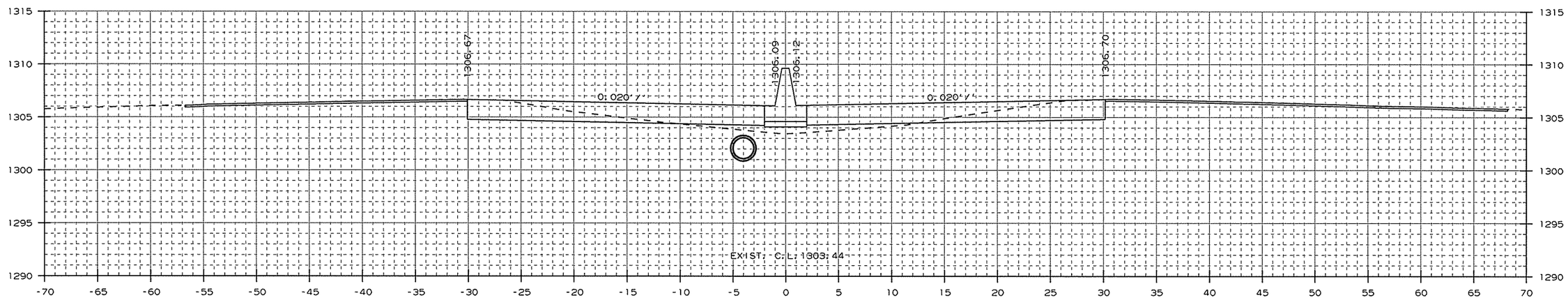

AREA CUT : 40.0
AREA FILL : 9.4

1239+00.00

CUT VOLUME : 148
FILL VOLUME : 49

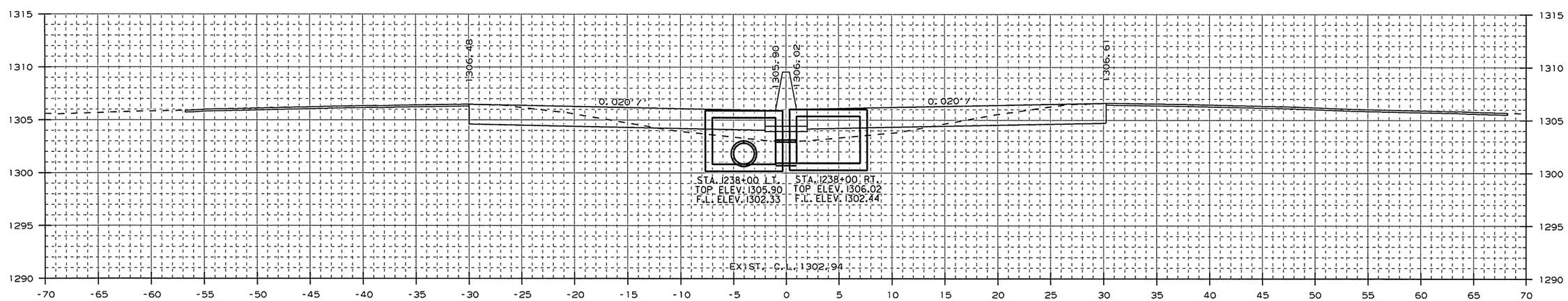

AREA CUT : 39.9
AREA FILL : 17.1

STA. 1238+00 - CONSTRUCT
DROP INLET 3' LT. OF C.L. H=5'1"
W/ 24" x 196' R.C. PIPE CULVERT
(CLASS IV) (TYPE 3 BEDDING)
CONNECT TO DROP INLET
STA. 1236+00 LT.
TYPE ST DROP INLET = 4' X 6'
3 GRATES

1238+00.00

STA. 1238+00 - CONSTRUCT
DROP INLET 3' RT. OF C.L. H=5'1"
W/ 24" x 2' R.C. PIPE CULVERT
(CLASS IV) (TYPE 3 BEDDING)
CONNECT TO DROP INLET
STA. 1238+00 LT.
TYPE ST DROP INLET = 4' X 6'
3 GRATES

CUT VOLUME : 148
FILL VOLUME : 66

CROSS SECTION STA. 1238+00 TO STA. 1239+00

USER: at5106
DESIGN FILE: G:\13106100_264toNHope\TRANSP\dgn\xsect\rCA0901_CX_02.dgn
PLOTTED: 1/13/2016 09:38
SCALE: 10:1
MODEL: CROSS SECTION SHEETS

Crafton, Tull & Associates Inc.

DATE REVISED	DATE FILMED	DATE REVISED	DATE FILMED

FED.RD. DIST.NO.	STATE	FED.AID PROJ.NO.	SHEET NO.	TOTAL SHEETS
6	ARK.			
JOB NO.		CA0901	354	452

2 CROSS SECTIONS

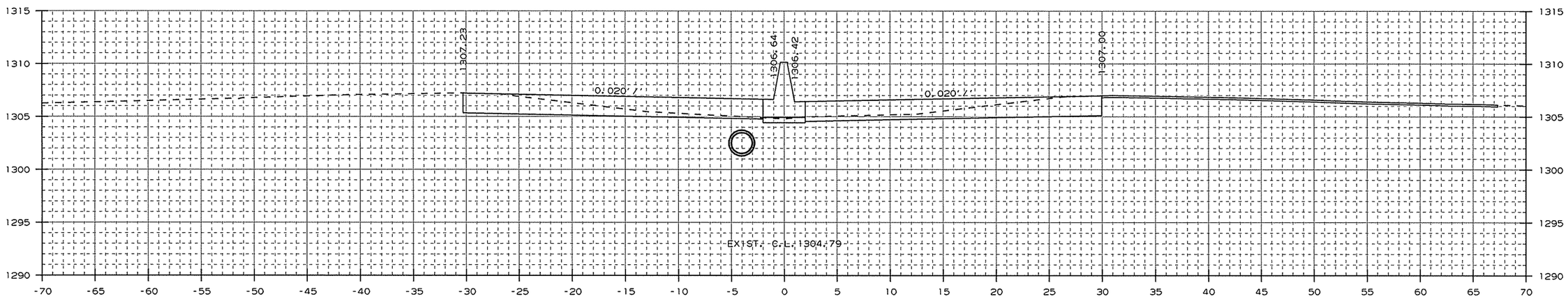

AREA CUT : 54.9
AREA FILL : 0.0

1241+00.00

CUT VOLUME : 181
FILL VOLUME : 6

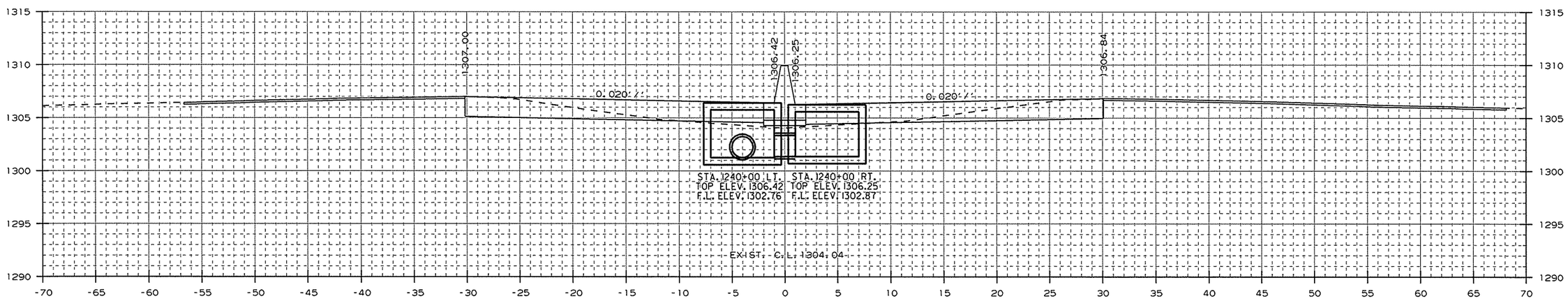

AREA CUT : 42.6
AREA FILL : 3.2

STA. 1240+00 - CONSTRUCT
DROP INLET 3' LT. OF C.L. H=5'2"
W/ 24" x 196' R.C. PIPE CULVERT
(CLASS IV) (TYPE 3 BEDDING)
CONNECT TO DROP INLET
STA. 1238+00 LT.
TYPE ST DROP INLET = 4' X 6'
3 GRATES

1240+00.00

STA. 1240+00 - CONSTRUCT
DROP INLET 3' RT. OF C.L. H=4'11"
W/ 24" x 2' R.C. PIPE CULVERT
(CLASS IV) (TYPE 3 BEDDING)
CONNECT TO DROP INLET
STA. 1240+00 LT.
TYPE ST DROP INLET = 4' X 6'
3 GRATES

CUT VOLUME : 153
FILL VOLUME : 23

CROSS SECTION STA. 1240+00 TO STA. 1241+00

USER: at5106
DESIGN FILE: G:\13106100_264toNHope\TRANSP\dgn\xsect\rCA0901_CX_02.dgn
PLOTTED: 1/13/2016 09:38
SCALE: 10:1
MODEL: CROSS SECTION SHEETS

Crafton, Tull & Associates Inc.

DATE REVISED	DATE FILMED	DATE REVISED	DATE FILMED

FED.RD. DIST.NO.	STATE	FED.AID PROJ.NO.	SHEET NO.	TOTAL SHEETS
6	ARK.			
JOB NO.		CA0901	355	452

2 CROSS SECTIONS

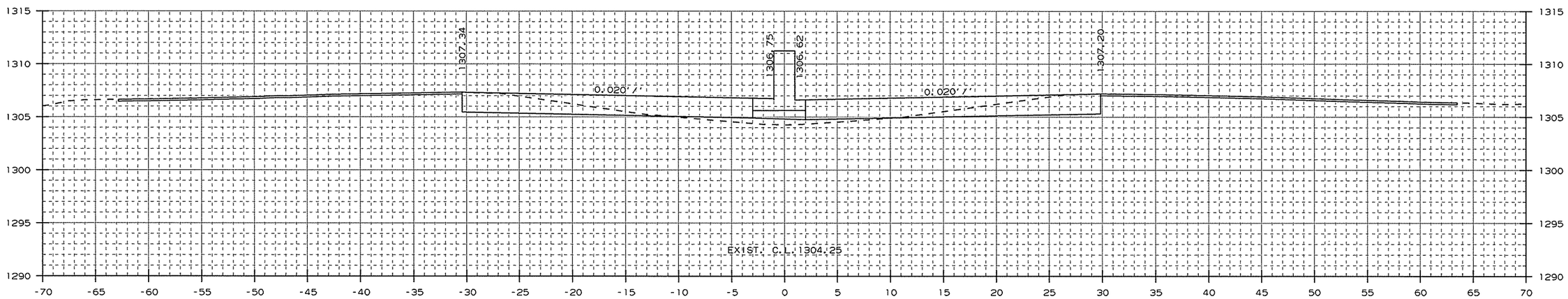

AREA CUT : 40.8
AREA FILL : 6.8

1242+00.00

CUT VOLUME : 80
FILL VOLUME : 7

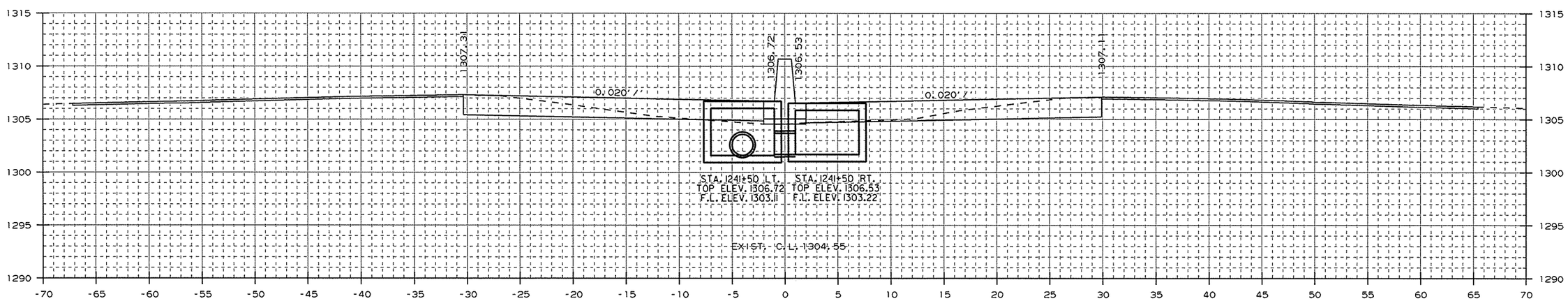

AREA CUT : 45.3
AREA FILL : 1.0

STA. 1241+50 - CONSTRUCT
DROP INLET 3' LT. OF C.L. H=5'1"
W/ 24" x 146' R.C. PIPE CULVERT
(CLASS IV) (TYPE 3 BEDDING)
CONNECT TO DROP INLET
STA. 1240+00 LT.
TYPE ST DROP INLET = 4' X 6'
3 GRATES

1241+50.00

STA. 1241+50 - CONSTRUCT
DROP INLET 3' RT. OF C.L. H=4'10"
W/ 24" x 2' R.C. PIPE CULVERT
(CLASS IV) (TYPE 3 BEDDING)
CONNECT TO DROP INLET
STA. 1241+50 LT.
TYPE ST DROP INLET = 4' X 6'
3 GRATES

CUT VOLUME : 93
FILL VOLUME : 1

CROSS SECTION STA. 1241+50 TO STA. 1242+00

USER: at5106
DESIGN FILE: G:\13106100_2641oNHope\TRANSP\dgn\xsect\rCA0901_CX_02.dgn
PLOTTED: 1/13/2016 09:38
SCALE: 10:1
MODEL: CROSS SECTION SHEETS

Crafton, Tull & Associates Inc.	DATE REVISED	DATE FILMED	DATE REVISED	DATE FILMED	FED.RD. DIST.NO.	STATE	FED.AID PROJ.NO.	SHEET NO.	TOTAL SHEETS
					6	ARK.			
					JOB NO.		CA0901	356	452
					(2)	CROSS SECTIONS			

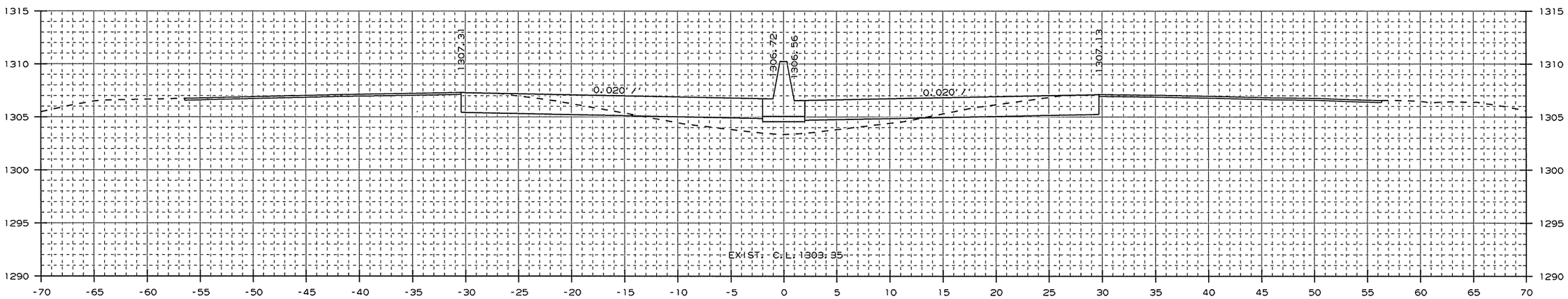

AREA CUT : 39.8
AREA FILL : 21.3

1244+00.00

CUT VOLUME : 148
FILL VOLUME : 71

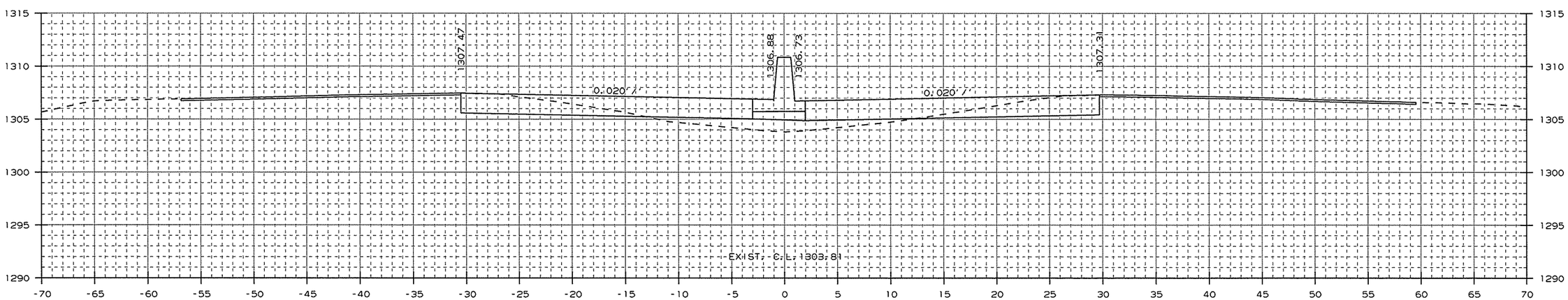

AREA CUT : 40.1
AREA FILL : 17.0

1243+00.00

CUT VOLUME : 150
FILL VOLUME : 44

CROSS SECTION STA. 1243+00 TO STA. 1244+00

USER: a15106
DESIGN FILE: G:\13106100_264toNHope\TRANSP\dgn\xsect\rCA0901_CX_02.dgn
PLOTTED: 1/13/2016 09:38
SCALE: 10:1
MODEL: CROSS SECTION SHEETS

Crafton, Tull & Associates Inc.

DATE REVISED	DATE FILMED	DATE REVISED	DATE FILMED

FED.RD. DIST.NO.	STATE	FED.AID PROJ.NO.	SHEET NO.	TOTAL SHEETS
6	ARK.			
JOB NO.		CA0901	357	452

2 CROSS SECTIONS

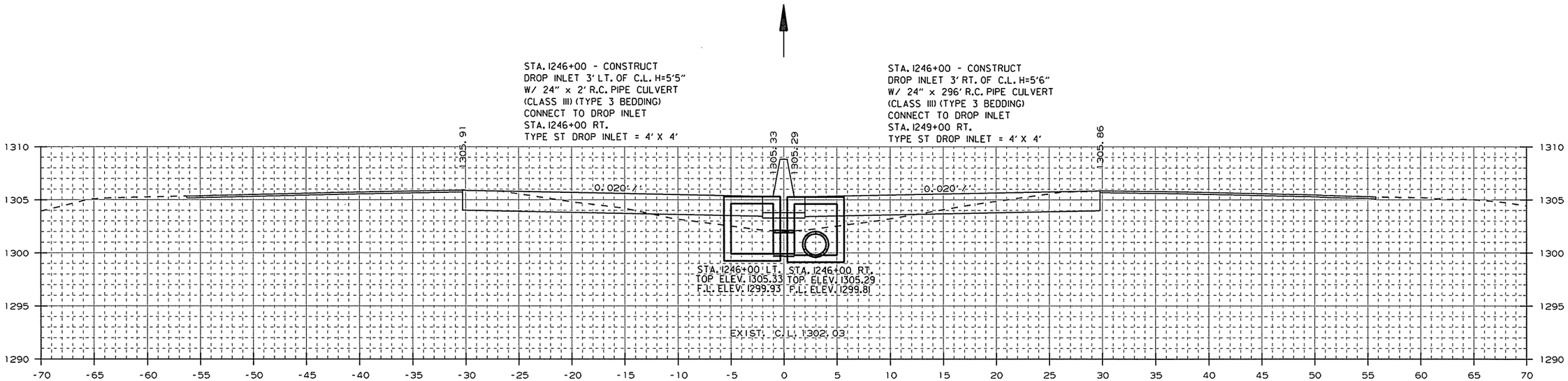

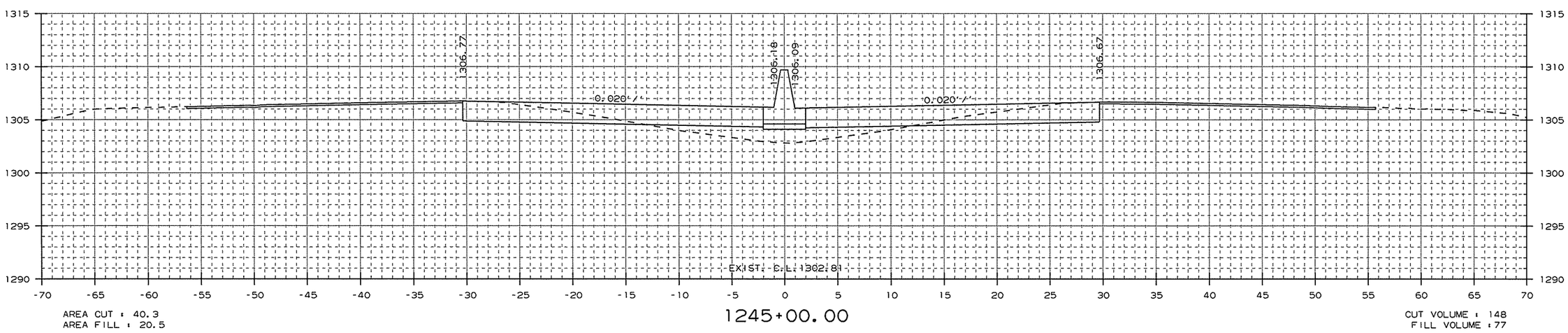

CROSS SECTION STA. 1245+00 TO STA. 1246+00

USER: a15106
DESIGN FILE: G:\13106100_264toNHope\TRANSP\dgn\xsect\rCA0901_CX_02.dgn
PLOTTED: 1/13/2016 09:38
SCALE: 10:1
MODEL: CROSS SECTION SHEETS

Crafton, Tull & Associates Inc.

DATE REVISED	DATE FILMED	DATE REVISED	DATE FILMED

FED.RD. DIST.NO.	STATE	FED.AID PROJ.NO.	SHEET NO.	TOTAL SHEETS
6	ARK.			
JOB NO.		CA0901	358	452

2 CROSS SECTIONS

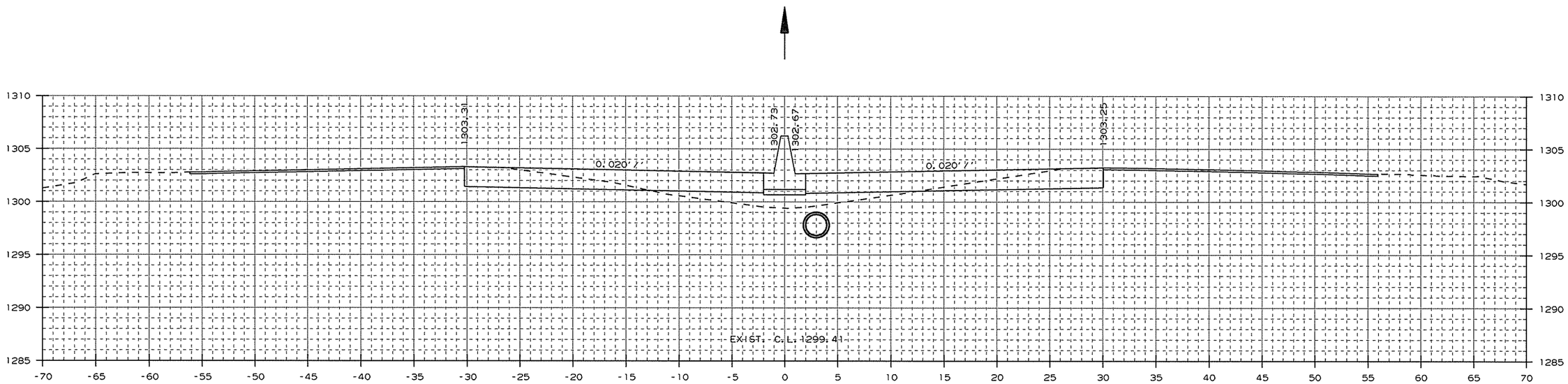

AREA CUT : 40.9
AREA FILL : 20.1

1248+00.00

CUT VOLUME : 152
FILL VOLUME : 74

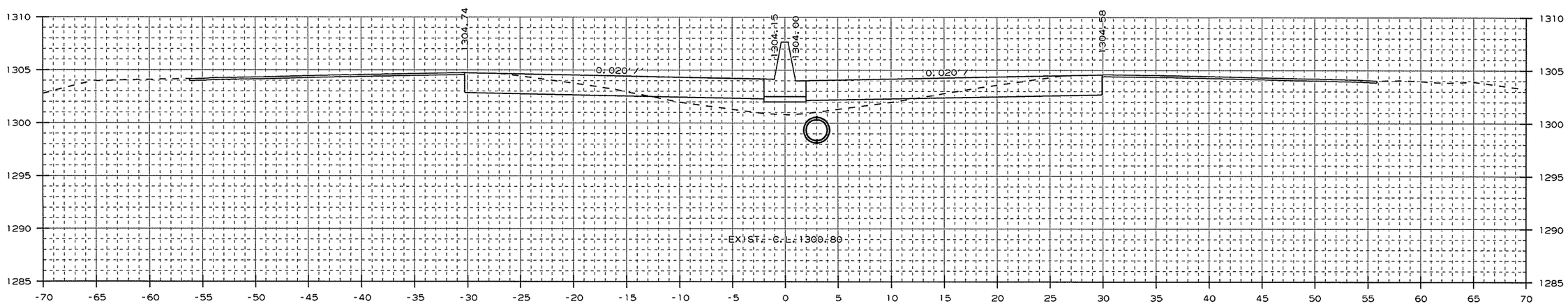

AREA CUT : 41.3
AREA FILL : 19.7

1247+00.00

CUT VOLUME : 151
FILL VOLUME : 73

CROSS SECTION STA. 1247+00 TO STA. 1248+00

USER: at5106
DESIGN FILE: G:\13106100_264toNHope\TRANSP\dgn\xsect\rCA0901_CX_02.dgn
PLOTTED: 1/13/2016 09:38
SCALE: 10:1
MODEL: CROSS SECTION SHEETS

Crafton, Tull & Associates Inc.

DATE REVISED	DATE FILMED	DATE REVISED	DATE FILMED

FED.RD. DIST.NO.	STATE	FED.AID PROJ.NO.	SHEET NO.	TOTAL SHEETS
6	ARK.			
JOB NO.		CA0901	359	452

2 CROSS SECTIONS

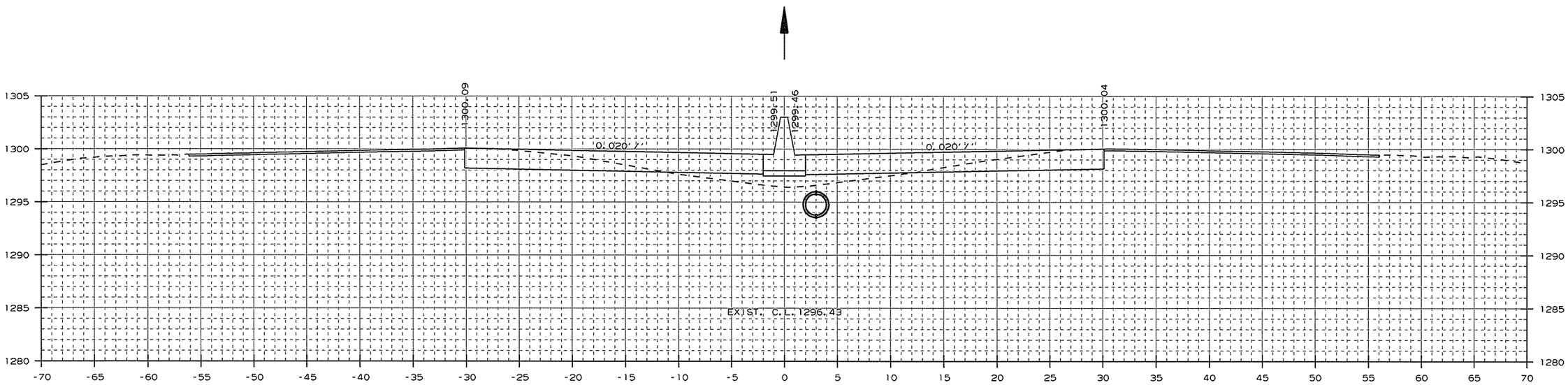

AREA CUT : 43.8
AREA FILL : 15.0

1250+00.00

CUT VOLUME : 161
FILL VOLUME : 61

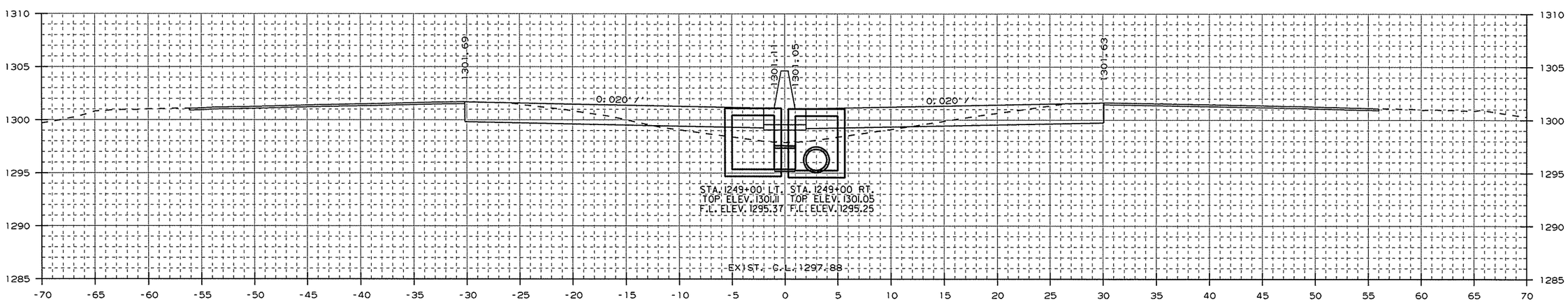

AREA CUT : 42.9
AREA FILL : 17.8

1249+00.00

STA. 1249+00 - CONSTRUCT
DROP INLET 3' LT. OF C.L. H=5'9"
W/ 24" x 2' R.C. PIPE CULVERT
(CLASS III) (TYPE 3 BEDDING)
CONNECT TO DROP INLET
STA. 1249+00 RT.
TYPE ST DROP INLET = 4' X 4'

STA. 1249+00 - CONSTRUCT
DROP INLET 3' RT. OF C.L. H=5'9"
W/ 24" x 296' R.C. PIPE CULVERT
(CLASS III) (TYPE 3 BEDDING)
CONNECT TO DROP INLET
STA. 1252+00 RT.
TYPE ST DROP INLET = 4' X 4'

CUT VOLUME : 155
FILL VOLUME : 70

CROSS SECTION STA. 1249+00 TO STA. 1250+00

USER: at5106
DESIGN FILE: G:\13106100_264toNHope\TRANSP\dgn\xsect\rCA0901_CX_02.dgn
PLOTTED: 1/13/2016 09:38
SCALE: 10:1
MODEL: CROSS SECTION SHEETS

Crafton, Tull & Associates Inc.

DATE REVISED	DATE FILMED	DATE REVISED	DATE FILMED

FED.RD. DIST.NO.	STATE	FED.AID PROJ.NO.	SHEET NO.	TOTAL SHEETS
6	ARK.			
JOB NO.		CA0901	360	452

2 CROSS SECTIONS

STA. 1252+00 - CONSTRUCT
DROP INLET 3' LT. OF C.L. H=5'5"
W/ 24" x 2' R.C. PIPE CULVERT
(CLASS III) (TYPE 3 BEDDING)
CONNECT TO DROP INLET
STA. 1252+00 RT.
TYPE ST DROP INLET = 4' X 4'

STA. 1252+00 - CONSTRUCT
DROP INLET 3' RT. OF C.L. H=5'8"
W/ 24" x 296' R.C. PIPE CULVERT
(CLASS III) (TYPE 3 BEDDING)
CONNECT TO DROP INLET
STA. 1255+00 RT.
TYPE ST DROP INLET = 4' X 4'

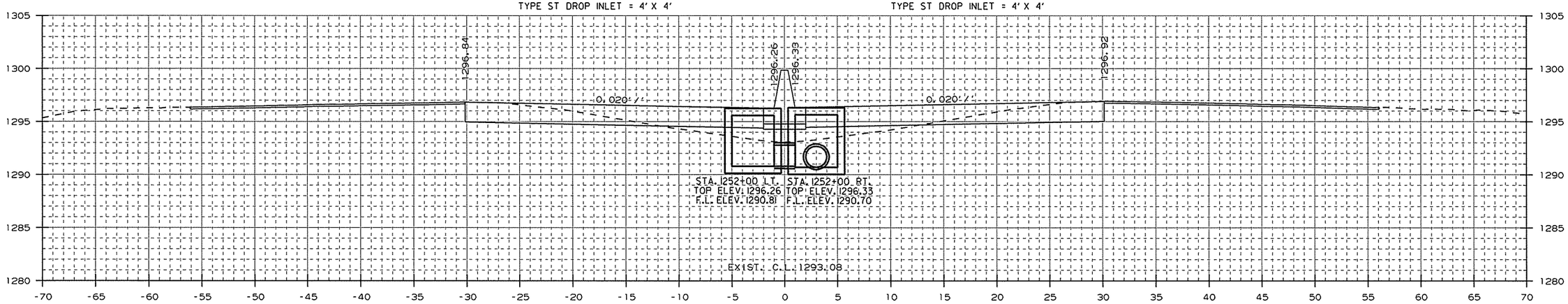

AREA CUT : 42.3
AREA FILL : 18.3

1252+00.00

CUT VOLUME : 158
FILL VOLUME : 61

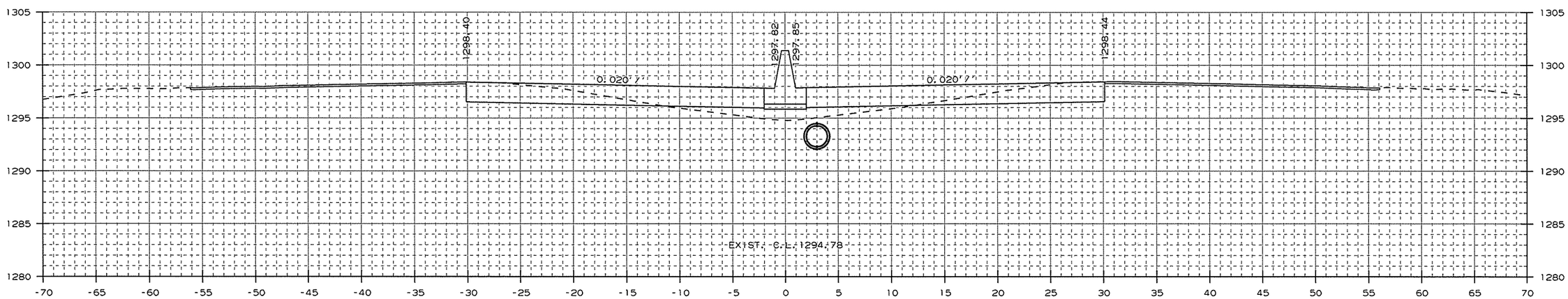

AREA CUT : 43.2
AREA FILL : 14.9

1251+00.00

CUT VOLUME : 161
FILL VOLUME : 55

CROSS SECTION STA. 1251+00 TO STA. 1252+00

USER: at5106
DESIGN FILE: G:\13106100_264toNHope\TRANSP\dgn\xsect\rCA0901_CX_02.dgn
PLOTTED: 1/13/2016 09:38
SCALE: 10:1
MODEL: CROSS SECTION SHEETS

Crafton, Tull & Associates Inc.

DATE REVISED	DATE FILMED	DATE REVISED	DATE FILMED

FED.RD. DIST.NO.	STATE	FED.AID PROJ.NO.	SHEET NO.	TOTAL SHEETS
6	ARK.			
JOB NO.		CA0901	361	452

2 CROSS SECTIONS

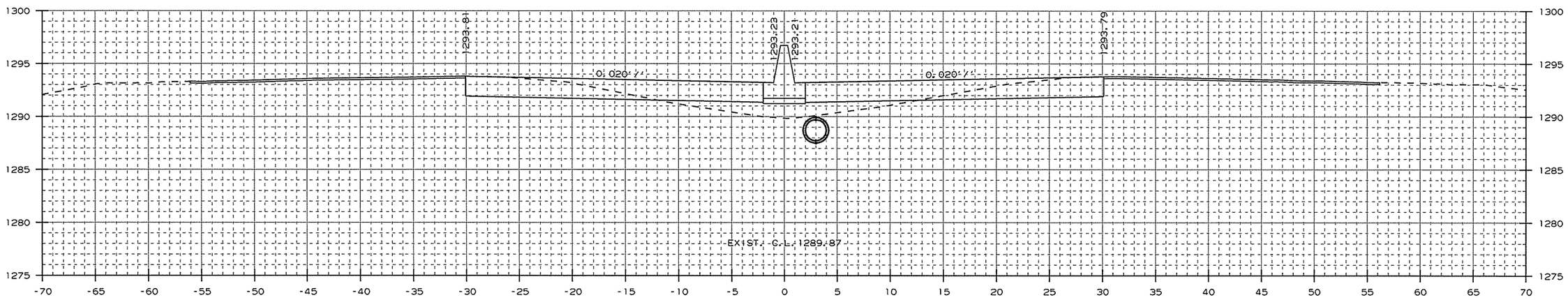

AREA CUT : 44.4
AREA FILL : 20.6

1254+00.00

CUT VOLUME : 163
FILL VOLUME : 71

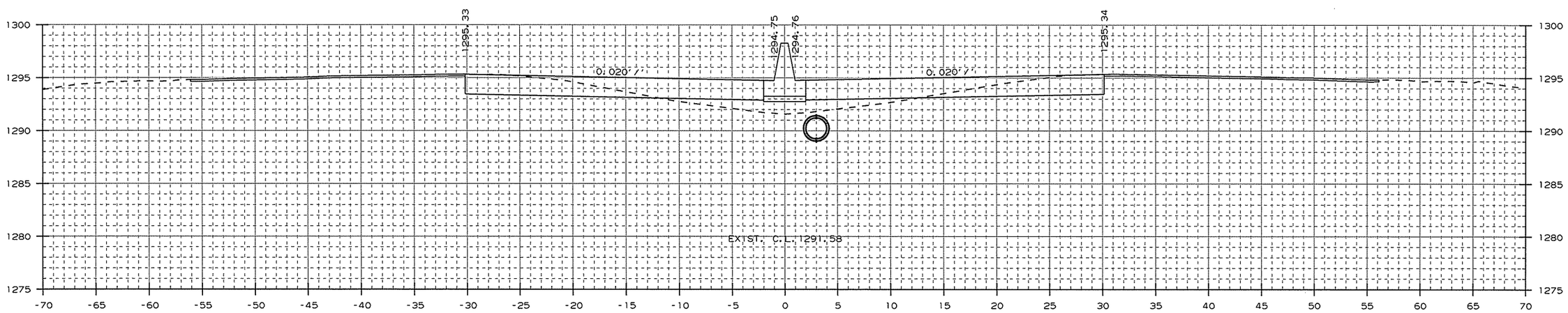

AREA CUT : 43.6
AREA FILL : 17.7

1253+00.00

CUT VOLUME : 159
FILL VOLUME : 67

CROSS SECTION STA. 1253+00 TO STA. 1254+00

USER: at506
DESIGN FILE: G:\13106100_264toNHope\TRANSP\dgn\xsect\rCA0901_CX_02.dgn
PLOTTED: 1/13/2016 09:39
SCALE: 10:1
MODEL: CROSS SECTION SHEETS

Crafton, Tull & Associates Inc.

DATE REVISED	DATE FILMED	DATE REVISED	DATE FILMED

FED.RD. DIST.NO.	STATE	FED.AID PROJ.NO.	SHEET NO.	TOTAL SHEETS
6	ARK.			
JOB NO.		CA0901	362	452

2 CROSS SECTIONS

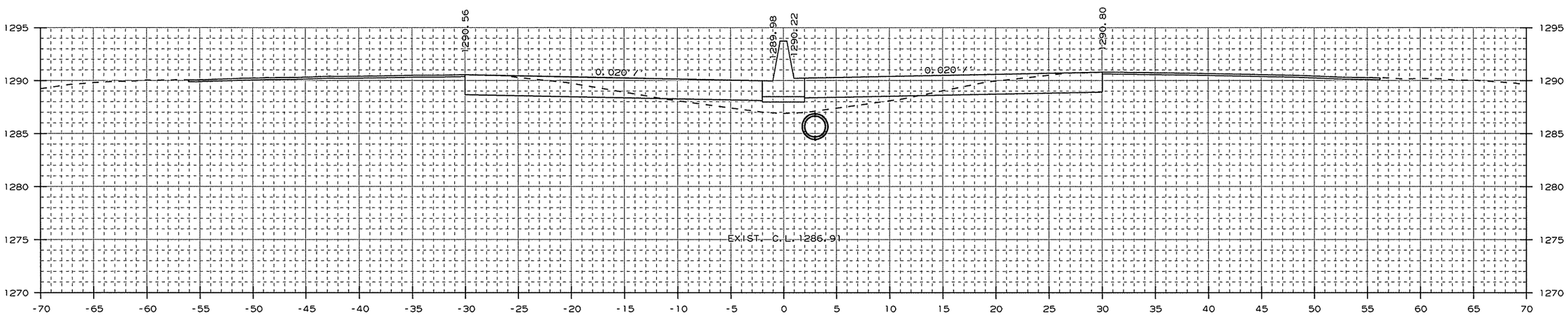

AREA CUT : 43.2
AREA FILL : 17.5

1256+00.00

CUT VOLUME : 157
FILL VOLUME : 68

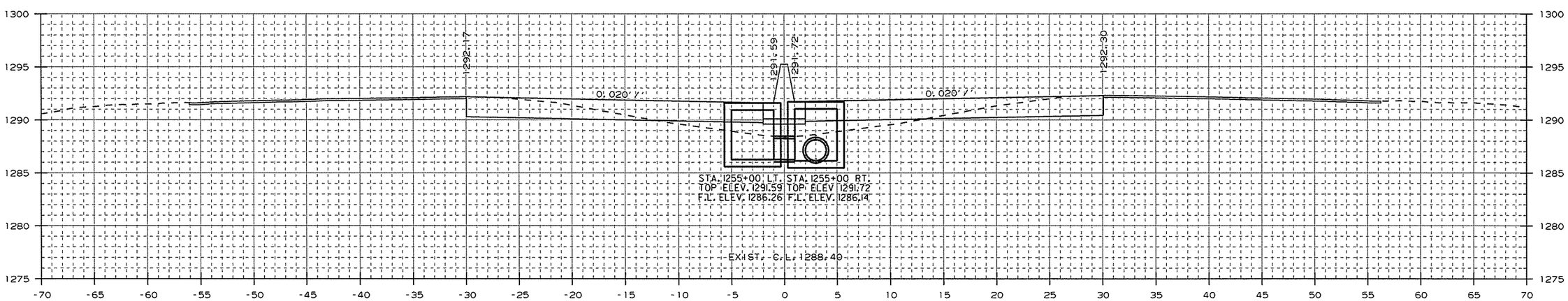

AREA CUT : 41.7
AREA FILL : 19.3

STA. 1255+00 - CONSTRUCT
DROP INLET 3' LT. OF C.L. H=5'4"
W/ 24" x 2' R.C. PIPE CULVERT
(CLASS III) (TYPE 3 BEDDING)
CONNECT TO DROP INLET
STA. 1255+00 RT.
TYPE ST DROP INLET = 4' X 4'

1255+00.00

STA. 1255+00 - CONSTRUCT
DROP INLET 3' RT. OF C.L. H=5'7"
W/ 24" x 296' R.C. PIPE CULVERT
(CLASS III) (TYPE 3 BEDDING)
CONNECT TO DROP INLET
STA. 1258+00 RT.
TYPE ST DROP INLET = 4' X 4'

CUT VOLUME : 159
FILL VOLUME : 74

CROSS SECTION STA. 1255+00 TO STA. 1256+00

USER: a15106
DESIGN FILE: G:\13106100_264toNHope\TRANSP\dgn\xsect\rCA0901_CX_02.dgn
PLOTTED: 1/13/2016 09:39
SCALE: 10:1
MODEL: CROSS SECTION SHEETS

Crafton, Tull & Associates Inc.

DATE REVISED	DATE FILMED	DATE REVISED	DATE FILMED

FED.RD. DIST.NO.	STATE	FED.AID PROJ.NO.	SHEET NO.	TOTAL SHEETS
6	ARK.			
JOB NO.		CA0901	363	452

2 CROSS SECTIONS

STA. 1258+00 - CONSTRUCT
DROP INLET 3' LT. OF C.L. H=5'4"
W/ 24" x 2' R.C. PIPE CULVERT
(CLASS III) (TYPE 3 BEDDING)
CONNECT TO DROP INLET
STA. 1258+00 RT.
TYPE ST DROP INLET = 4' X 4'

STA. 1258+00 - CONSTRUCT
DROP INLET 3' RT. OF C.L. H=5'8"
W/ 24" x 146' R.C. PIPE CULVERT
(CLASS III) (TYPE 3 BEDDING)
CONNECT TO DROP INLET
STA. 1259+50 RT.
TYPE ST DROP INLET = 4' X 4'

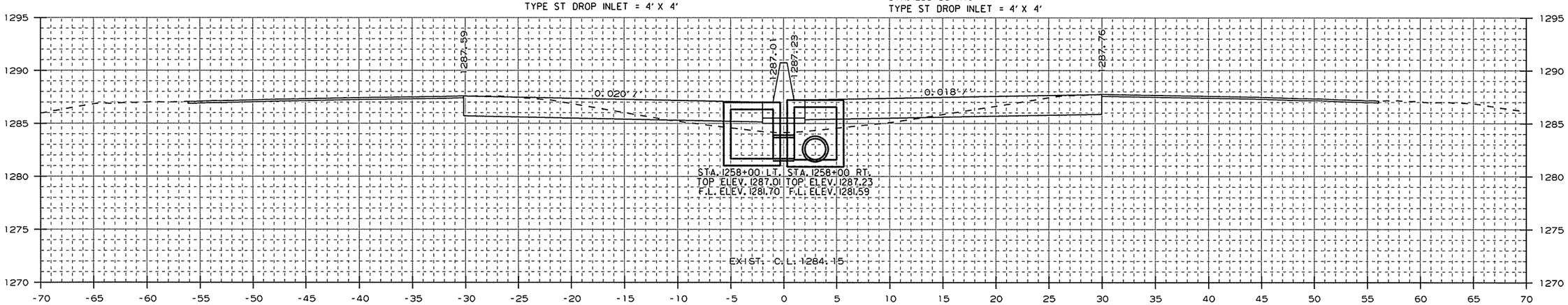

AREA CUT : 42.8
AREA FILL : 14.5

1258+00.00

CUT VOLUME : 157
FILL VOLUME : 59

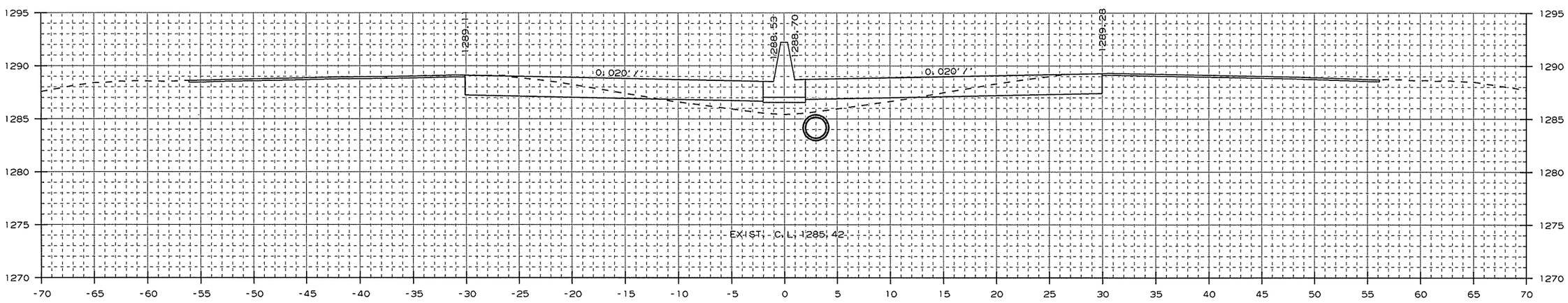

AREA CUT : 42.1
AREA FILL : 17.4

1257+00.00

CUT VOLUME : 158
FILL VOLUME : 65

CROSS SECTION STA. 1257+00 TO STA. 1258+00

USER: at5106
DESIGN FILE: G:\13106100_264toNHope\TRANSP\dgn\xsect\rCA0901_CX_02.dgn
PLOTTED: 1/13/2016 09:39
SCALE: 10:1
MODEL: CROSS SECTION SHEETS

Crafton, Tull & Associates Inc.

DATE REVISED	DATE FILMED	DATE REVISED	DATE FILMED

FED.RD. DIST.NO.	STATE	FED.AID PROJ.NO.	SHEET NO.	TOTAL SHEETS
6	ARK.			
JOB NO.		CA0901	364	452

2 CROSS SECTIONS

STA. 1259+50 - CONSTRUCT
DROP INLET 3' RT. OF C.L. H=5'3"
W/ 24" x 87' R.C. PIPE CULVERT
(CLASS V)
W/ F.E.S. RT.
TYPE ST DROP INLET = 4' X 4'
(JACK AND BORE)
5 CU. YD. DUMPED RIPRAP

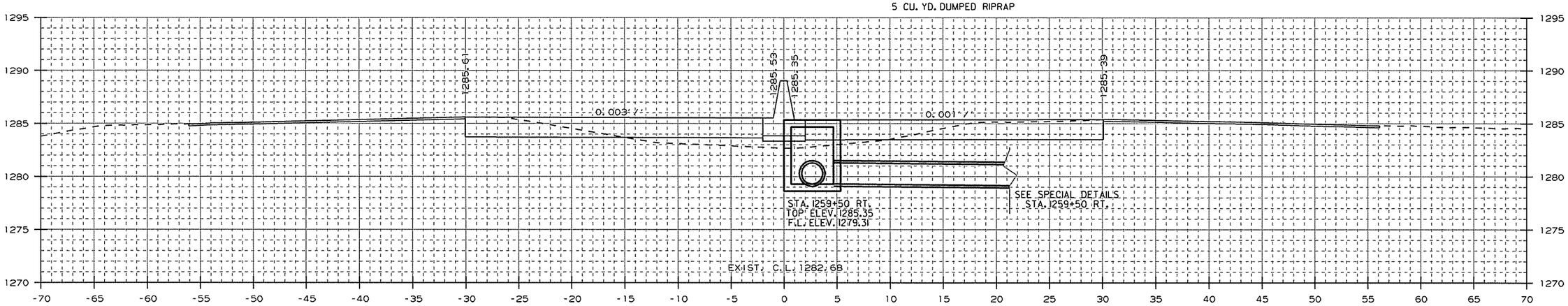

AREA CUT : 44.8
AREA FILL : 13.3

1259+50.00

CUT VOLUME : 88
FILL VOLUME : 21

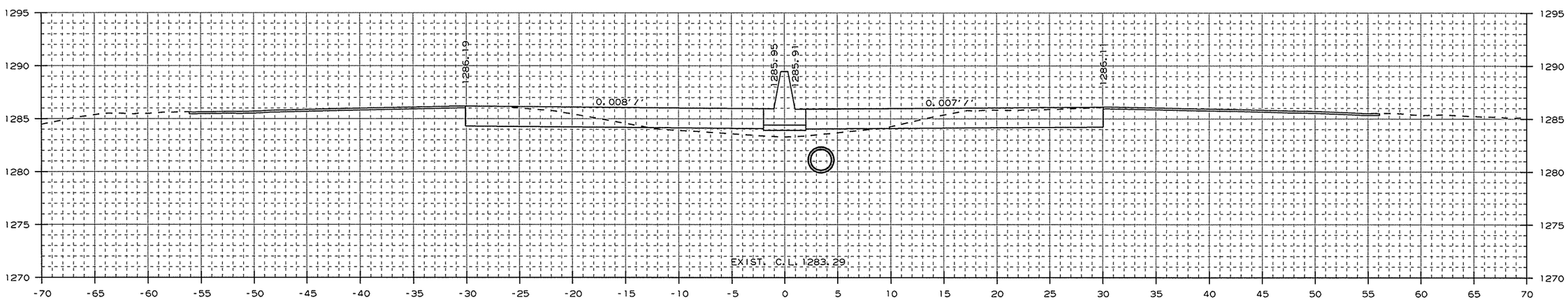

AREA CUT : 50.0
AREA FILL : 9.0

1259+00.00

CUT VOLUME : 172
FILL VOLUME : 44

CROSS SECTION STA. 1259+00 TO STA. 1259+50

USER: at5106
DESIGN FILE: G:\13106100_264toNHope\TRANSP\dgn\xsect\rCA0901_CX_02.dgn
PLOTTED: 1/13/2016 09:39
SCALE: 10:1
MODEL: CROSS SECTION SHEETS

Crafton, Tull & Associates Inc.

DATE REVISED	DATE FILMED	DATE REVISED	DATE FILMED

FED.RD. DIST.NO.	STATE	FED.AID PROJ.NO.	SHEET NO.	TOTAL SHEETS
6	ARK.			
JOB NO.		CA0901	365	452

2 CROSS SECTIONS

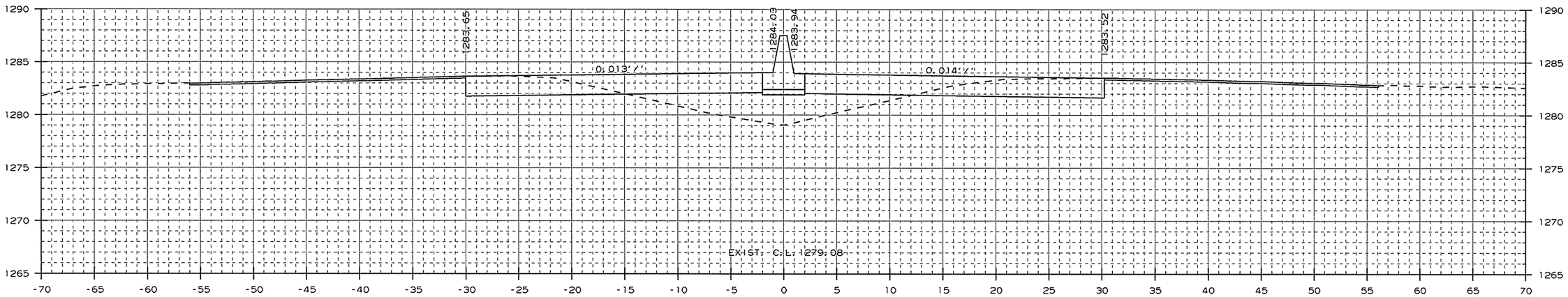

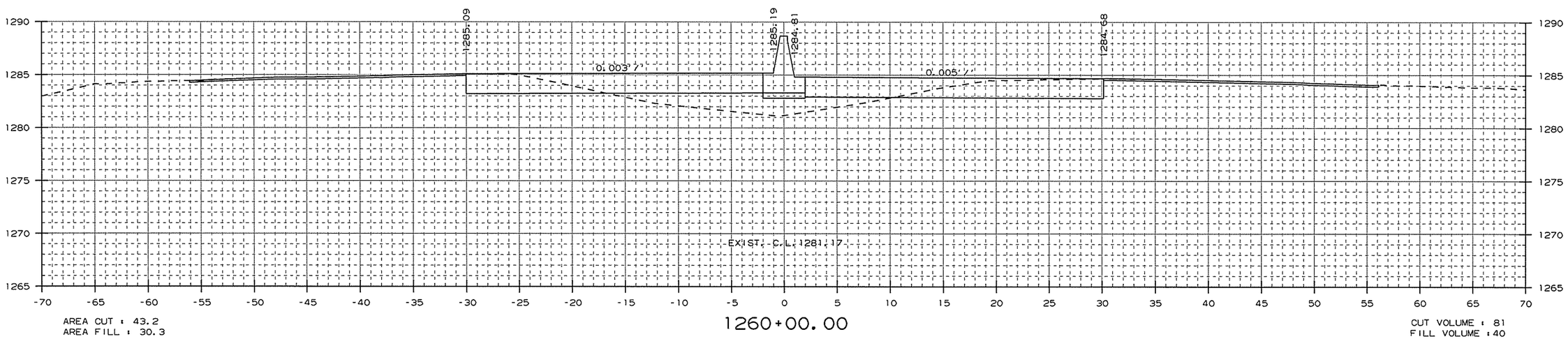

CROSS SECTION STA. 1260+00 TO STA. 1260+85

USER: at5106
DESIGN FILE: G:\13106100_264toNHope\TRANSP\dgn\xsect\rCA0901_CX_02.dgn
PLOTTED: 1/13/2016 09:39
SCALE: 10:1
MODEL: CROSS SECTION SHEETS

Crafton, Tull & Associates Inc.

DATE REVISED	DATE FILMED	DATE REVISED	DATE FILMED

FED.RD. DIST.NO.	STATE	FED.AID PROJ.NO.	SHEET NO.	TOTAL SHEETS
6	ARK.			
JOB NO.		CA0901	366	452

2 CROSS SECTIONS

STA. 1261+92.66 BR. END
I-49 LML BRIDGE (S.B.)
143'-0" CONT. PRESTRESSED
CONC. GIRDER UNIT
(43'-57'-43')
62'-0" CLEAR ROADWAY
(20° LT. FWD. SKEW)
BR. NO. A5956
STA. 1263+37.86 BR. END

STA. 1261+68.73 BR. END
I-49 RML BRIDGE (N.B.)
143'-0" CONT. PRESTRESSED
CONC. GIRDER UNIT
(43'-57'-43')
62'-0" CLEAR ROADWAY
(20° LT. FWD. SKEW)
BR. NO. B5956
STA. 1263+13.92 BR. END

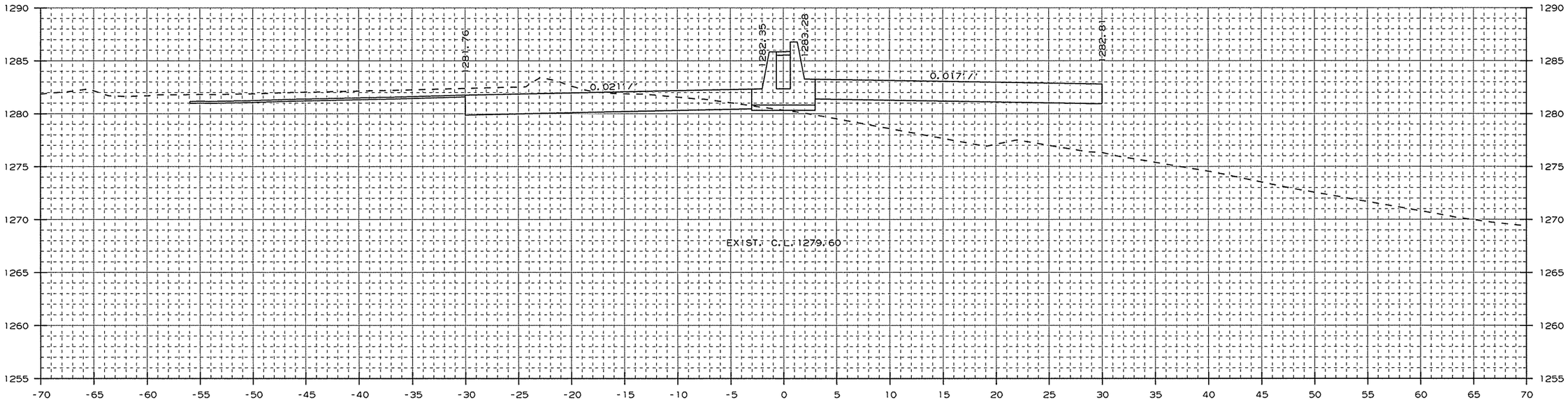

AREA CUT : 51.0
AREA FILL : 91.2

1261+80.70

CUT VOLUME : 140
FILL VOLUME : 210

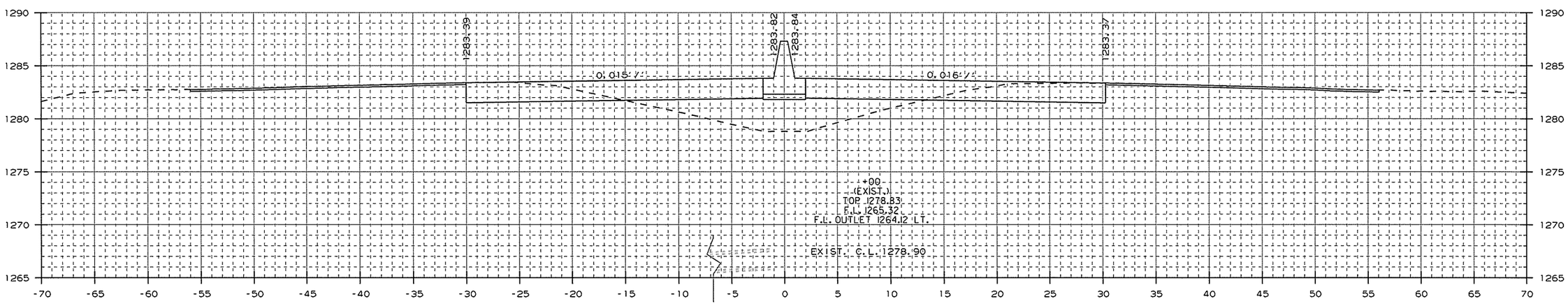

AREA CUT : 42.8
AREA FILL : 49.5

1261+00.00

STA. 1261+00 IN PLACE
TYPE R DROP INLET IN MEDIAN
REMOVE

STA. 1261+00 IN PLACE
W/ 18" X 123' R.C. PIPE OUTLET
W/ FES LT.
FILL AND ABANDON

CUT VOLUME : 24
FILL VOLUME : 26

CROSS SECTION STA. 1261+00 TO STA. 1261+81

USER: at5106
DESIGN FILE: G:\13106100_264toNHope\TRANSP\dgn\xsect\rCA0901_CX_02.dgn
PLOTTED: 1/13/2016 09:39
SCALE: 10:1
MODEL: CROSS SECTION SHEETS

Crafton, Tull & Associates Inc.

DATE REVISED	DATE FILMED	DATE REVISED	DATE FILMED

FED.RD. DIST.NO.	STATE	FED.AID PROJ.NO.	SHEET NO.	TOTAL SHEETS
6	ARK.			
JOB NO.		CA0901	367	452

2 CROSS SECTIONS

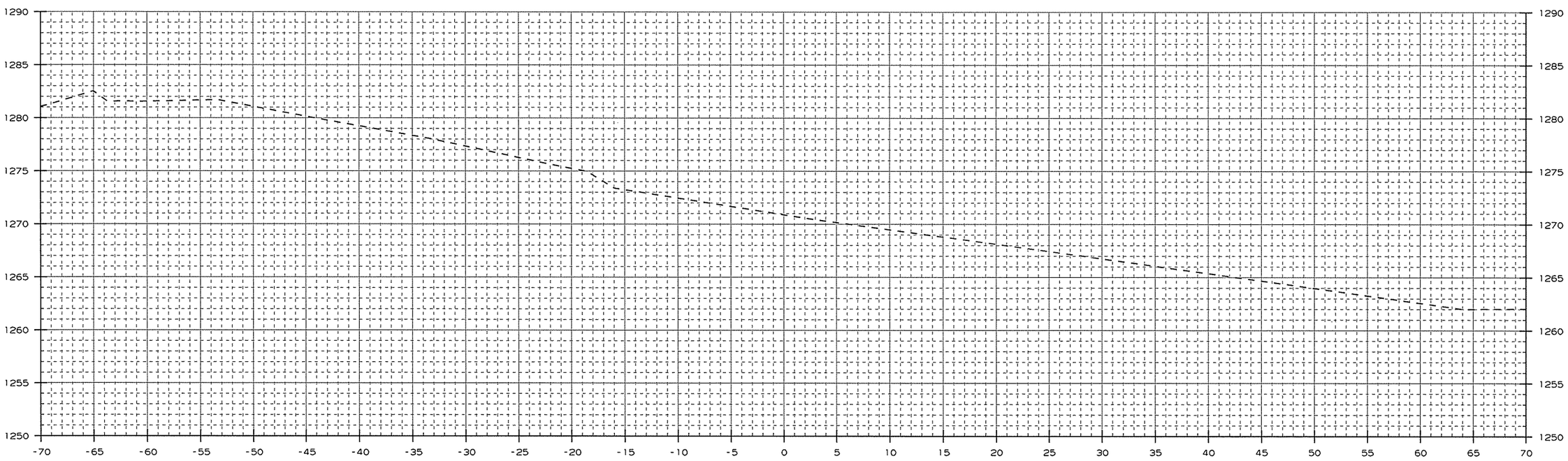

CROSS SECTION STA. 1262+00 TO STA. 1262+00

USER: a15106
DESIGN FILE: G:\13106100_264toNHope\TRANSP\dgn\xsect\rCA0901_CX_02.dgn
PLOTTED: 1/13/2016 09:39
SCALE: 10:1
MODEL: CROSS SECTION SHEETS

Crafton, Tull & Associates Inc.

DATE REVISED	DATE FILMED	DATE REVISED	DATE FILMED

FED.RD. DIST.NO.	STATE	FED.AID PROJ.NO.	SHEET NO.	TOTAL SHEETS
6	ARK.			
JOB NO.		CA0901	368	452

2 CROSS SECTIONS

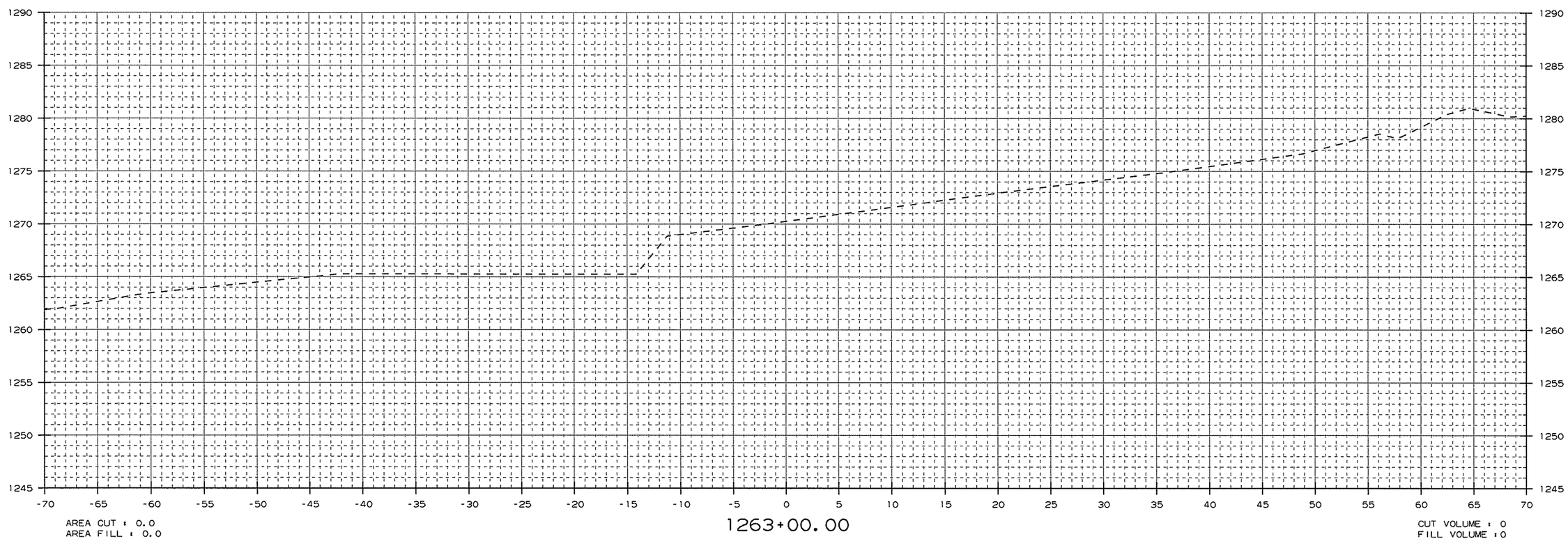

CROSS SECTION STA. 1263+00 TO STA. 1263+00

USER: at5106
DESIGN FILE: G:\13106100_264toNHope\TRANSP\dgn\xsect\rCA0901_CX_02.dgn
PLOTTED: 1/13/2016 09:39 SCALE: 10:1 MODEL: CROSS SECTION SHEETS

Crafton, Tull & Associates Inc.

DATE REVISED	DATE FILMED	DATE REVISED	DATE FILMED

FED.RD. DIST.NO.	STATE	FED.AID PROJ.NO.	SHEET NO.	TOTAL SHEETS
6	ARK.			
JOB NO.		CA0901	369	452

2 CROSS SECTIONS

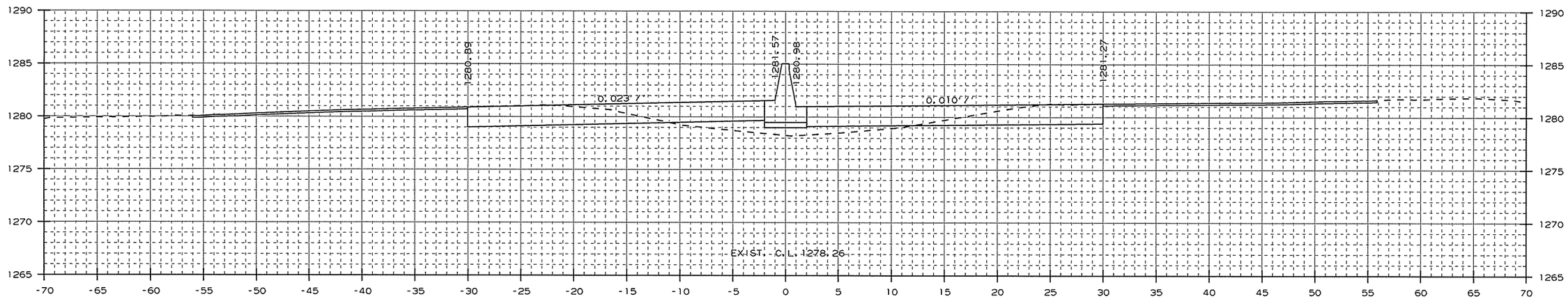

AREA CUT = 50.1
AREA FILL = 13.9

1264+00.00

CUT VOLUME = 140
FILL VOLUME = 56

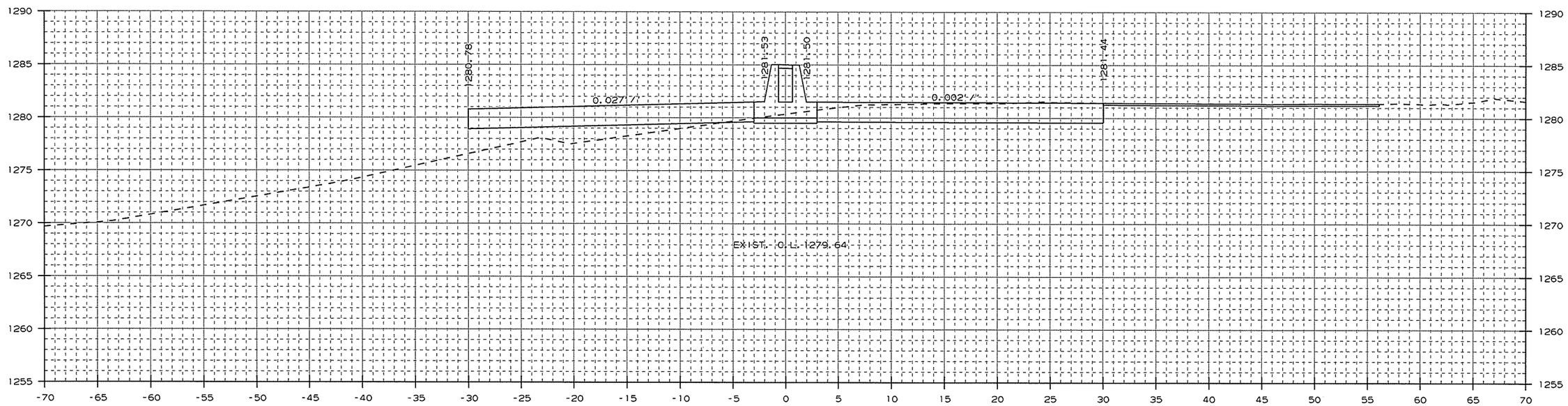

AREA CUT = 52.2
AREA FILL = 27.1

1263+25.89

CUT VOLUME = 25
FILL VOLUME = 13

CROSS SECTION STA. 1263+26 TO STA. 1264+00

USER: a15106
DESIGN FILE: G:\13106100_264toNHope\TRANSP\dgn\xsect\rCA0901_CX_02.dgn
PLOTTED: 1/13/2016 09:39
SCALE: 10:1
MODEL: CROSS SECTION SHEETS

Crafton, Tull & Associates Inc.

DATE REVISED	DATE FILMED	DATE REVISED	DATE FILMED

FED.RD. DIST.NO.	STATE	FED.AID PROJ.NO.	SHEET NO.	TOTAL SHEETS
6	ARK.			
JOB NO.		CA0901	370	452

2 CROSS SECTIONS

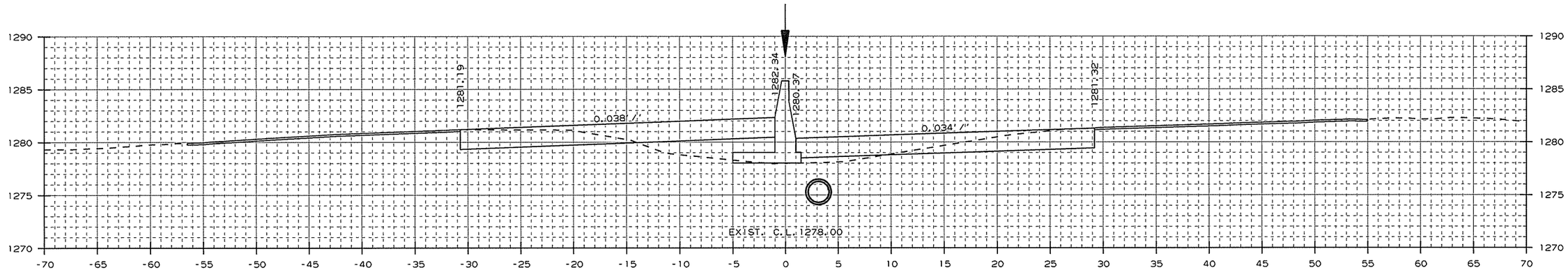

AREA CUT : 44.9
AREA FILL : 20.0

1265+00.00

STA.1264+65 - CONSTRUCT
DROP INLET 3' RT. OF C.L. H=6'5"
W/ 24" x 14' R.C. PIPE CULVERT
(CLASS III) (TYPE 3 BEDDING)
CONNECT TO EXIST. DROP INLET
STA.1264+50 RT.
TYPE ST DROP INLET = 4' X 4'

CUT VOLUME : 57
FILL VOLUME : 31

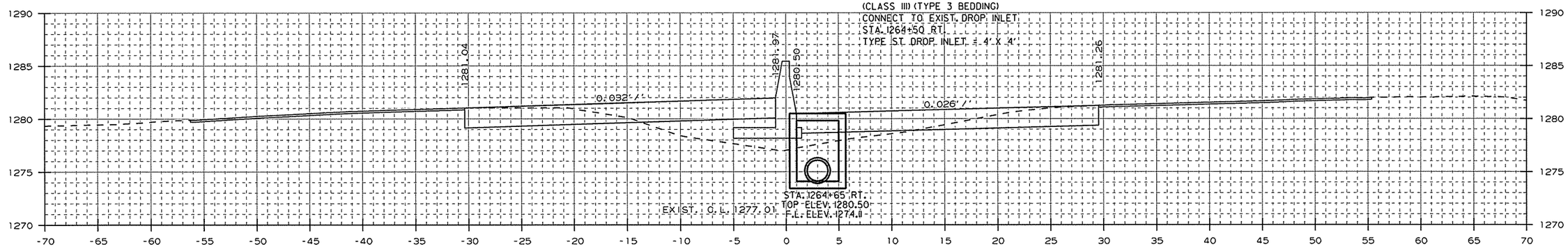

AREA CUT : 43.7
AREA FILL : 28.0

1264+65.00

CUT VOLUME : 24
FILL VOLUME : 18

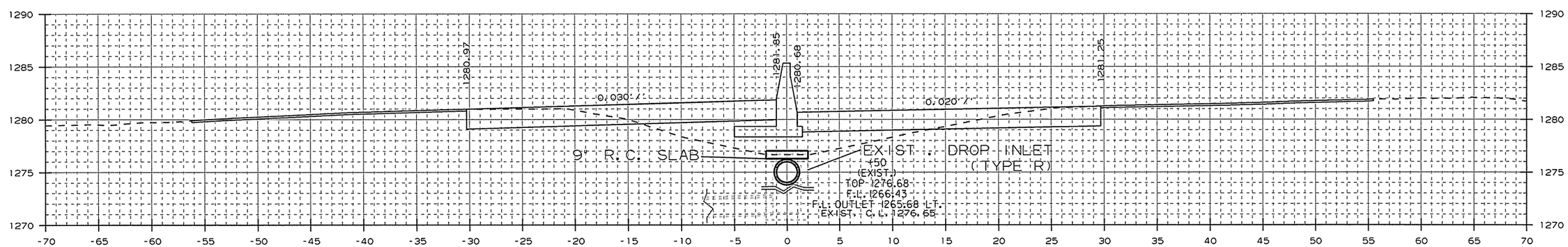

AREA CUT : 42.3
AREA FILL : 38.5

STA.1264+50 IN PLACE
TYPE R DROP INLET IN MEDIAN
W/ 18" X 113' R.C. PIPE OUTLET
W/ FES LT.
MODIFY

1264+50.00

CUT VOLUME : 86
FILL VOLUME : 49

CROSS SECTION STA. 1264+50 TO STA. 1265+00

USER: at5106
DESIGN FILE: G:\13106100_264toNHope\TRANSP\dgn\xsect\rCA0901_CX_02.dgn
PLOTTED: 1/13/2016 09:39
SCALE: 10:1
MODEL: CROSS SECTION SHEETS

Crafton, Tull & Associates Inc.

DATE REVISED	DATE FILMED	DATE REVISED	DATE FILMED

FED.RD. DIST.NO.	STATE	FED.AID PROJ.NO.	SHEET NO.	TOTAL SHEETS
6	ARK.			
JOB NO.		CA0901	371	452

2 CROSS SECTIONS

STA. 1267+00 - CONSTRUCT
DROP INLET 3' RT. OF C.L. H=5'4"
W/ 24" x 231' R.C. PIPE CULVERT
(CLASS III) (TYPE 3 BEDDING)
CONNECT TO DROP INLET
STA. 1264+65 RT.
TYPE ST DROP INLET = 4' X 4'

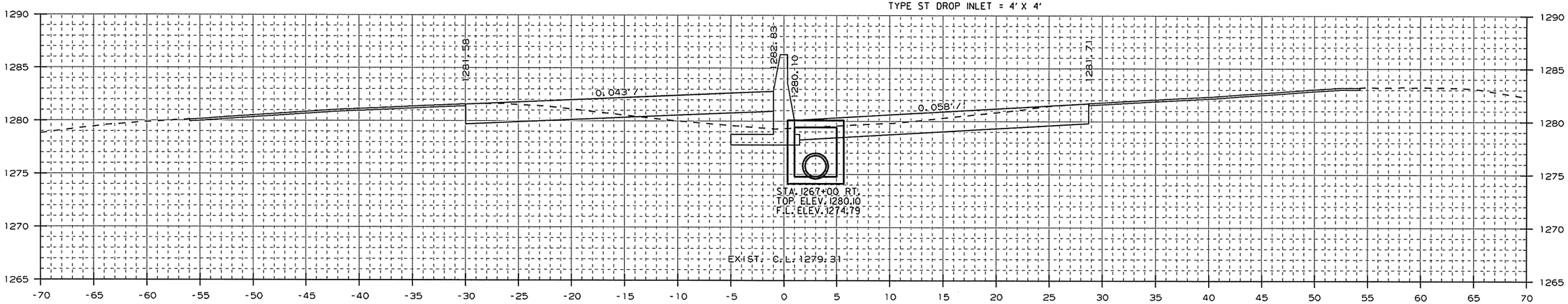

AREA CUT : 64.0
AREA FILL : 11.1

1267+00.00

CUT VOLUME : 229
FILL VOLUME : 47

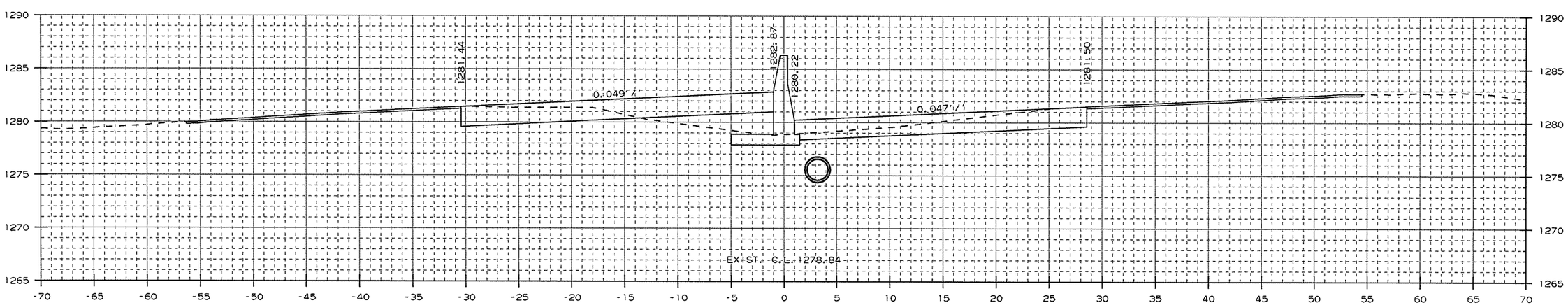

AREA CUT : 59.7
AREA FILL : 14.4

1266+00.00

CUT VOLUME : 194
FILL VOLUME : 64

CROSS SECTION STA. 1266+00 TO STA. 1267+00

USER: at5106
DESIGN FILE: G:\13106100_264toNHope\TRANSP\dgn\xsect\rCA0901_CX_02.dgn
PLOTTED: 1/13/2016 09:39
SCALE: 10:1
MODEL: CROSS SECTION SHEETS

Crafton, Tull & Associates Inc.

DATE REVISED	DATE FILMED	DATE REVISED	DATE FILMED

FED.RD. DIST.NO.	STATE	FED.AID PROJ.NO.	SHEET NO.	TOTAL SHEETS
6	ARK.			
JOB NO.		CA0901	372	452

2 CROSS SECTIONS

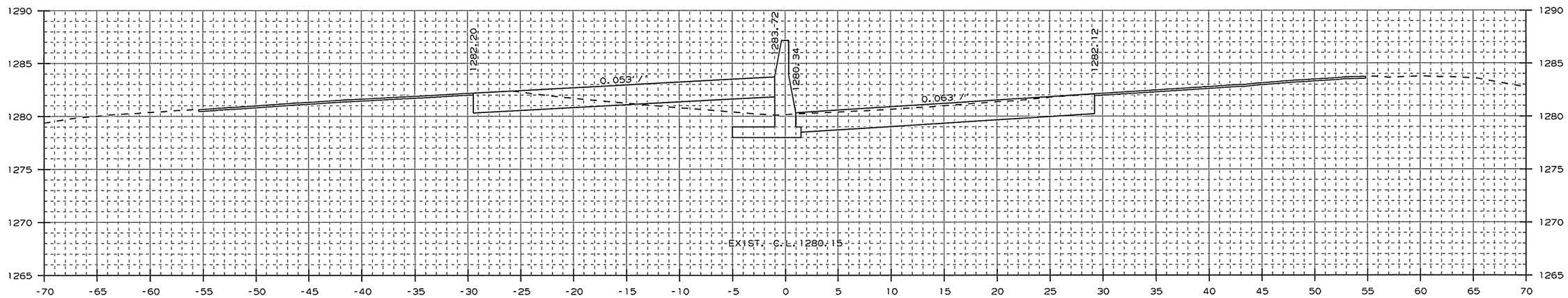

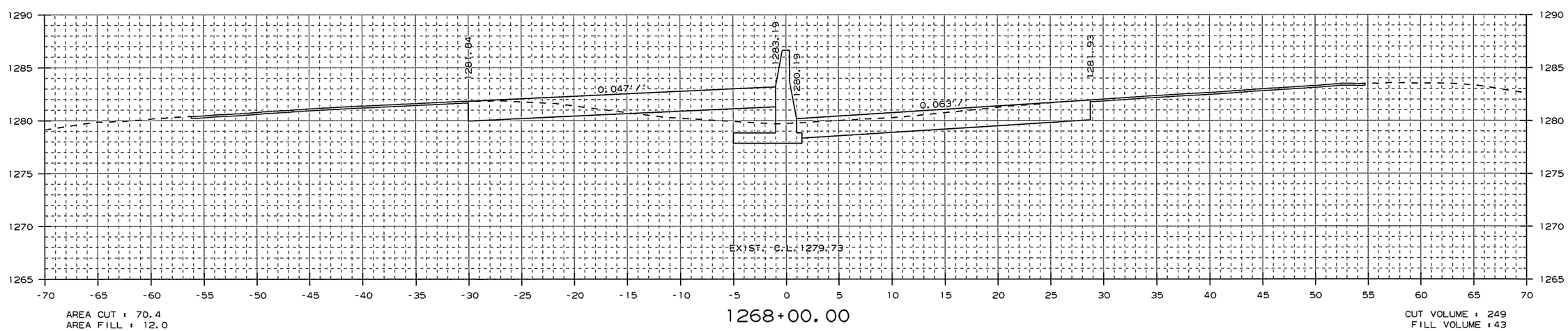

CROSS SECTION STA. 1268+00 TO STA. 1269+00

USER: a15106
DESIGN FILE: G:\13106100_264toNHope\TRANSP\dgn\xsect\rCA0901_CX_02.dgn
PLOTTED: 1/13/2016 09:39
SCALE: 10:1
MODEL: CROSS SECTION SHEETS

Crafton, Tull & Associates Inc.

DATE REVISED	DATE FILMED	DATE REVISED	DATE FILMED

FED.RD. DIST.NO.	STATE	FED.AID PROJ.NO.	SHEET NO.	TOTAL SHEETS
6	ARK.			
JOB NO.		CA0901	373	452

2 CROSS SECTIONS

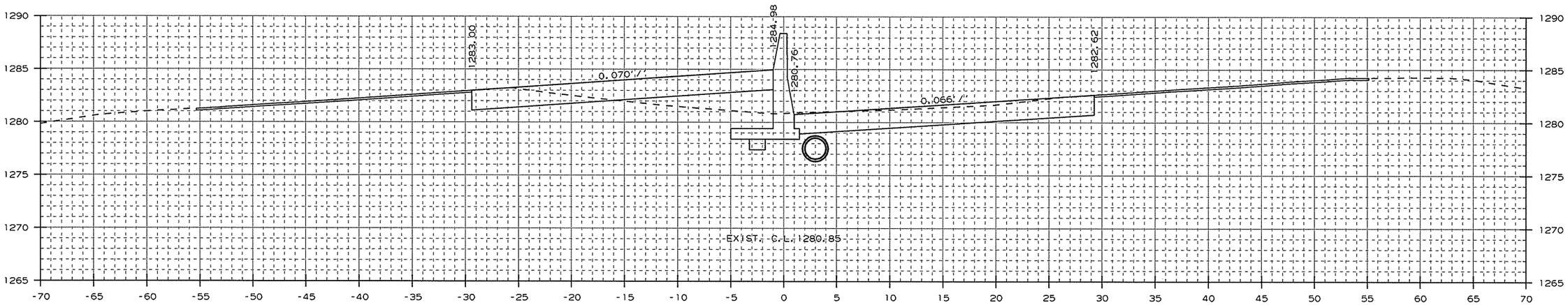

AREA CUT : 75.7
AREA FILL : 17.7

1271+00.00

CUT VOLUME : 286
FILL VOLUME : 58

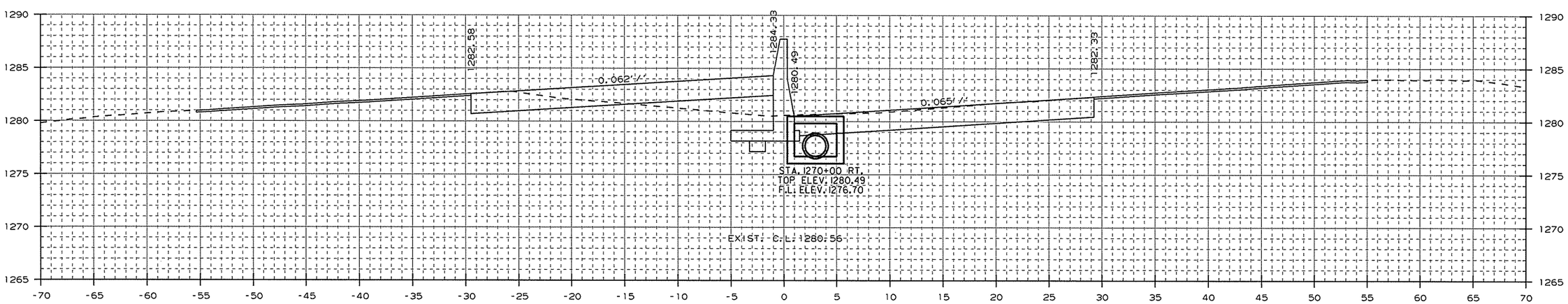

AREA CUT : 78.6
AREA FILL : 13.4

1270+00.00

CUT VOLUME : 282
FILL VOLUME : 46

STA. 1270+00 - CONSTRUCT
DROP INLET 3' RT. OF C.L. H=3'10"
W/ 24" x 296' R.C. PIPE CULVERT
(CLASS IV) (TYPE 3 BEDDING)
CONNECT TO DROP INLET
STA. 1273+00 RT.
TYPE ST DROP INLET = 4' X 4'

CROSS SECTION STA. 1270+00 TO STA. 1271+00

USER: at5106
DESIGN FILE: G:\13106100_264toNHope\TRANSP\dgn\xsect\rCA0901_CX_02.dgn
PLOTTED: 1/13/2016 09:39
SCALE: 10:1
MODEL: CROSS SECTION SHEETS

Crafton, Tull & Associates Inc.

DATE REVISED	DATE FILMED	DATE REVISED	DATE FILMED

FED.RD. DIST.NO.	STATE	FED.AID PROJ.NO.	SHEET NO.	TOTAL SHEETS
6	ARK.			
JOB NO.		CA0901	374	452

2 CROSS SECTIONS

STA. 1273+00 IN PLACE
TYPE R DROP INLET IN MEDIAN
REMOVE
W. 18" X 92' R.C. PIPE OUTLET
W/ FES LT.
MODIFY

STA. 1273+00 - CONSTRUCT
DROP INLET 3' RT. OF C.L. H=5'5"
W/ 18" X 4' R.C. PIPE CULVERT LT.
(CLASS III) (TYPE 3 BEDDING)
CONNECT TO EXIST. 18" X 92'
R.C. PIPE CULVERT
TYPE ST DROP INLET = 4' X 4'

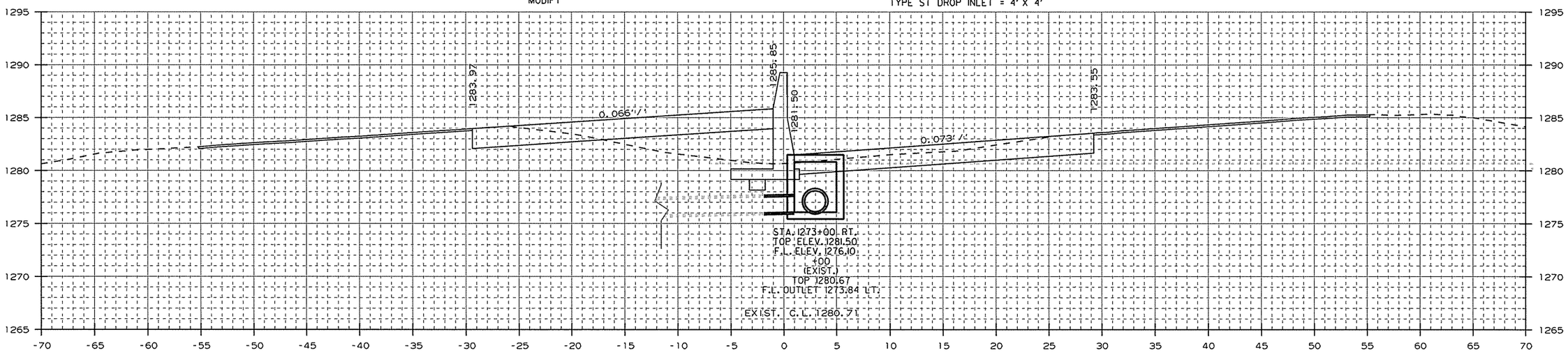

AREA CUT : 62.6
AREA FILL : 30.3

1273+00.00

CUT VOLUME : 247
FILL VOLUME : 91

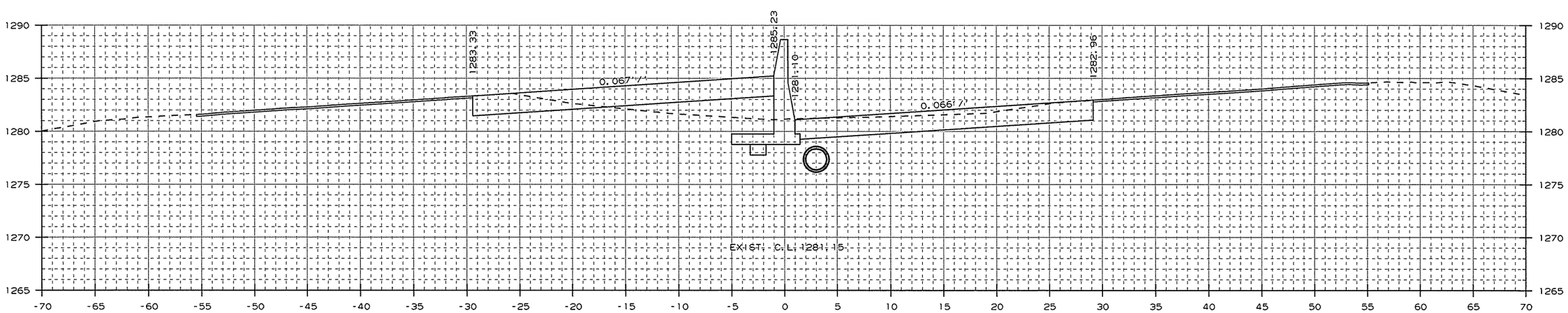

AREA CUT : 70.9
AREA FILL : 19.1

1272+00.00

CUT VOLUME : 271
FILL VOLUME : 68

CROSS SECTION STA. 1272+00 TO STA. 1273+00

USER: at5106
DESIGN FILE: G:\13106100_264toNHope\TRANSP\dgn\xsect\rCA0901_CX_02.dgn
PLOTTED: 1/13/2016 09:39
SCALE: 10:1
MODEL: CROSS SECTION SHEETS

Crafton, Tull & Associates Inc.

DATE REVISED	DATE FILMED	DATE REVISED	DATE FILMED

FED.RD. DIST.NO.	STATE	FED.AID PROJ.NO.	SHEET NO.	TOTAL SHEETS
6	ARK.			
JOB NO.		CA0901	375	452

2 CROSS SECTIONS

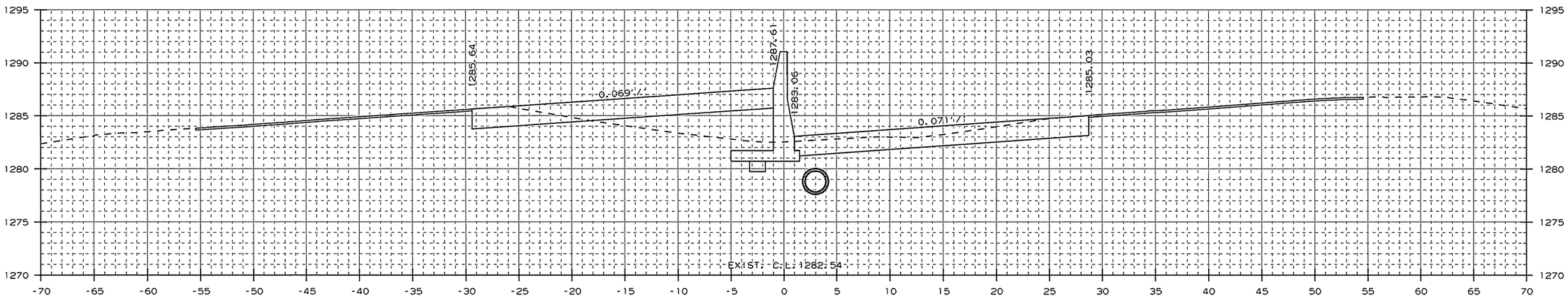

AREA CUT : 61.3
AREA FILL : 30.1

1275+00.00

CUT VOLUME : 227
FILL VOLUME : 113

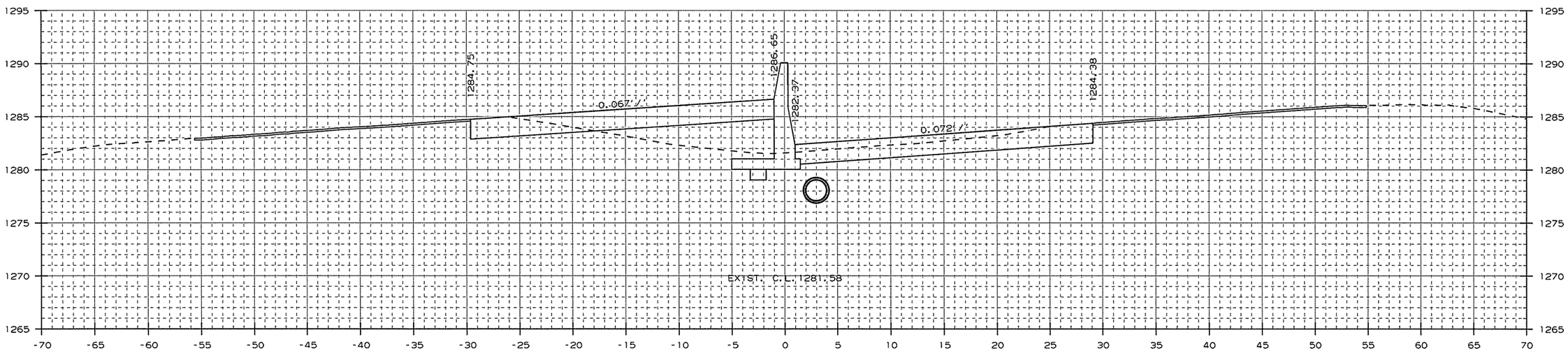

AREA CUT : 61.5
AREA FILL : 31.1

1274+00.00

CUT VOLUME : 230
FILL VOLUME : 114

CROSS SECTION STA. 1274+00 TO STA. 1275+00

USER: at5106
DESIGN FILE: G:\13106100_264toNHope\TRANSP\dgn\xsect\rCA0901_CX_02.dgn
PLOTTED: 1/13/2016 09:39
SCALE: 10:1
MODEL: CROSS SECTION SHEETS

Crafton, Tull & Associates Inc.

DATE REVISED	DATE FILMED	DATE REVISED	DATE FILMED

FED.RD. DIST.NO.	STATE	FED.AID PROJ.NO.	SHEET NO.	TOTAL SHEETS
6	ARK.			
JOB NO.		CA0901	376	452

2 CROSS SECTIONS

STA. 1276+75 - CONSTRUCT
DROP INLET 3' RT. OF C.L. H=5'6"
W/ 24" x 371' R.C. PIPE CULVERT
(CLASS III) (TYPE 3) BEDDING
CONNECT TO DROP INLET
STA. 1273+00 RT.
TYPE ST DROP INLET = 4' X 4'

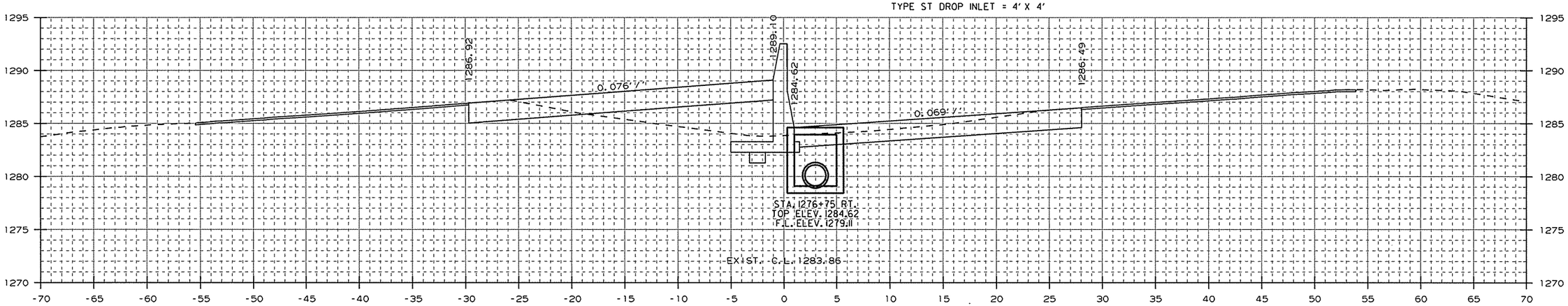

AREA CUT : 59.1
AREA FILL : 32.4

1276+75.00

CUT VOLUME : 168
FILL VOLUME : 90

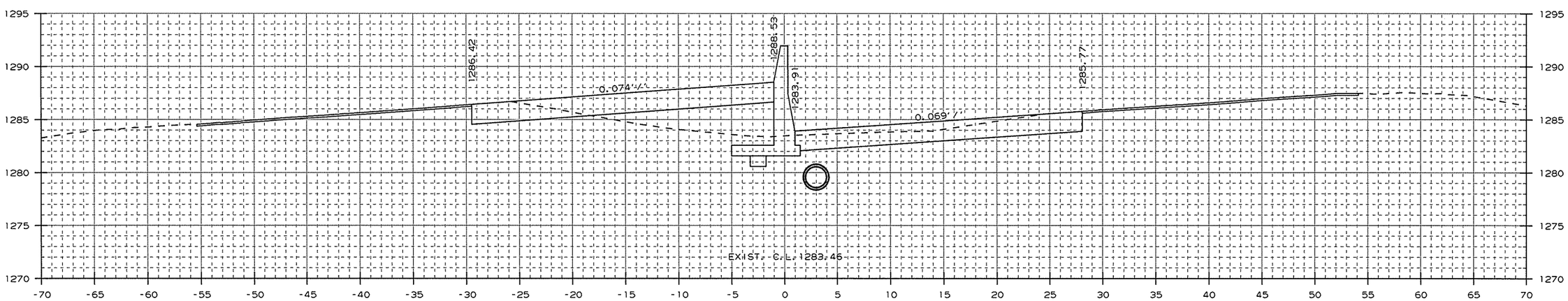

AREA CUT : 61.7
AREA FILL : 32.3

1276+00.00

CUT VOLUME : 228
FILL VOLUME : 116

CROSS SECTION STA. 1276+00 TO STA. 1276+75

USER: at5106
DESIGN FILE: G:\13106100_264toNHope\TRANSP\dgn\xsect\rCA0901_CX_02.dgn
PLOTTED: 1/13/2016 09:39
SCALE: 10:1
MODEL: CROSS SECTION SHEETS

Crafton, Tull & Associates Inc.

DATE REVISED	DATE FILMED	DATE REVISED	DATE FILMED

FED.RD. DIST.NO.	STATE	FED.AID PROJ.NO.	SHEET NO.	TOTAL SHEETS
6	ARK.			
JOB NO.		CA0901	377	452

2 CROSS SECTIONS

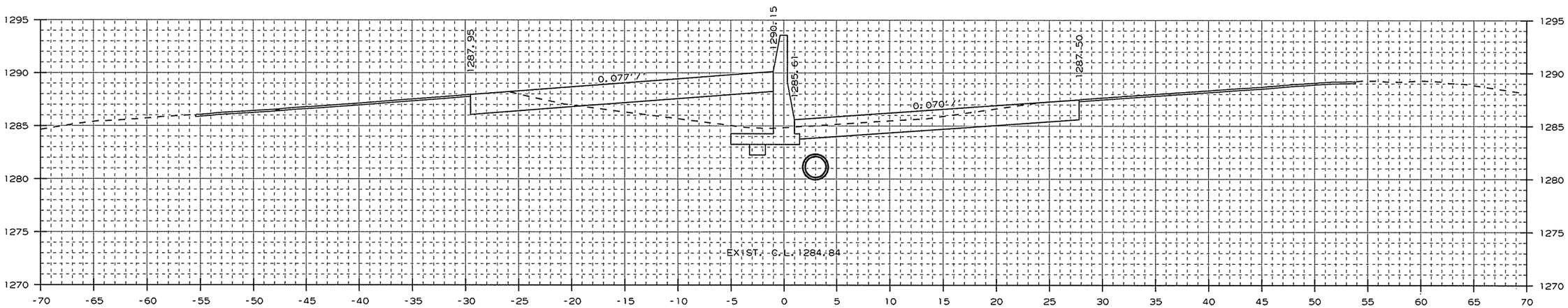

AREA CUT : 58.1
AREA FILL : 33.9

1278+00.00

CUT VOLUME : 216
FILL VOLUME : 124

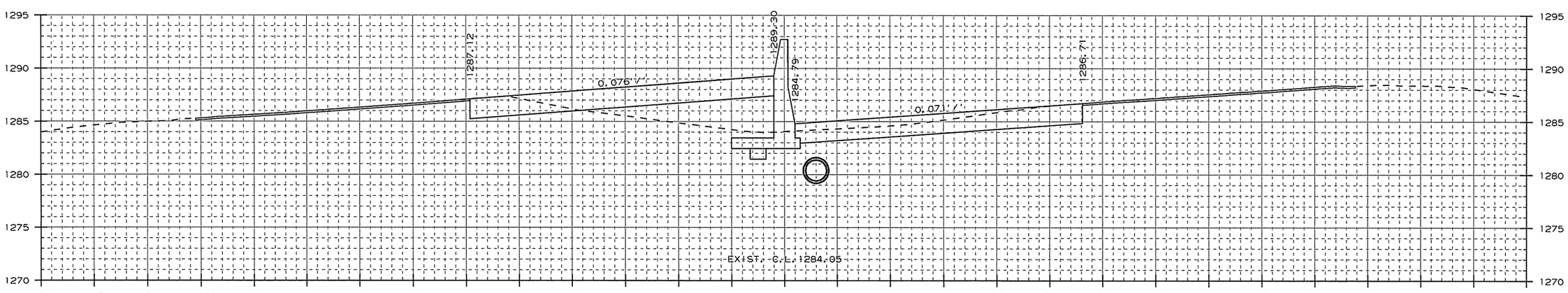

AREA CUT : 58.7
AREA FILL : 33.3

1277+00.00

CUT VOLUME : 55
FILL VOLUME : 30

CROSS SECTION STA. 1277+00 TO STA. 1278+00

USER: a15106
DESIGN FILE: G:\13106100_264toNHope\TRANSP\dgn\xsect\rCA0901_CX_02.dgn
PLOTTED: 1/13/2016 09:40
SCALE: 1:04
MODEL: CROSS SECTION SHEETS

Crafton, Tull & Associates Inc.

DATE REVISED	DATE FILMED	DATE REVISED	DATE FILMED

FED.RD. DIST.NO.	STATE	FED.AID PROJ.NO.	SHEET NO.	TOTAL SHEETS
6	ARK.			
JOB NO.		CA0901	378	452

2 CROSS SECTIONS

STA. 1279+75 - CONSTRUCT
DROP INLET 3' RT. OF C.L. H=5'6"
W/ 24" x 296' R.C. PIPE CULVERT
(CLASS III) (TYPE 3) BEDDING
CONNECT TO DROP INLET
STA. 1276+75 RT.
TYPE ST DROP INLET = 4' X 4'

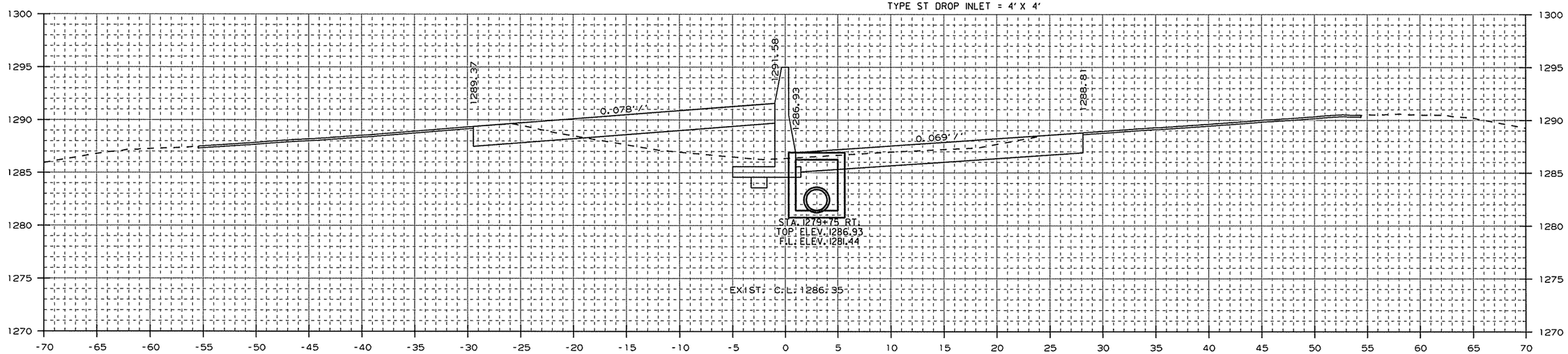

AREA CUT : 60.5
AREA FILL : 34.9

1279+75.00

CUT VOLUME : 167
FILL VOLUME : 95

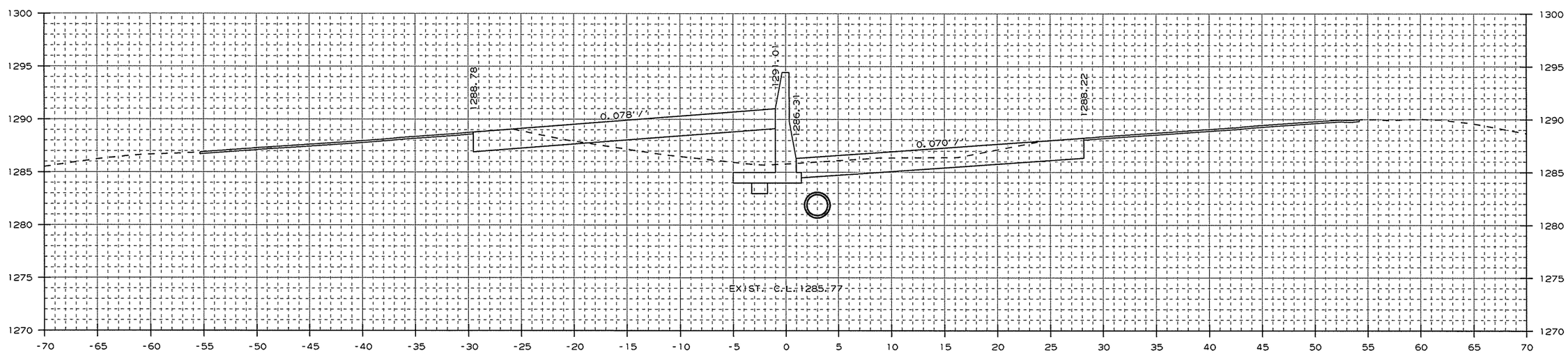

AREA CUT : 59.9
AREA FILL : 33.8

1279+00.00

CUT VOLUME : 219
FILL VOLUME : 125

CROSS SECTION STA. 1279+00 TO STA. 1279+75

USER: at5106
DESIGN FILE: G:\13106100_264toNHope\TRANSP\dgn\xsect\rCA0901_CX_02.dgn MODEL: CROSS SECTION SHEETS
PLOTTED: 1/13/2016 09:40 SCALE: 10:1

Crafton, Tull & Associates Inc.

DATE REVISED	DATE FILMED	DATE REVISED	DATE FILMED

FED.RD. DIST.NO.	STATE	FED.AID PROJ.NO.	SHEET NO.	TOTAL SHEETS
6	ARK.			
JOB NO.		CA0901	379	452

2 CROSS SECTIONS

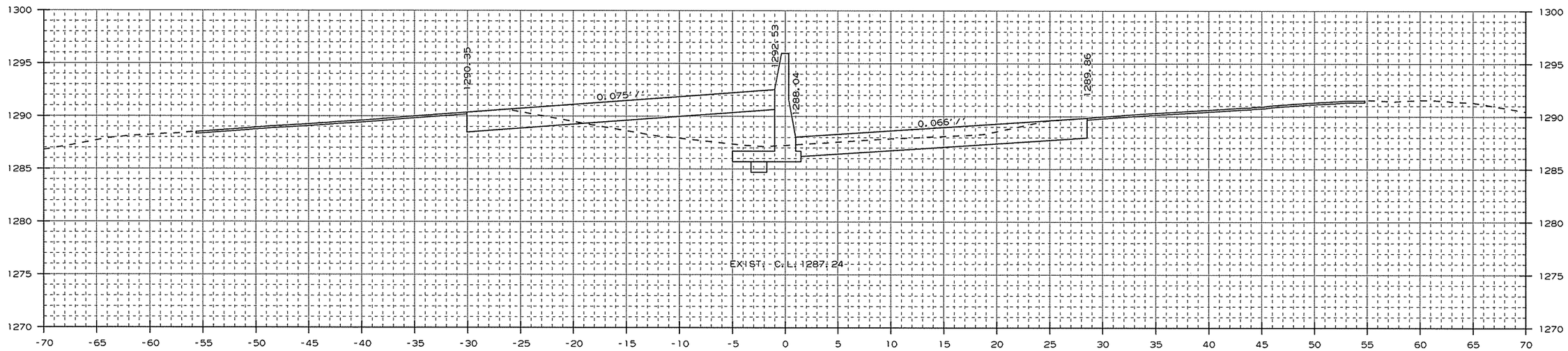

AREA CUT : 57.4
AREA FILL : 35.6

1281+00.00

CUT VOLUME : 216
FILL VOLUME : 130

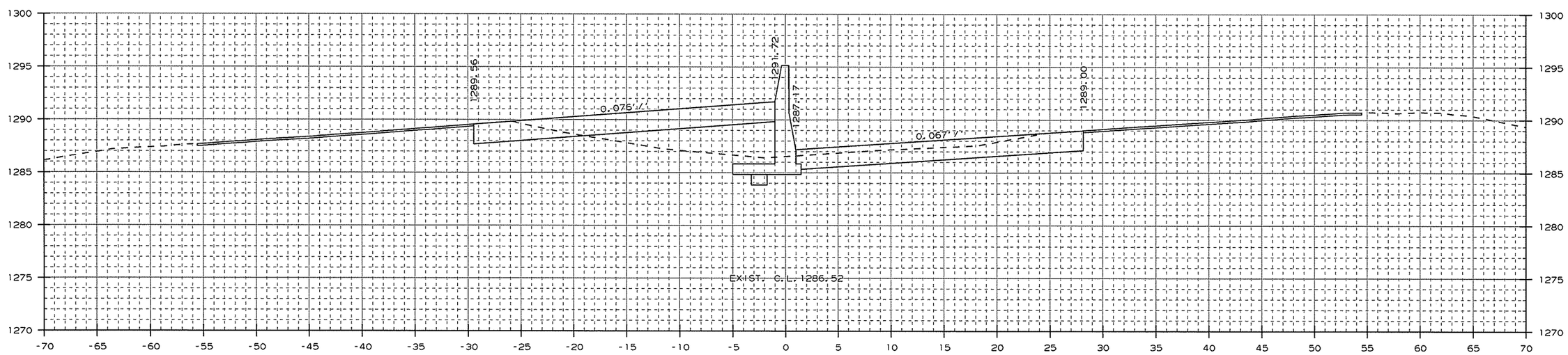

AREA CUT : 59.3
AREA FILL : 34.8

1280+00.00

CUT VOLUME : 55
FILL VOLUME : 32

CROSS SECTION STA. 1280+00 TO STA. 1281+00

USER: a15106
DESIGN FILE: G:\13106100_264toNHope\TRANSP\dgn\xsect\rCA0901_CX_02.dgn
PLOTTED: 1/13/2016 09:40
SCALE: 10:1
MODEL: CROSS SECTION SHEETS

Crafton, Tull & Associates Inc.

DATE REVISED	DATE FILMED	DATE REVISED	DATE FILMED

FED.RD. DIST.NO.	STATE	FED.AID PROJ.NO.	SHEET NO.	TOTAL SHEETS
6	ARK.			
JOB NO.		CA0901	380	452

2 CROSS SECTIONS

STA. 1282+60 IN PLACE
TYPE R DROP INLET W/
48" X 89' R.C. PIPE
CULVERT LT. AND 48" X 85'
R.C. PIPE CULVERT RT.
(10° RT. FWD. SKEW)
W/ FES LT. & RT.
MODIFY

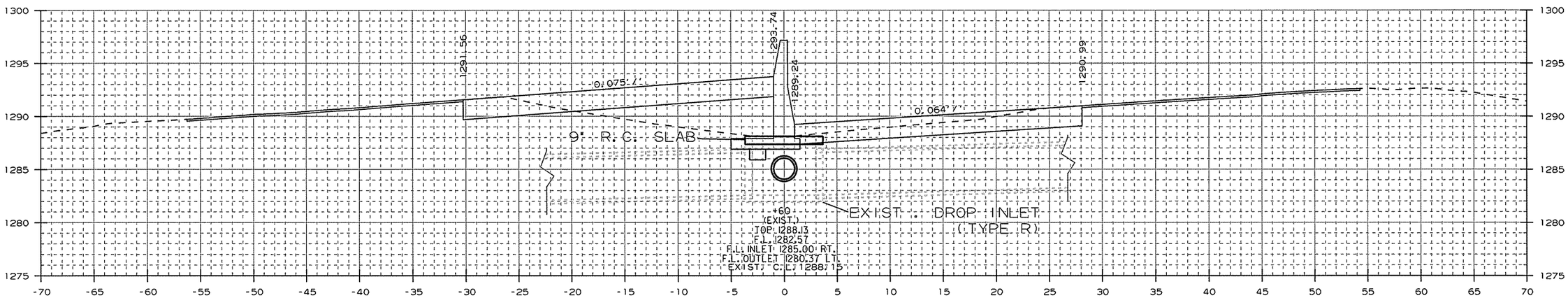

AREA CUT : 55.5
AREA FILL : 38.4

1282+60.00

CUT VOLUME : 126
FILL VOLUME : 85

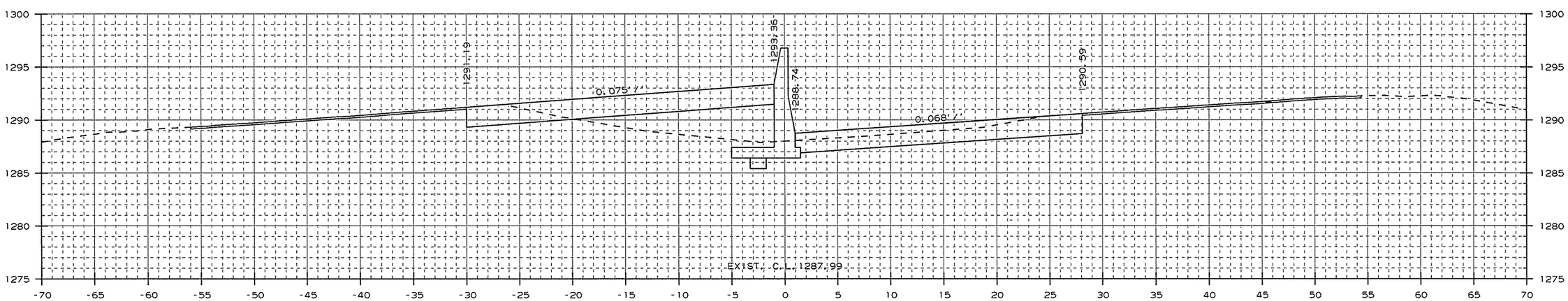

AREA CUT : 58.0
AREA FILL : 37.8

1282+00.00

CUT VOLUME : 214
FILL VOLUME : 136

CROSS SECTION STA. 1282+00 TO STA. 1282+60

USER: at5106
DESIGN FILE: G:\13106100_264toNHope\TRANSP\dgn\xsect\rCA0901_CX_02.dgn
PLOTTED: 1/13/2016 09:40
SCALE: 10:1
MODEL: CROSS SECTION SHEETS

Crafton, Tull & Associates Inc.

DATE REVISED	DATE FILMED	DATE REVISED	DATE FILMED

FED.RD. DIST.NO.	STATE	FED.AID PROJ.NO.	SHEET NO.	TOTAL SHEETS
6	ARK.			
JOB NO.		CA0901	381	452

2 CROSS SECTIONS

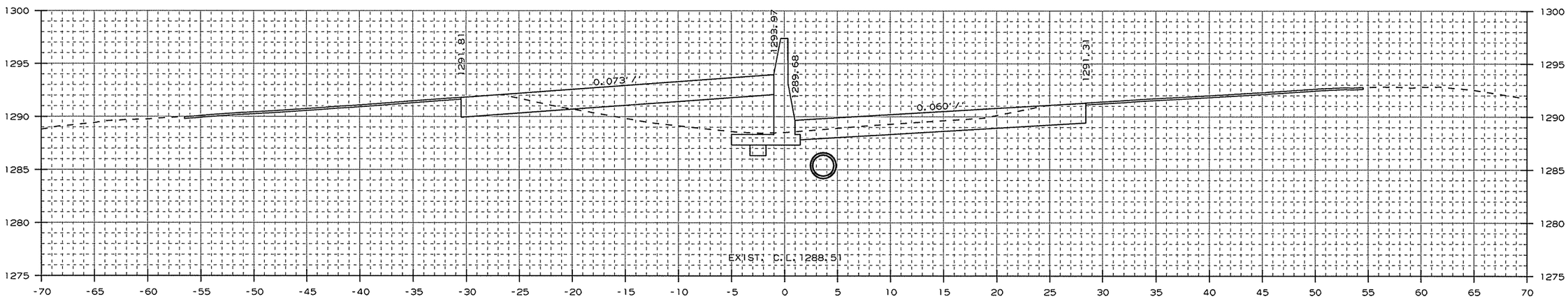

AREA CUT : 53.3
AREA FILL : 39.7

1283+00.00

CUT VOLUME : 50
FILL VOLUME : 37

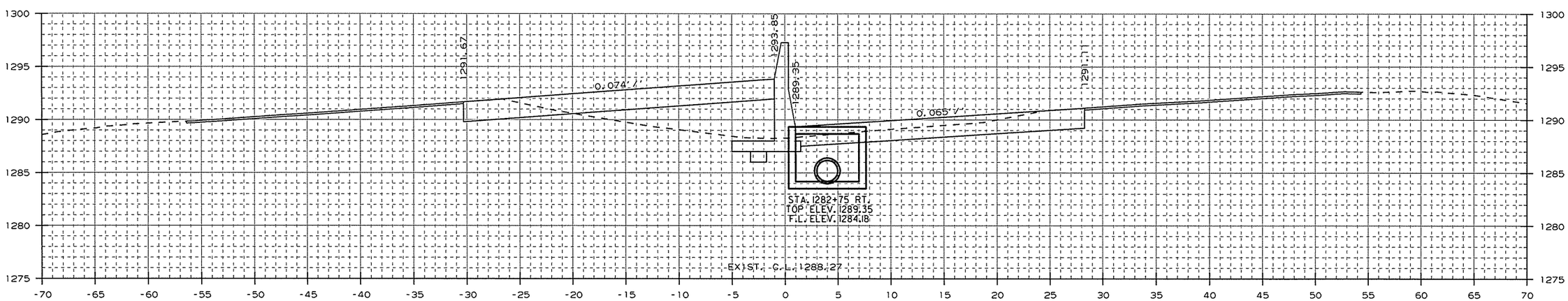

AREA CUT : 55.1
AREA FILL : 39.5

1282+75.00

STA. 1282+75 - CONSTRUCT
DROP INLET 3' RT. OF C.L. H=5'2"
W/ 24" x 11' R.C. PIPE CULVERT
(CLASS III) (TYPE 3 BEDDING)
CONNECT TO EXIST. DROP INLET
AT STA. 1282+60
TYPE ST DROP INLET = 4' X 6'
3 GRATES

CUT VOLUME : 31
FILL VOLUME : 22

CROSS SECTION STA. 1282+75 TO STA. 1283+00

USER: at5106
DESIGN FILE: G:\13106100_264toNHope\TRANSP\dgn\xsect\rCA0901_CX_02.dgn
PLOTTED: 1/13/2016 09:40
SCALE: 10:1
MODEL: CROSS SECTION SHEETS

Crafton, Tull & Associates Inc.

DATE REVISED	DATE FILMED	DATE REVISED	DATE FILMED

FED.RD. DIST.NO.	STATE	FED.AID PROJ.NO.	SHEET NO.	TOTAL SHEETS
6	ARK.			
JOB NO.		CA0901	382	452

2 CROSS SECTIONS

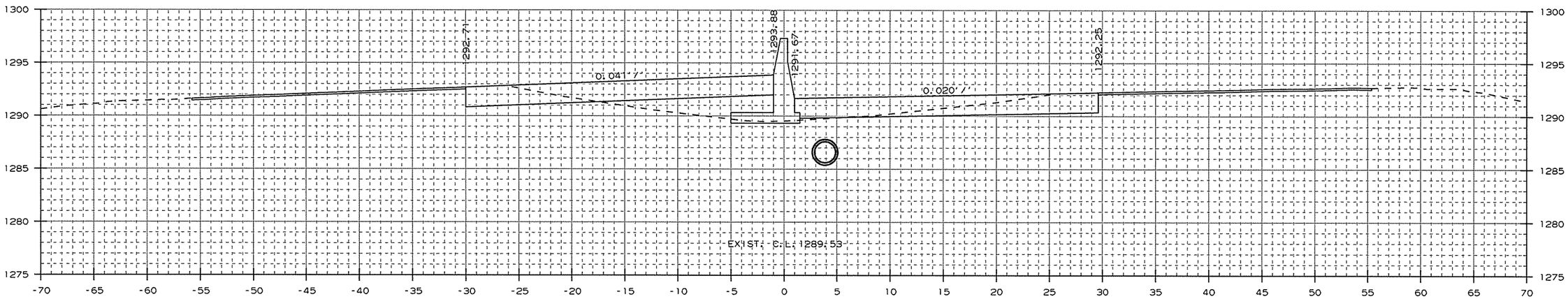

AREA CUT : 39.1
AREA FILL : 20.7

1285+00.00

CUT VOLUME : 158
FILL VOLUME : 96

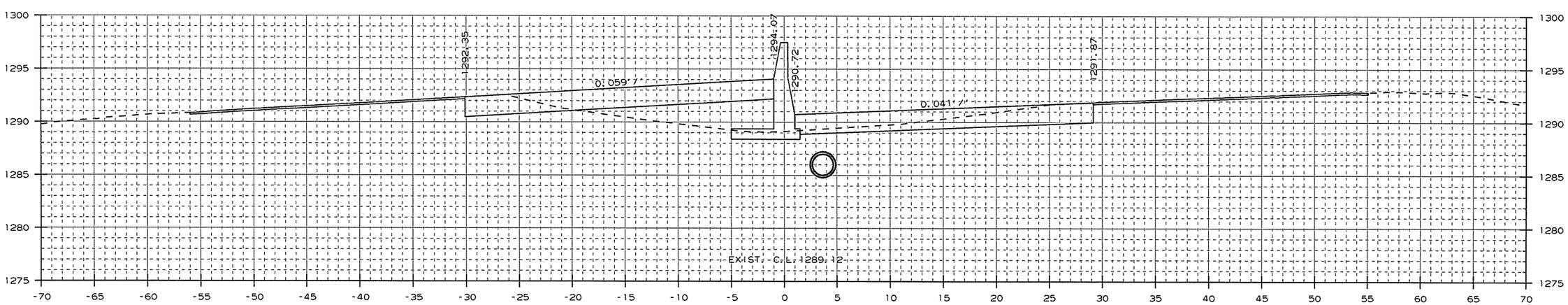

AREA CUT : 46.1
AREA FILL : 31.0

1284+00.00

CUT VOLUME : 184
FILL VOLUME : 131

CROSS SECTION STA. 1284+00 TO STA. 1285+00

USER: a15106
DESIGN FILE: G:\13106100_264toNHope\TRANSP\dgn\xsect\rCA0901_CX_02.dgn
PLOTTED: 1/13/2016 09:40
SCALE: 10:1
MODEL: CROSS SECTION SHEETS

Crafton, Tull & Associates Inc.

DATE REVISED	DATE FILMED	DATE REVISED	DATE FILMED

FED.RD. DIST.NO.	STATE	FED.AID PROJ.NO.	SHEET NO.	TOTAL SHEETS
6	ARK.			
JOB NO.		CA0901	383	452

2 CROSS SECTIONS

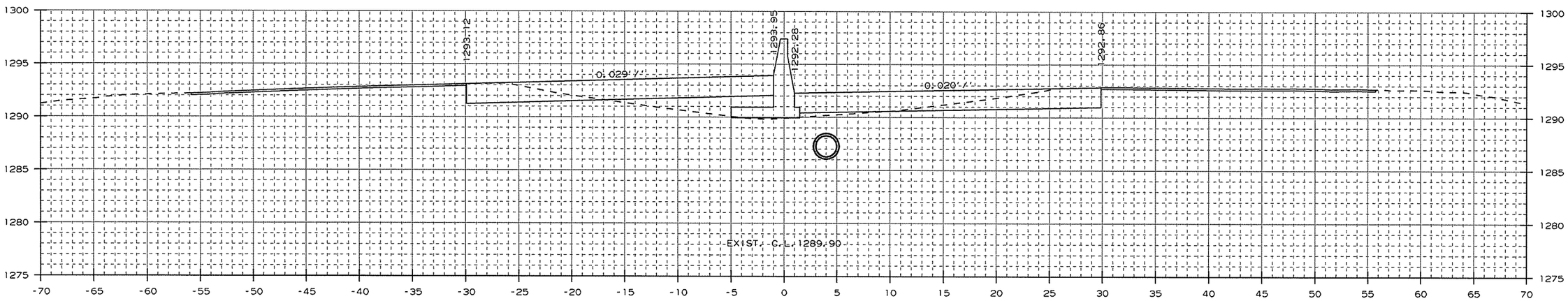

AREA CUT : 36.0
AREA FILL : 17.8

1286+00.00

CUT VOLUME : 70
FILL VOLUME : 33

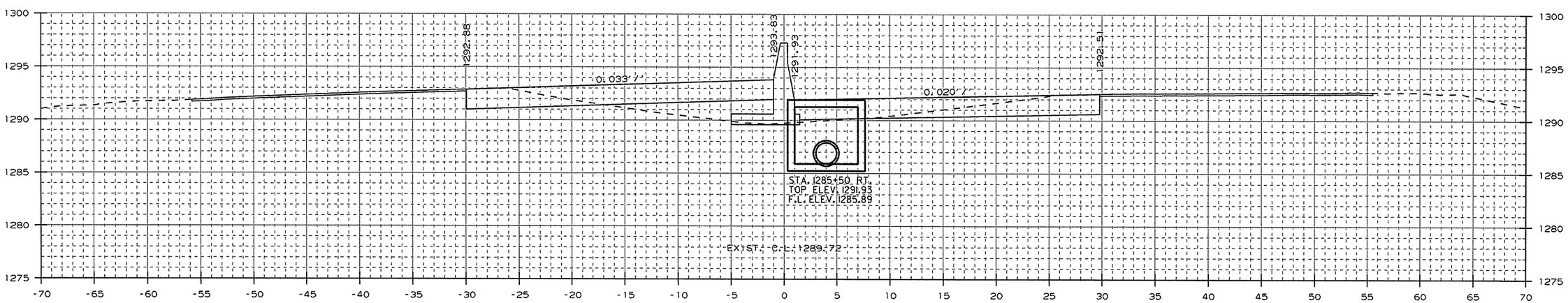

AREA CUT : 39.3
AREA FILL : 18.0

1285+50.00

STA. 1285+50 - CONSTRUCT
DROP INLET 3' RT. OF C.L. H=6'0"
W/ 24" x 27l' R.C. PIPE CULVERT
(CLASS III) (TYPE 3 BEDDING)
CONNECT TO DROP INLET
STA. 1282+75 RT.
TYPE ST DROP INLET = 4' X 6'
3 GRATES

CUT VOLUME : 73
FILL VOLUME : 36

CROSS SECTION STA. 1285+50 TO STA. 1286+00

USER: at5106
DESIGN FILE: G:\13106100_264toNHope\TRANSP\dgn\xsect\rCA0901_CX_02.dgn
PLOTTED: 1/13/2016 09:40
SCALE: 10:1
MODEL: CROSS SECTION SHEETS

Crafton, Tull & Associates Inc.	DATE REVISED	DATE FILMED	DATE REVISED	DATE FILMED	FED.RD. DIST.NO.	STATE	FED.AID PROJ.NO.	SHEET NO.	TOTAL SHEETS
					6	ARK.			
					JOB NO.		CA0901	384	452

2 CROSS SECTIONS

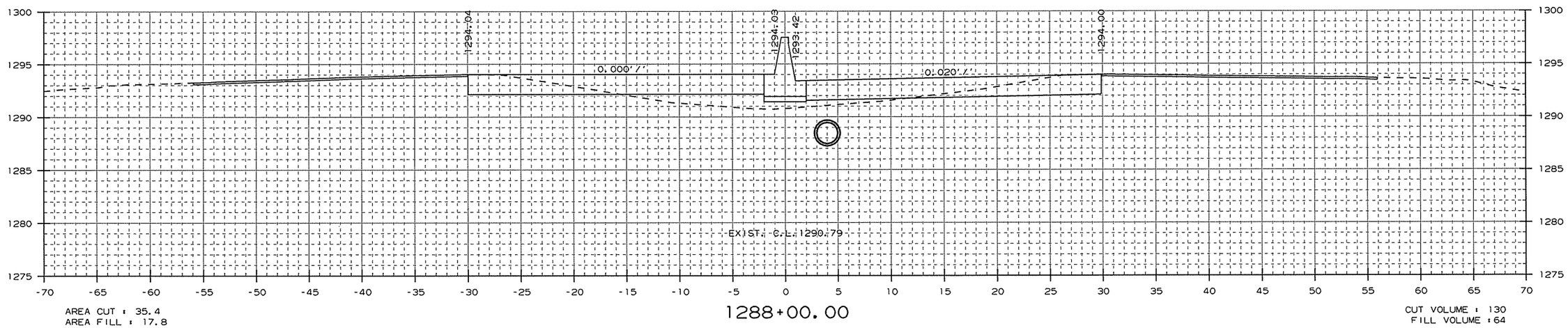

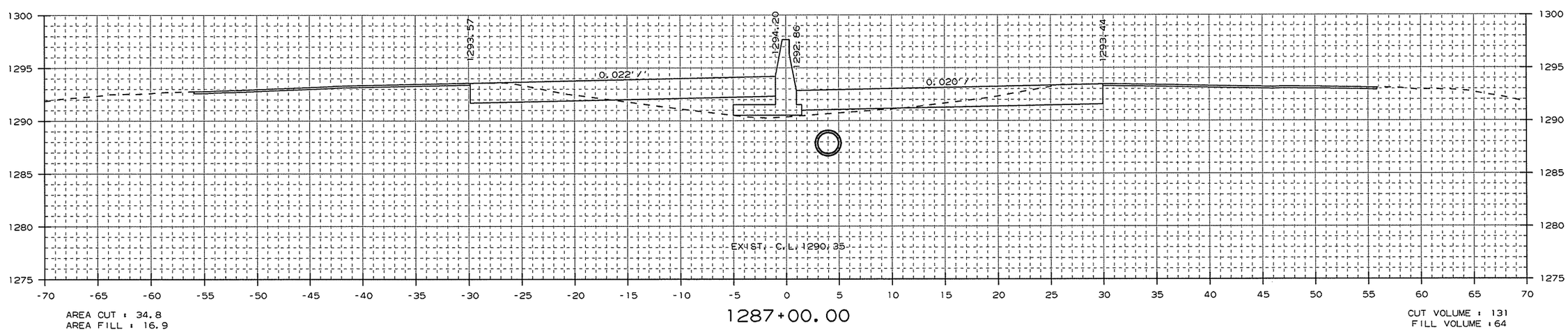

CROSS SECTION STA. 1287+00 TO STA. 1288+00

USER: a15106
DESIGN FILE: G:\13106100_264toNHope\TRANSP\dgn\xsect\rCA0901_CX_02.dgn
PLOTTED: 1/13/2016 09:40
SCALE: 10:1
MODEL: CROSS SECTION SHEETS

Crafton, Tull & Associates Inc.

DATE REVISED	DATE FILMED	DATE REVISED	DATE FILMED

FED.RD. DIST.NO.	STATE	FED.AID PROJ.NO.	SHEET NO.	TOTAL SHEETS
6	ARK.			
JOB NO.		CA0901	385	452

2 CROSS SECTIONS

STA. 1289+00 - CONSTRUCT
DROP INLET 3' LT. OF C.L. H=5'7"
W/ 24" x 46' R.C. PIPE CULVERT
(CLASS III) (TYPE 3 BEDDING)
CONNECT TO DROP INLET
STA. 1288+50 LT.
TYPE ST DROP INLET = 4' X 6'
3 GRATES

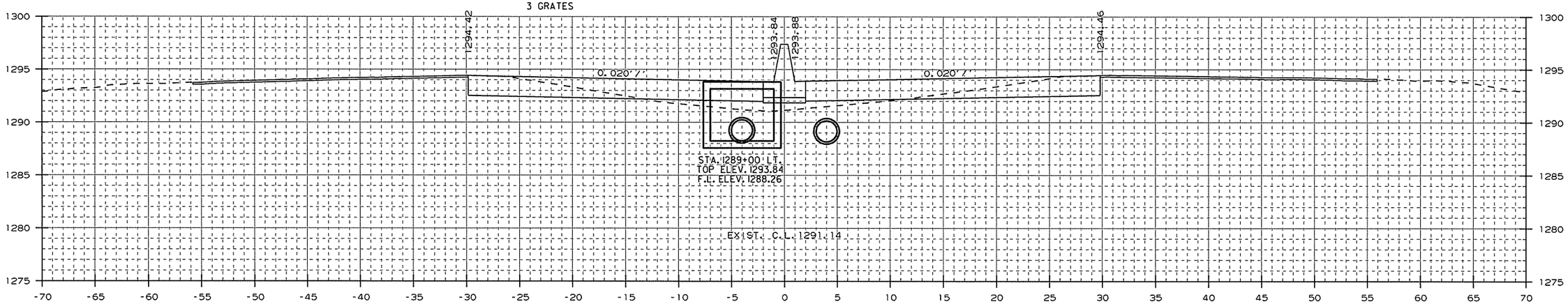

AREA CUT = 38.5
AREA FILL = 12.4

1289+00.00

CUT VOLUME = 70
FILL VOLUME = 26

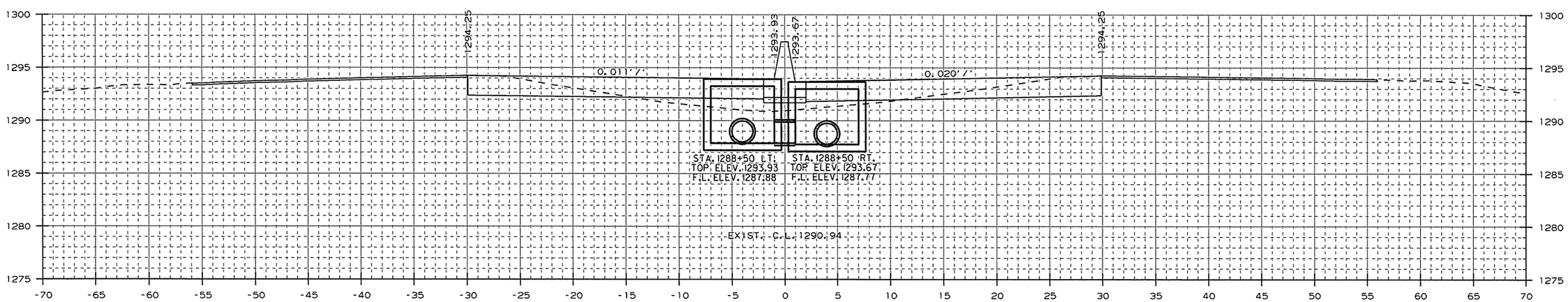

AREA CUT = 37.1
AREA FILL = 15.2

STA. 1288+50 - CONSTRUCT
DROP INLET 3' LT. OF C.L. H=6'0"
W/ 24" x 2' R.C. PIPE CULVERT
(CLASS III) (TYPE 3 BEDDING)
CONNECT TO DROP INLET
STA. 1288+50 RT.
TYPE ST DROP INLET = 4' X 6'
3 GRATES

1288+50.00

STA. 1288+50 - CONSTRUCT
DROP INLET 3' RT. OF C.L. H=5'11"
W/ 24" x 296' R.C. PIPE CULVERT
(CLASS III) (TYPE 3 BEDDING)
CONNECT TO DROP INLET
STA. 1285+50 RT.
TYPE ST DROP INLET = 4' X 6'
3 GRATES

CUT VOLUME = 67
FILL VOLUME = 31

CROSS SECTION STA. 1288+50 TO STA. 1289+00

USER: at5106
DESIGN FILE: G:\13106100_264toNHope\TRANSP\dgn\xsect\rCA0901_CX_02.dgn
PLOTTED: 1/13/2016 09:40
SCALE: 10:1
MODEL: CROSS SECTION SHEETS

Crafton, Tull & Associates Inc.

DATE REVISED	DATE FILMED	DATE REVISED	DATE FILMED

FED.RD. DIST.NO.	STATE	FED.AID PROJ.NO.	SHEET NO.	TOTAL SHEETS
6	ARK.			
JOB NO.		CA0901	386	452

2 CROSS SECTIONS

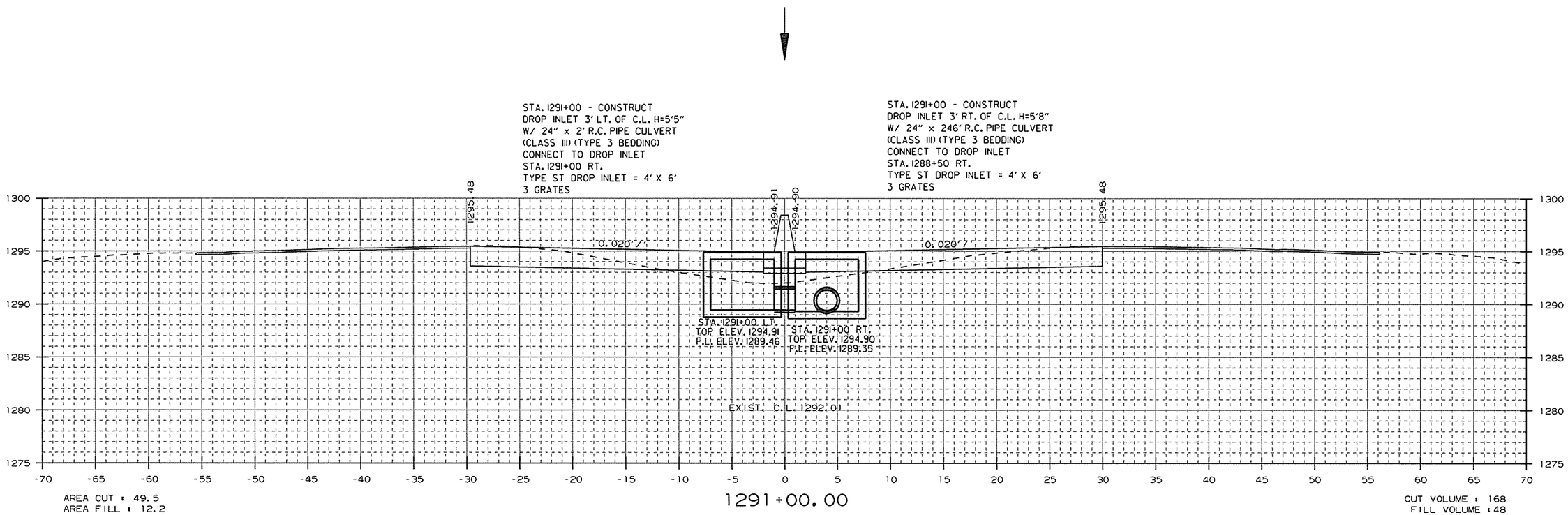

AREA CUT : 49.5
AREA FILL : 12.2

1291+00.00

CUT VOLUME : 168
FILL VOLUME : 48

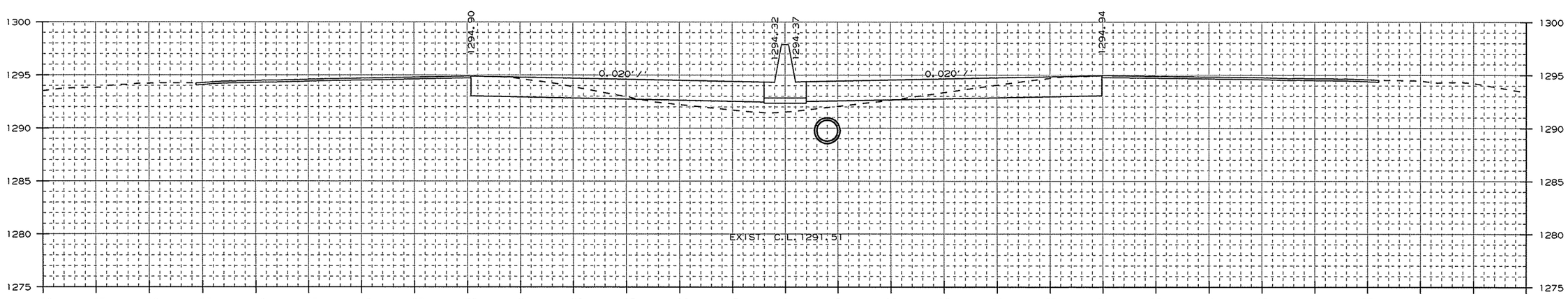

AREA CUT : 41.1
AREA FILL : 13.5

1290+00.00

CUT VOLUME : 147
FILL VOLUME : 48

CROSS SECTION STA. 1290+00 TO STA. 1291+00

USER: a+5106
DESIGN FILE: G:\13106100_264toNHope\TRANSP\dgn\xsect\rCA0901_CX_02.dgn
PLOTTED: 1/13/2016 09:40
SCALE: 10:1
MODEL: CROSS SECTION SHEETS

Crafton, Tull & Associates Inc.

DATE REVISED	DATE FILMED	DATE REVISED	DATE FILMED

FED.RD. DIST.NO.	STATE	FED.AID PROJ.NO.	SHEET NO.	TOTAL SHEETS
6	ARK.			
JOB NO.		CA0901	387	452

2 CROSS SECTIONS

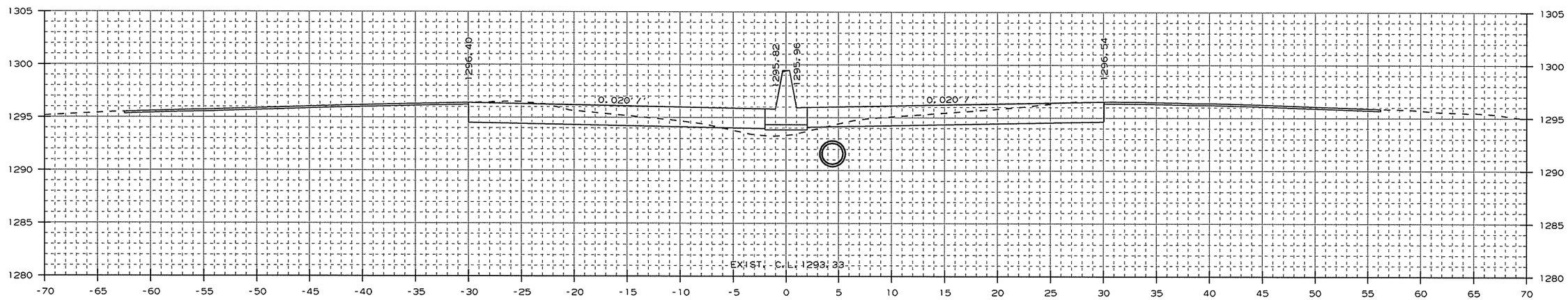

AREA CUT : 60.8
AREA FILL : 3.9

1292+93.00

CUT VOLUME : 190
FILL VOLUME : 23

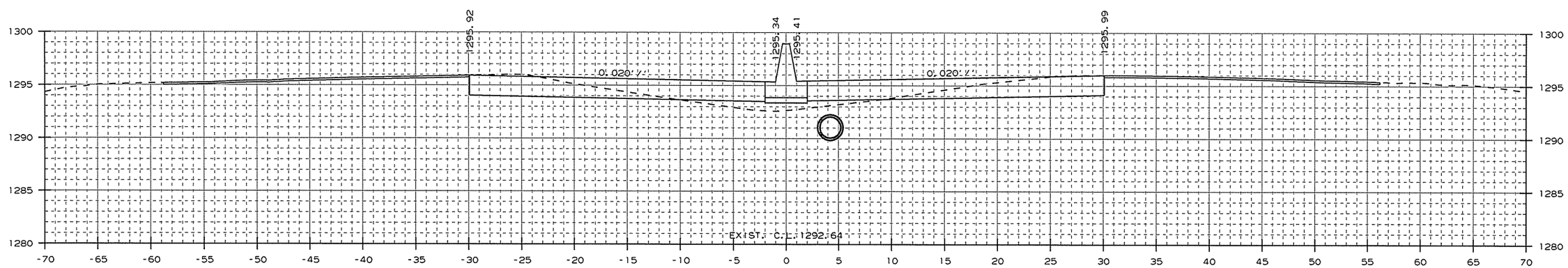

AREA CUT : 49.8
AREA FILL : 9.3

1292+00.00

CUT VOLUME : 184
FILL VOLUME : 40

CROSS SECTION STA. 1292+00 TO STA. 1292+93

USER: at5106
DESIGN FILE: G:\13106100_264toNHope\TRANSP\dgn\xsect\rCA0901_CX_02.dgn
PLOTTED: 1/13/2016 09:40
SCALE: 10:1
MODEL: CROSS SECTION SHEETS

Crafton, Tull & Associates Inc.

DATE REVISED	DATE FILMED	DATE REVISED	DATE FILMED

FED.RD. DIST.NO.	STATE	FED.AID PROJ.NO.	SHEET NO.	TOTAL SHEETS
6	ARK.			
JOB NO.		CA0901	388	452

2 CROSS SECTIONS

STA. 1293+60 - CONSTRUCT
DROP INLET 4'-9" LT. OF C.L. H=5'1"
W/ 24" x 6' R.C. PIPE CULVERT
(CLASS III) (TYPE 3 BEDDING)
CONNECT TO DROP INLET
STA. 1293+60 RT.
TYPE ST DROP INLET = 4' X 6'
3 GRATES

STA. 1293+60 - CONSTRUCT
DROP INLET 4'-9" RT. OF C.L. H=5'4"
W/ 24" x 256' R.C. PIPE CULVERT
(CLASS III) (TYPE 3 BEDDING)
CONNECT TO DROP INLET
STA. 1291+00 RT.
TYPE ST DROP INLET = 4' X 6'
3 GRATES

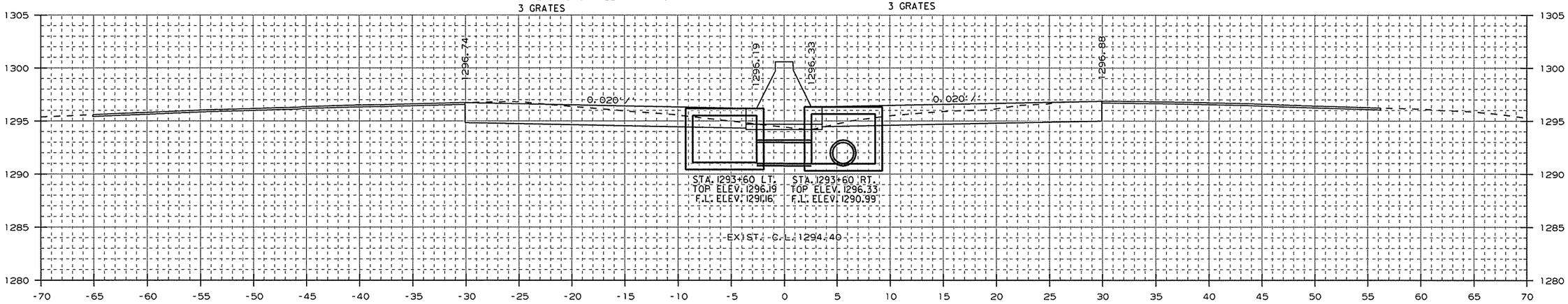

AREA CUT : 72.0
AREA FILL : 0.3

1293+60.00

CUT VOLUME : 157
FILL VOLUME : 4

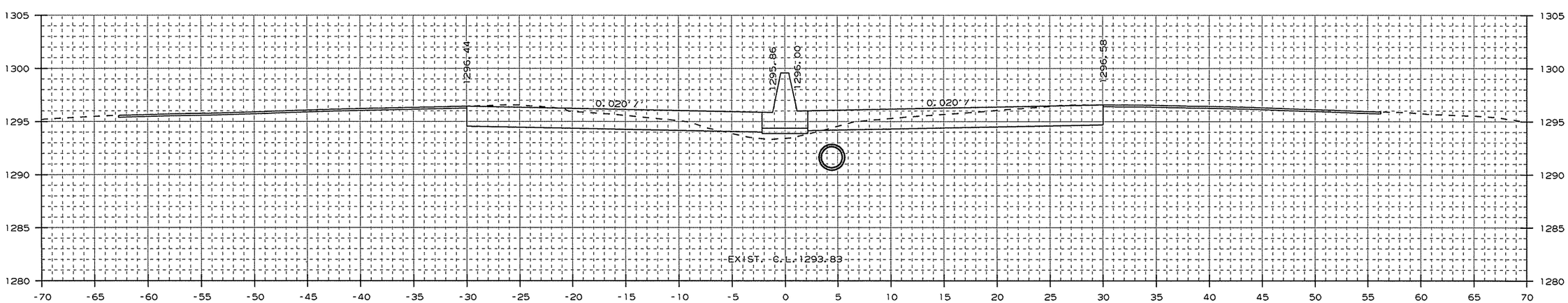

AREA CUT : 68.9
AREA FILL : 3.4

1293+00.00

CUT VOLUME : 17
FILL VOLUME : 1

CROSS SECTION STA. 1293+00 TO STA. 1293+60

USER: at5106
DESIGN FILE: G:\13106100_264toNHope\TRANSP\dgn\xsect\rCA0901_CX_02.dgn
PLOTTED: 1/13/2016 09:40
SCALE: 10:1
MODEL: CROSS SECTION SHEETS

Crafton, Tull & Associates Inc.

DATE REVISED	DATE FILMED	DATE REVISED	DATE FILMED

FED.RD. DIST.NO.	STATE	FED.AID PROJ.NO.	SHEET NO.	TOTAL SHEETS
6	ARK.			
JOB NO.		CA0901	389	452

2 CROSS SECTIONS

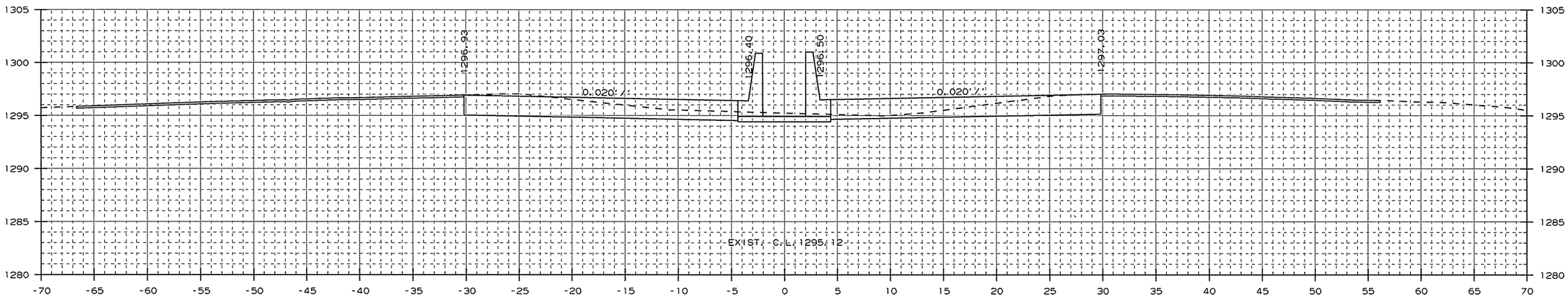

AREA CUT : 68.9
AREA FILL : 0.0

1294+00.00

CUT VOLUME : 17
FILL VOLUME : 0

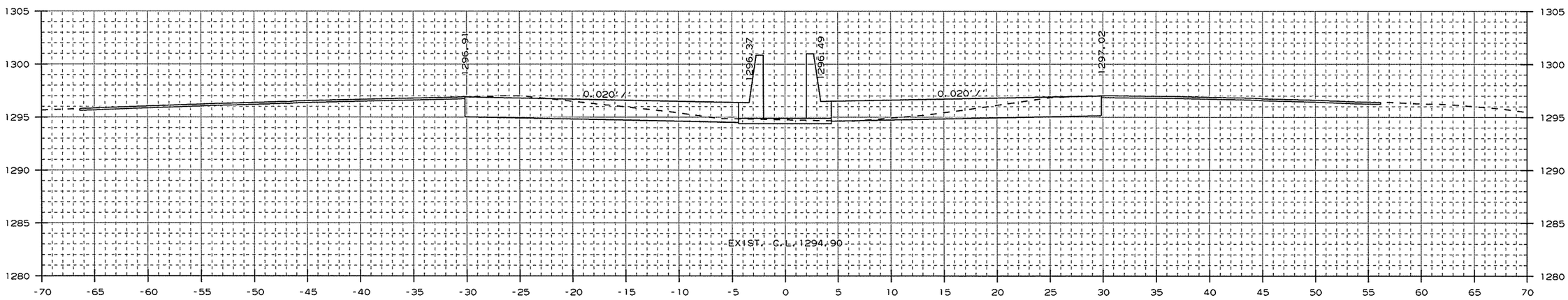

AREA CUT : 60.6
AREA FILL : 0.1

1293+93.00

CUT VOLUME : 81
FILL VOLUME : 0

CROSS SECTION STA. 1293+93 TO STA. 1294+00

USER: ot5106
DESIGN FILE: G:\13106100_264toNHope\TRANSP\dgn\xsect\rCA0901_CX_02.dgn
PLOTTED: 1/13/2016 09:40
SCALE: 10:1
MODEL: CROSS SECTION SHEETS

Crafton, Tull & Associates Inc.

DATE REVISED	DATE FILMED	DATE REVISED	DATE FILMED

FED.RD. DIST.NO.	STATE	FED.AID PROJ.NO.	SHEET NO.	TOTAL SHEETS
6	ARK.			
JOB NO.		CA0901	390	452

2 CROSS SECTIONS

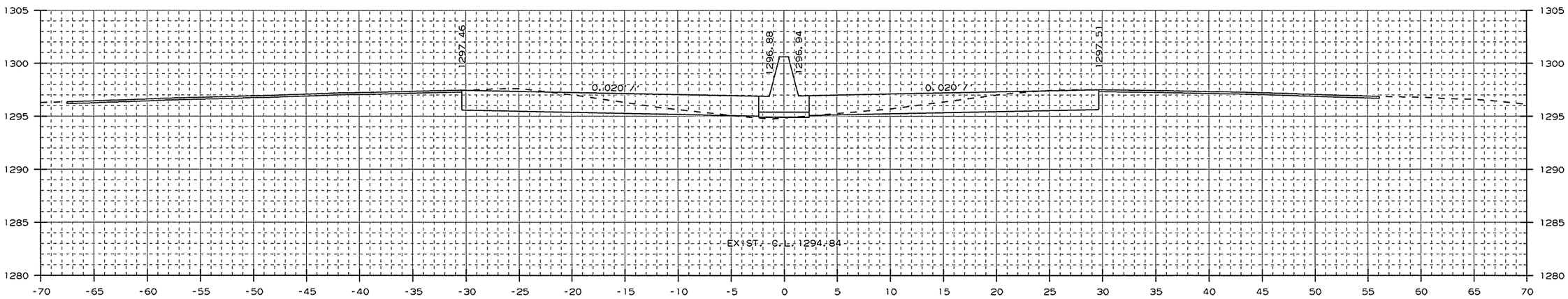

AREA CUT : 61.1
AREA FILL : 0.6

1295+00.00

CUT VOLUME : 201
FILL VOLUME : 1

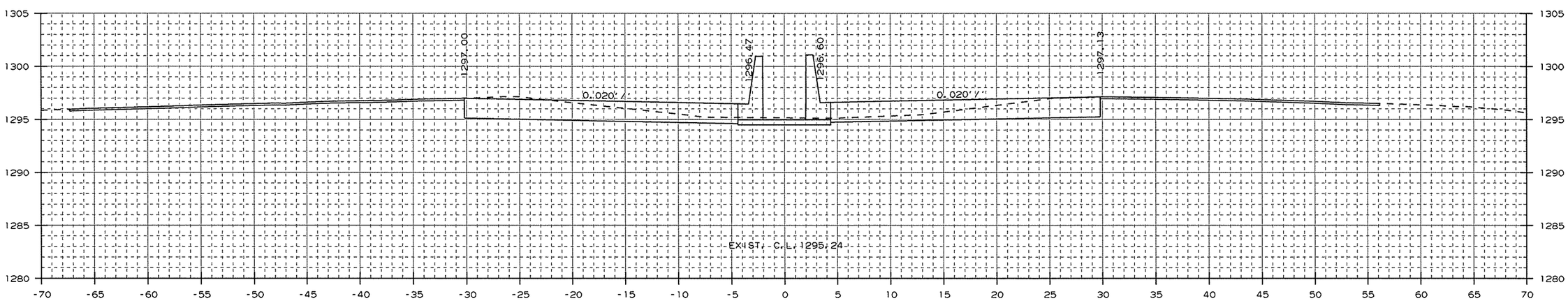

AREA CUT : 67.8
AREA FILL : 0.0

1294+16.00

CUT VOLUME : 41
FILL VOLUME : 0

CROSS SECTION STA. 1294+16 TO STA. 1295+00

USER: at5106
DESIGN FILE: G:\13106100_264toNHope\TRANSP\dgn\xsect\rCA0901_CX_02.dgn
PLOTTED: 1/13/2016 09:40
SCALE: 10:1
MODEL: CROSS SECTION SHEETS

Crafton, Tull & Associates Inc.

DATE REVISED	DATE FILMED	DATE REVISED	DATE FILMED

FED.RD. DIST.NO.	STATE	FED.AID PROJ.NO.	SHEET NO.	TOTAL SHEETS
6	ARK.			
JOB NO.		CA0901	391	452

2 CROSS SECTIONS

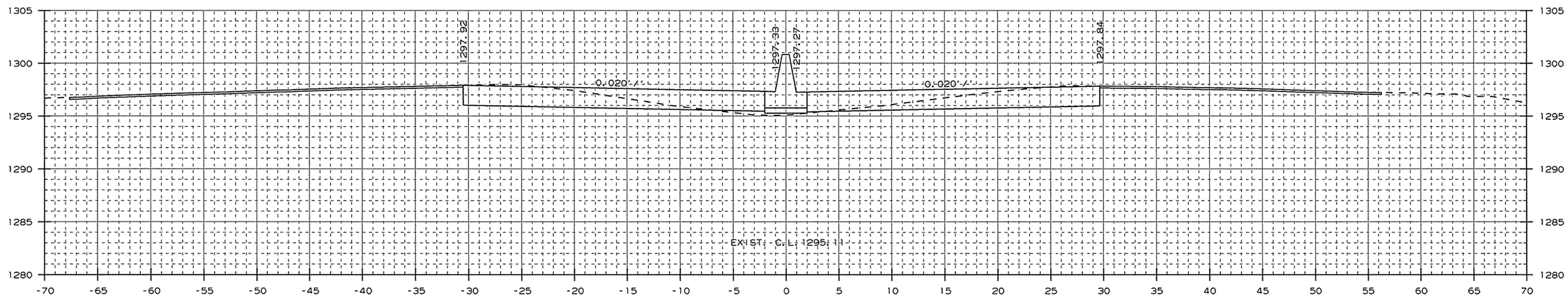

AREA CUT : 59.1
AREA FILL : 1.9

1296+00.00

CUT VOLUME : 185
FILL VOLUME : 5

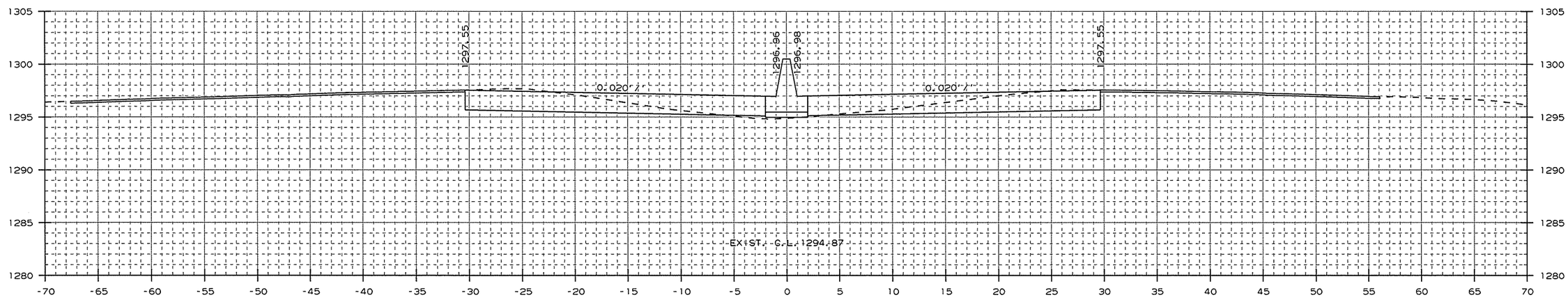

AREA CUT : 59.6
AREA FILL : 1.1

1295+16.00

CUT VOLUME : 36
FILL VOLUME : 0

CROSS SECTION STA. 1295+16 TO STA. 1296+00

USER: at5106
DESIGN FILE: G:\13106100_264toNHope\TRANSP\dgn\xsect\rCA0901_CX_02.dgn
PLOTTED: 1/13/2016 09:41
SCALE: 10:1
MODEL: CROSS SECTION SHEETS

Crafton, Tull & Associates Inc.

DATE REVISED	DATE FILMED	DATE REVISED	DATE FILMED

FED.RD. DIST.NO.	STATE	FED.AID PROJ.NO.	SHEET NO.	TOTAL SHEETS
6	ARK.			
JOB NO.		CA0901	392	452

2 CROSS SECTIONS

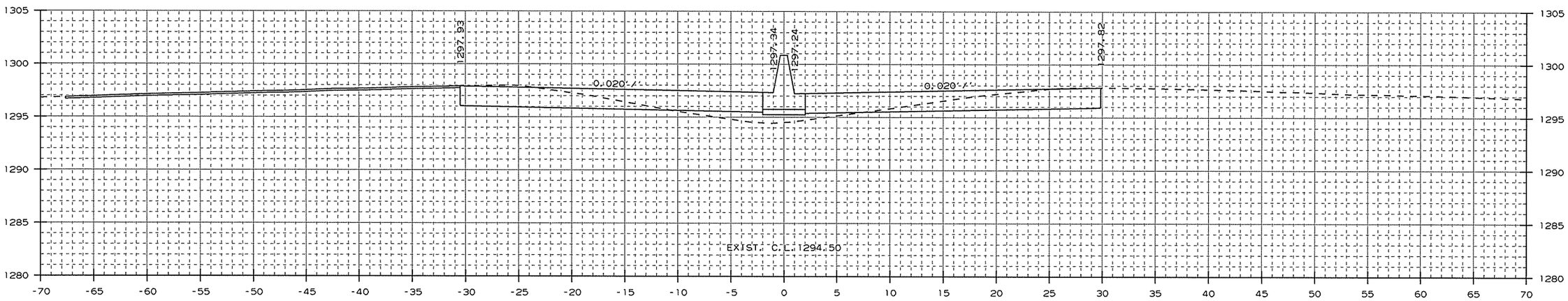

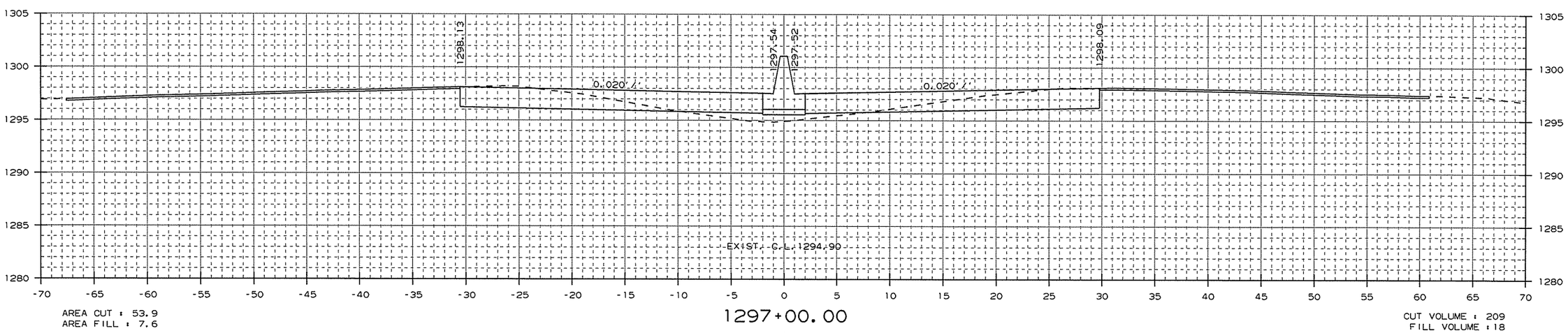

CROSS SECTION STA. 1297+00 TO STA. 1298+00

USER: at5106
DESIGN FILE: G:\13106100_264toNHope\TRANSP\dgn\xsect\rCA0901_CX_02.dgn
PLOTTED: 1/13/2016 09:41
SCALE: 10:1
MODEL: CROSS SECTION SHEETS

Crafton, Tull & Associates Inc.

DATE REVISED	DATE FILMED	DATE REVISED	DATE FILMED

FED.RD. DIST.NO.	STATE	FED.AID PROJ.NO.	SHEET NO.	TOTAL SHEETS
6	ARK.			
JOB NO.		CA0901	393	452

2 CROSS SECTIONS

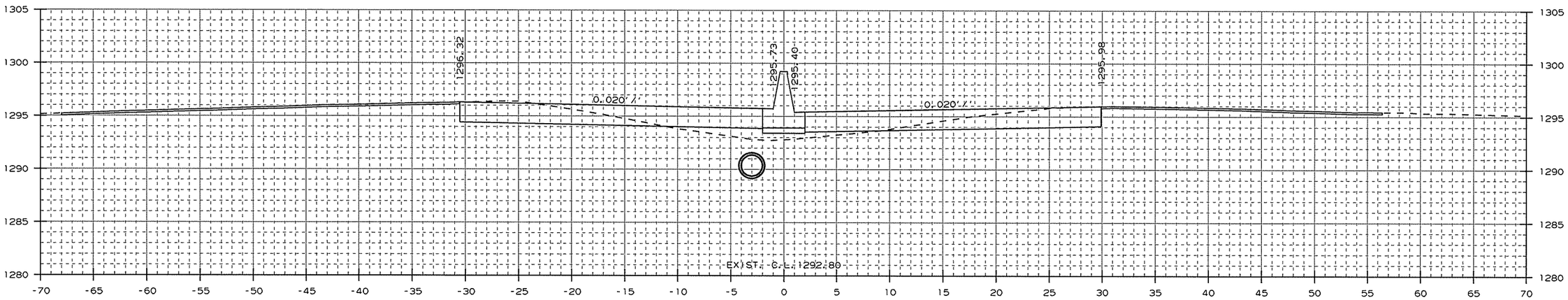

AREA CUT = 50.9
AREA FILL = 10.2

1300+00.00

CUT VOLUME = 194
FILL VOLUME = 36

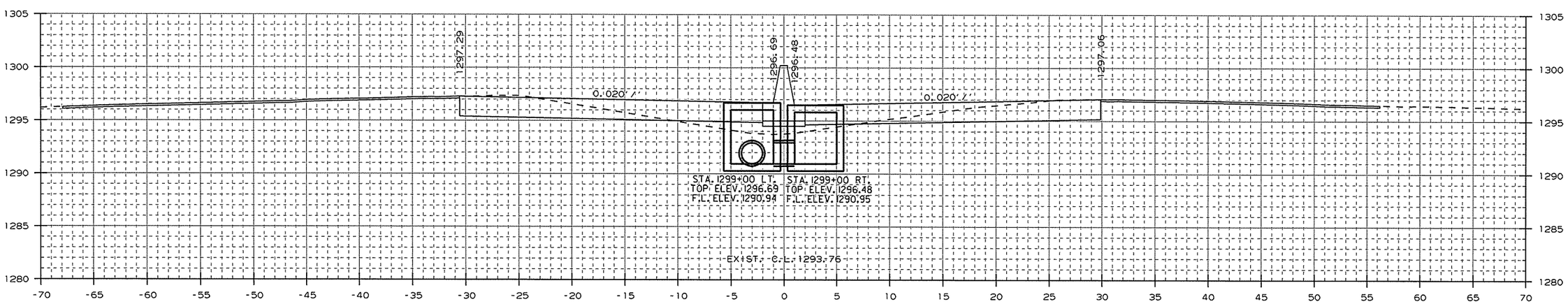

AREA CUT = 53.6
AREA FILL = 9.5

1299+00.00

CUT VOLUME = 198
FILL VOLUME = 36

STA. 1299+00 - CONSTRUCT
DROP INLET 3' LT. OF C.L. H=5'9"
W/ 24" x 296' R.C. PIPE CULVERT
(CLASS III) (TYPE 3 BEDDING)
CONNECT TO DROP INLET AT
STA. 1302+00 LT.
TYPE ST DROP INLET = 4' X 4'

STA. 1299+00 - CONSTRUCT
DROP INLET 3' RT. OF C.L. H=5'6"
W/ 24" x 2' R.C. PIPE CULVERT
(CLASS III) (TYPE 3 BEDDING)
CONNECT TO DROP INLET AT
STA. 1299+00 LT.
TYPE ST DROP INLET = 4' X 4'

CROSS SECTION STA. 1299+00 TO STA. 1300+00

USER: at5106
DESIGN FILE: G:\13106100_264toNHope\TRANSP\dgn\xsect\rCA0901_CX_02.dgn MODEL: CROSS SECTION SHEETS
PLOTTED: 1/13/2016 09:41 SCALE: 10:1

Crafton, Tull & Associates Inc.

DATE REVISED	DATE FILMED	DATE REVISED	DATE FILMED

FED.RD. DIST.NO.	STATE	FED.AID PROJ.NO.	SHEET NO.	TOTAL SHEETS
6	ARK.			
JOB NO.		CA0901	394	452

2 CROSS SECTIONS

STA. 1302+00 - CONSTRUCT
DROP INLET 3' LT. OF C.L. H=6'4"
W/ 24" x 296' R.C. PIPE CULVERT
(CLASS III) (TYPE 3 BEDDING)
CONNECT TO DROP INLET AT
STA. 1305+00 LT.
TYPE ST DROP INLET = 4' X 4'

STA. 1302+00 - CONSTRUCT
DROP INLET 3' RT. OF C.L. H=6'0"
W/ 24" x 2' R.C. PIPE CULVERT
(CLASS III) (TYPE 3 BEDDING)
CONNECT TO DROP INLET AT
STA. 1302+00 LT.
TYPE ST DROP INLET = 4' X 4'

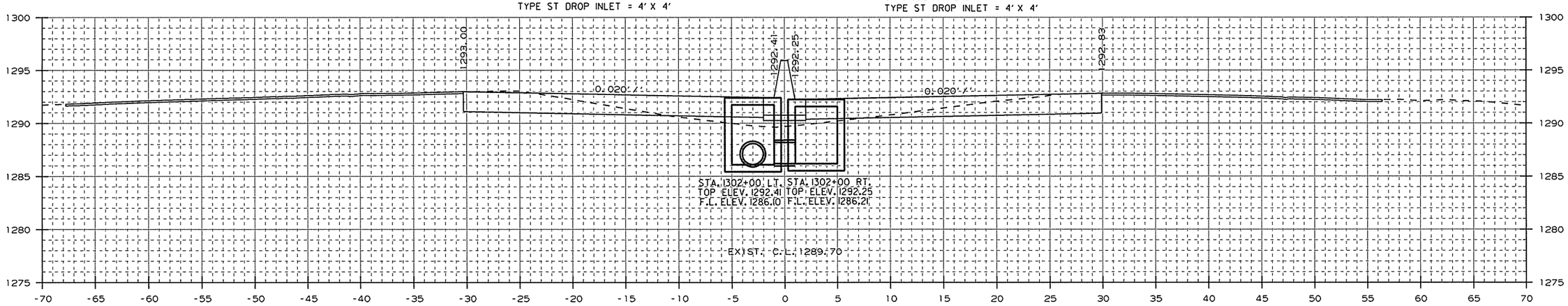

AREA CUT : 49.4
AREA FILL : 7.9

1302+00.00

CUT VOLUME : 180
FILL VOLUME : 37

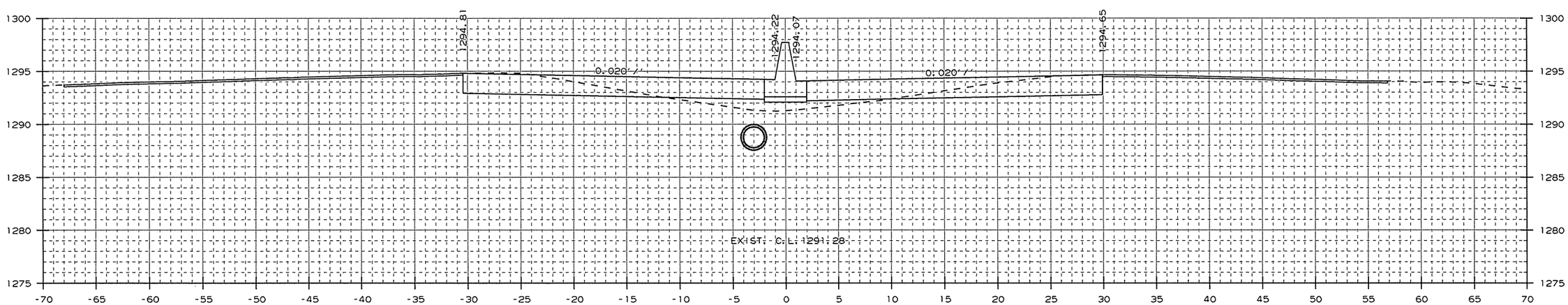

AREA CUT : 47.8
AREA FILL : 12.1

1301+00.00

CUT VOLUME : 183
FILL VOLUME : 41

CROSS SECTION STA. 1301+00 TO STA. 1302+00

USER: a15106
DESIGN FILE: G:\13106100_264toNHope\TRANSP\dgn\xsect\rCA0901_CX_02.dgn
PLOTTED: 1/13/2016 09:41
SCALE: 10:1
MODEL: CROSS SECTION SHEETS

Crafton, Tull & Associates Inc.

DATE REVISED	DATE FILMED	DATE REVISED	DATE FILMED

FED.RD. DIST.NO.	STATE	FED.AID PROJ.NO.	SHEET NO.	TOTAL SHEETS
6	ARK.			
JOB NO.		CA0901	395	452

2 CROSS SECTIONS

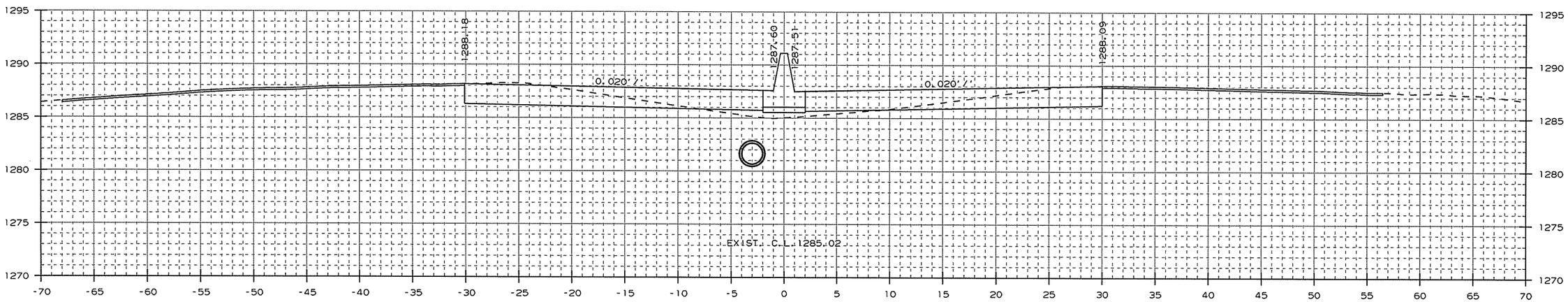

AREA CUT : 50.6
AREA FILL : 6.1

1304+00.00

CUT VOLUME : 182
FILL VOLUME : 25

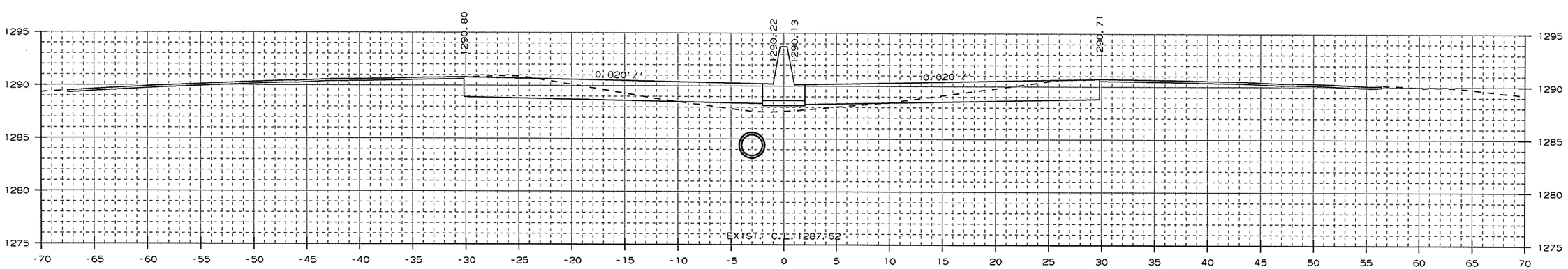

AREA CUT : 47.6
AREA FILL : 7.6

1303+00.00

CUT VOLUME : 180
FILL VOLUME : 29

CROSS SECTION STA. 1303+00 TO STA. 1304+00

USER: at5106
DESIGN FILE: G:\13106100_264toNHope\TRANSP\dgn\xsect\rCA0901_CX_02.dgn
PLOTTED: 1/13/2016 09:41
SCALE: 10:1
MODEL: CROSS SECTION SHEETS

Crafton, Tull & Associates Inc.

DATE REVISED	DATE FILMED	DATE REVISED	DATE FILMED

FED.RD. DIST.NO.	STATE	FED.AID PROJ.NO.	SHEET NO.	TOTAL SHEETS
6	ARK.			
JOB NO.		CA0901	396	452

2 CROSS SECTIONS

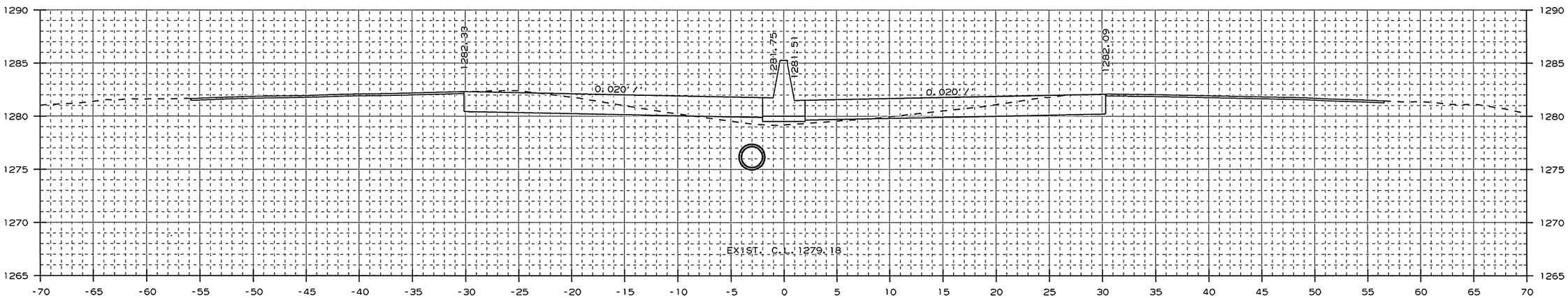

AREA CUT = 50.6
AREA FILL = 4.7

1306+00.00

CUT VOLUME = 181
FILL VOLUME = 23

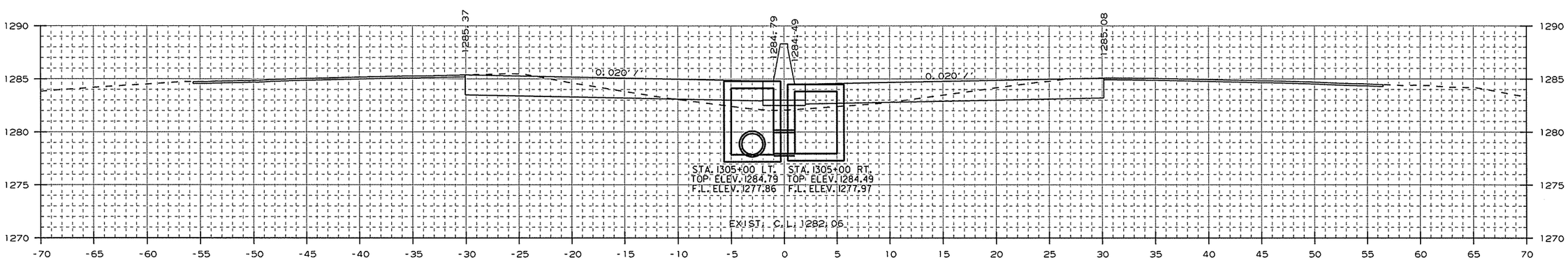

AREA CUT = 47.2
AREA FILL = 7.5

STA. 1305+00 - CONSTRUCT
DROP INLET 3' LT. OF C.L. H=6'11"
W/ 24" x 146' R.C. PIPE CULVERT
(CLASS III) (TYPE 3 BEDDING)
CONNECT TO DROP INLET AT
STA. 1306+50 LT.
TYPE ST DROP INLET = 4' X 4'

1305+00.00

STA. 1305+00 - CONSTRUCT
DROP INLET 3' RT. OF C.L. H=6'6"
W/ 24" x 2' R.C. PIPE CULVERT
(CLASS III) (TYPE 3 BEDDING)
CONNECT TO DROP INLET AT
STA. 1305+00 LT.
TYPE ST DROP INLET = 4' X 4'

CUT VOLUME = 181
FILL VOLUME = 25

CROSS SECTION STA. 1305+00 TO STA. 1306+00

USER: at5106
DESIGN FILE: G:\13106100_264toNHope\TRANSP\dgn\xsect\rCA0901_CX_02.dgn
PLOTTED: 1/13/2016 09:41
SCALE: 10:1
MODEL: CROSS SECTION SHEETS

Crafton, Tull & Associates Inc.

DATE REVISED	DATE FILMED	DATE REVISED	DATE FILMED

FED.RD. DIST.NO.	STATE	FED.AID PROJ.NO.	SHEET NO.	TOTAL SHEETS
6	ARK.			
JOB NO.		CA0901	397	452

2 CROSS SECTIONS

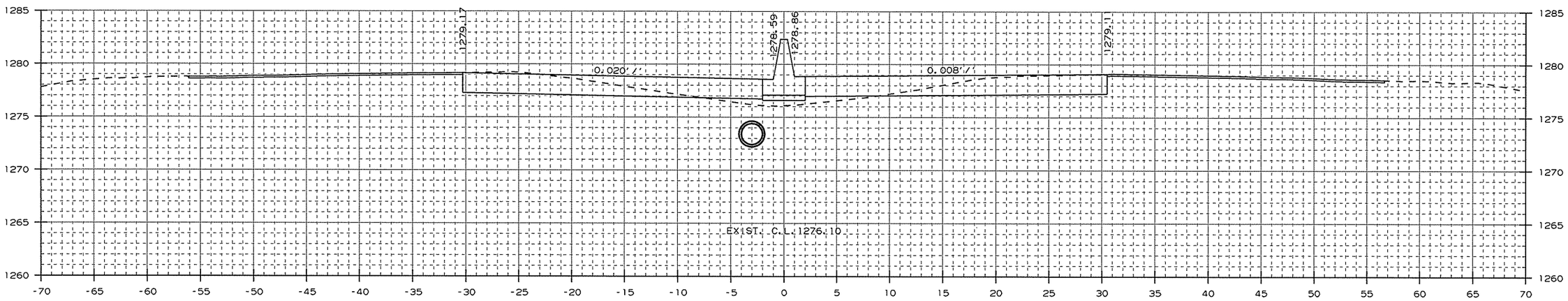

AREA CUT : 57.2
AREA FILL : 6.7

1307+00.00

CUT VOLUME : 101
FILL VOLUME : 12

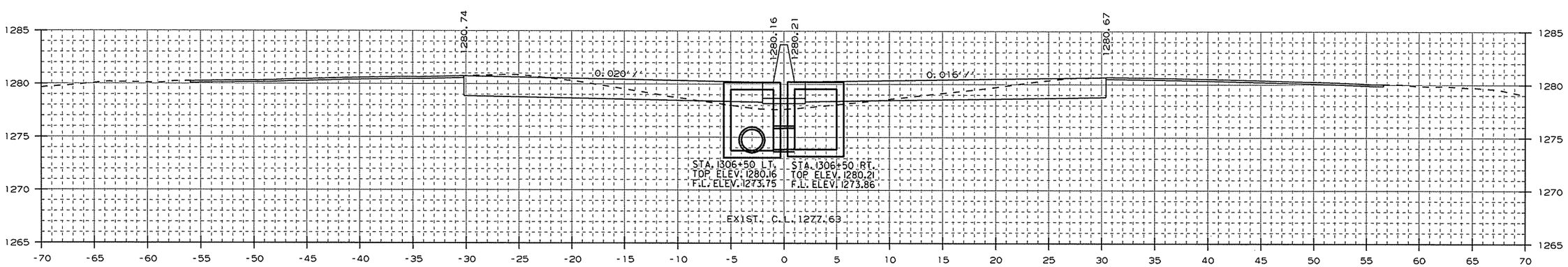

AREA CUT : 52.3
AREA FILL : 6.2

STA. 1306+50 - CONSTRUCT
DROP INLET 3' LT. OF C.L. H=6'5"
W/ 24" x 23' R.C. PIPE CULVERT
(CLASS III) (TYPE 3 BEDDING)
CONNECT TO DROP INLET AT
STA. 1308+85 LT.
TYPE ST DROP INLET = 4' X 4'

1306+50.00

STA. 1306+50 - CONSTRUCT
DROP INLET 3' RT. OF C.L. H=6'4"
W/ 24" x 2' R.C. PIPE CULVERT
(CLASS III) (TYPE 3 BEDDING)
CONNECT TO DROP INLET AT
STA. 1306+50 LT.
TYPE ST DROP INLET = 4' X 4'

CUT VOLUME : 95
FILL VOLUME : 10

CROSS SECTION STA. 1306+50 TO STA. 1307+00

USER: at5106
DESIGN FILE: G:\13106100_264toNHope\TRANSP\dgn\xsect\rCA0901_CX_02.dgn
PLOTTED: 1/13/2016 09:41
SCALE: 10:1
MODEL: CROSS SECTION SHEETS

Crafton, Tull & Associates Inc.

DATE REVISED	DATE FILMED	DATE REVISED	DATE FILMED

FED.RD. DIST.NO.	STATE	FED.AID PROJ.NO.	SHEET NO.	TOTAL SHEETS
6	ARK.			
JOB NO.		CA0901	398	452

2 CROSS SECTIONS

STA. 1308+85 - CONSTRUCT
DROP INLET 3' LT. OF C.L. H=5'6"
W/ 24" x 12' R.C. PIPE CULVERT
(CLASS III) (TYPE 3 BEDDING)
CONNECT TO EXIST DROP INLET
AT STA. 1309+00
TYPE ST DROP INLET = 4' X 4'

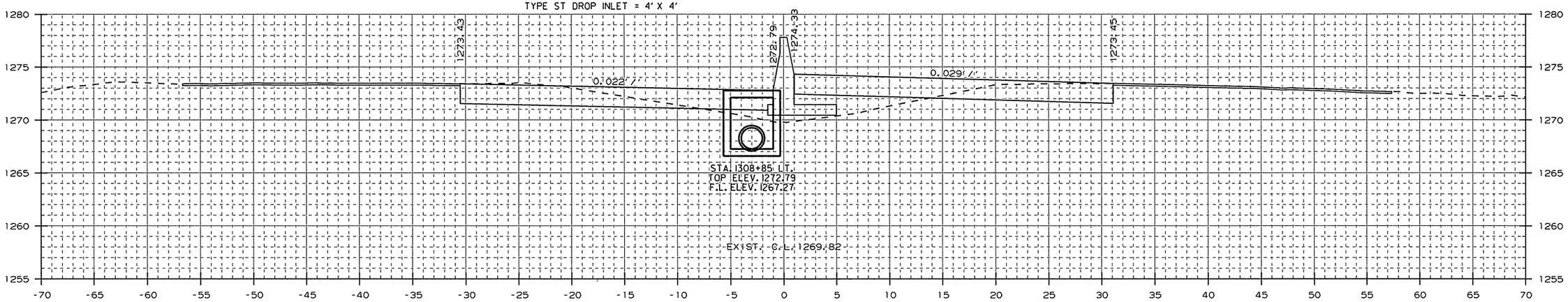

AREA CUT : 53.5
AREA FILL : 18.6

1308+85.00

CUT VOLUME : 168
FILL VOLUME : 45

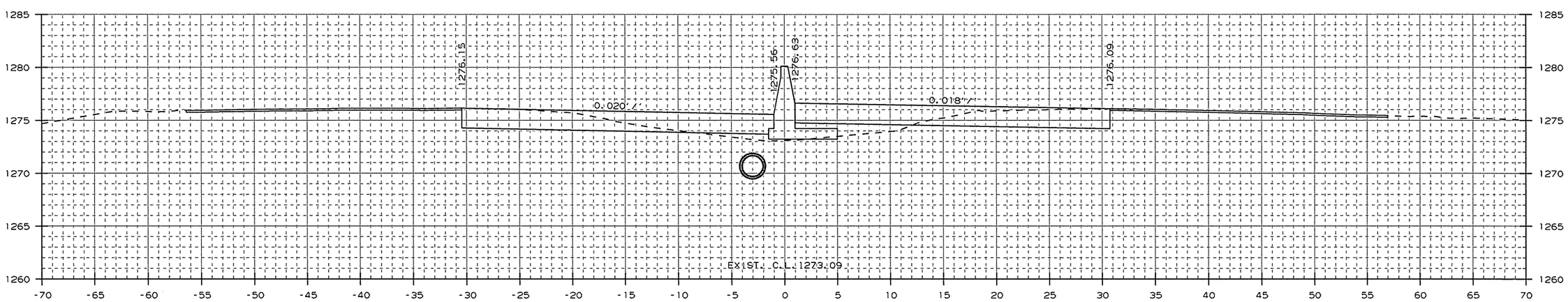

AREA CUT : 53.0
AREA FILL : 10.3

1308+00.00

CUT VOLUME : 204
FILL VOLUME : 31

CROSS SECTION STA. 1308+00 TO STA. 1308+85

USER: at506
DESIGN FILE: G:\13106100_264toNHope\TRANSP\dgn\xsect\rCA0901_CX_02.dgn
PLOTTED: 1/13/2016 09:41
SCALE: 10:1
MODEL: CROSS SECTION SHEETS

Crafton, Tull & Associates Inc.

DATE REVISED	DATE FILMED	DATE REVISED	DATE FILMED

FED.RD. DIST.NO.	STATE	FED.AID PROJ.NO.	SHEET NO.	TOTAL SHEETS
6	ARK.			
JOB NO.		CA0901	399	452

2 CROSS SECTIONS

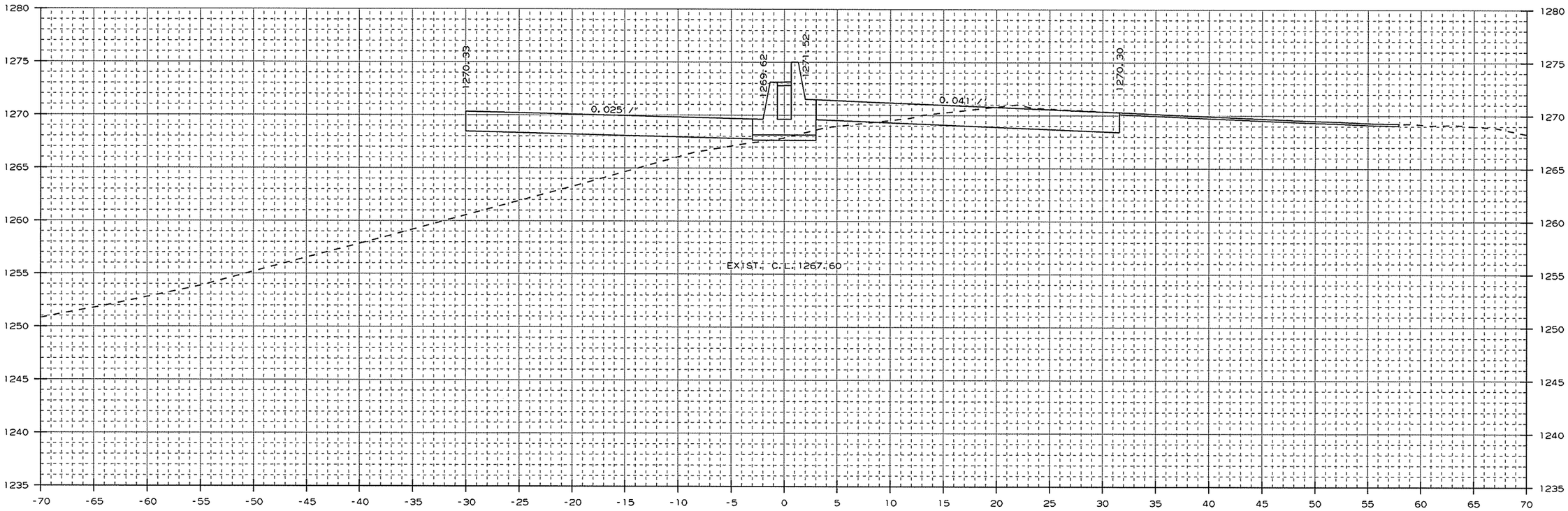

AREA CUT : 35.6
AREA FILL : 108.8

1309+86.70

CUT VOLUME : 137
FILL VOLUME : 214

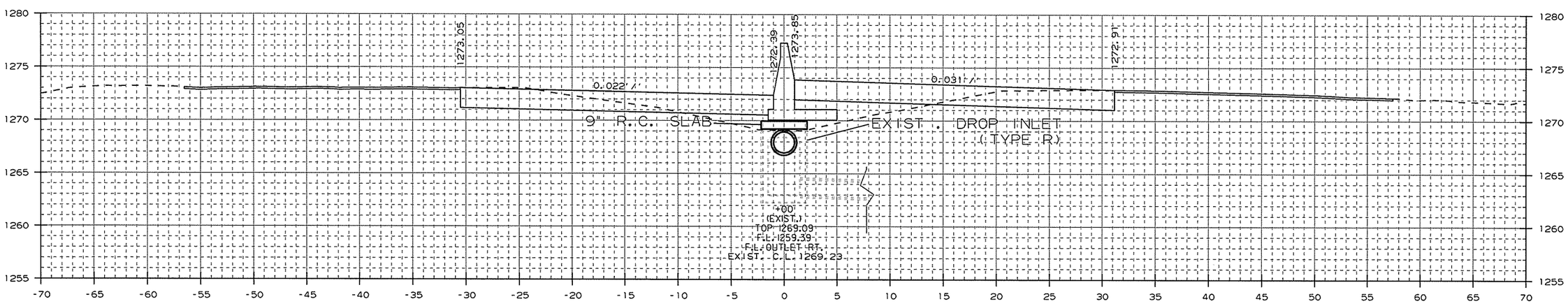

AREA CUT : 49.9
AREA FILL : 24.2

1309+00.00

CUT VOLUME : 29
FILL VOLUME : 12

STA. 1309+00 IN PLACE
TYPE R DROP INLET IN MEDIAN
W/ 18" X 105' PIPE OUTLET
W/ FES RT.
MODIFY

CROSS SECTION STA. 1309+00 TO STA. 1309+87

USER: at5106
DESIGN FILE: G:\13106100_264toNHope\TRANSP\dgn\xsect\rCA0901_CX_02.dgn
PLOTTED: 1/13/2016 09:41
SCALE: 10:1
MODEL: CROSS SECTION SHEETS

Crafton, Tull & Associates Inc.

DATE REVISED	DATE FILMED	DATE REVISED	DATE FILMED

FED.RD. DIST.NO.	STATE	FED.AID PROJ.NO.	SHEET NO.	TOTAL SHEETS
6	ARK.			
JOB NO.		CA0901	400	452

2 CROSS SECTIONS

STA. 1309+59.08 BR. END
I-49 LML BRIDGE (S.B.)
267'-0" CONT. W-BEAM UNIT
(48'-57'-57'-57'-48')
62'-0" CLEAR ROADWAY
BR. NO. A5958
STA. 1312+27.24 BR. END

STA. 1310+14.33 BR. END
I-49 RML BRIDGE (N.B.)
267'-0" CONT. W-BEAM UNIT
(48'-57'-57'-57'-48')
62'-0" CLEAR ROADWAY
BR. NO. B5958
STA. 1312+86.38 BR. END

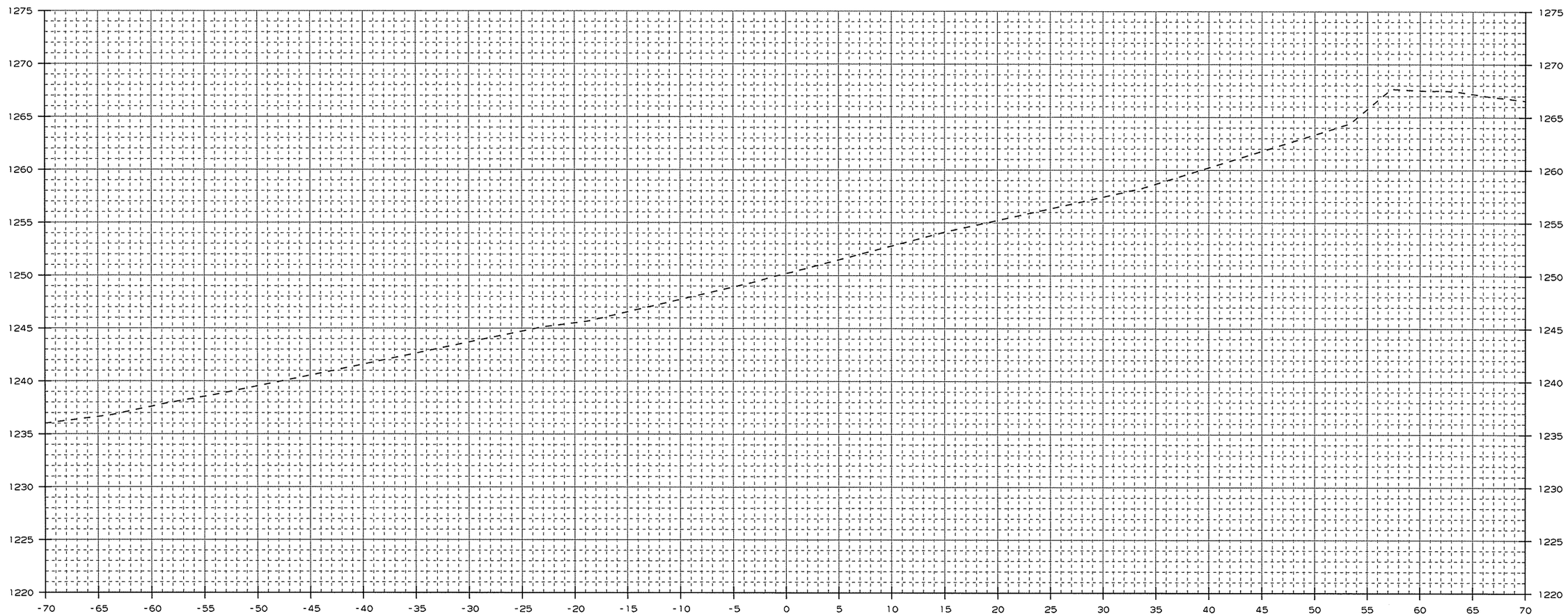

AREA CUT : 0.0
AREA FILL : 0.0

1310+36.00

CUT VOLUME : 33
FILL VOLUME : 99

CROSS SECTION STA. 1310+36 TO STA. 1310+36

USER: a15106
DESIGN FILE: G:\13106100_264toNHope\TRANSP\dgn\xsect\rCA0901_CX_02.dgn
PLOTTED: 1/13/2016 09:41
SCALE: 10:1
MODEL: CROSS SECTION SHEETS

Crafton, Tull & Associates Inc.

DATE REVISED	DATE FILMED	DATE REVISED	DATE FILMED

FED.RD. DIST.NO.	STATE	FED.AID PROJ.NO.	SHEET NO.	TOTAL SHEETS
6	ARK.			
JOB NO.		CA0901	401	452

2 CROSS SECTIONS

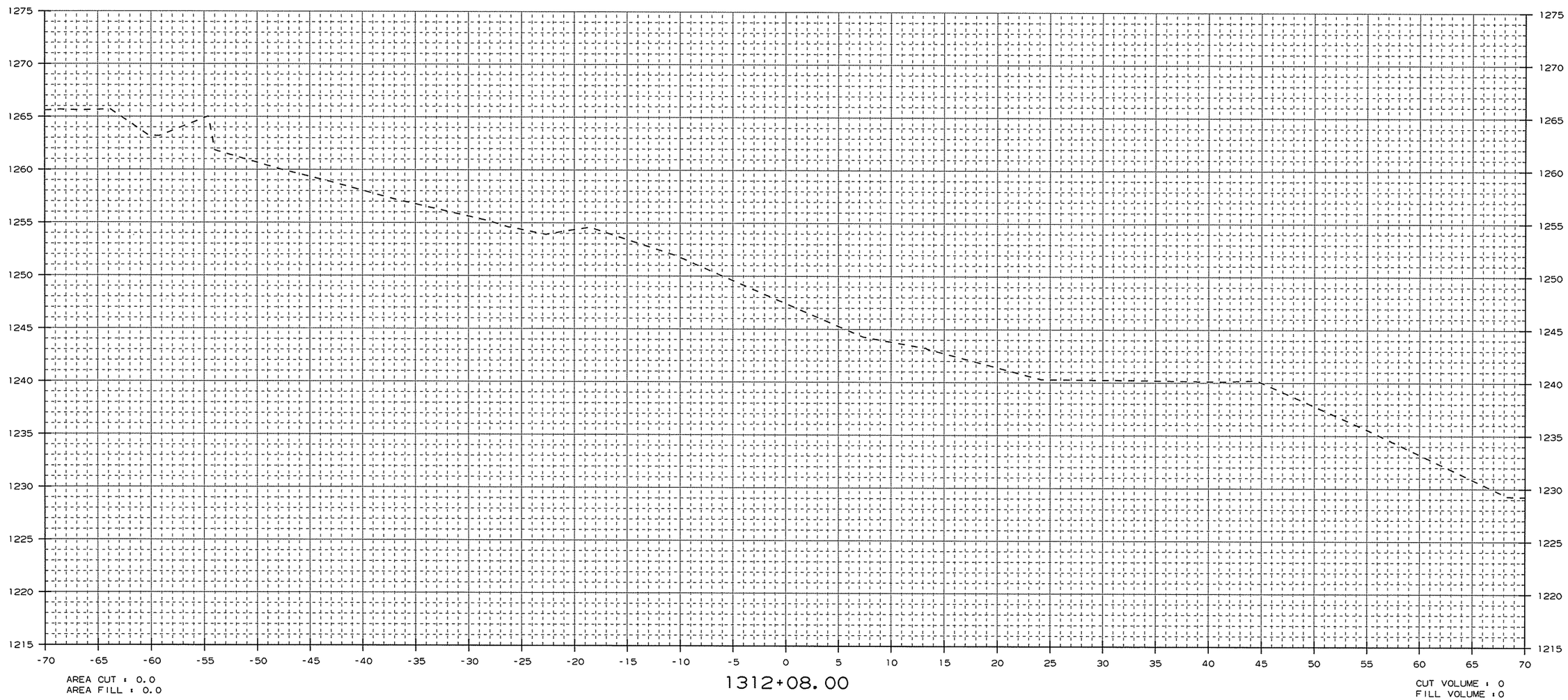

CROSS SECTION STA. 1312+08 TO STA. 1312+08

USER: at5106
DESIGN FILE: G:\13106100_264toNHope\TRANSP\dgn\xsect\rCA0901_CX_02.dgn
PLOTTED: 1/13/2016 09:42 SCALE: 10:1 MODEL: CROSS SECTION SHEETS

Crafton, Tull & Associates Inc.

DATE REVISED	DATE FILMED	DATE REVISED	DATE FILMED

FED.RD. DIST.NO.	STATE	FED.AID PROJ.NO.	SHEET NO.	TOTAL SHEETS
6	ARK.			
JOB NO.		CA0901	402	452

2 CROSS SECTIONS

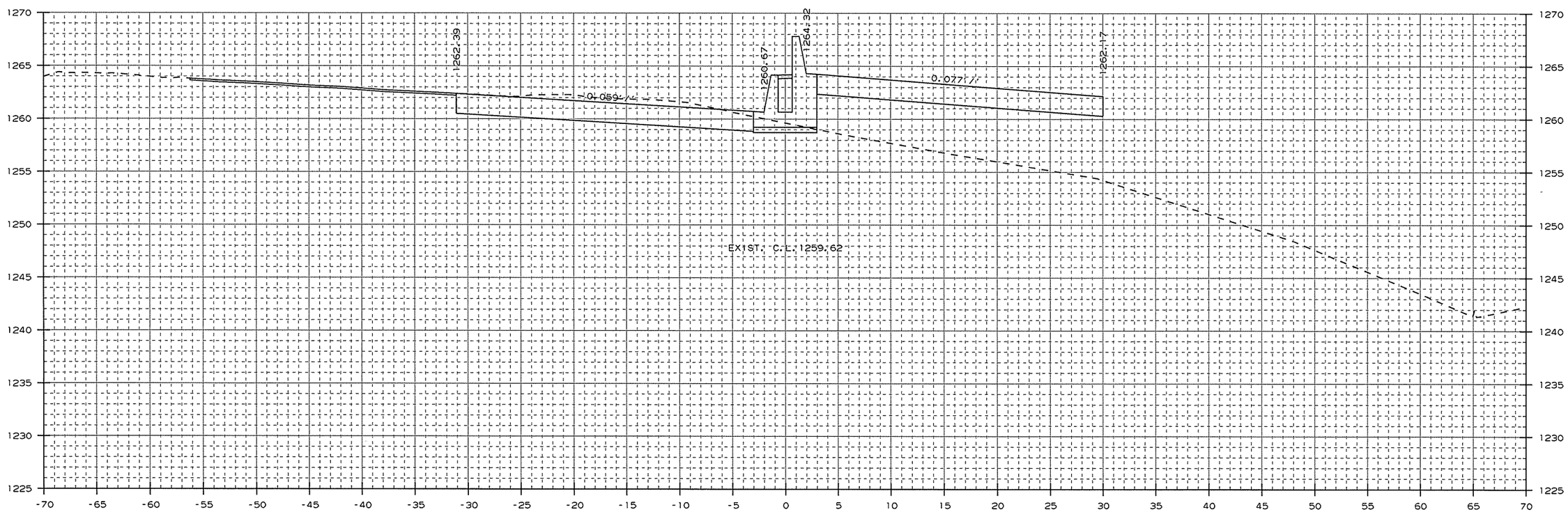

AREA CUT : 65.0
AREA FILL : 127.8

1312+57.12

CUT VOLUME : 59
FILL VOLUME : 116

CROSS SECTION STA. 1312+57 TO STA. 1312+57

USER: at5106
DESIGN FILE: G:\13106100_264toNHope\TRANSP\dgn\xsect\rCA0901_CX_02.dgn
PLOTTED: 1/13/2016 09:42
SCALE: 10:1
MODEL: CROSS SECTION SHEETS

Crafton, Tull & Associates Inc.

DATE REVISED	DATE FILMED	DATE REVISED	DATE FILMED

FED.RD. DIST.NO.	STATE	FED.AID PROJ.NO.	SHEET NO.	TOTAL SHEETS
6	ARK.			
JOB NO.		CA0901	403	452

2 CROSS SECTIONS

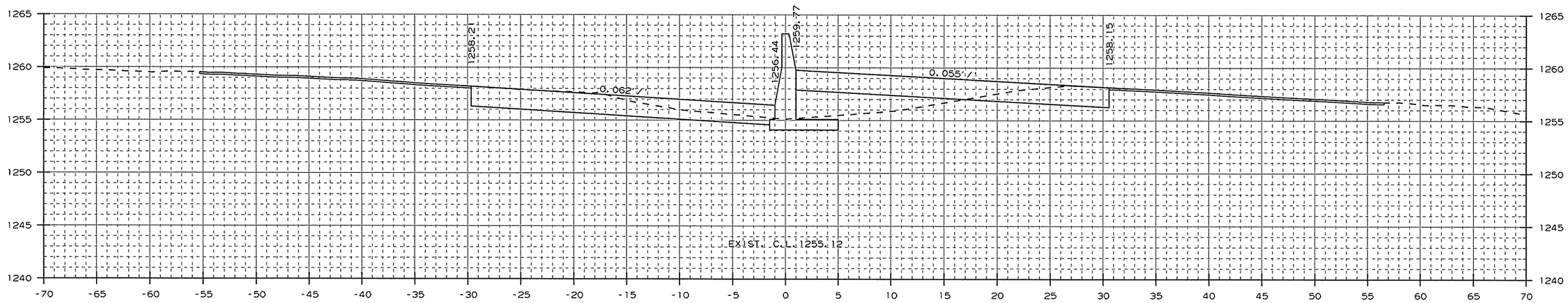

AREA CUT : 63.1
AREA FILL : 24.6

1314+00.00

CUT VOLUME : 271
FILL VOLUME : 60

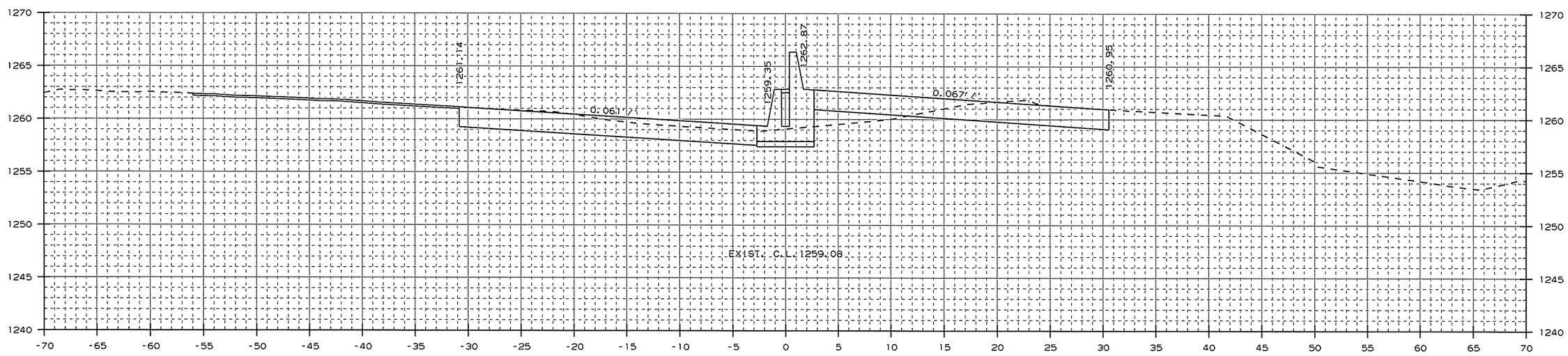

AREA CUT : 83.4
AREA FILL : 7.9

1313+00.00

CUT VOLUME : 118
FILL VOLUME : 108

CROSS SECTION STA. 1313+00 TO STA. 1314+00

USER: at5106
DESIGN FILE: G:\13106100_264toNHope\TRANSP\dgn\xsect\rCA0901_CX_02.dgn MODEL: CROSS SECTION SHEETS
PLOTTED: 1/13/2016 09:42 SCALE: 10:1

Crafton, Tull & Associates Inc.

DATE REVISED	DATE FILMED	DATE REVISED	DATE FILMED

FED.RD. DIST.NO.	STATE	FED.AID PROJ.NO.	SHEET NO.	TOTAL SHEETS
6	ARK.			
JOB NO.		CA0901	404	452

2 CROSS SECTIONS

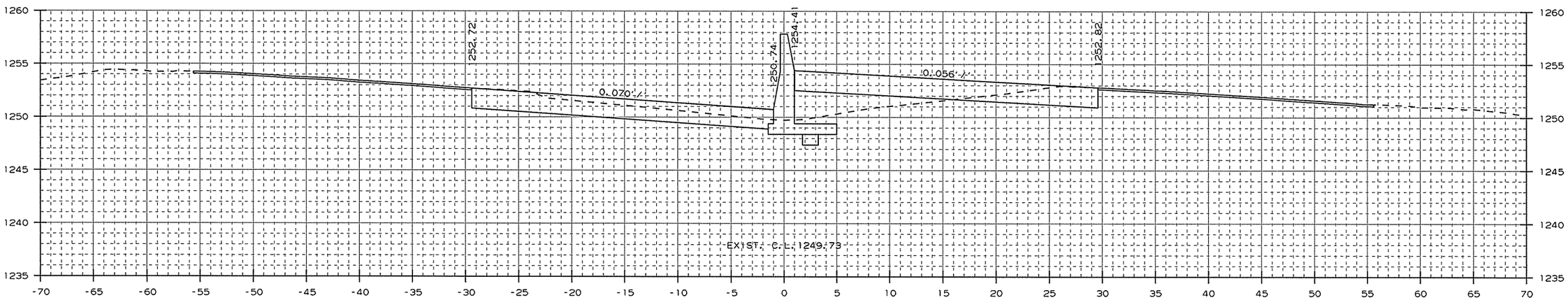

AREA CUT : 61.8
AREA FILL : 20.0

1316+00.00

CUT VOLUME : 236
FILL VOLUME : 70

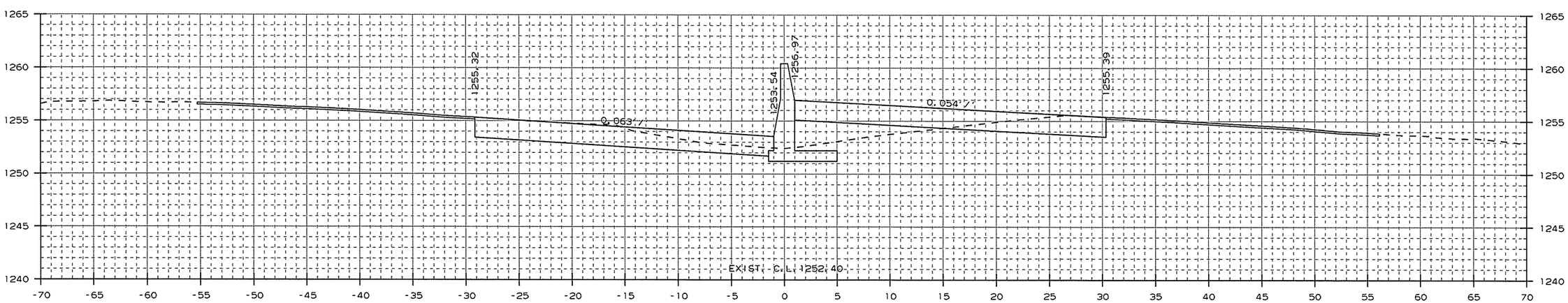

AREA CUT : 65.7
AREA FILL : 17.7

1315+00.00

CUT VOLUME : 239
FILL VOLUME : 78

CROSS SECTION STA. 1315+00 TO STA. 1316+00

USER: at5106
DESIGN FILE: G:\13106100_264toNHope\TRANSP\dgn\xsect\rCA0901_CX_02.dgn
PLOTTED: 1/13/2016 09:42
SCALE: 10:1
MODEL: CROSS SECTION SHEETS

Crafton, Tull & Associates Inc.

DATE REVISED	DATE FILMED	DATE REVISED	DATE FILMED

FED.RD. DIST.NO.	STATE	FED.AID PROJ.NO.	SHEET NO.	TOTAL SHEETS
6	ARK.			
JOB NO.		CA0901	405	452

2 CROSS SECTIONS

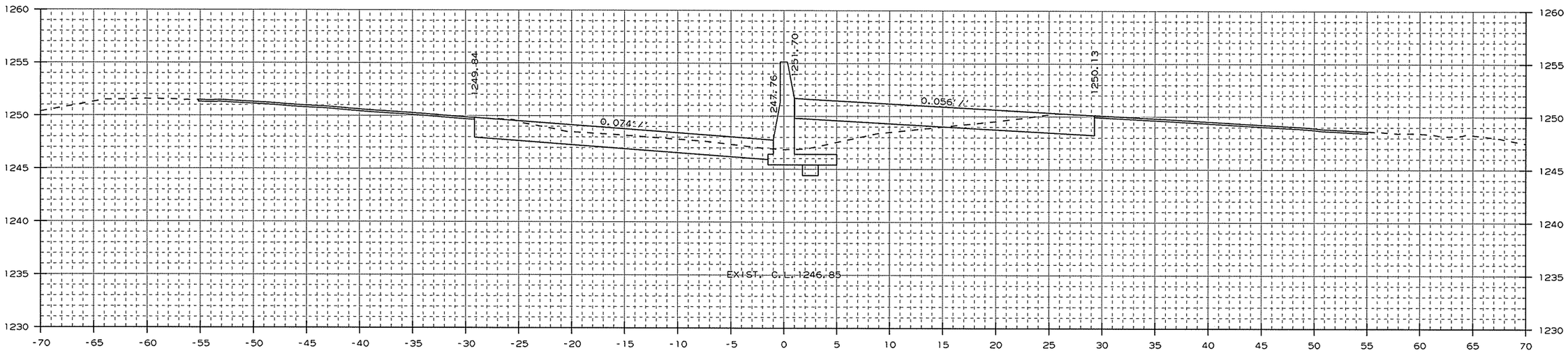

AREA CUT : 62.6
AREA FILL : 19.4

1317+42.42

CUT VOLUME : 99
FILL VOLUME : 31

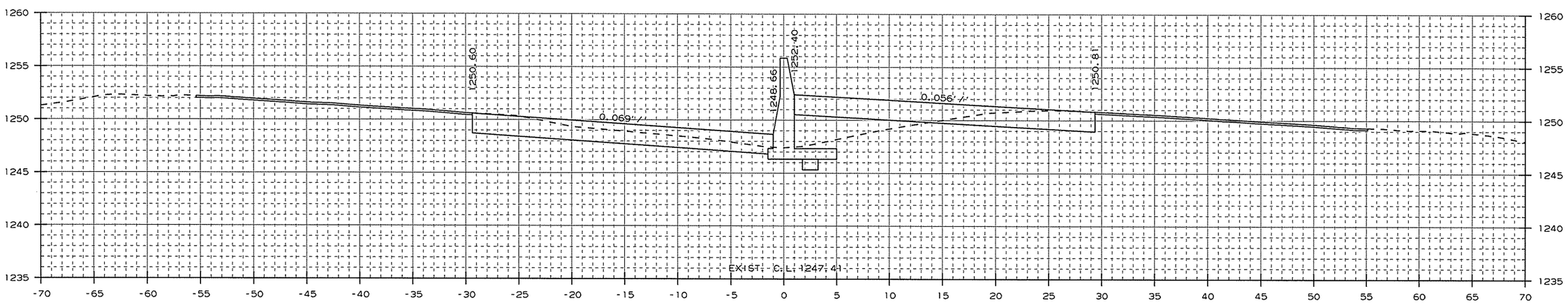

AREA CUT : 63.7
AREA FILL : 19.5

1317+00.00

CUT VOLUME : 232
FILL VOLUME : 73

CROSS SECTION STA. 1317+00 TO STA. 1317+42

USER: at5106
DESIGN FILE: G:\1306100_264toNHope\TRANSP\dgn\xsect\rCA0901_CX_02.dgn
PLOTTED: 1/13/2016 09:42
SCALE: 10:1
MODEL: CROSS SECTION SHEETS

Crafton, Tull & Associates Inc.

DATE REVISED	DATE FILMED	DATE REVISED	DATE FILMED

FED.RD. DIST.NO.	STATE	FED.AID PROJ.NO.	SHEET NO.	TOTAL SHEETS
6	ARK.			
JOB NO.		CA0901	406	452

2 CROSS SECTIONS

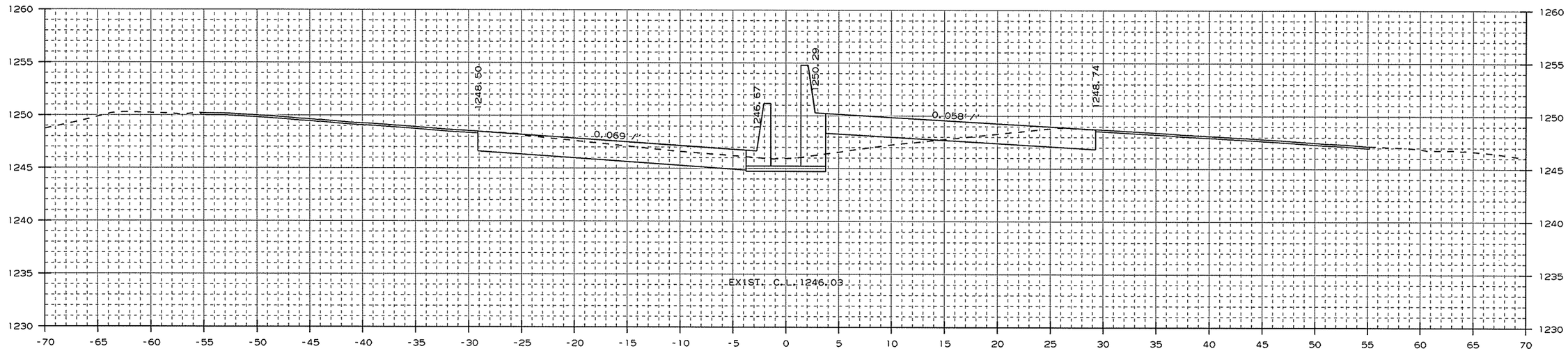

AREA CUT : 65.6
AREA FILL : 10.1

1318+42.42

CUT VOLUME : 96
FILL VOLUME : 22

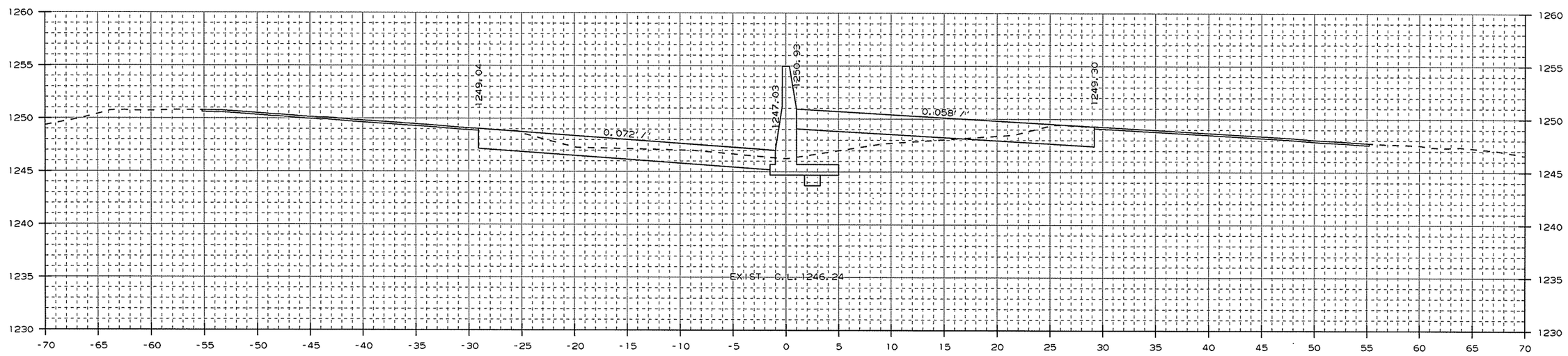

AREA CUT : 57.2
AREA FILL : 18.3

1318+00.00

CUT VOLUME : 128
FILL VOLUME : 40

CROSS SECTION STA. 1318+00 TO STA. 1318+42

USER: at5106
DESIGN FILE: G:\13106100_264toNHope\TRANSP\dgn\xsect\rCA0901_CX_02.dgn
PLOTTED: 1/13/2016 09:42
SCALE: 10:1
MODEL: CROSS SECTION SHEETS

Crafton, Tull & Associates Inc.

DATE REVISED	DATE FILMED	DATE REVISED	DATE FILMED

FED.RD. DIST.NO.	STATE	FED.AID PROJ.NO.	SHEET NO.	TOTAL SHEETS
6	ARK.			
JOB NO.		CA0901	407	452

2 CROSS SECTIONS

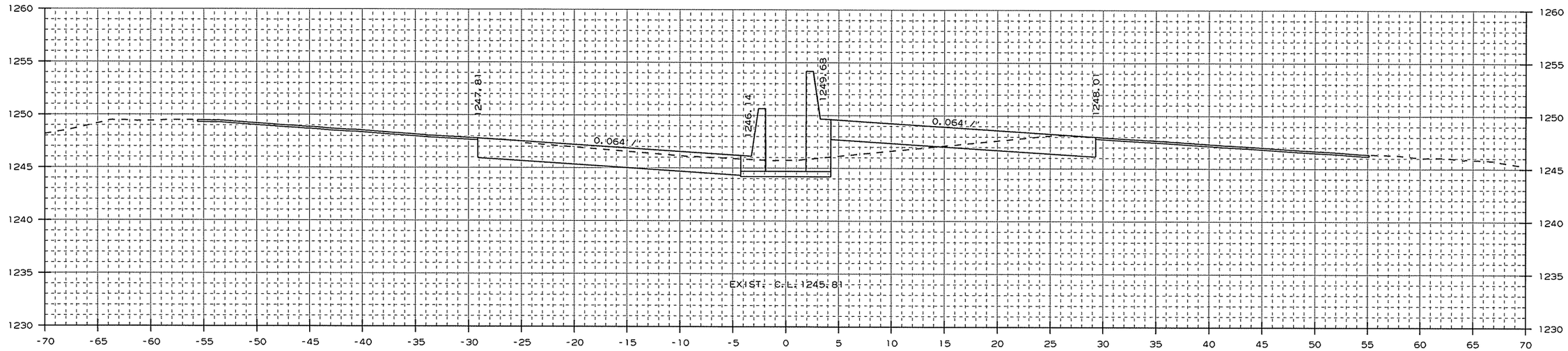

AREA CUT : 67.7
AREA FILL : 21.8

1319+21.55

CUT VOLUME : 57
FILL VOLUME : 12

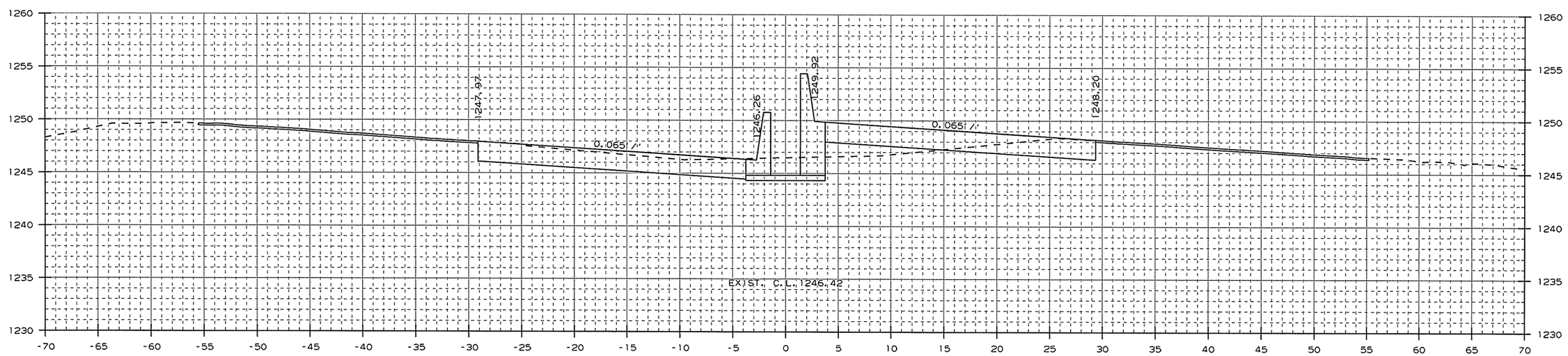

AREA CUT : 74.5
AREA FILL : 9.1

1319+00.00

CUT VOLUME : 149
FILL VOLUME : 20

CROSS SECTION STA. 1319+00 TO STA. 1319+22

USER: a15106
DESIGN FILE: G:\13106100_264toNHope\TRANSP\dgn\xsect\rCA0901_CX_02.dgn
PLOTTED: 1/13/2016 09:42
SCALE: 10:1
MODEL: CROSS SECTION SHEETS

Crafton, Tull & Associates Inc.

DATE REVISED	DATE FILMED	DATE REVISED	DATE FILMED

FED.RD. DIST.NO.	STATE	FED.AID PROJ.NO.	SHEET NO.	TOTAL SHEETS
6	ARK.			
JOB NO.		CA0901	408	452

2 CROSS SECTIONS

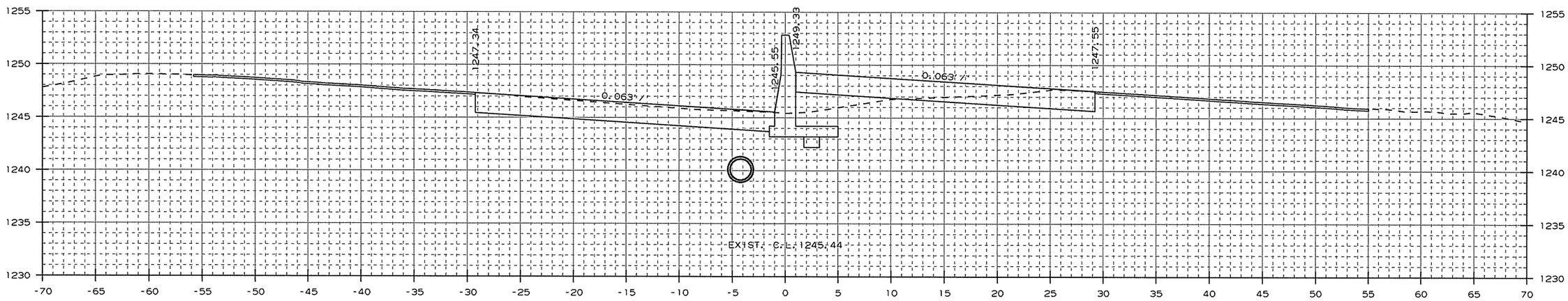

AREA CUT : 77.4
AREA FILL : 10.0

1320+00.00

CUT VOLUME : 136
FILL VOLUME : 21

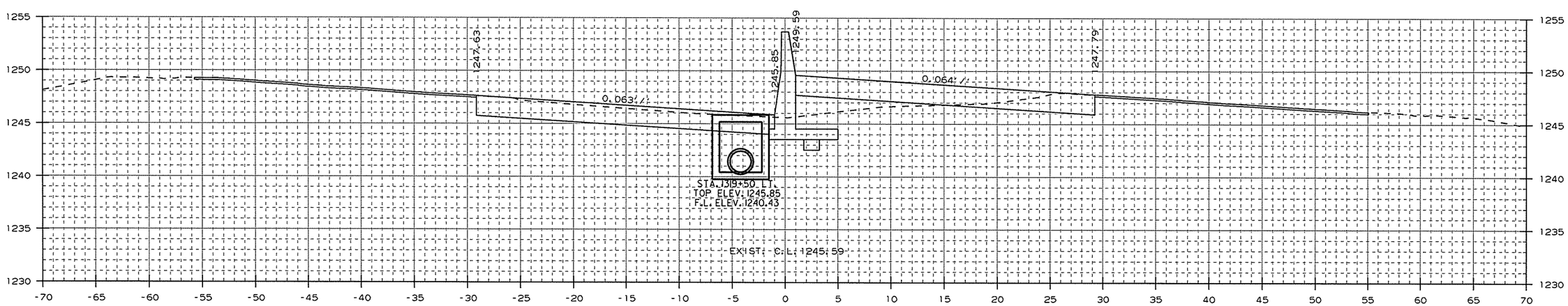

AREA CUT : 69.6
AREA FILL : 12.5

STA. 1319+50 - CONSTRUCT
DROP INLET 3' LT. OF C.L. H=5'5"
W/ 24" x 23' R.C. PIPE CULVERT
(CLASS III) (TYPE 3 BEDDING)
CONNECT TO DROP INLET AT
STA. 1321+85 LT.
TYPE ST DROP INLET = 4' X 4'

1319+50.00

CUT VOLUME : 72
FILL VOLUME : 18

CROSS SECTION STA. 1319+50 TO STA. 1320+00

USER: at5106
DESIGN FILE: G:\13106100_264toNHope\TRANSP\dgn\xsect\rCA0901_CX_02.dgn
PLOTTED: 1/13/2016 09:42
SCALE: 10:1
MODEL: CROSS SECTION SHEETS

Crafton, Tull & Associates Inc.

DATE REVISED	DATE FILMED	DATE REVISED	DATE FILMED

FED.RD. DIST.NO.	STATE	FED.AID PROJ.NO.	SHEET NO.	TOTAL SHEETS
6	ARK.			
JOB NO.		CA0901	409	452

2 CROSS SECTIONS

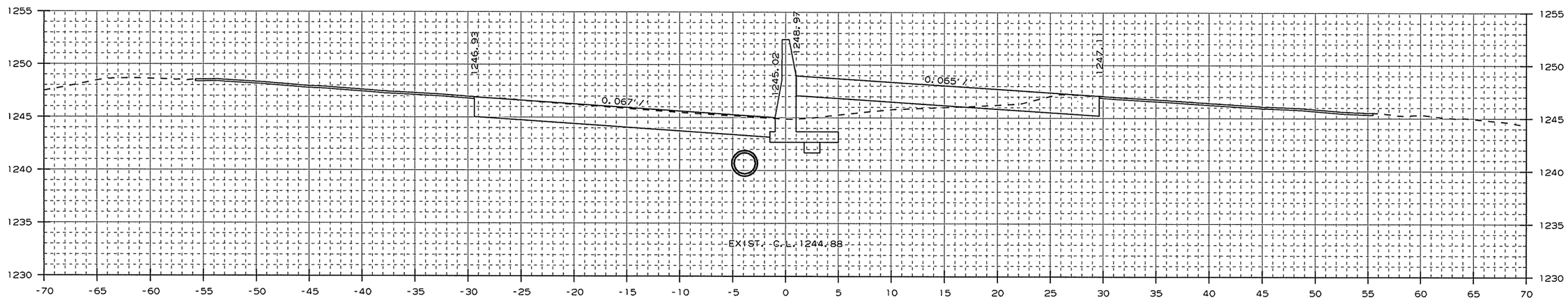

AREA CUT : 74.0
AREA FILL : 15.8

1321+00.00

CUT VOLUME : 216
FILL VOLUME : 38

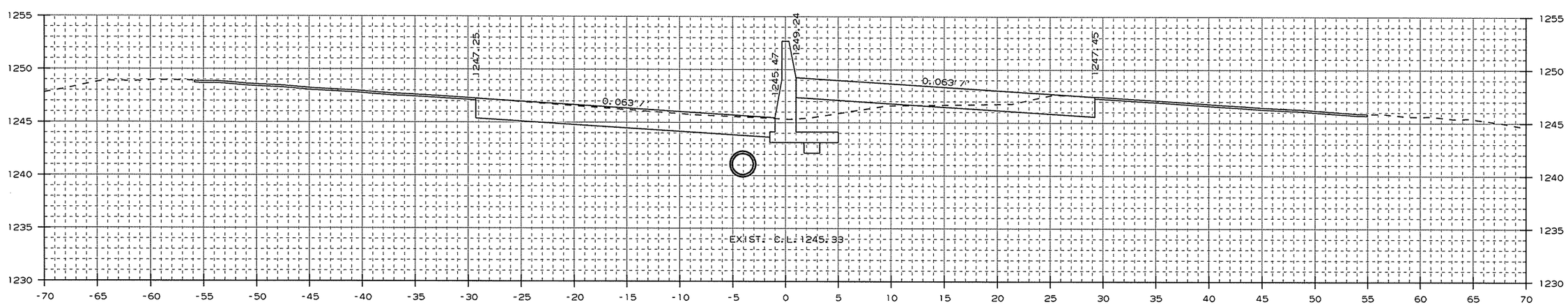

AREA CUT : 74.9
AREA FILL : 10.5

1320+21.55

CUT VOLUME : 61
FILL VOLUME : 8

CROSS SECTION STA. 1320+22 TO STA. 1321+00

USER: at5106
DESIGN FILE: G:\13106100_264toNHope\TRANSP\dgn\xsect\rCA0901_CX_02.dgn
PLOTTED: 1/13/2016 09:42 SCALE: 10:1 MODEL: CROSS SECTION SHEETS

Crafton, Tull & Associates Inc.

DATE REVISED	DATE FILMED	DATE REVISED	DATE FILMED

FED.RD. DIST.NO.	STATE	FED.AID PROJ.NO.	SHEET NO.	TOTAL SHEETS
6	ARK.			
JOB NO.		CA0901	410	452

2 CROSS SECTIONS

STA. 1322+00 IN PLACE
TYPE R DROP INLET IN MEDIAN
W/ 18" X 95' PIPE OUTLET
W/ FES RT.
MODIFY

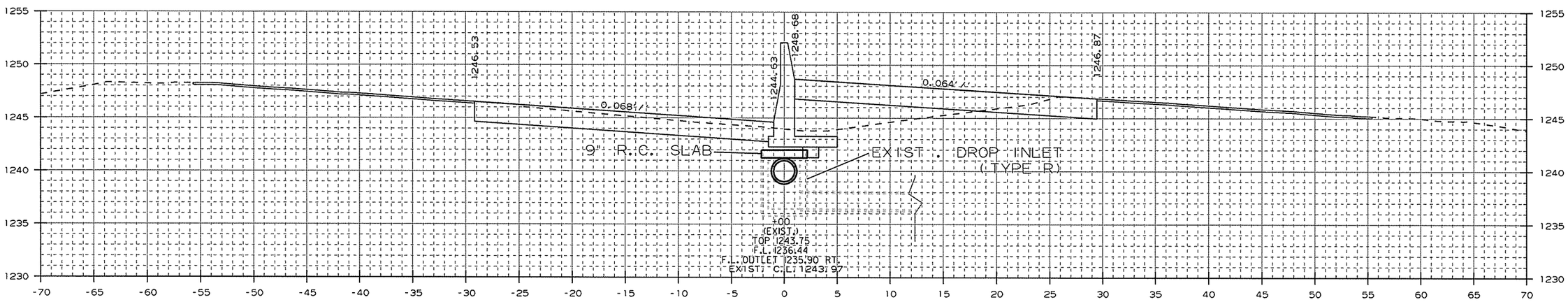

AREA CUT : 64.7
AREA FILL : 28.6

1322+00.00

CUT VOLUME : 37
FILL VOLUME : 15

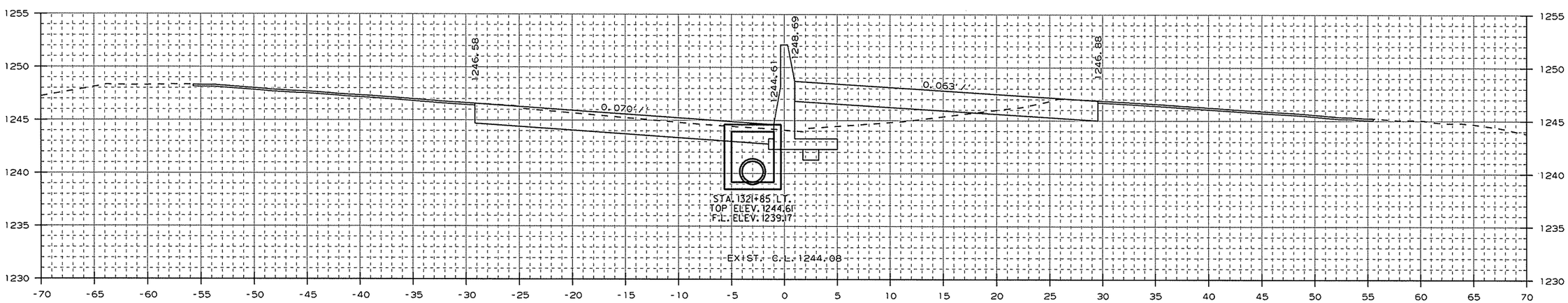

AREA CUT : 66.7
AREA FILL : 24.7

1321+85.00

CUT VOLUME : 221
FILL VOLUME : 64

STA. 1321+85 - CONSTRUCT
DROP INLET 3' LT. OF C.L. H=5'5"
W/ 24" x 12' R.C. PIPE CULVERT
(CLASS III) (TYPE 3 BEDDING)
CONNECT TO EXIST. DROP INLET
AT STA. 1322+00
TYPE ST DROP INLET = 4' X 4'

CROSS SECTION STA. 1321+85 TO STA. 1322+00

USER: at5106
DESIGN FILE: G:\13106100_264toNHope\TRANSP\dgn\xsect\rCA0901_CX_03.dgn
PLOTTED: 1/13/2016 09:42
SCALE: 10:1
MODEL: CROSS SECTION SHEETS

Crafton, Tull & Associates Inc.

DATE REVISED	DATE FILMED	DATE REVISED	DATE FILMED

FED.RD. DIST.NO.	STATE	FED.AID PROJ.NO.	SHEET NO.	TOTAL SHEETS
6	ARK.			
JOB NO.		CA0901	411	452

2 CROSS SECTIONS

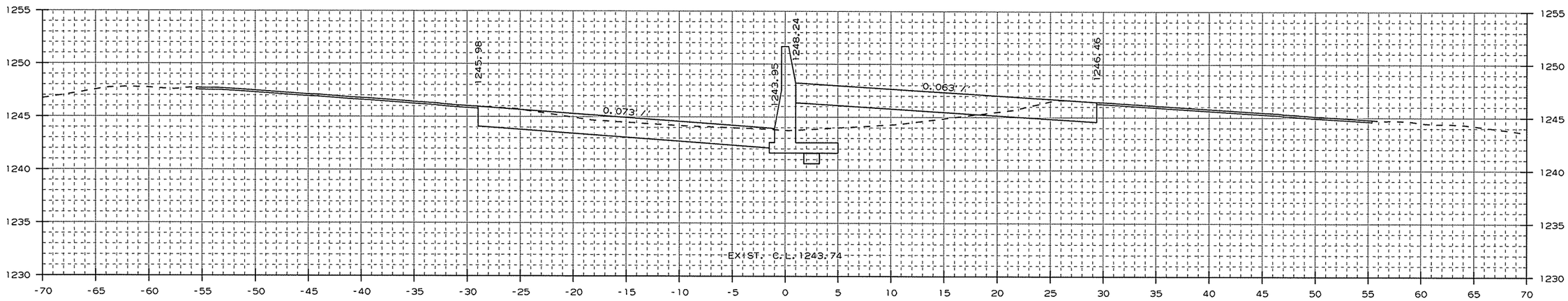

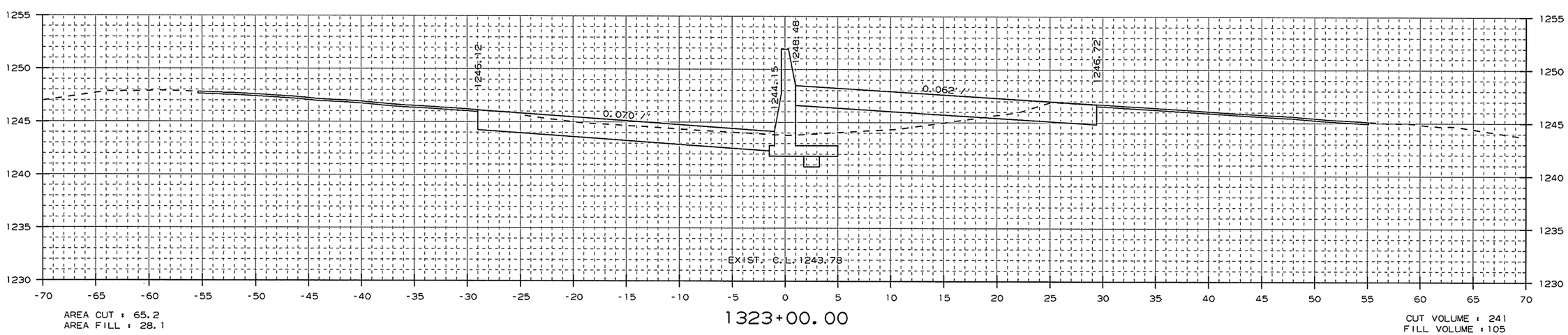

CROSS SECTION STA. 1323+00 TO STA. 1324+00

USER: at5106
DESIGN FILE: G:\13106100_264toNHope\TRANSP\dgn\xsect\rCA0901_CX_03.dgn MODEL: CROSS SECTION SHEETS
PLOTTED: 1/13/2016 09:42 SCALE: 10:1

Crafton, Tull & Associates Inc.

DATE REVISED	DATE FILMED	DATE REVISED	DATE FILMED

FED.RD. DIST.NO.	STATE	FED.AID PROJ.NO.	SHEET NO.	TOTAL SHEETS
6	ARK.			
JOB NO.		CA0901	412	452

2 CROSS SECTIONS

STA. 1326+00 IN PLACE
TRIPLE 10' X 6' X 177' R.C.
BOX CULVERT (SPAN 32'-11")
RETAIN

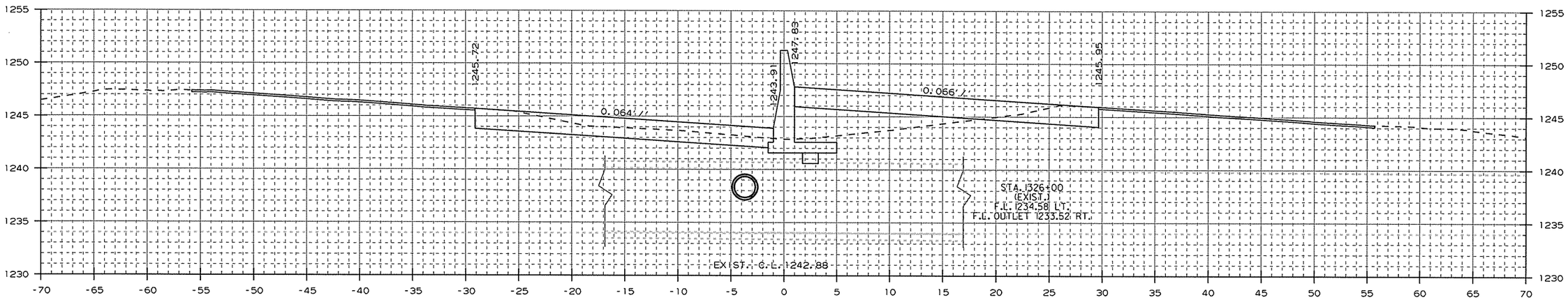

AREA CUT : 54.7
AREA FILL : 28.7

1326+00.00

CUT VOLUME : 207
FILL VOLUME : 106

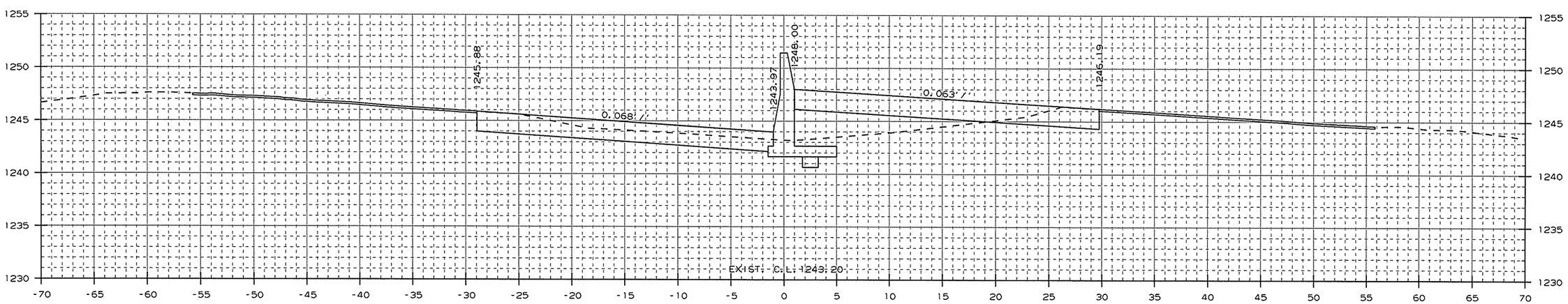

AREA CUT : 57.1
AREA FILL : 28.5

1325+00.00

CUT VOLUME : 231
FILL VOLUME : 99

CROSS SECTION STA. 1325+00 TO STA. 1326+00

USER: at5106
DESIGN FILE: G:\13106100_264toNHope\TRANSP\dgn\xsect\rCA0901_CX_03.dgn
PLOTTED: 1/13/2016 09:42
SCALE: 10:1
MODEL: CROSS SECTION SHEETS

Crafton, Tull & Associates Inc.

DATE REVISED	DATE FILMED	DATE REVISED	DATE FILMED

FED.RD. DIST.NO.	STATE	FED.AID PROJ.NO.	SHEET NO.	TOTAL SHEETS
6	ARK.			
JOB NO.		CA0901	413	452

2 CROSS SECTIONS

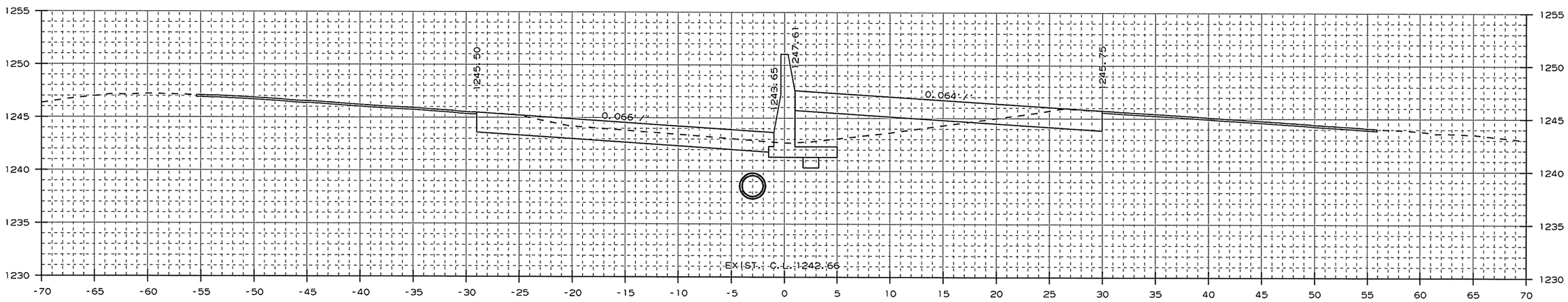

AREA CUT : 58.4
AREA FILL : 26.8

1327+00.00

CUT VOLUME : 107
FILL VOLUME : 48

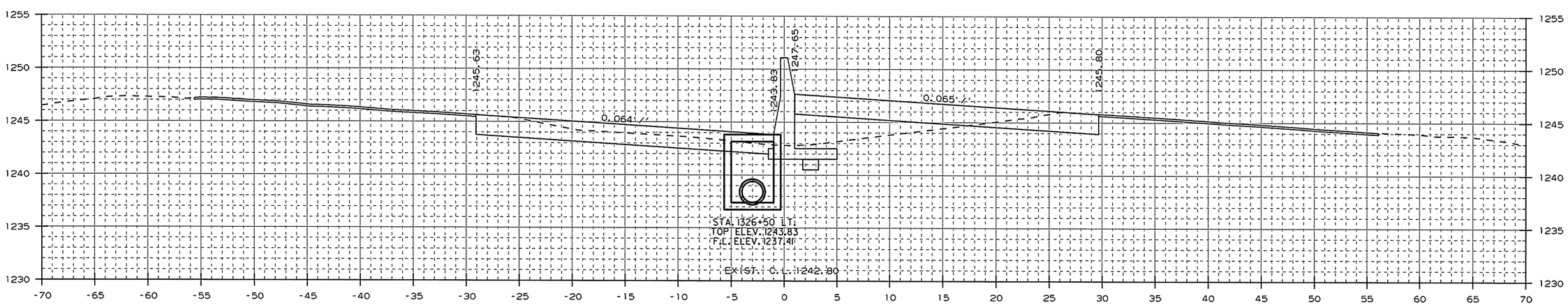

AREA CUT : 57.3
AREA FILL : 25.3

STA. 1326+50 - CONSTRUCT
DROP INLET 3' LT. OF C.L. H=6'5"
W/ 24" x 34' R.C. PIPE CULVERT
(CLASS III) (TYPE 3 BEDDING)
CONNECT TO EXIST. BOX CULVERT
STA. 1326+00 LT.
TYPE ST DROP INLET = 4' X 4'

1326+50.00

CUT VOLUME : 104
FILL VOLUME : 50

CROSS SECTION STA. 1326+50 TO STA. 1327+00

USER: at5106
DESIGN FILE: G:\13106100_264toNHope\TRANSP\dgn\xsect\rCA0901_CX_03.dgn
PLOTTED: 1/13/2016 09:42
SCALE: 10:1
MODEL: CROSS SECTION SHEETS

Crafton, Tull & Associates Inc.

DATE REVISED	DATE FILMED	DATE REVISED	DATE FILMED

FED.RD. DIST.NO.	STATE	FED.AID PROJ.NO.	SHEET NO.	TOTAL SHEETS
6	ARK.			
JOB NO.		CA0901	414	452

2 CROSS SECTIONS

STA. 1328+40 - CONSTRUCT
DROP INLET 3' LT. OF C.L. H=5'8"
W/ 24" x 186' R.C. PIPE CULVERT
(CLASS III) (TYPE 3 BEDDING)
CONNECT TO DROP INLET
STA. 1326+50 LT.
TYPE ST DROP INLET = 4' X 4'

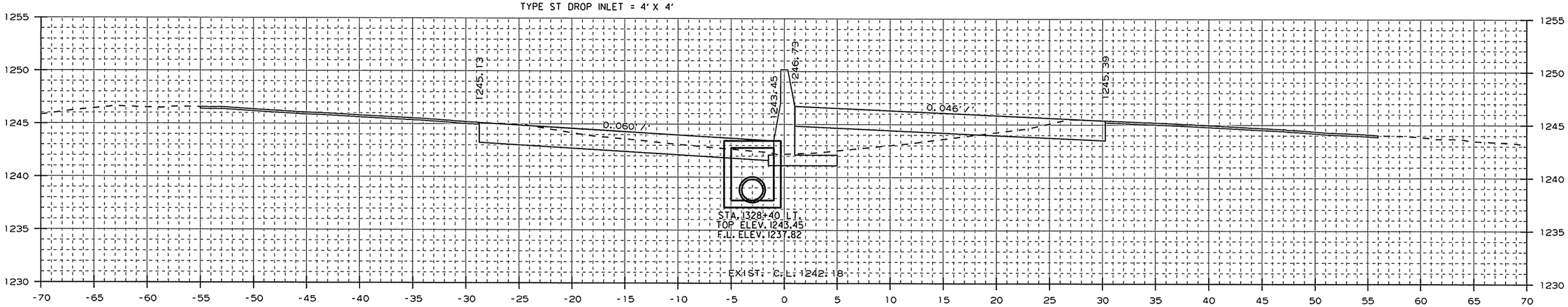

AREA CUT : 54.5
AREA FILL : 24.8

1328+40.00

CUT VOLUME : 81
FILL VOLUME : 37

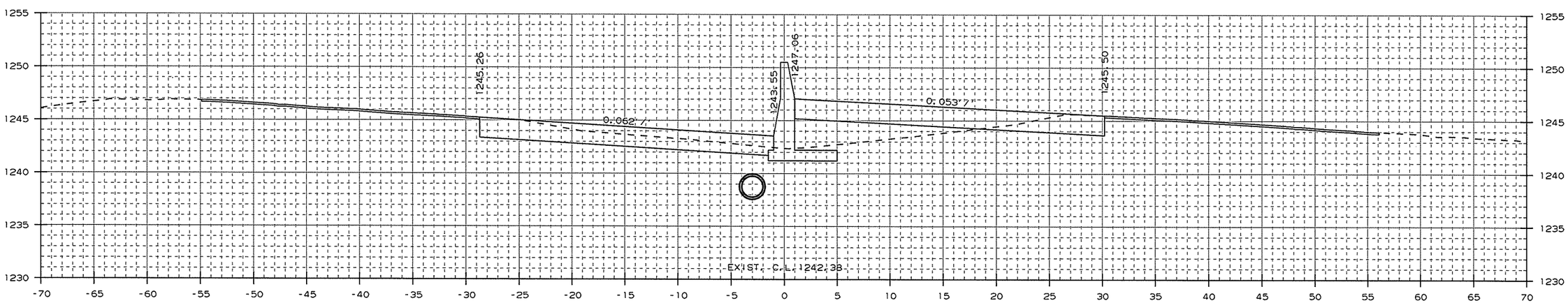

AREA CUT : 54.3
AREA FILL : 25.5

1328+00.00

CUT VOLUME : 209
FILL VOLUME : 97

CROSS SECTION STA. 1328+00 TO STA. 1328+40

USER: at5106
DESIGN FILE: G:\13106100_264toNHope\TRANSP\dgn\xsect\rCA0901_CX_03.dgn
PLOTTED: 1/13/2016 09:42
SCALE: 10:1
MODEL: CROSS SECTION SHEETS

Crafton, Tull & Associates Inc.

DATE REVISED	DATE FILMED	DATE REVISED	DATE FILMED

FED.RD. DIST.NO.	STATE	FED.AID PROJ.NO.	SHEET NO.	TOTAL SHEETS
6	ARK.			
JOB NO.		CA0901	415	452

2 CROSS SECTIONS

STA. 1329+05 IN PLACE
JCT. BOX IN MEDIAN
W/ 18" X 91' PIPE OUTLET TO RT.
MODIFY

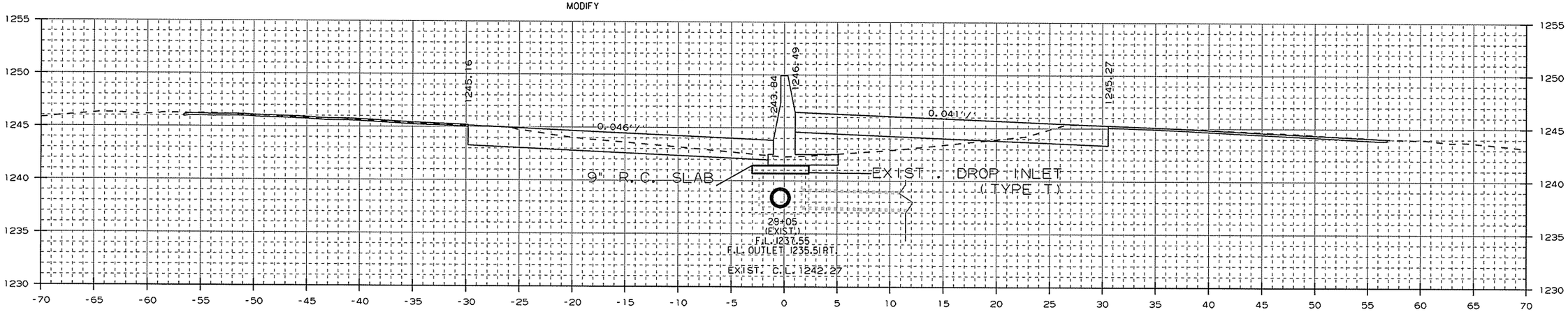

AREA CUT : 48.8
AREA FILL : 22.3

1329+00.00 (SKEWED 11°20' 48" RT. FWD.)

CUT VOLUME : 72
FILL VOLUME : 35

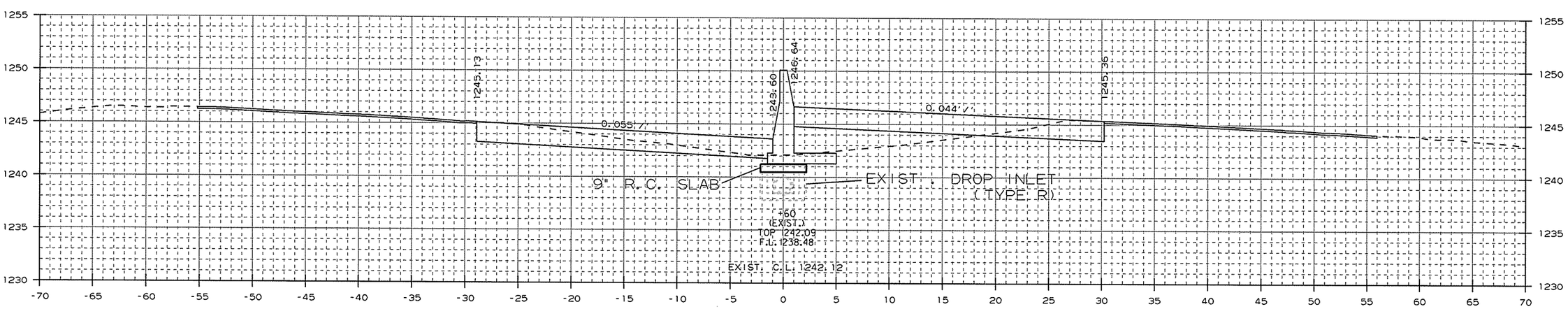

AREA CUT : 48.9
AREA FILL : 24.7

1328+60.00

CUT VOLUME : 38
FILL VOLUME : 18

STA. 1328+60 IN PLACE
TYPE R DROP INLET IN MEDIAN
W/ 18" X 43' R.C. PIPE
TO EXIST JCT. AT 1329+05
MODIFY

CROSS SECTION STA. 1328+60 TO STA. 1329+00

USER: a+506
DESIGN FILE: G:\13106100_264toNHope\TRANSP\dgn\xsect\rCA0901_CX_03.dgn
PLOTTED: 1/13/2016 09:43
SCALE: 10:1
MODEL: CROSS SECTION SHEETS

Crafton, Tull & Associates Inc.

DATE REVISED	DATE FILMED	DATE REVISED	DATE FILMED

FED.RD. DIST.NO.	STATE	FED.AID PROJ.NO.	SHEET NO.	TOTAL SHEETS
6	ARK.			
JOB NO.		CA0901	416	452

2 CROSS SECTIONS

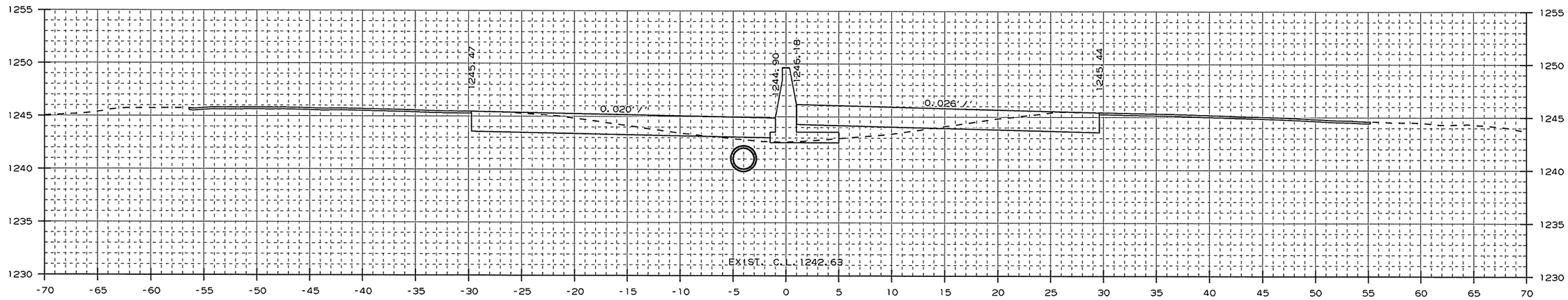

AREA CUT : 27.0
AREA FILL : 10.2

1330+00.00

CUT VOLUME : 16
FILL VOLUME : 5

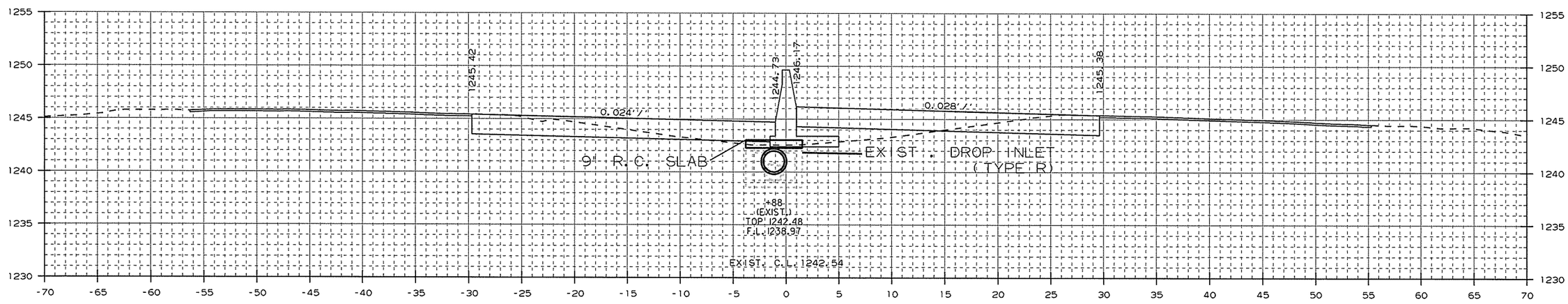

AREA CUT : 43.7
AREA FILL : 11.8

1329+88.00

CUT VOLUME : 151
FILL VOLUME : 56

STA. 1329+88 IN PLACE
TYPE R DROP INLET IN MEDIAN
W/ 24" X 80' R.C. PIPE OUTLET
TO EXIST JCT. BOX AT 1329+05
MODIFY

CROSS SECTION STA. 1329+88 TO STA. 1330+00

USER: at5106
DESIGN FILE: G:\13106100_264toNHope\TRANSP\dgn\xsect\rCA0901_CX_03.dgn
PLOTTED: 1/13/2016 09:43
SCALE: 10:1
MODEL: CROSS SECTION SHEETS

Crafton, Tull & Associates Inc.

DATE REVISED	DATE FILMED	DATE REVISED	DATE FILMED

FED.RD. DIST.NO.	STATE	FED.AID PROJ.NO.	SHEET NO.	TOTAL SHEETS
6	ARK.			
JOB NO.		CA0901	417	452

2 CROSS SECTIONS

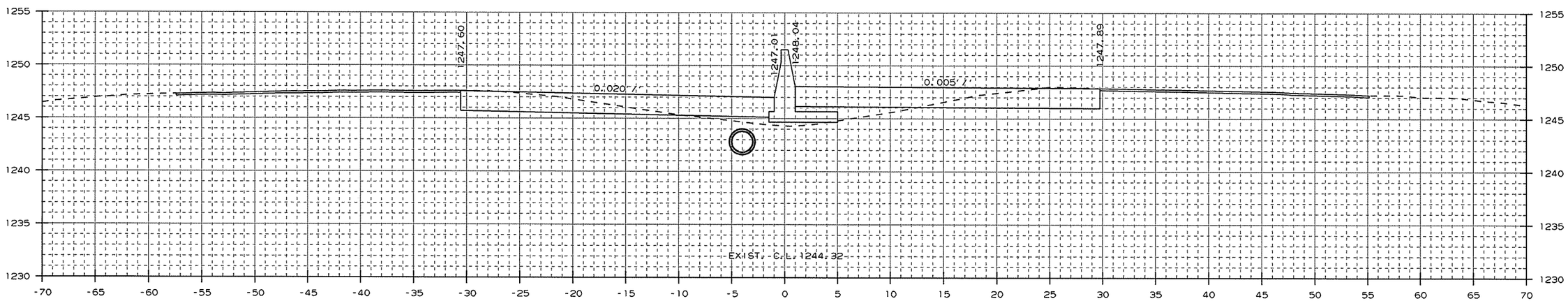

AREA CUT = 54.8
AREA FILL = 4.5

1332+00.00

CUT VOLUME = 201
FILL VOLUME = 33

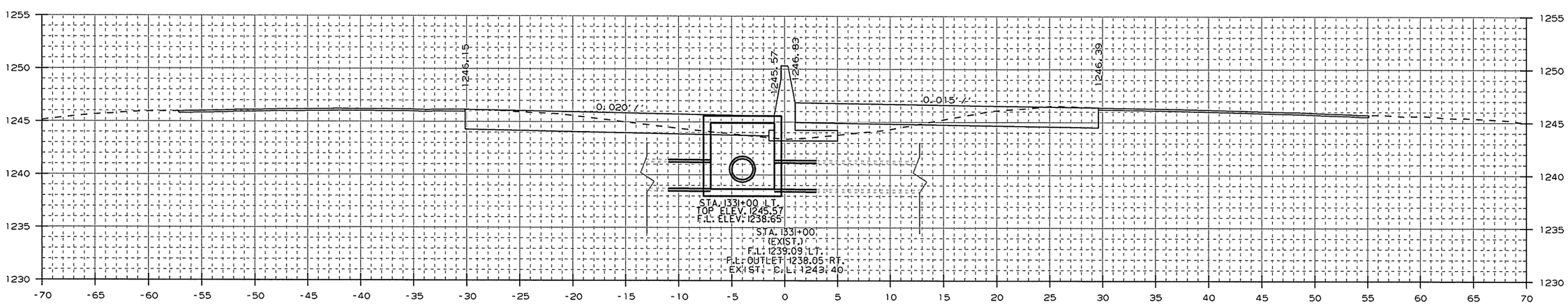

AREA CUT = 54.0
AREA FILL = 7.9

STA. 1331+00 - CONSTRUCT
DROP INLET 3' LT. OF C.L. H=6'11"
W/ 30" x 4' R.C. PIPE CULVERT LT. & RT.
(CLASS III) (TYPE 3 BEDDING)
CONNECT TO EXIST. NORTHERN MOST
30" X 174' R.C. PIPE CULVERT
TYPE ST DROP INLET = 4' X 6'
3 GRATES

1331+00.00

STA. 1331+00 IN PLACE
DOUBLE 30"X174' R.C. PIPE
CULVERT W/ FES LT. & RT.
RETAIN

CUT VOLUME = 150
FILL VOLUME = 34

CROSS SECTION STA. 1331+00 TO STA. 1332+00

USER: a15106
DESIGN FILE: G:\13106100_264toNHope\TRANSP\dgn\xsect\rCA0901_CX_03.dgn MODEL: CROSS SECTION SHEETS
PLOTTED: 1/13/2016 09:43 SCALE: 1:1

Crafton, Tull & Associates Inc.

DATE REVISED	DATE FILMED	DATE REVISED	DATE FILMED

FED.RD. DIST.NO.	STATE	FED.AID PROJ.NO.	SHEET NO.	TOTAL SHEETS
6	ARK.			
JOB NO.		CA0901	418	452

2 CROSS SECTIONS

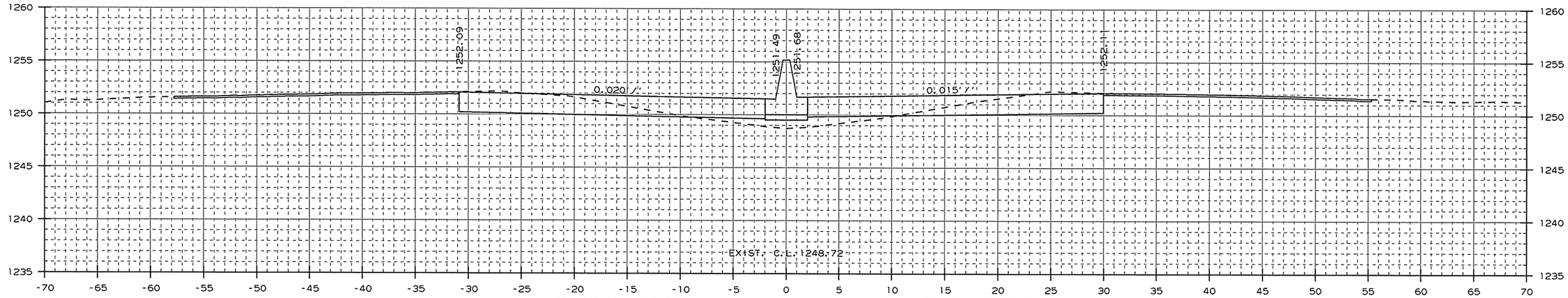

AREA CUT : 55.2
AREA FILL : 10.1

STA. 1333+50 - CONSTRUCT
DROP INLET 3' LT. OF C.L. H=6'6"
W/ 24" x 247' R.C. PIPE CULVERT
(CLASS III) (TYPE 3 BEDDING)
CONNECT TO DROP INLET
STA. 1331+00 LT.
TYPE 'S' DROP INLET = 4' X 6'
3' GRATES

1334+00.00

STA. 1333+50 - CONSTRUCT
DROP INLET 3' RT. OF C.L. H=7'2"
W/ 24" x 2' R.C. PIPE CULVERT
(CLASS III) (TYPE 3 BEDDING)
CONNECT TO DROP INLET
STA. 1333+50 LT.
TYPE 'S' DROP INLET = 4' X 6'
3 GRATES

CUT VOLUME : 101
FILL VOLUME : 20

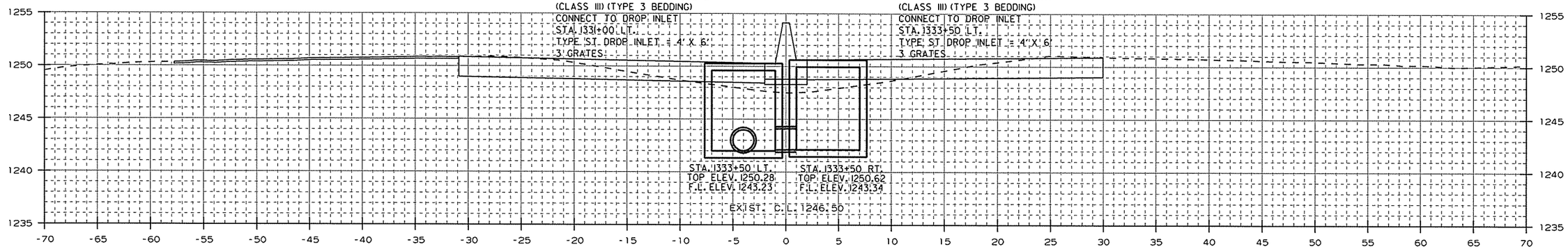

AREA CUT : 54.0
AREA FILL : 11.7

1333+50.00

CUT VOLUME : 99
FILL VOLUME : 24

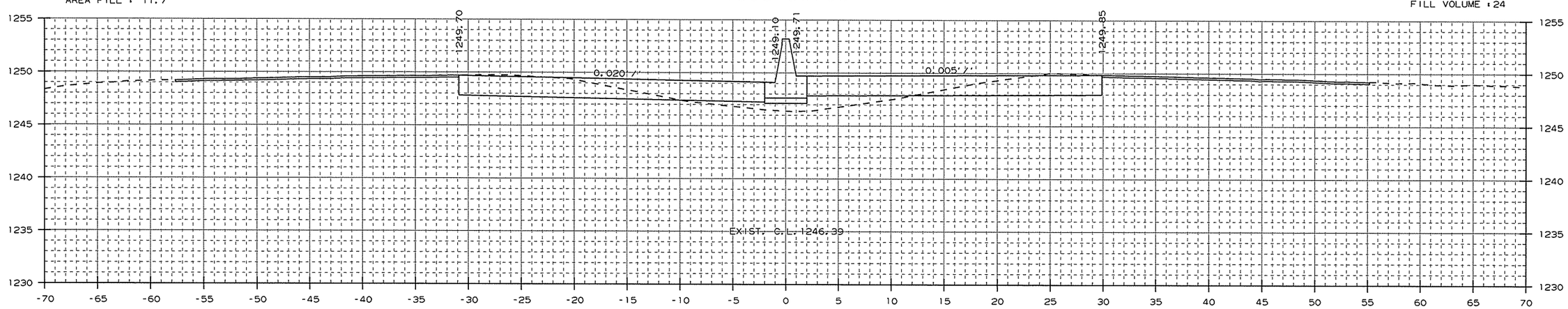

AREA CUT : 53.3
AREA FILL : 14.1

1333+00.00

CUT VOLUME : 200
FILL VOLUME : 34

CROSS SECTION STA. 1333+00 TO STA. 1334+00

USER: at5106
DESIGN FILE: G:\13106100_264toNHope\TRANSP\dgn\xsect\rCA0901_CX_03.dgn
PLOTTED: 1/13/2016 09:43
SCALE: 10:1
MODEL: CROSS SECTION SHEETS

Crafton, Tull & Associates Inc.

DATE REVISED	DATE FILMED	DATE REVISED	DATE FILMED

FED.RD. DIST.NO.	STATE	FED.AID PROJ.NO.	SHEET NO.	TOTAL SHEETS
6	ARK.			
JOB NO.		CA0901	419	452

2 CROSS SECTIONS

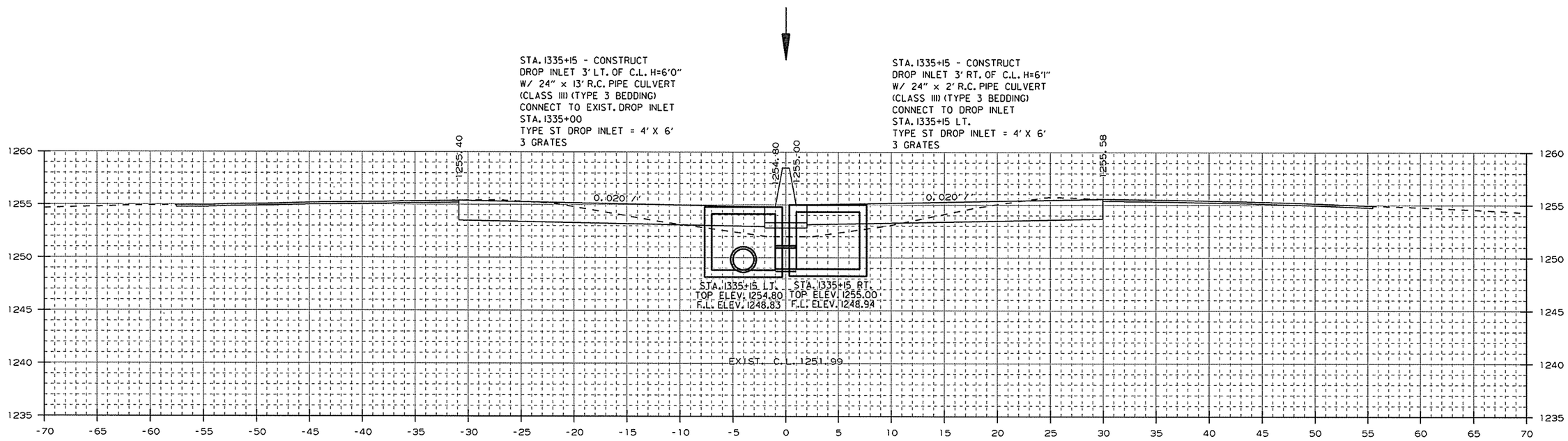

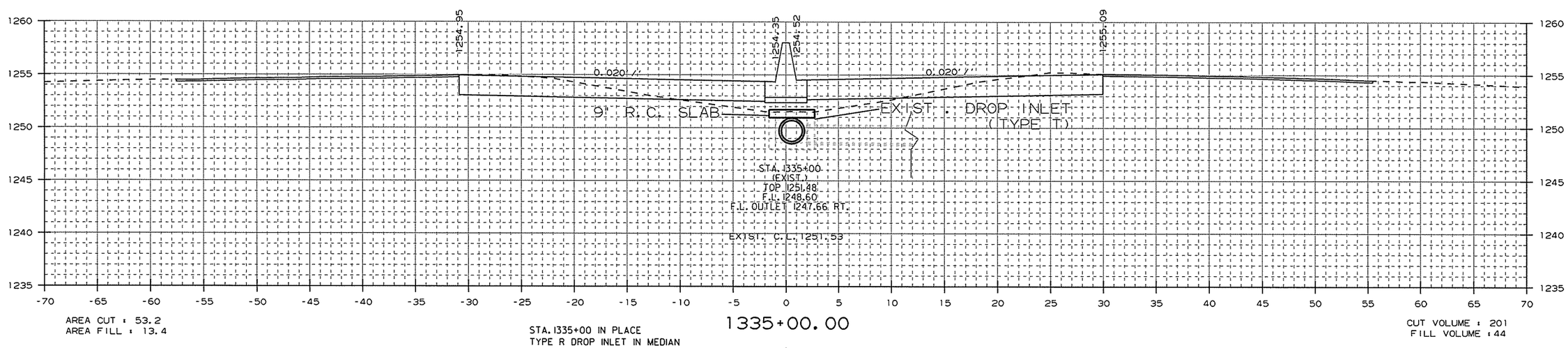

STA. 1335+00 IN PLACE
TYPE R DROP INLET IN MEDIAN
W/ 18" X 102' R.C. PIPE OUTLET
W/ F.E.S. RT.
MODIFY

CROSS SECTION STA. 1335+00 TO STA. 1335+15

USER: a15106
DESIGN FILE: G:\13106100_264toNHope\TRANSP\dgn\xsect\rCA0901_CX_03.dgn
PLOTTED: 1/13/2016 09:43
SCALE: 10:1
MODEL: CROSS SECTION SHEETS

Crafton, Tull & Associates Inc.

DATE REVISED	DATE FILMED	DATE REVISED	DATE FILMED

FED.RD. DIST.NO.	STATE	FED.AID PROJ.NO.	SHEET NO.	TOTAL SHEETS
6	ARK.			
JOB NO.		CA0901	420	452

2 CROSS SECTIONS

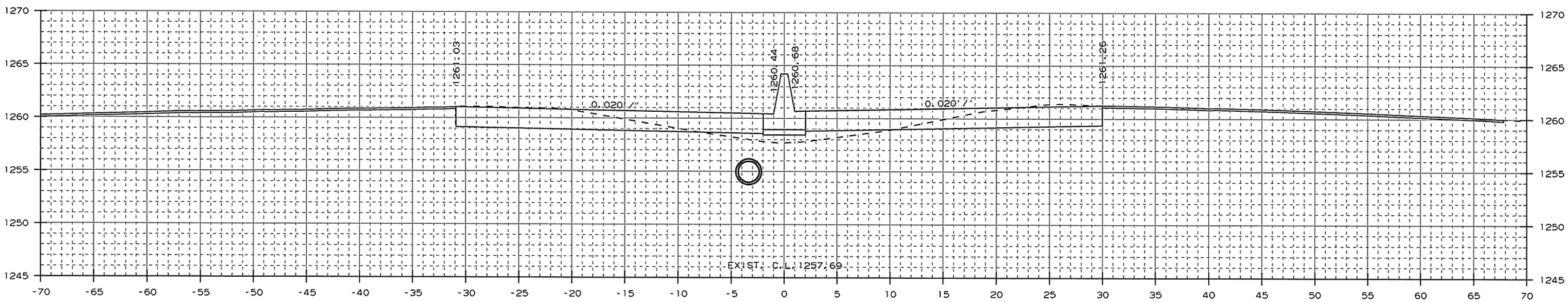

AREA CUT : 59.6
AREA FILL : 9.6

1337+00.00

CUT VOLUME : 219
FILL VOLUME : 36

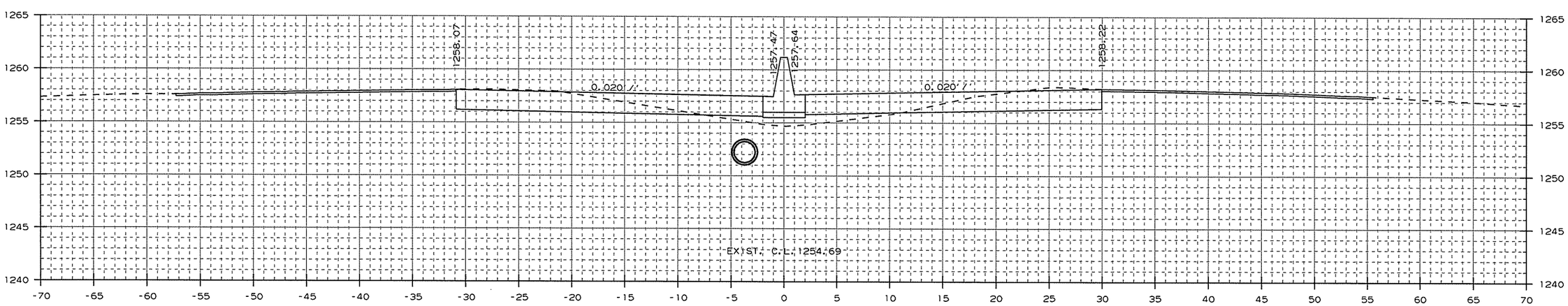

AREA CUT : 58.9
AREA FILL : 10.0

1336+00.00

CUT VOLUME : 178
FILL VOLUME : 36

CROSS SECTION STA. 1336+00 TO STA. 1337+00

USER: at5106
DESIGN FILE: G:\13106100_264toNHope\TRANSP\dgn\xsect\rCA0901_CX_03.dgn MODEL: CROSS SECTION SHEETS
PLOTTED: 1/13/2016 09:43 SCALE: 10:1

Crafton, Tull & Associates Inc.

DATE REVISED	DATE FILMED	DATE REVISED	DATE FILMED

FED.RD. DIST.NO.	STATE	FED.AID PROJ.NO.	SHEET NO.	TOTAL SHEETS
6	ARK.			
JOB NO.		CA0901	421	452

2 CROSS SECTIONS

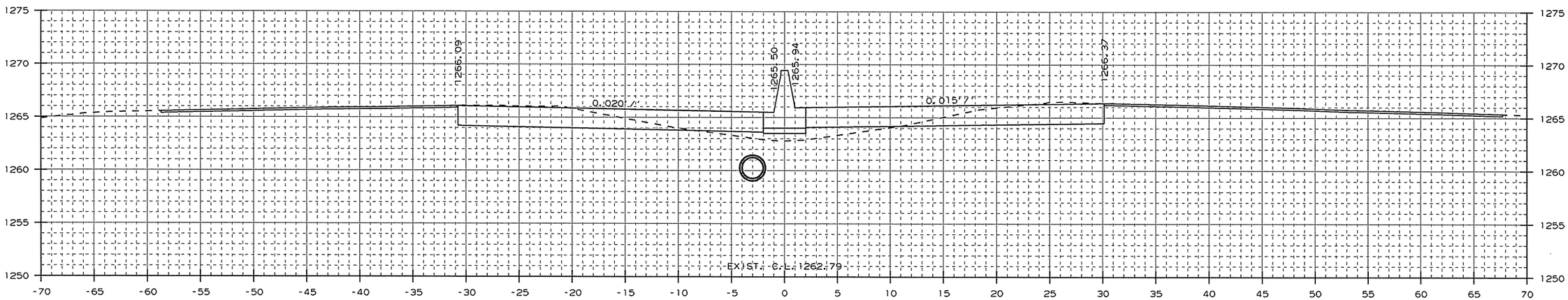

AREA CUT : 58.1
AREA FILL : 10.4

1339+00.00

CUT VOLUME : 223
FILL VOLUME : 34

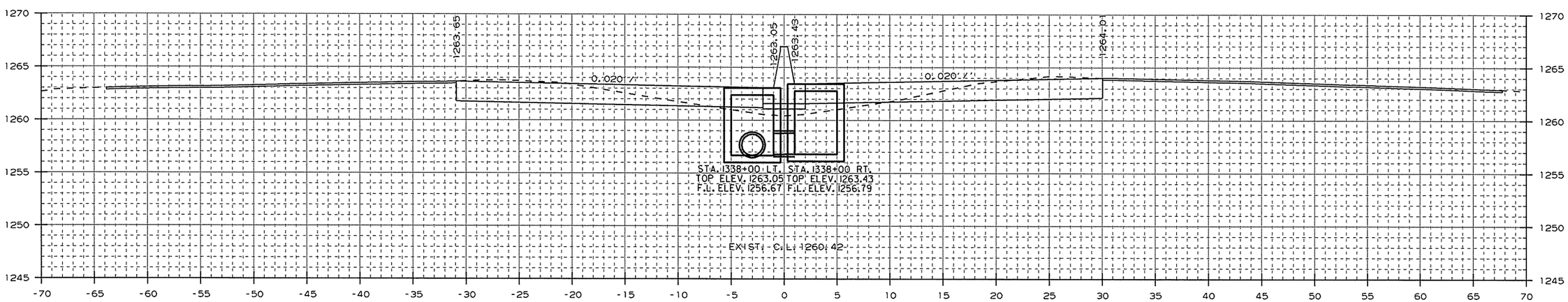

AREA CUT : 62.4
AREA FILL : 7.9

STA. 1338+00 - CONSTRUCT
DROP INLET 3' LT. OF C.L. H=6'5"
W/ 24" x 281' R.C. PIPE CULVERT
(CLASS III) (TYPE 3 BEDDING)
CONNECT TO DROP INLET
STA. 1335+15 LT.
TYPE ST DROP INLET = 4' X 4'

1338+00.00

STA. 1338+00 - CONSTRUCT
DROP INLET 3' RT. OF C.L. H=6'8"
W/ 24" x 2' R.C. PIPE CULVERT
(CLASS III) (TYPE 3 BEDDING)
CONNECT TO DROP INLET
STA. 1338+00 LT.
TYPE ST DROP INLET = 4' X 4'

CUT VOLUME : 226
FILL VOLUME : 32

CROSS SECTION STA. 1338+00 TO STA. 1339+00

USER: at5106
DESIGN FILE: G:\13106100_264toNHope\TRANSP\dgn\xsect\rCA0901_CX_03.dgn
PLOTTED: 1/13/2016 09:44
SCALE: 10:1
MODEL: CROSS SECTION SHEETS

Crafton, Tull & Associates Inc.

DATE REVISED	DATE FILMED	DATE REVISED	DATE FILMED

FED.RD. DIST.NO.	STATE	FED.AID PROJ.NO.	SHEET NO.	TOTAL SHEETS
6	ARK.			
JOB NO.		CA0901	422	452

2 CROSS SECTIONS

STA. 1341+00 - CONSTRUCT
DROP INLET 3' LT. OF C.L. H=4'9"
W/ 24" x 296' R.C. PIPE CULVERT
(CLASS III) (TYPE 3 BEDDING)
CONNECT TO DROP INLET
STA. 1338+00 LT.
TYPE ST DROP INLET = 4' X 4'

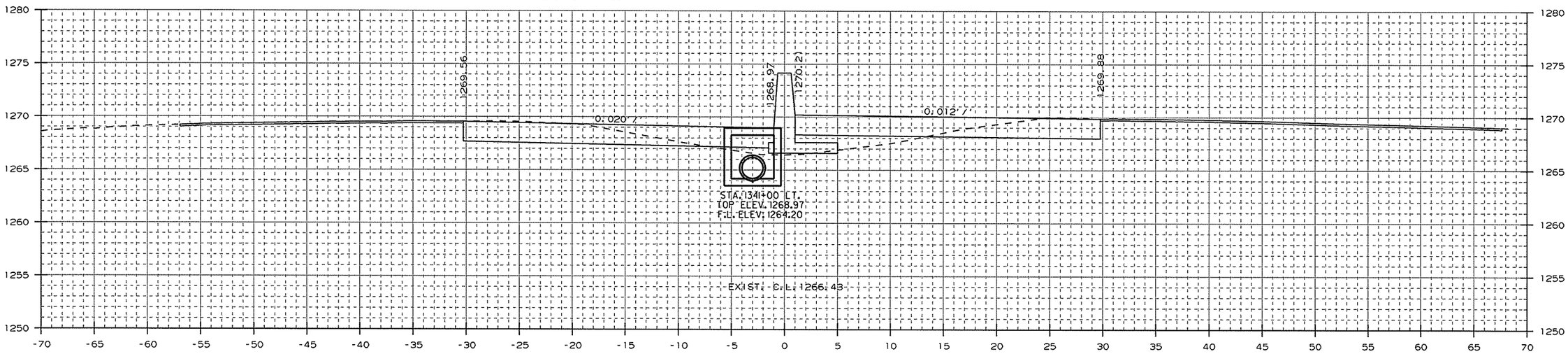

AREA CUT : 53.7
AREA FILL : 12.1

1341+00.00

CUT VOLUME : 200
FILL VOLUME : 49

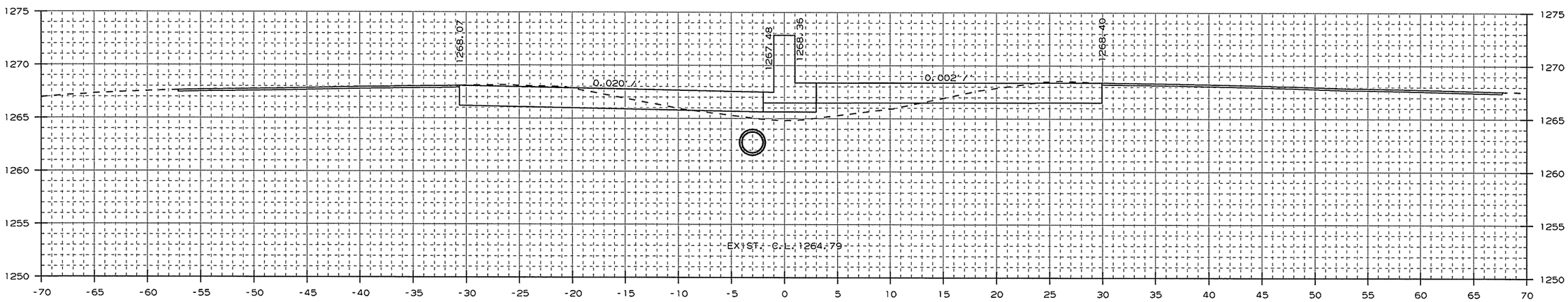

AREA CUT : 54.3
AREA FILL : 14.2

1340+00.00

CUT VOLUME : 208
FILL VOLUME : 46

CROSS SECTION STA. 1340+00 TO STA. 1341+00

USER: a15106
DESIGN FILE: G:\13106100_264toNHope\TRANSP\dgn\xsect\rCA0901_CX_03.dgn
PLOTTED: 1/13/2016 09:44
SCALE: 10:1
MODEL: CROSS SECTION SHEETS

Crafton, Tull & Associates Inc.

DATE REVISED	DATE FILMED	DATE REVISED	DATE FILMED

FED.RD. DIST.NO.	STATE	FED.AID PROJ.NO.	SHEET NO.	TOTAL SHEETS
6	ARK.			
JOB NO.		CA0901	423	452

2 CROSS SECTIONS

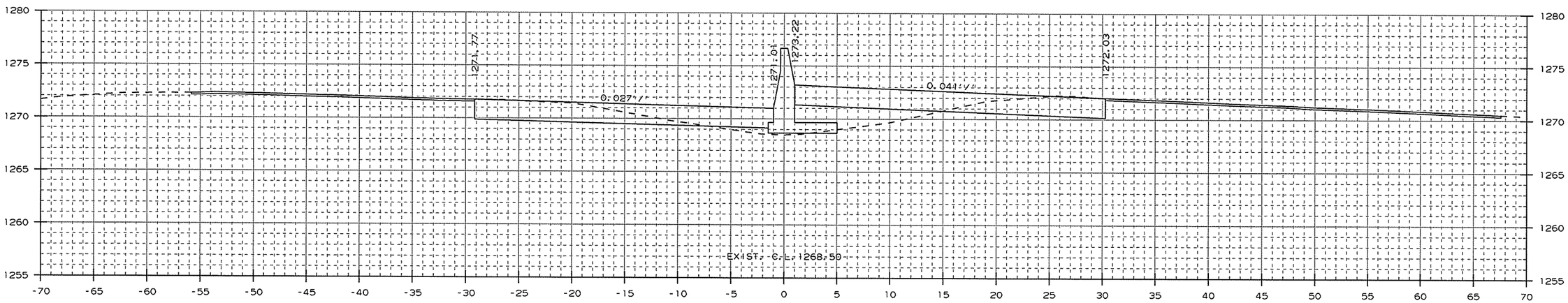

AREA CUT : 49.6
AREA FILL : 20.7

1343+00.00

CUT VOLUME : 186
FILL VOLUME : 71

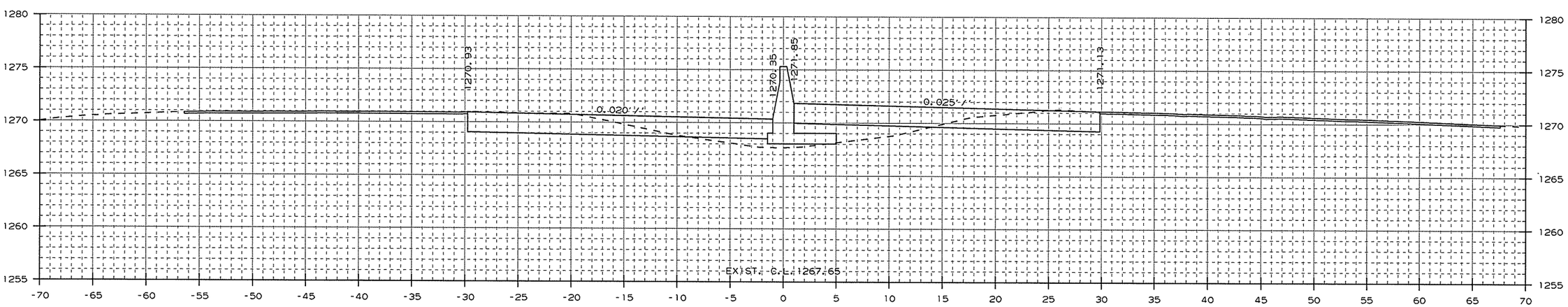

AREA CUT : 50.6
AREA FILL : 17.4

1342+00.00

CUT VOLUME : 193
FILL VOLUME : 55

CROSS SECTION STA. 1342+00 TO STA. 1343+00

USER: at5106
DESIGN FILE: G:\13106100_264toNHope\TRANSP\dgn\xsect\rCA0901_CX_03.dgn
PLOTTED: 1/13/2016 09:44
SCALE: 10:1
MODEL: CROSS SECTION SHEETS

Crafton, Tull & Associates Inc.

DATE REVISED	DATE FILMED	DATE REVISED	DATE FILMED

FED.RD. DIST.NO.	STATE	FED.AID PROJ.NO.	SHEET NO.	TOTAL SHEETS
6	ARK.			
JOB NO.		CA0901	424	452

2 CROSS SECTIONS

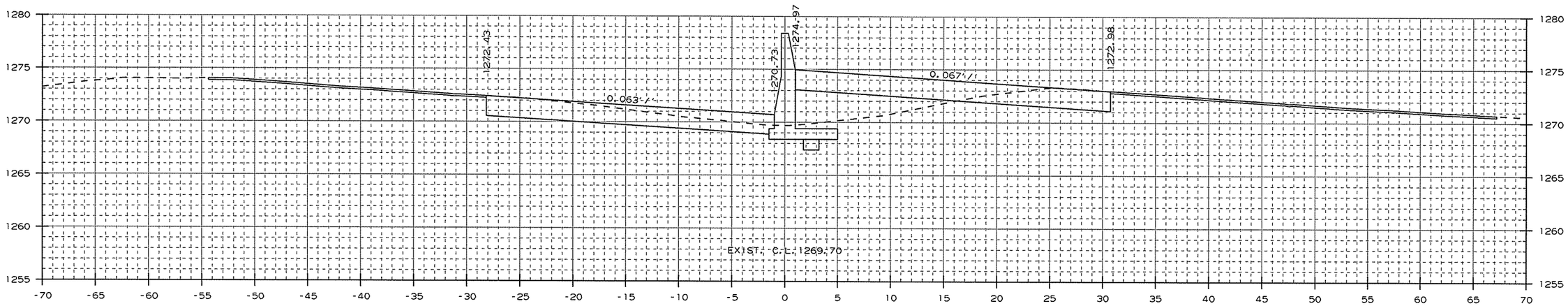

AREA CUT : 65.8
AREA FILL : 28.5

1345+00.00

CUT VOLUME : 225
FILL VOLUME : 98

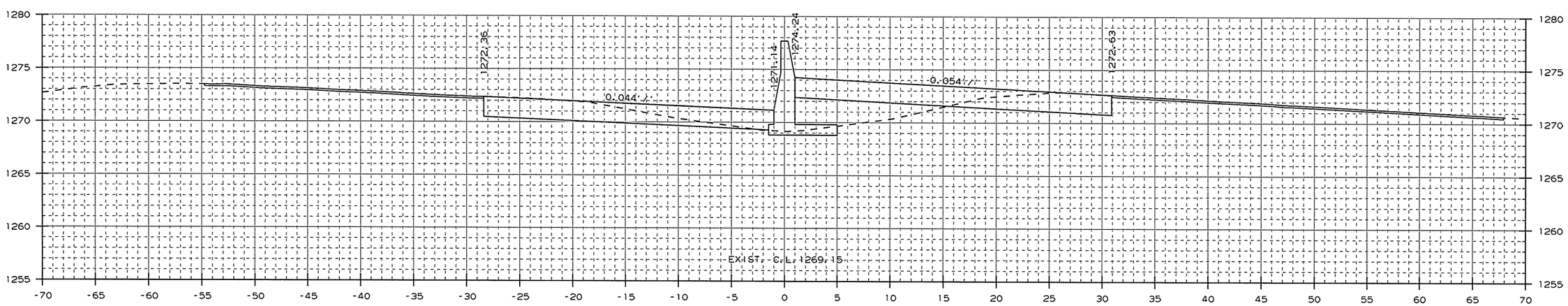

AREA CUT : 55.8
AREA FILL : 24.3

1344+00.00

CUT VOLUME : 195
FILL VOLUME : 83

CROSS SECTION STA. 1344+00 TO STA. 1345+00

USER: a+5106
DESIGN FILE: G:\13106100_264toNHope\TRANSP\dgn\xsect\rCA0901_CX_03.dgn
PLOTTED: 1/13/2016 09:44
SCALE: 10:1
MODEL: CROSS SECTION SHEETS

Crafton, Tull & Associates Inc.

DATE REVISED	DATE FILMED	DATE REVISED	DATE FILMED

FED.RD. DIST.NO.	STATE	FED.AID PROJ.NO.	SHEET NO.	TOTAL SHEETS
6	ARK.			
JOB NO.		CA0901	425	452

2 CROSS SECTIONS

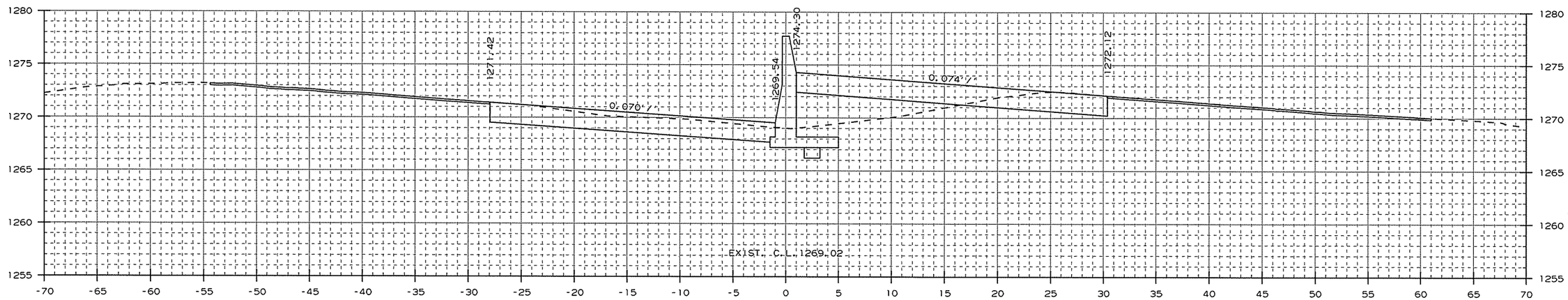

AREA CUT : 70.9
AREA FILL : 28.8

1347+00.00

CUT VOLUME : 258
FILL VOLUME : 109

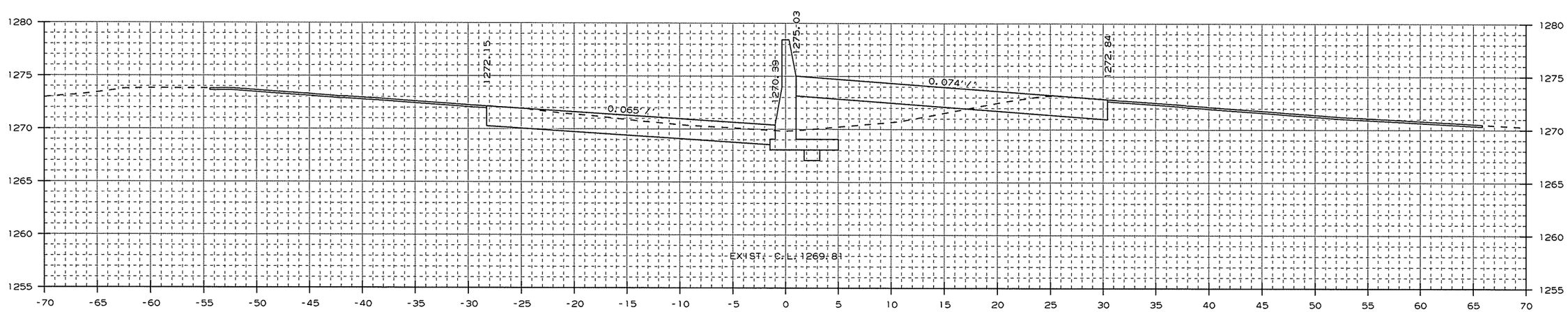

AREA CUT : 68.5
AREA FILL : 29.9

1346+00.00

CUT VOLUME : 249
FILL VOLUME : 108

CROSS SECTION STA. 1346+00 TO STA. 1347+00

USER: a15106
DESIGN FILE: G:\13106100_264toNHope\TRANSP\dgn\xsect\rCA0901_CX_03.dgn
PLOTTED: 1/13/2016 09:44
SCALE: 10:1
MODEL: CROSS SECTION SHEETS

Crafton, Tull & Associates Inc.

DATE REVISED	DATE FILMED	DATE REVISED	DATE FILMED	FED.RD. DIST.NO.	STATE	FED.AID PROJ.NO.	SHEET NO.	TOTAL SHEETS
				6	ARK.			
				JOB NO.		CA0901	426	452

2 CROSS SECTIONS

STA. 1349+00 - CONSTRUCT
DROP INLET 3' LT. OF C.L. H=5'9"
W/ 24" x 296' R.C. PIPE CULVERT
(CLASS III) (TYPE 3 BEDDING)
CONNECT TO DROP INLET
STA. 1352+00 LT.
TYPE ST DROP INLET = 4' X 4'

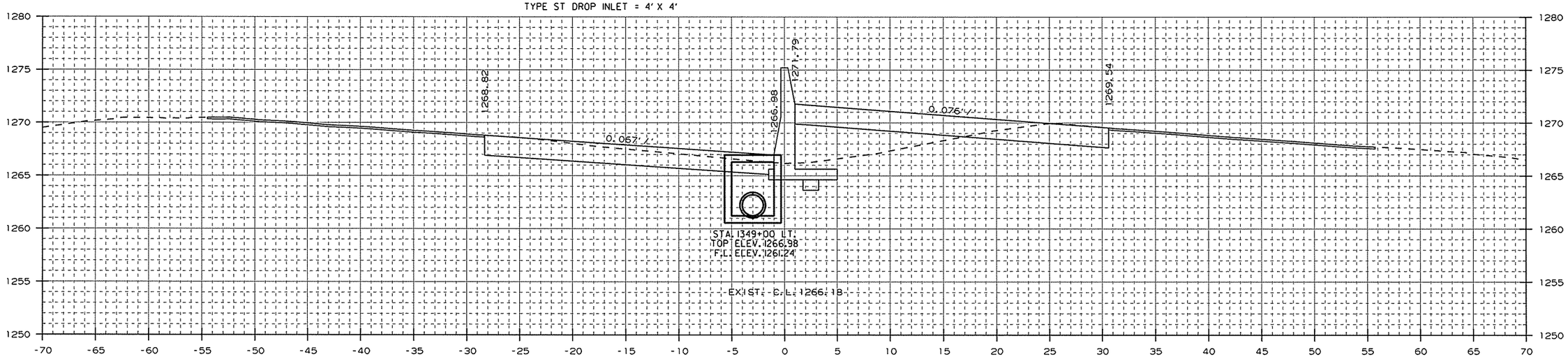

AREA CUT : 68.8
AREA FILL : 32.4

1349+00.00

CUT VOLUME : 251
FILL VOLUME : 116

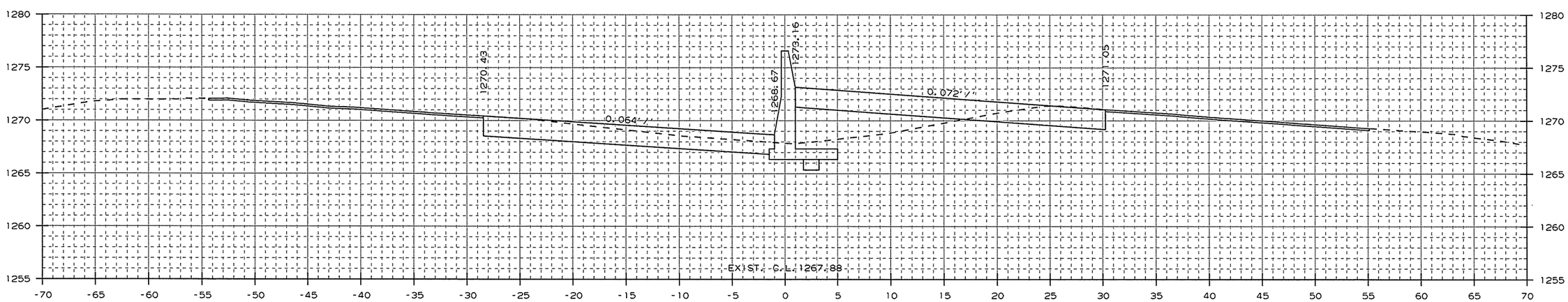

AREA CUT : 66.9
AREA FILL : 30.2

1348+00.00

CUT VOLUME : 255
FILL VOLUME : 109

CROSS SECTION STA. 1348+00 TO STA. 1349+00

USER: at5106
DESIGN FILE: G:\13106100_264toNHope\TRANSP\dgn\xsect\rCA0901_CX_03.dgn MODEL: CROSS SECTION SHEETS
PLOTTED: 1/13/2016 09:44 SCALE: 10:1

Crafton, Tull & Associates Inc.

DATE REVISED	DATE FILMED	DATE REVISED	DATE FILMED	FED.RD. DIST.NO.	STATE	FED.AID PROJ.NO.	SHEET NO.	TOTAL SHEETS
				6	ARK.			
				JOB NO.		CA0901	427	452

2 CROSS SECTIONS

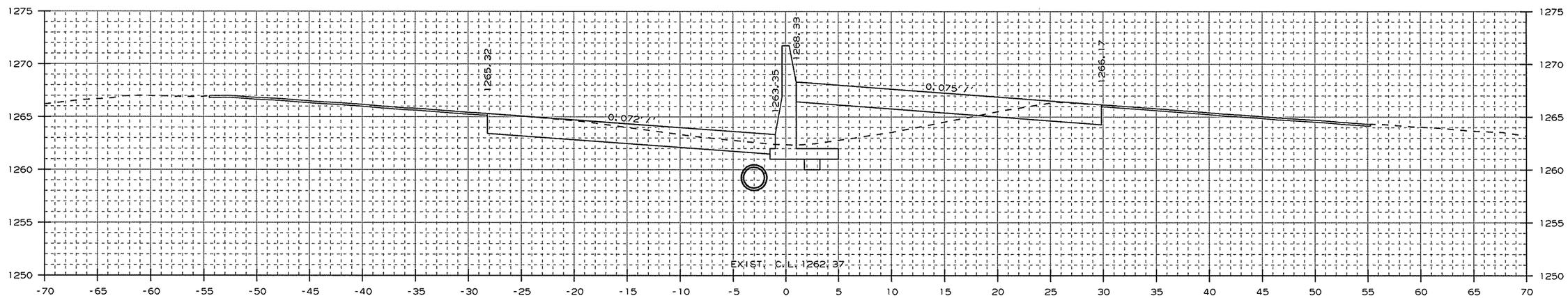

AREA CUT : 62.9
AREA FILL : 38.3

1351+00.00

CUT VOLUME : 237
FILL VOLUME : 146

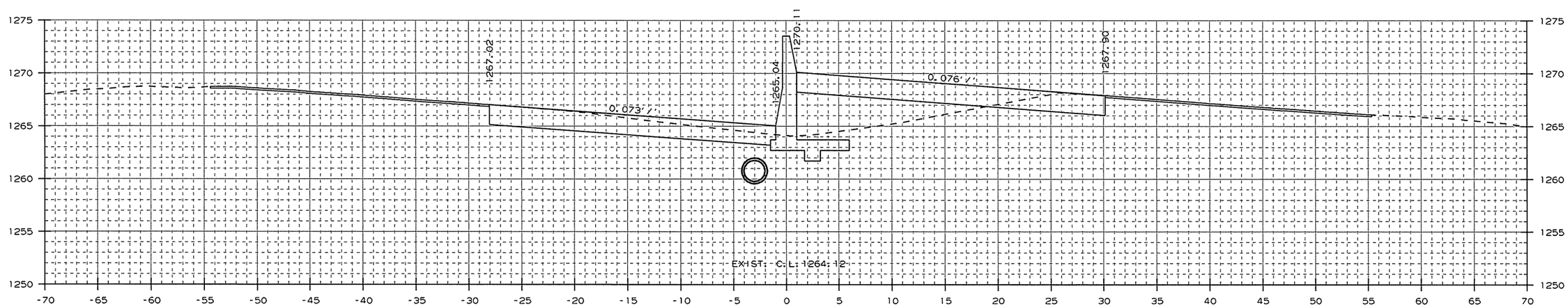

AREA CUT : 65.0
AREA FILL : 40.4

1350+00.00

CUT VOLUME : 248
FILL VOLUME : 135

CROSS SECTION STA. 1350+00 TO STA. 1351+00

USER: at5106
DESIGN FILE: G:\13106100_264toNHope\TRANSP\dgn\xsect\rCA0901_CX_03.dgn
PLOTTED: 1/13/2016 09:44
SCALE: 10:1 MODEL: CROSS SECTION SHEETS

Crafton, Tull & Associates Inc.

DATE REVISED	DATE FILMED	DATE REVISED	DATE FILMED

FED.RD. DIST.NO.	STATE	FED.AID PROJ.NO.	SHEET NO.	TOTAL SHEETS
6	ARK.			
JOB NO.		CA0901	428	452

2 CROSS SECTIONS

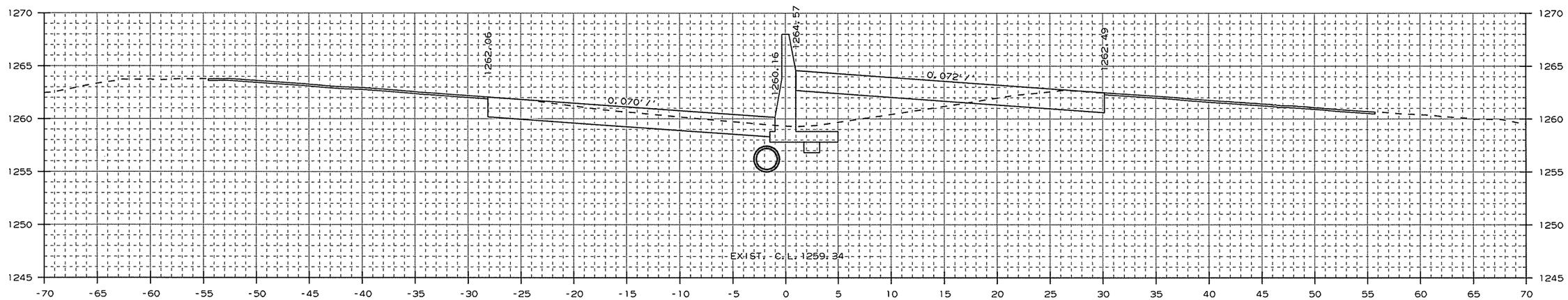

AREA CUT : 63.8
AREA FILL : 29.4

1353+00.00

CUT VOLUME : 236
FILL VOLUME : 119

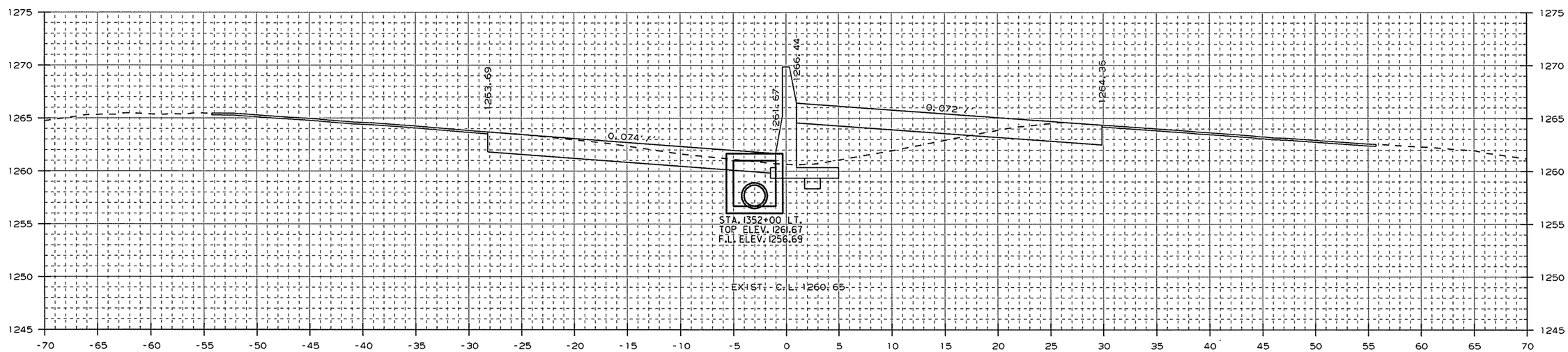

AREA CUT : 63.5
AREA FILL : 35.0

STA. 1352+00 - CONSTRUCT
DROP INLET 3' LT. OF C.L. H=5'0"
W/ 24" x 295' R.C. PIPE CULVERT
(CLASS III) (TYPE 3 BEDDING)
CONNECT TO EXIST. DROP INLET
STA. 1355+00 LT.
TYPE ST DROP INLET = 4' X 4'

1352+00.00

CUT VOLUME : 234
FILL VOLUME : 136

CROSS SECTION STA. 1352+00 TO STA. 1353+00

USER: at5106
DESIGN FILE: G:\13106100_2641oNHope\TRANSP\dgn\xsect\rCA0901_CX_03.dgn
PLOTTED: 1/13/2016 09:44
SCALE: 10:1
MODEL: CROSS SECTION SHEETS

Crafton, Tull & Associates Inc.

DATE REVISED	DATE FILMED	DATE REVISED	DATE FILMED	FED.RD. DIST.NO.	STATE	FED.AID PROJ.NO.	SHEET NO.	TOTAL SHEETS
				6	ARK.			
				JOB NO.		CA0901	429	452

2 CROSS SECTIONS

STA. 1355+00 IN PLACE
TYPE R DROP INLET IN MEDIAN
W/ 18" X 86' R.C. PIPE OUTLET
W/ F.E.S. RT.
MODIFY

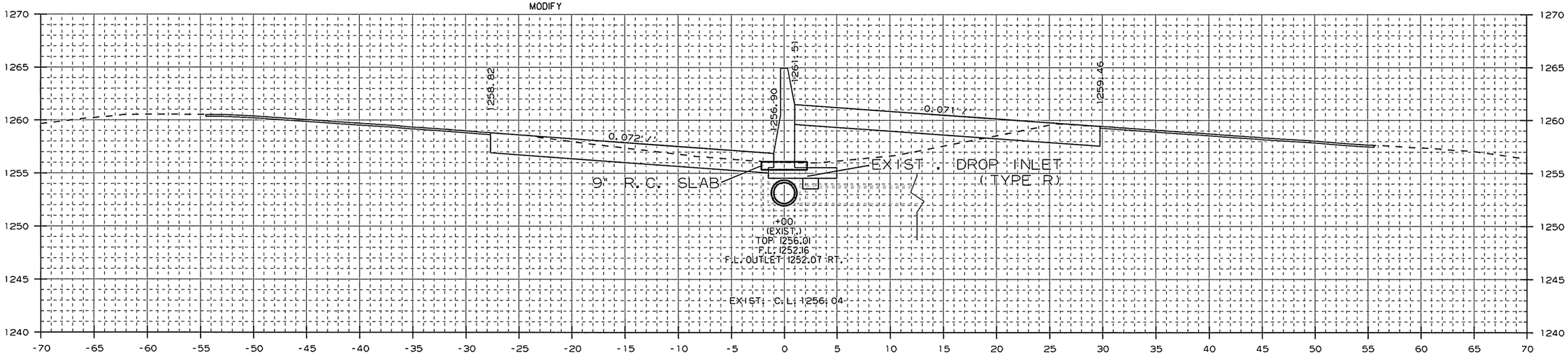

AREA CUT : 59.1
AREA FILL : 38.4

1355+00.00

CUT VOLUME : 222
FILL VOLUME : 136

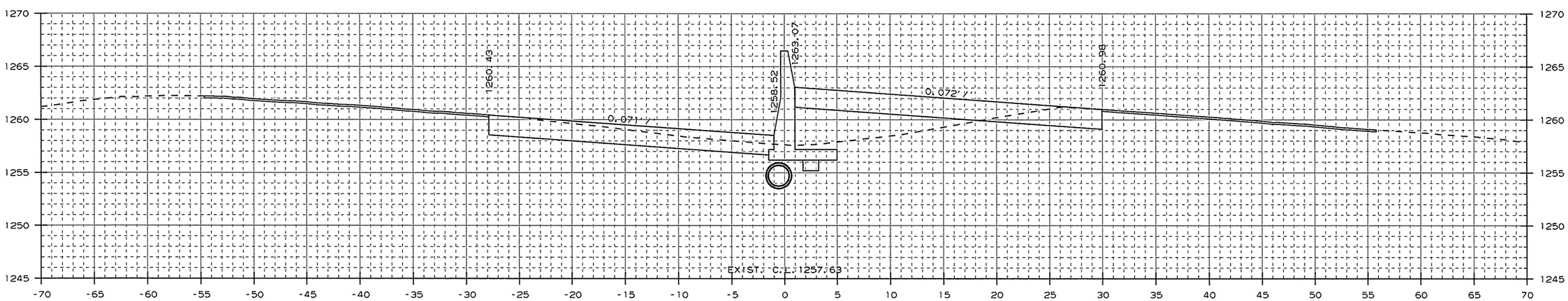

AREA CUT : 60.6
AREA FILL : 35.3

1354+00.00

CUT VOLUME : 230
FILL VOLUME : 120

CROSS SECTION STA. 1354+00 TO STA. 1355+00

USER: a+5106
DESIGN FILE: G:\13106100_264toNHope\TRANSP\dgn\xsect\rCA0901_CX_03.dgn
PLOTTED: 1/13/2016 09:44
SCALE: 10:1
MODEL: CROSS SECTION SHEETS

Crafton, Tull & Associates Inc.

DATE REVISED	DATE FILMED	DATE REVISED	DATE FILMED

FED.RD. DIST.NO.	STATE	FED.AID PROJ.NO.	SHEET NO.	TOTAL SHEETS
6	ARK.			
JOB NO.		CA0901	430	452

2 CROSS SECTIONS

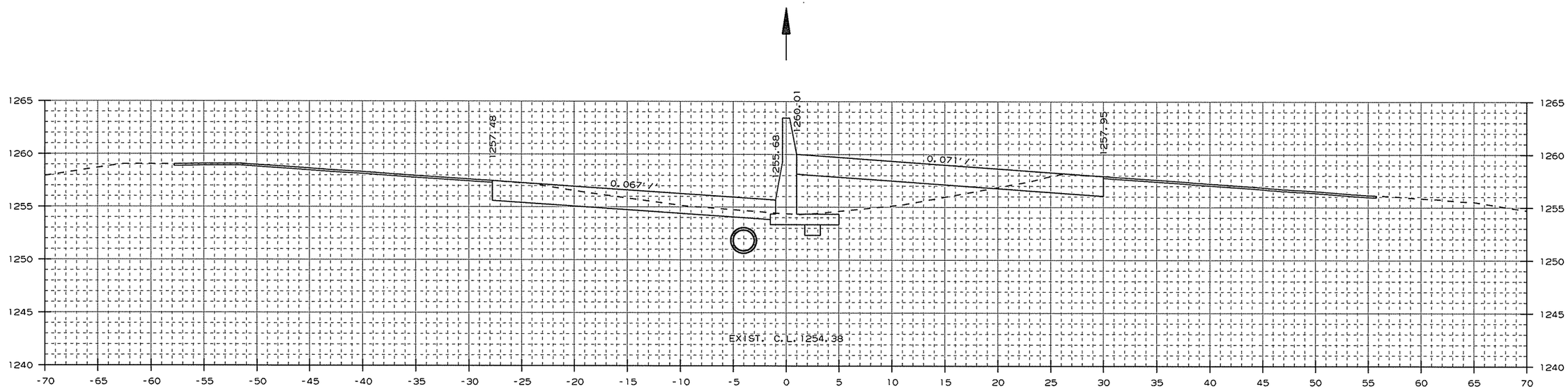

AREA CUT : 51.4
AREA FILL : 40.0

1356+00.00

CUT VOLUME : 98
FILL VOLUME : 74

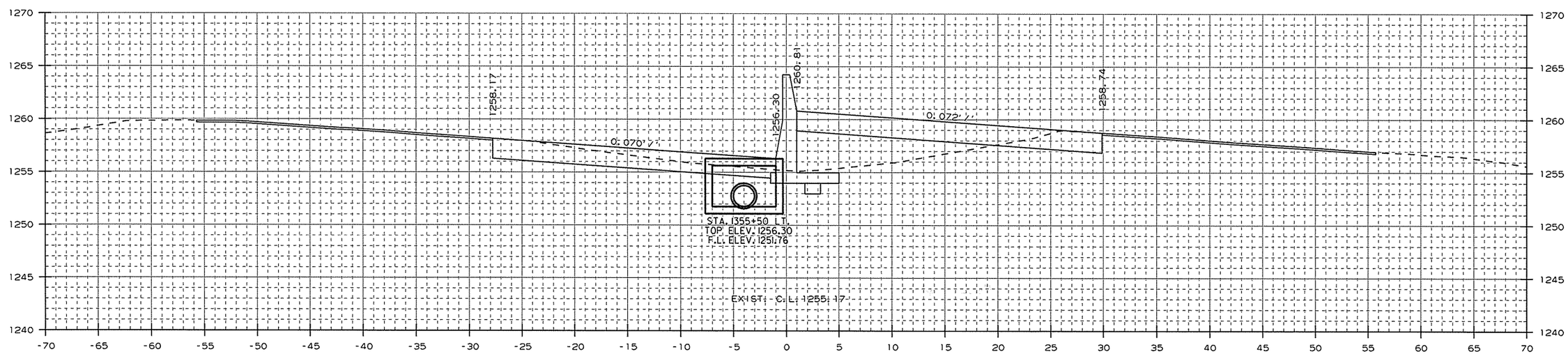

AREA CUT : 54.2
AREA FILL : 40.3

STA. 1355+50 - CONSTRUCT
DROP INLET 3' LT. OF C.L. H=4'6"
W/ 24" x 206' R.C. PIPE CULVERT
(CLASS III) (TYPE 3 BEDDING)
CONNECT TO DROP INLET
STA. 1357+60 LT.
TYPE ST DROP INLET = 4' X 6'
3 GRATES

1355+50.00

CUT VOLUME : 105
FILL VOLUME : 73

CROSS SECTION STA. 1355+50 TO STA. 1356+00

USER: a+506
DESIGN FILE: G:\13106100_264toNHope\TRANSP\dgn\xsect\rCA0901_CX_03.dgn
PLOTTED: 1/13/2016 09:44
SCALE: 10:1
MODEL: CROSS SECTION SHEETS

Crafton, Tull & Associates Inc.

DATE REVISED	DATE FILMED	DATE REVISED	DATE FILMED

FED.RD. DIST.NO.	STATE	FED.AID PROJ.NO.	SHEET NO.	TOTAL SHEETS
6	ARK.			
JOB NO.		CA0901	431	452

2 CROSS SECTIONS

STA. 1357+60 - CONSTRUCT
DROP INLET 3' LT. OF C.L. H=5'2"
W/ 24" x 296' R.C. PIPE CULVERT
(CLASS III) (TYPE 3 BEDDING)
CONNECT TO DROP INLET
STA. 1360+60 LT.
TYPE ST DROP INLET = 4' X 6'
3 GRATES

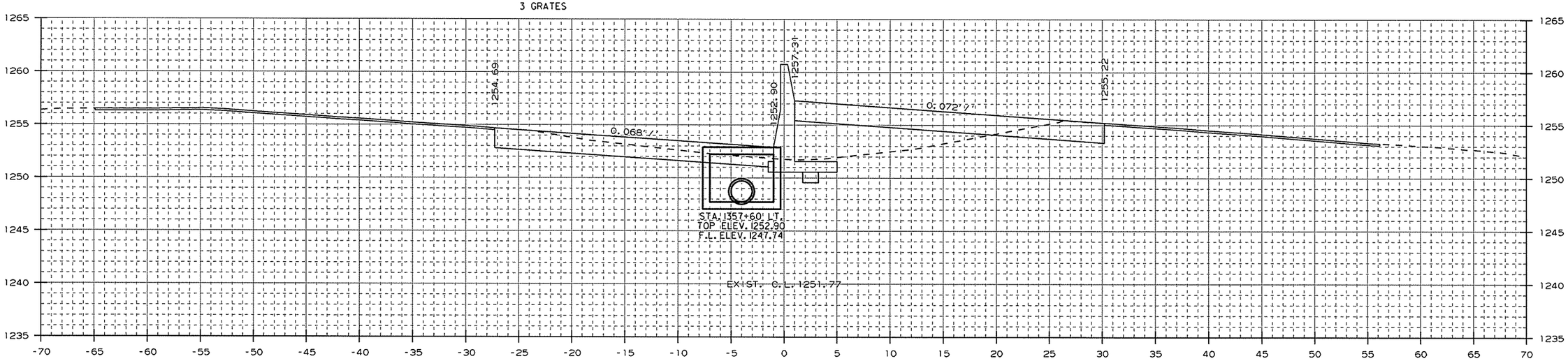

AREA CUT : 53.9
AREA FILL : 39.4

1357+60.00

CUT VOLUME : 122
FILL VOLUME : 87

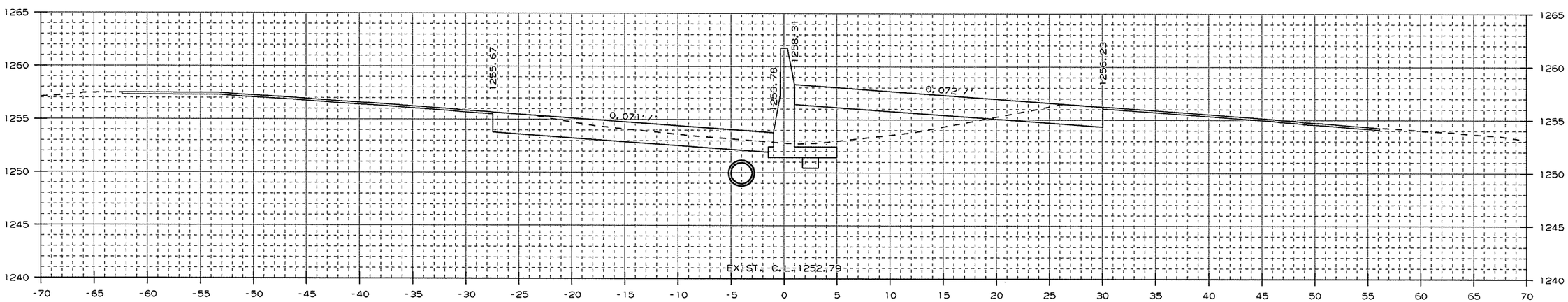

AREA CUT : 56.3
AREA FILL : 38.6

1357+00.00

CUT VOLUME : 199
FILL VOLUME : 146

CROSS SECTION STA. 1357+00 TO STA. 1357+60

USER: a15106
DESIGN FILE: G:\13106100_264toNHope\TRANSP\dgn\xsect\rCA0901_CX_03.dgn
PLOTTED: 1/13/2016 09:44
SCALE: 10:1
MODEL: CROSS SECTION SHEETS

Crafton, Tull & Associates Inc.

DATE REVISED	DATE FILMED	DATE REVISED	DATE FILMED

FED.RD. DIST.NO.	STATE	FED.AID PROJ.NO.	SHEET NO.	TOTAL SHEETS
6	ARK.			
JOB NO.		CA0901	432	452

2 CROSS SECTIONS

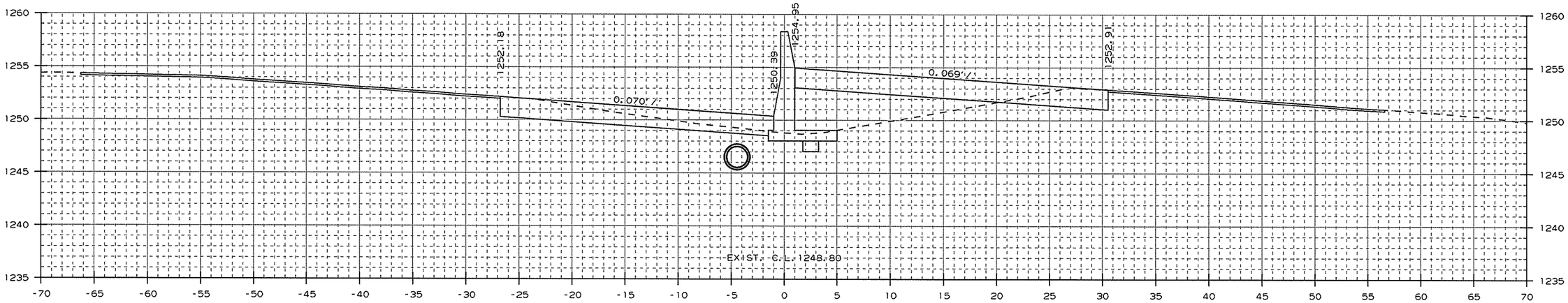

AREA CUT : 47.1
AREA FILL : 44.4

1359+00.00

CUT VOLUME : 191
FILL VOLUME : 155

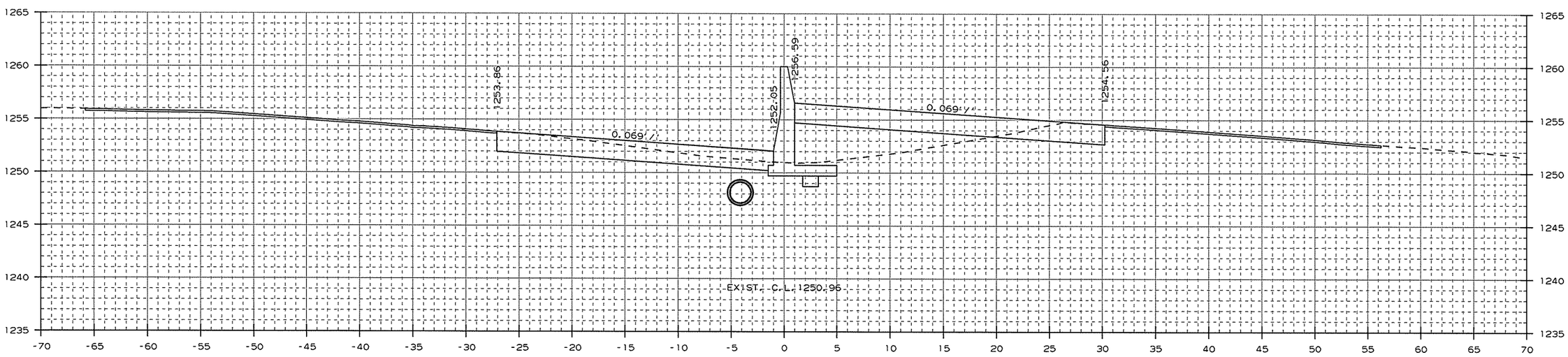

AREA CUT : 56.0
AREA FILL : 39.5

1358+00.00

CUT VOLUME : 81
FILL VOLUME : 58

CROSS SECTION STA. 1358+00 TO STA. 1359+00

USER: at5106
DESIGN FILE: G:\13106100_264toNHope\TRANSP\dgn\xsect\rCA0901_CX_03.dgn
PLOTTED: 1/13/2016 09:44
SCALE: 10:1
MODEL: CROSS SECTION SHEETS

Crafton, Tull & Associates Inc.

DATE REVISED	DATE FILMED	DATE REVISED	DATE FILMED

FED.RD. DIST.NO.	STATE	FED.AID PROJ.NO.	SHEET NO.	TOTAL SHEETS
6	ARK.			
JOB NO.		CA0901	433	452

2 CROSS SECTIONS

STA. 1360+60 - CONSTRUCT
DROP INLET 3' LT. OF C.L. H=5'6"
W/ 24" x 296' R.C. PIPE CULVERT
(CLASS III) (TYPE 3 BEDDING)
CONNECT TO DROP INLET
STA. 1363+60 LT.
TYPE ST DROP INLET = 4' X 6'
3 GRATES

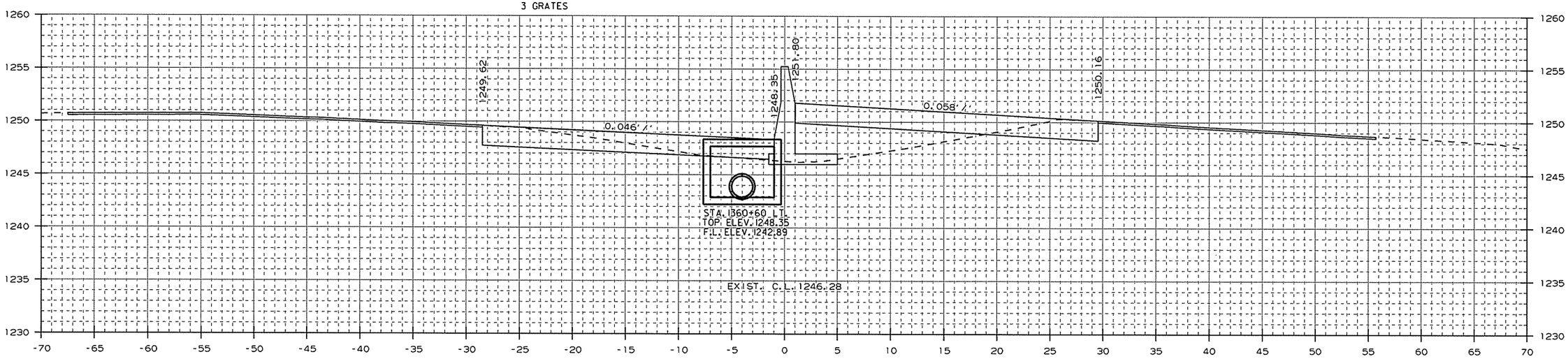

AREA CUT : 38.3
AREA FILL : 34.2

CUT VOLUME : 92
FILL VOLUME : 80

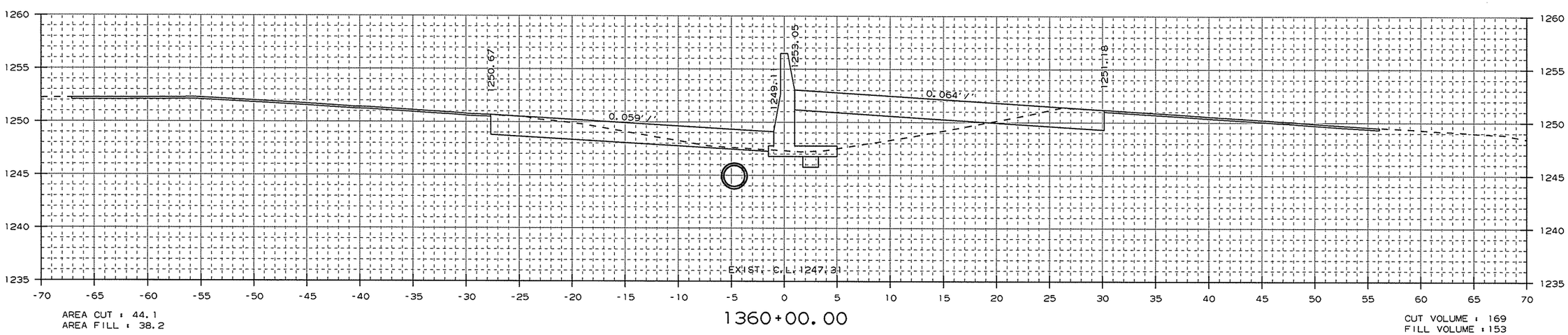

AREA CUT : 44.1
AREA FILL : 38.2

CUT VOLUME : 169
FILL VOLUME : 153

CROSS SECTION STA. 1360+00 TO STA. 1360+60

USER: at5106
DESIGN FILE: G:\13106100_264toNHope\TRANSP\dgn\xsect\rCA0901_CX_03.dgn
PLOTTED: 1/13/2016 09:44
SCALE: 10:1
MODEL: CROSS SECTION SHEETS

Crafton, Tull & Associates Inc.

DATE REVISED	DATE FILMED	DATE REVISED	DATE FILMED

FED.RD. DIST.NO.	STATE	FED.AID PROJ.NO.	SHEET NO.	TOTAL SHEETS
6	ARK.			
JOB NO.		CA0901	434	452

2 CROSS SECTIONS

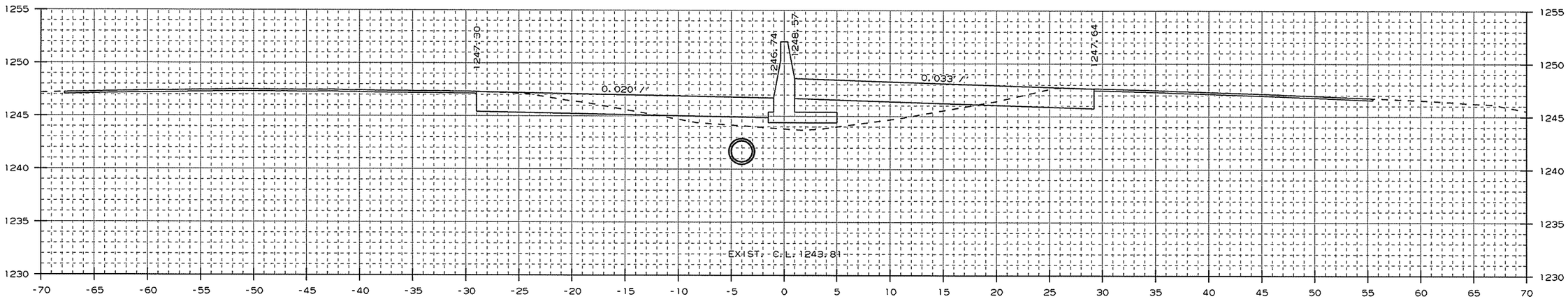

AREA CUT : 33.0
AREA FILL : 33.2

1362+00.00

CUT VOLUME : 128
FILL VOLUME : 121

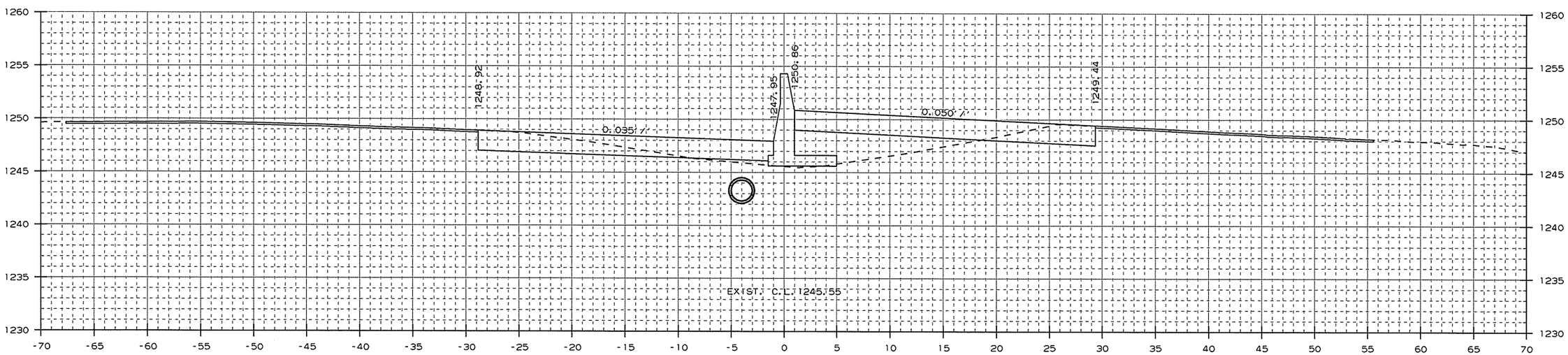

AREA CUT : 35.9
AREA FILL : 32.2

1361+00.00

CUT VOLUME : 55
FILL VOLUME : 49

CROSS SECTION STA. 1361+00 TO STA. 1362+00

USER: a15106
DESIGN FILE: G:\13106100_264toNHope\TRANSP\dgn\xsect\rCA0901_CX_03.dgn
PLOTTED: 1/13/2016 09:44
SCALE: 10:1
MODEL: CROSS SECTION SHEETS

Crafton, Tull & Associates Inc.

DATE REVISED	DATE FILMED	DATE REVISED	DATE FILMED

FED.RD. DIST.NO.	STATE	FED.AID PROJ.NO.	SHEET NO.	TOTAL SHEETS
6	ARK.			
JOB NO.		CA0901	435	452

2 CROSS SECTIONS

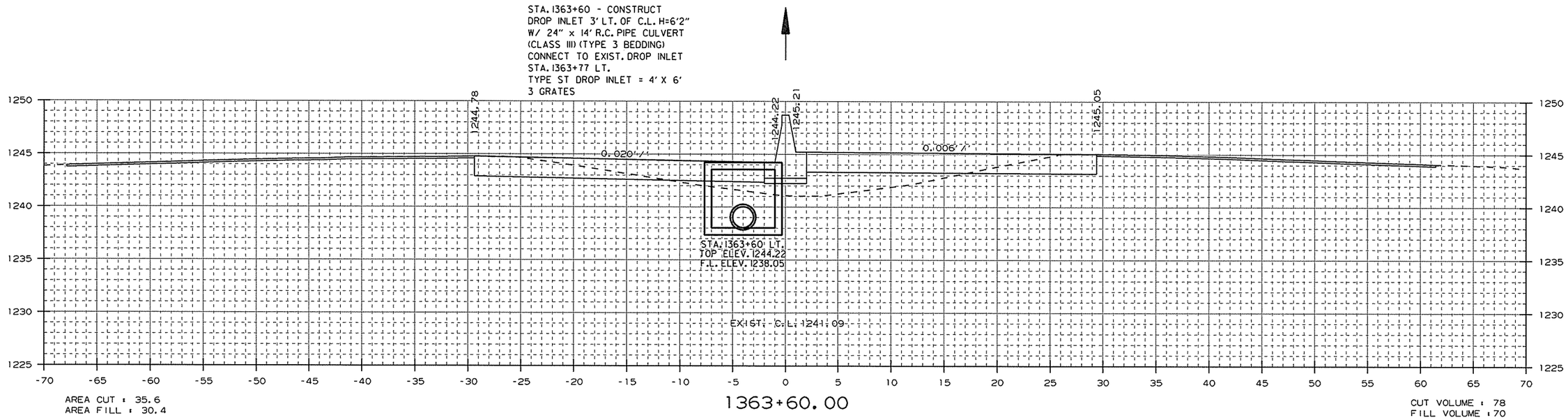

AREA CUT : 35.6
AREA FILL : 30.4

1363+60.00

CUT VOLUME : 78
FILL VOLUME : 70

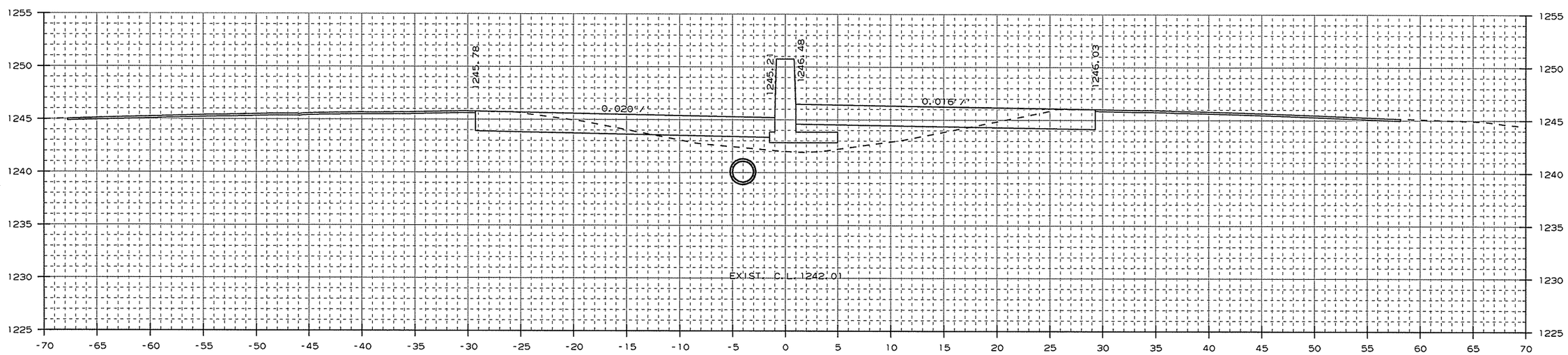

AREA CUT : 34.2
AREA FILL : 32.2

1363+00.00

CUT VOLUME : 124
FILL VOLUME : 121

CROSS SECTION STA. 1363+00 TO STA. 1363+60

USER: at5106
DESIGN FILE: G:\13106100_264toNHope\TRANSP\dgn\xsect\rCA0901_CX_03.dgn
PLOTTED: 1/13/2016 09:44
SCALE: 10:1
MODEL: CROSS SECTION SHEETS

Crafton, Tull & Associates Inc.

DATE REVISED	DATE FILMED	DATE REVISED	DATE FILMED

FED.RD. DIST.NO.	STATE	FED.AID PROJ.NO.	SHEET NO.	TOTAL SHEETS
6	ARK.			
JOB NO.		CA0901	436	452

2 CROSS SECTIONS

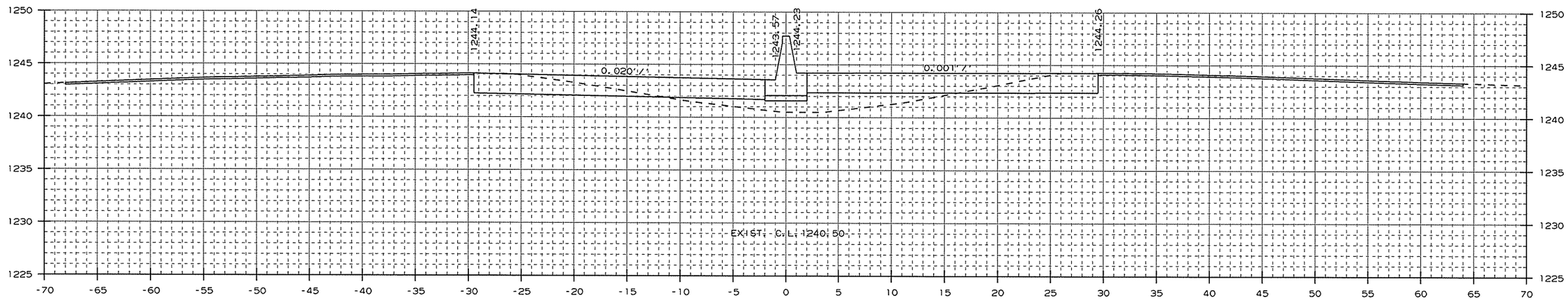

AREA CUT : 36.6
AREA FILL : 25.6

1364+00.00

CUT VOLUME : 31
FILL VOLUME : 23

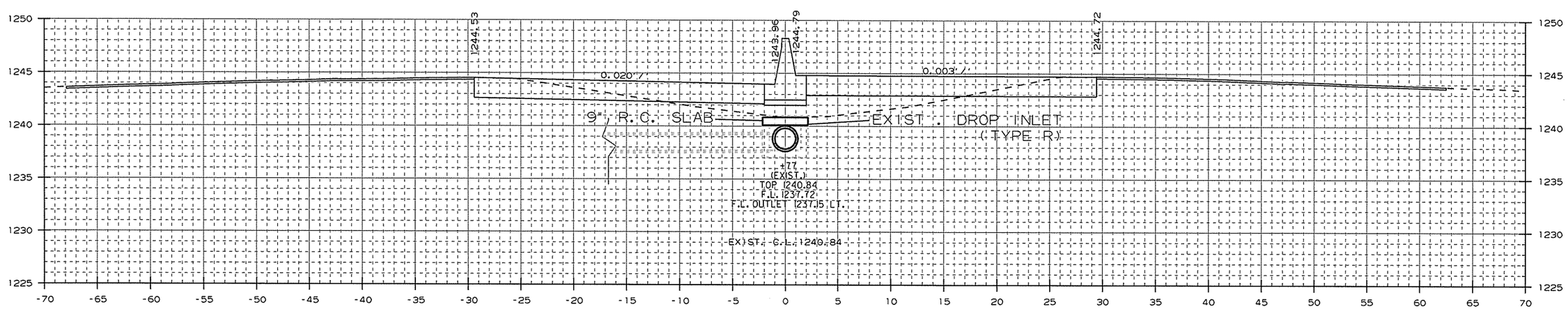

AREA CUT : 35.4
AREA FILL : 28.3

1363+77.00

CUT VOLUME : 22
FILL VOLUME : 18

STA. 1363+77 IN PLACE
TYPE R DROP INLET IN MEDIAN
W/ 18" X 93' R.C. PIPE OUTLET
W/ F.E.S. LT.
MODIFY

CROSS SECTION STA. 1363+77 TO STA. 1364+00

USER: at5106
DESIGN FILE: G:\13106100_264toNHope\TRANSP\dgn\xsect\rCA0901_CX_03.dgn
PLOTTED: 1/13/2016 09:44
SCALE: 10:1
MODEL: CROSS SECTION SHEETS

Crafton, Tull & Associates Inc.

DATE REVISED	DATE FILMED	DATE REVISED	DATE FILMED

FED.RD. DIST.NO.	STATE	FED.AID PROJ.NO.	SHEET NO.	TOTAL SHEETS
6	ARK.			
JOB NO.		CA0901	437	452

2 CROSS SECTIONS

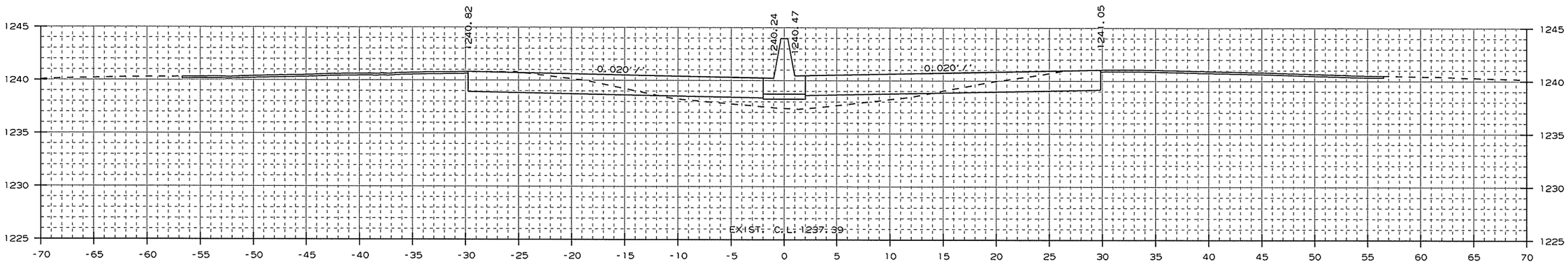

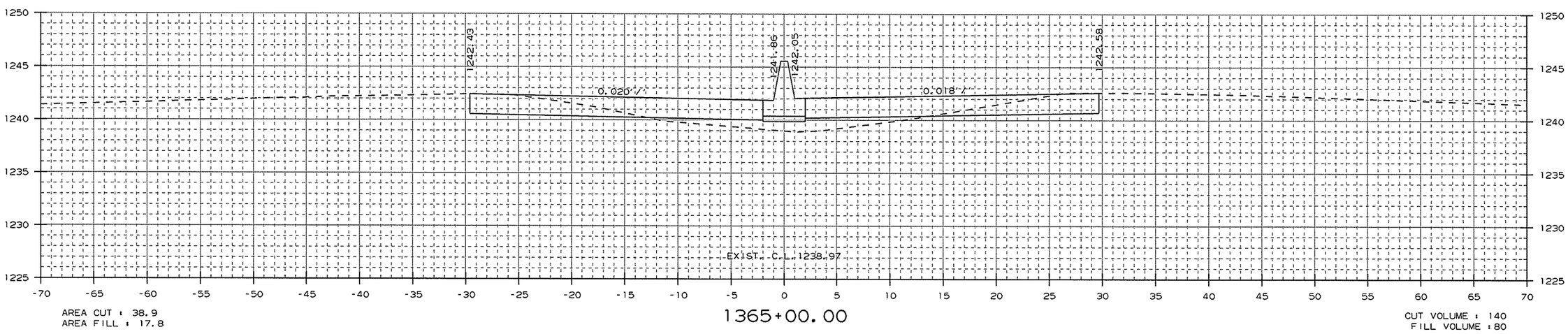

CROSS SECTION STA. 1365+00 TO STA. 1366+00

USER: at5106
DESIGN FILE: G:\13106100_264toNHope\TRANSP\dgn\xsect\rCA0901_CX_03.dgn
PLOTTED: 1/13/2016 09:44
SCALE: 10:1
MODEL: CROSS SECTION SHEETS

Crafton, Tull & Associates Inc.

DATE REVISED	DATE FILMED	DATE REVISED	DATE FILMED

FED.RD. DIST.NO.	STATE	FED.AID PROJ.NO.	SHEET NO.	TOTAL SHEETS
6	ARK.			
JOB NO.		CA0901	438	452

2 CROSS SECTIONS

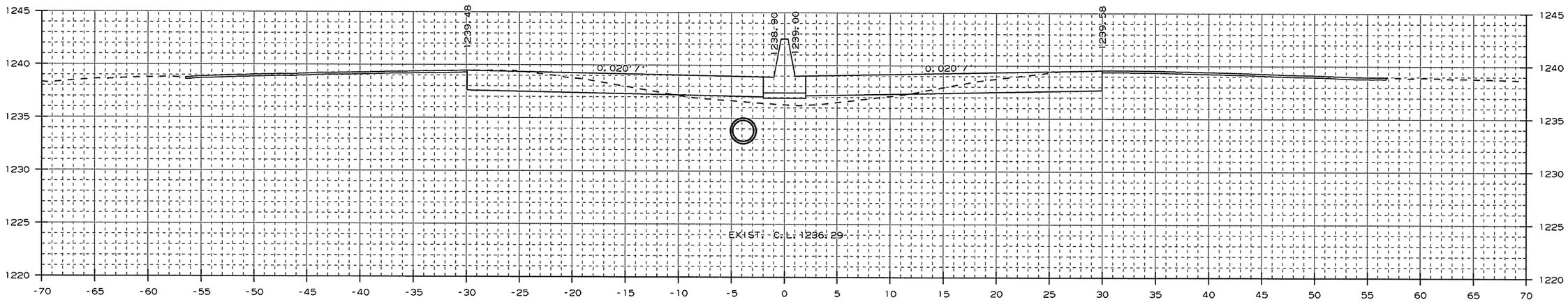

AREA CUT : 46.7
AREA FILL : 10.5

1367+00.00

CUT VOLUME : 68
FILL VOLUME : 17

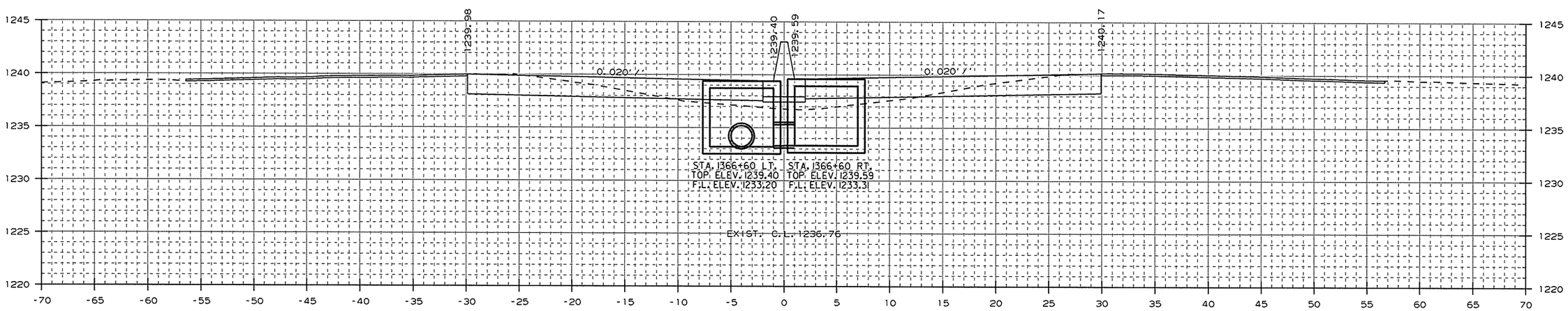

AREA CUT : 44.7
AREA FILL : 12.1

STA. 1366+60 - CONSTRUCT
DROP INLET 3' LT. OF C.L. H=6'2"
W/ 24" x 296' R.C. PIPE CULVERT
(CLASS III) (TYPE 3 BEDDING)
CONNECT TO DROP INLET
STA. 1369+60 LT.
TYPE ST DROP INLET = 4' X 6'
3 GRATES

1366+60.00

STA. 1366+60 - CONSTRUCT
DROP INLET 3' RT. OF C.L. H=6'3"
W/ 24" x 2' R.C. PIPE CULVERT
(CLASS III) (TYPE 3 BEDDING)
CONNECT TO DROP INLET
STA. 1366+60 LT.
TYPE ST DROP INLET = 4' X 6'
3 GRATES

CUT VOLUME : 96
FILL VOLUME : 32

CROSS SECTION STA. 1366+60 TO STA. 1367+00

USER: at5106
DESIGN FILE: G:\13106100_264toNHope\TRANSP\dgn\xsect\rCA0901_CX_03.dgn
PLOTTED: 1/13/2016 09:44
SCALE: 10:1
MODEL: CROSS SECTION SHEETS

Crafton, Tull & Associates Inc.

DATE REVISED	DATE FILMED	DATE REVISED	DATE FILMED

FED.RD. DIST.NO.	STATE	FED.AID PROJ.NO.	SHEET NO.	TOTAL SHEETS
6	ARK.			
JOB NO.		CA0901	439	452

2 CROSS SECTIONS

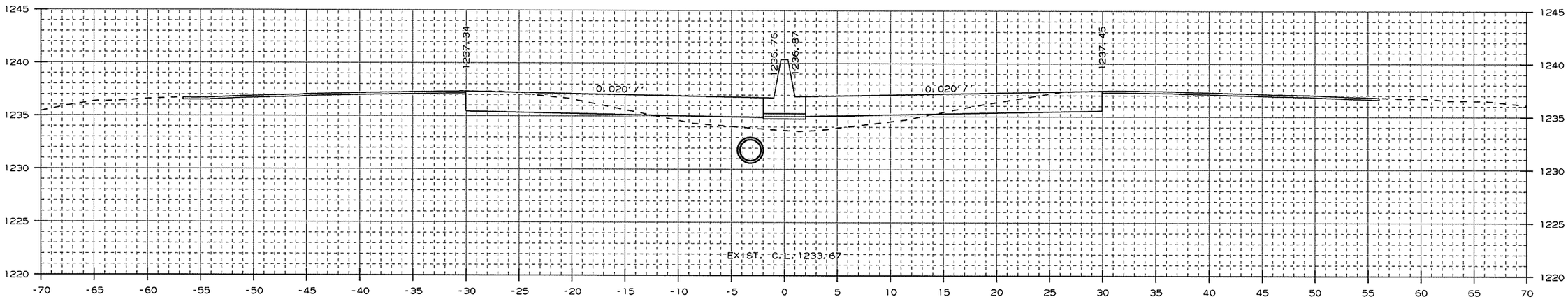

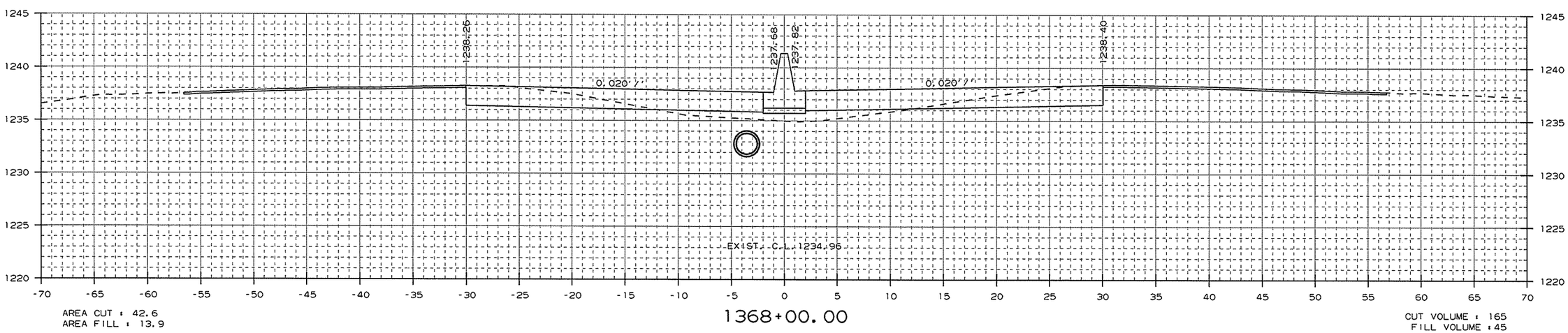

CROSS SECTION STA. 1368+00 TO STA. 1369+00

USER: at5106
DESIGN FILE: G:\13106100_264toNHope\TRANSP\dgn\xsect\rCA0901_CX_03.dgn
PLOTTED: 1/13/2016 09:44
SCALE: 10:1
MODEL: CROSS SECTION SHEETS

Crafton, Tull & Associates Inc.

DATE REVISED	DATE FILMED	DATE REVISED	DATE FILMED

FED.RD. DIST.NO.	STATE	FED.AID PROJ.NO.	SHEET NO.	TOTAL SHEETS
6	ARK.			
JOB NO.		CA0901	440	452

2 CROSS SECTIONS

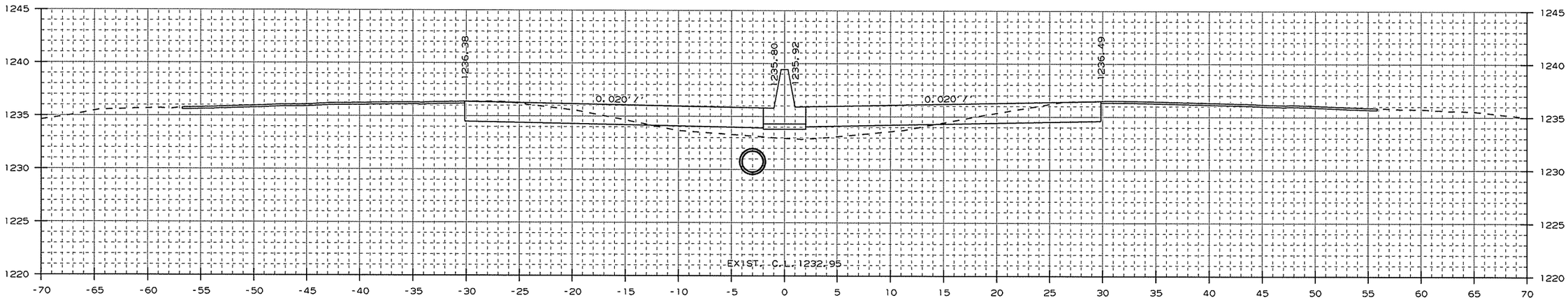

AREA CUT : 40.6
AREA FILL : 18.1

1370+00.00

CUT VOLUME : 60
FILL VOLUME : 29

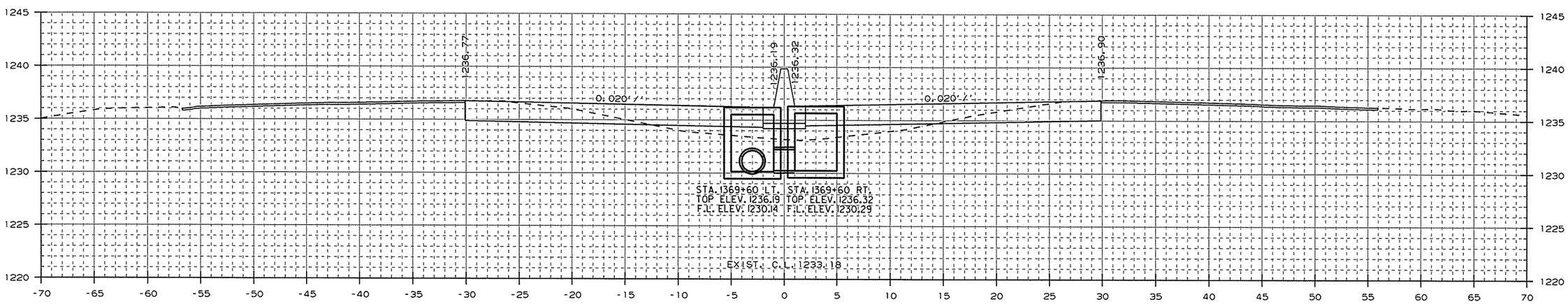

AREA CUT : 40.8
AREA FILL : 20.8

STA. 1369+60 - CONSTRUCT
DROP INLET 3' LT. OF C.L. H=6'1"
W/ 24" x 296' R.C. PIPE CULVERT
(CLASS III) (TYPE 3 BEDDING)
CONNECT TO DROP INLET
STA. 1372+60 LT.
TYPE ST DROP INLET = 4' X 4'

1369+60.00

STA. 1369+60 - CONSTRUCT
DROP INLET 3' RT. OF C.L. H=6'1"
W/ 24" x 2' R.C. PIPE CULVERT
(CLASS III) (TYPE 3 BEDDING)
CONNECT TO DROP INLET
STA. 1369+60 LT.
TYPE ST DROP INLET = 4' X 4'

CUT VOLUME : 91
FILL VOLUME : 47

CROSS SECTION STA. 1369+60 TO STA. 1370+00

USER: at5106
DESIGN FILE: G:\13106100_264toNHope\TRANSP\dgn\xsect\rCA0901_CX_03.dgn
PLOTTED: 1/13/2016 09:44
SCALE: 10:1
MODEL: CROSS SECTION SHEETS

Crafton, Tull & Associates Inc.

DATE REVISED	DATE FILMED	DATE REVISED	DATE FILMED

FED.RD. DIST.NO.	STATE	FED.AID PROJ.NO.	SHEET NO.	TOTAL SHEETS
6	ARK.			
JOB NO.		CA0901	441	452

2 CROSS SECTIONS

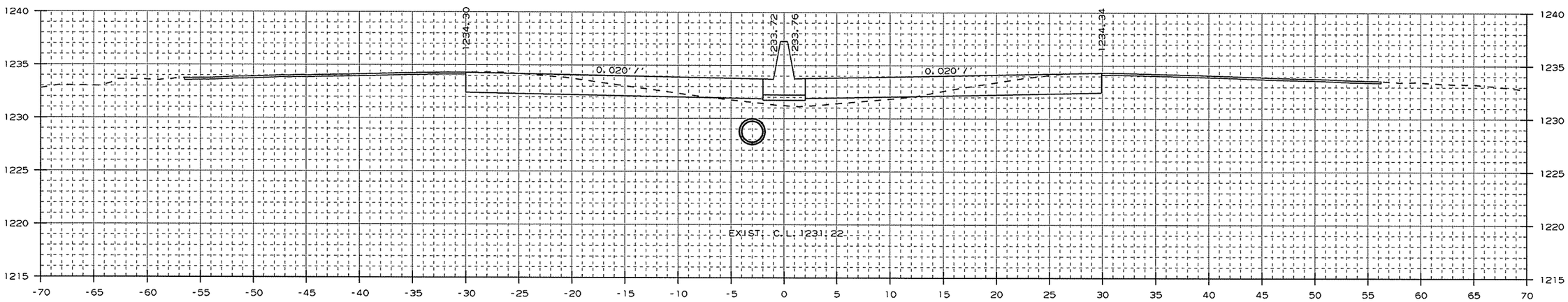

AREA CUT : 49.1
AREA FILL : 7.4

1372+00.00

CUT VOLUME : 172
FILL VOLUME : 34

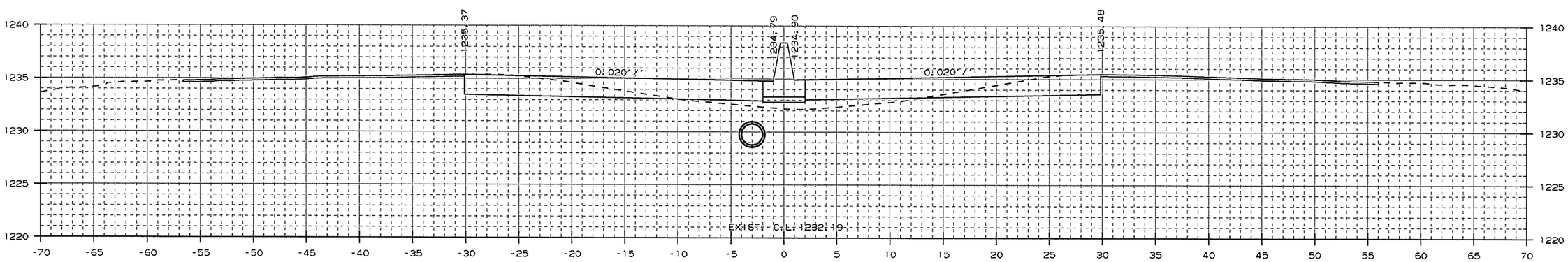

AREA CUT : 43.8
AREA FILL : 11.2

1371+00.00

CUT VOLUME : 156
FILL VOLUME : 54

CROSS SECTION STA. 1371+00 TO STA. 1372+00

USER: a15106
DESIGN FILE: G:\13106100_264toNHope\TRANSP\dgn\xsect\rCA0901_CX_03.dgn
PLOTTED: 1/13/2016 09:46
SCALE: 10:1
MODEL: CROSS SECTION SHEETS

Crafton, Tull & Associates Inc.

DATE REVISED	DATE FILMED	DATE REVISED	DATE FILMED

FED.RD. DIST.NO.	STATE	FED.AID PROJ.NO.	SHEET NO.	TOTAL SHEETS
6	ARK.			
JOB NO.		CA0901	442	452

2 CROSS SECTIONS

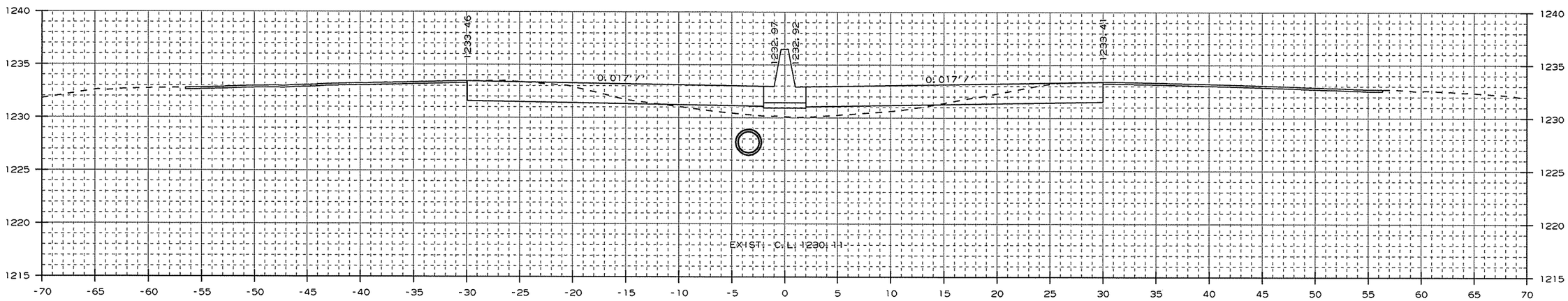

AREA CUT : 42.2
AREA FILL : 16.1

1373+00.00

CUT VOLUME : 67
FILL VOLUME : 19

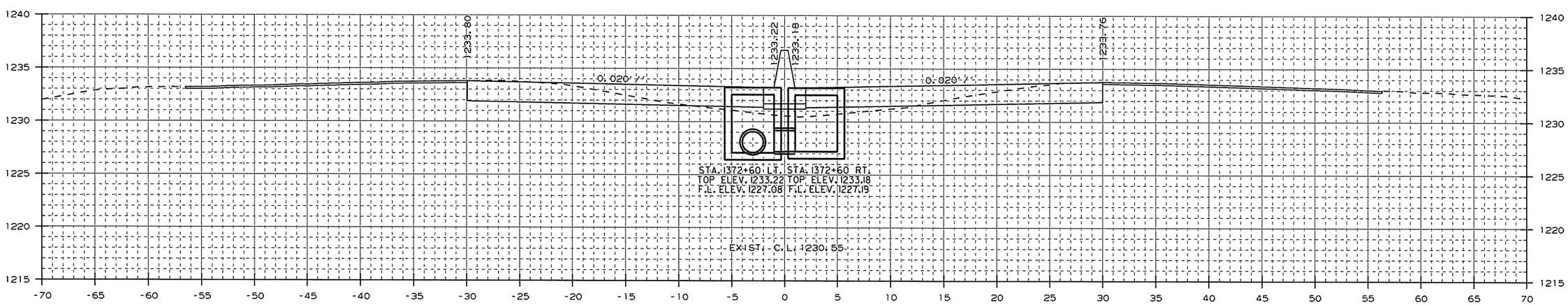

AREA CUT : 48.5
AREA FILL : 9.7

STA. 1372+60 - CONSTRUCT
DROP INLET 3' LT. OF C.L. H=6'2"
W/ 24" x 96' R.C. PIPE CULVERT
(CLASS III) (TYPE 3 BEDDING)
CONNECT TO DROP INLET
STA. 1373+60 LT.
TYPE ST DROP INLET = 4' X 4'

1372+60.00

STA. 1372+60 - CONSTRUCT
DROP INLET 3' RT. OF C.L. H=6'0"
W/ 24" x 2' R.C. PIPE CULVERT
(CLASS III) (TYPE 3 BEDDING)
CONNECT TO DROP INLET
STA. 1372+60 LT.
TYPE ST DROP INLET = 4' X 4'

CUT VOLUME : 108
FILL VOLUME : 19

CROSS SECTION STA. 1372+60 TO STA. 1373+00

USER: a15106
DESIGN FILE: G:\13106100_264toNHope\TRANSP\dgn\xsect\rCA0901_CX_03.dgn
PLOTTED: 1/13/2016 09:46
SCALE: 10:1
MODEL: CROSS SECTION SHEETS

Crafton, Tull & Associates Inc.

DATE REVISED	DATE FILMED	DATE REVISED	DATE FILMED

FED.RD. DIST.NO.	STATE	FED.AID PROJ.NO.	SHEET NO.	TOTAL SHEETS
6	ARK.			
JOB NO.		CA0901	443	452

2 CROSS SECTIONS

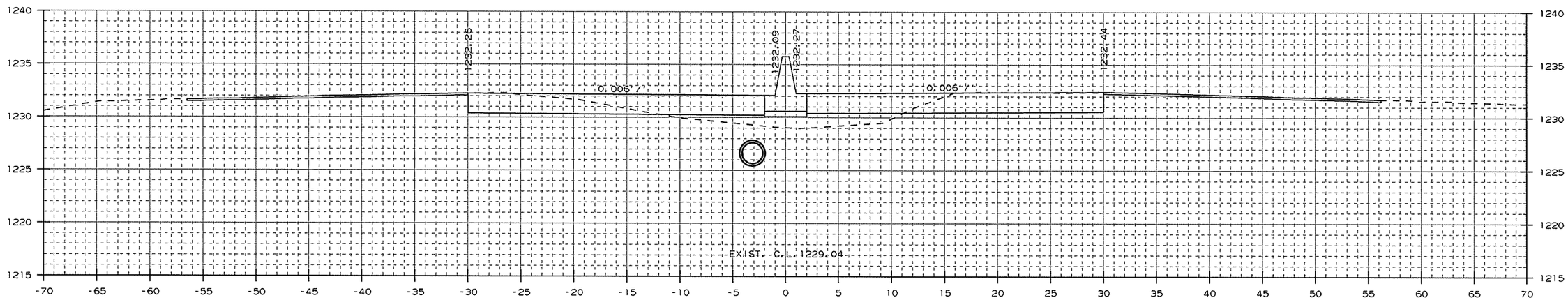

AREA CUT : 54.0
AREA FILL : 19.2

1374+00.00

CUT VOLUME : 81
FILL VOLUME : 27

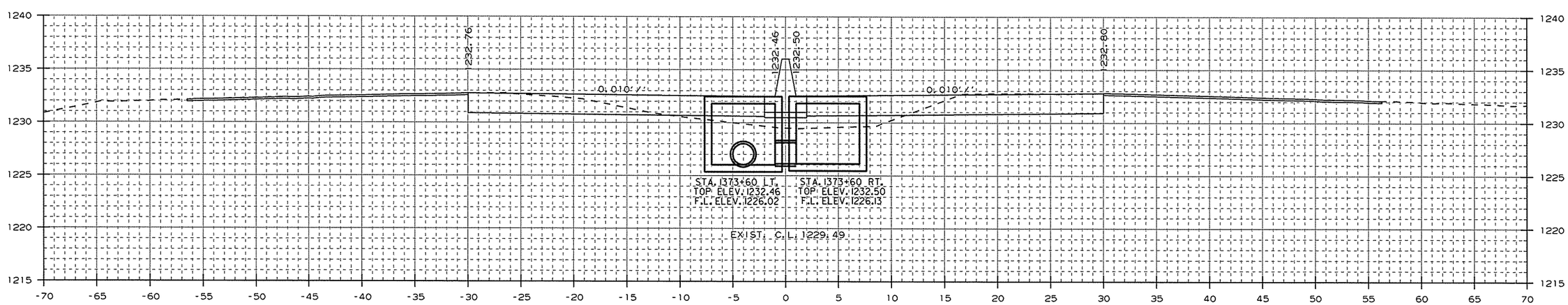

AREA CUT : 54.8
AREA FILL : 16.9

STA. 1373+60 - CONSTRUCT
DROP INLET 3' LT. OF C.L. H=6'5"
W/ 24" x 212' R.C. PIPE CULVERT
(CLASS III) (TYPE 3 BEDDING)
CONNECT TO EXIST. DROP INLET
STA. 1375+75
TYPE ST DROP INLET = 4' X 6'
3 GRATES

1373+60.00

STA. 1373+60 - CONSTRUCT
DROP INLET 3' RT. OF C.L. H=6'4"
W/ 24" x 2' R.C. PIPE CULVERT
(CLASS III) (TYPE 3 BEDDING)
CONNECT TO DROP INLET
STA. 1373+60 LT.
TYPE ST DROP INLET = 4' X 6'
3 GRATES

CUT VOLUME : 108
FILL VOLUME : 37

CROSS SECTION STA. 1373+60 TO STA. 1374+00

USER: a15106
DESIGN FILE: G:\13106100_264toNHope\TRANSP\dgn\xsect\rCA0901_CX_03.dgn
PLOTTED: 1/13/2016 09:46
SCALE: 10:1
MODEL: CROSS SECTION SHEETS

Crafton, Tull & Associates Inc.

DATE REVISED	DATE FILMED	DATE REVISED	DATE FILMED

FED.RD. DIST.NO.	STATE	FED.AID PROJ.NO.	SHEET NO.	TOTAL SHEETS
6	ARK.			
JOB NO.		CA0901	444	452

2 CROSS SECTIONS

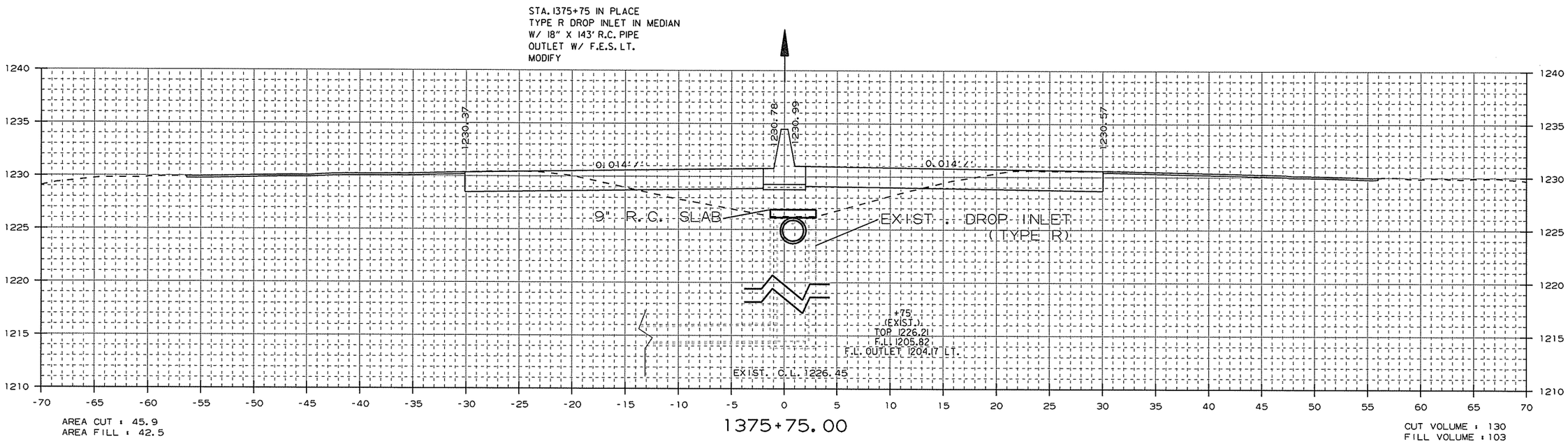

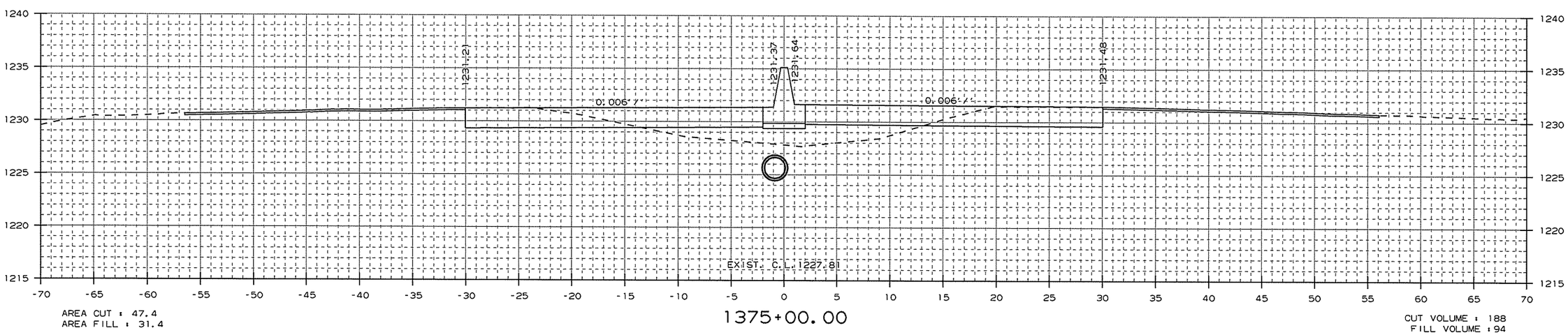

CROSS SECTION STA. 1375+00 TO STA. 1375+75

USER: a15106
DESIGN FILE: G:\13106100_264toNHope\TRANSP\dgn\xsect\rCA0901_CX_03.dgn
PLOTTED: 1/13/2016 09:46
SCALE: 10:1
MODEL: CROSS SECTION SHEETS

Crafton, Tull & Associates Inc.

DATE REVISED	DATE FILMED	DATE REVISED	DATE FILMED

FED.RD. DIST.NO.	STATE	FED.AID PROJ.NO.	SHEET NO.	TOTAL SHEETS
6	ARK.			
JOB NO.		CA0901	445	452

2 CROSS SECTIONS

STA. 1376+57.71 BR. END
I-49 LML BRIDGE (S.B.)
399'-0" CONT. PRESTRESSED
CONC. GIRDER UNIT
(43'-57'-43'-64'-64'-64'-64')
62'-0" CLEAR ROADWAY
BR. NO. A5960
STA. 1380+58.82 BR. END

STA. 1376+57.71 BR. END
I-49 RML BRIDGE (N.B.)
399'-0" CONT. PRESTRESSED
CONC. GIRDER UNIT
(43'-57'-43'-64'-64'-64'-64')
62'-0" CLEAR ROADWAY
BR. NO. B5960
STA. 1380+58.82 BR. END

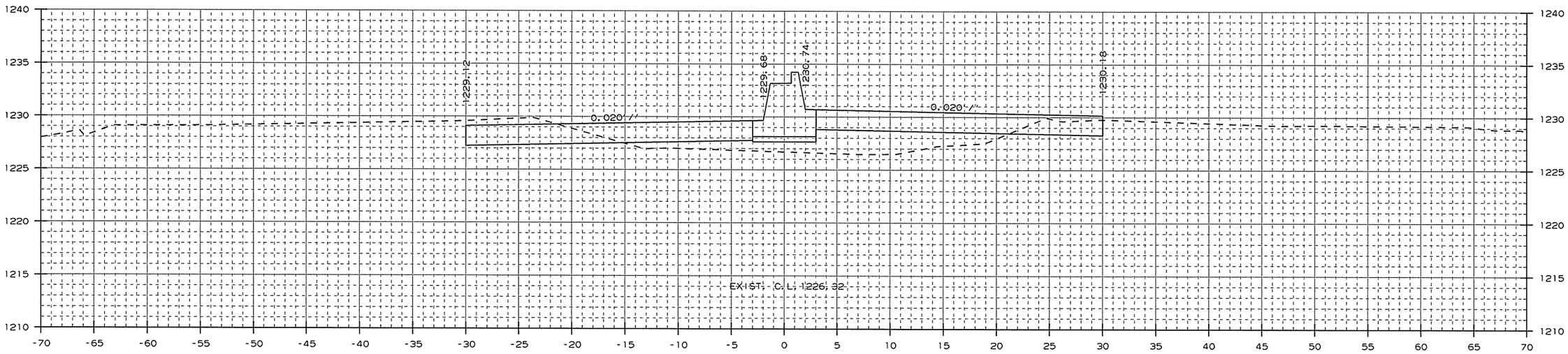

AREA CUT : 36.0
AREA FILL : 44.5

1376+57.71

CUT VOLUME : 91
FILL VOLUME : 72

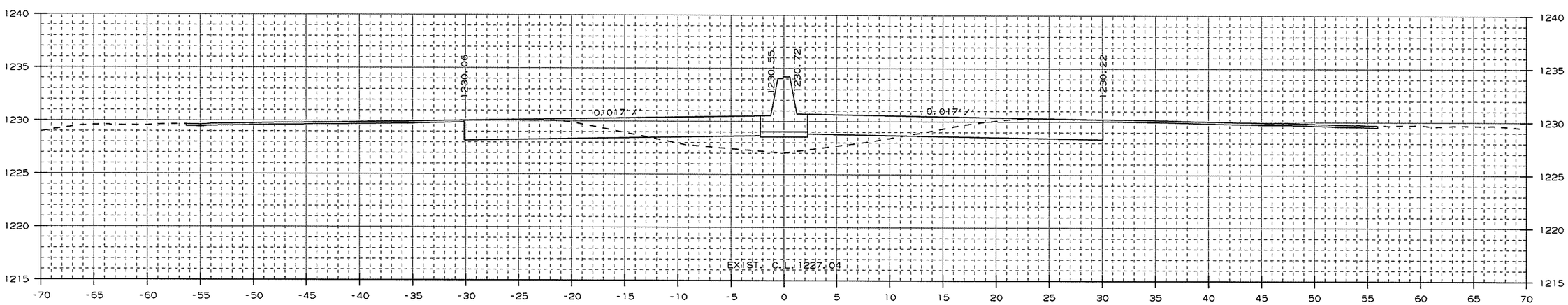

AREA CUT : 49.5
AREA FILL : 22.7

1376+00.00

CUT VOLUME : 44
FILL VOLUME : 30

CROSS SECTION STA. 1376+00 TO STA. 1376+58

USER: at5106
DESIGN FILE: G:\13106100_264toNHope\TRANSP\dgn\xsect\rCA0901_CX_03.dgn
PLOTTED: 1/13/2016 09:46
SCALE: 10:1
MODEL: CROSS SECTION SHEETS

Crafton, Tull & Associates Inc.

DATE REVISED	DATE FILMED	DATE REVISED	DATE FILMED

FED.RD. DIST.NO.	STATE	FED.AID PROJ.NO.	SHEET NO.	TOTAL SHEETS
6	ARK.			
JOB NO.		CA0901	446	452

2 CROSS SECTIONS

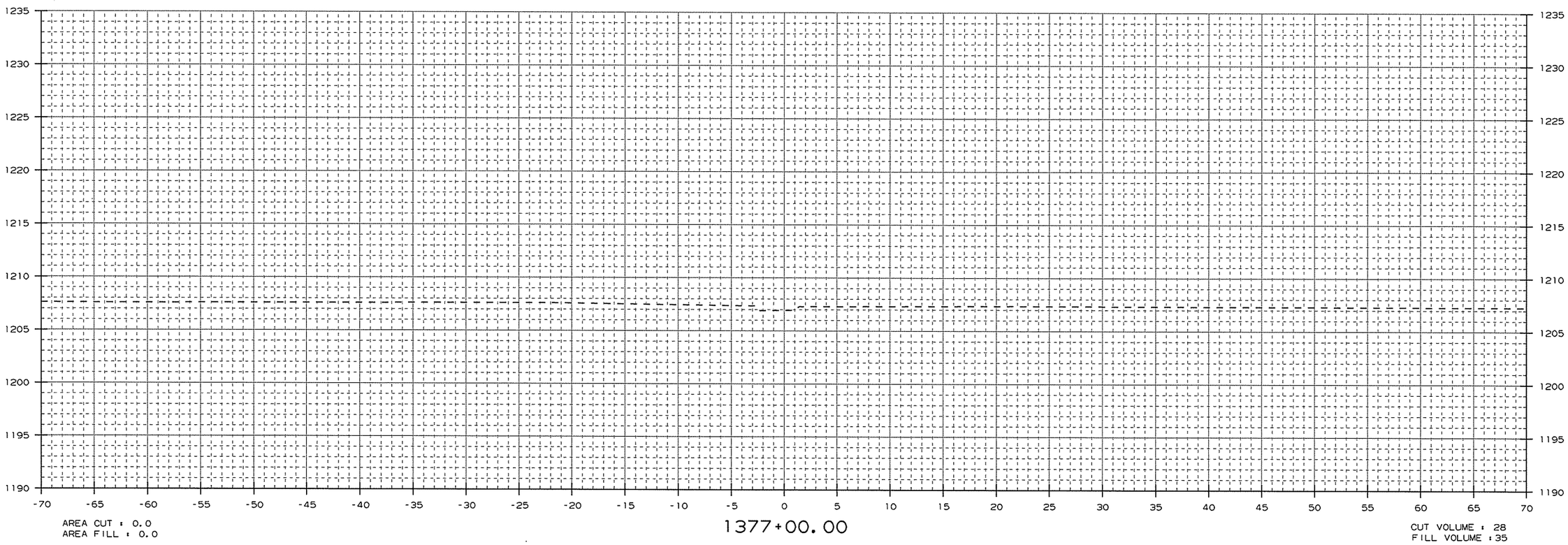

CROSS SECTION STA. 1377+00 TO STA. 1377+00

USER: at5106
DESIGN FILE: G:\13106100_264toNHope\TRANSP\dgn\xsect\rCA0901_CX_03.dgn
PLOTTED: 1/13/2016 09:46
SCALE: 10:1
MODEL: CROSS SECTION SHEETS

Crafton, Tull & Associates Inc.

DATE REVISED	DATE FILMED	DATE REVISED	DATE FILMED

FED.RD. DIST.NO.	STATE	FED.AID PROJ.NO.	SHEET NO.	TOTAL SHEETS
6	ARK.			
JOB NO.		CA0901	447	452

2 CROSS SECTIONS

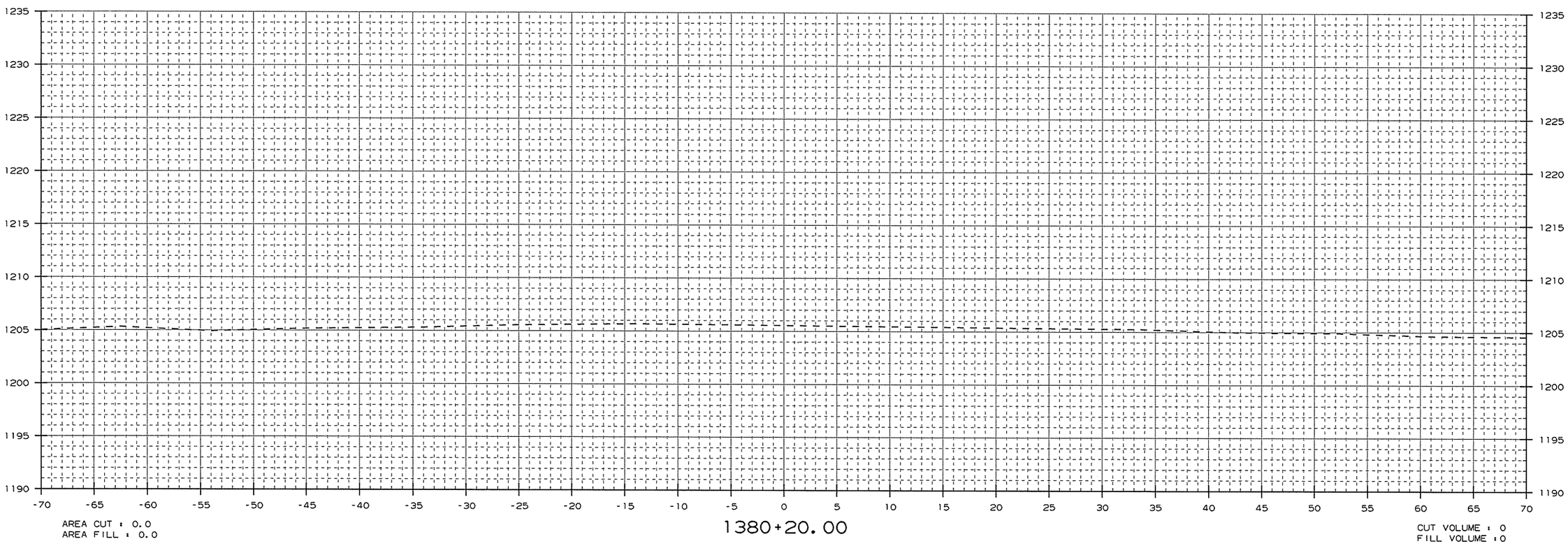

CROSS SECTION STA. 1380+20 TO STA. 1380+20

USER: at5106
DESIGN FILE: G:\3106100_264toNHope\TRANSP\dgn\xsect\rCA0901_CX_03.dgn
PLOTTED: 1/13/2016 09:46
SCALE: 10:1
MODEL: CROSS SECTION SHEETS

Crafton, Tull & Associates Inc.

DATE REVISED	DATE FILMED	DATE REVISED	DATE FILMED

FED.RD. DIST.NO.	STATE	FED.AID PROJ.NO.	SHEET NO.	TOTAL SHEETS
6	ARK.			
JOB NO.		CA0901	448	452

2 CROSS SECTIONS

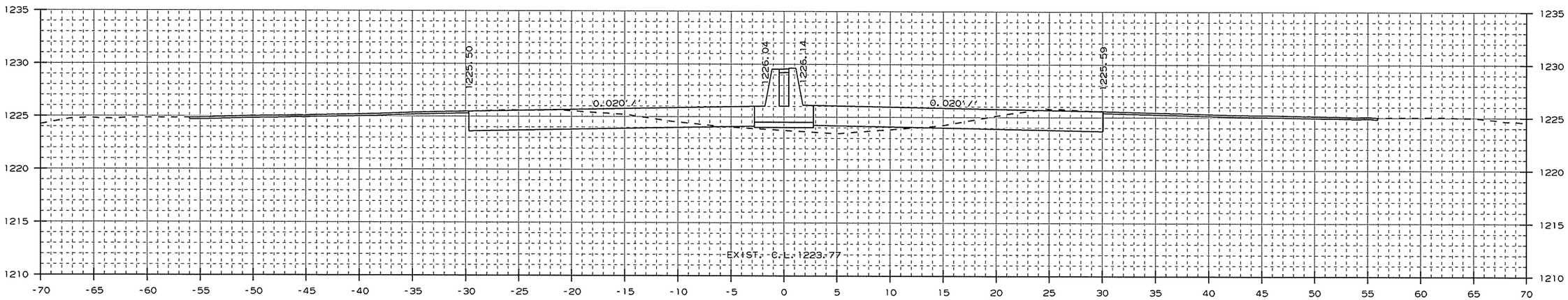

AREA CUT : 53.2
AREA FILL : 6.4

1381+00.00

CUT VOLUME : 49
FILL VOLUME : 88

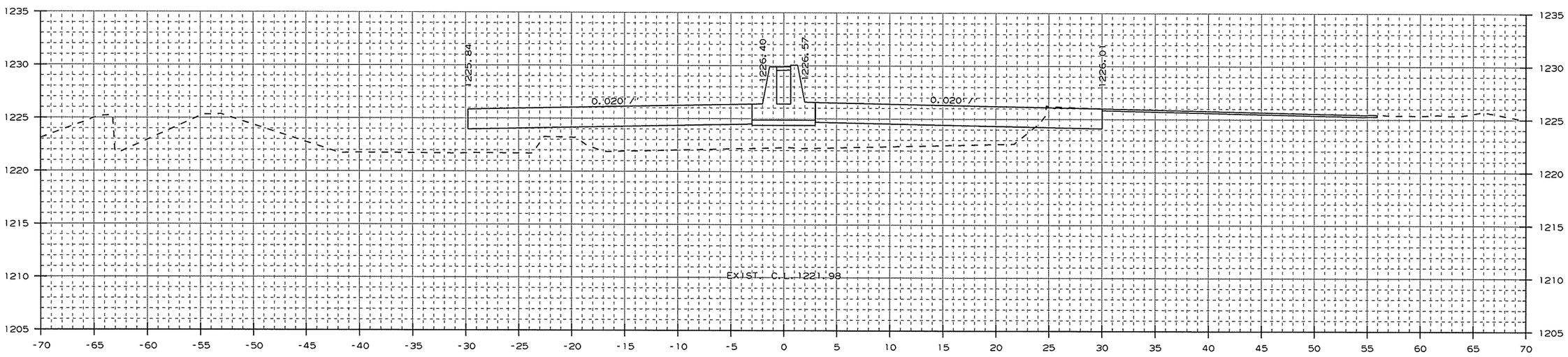

AREA CUT : 10.7
AREA FILL : 109.1

1380+58.82

CUT VOLUME : 8
FILL VOLUME : 78

CROSS SECTION STA. 1380+59 TO STA. 1381+00

USER: at5106
DESIGN FILE: G:\13106100_264toNHope\TRANSP\dgn\xsect\rCA0901_CX_03.dgn
PLOTTED: 1/13/2016 09:46
SCALE: 10:1
MODEL: CROSS SECTION SHEETS

Crafton, Tull & Associates Inc.

DATE REVISED	DATE FILMED	DATE REVISED	DATE FILMED

FED.RD. DIST.NO.	STATE	FED.AID PROJ.NO.	SHEET NO.	TOTAL SHEETS
6	ARK.			
JOB NO.		CA0901	449	452

2 CROSS SECTIONS

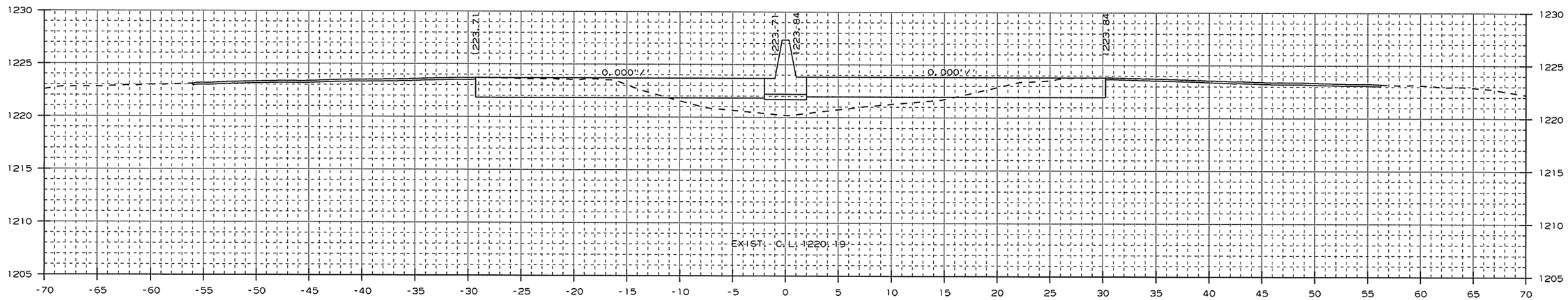

AREA CUT : 45.3
AREA FILL : 25.5

1383+00.00

CUT VOLUME : 162
FILL VOLUME : 112

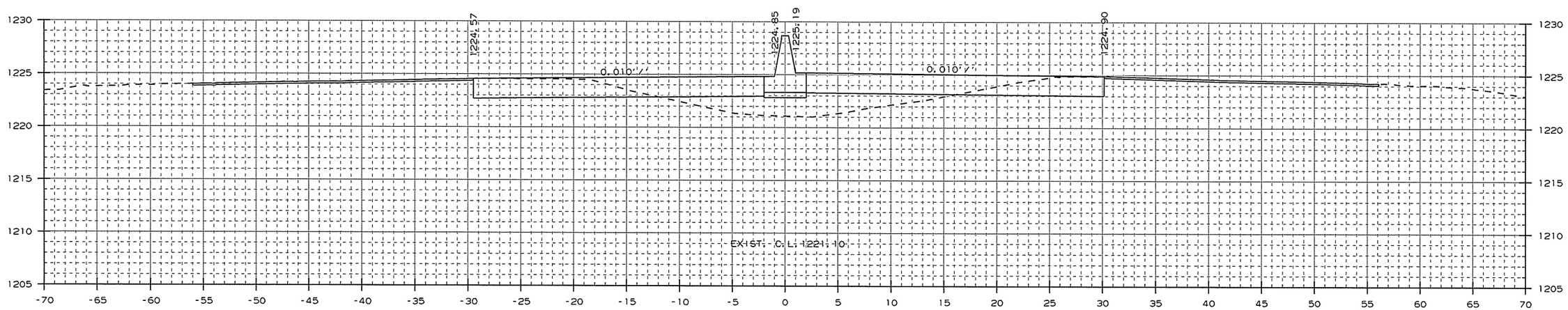

AREA CUT : 42.0
AREA FILL : 35.2

1382+00.00

CUT VOLUME : 176
FILL VOLUME : 77

CROSS SECTION STA. 1382+00 TO STA. 1383+00

USER: a15106
DESIGN FILE: G:\13106100_264toNHope\TRANSP\dgn\xsect\rCA0901_CX_03.dgn
PLOTTED: 1/13/2016 09:46
SCALE: 10:1
MODEL: CROSS SECTION SHEETS

Crafton, Tull & Associates Inc.

DATE REVISED	DATE FILMED	DATE REVISED	DATE FILMED

FED.RD. DIST.NO.	STATE	FED.AID PROJ.NO.	SHEET NO.	TOTAL SHEETS
6	ARK.			
JOB NO.		CA0901	450	452

2 CROSS SECTIONS

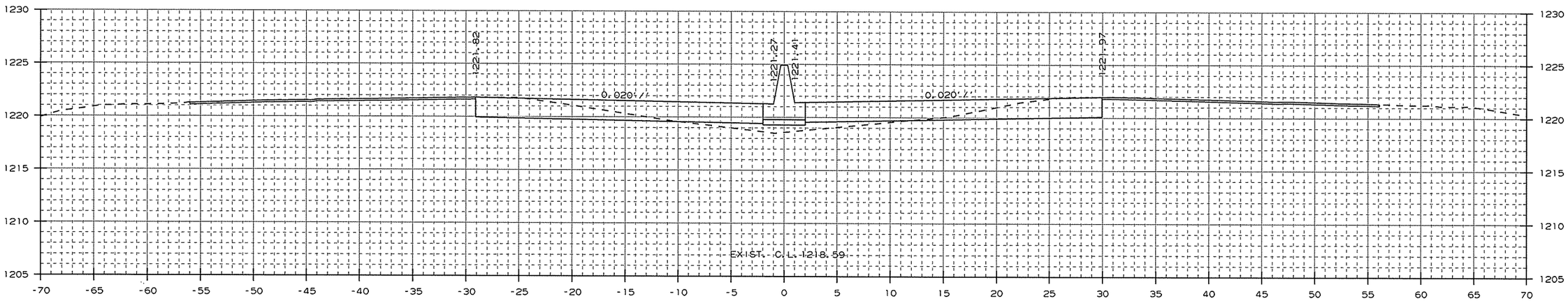

AREA CUT : 42.6
AREA FILL : 9.7

1385+00.00

CUT VOLUME : 153
FILL VOLUME : 50

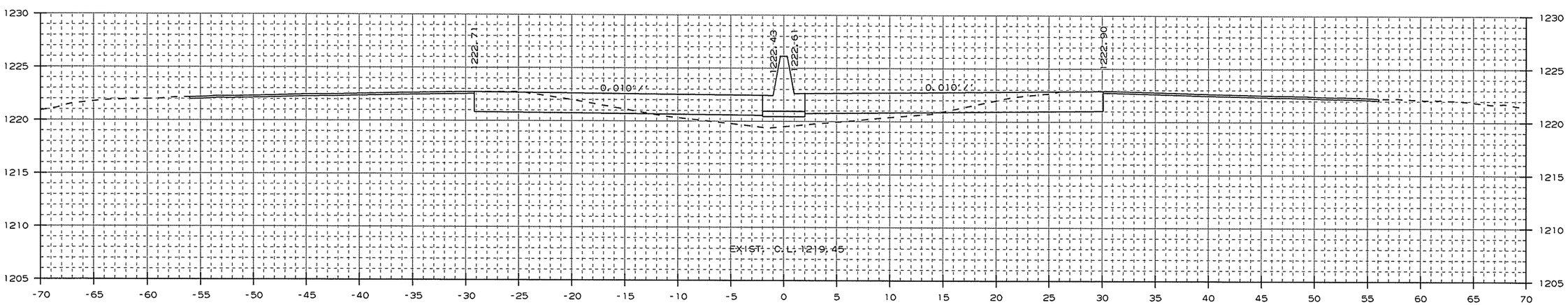

AREA CUT : 39.9
AREA FILL : 17.4

1384+00.00

CUT VOLUME : 158
FILL VOLUME : 79

CROSS SECTION STA. 1384+00 TO STA. 1385+00

USER: at5106
DESIGN FILE: G:\13106100_264toNHope\TRANSP\dgn\xsect\rCA0901_CX_03.dgn
PLOTTED: 1/13/2016 09:46
SCALE: 10:1
MODEL: CROSS SECTION SHEETS

Crafton, Tull & Associates Inc.

DATE REVISED	DATE FILMED	DATE REVISED	DATE FILMED

FED.RD. DIST.NO.	STATE	FED.AID PROJ.NO.	SHEET NO.	TOTAL SHEETS
6	ARK.			
JOB NO.		CA0901	451	452

2 CROSS SECTIONS

STA. 1385+69.30 IN PLACE TYPE RM
DROP INLET IN MEDIAN
REMOVE

STA. 1385+69.30 - CONSTRUCT
DROP INLET 3' LT. OF C.L. H= 7'-1"
CONNECT TO EXIST. 24" X 248'
R.C. PIPE CULVERT
TYPE ST DROP INLET 4' X 4'

STA. 1385+69.30 - CONSTRUCT
DROP INLET 3' RT. OF C.L. H= 7'-1"
W/ 24" X 2' R.C. PIPE CULVERT
(CLASS III) (TYPE 3 BEDDING)
CONNECT TO DROP INLET
STA. 1385+69.30 LT.
TYPE ST DROP INLET 4' X 4'

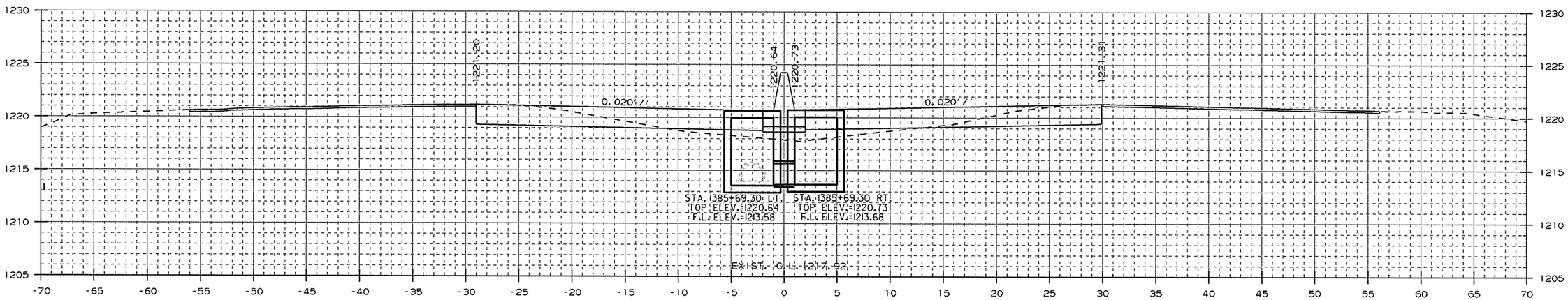

AREA CUT : 41.1
AREA FILL : 12.7

1385+69.30

CUT VOLUME : 101
FILL VOLUME : 27

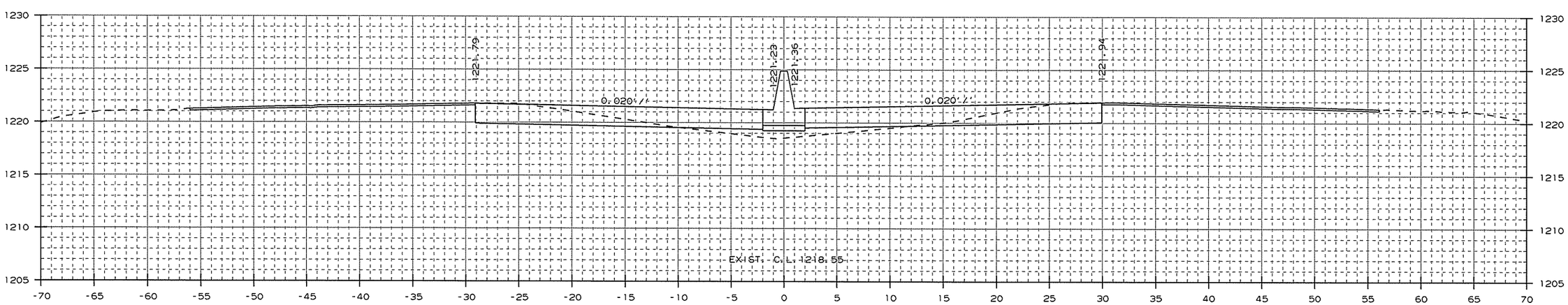

AREA CUT : 42.7
AREA FILL : 9.7

1385+03.98

CUT VOLUME : 6
FILL VOLUME : 1

CROSS SECTION STA. 1385+04 TO STA. 1385+69

USER: a15106
DESIGN FILE: G:\13106100_264toNHope\TRANSP\dgn\xsect\rCA0901_CX_03.dgn
PLOTTED: 1/13/2016 09:46
SCALE: 10:1
MODEL: CROSS SECTION SHEETS

Crafton, Tull & Associates Inc.

DATE REVISED	DATE FILMED	DATE REVISED	DATE FILMED

FED.RD. DIST.NO.	STATE	FED.AID PROJ.NO.	SHEET NO.	TOTAL SHEETS
6	ARK.			
JOB NO.		CA0901	452	452

2 CROSS SECTIONS

STA. 1386+69.30 - END JOB CA0901

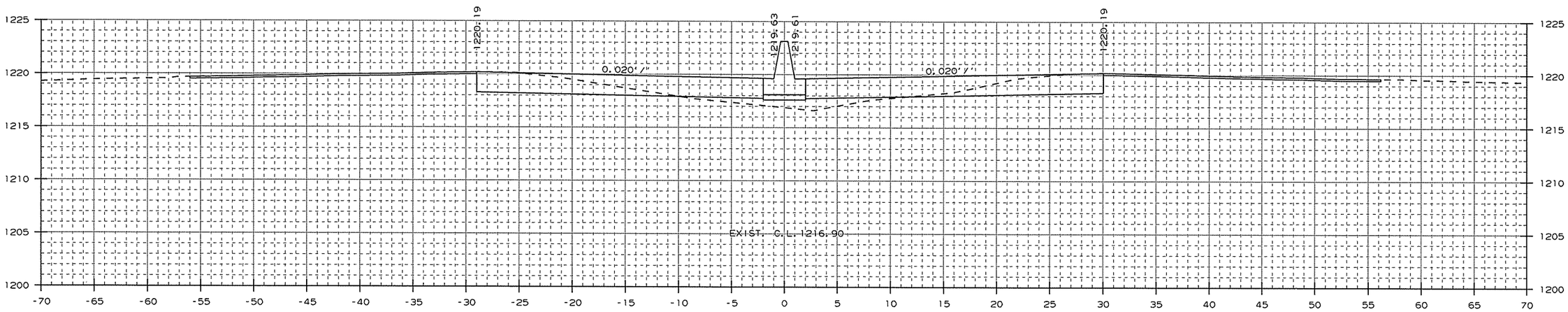

AREA CUT : 42.8
AREA FILL : 11.1

1386+69.30

CUT VOLUME : 110
FILL VOLUME : 28

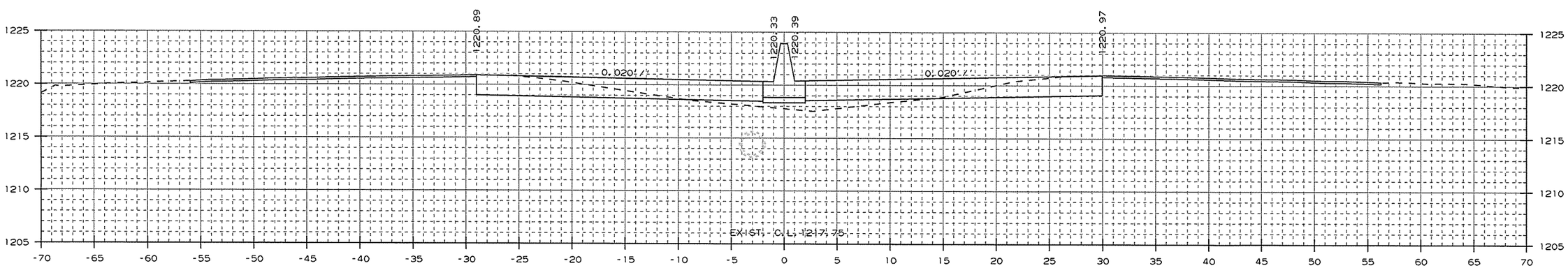

AREA CUT : 42.5
AREA FILL : 10.7

1386+00.00

CUT VOLUME : 48
FILL VOLUME : 13

CROSS SECTION STA. 1386+00 TO STA. 1386+69

USER: at5106
DESIGN FILE: G:\13106100_264toNHope\TRANSP\dgn\xsect\rCA0901_CX_03.dgn
PLOTTED: 1/13/2016 09:46
SCALE: 10:1
MODEL: CROSS SECTION SHEETS