DATE REVISED	DATE FILMED	DATE REVISED	DATE FILMED	FED. RD. DIST. NO.	STATE	FED. AID PROJ. NO.	SHEET NO.	TOTAL SHEETS
				6	ARK.			
				JOB NO.		061448	1	82
				(4) PULASKI CO. AREA 1 HEADQUARTERS/R.E. OFFICE 61 (S)				

ARKANSAS DEPARTMENT OF TRANSPORTATION

CONSTRUCTION PLANS:

PULASKI CO. AREA 1 HEADQUARTERS/ R.E. OFFICE 61 (S)

PULASKI COUNTY

ROUTE 70 SECTION 13

JOB 061448

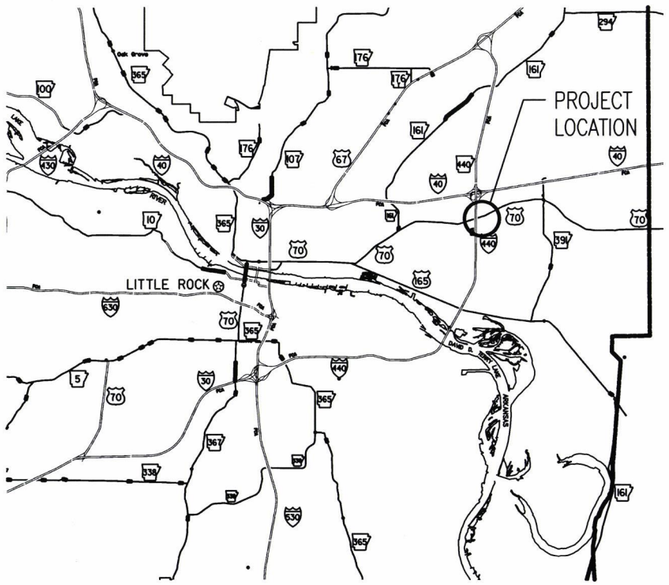

NORTH

VICINITY MAP

SCALE: NO SCALE

ARK. HWY. DIST. NO. 6

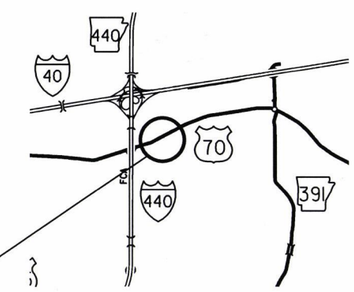

PROJECT LOCATION
911 ADDRESSES:
R.E. OFFICE–9800 HWY. 70 NORTH LITTLE ROCK 72117
SEALING CREW–9900 HWY. 70 NORTH LITTLE ROCK 72117
AREA HEADQUARTERS–9902 HWY. 70 NORTH LITTLE ROCK 72117

NORTH

LOCATION MAP

SCALE: NO SCALE

APPROVED

STATE OF ARKANSAS
REGISTERED PROFESSIONAL ENGINEER
No. 7836
M. E. BANKS

5-30-18

DEPUTY DIRECTOR
AND CHIEF ENGINEER

MIDPOINT OF PROJECT:
LATITUDE: N 34° 46' 10"
LONGITUDE: W 92° 09' 20"

ARDOT ARKANSAS DEPARTMENT OF TRANSPORTATION

PULASKI CO. AREA 1
HEADQUARTERS/
R.E. OFFICE 61 (S)
North Little Rock, Arkansas
Pulaski County

DATE: MAY 29, 2018
JOB NO: 061448
DRAWN BY: KB
REVISIONS:

G1.1

ABBREVIATIONS

AD	AREA DRAIN	GALV	GALVANIZED
ADA	AMERICANS WITH DISABILITIES	INSUL	INSULATION
AFF	ABOVE FINISHED FLOOR	INT	INTERIOR
AFG	ABOVE FINISHED GRADE	MAX	MAXIMUM
ALUM	ALUMINUM	MBM	METAL BUILDING MANUFACTURER
ANOD	ANODIZED	MECH	MECHANICAL
BOT	BOTTOM	MIN	MINIMUM
CJ	CONTROL JOINT	MTL	METAL
CLG	CEILING	NIC	NOT IN CONTRACT
CLR	CLEAR	NO	NUMBER
CMU	CONCRETE MASONRY UNIT	NOM	NOMINAL
COL	COLUMN	OC	ON CENTER
CONC	CONCRETE	OPG	OPENING
CONT	CONTINUOUS	PLUMB	PLUMBING
DEMO	DEMOLITION	PLAS. LAM.	PLASTIC LAMINATE
DTL	DETAIL	PLYWD	PLYWOOD
DIA	DIAMETER	PVC	POLYVINYL CHLORIDE
DIM	DIMENSION	RBR	RUBBER
EA	EACH	RD	ROOF DRAIN
EJ	EXPANSION JOINT	REQ	REQUIRED
ELEC	ELECTRICAL	SIM	SIMILAR
ELEV	ELEVATION	SPEC	SPECIFICATION
EQ	EQUAL	SPK	SPRINKLER
EWC	ELECTRIC WATER COOLER	STRUCT	STRUCTURAL
EXIST	EXISTING	T&G	TONGUE AND GROOVE
FD	FLOOR DRAIN	TELE	TELEPHONE
FEC	FIRE EXTINGUISHER CABINET	TLT	TOILET
FFE	FINISHED FLOOR ELEVATION	TYP	TYPICAL
FIXT	FIXTURE	UNO	UNLESS NOTED OTHERWISE
FLR	FLOOR	VCT	VINYL COMPOSITION TILE
GA	GAUGE		

SYMBOL LEGEND

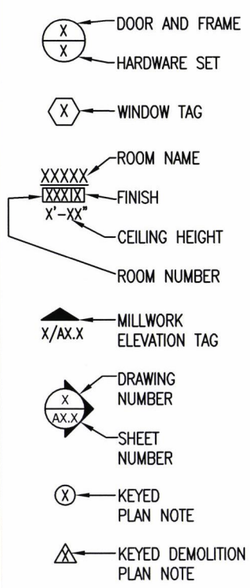

MATERIAL LEGEND

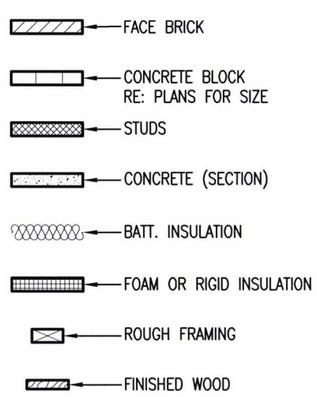

INDEX OF SHEETS

SHEET	NO.	SHEET TITLE	SHEET	NO.	SHEET TITLE
G1.1	1	TITLE SHEET	S1.1	43	R.E. OFFICE FOUNDATION PLAN AND DETAILS
G1.2	2	INDEX OF SHEETS	S2.1	44	A.H.Q. FOUNDATION PLAN
G1.3	3	GOVERNING SPECIFICATIONS, SUMMARY OF QUANTITIES, AND REVISIONS	S3.1	45	SEALING CREW FOUNDATION PLAN
			S4.1	46	FOUNDATION DETAILS
C1.1	4	PLOT PLAN	S4.2	47	FOUNDATION DETAILS
C1.2	5	OVERALL SITE PLAN	MEP1.1	48	OVERALL UTILITIES SITE PLAN
C1.3	6	GRADING PLAN	MEP1.2	49	ENLARGED UTILITIES SITE PLAN
C1.4	7	R.E. OFFICE ENLARGED SITE PLAN	MEP2.2	50	UTILITIES SITE DETAILS
C1.5	8	A.H.Q. AND SEALING CREW ENLARGED SITE PLANS	M1.1	51	R.E. OFFICE HVAC FLOOR PLAN
A1.1	9	DOOR SCHEDULE	M2.1	52	A.H.Q. ENLARGED HVAC FLOOR PLAN
A1.2	10	WINDOW SCHEDULE AND DETAILS	M2.2	53	A.H.Q. UPPER LEVEL HVAC FLOOR PLAN
A1.3	11	FINISH SCHEDULE, CABINET ELEVATIONS AND DETAILS	M3.1	54	SEALING CREW HVAC FLOOR PLAN
			M4.1	55	MECHANICAL EQUIPMENT SCHEDULE
A2.1	12	R.E. OFFICE FLOOR PLAN, ENLARGED TOILET PLAN AND DETAILS	P1.1	56	R.E. OFFICE SANITARY SEWER PLAN
			P1.2	57	R.E. OFFICE PIPING PLAN
A2.2	13	R.E. OFFICE DIMENSION PLAN	P1.3	58	R.E. OFFICE RISER DIAGRAMS
A2.3	14	R.E. OFFICE REFLECTED CEILING PLAN	P2.1	59	A.H.Q. SANITARY SEWER PLAN
A2.4	15	R.E. OFFICE ELEVATIONS	P2.2	60	A.H.Q. ENLARGED SANITARY SEWER PLAN AND DETAILS
A2.5	16	R.E. OFFICE WALL SECTIONS			
A2.6	17	R.E. OFFICE WALL SECTIONS	P2.3	61	A.H.Q. PIPING PLAN
A2.7	18	R.E. OFFICE WALL SECTIONS AND DETAILS	P2.4	62	A.H.Q. ENLARGED PIPING PLAN AND DETAIL
A2.8	19	R.E. OFFICE ROOF PLAN AND DETAILS	P2.5	63	A.H.Q. UPPER LEVEL PIPING PLAN
A3.1	20	A.H.Q. FLOOR PLAN	P2.6	64	A.H.Q. RISER DIAGRAMS
A3.2	21	A.H.Q. UPPER LEVEL FLOOR PLAN AND ENLARGED TOILET PLAN	P3.1	65	SEALING CREW SANITARY SEWER PLAN
			P3.2	66	SEALING CREW PIPING PLAN
A3.3	22	A.H.Q. DIMENSION PLAN	P3.3	67	SEALING CREW ENLARGED SANITARY SEWER AND PIPING PLAN
A3.4	23	A.H.Q. ELEVATIONS			
A3.5	24	A.H.Q. ELEVATIONS	P3.4	68	SEALING CREW RISER DIAGRAMS
A3.6	25	A.H.Q. BUILDING SECTIONS	P4.1	69	PLUMBING FIXTURE SCHEDULE AND LEGEND
A3.7	26	A.H.Q. WALL SECTIONS	E1.1	70	R.E. OFFICE POWER PLAN
A3.8	27	A.H.Q. WALL SECTIONS	E1.2	71	R.E. OFFICE LIGHTING PLAN
A3.9	28	A.H.Q. STAIR SECTION	E1.3	72	R.E. OFFICE PANEL SCHEDULE
A3.10	29	A.H.Q. STAIR SECTION	E2.1	73	A.H.Q. POWER PLAN
A3.11	30	A.H.Q. REFLECTED CEILING PLAN	E2.2	74	A.H.Q. UPPER LEVEL POWER PLAN
A3.12	31	A.H.Q. ROOF PLAN AND DETAILS	E2.3	75	A.H.Q. LIGHTING PLAN
A4.1	32	SEALING CREW FLOOR PLAN AND ENLARGED TOILET PLAN	E2.4	76	A.H.Q. UPPER LEVEL LIGHTING PLAN
			E2.5	77	A.H.Q. PANEL SCHEDULES
A4.2	33	SEALING CREW DIMENSION PLAN	E3.1	78	SEALING CREW POWER PLAN
A4.3	34	SEALING CREW ELEVATIONS	E3.2	79	SEALING CREW LIGHTING PLAN
A4.4	35	SEALING CREW BUILDING SECTIONS	E3.3	80	SEALING CREW PANEL SCHEDULES
A4.5	36	SEALING CREW WALL SECTIONS	E4.1	81	WASH RACK AND COVERED WORK BAY POWER PLANS
A4.6	37	SEALING CREW WALL SECTIONS			
A4.7	38	SEALING CREW REFLECTED CEILING PLAN	E5.1	82	ELECTRICAL RISER DIAGRAM, LIGHTING FIXTURE SCHEDULE AND LEGENDS
A4.8	39	SEALING CREW ROOF PLAN AND DETAILS			
A5.1	40	COVERED WORK BAY PLANS, ELEVATIONS, AND WALL SECTIONS			
A6.1	41	WASH RACK PLANS, ELEVATIONS, AND SECTIONS			
A7.1	42	A.H.Q. AND SEALING CREW DOOR AND WINDOW DETAILS			

ARDOT ARKANSAS DEPARTMENT OF TRANSPORTATION

PULASKI CO. AREA 1 HEADQUARTERS/ R.E. OFFICE 61 (S)
North Little Rock, Arkansas
Pulaski County

STATE OF ARKANSAS REGISTERED PROFESSIONAL ENGINEER No. 7527 JOSEPH A. SARTINI
5-29-18

DATE: MAY 29, 2018
JOB NO: 061448
DRAWN BY: KB
REVISIONS:

G1.2

SUMMARY OF QUANTITIES

ITEM NO.	ITEM DESCRIPTION	QTY	UNIT
SP & 210	COMPACTED EMBANKMENT	3200	CU.YD.
SP & 210	SOIL STABILIZATION	100	TONS
601	MOBILIZATION	1.00	LUMP SUM
621	SILT FENCE	950	L.F.
SP	R.E. OFFICE	1.00	LUMP SUM
SP	AREA HEADQUARTERS	1.00	LUMP SUM
SP	SEALING CREW BUILDING	1.00	LUMP SUM

REVISIONS

DATE	DESCRIPTION	SHEET #
7-12-18	ADDED SP STORM WATER POLLUTION PREVENTION PLAN, ADDED PAY ITEM SILT FENCE, ADDED STORM WATER POLLUTION PREVENTION PLAN INFORMATION TO OVERALL SITE PLAN	3 & 5
7-12-18	REVISED DOOR TAGS ON AREA HEADQUARTERS AND SEALING CREW FLOOR PLANS	20 & 32

EARTHWORK

STATION	STATION	LOCATION / DESCRIPTION	COMPACTED EMBANKMENT CU. YD.
ENTIRE	PROJECT	FILL TO BE USED AS DESCRIBED ON GRADING PLAN	3200
TOTALS:			3200

NOTE: EARTHWORK QUANTITIES SHOWN ABOVE SHALL BE PAID AS PLAN QUANTITY.

TEMPORARY EROSION CONTROL

LOCATION	SILT FENCE
	LIN. FT.
ENTIRE PROJECT AS	950
SHOWN ON SITE PLANS	
ENTIRE PROJECT	
AS DIRECTED	
TOTAL:	950

TEMPORARY EROSION CONTROL DEVICES SHOWN ABOVE AND ON THE PLANS SHALL BE INSTALLED IN SUCH A SEQUENCE AS TO DETER EROSION AND SEDIMENTATION OF U.S. WATERWAYS AS EXPLAINED BY THE NATIONAL POLLUTANT DISCHARGE ELIMINATION SYSTEM PERMIT.

GOVERNING SPECIFICATIONS:

ARKANSAS STATE HIGHWAY COMMISSION STANDARD SPECIFICATIONS FOR HIGHWAY CONSTRUCTION, EDITION OF 2014, AND THE FOLLOWING SPECIAL PROVISIONS AND SUPPLEMENTAL SPECIFICATIONS:

ERRATA_____ERRATA FOR THE BOOK OF STANDARD SPECIFICATIONS
100-3_____CONTRACTOR'S LICENSE
100-4_____DEPARTMENT NAME CHANGE
102-2_____ISSUANCE OF PROPOSALS
108-1_____LIQUIDATED DAMAGES
108-2_____WORK ALLOWED PRIOR TO ISSUANCE OF WORK ORDER
JOB 061448_____BIDDING REQUIREMENTS AND CONDITIONS
JOB 061448_____COMPACTED EMBANKMENT SPECIAL
JOB 061448_____MANDATORY ELECTRONIC CONTRACT
JOB 061448_____MANDATORY ELECTRONIC DOCUMENT SUBMITTAL
JOB 061448_____MEASUREMENT AND PAYMENT
JOB 061448_____PROJECT MANUAL
JOB 061448_____STORM WATER POLLUTION PREVENTION PLAN
JOB 061448_____SOIL STABILIZATION
JOB 061448_____UTILITY ADJUSTMENTS

ARDOT ARKANSAS DEPARTMENT OF TRANSPORTATION

PULASKI CO. AREA 1 HEADQUARTERS/ R.E. OFFICE 61 (S)
North Little Rock, Arkansas
Pulaski County

STATE OF ARKANSAS REGISTERED PROFESSIONAL ENGINEER No. 7527 JOSEPH A. SARTINI
7-16-18

DATE: MAY 29, 2018
JOB NO: 061448
DRAWN BY: KB
REVISIONS: 7-12-18

G1.3

Tract 1
Part of the South Half of Section 26, Township 2 North, Range 11 West in Pulaski County, Arkansas, and being more particularly described as follows:

Commencing at the Quarter Corner Sections 25 and 26 (East Quarter corner of said Section 26), being a found angle iron ; thence North 88°18'25" West along the North line of said South Half of Section 26 a distance of 2591.57 feet; thence South 26°21'24" East, 28.80 feet to a point on the locally accepted Southerly ROW of U.S. Hwy. 70 as described in Instrument No. 2007014901 and Instrument No. 2007014902 filed in the Circuit Clerk's Office of Pulaski County, Arkansas and being a set 5/8" rebar with 2" aluminum cap stamped ARKANSAS HWY & TRANS DEPT PS 1731 BDY and the Point of Beginning; thence South 26°21'24" East, 462.17 feet to a set 5/8" rebar with 2" aluminum cap stamped ARKANSAS HWY & TRANS DEPT PS 1731 BDY; thence South 19°26'37" West, 151.00 feet to a set 5/8" rebar with 2" aluminum cap stamped ARKANSAS HWY & TRANS DEPT PS 1731 BDY; thence South 61°40'56" West, 665.70 feet to a set 5/8" rebar with 2" aluminum cap stamped ARKANSAS HWY & TRANS DEPT PS 1731 BDY; thence North 24°31'32" West, 600.03 feet to a point on the locally accepted ROW of U.S. Hwy. 70 as described in said Instrument No. 2007014901 and Instrument No. 2007014902 being a set 5/8" rebar with 2" aluminum cap stamped ARKANSAS HWY & TRANS DEPT PS 1731 BDY; thence along said locally accepted Southerly ROW of U.S. Hwy. 70 the following courses and distances: North 69°07'50" East, 99.98 feet to found ½" rebar; thence North 63°36'28" East, 302.54 feet to a set 5/8" rebar with 2" aluminum cap stamped ARKANSAS HWY & TRANS DEPT PS 1731 BDY; thence North 63°45'31" East, 63.47 feet to a found ¾" pipe; thence North 63°38'36" East, 288.85 feet to the Point of Beginning. Containing 10.00 acres (435,751 square feet) more or less, with 3.04 acres (132,556 square feet) more or less being in the NW ¼ SE ¼ and 6.96 acres (303,195 square feet) more or less being in the NE ¼ SW ¼ of said Section 26, Township 2 North, Range 11 West.

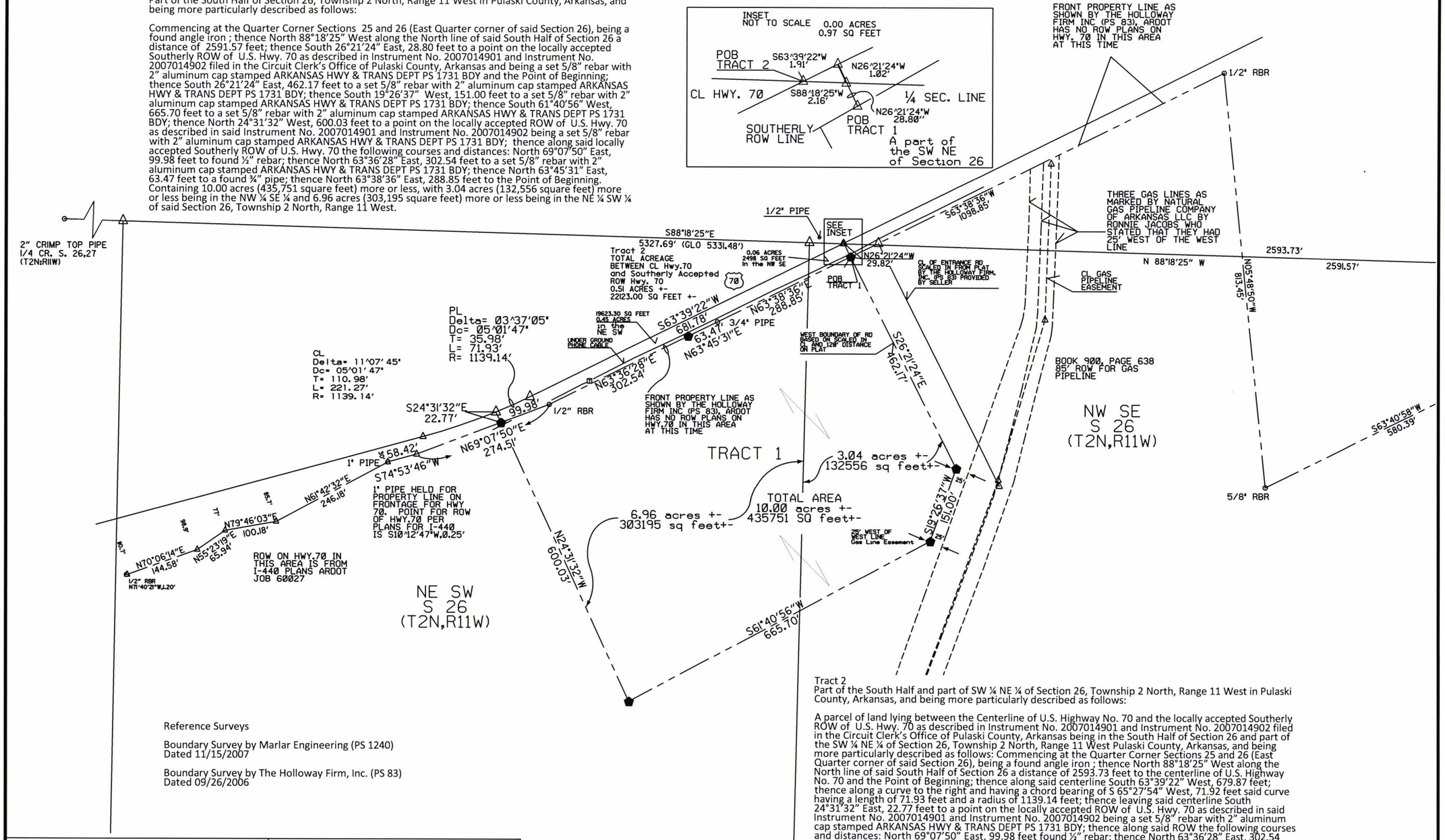

Tract 2
Part of the South Half and part of SW ¼ NE ¼ of Section 26, Township 2 North, Range 11 West in Pulaski County, Arkansas, and being more particularly described as follows:

A parcel of land lying between the Centerline of U.S. Highway No. 70 and the locally accepted Southerly ROW of U.S. Hwy. 70 as described in Instrument No. 2007014901 and Instrument No. 2007014902 filed in the Circuit Clerk's Office of Pulaski County, Arkansas being in the South Half of Section 26 and part of the SW ¼ NE ¼ of Section 26, Township 2 North, Range 11 West Pulaski County, Arkansas, and being more particularly described as follows: Commencing at the Quarter Corner Sections 25 and 26 (East Quarter corner of said Section 26), being a found angle iron ; thence North 88°18'25" West along the North line of said South Half of Section 26 a distance of 2593.73 feet to the centerline of U.S. Highway No. 70 and the Point of Beginning; thence along said centerline South 63°39'22" West, 679.87 feet; thence along a curve to the right and having a chord bearing of S 65°27'54" West, 71.92 feet said curve having a length of 71.93 feet and a radius of 1139.14 feet; thence leaving said centerline South 24°31'32" East, 22.77 feet to a point on the locally accepted ROW of U.S. Hwy. 70 as described in said Instrument No. 2007014901 and Instrument No. 2007014902 being a set 5/8" rebar with 2" aluminum cap stamped ARKANSAS HWY & TRANS DEPT PS 1731 BDY; thence along said ROW the following courses and distances: North 69°07'50" East, 99.98 feet found ½" rebar; thence North 63°36'28" East, 302.54 feet to a set 5/8" rebar with 2" aluminum cap stamped ARKANSAS HWY & TRANS DEPT PS 1731 BDY; thence North 63°45'31" East, 63.47 feet to a found ¾" pipe; thence North 63°38'36" East, 288.85 feet to a set 5/8" rebar with 2" aluminum cap stamped ARKANSAS HWY & TRANS DEPT PS 1731 BDY; thence leaving said ROW line North 26°21' 24" West, 28.80 feet to said North line of said South Half of Section 26; thence continue North 26°21'24" West, 1.02 feet to the centerline of U.S. Highway No. 70; thence along said centerline South 63°39'22" West, 1.91 feet to the Point of Beginning. Containing 0.51 acres (22,123 square feet) more or less, being 0.45 acres (19,623 square feet) more or less in the NE ¼ SW ¼, 0.06 acres (2,499 square feet) more or less in the NW ¼ SE ¼, and 0.00 acres (1 square foot) more or less in SW ¼ NE ¼ of said Section 26, Township 2 North, Range 11 West.

Reference Surveys

Boundary Survey by Marlar Engineering (PS 1240)
Dated 11/15/2007

Boundary Survey by The Holloway Firm, Inc. (PS 83)
Dated 09/26/2006

BASIS OF BEARING:
STATE PLANE GRID 0301–NORTH ZONE DETERMINED FROM GPS PTS 600076 – 600076A CONVERGENCE ANGLE: 00 05 30 LEFT AT LT: N 35–39–09 LG: W090–55–20
ALL DISTANCES ARE GROUND
TO CONVERT BACK TO GRID MULTIPLY BY CAF = 1.0000278137

LEGEND

- Found Monument as Described
- Calculated Corner
- Set ⅝" Rebar w/ 2" Alum Cap Stamped "ARKANSAS HWY & TRANS DEPT BDY PS 1731"
- US HWY

500-02N-11W-0-26-130-60-1731
500-02N-11W-0-26-310-60-1731
500-02N-11W-0-26-240-60-1731

NORTH

1 / C1.1 PLOT PLAN
SCALE : 1" = 200.0'

ARDOT ARKANSAS DEPARTMENT OF TRANSPORTATION

PULASKI CO. AREA 1
HEADQUARTERS/
R.E. OFFICE 61 (S)
North Little Rock, Arkansas
Pulaski County

STATE OF ARKANSAS REGISTERED PROFESSIONAL ENGINEER No. 7527 JOSEPH A. SARTINI

DATE: MAY 29, 2018
JOB NO: 061448
DRAWN BY: KB
REVISIONS:

C1.1

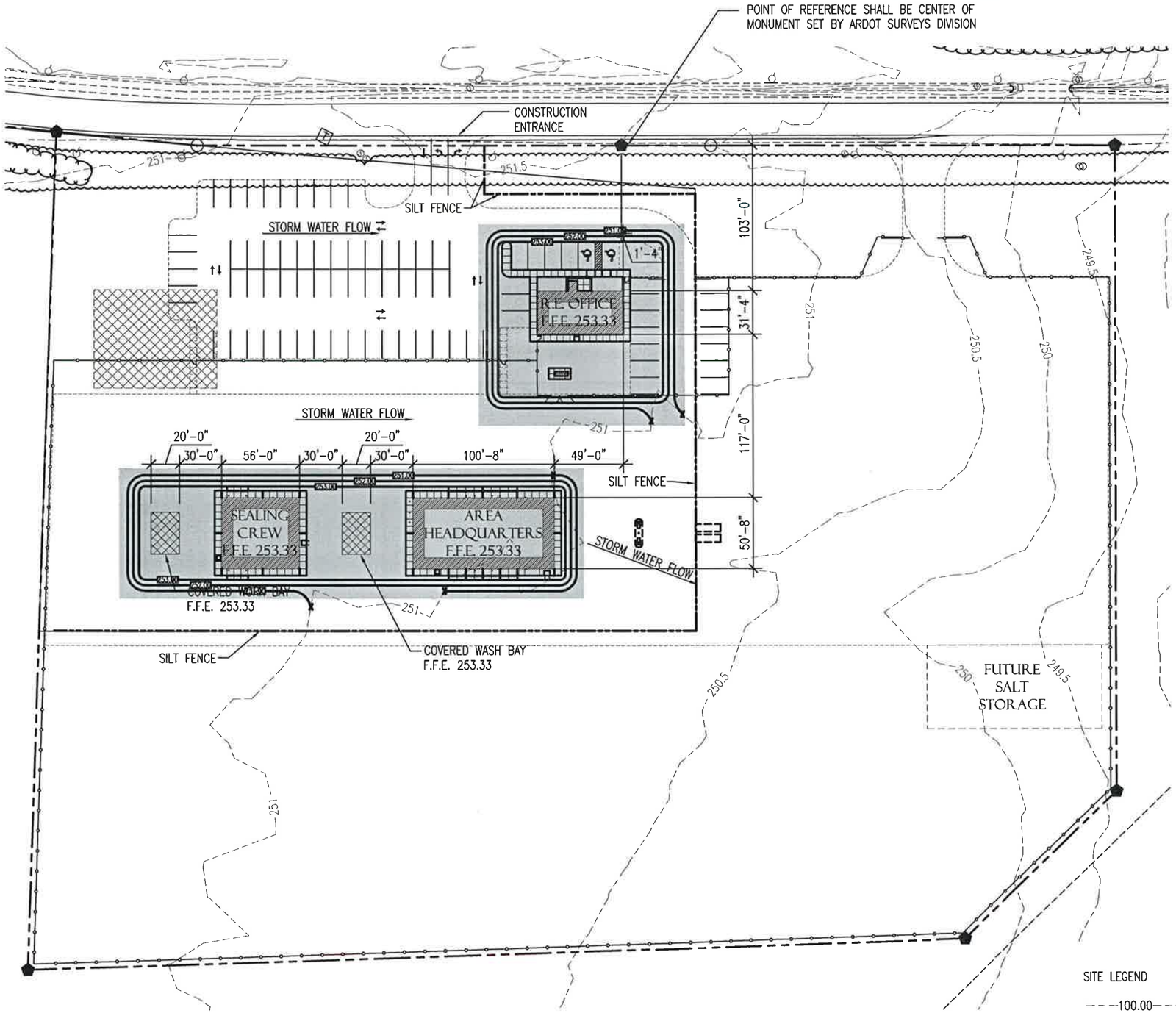

GENERAL NOTES:

1. GENERAL CONTRACTOR SHALL FIELD VERIFY SITE CONDITIONS PRIOR TO BIDDING.
2. GENERAL CONTRACTOR SHALL BE RESPONSIBLE FOR OBTAINING ALL PERMITS.
3. GENERAL CONTRACTOR SHALL BE RESPONSIBLE FOR LOCATION OF UTILITIES.
4. GENERAL CONTRACTOR SHALL BE RESPONSIBLE FOR THE BUILDING PAD. ALL OTHER DIRT WORK SHALL BE PROVIDED BY OWNER.
5. GENERAL CONTRACTOR SHALL BE RESPONSIBLE FOR EROSION CONTROL PER THE ARKANSAS DEPARTMENT OF ENVIRONMENTAL QUALITY GUIDELINES.
6. ALL ASPHALT PAVING, PARKING LAYOUT, AND DRIVES SHALL BE PROVIDED BY OWNER.
7. FUELING ISLAND AND UNDERGROUND STORAGE TANKS SHALL BE PROVIDED BY OWNER.

GENERAL SITE NOTES:

1. THE BUILDING PAD AREA SHALL BE STRIPPED OF TOP SOIL AND ORGANIC MATTER. STRIPPING DEPTH SHALL BE EIGHT (8) INCHES. THIS MATERIAL SHALL BE STORED ON SITE AND USED FOR FINAL GRADING IN UNPAVED AREAS.
2. BUILDING PADS SHALL CONSIST OF A MINIMUM OF TWO (2) FEET OF GRANULAR FILL, PLACED AND COMPACTED ACCORDING TO THE REQUIREMENTS OF SECTION 210 OF THE AHTD STANDARD SPECIFICATIONS FOR HIGHWAY CONSTRUCTION, 2014 EDITION. PADS SHALL EXTEND EIGHT (8) FEET BEYOND THE BUILDING PERIMETER ON ALL SIDES.
3. GRANULAR FILL SHALL MEET THE MATERIAL PROPERTIES OF SELECT MATERIAL (SM-1) IN SECTION 302 OF THE AHTD STANDARD SPECIFICATION FOR HIGHWAY CONSTRUCTION, 2014 EDITION.
4. THE FOUNDATION BEARING AREA SHALL BE LEVEL AND FREE OF LOOSE SOIL, PONDED WATER, AND DEBRIS PRIOR TO PLACEMENT OF CONCRETE. MATERIALS AT BEARING LEVEL THAT BECOME EXCESSIVELY DRY OR SATURATED SHALL BE REMOVED PRIOR TO PLACEMENT OF CONCRETE. CONCRETE SHALL BE PLACED AS SOON AS POSSIBLE AFTER EXCAVATION OF FOOTING SO THAT EXCESSIVE DRYING OF BEARING MATERIALS DOES NOT OCCUR.
5. BEFORE FILLING OPERATIONS BEGIN, REPRESENTATIVE SAMPLES OF PROPOSED FILL MATERIAL SHALL BE COLLECTED AND TESTED TO DETERMINE THE MAXIMUM DRY DENSITY, OPTIMUM MOISTURE CONTENT, NATURAL MOISTURE CONTENT, GRADATION, AND PLASTICITY OF THE SOIL.
6. THE FILL SURFACE MUST BE ADEQUATELY MAINTAINED DURING CONSTRUCTION IN ORDER TO ACHIEVE AN ACCEPTABLE COMPACTED FILL. THE FILL SURFACE SHALL BE SLOPED TO ALLOW SUFFICIENT DRAINAGE AND TO PREVENT PONDING OF WATER ON THE BUILDING PAD. IF THE SURFACE SOILS BECOME EXCESSIVELY WET OR FROZEN, FILL OPERATIONS SHALL BE SUSPENDED UNTIL THE RESIDENT ENGINEER HAS BEEN CONSULTED FOR GUIDANCE.

SITE LEGEND

---100.00---	EXISTING CONTOURS
—100.00—	NEW CONTOURS
+100.00	SPOT ELEVATIONS
⬟	MONUMENT SET BY ARDOT SURVEYS DIVISION
	DISTURBED SOIL AREAS
	TOPSOIL STOCKPILE AREA

NORTH

1 / C1.2 OVERALL SITE PLAN

SCALE : 1" = 80.0'

ARDOT ARKANSAS DEPARTMENT OF TRANSPORTATION

PULASKI CO. AREA 1 HEADQUARTERS/ R.E. OFFICE 61 (S)
North Little Rock, Arkansas
Pulaski County

STATE OF ARKANSAS REGISTERED PROFESSIONAL ENGINEER No. 7527 JOSEPH A. SARGENTINI 7-16-18

DATE: MAY 29, 2018
JOB NO: 061448
DRAWN BY: KB
REVISIONS: 7-12-18

C1.2

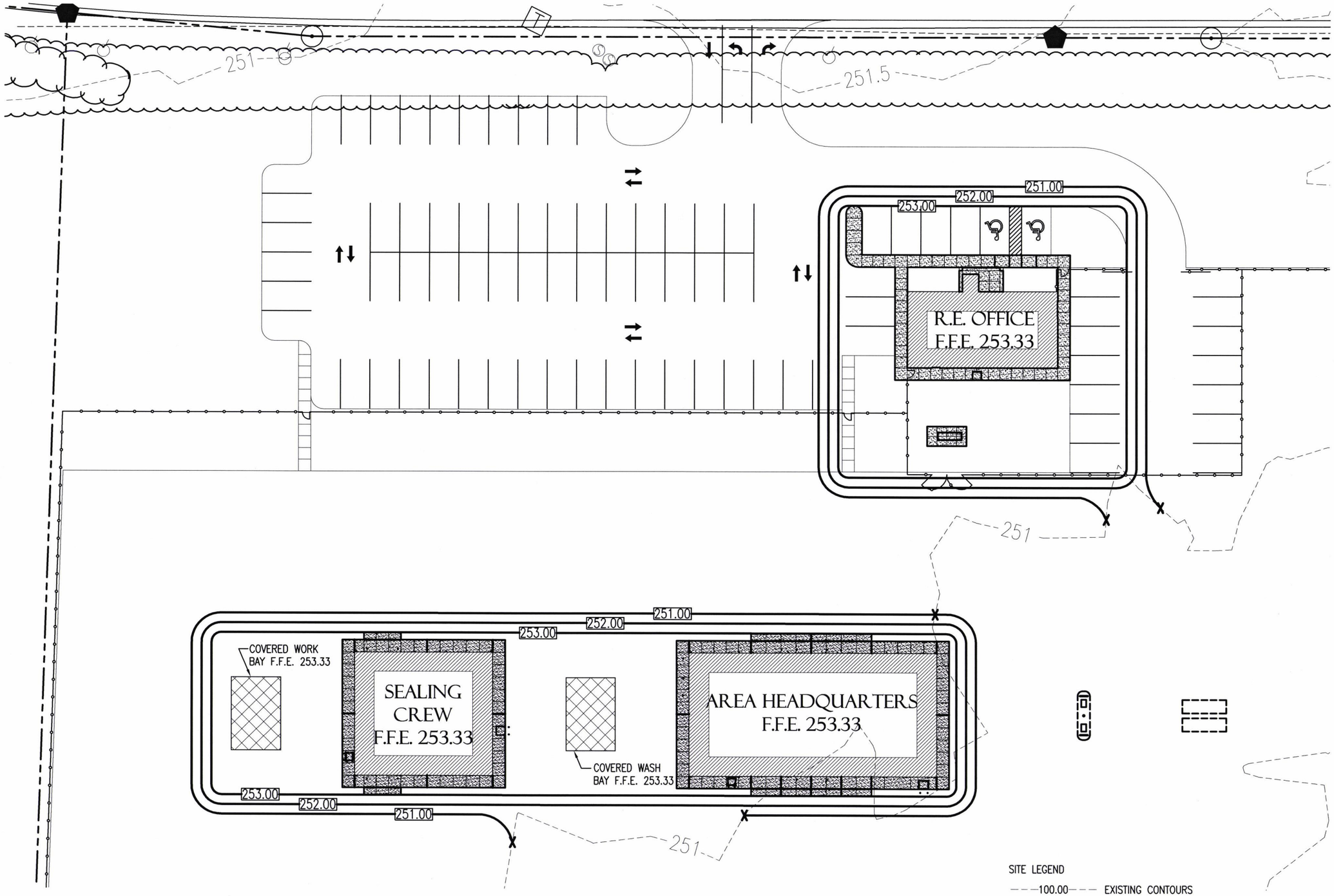

NORTH

1 / C1.2 GRADING PLAN

SCALE : 1" = 40.0'

SITE LEGEND

---100.00---	EXISTING CONTOURS
—100.00—	NEW CONTOURS
+100.00	SPOT ELEVATIONS
⬟	MONUMENT SET BY AHTD SURVEYS DIVISION

ARDOT ARKANSAS DEPARTMENT OF TRANSPORTATION

PULASKI CO. AREA 1
HEADQUARTERS/
R.E. OFFICE 61 (S)
North Little Rock, Arkansas
Pulaski County

STATE OF ARKANSAS
REGISTERED PROFESSIONAL ENGINEER
No. 7527
JOSEPH A. SARGENT
5-29-18

DATE: MAY 29, 2018
JOB NO: 061448
DRAWN BY: KB
REVISIONS:

C1.3

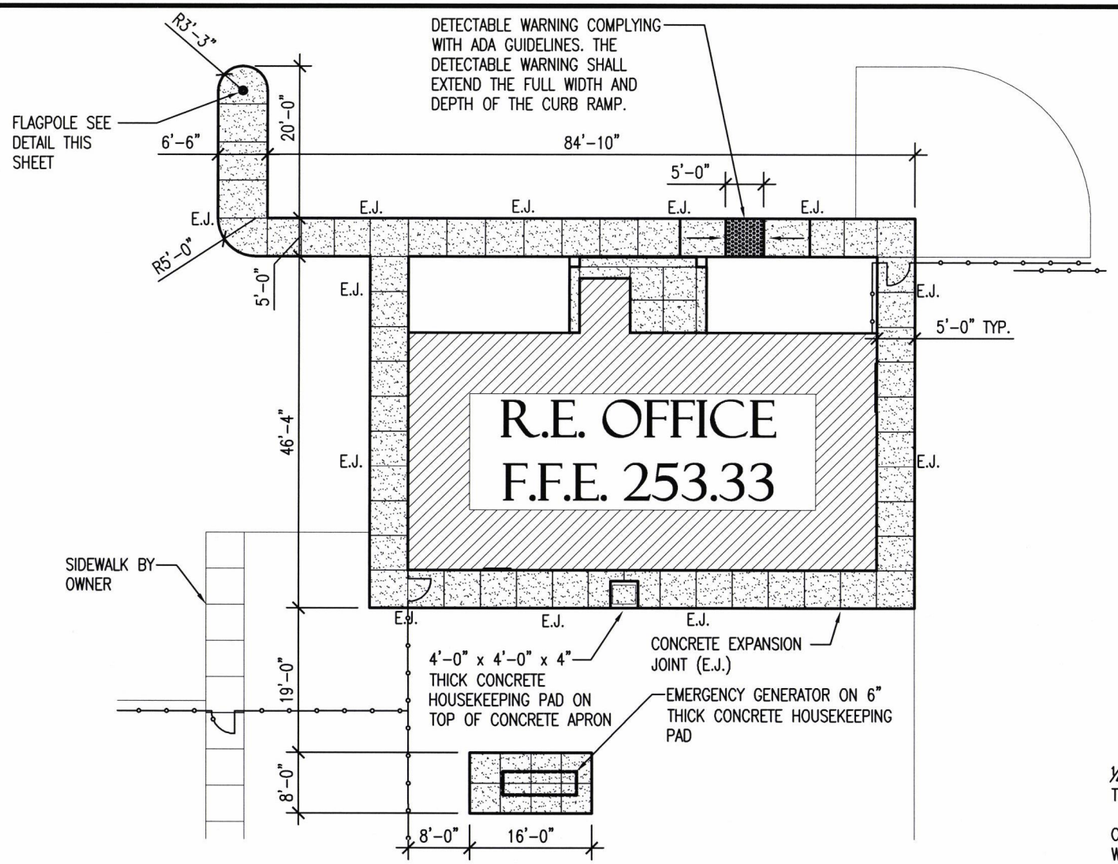

1 / C1.4 ENLARGED SITE PLAN

SCALE : 1" = 20.0'

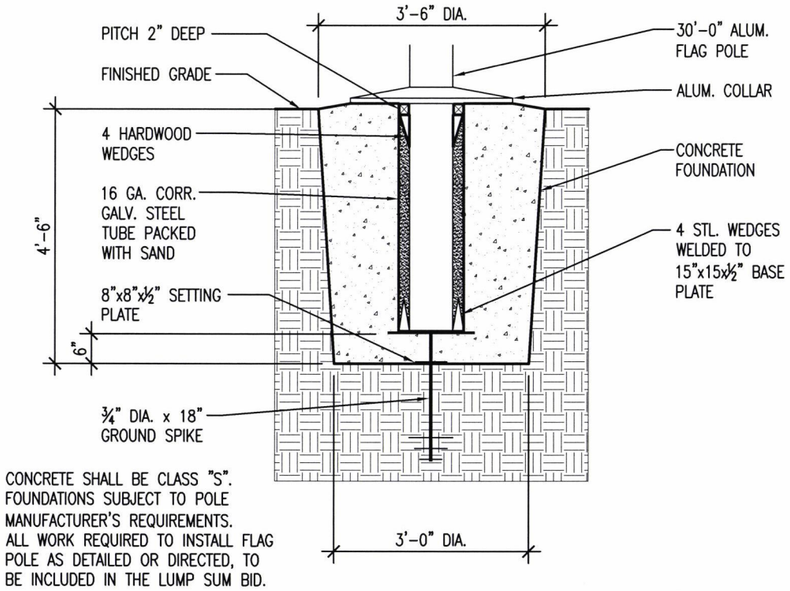

1. CONCRETE SHALL BE CLASS "S".
2. FOUNDATIONS SUBJECT TO POLE MANUFACTURER'S REQUIREMENTS.
3. ALL WORK REQUIRED TO INSTALL FLAG POLE AS DETAILED OR DIRECTED, TO BE INCLUDED IN THE LUMP SUM BID.

2 / C1.4 FLAGPOLE BASE DETAIL

SCALE : NO SCALE

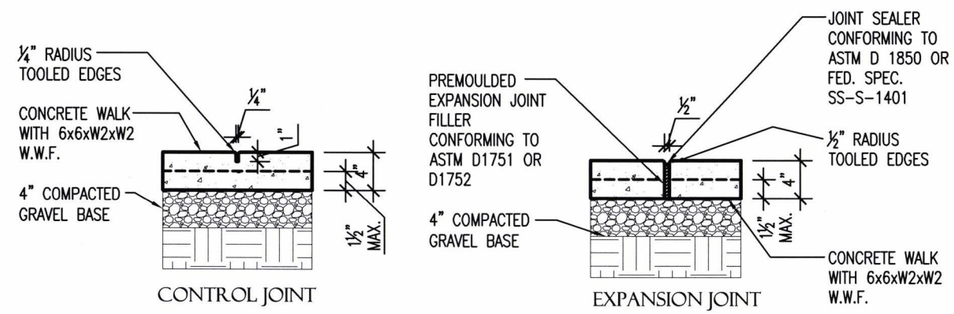

3 / C1.4 SIDEWALK JOINT DETAILS

SCALE : NO SCALE

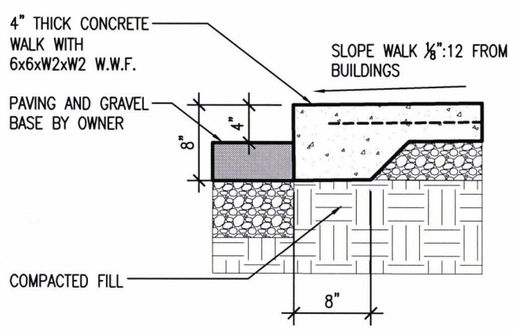

4 / C1.4 CONCRETE WALK AT ASPHALT DETAIL

SCALE : NO SCALE

ARDOT ARKANSAS DEPARTMENT OF TRANSPORTATION

PULASKI CO. AREA 1
HEADQUARTERS/
R.E. OFFICE 61 (S)
North Little Rock, Arkansas
Pulaski County

STATE OF ARKANSAS
REGISTERED PROFESSIONAL ENGINEER
No. 7527
JOSEPH A. SARTINI

DATE: MAY 29, 2018
JOB NO: 061448
DRAWN BY: KB
REVISIONS:

C1.4

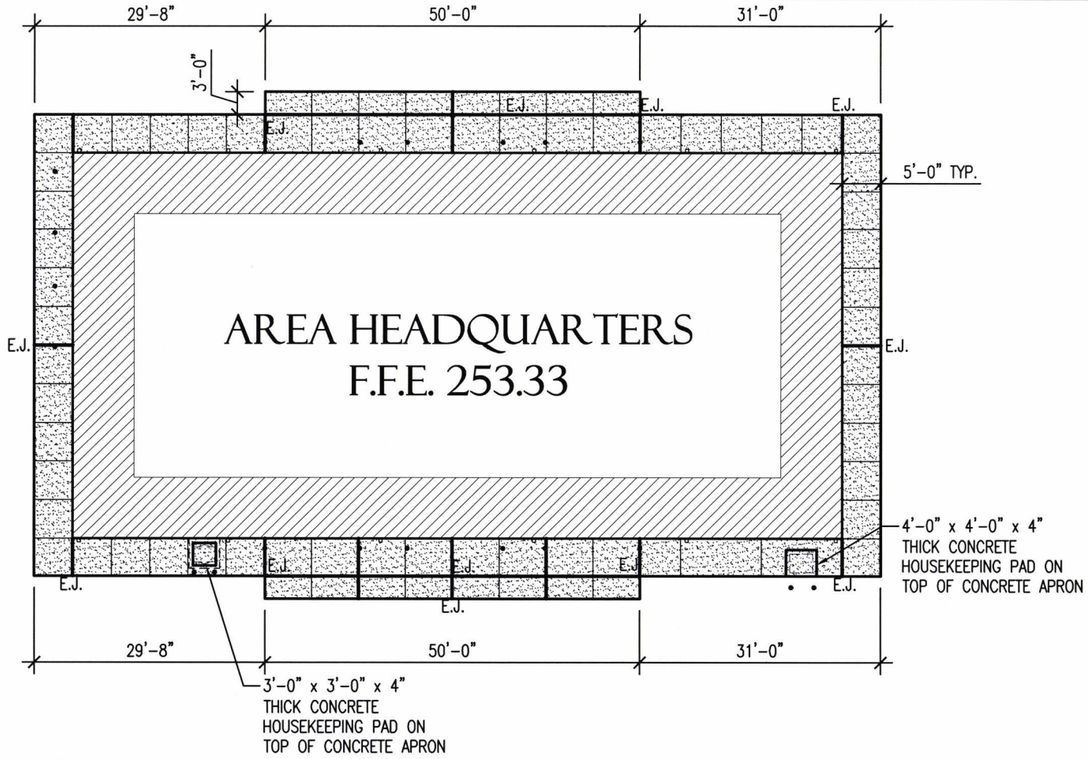

NORTH

1 / C1.5 ENLARGED SITE PLAN

SCALE : 1" = 20.0'

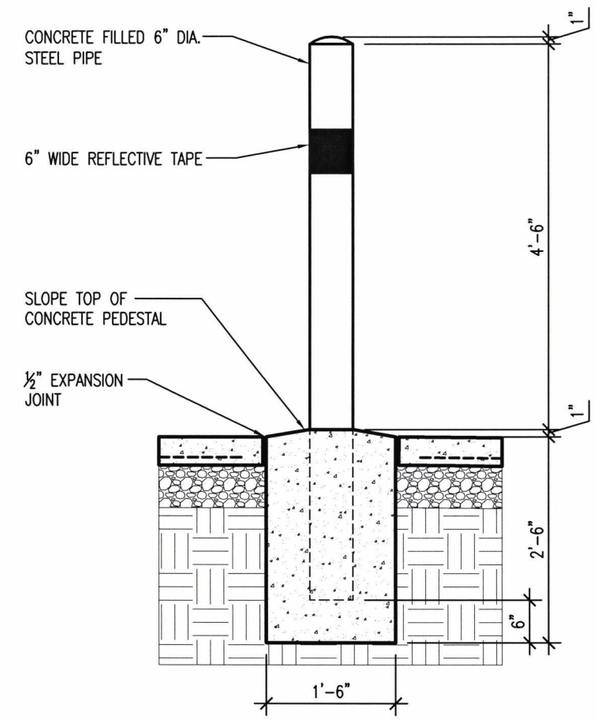

3 / C1.5 PIPE BOLLARD DETAIL

SCALE : NO SCALE

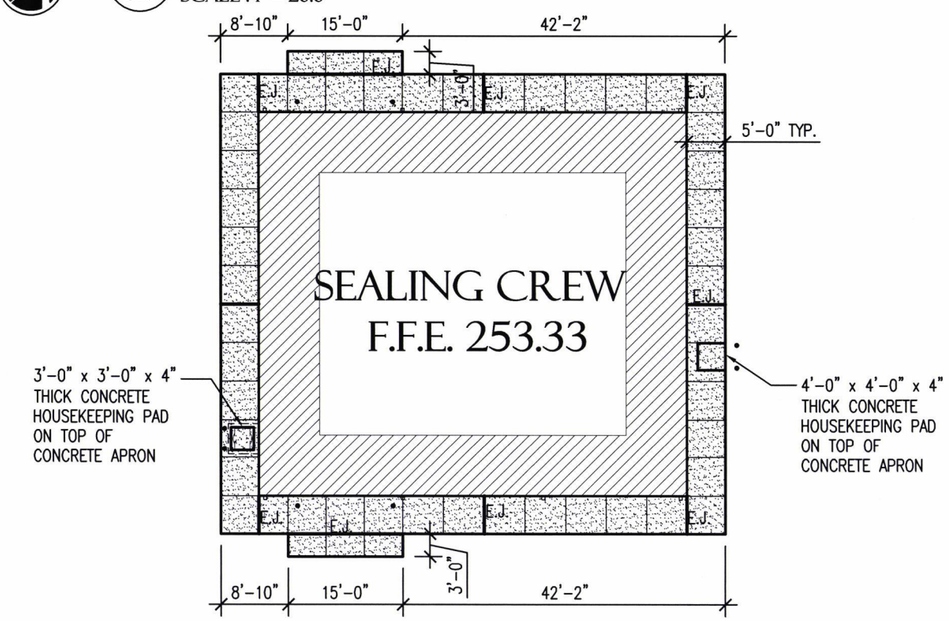

NORTH

2 / C1.5 ENLARGED SITE PLAN

SCALE : 1" = 20.0'

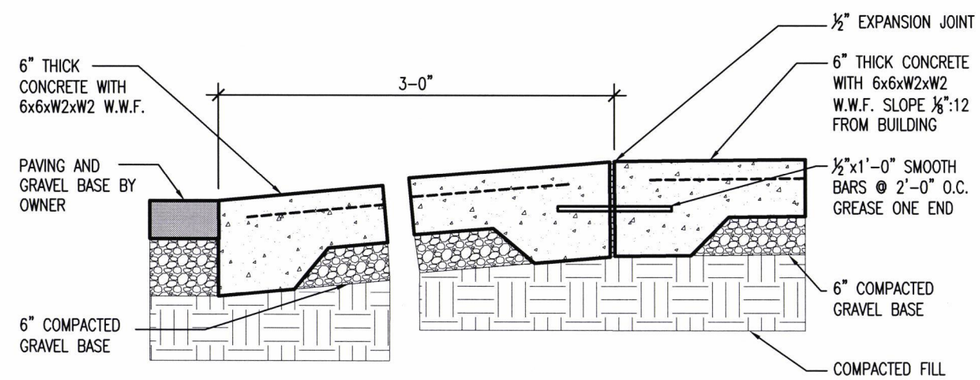

4 / C1.5 CONCRETE APPROACH DETAIL

SCALE : NO SCALE

ARDOT ARKANSAS DEPARTMENT OF TRANSPORTATION

PULASKI CO. AREA 1
HEADQUARTERS/
R.E. OFFICE 61 (S)
North Little Rock, Arkansas
Pulaski County

STATE OF ARKANSAS REGISTERED PROFESSIONAL ENGINEER No. 7527 JOSEPH A. SARPENI

DATE: MAY 29, 2018
JOB NO: 061448
DRAWN BY: KB
REVISIONS:

C1.5

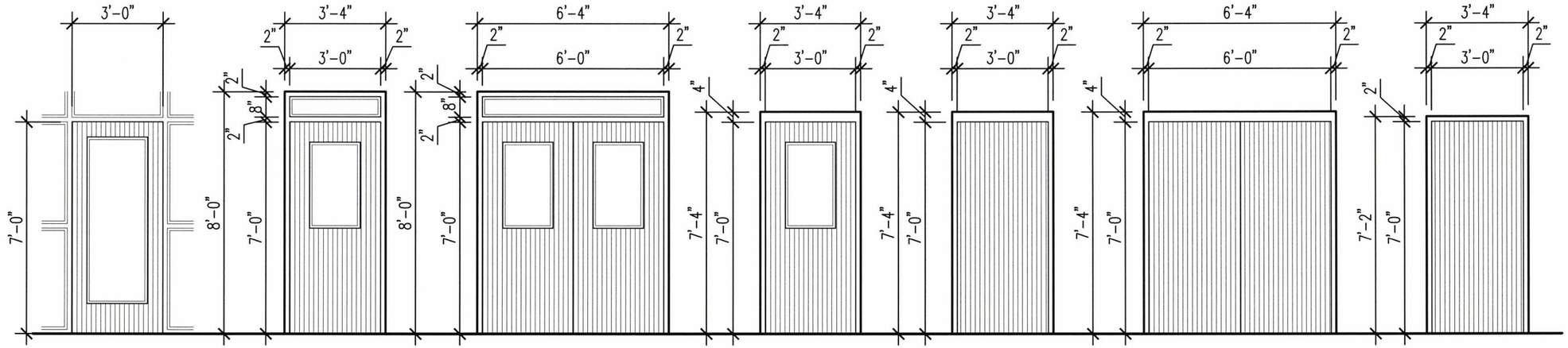

① KAWNEER 500 WIDE STYLE ALUMINUM DOOR WITH OFFSET/BUTT HINGE AND TEMPERED INSULATING GLASS IN TRIFAB 400 FRAME.

② 1¾" THICK INSULATED METAL DOOR IN 2"x5¾" HOLLOW METAL FRAME. 1" TEMPERED INSULATING GLASS.

③ 1¾" THICK INSULATED METAL DOORS IN 2"x5¾" HOLLOW METAL FRAME. 1" TEMPERED INSULATING GLASS.

④ 1¾" THICK INSULATED METAL DOOR IN 2"x5¾" HOLLOW METAL FRAME. 1" TEMPERED INSULATING GLASS.

⑤ 1¾" THICK INSULATED METAL DOOR IN 2"x5¾" HOLLOW METAL FRAME.

⑥ 1¾" THICK INSULATED METAL DOORS IN 2"x5¾" HOLLOW METAL FRAME. 1" TEMPERED INSULATING GLASS.

⑦ 1¾" THICK NON INSULATED METAL DOOR IN 2"x5¾" HOLLOW METAL FRAME.

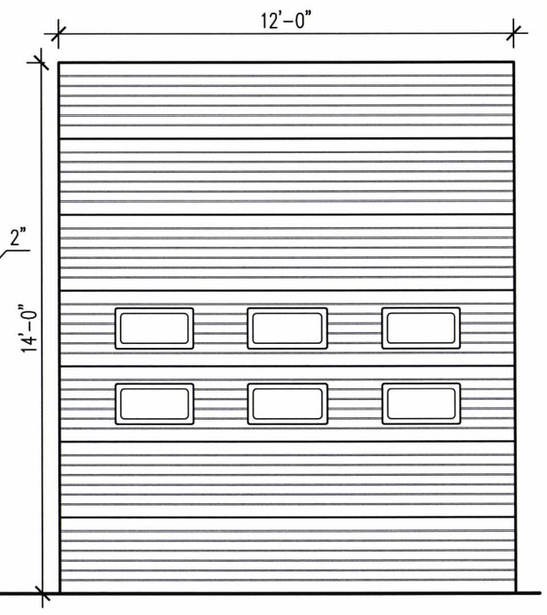

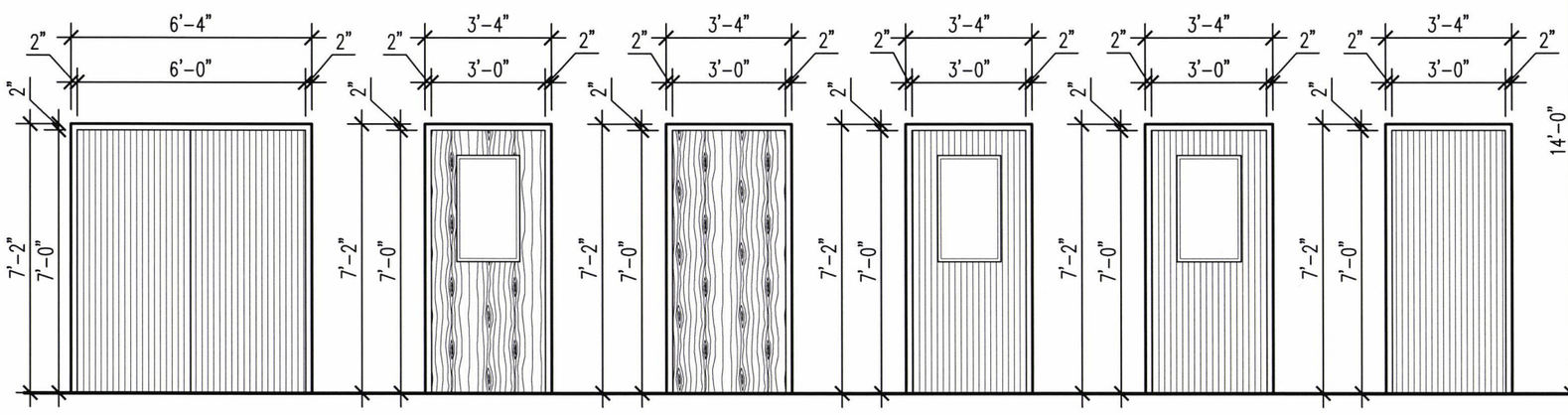

⑧ 1¾" THICK INSULATED METAL DOORS IN 2"x5¾" HOLLOW METAL FRAME. 1" TEMPERED INSULATING GLASS.

⑨ 1¾" THICK SOLID CORE WOOD DOOR IN 2"x5¾" HOLLOW METAL FRAME. ¼" TEMPERED GLASS.

⑩ 1¾" THICK SOLID CORE WOOD DOOR IN 2"x5¾" HOLLOW METAL FRAME.

⑪ 1¾" THICK INSULATED METAL DOOR IN 2"x5¾" HOLLOW METAL FRAME. ¼" TEMPERED GLASS.

⑫ 1¾" THICK NON INSULATED METAL DOOR IN 2"x5¾" HOLLOW METAL FRAME. ¼" TEMPERED GLASS.

⑬ 1¾" THICK NON INSULATED METAL DOOR IN 2"x5¾" HOLLOW METAL FRAME.

⑭ FACE OF WALL MOUNTED INSULATED SECTIONAL STEEL DOOR.

1 / A1.1 DOOR SCHEDULE

SCALE : ¼" = 1'-0"

ARDOT ARKANSAS DEPARTMENT OF TRANSPORTATION

PULASKI CO. AREA 1 HEADQUARTERS/ R.E. OFFICE 61 (S)

North Little Rock, Arkansas

Pulaski County

STATE OF ARKANSAS REGISTERED PROFESSIONAL ENGINEER No. 7527 JOSEPH A. SARKINI

DATE: MAY 29, 2018

JOB NO: 061448

DRAWN BY: KB

REVISIONS:

A1.1

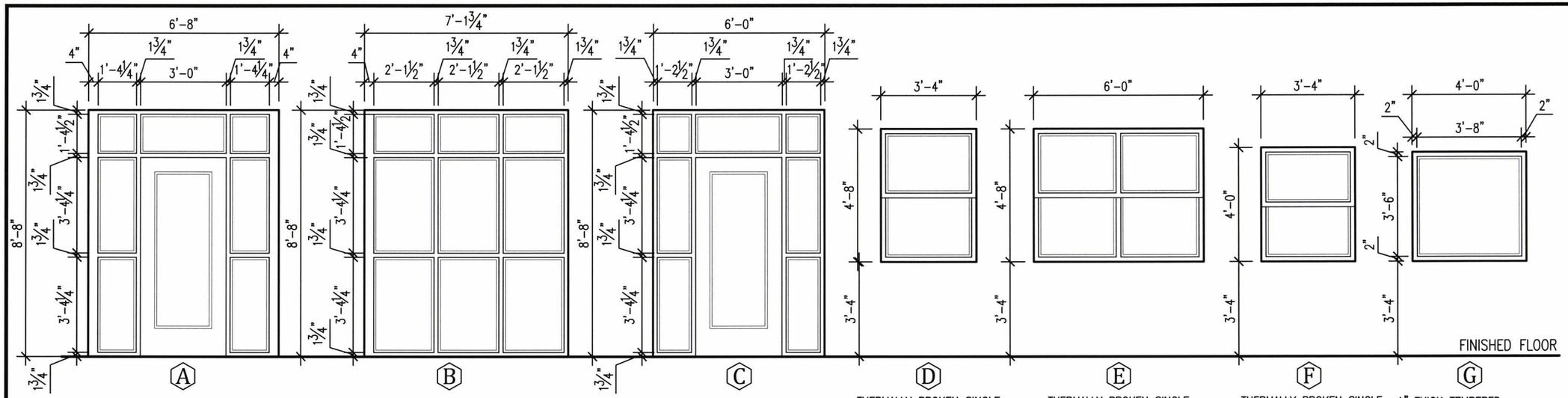

KAWNEER TRIFAB 400 ALUMINUM STOREFRONT WITH 1" TEMPERED INSULATING GLASS.

KAWNEER TRIFAB 400 ALUMINUM STOREFRONT WITH 1" TEMPERED INSULATING GLASS.

KAWNEER TRIFAB 400 ALUMINUM STOREFRONT WITH 1" TEMPERED INSULATING GLASS.

THERMALLY BROKEN SINGLE HUNG ALUMINUM WINDOW WITH INSECT SCREEN ON OPERABLE PORTION

THERMALLY BROKEN SINGLE HUNG ALUMINUM WINDOW WITH INSECT SCREEN ON OPERABLE PORTION

THERMALLY BROKEN SINGLE HUNG ALUMINUM WINDOW WITH INSECT SCREEN ON OPERABLE PORTION

1" THICK TEMPERED INSULATING GLASS IN 2"x5 ¾" HOLLOW METAL FRAME.

1/A1.2 WINDOW SCHEDULE

SCALE : ¼" = 1'-0"

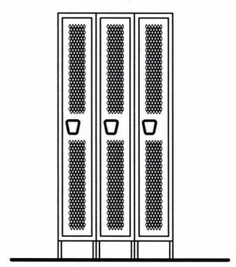

18" DEEP VENTILATED WARDROBE LOCKER AS MANUFACTURED BY HALLOWELL MODEL NUMBER U3288-1HV-A-HG OR APPROVED EQUAL. SEE PLANS FOR LOCATIONS AND LAYOUT.

2/A1.2 LOCKER ELEVATION

SCALE : ¼"= 1'-0"

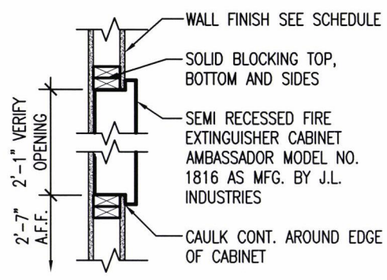

FIRE EXTINGUISHER CABINET DETAIL

3/A1.2 SCALE : NO SCALE

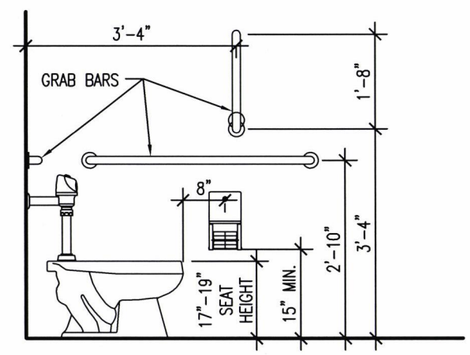

ELEVATION

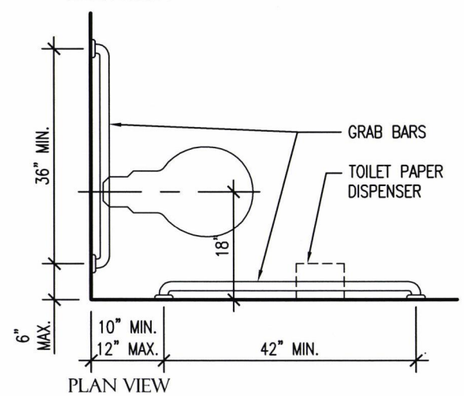

PLAN VIEW

4/A1.2 ADA TOILET DETAILS

SCALE : NO SCALE

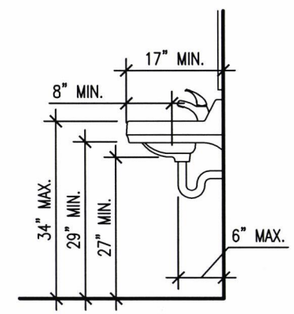

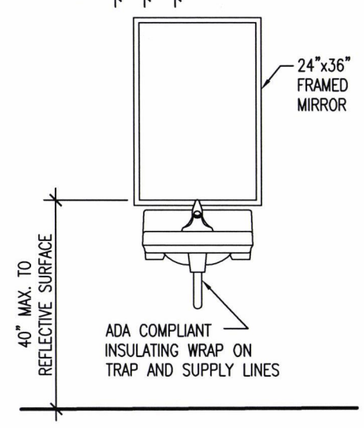

5/A1.2 LAVATORY DETAIL

SCALE : NO SCALE

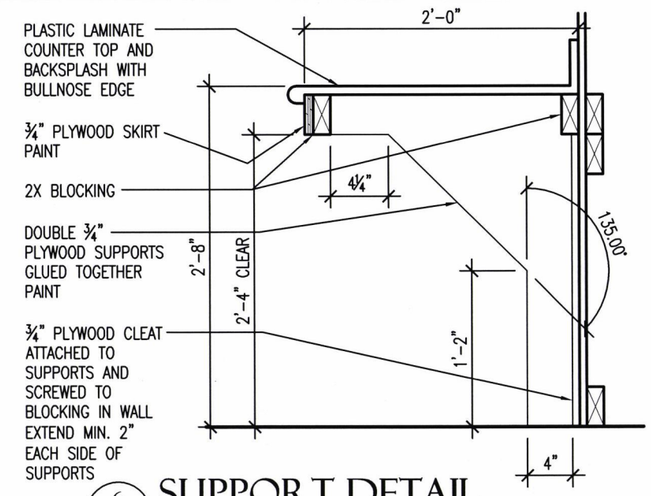

6/A1.2 SUPPORT DETAIL

SCALE : NO SCALE

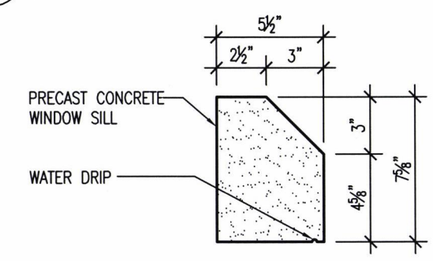

7/A1.2 PRECAST SILL DETAIL

SCALE : 1½" = 1'-0"

ARDOT ARKANSAS DEPARTMENT OF TRANSPORTATION

PULASKI CO. AREA 1 HEADQUARTERS/ R.E. OFFICE 61 (S)
North Little Rock, Arkansas
Pulaski County

STATE OF ARKANSAS REGISTERED PROFESSIONAL ENGINEER No. 7527 JOSEPH A. SARCINI 6-12-18

DATE: MAY 29, 2018
JOB NO: 061448
DRAWN BY: KB
REVISIONS:

A1.2

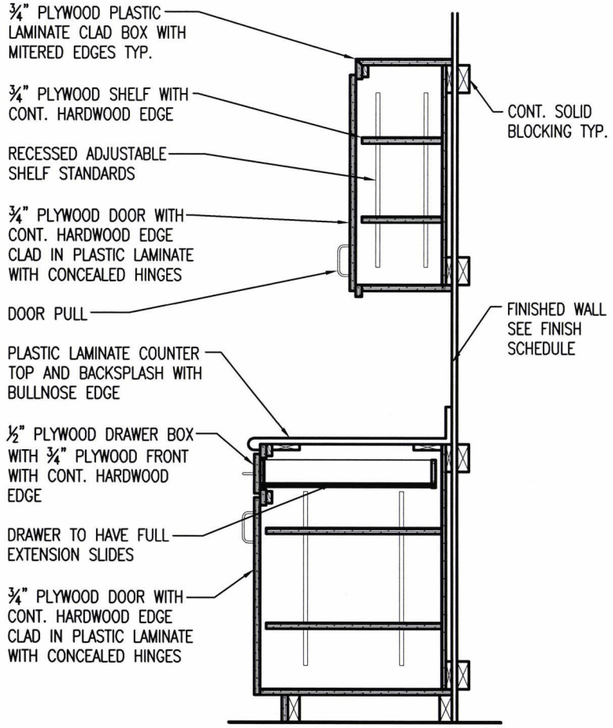

1 / A1.3 TYPICAL CABINET SECTION
SCALE : NO SCALE

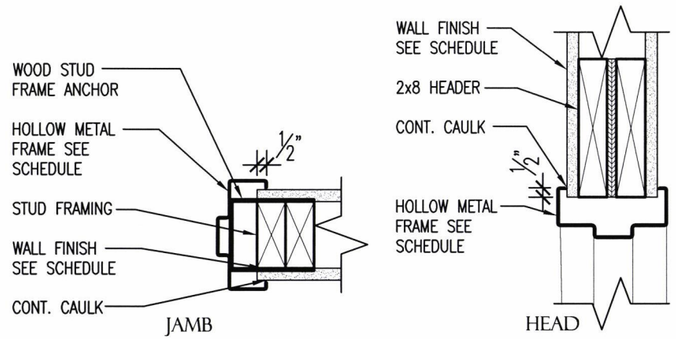

2 / A1.3 INTERIOR H.M. FRAME DETAILS
SCALE : 1½" = 1'-0"

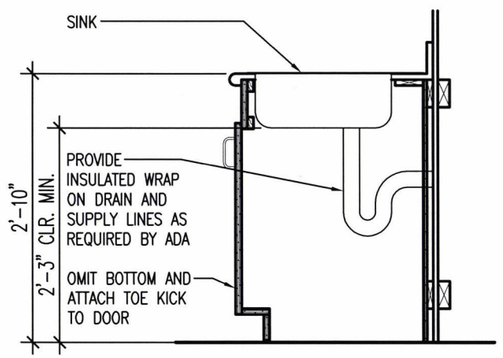

3 / A1.3 SINK BASE DETAIL
SCALE : NO SCALE

ROOM FINISH SCHEDULE

	MATERIAL	ROOM FINISH MARK A	B	C	D	E	F	COMMENTS
FLOOR	SEALED CONCRETE	●						
	SEALED CONCRETE		●	●				
	EPOXY COATING				●			
	¾" T&G PLYWOOD					●		
BASE	4" VINYL BASE	●						
	1"x4", PAINT		●	●				
	4" EPOXY COATING				●			
	NONE					●	●	
WALLS	⅝" GYP. BOARD, PAINT	●						
	½" PLYWOOD, PAINT		●	●		●		
	EPOXY COATING				●			
	EXPOSED STRUCTURE, PAINT			●		●	●	
W'SCOT	NONE	●	●	●	●	●	●	
CEILING	2'x2' ACOUSTICAL TILE	●			●			
	½" PLYWOOD, PAINT		●					
	EXPOSED STRUCTURE, PAINT			●		●	●	

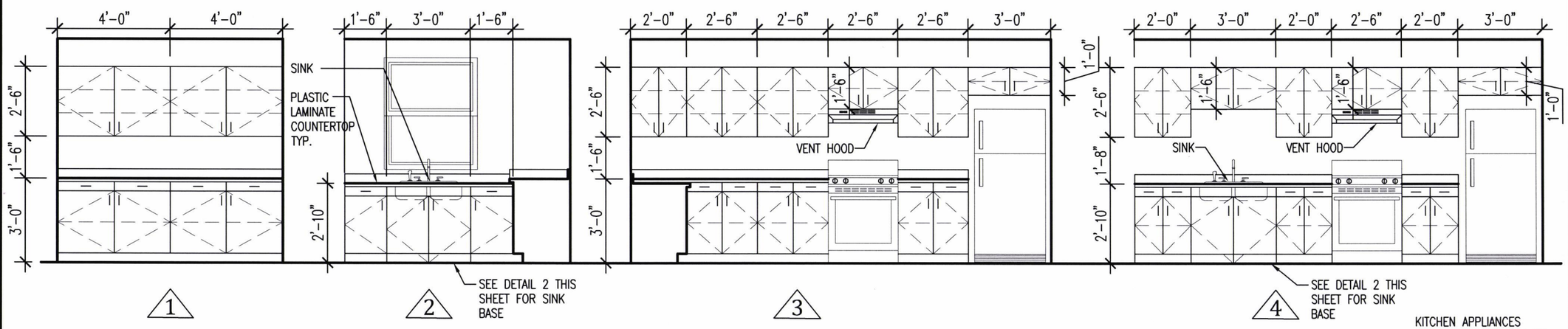

KITCHEN APPLIANCES SHALL BE FURNISHED BY OWNER AND INSTALLED BY CONTRACTOR

4 / A1.2 CABINET ELEVATIONS
SCALE : ¼" = 1'-0"

ARDOT ARKANSAS DEPARTMENT OF TRANSPORTATION

PULASKI CO. AREA 1 HEADQUARTERS/ R.E. OFFICE 61 (S)
North Little Rock, Arkansas
Pulaski County

STATE OF ARKANSAS REGISTERED PROFESSIONAL ENGINEER No. 7527 JOSEPH A. SARTINI 5-29-18

DATE: MAY 29, 2018
JOB NO: 061448
DRAWN BY: KB
REVISIONS:

A1.3

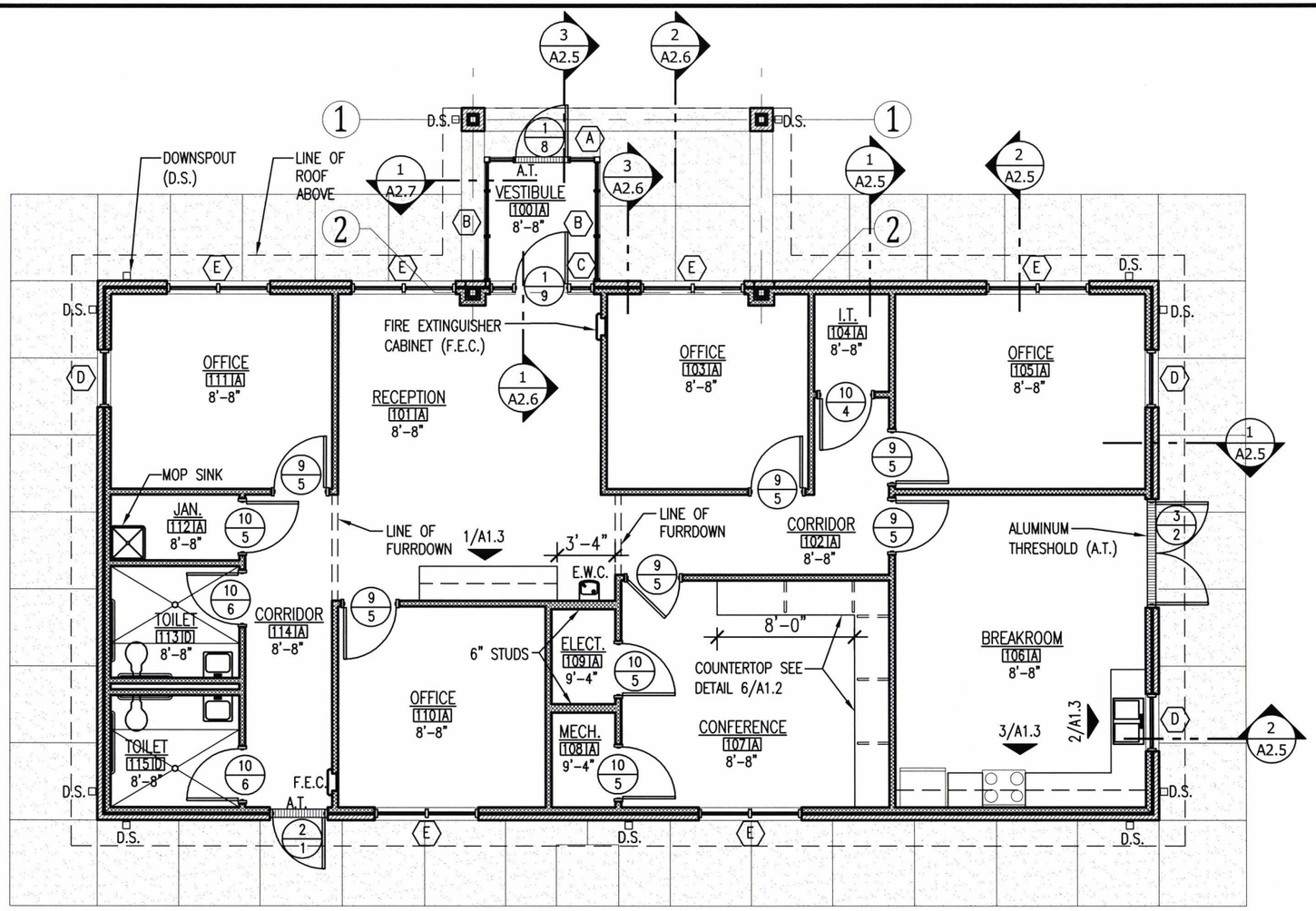

NORTH

1 / A2.1 R.E. OFFICE FLOOR PLAN

SCALE : 1/8" = 1'-0"

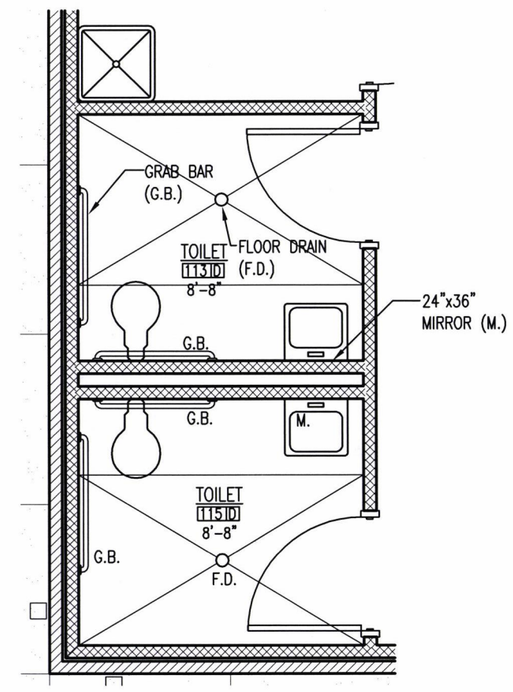

2 / A2.1 ENLARGED TOILET PLAN

SCALE : 1/4" = 1'-0"

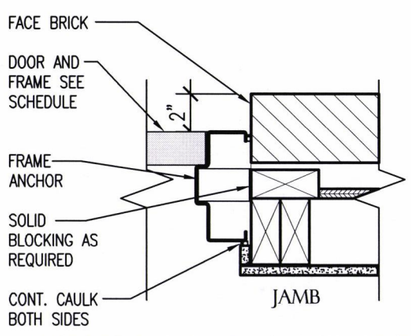

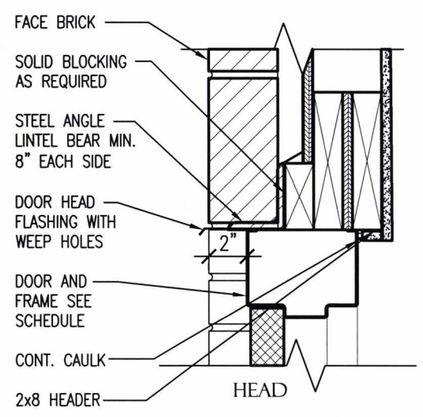

4 / A2.1 EXTERIOR DOOR DETAILS

SCALE : 1/2" = 1'-0"

ARDOT ARKANSAS DEPARTMENT OF TRANSPORTATION

PULASKI CO. AREA 1 HEADQUARTERS/ R.E. OFFICE 61 (S)
North Little Rock, Arkansas
Pulaski County

STATE OF ARKANSAS REGISTERED PROFESSIONAL ENGINEER No. 7527 JOSEPH A. SARTINI 5-29-18

DATE: MAY 29, 2018
JOB NO: 061448
DRAWN BY: KB
REVISIONS:

A2.1

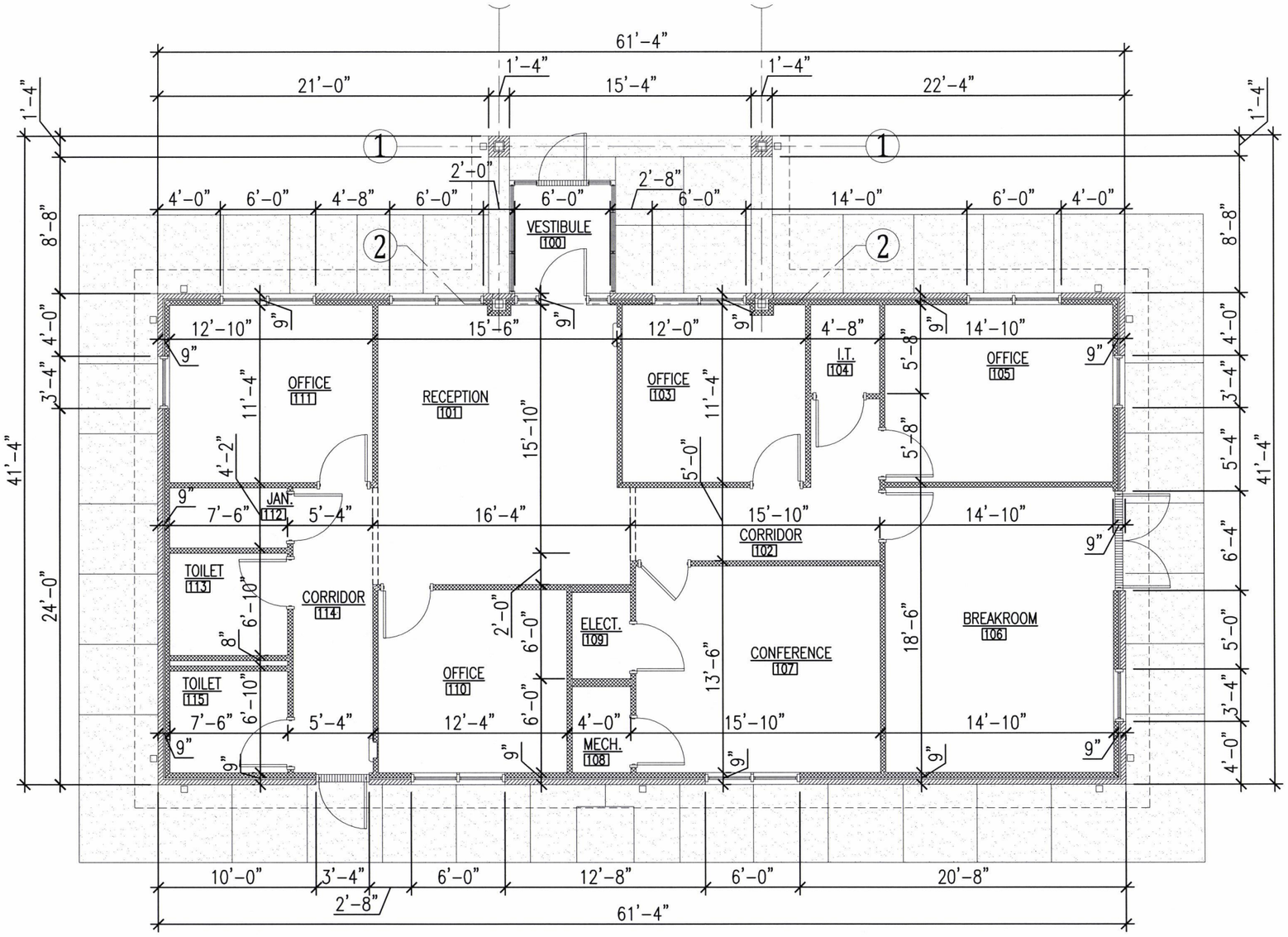

NORTH

2 / A2.2 R.E. OFFICE DIMENSION PLAN

SCALE : 1/8" = 1'-0"

ARDOT ARKANSAS DEPARTMENT OF TRANSPORTATION

PULASKI CO. AREA 1
HEADQUARTERS/
R.E. OFFICE 61 (S)
North Little Rock, Arkansas
Pulaski County

STATE OF ARKANSAS
REGISTERED PROFESSIONAL ENGINEER
No. 7527
JOSEPH A. SARTINI
5-29-18

DATE: MAY 29, 2018
JOB NO: 061448
DRAWN BY: KB
REVISIONS:

A2.2

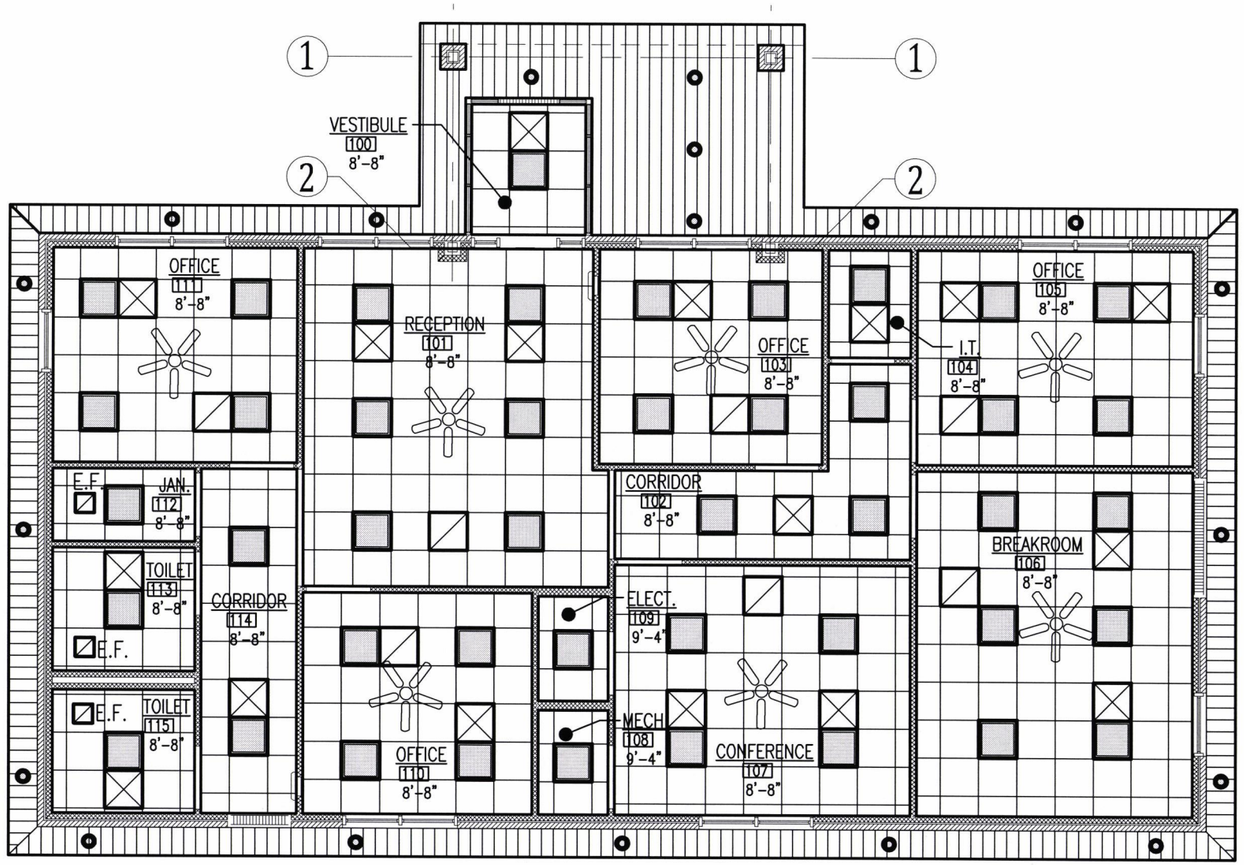

NORTH

1 / A2.3 R.E. OFFICE REFLECTED CEILING PLAN

SCALE : 1/8" = 1'-0"

CEILING LEGEND

- 2'x4' LIGHT FIXTURE
- 2'x2' LIGHT FIXTURE
- RECESSED LIGHT FIXTURE
- CEILING FAN
- SUPPLY GRILLE
- RETURN GRILLE
- E.F. EXHAUST FAN
- PLYWOOD CEILING/SOFFIT
- FLAT PANEL METAL SOFFIT

ARDOT ARKANSAS DEPARTMENT OF TRANSPORTATION

PULASKI CO. AREA 1
HEADQUARTERS/
R.E. OFFICE 61 (S)
North Little Rock, Arkansas
Pulaski County

STATE OF ARKANSAS
REGISTERED PROFESSIONAL ENGINEER
No. 7527
JOSEPH A. SARTENI
5-29-18

DATE: MAY 29, 2018
JOB NO: 061448
DRAWN BY: KB
REVISIONS:

A2.3

1 / A2.2 R.E. OFFICE NORTH ELEVATION
SCALE : 3/32" = 1'-0"

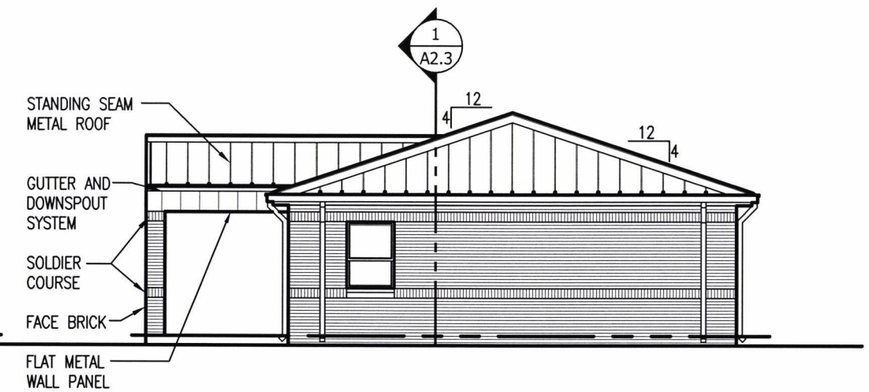

2 / A2.2 R.E. OFFICE WEST ELEVATION
SCALE : 3/32" = 1'-0"

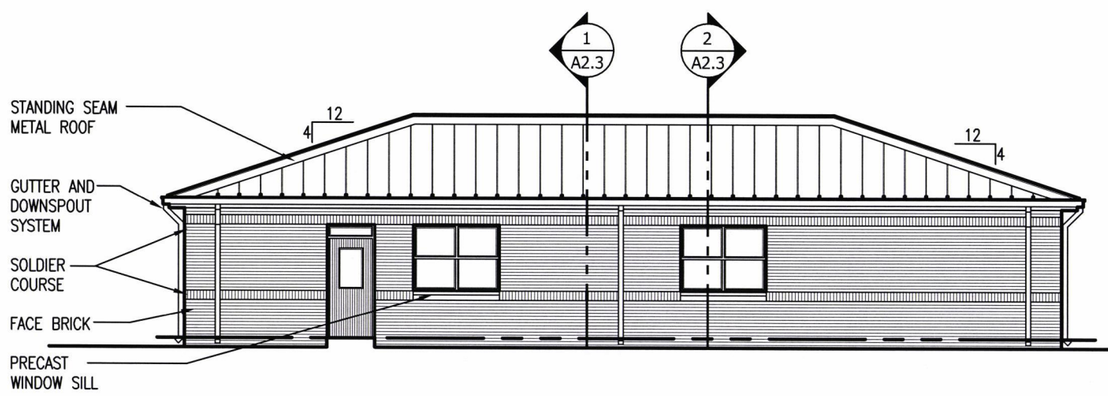

3 / A2.2 R.E. OFFICE SOUTH ELEVATION
SCALE : 3/32" = 1'-0"

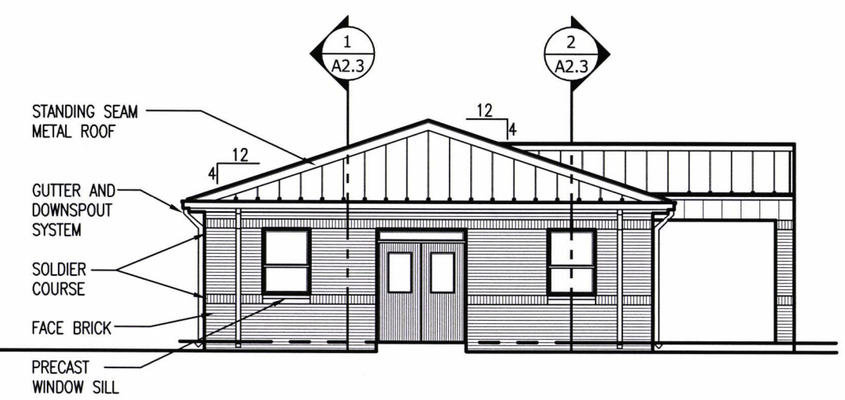

4 / A2.2 R.E. OFFICE EAST ELEVATION
SCALE : 3/32" = 1'-0"

ARDOT ARKANSAS DEPARTMENT OF TRANSPORTATION

PULASKI CO. AREA 1 HEADQUARTERS/ R.E. OFFICE 61 (S)
North Little Rock, Arkansas
Pulaski County

STATE OF ARKANSAS
REGISTERED PROFESSIONAL ENGINEER
No. 7527
JOSEPH A. SARTINI

DATE: MAY 29, 2018
JOB NO: 061448
DRAWN BY: KB
REVISIONS:

A2.4

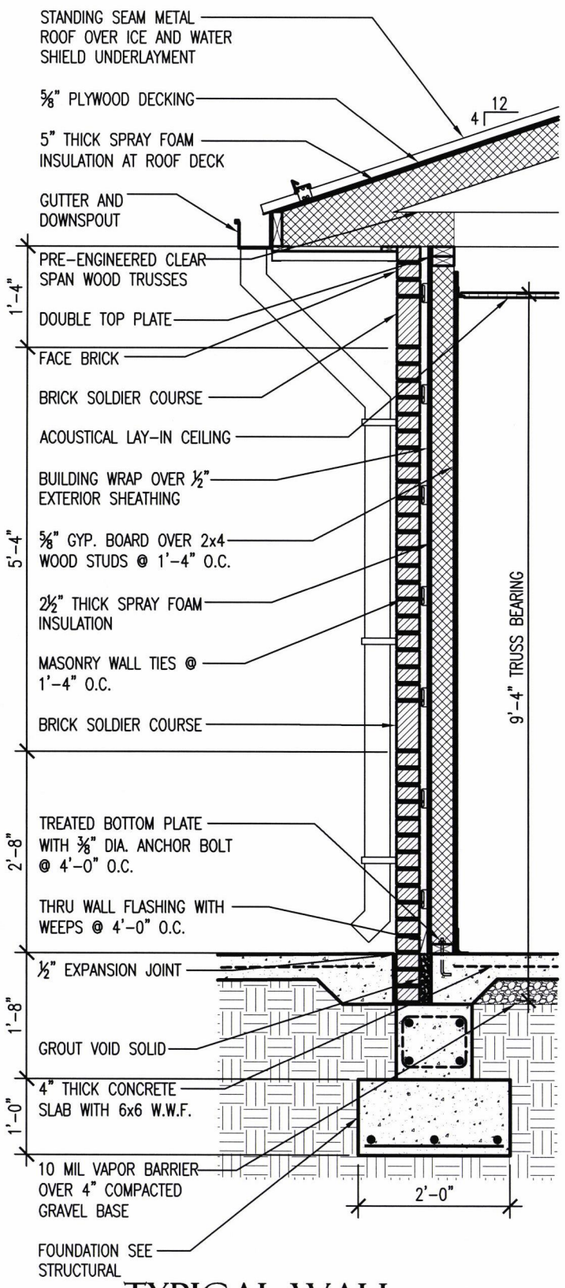

1 A2.5 TYPICAL WALL SECTION

SCALE : ½" = 1'-0"

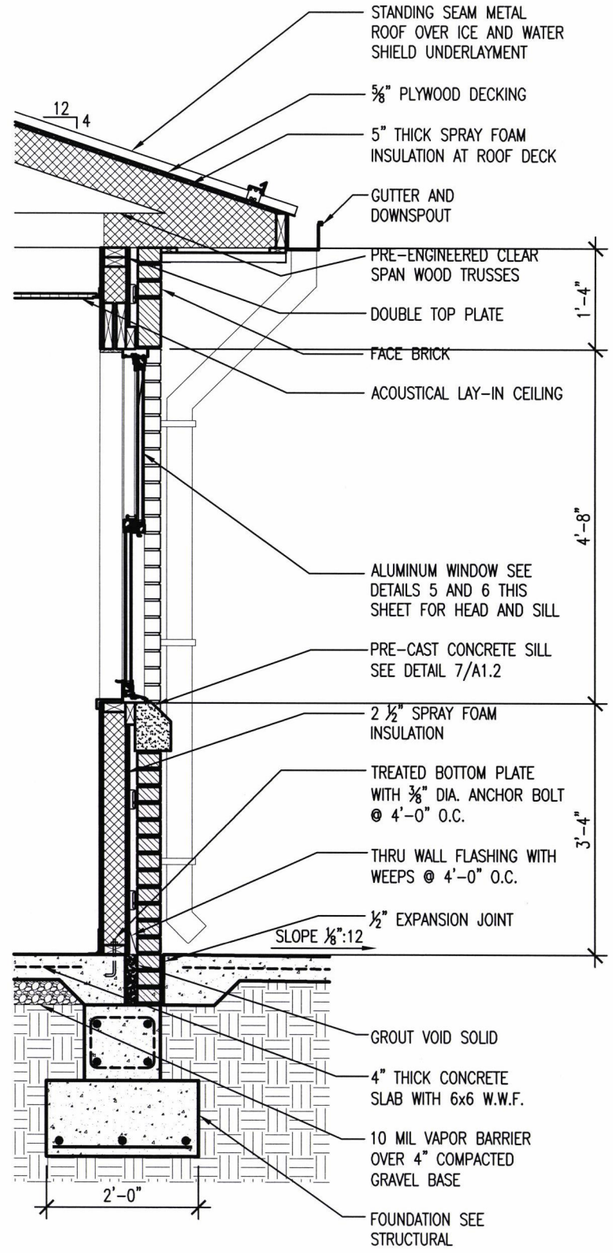

2 A2.5 TYPICAL WALL SECTION @ WINDOW

SCALE : ½" = 1'-0"

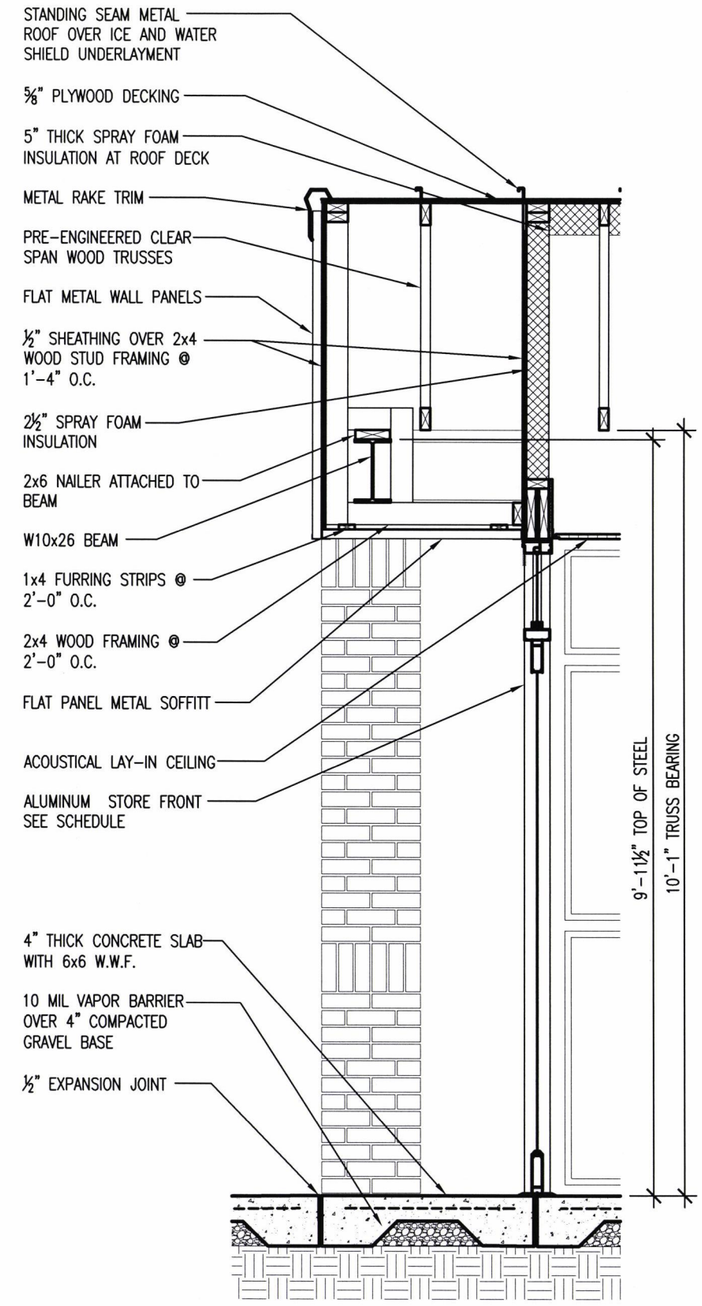

3 A2.5 WALL SECTION

SCALE : ½" = 1'-0"

ARDOT ARKANSAS DEPARTMENT OF TRANSPORTATION

PULASKI CO. AREA 1
HEADQUARTERS/
R.E. OFFICE 61 (S)
North Little Rock, Arkansas
Pulaski County

STATE OF ARKANSAS REGISTERED PROFESSIONAL ENGINEER No. 7527 JOSEPH A. SARGENTI 5-29-18

DATE: MAY 29, 2018
JOB NO: 061448
DRAWN BY: KB
REVISIONS:

A2.5

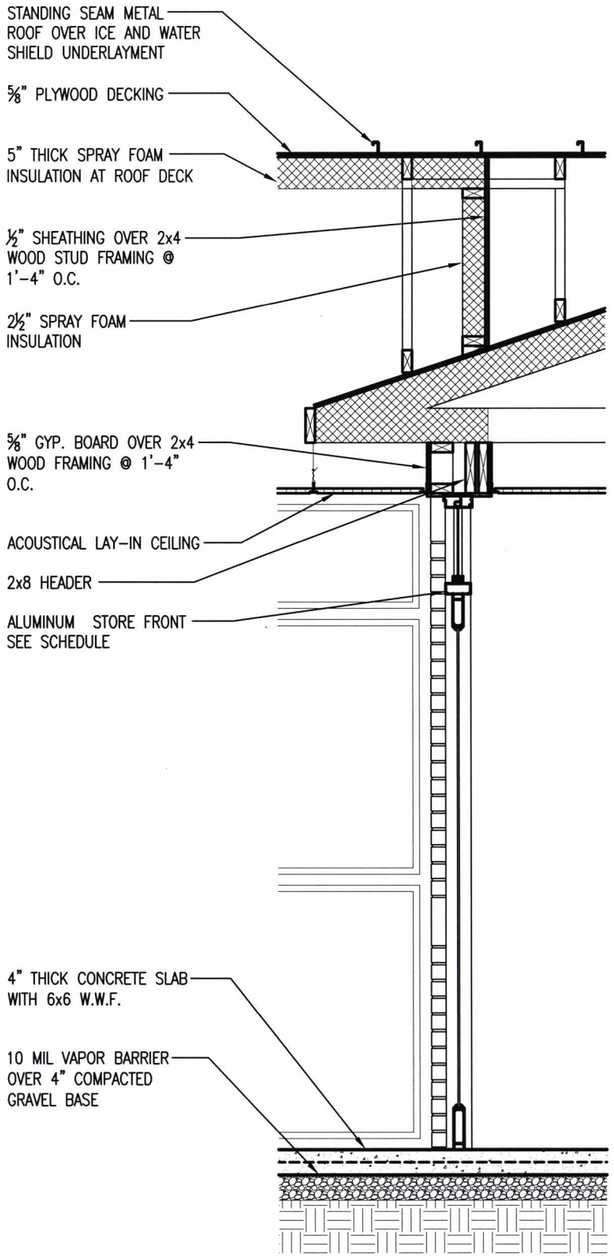

1 A2.6 WALL SECTION
SCALE : ½" = 1'-0"

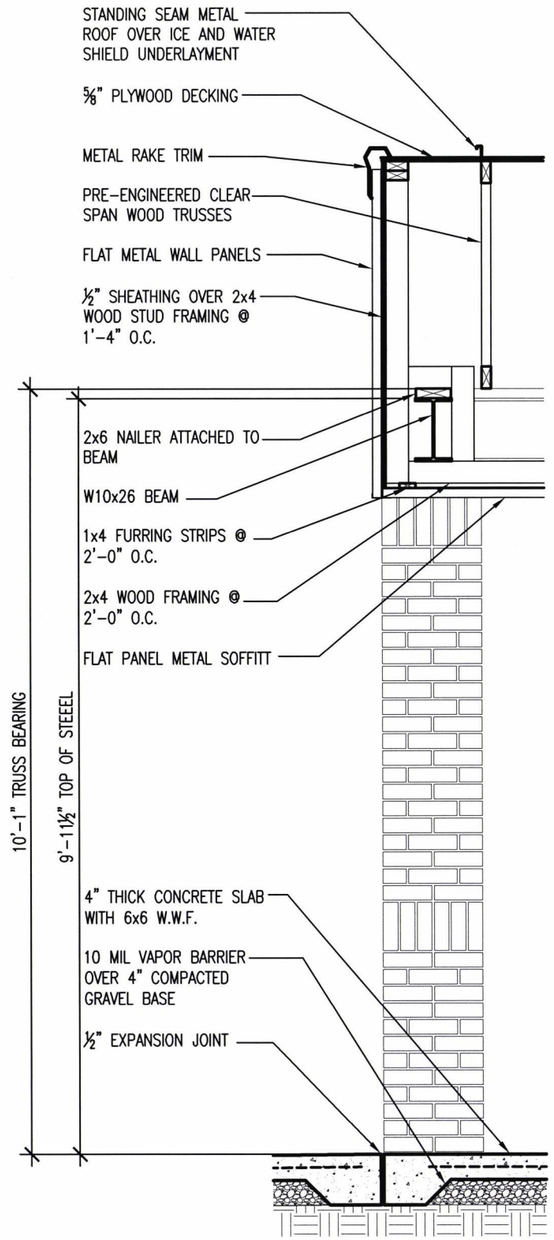

2 A2.6 WALL SECTION
SCALE : ½" = 1'-0"

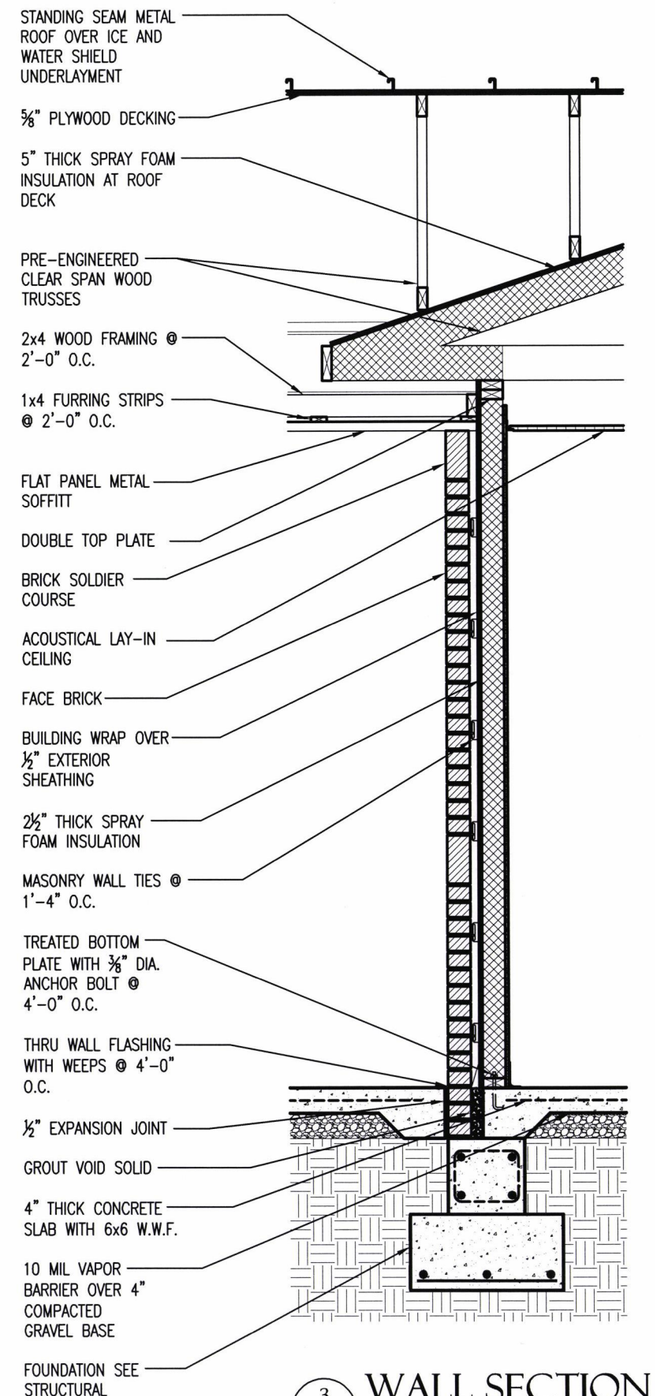

3 A2.6 WALL SECTION
SCALE : ½" = 1'-0"

ARDOT ARKANSAS DEPARTMENT OF TRANSPORTATION

PULASKI CO. AREA 1
HEADQUARTERS/
R.E. OFFICE 61 (S)
North Little Rock, Arkansas
Pulaski County

STATE OF ARKANSAS
REGISTERED PROFESSIONAL ENGINEER
No. 7527
JOSEPH A. SARTINI
5-28-18

DATE: MAY 29, 2018
JOB NO: 061448
DRAWN BY: KB
REVISIONS:

A2.6

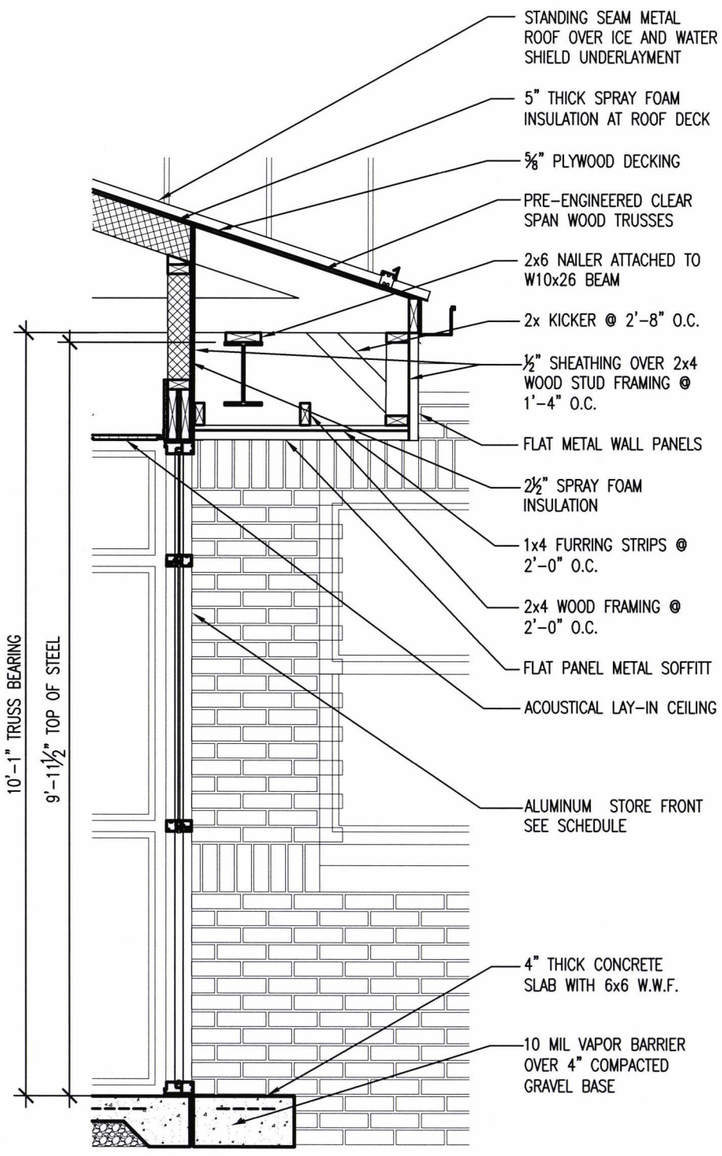

1 / A2.7 WALL SECTION
SCALE : ½" = 1'-0"

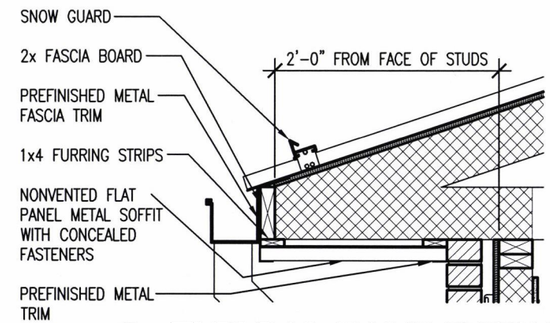

2 / A2.7 TYPICAL EAVE DETAIL
SCALE : ¾" = 1'-0"

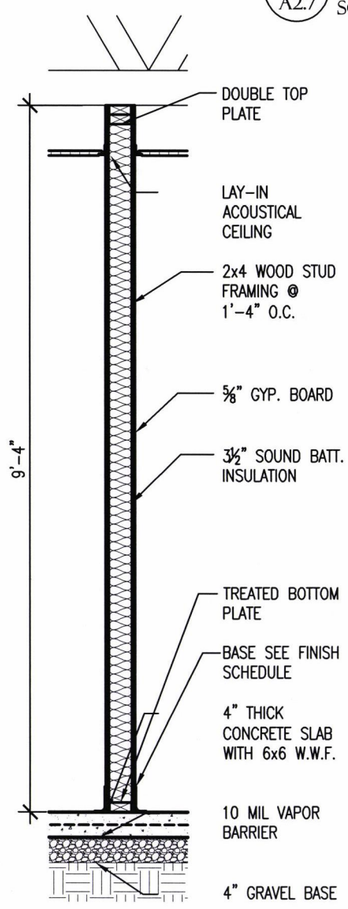

2 / A2.7 TYPICAL INTERIOR WALL SECTION
SCALE : ½" = 1'-0"

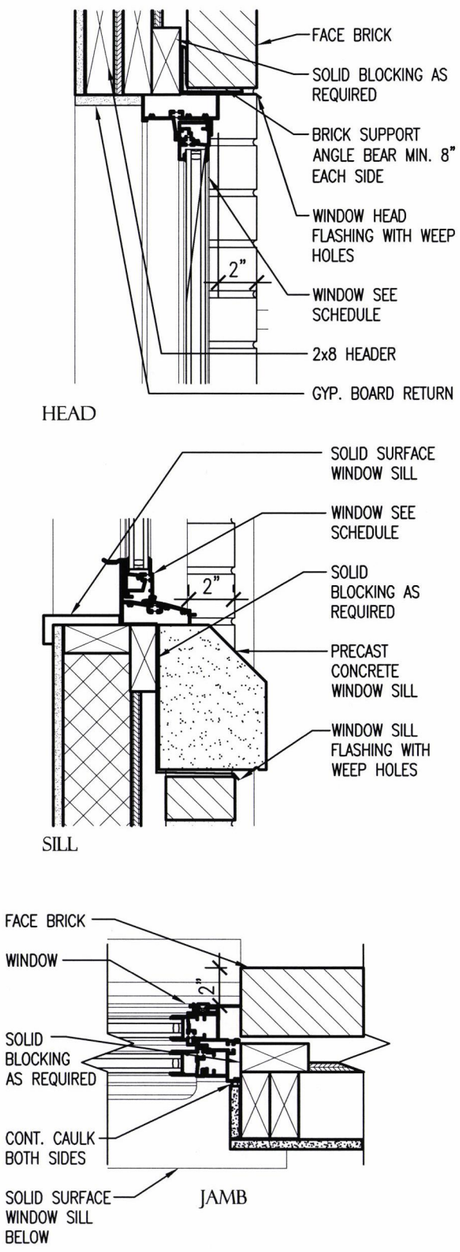

3 / A2.7 WINDOW DETAILS
SCALE : 1½" = 1'-0"

ARDOT ARKANSAS DEPARTMENT OF TRANSPORTATION

PULASKI CO. AREA 1 HEADQUARTERS/ R.E. OFFICE 61 (S)
North Little Rock, Arkansas
Pulaski County

STATE OF ARKANSAS REGISTERED PROFESSIONAL ENGINEER No. 7527 JOSEPH A. SARTINI 5-29-18

DATE: MAY 29, 2018
JOB NO: 061448
DRAWN BY: KB
REVISIONS:

A2.7

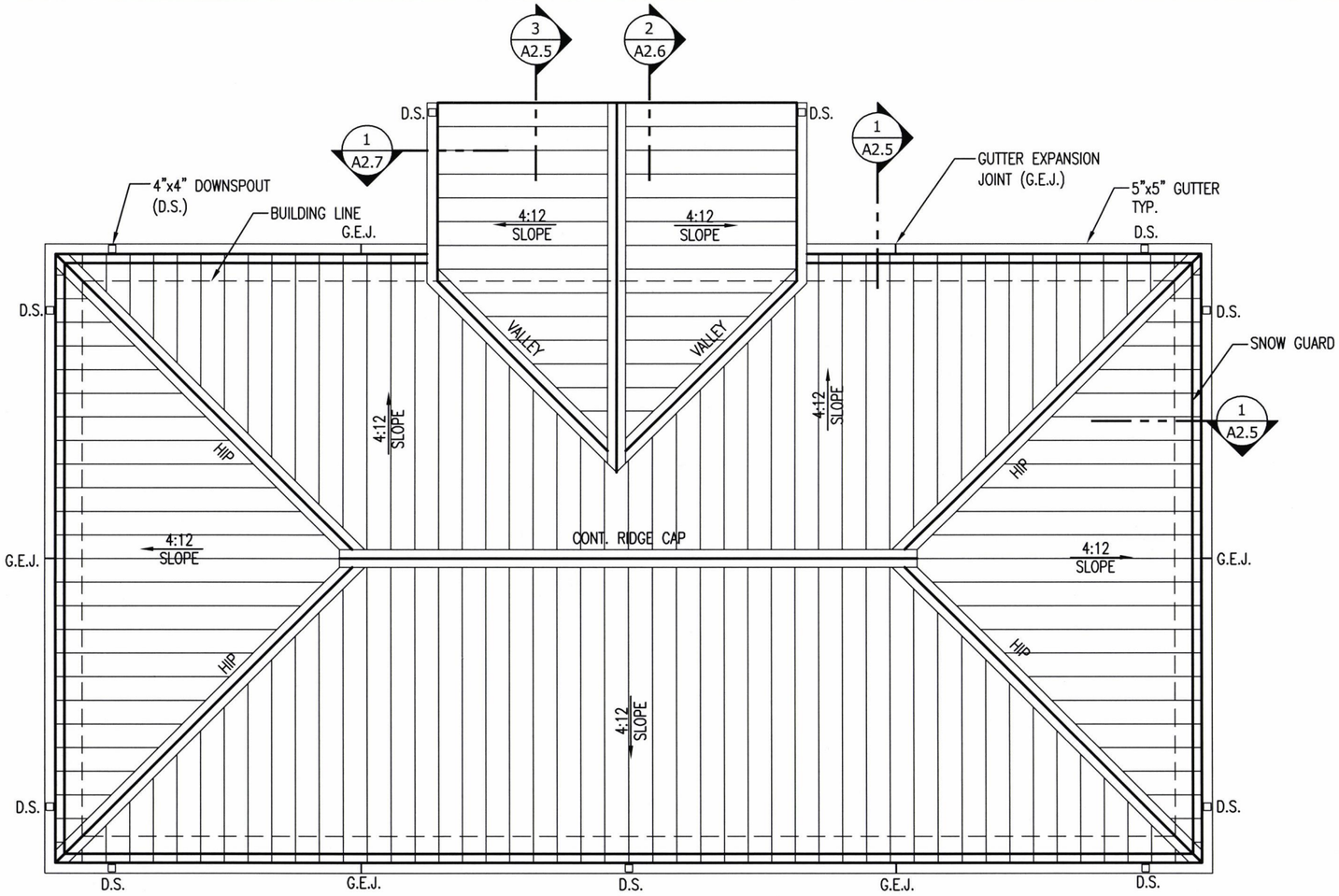

NORTH

1 / A2.8 R.E. OFFICE ROOF PLAN

SCALE : 1/8" = 1'-0"

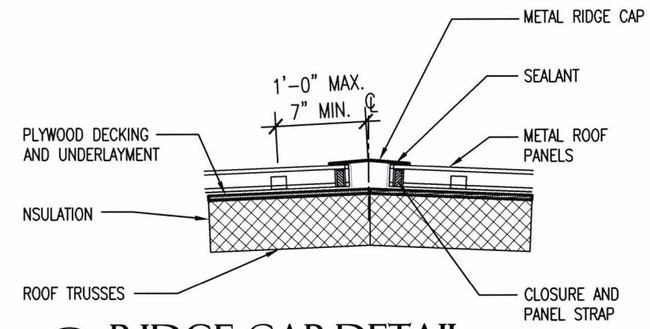

2 / A2.8 RIDGE CAP DETAIL

SCALE : NO SCALE

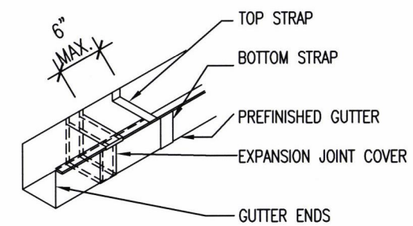

3 / A2.8 GUTTER EXPANSION JOINT DETAIL

SCALE : NO SCALE

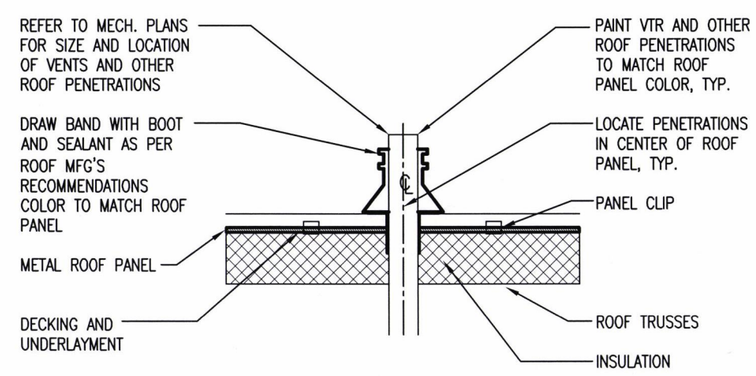

4 / A2.8 VENT THROUGH ROOF (VTR) DETAIL

SCALE : NO SCALE

ARDOT ARKANSAS DEPARTMENT OF TRANSPORTATION

PULASKI CO. AREA 1
HEADQUARTERS/
R.E. OFFICE 61 (S)
North Little Rock, Arkansas
Pulaski County

STATE OF ARKANSAS
REGISTERED PROFESSIONAL ENGINEER
No. 7527
JOSEPH A. SARTINI
5-29-18

DATE: MAY 29, 2018
JOB NO: 061448
DRAWN BY: KB
REVISIONS:

A2.8

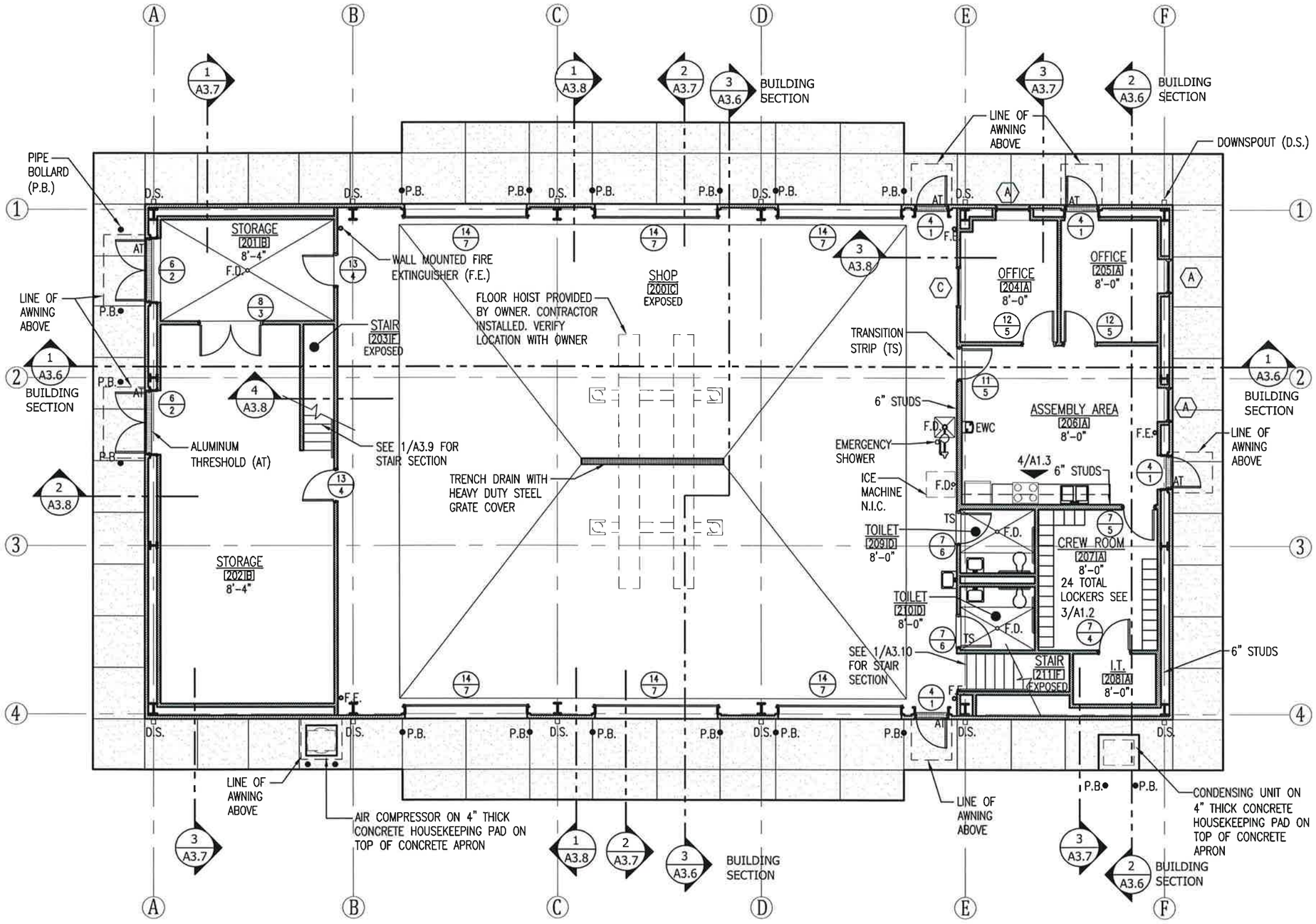

NORTH

A.H.Q. FLOOR PLAN

1 / A3.1

SCALE : 3/32" = 1'-0"

ARDOT ARKANSAS DEPARTMENT OF TRANSPORTATION

PULASKI CO. AREA 1 HEADQUARTERS/ R.E. OFFICE 61 (S)

North Little Rock, Arkansas

Pulaski County

STATE OF ARKANSAS REGISTERED PROFESSIONAL ENGINEER No. 7527 JOSEPH A. SARTINI 7-16-18

DATE: MAY 29, 2018

JOB NO: 061448

DRAWN BY: KB

REVISIONS: 7-12-18

A3.1

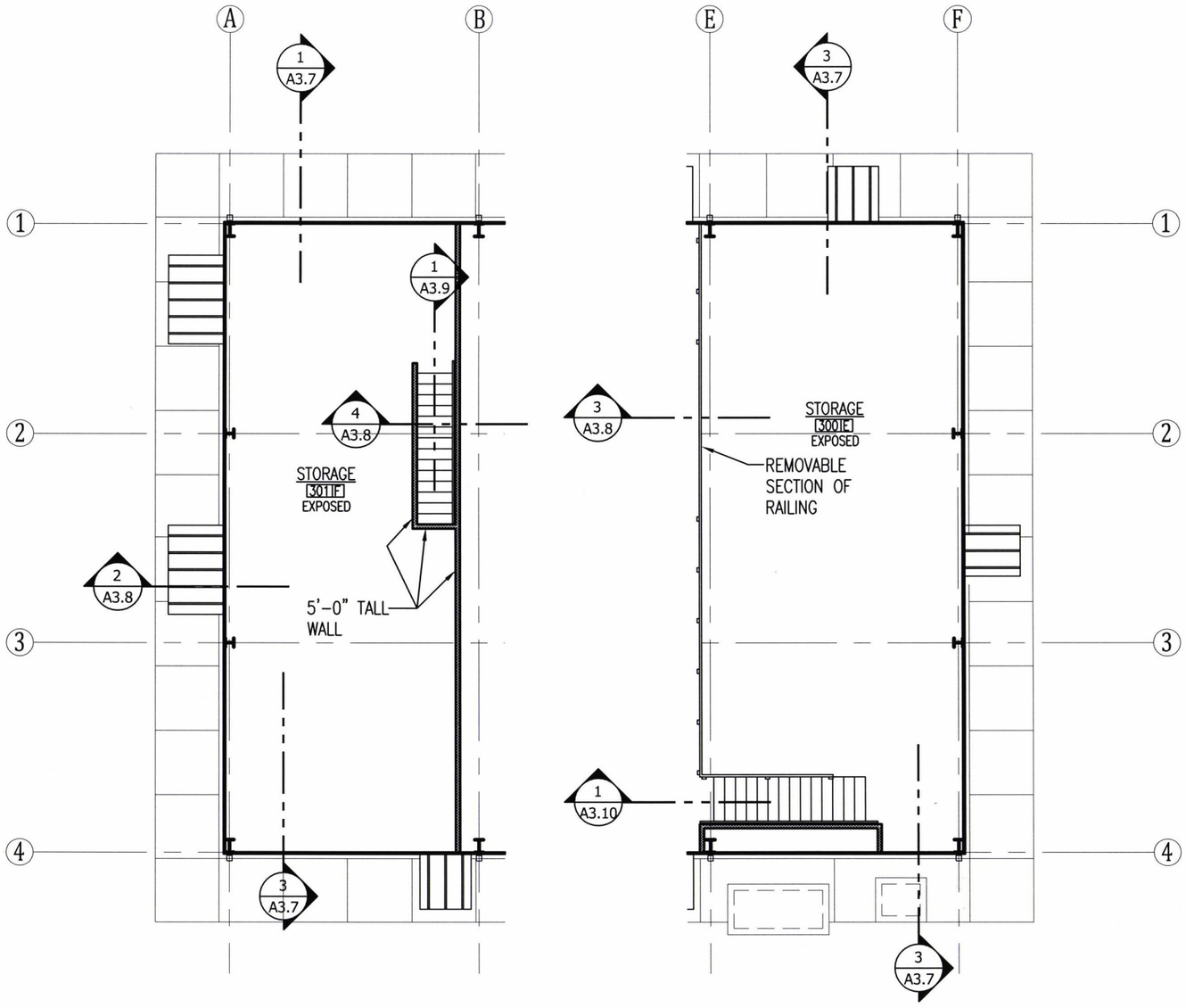

NORTH

1 A3.2 UPPER LEVEL FLOOR PLANS

SCALE : 3/32" = 1'-0"

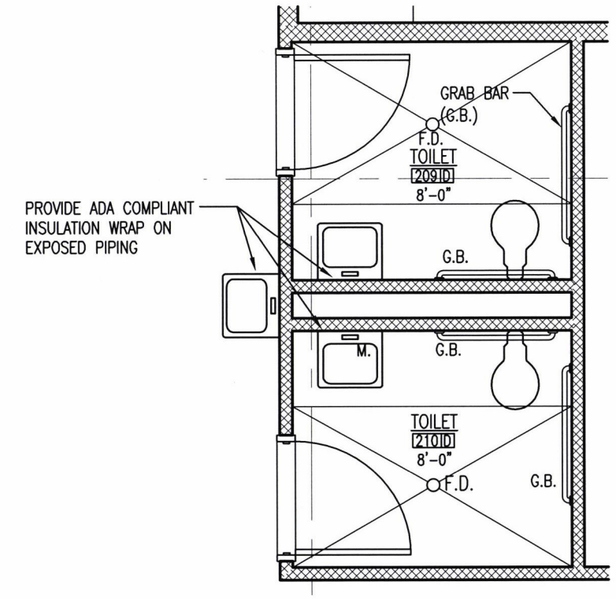

1 A3.2 ENLARGED TOILET PLAN

SCALE : 1/4" = 1'-0"

ARDOT ARKANSAS DEPARTMENT OF TRANSPORTATION

PULASKI CO. AREA 1 HEADQUARTERS/ R.E. OFFICE 61 (S)

North Little Rock, Arkansas

Pulaski County

STATE OF ARKANSAS REGISTERED PROFESSIONAL ENGINEER No. 7527 JOSEPH A. SARTINI 5-29-18

DATE: MAY 29, 2018

JOB NO: 061448

DRAWN BY: KB

REVISIONS:

A3.2

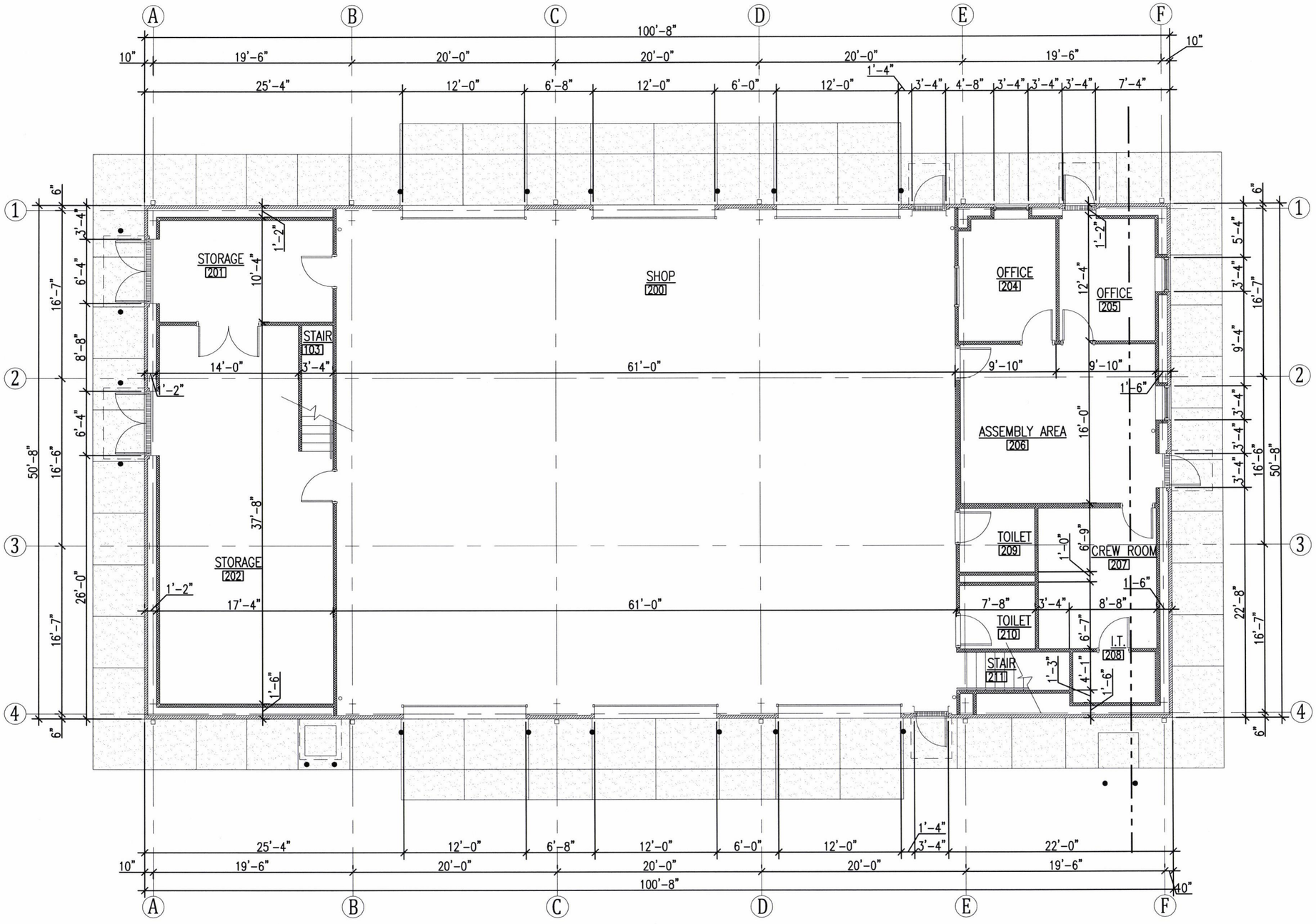

NORTH

1 / A3.3 A.H.Q. DIMENSION PLAN

SCALE : 3/32" = 1'-0"

ARDOT ARKANSAS DEPARTMENT OF TRANSPORTATION

PULASKI CO. AREA 1
HEADQUARTERS/
R.E. OFFICE 61 (S)
North Little Rock, Arkansas
Pulaski County

STATE OF ARKANSAS
REGISTERED PROFESSIONAL ENGINEER
No. 7527
JOSEPH A. SARTINI

DATE: MAY 29, 2018
JOB NO: 061448
DRAWN BY: KB
REVISIONS:

A3.3

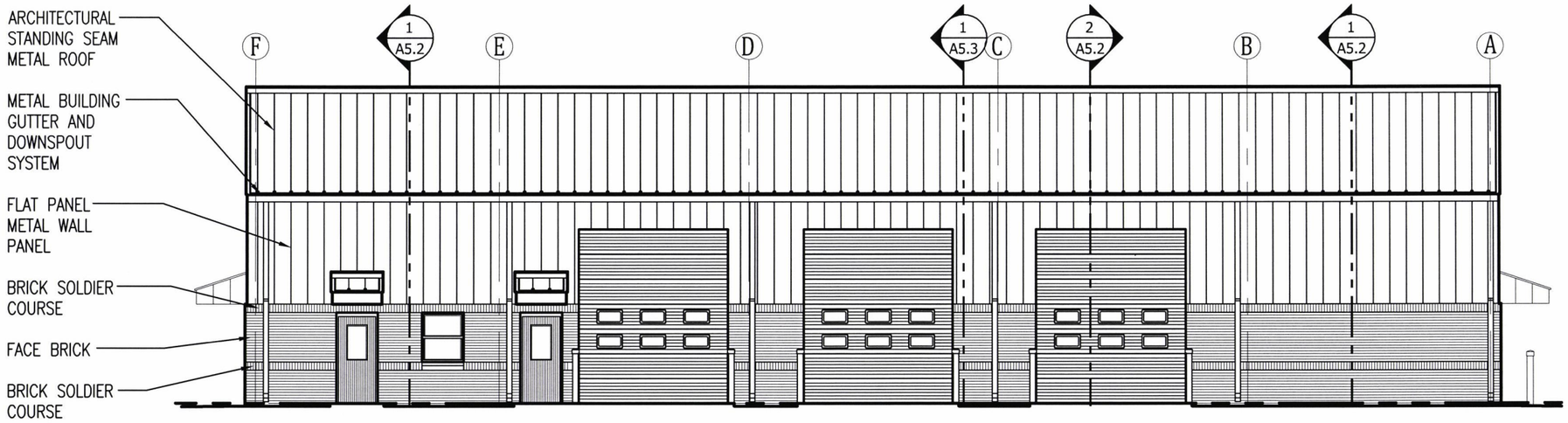

1/A3.4 A.H.Q. NORTH ELEVATION

SCALE : 3/32" = 1'-0"

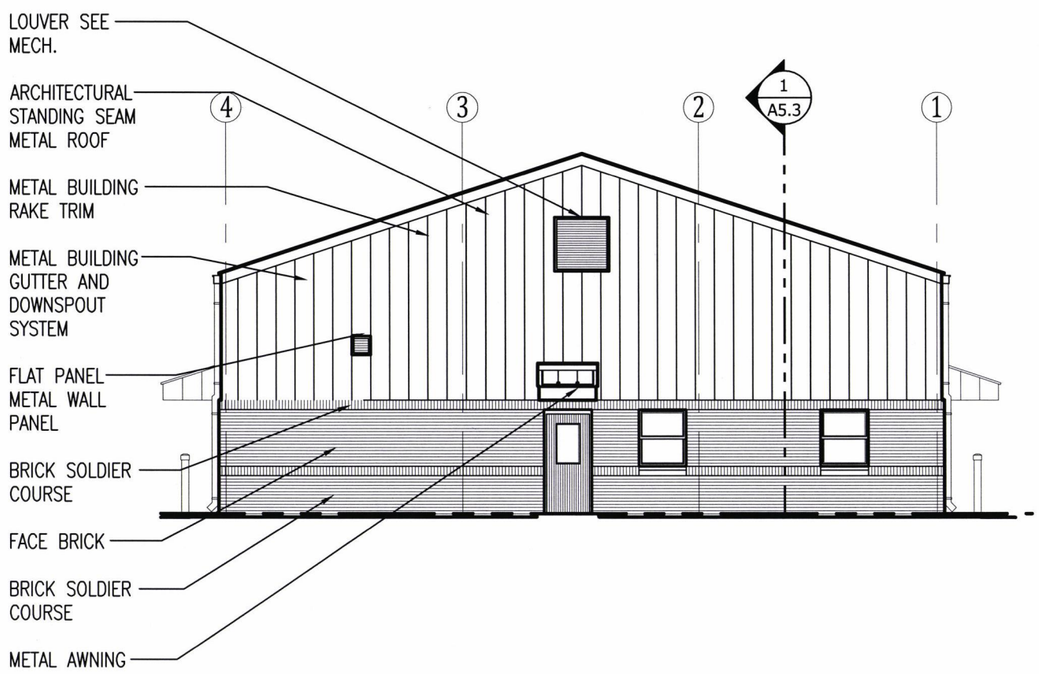

1/A3.4 A.H.Q. EAST ELEVATION

SCALE : 3/32" = 1'-0"

ARDOT ARKANSAS DEPARTMENT OF TRANSPORTATION

PULASKI CO. AREA 1 HEADQUARTERS/ R.E. OFFICE 61 (S)
North Little Rock, Arkansas
Pulaski County

STATE OF ARKANSAS REGISTERED PROFESSIONAL ENGINEER No. 7527 JOSEPH A. SARCINI

DATE: MAY 29, 2018
JOB NO: 061448
DRAWN BY: KB
REVISIONS:

A3.4

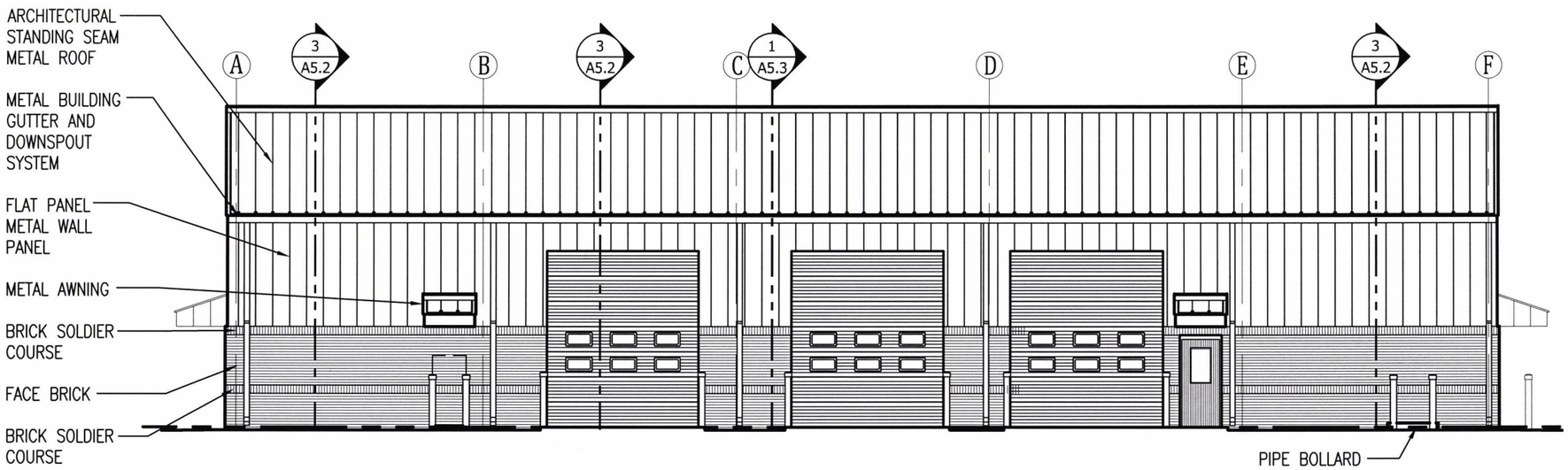

1 A3.5 A.H.Q. SOUTH ELEVATION
SCALE : 3/32" = 1'-0"

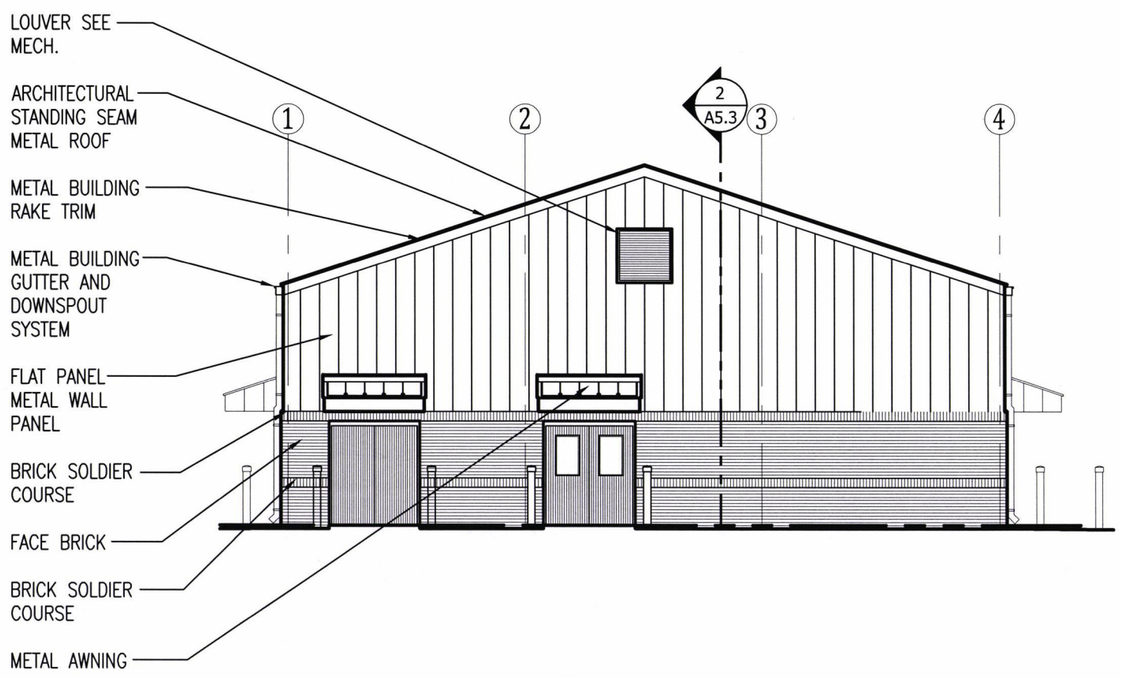

1 A3.5 A.H.Q. WEST ELEVATION
SCALE : 3/32" = 1'-0"

ARDOT ARKANSAS DEPARTMENT OF TRANSPORTATION

PULASKI CO. AREA 1 HEADQUARTERS/ R.E. OFFICE 61 (S)
North Little Rock, Arkansas
Pulaski County

STATE OF ARKANSAS
REGISTERED PROFESSIONAL ENGINEER
No. 7527
JOSEPH A. SARGENTI

DATE: MAY 29, 2018
JOB NO: 061448
DRAWN BY: KB
REVISIONS:

A3.5

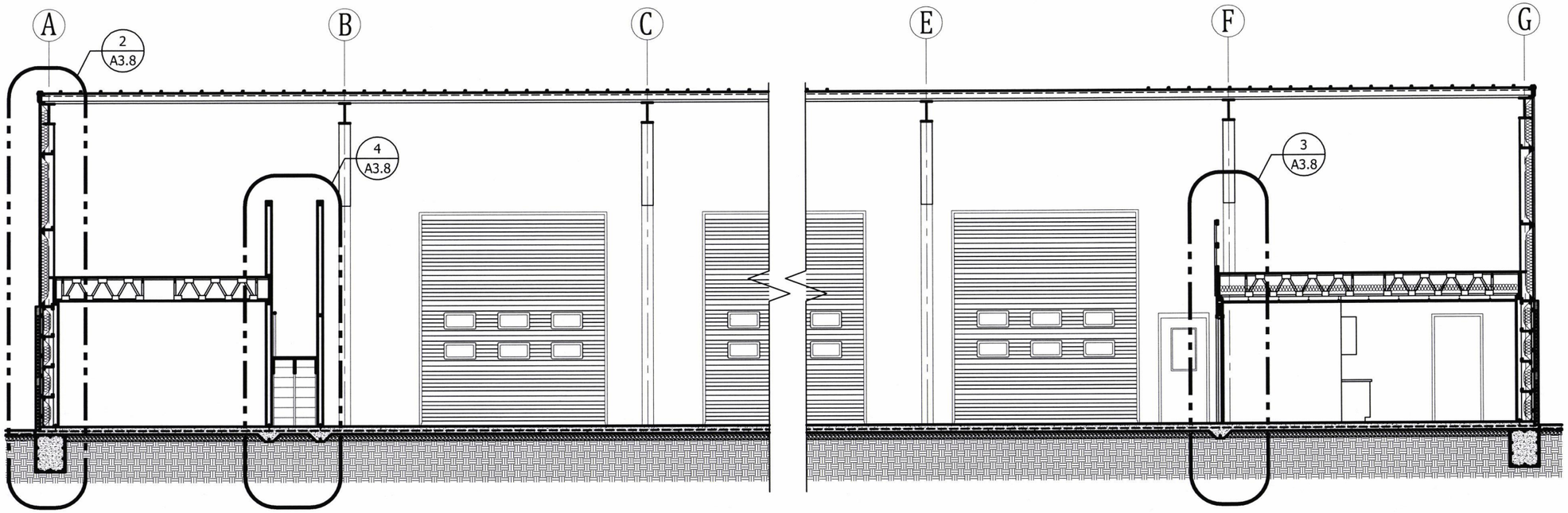

1 / A3.6 BUILDING SECTION
SCALE : 1/8" = 1'-0"

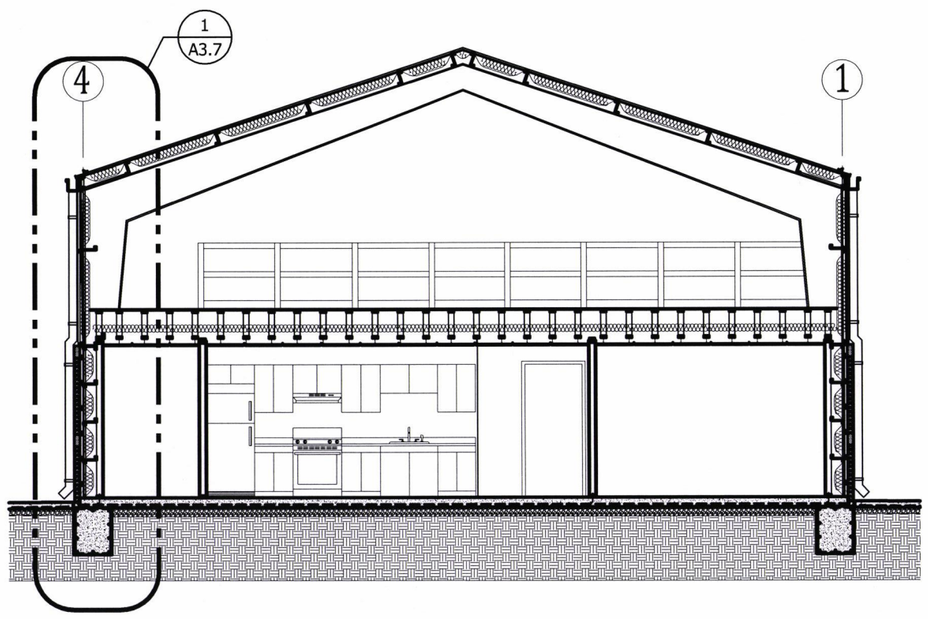

2 / A3.6 BUILDING SECTION
SCALE : 1/8" = 1'-0"

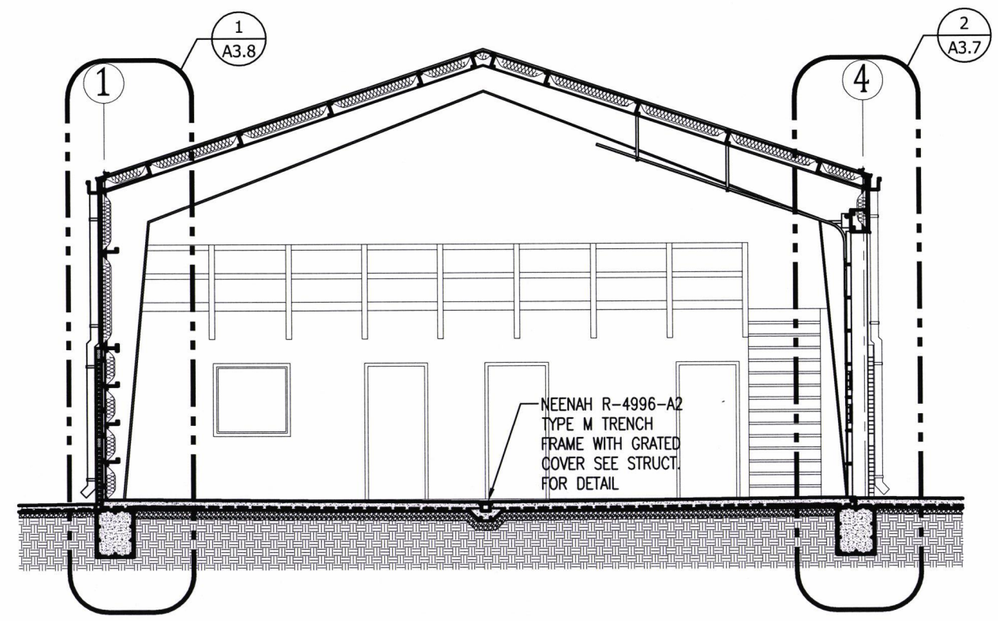

3 / A3.6 BUILDING SECTION
SCALE : 1/8" = 1'-0"

ARDOT ARKANSAS DEPARTMENT OF TRANSPORTATION

PULASKI CO. AREA 1
HEADQUARTERS/
R.E. OFFICE 61 (S)
North Little Rock, Arkansas
Pulaski County

STATE OF ARKANSAS
REGISTERED PROFESSIONAL ENGINEER
No. 7527
JOSEPH A. SARGENTI
5-29-18

DATE: MAY 29, 2018
JOB NO: 061448
DRAWN BY: KB
REVISIONS:

A3.6

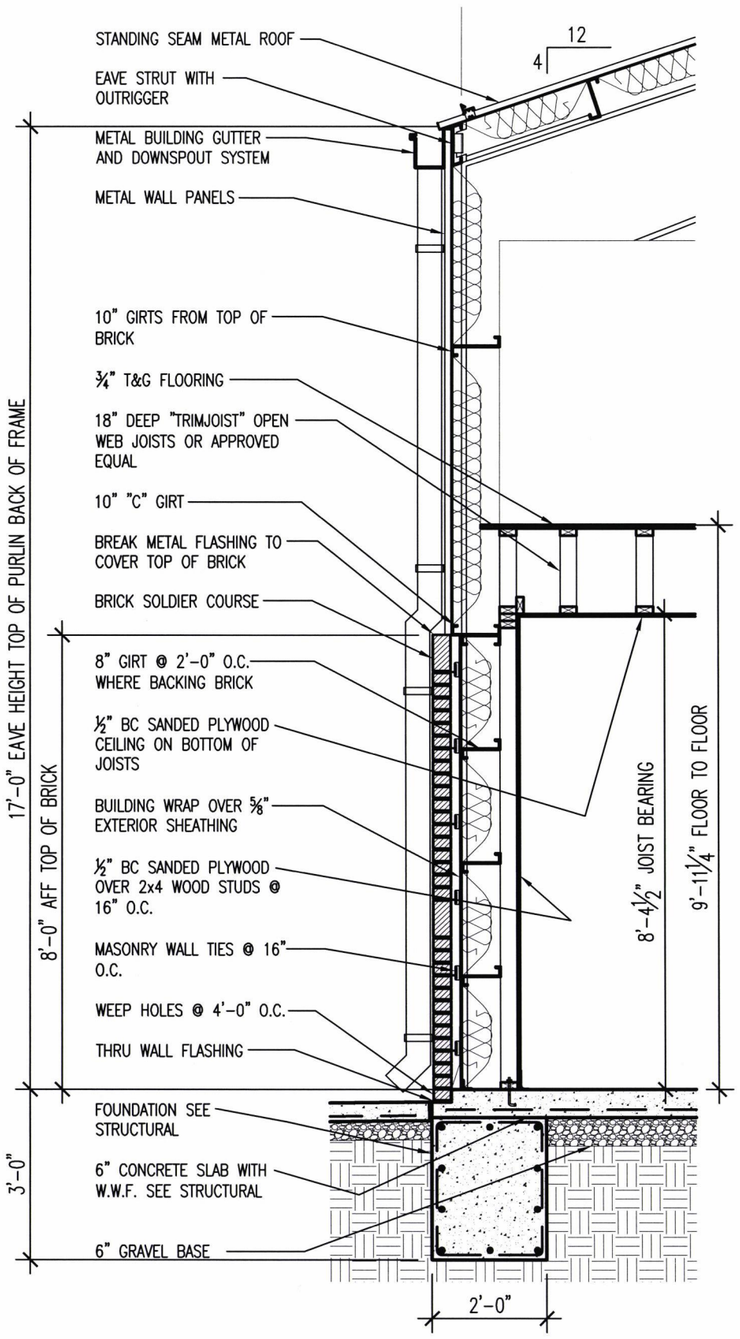

1 A3.7 WALL SECTION
SCALE : ⅜" = 1'-0"

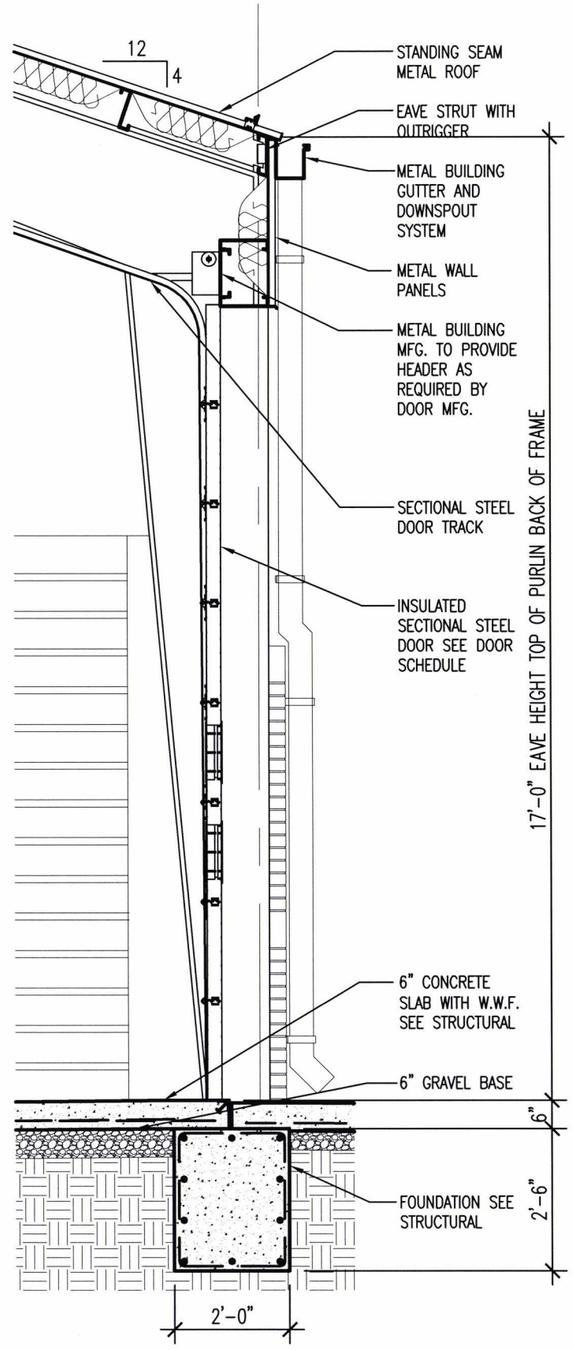

2 A3.7 WALL SECTION
SCALE : ⅜" = 1'-0"

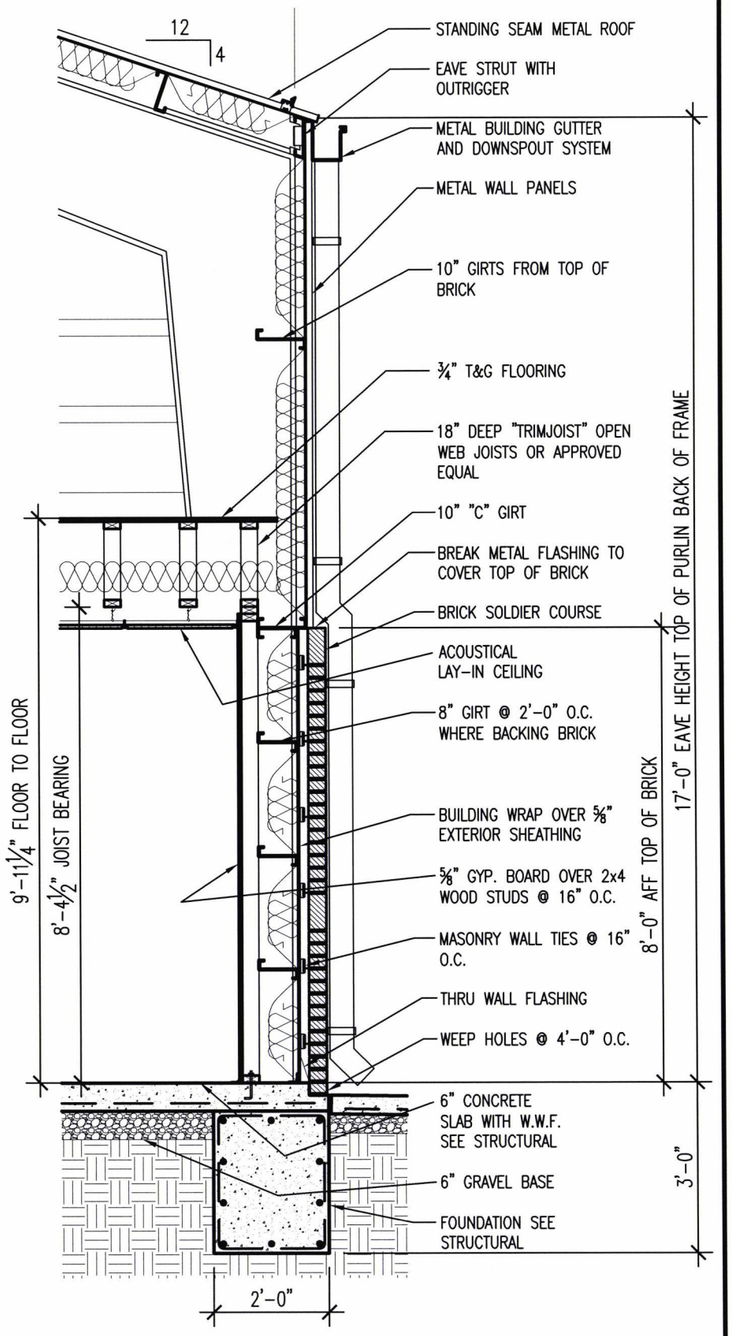

3 A3.7 WALL SECTION
SCALE : ⅜" = 1'-0"

ARDOT ARKANSAS DEPARTMENT OF TRANSPORTATION

PULASKI CO. AREA 1
HEADQUARTERS/
R.E. OFFICE 61 (S)
North Little Rock, Arkansas
Pulaski County

STATE OF ARKANSAS
REGISTERED PROFESSIONAL ENGINEER
No. 7527
JOSEPH A. SARTINI
5-28-18

DATE: MAY 29, 2018
JOB NO: 061448
DRAWN BY: KB
REVISIONS:

A3.7

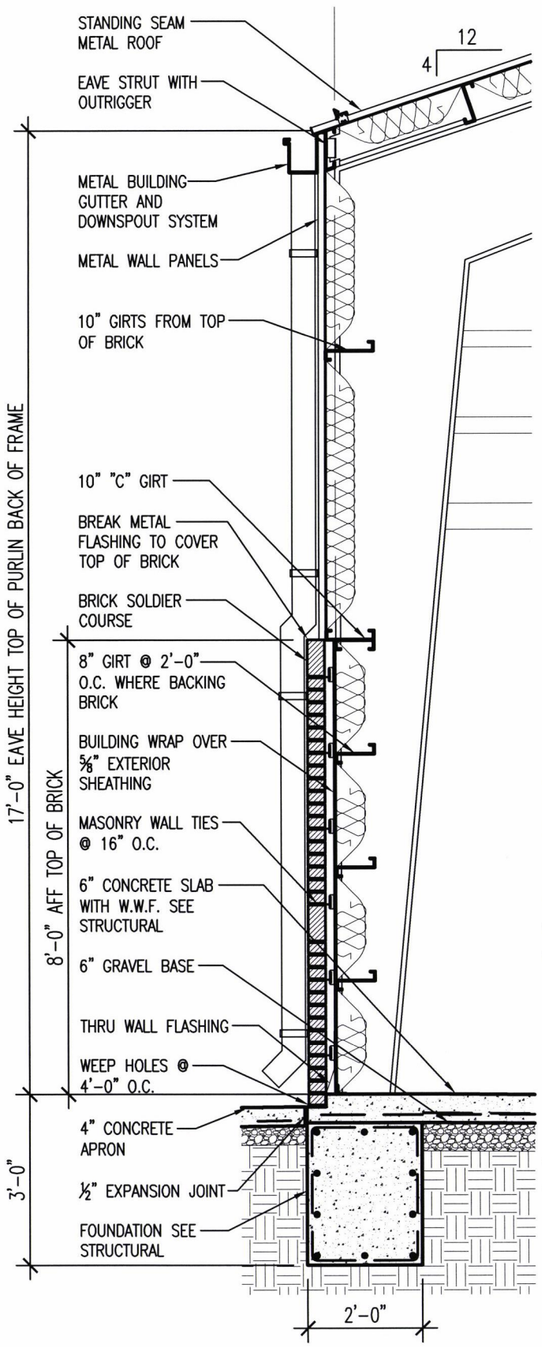

1 A3.8 WALL SECTION
SCALE : ⅜" = 1'-0"

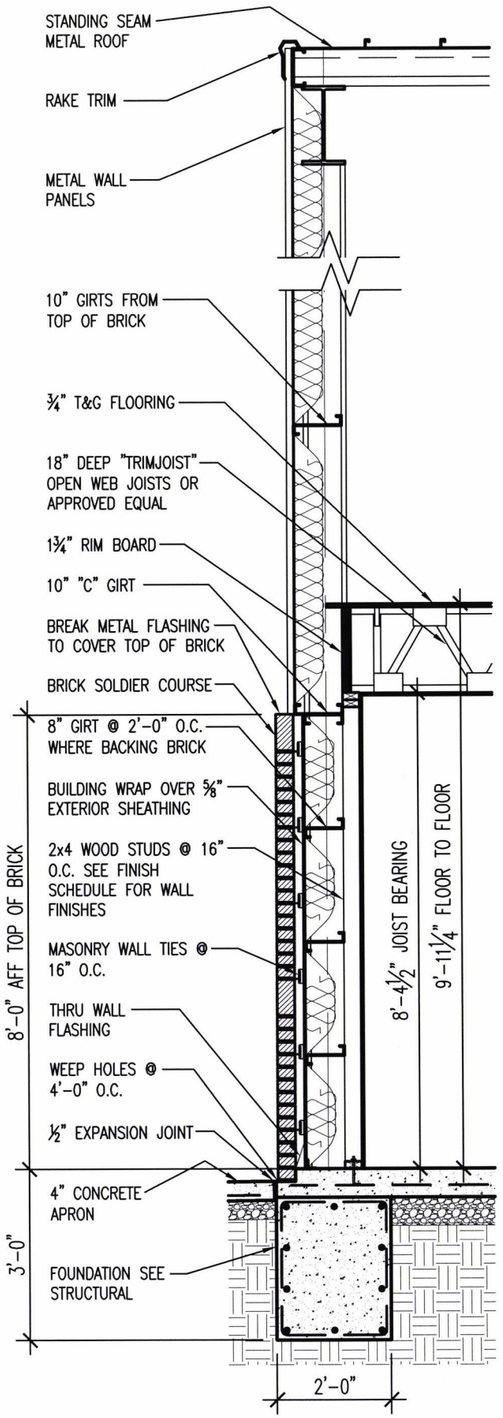

2 A3.8 WALL SECTION
SCALE : ⅜" = 1'-0"

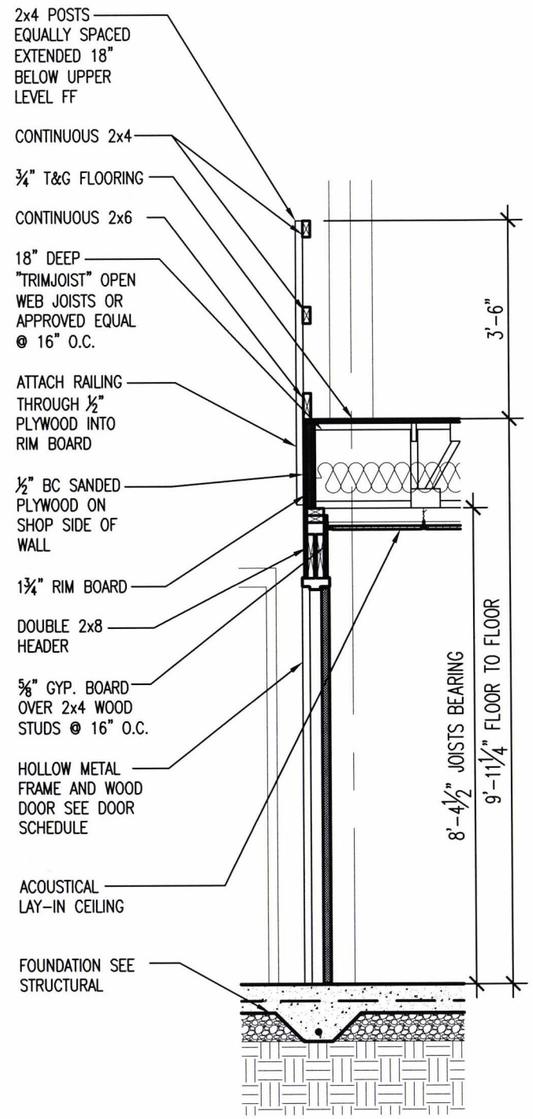

3 A3.8 WALL SECTION
SCALE : ⅜" = 1'-0"

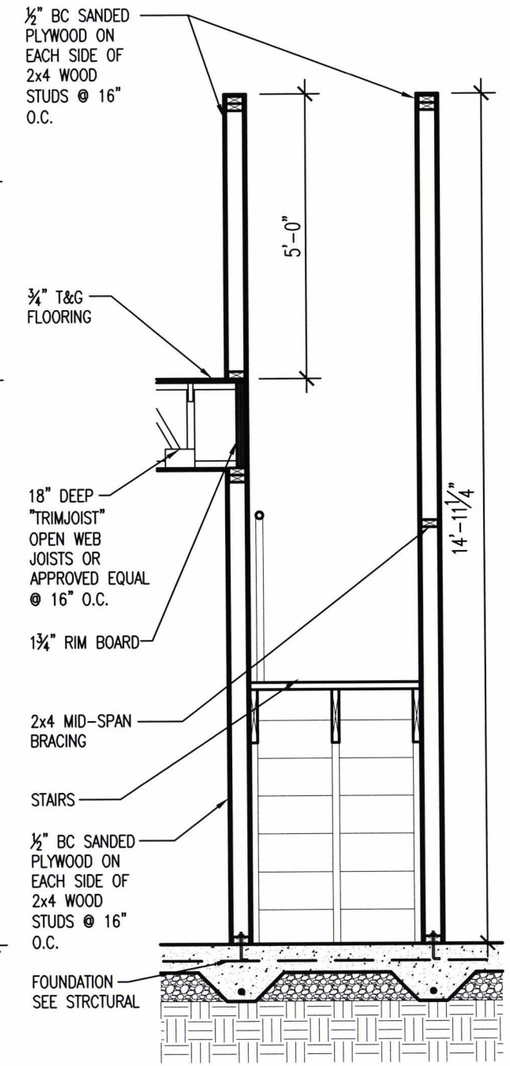

4 A3.8 WALL SECTION
SCALE : ⅜" = 1'-0"

ARDOT ARKANSAS DEPARTMENT OF TRANSPORTATION

PULASKI CO. AREA 1 HEADQUARTERS/ R.E. OFFICE 61 (S)
North Little Rock, Arkansas
Pulaski County

STATE OF ARKANSAS REGISTERED PROFESSIONAL ENGINEER No. 7527 JOSEPH A. SARTINI 5-29-18

DATE: MAY 29, 2018
JOB NO: 061448
DRAWN BY: KB
REVISIONS:

A3.8

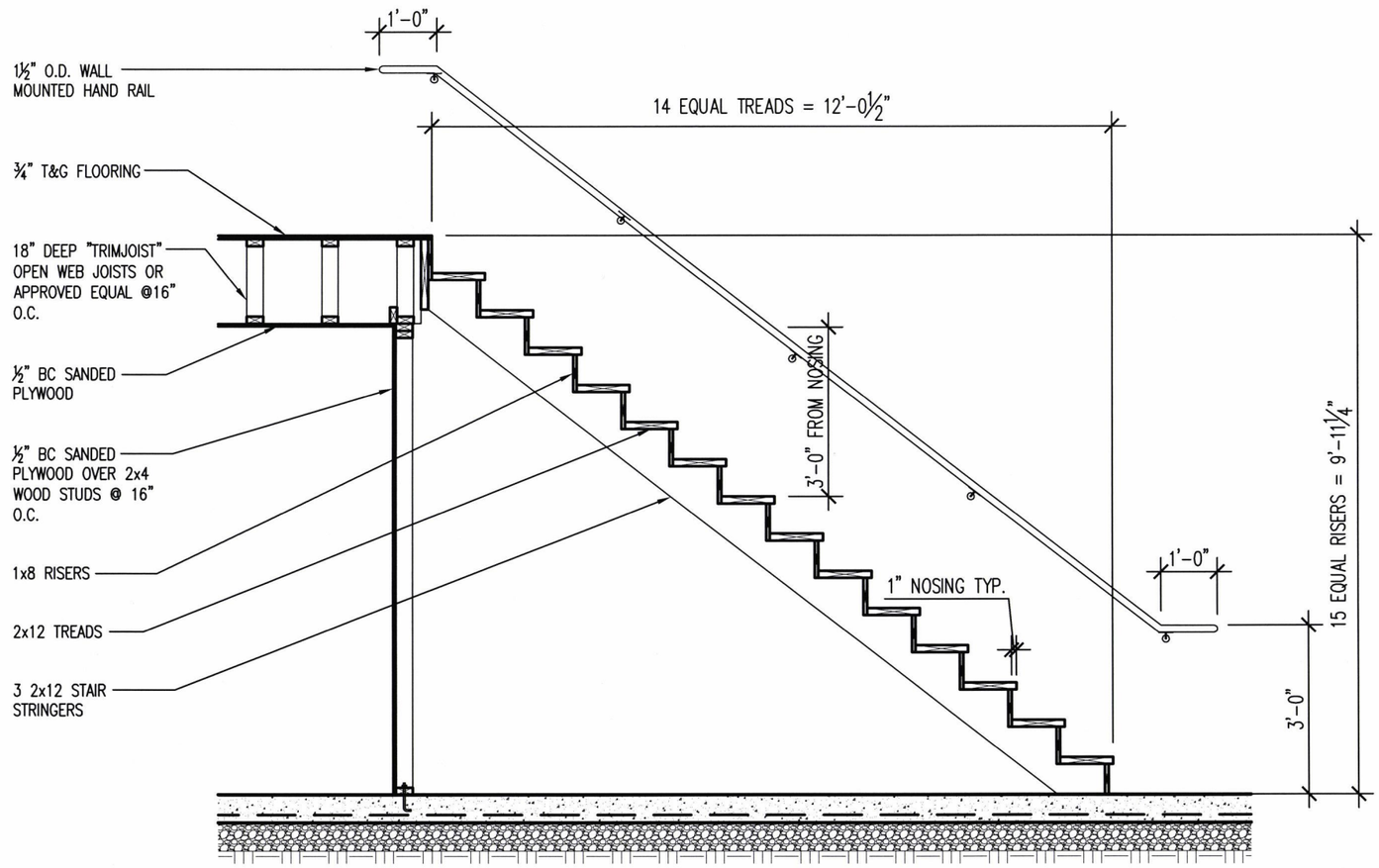

1 / A3.9 STAIR SECTION
SCALE : ⅜" = 1'-0"

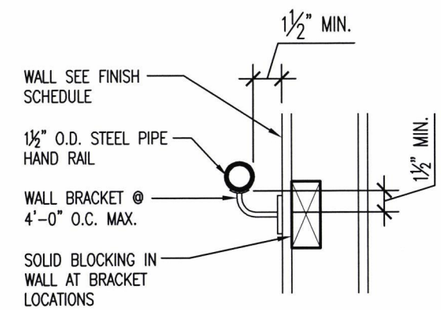

2 / A3.9 WALL BRACKET DETAIL
SCALE : 1½" = 1'-0"

ARDOT ARKANSAS DEPARTMENT OF TRANSPORTATION

PULASKI CO. AREA 1 HEADQUARTERS/ R.E. OFFICE 61 (S)
North Little Rock, Arkansas
Pulaski County

STATE OF ARKANSAS
REGISTERED PROFESSIONAL ENGINEER
No. 7527
JOSEPH A. SARTINI
5-29-18

DATE: MAY 29, 2018
JOB NO: 061448
DRAWN BY: KB
REVISIONS:

A3.9

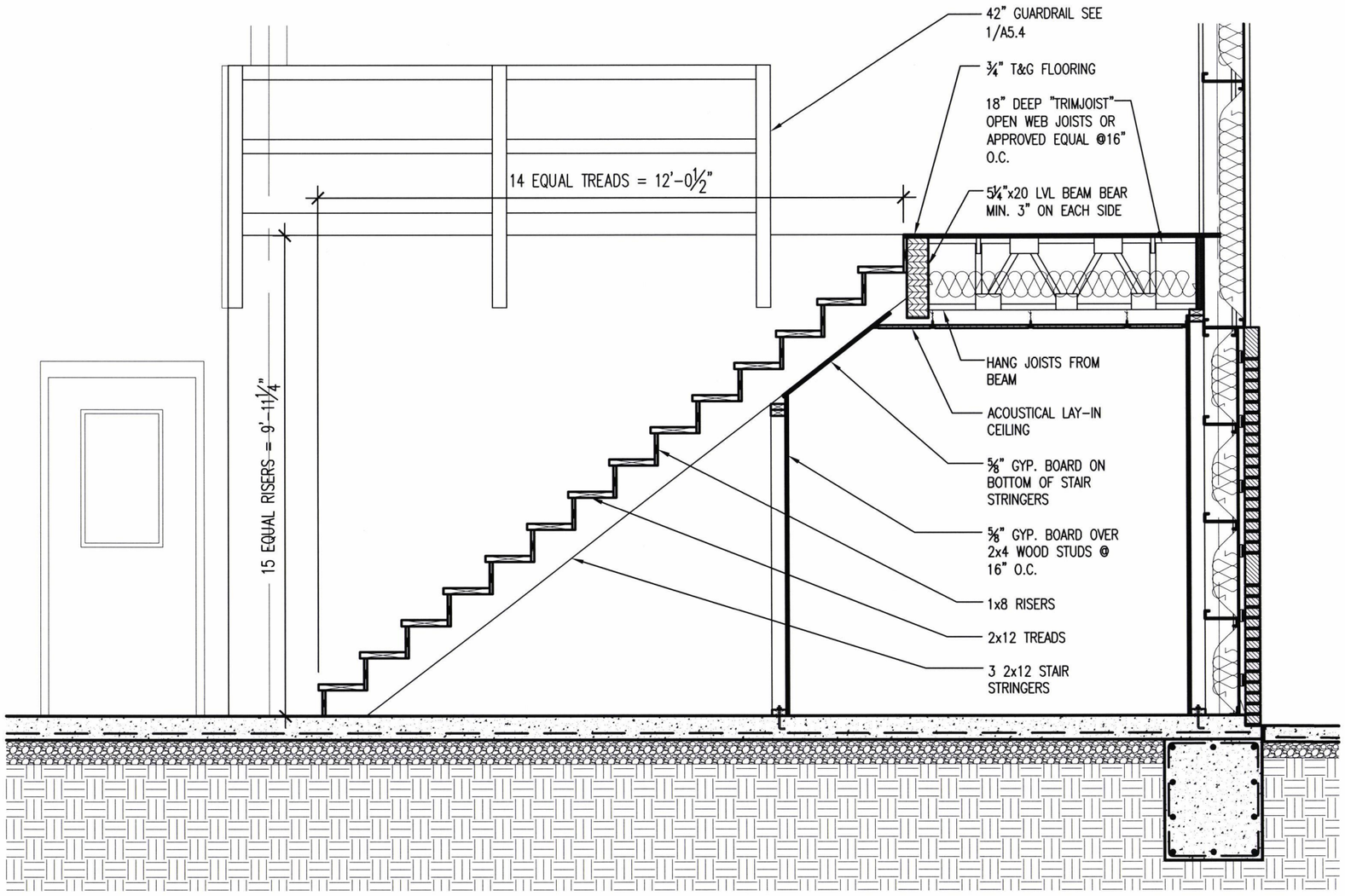

1 / A3.10 STAIR SECTION

SCALE : ⅜" = 1'-0"

ARDOT ARKANSAS DEPARTMENT OF TRANSPORTATION

PULASKI CO. AREA 1 HEADQUARTERS/ R.E. OFFICE 61 (S)

North Little Rock, Arkansas

Pulaski County

STATE OF ARKANSAS REGISTERED PROFESSIONAL ENGINEER No. 7527 JOSEPH A. SARTINI 5-29-18

DATE: MAY 29, 2018

JOB NO: 061448

DRAWN BY: KB

REVISIONS:

A3.10

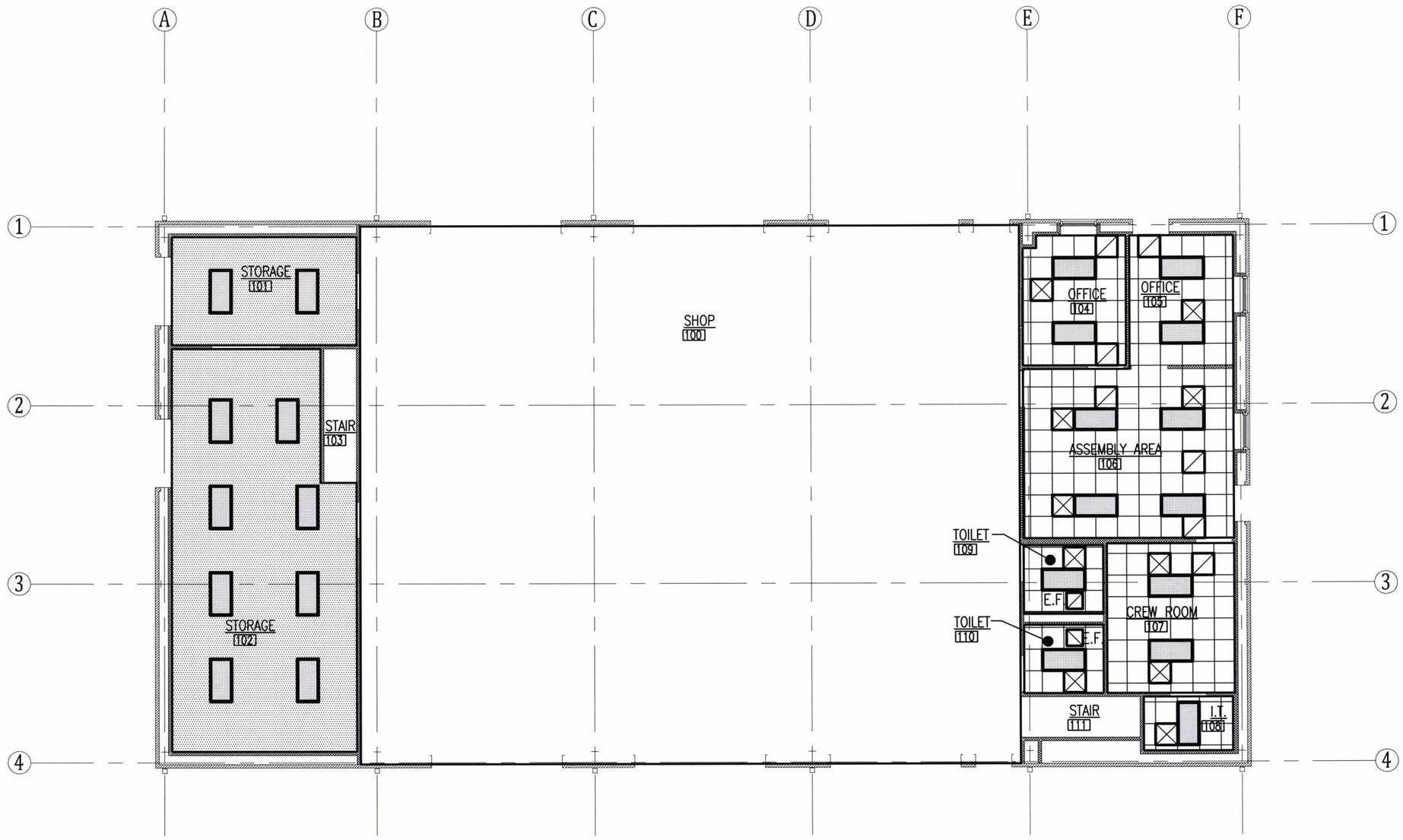

NORTH

1 / A3.11 A.H.Q. REFLECTED CEILING PLAN

SCALE : 3/32" = 1'-0"

CEILING LEGEND

2'x4' LIGHT FIXTURE	RETURN GRILLE
2'x2' LIGHT FIXTURE	E.F. EXHAUST FAN
RECESSED LIGHT FIXTURE	PLYWOOD CEILING/SOFFIT
CEILING FAN	FLAT PANEL METAL SOFFIT
SUPPLY GRILLE	

ARDOT ARKANSAS DEPARTMENT OF TRANSPORTATION

PULASKI CO. AREA 1
HEADQUARTERS/
R.E. OFFICE 61 (S)
North Little Rock, Arkansas
Pulaski County

STATE OF ARKANSAS
REGISTERED PROFESSIONAL ENGINEER
No. 7527
JOSEPH A. SARTINI

DATE: MAY 29, 2018
JOB NO: 061448
DRAWN BY: KB
REVISIONS:

A3.11

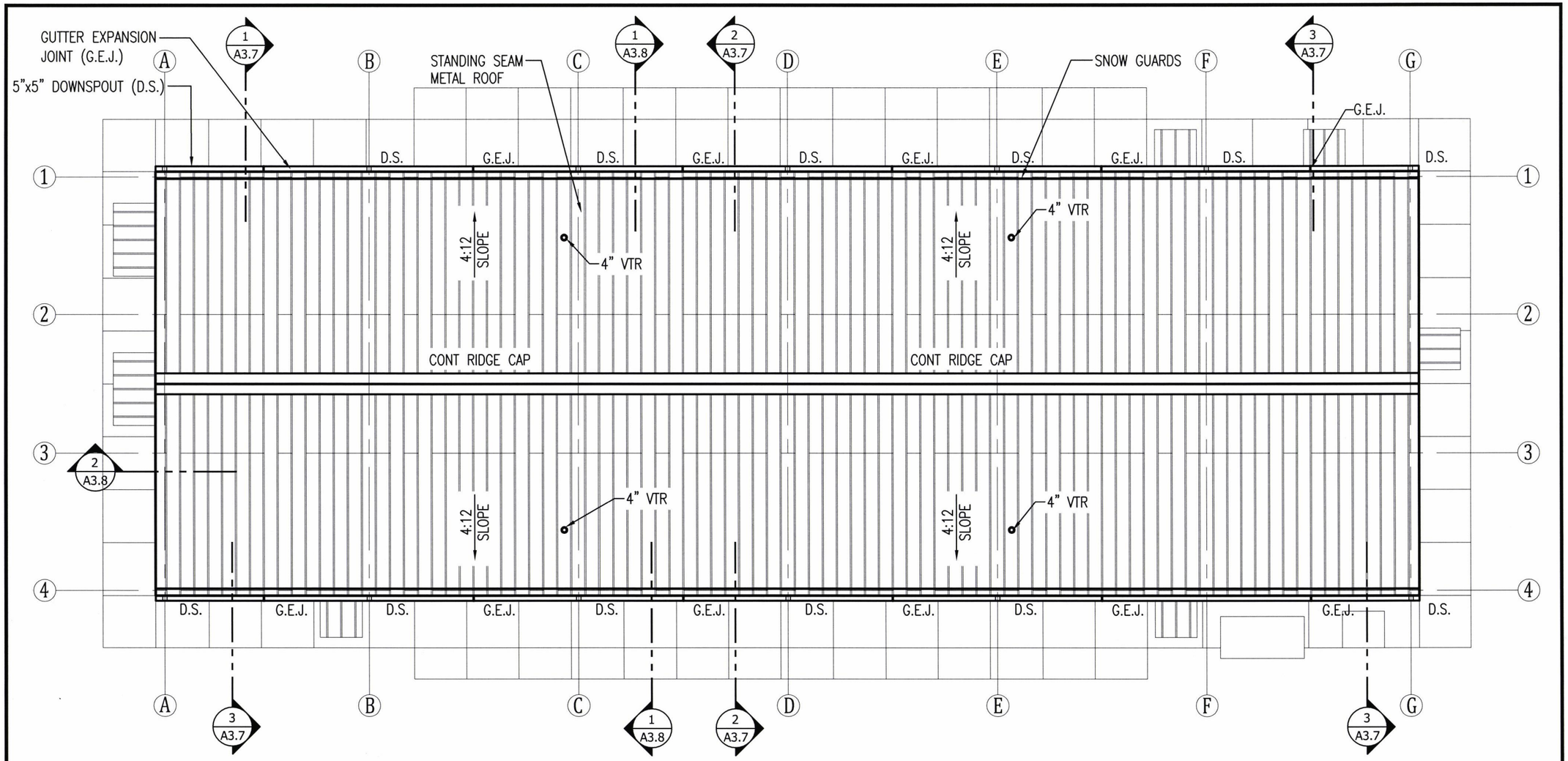

NORTH

1 A3.12 A.H.Q. ROOF PLAN

SCALE : 3/32" = 1'-0"

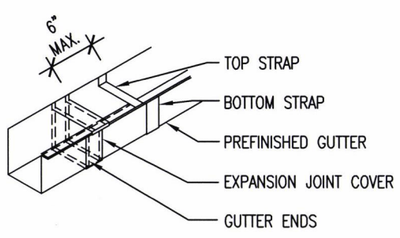

2 A3.12 G.E.J. DETAIL

SCALE : NO SCALE

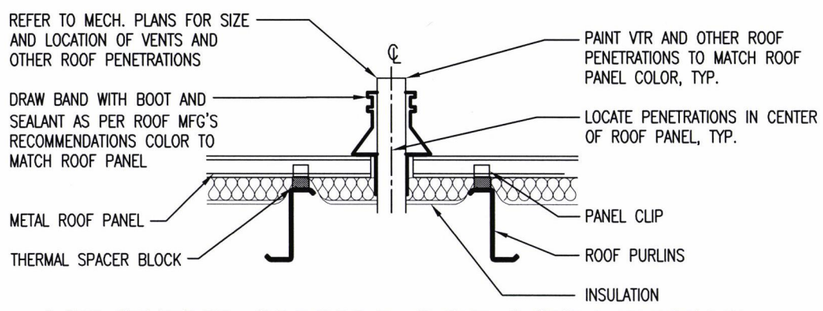

3 A3.12 VENT THROUGH ROOF (VTR) DETAIL

SCALE : NO SCALE

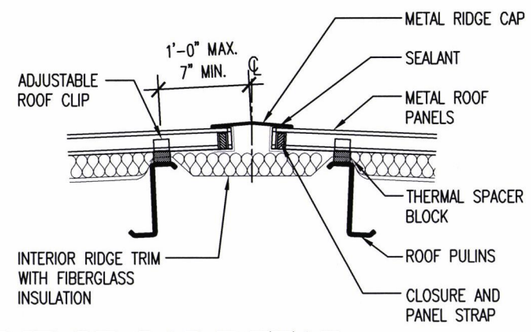

4 A3.12 RIDGE CAP DETAIL

SCALE : NO SCALE

ARDOT ARKANSAS DEPARTMENT OF TRANSPORTATION

PULASKI CO. AREA 1 HEADQUARTERS/ R.E. OFFICE 61 (S)
North Little Rock, Arkansas
Pulaski County

STATE OF ARKANSAS REGISTERED PROFESSIONAL ENGINEER No. 7527 JOSEPH A. SARTINI 5-29-18

DATE: MAY 29, 2018
JOB NO: 061448
DRAWN BY: KB
REVISIONS:

A3.12

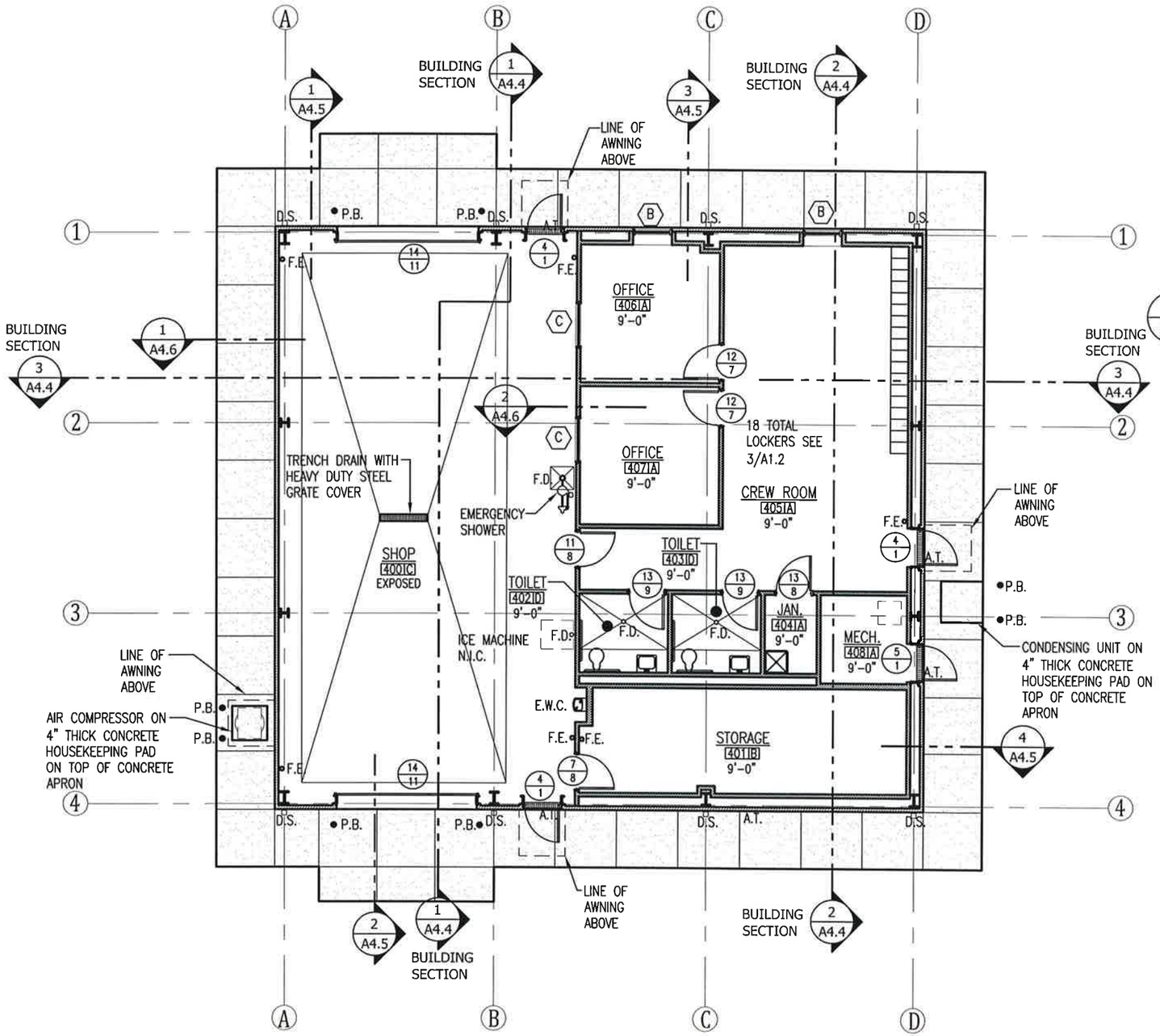

NORTH

1 / A4.1 SEALING CREW FLOOR PLAN

SCALE : 3/32" = 1'-0"

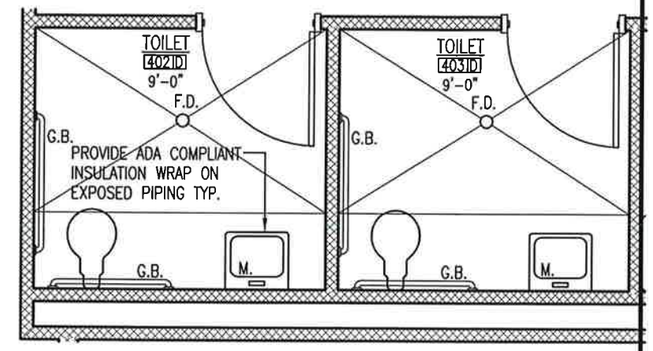

2 / A4.1 ENLARGED TOILET PLAN

SCALE : 1/4" = 1'-0"

ARDOT ARKANSAS DEPARTMENT OF TRANSPORTATION

PULASKI CO. AREA 1
HEADQUARTERS/
R.E. OFFICE 61 (S)
North Little Rock, Arkansas
Pulaski County

STATE OF ARKANSAS REGISTERED PROFESSIONAL ENGINEER No. 7527 JOSEPH A. SARTINI 7-16-18

DATE: MAY 29, 2018
JOB NO: 061448
DRAWN BY: KB
REVISIONS: 7-12-18

A4.1

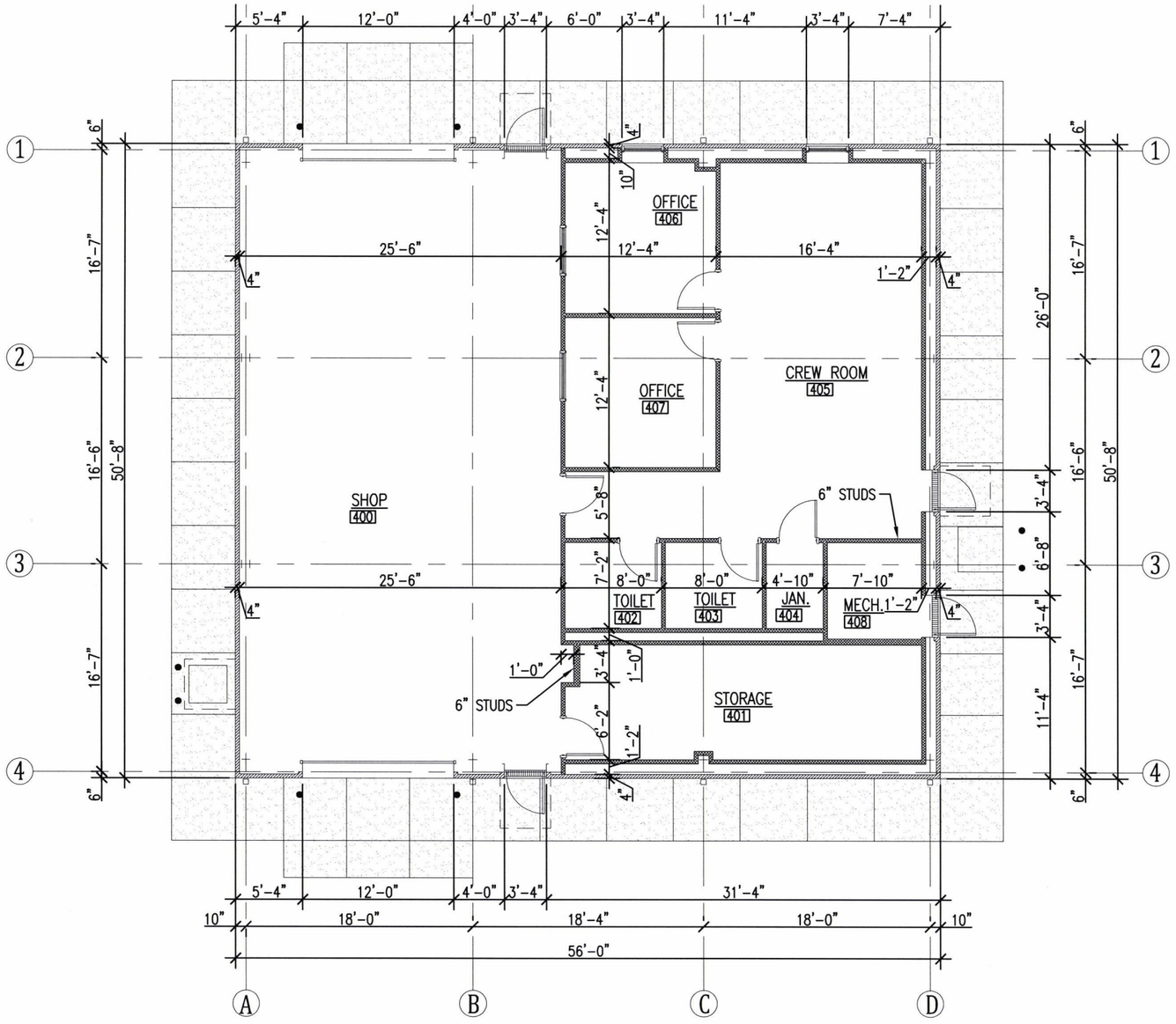

NORTH

1 / A4.2 SEALING CREW DIMENSION PLAN

SCALE : 3/32" = 1'-0"

ARDOT ARKANSAS DEPARTMENT OF TRANSPORTATION

PULASKI CO. AREA 1
HEADQUARTERS/
R.E. OFFICE 61 (S)
North Little Rock, Arkansas
Pulaski County

STATE OF ARKANSAS
REGISTERED PROFESSIONAL ENGINEER
No. 7527
JOSEPH A. SARTINI
5-28-18

DATE: MAY 29, 2018
JOB NO: 061448
DRAWN BY: KB
REVISIONS:

A4.2

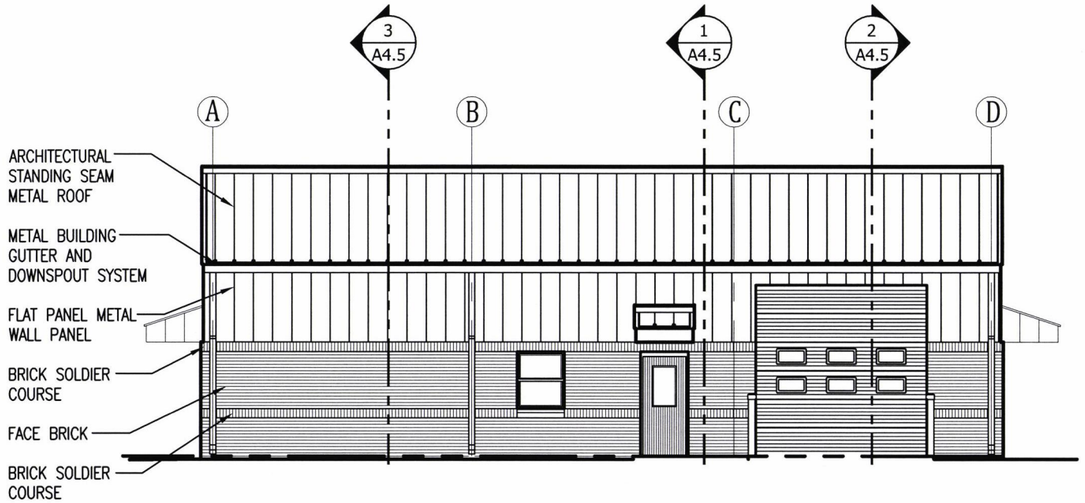

1 A4.3 NORTH ELEVATION
SCALE : 3/32" = 1'-0"

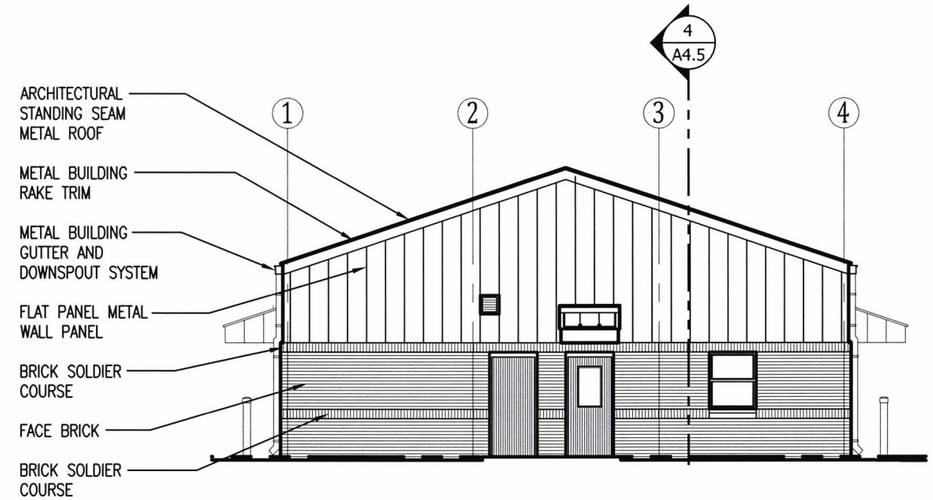

2 A4.3 EAST ELEVATION
SCALE : 3/32" = 1'-0"

3 A4.3 SOUTH ELEVATION
SCALE : 3/32" = 1'-0"

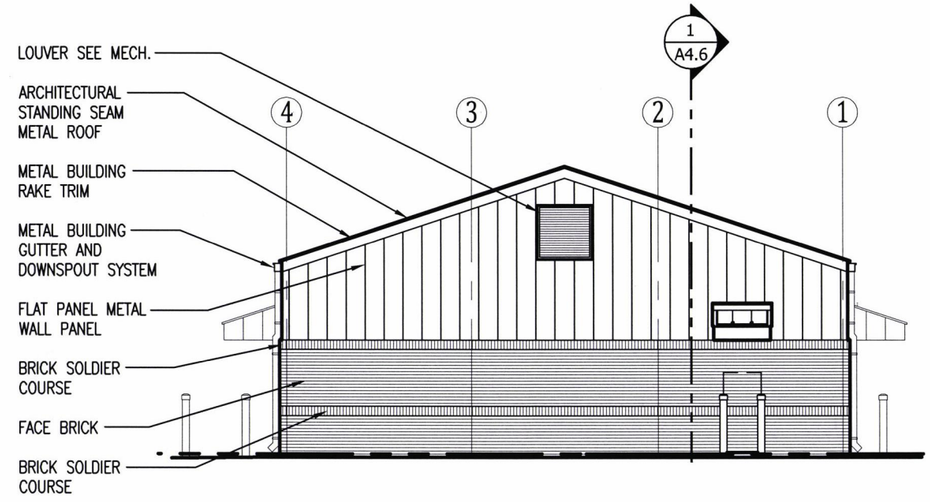

4 A4.3 WEST ELEVATION
SCALE : 3/32" = 1'-0"

ARDOT ARKANSAS DEPARTMENT OF TRANSPORTATION

PULASKI CO. AREA 1
HEADQUARTERS/
R.E. OFFICE 61 (S)
North Little Rock, Arkansas
Pulaski County

STATE OF ARKANSAS
REGISTERED PROFESSIONAL ENGINEER
No. 7527
JOSEPH A. SARPINI

DATE: MAY 29, 2018
JOB NO: 061448
DRAWN BY: KB
REVISIONS:

A4.3

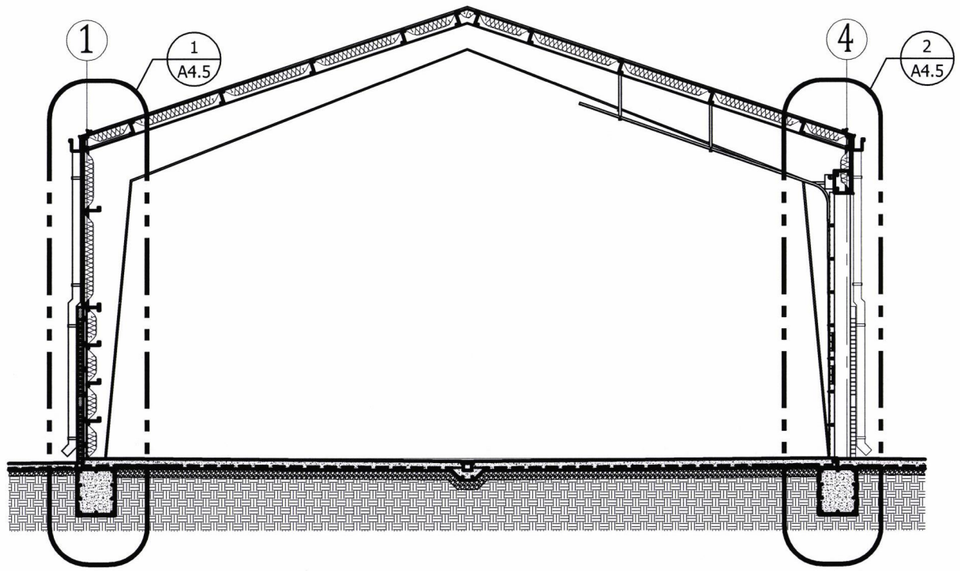

1 / A4.4 BUILDING SECTION
SCALE : ⅛" = 1'-0"

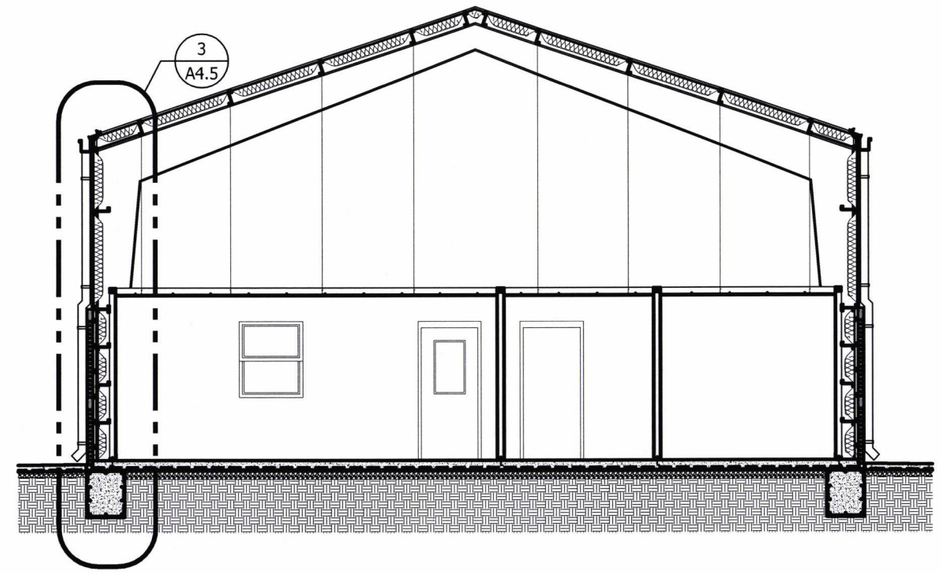

2 / A4.4 BUILDING SECTION
SCALE : ⅛" = 1'-0"

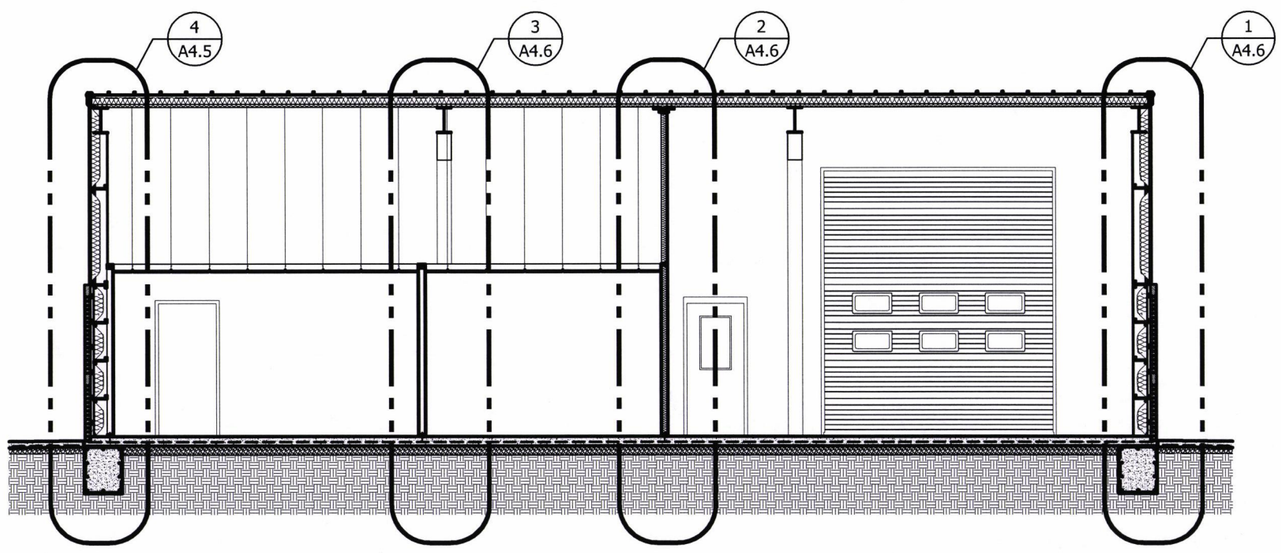

3 / A4.4 BUILDING SECTION
SCALE : ⅛" = 1'-0"

ARDOT ARKANSAS DEPARTMENT OF TRANSPORTATION

PULASKI CO. AREA 1 HEADQUARTERS/ R.E. OFFICE 61 (S)
North Little Rock, Arkansas
Pulaski County

STATE OF ARKANSAS
REGISTERED PROFESSIONAL ENGINEER
No. 7527
JOSEPH A. SARTINI
5-29-18

DATE: MAY 29, 2018
JOB NO: 061448
DRAWN BY: KB
REVISIONS:

A4.4

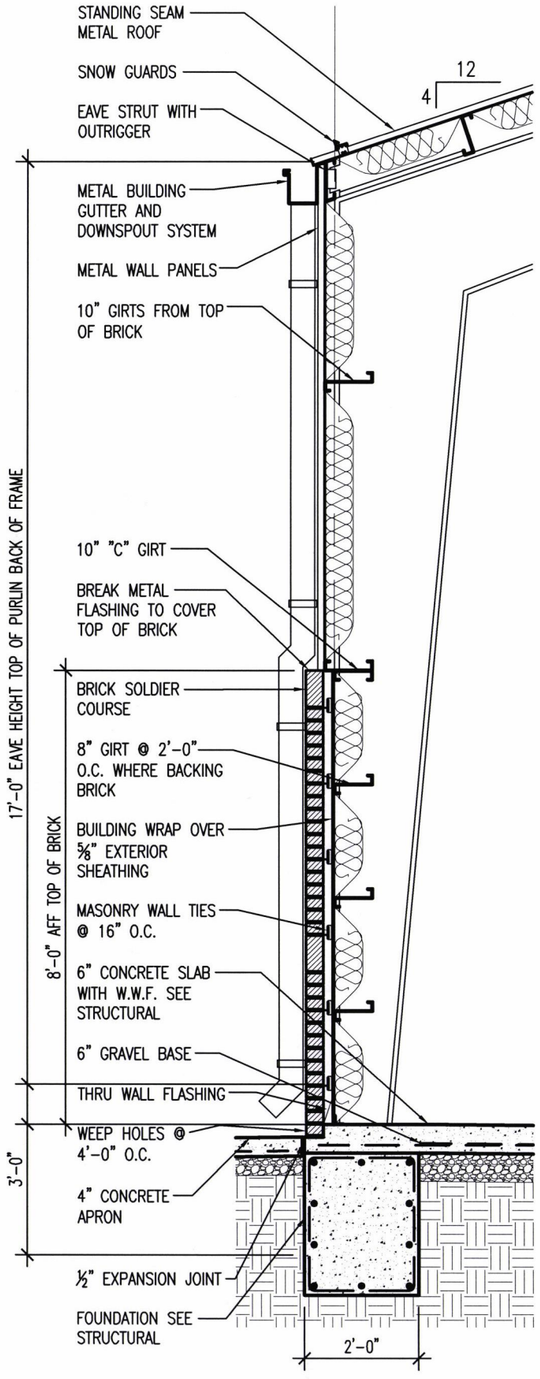

1 A4.5 WALL SECTION
SCALE : ⅜" = 1'-0"

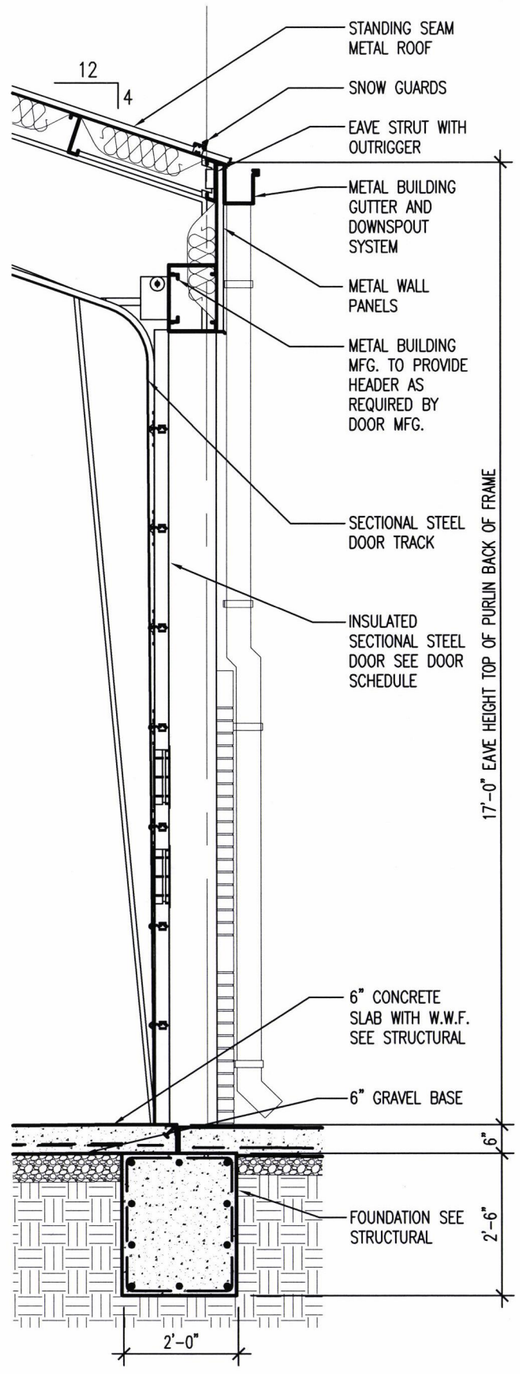

2 A4.5 WALL SECTION
SCALE : ⅜" = 1'-0"

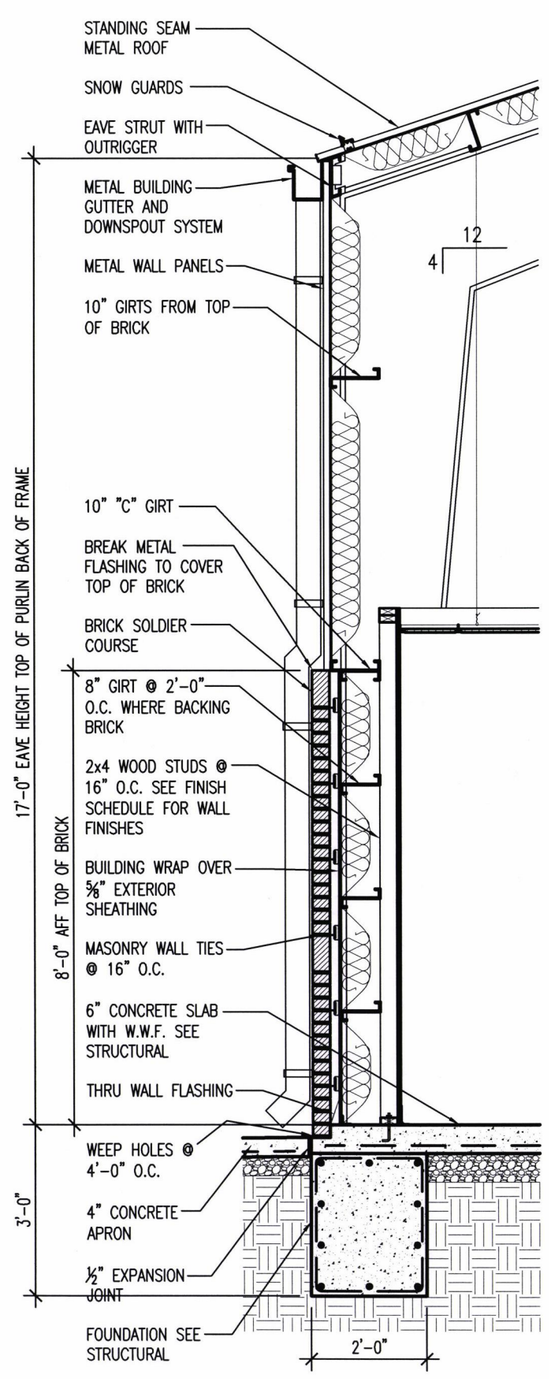

3 A4.5 WALL SECTION
SCALE : ⅜" = 1'-0"

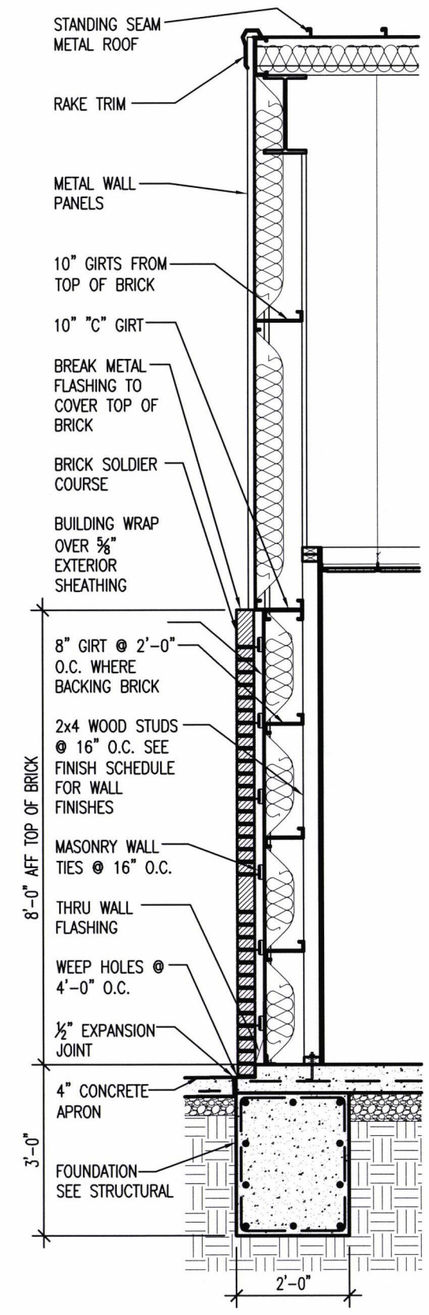

4 A4.5 WALL SECTION
SCALE : ⅜" = 1'-0"

ARDOT ARKANSAS DEPARTMENT OF TRANSPORTATION

PULASKI CO. AREA 1
HEADQUARTERS/
R.E. OFFICE 61 (S)
North Little Rock, Arkansas
Pulaski County

STATE OF ARKANSAS
REGISTERED PROFESSIONAL ENGINEER
No. 7527
JOSEPH A. SARTINI

DATE: MAY 29, 2018
JOB NO: 061448
DRAWN BY: KB
REVISIONS:

A4.5

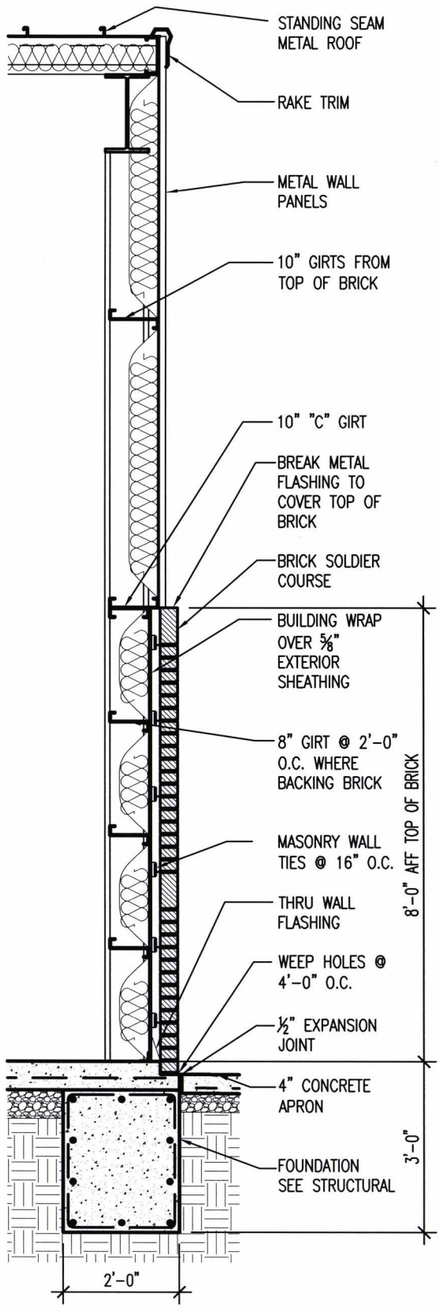

1 A4.6 WALL SECTION
SCALE : 3/8" = 1'-0"

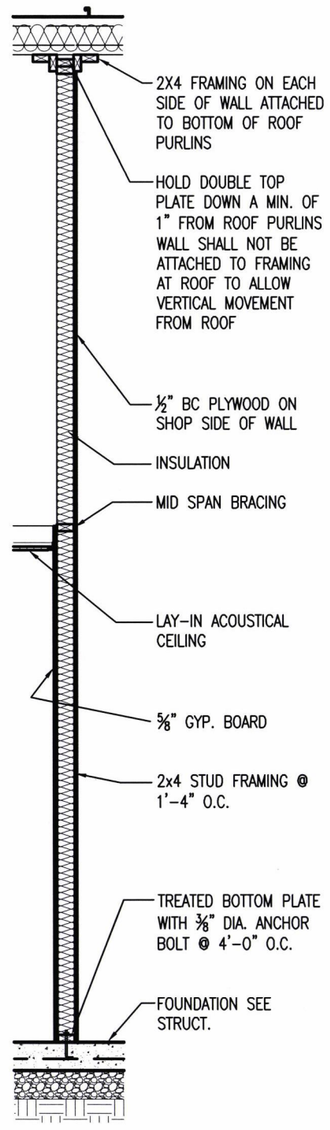

2 A4.6 WALL SECTION
SCALE : 3/8" = 1'-0"

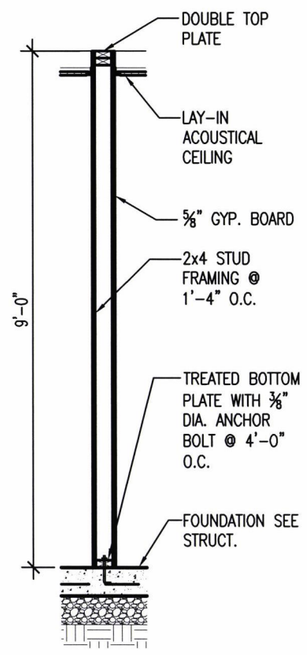

TYPICAL INTERIOR
3 A4.6 WALL SECTION
SCALE : 3/8" = 1'-0"

ARDOT ARKANSAS DEPARTMENT OF TRANSPORTATION

PULASKI CO. AREA 1
HEADQUARTERS/
R.E. OFFICE 61 (S)
North Little Rock, Arkansas
Pulaski County

STATE OF ARKANSAS
REGISTERED PROFESSIONAL ENGINEER
No. 7527
JOSEPH A. SARTINI
5-29-18

DATE: MAY 29, 2018
JOB NO: 061448
DRAWN BY: KB
REVISIONS:

A4.6

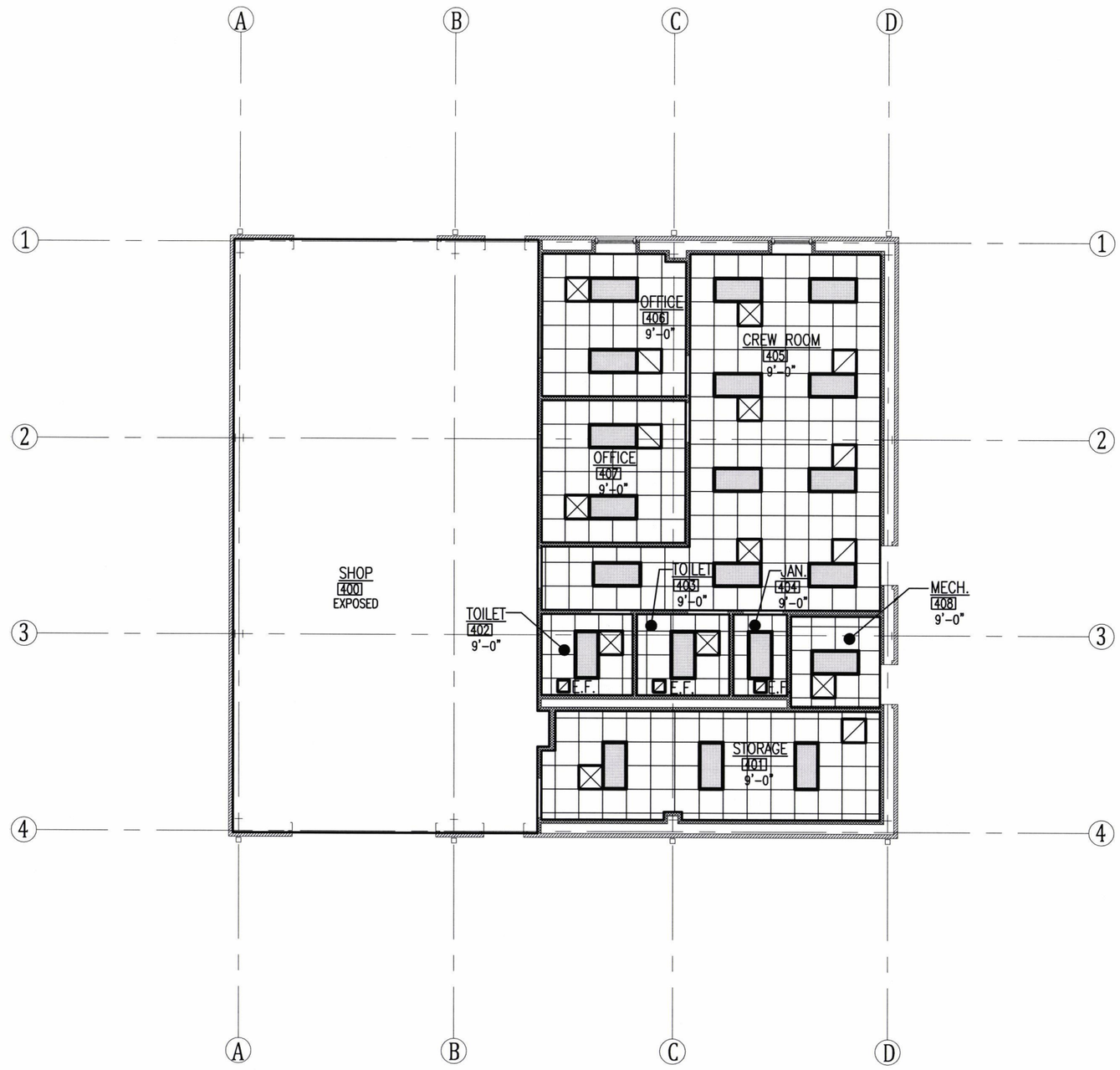

NORTH

1 / A4.7 SEALING CREW REFLECTED CEILING PLAN

SCALE : 3/32" = 1'-0"

CEILING LEGEND

- 2'x4' LIGHT FIXTURE
- 2'x2' LIGHT FIXTURE
- RECESSED LIGHT FIXTURE
- CEILING FAN
- SUPPLY GRILLE
- RETURN GRILLE
- E.F. EXHAUST FAN
- PLYWOOD CEILING/SOFFIT
- FLAT PANEL METAL SOFFIT

ARDOT ARKANSAS DEPARTMENT OF TRANSPORTATION

PULASKI CO. AREA 1
HEADQUARTERS/
R.E. OFFICE 61 (S)
North Little Rock, Arkansas
Pulaski County

STATE OF ARKANSAS
REGISTERED PROFESSIONAL ENGINEER
No. 7527
JOSEPH A. SARTINI
5-29-18

DATE: MAY 29, 2018
JOB NO: 061448
DRAWN BY: KB
REVISIONS:

A4.7

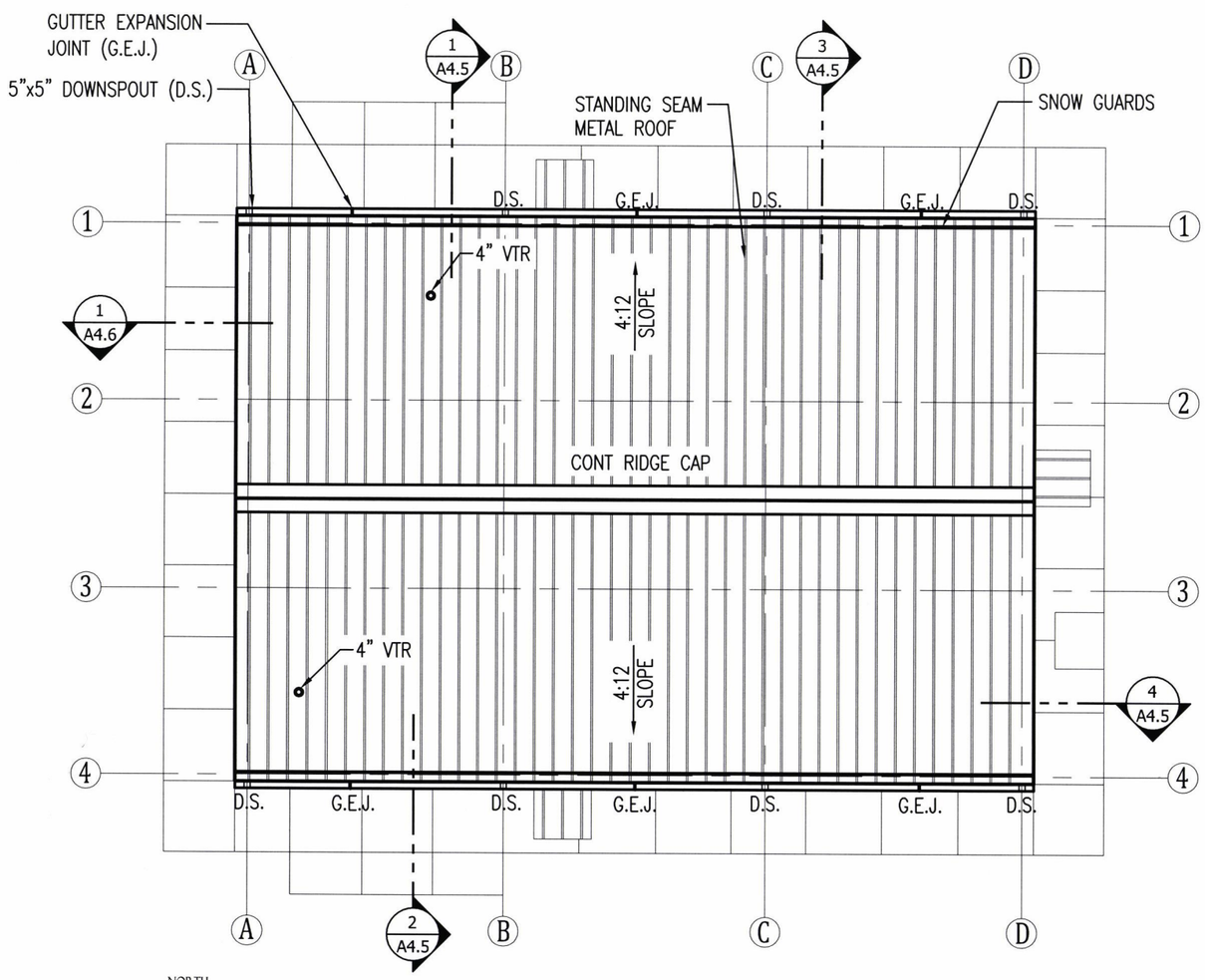

1 A4.8 ROOF PLAN

SCALE : 3/32" = 1'-0"

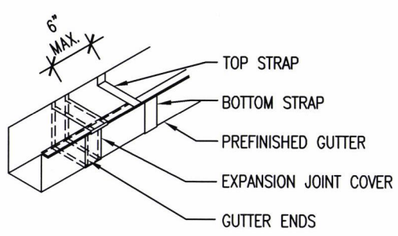

2 A4.8 G.E.J. DETAIL

SCALE : NO SCALE

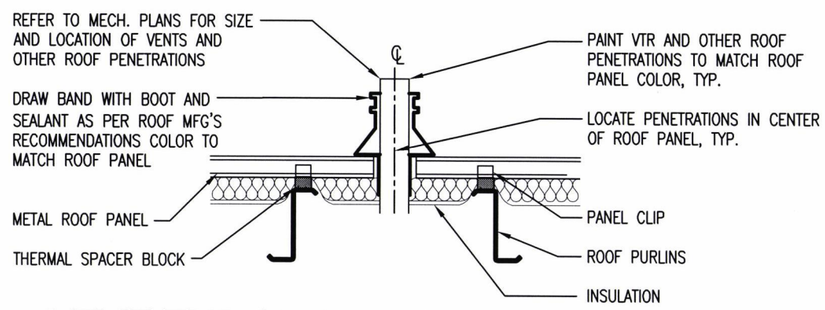

3 A4.8 VENT THROUGH ROOF (VTR) DETAIL

SCALE : NO SCALE

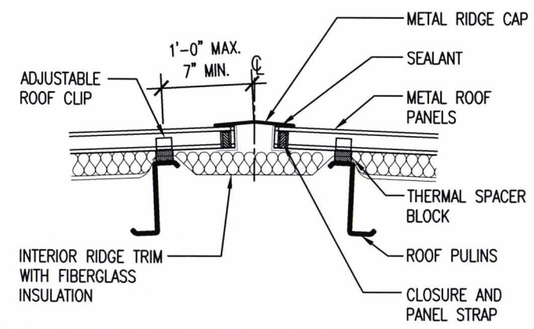

4 A4.8 RIDGE CAP DETAIL

SCALE : NO SCALE

ARDOT ARKANSAS DEPARTMENT OF TRANSPORTATION

PULASKI CO. AREA 1 HEADQUARTERS/ R.E. OFFICE 61 (S)
North Little Rock, Arkansas
Pulaski County

STATE OF ARKANSAS REGISTERED PROFESSIONAL ENGINEER No. 7527 JOSEPH A. SARTINI 5-29-18

DATE: MAY 29, 2018
JOB NO: 061448
DRAWN BY: KB
REVISIONS:

A4.8

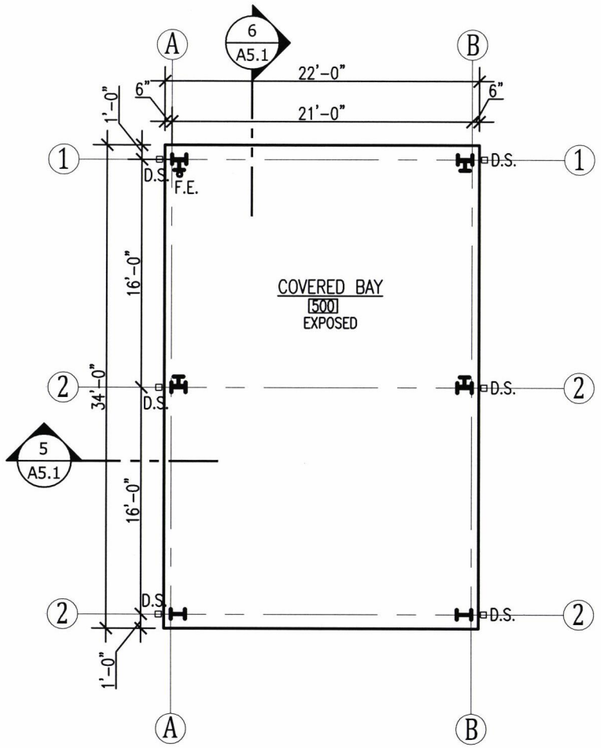

NORTH

1 A5.1 COVERED WORK BAY FLOOR PLAN

SCALE : 3/32" = 1'-0"

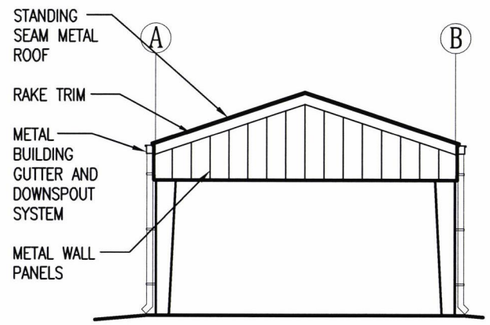

2 A5.1 NORTH/SOUTH ELEVATION

SCALE : 3/32" = 1'-0"

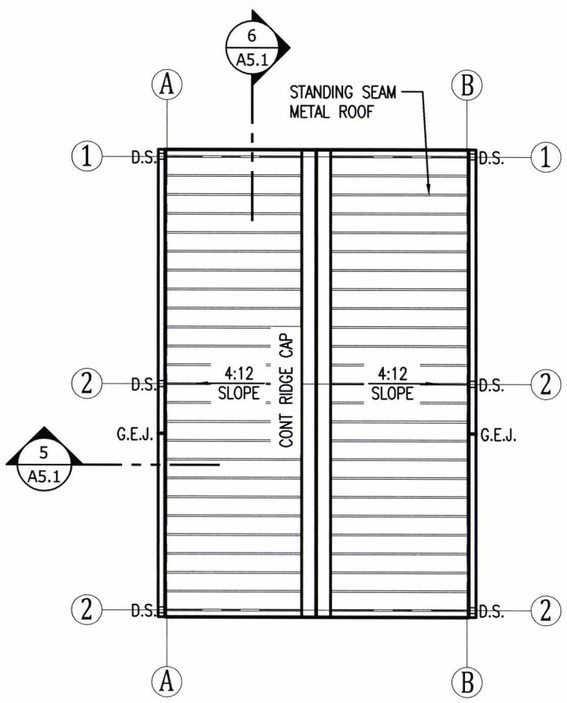

NORTH

4 A5.1 COVERED WORK BAY ROOF PLAN

SCALE : 3/32" = 1'-0"

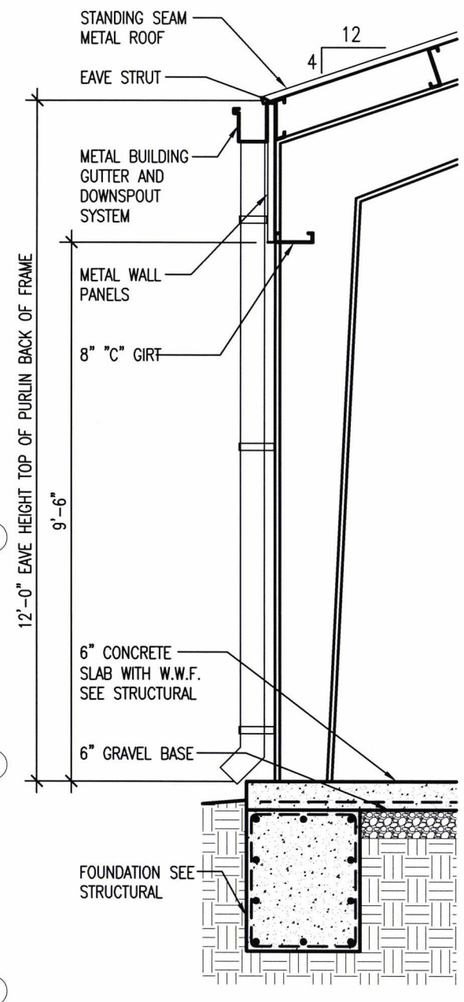

5 A5.1 WALL SECTION

SCALE : 3/8" = 1'-0"

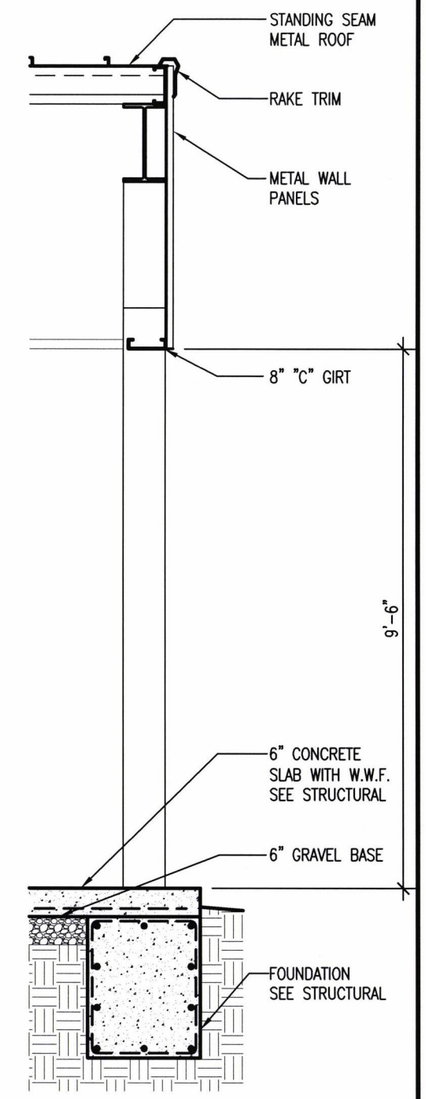

6 A5.1 WALL SECTION

SCALE : 3/8" = 1'-0"

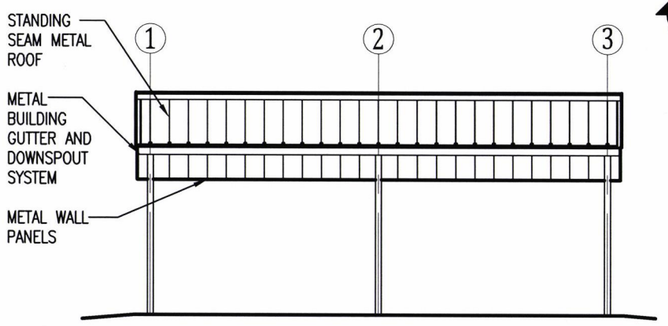

3 A5.1 EAST/WEST ELEVATION

SCALE : 3/32" = 1'-0"

ARDOT ARKANSAS DEPARTMENT OF TRANSPORTATION

PULASKI CO. AREA 1 HEADQUARTERS/ R.E. OFFICE 61 (S)

North Little Rock, Arkansas

Pulaski County

STATE OF ARKANSAS REGISTERED PROFESSIONAL ENGINEER No. 7527 JOSEPH A. SARTENI 2-28-18

DATE: MAY 29, 2018

JOB NO: 061448

DRAWN BY: KB

REVISIONS:

A5.1

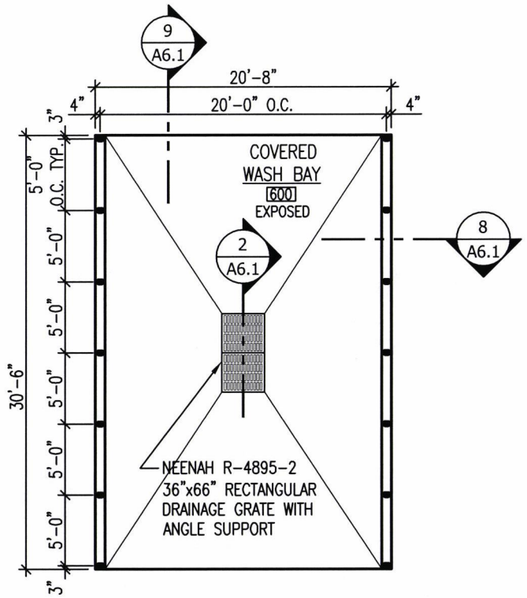

NORTH

1 A6.1 WASH RACK FLOOR PLAN
SCALE : 3/32" = 1'-0"

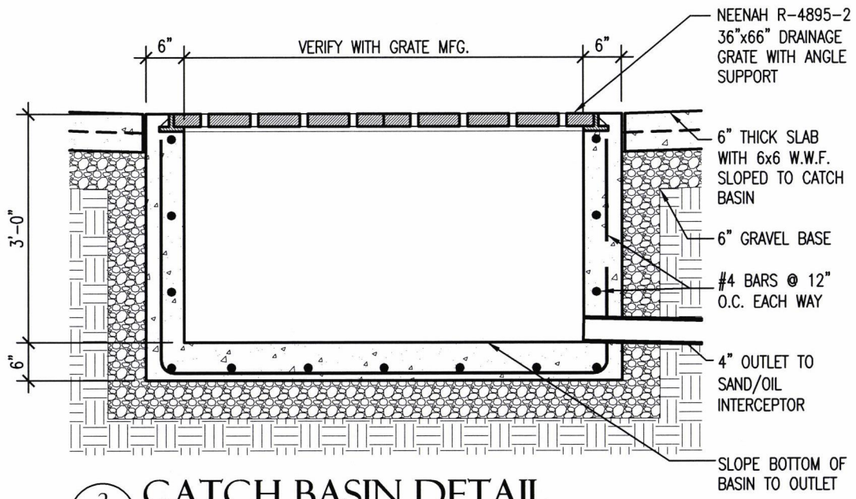

2 A6.1 CATCH BASIN DETAIL
SCALE : 1/2"= 1'-0"

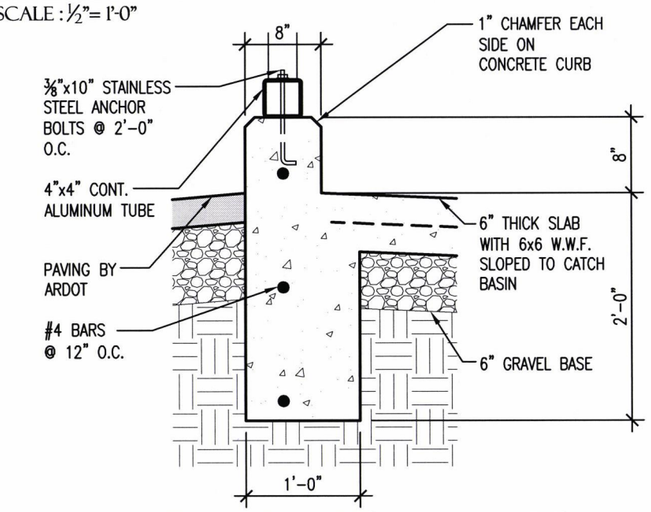

4 A6.1 FOUNDATION DETAIL
SCALE : 3/4"= 1'-0"

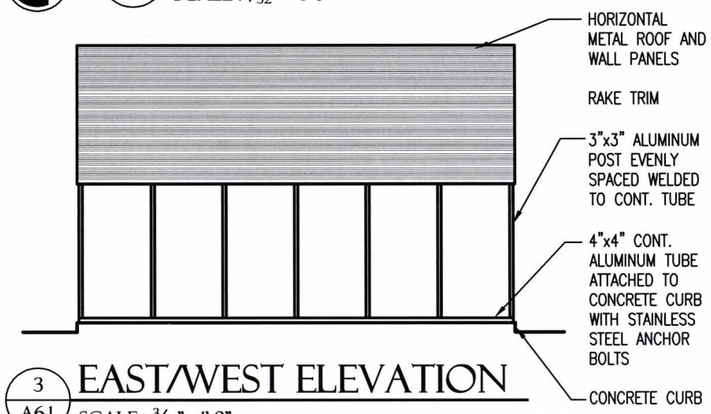

3 A6.1 EAST/WEST ELEVATION
SCALE : 3/32"= 1'-0"

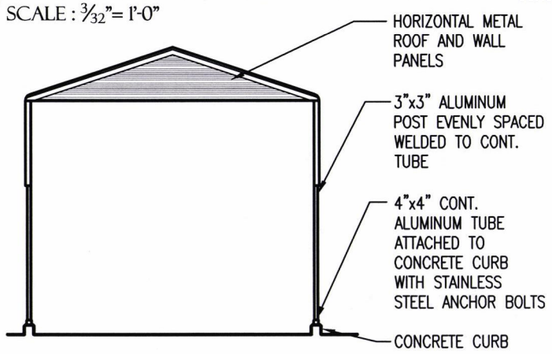

5 A6.1 NORTH/SOUTH ELEVATION
SCALE : 3/32"= 1'-0"

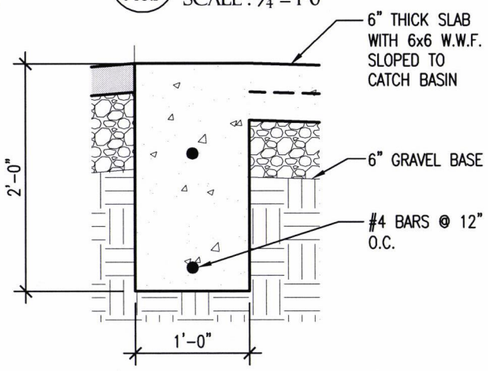

6 A6.1 FOUNDATION DETAIL
SCALE : 3/4"= 1'-0"

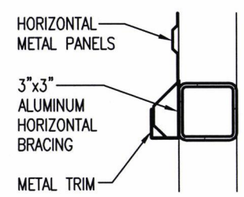

7 A6.1 CLOSURE DETAIL
SCALE : 1 1/2"= 1'-0"

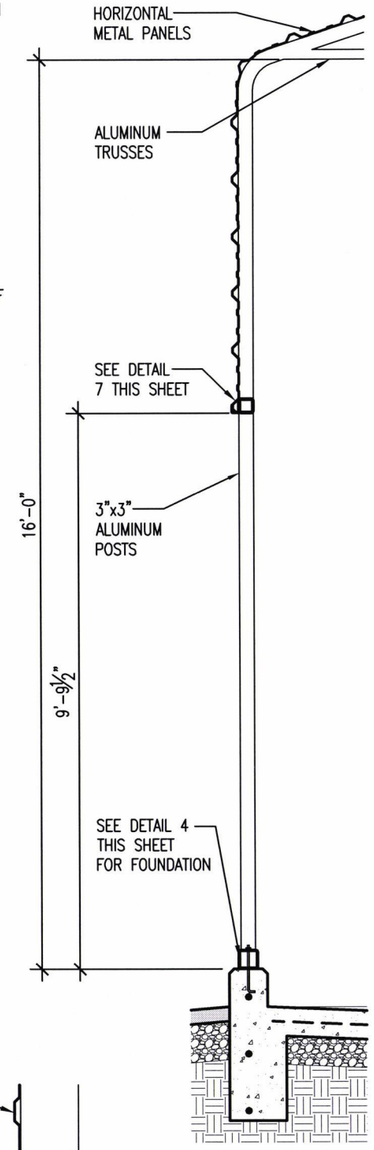

8 A6.1 SECTION
SCALE : 3/8" = 1'-0"

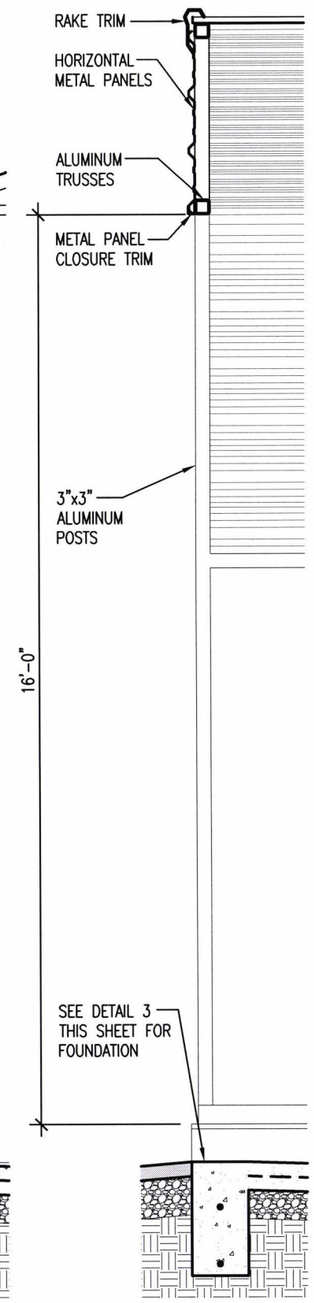

9 A6.1 SECTION
SCALE : 3/8" = 1'-0"

ARDOT
ARKANSAS DEPARTMENT OF TRANSPORTATION

PULASKI CO. AREA 1
HEADQUARTERS/
R.E. OFFICE 61 (S)
North Little Rock, Arkansas
Pulaski County

STATE OF ARKANSAS
REGISTERED PROFESSIONAL ENGINEER
No. 7527
JOSEPH A. SARTINI
5-29-18

DATE: MAY 29, 2018
JOB NO: 061448
DRAWN BY: KB
REVISIONS:

A6.1

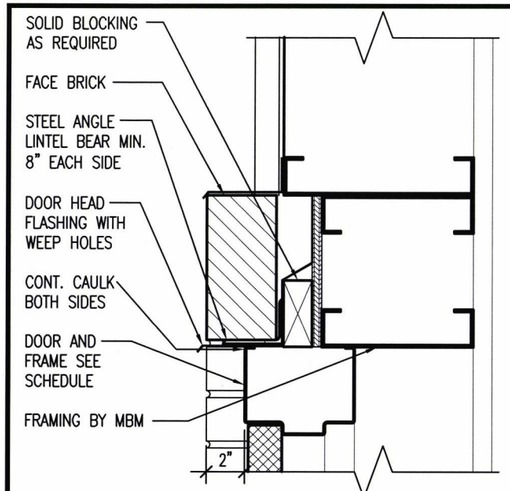

AREA HEADQUARTERS AND SEALING CREW DOOR HEAD

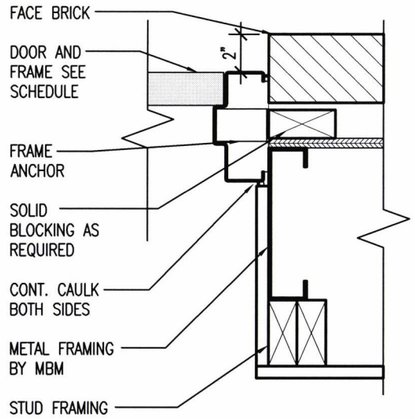

AREA HEADQUARTERS AND SEALING CREW DOOR JAMB

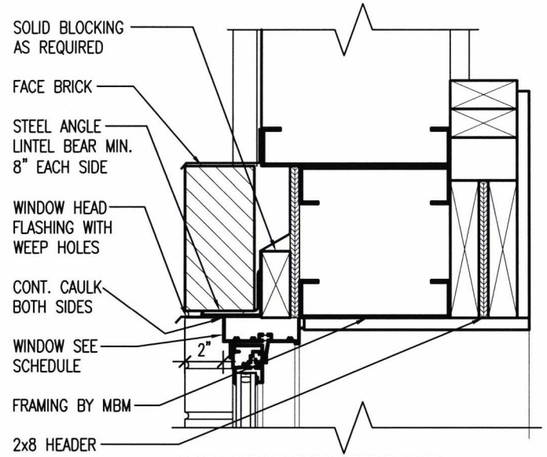

AREA HEADQUARTERS AND SEALING CREW WINDOW HEAD

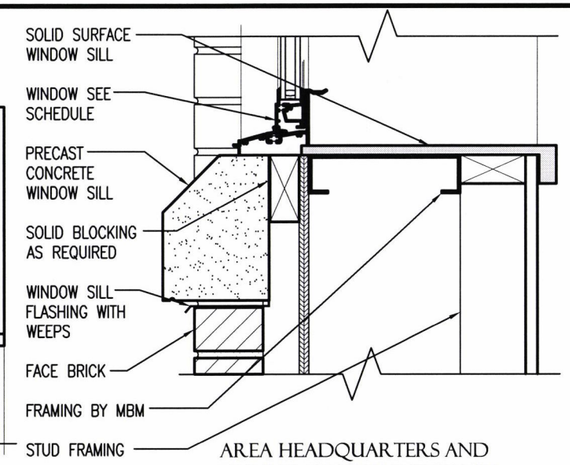

AREA HEADQUARTERS AND SEALING CREW WINDOW SILL

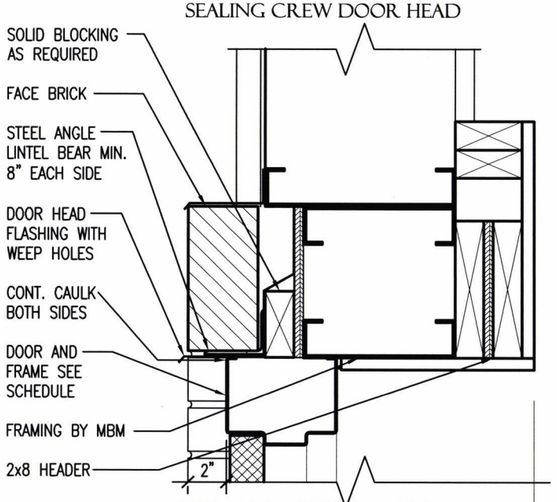

AREA HEADQUARTERS AND SEALING CREW DOOR HEAD

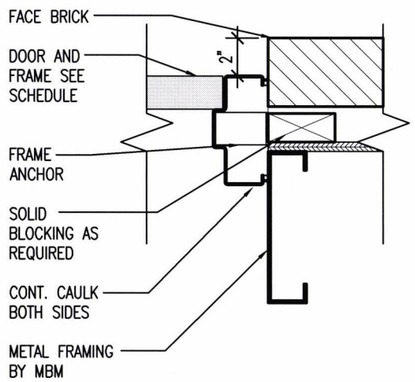

AREA HEADQUARTERS AND SEALING CREW DOOR JAMB

1 / A7.1 EXTERIOR DOOR DETAILS

SCALE : 1½" = 1'-0"

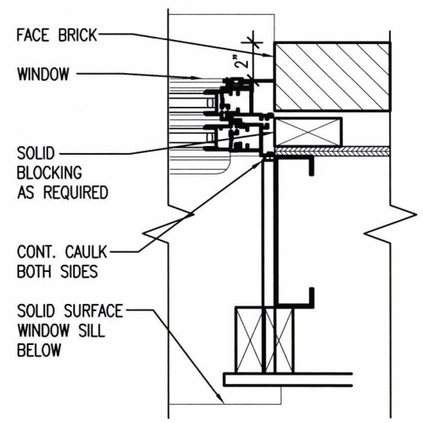

AREA HEADQUARTERS AND SEALING CREW WINDOW JAMB

2 / A7.1 EXTERIOR WINDOW DETAILS

SCALE : 1½" = 1'-0"

ARDOT ARKANSAS DEPARTMENT OF TRANSPORTATION

PULASKI CO. AREA 1 HEADQUARTERS/ R.E. OFFICE 61 (S)
North Little Rock, Arkansas
Pulaski County

STATE OF ARKANSAS
REGISTERED PROFESSIONAL ENGINEER
No. 7527
JOSEPH A. SARTINI
5-23-18

DATE: MAY 29, 2018
JOB NO: 061448
DRAWN BY: KB
REVISIONS:

A7.1

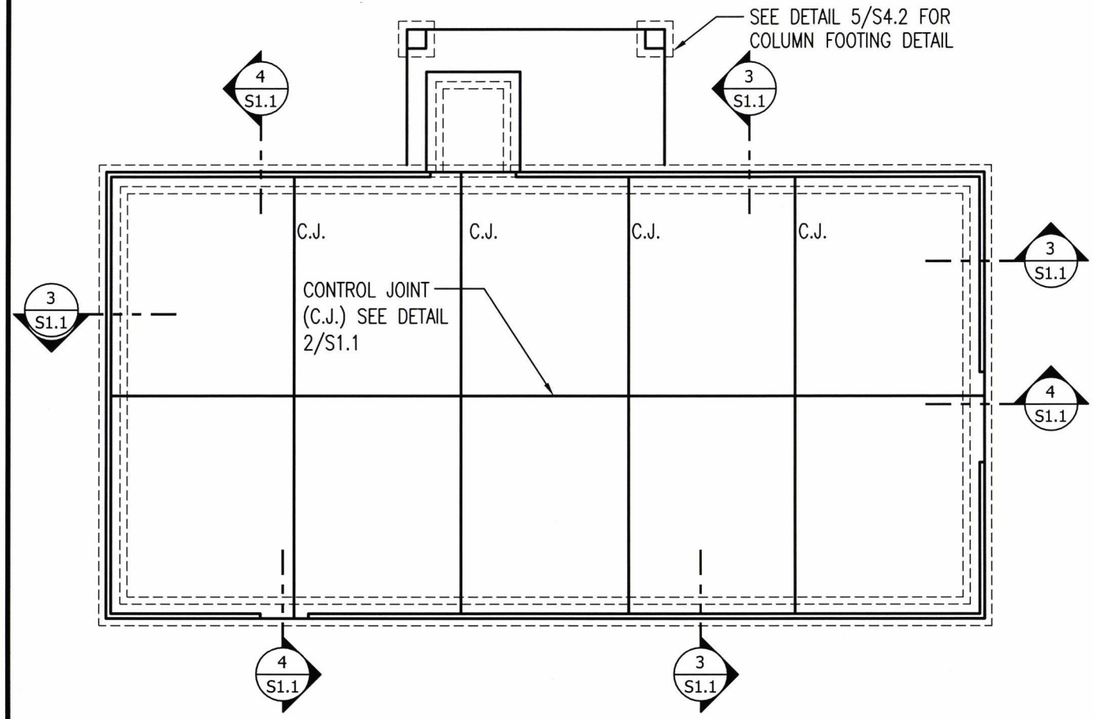

1 S1.1 FOUNDATION PLAN

SCALE : 3/32" = 1'-0"

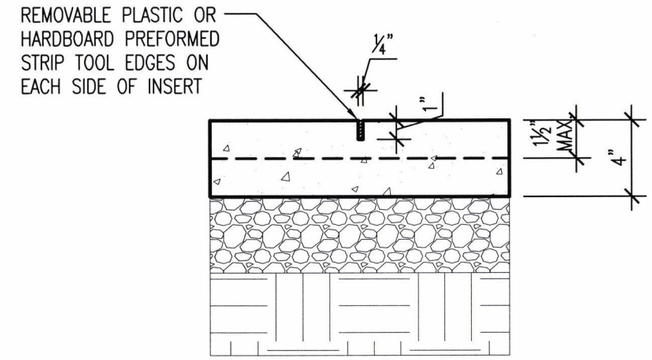

NOTES:

1. FILL JOINT WITH SEALANT AFTER SLAB HAS CURED
2. PROVIDE SUPPORT CHAIRS TO HOLD SLAB REINF. IN POSITION DURING CONCRETE PLACEMENT.
3. SAWCUT JOINTS ARE PERMITTED WITH THE APPROVAL OF THE OWNER'S PROJECT MANAGER ONLY. IF APPROVED SAWCUT JOINTS USING A "SOFF-CUT" MACHINE OR EQUAL IMMEDIATELY AFTER FINISHING SLAB.

2 S1.1 CONTROL JOINT DETAIL

SCALE : 1 1/2" = 1'-0"

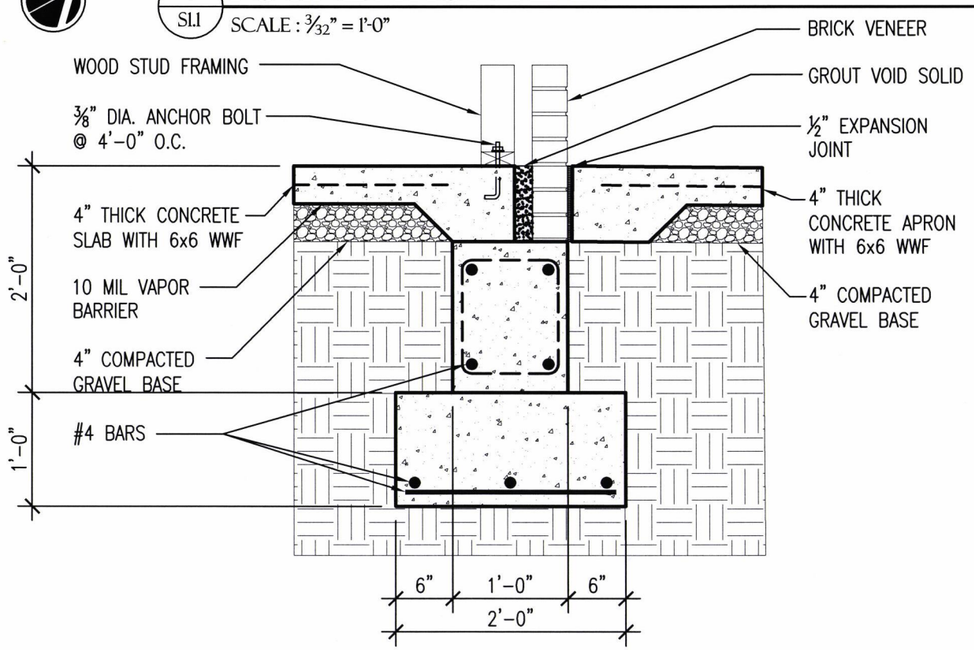

3 S1.1 FOUNDATION DETAIL

SCALE : 3/4" = 1'-0"

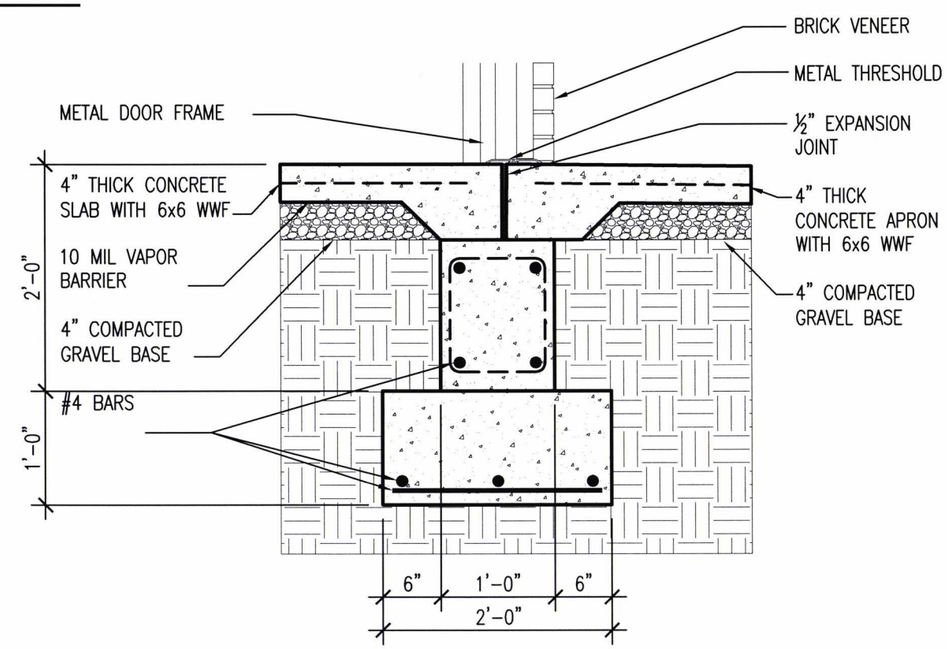

3 S1.1 FOUNDATION AT EXTERIOR DOOR DETAIL

SCALE : 3/4" = 1'-0"

ARDOT ARKANSAS DEPARTMENT OF TRANSPORTATION

PULASKI CO. AREA 1 HEADQUARTERS/ R.E. OFFICE 61 (S)
North Little Rock, Arkansas
Pulaski County

STATE OF ARKANSAS REGISTERED PROFESSIONAL ENGINEER No. 7527 JOSEPH A. SARTINI 5-18-18

DATE: MAY 29, 2018
JOB NO: 061448
DRAWN BY: KB
REVISIONS:

S1.1

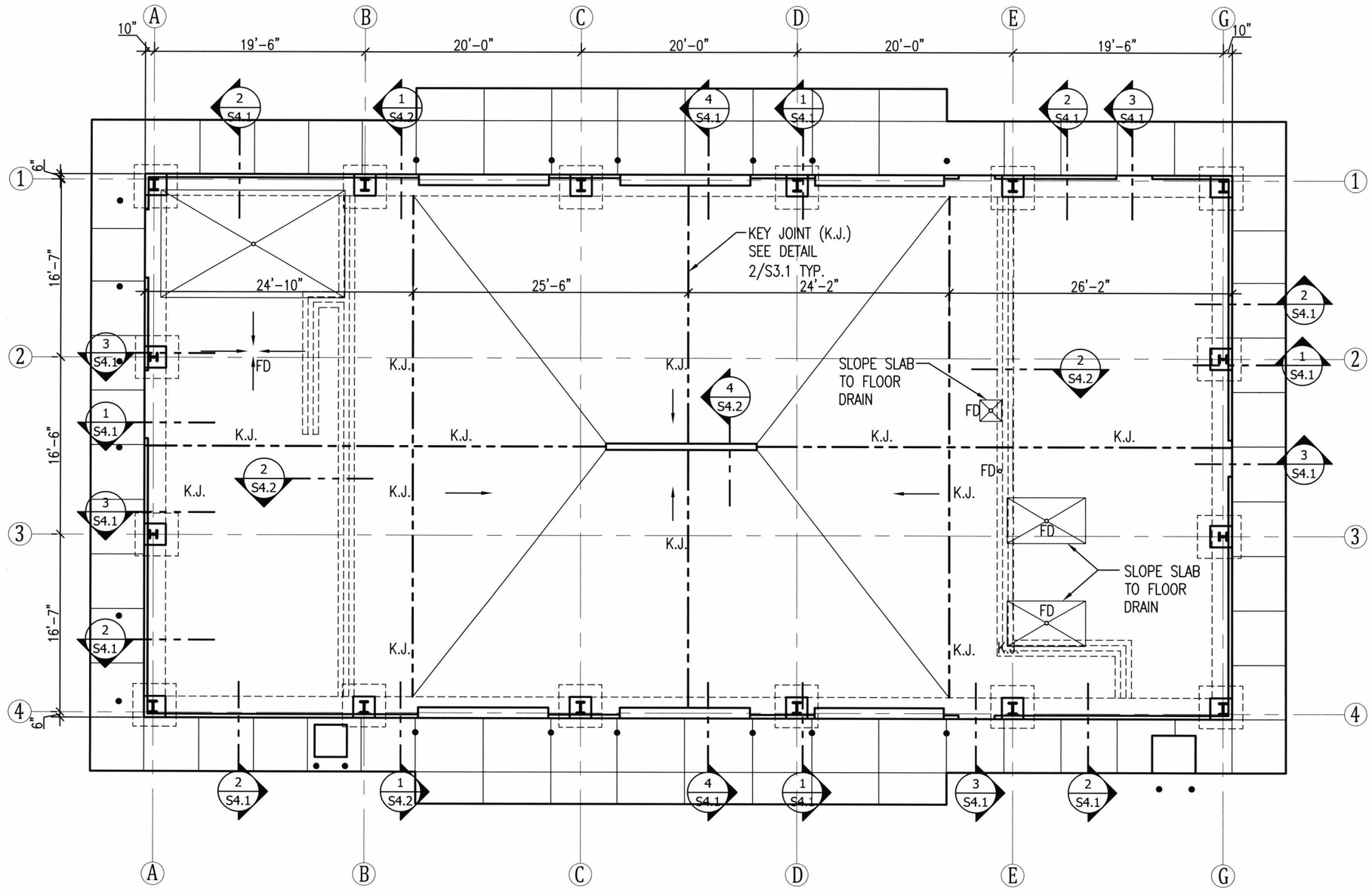

NORTH

1 / S2.1 FOUNDATION PLAN

SCALE : 3/32" = 1'-0"

ARDOT ARKANSAS DEPARTMENT OF TRANSPORTATION

PULASKI CO. AREA 1
HEADQUARTERS/
R.E. OFFICE 61 (S)
North Little Rock, Arkansas
Pulaski County

STATE OF ARKANSAS
REGISTERED PROFESSIONAL ENGINEER
No. 7527
JOSEPH A. SARTINI
5-28-18

DATE: MAY 29, 2018
JOB NO: 061448
DRAWN BY: KB
REVISIONS:

S2.1

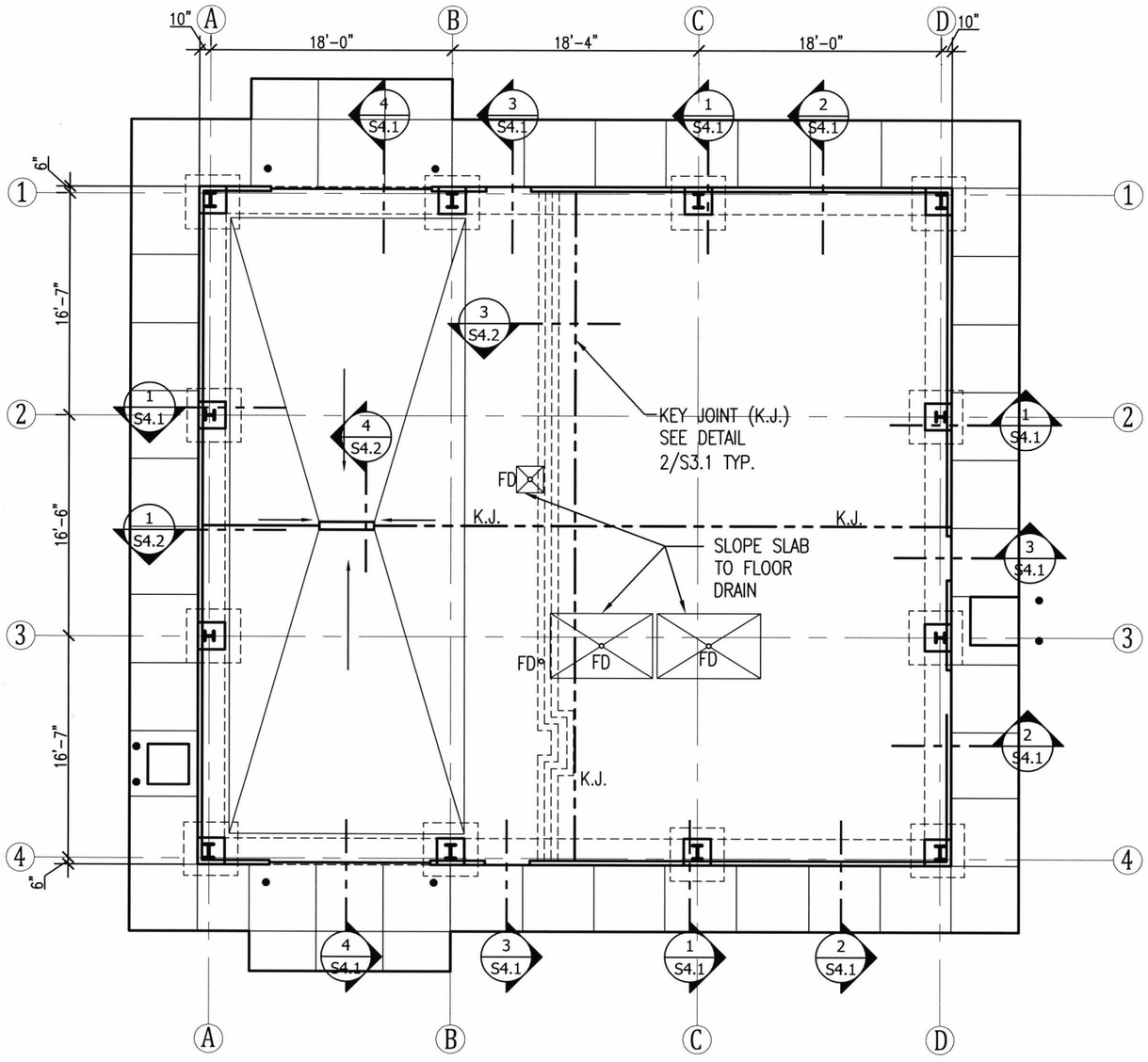

NORTH

1 / S3.1 SEALING CREW FOUNDATION PLAN

SCALE : 3/32" = 1'-0"

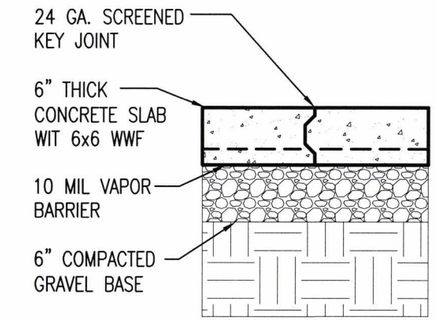

2 / S3.1 KEY JOINT DETAIL

SCALE : 3/4" = 1'-0"

ARDOT ARKANSAS DEPARTMENT OF TRANSPORTATION

PULASKI CO. AREA 1
HEADQUARTERS/
R.E. OFFICE 61 (S)
North Little Rock, Arkansas
Pulaski County

STATE OF ARKANSAS
REGISTERED PROFESSIONAL ENGINEER
No. 7527
JOSEPH A. SARTINI
5-29-18

DATE: MAY 29, 2018
JOB NO: 061448
DRAWN BY: KB
REVISIONS:

S3.1

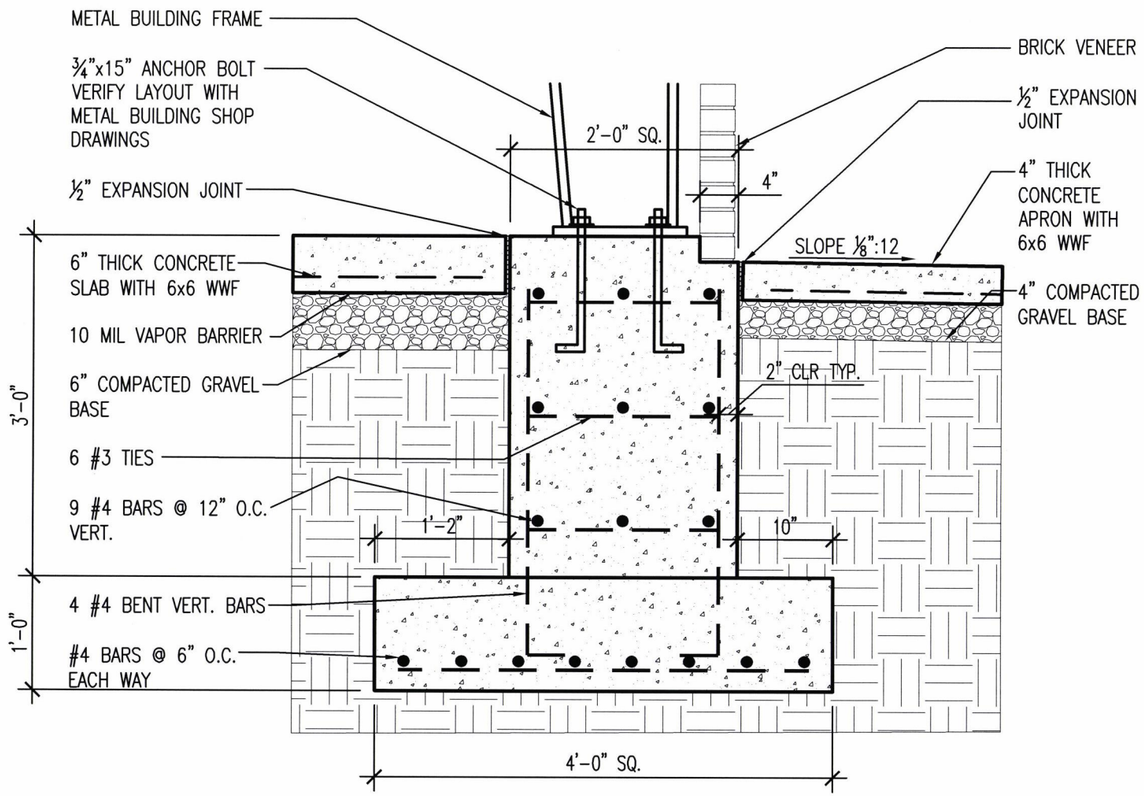

1 S4.1 PIER SECTION
SCALE : ¾" = 1'-0"

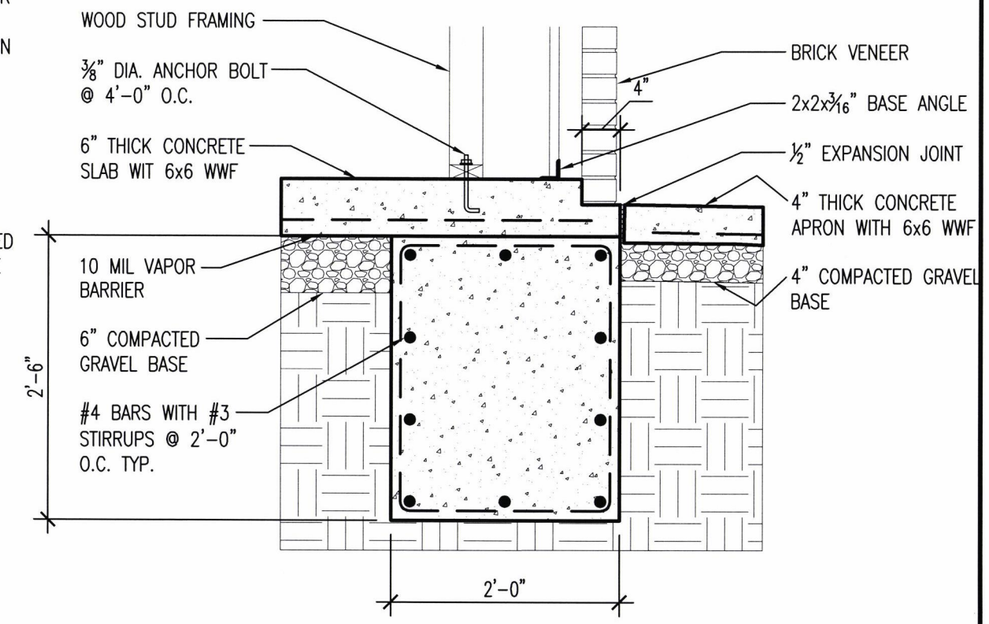

2 S4.1 GRADE BEAM SECTION AT STUD FRAMING
SCALE : ¾" = 1'-0"

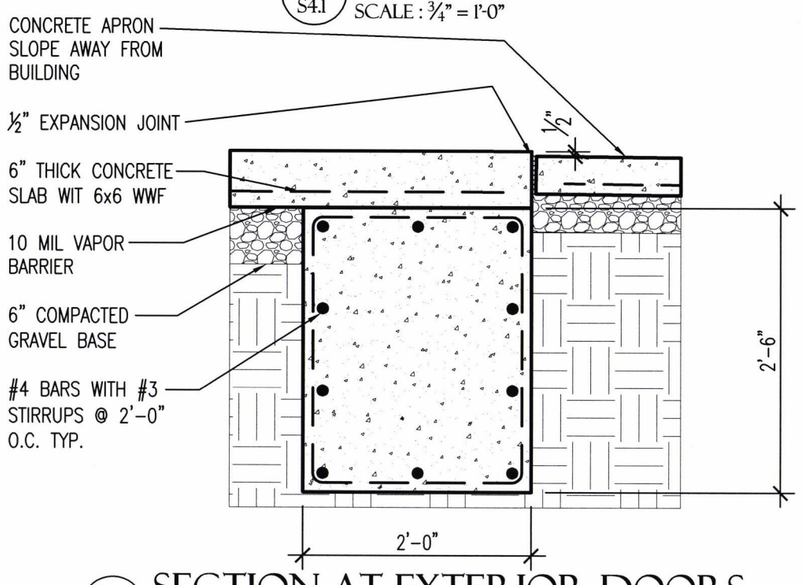

3 S4.1 SECTION AT EXTERIOR DOORS
SCALE : ¾" = 1'-0"

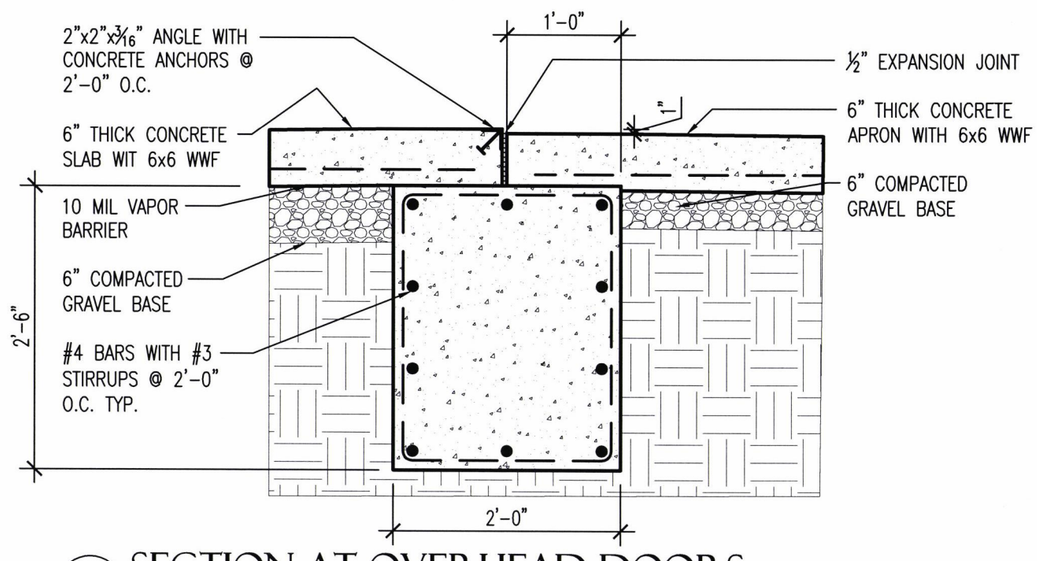

4 S4.1 SECTION AT OVERHEAD DOORS
SCALE : ¾" = 1'-0"

ARDOT ARKANSAS DEPARTMENT OF TRANSPORTATION

PULASKI CO. AREA 1 HEADQUARTERS/ R.E. OFFICE 61 (S)
North Little Rock, Arkansas
Pulaski County

STATE OF ARKANSAS REGISTERED PROFESSIONAL ENGINEER No. 7527 JOSEPH A. SARTINI 5-29-18

DATE: MAY 29, 2018
JOB NO: 061448
DRAWN BY: KB
REVISIONS:

S4.1

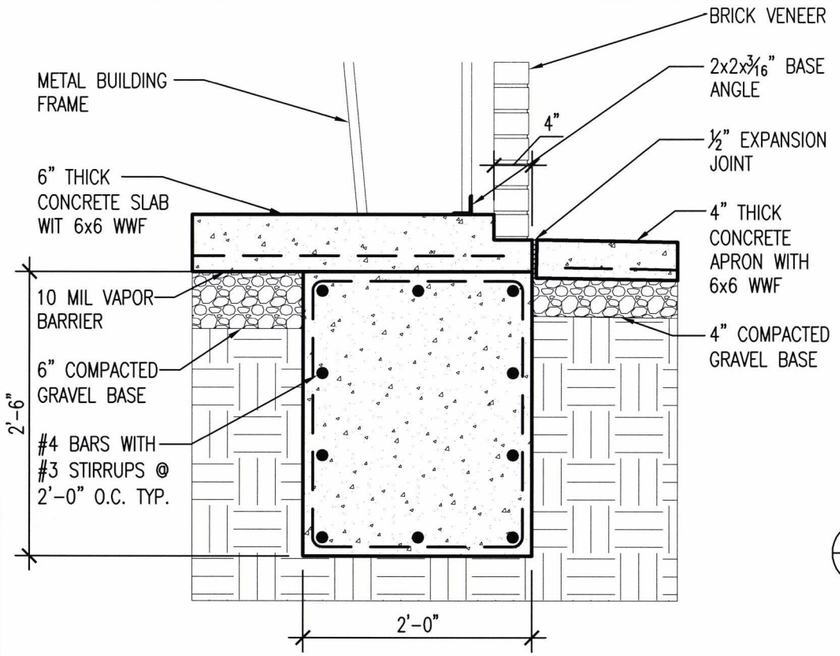

GRADE BEAM DETAIL AT SHOP AREA

1 / S4.2 SCALE : 3/4" = 1'-0"

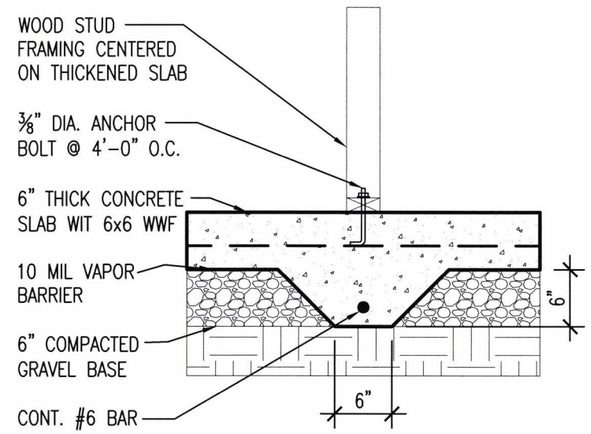

THICKENED SLAB DETAIL

2 / S4.2 SCALE : 3/4" = 1'-0"

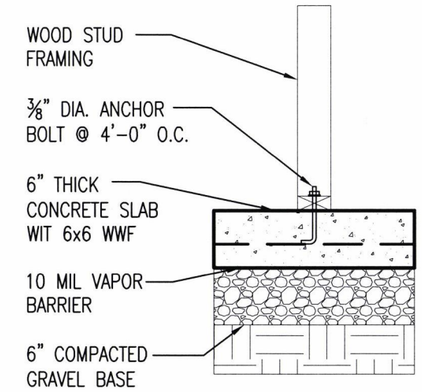

SLAB DETAIL

3 / S4.2 SCALE : 3/4" = 1'-0"

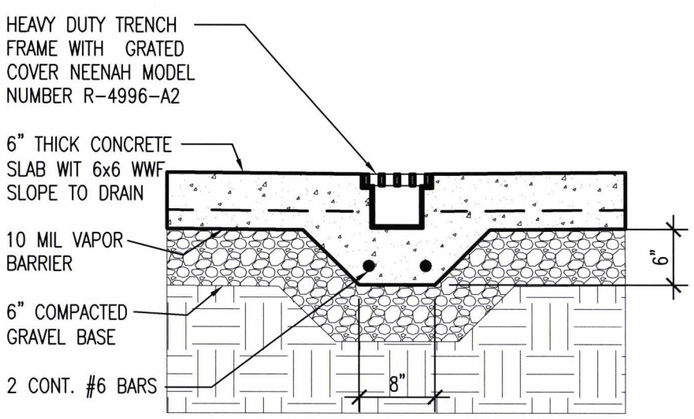

TRENCH DRAIN DETAIL

4 / S4.2 SCALE : 3/4" = 1'-0"

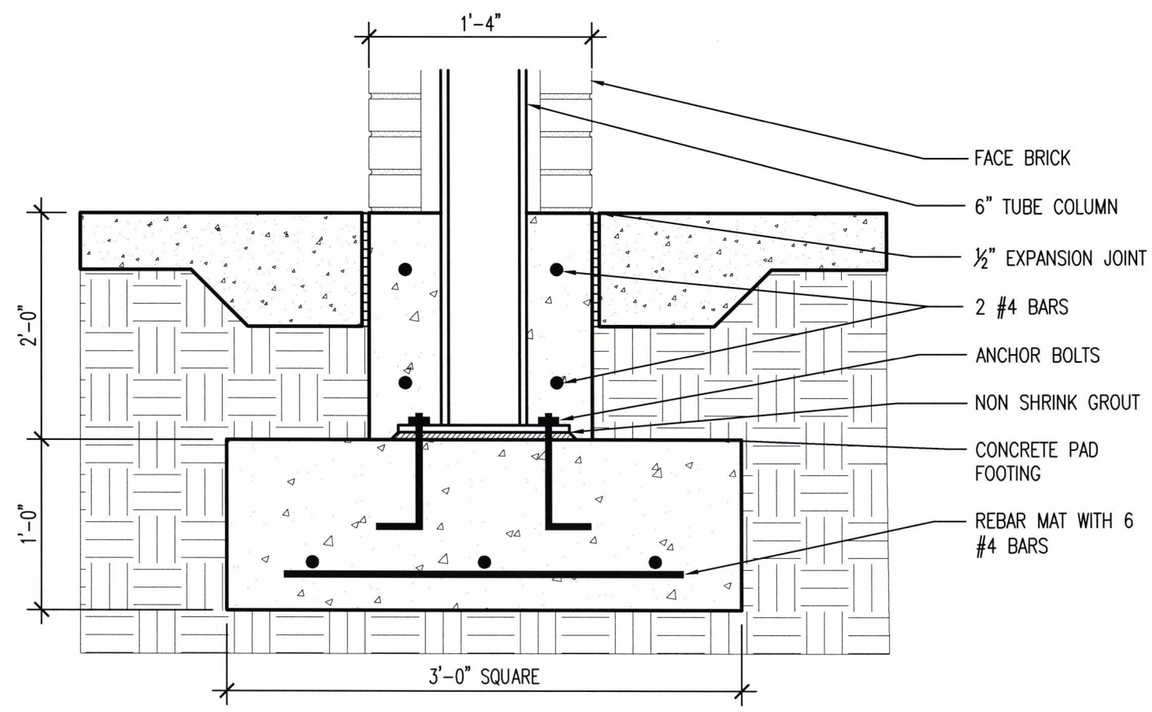

COLUMN FOOTING DETAIL

5 / S4.2 SCALE : 3/4" = 1'-0"

ARDOT ARKANSAS DEPARTMENT OF TRANSPORTATION

PULASKI CO. AREA 1
HEADQUARTERS/
R.E. OFFICE 61 (S)
North Little Rock, Arkansas
Pulaski County

STATE OF ARKANSAS REGISTERED PROFESSIONAL ENGINEER No. 7527 JOSEPH A. SARDINI 5-29-18

DATE: MAY 29, 2018
JOB NO: 061448
DRAWN BY: KB
REVISIONS:

S4.2

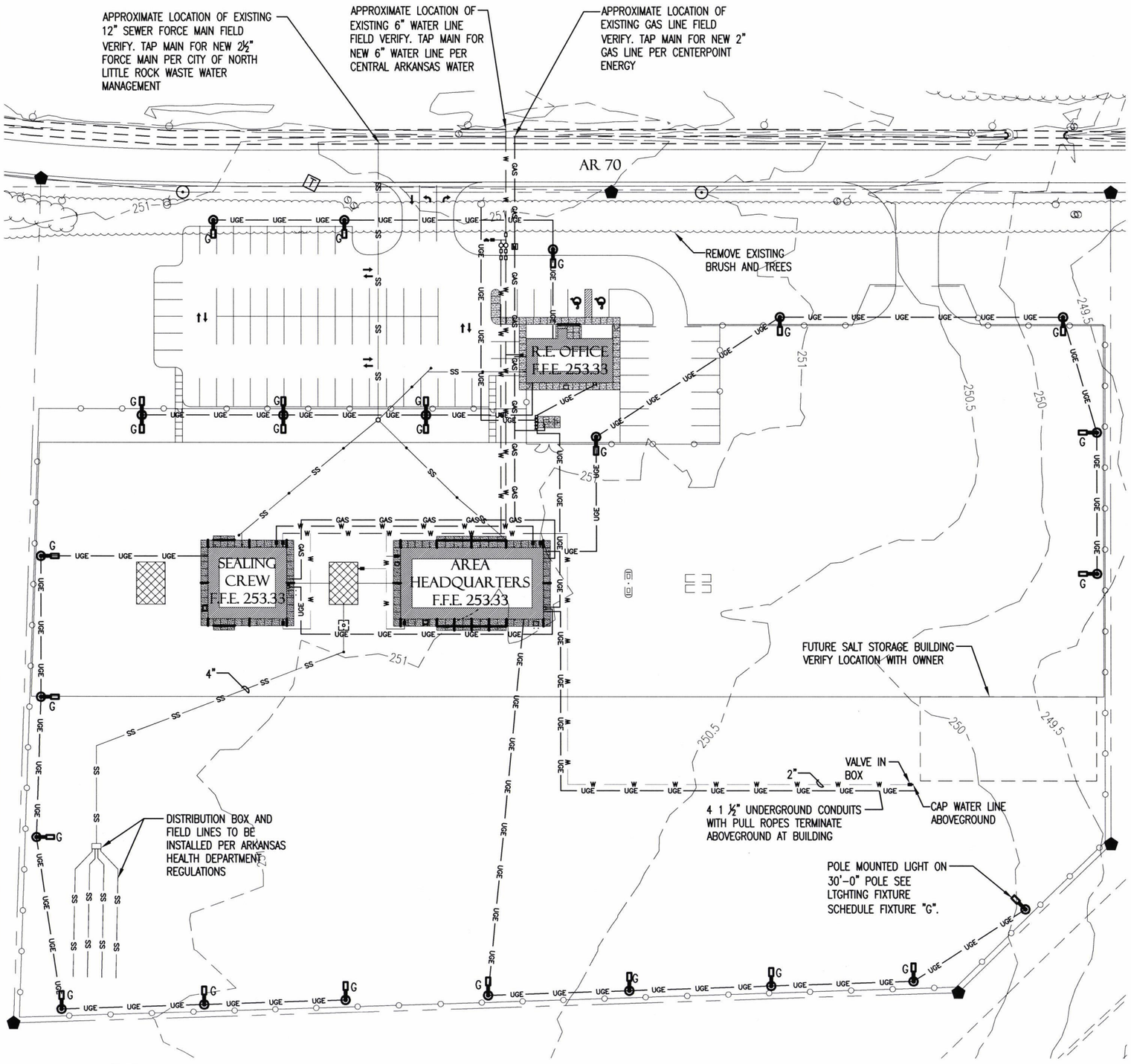

1 MEP1.1 OVERALL UTILITIES SITE PLAN

SCALE : 1" = 80.0'

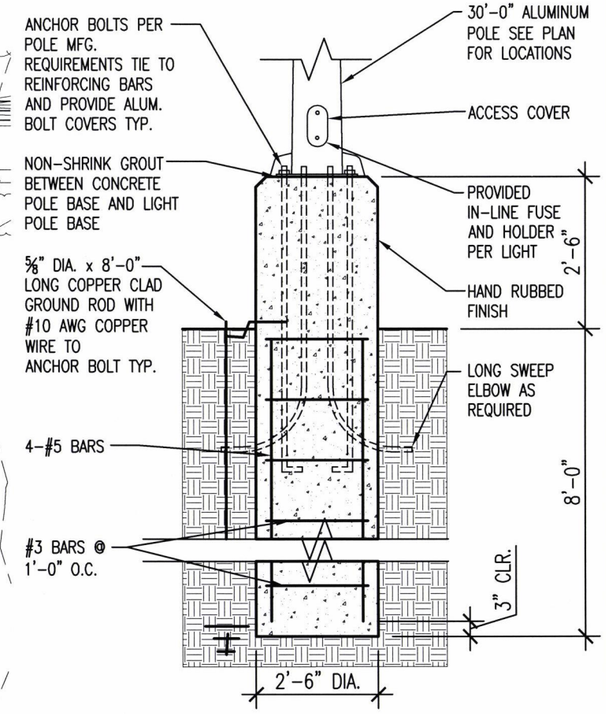

2 MEP1.1 LIGHT POLE BASE DETAIL

SCALE : NO SCALE

ARDOT ARKANSAS DEPARTMENT OF TRANSPORTATION

PULASKI CO. AREA 1
HEADQUARTERS/
R.E. OFFICE 61 (S)
North Little Rock, Arkansas
Pulaski County

STATE OF ARKANSAS REGISTERED PROFESSIONAL ENGINEER No. 7527 JOSEPH A. SARTINI 5-29-18

DATE: MAY 29, 2018
JOB NO: 061448
DRAWN BY: KB
REVISIONS:

MEP1.1

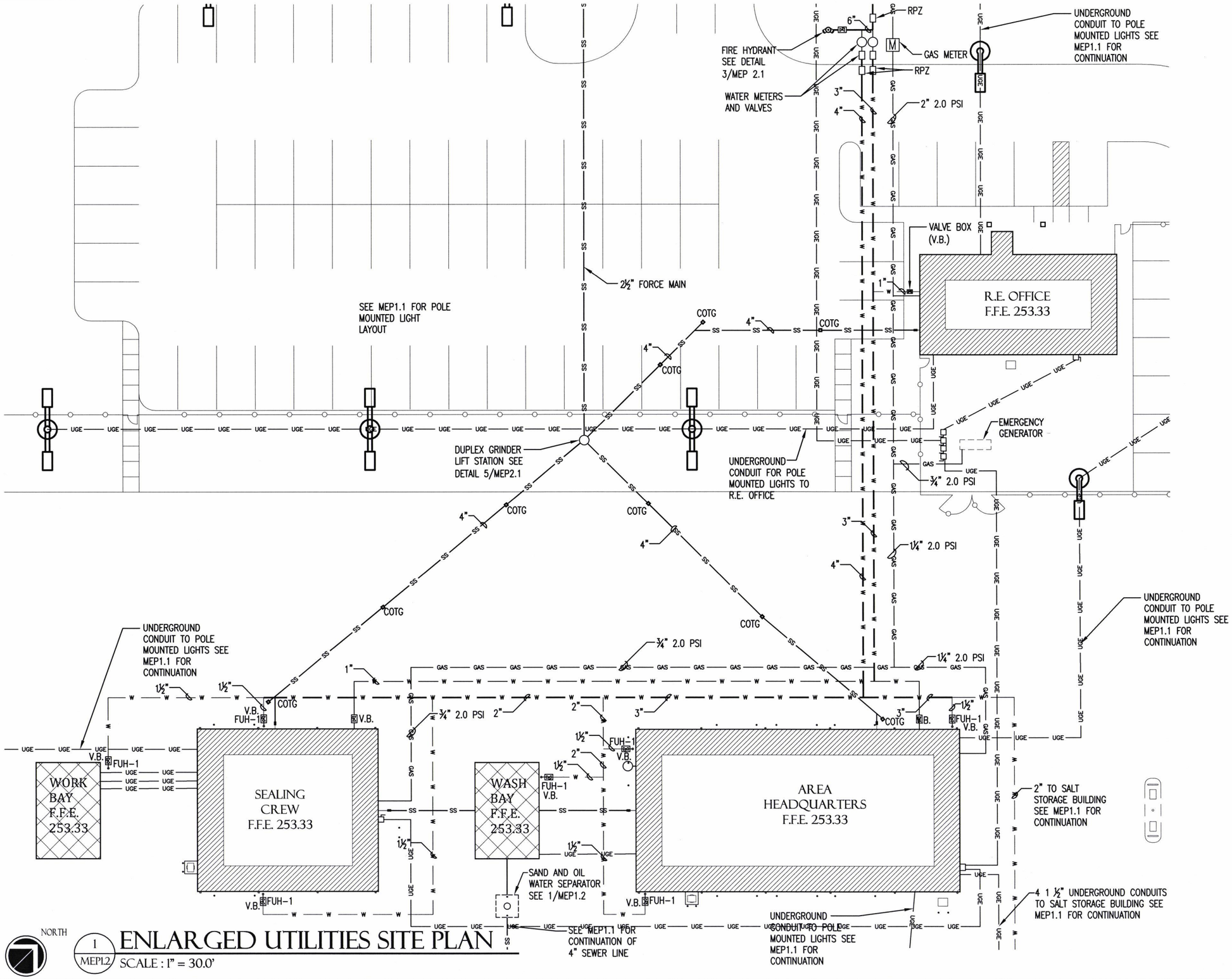

1 MEP1.2 ENLARGED UTILITIES SITE PLAN

SCALE : 1" = 30.0'

ARDOT ARKANSAS DEPARTMENT OF TRANSPORTATION

PULASKI CO. AREA 1 HEADQUARTERS/ R.E. OFFICE 61 (S)

North Little Rock, Arkansas

Pulaski County

STATE OF ARKANSAS REGISTERED PROFESSIONAL ENGINEER No. 7527 JOSEPH A. SARTINI 5-29-18

DATE: MAY 29, 2018

JOB NO: 061448

DRAWN BY: KB

REVISIONS:

MEP1.2

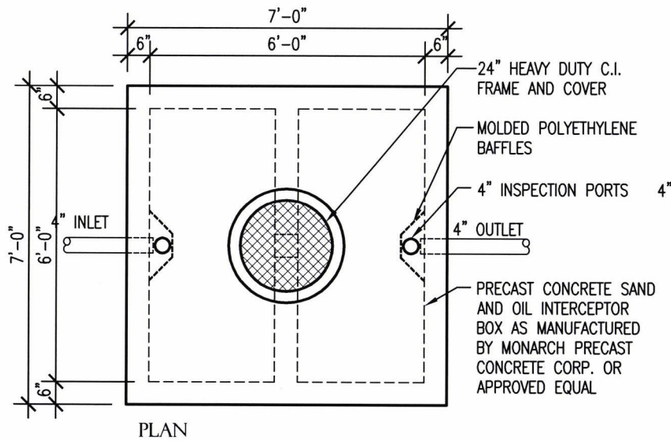

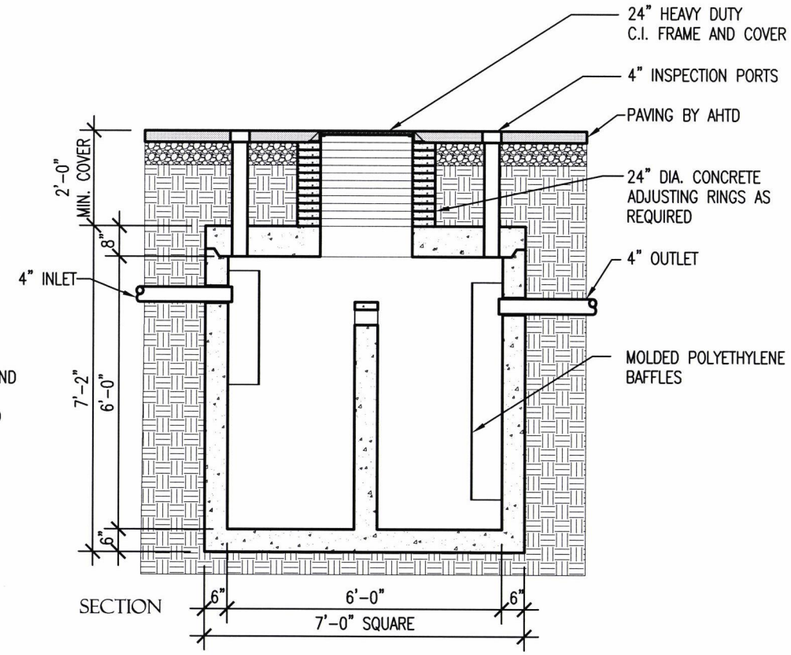

1 MEP2.1 SAND AND OIL INTERCEPTOR DETAIL

SCALE : NO SCALE

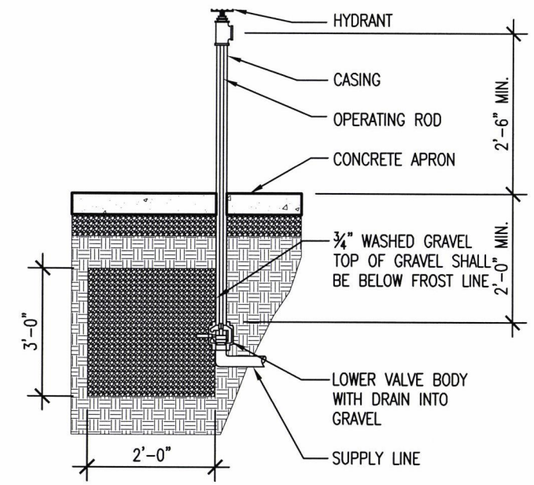

2 MEP2.1 FREEZELESS HYDRANT DETAIL

SCALE : NO SCALE

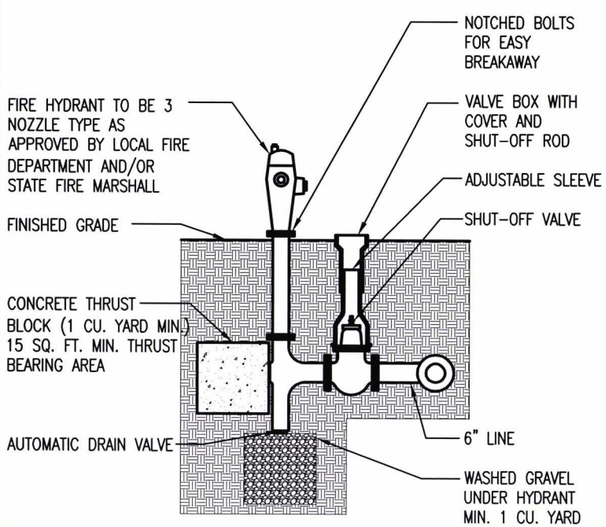

3 MEP2.1 FIRE HYDRANT DETAIL

SCALE : NO SCALE

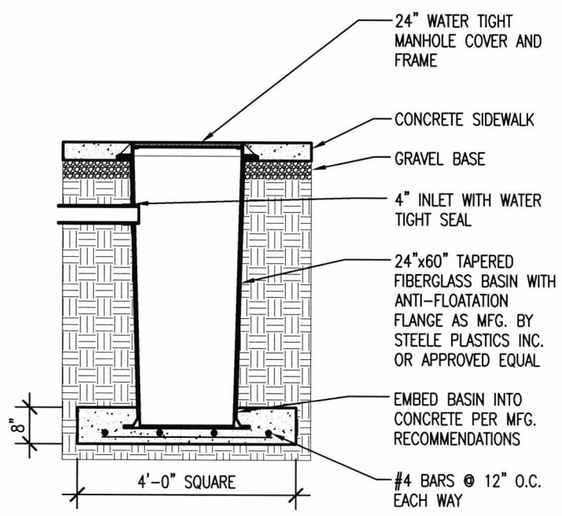

4 MEP2.1 OIL CONTAINMENT BASIN DETAIL

SCALE : NO SCALE

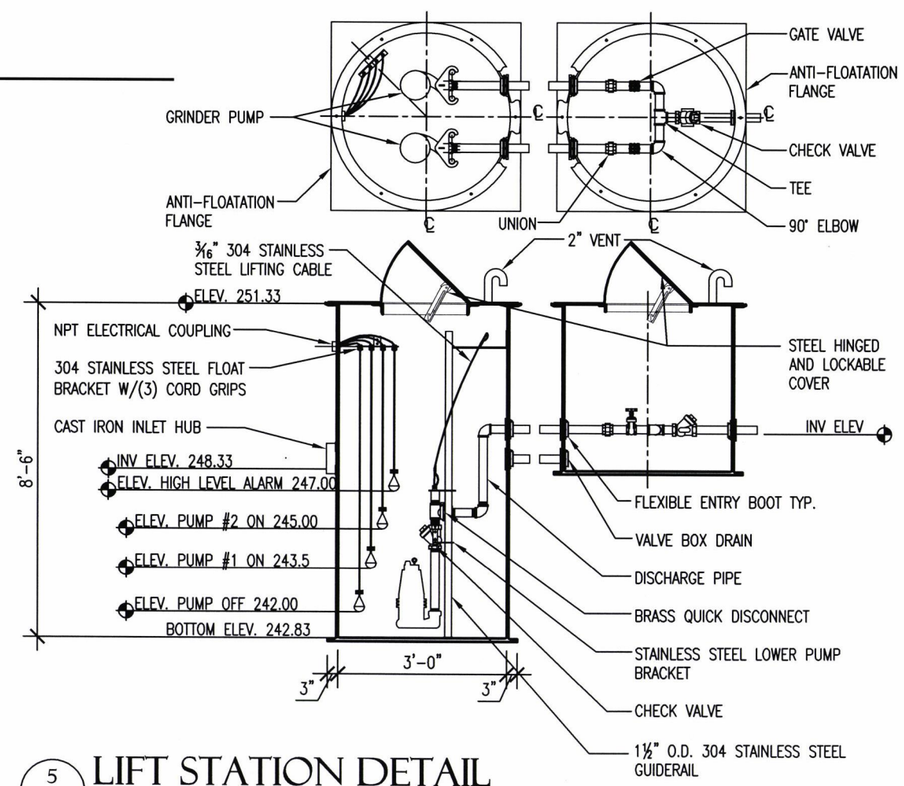

5 MEP2.1 LIFT STATION DETAIL

SCALE : NO SCALE

ARDOT ARKANSAS DEPARTMENT OF TRANSPORTATION

PULASKI CO. AREA 1
HEADQUARTERS/
R.E. OFFICE 61 (S)
North Little Rock, Arkansas
Pulaski County

STATE OF ARKANSAS REGISTERED PROFESSIONAL ENGINEER No. 7527 JOSEPH A. SARTENI 7-18-18

DATE: MAY 29, 2018
JOB NO: 061448
DRAWN BY: KB
REVISIONS:

MEP2.1

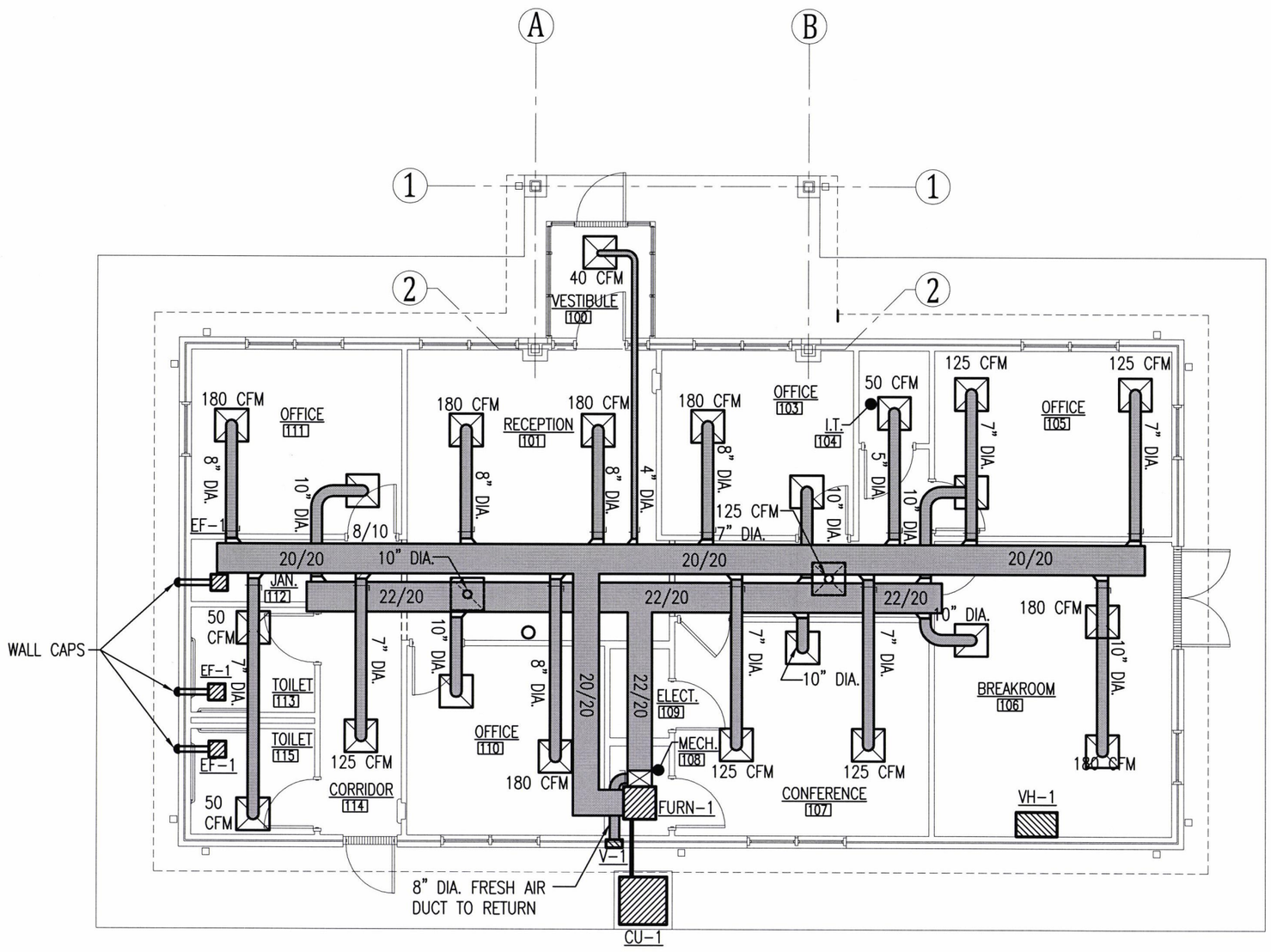

NORTH

1
M1.1

R.E. OFFICE HVAC FLOOR PLAN

SCALE : 1/8" = 1'-0"

ARDOT ARKANSAS DEPARTMENT OF TRANSPORTATION

PULASKI CO. AREA 1
HEADQUARTERS/
R.E. OFFICE 61 (S)
North Little Rock, Arkansas
Pulaski County

STATE OF ARKANSAS
REGISTERED PROFESSIONAL ENGINEER
No. 7527
JOSEPH A. SARTINI
5-29-18

DATE: MAY 29, 2018
JOB NO: 061448
DRAWN BY: KB
REVISIONS:

M1.1

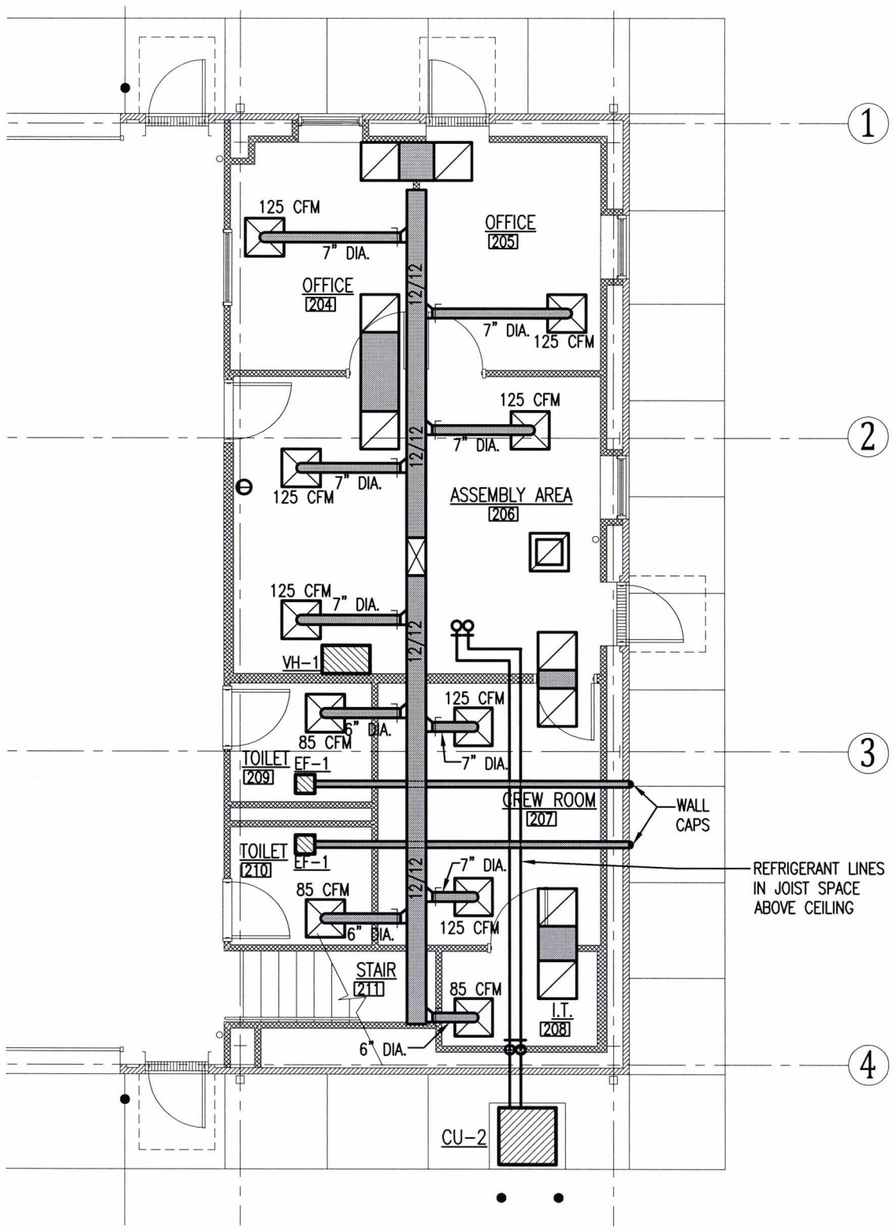

NORTH

1 / M2.1 A.H.Q. ENLARGED HVAC FLOOR PLAN

SCALE : 1/8" = 1'-0"

ARDOT ARKANSAS DEPARTMENT OF TRANSPORTATION

PULASKI CO. AREA 1
HEADQUARTERS/
R.E. OFFICE 61 (S)
North Little Rock, Arkansas
Pulaski County

STATE OF ARKANSAS
REGISTERED PROFESSIONAL ENGINEER
No. 7527
5-29-18
JOSEPH A. SARTINI

DATE: MAY 29, 2018
JOB NO: 061448
DRAWN BY: KB
REVISIONS:

M2.1

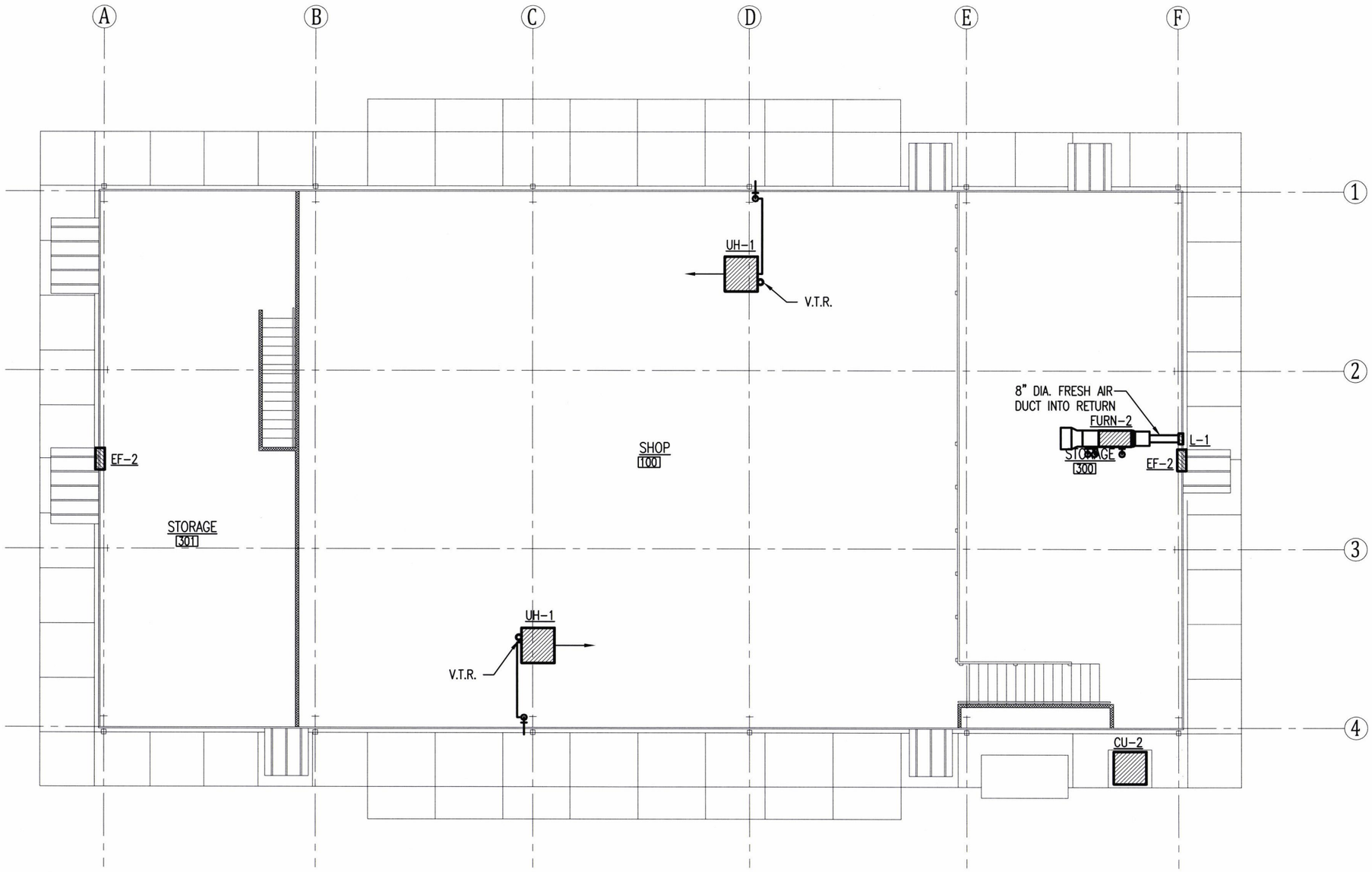

NORTH

1 / M2.2 A.H.Q. UPPER LEVEL HVAC FLOOR PLAN

SCALE : 3/32" = 1'-0"

ARDOT ARKANSAS DEPARTMENT OF TRANSPORTATION

PULASKI CO. AREA 1 HEADQUARTERS/ R.E. OFFICE 61 (S)

North Little Rock, Arkansas

Pulaski County

STATE OF ARKANSAS REGISTERED PROFESSIONAL ENGINEER No. 7527 JOSEPH A. SARTENI

5-29-18

DATE: MAY 29, 2018

JOB NO: 061448

DRAWN BY: KB

REVISIONS:

M2.2

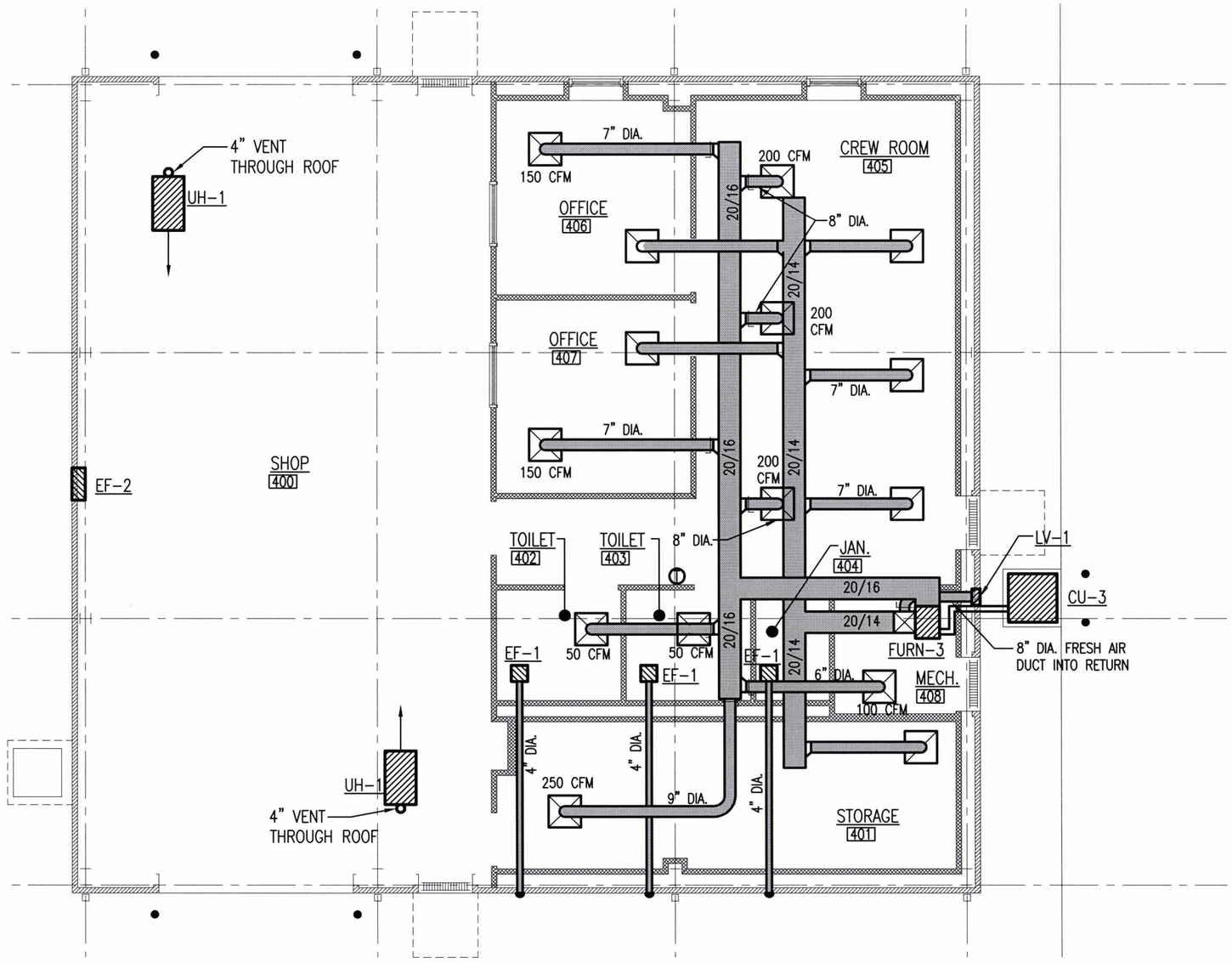

NORTH

1 / M3.1

SEALING CREW HVAC FLOOR PLAN

SCALE : ⅛" = 1'-0"

ARDOT ARKANSAS DEPARTMENT OF TRANSPORTATION

PULASKI CO. AREA 1
HEADQUARTERS/
R.E. OFFICE 61 (S)
North Little Rock, Arkansas
Pulaski County

STATE OF ARKANSAS
REGISTERED PROFESSIONAL ENGINEER
No. 7527
JOSEPH A. SARTENI
5-29-18

DATE: MAY 29, 2018
JOB NO: 061448
DRAWN BY: KB
REVISIONS:

M3.1

MECHANICAL EQUIPMENT SCHEDULE

MARK	MANUFACTURER	MODEL	REMARKS
CU-1	CARRIER OR EQUAL	24ANB160A003 INFINITY SERIES TWO STAGE AIR CONDITIONER WITH PURON 5 TONS COOLING 21 SEER @ ARI CONDTIONS WITH CNPVP6024ALA EVAPORATOR COIL AND SYSTXCCITW01 TOUCH CONTROL	
CU-2	CARRIER OR EQUAL	24ANB124A003 INFINITY SERIES TWO STAGE AIR CONDITIONER WITH PURON 2 TONS COOLING 21 SEER @ ARI CONDTIONS WITH CNPVP3717ALA EVAPORATOR COIL AND SYSTXCCITW01 TOUCH CONTROL	
CU-3	CARRIER OR EQUAL	24ANB136A003 INFINITY SERIES TWO STAGE AIR CONDITIONER WITH PURON 3 TONS COOLING 21 SEER @ ARI CONDTIONS WITH CNPVP4324ALA EVAPORATOR COIL AND SYSTXCCITW01 TOUCH CONTROL	
FURN-1	CARRIER OR EQUAL	59TN6A100V21-22 INFINITY TWO STAGE, VARIABLE SPEED 4 WAY MULTIPOISE 98,000 BTU 96% AFUE GAS FURNACE	PROVIDE PLEATED MEDIA CABINET
FURN-2	CARRIER OR EQUAL	59TN6A060V17-14 INFINITY TWO STAGE, VARIABLE SPEED 4 WAY MULTIPOISE 58,000 BTU 96% AFUE GAS FURNACE	PROVIDE PLEATED MEDIA CABINET
FURN-3	CARRIER OR EQUAL	59TN6A080V17-14 INFINITY TWO STAGE, VARIABLE SPEED 4 WAY MULTIPOISE 78,000 BTU 96% AFUE GAS FURNACE	PROVIDE PLEATED MEDIA CABINET
UH-1	REZNOR OR EQUAL	UEAS130 SUPER HIGH EFFICIENCY SEPARATED COMBUSTION, LOW STATIC UNIT HEATER 93% AFUE	
EF-1	BROAN OR EQUAL	QTXE080 EXHAUST FAN WITH BACKDRAFT DAMPER	
EF-2	DELHI OR EQUAL	AX36-7 36" SHUTTER MOUNT EXHAUST FAN 115/230V, 1/2 HP MOTOR	
VH-1	BROAN OR EQUAL	QS330SS NON DUCTED VENT HOOD	
L-1	RUSKIN OR EQUAL	ELF6375DXH 12"x12" EXTRUDED ALUMINUM LOUVER WITH INSECT SCREEN	COLOR TO MATCH EXTERIOR WALL COLOR

ARDOT ARKANSAS DEPARTMENT OF TRANSPORTATION

PULASKI CO. AREA 1
HEADQUARTERS/
R.E. OFFICE 61 (S)
North Little Rock, Arkansas
Pulaski County

STATE OF ARKANSAS
REGISTERED PROFESSIONAL ENGINEER
No. 7527
JOSEPH A. SARTINI
5-29-18

DATE: MAY 29, 2018
JOB NO: 061448
DRAWN BY: KB
REVISIONS:

M4.1

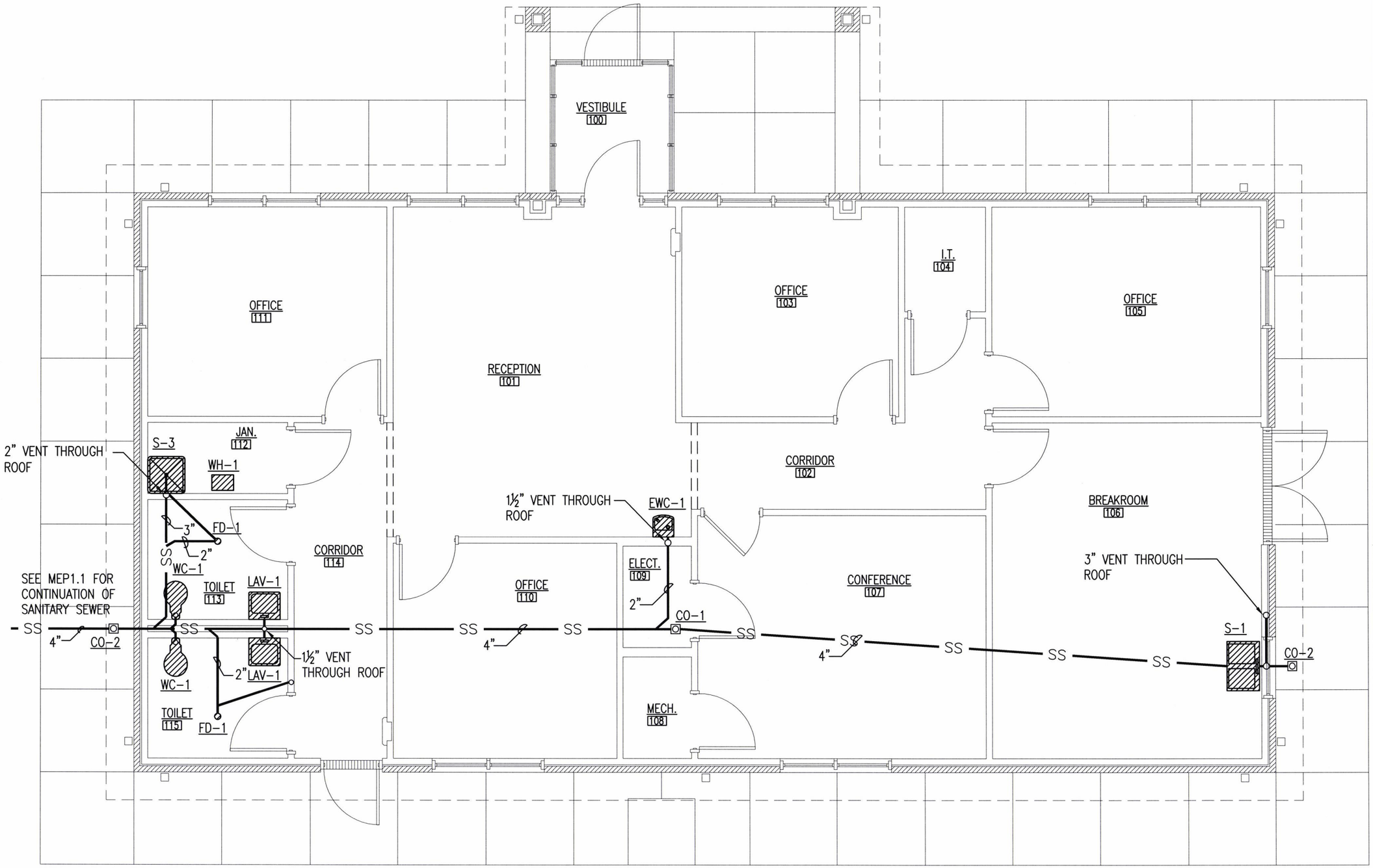

1 / P1.1 R.E. OFFICE SANITARY SEWER PLAN

SCALE : 3/16" = 1'-0"

ARDOT ARKANSAS DEPARTMENT OF TRANSPORTATION

PULASKI CO. AREA 1
HEADQUARTERS/
R.E. OFFICE 61 (S)
North Little Rock, Arkansas
Pulaski County

STATE OF ARKANSAS
REGISTERED PROFESSIONAL ENGINEER
No. 7527
JOSEPH A. SARTINI
5-29-18

DATE: MAY 29, 2018
JOB NO: 061448
DRAWN BY: KB
REVISIONS:

P1.1

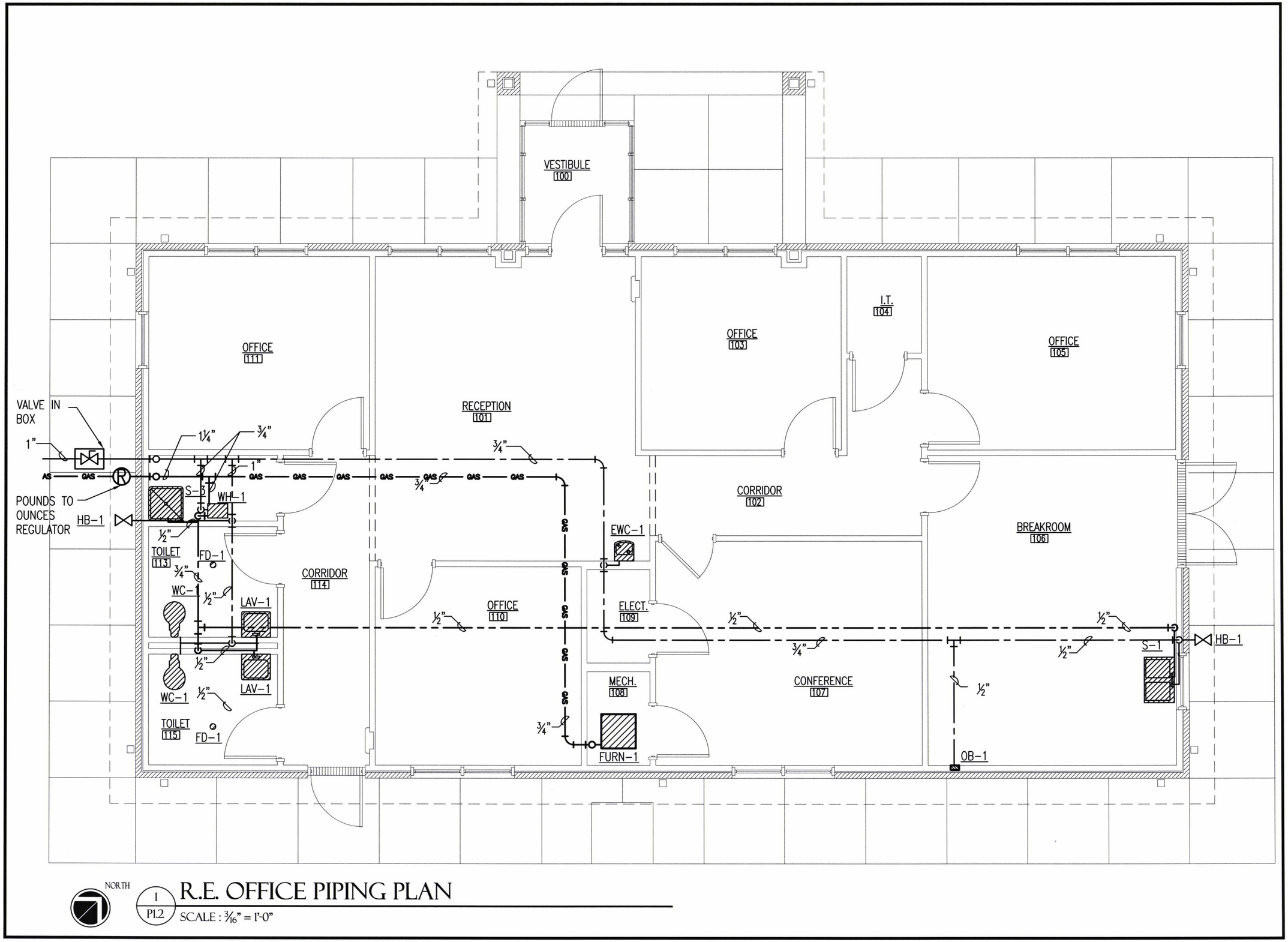

ARDOT
ARKANSAS DEPARTMENT OF TRANSPORTATION

PULASKI CO. AREA 1
HEADQUARTERS/
R.E. OFFICE 61 (S)
North Little Rock, Arkansas
Pulaski County

STATE OF ARKANSAS
REGISTERED PROFESSIONAL ENGINEER
No. 7527
JOSEPH A. SARDINI
6-12-18

DATE: MAY 29, 2018
JOB NO: 061448
DRAWN BY: KB
REVISIONS:

P1.2

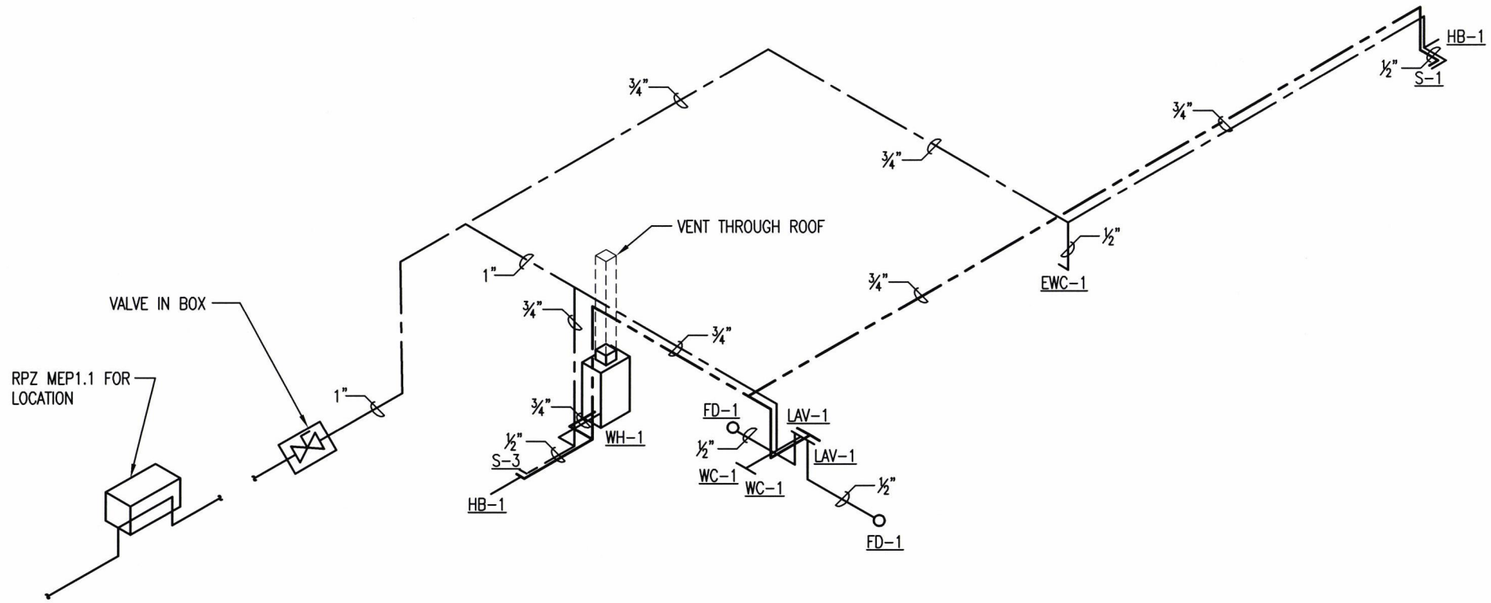

1 / P1.3 DOMESTIC WATER RISER DIAGRAM
SCALE : NO SCALE

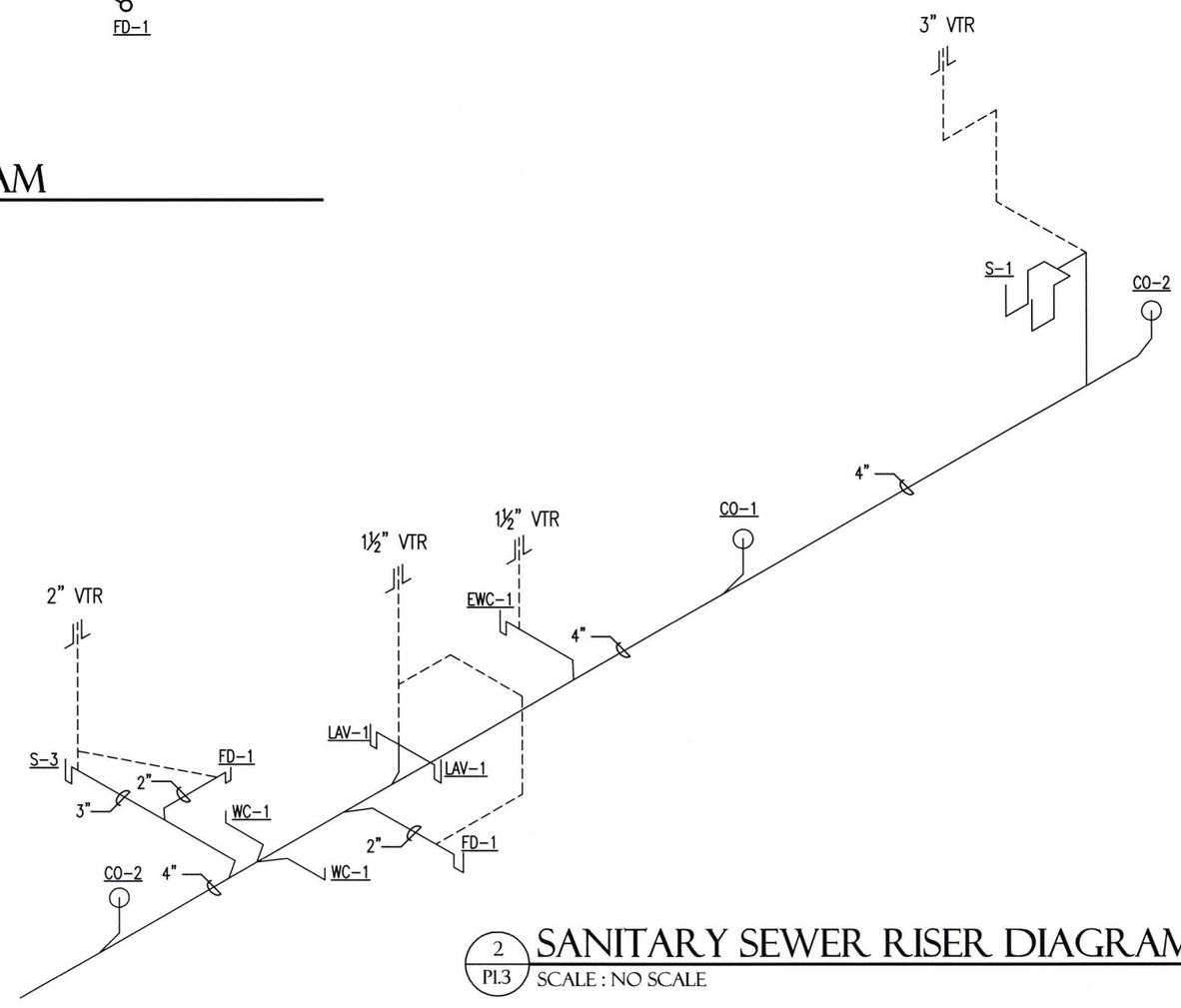

2 / P1.3 SANITARY SEWER RISER DIAGRAM
SCALE : NO SCALE

ARDOT ARKANSAS DEPARTMENT OF TRANSPORTATION

PULASKI CO. AREA 1 HEADQUARTERS/ R.E. OFFICE 61 (S)
North Little Rock, Arkansas
Pulaski County

STATE OF ARKANSAS
REGISTERED PROFESSIONAL ENGINEER
No. 7527
JOSEPH A. SARTINI
5-28-18

DATE: MAY 29, 2018
JOB NO: 061448
DRAWN BY: KB
REVISIONS:

P1.3

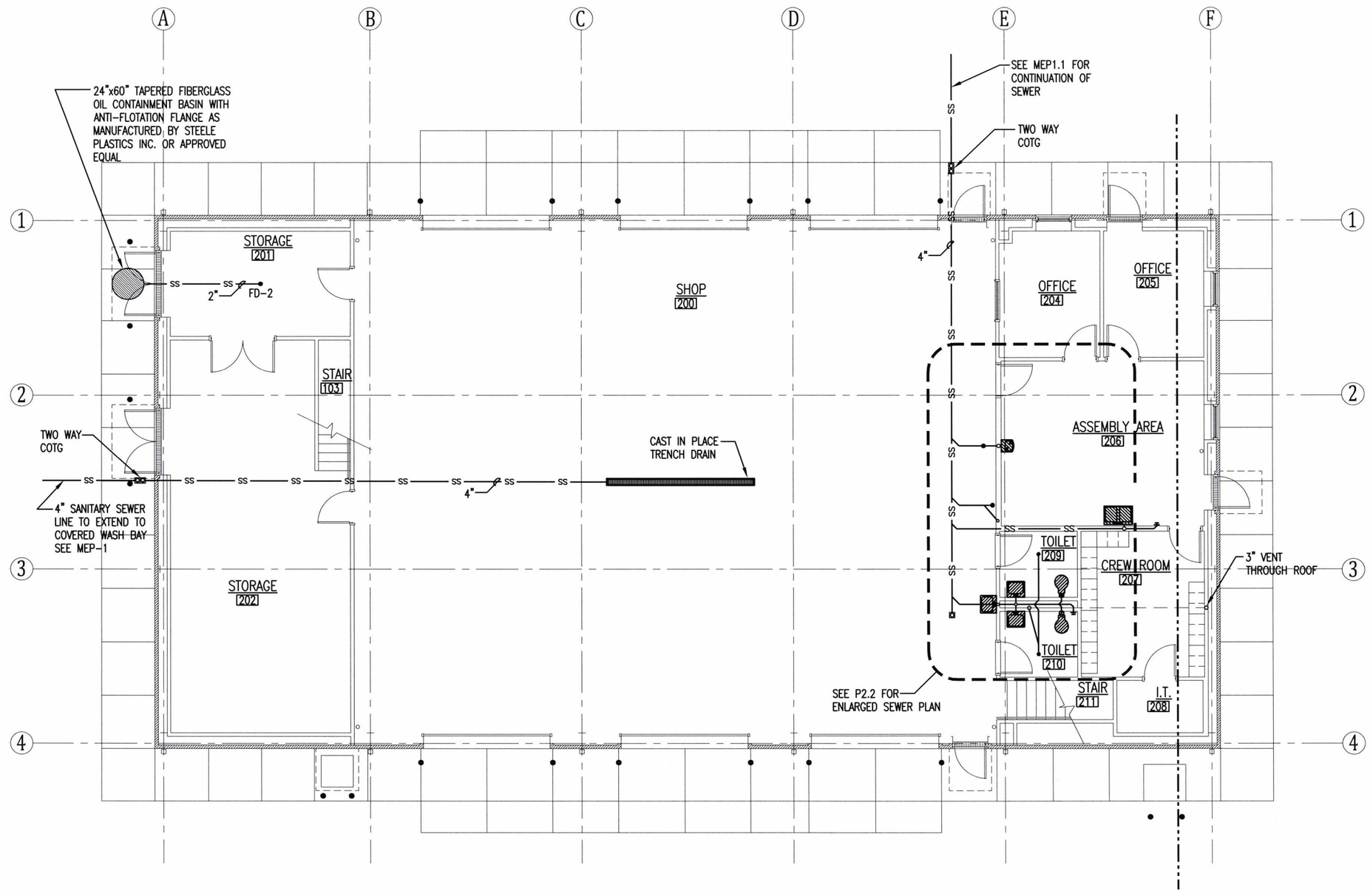

NORTH

1 / P2.1 A.H.Q. SANITARY SEWER PLAN

SCALE : 3/32" = 1'-0"

ARDOT ARKANSAS DEPARTMENT OF TRANSPORTATION

PULASKI CO. AREA 1
HEADQUARTERS/
R.E. OFFICE 61 (S)
North Little Rock, Arkansas
Pulaski County

STATE OF ARKANSAS REGISTERED PROFESSIONAL ENGINEER No. 7527 JOSEPH A. SARTINI 5-22-18

DATE: MAY 29, 2018
JOB NO: 061448
DRAWN BY: KB
REVISIONS:

P2.1

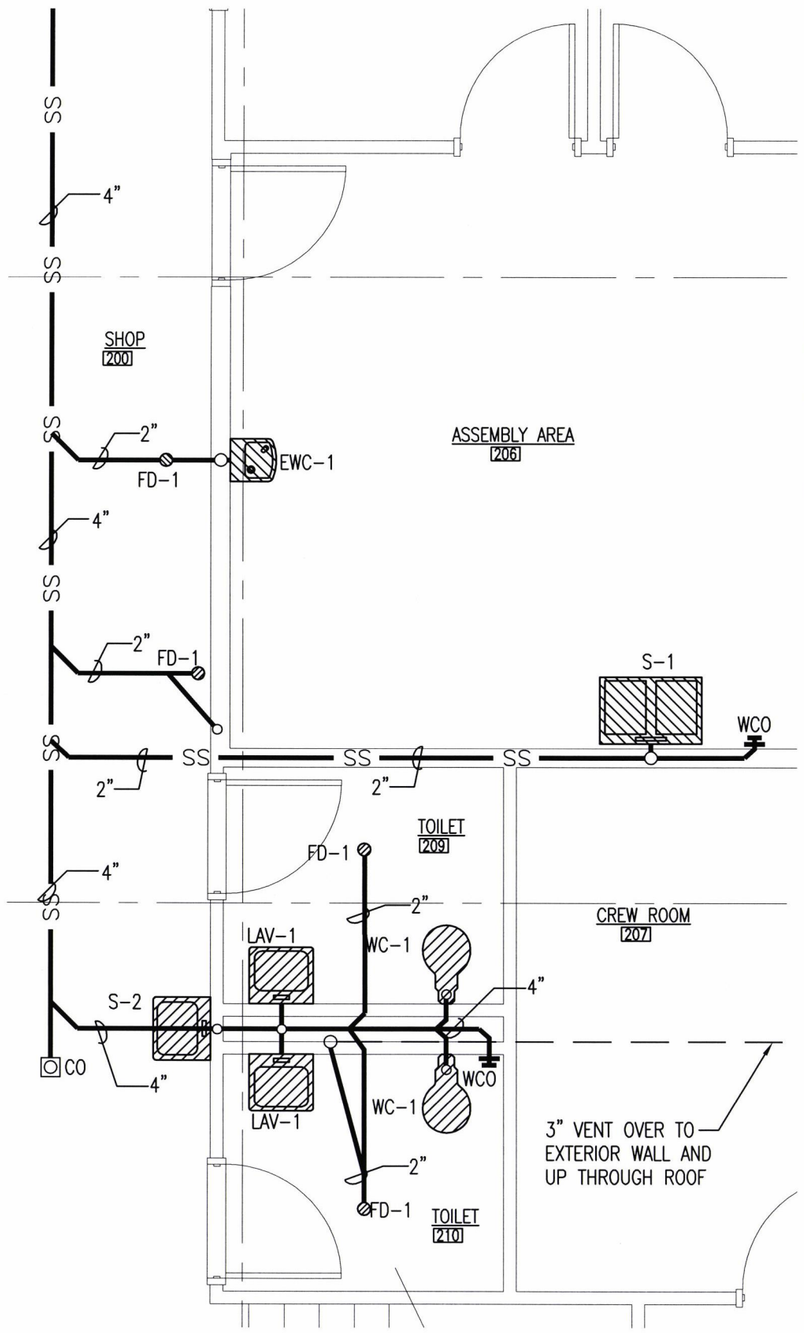

NORTH

1 P2.2 A.H.Q. ENLARGED SANITARY SEWER PLAN

SCALE : 1/4" = 1'-0"

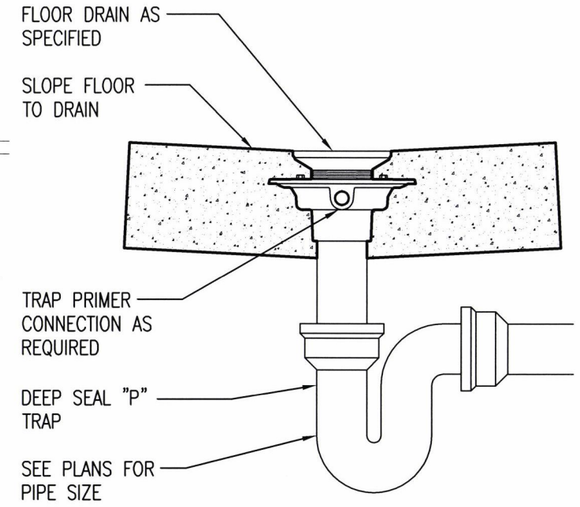

2 P2.2 FLOOR DRAIN

SCALE : NO SCALE

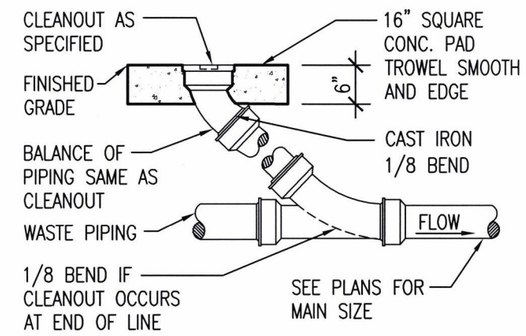

3 P2.2 CLEANOUT TO GRADE

SCALE : NO SCALE

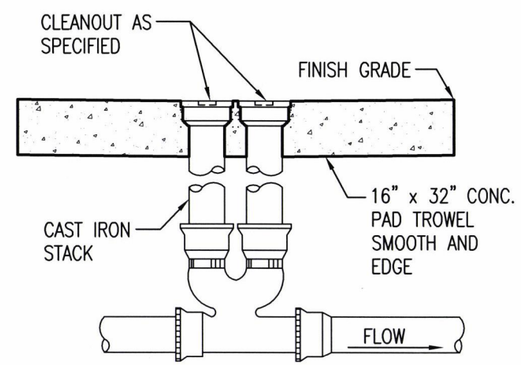

4 P2.2 DOUBLE CLEANOUT

SCALE : NO SCALE

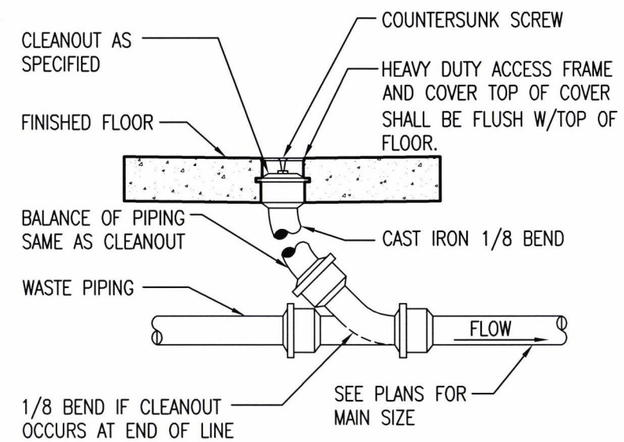

5 P2.2 FLOOR CLEANOUT

SCALE : NO SCALE

ARDOT ARKANSAS DEPARTMENT OF TRANSPORTATION

PULASKI CO. AREA 1
HEADQUARTERS/
R.E. OFFICE 61 (S)
North Little Rock, Arkansas
Pulaski County

STATE OF ARKANSAS
REGISTERED PROFESSIONAL ENGINEER
No. 7527
JOSEPH A. SARTINI
5-29-18

DATE: MAY 29, 2018
JOB NO: 061448
DRAWN BY: KB
REVISIONS:

P2.2

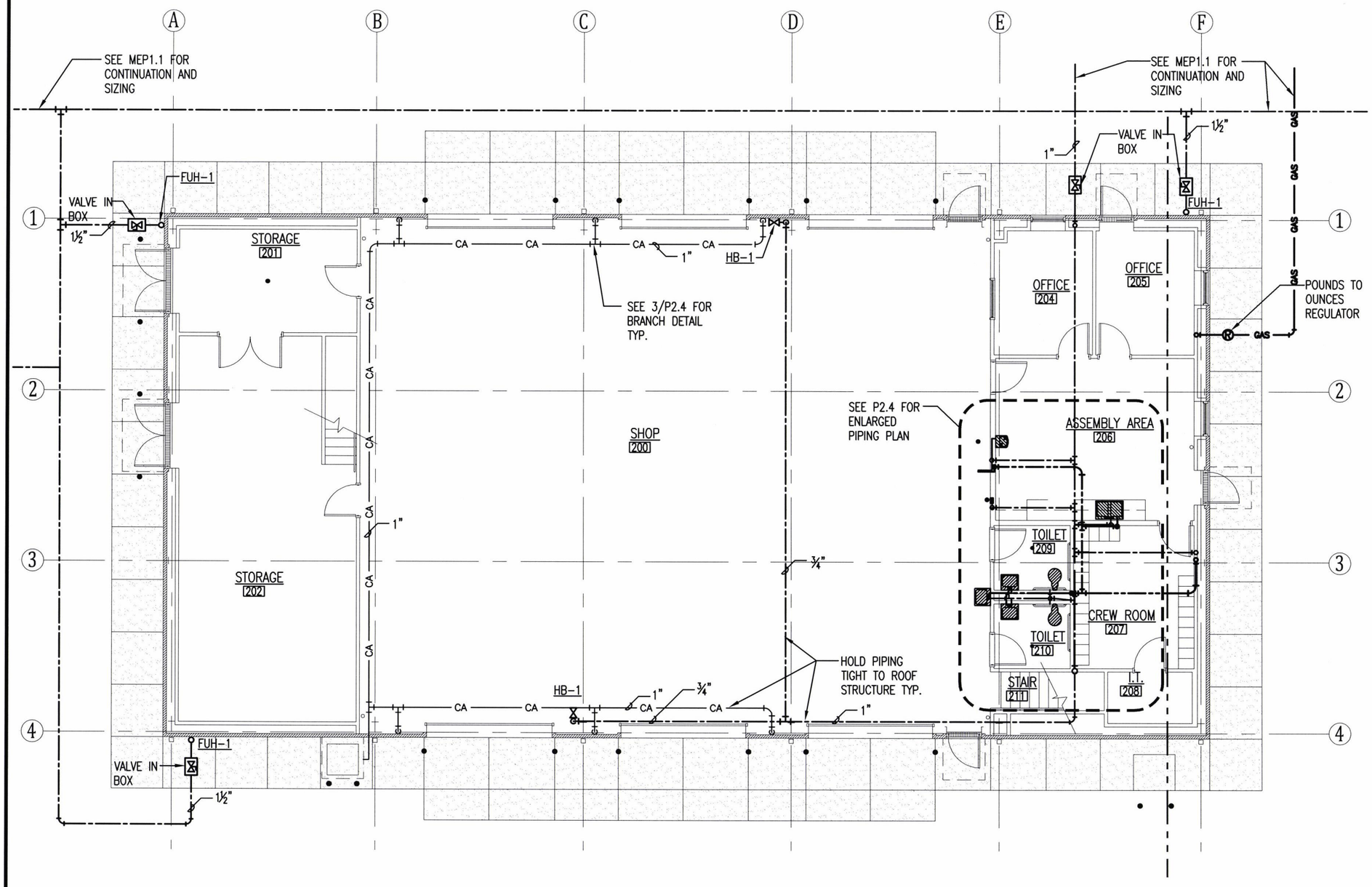

NORTH

1 / P2.3 A.H.Q. PIPING PLAN

SCALE : 3/32" = 1'-0"

ARDOT ARKANSAS DEPARTMENT OF TRANSPORTATION

PULASKI CO. AREA 1
HEADQUARTERS/
R.E. OFFICE 61 (S)
North Little Rock, Arkansas
Pulaski County

STATE OF ARKANSAS REGISTERED PROFESSIONAL ENGINEER No. 7527 JOSEPH A. SARTINI 5-18-18

DATE: MAY 29, 2018
JOB NO: 061448
DRAWN BY: KB
REVISIONS:

P2.3

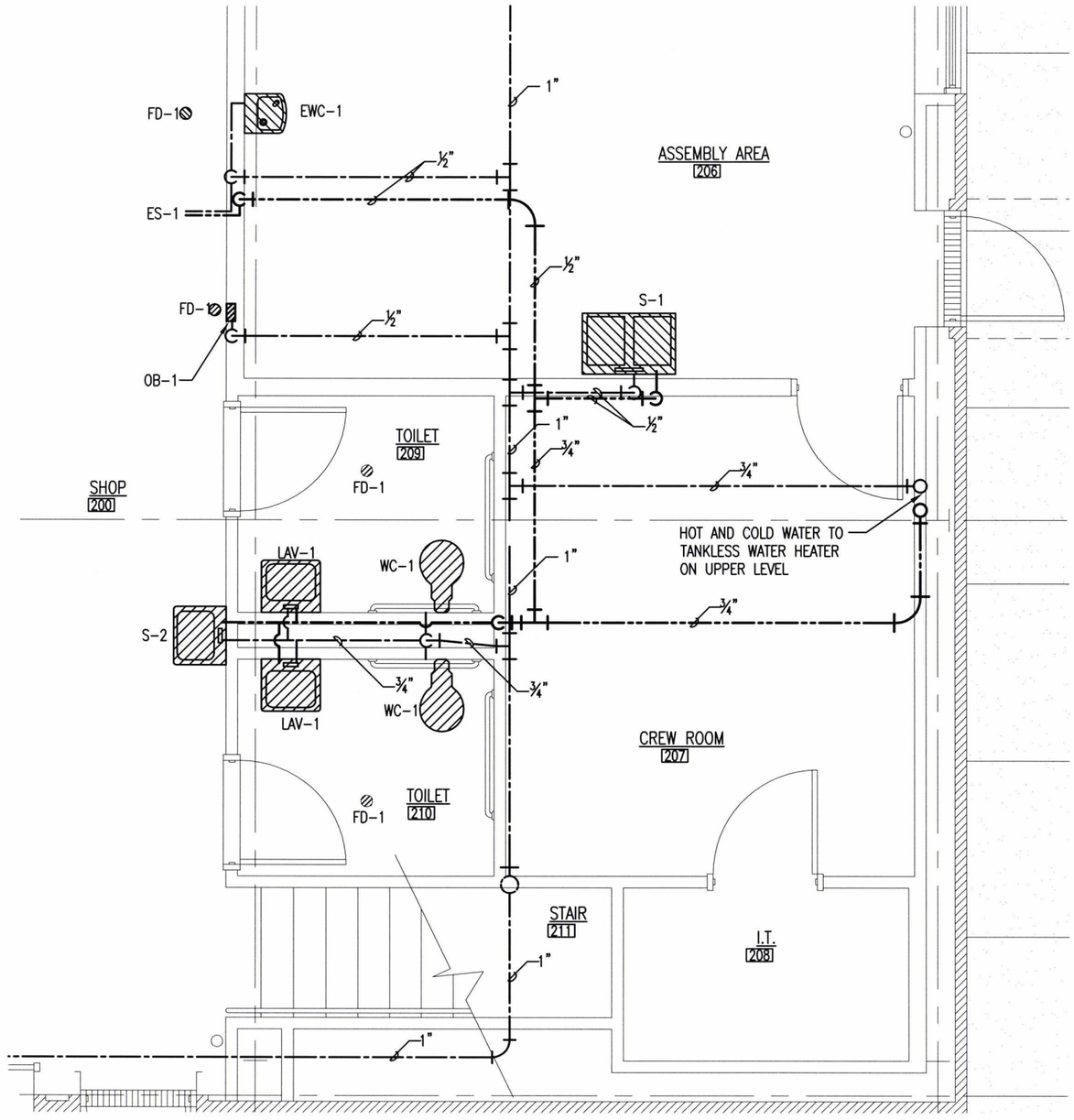

NORTH

1 / P2.4 A.H.Q. ENLARGED PIPING PLAN

SCALE : 3/32" = 1'-0"

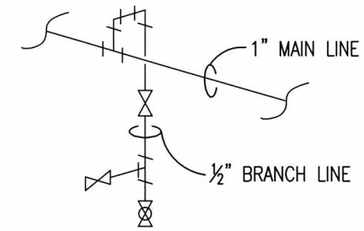

2 / P2.4 COMPRESSED AIR BRANCH DETAIL

SCALE : NO SCALE

ARDOT ARKANSAS DEPARTMENT OF TRANSPORTATION

PULASKI CO. AREA 1
HEADQUARTERS/
R.E. OFFICE 61 (S)
North Little Rock, Arkansas
Pulaski County

STATE OF ARKANSAS
REGISTERED PROFESSIONAL ENGINEER
No. 7527
JOSEPH A. SARGINI
7-12-18

DATE: MAY 29, 2018
JOB NO: 061448
DRAWN BY: KB
REVISIONS:

P2.4

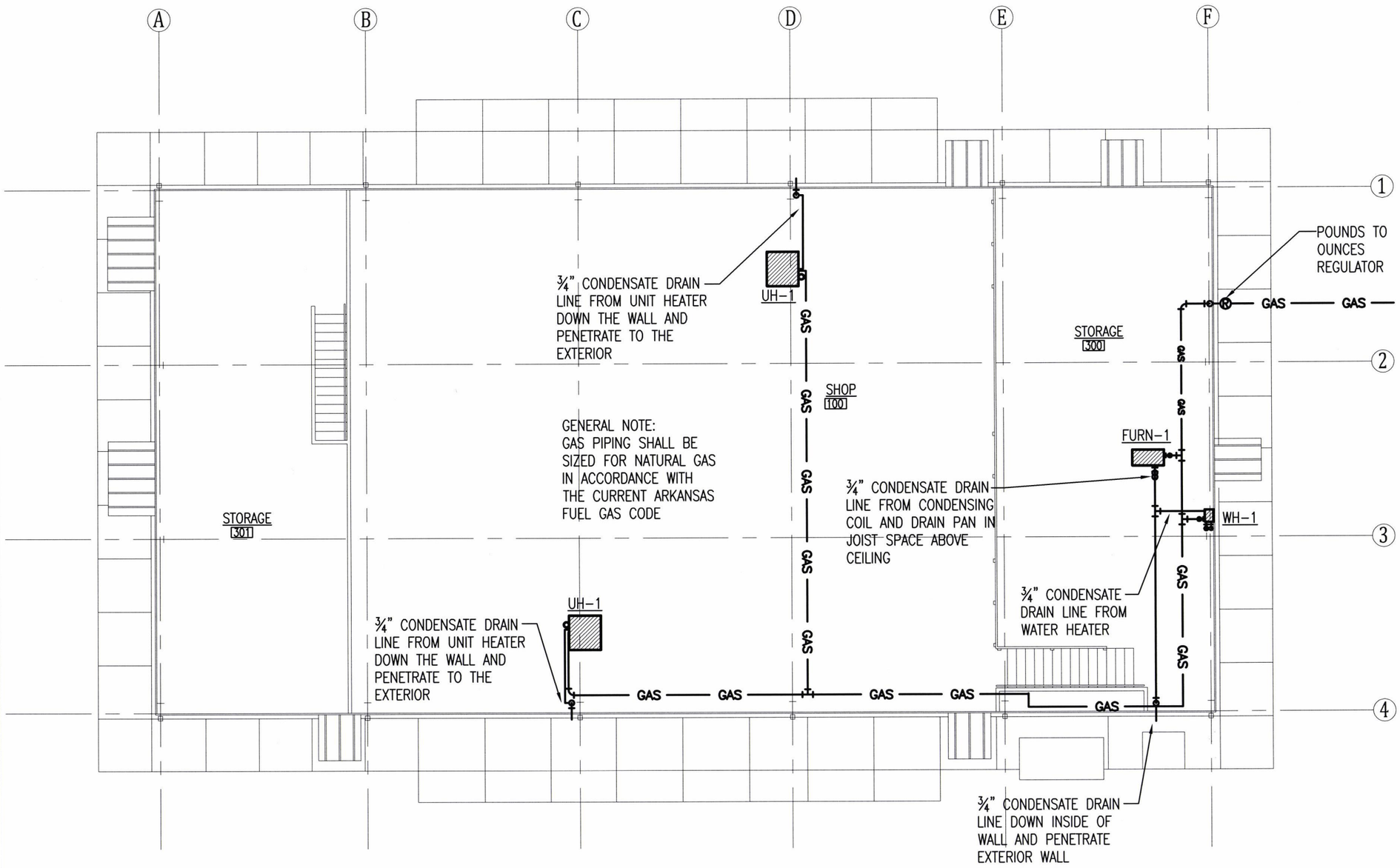

NORTH

1 / P2.5 A.H.Q. UPPER LEVEL PIPING PLAN

SCALE : 3/32" = 1'-0"

ARDOT ARKANSAS DEPARTMENT OF TRANSPORTATION

PULASKI CO. AREA 1 HEADQUARTERS/ R.E. OFFICE 61 (S)

North Little Rock, Arkansas

Pulaski County

STATE OF ARKANSAS REGISTERED PROFESSIONAL ENGINEER No. 7527 JOSEPH A. SARTINI 5-18-18

DATE: MAY 29, 2018

JOB NO: 061448

DRAWN BY: KB

REVISIONS:

P2.5

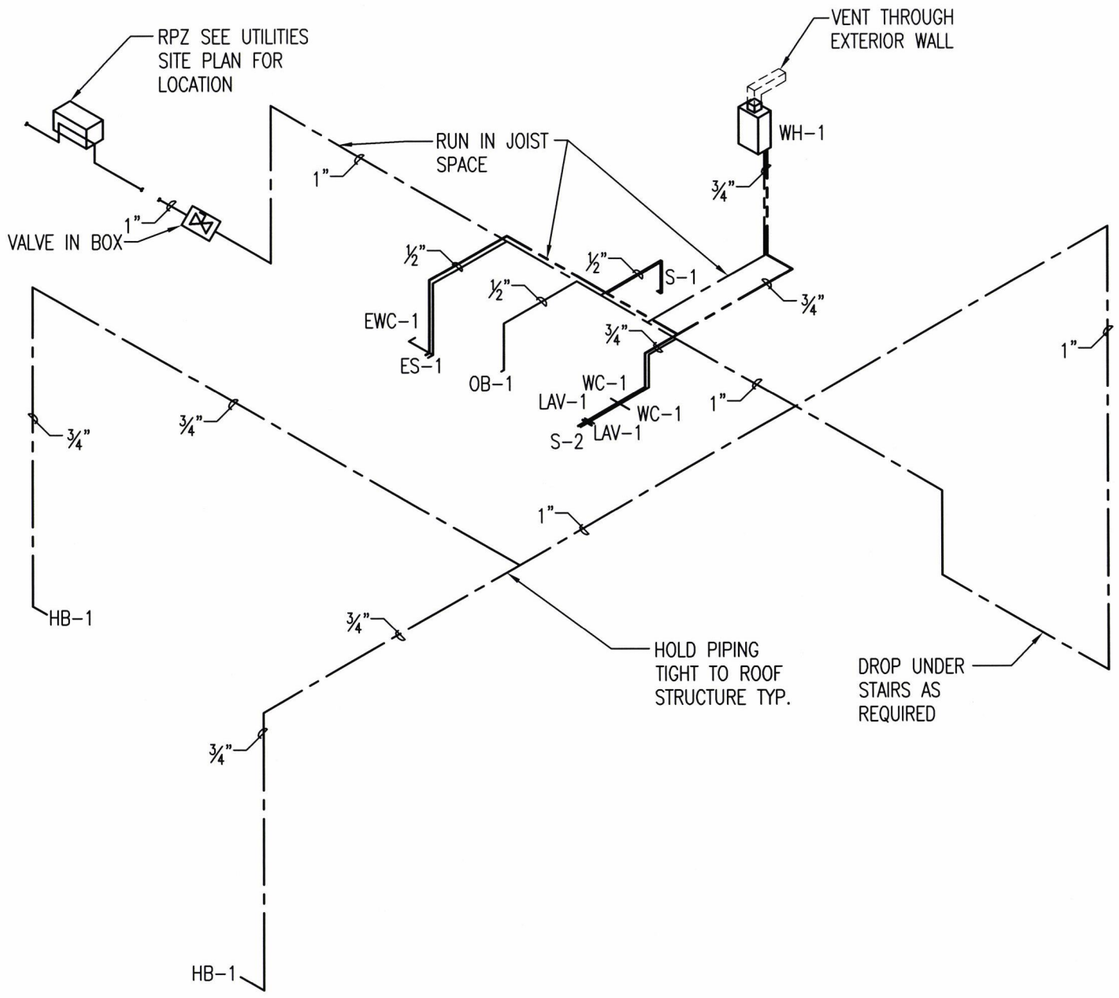

1 P2.6 DOMESTIC WATER RISER DIAGRAM

SCALE : NO SCALE

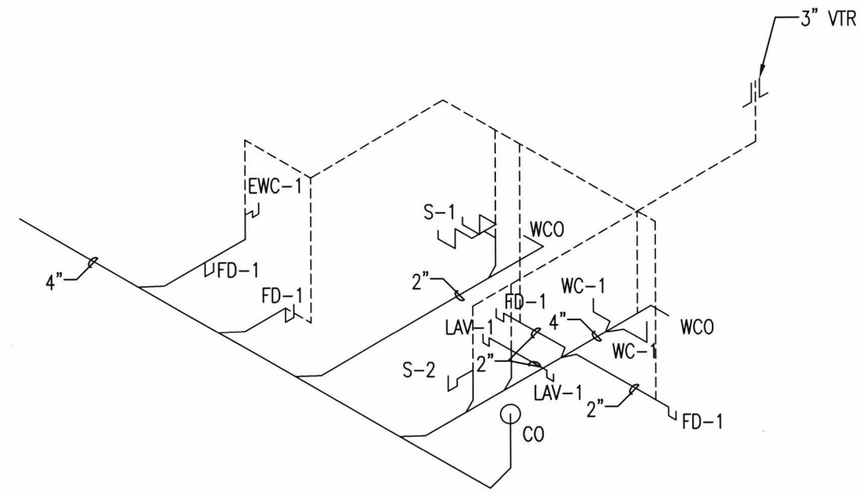

2 P2.6 SANITARY SEWER RISER DIAGRAM

SCALE : NO SCALE

ARDOT ARKANSAS DEPARTMENT OF TRANSPORTATION

PULASKI CO. AREA 1 HEADQUARTERS/ R.E. OFFICE 61 (S)

North Little Rock, Arkansas

Pulaski County

STATE OF ARKANSAS REGISTERED PROFESSIONAL ENGINEER No. 7527 JOSEPH A. SARTINI

5-22-18

DATE: MAY 29, 2018

JOB NO: 061448

DRAWN BY: KB

REVISIONS:

P2.6

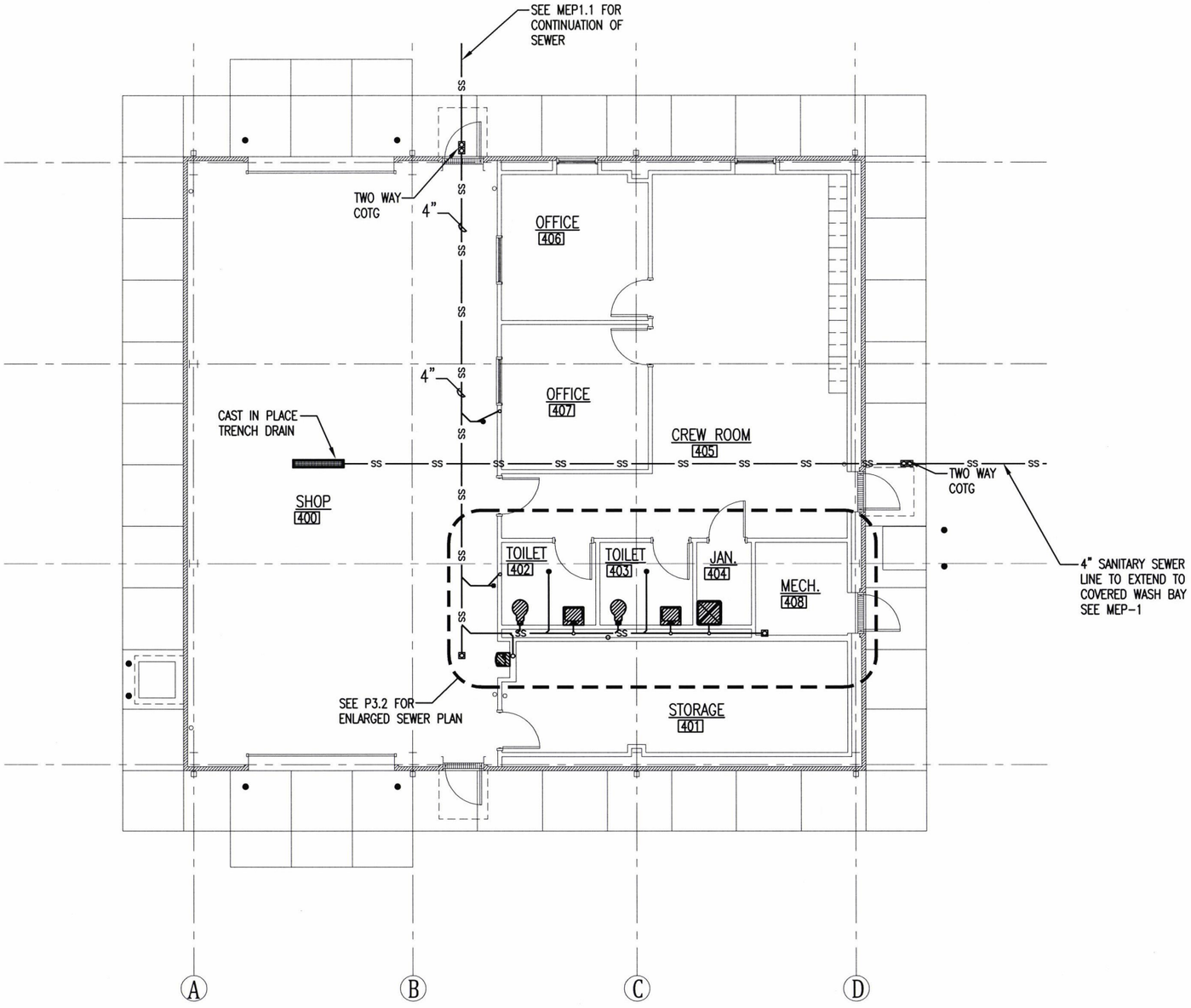

NORTH

1 / P3.1 SEALING CREW SANITARY SEWER PLAN

SCALE : 3/32" = 1'-0"

ARDOT ARKANSAS DEPARTMENT OF TRANSPORTATION

PULASKI CO. AREA 1 HEADQUARTERS/ R.E. OFFICE 61 (S)

North Little Rock, Arkansas

Pulaski County

STATE OF ARKANSAS REGISTERED PROFESSIONAL ENGINEER No. 7527 JOSEPH A. SARTINI 5-29-18

DATE: MAY 29, 2018

JOB NO: 061448

DRAWN BY: KB

REVISIONS:

P3.1

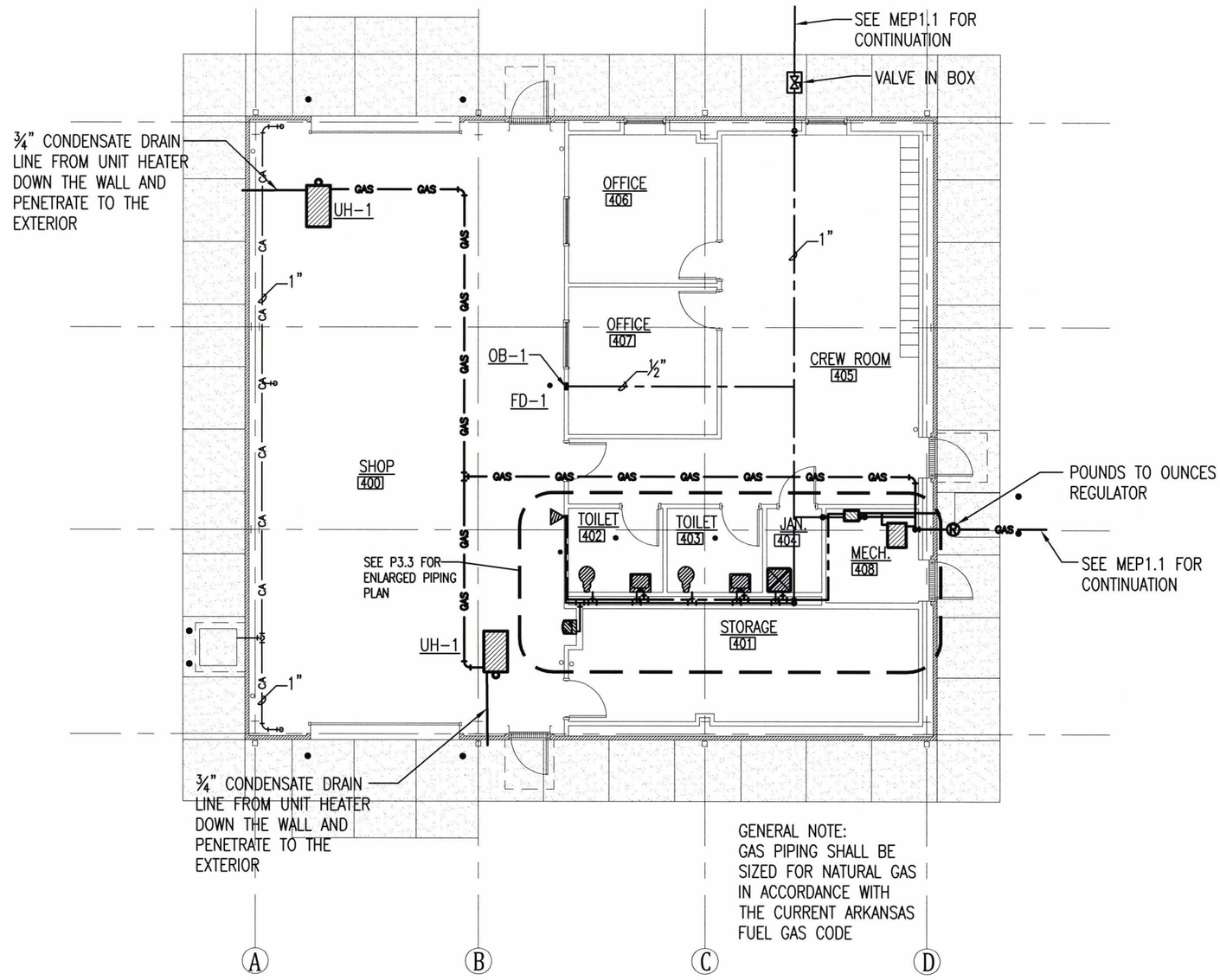

NORTH

1 / P3.2 SEALING CREW PIPING PLAN

SCALE : 3/32" = 1'-0"

ARDOT ARKANSAS DEPARTMENT OF TRANSPORTATION

PULASKI CO. AREA 1 HEADQUARTERS/ R.E. OFFICE 61 (S)

North Little Rock, Arkansas

Pulaski County

STATE OF ARKANSAS REGISTERED PROFESSIONAL ENGINEER No. 7527 JOSEPH A. SARTINI

DATE: MAY 29, 2018

JOB NO: 061448

DRAWN BY: KB

REVISIONS:

P3.2

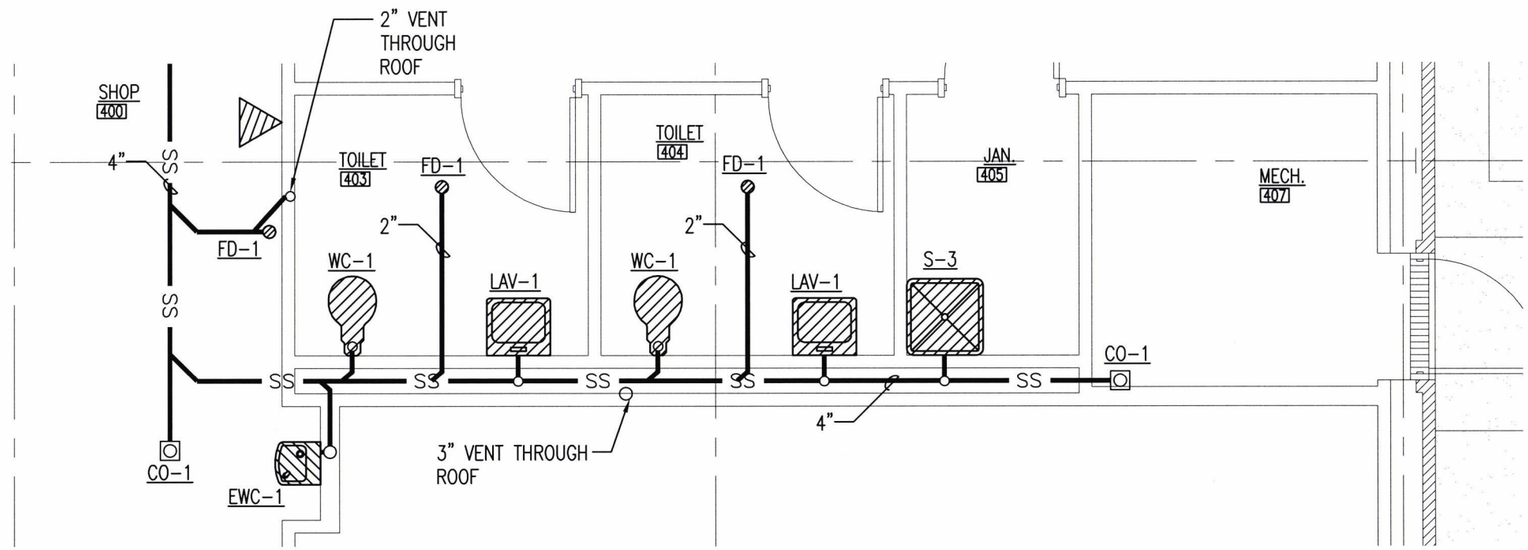

NORTH

1 / P3.4 SEALING CREW ENLARGED SANITARY SEWER PLAN

SCALE : ¼" = 1'-0"

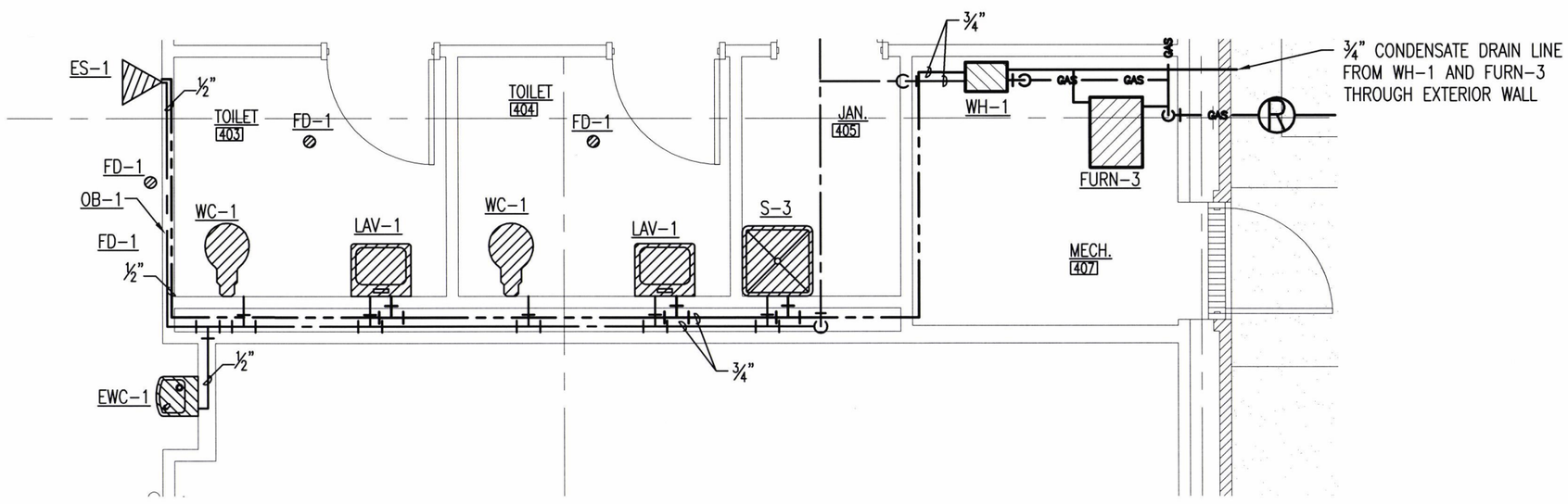

NORTH

2 / P3.4 SEALING CREW ENLARGED PIPING PLAN

SCALE : ¼" = 1'-0"

ARDOT ARKANSAS DEPARTMENT OF TRANSPORTATION

PULASKI CO. AREA 1 HEADQUARTERS/ R.E. OFFICE 61 (S)
North Little Rock, Arkansas
Pulaski County

STATE OF ARKANSAS REGISTERED PROFESSIONAL ENGINEER No. 7527 JOSEPH A. SARDINI 5-18-18

DATE: MAY 29, 2018
JOB NO: 061448
DRAWN BY: KB
REVISIONS:

P3.3

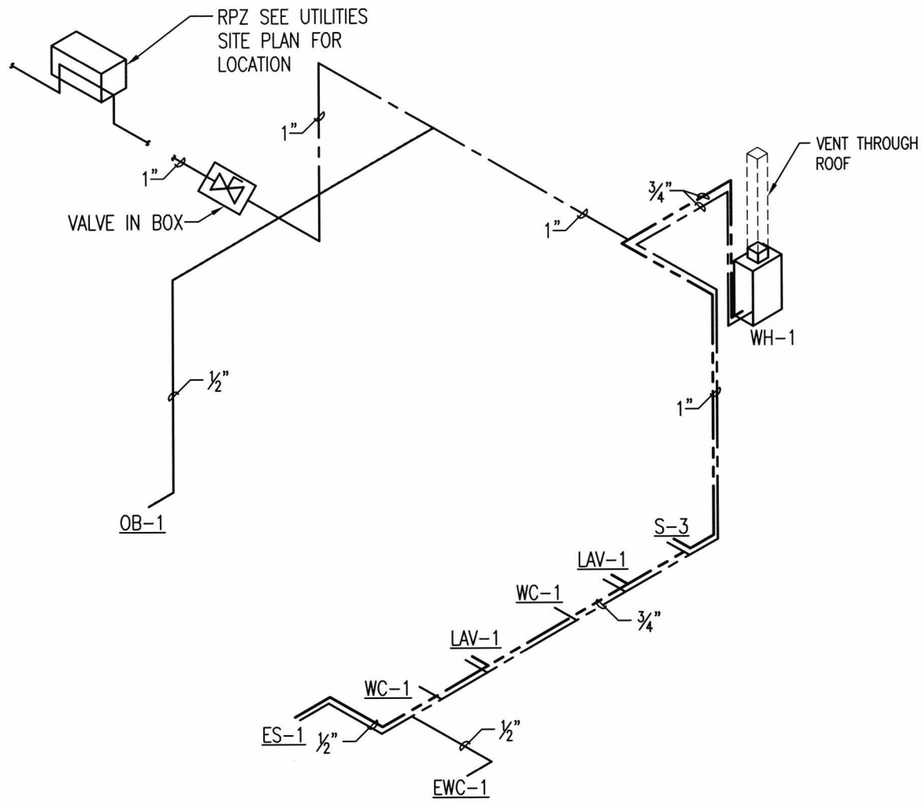

1 P3.5 DOMESTIC WATER RISER DIAGRAM
SCALE : NO SCALE

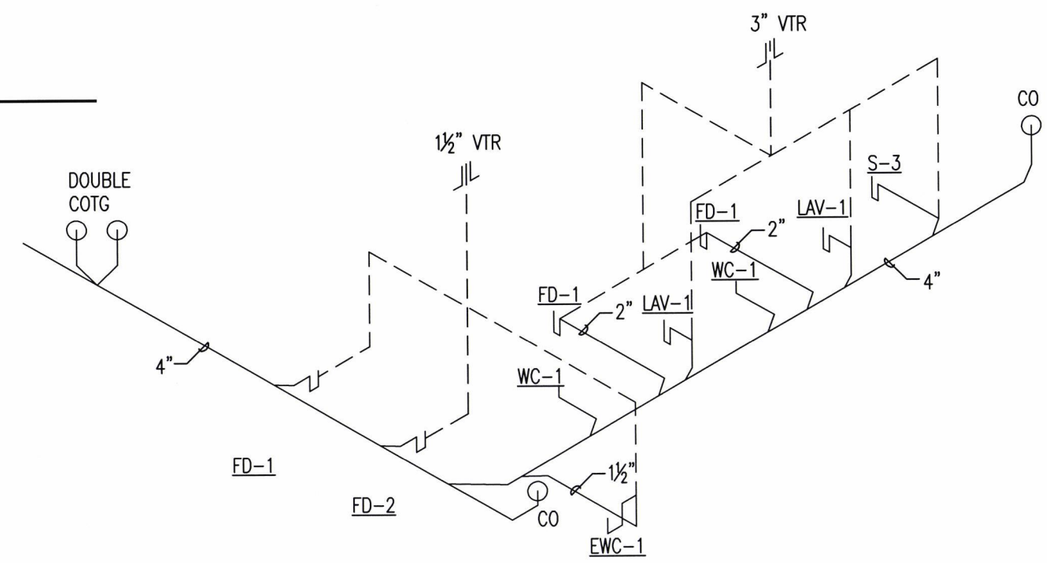

2 P3.5 SANITARY SEWER RISER DIAGRAM
SCALE : NO SCALE

ARDOT ARKANSAS DEPARTMENT OF TRANSPORTATION

PULASKI CO. AREA 1 HEADQUARTERS/ R.E. OFFICE 61 (S)
North Little Rock, Arkansas
Pulaski County

STATE OF ARKANSAS REGISTERED PROFESSIONAL ENGINEER No. 7527 JOSEPH A. SARTINI 5-18-18

DATE: MAY 29, 2018
JOB NO: 061448
DRAWN BY: KB
REVISIONS:

P3.4

PLUMBING FIXTURE SCHEDULE

MARK	MANUFACTURER	MODEL	REMARKS
WC-1	AMERICAN STANDARD	3461.660.020 "MADERA" 1.6 GPF ADA EVERCLEAN TOILET WITH SELECTRONIC EXPOSED BATTERY FLUSH VALVE SYSTEM PROVIDE 5910.110.020 SEAT	RIM SHALL BE MOUNTED AT 17" A.F.F.
LAV-1	AMERICAN STANDARD	0356.421 "LUCERNE" WALL MOUNTED SINK ADA WITH 1340M.119 PILLAR TAP FAUCET WITH EXTENDED SPOUT 0.5 GPM NON-AERATED SPRAY	RIM SHALL BE MOUNTED AT 34" A.F.F. PROVIDE CONCEALED CARRIER AND ADA COMPLIANT INSULATION WRAP ON EXPOSED PIPING AND DRAIN
S-1	AMERICAN STANDARD	15DB.332284 "PREVOIR" 18 GAUGE STAINLESS STEEL DROP-IN 33⅜" BY 22" 2-BOWL KITCHEN SINK WITH 4205.001 "RELIANT" SINGLE CONTROL KITCHEN FAUCET	
S-2	AMERICAN STANDARD	7695.008 "AKRON" CAST IRON WALL MOUNTED SERVICE SINK WITH 8351.076 SERVICE SINK FAUCET WITH VACUUM BREAKER SPOUT AND 7798.020 TRAP STANDARDS	
EWC-1	ELKAY	EZS8L 120 VOLT WALL MOUNTED BARRIER FREE DRINKING FOUNTAIN	SPOUT SHALL BE MOUNTED AT 36" A.F.F.
FD-1	WADE	1100STD CAST IRON FLOOR DRAIN WITH FLANGE, ½" PRIMER TAP, 5" DIA. NICKEL BRONZE STRAINER AND "P" TRAP WITH MODEL SS2009V TRAP SEALER BY RECTORSEAL	
FD-2	WADE	1100STD CAST IRON FLOOR DRAIN WITH FLANGE, ½" PRIMER TAP, 5" DIA. NICKEL BRONZE STRAINER NO "P" TRAP REQUIRED	
WH-1	RINNAI	REU-VC2528FFU-US TANKLESS WATER HEATER WITH TANKLESS WATER HEATER DRAIN PAN	MOUNT TO UNI-STRUT FRAMING ATTACHED TO BUILDING STRUCTURE
ES-1	HAWS	8320-8325 COMBINATION SHOWER AND EYE/FACE WASH WITH AXION MSR PROVIDE WATTS LFMMV MIXING VALVE	
OB-1	IPS CORPORATION	MDWB1AB ICE MACHINE OUTLET BOX W/ ⅜" OUTLET QTR. TURN VALVE ½" SWEAT / WITH ARRESTER	
HB-1	McMASTER-CARR	2947K5 HIGH FLOW FAUCET ONE T-HANDLE, HOT OR COLD WATER, ¾" NPT MALE INLET	
FUH-1	WOODFORD	U150 FREEZELESS UTILITY HYDRANT	
CO	WADE	6004,1 CAST IRON CLEANOUT WITH THREADED ADJUSTABLE HOUSING, FLANGED FERRULE AND ROUND SECURED HEAVY DUTY TOP.	
COTG	WADE	6000Z CAST IRON CLEANOUT WITH THREADED ADJUSTABLE HOUSING, FLANGED FERRULE WITH ROUND SCORIATED CAST IRON TRACTOR TYPE COVER.	

PLUMBING SYMBOL LEGEND

SYMBOL	DESCRIPTION	SYMBOL	DESCRIPTION
—·—	DOMESTIC COLD WATER		ELBOW UP
—··—	DOMESTIC HOT WATER		TEE
—SS—	SANITARY SEWER		TEE DOWN
—CA—	COMPRESSED AIR		TEE UP
—GAS—	GAS NATURAL OR PROPANE		GATE VALVE
	ELBOW	HB	HOSE BIB
	ELBOW DOWN	FUH	FREEZELESS UTILITY HYDRANT

ARDOT ARKANSAS DEPARTMENT OF TRANSPORTATION

PULASKI CO. AREA 1 HEADQUARTERS/ R.E. OFFICE 61 (S)
North Little Rock, Arkansas
Pulaski County

STATE OF ARKANSAS REGISTERED PROFESSIONAL ENGINEER No. 7527 JOSEPH A. SARTENI 5-29-18

DATE: MAY 29, 2018
JOB NO: 061448
DRAWN BY: KB
REVISIONS:

P4.1

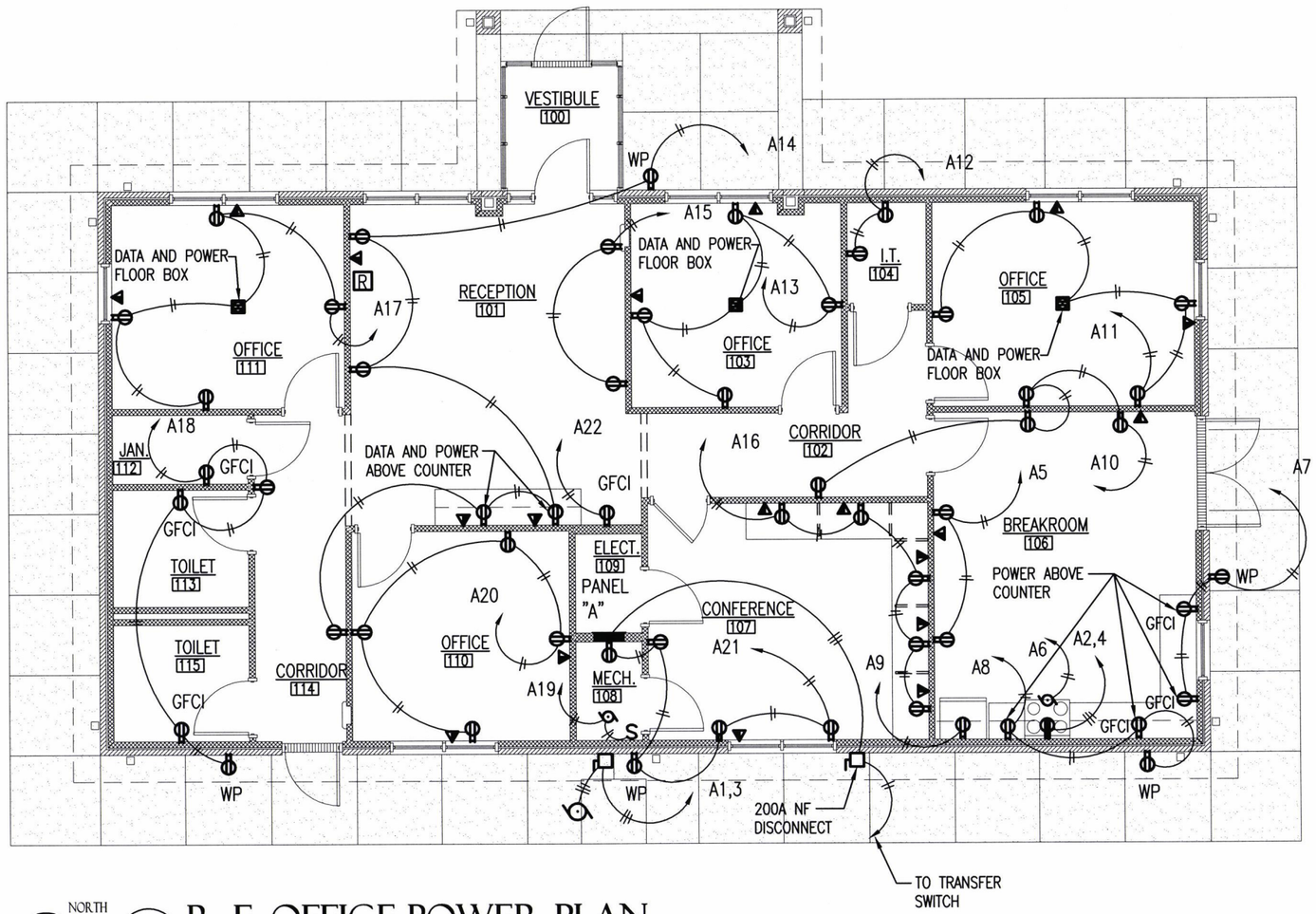

NORTH

1
E1.1

R. E. OFFICE POWER PLAN

SCALE : 1/8" = 1'-0"

ARDOT
ARKANSAS DEPARTMENT OF TRANSPORTATION

PULASKI CO. AREA 1
HEADQUARTERS/
R.E. OFFICE 61 (S)
North Little Rock, Arkansas
Pulaski County

STATE OF ARKANSAS
REGISTERED PROFESSIONAL ENGINEER
No. 7527
JOSEPH A. SARTINI
5-29-18

DATE: MAY 29, 2018
JOB NO: 061448
DRAWN BY: KB
REVISIONS:

E1.1

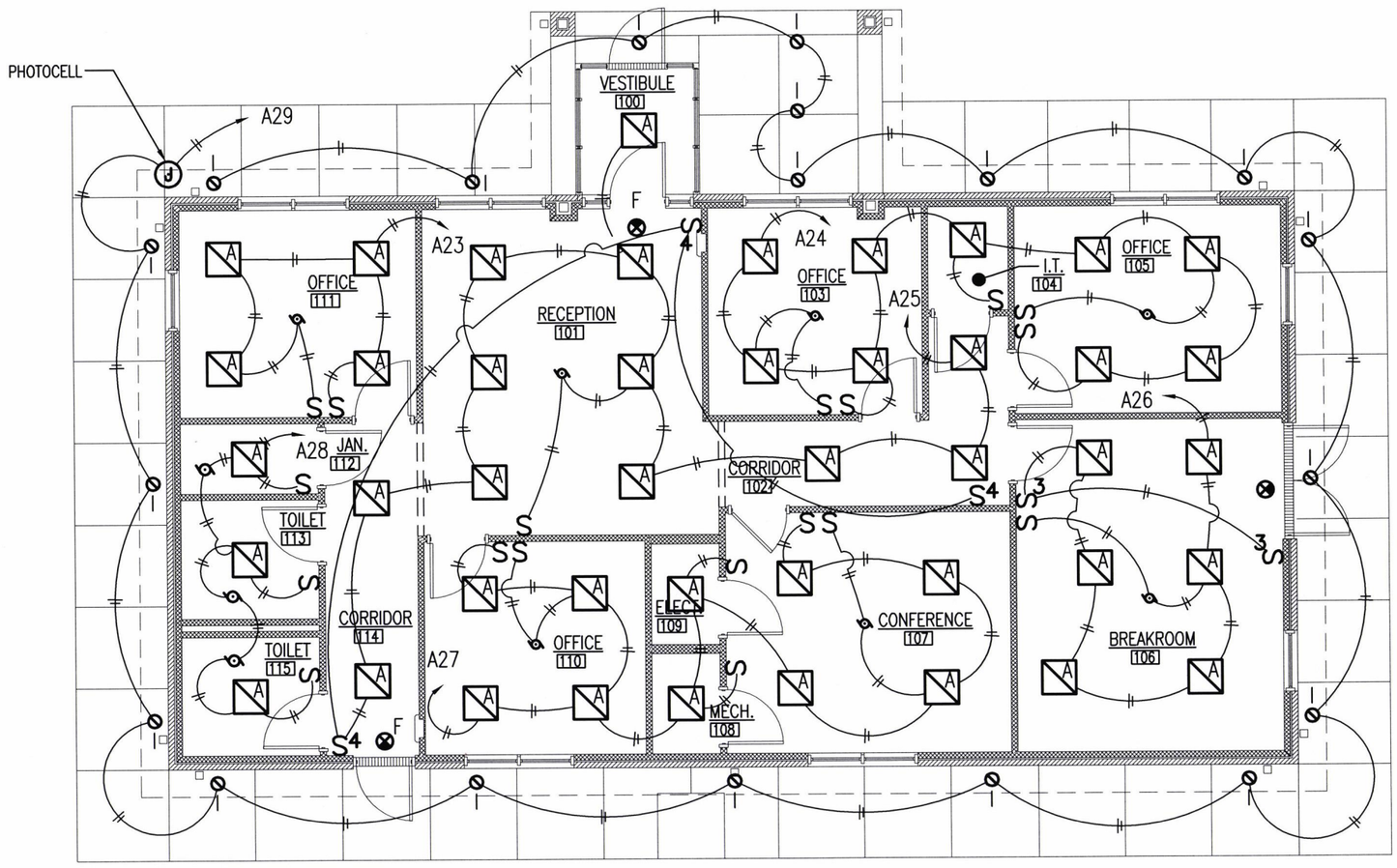

NORTH

1 / E1.2 R. E. OFFICE LIGHTING PLAN

SCALE : 1/8" = 1'-0"

ARDOT ARKANSAS DEPARTMENT OF TRANSPORTATION

PULASKI CO. AREA 1
HEADQUARTERS/
R.E. OFFICE 61 (S)
North Little Rock, Arkansas
Pulaski County

STATE OF ARKANSAS
REGISTERED PROFESSIONAL ENGINEER
No. 7527
JOSEPH A. SARTINI
5-28-18

DATE: MAY 29, 2018
JOB NO: 061448
DRAWN BY: KB
REVISIONS:

E1.2

PANELBOARD: A	VOLTAGE: 120/240V,1ø,3W	BUS RATING: 200A	MAIN: LUGS ONLY
LOCATION: IT 108	MFG. AND TYPE: SQ-D TYPE NQOD	EQUIP. GRD. BUS: YES	ISOL. GRD. BUS: NO
MOUNTING: RECESSED	ENCLOSURE: NEMA 1	MINIMUM A.I.C. RATING: 22K	FED FROM: MAIN DISCONNECT

SERVES	P/T	CIR. NO.	A ø	B ø	CIR. NO.	P/T	SERVES
CU-1	2/60	1			2	1/40	RANGE
		3			4		
RECEPTACLES	1/20	5			6	1/20	RECEPTACLE
		7			8	1/20	RECEPTACLES
		9			10		
		11			12		
		13			14		
		15			16		
		17			18		
FURN-1	1/30	19			20		
EWC-1	1/20	21			22		
LIGHTS		23			24	1/20	LIGHTS
		25			26		
		27			28		
EXTERIOR LIGHTS		29			30	1/20	POLE MOUNTED LIGHTS
SPARE		31			32		
		33			34	1/20	POLE MOUNTED LIGHTS
		35			36		
		37			38		SPARE
		39			40		

ARDOT ARKANSAS DEPARTMENT OF TRANSPORTATION

PULASKI CO. AREA 1 HEADQUARTERS/ R.E. OFFICE 61 (S)
North Little Rock, Arkansas
Pulaski County

STATE OF ARKANSAS REGISTERED PROFESSIONAL ENGINEER No. 7527 JOSEPH A. SARTINI 5-18-18

DATE: MAY 29, 2018
JOB NO: 061448
DRAWN BY: KB
REVISIONS:

E1.3

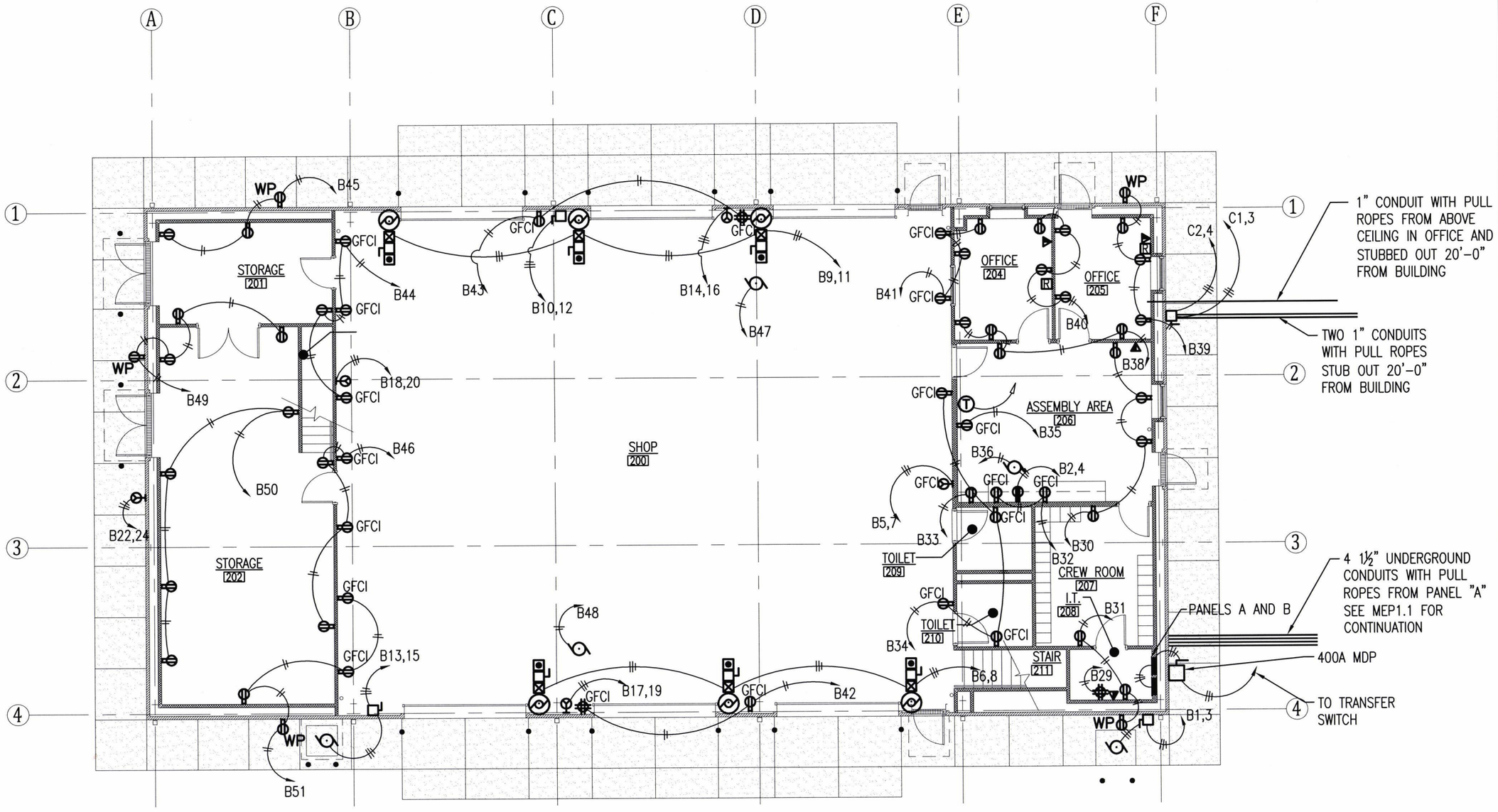

NORTH

1 / E2.1 A.H.Q. POWER PLAN

SCALE : 3/32" = 1'-0"

ARDOT ARKANSAS DEPARTMENT OF TRANSPORTATION

PULASKI CO. AREA 1
HEADQUARTERS/
R.E. OFFICE 61 (S)
North Little Rock, Arkansas
Pulaski County

STATE OF ARKANSAS REGISTERED PROFESSIONAL ENGINEER No. 7527 JOSEPH A. SARGENT 5-29-18

DATE: MAY 29, 2018
JOB NO: 061448
DRAWN BY: KB
REVISIONS:

E2.1

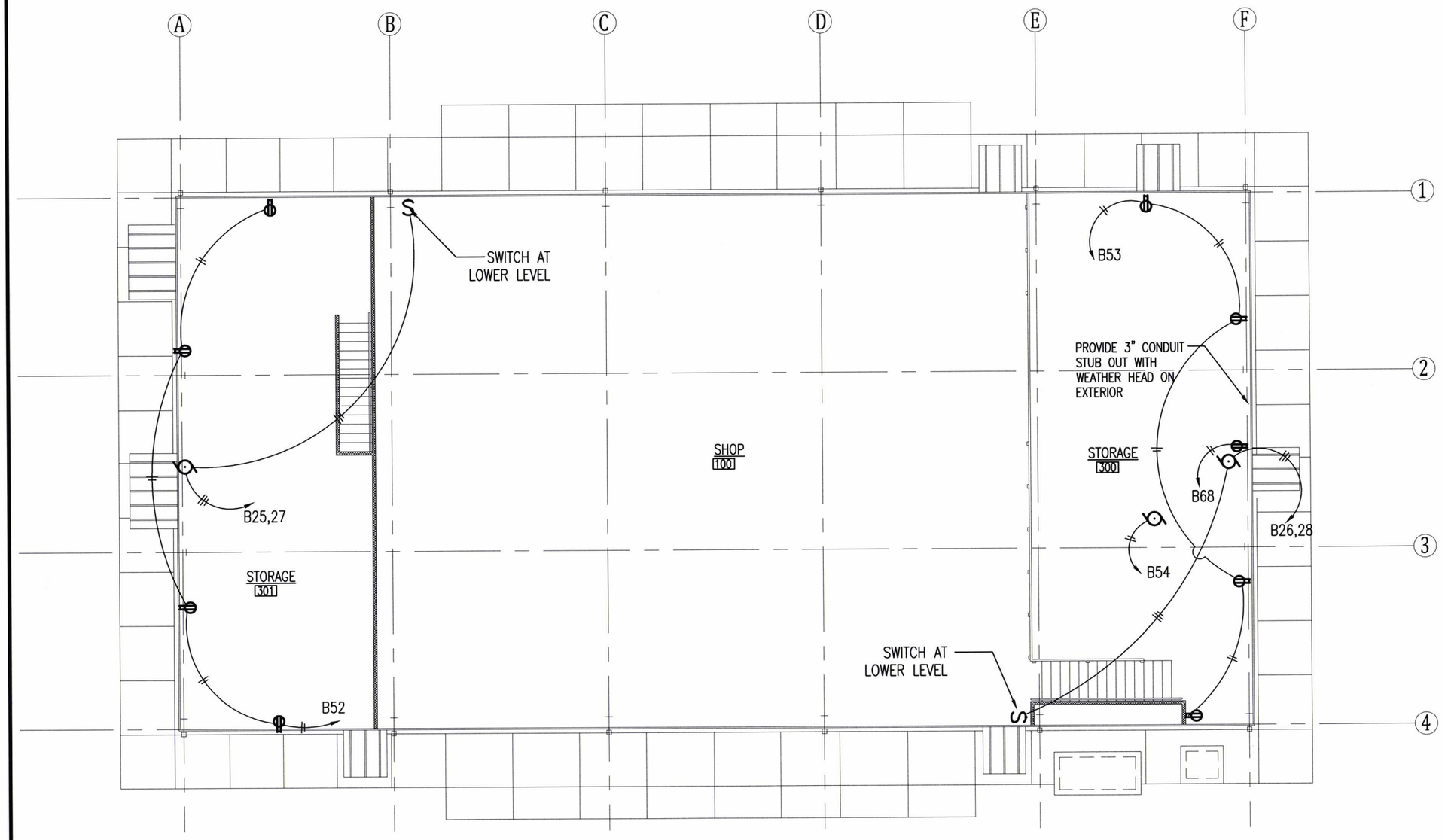

NORTH

1 / E2.2 A.H.Q. UPPER LEVEL POWER PLAN

SCALE : 3/32" = 1'-0"

ARDOT ARKANSAS DEPARTMENT OF TRANSPORTATION

PULASKI CO. AREA 1
HEADQUARTERS/
R.E. OFFICE 61 (S)
North Little Rock, Arkansas
Pulaski County

STATE OF ARKANSAS
REGISTERED PROFESSIONAL ENGINEER
No. 7527
JOSEPH A. SARTINI
5-29-18

DATE: MAY 29, 2018
JOB NO: 061448
DRAWN BY: KB
REVISIONS:

E2.2

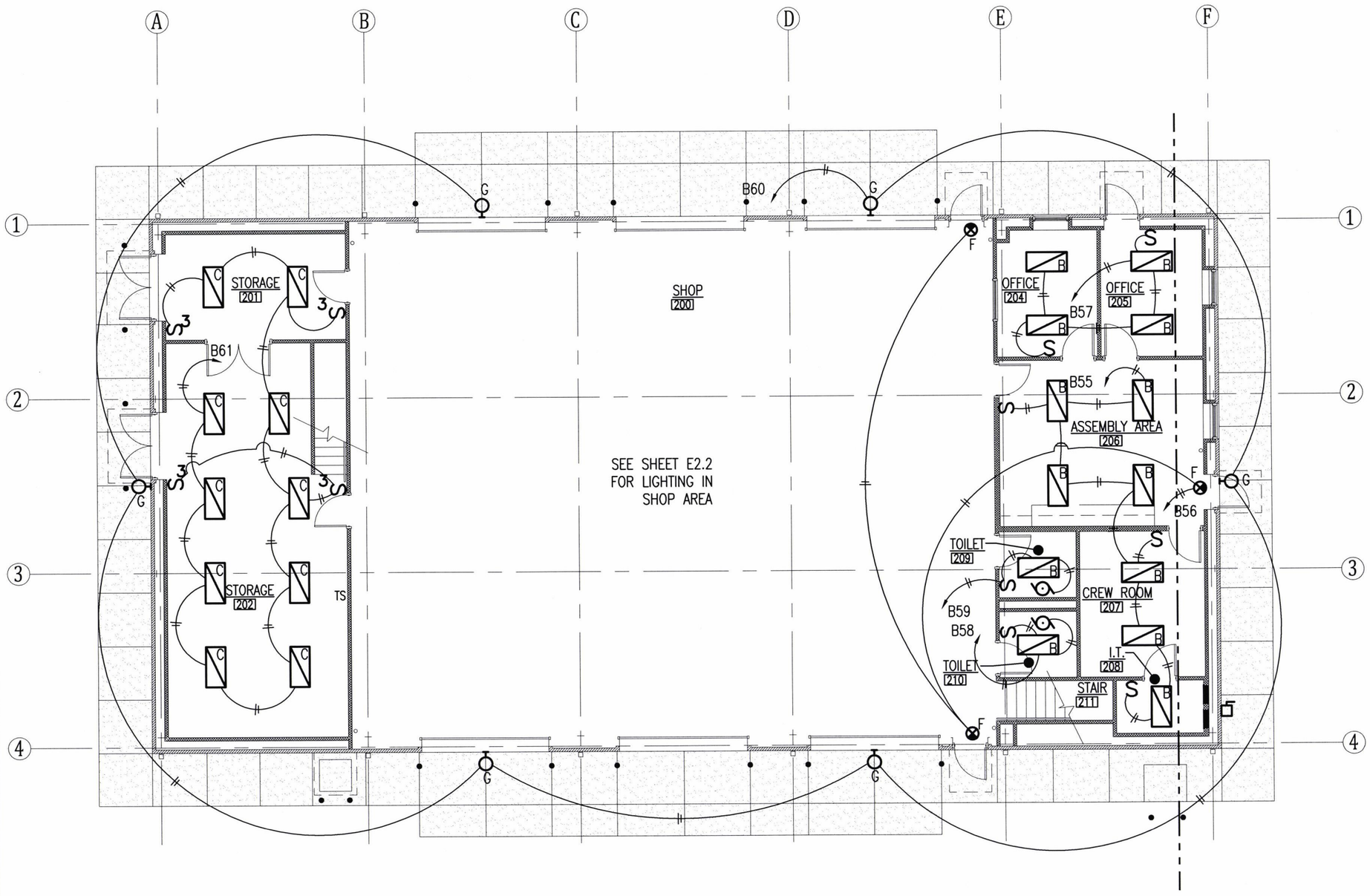

NORTH

1 / E2.3 A.H.Q. LIGHTING PLAN

SCALE : 3/32" = 1'-0"

ARDOT ARKANSAS DEPARTMENT OF TRANSPORTATION

PULASKI CO. AREA 1
HEADQUARTERS/
R.E. OFFICE 61 (S)
North Little Rock, Arkansas
Pulaski County

STATE OF ARKANSAS
REGISTERED PROFESSIONAL ENGINEER
No. 7527
JOSEPH A. SARTINI

DATE: MAY 29, 2018
JOB NO: 061448
DRAWN BY: KB
REVISIONS:

E2.3

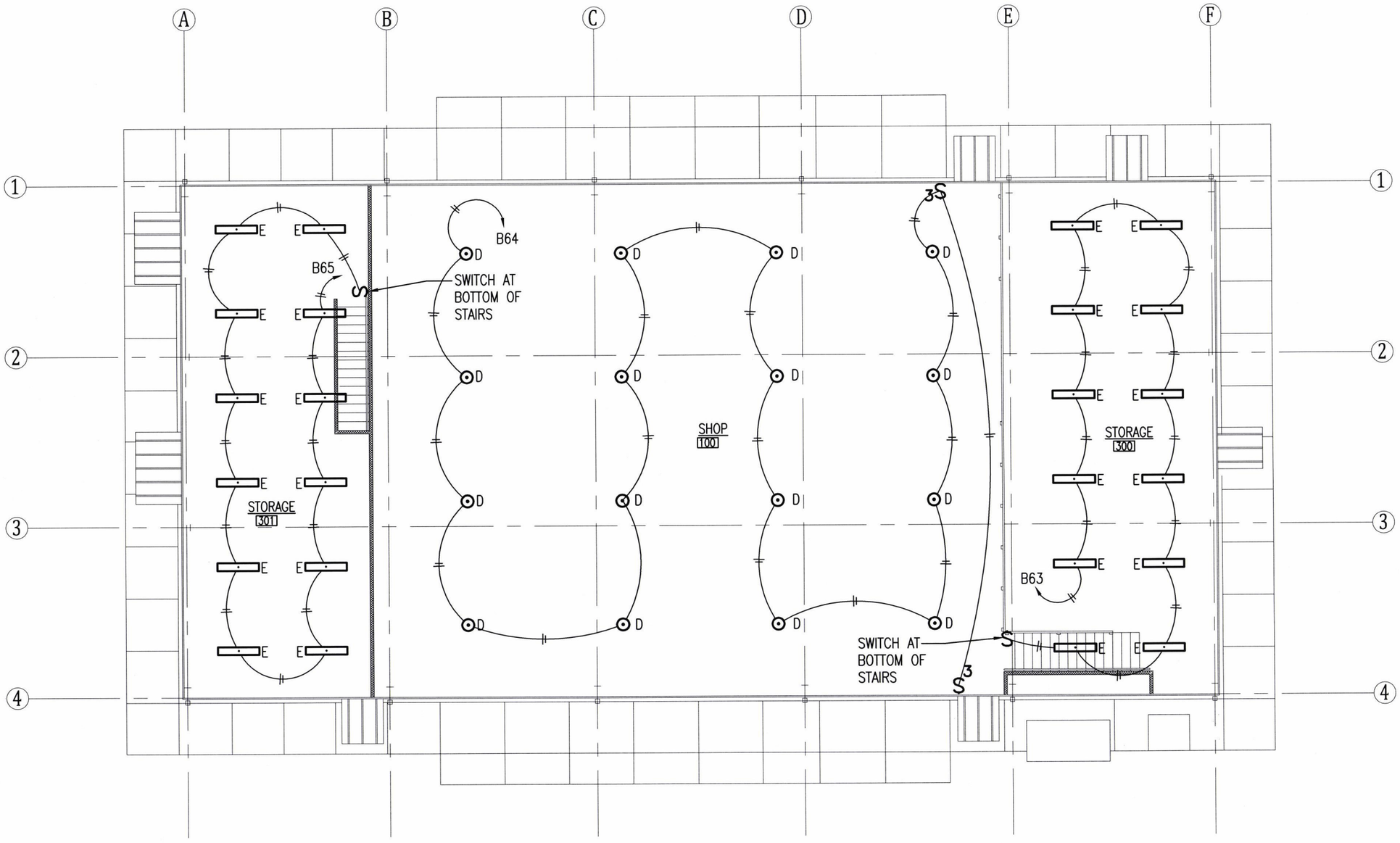

NORTH

1
E2.4

A.H.Q. UPPER LEVEL LIGHTING PLAN

SCALE : 3/32" = 1'-0"

ARDOT
ARKANSAS DEPARTMENT OF TRANSPORTATION

PULASKI CO. AREA 1
HEADQUARTERS/
R.E. OFFICE 61 (S)
North Little Rock, Arkansas
Pulaski County

STATE OF ARKANSAS
REGISTERED PROFESSIONAL ENGINEER
No. 7527
JOSEPH A. SARTINI
5-29-18

DATE: MAY 29, 2018
JOB NO: 061448
DRAWN BY: KB
REVISIONS:

E2.4

PANELBOARD: B	VOLTAGE: 120/240V,1ø,3W	BUS RATING: 200A	MAIN: LUGS ONLY
LOCATION: IT 108	MFG. AND TYPE: SQ-D TYPE NQOD	EQUIP. GRD. BUS: YES	ISOL. GRD. BUS: NO
MOUNTING: RECESSED	ENCLOSURE: NEMA 1	MINIMUM A.I.C. RATING: 22K	FED FROM: MAIN DISCONNECT

SERVES	P/T	CIR. NO.	A ø	B ø	CIR. NO.	P/T	SERVES
CU-1	2/60	1	●		2	2/40	RANGE
		3		●	4		
ICE MACHINE	2/20	5	●		6	2/40	OVERHEAD DOORS
		7		●	8		
OVERHEAD DOORS	2/40	9	●		10	2/60	TRUCK LIFT
		11		●	12		
AIR COMPRESSOR	2/60	13	●		14	2/60	WELDER
		15		●	16		
WELDER	2/60	17	●		18	2/60	WELDER
		19		●	20		
HP-1	2/20	21	●		22	2/20	WASH RACK
		23		●	24		
EF-2	2/30	25	●		26	2/30	EF-2
		27		●	28		
RECEPTACLES	1/20	29	●		30	1/20	RECEPTACLES
↓		31		●	32	↓	↓
↓		33	●		34		
RECEPTACLE AT EWC-1		35		●	36	1/30	VENT HOOD AT ASSEMBLY AREA 107
RECEPTACLES		37	●		38	1/20	RECEPTACLES
↓		39		●	40	↓	↓
↓		41	●		42		
↓		43		●	44		
↓	↓	45	●		46	↓	↓
UH-1	1/30	47		●	48	1/30	UH-1
RECEPTACLES	1/20	49	●		50	1/20	RECEPTACLES
↓	↓	51		●	52	↓	↓
↓		53	●		54	1/30	FURNACE F-1
LIGHTS		55		●	56		LIGHTS
↓		57	●		58		↓
↓		59		●	60		
↓		61	●		62		
↓	↓	63		●	64	↓	↓
SHOP LIGHTS	1/30	65	●		66	1/20	ALARM SYSTEM FOR DOSING TANK
SHOP LIGHTS	1/30	67		●	68	1/20	WATER HEATER
LIGHTS	1/20	69	●		70	1/20	RECEPTACLES FOR TRUCK HEATERS
LIGHTS	1/20	71		●	72	1/20	RECEPTACLES FOR TRUCK HEATERS
RECEPTACLE WASH RACK	2/20	73	●		74	2/100	PANEL B
		75		●	78		
SPARE		77	●		78		SPARE
↓		79		●	80	↓	↓
↓		81	●		82		
↓	↓	83		●	84	↓	↓

PANELBOARD: C	VOLTAGE: 120/240V,1ø,3W	BUS RATING: 100A	MAIN: LUGS ONLY
LOCATION: IT 108	MFG. AND TYPE: SQ-D TYPE NQOD	EQUIP. GRD. BUS: YES	ISOL. GRD. BUS: NO
MOUNTING: RECESSED	ENCLOSURE: NEMA 1	MINIMUM A.I.C. RATING: 22K	FED FROM: PANEL A

SERVES	P/T	CIR. NO.	A ø	B ø	CIR. NO.	P/T	SERVES
FUEL PUMPS	2/30	1	●		2	2/30	FUEL PUMPS
		3		●	4		
POLE MOUNTED LIGHTS	1/30	5	●		6	1/20	POLE MOUNTED LIGHTS
SEWER LIFT STATION	2/60	7		●	8		
		9	●		10	1/20	POLE MOUNTED LIGHTS
SPARE		11		●	12		
↓		13	●		14		SPARE
↓		15		●	16		↓
↓		17	●		18		
↓		19		●	20		
↓		21	●		22		
↓		23		●	24		
↓		25	●		26		
↓		27		●	28		
↓		29	●		30		↓

ARDOT ARKANSAS DEPARTMENT OF TRANSPORTATION

PULASKI CO. AREA 1 HEADQUARTERS/ R.E. OFFICE 61 (S)
North Little Rock, Arkansas
Pulaski County

STATE OF ARKANSAS REGISTERED PROFESSIONAL ENGINEER No. 7527 JOSEPH A. SARTINI

DATE: MAY 29, 2018
JOB NO: 061448
DRAWN BY: KB
REVISIONS:

E2.5

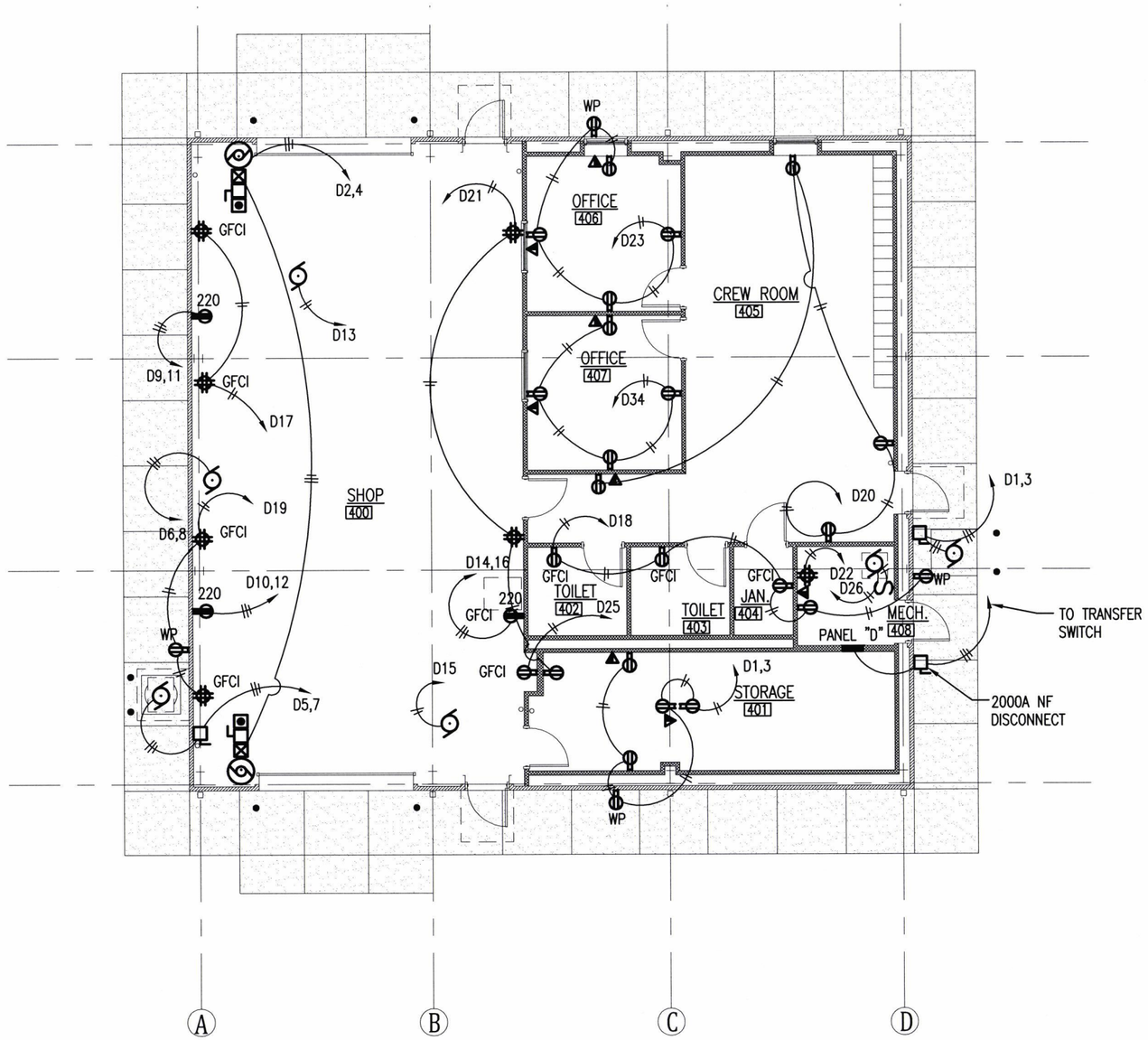

NORTH

1 / E3.1 SEALING CREW POWER PLAN

SCALE : 3/32" = 1'-0"

ARDOT ARKANSAS DEPARTMENT OF TRANSPORTATION

PULASKI CO. AREA 1
HEADQUARTERS/
R.E. OFFICE 61 (S)
North Little Rock, Arkansas
Pulaski County

STATE OF ARKANSAS
REGISTERED PROFESSIONAL ENGINEER
No. 7527
JOSEPH A. SARTINI
5-29-18

DATE: MAY 29, 2018
JOB NO: 061448
DRAWN BY: KB
REVISIONS:

E3.1

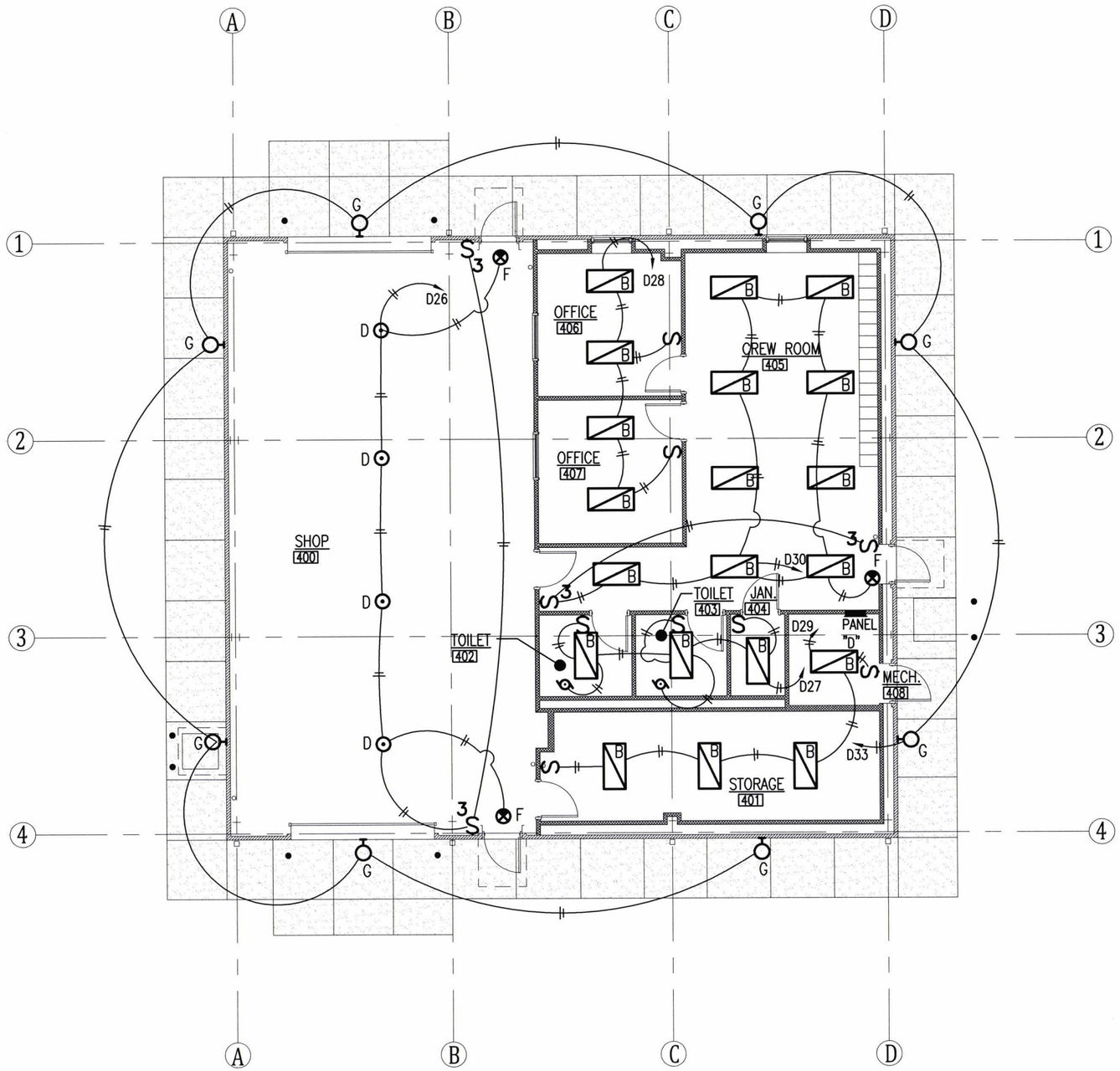

NORTH

1 / E3.2 SEALING CREW LIGHTING PLAN

SCALE : 3/32" = 1'-0"

ARDOT ARKANSAS DEPARTMENT OF TRANSPORTATION

PULASKI CO. AREA 1
HEADQUARTERS/
R.E. OFFICE 61 (S)
North Little Rock, Arkansas
Pulaski County

STATE OF ARKANSAS
REGISTERED PROFESSIONAL ENGINEER
No. 7527
JOSEPH A. SARTINI
5-29-18

DATE: MAY 29, 2018
JOB NO: 061448
DRAWN BY: KB
REVISIONS:

E3.2

PANELBOARD: D	VOLTAGE: 120/240V,1ø,3W	BUS RATING: 200A	MAIN: LUGS ONLY
LOCATION: MECHANICAL 407	MFG. AND TYPE: SQ-D TYPE NQOD	EQUIP. GRD. BUS: YES	ISOL. GRD. BUS: NO
MOUNTING: RECESSED	ENCLOSURE: NEMA 1	MINIMUM A.I.C. RATING: 22K	FED FROM: MAIN DISCONNECT

SERVES	P/T	CIR. NO.	A ø	B ø	CIR. NO.	P/T	SERVES
CU-3	2/60	1			2	2/40	OVERHEAD DOORS
		3			4		
AIR COMPRESSOR	2/60	5			6	2/30	EF-2
		7			8		
RECEPTACLE	2/60	9			10	2/60	RECEPTACLE
		11			12		
UH-1	1/30	13			14	2/20	ICE MACHINE SHOP
UH-1	1/30	15			16		
RECEPTACLES	1/20	17			18	1/20	RECEPTACLES
		19			20		
		21			22		
		23			24	1/30	F-3
RECEPTACLE EWC-1		25			26	1/15	LIGHTS SHOP 400
LIGHTS		27			28		LIGHTS OFFICE 402
LIGHTS		29			30		LIGHTS CREW ROOM 406
POLE MOUNTED LIGHTS	2/20	31			32	2/20	WH-1
		33			34	1/20	RECEPTACLES
EXTERIOR LIGHTS	1/30	35			36	2/60	RECEPTACLE COVERED WORK BAY
SPARE		37			38		
		39			40	1/20	RECEPTACLES COVERED WORK BAY

ARDOT ARKANSAS DEPARTMENT OF TRANSPORTATION

PULASKI CO. AREA 1 HEADQUARTERS/ R.E. OFFICE 61 (S)
North Little Rock, Arkansas
Pulaski County

STATE OF ARKANSAS
REGISTERED PROFESSIONAL ENGINEER
No. 7527
JOSEPH A. SARTINI
5-28-18

DATE: MAY 29, 2018
JOB NO: 061448
DRAWN BY: KB
REVISIONS:

E3.3

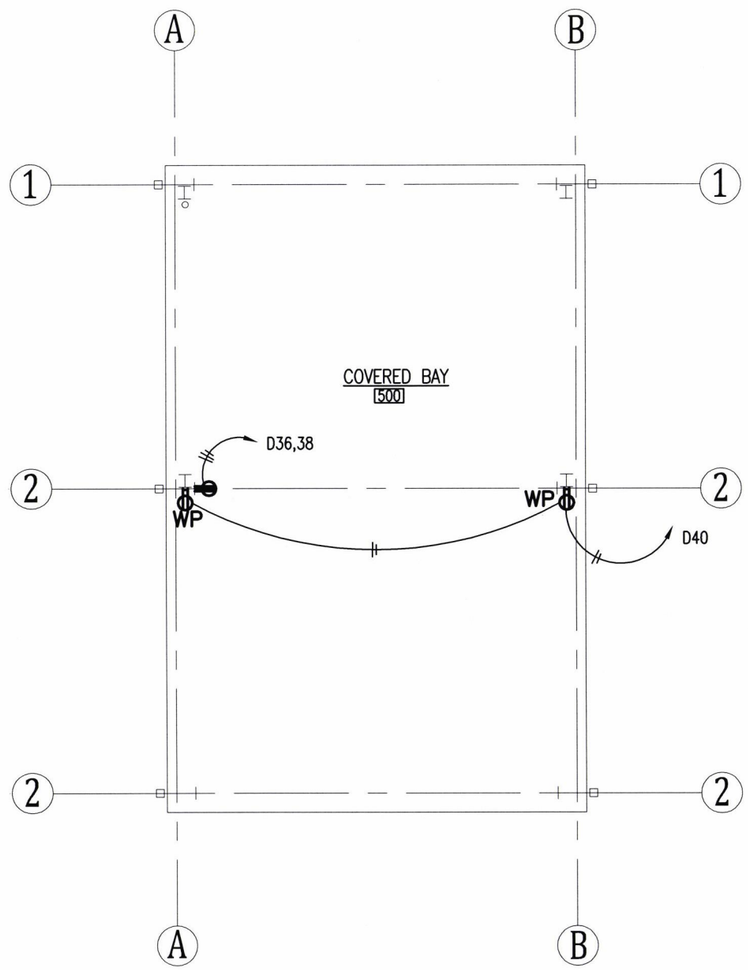

NORTH 1 E4.1 COVERED WORK BAY POWER PLAN

SCALE : 3/32" = 1'-0"

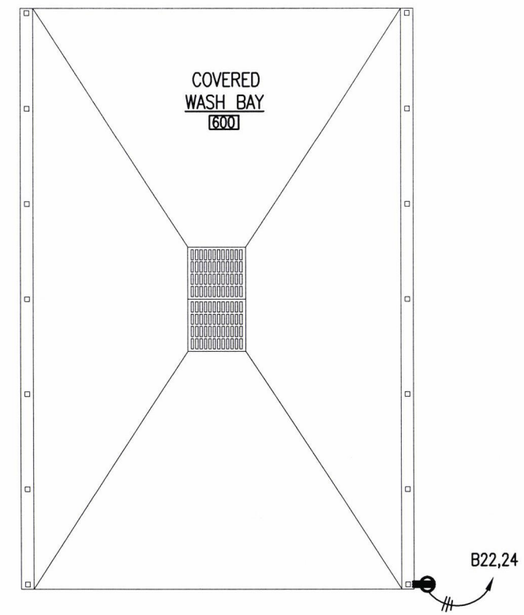

NORTH 2 E4.1 WASH RACK POWER PLAN

SCALE : 3/32" = 1'-0"

ARDOT ARKANSAS DEPARTMENT OF TRANSPORTATION

PULASKI CO. AREA 1 HEADQUARTERS/ R.E. OFFICE 61 (S)

North Little Rock, Arkansas

Pulaski County

STATE OF ARKANSAS REGISTERED PROFESSIONAL ENGINEER No. 7527 JOSEPH A. SARTINI

DATE: MAY 29, 2018

JOB NO: 061448

DRAWN BY: KB

REVISIONS:

E4.1

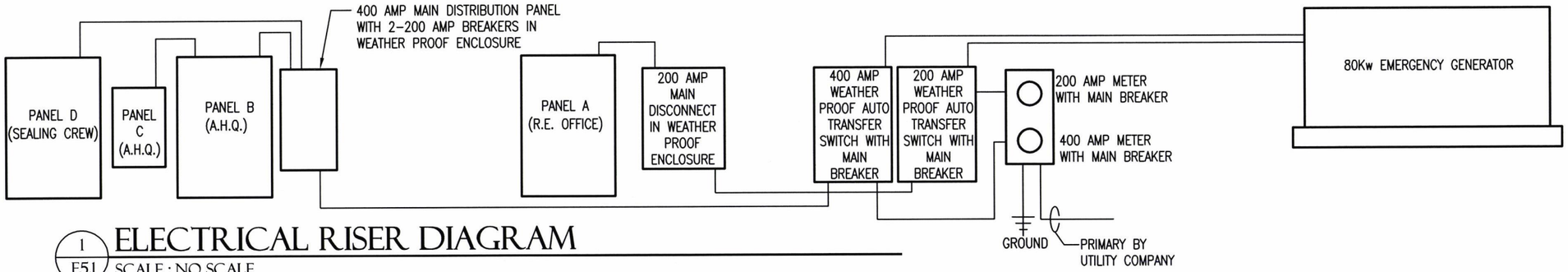

1 / E5.1 ELECTRICAL RISER DIAGRAM
SCALE : NO SCALE

LIGHT FIXTURE SCHEDULE

MARK	MANUFACTURER	MODEL	REMARKS
A	LITHONIA OR EQUAL	2VTL 40L EZ1 LP840 N80	2x2 LED ARCHITECTURAL TROFFER
B	LITHONIA OR EQUAL	2TL4 48L FW A19 24V LP840	
C	LITHONIA OR EQUAL	2TLX4 46L FW A19 D50 LP840 N100	
D	LITHONIA OR EQUAL	IBG 18000LM SEF PCL WD MVOLT OZ10 40K 70CRI WGX XAD DWH	BOTTOM AT 18'-0" A.F.F.
E	LITHONIA OR EQUAL	ZL1N L48 5000LM FST MVOLT 40K 80CRI WH	CHAIN SUSPENDED 8'-0" A.F.F.
F	LITHONIA OR EQUAL	ECBR LED M6	WALL MOUNTED
G	LITHONIA OR EQUAL	TWR2 LED 1 50K MVOLT DDB	BOTTOM AT 15'-0" A.F.F. WITH PHOTOCELL
H	LITHONIA OR EQUAL	CSX2 LED 120C 700 40K T4M MVOLT SPA BS DDBXD	SSA 30 6J FBC DDB ANCHOR BASE POLE
I	LITHONIA OR EQUAL	LDN6 40/15 L06AR LSS MVOLT	

LIGHTING SYMBOL LEGEND

SYMBOL	DESCRIPTION
	2x2 LED FIXTURE
	2x4 LED FIXTURE
	4' STRIP LED FIXTURE
	HIGH BAY LED FIXTURE
	LED EXTERIOR WALL PACK
	EMERGENCY LIGHTING

ELECTRICAL SYMBOL LEGEND

SYMBOL	DESCRIPTION	SYMBOL	DESCRIPTION
S	SWITCH	M	METER
S_3	THREE WAY SWITCH		COMBINATION TELEPHONE AND DATA OUTLET
	110V DUPLEX OUTLET		PUSH BUTTON CONTROL AS NOTED ON PLANS
	110V QUADPLEX OUTLET		MOTOR CONTROL BOX
	110V DUPLEX OUTLET IN FLUSH MTD. FLOOR BOX		DISCONNECT
	110V QUADPLEX OUTLET IN FLUSH MTD. FLOOR BOX	TS	AUTOMATIC TRANSFER SWITCH
GFCI	110V GROUND FAULT CIRCUIT INTERRUPTER		MOTOR
WP	110V WEATHER PROOF OUTLET	J	SQUARE JUNCTION BOX
	220V OUTLET	J	ROUND JUNCTION BOX
R	4x4 BOX RADIO OUTLET		42" FIVE BLADE HARBOR BREEZE CEILING FAN W/O LIGHT KIT
T	THERMOSTAT		

ARDOT ARKANSAS DEPARTMENT OF TRANSPORTATION

PULASKI CO. AREA 1 HEADQUARTERS/ R.E. OFFICE 61 (S)
North Little Rock, Arkansas
Pulaski County

STATE OF ARKANSAS REGISTERED PROFESSIONAL ENGINEER No. 7527 JOSEPH A. SARTINI

DATE: MAY 29, 2018
JOB NO: 061448
DRAWN BY: KB
REVISIONS:

E5.1