DATE REVISED	DATE FILMED	DATE REVISED	DATE FILMED	FED.RD. DIST.NO.	STATE	FED.AID PROJ.NO.	SHEET NO.	TOTAL SHEETS
				6	ARK.			
				JOB NO.		090502	1	57
				② PINEY CREEK STR. & APPRS. (S)				

ARKANSAS DEPARTMENT OF TRANSPORTATION
CONSTRUCTION PLANS FOR STATE HIGHWAY

PINEY CREEK
STR. & APPRS. (S)

CARROLL COUNTY
ROUTE 21 SECTION 5

JOB 090502

FED. AID PROJ. NHPP-0408(9)

NOT TO SCALE

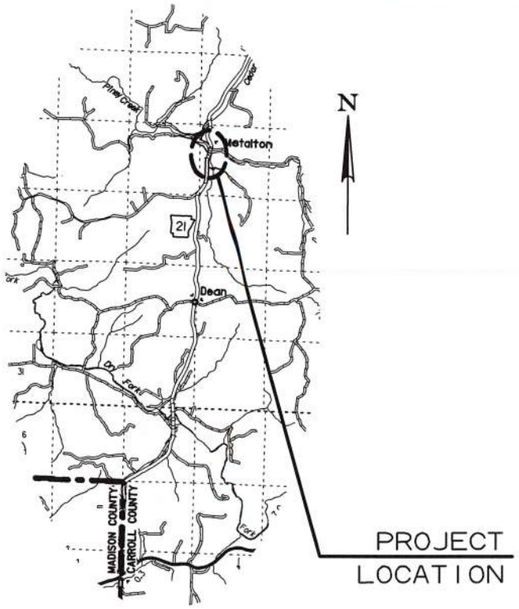

CARROLL COUNTY
VICINITY MAP

ARK. HWY. DIST. NO. 9

BRIDGE DATA

① STA. 309+70.47 BRIDGE END
BRIDGE NO. 07485
246'-0" INTEGRAL CONT. W-BEAM
(54'-69'-69'-54')
40'-0" CLEAR ROADWAY
20°LT. FWD. SKEW
247'-0¾" BRIDGE LENGTH
STA. 312+17.53 BRIDGE END

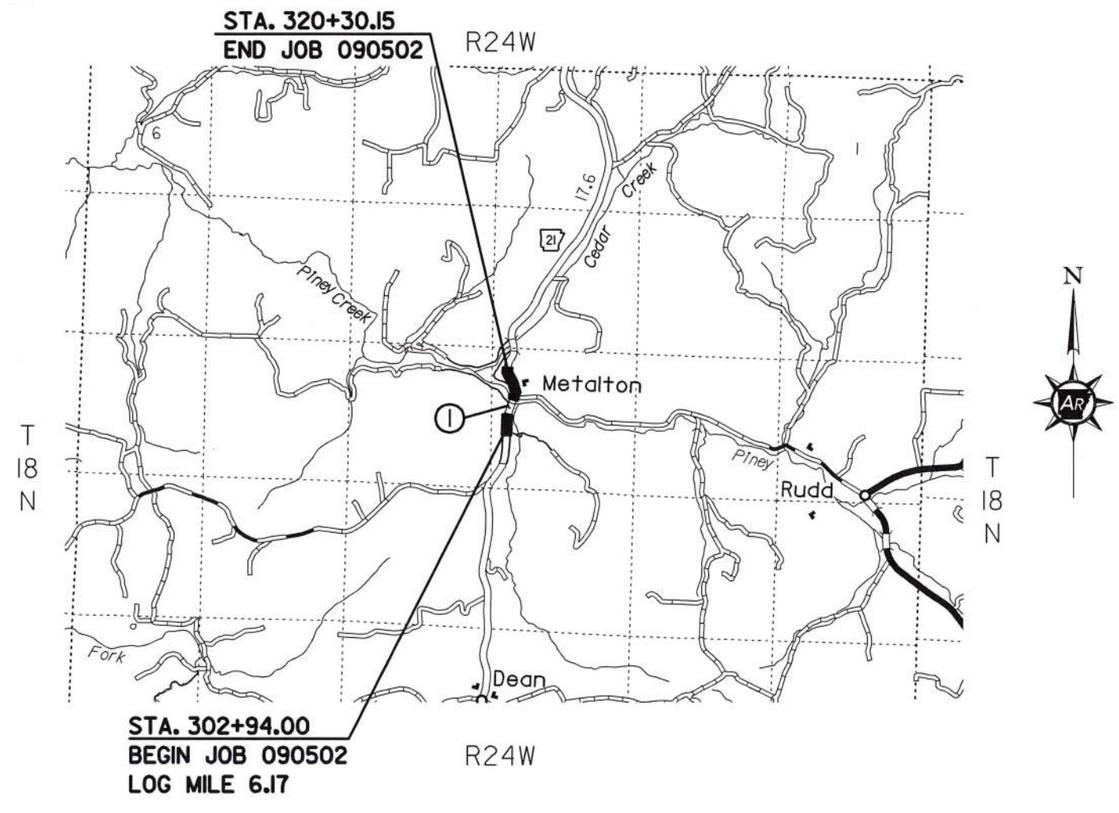

DESIGN TRAFFIC DATA

HWY. 21

DESIGN YEAR	2040
2020 ADT	2,700
2040 ADT	3,400
2040 DHV	374
DIRECTIONAL DISTRIBUTION	60%
TRUCKS	12%
DESIGN SPEED	55 MPH

BEGINNING OF PROJECT
LAT. = N 36°13'14"
LONG. = W 93°31'50"

MID-POINT OF PROJECT
LAT. = N 36°13'23"
LONG. = W 93°31'48"

END OF PROJECT
LAT. = N 36°13'31"
LONG. = W 93°31'49"

LENGTH OF PROJECT CALCULATED ALONG C.L.

GROSS	LENGTH OF PROJECT	1736.15	FEET	OR	0.329	MILES
NET	LENGTH OF ROADWAY	1489.09	FEET	OR	0.282	MILES
NET	LENGTH OF BRIDGES	247.06	FEET	OR	0.047	MILES
NET	LENGTH OF PROJECT	1736.15	FEET	OR	0.329	MILES

CERTIFICATE OF AUTHORIZATION
CRAFTON, TULL & ASSOCIATES, INC.
No. 109
ARKANSAS ENGINEER

STATE OF ARKANSAS
REGISTERED PROFESSIONAL ENGINEER
No. 9620
04-28-2020
HUBERT BURNS

P.E. JOB 090502

USER: JJ5206
DESIGN FILE: G:\1810360I_090502\TRANSP\dgn\090502_Piney Creek\misc\r090502 TTL.dgn
PLOTTED: 4/28/2020 14:49
MODEL: PROPOSED DESIGN
SCALE: 1:200

G:\1810360I_090502\TRANSP\dgn\090502_Piney Creek\misc\r090502 TTL.dgn 4/28/2020 14:49

DATE REVISED	DATE FILMED	DATE REVISED	DATE FILMED	FED.RD. DIST.NO.	STATE	FED.AID PROJ.NO.	SHEET NO.	TOTAL SHEETS
				6	ARK.			
				JOB NO.		090502	2	57

(2) INDEX OF SHEETS & STANDARD DRAWINGS

STATE OF ARKANSAS ★ ★ ★ REGISTERED PROFESSIONAL ENGINEER ★ ★ ★ No. 15560 JEROME PAUL DAVIS 6-08-2020

INDEX OF SHEETS

SHEET NO.	TITLE	BRIDGE NO.	DRWG.NO.
1	TITLE SHEET		
2	INDEX OF SHEETS AND STANDARD DRAWINGS		
3	GOVERNING SPECIFICATIONS AND GENERAL NOTES		
4 - 5	TYPICAL SECTIONS OF IMPROVEMENT		
6 - 8	SPECIAL DETAILS		
9 - 11	TEMPORARY EROSION CONTROL DETAILS		
12 - 14	MAINTENANCE OF TRAFFIC DETAILS		
15	PERMANENT PAVEMENT MARKING DETAILS		
16 - 19	QUANTITIES		
20	SCHEDULE OF BRIDGE QUANTITIES	07485	61619
21	SUMMARY OF QUANTITIES AND REVISIONS		
22 - 24	SURVEY CONTROL DETAILS		
25 - 27	PLAN AND PROFILE SHEETS		
28	LAYOUT OF BRIDGE HIGHWAY 21 OVER PINEY CREEK (SHEET 1 OF 2)	07485	61620
29	LAYOUT OF BRIDGE HIGHWAY 21 OVER PINEY CREEK (SHEET 2 OF 2)	07485	61621
30	DETAILS OF BENTS 1 & 5 (SHEET 1 OF 2)	07485	61622
31	DETAILS OF BENTS 1 & 5 (SHEET 2 OF 2)	07485	61623
32	DETAILS OF BENTS 2 - 4 (SHEET 1 OF 2)	07485	61624
33	DETAILS OF BENTS 2 - 4 (SHEET 2 OF 2)	07485	61625
34	DETAILS OF ELASTOMERIC BEARINGS	07485	61626
35	DETAILS OF 246'-0" INTEGRAL CONTINUOUS W-BEAM UNIT (SHEET 1 OF 7)	07485	61627
36	DETAILS OF 246'-0" INTEGRAL CONTINUOUS W-BEAM UNIT (SHEET 2 OF 7)	07485	61628
37	DETAILS OF 246'-0" INTEGRAL CONTINUOUS W-BEAM UNIT (SHEET 3 OF 7)	07485	61629
38	DETAILS OF 246'-0" INTEGRAL CONTINUOUS W-BEAM UNIT (SHEET 4 OF 7)	07485	61630
39	DETAILS OF 246'-0" INTEGRAL CONTINUOUS W-BEAM UNIT (SHEET 5 OF 7)	07485	61631
40	DETAILS OF 246'-0" INTEGRAL CONTINUOUS W-BEAM UNIT (SHEET 6 OF 7)	07485	61632
41	DETAILS OF 246'-0" INTEGRAL CONTINUOUS W-BEAM UNIT (SHEET 7 OF 7)	07485	61633
42	DETAILS OF TYPE SPECIAL APPROACH GUTTERS	07485	61634
43 - 57	CROSS SECTIONS		

NOTE: CROSS SECTIONS NOT NORMALLY INCLUDED IN PLANS SOLD TO PROSPECTIVE BIDDERS, BUT MAY BE HAD UPON REQUEST.

BRIDGE STANDARD DRAWINGS

DRWG.NO.	TITLE	DATE
55000	STANDARD DETAILS FOR EMBANKMENT CONSTRUCTION AND BACKFILL AT BRIDGE ENDS	02-27-14
55001	STANDARD DETAILS FOR DUMPED RIPRAP AND FILTER BLANKET AND COMPUTING EXCAVATION FOR STRUCTURES	02-27-14
55005	STANDARD DETAILS FOR PERMANENT STEEL BRIDGE DECK FORMS FOR STEEL & CONCRETE GIRDER SPANS	03-24-16
55006	STANDARD GENERAL NOTES FOR STEEL BRIDGE STRUCTURES	09-02-15
55007	STANDARD DETAILS FOR STEEL BRIDGE STRUCTURES	02-11-16
55010	STANDARD DETAILS FOR TYPE D BRIDGE NAME PLATE	03-24-20
55020	STANDARD DETAILS FOR STEEL H-PILES AND PILE ENCASEMENTS	03-24-16
55040C1	STANDARD DETAILS FOR TYPE C1 APPROACH SLAB	02-07-14

ROADWAY STANDARD DRAWINGS

DRWG.NO.	TITLE	DATE
CDP-1	CONCRETE DITCH PAVING	12-08-16
FES-1	FLARED END SECTION	10-18-96
FES-2	FLARED END SECTION	10-18-96
GR-7	GUARDRAIL DETAILS	11-07-19
GR-8	GUARDRAIL DETAILS	11-07-19
GR-9	GUARDRAIL DETAILS	11-07-19
GR-10	GUARDRAIL DETAILS	11-07-19
GR-11	GUARDRAIL DETAILS	11-07-19
GR-12	GUARDRAIL DETAILS	05-14-20
MB-1	MAILBOX DETAILS	11-18-04
PBC-1	PRECAST CONCRETE BOX CULVERTS	01-28-15
PCC-1	CONCRETE PIPE CULVERT FILL HEIGHTS & BEDDING	02-27-14
PCM-1	METAL PIPE CULVERT FILL HEIGHTS & BEDDING	02-27-14
PCP-1	PLASTIC PIPE CULVERT (HIGH DENSITY POLYETHYLENE)	02-27-14
PCP-2	PLASTIC PIPE CULVERT (PVC F949)	02-27-14
PCP-3	PLASTIC PIPE CULVERT (POLYPROPYLENE)	02-27-20
PM-1	PAVEMENT MARKING DETAILS	02-27-20
PU-1	DETAILS OF PIPE UNDERDRAIN	12-08-16
RCB-1	REINFORCED CONCRETE BOX CULVERT DETAILS	07-26-12
RCB-2	EXCAVATION PAY LIMITS, BACKFILL, & SOLID SODDING FOR BOX CULVERTS	11-20-03
RCB-3	METHOD OF EXTENDING EXISTING R.C. BOX CULVERTS	10-12-95
SE-2	TABLES AND METHOD OF SUPERELEVATION FOR TWO-WAY TRAFFIC	11-07-19
SI-1	DETAILS OF SPECIAL ITEMS	10-25-18
TC-1	STANDARD TRAFFIC CONTROLS FOR HIGHWAY CONSTRUCTION	11-07-19
TC-2	STANDARD TRAFFIC CONTROLS FOR HIGHWAY CONSTRUCTION	11-07-19
TC-3	STANDARD TRAFFIC CONTROLS FOR HIGHWAY CONSTRUCTION	02-27-20
TC-4	STANDARD TRAFFIC CONTROLS FOR HIGHWAY CONSTRUCTION-TEMPORARY PRECAST BARRIER	11-07-19
TC-5	STANDARD TRAFFIC CONTROLS FOR HIGHWAY CONSTRUCTION-TEMPORARY PRECAST BARRIER	11-07-19
TEC-1	TEMPORARY EROSION CONTROL DEVICES	11-16-17
TEC-2	TEMPORARY EROSION CONTROL DEVICES	06-02-94
TEC-3	TEMPORARY EROSION CONTROL DEVICES	11-03-94
WF-2	WIRE FENCE WATER GAPS	04-20-79
WF-3	CHAIN LINK FENCE	11-17-10
WF-4	WIRE FENCE TYPE C AND D	08-22-02
W-X003-1	DETAILS OF STANDARD WINGS FOR REINFORCED CONCRETE BOX CULVERTS	05-10-66
R-100X-0	DETAILS OF STANDARD BARREL SECTIONS FOR REINFORCED CONCRETE BOX CULVERTS	02-08-63

INDEX OF SHEETS & STANDARD DRAWINGS

GOVERNING SPECIFICATIONS

ARKANSAS STATE HIGHWAY COMMISSION STANDARD SPECIFICATIONS FOR HIGHWAY CONSTRUCTION, EDITION OF 2014, AND THE FOLLOWING SPECIAL PROVISIONS AND SUPPLEMENTAL SPECIFICATIONS:

NUMBER	TITLE
ERRATA____	ERRATA FOR THE BOOK OF STANDARD SPECIFICATIONS
FHWA-1273__	REQUIRED CONTRACT PROVISIONS FEDERAL-AID CONSTRUCTION CONTRACTS
FHWA-1273__	SUPPLEMENT - EQUAL EMPLOYMENT OPPORTUNITY - NOTICE TO CONTRACTORS
FHWA-1273__	SUPPLEMENT - SPECIFIC EQUAL EMPLOYMENT OPPORTUNITY RESPONSIBILITIES (23 U.S.C. 140)
FHWA-1273__	SUPPLEMENT - EQUAL EMPLOYMENT OPPORTUNITY - GOALS AND TIMETABLES
FHWA-1273__	SUPPLEMENT - EQUAL EMPLOYMENT OPPORTUNITY - FEDERAL STANDARDS
FHWA-1273__	SUPPLEMENT - POSTERS AND NOTICES REQUIRED FOR FEDERAL-AID PROJECTS
FHWA-1273__	SUPPLEMENT - WAGE RATE DETERMINATION
100-3_____	CONTRACTOR'S LICENSE
100-4_____	DEPARTMENT NAME CHANGE
102-2_____	ISSUANCE OF PROPOSALS
108-1_____	LIQUIDATED DAMAGES
108-2_____	WORK ALLOWED PRIOR TO ISSUANCE OF WORK ORDER
110-1_____	PROTECTION OF WATER QUALITY AND WETLANDS
210-1_____	UNCLASSIFIED EXCAVATION
303-1_____	AGGREGATE BASE COURSE
306-1_____	QUALITY CONTROL AND ACCEPTANCE
400-1_____	TACK COATS
400-4_____	DESIGN AND QUALITY CONTROL OF ASPHALT MIXTURES
400-5_____	PERCENT AIR VOIDS FOR ACHM MIX DESIGNS
400-6_____	LIQUID ANTI-STRIP ADDITIVE
404-3_____	DESIGN OF ASPHALT MIXTURES
410-1_____	CONSTRUCTION REQUIREMENTS AND ACCEPTANCE OF ASPHALT CONCRETE PLANT MIX COURSES
410-2_____	DEVICES FOR MEASURING DENSITY FOR ROLLING PATTERNS
600-2_____	INCIDENTAL CONSTRUCTION
603-1_____	LANE CLOSURE NOTIFICATION
604-1_____	RETROREFLECTIVE SHEETING FOR TRAFFIC CONTROL DEVICES IN CONSTRUCTION ZONES
604-3_____	TRAFFIC CONTROL DEVICES IN CONSTRUCTION ZONES (MASH)
605-1_____	CONCRETE DITCH PAVING
606-1_____	PIPE CULVERTS FOR SIDE DRAINS
617-1_____	GUARDRAIL TERMINAL (TYPE 2)
620-1_____	MULCH COVER
734-1_____	BRIDGE END TERMINAL
800-1_____	STRUCTURES
802-3_____	CONCRETE FOR STRUCTURES
804-2_____	REINFORCING STEEL FOR STRUCTURES
807-2_____	STEEL STRUCTURES
808-1_____	INSTALLATION OF ELASTOMERIC BEARINGS
808-2_____	ELASTOMERIC BEARINGS
JOB 090502__	BIDDING REQUIREMENTS AND CONDITIONS
JOB 090502__	BROADBAND INTERNET SERVICE FOR ASPHALT CONCRETE PLANT
JOB 090502__	BROADBAND INTERNET SERVICE FOR FIELD OFFICE
JOB 090502__	CARGO PREFERENCE ACT REQUIREMENTS
JOB 090502__	CLASS C FLY ASH IN PORTLAND CEMENT CONCRETE PAVEMENT AND CLASS S(AE) CONCRETE
JOB 090502__	CONSTRUCTION IN SPECIAL FLOOD HAZARD AREAS
JOB 090502__	DELAY IN RIGHT OF WAY OCCUPANCY
JOB 090502__	DIRECT TENSION INDICATORS FOR HIGH STRENGTH BOLT ASSEMBLIES
JOB 090502__	DISADVANTAGED BUSINESS ENTERPRISE BIDDER'S RESPONSIBILITIES
JOB 090502__	ESTABLISHING CONTRACT TIME - WORKING DAY CONTRACT
JOB 090502__	EXTENSION FOR PIPE CULVERTS
JOB 090502__	GOALS FOR DISADVANTAGED BUSINESS ENTERPRISE PARTICIPATION
JOB 090502__	MANDATORY ELECTRONIC CONTRACT
JOB 090502__	MANDATORY ELECTRONIC DOCUMENT SUBMITTAL
JOB 090502__	NESTING SITES OF MIGRATORY BIRDS
JOB 090502__	OFF-SITE RESTRAINING CONDITIONS FOR INDIANA AND NORTHERN LONG-EARED BATS
JOB 090502__	PLASTIC PIPE
JOB 090502__	PRICE ADJUSTMENT FOR ASPHALT BINDER
JOB 090502__	ROCK FILL
JOB 090502__	SHORING
JOB 090502__	SHORING FOR CULVERTS
JOB 090502__	SOIL STABILIZATION
JOB 090502__	SPECIAL CLEARING PUP SEASON REQUIREMENTS
JOB 090502__	STORM WATER POLLUTION PREVENTION PLAN
JOB 090502__	SUBMISSION OF ASPHALT CONCRETE HOT MIX ACCEPTANCE TEST RESULTS
JOB 090502__	UTILITY ADJUSTMENTS
JOB 090502__	VALUE ENGINEERING
JOB 090502__	WARM MIX ASPHALT
JOB 090502__	WELLHEAD PROTECTION

GENERAL NOTES

1. GRADE LINE DENOTES FINISHED GRADE WHERE SHOWN ON PLANS.
2. ALL PIPE LINES, POWER, TELEPHONE, AND TELEGRAPH LINES TO BE MOVED OR LOWERED BY THE RESPECTIVE OWNERS AS PER AGREEMENT WITH SUCH OWNERS.
3. ANY EQUIPMENT OR APPURTENANCE THAT INTERFERES WITH THE PROPOSED CONSTRUCTION AND WHICH MAY BE THE PROPERTY OF UTILITY SERVICE ORGANIZATIONS SHALL BE MOVED BY THE OWNERS UNLESS OTHERWISE PROVIDED.
4. THE CONTRACTOR SHALL BE RESPONSIBLE FOR MAINTAINING U. S. MAILBOXES WITHIN THE PROJECT LIMITS IN SUCH A MANNER THAT THE PUBLIC MAY RECEIVE CONTINUED MAIL SERVICE. PAYMENT WILL BE CONSIDERED INCLUDED IN THE PRICE BID FOR THE VARIOUS BID ITEMS.
5. ALL LAND MONUMENTS LOCATED WITHIN THE CONSTRUCTION AREA SHALL BE PROTECTED IN ACCORDANCE WITH SECTION 107.12 OF THE STANDARD SPECIFICATIONS.
6. ALL TREES THAT DO NOT DIRECTLY INTERFERE WITH THE PROPOSED CONSTRUCTION SHALL BE SPARED AS DIRECTED BY THE ENGINEER. CARE AND DISCRETION SHALL BE USED TO ENSURE THAT ALL TREES NOT TO BE REMOVED SHALL BE HARMED AS LITTLE AS POSSIBLE DURING THE CONSTRUCTION OPERATIONS.
7. THE CONTRACTOR SHALL BE RESPONSIBLE FOR PROVIDING A FENCE TO CONTROL LIVESTOCK IN AREAS WHERE PASTURES ARE SEVERED. WIRE FENCE MAY BE CONSTRUCTED INITIALLY, OR IN LIEU THEREOF, THE CONTRACTOR AT HIS OWN EXPENSE, MAY ELECT TO PROVIDE TEMPORARY FENCING SUITABLE TO CONTAIN LIVESTOCK.
8. THE SEQUENCE AS SHOWN ON THE MAINTENANCE OF TRAFFIC PLANS IS A GENERAL OUTLINE FOR THE CONSTRUCTION OF THIS PROJECT, AND IN NO WAY IS IT INTENDED TO COVER EVERY ITEM IN THE PROJECT. ITEMS NOT CRITICAL TO THE CONSTRUCTION SEQUENCE MAY BE CONSTRUCTED IN ANY STAGE AS APPROVED BY THE RESIDENT ENGINEER.
9. ALL FLEXIBLE BASE AND ASPHALTIC PAVEMENTS REMOVED SHALL BE PAID FOR UNDER THE ITEM NO. 210 - UNCLASSIFIED EXCAVATION.
10. THE EXISTING ASPHALT PAVEMENT TO BE REMOVED FROM THE REMAINING PAVEMENT SHALL BE SEPARATED BY SAWING ALONG A NEAT LINE. AFTER SAWING, THE PAVEMENT TO BE REMOVED SHALL BE CAREFULLY REMOVED IN A MANNER THAT WILL NOT DAMAGE THE PAVEMENT THAT IS TO REMAIN. ANY DAMAGE OF THE ASPHALT PAVEMENT THAT IS TO REMAIN IN PLACE SHALL BE REPAIRED AT THE CONTRACTOR'S EXPENSE.
11. THIS PROJECT IS COVERED UNDER A SECTION 404 NATIONWIDE 14 PERMIT. REFER TO SECTION 110 OF THE STANDARD SPECIFICATIONS, EDITION OF 2014, FOR PERMIT REQUIREMENTS.

STATE OF ARKANSAS REGISTERED PROFESSIONAL ENGINEER No. 9620 HUBERT BURNS 06-02-2020

DATE REVISED	DATE FILMED	DATE REVISED	DATE FILMED	FED.RD. DIST.NO.	STATE	FED.AID PROJ.NO.	SHEET NO.	TOTAL SHEETS
				6	ARK.			
				JOB NO.		090502	4	57

(2) TYPICAL SECTIONS OF IMPROVEMENT

STATE OF ARKANSAS
REGISTERED PROFESSIONAL ENGINEER
No. 15560
4-28-2020
JEROME PAUL DAVIS

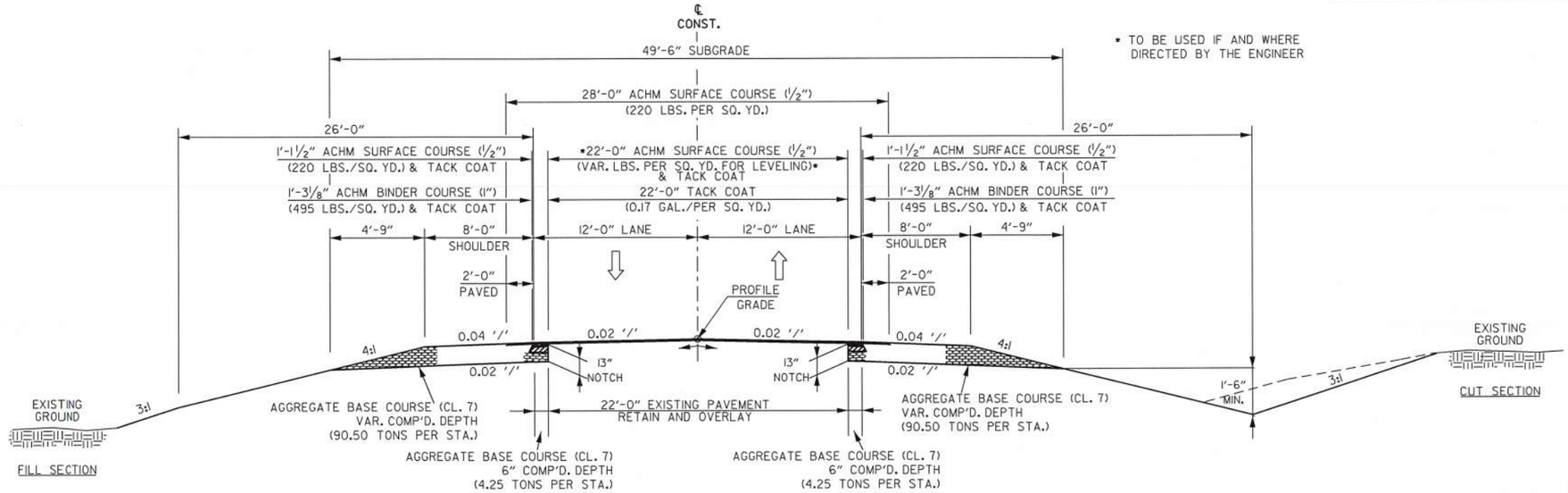

* TO BE USED IF AND WHERE DIRECTED BY THE ENGINEER

NOTCH & WIDEN
TYPICAL SECTION OF IMPROVEMENT
HWY. 21

STA. 302+94.00 TO STA. 306+59.13
STA. 318+24.54 TO STA. 320+30.15

TYPICAL SECTION NOTES:

1. REFER TO CROSS SECTIONS FOR DEVIATIONS FROM THE NORMAL SLOPES. NO CHANGES SHALL BE MADE FROM THE PLANNED SLOPES WITHOUT THE APPROVAL OF THE ENGINEER.
2. THE FINAL 2" OF SURFACE COURSE IS TO BE PLACED AFTER ALL OTHER COURSES HAVE BEEN LAID. LONGITUDINAL JOINTS SHALL BE AT LANE LINES.
3. THE THICKNESS OF AGGREGATE BASE COURSE SHALL BE WITHIN PLUS OR MINUS ONE INCH OF THE PLAN THICKNESS SHOWN. THE CONTRACTOR WILL CORRECT ANY DEFICIENT THICKNESS THAT DOES NOT MEET TOLERANCE INDICATED. PAYMENT WILL NOT BE MADE FOR MATERIAL PLACED IN EXCESS OF THE TOLERANCE INDICATED.
4. ASPHALT FOR LEVELING OF EXISTING PAVEMENT SHALL BE PLACED ONLY IF AND WHERE DIRECTED BY THE ENGINEER. CALCULATIONS FOR THE AMOUNT OF LEVELING AND LEVELING OPERATIONS SHALL BE PERFORMED BEFORE CONSTRUCTING NOTCH AND WIDENING, CALCULATIONS WILL NOT BE PAID FOR DIRECTLY BUT PAYMENT WILL BE CONSIDERED INCLUDED IN THE VARIOUS PAY ITEMS.
5. WITH THE APPROVAL OF THE ENGINEER, THE CONTRACTOR WILL BE ALLOWED TO SUBSTITUTE, AT NO ADDITIONAL COST TO THE DEPARTMENT, THE FIRST LIFT OF ACHM SURFACE COURSE (1/2") IN LIEU OF AGGREGATE BASE COURSE ON THE SHOULDERS.

* TO BE USED IF AND WHERE DIRECTED BY THE ENGINEER

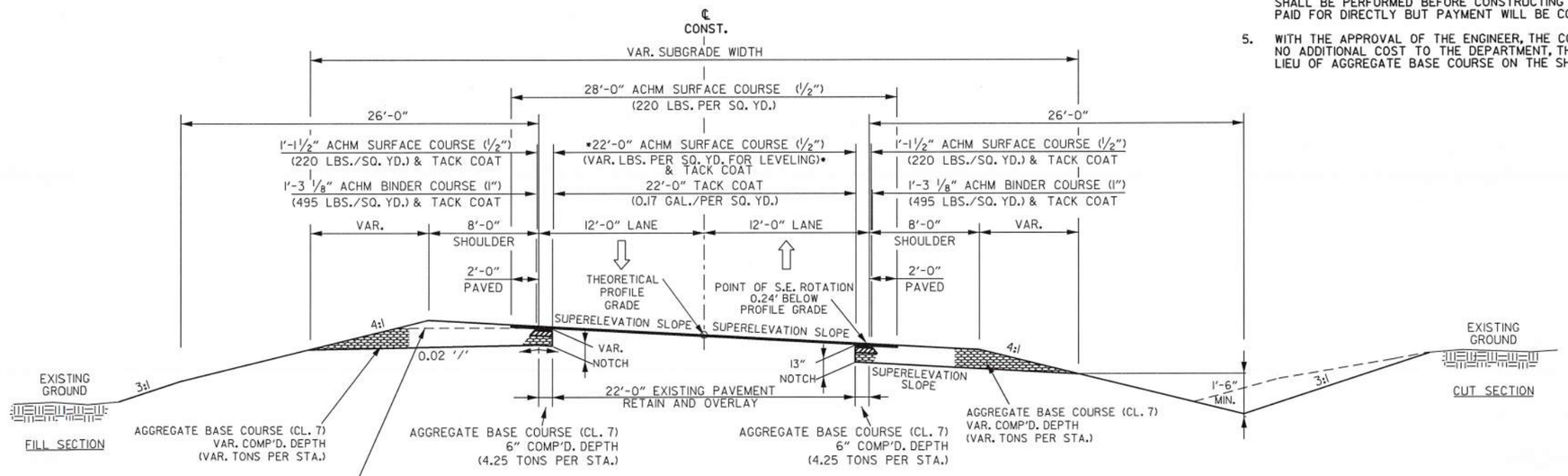

NOTE: ON ALL SUPERELEVATED CURVES AND THROUGH SUPERELEVATION TRANSITIONS THE ALGEBRAIC DIFFERENCE BETWEEN PAVEMENT SLOPE AND SHOULDER SLOPE SHALL NOT EXCEED 0.08'/'.

NOTCH & WIDEN
SUPERELEVATED TYPICAL SECTION OF IMPROVEMENT
HWY. 21

TYPICAL SECTIONS OF IMPROVEMENT

DATE REVISED	DATE FILMED	DATE REVISED	DATE FILMED	FED.RD. DIST.NO.	STATE	FED.AID PROJ.NO.	SHEET NO.	TOTAL SHEETS
				6	ARK.			
				JOB NO.		090502	5	57

(2) TYPICAL SECTIONS OF IMPROVEMENT

STATE OF ARKANSAS
REGISTERED PROFESSIONAL ENGINEER
No. 15560
4-28-2020
JEROME PAUL DAVIS

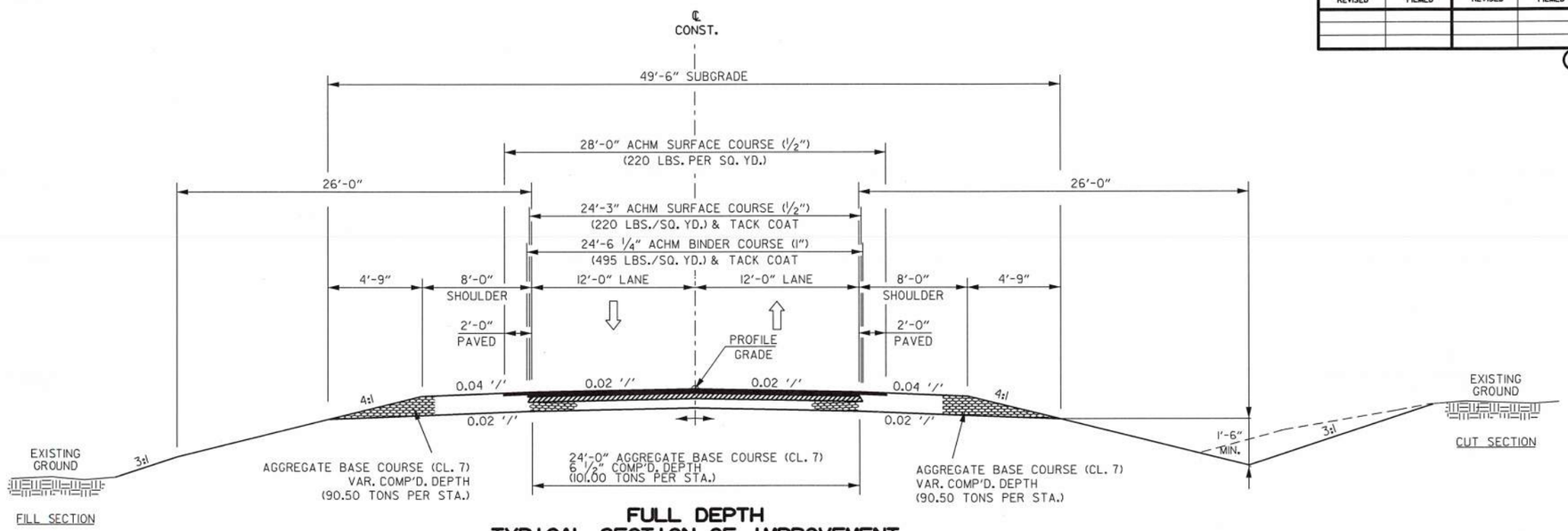

FULL DEPTH TYPICAL SECTION OF IMPROVEMENT HWY. 21

STA. 306+59.13 TO STA. 309+70.47
STA. 312+17.53 TO STA. 318+24.54

TYPICAL SECTION NOTES:

1. REFER TO CROSS SECTIONS FOR DEVIATIONS FROM THE NORMAL SLOPES. NO CHANGES SHALL BE MADE FROM THE PLANNED SLOPES WITHOUT THE APPROVAL OF THE ENGINEER.
2. THE FINAL 2" OF SURFACE COURSE IS TO BE PLACED AFTER ALL OTHER COURSES HAVE BEEN LAID. LONGITUDINAL JOINTS SHALL BE AT LANE LINES.
3. THE THICKNESS OF AGGREGATE BASE COURSE SHALL BE WITHIN PLUS OR MINUS ONE INCH OF THE PLAN THICKNESS SHOWN. THE CONTRACTOR WILL CORRECT ANY DEFICIENT THICKNESS THAT DOES NOT MEET TOLERANCE INDICATED. PAYMENT WILL NOT BE MADE FOR MATERIAL PLACED IN EXCESS OF THE TOLERANCE INDICATED.
4. WITH THE APPROVAL OF THE ENGINEER, THE CONTRACTOR WILL BE ALLOWED TO SUBSTITUTE, AT NO ADDITIONAL COST TO THE DEPARTMENT, THE FIRST LIFT OF ACHM SURFACE COURSE (1/2") IN LIEU OF AGGREGATE BASE COURSE ON THE SHOULDERS.

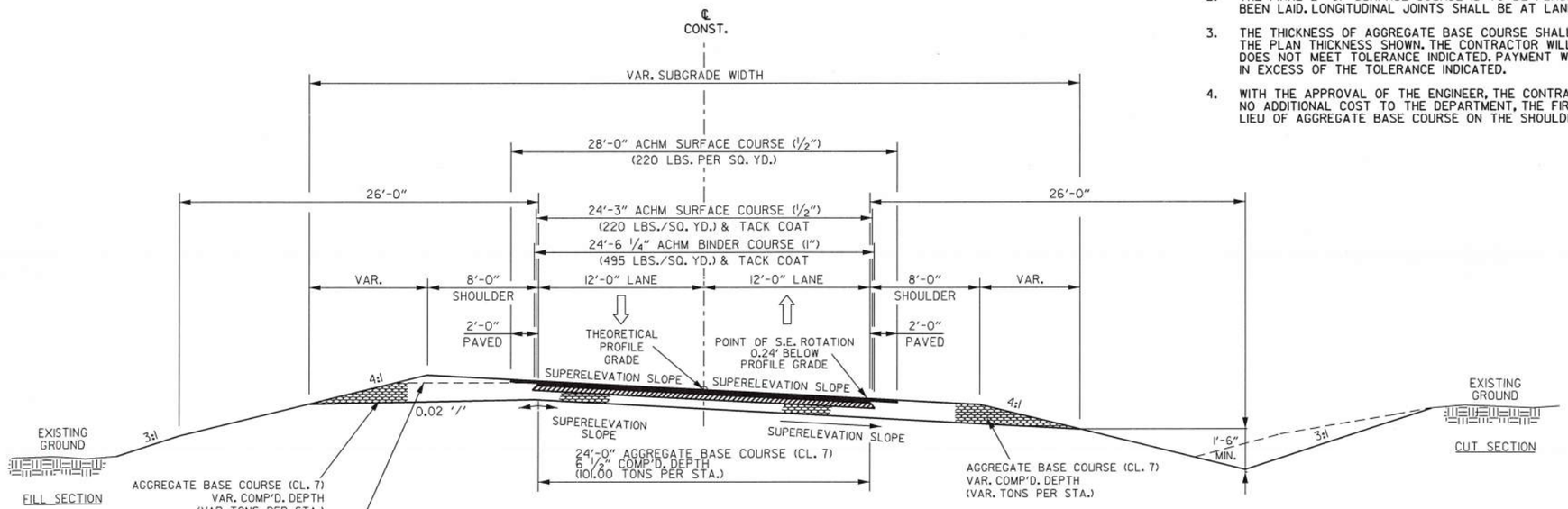

NOTE: ON ALL SUPERELEVATED CURVES AND THROUGH SUPERELEVATION TRANSITIONS THE ALGEBRAIC DIFFERENCE BETWEEN PAVEMENT SLOPE AND SHOULDER SLOPE SHALL NOT EXCEED 0.08'/'.

FULL DEPTH SUPERELEVATED TYPICAL SECTION OF IMPROVEMENT HWY. 21

TYPICAL SECTIONS OF IMPROVEMENT

DATE REVISED	DATE FILMED	DATE REVISED	DATE FILMED	FED.RD. DIST.NO.	STATE	FED.AID PROJ.NO.	SHEET NO.	TOTAL SHEETS
				6	ARK.			
				JOB NO.		090502	6	57

2 SPECIAL DETAILS

STATE OF ARKANSAS
REGISTERED PROFESSIONAL ENGINEER
No. 15560
4-28-2020
JEROME PAUL DAVIS

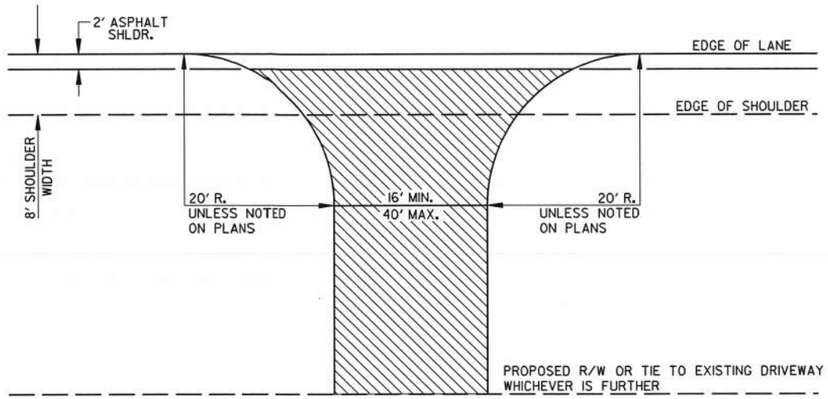

DETAIL FOR DRIVEWAY TURNOUTS
OPEN SHOULDER SECTION

NOTE: TURNOUTS AND PRIVATE DRIVES SHALL BE MODIFIED WHERE NECESSARY TO MEET LOCAL CONDITIONS AS DIRECTED BY THE ENGINEER.

ACHM SURFACE COURSE (1/2") (220 LBS. PER SQ.YD.) AND AGGREGATE BASE COURSE (CLASS 7) 7" COMP. DEPTH IF ASPHALT OR GRAVEL DRIVE EXISTING; OR 6" CONCRETE IF CONCRETE DRIVE EXISTING.

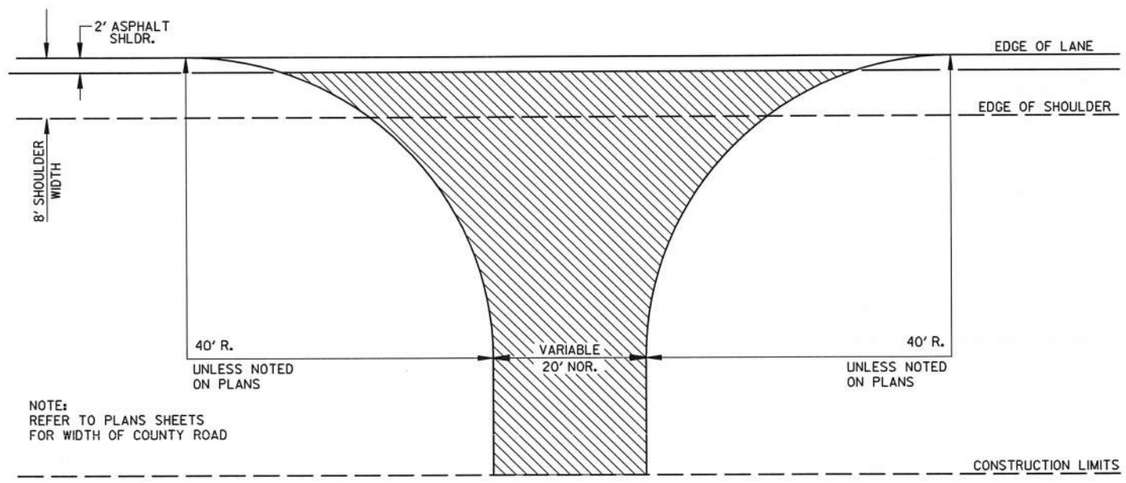

DETAIL FOR COUNTY ROAD TURNOUTS
OPEN SHOULDER SECTION

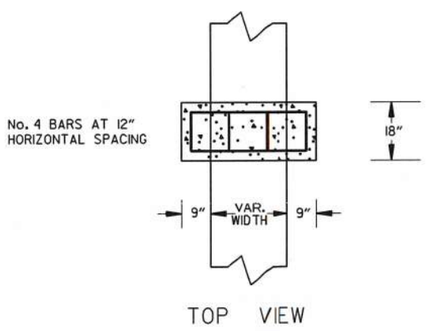

TOP VIEW

MIN 3" COVER

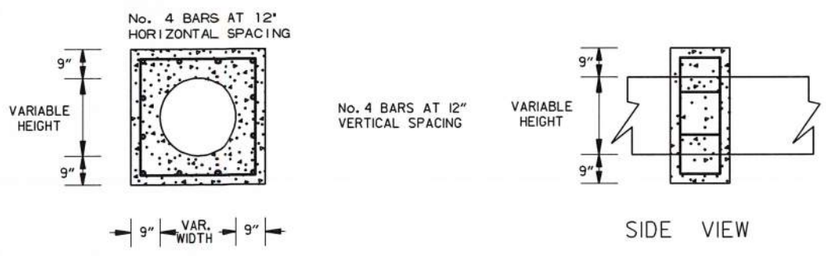

FRONT VIEW

SIDE VIEW

PIPE EXTENSION
REINFORCED CONCRETE COLLAR DETAIL

SPECIAL DETAILS

USER: JJ5206
DESIGN FILE: G:\1810360L_090502\TRANSP\dgn\090502_Piney Creek\special_details\090502 SpecialDetails.dgn SCALE: 1:2
PLOTTED: 4/28/2020 14:50 MODEL: PROPOSED DESIGN

G:\1810360L_090502\TRANSP\dgn\090502_Piney Creek\special_details\090502 SpecialDetails.dgn 4/28/2020 14:50

DATE REVISED	DATE FILMED	DATE REVISED	DATE FILMED	FED.RD. DIST.NO.	STATE	FED.AID PROJ.NO.	SHEET NO.	TOTAL SHEETS
				6	ARK.			
				JOB NO.		090502	7	57

(2) SPECIAL DETAILS

STATE OF ARKANSAS
REGISTERED PROFESSIONAL ENGINEER
No. 15560
JEROME PAUL DAVIS
4-28-2020

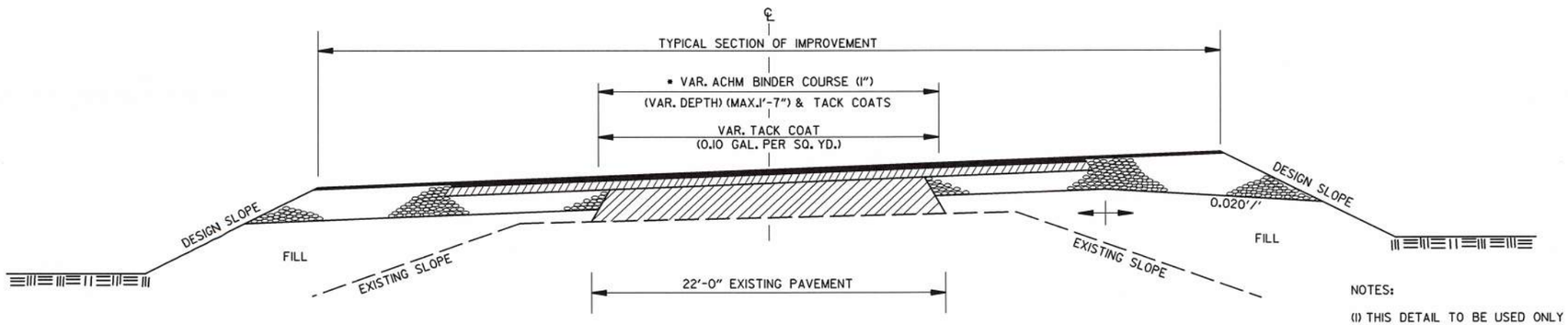

* 6 ½" AGGREGATE BASE COURSE (CLASS 7) TO BE REPLACED WITH ACHM BINDER COURSE (1")

METHOD OF RAISING GRADE

NOTES:

(1) THIS DETAIL TO BE USED ONLY WHERE DIRECTED BY THE ENGINEER.

(2) QUANTITIES FOR METHOD OF GRADE RAISE USING ASPHALT WERE CALCULATED ON THIS PROJECT AT LOCATIONS WHERE THE DISTANCE BETWEEN THE EXISTING ASPHALT ROADWAY AND THE PROPOSED SUBGRADE WAS ONE FOOT OR LESS.

(3) IN LOCATIONS WHERE THE DISTANCE BETWEEN THE PROPOSED SUBGRADE AND THE EXISTING ASPHALT ROADWAY IS MORE THAN ONE FOOT, SCARIFICATION OF THE EXISTING ASPHALT ROADWAY WILL BE REQUIRED AS STATED IN SECTION 210, SUBSECTION 210.09 OF THE STANDARD SPECIFICATIONS.

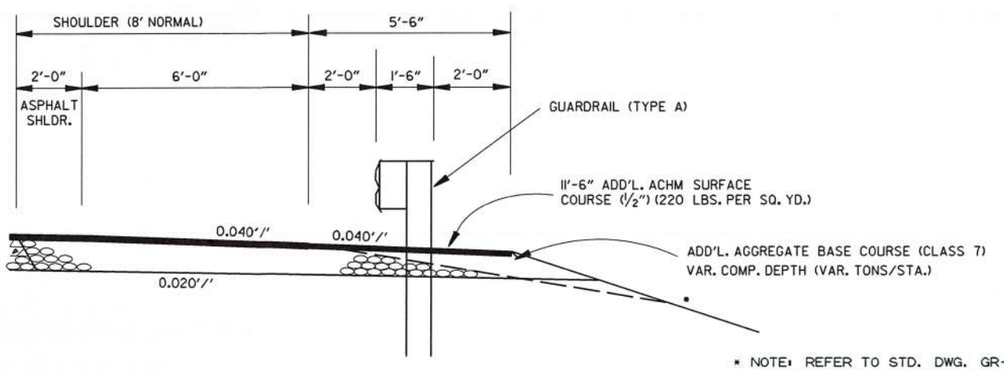

WIDENING FOR GUARDRAIL

* NOTE: REFER TO STD. DWG. GR-9A AND CROSS SECTIONS FOR SLOPE REQUIREMENTS BEHIND GUARDRAIL.

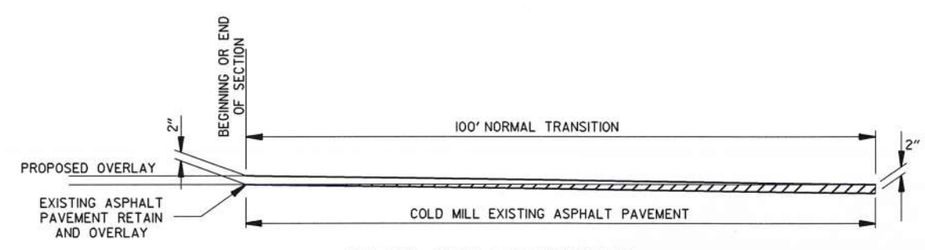

DETAIL FOR TRANSITIONS

SPECIAL DETAILS

USER: JJ5206
DESIGN FILE: G:\18103601_090502\TRANSP\dgn\090502_Piney Creek\special_details\090502 SpecialDetails.dgn SCALE: 1:2
PLOTTED: 4/28/2020 14:50 MODEL: PROPOSED DESIGN

DATE REVISED	DATE FILMED	DATE REVISED	DATE FILMED	FED.RD. DIST.NO.	STATE	FED.AID PROJ.NO.	SHEET NO.	TOTAL SHEETS
				6	ARK.			
				JOB NO.		090502	8	57

2 SPECIAL DETAILS

STATE OF ARKANSAS
REGISTERED PROFESSIONAL ENGINEER
No. 15560
4-28-2020
JEROME PAUL DAVIS

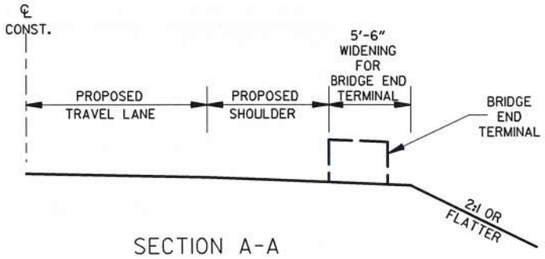

SECTION A-A

NOTE:
ELIMINATE OR MODIFY APPROACH CURB SECTION TO FIT BRIDGE END TERMINAL. NO PAYMENT SHALL BE MADE FOR ELIMINATING OR MODIFYING THIS CURB, BUT SHALL BE CONSIDERED IN PAYMENT MADE FOR APPROACH GUTTERS OF THE TYPE SPECIFIED.

NOTE:
BRIDGE END TERMINAL SHALL CONFORM TO THE FOLLOWING:
- -MAXIMUM LENGTH: 20'
- -MAXIMUM HEIGHT: 2.75'
- -DESIGN SPEED: 60 MPH

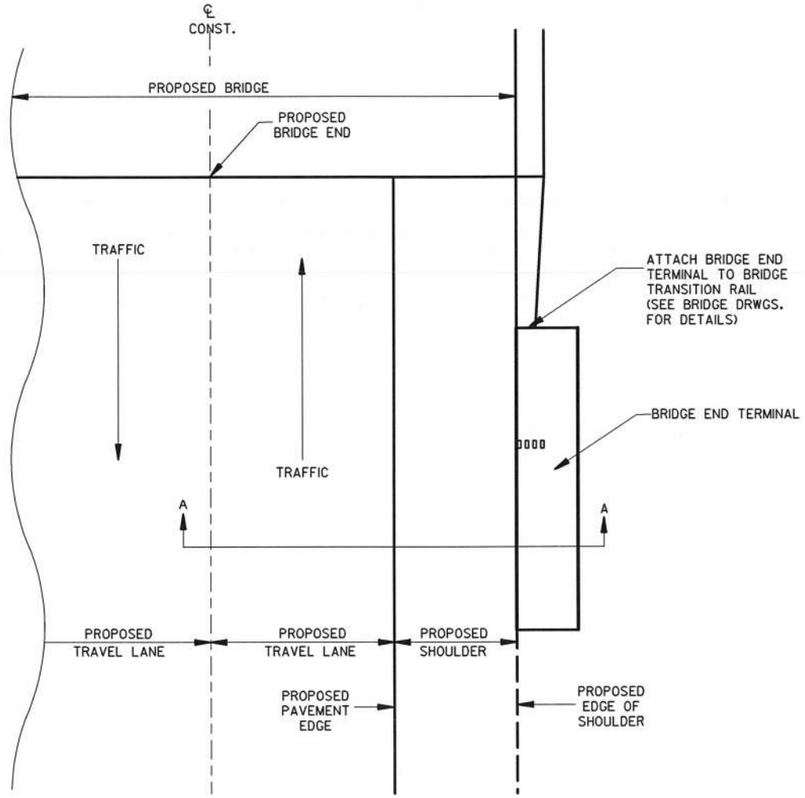

PLAN VIEW

BRIDGE END TERMINAL DETAILS

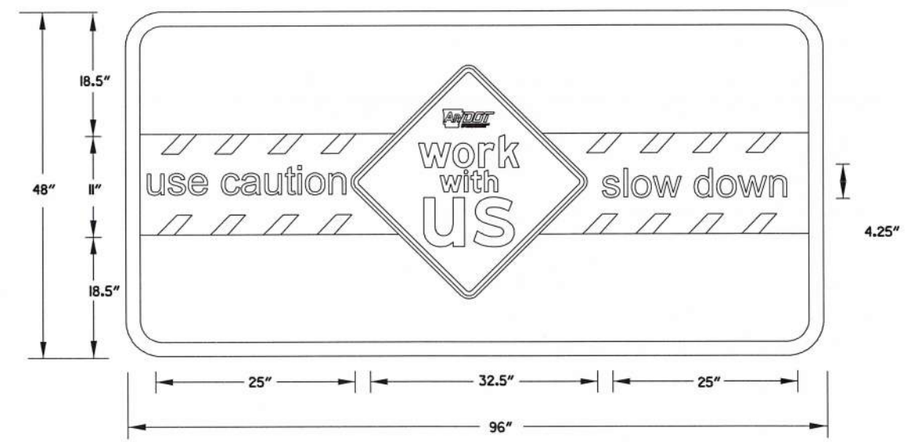

1.5" WHITE BORDER, 1.5" RADII, GREEN BACKGROUND
"use caution/slow down" 4.25" NIVEAU GROTESK, REGULAR FONT
"work with us" FRUTIGER LT 75 BLACK FONT

NOTE: DIGITAL ART WORK FILE AVAILABLE FROM ARDOT MAINTENANCE DIVISION SIGN SHOP 501-569-2665.
THIS SIGN SHALL BE PLACED 500' PRECEDING THE FIRST ADVANCE WARNING SIGN, IN THE DIRECTION OF TRAFFIC.

WORK WITH US SIGN

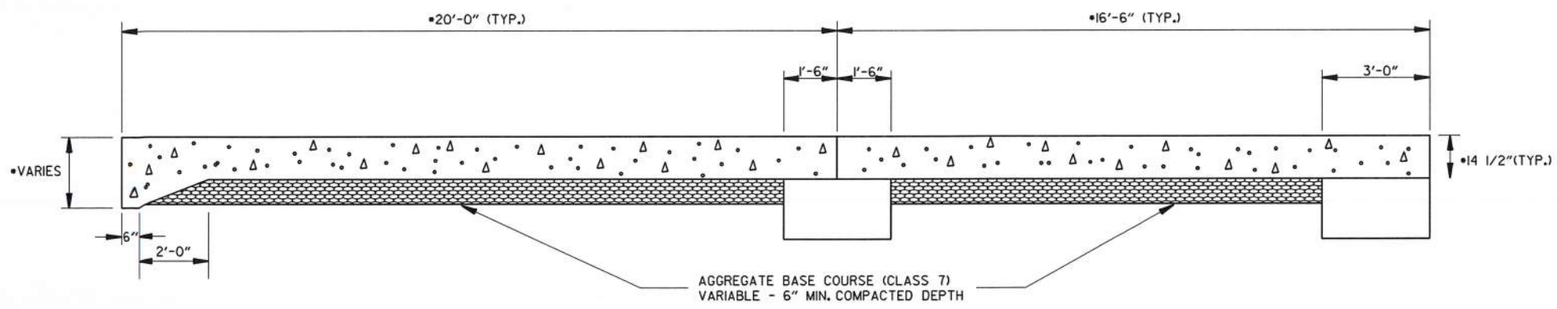

• SEE APPROACH SLAB DETAILS IN BRIDGE DRAWINGS

SECTION OF APPROACH SLAB

SPECIAL DETAILS

USER: JJ5206
DESIGN FILE: G:\18103601_090502\TRANSP\dgn\090502_Piney Creek\special_details\090502 SpecialDetails.dgn
PLOTTED: 4/28/202014:50 MODEL: PROPOSED DESIGN SCALE: 1:2

DATE REVISED	DATE FILMED	DATE REVISED	DATE FILMED

FED.RD. DIST.NO.	STATE	FED.AID PROJ.NO.	SHEET NO.	TOTAL SHEETS
6	ARK.			
JOB NO.		090502	9	57

(2) TEMPORARY EROSION CONTROL DETAILS

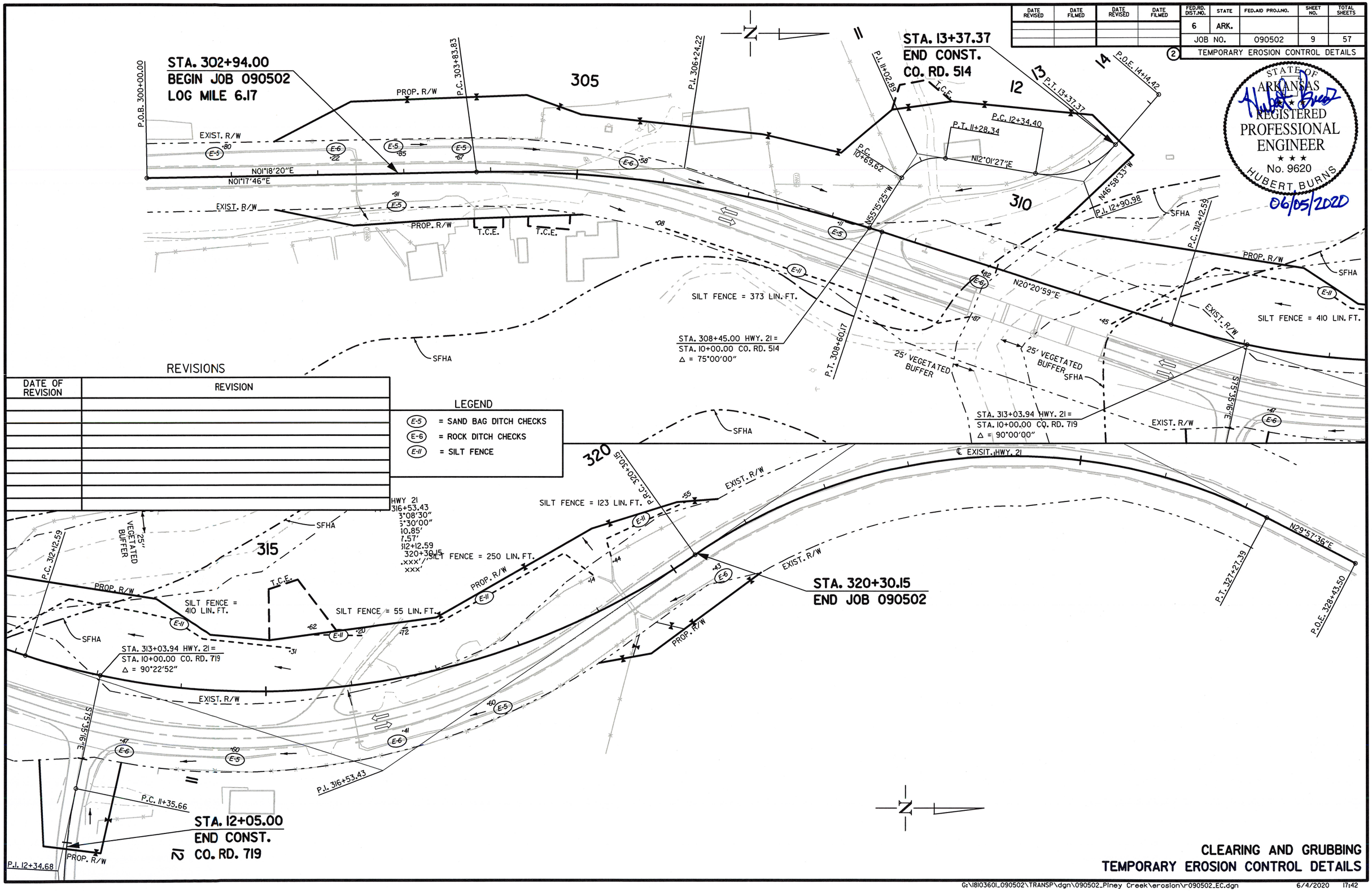

REVISIONS

DATE OF REVISION	REVISION

LEGEND

- (E-5) = SAND BAG DITCH CHECKS
- (E-6) = ROCK DITCH CHECKS
- (E-11) = SILT FENCE

CLEARING AND GRUBBING
TEMPORARY EROSION CONTROL DETAILS

USER: NS5187
DESIGN FILE: G:\18103601_090502\TRANSP\dgn\090502_Piney Creek\erosion\r-090502_EC.dgn
PLOTTED: 6/4/2020 17:42 MODEL: Clearing and Grubbing - Piney Creek SCALE: 1:100

G:\18103601_090502\TRANSP\dgn\090502_Piney Creek\erosion\r-090502_EC.dgn 6/4/2020 17:42

DATE REVISED	DATE FILMED	DATE REVISED	DATE FILMED

FED.RD. DIST.NO.	STATE	FED.AID PROJ.NO.	SHEET NO.	TOTAL SHEETS
6	ARK.			
JOB NO.		090502	10	57

2 TEMPORARY EROSION CONTROL DETAILS

STATE OF ARKANSAS REGISTERED PROFESSIONAL ENGINEER No. 9620 HUBERT BURNS

06/05/2020

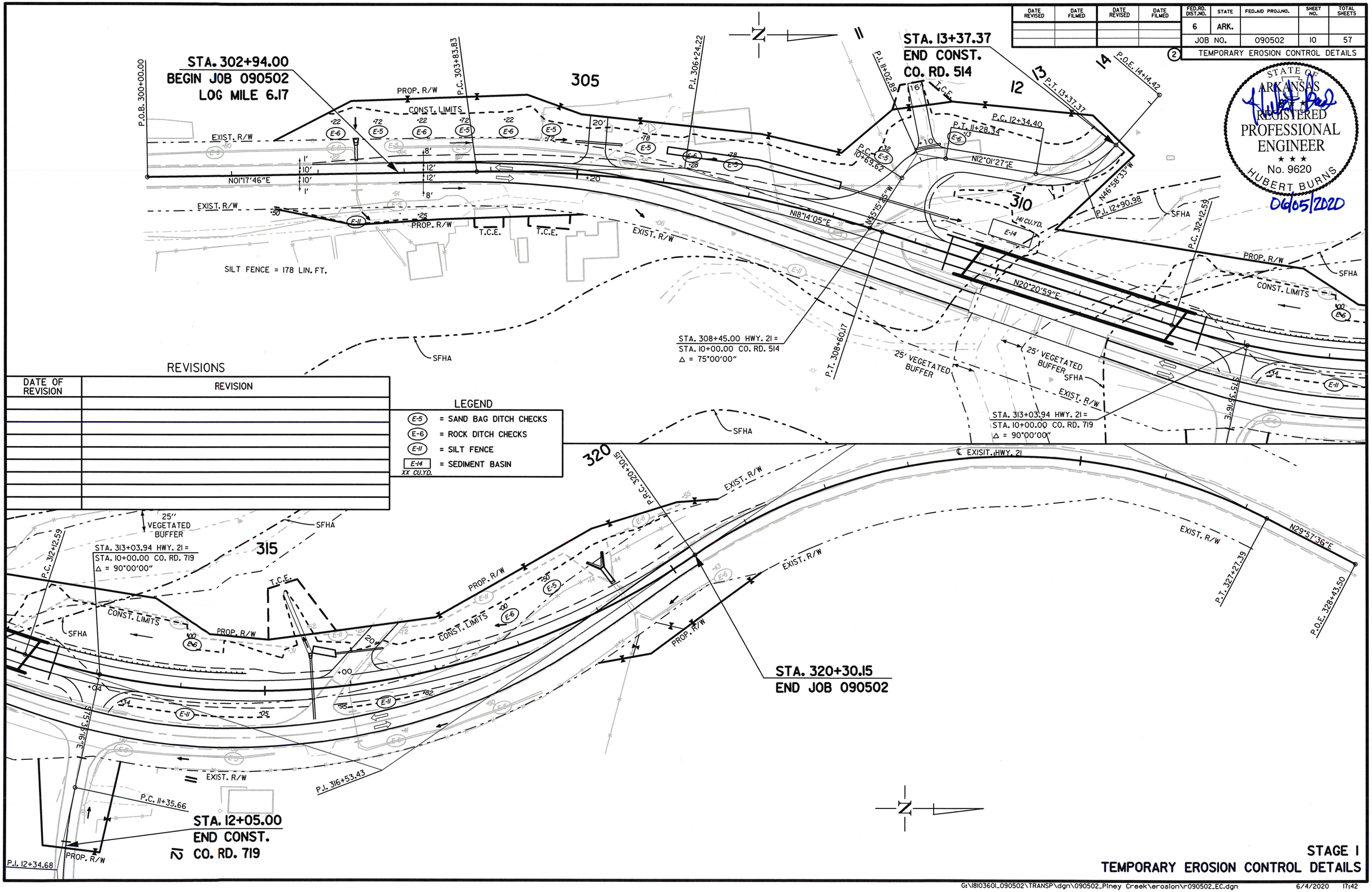

REVISIONS

DATE OF REVISION	REVISION

LEGEND

- (E-5) = SAND BAG DITCH CHECKS
- (E-6) = ROCK DITCH CHECKS
- (E-11) = SILT FENCE
- [E-14] XX CU.YD. = SEDIMENT BASIN

STAGE I
TEMPORARY EROSION CONTROL DETAILS

USER: N55187
DESIGN FILE: G:\18103601_090502\TRANSP\dgn\090502_Piney Creek\erosion\r090502_EC.dgn
PLOTTED: 6/4/2020 17:42
MODEL: EROSION CONTROL STAGE 1 - Piney Creek
SCALE: 1:100

G:\18103601_090502\TRANSP\dgn\090502_Piney Creek\erosion\r090502_EC.dgn 6/4/2020 17:42

DATE REVISED	DATE FILMED	DATE REVISED	DATE FILMED

FED.RD. DIST.NO.	STATE	FED.AID PROJ.NO.	SHEET NO.	TOTAL SHEETS
6	ARK.		11	57
JOB NO.	090502			

2 TEMPORARY EROSION CONTROL DETAILS

STATE OF ARKANSAS
REGISTERED PROFESSIONAL ENGINEER
No. 9620
HUBERT BURNS
06/05/2020

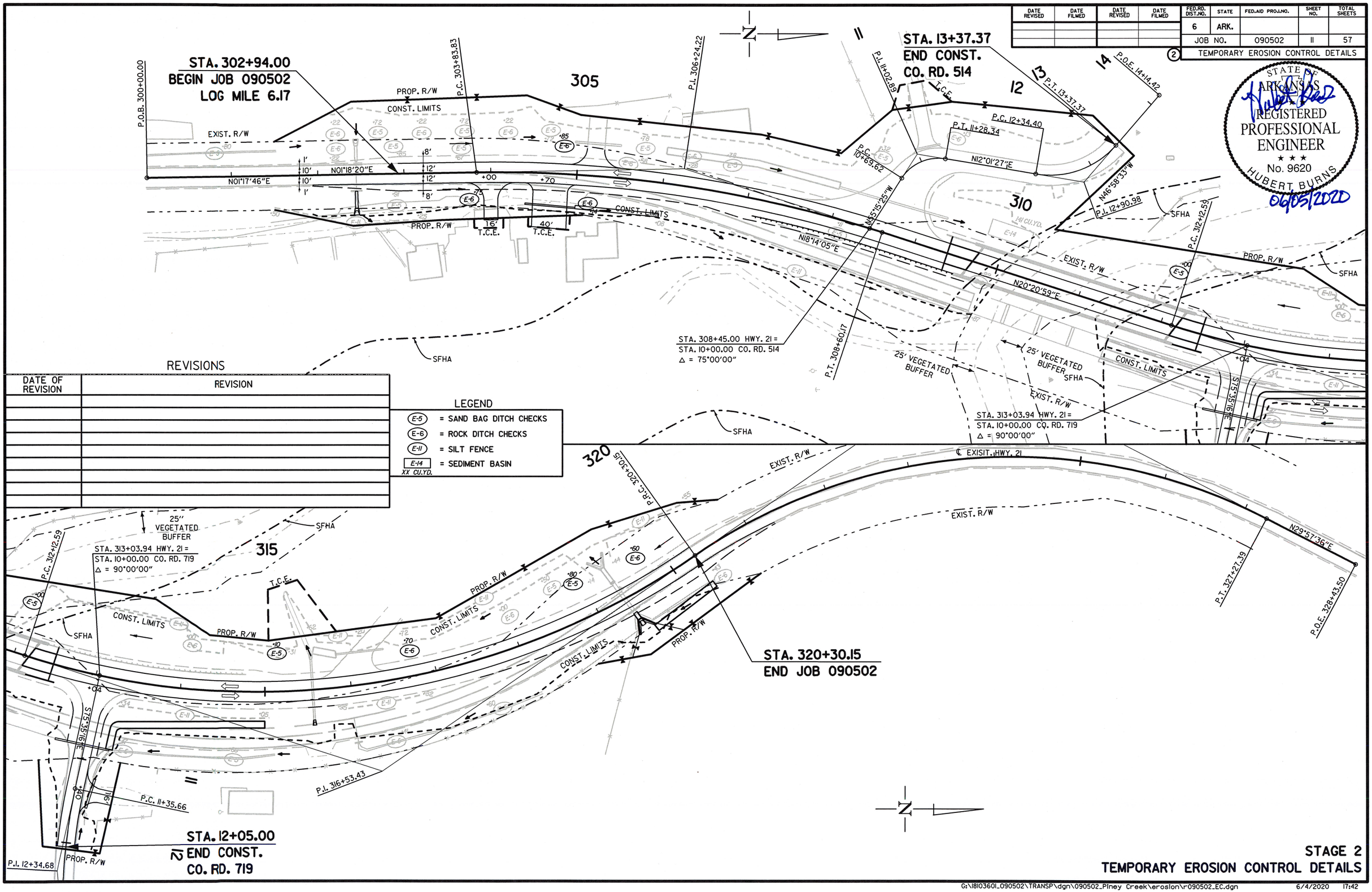

REVISIONS

DATE OF REVISION	REVISION

LEGEND

E-5	= SAND BAG DITCH CHECKS
E-6	= ROCK DITCH CHECKS
E-11	= SILT FENCE
E-14 XX CU.YD.	= SEDIMENT BASIN

STAGE 2
TEMPORARY EROSION CONTROL DETAILS

USER: NS5187
DESIGN FILE: G:\18103601_090502\TRANSP\dgn\090502_Piney Creek\erosion\r090502_EC.dgn
PLOTTED: 6/4/2020 17:42 MODEL: EROSION CONTROL STAGE 2 - Piney Creek SCALE: 1:100

DATE REVISED	DATE FILMED	DATE REVISED	DATE FILMED	FED.RD. DIST.NO.	STATE	FED.AID PROJ.NO.	SHEET NO.	TOTAL SHEETS
				6	ARK.			
				JOB NO.		090502	12	57

2 MAINTENANCE OF TRAFFIC DETAILS

STATE OF ARKANSAS
REGISTERED PROFESSIONAL ENGINEER
No. 15560
JEROME PAUL DAVIS
4-28-2020

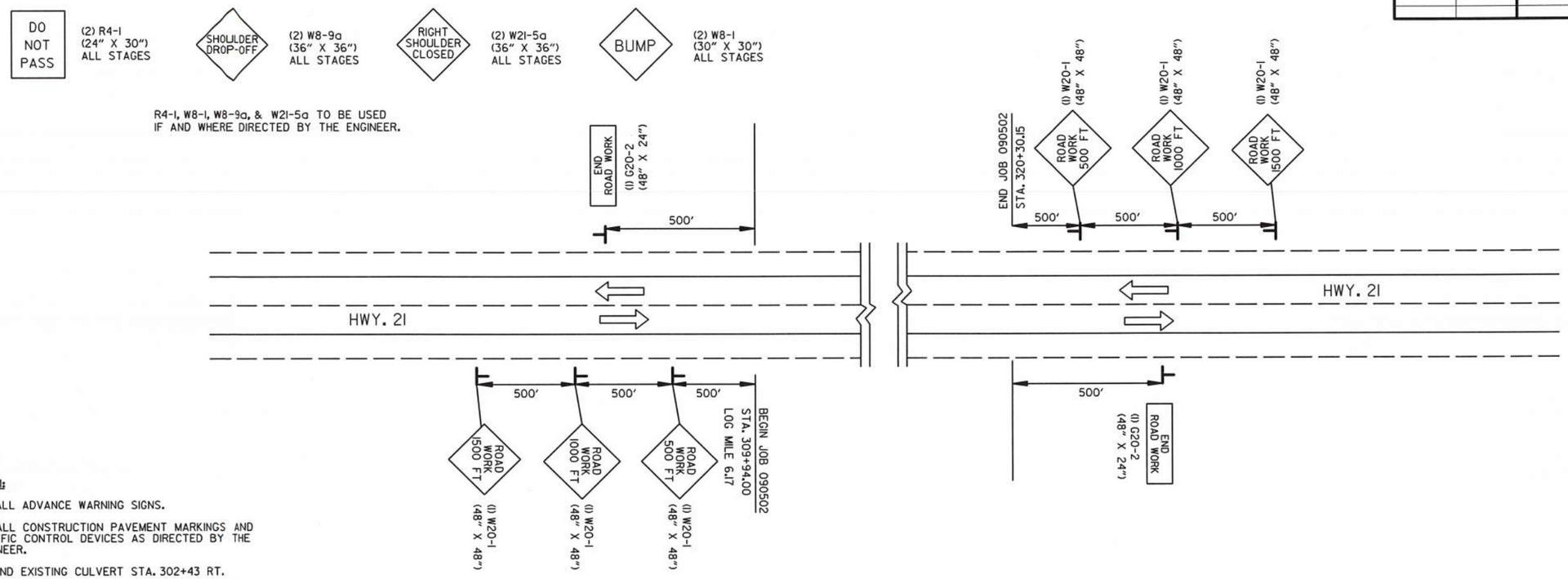

STAGE 1:

1) INSTALL ADVANCE WARNING SIGNS.

2) INSTALL CONSTRUCTION PAVEMENT MARKINGS AND TRAFFIC CONTROL DEVICES AS DIRECTED BY THE ENGINEER.

3) EXTEND EXISTING CULVERT STA. 302+43 RT.

4) CONSTRUCT NEW ROADWAY & BRIDGE OVER PINEY CREEK.

STAGE 2:

1) MAINTAIN ADVANCE WARNING SIGNS.

2) CONSTRUCT PAVEMENT WIDENING TO CONNECT EXISTING ROADWAY.

3) CONSTRUCT FINAL LIFT OF ASPHALT, GUARDRAIL & PERMANENT PAVEMENT MARKINGS.

4) SHIFT TRAFFIC TO NEW ROADWAY, REMOVE EXISTING BRIDGE & ROADWAY.

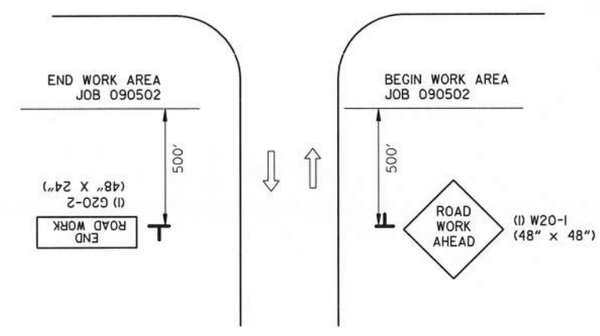

SIDE ROADS
ALL STAGES

STA. 308+45.00 CO. RD. 514 LT.
STA. 313+03.94 CO. RD. 719 RT.

ADVANCE SIGNS AT JOB ENDS
MAINTENANCE OF TRAFFIC DETAILS

USER: JJ5206
DESIGN FILE: G:\1810360L_090502\TRANSP\dgn\090502_Piney Creek\maint_of_traffic\r090502 MOT 3-31-20.dgn
PLOTTED: 4/28/2020 14:50 MODEL: MOT DETAILS SCALE: 1:100

DATE REVISED	DATE FILMED	DATE REVISED	DATE FILMED

FED.RD. DIST.NO.	STATE	FED.AID PROJ.NO.	SHEET NO.	TOTAL SHEETS
6	ARK.			
JOB NO.		090502	13	57

2 MAINTENANCE OF TRAFFIC DETAILS

STATE OF ARKANSAS REGISTERED PROFESSIONAL ENGINEER ★★★ No. 9620 HUBERT BURNS

06/05/2020

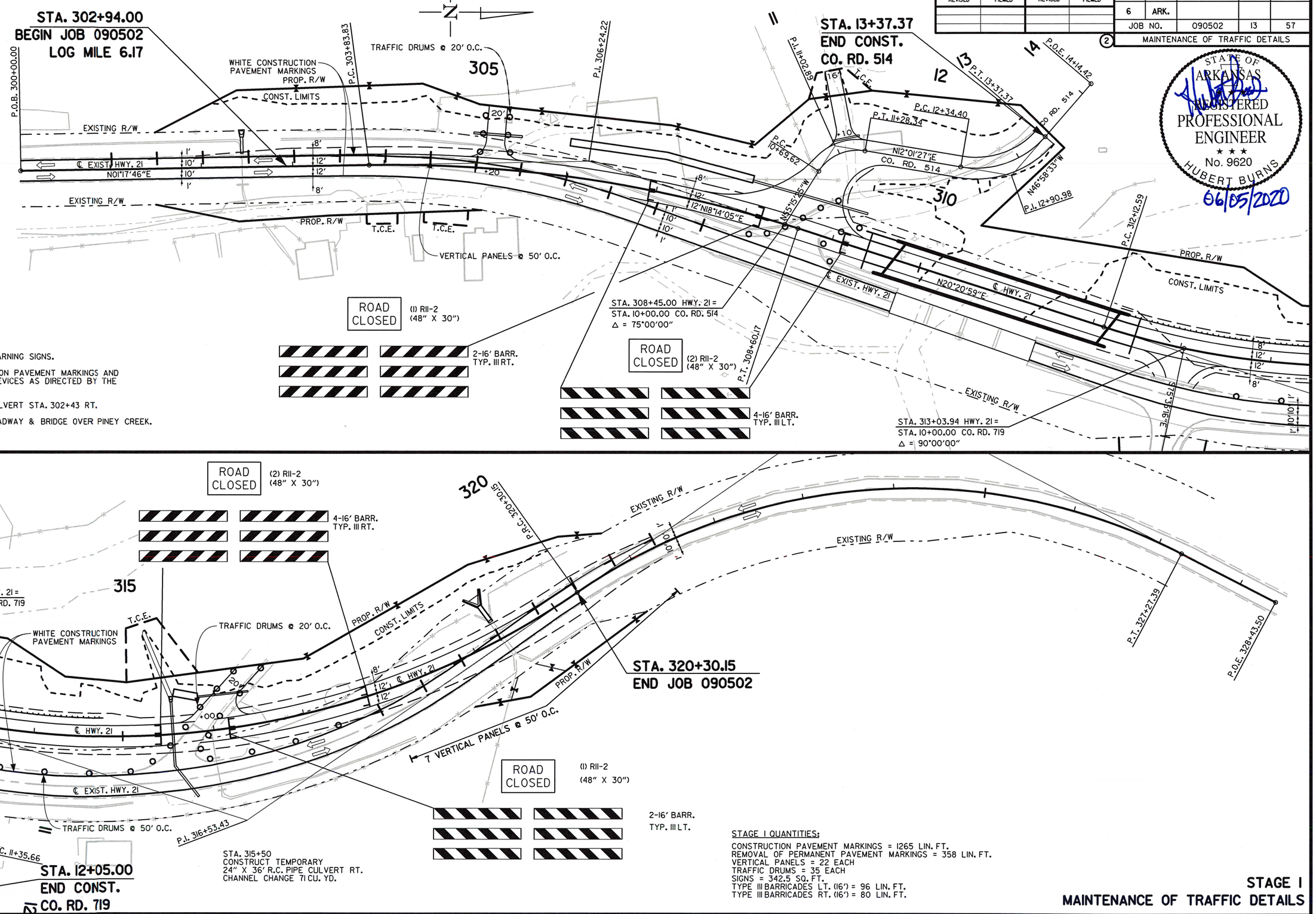

SEQUENCING:

STAGE I:

1) INSTALL ADVANCE WARNING SIGNS.

2) INSTALL CONSTRUCTION PAVEMENT MARKINGS AND TRAFFIC CONTROL DEVICES AS DIRECTED BY THE ENGINEER.

3) EXTEND EXISTING CULVERT STA. 302+43 RT.

4) CONSTRUCT NEW ROADWAY & BRIDGE OVER PINEY CREEK.

STA. 315+50
CONSTRUCT TEMPORARY
24" X 36' R.C. PIPE CULVERT RT.
CHANNEL CHANGE 71 CU. YD.

STAGE I QUANTITIES:

CONSTRUCTION PAVEMENT MARKINGS = 1265 LIN. FT.
REMOVAL OF PERMANENT PAVEMENT MARKINGS = 358 LIN. FT.
VERTICAL PANELS = 22 EACH
TRAFFIC DRUMS = 35 EACH
SIGNS = 342.5 SQ. FT.
TYPE III BARRICADES LT. (16') = 96 LIN. FT.
TYPE III BARRICADES RT. (16') = 80 LIN. FT.

STAGE I
MAINTENANCE OF TRAFFIC DETAILS

USER: N55187
DESIGN FILE: G:\180360I_090502\TRANSP\dgn\090502_Piney Creek\maint_of_traffic\r090502 MOT.dgn
PLOTTED: 6/4/2020 17:42
MODEL: MOT STAGE I - Piney Creek
SCALE: 1:100

DATE REVISED	DATE FILMED	DATE REVISED	DATE FILMED

FED.RD. DIST.NO.	STATE	FED.AID PROJ.NO.	SHEET NO.	TOTAL SHEETS
6	ARK.			
JOB NO.		090502	14	57

2 MAINTENANCE OF TRAFFIC DETAILS

STATE OF ARKANSAS REGISTERED PROFESSIONAL ENGINEER No. 9620 HUBERT BURNS 06/05/2020

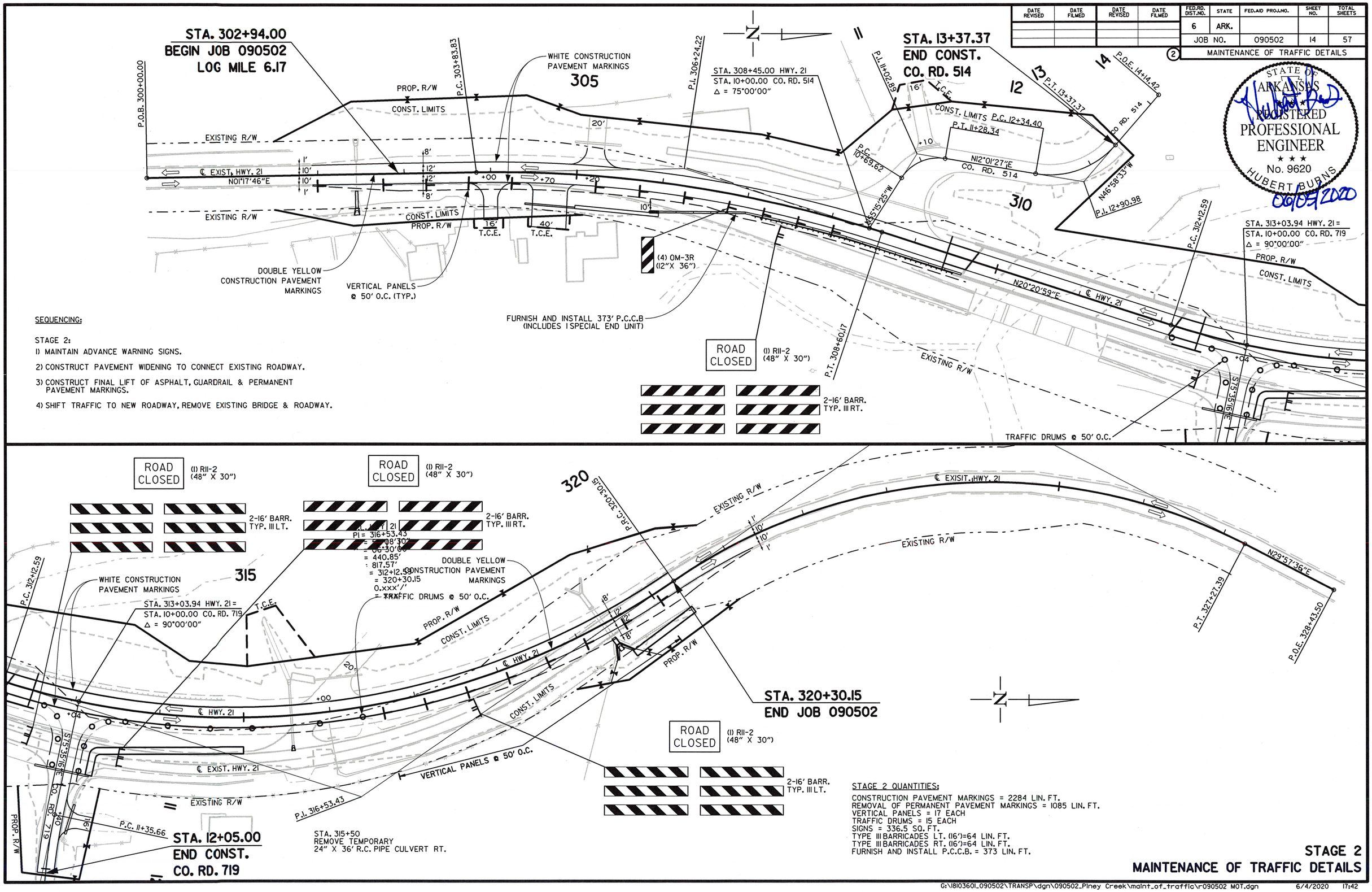

USER: NS5187
DESIGN FILE: G:\1810360I_090502\TRANSP\dgn\090502_Piney Creek\maint_of_traffic\r090502 MOT.dgn
PLOTTED: 6/4/2020 17:42
MODEL: MOT STAGE 2 - Piney Creek
SCALE: 1:100

G:\1810360I_090502\TRANSP\dgn\090502_Piney Creek\maint_of_traffic\r090502 MOT.dgn 6/4/2020 17:42

DATE REVISED	DATE FILMED	DATE REVISED	DATE FILMED	FED.RD. DIST.NO.	STATE	FED.AID PROJ.NO.	SHEET NO.	TOTAL SHEETS
				6	ARK.			
				JOB NO.		090502	15	57
				(2) PERMAMENT PAVEMENT MARKING DETAIL				

STATE OF ARKANSAS
REGISTERED PROFESSIONAL ENGINEER
No. 15560
4-28-2020
JEROME PAUL DAVIS

PERMANENT PAVEMENT MARKING

HWY 21:

THERMOPLASTIC PAVEMENT MARKING:
WHITE (6") = 3900 LIN. FT.
YELLOW (6") = 4150 LIN. FT.

RAISED PAVEMENT MARKERS:
TYPE II (YELLOW/YELLOW) (80' O.C.) = 26 EACH

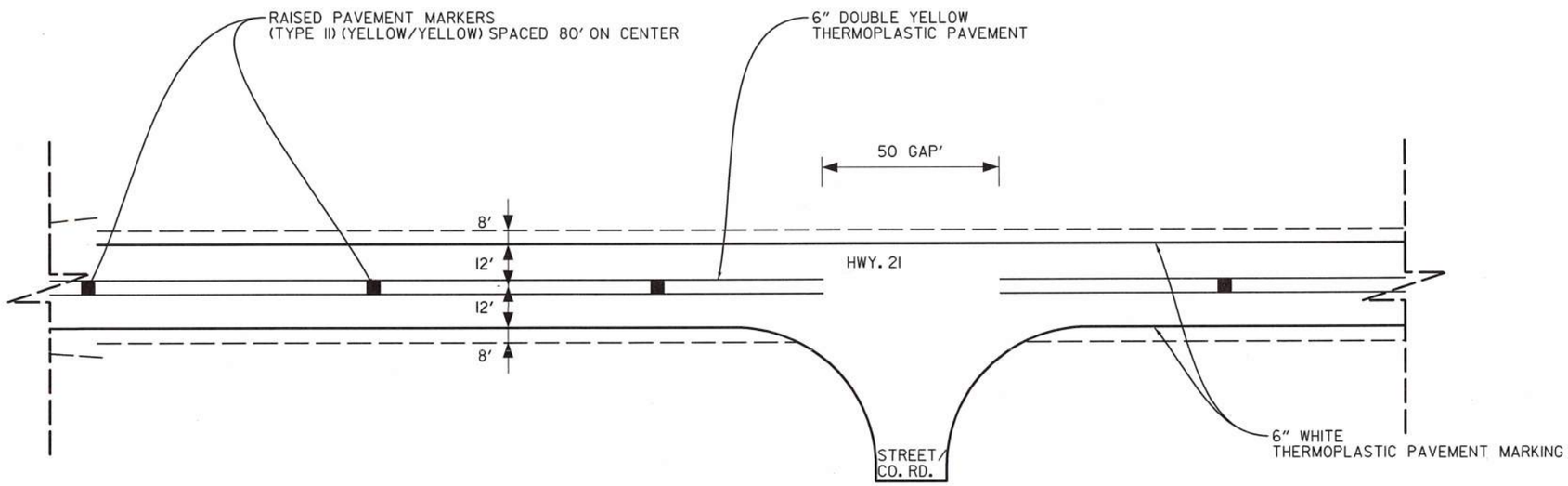

TYPICAL 2-LANE PERMANENT PAVEMENT MARKING LAYOUT

• THE 6" YELLOW STRIPING QUANTITY HAS BEEN ESTIMATED BASED ON A DOUBLE YELLOW CENTERLINE STRIPE FOR THE ENTIRE PROJECT. THE PROJECT MUST BE MARKED FOR PASSING/NO PASSING ZONES PRIOR TO THE PLACEMENT OF ANY FINAL STRIPING. CONTACT THE MAINTENANCE DIVISION AFTER THE FINAL LIFT OF SURFACE COURSE HAS BEEN PLACED TO SCHEDULE THE ZONING OF THE PROJECT.

USER: JJ5206
DESIGN FILE: G:\180360L_090502\TRANSP\dgn\090502_Piney Creek\misc\r090502 PPM Detail.dgn
PLOTTED: 4/28/2020 14:50 MODEL: Sheet SCALE: 1:40.1072

PERMANENT PAVEMENT MARKING DETAIL

G:\180360L_090502\TRANSP\dgn\090502_Piney Creek\misc\r090502 PPM Detail.dgn 4/28/2020 14:50

DATE REVISED	DATE FILMED	DATE REVISED	DATE FILMED	FED.RD. DIST.NO.	STATE	FED.AID PROJ.NO.	SHEET NO.	TOTAL SHEETS
				6	ARK.			
				JOB NO.		090502	16	57

2 QUANTITIES

STATE OF ARKANSAS
REGISTERED PROFESSIONAL ENGINEER
No. 15560
4-28-2020
JEROME PAUL DAVIS

ADVANCE WARNING SIGNS AND DEVICES

SIGN NUMBER	DESCRIPTION	SIGN SIZE	STAGE 1	STAGE 2	MAXIMUM NUMBER REQUIRED	TOTAL SIGNS REQUIRED		VERTICAL PANELS	TRAFFIC DRUMS	BARRICADES (TYPE III)		FURNISHING & INSTALLING PRECAST CONC. BARRIER
										RIGHT	LEFT	
			LIN. FT. - EACH			NO.	SQ. FT.	EACH		LIN. FT.		
W20-1	ROAD WORK 1500 FT.	48"x48"	2	2	2	2	32.0					
W20-1	ROAD WORK 1000 FT.	48"x48"	2	2	2	2	32.0					
W20-1	ROAD WORK 500 FT.	48"x48"	2	2	2	2	32.0					
W20-1	ROAD WORK AHEAD	48"x48"	2	2	2	2	32.0					
G20-2	END ROAD WORK	48"x24"	4	4	4	4	32.0					
R11-2	ROAD CLOSED	48"x30"	6	4	6	6	60.0					
OM-3R	OBJECT MARKER	12"x36"		4	4	4	12.0					
R4-1	DO NOT PASS	24"x30"	2	2	2	2	10.0					
W21-5A	RIGHT SHOULDER CLOSED	36"x36"	2	2	2	2	18.0					
W8-1	BUMP	30"x30"	2	2	2	2	12.5					
W8-9A	SHOULDER DROP-OFF	36"X36"	2	2	2	2	18.0					
SPECIAL	WORK WITH US SIGN (USE CAUTION, SLOW DOWN)	96"x48"	2	2	2	2	64.0					
	VERTICAL PANELS		22	16	22			22				
	TRAFFIC DRUMS		35	15	35				35			
	TYPE III BARRICADE-RT. (16')		6	4	6					96		
	TYPE III BARRICADE-LT. (16')		6	4	6						96	
	FURNISHING AND INSTALLING PRECAST CONCRETE BARRIER			373	373							373
TOTALS:							354.5	22	35	96	96	373

NOTE: THIS IS A HIGH TRAFFIC VOLUME ROAD AS DEFINED IN SECTION 604.03, STANDARD SPECIFICATIONS FOR HIGHWAY CONSTRUCTION.

CLEARING AND GRUBBING

STATION	STATION	LOCATION	CLEARING	GRUBBING
			STATION	
302+94	304+60	HWY. 21	2	2
307+38	315+00	HWY. 21	8	8
316+27	320+30	HWY. 21	5	5
TOTALS:			15	15

CONSTRUCTION PAVEMENT MARKINGS AND PERMANENT PAVEMENT MARKINGS

DESCRIPTION	STAGE 1	STAGE 2	END OF JOB	REMOVAL OF PERMANENT PAVEMENT MARKINGS	CONSTRUCTION PAVEMENT MARKINGS	REMOVAL OF CONSTRUCTION PAVEMENT MARKINGS	RAISED PAVEMENT MARKERS	THERMOPLASTIC PAVEMENT MARKING	
							TYPE II	6"	
							(YELLOW/YELLOW)	WHITE	YELLOW
	LIN. FT. - EACH			LIN. FT.		LIN. FT.	EACH	LIN. FT.	
REMOVAL OF PERMANENT PAVEMENT MARKINGS	358	1085		1443					
CONSTRUCTION PAVEMENT MARKINGS	1265	2284			3549				
REMOVAL OF CONSTRUCTION PAVEMENT MARKINGS		1265				1265			
RAISED PAVEMENT MARKERS TYPE II (YELLOW/YELLOW)			26				26		
THERMOPLASTIC PAVEMENT MARKING WHITE (6")			3900					3900	
THERMOPLASTIC PAVEMENT MARKING YELLOW (6")			4150						4150
TOTALS:				1443	3549	1265	26	3900	4150

NOTE: THIS IS A HIGH TRAFFIC VOLUME ROAD AS DEFINED IN SECTION 604.03, STANDARD SPECIFICATIONS FOR HIGHWAY CONSTRUCTION.

NOTE: THE 6" YELLOW STRIPING QUANTITY HAS BEEN ESTIMATED BASED ON A DOUBLE YELLOW CENTERLINE STRIPE FOR THE ENTIRE PROJECT.
THE PROJECT MUST BE MARKED FOR PASSING/NO PASSING ZONES PRIOR TO THE PLACEMENT OF ANY FINAL STRIPING.
CONTACT THE MAINTENANCE DIVISION AFTER THE FINAL LIFT OF SURFACE COURSE HAS BEEN PLACED TO SCHEDULE THE ZONING OF THE PROJECT.

MAILBOXES

LOCATION	MAILBOXES	MAILBOX SUPPORTS (SINGLE)
	EACH	
ENTIRE PROJECT	2	2
TOTALS:	2	2

REMOVAL AND DISPOSAL OF CULVERTS

STATION	DESCRIPTION	PIPE CULVERTS
		EACH
305+20	HWY. - 21 - 14" X 32" X 24' C.M.PIPE CULVERT	1
315+94	HWY. - 21 - 24" X 37' R.C. PIPE CULVERT	1
10+39	CO. RD. 514 - 32" X14" X 90' C.M. ARCH PIPE CULVERT	1
11+10	CO. RD. 514 - 16" X 18' C.M. PIPE CULVERT	1
10+85	CO. RD. 719 - 22" X 12" X 57' ARCH PIPE CULVERT	1
11+40	CO. RD. 719 - 22" X 12" X 35' ARCH PIPE CULVERT	1
TOTAL:		6

NOTE: QUANTITIES SHOWN ABOVE SHALL INCLUDE REMOVAL & DISPOSAL OF ALL HEADWALLS AND FLARED END SECTIONS IF APPLICABLE.

BENCH MARKS

STATION	LOCATION	BENCH MARKS
		EACH
309+70	AT BRIDGE	1
TOTAL:		1

NOTE: SHOWN FOR INFORMATION ONLY. BENCH MARKS SHALL BE FURNISHED AND PLACED BY STATE FORCES.

SELECTED PIPE BEDDING

LOCATION	SELECTED PIPE BEDDING
	CU.YD.
ENTIRE PROJECT TO BE USED IF	
AND WHERE DIRECTED BY THE	50
ENGINEER	
TOTAL:	50

NOTE: QUANTITY ESTIMATED.
SEE SECTION 104.03 OF THE STD. SPECS.

QUANTITIES

DATE REVISED	DATE FILMED	DATE REVISED	DATE FILMED	FED.RD. DIST.NO.	STATE	FED.AID PROJ.NO.	SHEET NO.	TOTAL SHEETS
				6	ARK.			
				JOB NO.		090502	17	57

(2) QUANTITIES

STATE OF ARKANSAS
REGISTERED PROFESSIONAL ENGINEER
No. 15560
04-28-2020
JEROME PAUL DAVIS

REMOVAL AND DISPOSAL OF ITEMS

STATION	STATION	LOCATION	WATER WELL	WELL HOUSE	ROCK WALLS	CONCRETE DRIVEWAYS	SIGN FOUNDATIONS	HOUSE FOUNDATIONS	PROPANE TANK	GUARDRAIL	BUILDINGS	STORM CELLAR	SIGNS
			EACH	EACH	LIN. FT.	SQ. YD.	EACH	LIN. FT.	EACH	LIN. FT.	EACH	EACH	EACH
305+00	306+29	HWY. 21 - LT.				1333							
305+29	305+36	HWY. 21 - LT.		1									
305+33		HWY. 21 - LT.	1										
305+78	305+87	HWY. 21 - LT.									1		
306+22	306+95	HWY. 21 - LT.						66				1	
306+00	307+06	HWY. 21 - LT.			106								
307+51		HWY. 21 - LT.							1				
307+75	309+84	HWY. 21 - RT.								203			
309+07	309+84	HWY. 21 - LT.								78			
309+10		HWY. 21 - LT.					2						1
309+10		HWY. 21 - LT.									1		1
311+46	312+23	HWY. 21 - LT.								77			
311+47	313+46	HWY. 21 - LT.								203			
316+44	316+48	HWY. 21 - LT.					2						1
TOTALS:			1	1	106	1333	4	66	1	561	2	1	3

NOTE: THE QUANTITY SHOWN ABOVE FOR THE REMOVAL AND DISPOSAL OF GUARDRAIL SHALL INCLUDE THE REMOVAL AND DISPOSAL OF ALL GUARDRAIL TERMINALS AND TERMINAL ANCHOR POSTS.

REMOVAL AND DISPOSAL OF FENCE

STATION	STATION	LOCATION	WIRE FENCE	CHAIN LINK FENCE	PIPE FENCE	BOARD FENCE	GATES
			LIN. FT.	LIN. FT.	LIN. FT.	LIN. FT.	EACH
303+07	304+83	HWY. 21 - LT.	209				
303+50	303+81	HWY. 21 - RT.		40			
303+81	304+22	HWY. 21 - RT.				70	
307+08	307+37	HWY. 21 - LT.		80			
307+29	307+81	HWY. 21 - LT.	53				
307+81	307+93	HWY. 21 - LT.					1
307+93	308+67	HWY. 21 - LT.	136				
316+08	320+48	HWY. 21 - LT.	604				
317+56		HWY. 21 - LT.					1
318+37	319+36	HWY. 21 - RT.	117				
319+29	319+47	HWY. 21 - RT.			32		
319+30		HWY. 21 - RT.					1
319+41	320+80	HWY. 21 - RT.	159				
10+59	13+30	CO. RD. 514 - LT.		306			
10+67	11+09	CO. RD. 514 - LT.					2
11+70	12+08	CO. RD. 719 - LT.	37				
11+69	11+67	CO. RD. 719 - LT.			12		
TOTALS:			1315	426	44	70	5

EROSION CONTROL MATTING

STATION	STATION	LOCATION	LENGTH	CLASS 3
			LIN. FT.	SQ. YD.
304+00.00	306+00.00		200.00	177.78
305+00.00	306+00.00		100.00	88.89
TOTAL:				266.67

NOTE: AVERAGE WIDTH = 8'-0"

EROSION CONTROL

STATION	STATION	LOCATION	PERMANENT EROSION CONTROL					TEMPORARY EROSION CONTROL								
			SEEDING	LIME	MULCH COVER	WATER	SECOND SEEDING APPLICATION	TEMPORARY SEEDING	MULCH COVER	WATER	SAND BAG DITCH CHECKS (E-5)	ROCK DITCH CHECKS (E-6)	SILT FENCE (E-11)	SEDIMENT BASIN (E-14)	OBLITERATION OF SEDIMENT BASIN	*SEDIMENT REMOVAL & DISPOSAL
			ACRE	TON	ACRE	M.GAL.	ACRE	ACRE	ACRE	M.GAL.	BAG	CU.YD.	LIN. FT.	CU.YD.	CU.YD.	CU. YD.
ENTIRE	PROJECT	CLEARING AND GRUBBING						2.22	2.22	45.3	154	18	1211			58
ENTIRE	PROJECT	STAGE 1	1.90	3.80	1.90	193.8	1.90	1.00	1.00	20.4	154	21	178	141	141	162
ENTIRE	PROJECT	STAGE 2	1.30	2.60	1.30	132.6	1.30	0.70	0.70	14.3	66	15				8
*ENTIRE PROJECT TO BE USED IF AND WHERE DIRECTED BY THE ENGINEER.			2.22	4.44	2.22	226.4	2.22	0.50	0.50	10.2	44	6	160	50	50	56
TOTALS:			5.42	10.84	5.42	552.8	5.42	4.42	4.42	90.2	418	60	1549	191	191	284

BASIS OF ESTIMATE:
LIME .....2 TONS / ACRE OF SEEDING
WATER.....102.0 M.G. / ACRE OF SEEDING
WATER.....20.4 M.G. / ACRE OF TEMPORARY SEEDING
SAND BAG DITCH CHECKS.....22 BAGS / LOCATION
ROCK DITCH CHECKS.....3 CU.YD./LOCATION

NOTE: THE TEMPORARY EROSION CONTROL DEVICES SHOWN ABOVE AND ON THE PLANS SHALL BE INSTALLED IN SUCH A SEQUENCE AS TO DETER EROSION AND SEDIMENTATION ON U.S. WATERWAYS AS EXPLAINED BY THE NATIONAL POLLUTANT DISCHARGE ELIMINATION SYSTEM PERMIT.

*QUANTITIES ESTIMATED.
SEE SECTION 104.03 OF THE STD. SPECS.

DATE REVISED	DATE FILMED	DATE REVISED	DATE FILMED	FED.RD. DIST.NO.	STATE	FED.AID PROJ.NO.	SHEET NO.	TOTAL SHEETS
				6	ARK.			
				JOB NO.		090502	18	57

2 QUANTITIES

STATE OF ARKANSAS REGISTERED PROFESSIONAL ENGINEER No. 9620 HUBERT BURNS 06/05/2020

STRUCTURES

STATION	DESCRIPTION	REINFORCED CONCRETE PIPE CULVERT (CLASS III) 24"	REINFORCED CONCRETE PIPE CULVERT (CLASS III) 36"	TEMPORARY CULVERTS 24"	FLARED END SECTIONS FOR R.C. PIPE 24"	FLARED END SECTIONS FOR R.C. PIPE 36"	SPAN	HEIGHT	BREAKBACK	CLASS S CONCRETE-ROADWAY	REINF. STEEL-ROADWAY (GRADE 60)	UNCL.EXC. FOR STR.-ROADWAY	SOLID SODDING	WATER	STD. DWG. NOS.
		LIN. FT.		LIN. FT.	EACH		LIN. FT.			CU.YD.	POUND	CU.YD.	SQ.YD.	M.GAL.	
302+43	EXTEND PIPE CULVERT 20' LT & 15' RT		43			2							34	0.4	FES-1, FES-2, PCC-1
315+50	INSTALL R.C. PIPE CULVERT	72		36	2								24	0.3	FES-1, FES-2, PCC-1
319+30	EXTEND R.C. BOX CULVERT - 25' LT. & 16' RT. W/WING WALLS 3:1						4	6	41	35.05	2941	23	19	0.2	R-100X-0, W-X003-1, PBC-1, RCB-1, RCB-2, RCB-3
TOTALS:		**72**	**43**	**36**	**2**	**2**				**35.05**	**2941**	**23**	**77**	**0.9**	

BASIS OF ESTIMATE:
WATER.....12.6 GAL. / SQ. YD. OF SOLID SODDING
NOTE: FOR R.C. PIPE CULVERT INSTALLATIONS USE TYPE 3 BEDDING UNLESS OTHERWISE SPECIFIED.
NOTE: FOR C.M. PIPE CULVERT INSTALLATIONS USE TYPE 2 BEDDING UNLESS OTHERWISE SPECIFIED.

DRIVEWAYS & TURNOUTS

STATION	SIDE	LOCATION	WIDTH	ACHM SURFACE COURSE (1/2") 220 LBS. PER SQ. YD. (PG 64-22)		AGGREGATE BASE COURSE (CLASS 7)	SIDE DRAINS 18"	SIDE DRAINS 24"	SIDE DRAINS 21"X15"	SIDE DRAINS 28"X20"	STANDARD DRAWINGS
			FEET	SQ. YD.	TON	TON	LIN. FT.				
304+00	RT.	HWY. 21	16	97.27	10.70	180.27					PCC-1, PCM-1, PCP-1, PCP-2, PCP-3
304+70	RT.	HWY. 21	40	225.20	24.77	80.16	58				PCC-1, PCM-1, PCP-1, PCP-2, PCP-3
305+20	LT.	HWY. 21	20	135.70	14.93	44.60		54			PCC-1, PCM-1, PCP-1, PCP-2, PCP-3
308+45	LT.	HWY. 21	24	1265.64	139.22	479.59		132			PCC-1, PCM-1, PCP-1, PCP-2, PCP-3
313+04	RT.	HWY. 21	20	480.79	52.89	180.27		65			PCC-1, PCM-1, PCP-1, PCP-2, PCP-3
316+00	LT.	HWY. 21	20	209.12	23.00	70.09	56				PCC-1, PCM-1, PCP-1, PCP-2, PCP-3
11+10	LT.	CO. RD. 514	16	150.56	16.56	61.48			30		PCC-1, PCM-1, PCP-1, PCP-2, PCP-3
11+40	LT.	CO. RD. 719	16	82.22	9.04	33.57				36	PCC-1, PCM-1, PCP-1, PCP-2, PCP-3
* ENTIRE PROJECT TEMPORARY DRIVES						70.00					
TOTALS:				**2646.50**	**291.11**	**1200.03**	**114**	**251**	**30**	**36**	

BASIS OF ESTIMATE:
ACHM SURFACE COURSE (1/2").....94.5% MIN. AGGR).....5.5% ASPHALT BINDER
MAXIMUM NUMBER OF GYRATIONS = 115 FOR PG 64-22
* QUANTITY ESTIMATED
SEE SECTION 104.03 OF THE STD. SPECS.
TO BE USED IF AND WHERE DIRECTED BY THE ENGINEER.

GUARDRAIL

STATION	STATION	LOCATION	GUARDRAIL (TYPE A)	THRIE BEAM GUARDRAIL TERMINAL	GUARDRAIL TERMINAL (TYPE 2)	BRIDGE END TERMINAL
			LIN. FT.	EACH		
307+10.16	309+53.91	RT. SIDE OF MAIN LANES	175	1	1	
309+68.10		LT. SIDE OF MAIN LANES				1
312+19.58		RT. SIDE OF MAIN LANES				1
312+34.35	314+78.10	LT. SIDE OF MAIN LANES	175	1	1	
TOTALS:			**350**	**2**	**2**	**2**

ASPHALT CONCRETE PATCHING FOR MAINTENANCE OF TRAFFIC

LOCATION	TON	TACK COAT GALLON
ENTIRE PROJECT - TO BE USED IF AND WHERE	8	16
DIRECTED BY THE ENGINEER		
TOTALS:	**8**	**16**

BASIS OF ESTIMATE:
ASPHALT CONCRETE PATCHING FOR MAINTENANCE OF TRAFFIC...25 TON/MILE
TACK COAT FOR MAINTENANCE OF TRAFFIC.....50 GAL./MILE

4" PIPE UNDERDRAIN

STATION	STATION	LOCATIONS	4" PIPE UNDERDRAINS	UNDERDRAIN OUTLET PROTECTORS
			LIN. FT.	EACH
* ENTIRE PROJECT TO BE USED IF AND			1000	4
WHERE DIRECTED BY THE ENGINEER				
TOTALS:			**1000**	**4**

* NOTE: QUANTITY ESTIMATED.
SEE SECTION 104.03 OF THE STD. SPECS.

CONCRETE DITCH PAVING

STATION	STATION	LOCATION	LENGTH	"W"	CONC. DITCH PAVING (TYPE B)	SOLID SODDING	WATER
			LIN. FT.	FEET	SQ. YD.	SQ. YD.	M. GAL.
305+00.00	306+00.00	HWY. 21 - RT.	100	4.00	44	44	0.6
306+00.00	307+98.73	HWY. 21 - LT.	204	8.00	181	91	1.2
313+29.39	315+00.00	HWY. 21 - RT.	210	8.00	187	93	1.2
315+55.10	315+82.45	HWY. 21 - LT.	27	8.00	24	12	0.2
319+51.70	320+30.00	HWY. 21 - RT.	54	8.00	48	24	0.3
TOTALS:					**484**	**264**	**3.5**

BASIS OF ESTIMATE:
WATER.....12.6 GAL. / SQ. YD. OF SOLID SODDING.

EARTHWORK

STATION	STATION	LOCATION / DESCRIPTION	UNCLASSIFIED EXCAVATION	COMPACTED EMBANKMENT	ROCK FILL	* SOIL STABILIZATION
			CU. YD.			TON
ENTIRE	PROJECT	STAGE 1-MAIN LANES	6165	14745	1580	
ENTIRE	PROJECT	STAGE 2-MAIN LANES	2594	1899		
ENTIRE	PROJECT	APPROACHES		130		
ENTIRE	PROJECT	TEMPORARY APPROACHES		50		
ENITIRE	PROJECT	BRIDGE EXCAVATION	695			
315+50		CHANNEL CHANGE	71			
		CO. RD. 514	2979			
		CO. RD. 719	32	878		
* ENTIRE	PROJECT	TO BE USED IF AND WHERE				100
		DIRECTED BY THE ENGINEER				
TOTALS:			**12536**	**17702**	**1580**	**100**

* QUANTITY ESTIMATED.
SEE SECTION 104.03 OF THE STD. SPECS.

USER: NS5187 DESIGN FILE: G:\180360L_090502\TRANSP\dgn\090502_Piney Creek\quantities\R09502_QUANTITIES.dgn SCALE: 1:2
PLOTTED: 6/5/2020 09:40 MODEL: TITLE SHEET

DATE REVISED	DATE FILMED	DATE REVISED	DATE FILMED	FED.RD. DIST.NO.	STATE	FED.AID PROJ.NO.	SHEET NO.	TOTAL SHEETS
				6	ARK.			
				JOB NO.		090502	19	57

2 QUANTITIES

STATE OF ARKANSAS ★★★ REGISTERED PROFESSIONAL ENGINEER ★★★ No. 15560 05-21-20 JEROME PAUL DAVIS

FENCING

STATION	STATION	LOCATION	WIRE FENCE (TYPE D)	WIRE FENCE (TYPE D-1)	WIRE FENCE (TYPE D-2)	10' CHAIN LINK FENCE	* 16'-0" GATES	* 18'-0" GATES
			LIN. FT.				EACH	EACH
303+07	304+83	HWY. 21 - LT.	183					
307+85		HWY. 21 - LT.					1	
307+08	308+18	HWY. 21 - LT.	138					
316+74	320+48	HWY. 21 - LT.		392				
317+56		HWY. 21 - LT.					1	
318+21	320+81	HWY. 21 - RT.			254			
319+20		HWY. 21 - RT.					1	
10+76	13+39	CO. RD. 514 - LT.				262		
11+10		CO. RD. 514 - LT.						1
11+63	12+08	CO. RD. 719			44			
TOTALS:			**321**	**392**	**298**	**262**	**3**	**1**

* DENOTES ALTERNATE BID ITEM.

APPROACH GUTTERS AND SLABS

STATION	STATION	LOCATION	APPROACH GUTTER (TYPE SPECIAL)	APPROACH SLABS	REINFORCING STEEL-RDWY. (GR. 60)	AGGREGATE BASE CRS. (CLASS 7)
			CU.YD.	CU.YD.	POUND	TON
309+31.11	309+62.31	RT. SIDE	13.92		783	
309+31.11	309+70.47	APPROACH SLAB		58.51	6063	36.75
309+31.11	309+78.63	LT. SIDE	14.10		784	
312+13.16	312+57.53	RT. SIDE	14.10		784	
312+17.53	312+56.92	APPROACH SLAB		58.51	6063	36.75
312+22.05	312+56.32	LT. SIDE	13.92		783	
TOTALS:			**56.04**	**117.02**	**15260**	**73.50**

BASE AND SURFACING

STATION	STATION	LOCATION	LENGTH	AGGREGATE BASE COURSE (CLASS 7) TON / STATION	AGGREGATE BASE COURSE (CLASS 7) TON	TACK COAT (0.05 GAL. PER SQ. YD.) TOTAL WID.	TACK COAT (0.05 GAL. PER SQ. YD.) SQ.YD.	TACK COAT (0.05 GAL. PER SQ. YD.) GALLON	TACK COAT (0.17 GAL. PER SQ. YD.) TOTAL WID.	TACK COAT (0.17 GAL. PER SQ. YD.) SQ.YD.	TACK COAT (0.17 GAL. PER SQ. YD.) GALLON	TACK COAT TOTAL GALLONS	ACHM BINDER COURSE (1") AVG. WID.	ACHM BINDER COURSE (1") SQ.YD.	ACHM BINDER COURSE (1") POUND / SQ.YD.	ACHM BINDER COURSE (1") PG 64-22	ACHM SURFACE COURSE (1/2") AVG. WID.	ACHM SURFACE COURSE (1/2") SQ.YD.	ACHM SURFACE COURSE (1/2") POUND / SQ.YD.	ACHM SURFACE COURSE (1/2") PG 64-22	ACHM SURFACE COURSE (1/2") AVG. WID.	ACHM SURFACE COURSE (1/2") SQ.YD.	ACHM SURFACE COURSE (1/2") POUND / SQ.YD.	ACHM SURFACE COURSE (1/2") PG 64-22	ACHM SURFACE COURSE (1/2") TOTAL PG 64-22
			FEET			FEET			FEET				FEET			TON	FEET			TON	FEET			TON	TON
MAIN LANES																									
301+94.00	302+94.00	HWY. 21 BEGIN TRANSITIION	100.00	110.50	110.50				22.00	244.44	41.55	41.55									26.00	288.89	220.00	31.78	31.78
302+94.00	306+59.13	HWY. 21 NOTCH AND WIDEN	365.13	213.00	777.73	17.34	703.48	35.17				35.17	8.73	354.18	495.00	87.66	8.63	350.12	220.00	38.51	28.00	1135.96	220.00	124.96	163.47
306+59.13	309+31.11	HWY. 21 FULL DEPTH	271.98	282.00	766.98	48.77	1473.83	73.69				73.69	24.52	740.99	495.00	183.40	24.25	732.84	220.00	80.61	28.00	846.16	220.00	93.08	173.69
312+56.92	318+08.44	HWY. 21 FULL DEPTH	551.52	282.00	1555.29	48.77	2988.63	149.43				149.43	24.52	1502.59	495.00	371.89	24.25	1486.04	220.00	163.46	28.00	1715.84	220.00	188.74	352.20
318+08.44	320+30.15	HWY. 21 NOTCH AND WIDEN	221.71	216.50	480.00	17.43	429.38	21.47				21.47	8.76	215.80	495.00	53.41	8.67	213.58	220.00	23.49	28.00	689.76	220.00	75.87	99.36
320+30.15	321+30.15	HWY. 21 END TRANSITION	100.00	126.25	126.25				22.00	244.44	41.55	41.55									26.00	288.89	220.00	31.78	31.78
ADDITIONAL FOR LEVELING																									
302+94.00	305+20.00	HWY. 21	226.00						22.00	552.44	93.91	93.91									22.00	552.44	220.00	60.77	60.77
319+00.00	320+30.15	HWY. 21	130.15						22.00	318.14	54.08	54.08									22.00	318.14	220.00	35.00	35.00
ADDITIONAL FOR SUPERELEVATION																									
302+94.00	305+94.00	HWY. 21 SUPER TRANSITION	300.00	45.00	135.00																				
305+94.00	306+50.00	HWY. 21 MAX SUPER	56.00	58.25	32.62																				
306+50.00	309+50.00	HWY. 21 SUPER TRANSITION	300.00	45.00	135.00																				
312+12.59	315+62.59	HWY. 21 SUPER TRANSITION	350.00	41.00	143.50																				
315+62.59	316+80.15	HWY. 21 MAX SUPER	117.56	69.50	81.70																				
316+80.15	320+30.15	HWY. 21 SUPER TRANSITION	350.00	41.00	143.50																				
WIDENING FOR GUARDRAIL																									
306+55.11	309+63.19	HWY. 21 RT.	308.08	20.87	64.30																10.27	351.55	220.00	38.67	38.67
309+07.73	309+77.74	HWY. 21 LT.	70.01	22.55	15.79																7.34	57.10	220.00	6.28	6.28
312+25.12	315+20.07	HWY. 21 LT.	294.95	21.12	62.29																10.24	335.59	220.00	36.91	36.91
312+10.24	312+70.52	HWY. 21 RT.	60.28	29.17	17.58																9.90	66.31	220.00	7.29	7.29
TOTALS:					**4648.03**		**5595.32**	**279.76**		**1359.46**	**231.09**	**510.85**		**2813.56**		**696.36**		**2782.58**		**306.07**		**6646.63**		**731.13**	**1037.20**

BASIS OF ESTIMATE:
ACHM SURFACE COURSE (1/2").....94.5% MIN. AGGR.....5.5% ASPHALT BINDER
ACHM BINDER COURSE (1").....95.6% MIN. AGGR.....4.4% ASPHALT BINDER
MAXIMUM NUMBER OF GYRATIONS = 115 FOR PG 64-22
TACK COAT QUANTITIES WERE CALCULATED USING THE EMULSIFIED ASPHALT RATES. REFER TO SS-400-1 FOR THE RESIDUAL ASPHALT APPLICATION RATES.

PAVEMENT REPAIR OVER CULVERTS (CONCRETE)

STATION	LOCATION	WIDTH	LENGTH	CU.YD.
		FEET		
315+50	HWY. 21	8.50	22	5.2
TOTAL:				**5.2**

AVG. DEPTH = 9"

COLD MILLING ASPHALT PAVEMENT

STATION	STATION	LOCATION	AVG. WIDTH	COLD MILLING ASPHALT PAVEMENT
			FEET	SQ. YD.
301+94.00	302+94.00	MAIN LANES	22.00	244.44
320+30.15	321+30.15	MAIN LANES	22.00	244.44
TOTAL:				**488.88**

NOTE: AVERAGE MILLING DEPTH 1".

ACHM PATCHING OF EXISTING ROADWAY

DESCRIPTION	TON
ENTIRE PROJECT - TO BE USED IF AND WHERE	50
DIRECTED BY THE ENGINEER	
TOTAL:	**50**

NOTE: QUANTITY ESTIMATED.
SEE SECTION 104.03 OF THE STD. SPECS.

USER: JJ5206
DESIGN FILE: G:\180360_090502\TRANSP\dgn\090502_Piney Creek\quantities\R09502_QUANTITIES.dgn SCALE: 1:2
PLOTTED: 5/21/2020 15:42 MODEL: TITLE SHEET

DATE REVISED	DATE FILMED	DATE REVISED	DATE FILMED

FED.RD. DIST.NO.	STATE	FED.AID PROJ.NO.	SHEET NO.	TOTAL SHEETS
6	ARK.			
JOB NO.		090502	20	57

(1) 07485 BRIDGE QUANTITIES 61619

SCHEDULE OF BRIDGE QUANTITIES - JOB NO. 090502

BRIDGE NO.	NAME PLATE TITLE	UNIT OF STRUCTURE	ITEM NO.	205	801	SS & 802	SP, SS & 802	803	SS & 804	SS & 804	SS & 805 (1)	SS & 805	SP, SS, & 807	SS & 808	812	816	816	SP JOB 090502
			ITEM	REMOVAL OF EXISTING BRIDGE STRUCTURE (SITE NO. _)	UNCLASSIFIED EXCAVATION FOR STRUCTURES-BRIDGE	CLASS S CONCRETE -BRIDGE	CLASS S (AE) CONCRETE -BRIDGE	CLASS 2 PROTECTIVE SURFACE TREATMENT	REINFORCING STEEL - BRIDGE (GRADE 60)	EPOXY COATED REINFORCING STEEL (GRADE 60)	STEEL PILING (HP 12X53)	PREBORING	STRUCTURAL STEEL IN BEAM SPANS (A709, GR. 50W)	ELASTOMERIC BEARINGS	BRIDGE NAME PLATE (TYPE D)	FILTER BLANKET	DUMPED RIPRAP	SHORING (SITE NO. _)
			UNIT	LUMP SUM	CU. YD.	CU. YD.	CU. YD.	SQ. YD.	LB.	LB.	LIN. FT.	LIN. FT.	LB.	CU. IN.	EACH	SQ. YD.	CU. YD.	LUMP SUM
07485	HIGHWAY 21 OVER PINEY CREEK	BENT NO. 1			36	23.38			1501	407	90	75				62	50	
		BENT NO. 2			120	59.71			14,296				1536	3,150				
		BENT NO. 3			67	59.68			14,296				1536	3,150				
		BENT NO. 4			154	59.90			14,296				1536	3,150				
		BENT NO. 5				23.53			1501	407	120	75				224	147	
		246'-0" INT. CONT. W-BEAM UNIT					349.40	1329.1		88,226			225,932		1			
		SITE NO. 1 (EX. BR. NO. 03309)		1														1
		TOTALS FOR JOB NO. 090502			377	226.20	349.40	1329.1	45,890	89,040	210	150	230,540	9,450	1	286	197	

(1) All piling shall be ASTM A709, Grade 50. Steel piling (Gr. 50) shall have special driving points which shall not be paid for directly, but shall be considered subsidiary to the item "Steel Piling (HP 12x53)."

STATE OF ARKANSAS
REGISTERED PROFESSIONAL ENGINEER
No. 11856
CHARLES A. WIPF
06/01/2020

SCHEDULE OF BRIDGE QUANTITIES
PINEY CREEK STR. & APPRS. (S)
CARROLL COUNTY
ROUTE 21 SEC. 5
ARKANSAS STATE HIGHWAY COMMISSION
LITTLE ROCK, ARK.

DRAWN BY: LDG DATE: 04-01-20 FILENAME: b090502_ql.dgn
CHECKED BY: CAW DATE: 04-02-20 SCALE: NO SCALE
DESIGNED BY: LDG DATE: 10-21-19
BRIDGE NO. 07485 DRAWING NO. 61619

USER: lg5169
DESIGN FILE: G:\181036O1_090502\TRANSP\dgn\bridge\b090502_ql.dgn
PLOTTED: 6/1/2020 11:20 SCALE: 1:2

G:\181036O1_090502\TRANSP\dgn\bridge\b090502_ql.dgn 6/1/2020 11:20

DATE REVISED	DATE FILMED	DATE REVISED	DATE FILMED	FED.RD. DIST.NO.	STATE	FED.AID PROJ.NO.	SHEET NO.	TOTAL SHEETS
				6	ARK.			
				JOB NO.		090502	21	57

2 SUMMARY OF QUANTITIES

STATE OF ARKANSAS REGISTERED PROFESSIONAL ENGINEER No. 9620 HUBERT BURNS 06/08/2020

SUMMARY OF QUANTITIES (BOX 1 OF 2)

ITEM NUMBER	ITEM	QUANTITY	UNIT
SP & 201	CLEARING	15	STATION
201	GRUBBING	15	STATION
202	REMOVAL AND DISPOSAL OF WELL	1	EACH
202	REMOVAL AND DISPOSAL OF WIRE FENCE	1315	LIN. FT.
202	REMOVAL AND DISPOSAL OF CHAIN LINK FENCE	426	LIN. FT.
202	REMOVAL AND DISPOSAL OF BOARD FENCE	70	LIN. FT.
202	REMOVAL AND DISPOSAL OF PIPE FENCE	44	LIN. FT.
202	REMOVAL AND DISPOSAL OF GATES	5	EACH
202	REMOVAL AND DISPOSAL OF ROCK WALLS	106	LIN. FT.
202	REMOVAL AND DISPOSAL OF CONCRETE DRIVEWAYS	1333	SQ. YD.
202	REMOVAL AND DISPOSAL OF SIGN FOUNDATIONS	4	EACH
202	REMOVAL AND DISPOSAL OF HOUSE FOUNDATION	66	LIN. FT.
202	REMOVAL AND DISPOSAL OF PIPE CULVERTS	6	EACH
202	REMOVAL AND DISPOSAL OF GUARDRAIL	561	LIN. FT.
202	REMOVAL AND DISPOSAL OF WELL HOUSE	1	EACH
202	REMOVAL AND DISPOSAL OF BUILDINGS	2	EACH
202	REMOVAL AND DISPOSAL OF STORM CELLAR	1	EACH
202	REMOVAL AND DISPOSAL OF SIGNS	3	EACH
202	REMOVAL AND DISPOSAL OF PROPANE TANK	1	EACH
SS & 210	UNCLASSIFIED EXCAVATION	12536	CU. YD.
210	COMPACTED EMBANKMENT	17702	CU. YD.
SP & 210	ROCK FILL	1580	CU. YD.
SP & 210	SOIL STABILIZATION	100	TON
SS & 303	AGGREGATE BASE COURSE (CLASS 7)	5922	TON
SS & 401	TACK COAT	527	GAL.
SP, SS, & 406	MINERAL AGGREGATE IN ACHM BINDER COURSE (1")	665	TON
SP, SS, & 406	ASPHALT BINDER (PG 64-22) IN ACHM BINDER COURSE (1")	31	TON
SP, SS, & 407	MINERAL AGGREGATE IN ACHM SURFACE COURSE (1/2")	1255	TON
SP, SS, & 407	ASPHALT BINDER (PG 64-22) IN ACHM SURFACE COURSE (1/2")	73	TON
412	COLD MILLING ASPHALT PAVEMENT	489	SQ. YD.
SP, SS, & 414	ASPHALT CONCRETE PATCHING FOR MAINTENANCE OF TRAFFIC	8	TON
SP, SS, & 415	ACHM PATCHING OF EXISTING ROADWAY	50	TON
504	APPROACH SLABS	117.02	CU. YD.
504	APPROACH GUTTERS	56.04	CU. YD.
601	MOBILIZATION	1.00	LUMP SUM
SP & 602	FURNISHING FIELD OFFICE	1	EACH
SS & 603	MAINTENANCE OF TRAFFIC	1.00	LUMP SUM
603	24" TEMPORARY CULVERT	36	LIN. FT.
SS & 604	SIGNS	355	SQ. FT.
SS & 604	BARRICADES	192	LIN. FT.
SS & 604	TRAFFIC DRUMS	35	EACH
SS & 604	FURNISHING AND INSTALLING PRECAST CONCRETE BARRIER	373	LIN. FT.
604	CONSTRUCTION PAVEMENT MARKINGS	3549	LIN. FT.
604	REMOVAL OF CONSTRUCTION PAVEMENT MARKINGS	1265	LIN. FT.
604	REMOVAL OF PERMANENT PAVEMENT MARKINGS	1443	LIN. FT.
SS & 604	VERTICAL PANELS	22	EACH
SS & 605	CONCRETE DITCH PAVING (TYPE B)	484	SQ. YD.
606	24" REINFORCED CONCRETE PIPE CULVERTS (CLASS III)	72	LIN. FT.
606	36" REINFORCED CONCRETE PIPE CULVERTS (CLASS III)	43	LIN. FT.
SP, SS, & 606	18" SIDE DRAIN	114	LIN. FT.
SP, SS, & 606	24" SIDE DRAIN	251	LIN. FT.
SS & 606	21" X 15" SIDE DRAIN	30	LIN. FT.
SS & 606	28" X 20" SIDE DRAIN	36	LIN. FT.
606	24" FLARED END SECTIONS FOR REINFORCED CONCRETE PIPE CULVERTS	2	EACH
606	36" FLARED END SECTIONS FOR REINFORCED CONCRETE PIPE CULVERTS	2	EACH
606	SELECTED PIPE BEDDING	50	CU. YD.
SS & 611	4" PIPE UNDERDRAINS	1000	LIN. FT.
SS & 611	UNDERDRAIN OUTLET PROTECTORS	4	EACH
615	PAVEMENT REPAIR OVER CULVERTS (CONCRETE)	5.2	CU. YD.
SS & 617	GUARDRAIL (TYPE A)	350	LIN. FT.
SS & 617	GUARDRAIL TERMINAL (TYPE 2)	2	EACH
SS & 617	THRIE BEAM GUARDRAIL TERMINAL	2	EACH
619	WIRE FENCE (TYPE D)	321	LIN. FT.
619	WIRE FENCE (TYPE D-1)	392	LIN. FT.
619	WIRE FENCE (TYPE D-2)	298	LIN. FT.
619	10' STEEL CHAIN LINK FENCE	262	LIN. FT.
* 619	16' STEEL GATES (ALTERNATE NO. 1)	3	EACH
* 619	16' ALUMINUM GATES (ALTERNATE NO. 2)	3	EACH
* 619	18' STEEL GATES (ALTERNATE NO. 1)	1	EACH
* 619	18' ALUMINUM GATES (ALTERNATE NO. 2)	1	EACH
620	LIME	11	TON
620	SEEDING	5.42	ACRE
SS & 620	MULCH COVER	9.84	ACRE
620	WATER	647.4	M. GAL.

* DENOTES ALTERNATE BID ITEMS.

SUMMARY OF QUANTITIES (BOX 2 OF 2)

ITEM NUMBER	ITEM	QUANTITY	UNIT
621	TEMPORARY SEEDING	4.42	ACRE
621	SILT FENCE	1549	LIN. FT.
621	SAND BAG DITCH CHECKS	418	BAG
621	SEDIMENT BASIN	191	CU. YD.
621	OBLITERATION OF SEDIMENT BASIN	191	CU. YD.
621	SEDIMENT REMOVAL AND DISPOSAL	284	CU. YD.
621	ROCK DITCH CHECKS	60	CU. YD.
623	SECOND SEEDING APPLICATION	5.42	ACRE
624	SOLID SODDING	341	SQ. YD.
626	EROSION CONTROL MATTING (CLASS 3)	267	SQ. YD.
635	ROADWAY CONSTRUCTION CONTROL	1.00	LUMP SUM
637	MAILBOXES	2	EACH
637	MAILBOX SUPPORTS (SINGLE)	2	EACH
719	THERMOPLASTIC PAVEMENT MARKING WHITE (6")	3900	LIN. FT.
719	THERMOPLASTIC PAVEMENT MARKING YELLOW (6")	4150	LIN. FT.
721	RAISED PAVEMENT MARKERS (TYPE II)	26	EACH
SS & 734	BRIDGE END TERMINAL	2	EACH
801	UNCLASSIFIED EXCAVATION FOR STRUCTURES-ROADWAY	23	CU. YD.
SS & 802	CLASS S CONCRETE-ROADWAY	35.05	CU. YD.
SS & 804	REINFORCING STEEL-ROADWAY (GRADE 60)	18201	POUND
	STRUCTURES OVER 20' SPAN		
205	REMOVAL OF EXISTING BRIDGE STRUCTURE (SITE NO. 1)	1.00	LUMP SUM
636	BRIDGE CONSTRUCTION CONTROL	1.00	LUMP SUM
801	UNCLASSIFIED EXCAVATION FOR STRUCTURES-BRIDGE	377	CU. YD.
SS & 802	CLASS S CONCRETE-BRIDGE	226.20	CU. YD.
SP, SS, & 802	CLASS S(AE) CONCRETE-BRIDGE	349.40	CU. YD.
803	CLASS 2 PROTECTIVE SURFACE TREATMENT	1329.10	SQ. YD.
SS & 804	REINFORCING STEEL-BRIDGE (GRADE 60)	45890	POUND
SS & 804	EPOXY COATED REINFORCING STEEL (GRADE 60)	89040	POUND
SS & 805	STEEL PILING (HP 12X53)	210	LIN. FT.
SS & 805	PREBORING	150	LIN. FT.
SP, SS, & 807	STRUCTURAL STEEL IN BEAM SPANS (A709, GR. 50W)	230540	POUND
SS & 808	ELASTOMERIC BEARINGS	9450	CU. IN.
812	BRIDGE NAME PLATE (TYPE D)	1	EACH
816	FILTER BLANKET	286	SQ. YD.
816	DUMPED RIPRAP	197	CU. YD.
SP	SHORING (SITE NO. 1)	1.00	LUMP SUM

REVISIONS

DATE	REVISION	SHEET NUMBER

USER: JJ5206
DESIGN FILE: G:\180360I_090502\TRANSP\dgn\090502_Piney Creek\quantities\R09502_QUANTITIES.dgn
PLOTTED: 6/8/2020 10:06 MODEL: TITLE SHEET SCALE: 1:2

SUMMARY OF QUANTITIES AND REVISIONS

G:\180360I_090502\TRANSP\dgn\090502_Piney Creek\quantities\R09502_QUANTITIES.dgn 6/8/2020 10:06

DATE REVISED	DATE FILMED	DATE REVISED	DATE FILMED	FED.RD. DIST.NO.	STATE	FED.AID PROJ.NO.	SHEET NO.	TOTAL SHEETS
				6	ARK.			
				JOB NO.		090502	22	57

2 SURVEY CONTROL DETAILS

STATE OF ARKANSAS
REGISTERED PROFESSIONAL ENGINEER
No. 15560
4-28-2020
JEROME PAUL DAVIS

SURVEY CONTROL COORDINATES

Project Name: s090502
Date: 3/3/2017
Coordinate System: ARKANSAS STATE PLANE - NORTH ZONE BASED ON GPS CONTROL, 080038 - 080038A & 080039 - 080039A
PROJECTED TO GROUND.
Units: U.S. SURVEY FOOT

Point Name	Northing	Easting	Elev	Feature	Description
1	670493.2048	858373.74	401330.503	CTL	AHTD STD. MON. STAMPED PN: 1
2	671349.4335	858333.91	041328.954	CTL	AHTD STD. MON. STAMPED PN: 2
3	671619.0334	858373.47	861324.405	CTL	AHTD STD. MON. STAMPED PN: 3
4	672549.8708	858255.28	921349.079	CTL	AHTD STD. MON. STAMPED PN: 4
5	673123.5422	858329.21	191337.762	CTL	AHTD STD. MON. STAMPED PN: 5
6	673551.9301	858470.16	361345.355	CTL	AHTD STD. MON. STAMPED PN: 6
7	690045.0759	860896.27	661379.243	CTL	AHTD STD. MON. STAMPED PN: 7
8	691136.9192	861036.09	751351.596	CTL	AHTD STD. MON. STAMPED PN: 8
9	691195.9896	860982.68	131363.573	CTL	AHTD STD. MON. STAMPED PN: 9
10	691446.1516	861218.80	561356.118	CTL	AHTD STD. MON. STAMPED PN: 10
11	691821.4948	861106.71	861365.696	CTL	AHTD STD. MON. STAMPED PN: 11
12	692163.6579	861059.97	661390.587	CTL	AHTD STD. MON. STAMPED PN: 12
13	692451.8123	860901.10	811405.557	CTL	AHTD STD. MON. STAMPED PN: 13
14	692699.6987	860922.41	691402.911	CTL	AHTD STD. MON. STAMPED PN: 14
100	672101.8050	858365.14	771335.314	GPS	AHTD GPS #080038
101	671417.2950	859787.78	971374.397	GPS	AHTD GPS #080038A
102	689373.9538	860864.06	451387.942	GPS	AHTD GPS #080039
103	690781.4718	860901.02	521369.955	GPS	AHTD GPS #080039A
997	660000.6594	816415.25	121377.195	BM	2ND ORDER NGS BM R 143
998	674342.9727	858616.59	981379.912	BM	2ND ORDER NGS BM R 145
999	691397.5938	861095.66	801355.006	BM	3RD ORDER NGS BM T 145 RESET

*Note - Rebar and Cap - Standard - 5/8" Rebar with 2" Aluminum Cap stamped
*(standard markings common to all caps), or as indicated
(other markings indicated in the point description of the individual point).
ALL DISTANCES ARE GROUND.
USE CAF = 1.0 FOR STAKEOUT FOR THIS PROJECT.
A PROJECT CAF OF .9999329738 HAS BEEN USED TO COMPUTE THE ABOVE GROUND COORDINATES.
THIS CAF IS INTENDED FOR USE WITHIN THE PROJECT LIMITS.
GRID DISTANCE = GROUND DISTANCE X CAF.
GRID COORDINATES ARE STORED UNDER FILE NAME s090435gi.CTL
HORIZONTAL DATUM: NAD 83 (2011)
VERTICAL DATUM: NAVD 88 POSITIONAL ACCURACY THIRD ORDER, UNLESS SPECIFIED OTHERWISE AT A SPECIFIC POINT.

REFERENCE POINTS (1500 SERIES) ARE TO BE USED TO ESTABLISH CONTROL IF THE PRIMARY CONTROL POINTS LISTED ABOVE HAVE BEEN DESTROYED.
REFERENCE POINTS ARE NOT TO BE USED FOR VERTICAL CONTROL

BASIS OF BEARING:
ARKANSAS STATE PLANE GRID BEARINGS - 0301-NORTH ZONE
DETERMINED FROM GPS CONTROL POINTS: 880088-880088A
CONVERGENCE ANGLE: 00 53 42.23 LEFT AT PN: 3 LT: 36-10-07.03N LG: 093-32-17.45W
GRID AZIMUTH = ASTRONOMICAL AZIMUTH - CONVERGENCE ANGLE.

DETERMINED FROM GPS CONTROL POINTS: 080039 - 080039A
CONVERGENCE ANGLE: 00 53 25.49 LEFT AT PN: 8 LT: 36-13-20.41N LG: 093-31-48.68W
GRID AZIMUTH = ASTRONOMICAL AZIMUTH - CONVERGENCE ANGLE.

090502 CL - HIGHWAY 21

POINT NO.	TYPE	STATION	NORTHING	EASTING
8033	P.O.B.	300+00.00	690224.5861	860885.7889
8034	P.C.	303+83.83	690608.3169	860894.4706
8035	P.T.	308+60.17	691074.0355	860983.5045
8036	P.C.	312+12.59	691404.4524	861106.0564
8037	P.R.C.	320+30.15	692188.3829	861020.6032
8038	P.T.	327+27.39	692851.0940	861004.2221
8039	P.O.E.	328+43.50	692951.6809	861062.2023

CO. RD. 514

POINT NO.	TYPE	STATION	NORTHING	EASTING
8044	P.O.B.	10+00.00	691059.7847	860978.3046
8045	P.C.	10+69.62	691099.4620	860921.0951
8046	P.T.	11+28.34	691150.9640	860900.6870
8047	P.C.	12+34.40	691254.6993	860922.7824
8048	P.T.	13+37.37	691348.6383	860893.2071
8049	P.O.E.	14+14.42	691401.2116	860836.8769

CO. RD. 719

POINT NO.	TYPE	STATION	NORTHING	EASTING
8040	P.O.B.	10+00.00	691491.5919	861133.3325
8041	P.C.	11+35.66	691457.8257	861264.7277
8042	P.T.	13+32.19	691438.2092	861459.5185
8043	P.O.E.	14+23.98	691442.8708	861551.1945

DATE REVISED	DATE FILMED	DATE REVISED	DATE FILMED	FED.RD. DIST.NO.	STATE	FED.AID PROJ.NO.	SHEET NO.	TOTAL SHEETS
				6	ARK.			
				JOB NO.		090502	23	57

(2) SURVEY CONTROL DETAILS

STATE OF ARKANSAS
REGISTERED PROFESSIONAL ENGINEER
No. 15560
JEROME PAUL DAVIS
4-28-2020

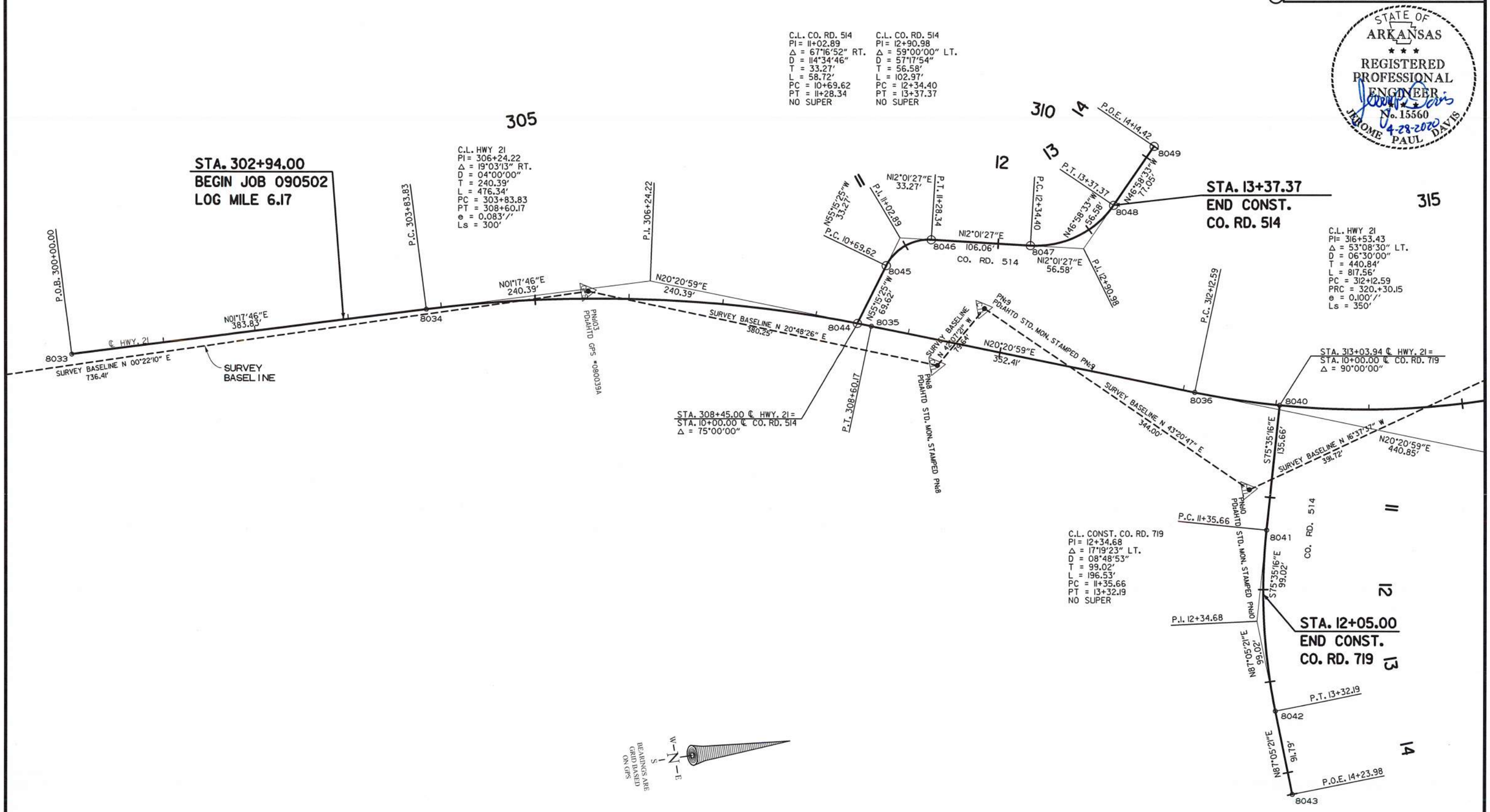

SURVEY CONTROL DETAILS

USER: UJ5206
DESIGN FILE: G:\1810360L_090502\TRANSP\dgn\090502_Piney Creek\survey_ctl\090502 Survey CTL Piney Creek.dgn
PLOTTED: 4/28/202014:52 MODEL: PROPOSED DESIGN SCALE: 1:100

G:\1810360L_090502\TRANSP\dgn\090502_Piney Creek\survey_ctl\090502 Survey CTL Piney Creek.dgn 4/28/2020 14:52

DATE REVISED	DATE FILMED	DATE REVISED	DATE FILMED	FED.RD. DIST.NO.	STATE	FED.AID PROJ.NO.	SHEET NO.	TOTAL SHEETS
				6	ARK.			
				JOB NO.		090502	24	57

2 SURVEY CONTROL DETAILS

STATE OF ARKANSAS
REGISTERED PROFESSIONAL ENGINEER
No. 13560
JEROME PAUL DAVIS
4-28-2020

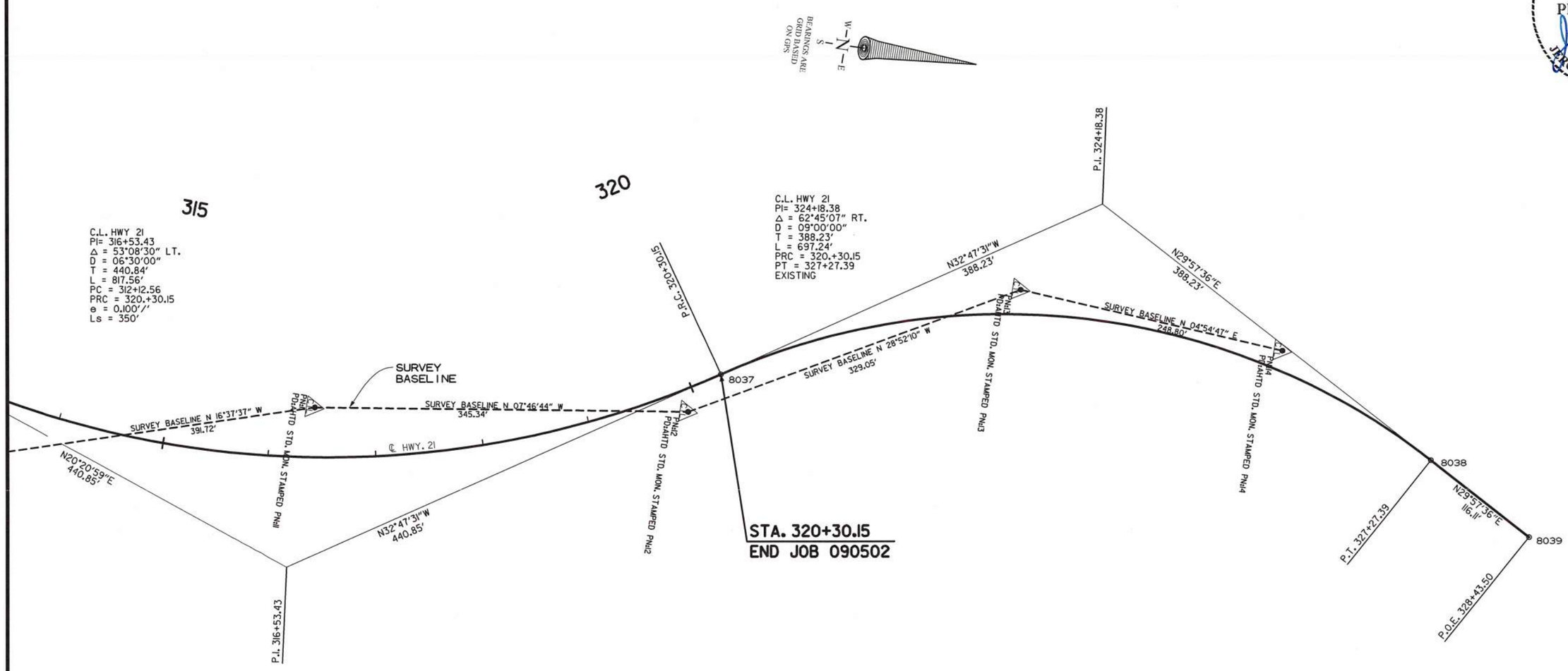

SURVEY CONTROL DETAILS

USER: JJ5206
DESIGN FILE: G:\BI0360I_090502\TRANSP\dgn\090502_Piney Creek\survey_ctl\090502 Survey CTL Piney Creek.dgn
PLOTTED: 4/28/2020 14:52 MODEL: PROPOSED DESIGN SCALE: 1:100

G:\BI0360I_090502\TRANSP\dgn\090502_Piney Creek\survey_ctl\090502 Survey CTL Piney Creek.dgn 4/28/2020 14:52

DATE REVISED	DATE FILMED	DATE REVISED	DATE FILMED

FED.RD. DIST.NO.	STATE	FED.AID PROJ.NO.	SHEET NO.	TOTAL SHEETS
6	ARK.			
JOB NO.		090502	25	57

PLAN AND PROFILE SHEETS

STA.	STA.	SIDE	GUARDRAIL (TYPE A)	THRIE BEAM GUARDRAIL TERMINAL	GUARDRAIL TERMINAL (TYPE 2)	BRIDGE END TERMINAL
307+10.16	309+53.91	HWY. 21 RT.	175 LIN.FT.	1 EACH	1 EACH	
309+68.10		HWY. 21 LT.				1 EACH
312+19.58		HWY. 21 RT.				1 EACH
312+34.35	314+78.10	HWY. 21 LT.	175 LIN.FT.	1 EACH	1 EACH	

REMOVAL AND DISPOSAL FENCE

STA.	STA.	SIDE	LIN. FT.	GATE
303+07	304+83	LT.	209	
307+81	304+22	RT.	60	
307+08	307+37	LT.	80	
307+29	307+81	LT.	53	
307+81	307+93	LT.		1
307+93	308+67	LT.	136	
10+59	13+30	LT.	306	
10+67	11+09	LT.		2
11+69	11+67	LT.	12	
11+70	12+08	LT.	37	

FENCE

STA.	STA.	SIDE	TYPE	LIN. FT.	16' GATE	18' GATE
303+07	304+83	LT.	WIRE TYPE D	183		
307+85		LT.			1	
307+08	308+18	LT.	WIRE TYPE D	138		
10+76	13+39	LT.	10' CHAIN LINK	262		
11+10		LT.			1	
11+63	12+08	RT.	WIRE TYPE D-2	44		

CONCRETE DITCH PAVING

STA.	STA.	SIDE	"W"	SQ. YDS.
305+00.00	306+00.00	RT.	4	44
306+00.00	307+98.73	LT.	8	181
313+29.39	315+00.00	RT.	8	187

REFER TO SURVEY CONTROL DETAIL SHEETS FOR HORIZONTAL AND VERTICAL CONTROL DATA

STA. 302+43 IN PLACE
36" X 37' R.C. PIPE CULVERT
W/HEADWALLS LT. & RT.
REMOVE HEADWALLS &
EXTEND R.C. PIPE 20' LT. & 15' RT.
(CLASS III(TYPE 3 BEDDING)
FOR A COMPLETED LENGTH OF 72'
W/FES LT. & RT.
Q50 = 17 CFS ± D.A. = 12.8 AC.
36" R.C. PIPE = 43 LIN. FT.
36" F.E.S. = 2 EA.

STA. 309+70.47 BRIDGE END
BRIDGE NO. 07485
246'-0" INTEGRAL CONT. W-BEAM
(54'-69'-69'-54')
40'-0" CLEAR ROADWAY
20°LT. FWD. SKEW
247'-0¾" BRIDGE LENGTH
STA. 312+17.53 BRIDGE END

STA. 309+84.07 TO STA. 311+46.35
IN PLACE 162' X 29' SPAN BRIDGE
NO. 03309 CONSISTING
OF CONCRETE-CAST-IN-PLACE
DECK & STEEL I-BEAMS
REMOVE AS EXISTING BRIDGE
STRUCTURE = 1.00 LUMP SUM

STA. 13+37.37
END CONST.
CO. RD. 514

C.L. CONST. HWY. 21
PI = 316+53.43
Δ = 53°08'30" LT.
D = 06°30'00"
T = 440.84'
L = 817.56'
PC = 312+12.59
PRC = 320+30.15
e = 0.10'/'
Ls = 350'

C.L. CONST. HWY. 21
PI = 306+24.22
Δ = 19°03'13" RT.
D = 04°00'00"
T = 240.39'
L = 476.34'
PC = 303+83.83
PT = 308+61.17
e = 0.083'/'
Ls = 300'

STA. 305+20 - IN PLACE
32" X 14" X 24' PIPE CULVERT LT.
SIDE DRAIN - REMOVE
INSTALL 24" X 54' PIPE CULVERT
LT. SIDE DRAIN
CONST. APPR. = 30 CU. YD.

STA. 308+45.00 ℄ HWY. 21
STA. 10+00.00 ℄ CO. RD. 514
Δ = 75°00'00"

STA. 313+03.94 ℄ HWY. 21 =
STA. 10+00.00 ℄ CO. RD. 719
Δ = 90°00'00"

STA. 304+70 - INSTALL
18" X 58' PIPE CULVERT
RT. SIDE DRAIN
CONST. APPR. = 10 CU. YD.

STA. 304+00 - INSTALL
CONST. APPR. = 10 CU. YD.

STATE OF ARKANSAS
REGISTERED PROFESSIONAL ENGINEER
No. 9620
HUBERT BURNS
06/05/2020

HWY. 21

STA. 302+94.00 BEGIN SUPERELEVATION
STA. 305+94.00 MAX. SUPERELEVATION (0.083'/')
STA. 306+50.00 MAX. SUPERELEVATION (0.083'/')
STA. 309+50.00 END SUPERELEVATION

STA. 312+12.59 BEGIN SUPERELEVATION
STA. 315+62.59 MAX. SUPERELEVATION (0.100'/')
STA. 316+80.15 MAX. SUPERELEVATION (0.100'/')
STA. 320+30.15 END SUPERELEVATION

STA. 302+94.00
BEGIN JOB 090502
LOG MILE 6.17

EXIST. GROUND
PROFILE GRADE
-1.64%
PVI 302+94.00 ELEV. 1376.28
PVC 303+55.00 ELEV. 1375.28
PVI 304+70.00 ELEV. 1373.39
290' V.C.
K = 115.58
e = -0.57'
+43
F.L. IN 1371.65 LT.
F.L. OUT 1368.23 RT.
3.63%
PVT 305+85.00 ELEV. 1369.21
PVC 306+50.00 ELEV. 1366.86
STA. 309+70.47 BR. END
STA. 312+17.53 BR. END
1080' V.C.
K = 115.26
e = 12.65'
5.72%
Q25 DESIGN H.W. ELEV. 1341.70'
PVI 311+90.00 ELEV. 1347.25

PINEY CREEK AT STA. 310+10 TO STA. 311+50 IS CLASSIFIED AS A PERENNIAL STREAM. THE TOP OF CHANNEL ELEVATION IS 1336.0 FT. MSL. REFER TO SECTION 110.05 (C) TEMPORARY FILL (P.130) OF THE 2014 STANDARD SPECIFICATIONS.

USER: NS5187
DESIGN FILE: G:\18103601_090502\TRANSP\dgn\090502_Piney Creek\p&p\r090502_PP_PINEY CREEK_01.dgn MODEL: PROPOSED DESIGN
PLOTTED: 6/4/2020 17:44 SCALE: 1:00

G:\18103601_090502\TRANSP\dgn\090502_Piney Creek\p&p\r090502_PP_PINEY CREEK_01.dgn 6/4/2020 17:44

DATE REVISED	DATE FILMED	DATE REVISED	DATE FILMED	FED.RD. DIST.NO.	STATE	FED.AID PROJ.NO.	SHEET NO.	TOTAL SHEETS
				6	ARK.			
				JOB NO.		090502	26	57

(2) PLAN AND PROFILE SHEETS

STA. 316+00 INSTALL
18" X 56' PIPE CULVERT
LT. SIDE DRAIN
CONST. APPR. = 90 CU.YD.

STA. 319+30 IN PLACE
4' X 6' X 47' R.C. BOX CULVERT
W/ WING LT. & RT.
RETAIN AND EXTEND 25' LT. & 16' RT.
TO A COMPLETED LENGTH OF 79'
WITH 3:1 WINGS LT. & RT.
Q50 = 25 CFS ; D.A. = 11.7 AC.

STA. 315+50 CONSTRUCT
24" X 72' R.C. PIPE CULVERT
(CLASS III)(TYPE 3 BEDDING)
W/ FES LT. & RT.
Q50 = 18 CFS ; D.A. = 5.7 AC.

STA. 315+94 IN PLACE
24" X 37' R.C. PIPE CULVERT
W/ HEADWALLS LT. & RT.
REMOVE

C.L. CONST. HWY. 21
PI = 316+53.43
Δ = 53°08'30" LT.
D = 06°30'00"
T = 440.84'
L = 817.56'
PC = 312+12.59
PRC = 320+30.15
e = 0.10'/'
Ls = 350'

C.L. CONST. HWY. 21
PI = 324+18.38
Δ = 62°45'07" RT.
D = 09°00'00"
T = 388.23'
L = 697.24'
PRC = 320+30.15
PT = 327+27.39

REMOVAL AND DISPOSAL FENCE

STA.	STA.	SIDE	LIN. FT.	GATE
316+08	320+48	LT.	604	
317+56		LT.		1
318+37	319+36	RT.	117	
319+29	319+47	RT.	32	
319+30		RT.		1
319+41	320+80	RT.	159	

CONCRETE DITCH PAVING

STA.	STA.	SIDE	"W"	SQ. YDS.
315+55.10	315+82.45	LT.	8	24
319+51.70	320+30.00	RT.	8	48

FENCE

STA.	STA.	SIDE	TYPE	LIN. FT.	16' GATE
316+74	320+48	LT.	WIRE TYPE D-1	392	
318+21	320+81	RT.	WIRE TYPE D-2	254	
317+56		LT.			1
319+20		RT.			1

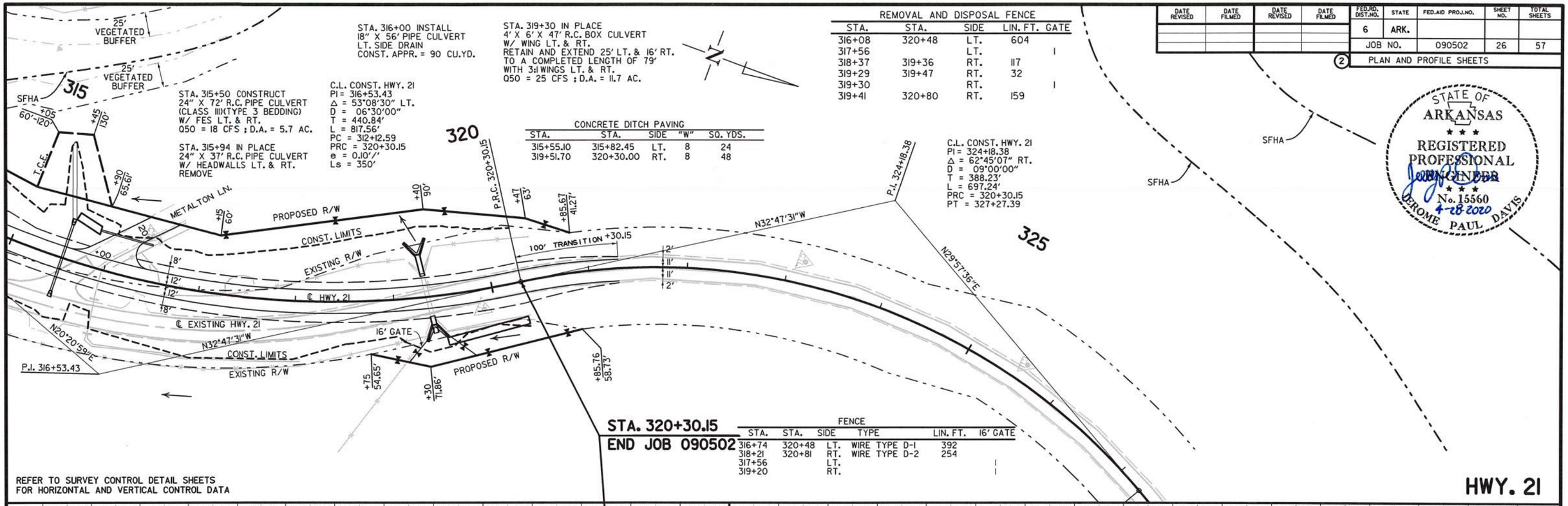

REFER TO SURVEY CONTROL DETAIL SHEETS
FOR HORIZONTAL AND VERTICAL CONTROL DATA

HWY. 21

STATE OF ARKANSAS
REGISTERED PROFESSIONAL ENGINEER
No. 15560
4-28-2020
JEROME PAUL DAVIS

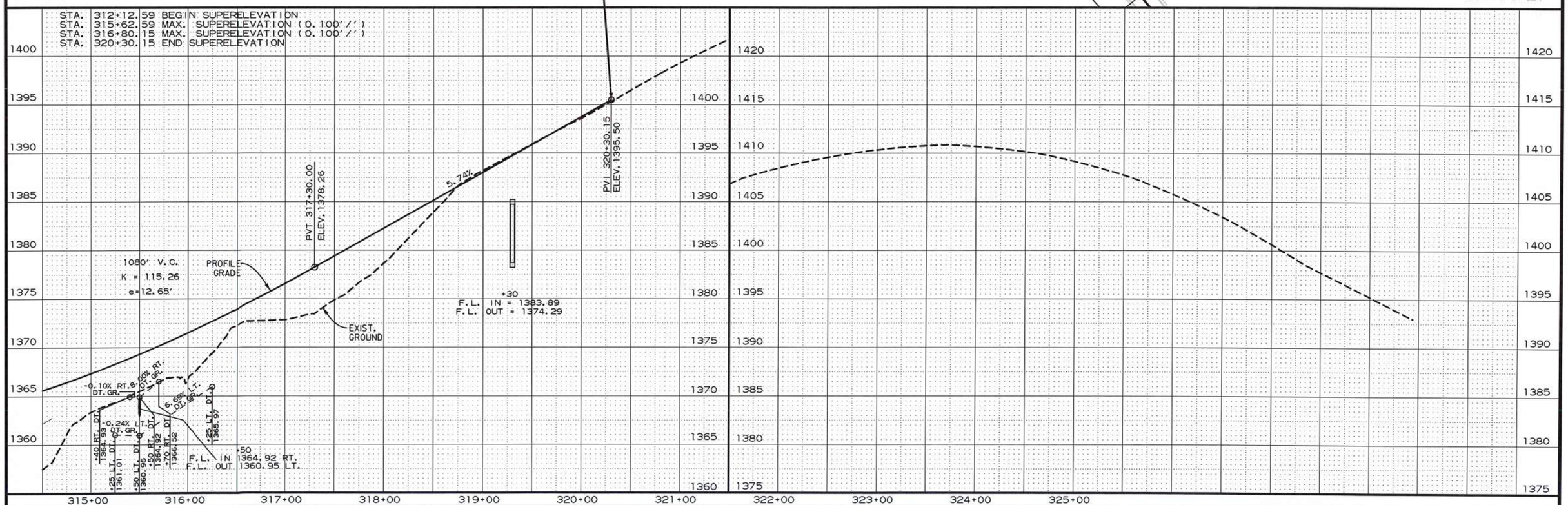

USER: JJ5206
DESIGN FILE: G:\1810360I_090502\TRANSP\dgn\090502_Piney Creek\p&p\r090502_PP_PINEY CREEK_02.dgn
PLOTTED: 4/28/2020 15:57
SCALE: 1:100
MODEL: PROPOSED DESIGN

G:\1810360I_090502\TRANSP\dgn\090502_Piney Creek\p&p\r090502_PP_PINEY CREEK_02.dgn 4/28/2020 15:57

DATE REVISED	DATE FILMED	DATE REVISED	DATE FILMED	FED.RD. DIST.NO.	STATE	FED.AID PROJ.NO.	SHEET NO.	TOTAL SHEETS
				6	ARK.			
				JOB NO.		090502	27	57
				2	PLAN AND PROFILE SHEETS			

STATE OF ARKANSAS
REGISTERED PROFESSIONAL ENGINEER
No. 15560
JEROME PAUL DAVIS
4-28-2020

STA. 11+10 CO. RD. 514 - IN PLACE
16" X 18' C.M. PIPE CULVERT REMOVE
INSTALL 21" X 15" X 30' ARCH SIDE DRAIN LT.
CONST. APPROACH = 15 CU. YD.

C.L. CONST. CO. RD. 514
PI = 12+90.98
Δ = 59°00'00" LT.
D = 57°17'54"
T = 56.58'
L = 102.97'
PC = 12+34.40
PT = 13+37.37
NO SUPER

C.L. CONST. CO. RD. 514
PI = 11+02.89
Δ = 67°16'52" RT.
D = 114°34'46"
T = 33.27'
L = 58.72'
PC = 10+69.62
PT = 11+28.34
NO SUPER

STA. 10+39 CO. RD. 514 - IN PLACE
32" X 14" X 90' C.M. ARCH PIPE
CULVERT REMOVE.
INSTALL 24" X 132' SIDE DRAIN LT.
CONST. TURNOUT

STA. 308+45.00 ℄ HWY. 21 =
STA. 10+00.00 ℄ CO. RD. 514
Δ = 75°00'00"

REFER TO SURVEY CONTROL DETAIL SHEETS
FOR HORIZONTAL AND VERTICAL CONTROL DATA

C.L. CONST. CO. RD. 719
PI = 12+34.68
Δ = 17°19'23" LT.
D = 08°48'53"
T = 99.02'
L = 196.53'
PC = 11+35.66
PT = 13+32.19
NO SUPER

STA. 313+03.94 ℄ HWY. 21 =
STA. 10+00.00 ℄ CO. RD. 719
Δ = 90°00'00"

STA. 10+85 CO. RD. 719 - IN PLACE
22" X 12" X 57' C.M. ARCH PIPE
CULVERT REMOVE.
INSTALL 24" X 65' SIDE DRAIN RT.
CONST. TURNOUT

STA. 11+40 CO. RD. 719 - IN PLACE
30" X 12" X 35' ARCH PIPE CULVERT
LT. SIDE DRAIN - REMOVE
INSTALL 28" X 20" X 36' ARCH PIPE
CULVERT LT. SIDE DRAIN
CONST. APPR. = 10 CU. YD.

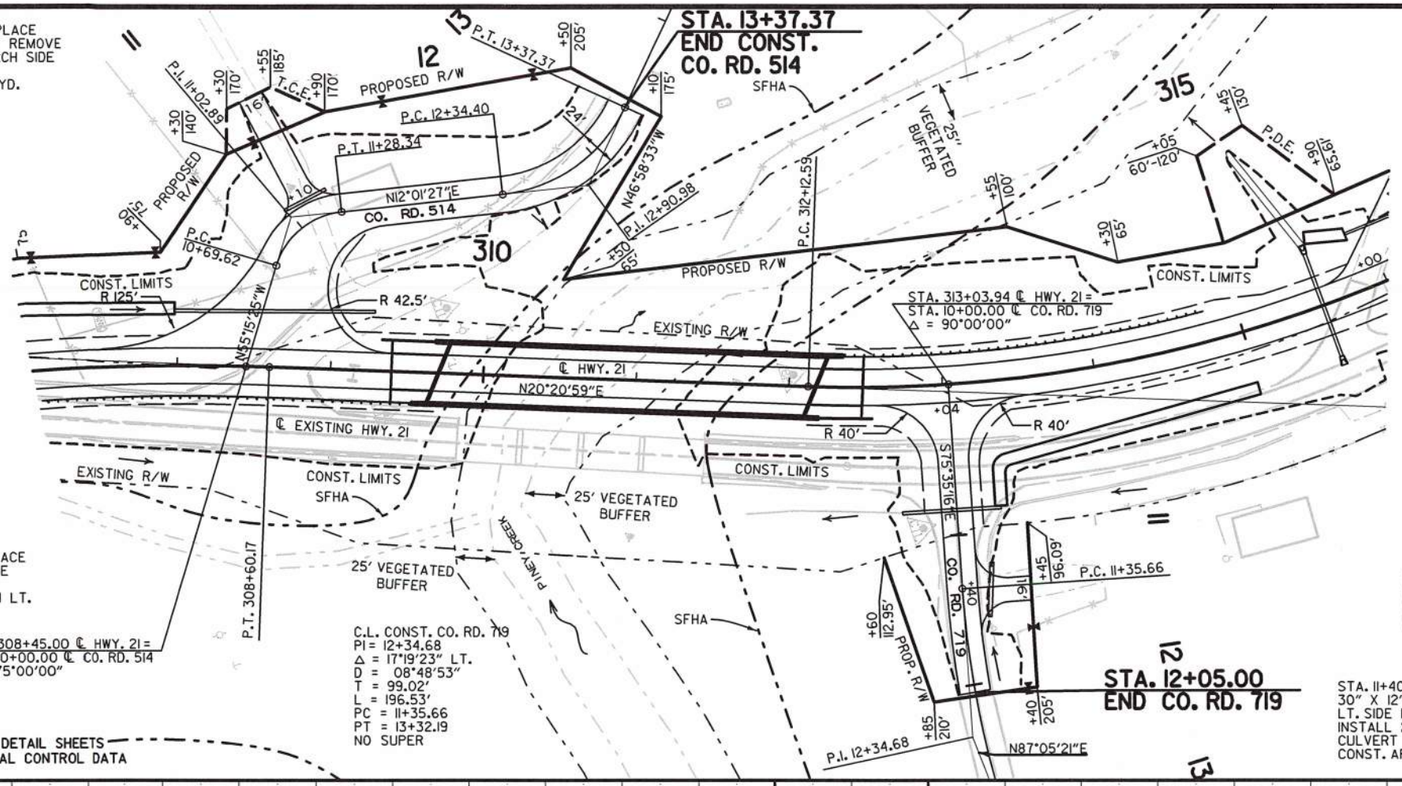

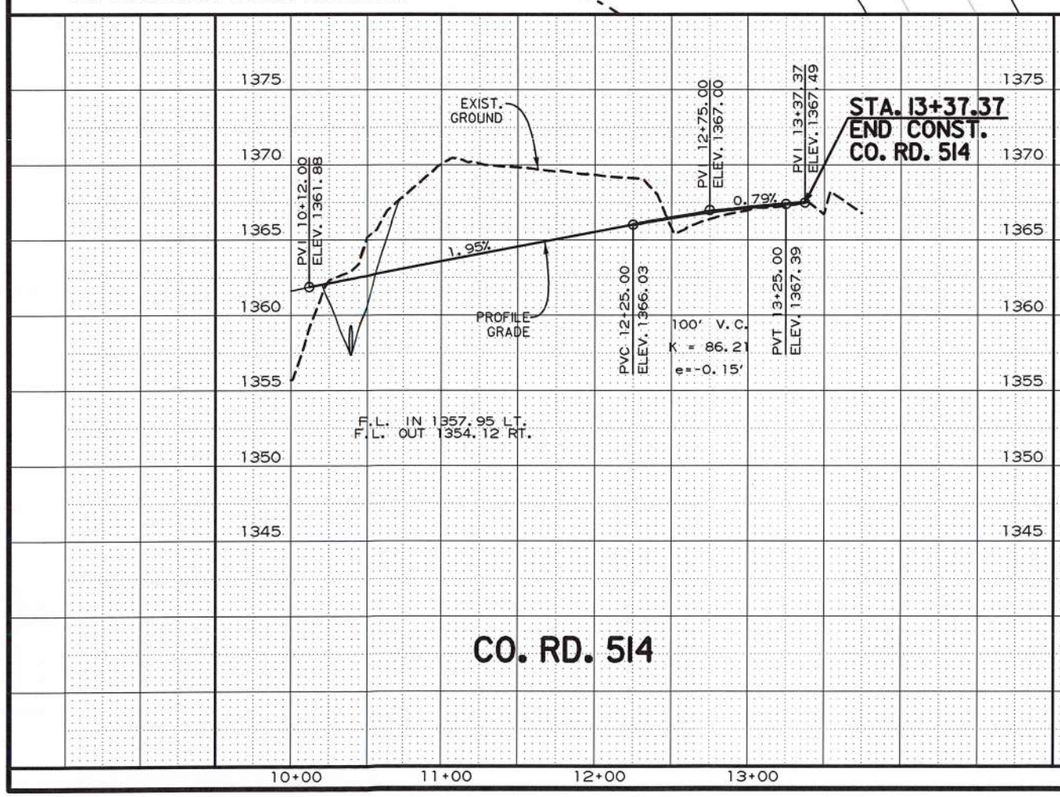

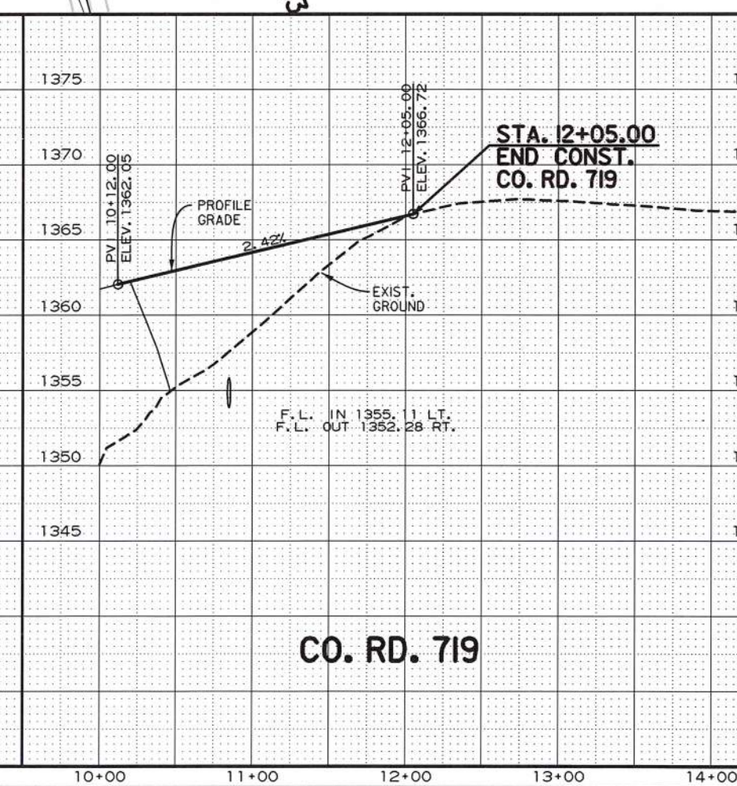

CO. RD. 514 & 719

USER: JJ5206
DESIGN FILE: G:\1810360L_090502\TRANSP\dgn\090502_Piney Creek\p&p\r090502_PP_PINEY CREEK_03 CO RD.dgn
PLOTTED: 4/28/2020 14:52
SCALE: 1:100
MODEL: PROPOSED DESIGN

G:\1810360L_090502\TRANSP\dgn\090502_Piney Creek\p&p\r090502_PP_PINEY CREEK_03 CO RD.dgn 4/28/2020 14:52

DATE REVISED	DATE FILMED	DATE REVISED	DATE FILMED	FED.RD. DIST.NO.	STATE	FED.AID PROJ.NO.	SHEET NO.	TOTAL SHEETS
				6	ARK.			
				JOB NO.		090502	28	57
				(1) 07485		LAYOUT		61620

For R/W Data, See Roadway Plans.

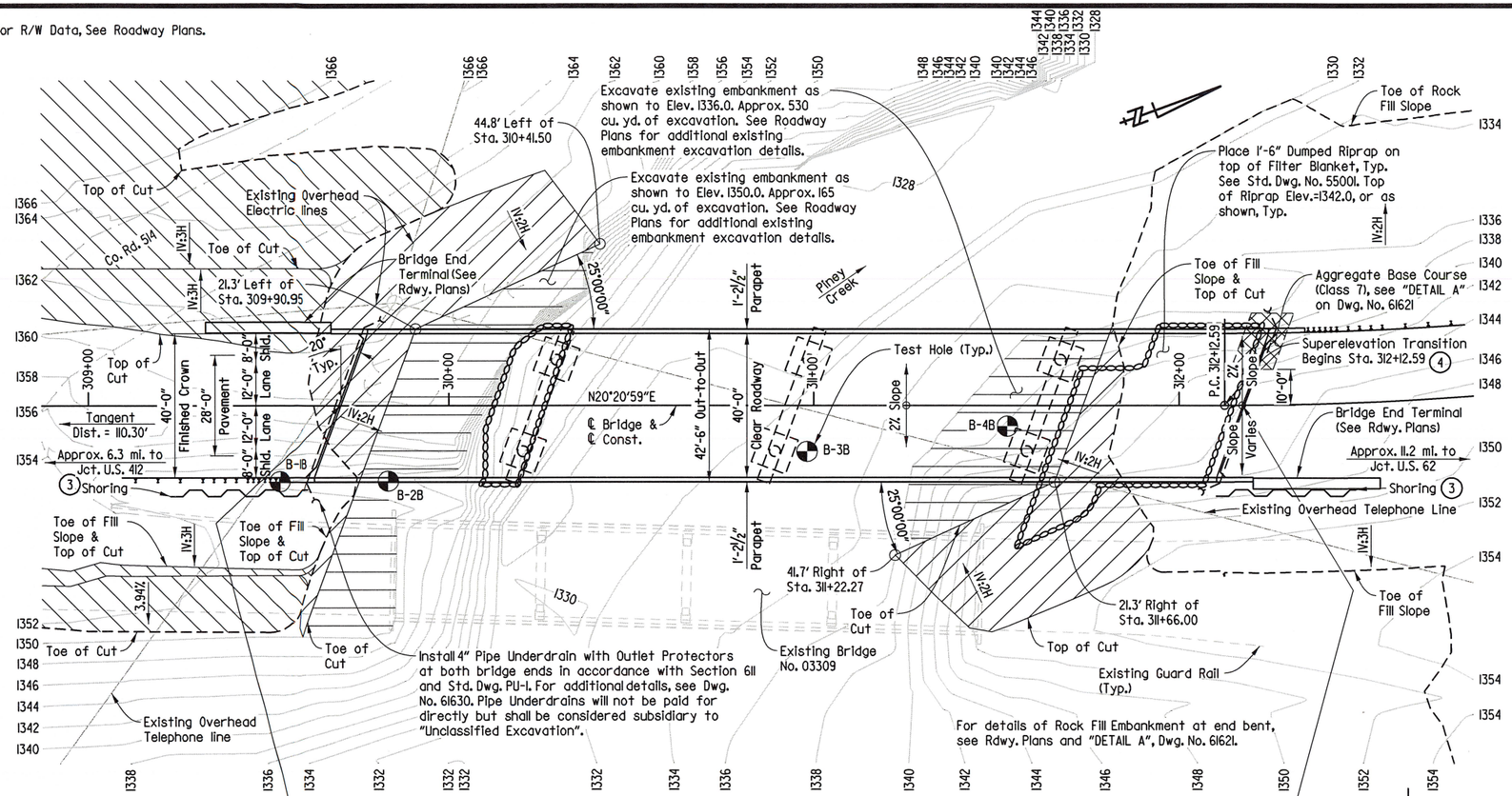

PLAN

Note: Use Type Special Approach Gutters and Type CI Approach Slabs (width=24'-0") at both ends of bridge. See Dwg. Nos. 61634 & 55040CI, respectively. Eliminate or modify Type Special Approach Gutter curb section to fit bridge end terminal. No additional payment will be made for this work.

Note: Stations shown are along ℄ Construction. Elevations shown are theoretical working point elevations at ℄ Bridge. Any vertical dimension referenced to ℄ Deck is based on theoretical working point elevation at ℄ Bridge. See "Rounding Detail" on Std. Dwg. No. 55007.

Note: The longitudinal lines of the bridge (except beams), approach gutters, and approach slabs shall be constructed on curves concentric with ℄ Construction.

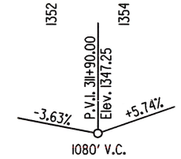

VERTICAL ALIGNMENT DATA

Along ℄ Bridge & ℄ Construction.

HORIZONTAL CURVE DATA

Along ℄ Const.

PI = Sta. 316+53.43
Δ = 53°08'30"LT.
D = 06°30'00"
T = 440.84'
L = 817.56'
PC = Sta. 312+12.59
PT = Sta. 320+30.15

Begin Bridge Sta. 309+70.47 Elev. 1359.67

End Bridge Sta. 312+17.53 Elev. 1360.22

Total Length of Bridge = 247'-0¾"

246'-0" Integral Continuous W-Beam Unit (54'-69'-69'-54')

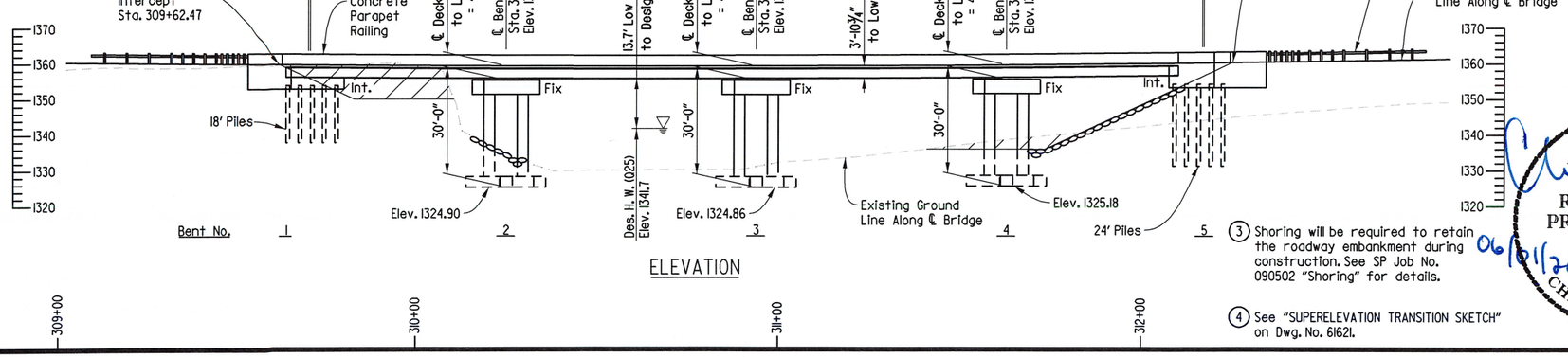

ELEVATION

(3) Shoring will be required to retain the roadway embankment during construction. See SP Job No. 090502 "Shoring" for details.

(4) See "SUPERELEVATION TRANSITION SKETCH" on Dwg. No. 61621.

GENERAL NOTES

BENCH MARK: Vertical Control Data are shown on the Survey Control Data Sheets.

CONSTRUCTION SPECIFICATIONS: Arkansas State Highway and Transportation Department Standard Specifications for Highway Construction (2014 edition) with applicable Supplemental Specifications and Special Provisions. Section and Subsection refer to the Standard Construction Specifications unless otherwise noted in the Plans.

DESIGN SPECIFICATIONS: AASHTO LRFD Bridge Design Specifications, Seventh Edition (2014) with 2015 interim revisions.

LIVE LOADING: HL-93 SITE CLASS = B S_{D1} = 0.061 SEISMIC PERFORMANCE ZONE: I

MATERIALS AND STRENGTHS:

Class S(AE) Concrete (superstructure)	f'c = 4,000 psi
Class S Concrete (substructure)	f'c = 3,500 psi
Reinforcing Steel (Grade 60 AASHTO M 31 or M 322 Type A)	fy = 60,000 psi
Structural Steel (ASTM A709, Gr. 50)	Fy = 50,000 psi
Structural Steel (ASTM A709, Gr. 50W)	Fy = 50,000 psi
Structural Steel (ASTM A709, Gr. 36)	Fy = 36,000 psi

BORING LOGS: Boring logs may be obtained from the Construction Contract Procurement Section of the Program Management Division.

STEEL PILING: All piling shall be HP 12x53 (Grade 50) and shall be driven with an approved air, steam, or diesel hammer to a minimum safe bearing capacity of 97 tons per pile and into the material designated as moderately hard sandstone on the boring legend. Minimum penetration shall be 15' below bottom of cap. Piling in end bents shall be driven after embankment to bottom of cap is in place. Lengths shown are for estimating quantities and for use in determining payment for cut-off and build-up in accordance with Section 805. The Contractor shall use approved steel H-Pile driving points on all piles.

PREBORING: Preboring is required for all piling at Bents 1 and 5. Preboring shall be to a minimum depth of 5' into material designated as moderately hard sandstone on the boring legend or to a minimum depth of 15' below the bottom of the cap, whichever is lower. Prebored holes shall have a diameter 6" greater than the diagonal of the pile for a depth of 10' below the bottom of the cap. The size and depth of the remaining preboring shall be determined in the field by the Engineer. After driving is completed, the prebored holes shall be backfilled with Class S Concrete to within 10' of the bottom of the cap, and the remaining 10' shall be backfilled with sand or pea gravel. The Contractor shall be responsible for keeping prebored holes free of debris prior to driving piles and backfilling which may require the use of temporary casings or other approved methods. Any related cost for backfilling and temporary casing will not be paid for directly, but shall be considered subsidiary to the item "Preboring".

FOOTINGS: Footings shall be set a minimum of 2'-0" into material designated as moderately hard to hard sandstone on the boring legend and shall have a minimum cover over top of footings of 2' as determined by the lowest elevation within the footprint of the footing. Foundations for footings shall be prepared in accordance with Subsection 801.04. Blasting will not be allowed. Concrete in footings shall be poured directly against excavated surfaces of rock.

BRIDGE DECK: The concrete bridge deck shall be given a tine finish as specified for final finishing in Subsection 802.19 for Class 5 Tined Bridge Roadway Surface Finish.

PROTECTIVE SURFACE TREATMENT: Class 2 Protective Surface Treatment shall be applied to the roadway surface and roadway face and top of parapet rails in accordance with Section 803.

For Additional General Notes, see Dwg. No. 61621.

HYDRAULIC DATA

FLOOD DESCRIPTION	FREQUENCY	DISCHARGE	(1) NATURAL W.S. ELEVATION	W.S. ELEVATION WITH BACKWATER
	YEARS	CFS	FEET	FEET
DESIGN	25	9,219	1340.7	1341.7
BASE	100	14,918	1344.0	1344.5
EXTREME	500	23,036	1347.8	1347.9
OVERTOPPING	>500	---	---	---

(1) Unconstricted water surface elevation without structure or roadway approaches. Q100 backwater elevation for existing structure = 1347.2 feet

(2) Proposed Low Bridge Chord Elev. = 1355.36 feet at Station 310+68.40
Drainage Area = 15.86 square miles
Historical H.W. Elev. = 1351.5 feet

STATE OF ARKANSAS REGISTERED PROFESSIONAL ENGINEER No. 11856 CHARLES A. WIPF

06/01/2020

SHEET 1 OF 2

LAYOUT OF BRIDGE
HIGHWAY 21 OVER PINEY CREEK
PINEY CREEK STR. & APPRS. (S)
CARROLL COUNTY
ROUTE 21 SEC. 5

ARKANSAS STATE HIGHWAY COMMISSION

LITTLE ROCK, ARK.

DRAWN BY: LDG	DATE: 07-26-19	FILENAME: b090502_11.dgn			
CHECKED BY: CAW	DATE: 07-31-19	SCALE: 1" = 20'			
DESIGNED BY: LDG	DATE: 09-26-18				

BRIDGE NO. 07485 DRAWING NO. 61620

USER: lg5169 DESIGN FILE: G:\18103601_090502\TRANSP\dgn\bridge\b090502_11.dgn SCALE: 1:40 PLOTTED: 6/1/2020 11:20

G:\18103601_090502\TRANSP\dgn\bridge\b090502_11.dgn 6/1/2020 11:20

DATE REVISED	DATE FILMED	DATE REVISED	DATE FILMED	FED.RD. DIST.NO.	STATE	FED.AID PROJ.NO.	SHEET NO.	TOTAL SHEETS
				6	ARK.			
				JOB NO.		090502	29	57
				(1) 07485		LAYOUT		61621

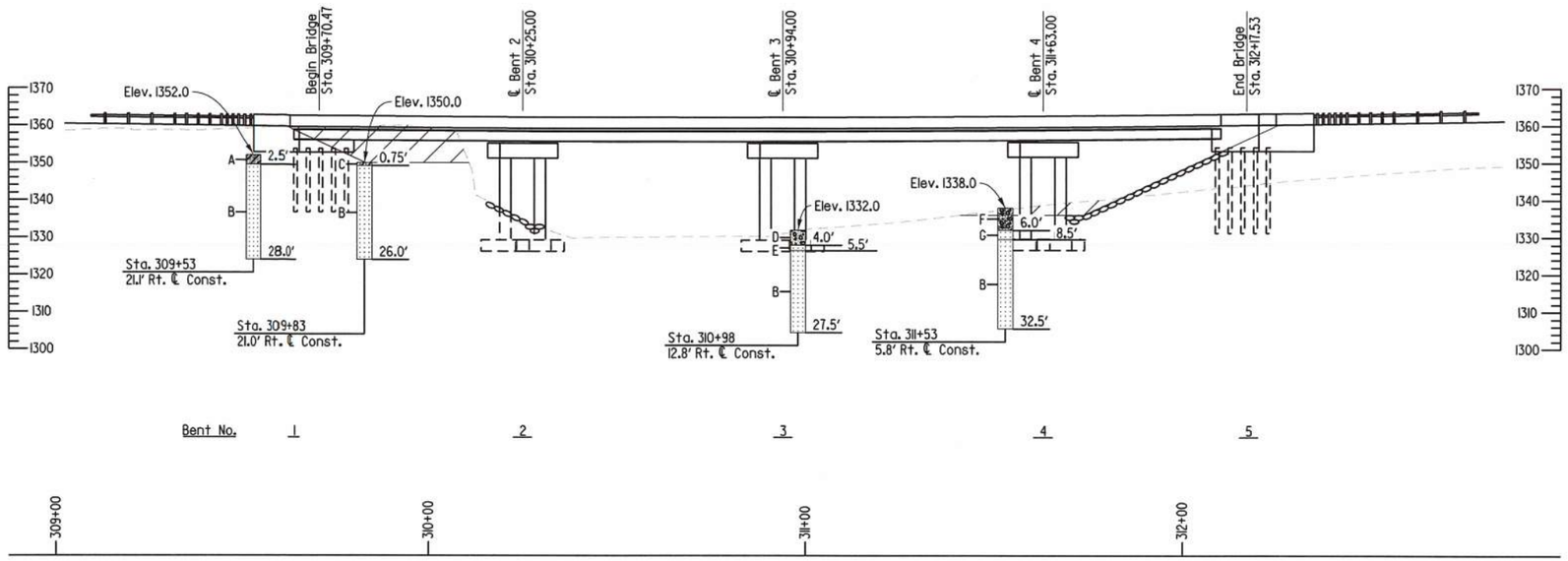

ELEVATION OF SOIL BORINGS

"N" VALUES

Sta. 309+53 - 21.1' Right of ℄ Const.
0.5 -1.5,N=10
2.0 -2.5,N=50/3"

Sta. 309+83 - 21.0' Right of ℄ Const.
0.0 -0.5,N=50/2"

Sta. 310+98 - 12.8' Right of ℄ Const.
0.5 -1.5,N=15
2.5 -3.5,N=14
4.0 -4.5,N=50/2"

Sta. 311+53 - 5.8' Right of ℄ Const.
0.5 -1.5,N=28
2.5 -3.5,N=12
4.5 -5.5,N=9
6.5 -7.0,N=50/2"

BORING LEGEND

A. Loose to medium dense brown clayey fine to medium SAND - fill
B. Moderately hard to hard light tan fine to medium SANDSTONE, friable, flat bedded, massive
C. Very soft to soft brown silty CLAY w/ occasional organics - fill
D. Medium dense tan and brown sandy fine to coarse GRAVEL
E. Moderately hard to hard light tan and brown weathered fine-grained SANDSTONE
F. Medium dense reddish brown, brown and tan clayey fine to coarse SAND w/ some fine to coarse GRAVEL
G. Moderately hard to hard light tan and brown weathered fine-grained SANDSTONE w/ very close horizontal fractures and ferrous stains

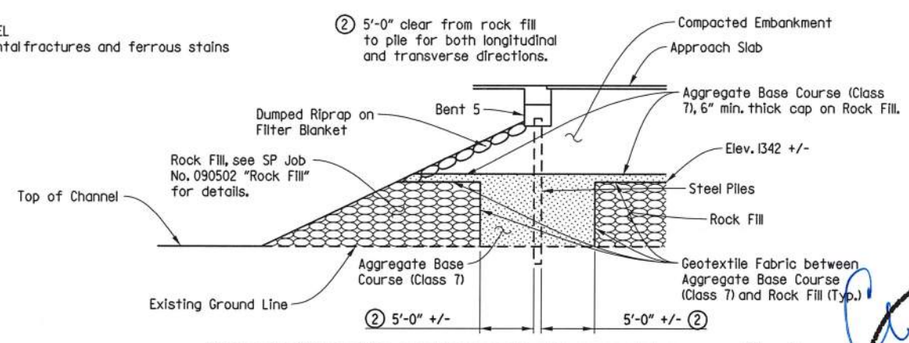

Where rock fill is used for embankment construction, aggregate base course (Class 7) in accordance with Subsection 303.02, shall be placed in areas where piling will be located and other areas as shown. Geotextile Filter Fabric shall be placed between Rock Fill and aggregate base course (Class 7). Geotextile Filter Fabric shall be Type 2 as specified in Subsection 625.02. Aggregate base course (Class 7) shall be paid for as "Rock Fill". Geotextile Filter Fabric will not be paid for directly but shall be considered subsidiary to the item "Rock Fill".

DETAIL A
No Scale

GENERAL NOTES (CONT'D.)

DETAIL DRAWINGS:	DRAWING NUMBER
End Bents	61622-61623
Intermediate Bents	61624-61625
Elastomeric Bearings	61626
246'-0" Integral Continuous W-Beam Unit	61627-61633
General Notes for Steel Bridge Structures	55006
Details for Steel Bridge Structures	55007
Details for Steel H-Piles and Pile Encasements	55020
Type Special Approach Gutters	61634
Type CI Approach Slabs	55040CI

EXISTING BRIDGE: Existing Bridge No. 03309 (Log Mile 6.32) is 28.7' wide (24.0' clear roadway) and 162.0' long and consists of I-beam spans supported by reinforced concrete abutments on spread footings and reinforced concrete column intermediate bents on spread footings. Plans of the existing structure, if available, may be obtained upon request to the Construction Contract Procurement Section of the Program Management Division.

REMOVAL AND SALVAGE: After the new bridge is open to traffic, Existing Bridge No. 03309 shall be removed, including existing riprap, in accordance with Section 205. Removal of existing riprap will not be paid for directly but shall be considered subsidiary to the item "Removal of Existing Bridge Structure (Site No.)". All material from the existing bridge shall become the property of the Contractor.

MAINTENANCE OF TRAFFIC: See Roadway Plans.

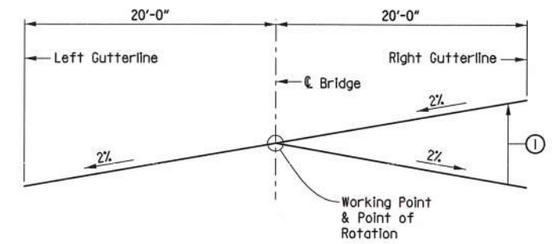

STATION 312+12.59 TO 313+29.26
(Looking Ahead)

SUPERELEVATION TRANSITION SKETCH

(1) Cross slope varies from 2% down from Profile Grade (Sta. 312+12.59) to 2% up from Profile Grade (Sta. 313+29.26).

STATE OF ARKANSAS
REGISTERED PROFESSIONAL ENGINEER
No. 11856
CHARLES A. WIPF
04/28/2020

SHEET 2 OF 2
LAYOUT OF BRIDGE
HIGHWAY 21 OVER PINEY CREEK
PINEY CREEK STR. & APPRS. (S)
CARROLL COUNTY
ROUTE 21 SEC. 5
ARKANSAS STATE HIGHWAY COMMISSION
LITTLE ROCK, ARK.

DRAWN BY: LDG DATE: 12-11-18
CHECKED BY: CAW DATE: 01-04-19
DESIGNED BY: LDG DATE: 09-26-18
FILENAME: b090502_l2.dgn
SCALE: 1" = 20'

BRIDGE NO. 07485 DRAWING NO. 61621

USER: JJ5206
DESIGN FILE: G:\181036\01_090502\TRANSP\dgn\bridge\b090502_l2.dgn
PLOTTED: 4/28/2020 16:28 SCALE: 1:40

DATE REVISED	DATE FILMED	DATE REVISED	DATE FILMED	FED.RD. DIST.NO.	STATE	FED.AID PROJ.NO.	SHEET NO.	TOTAL SHEETS
				6	ARK.			
				JOB NO.		090502	30	57
				1	07485	END BENTS		61622

Note: The longitudinal lines of the wings shall be constructed on curves concentric with ℄ Construction, Bent 5 only. See Layout for additional information. Adjustment to reinforcement may be required.

Modify the bridge rail and connection detail for Wing B at Bents 1 and 5 above the gutterline as required by the manufacturer of the bridge end terminal. Reinforcing bars that are relocated or bent to fit the modified rail shall have minimum plan concrete cover.

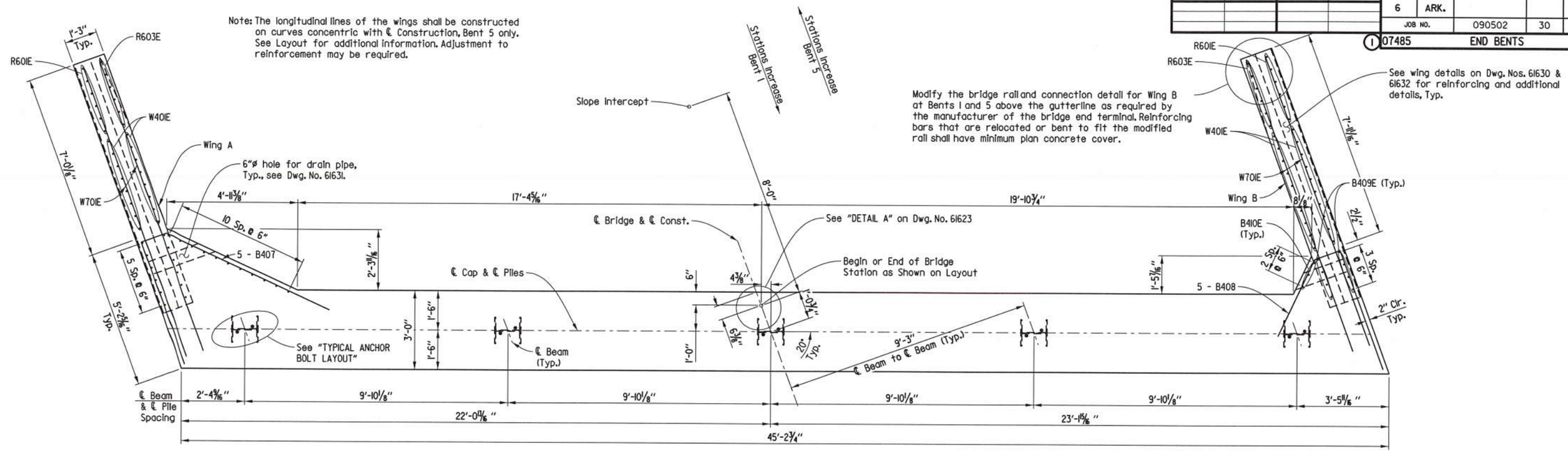

PLAN

Scale: 1/2" = 1'-0"

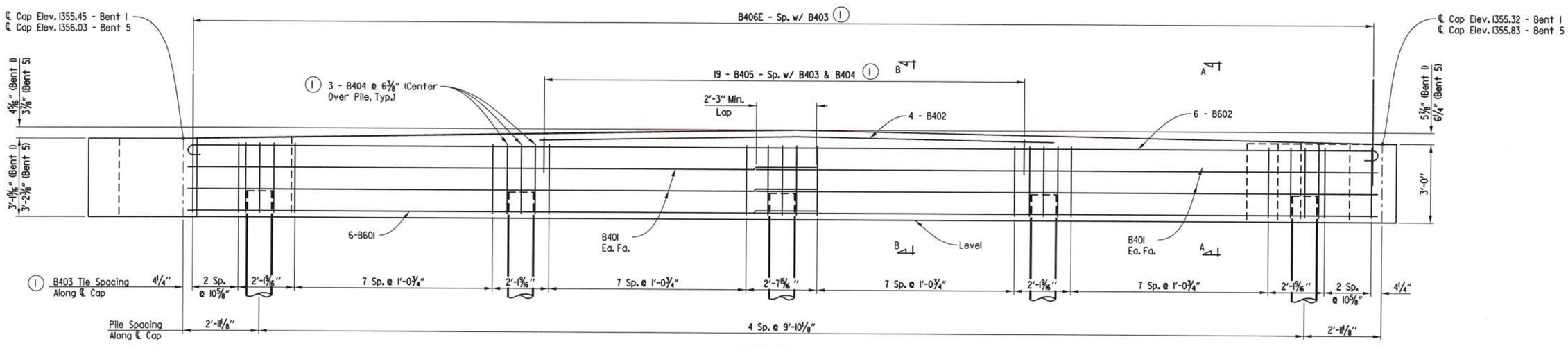

ELEVATION

(Looking Back at Bent 1, Looking Ahead at Bent 5)

Scale: 1/2" = 1'-0"

For "SECTION A-A", "SECTION B-B", and Bar List, See Dwg. No. 61623.

For General Notes, see Std. Dwg. No. 55006.

Notes:
Bars B409E and B410E shall have a 2'-10" minimum embedment into the end bent cap.

Granular Backfill and Pipe Underdrain required behind Cap. See Dwg. No. 61631.

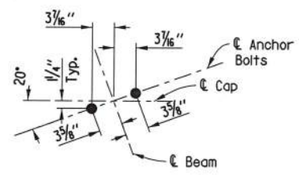

TYPICAL ANCHOR BOLT LAYOUT

Scale: 1" = 1'-0"

(1) Place horizontal leg of bars parallel to ℄ Beam.

STATE OF ARKANSAS
REGISTERED PROFESSIONAL ENGINEER
No. 11856
CHARLES A. WIPF
04/28/2020

SHEET 1 OF 2

DETAILS OF BENTS 1 & 5

ROUTE SEC.

ARKANSAS STATE HIGHWAY COMMISSION

LITTLE ROCK, ARK.

DRAWN BY: LDG	DATE: 10-03-19	FILENAME: b090502_bll.dgn	
CHECKED BY: CAW	DATE: 03-30-20	SCALE: SEE DETAILS	
DESIGNED BY: LDG	DATE: 10-02-19		

BRIDGE NO. 07485 DRAWING NO. 61622

USER: JJ5206
DESIGN FILE: G:\18103601_090502\TRANSP\dgn\bridge\b090502_bll.dgn
PLOTTED: 4/28/2020 16:28 SCALE: 1:4

G:\18103601_090502\TRANSP\dgn\bridge\b090502_bll.dgn 4/28/2020 16:28

DATE REVISED	DATE FILMED	DATE REVISED	DATE FILMED	FED.RD. DIST.NO.	STATE	FED.AID PROJ.NO.	SHEET NO.	TOTAL SHEETS
				6	ARK.			
				JOB NO.		090502	31	57

(1) 07485 END BENTS 61623

BENDING DIAGRAM

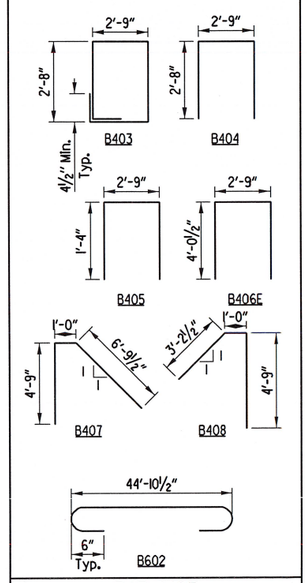

BAR LIST
(Per Bent)

Mark	Number Required	Length	Pin Diameter
B401	8	23'-7"	Str.
B402	4	19'-5"	Str.
B403	38	11'-2"	2"
B404	15	7'-11"	2"
B405	19	5'-3"	2"
B406E	38	10'-8"	2"
B407	5	12'-6"	2"
B408	5	8'-11"	2"
B409E	20	6'-7"	Str.
B410E	14	5'-2"	Str.
B601	6	44'-11"	Str.
B602	6	46'-3"	4½"

Note:
Dimensions of bars are out-to-out.

Bar designations ending with "E" indicate epoxy-coated bars.

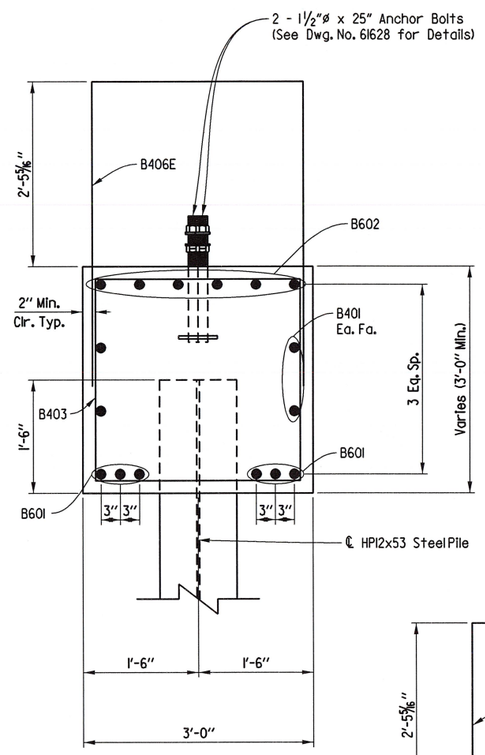

SECTION A-A
Scale: 1" = 1'-0"

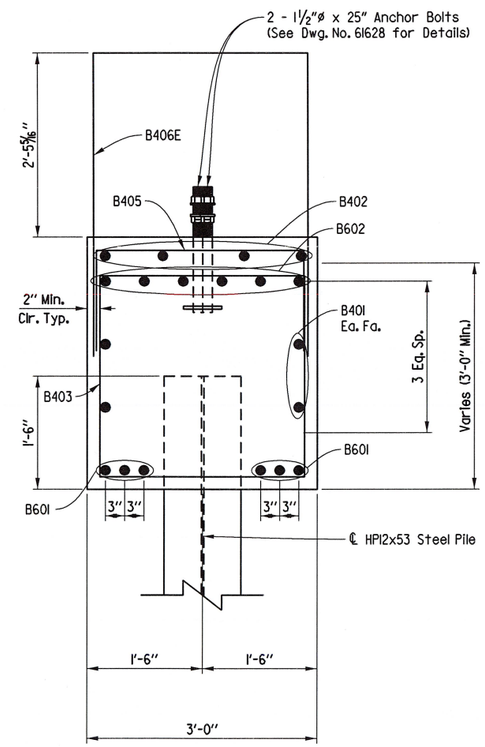

SECTION B-B
Scale: 1" = 1'-0"

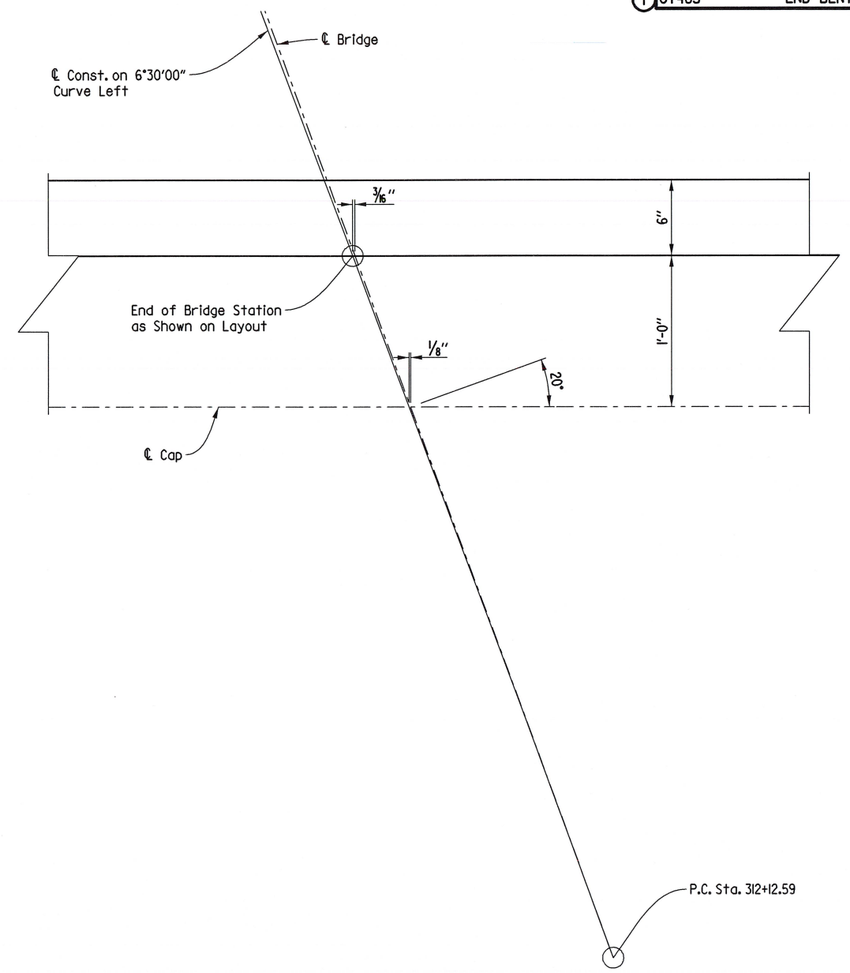

DETAIL A
(Bent 5 only)
Scale: 2" = 1'-0"

STATE OF ARKANSAS
REGISTERED PROFESSIONAL ENGINEER
No. 11856
CHARLES A. WIPF
06/01/2020

SHEET 2 OF 2
DETAILS OF BENTS 1 & 5
ROUTE SEC.
ARKANSAS STATE HIGHWAY COMMISSION
LITTLE ROCK, ARK.

DRAWN BY:	LDG	DATE:	10-03-19	FILENAME:	b090502_bl2.dgn
CHECKED BY:	CAW	DATE:	03-30-20	SCALE:	SEE DETAILS
DESIGNED BY:	LDG	DATE:	10-02-19		

BRIDGE NO. 07485 DRAWING NO. 61623

USER: lg5169
DESIGN FILE: G:\18103601_090502\TRANSP\dgn\bridge\b090502_bl2.dgn
PLOTTED: 6/1/2020 11:20 SCALE: 1:2

G:\18103601_090502\TRANSP\dgn\bridge\b090502_bl2.dgn 6/1/2020 11:20

DATE REVISED	DATE FILMED	DATE REVISED	DATE FILMED	FED.RD. DIST.NO.	STATE	FED.AID PROJ.NO.	SHEET NO.	TOTAL SHEETS
				6	ARK.			
				JOB NO.		090502	32	57

(1) 07485 INT. BENTS 61624

For "SECTION B-B", "SECTION C-C", "SECTION D-D", and Bar List, see Dwg. No. 61625.

For General Notes, See Std. Dwg. No. 55006.

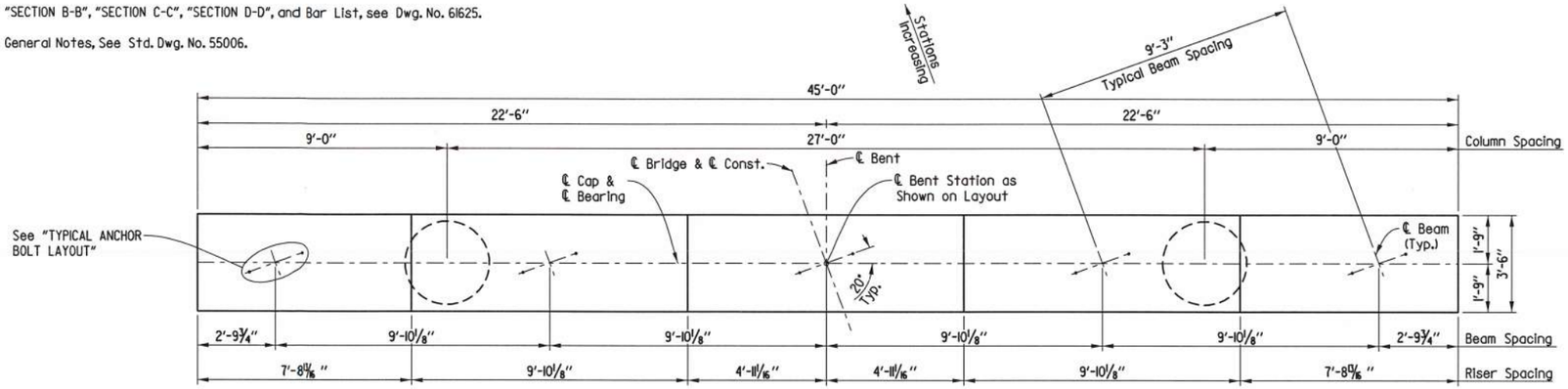

PLAN

Scale: ⅜" = 1'-0"

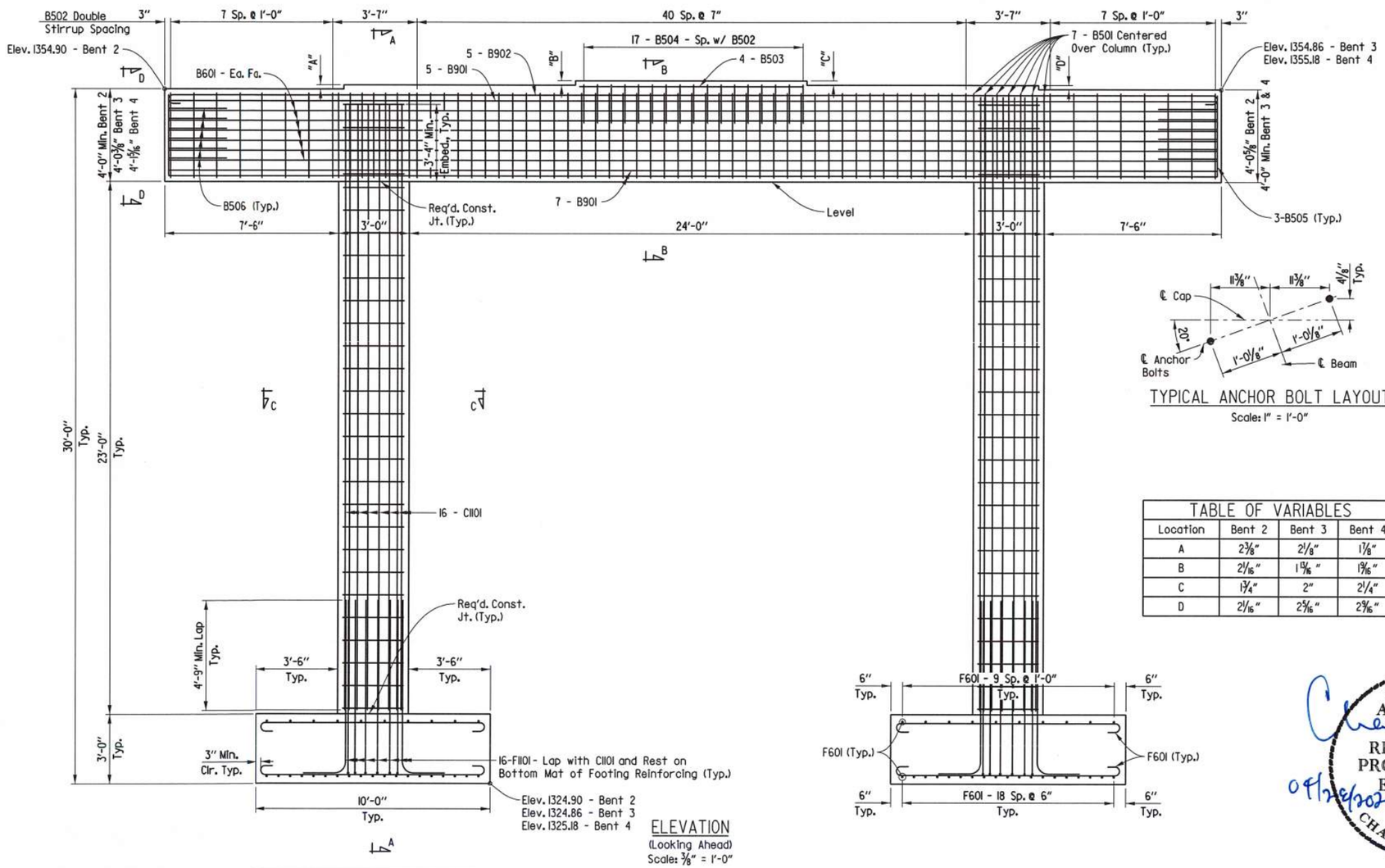

ELEVATION

(Looking Ahead)

Scale: ⅜" = 1'-0"

TYPICAL ANCHOR BOLT LAYOUT

Scale: 1" = 1'-0"

TABLE OF VARIABLES			
Location	Bent 2	Bent 3	Bent 4
A	2⅜"	2⅛"	1⅞"
B	2 1/16"	1 13/16"	1 9/16"
C	1¾"	2"	2¼"
D	2 1/16"	2 5/16"	2 9/16"

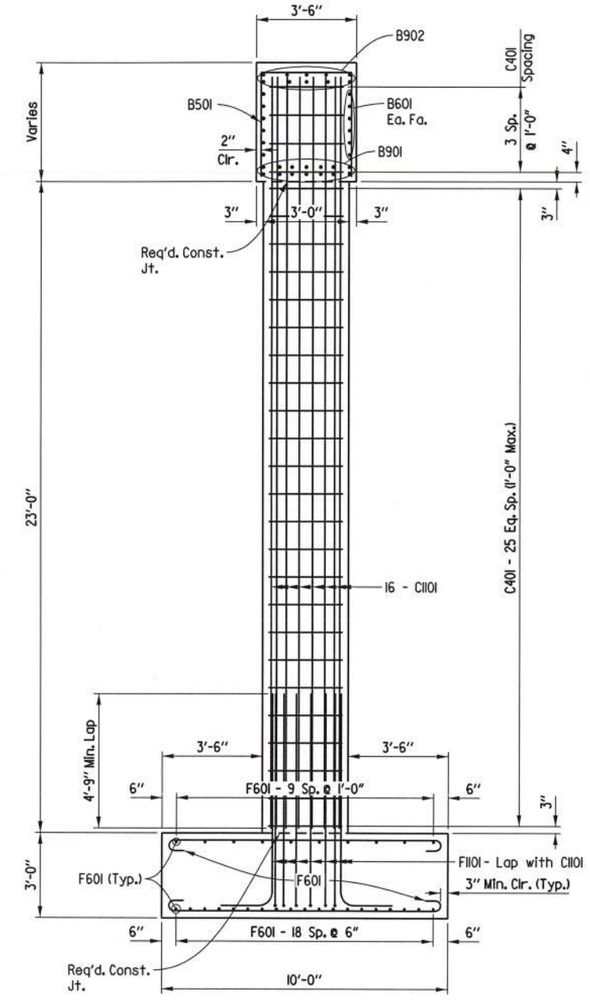

SECTION A-A

Scale: ⅜" = 1'-0"

STATE OF ARKANSAS
REGISTERED PROFESSIONAL ENGINEER
No. 11856
CHARLES A. WIPF
04/28/2020

SHEET 1 OF 2

DETAILS OF BENTS 2 - 4

ROUTE SEC.

ARKANSAS STATE HIGHWAY COMMISSION

LITTLE ROCK, ARK.

DRAWN BY:	LDG	DATE:	10-04-19	FILENAME:	b090502_b21.dgn
CHECKED BY:	CAW	DATE:	03-31-20	SCALE:	SEE DETAILS
DESIGNED BY:	LDG	DATE:	10-03-19		

BRIDGE NO. 07485 DRAWING NO. 61624

USER: JJ5206 DESIGN FILE: G:\18103601_090502\TRANSP\dgn\bridge\b090502_b21.dgn PLOTTED: 4/28/2020 16:28 SCALE: 1:5.333

G:\18103601_090502\TRANSP\dgn\bridge\b090502_b21.dgn 4/28/2020 16:28

DATE REVISED	DATE FILMED	DATE REVISED	DATE FILMED	FED.RD. DIST.NO.	STATE	FED.AID PROJ.NO.	SHEET NO.	TOTAL SHEETS
				6	ARK.			
				JOB NO.		090502	33	57
				(1) 07485		INT. BENTS		61625

BENDING DIAGRAM

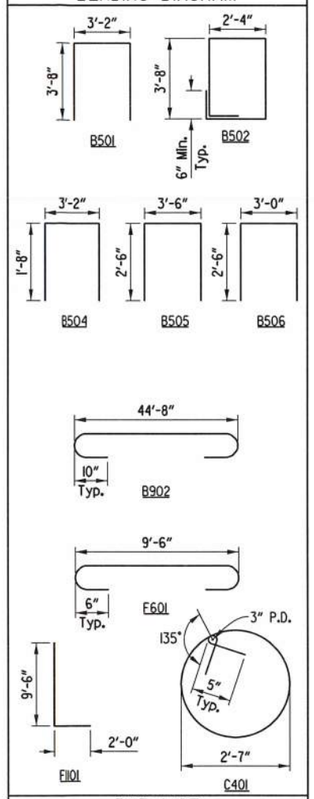

BAR LIST
(Per Bent)

Mark	Number Required	Length	Pin Diameter
B501	14	10'-4"	2½"
B502	57	12'-6"	2½"
B503	4	9'-6"	Str.
B504	17	6'-4"	2½"
B505	6	8'-4"	2½"
B506	12	7'-10"	2½"
B601	12	44'-8"	Str.
B901	19	44'-8"	Str.
B902	5	47'-2"	9"
C401	60	9'-3"	3"
C1101	32	26'-2"	Str.
F601	116	10'-10"	4½"
F1101	32	11'-2"	11¼"

Note:
Dimensions of bars are out-to-out.

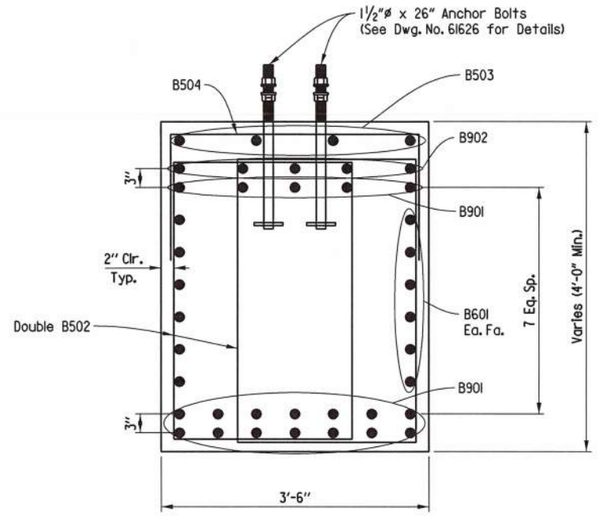

SECTION B-B
Scale: 1" = 1'-0"

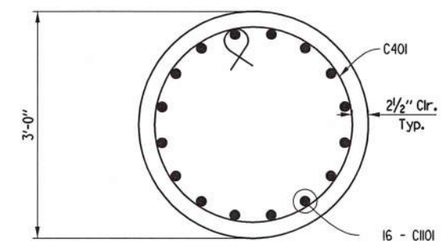

SECTION C-C
Scale: 1" = 1'-0"

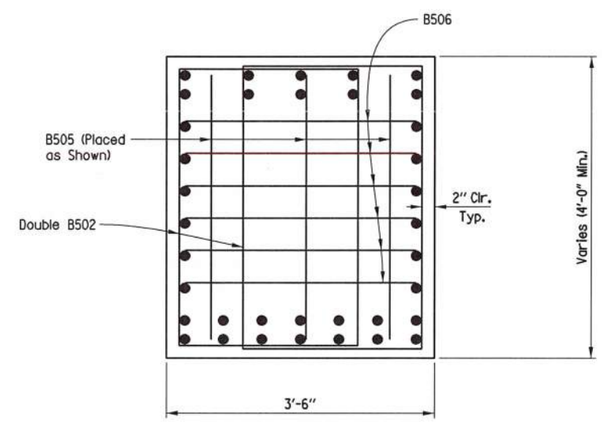

SECTION D-D
(Typ. Both Ends of Cap)
Scale: 1" = 1'-0"

STATE OF ARKANSAS
REGISTERED PROFESSIONAL ENGINEER
No. 11856
CHARLES A. WIPF
04/28/2020

SHEET 2 OF 2
DETAILS OF BENTS 2 - 4
ROUTE SEC.
ARKANSAS STATE HIGHWAY COMMISSION
LITTLE ROCK, ARK.

DRAWN BY: LDG DATE: 10-07-19 FILENAME: b090502_b22.dgn
CHECKED BY: CAW DATE: 03-31-20 SCALE: SEE DETAILS
DESIGNED BY: LDG DATE: 10-03-19
BRIDGE NO. 07485 DRAWING NO. 61625

USER: JJ5206
DESIGN FILE: G:\181036\01_090502\TRANSP\dgn\bridge\b090502_b22.dgn
PLOTTED: 4/28/2020 16:28 SCALE: 1:2

DATE REVISED	DATE FILMED	DATE REVISED	DATE FILMED

FED.RD. DIST.NO.	STATE	FED.AID PROJ.NO.	SHEET NO.	TOTAL SHEETS
6	ARK.			
JOB NO.		090502	34	57

(1) 07485 BEARING DETAILS 61626

TABLE OF FABRICATOR VARIABLES

							ELASTOMERIC PAD							EXTERNAL LOAD PLATE									ANCHOR BOLT				
BRIDGE NO.	BENT NO.	BEARING TYPE	NO. OF BEARINGS EACH BENT	(3) MAXIMUM DESIGN LOAD (KIPS)	G	H	A	B	N	TI	Te	NO. & THICKNESS OF STEEL LAMINAE	T	C	D	E	F	J	K	M	Ta	Tb	ø X L	GRADE	PIPE SLEEVE SIZE (ø X L)	SHEET METAL SLEEVE SIZE (ø X L)	STEEL WASHER SIZE (O.D.)
07485	2	Fix.	5	228	8 5/16"	6 3/16"	15"	12"	6	1/2"	1/4"	7 @ 12 Ga.	4 1/4"	13"	32 1/2"	2 1/4"	2 1/4"	3 11/16"	1/2"	12 1/8"	(4)	(4)	1 1/2" X 26"	55	1 1/2" X 6 7/16"	3" X 7"	3"
	3	Fix.	5	234	8 5/16"	6 3/16"	15"	12"	6	1/2"	1/4"	7 @ 12 Ga.	4 1/4"	13"	32 1/2"	2 1/4"	2 1/4"	3 11/16"	1/2"	12 1/8"	(4)	(4)	1 1/2" X 26"	55	1 1/2" X 6 7/16"	3" X 7"	3"
	4	Fix.	5	228	8 5/16"	6 3/16"	15"	12"	6	1/2"	1/4"	7 @ 12 Ga.	4 1/4"	13"	32 1/2"	2 1/4"	2 1/4"	3 11/16"	1/2"	12 1/8"	(4)	(4)	1 1/2" X 26"	55	1 1/2" X 6 7/16"	3" X 7"	3"

(1) Care shall be taken to ensure that the External Load plate is in full and complete contact with the Beam or Girder Flange before welding begins.

(2) Center line of Beam or Girder shall be aligned with center line of Elastometric pad.

(3) Maximum Design Load = Service I Limit State

Note:
The direction of bevel of the external load plate may not be accurately depicted with respect to Ta and Tb values shown in "TABLE OF FABRICATOR VARIABLES".

Unless otherwise approved by the Engineer, welding of the external load plate at expansion bearings to the beam or girder will be allowed only when: 1) the approximate average air temperature during the 24 hour period immediately preceding welding is between 40°F and 80°F; and 2) the slots in the external load plate are positioned to center on the anchor bolts; and 3) no horizontal deformation of the elastomeric pad is evident. If welding at other temperatures is required, the Engineer will provide adjustment data.

(4)

		Bent 2	Bent 3	Bent 4
Beam 1	Ta	1.98"	2.02"	2.06"
	Tb	2.02"	1.98"	1.94"
Beam 2	Ta	1.98"	2.02"	2.06"
	Tb	2.02"	1.98"	1.94"
Beam 3	Ta	1.98"	2.01"	2.05"
	Tb	2.02"	1.99"	1.95"
Beam 4	Ta	1.97"	2.01"	2.05"
	Tb	2.03"	1.99"	1.95"
Beam 5	Ta	1.97"	2.01"	2.05"
	Tb	2.03"	1.99"	1.95"

GENERAL NOTES

Elastomeric bearings shall conform to Section 808 and shall be paid for at the unit price bid for "Elastomeric Bearings".

External load plates and shear blocks shall conform to ASTM A709, Gr. 50W. Pipe sleeves shall be ASTM A500, Grade B, and shall be galvanized to conform to AASHTO M 232, Class C or ASTM B695, Class 50.

External load plates and shear blocks shall be completely fabricated (including bevel, bolt holes and all shop welding) and shall be cleaned before vulcanizing to the elastomeric bearing. Surfaces in contact with the elastomeric bearing shall be cleaned in accordance with Subsection 808.03. Other surfaces shall be blast cleaned in accordance with Subsection 807.84(b) for painted steel and 807.84(e) for unpainted Grade 50W steel.

Anchor Bolts, Washers and Nuts shall conform to Subsection 807.07. The anchor bolt grade of steel shall be as specified in the "Table of Fabricator Variables". Indentations shall be circular with rounded bottoms and staggered as shown in the details.

Pipe Sleeves, Anchor bolts, Washers, and Nuts shall be paid for at the unit price bid for "Structural Steel in Beam Spans, (ASTM A709, Gr. 50W)". External load plates will not be measured or paid for separately, but will be considered incidental to the unit price bid for "Elastomeric Bearings".

Bearings shall be seated in accordance with Subsection 808.08. This work and materials are considered subsidiary to the item "Elastomeric Bearings" and will not be paid for directly.

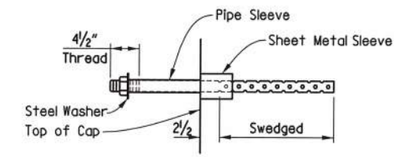

ANCHOR BOLT DETAIL
No Scale

Anchor Bolts may be cast in place or drilled and grouted into place. If Anchor Bolts are to be cast in place, the galvanized Sheet Metal Sleeves will not be required.

If Anchor Bolts are to be drilled and grouted in place, the galvanized Sheet Metal Sleeves shall be cast in place as shown. Sleeves shall be dry packed with styrofoam, urethane foam or approved equal prior to pouring of concrete. After pouring of the cap and prior to erection of structural steel, the dry pack shall be removed and holes for the anchor bolts shall be accurately drilled into the concrete. Bolts placed in drilled holes shall be accurately set and fixed using OPL approved epoxy or non-shrink grout that completely fills the holes. Galvanized sheet metal sleeves shall meet the requirements of ASTM 653, CS Type B or approved equivalent, be of minimum 16 gauge thickness, and be galvanized according to ASTM B695, Class 50. Galvanized sheet metal sleeves will not be paid for directly, but will be considered subsidiary to the items "Structural Steel in Beam Spans, (ASTM A709, Gr. 50W)".

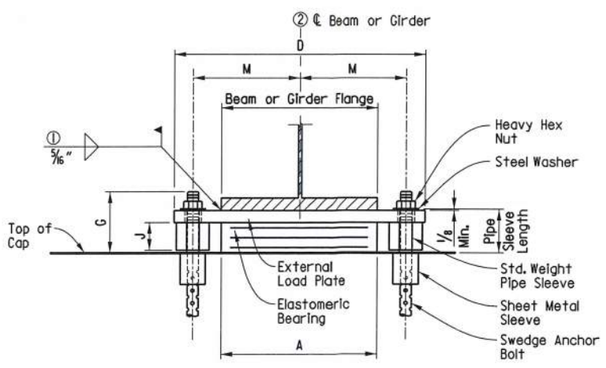

FRONT VIEW
No Scale

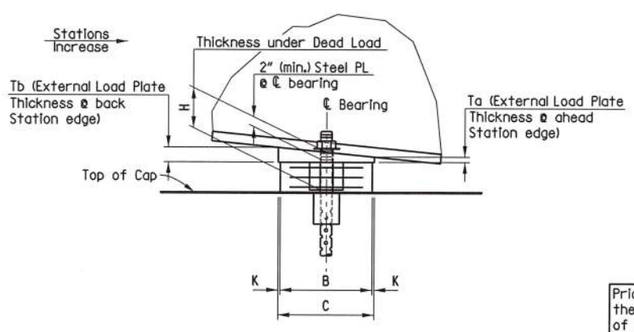

SIDE VIEW
No Scale

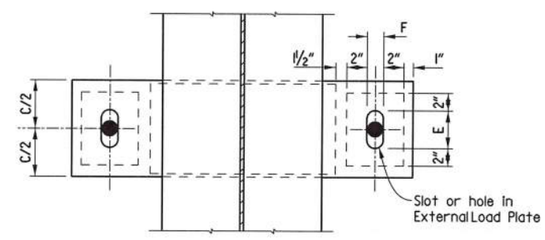

PLAN VIEW
No Scale

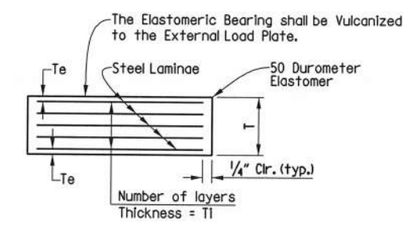

Te = thickness of Elastomer cover on top and bottom of pad
TI = thickness of Elastomer between Steel Laminae
N = number of Elastomer layers of thickness TI

ELASTOMERIC BEARING
No Scale

Prior to erection of the Beams or Girders, the Contractor shall verify the orientation of the bearings with respect to Ta and Tb

STATE OF ARKANSAS
REGISTERED PROFESSIONAL ENGINEER
No. 11856
CHARLES A. WIPF
04/28/2020

DETAILS OF ELASTOMERIC BEARINGS

ROUTE SEC.

ARKANSAS STATE HIGHWAY COMMISSION

LITTLE ROCK, ARK.

DRAWN BY:	LDG	DATE:	10-02-19	FILENAME:	b090502_el.dgn
CHECKED BY:	CAW	DATE:	03-31-20	SCALE:	SEE DETAILS
DESIGNED BY:	LDG	DATE:	10-01-19		

BRIDGE NO. 07485 DRAWING NO. 61626

DATE REVISED	DATE FILMED	DATE REVISED	DATE FILMED	FED.RD. DIST.NO.	STATE	FED.AID PROJ.NO.	SHEET NO.	TOTAL SHEETS
				6	ARK.			
				JOB NO.		090502	35	57
				(1) 07485		SPAN DETAILS		61627

Note: Class 2 Protective Surface Treatment shall be applied to the roadway surface and roadway face and top of parapet rail.

Note: At Contractor's option, in lieu of providing bar S503E, one #5 bar top and bottom may be substituted for each bar. Payment for reinforcing will be based on the weight of bar S503E. Bars in top and bottom shall be Epoxy Coated.

SLAB REINFORCING:

Transverse:
S502E @ 1'-0" o.c. in top and bottom
S503E @ 1'-0" o.c. bent up over beams
(Alternate w/ S502E bars)
S604E @ 1'-0" o.c. in top at overhangs

Longitudinal:
S401E spa. as shown in top
S501E spa. as shown in bottom
S601E, S602E, & S603E spa. as shown in top over supports, see "REINFORCING PLAN AND POURING SEQUENCE" on Dwg. No. 61630

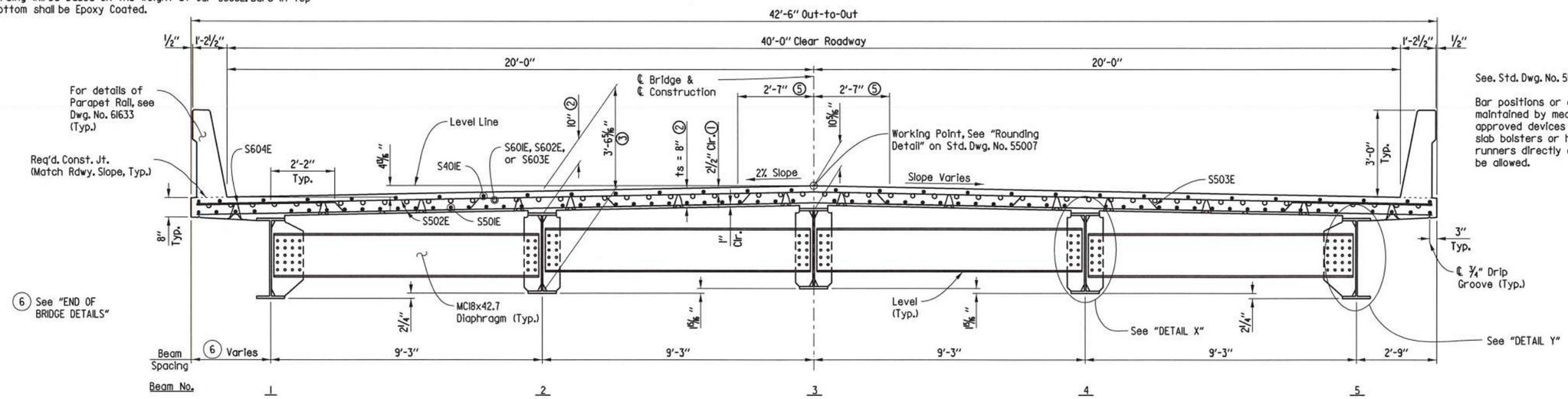

See. Std. Dwg. No. 55007 for additional information.

Bar positions or clearances from the forms shall be maintained by means of stays, ties, hangers, or other approved devices per Subsection 804.06. Placement of slab bolsters or high-chairs with full-length lower runners directly on removable deck forms will not be allowed.

TYPICAL ROADWAY SECTION

(Looking Ahead)
Scale: 1/2" = 1'-0"

Note: The superstructure details shown are for use when removable deck forming is used and are the basis for measurement of Class S(AE) Concrete. See ARDOT Std. Dwg. No. 55005 for allowable modifications and for tolerances when permanent steel bridge deck forms are used.

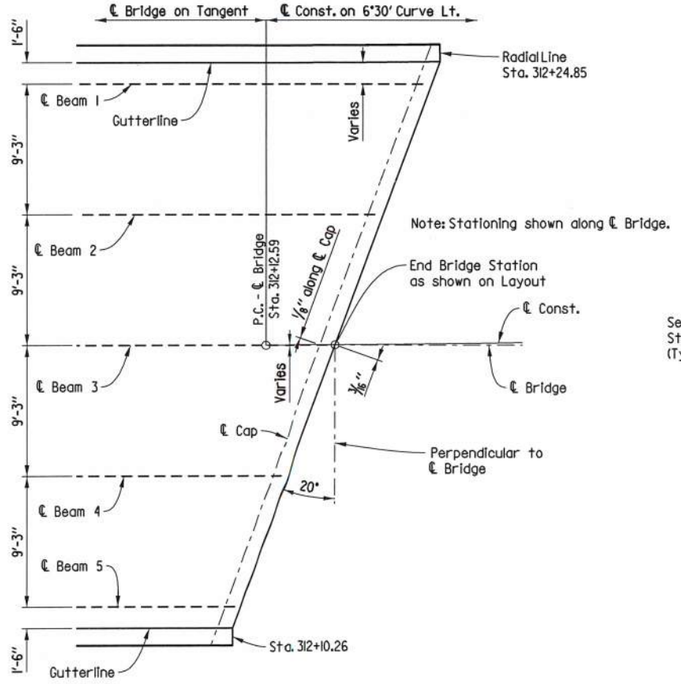

END OF BRIDGE DETAILS

Scale: 3/16" = 1'-0"

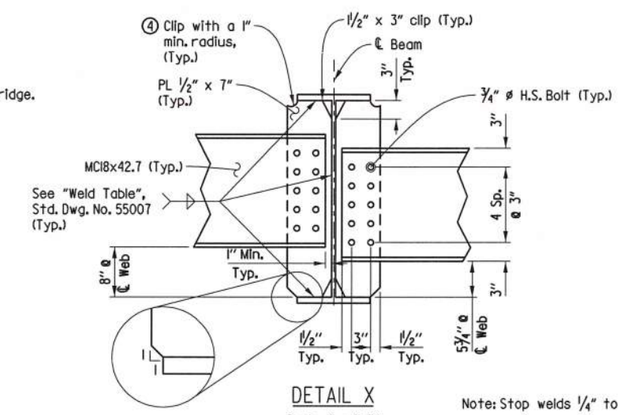

DETAIL X

Scale: 1" = 1'-0"

Note: Stop welds 1/4" to 1" from end of clip (Typ.)

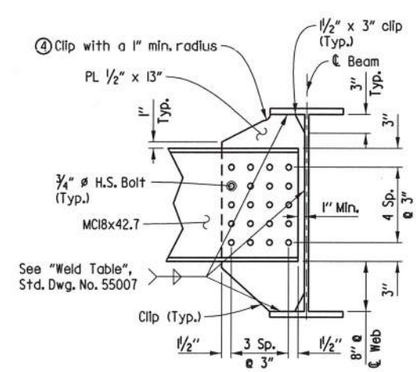

DETAIL Y

Scale: 1" = 1'-0"

(1) Tolerances: Minus = 1/4"
Plus = Equal to amount of slab thickening used to meet slab thickness tolerance

(2) See "Adjustment for Slab Thickness Tolerance" Std. Dwg. No. 55007.

(3) Measured at ℄ Bearing and ℄ Beam (Typ. for beams 1, 2, 4, and 5)

(4) If permanent steel bridge deck forms are used, the Fabricator shall clip plate as necessary to accommodate the deck form supports.

(5) See "Rounding Detail" on Std. Dwg. No. 55007.

STATE OF ARKANSAS
REGISTERED PROFESSIONAL ENGINEER
No. 11856
CHARLES A. WIPF
04/28/2020

SHEET 1 OF 7

DETAILS OF 246'-0" INTEGRAL CONTINUOUS W-BEAM UNIT

ROUTE SEC.

ARKANSAS STATE HIGHWAY COMMISSION

LITTLE ROCK, ARK.

DRAWN BY:	LDG	DATE:	10-08-19	FILENAME:	b090502_sl.dgn
CHECKED BY:	CAW	DATE:	01-04-19	SCALE:	SEE DETAILS
DESIGNED BY:	LDG	DATE:	10-01-19		

BRIDGE NO. 07485 DRAWING NO. 61627

USER: JJ5206
DESIGN FILE: G:\1810360I_090502\TRANSP\dgn\bridge\b090502_sl.dgn
PLOTTED: 4/28/2020 16:28 SCALE: 1:4

DATE REVISED	DATE FILMED	DATE REVISED	DATE FILMED	FED.RD. DIST.NO.	STATE	FED.AID PROJ.NO.	SHEET NO.	TOTAL SHEETS
				6	ARK.			
				JOB NO.		090502	36	57
				(1) 07485		SPAN DETAILS		61628

(1) See End Bent Details on Dwg. Nos. 61622 & 61623 for reinforcing and additional details.

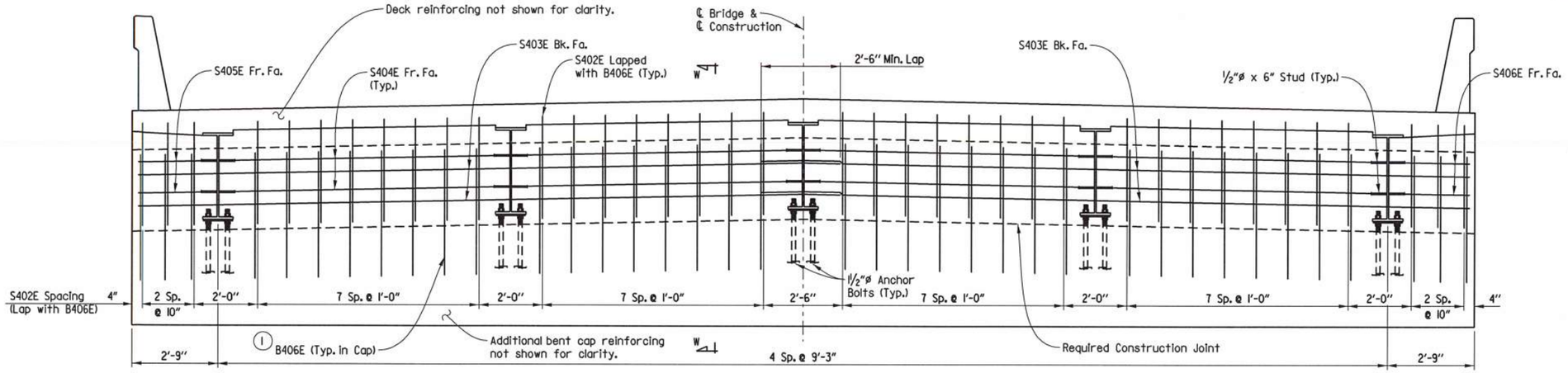

TYPICAL ROADWAY SECTION NEAR END OF SPAN

(Looking Ahead - Bent 4
Bent 1 Similar)
Scale: 1/2" = 1'-0"

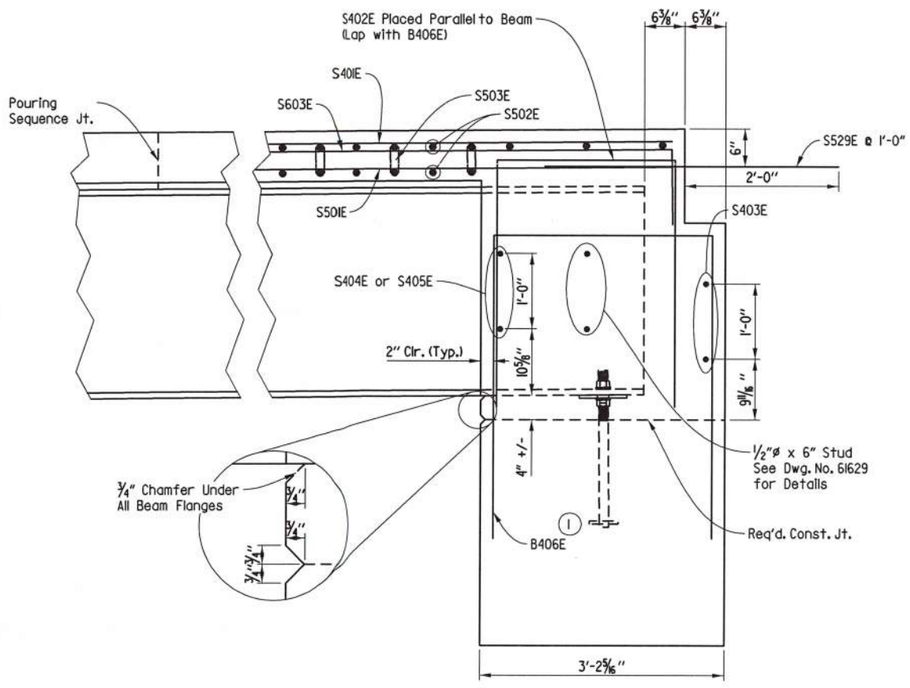

SECTION W-W

(Perpendicular to ℄ Beam)
Scale: 1" = 1'-0"

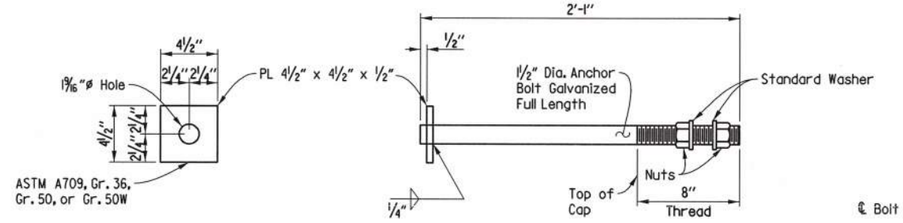

ANCHOR BOLT DETAIL

Scale: 2" = 1'-0"

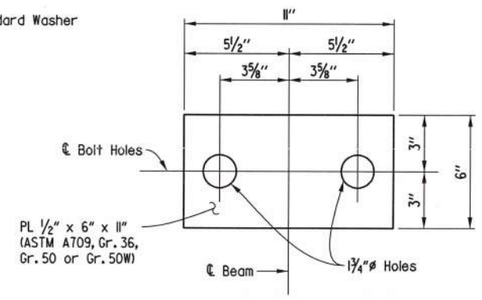

Note: See End Bent Details on Dwg. No. 61622 for additional information.

BEARING PLATE DETAIL

Scale: 3" = 1'-0"

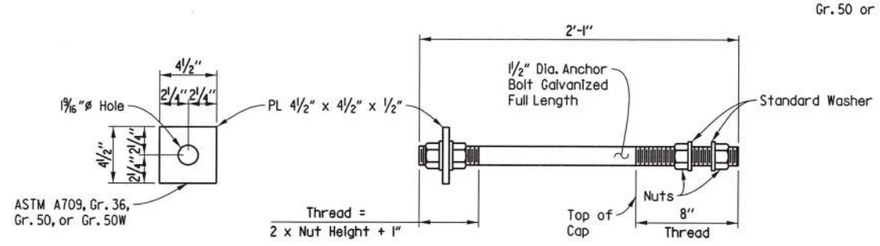

ALTERNATE ANCHOR BOLT DETAIL

Scale: 2" = 1'-0"

Anchor bolts shall comply with AASHTO M 314, Grade 55, with Supplementary Requirement S1, and galvanized according to Subsection 807.07. Nuts and Washers for bolts shall be as specified in Subsection 807.07.

Use lower nut and washer to adjust to grade. Snug tight top nut and washer after grade is adjusted.

Bolts, nuts, and washers shall be paid for at the unit price bid for "Structural Steel in Beam Spans (A709, Gr. 50W)".

STATE OF ARKANSAS
REGISTERED PROFESSIONAL ENGINEER
No. 11856
CHARLES A. WIPF
04/28/2020

SHEET 2 OF 7

DETAILS OF 246'-0" INTEGRAL CONTINUOUS W-BEAM UNIT

ROUTE SEC.

ARKANSAS STATE HIGHWAY COMMISSION

LITTLE ROCK, ARK.

DRAWN BY:	LDG	DATE:	10-08-19	FILENAME:	b090502_s2.dgn
CHECKED BY:	CAW	DATE:	03-31-20	SCALE:	SEE DETAILS
DESIGNED BY:	LDG	DATE:	10-01-19		

BRIDGE NO. 07485 DRAWING NO. 61628

DATE REVISED	DATE FILMED	DATE REVISED	DATE FILMED	FED.RD. DIST.NO.	STATE	FED.AID PROJ.NO.	SHEET NO.	TOTAL SHEETS
				6	ARK.			
				JOB NO.		090502	37	57
				(1) 07485		SPAN DETAILS		61629

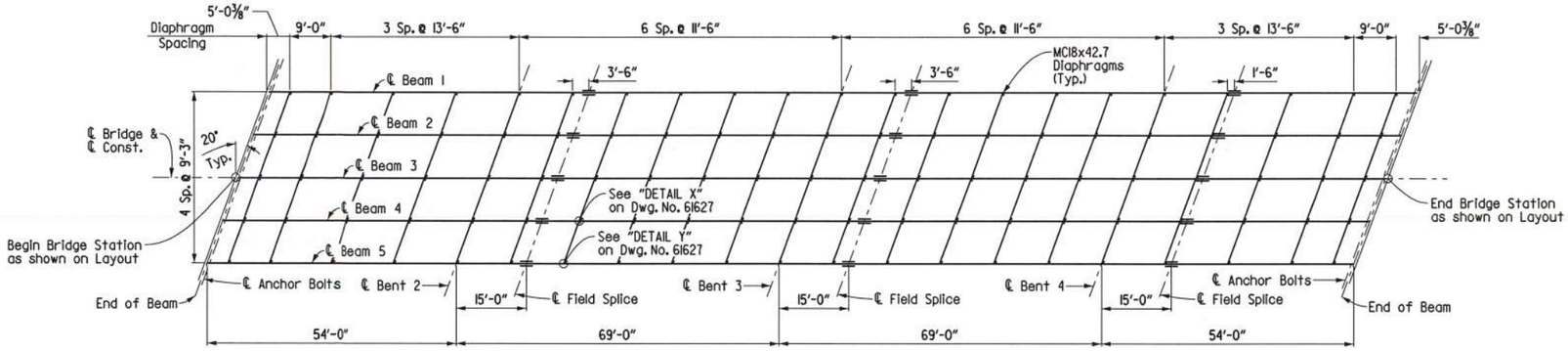

FRAMING PLAN

Scale: 1/16" = 1'-0"

Note:
For Shear Connector detail, see Std. Dwg. No. 55007

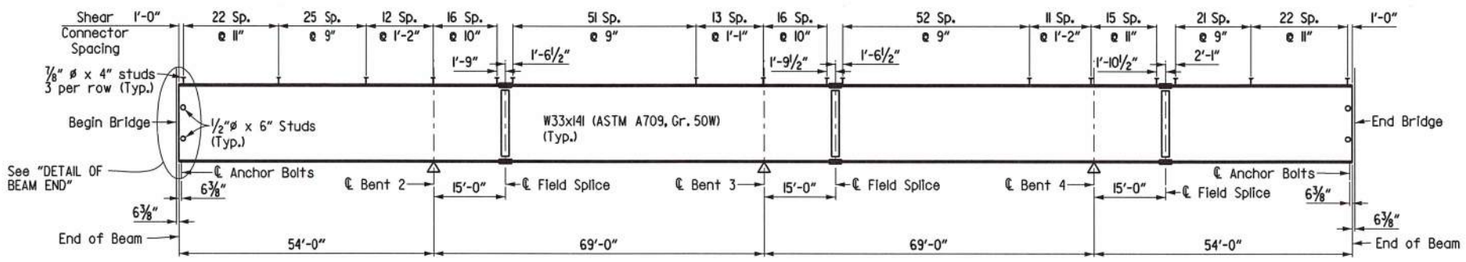

TYPICAL BEAM ELEVATION

No Scale

TABLE OF DEAD LOAD DEFLECTIONS - INCHES

Camber for Dead Load Deflection plus Vertical curve ±¼" tolerance.

Deflections shown are off a chord from ℄ Brng. to ℄ Brng. Vertical curve corrections not included. Negative sign (-) indicates upward deflection.

Span	Point of Deflection	Structural Steel		Structural Steel + Slab		Structural Steel + Slab + Parapet	
		Interior	Exterior	Interior	Exterior	Interior	Exterior
1	0	0.000	0.000	0.000	0.000	0.000	0.000
	0.1	0.025	0.023	0.150	0.123	0.152	0.125
	0.2	0.046	0.042	0.275	0.226	0.280	0.231
	0.3	0.061	0.055	0.360	0.295	0.368	0.304
	0.4	0.066	0.060	0.394	0.323	0.404	0.333
	0.5	0.063	0.057	0.376	0.308	0.386	0.318
	0.6	0.053	0.048	0.314	0.257	0.322	0.266
	0.7	0.037	0.033	0.219	0.179	0.224	0.184
	0.8	0.019	0.017	0.114	0.093	0.115	0.094
	0.9	0.005	0.004	0.029	0.023	0.028	0.022
2	0	0.000	0.000	0.000	0.000	0.000	0.000
	0.1	0.014	0.013	0.084	0.069	0.093	0.079
	0.2	0.041	0.037	0.243	0.199	0.266	0.223
	0.3	0.068	0.062	0.405	0.332	0.439	0.369
	0.4	0.088	0.079	0.521	0.426	0.563	0.471
	0.5	0.094	0.085	0.559	0.458	0.603	0.505
	0.6	0.086	0.078	0.512	0.420	0.552	0.463
	0.7	0.066	0.060	0.390	0.320	0.421	0.353
	0.8	0.038	0.034	0.226	0.185	0.244	0.204
	0.9	0.012	0.011	0.071	0.059	0.077	0.065
	0	0.000	0.000	0.000	0.000	0.000	0.000

Symmetrical about ℄ Bent 3

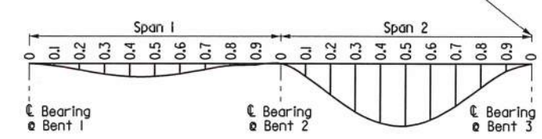

DEAD LOAD DEFLECTION DIAGRAM

No Scale

Note: All structural steel shall be ASTM A709, Gr. 50W unless otherwise noted and shall be paid for as "Structural Steel In Beam Spans (A709, Gr. 50W)". See Std. Dwg. Nos. 55006 and 55007 for additional notes and details.

Note: Bolted field splices shown may be eliminated or shop welded splices may be substituted with approval of the Engineer. Payment will be made on the basis of the plan quantities. See Bolted Field Splice Details.

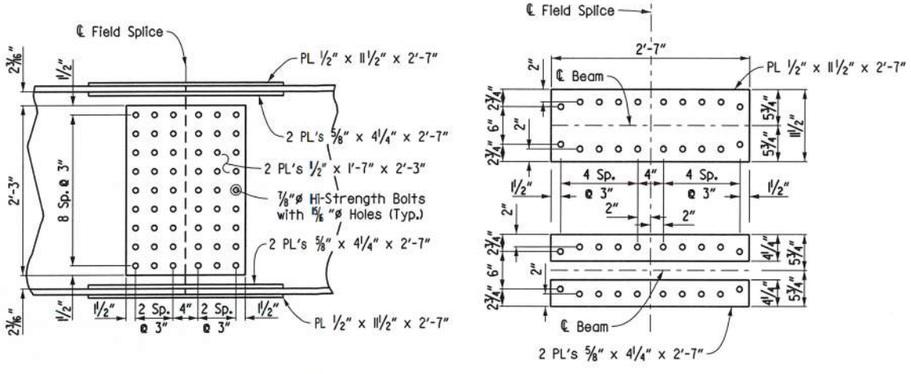

DETAILS OF FIELD SPLICE

Scale: 1" = 1'-0"

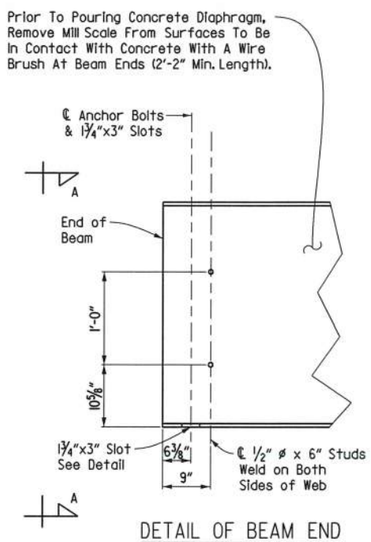

DETAIL OF BEAM END

No Scale

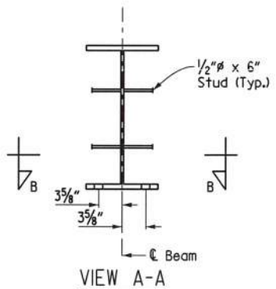

VIEW A-A

No Scale

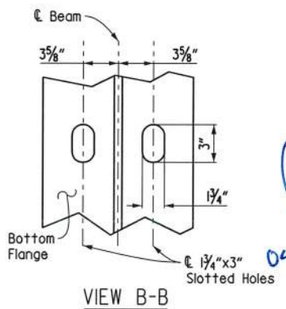

VIEW B-B

No Scale

STATE OF ARKANSAS
REGISTERED PROFESSIONAL ENGINEER
No. 11856
CHARLES A. WIPF
04/28/2020

SHEET 3 OF 7

DETAILS OF 246'-0" INTEGRAL CONTINUOUS W-BEAM UNIT

ROUTE SEC.

ARKANSAS STATE HIGHWAY COMMISSION

LITTLE ROCK, ARK.

DRAWN BY:	LDG	DATE:	10-08-19	FILENAME:	b090502_s3.dgn
CHECKED BY:	CAW	DATE:	04-01-20	SCALE:	SEE DETAILS
DESIGNED BY:	LDG	DATE:	10-01-19		

BRIDGE NO. 07485 DRAWING NO. 61629

DATE REVISED	DATE FILMED	DATE REVISED	DATE FILMED	FED.RD. DIST.NO.	STATE	FED.AID PROJ.NO.	SHEET NO.	TOTAL SHEETS
				6	ARK.			
				JOB NO.		090502	38	57
				(I) 07485		SPAN DETAILS		61630

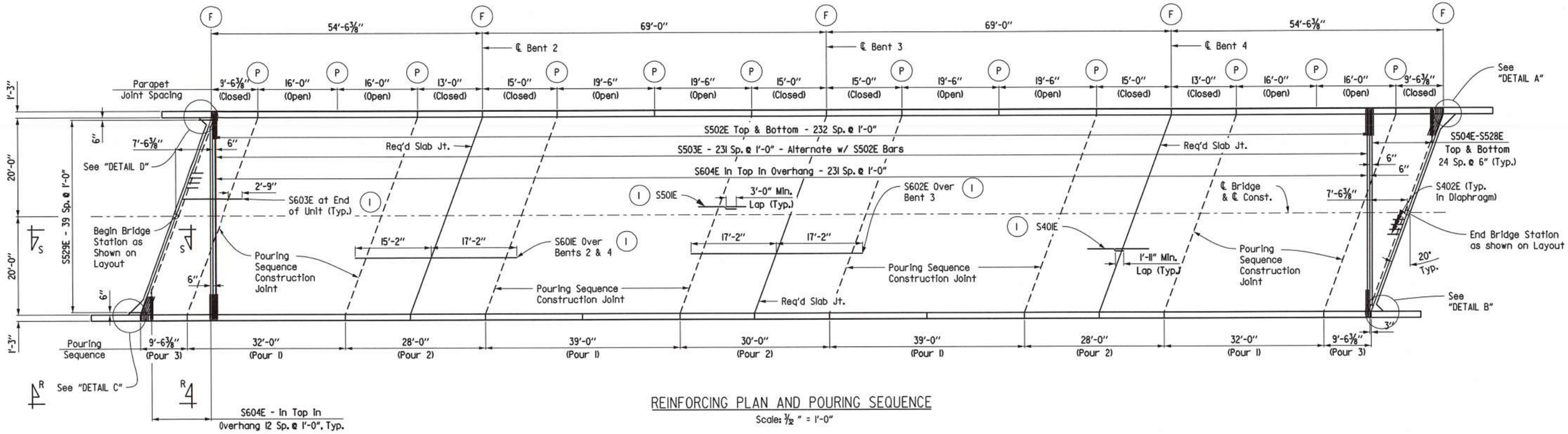

REINFORCING PLAN AND POURING SEQUENCE

Scale: 1/12" = 1'-0"

Note:
Parapet rail spacing and joint depth shown are typical for both sides of roadway. For Parapet reinforcing details, see Dwg. No. 61633.

Rails and wings are included in span construction and are included in span quantities.

Required slab joints and pouring sequence joints shall align with parapet open joints at the gutterline.

For "Transverse Slab Joint Detail" and Longitudinal Construction Joint", See Std. Dwg. No. 55007.

For Bar list and "SECTION AT END BENT (NORMAL TO CAP)", see Dwg. No. 61631.

For "VIEW R-R" and "VIEW S-S", see Dwg. No. 61632.

(P) Partial depth parapet joint at this location.

(F) Full depth parapet joint at this location.

(I) Place as shown in "TYPICAL ROADWAY SECTION", see Dwg. No. 61627.

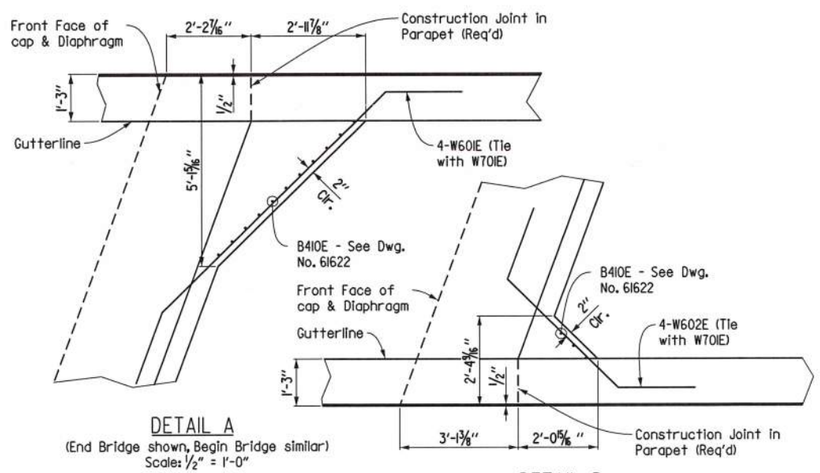

DETAIL A

(End Bridge shown, Begin Bridge similar)
Scale: 1/2" = 1'-0"

DETAIL B

(End Bridge shown, Begin Bridge similar)
Scale: 1/2" = 1'-0"

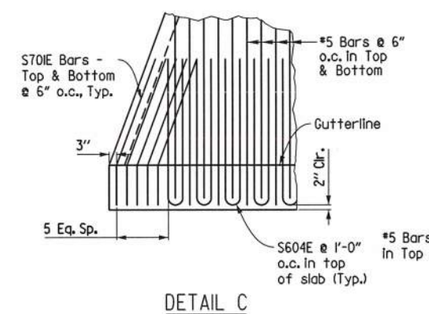

DETAIL C

(Begin Bridge shown, End Bridge similar)
Scale: 3/8" = 1'-0"

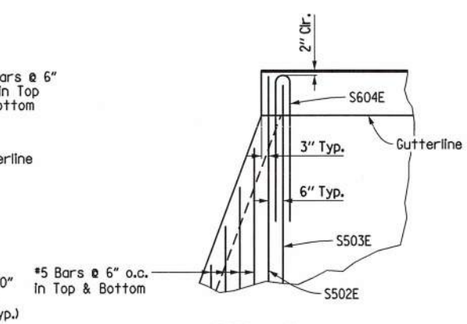

DETAIL D

(Begin Bridge shown, End Bridge similar)
Scale: 3/8" = 1'-0"

Pouring Sequence Notes:

Pours with the same number may be place simultaneously or separately. All Pours (1) must be placed before Pours (2) can be placed. Pours (2) must be placed before Pours (3) can be placed. 48 hours shall elapse between the end of a pour and the start of the next pour. 72 hours shall elapse between adjacent pours.

A minimum of 72 hours shall elapse between completion of the slab and the pouring of the bridge railing. Any railing pours made before the entire slab unit has been placed must be approved by the Engineer. Concrete diaphragms at end of unit shall be poured monolithically with the deck. The Contractor must obtain approval from the Engineer for any deviations from the pouring sequence shown.

Concrete in bridge superstructure shall be place, consolidated, and screeded off for the entire pour before any concrete has taken its initial set. This may require the use of a retarding agent.

Concrete diaphragms shall be poured monolithically with the slab.

STATE OF ARKANSAS
REGISTERED PROFESSIONAL ENGINEER
No. 11856
CHARLES A. WIPF
04/28/2020

SHEET 4 OF 7

DETAILS OF 246'-0" INTEGRAL CONTINUOUS W-BEAM UNIT

ROUTE SEC.

ARKANSAS STATE HIGHWAY COMMISSION

LITTLE ROCK, ARK.

DRAWN BY:	LDG	DATE:	10-08-19	FILENAME:	b090502_s4.dgn
CHECKED BY:	CAW	DATE:	04-01-20	SCALE:	SEE DETAILS
DESIGNED BY:	LDG	DATE:	10-01-19		

BRIDGE NO. 07485 DRAWING NO. 61630

DATE REVISED	DATE FILMED	DATE REVISED	DATE FILMED	FED.RD. DIST.NO.	STATE	FED.AID PROJ.NO.	SHEET NO.	TOTAL SHEETS
				6	ARK.			
				JOB NO.		090502	39	57
				(1) 07485		SPAN DETAILS		61631

BAR LIST

Mark	Number Required	Length	Pin Diameter
S401E	210	36'-11"	Str.
S402E	76	8'-8"	2"
S403E	8	23'-11"	Str.
S404E	16	9'-7"	Str.
S405E	8	2'-8"	Str.
S501E	384	43'-8"	Str.
S502E	466	42'-2"	Str.
S503E	232	42'-6"	3"
S504E to S528E	4 Ea.	VAR. 6'-9" to 39'-8"	Str.
S529E	80	4'-6"	Str.
S601E	112	32'-4"	Str.
S602E	56	34'-4"	Str.
S603E	112	12'-11"	4 1/2"
S604E	490	9'-8"	4 1/2"
S701E	20	4'-10"	5 1/4"
P401E	924	5'-11"	2"
P402E	128	5'-1"	2"
P403E	924	3'-6"	3 3/4"
P404E	32	9'-3"	Str.
P405E	64	15'-8"	Str.
P406E	32	12'-8"	Str.
P407E	64	14'-8"	Str.
P408E	64	19'-2"	Str.
R401E	56	5'-11"	2"
R402E	32	5'-8"	Str.
R403E	32	9'-8"	Str.
R404E	56	3'-10"	3 3/4"
R601E	24	9'-8"	Str.
R602E	12	5'-0"	Str.
R603E	24	9'-8"	4 1/2"
W401E	72	6'-8"	Str.
W501E	32	7'-6"	3 3/4"
W601E	8	12'-2"	4 1/2"
W602E	8	8'-1"	4 1/2"
W701E	88	11'-8"	Str.

BENDING DIAGRAM

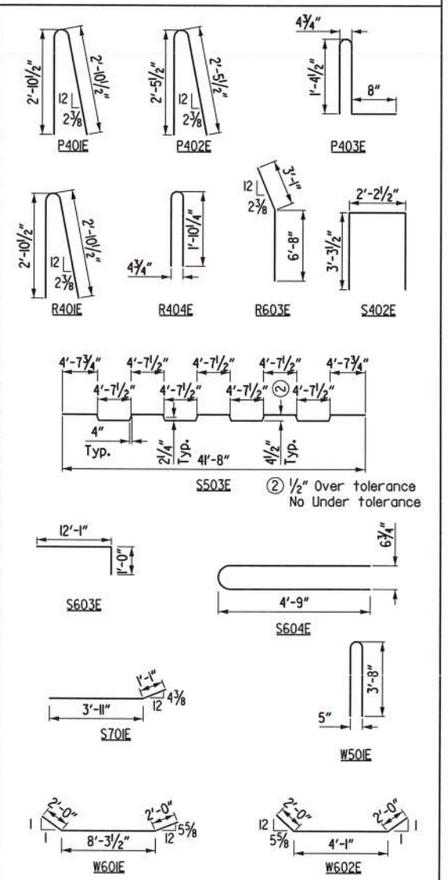

Note:
Dimensions of bars are out-to-out.
Bar designations ending with "E" indicate epoxy-coated bars.

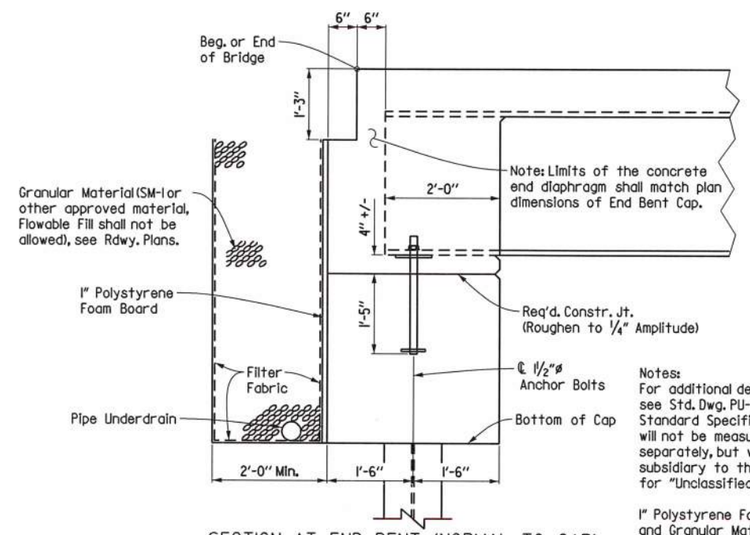

SECTION AT END BENT (NORMAL TO CAP)
Scale: 3/4" = 1'-0"

Notes:
For additional details of pipe underdrain see Std. Dwg. PU-1 and Section 611 of the Standard Specifications. Pipe underdrains will not be measured or paid for separately, but will be considered subsidiary to the unit price bid for "Unclassified Excavation".

1" Polystyrene Foam Board, Filter Fabric, and Granular Material shall not be paid for directly, but shall be considered subsidiary to the various bid items.

STATE OF ARKANSAS REGISTERED PROFESSIONAL ENGINEER No. 11856 CHARLES A. WIPF

04/28/2020

SHEET 5 OF 7

DETAILS OF 246'-0" INTEGRAL CONTINUOUS W-BEAM UNIT

ROUTE SEC.

ARKANSAS STATE HIGHWAY COMMISSION

LITTLE ROCK, ARK.

DRAWN BY:	LDG	DATE:	10-08-19	FILENAME:	b090502_s5.dgn
CHECKED BY:	CAW	DATE:	04-01-20	SCALE:	SEE DETAILS
DESIGNED BY:	LDG	DATE:	10-01-19		

BRIDGE NO. 07485 DRAWING NO. 61631

DATE REVISED	DATE FILMED	DATE REVISED	DATE FILMED	FED.RD. DIST.NO.	STATE	FED.AID PROJ.NO.	SHEET NO.	TOTAL SHEETS
				6	ARK.			
				JOB NO.		090502	40	57

(1) 07485 SPAN DETAILS 61632

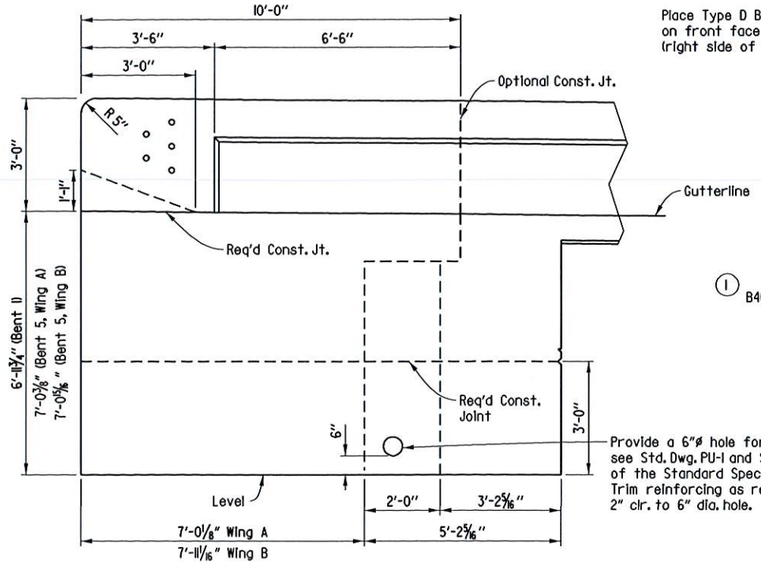

VIEW R-R

Scale: ½" = 1'-0"

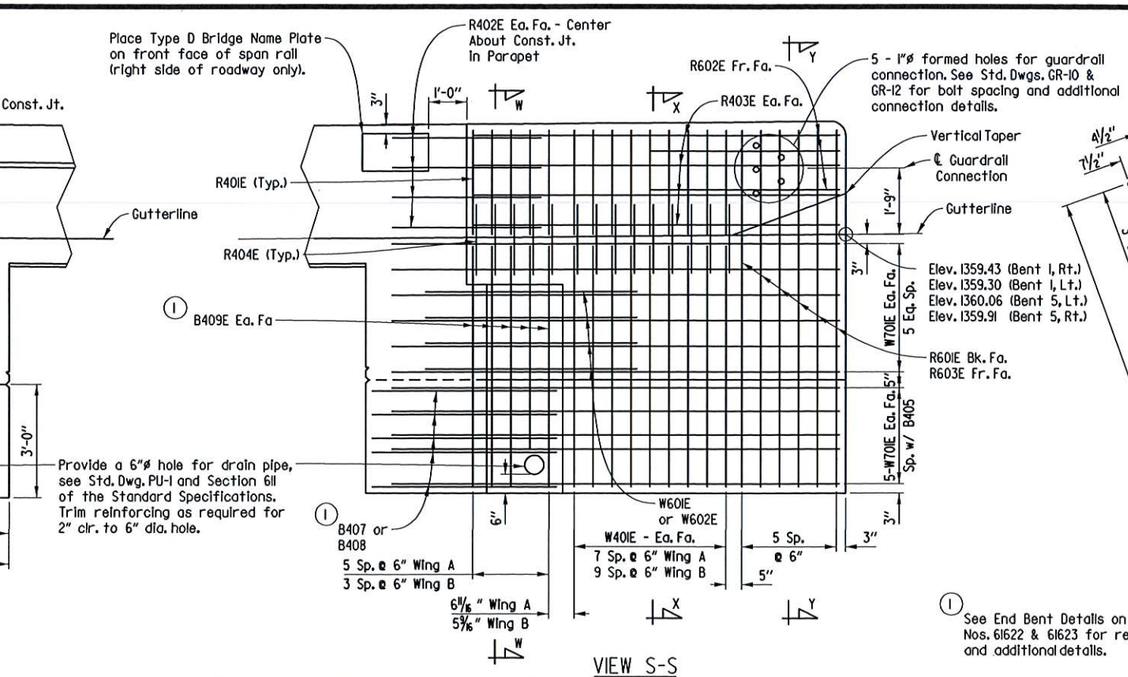

VIEW S-S

Scale: ½" = 1'-0"

Note: For Bar List, See Dwg. No. 61631

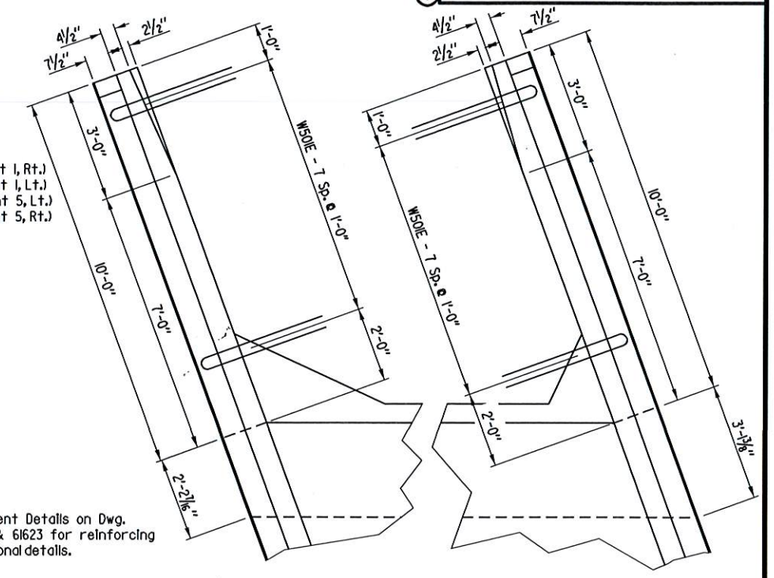

(1) See End Bent Details on Dwg. Nos. 61622 & 61623 for reinforcing and additional details.

PLAN OF RAIL

Scale: ½" = 1'-0"

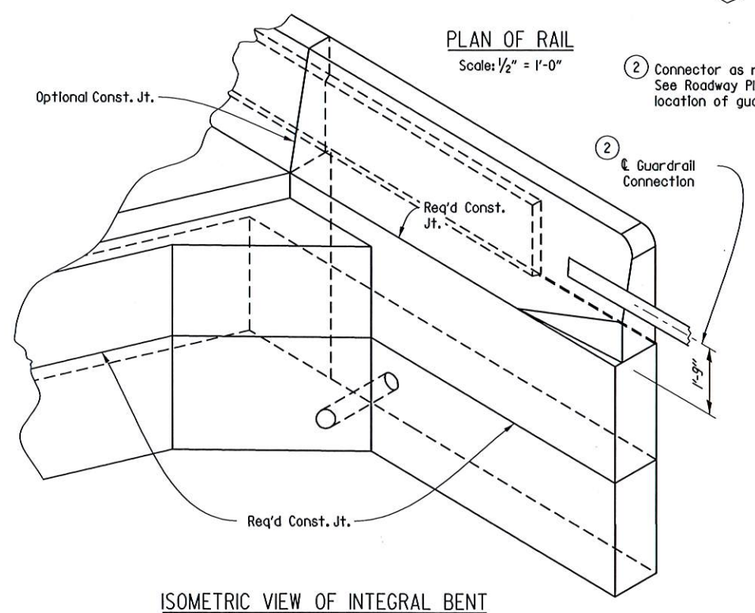

(2) Connector as required. See Roadway Plans for location of guardrail.

ISOMETRIC VIEW OF INTEGRAL BENT

No Scale

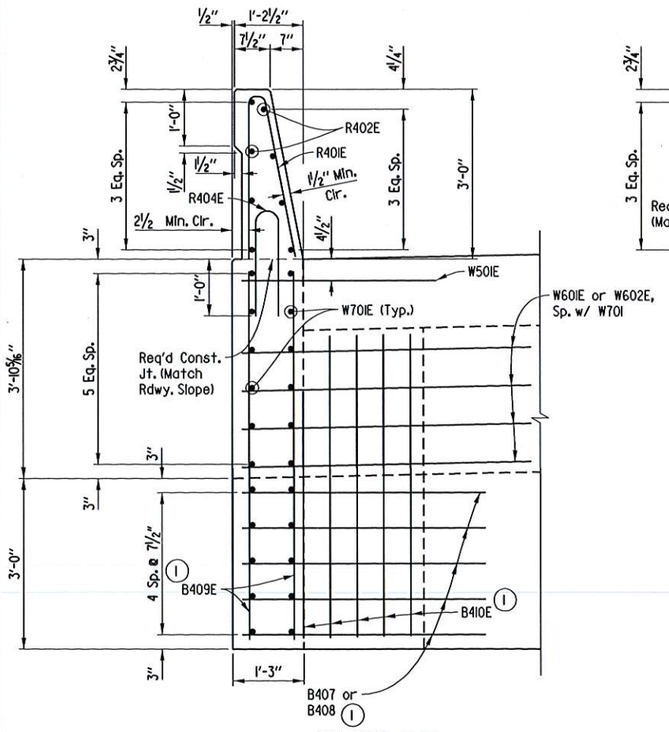

SECTION W-W

Scale: ¾" = 1'-0"

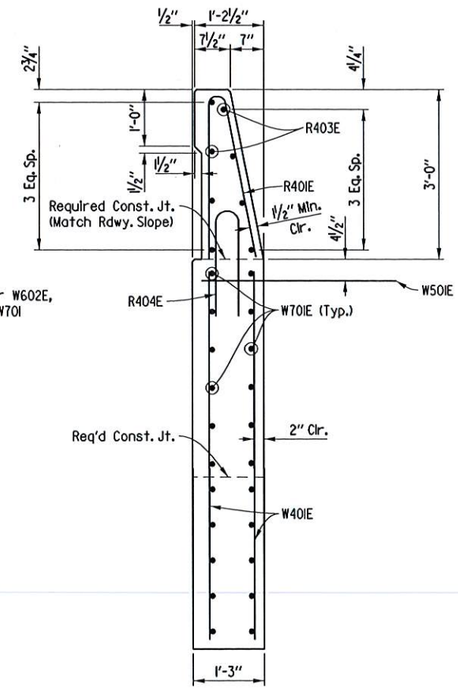

SECTION X-X

Scale: ¾" = 1'-0"

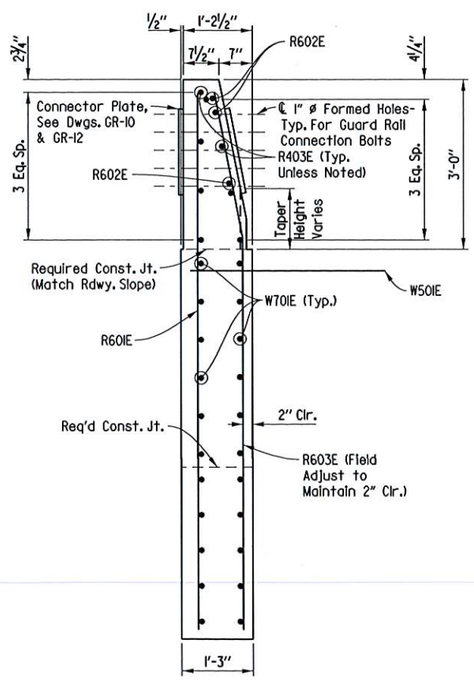

SECTION Y-Y

Scale: ¾" = 1'-0"

STATE OF ARKANSAS REGISTERED PROFESSIONAL ENGINEER No. 11856 CHARLES A. WIPF

Charles A. Wipf 05/08/2020

SHEET 6 OF 7

DETAILS OF 246'-0" INTEGRAL CONTINUOUS W-BEAM UNIT

ROUTE SEC.

ARKANSAS STATE HIGHWAY COMMISSION

LITTLE ROCK, ARK.

DRAWN BY:	LDG	DATE:	10-08-19	FILENAME:	b090502_s6.dgn
CHECKED BY:	CAW	DATE:	04-01-20	SCALE:	SEE DETAILS
DESIGNED BY:	LDG	DATE:	10-01-19		

BRIDGE NO. 07485 DRAWING NO. 61632

USER: lg5169
DESIGN FILE: G:\1810360I_090502\TRANSP\dgn\bridge\b090502_s6.dgn
PLOTTED: 5/8/2020 07:20 SCALE: 1:4

G:\1810360I_090502\TRANSP\dgn\bridge\b090502_s6.dgn 5/8/2020 07:20

DATE REVISED	DATE FILMED	DATE REVISED	DATE FILMED	FED.RD. DIST.NO.	STATE	FED.AID PROJ.NO.	SHEET NO.	TOTAL SHEETS
				6	ARK.			
				JOB NO.		090502	41	57
				1 07485		SPAN DETAILS		61633

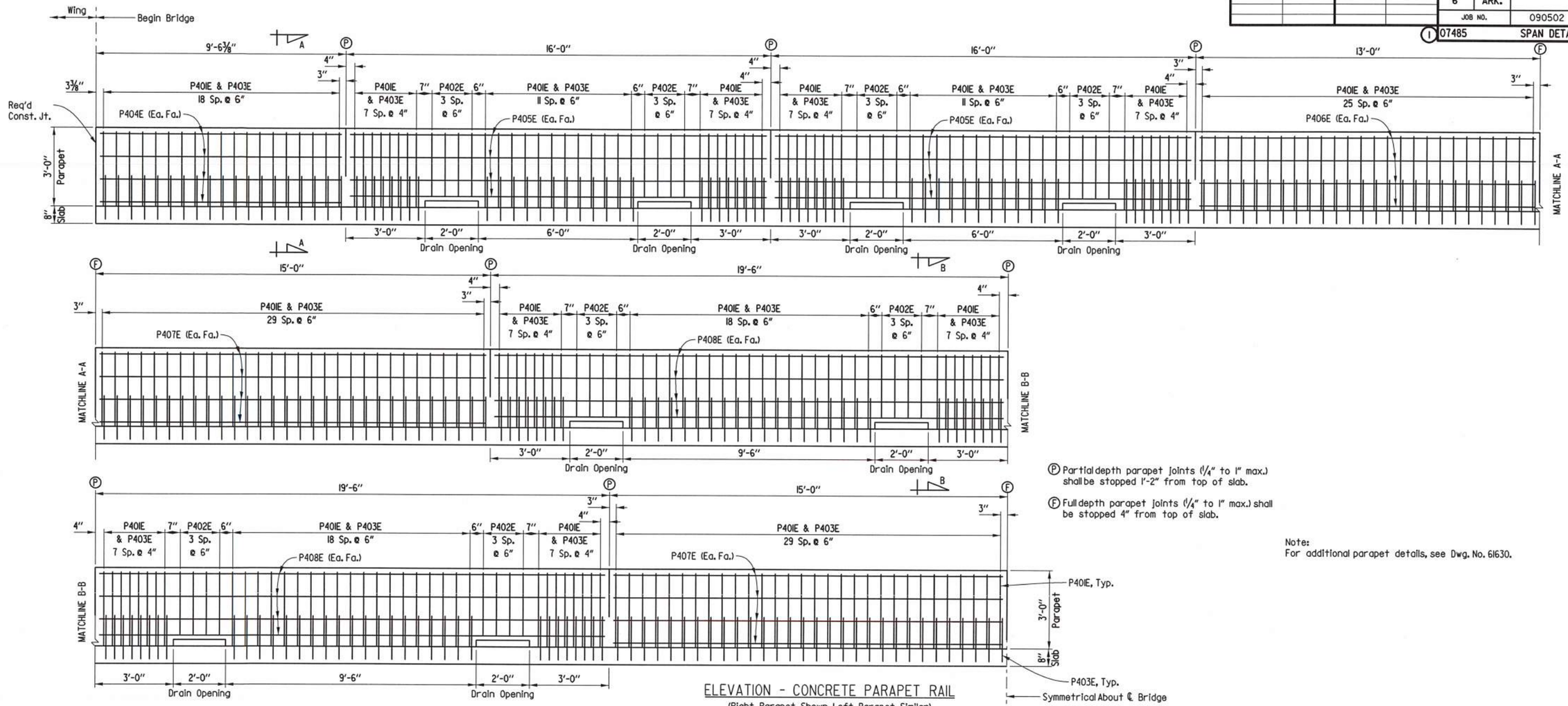

ELEVATION - CONCRETE PARAPET RAIL

(Right Parapet Shown, Left Parapet Similar)
Scale: ½" = 1'-0"

Ⓟ Partial depth parapet joints (¼" to 1" max.) shall be stopped 1'-2" from top of slab.

Ⓕ Full depth parapet joints (¼" to 1" max.) shall be stopped 4" from top of slab.

Note:
For additional parapet details, see Dwg. No. 61630.

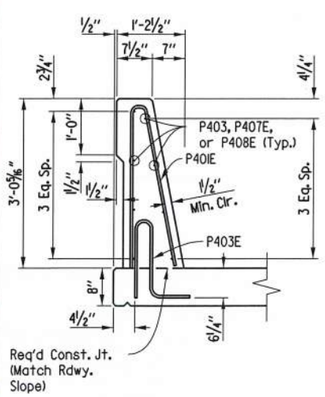

SECTION A-A

Scale: ¾" = 1'-0"

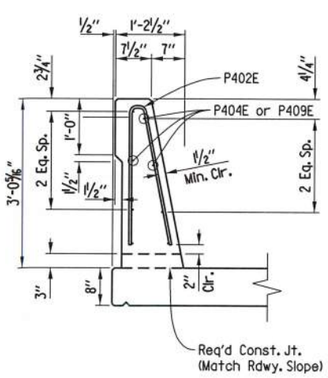

SECTION B-B

Scale: ¾" = 1'-0"

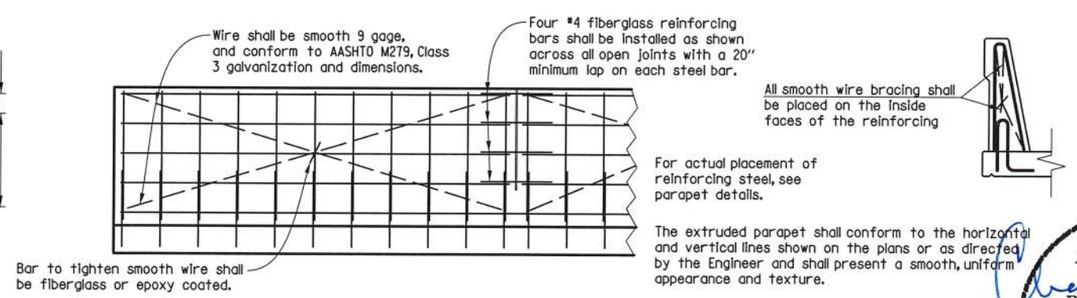

For actual placement of reinforcing steel, see parapet details.

The extruded parapet shall conform to the horizontal and vertical lines shown on the plans or as directed by the Engineer and shall present a smooth, uniform appearance and texture.

Unless otherwise noted, exposed surfaces may be given a light brush finish or a Class 3 Textured Coating Finish in place of Class 2 Rubbed Finish.

All panels shall be braced as required to prevent racking. All open joints shall be sawed as soon as practical to a minimum width of ¼". To control cracking before sawing all joints must be grooved before the concrete is set. Sawing of the joints must be controlled so it will follow the grooved joint.

DETAILS OF OPTIONAL SLIP FORMING OF CONCRETE PARAPET RAIL

No Scale

STATE OF ARKANSAS
REGISTERED PROFESSIONAL ENGINEER
No. 11856
CHARLES A. WIPF
04/28/2020

SHEET 7 OF 7

DETAILS OF 246'-0" INTEGRAL CONTINUOUS W-BEAM UNIT

ROUTE SEC.

ARKANSAS STATE HIGHWAY COMMISSION

LITTLE ROCK, ARK.

DRAWN BY:	LDG	DATE:	10-08-19	FILENAME:	b090502_s7.dgn
CHECKED BY:	CAW	DATE:	04-01-20	SCALE:	SEE DETAILS
DESIGNED BY:	LDG	DATE:	10-01-19		

BRIDGE NO. 07485 DRAWING NO. 61633

USER: JJ5206
DESIGN FILE: G:\180360L_090502\TRANSP\dgn\bridge\b090502_s7.dgn
PLOTTED: 4/28/2020 16:28 SCALE: 1:4

G:\180360L_090502\TRANSP\dgn\bridge\b090502_s7.dgn 4/28/2020 16:28

DATE REVISED	DATE FILMED	DATE REVISED	DATE FILMED	FED.RD. DIST.NO.	STATE	FED.AID PROJ.NO.	SHEET NO.	TOTAL SHEETS
				6	ARK.			
				JOB NO.		090502	42	57

1 07485 TYPE SPECIAL GUTTERS 61634

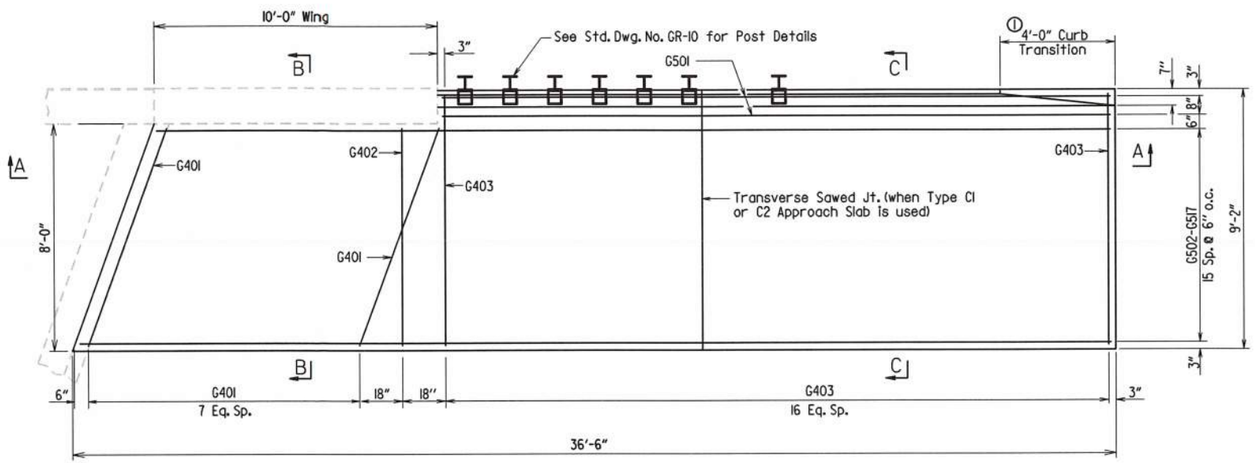

PLAN OF APPROACH GUTTER A
(End Bridge Shown, Begin Bridge Similar)
Scale: 3/8" = 1'-0"

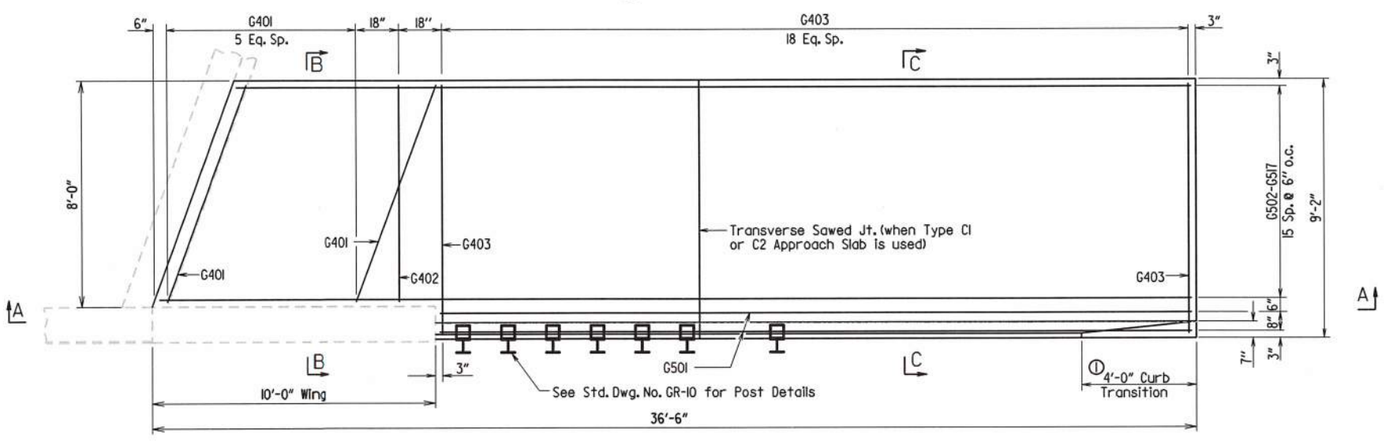

PLAN OF APPROACH GUTTER B
(End Bridge Shown, Begin Bridge Similar)
Scale: 3/8" = 1'-0"

1 Construct gutter curb with height-transition as shown if drop inlet is not placed at end of gutter.

Construct gutter curb full height (no height-transition) if drop inlet is placed at end of gutter. Curb height transition placed on drop inlet. See drop inlet details.

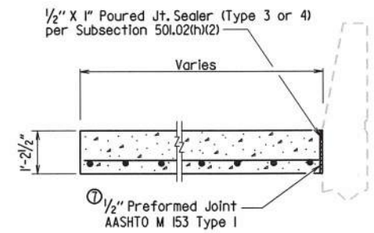

SECTION B-B
No Scale

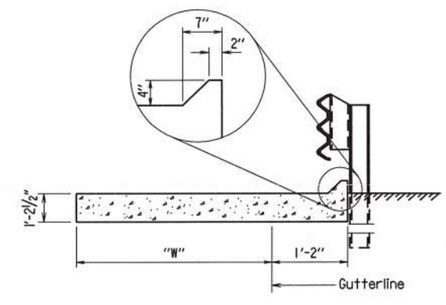

SECTION C-C
No Scale

BAR LIST FOR TYPE SPECIAL GUTTERS

	Mark	No. Req'd.	Length
Gutter A	G401	8	8'-2"
	G402	1	7'-8"
	G403	17	8'-10"
	G501	2	26'-2"
	G502 - G517	1 each	Var. 33'-4" to 36'-1"
Gutter B	G401	6	8'-2"
	G402	1	7'-8"
	G403	19	8'-10"
	G501	2	26'-2"
	G502 - G517	1 each	Var. 33'-4" to 36'-1"

QUANTITIES FOR TYPE SPECIAL GUTTERS

(For Information Only)

	Reinforcing Steel (Lbs.)	Concrete (Cu. Yds.)
Gutter A	783	13.92
Gutter B	784	14.10

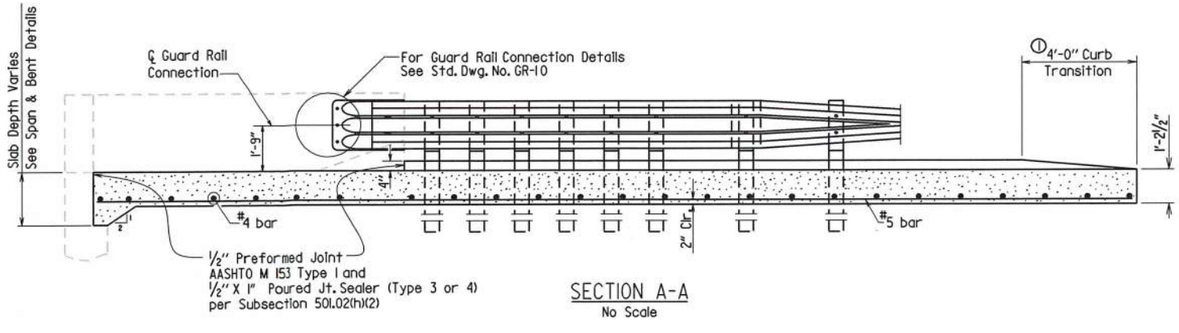

SECTION A-A
No Scale

Note:
All longitudinal lines within the limits of horizontal curves shall be on curves concentric to C.L. Bridge. Adjustment to longitudinal bar lengths may be required. Transverse reinforcing shall be placed on radial lines to C.L. Bridge.

GENERAL NOTES

All concrete shall be Class S or Class S(AE) or mixture used for Portland Cement Concrete Pavement and shall be poured in the dry.

All reinforcing steel shall be Grade 60 (yield strength = 60,000 psi) conforming to AASHTO M 31 or M 322, Type A, with mill test reports.

Approach Gutters will be measured and paid for in accordance with Section 504.

STATE OF ARKANSAS
REGISTERED PROFESSIONAL ENGINEER
No. 11856
CHARLES A. WIPF
04/28/2020

DETAILS FOR TYPE SPECIAL APPROACH GUTTERS

ROUTE SEC.

ARKANSAS STATE HIGHWAY COMMISSION

LITTLE ROCK, ARK.

DRAWN BY: LDG DATE: 03-27-20 FILENAME: b090502_gl.dgn
CHECKED BY: MLC DATE: 03-31-20 SCALE: SEE DETAILS
DESIGNED BY: LDG DATE: 03-27-20

BRIDGE NO. 07485 DRAWING NO. 61634

DATE REVISED	DATE FILMED	DATE REVISED	DATE FILMED	FED.RD. DIST.NO.	STATE	FED.AID PROJ.NO.	SHEET NO.	TOTAL SHEETS
				6	ARK.			
				JOB NO.		090502	43	57
				(2)	CROSS SECTIONS			

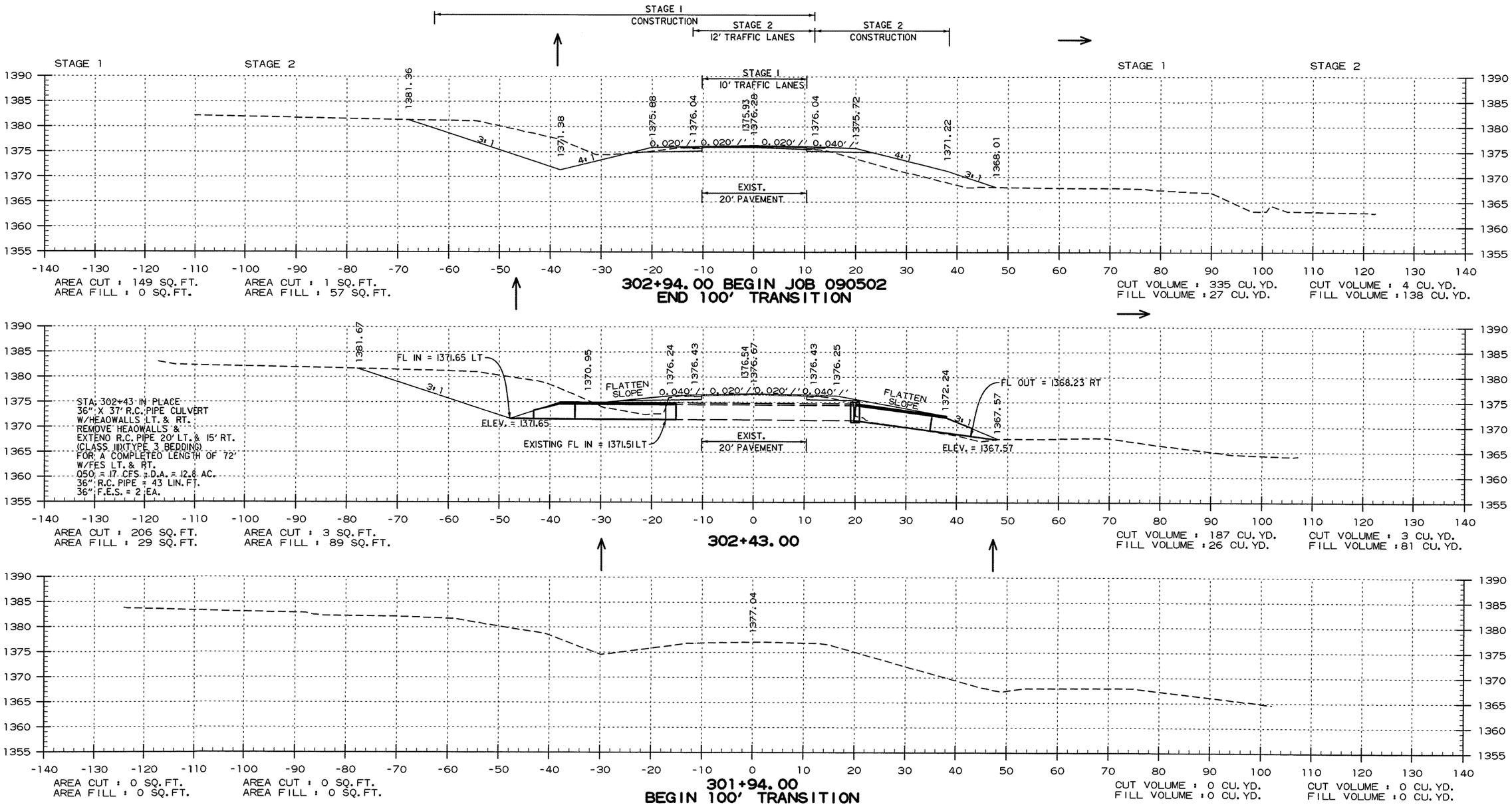

STA. 301+94 TO STA. 302+94

USER: JJ5206
DESIGN FILE: G:\180360L_090502\TRANSP\dgn\090502_Piney Creek\xsect\r090502_XS_Piney Creek 3-13-20.dgn
PLOTTED: 4/28/2020 14:52 MODEL: PROPOSED DESIGN SCALE: 1:20

G:\180360L_090502\TRANSP\dgn\090502_Piney Creek\xsect\r090502_XS_Piney Creek 3-13-20.dgn 4/28/2020 14:52

DATE REVISED	DATE FILMED	DATE REVISED	DATE FILMED	FED.RD. DIST.NO.	STATE	FED.AID PROJ.NO.	SHEET NO.	TOTAL SHEETS
				6	ARK.			
				JOB NO.		090502	44	57

(2) CROSS SECTIONS

STA. 304+70 - INSTALL
18" X 58' PIPE CULVERT
RT. SIDE DRAIN
CONST. APPR. = 10 CU. YD.

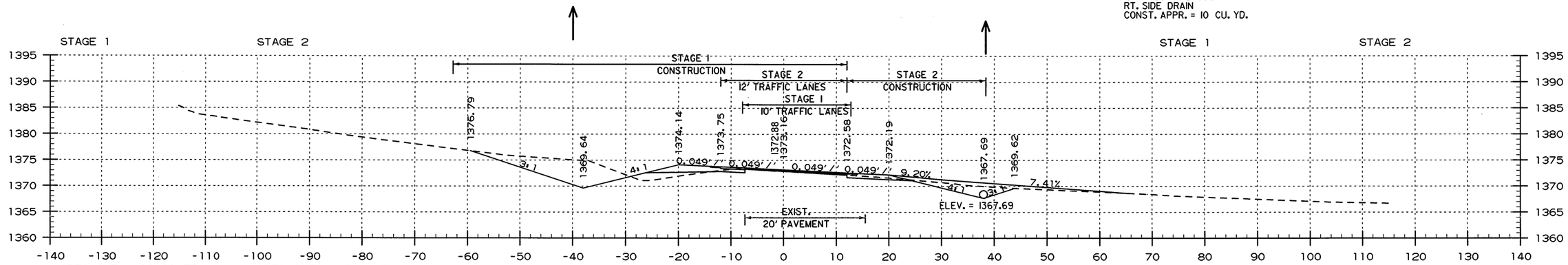

AREA CUT : 82 SQ.FT.
AREA FILL : 12 SQ.FT.

AREA CUT : 27 SQ.FT.
AREA FILL : 0 SQ.FT.

304+70.00

CUT VOLUME : 272 CU.YD.
FILL VOLUME : 30 CU.YD.

CUT VOLUME : 41 CU.YD.
FILL VOLUME : 12 CU.YD.

STA. 304+00 - INSTALL
CONST. APPR. = 10 CU.YD.

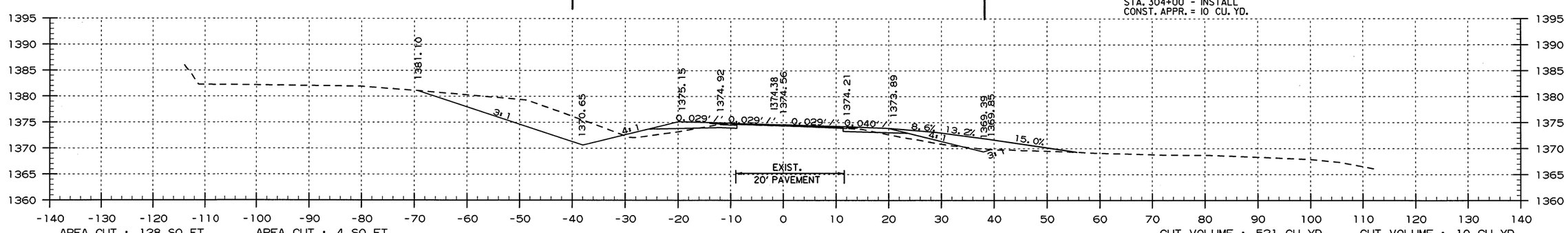

AREA CUT : 128 SQ.FT.
AREA FILL : 11 SQ.FT.

AREA CUT : 4 SQ.FT.
AREA FILL : 9 SQ.FT.

304+00.00

CUT VOLUME : 521 CU.YD.
FILL VOLUME : 21 CU.YD.

CUT VOLUME : 10 CU.YD.
FILL VOLUME : 111 CU.YD.

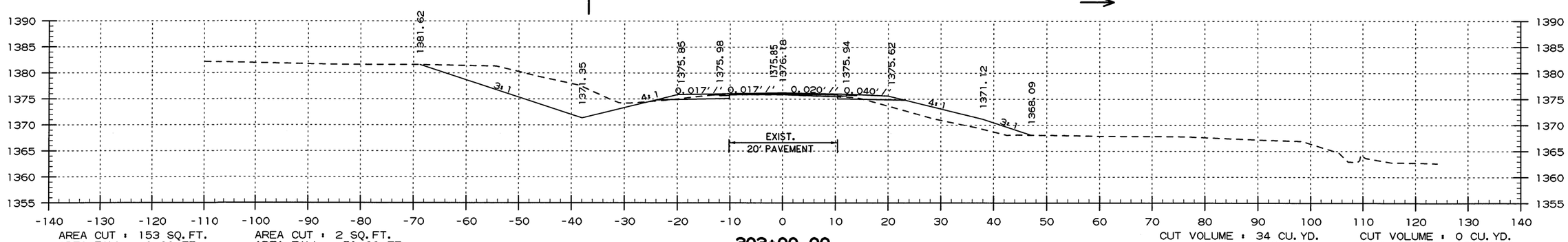

AREA CUT : 153 SQ.FT.
AREA FILL : 0 SQ.FT.

AREA CUT : 2 SQ.FT.
AREA FILL : 51 SQ.FT.

303+00.00

CUT VOLUME : 34 CU.YD.
FILL VOLUME : 0 CU.YD.

CUT VOLUME : 0 CU.YD.
FILL VOLUME : 12 CU.YD.

STA. 303+00 TO STA. 304+70

USER: NSS187
DESIGN FILE: G:\180360_090502\TRANSP\dgn\090502_Piney Creek\xsect\r090502_XS_Piney Creek.dgn
PLOTTED: 6/4/2020 17:44 MODEL: PROPOSED DESIGN
SCALE: 1:20

DATE REVISED	DATE FILMED	DATE REVISED	DATE FILMED	FED.RD. DIST.NO.	STATE	FED.AID PROJ.NO.	SHEET NO.	TOTAL SHEETS
				6	ARK.			
				JOB NO.		090502	45	57

(2) CROSS SECTIONS

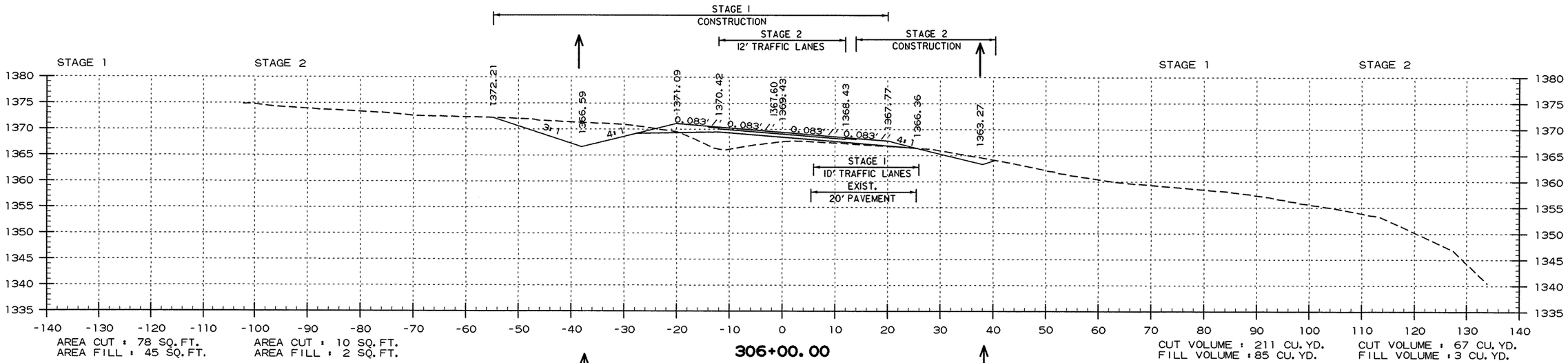

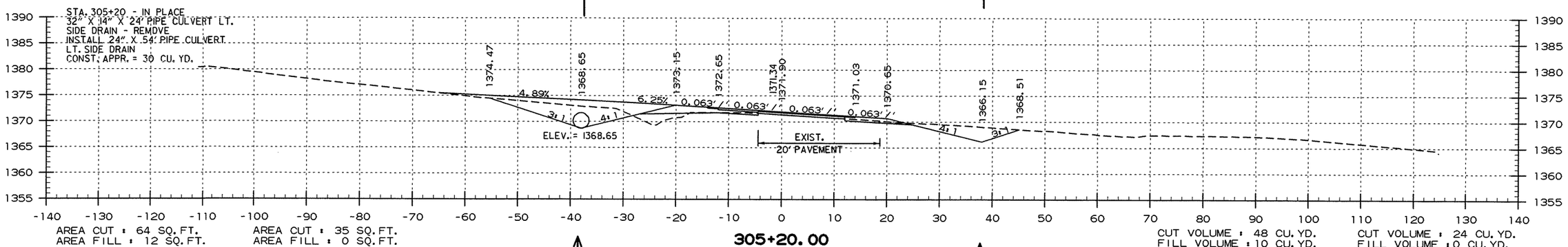

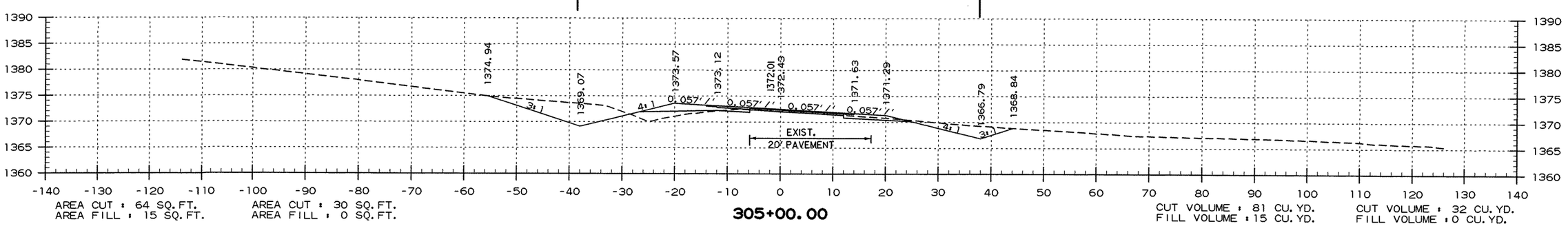

STA. 305+00 TO STA. 306+00

USER: JJ5206
DESIGN FILE: G:\180360L_090502\TRANSP\dgn\090502_Piney Creek\xsect\r090502_XS_Piney Creek 3-13-20.dgn
PLOTTED: 4/28/2020 14:52 MODEL: PROPOSED DESIGN SCALE: h20

G:\180360L_090502\TRANSP\dgn\090502_Piney Creek\xsect\r090502_XS_Piney Creek 3-13-20.dgn 4/28/2020 14:52

DATE REVISED	DATE FILMED	DATE REVISED	DATE FILMED

FED.RD. DIST.NO.	STATE	FED.AID PROJ.NO.	SHEET NO.	TOTAL SHEETS
6	ARK.			
JOB NO.		090502	46	57

2 CROSS SECTIONS

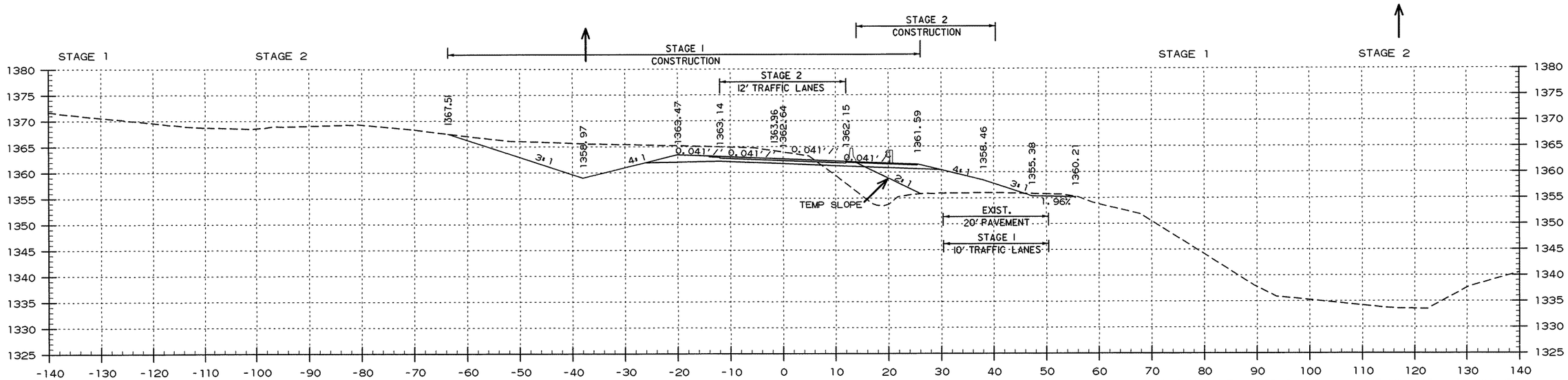

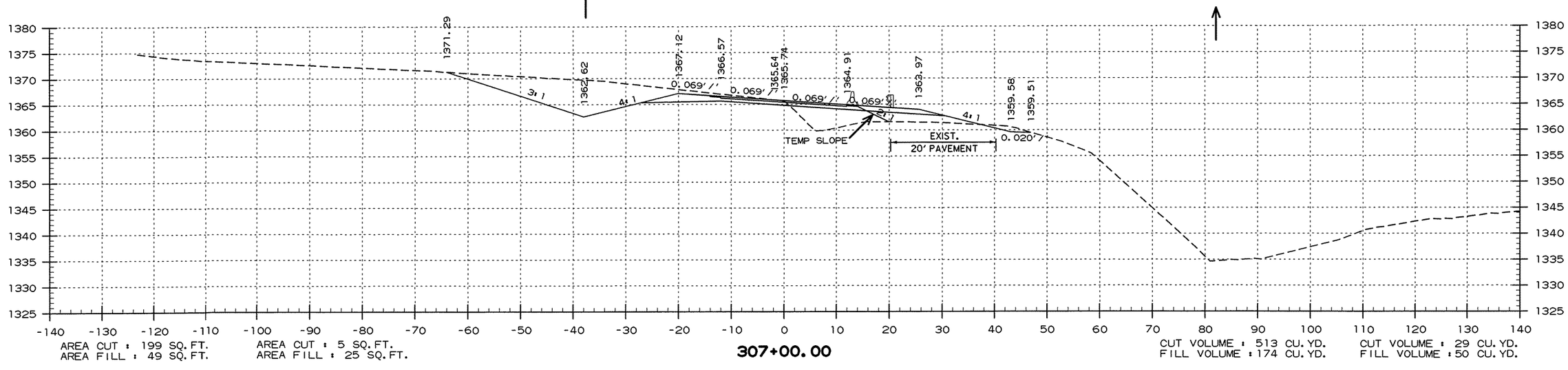

STA. 307+00 TO STA. 308+00

USER: JJ5206
DESIGN FILE: G:\180360L_090502\TRANSP\dgn\090502_Piney Creek\xsect\r090502_XS_Piney Creek 3-13-20.dgn
PLOTTED: 4/28/2020 14:52 MODEL: PROPOSED DESIGN SCALE: 1:20

G:\180360L_090502\TRANSP\dgn\090502_Piney Creek\xsect\r090502_XS_Piney Creek 3-13-20.dgn 4/28/2020 14:52

DATE REVISED	DATE FILMED	DATE REVISED	DATE FILMED	FED.RD. DIST.NO.	STATE	FED.AID PROJ.NO.	SHEET NO.	TOTAL SHEETS
				6	ARK.			
				JOB NO.		090502	47	57
				(2)	CROSS SECTIONS			

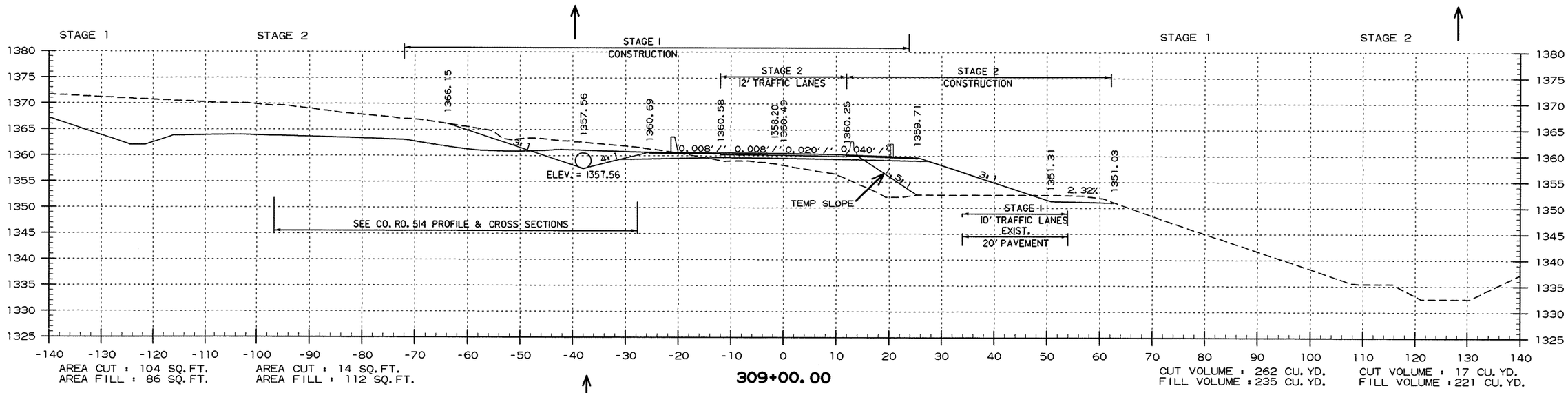

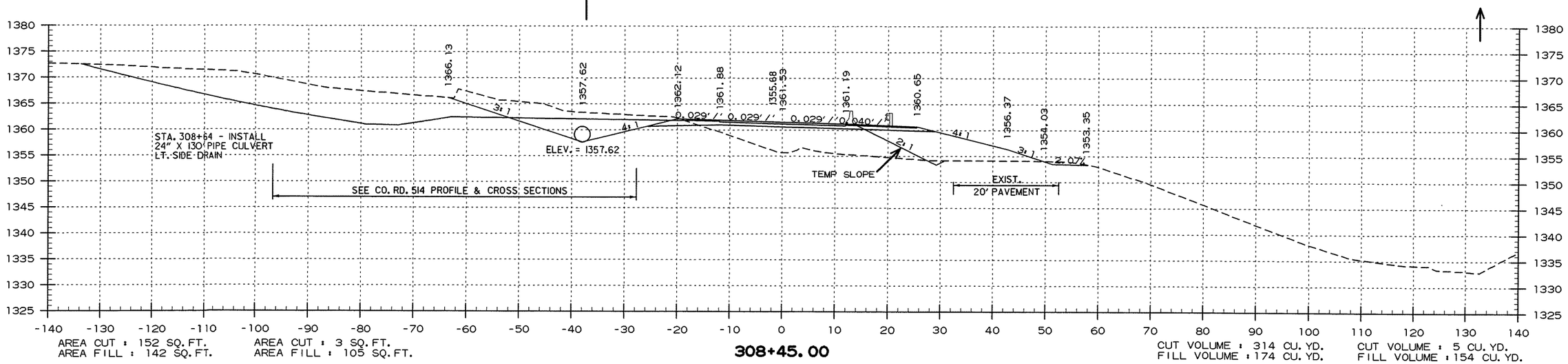

STA. 308+45 TO STA. 309+00

USER: JJ5206
DESIGN FILE: G:\180360L_090502\TRANSP\dgn\090502_Piney Creek\xsect\r090502_XS_Piney Creek 3-13-20.dgn
PLOTTED: 4/28/2020 14:52 MODEL: PROPOSED DESIGN SCALE: 1:20

G:\180360L_090502\TRANSP\dgn\090502_Piney Creek\xsect\r090502_XS_Piney Creek 3-13-20.dgn 4/28/2020 14:52

DATE REVISED	DATE FILMED	DATE REVISED	DATE FILMED

FED.RD. DIST.NO.	STATE	FED.AID PROJ.NO.	SHEET NO.	TOTAL SHEETS
6	ARK.			
JOB NO.		090502	48	57

2 CROSS SECTIONS

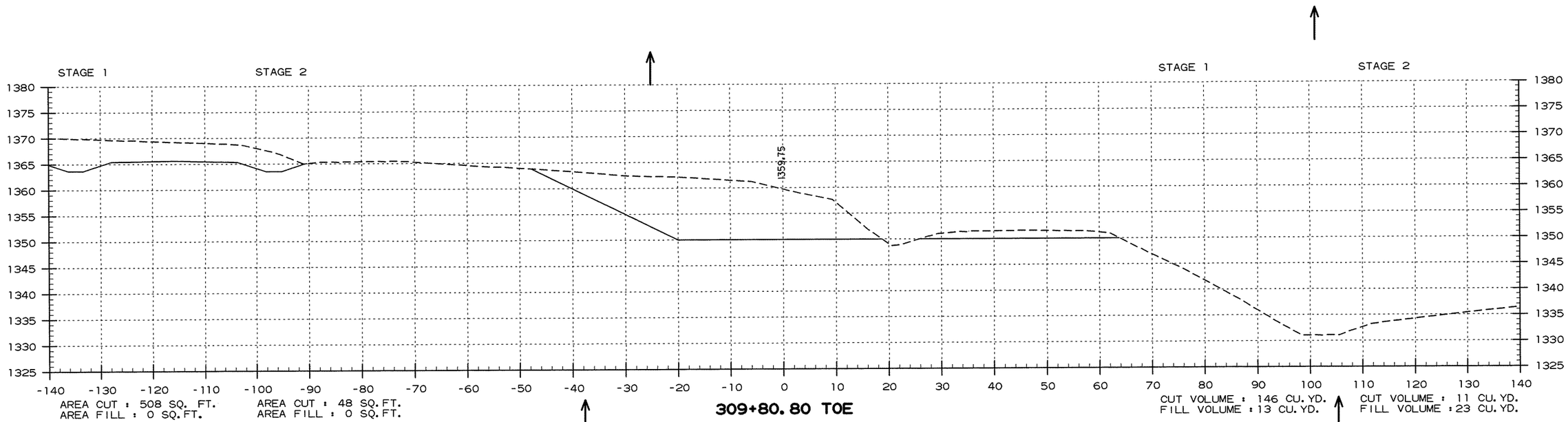

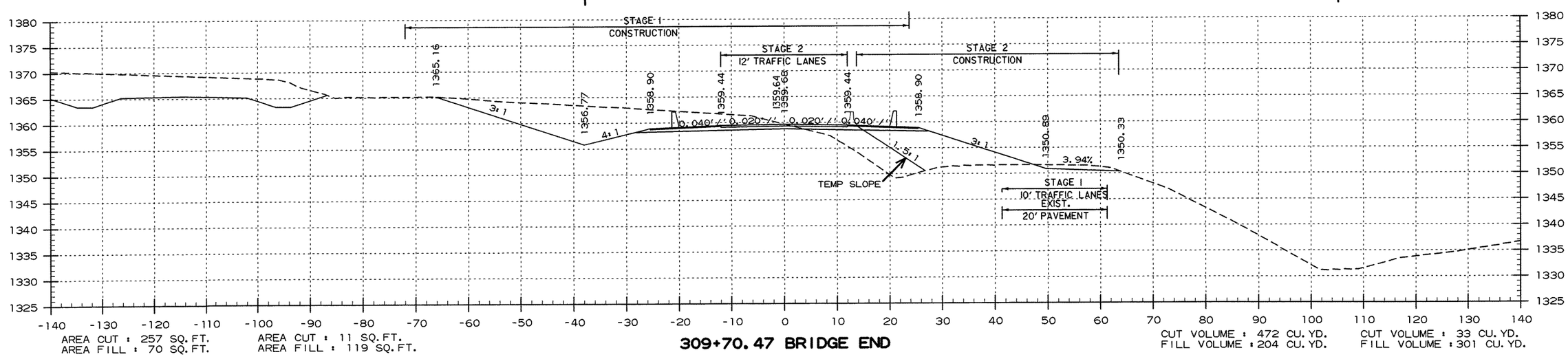

STA. 309+70 TO STA. 309+81

USER: JJ5206
DESIGN FILE: G:\180360L_090502\TRANSP\dgn\090502_Piney Creek\xsect\r090502_XS_Piney Creek 3-13-20.dgn
PLOTTED: 4/28/2020 14:52 MODEL: PROPOSED DESIGN SCALE: 1:20

G:\180360L_090502\TRANSP\dgn\090502_Piney Creek\xsect\r090502_XS_Piney Creek 3-13-20.dgn 4/28/2020 14:52

DATE REVISED	DATE FILMED	DATE REVISED	DATE FILMED	FED.RD. DIST.NO.	STATE	FED.AID PROJ.NO.	SHEET NO.	TOTAL SHEETS
				6	ARK.			
				JOB NO.		090502	49	57

(2) CROSS SECTIONS

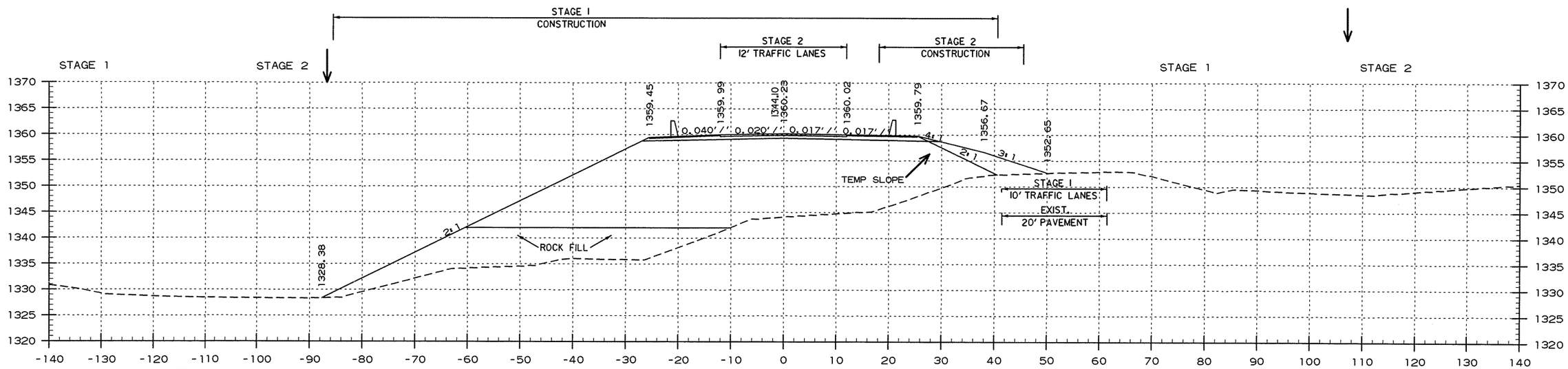

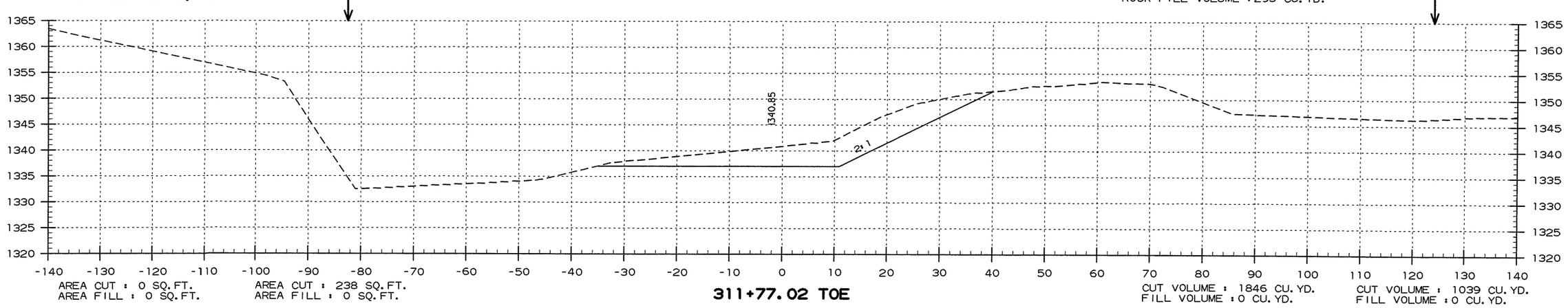

STA. 311+41 TO STA. 312+18

USER: JJ5206
DESIGN FILE: G:\18\0360_090502\TRANSP\dgn\090502_Piney Creek\xsect\r090502_XS_Piney Creek 3-13-20.dgn
PLOTTED: 4/28/2020 14:52 MODEL: PROPOSED DESIGN SCALE: h20

G:\18\0360_090502\TRANSP\dgn\090502_Piney Creek\xsect\r090502_XS_Piney Creek 3-13-20.dgn 4/28/2020 14:52

DATE REVISED	DATE FILMED	DATE REVISED	DATE FILMED	FED.RD. DIST.NO.	STATE	FED.AID PROJ.NO.	SHEET NO.	TOTAL SHEETS
				6	ARK.			
				JOB NO.		090502	S0	S7
				2	CROSS SECTIONS			

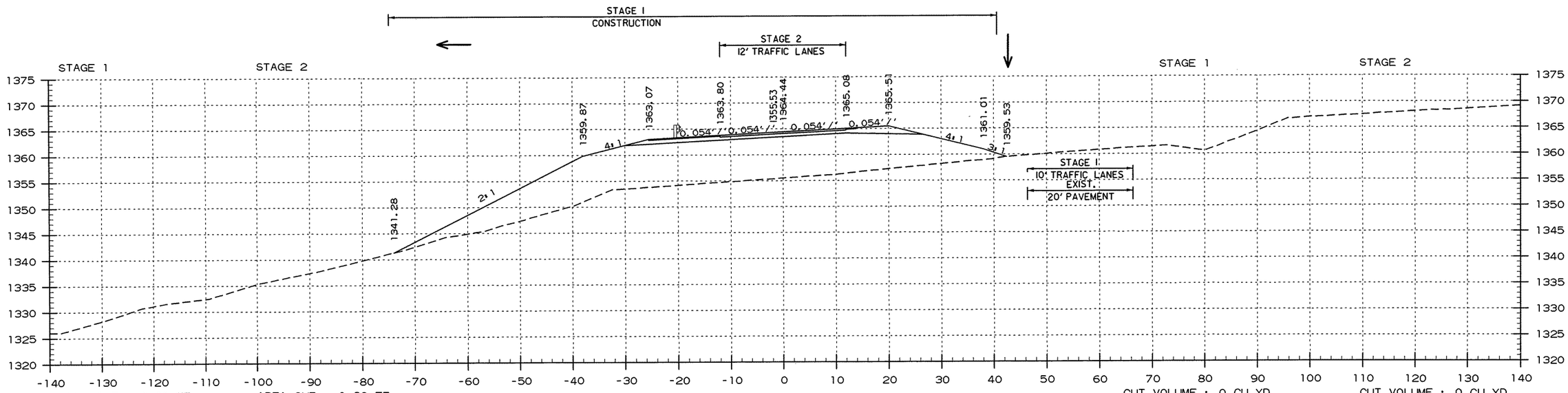

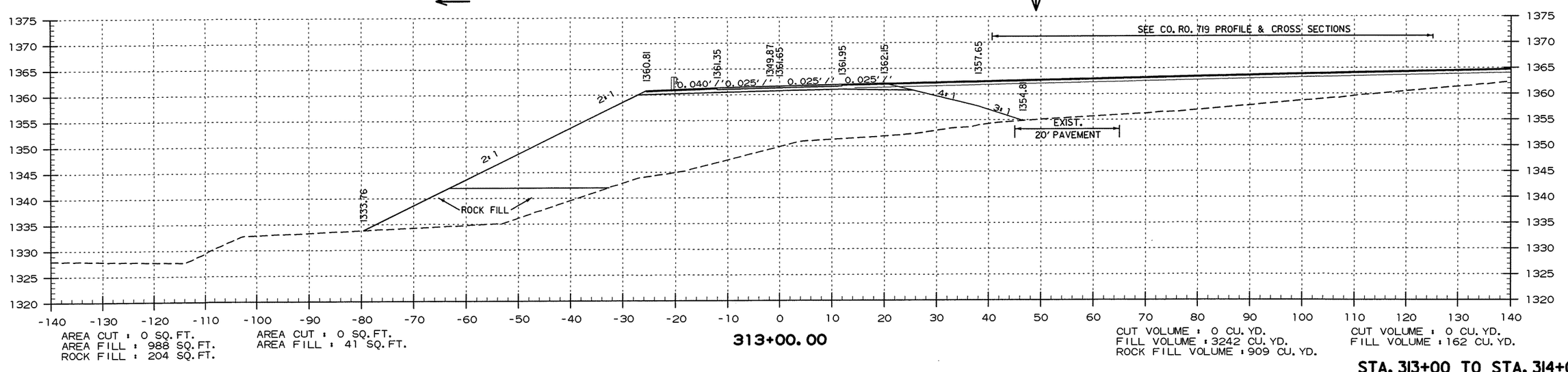

STA. 313+00 TO STA. 314+00

USER: JJ5206
DESIGN FILE: G:\1810360_090502\TRANSP\dgn\090502_Piney Creek\xsect\r090502_XS_Piney Creek 3-13-20.dgn
PLOTTED: 4/28/2020 14:52
MODEL: PROPOSED DESIGN
SCALE: 1:20

G:\1810360_090502\TRANSP\dgn\090502_Piney Creek\xsect\r090502_XS_Piney Creek 3-13-20.dgn 4/28/2020 14:52

DATE REVISED	DATE FILMED	DATE REVISED	DATE FILMED	FED.RD. DIST.NO.	STATE	FED.AID PROJ.NO.	SHEET NO.	TOTAL SHEETS
				6	ARK.			
				JDB NO.		090502	51	57
				(2)	CROSS SECTIONS			

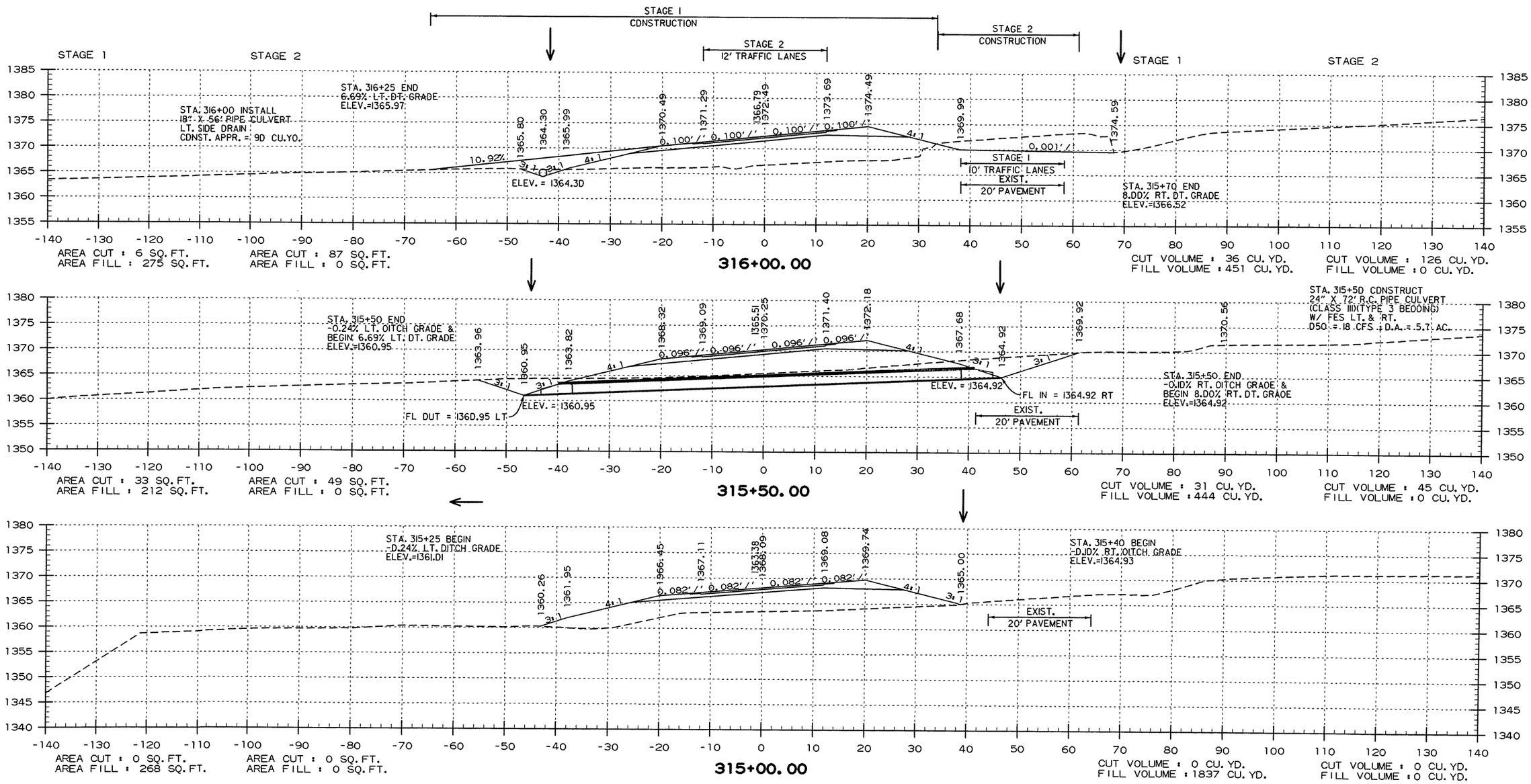

STA. 315+00 TO STA. 316+00

USER: JJ5206
DESIGN FILE: G:\180360_090502\TRANSP\dgn\090502_Piney Creek\xsect\r090502_XS_Piney Creek 3-13-20.dgn
PLOTTED: 4/28/2020 14:53 MODEL: PROPOSED DESIGN SCALE: h20

G:\180360_090502\TRANSP\dgn\090502_Piney Creek\xsect\r090502_XS_Piney Creek 3-13-20.dgn 4/28/2020 14:53

DATE REVISED	DATE FILMED	DATE REVISED	DATE FILMED	FED.RD. DIST.NO.	STATE	FED.AID PROJ.NO.	SHEET NO.	TOTAL SHEETS
				6	ARK.			
				JOB NO.		090502	52	57

(2) CROSS SECTIONS

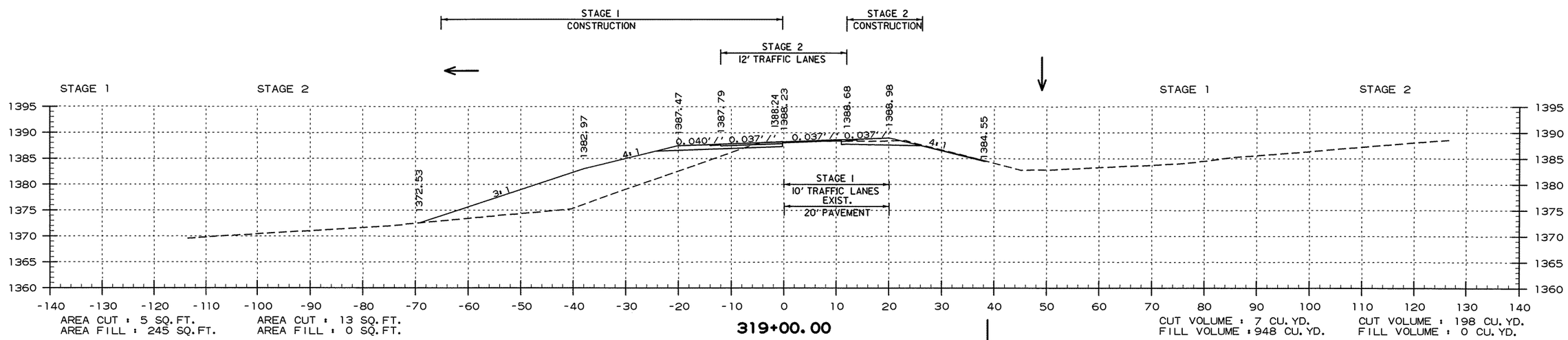

319+00.00

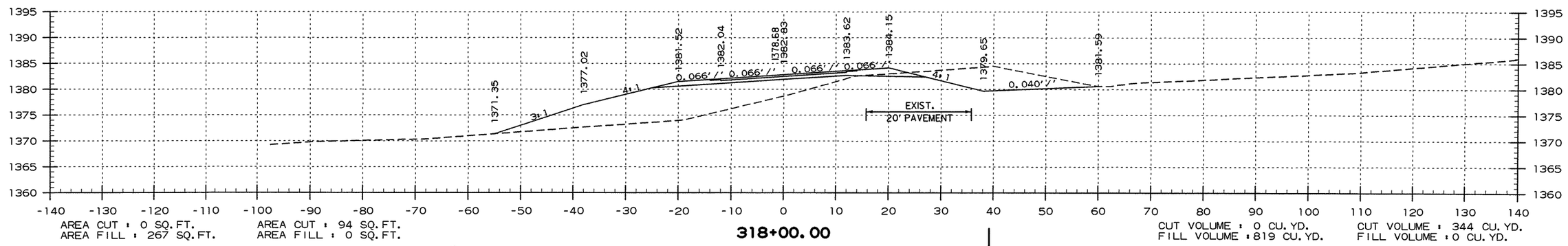

318+00.00

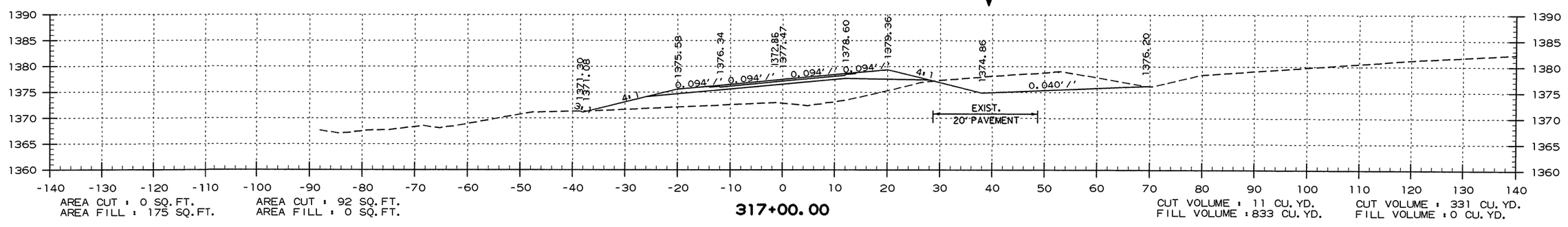

317+00.00

STA. 317+00 TO STA. 319+00

USER: JJ5206
DESIGN FILE: G:\180360_090502\TRANSP\dgn\090502_Piney Creek\xsect\r090502_XS_Piney Creek 3-13-20.dgn
PLOTTED: 4/28/2020 14:53 MODEL: PROPOSED DESIGN SCALE: 1:20

G:\180360_090502\TRANSP\dgn\090502_Piney Creek\xsect\r090502_XS_Piney Creek 3-13-20.dgn 4/28/2020 14:53

DATE REVISED	DATE FILMED	DATE REVISED	DATE FILMED	FED.RD. DIST.NO.	STATE	FED.AID PROJ.NO.	SHEET NO.	TOTAL SHEETS
				6	ARK.			
				JOB NO.		090502	53	57
				2	CROSS SECTIONS			

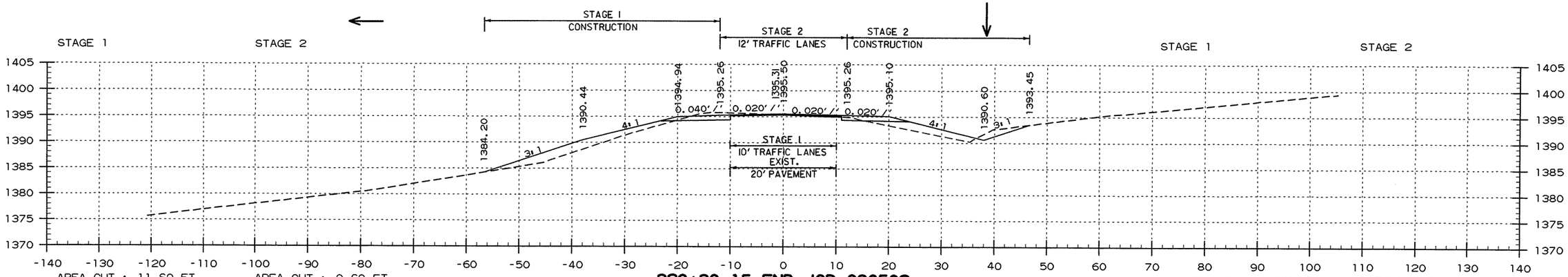

320+30.15 END JOB 090502
BEGIN 100' TRANSITION

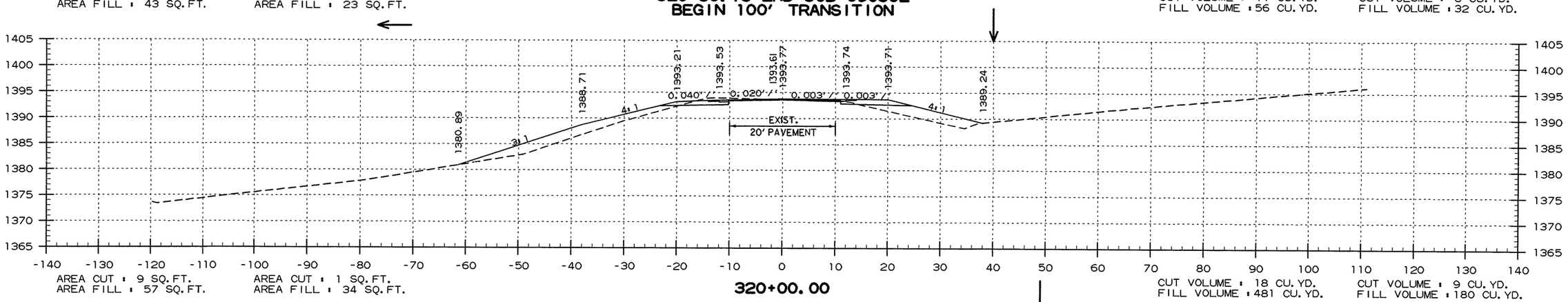

320+00.00

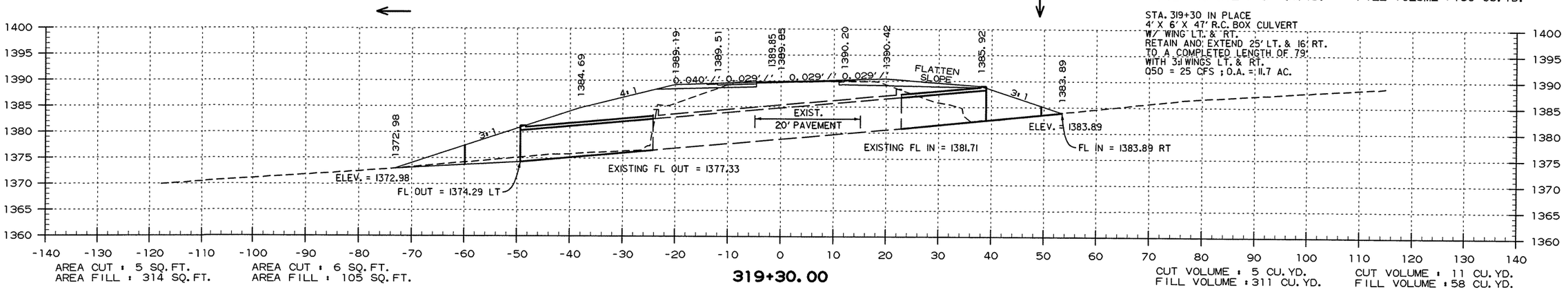

319+30.00

STA. 319+30 TO STA. 320+30

USER: JJ5206
DESIGN FILE: G:\1810360L_090502\TRANSP\dgn\090502_Piney Creek\xsect\r090502_XS_Piney Creek 3-13-20.dgn
PLOTTED: 4/28/2020 14:53
MODEL: PROPOSED DESIGN
SCALE: 1:20

G:\1810360L_090502\TRANSP\dgn\090502_Piney Creek\xsect\r090502_XS_Piney Creek 3-13-20.dgn 4/28/2020 14:53

DATE REVISED	DATE FILMED	DATE REVISED	DATE FILMED	FED.RD. DIST.NO.	STATE	FED.AID PROJ.NO.	SHEET NO.	TOTAL SHEETS
				6	ARK.			
				JOB NO.		090502	54	57

2 CROSS SECTIONS

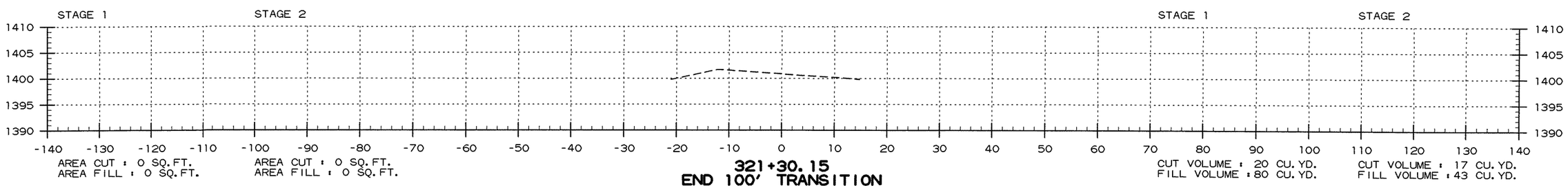

STA. 321+30 TO STA. 321+30

USER: JJ5206
DESIGN FILE: G:\180360L090502\TRANSP\dgn\090502_Piney Creek\xsect\r090502_XS_Piney Creek 3-13-20.dgn
PLOTTED: 4/28/2020 14:53 MODEL: PROPOSED DESIGN SCALE: 1:20

G:\180360L090502\TRANSP\dgn\090502_Piney Creek\xsect\r090502_XS_Piney Creek 3-13-20.dgn 4/28/2020 14:53

DATE REVISED	DATE FILMED	DATE REVISED	DATE FILMED	FED.RD. DIST.NO.	STATE	FED.AID PROJ.NO.	SHEET NO.	TOTAL SHEETS
				6	ARK.			
				JOB NO.		090502	55	57
				(2) CROSS SECTIONS				

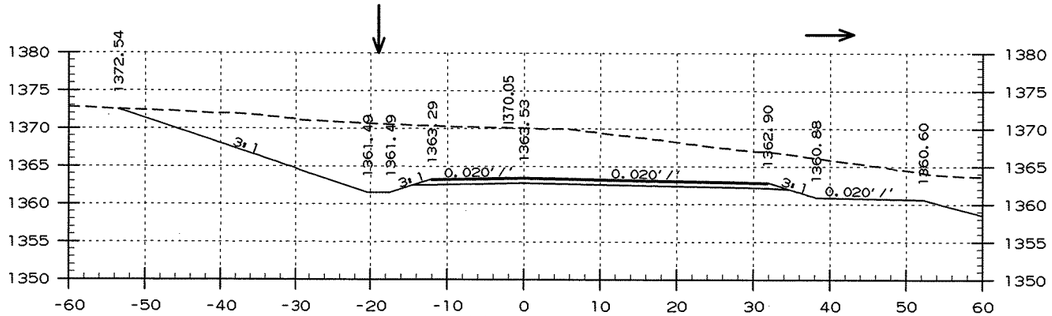

AREA CUT : 605 SQ.FT.
AREA FILL : 0 SQ.FT.

11+00.00

CUT VOLUME : 404 CU.YD.
FILL VOLUME : 0 CU.YD.

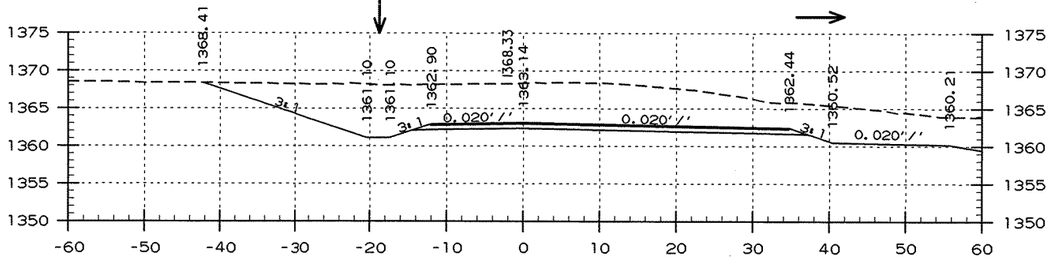

AREA CUT : 486 SQ.FT.
AREA FILL : 0 SQ.FT.

10+80.00

CUT VOLUME : 458 CU.YD.
FILL VOLUME : 0 CU.YD.

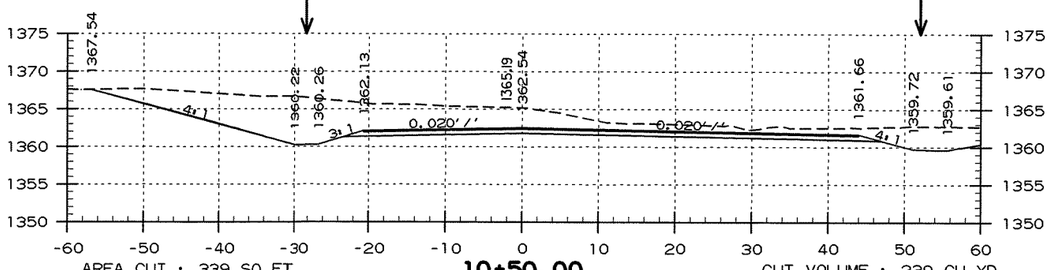

AREA CUT : 339 SQ.FT.
AREA FILL : 0 SQ.FT.

10+50.00

CUT VOLUME : 239 CU.YD.
FILL VOLUME : 0 CU.YD.

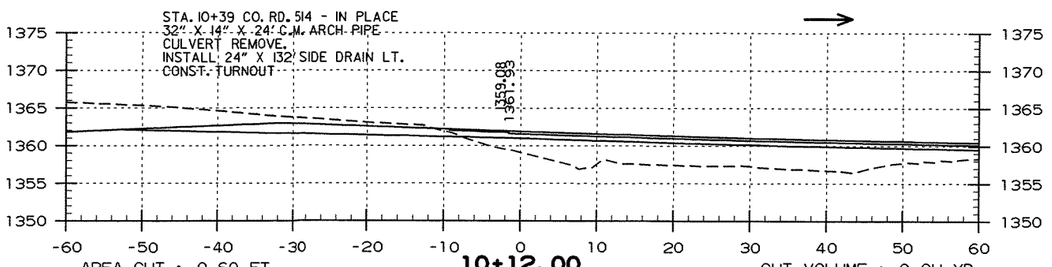

AREA CUT : 0 SQ.FT.
AREA FILL : 0 SQ.FT.

10+12.00
BEGIN CONST.
CO. RD. 514

CUT VOLUME : 0 CU.YD.
FILL VOLUME : 0 CU.YD.

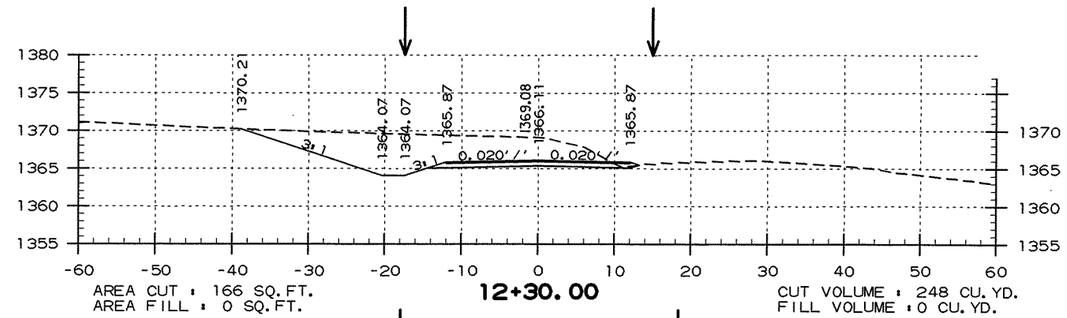

AREA CUT : 166 SQ.FT.
AREA FILL : 0 SQ.FT.

12+30.00

CUT VOLUME : 248 CU.YD.
FILL VOLUME : 0 CU.YD.

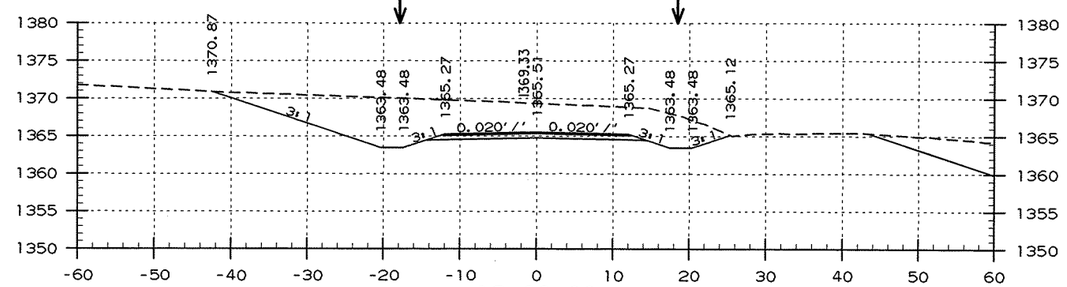

AREA CUT : 281 SQ.FT.
AREA FILL : 0 SQ.FT.

12+00.00

CUT VOLUME : 651 CU.YD.
FILL VOLUME : 0 CU.YD.

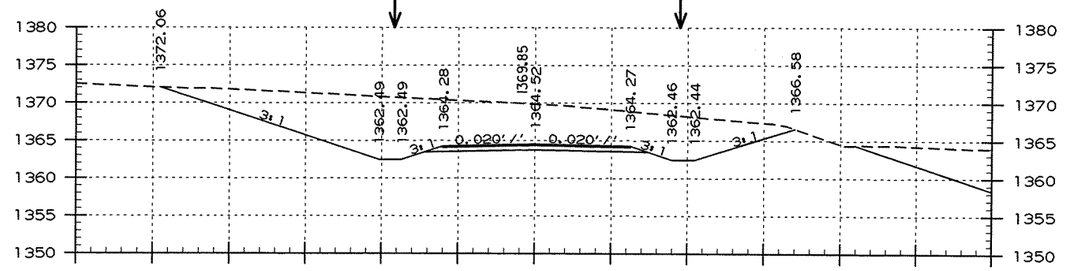

AREA CUT : 422 SQ.FT.
AREA FILL : 0 SQ.FT.

11+50.00

CUT VOLUME : 951 CU.YD.
FILL VOLUME : 0 CU.YD.

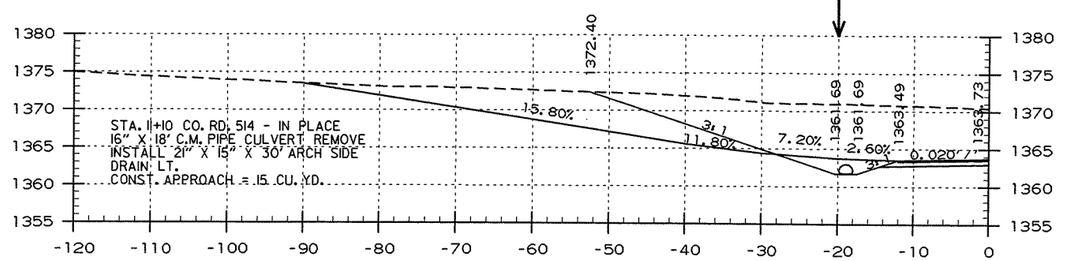

11+10.00

STA. 10+12 TO STA. 12+30

USER: JJ5206
DESIGN FILE: G:\180360L_090502\TRANSP\dgn\090502_Piney Creek\xsect\r090502_XS_Piney Creek 3-13-20.dgn
PLOTTED: 4/28/2020 14:53 MODEL: PROPOSED DESIGN SCALE: 1:20

DATE REVISED	DATE FILMED	DATE REVISED	DATE FILMED

FED.RD. DIST.NO.	STATE	FED.AID PROJ.NO.	SHEET NO.	TOTAL SHEETS
6	ARK.			
JOB NO.		090502	56	57

2 CROSS SECTIONS

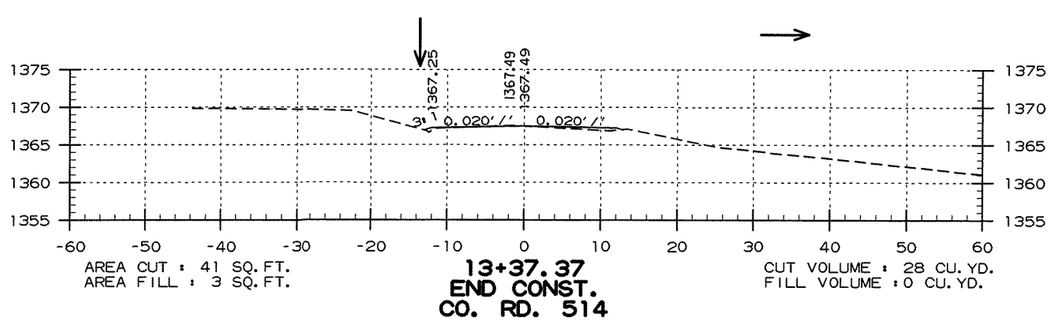

AREA CUT : 41 SQ. FT.
AREA FILL : 3 SQ. FT.

13+37.37
END CONST.
CO. RD. 514

CUT VOLUME : 28 CU. YD.
FILL VOLUME : 0 CU. YD.

STA. 13+37 TO STA. 13+37

USER: JJ5206
DESIGN FILE: G:\1B103601_090502\TRANSP\dgn\090502_Piney Creek\xsect\r090502_XS_Piney Creek 3-13-20.dgn
PLOTTED: 4/28/202014:53 MODEL: PROPOSED DESIGN SCALE: 1:20

G:\1B103601_090502\TRANSP\dgn\090502_Piney Creek\xsect\r090502_XS_Piney Creek 3-13-20.dgn 4/28/2020 14:53

DATE REVISED	DATE FILMED	DATE REVISED	DATE FILMED	FED.RD. DIST.NO.	STATE	FED.AID PROJ.NO.	SHEET NO.	TOTAL SHEETS
				6	ARK.			
				JOB NO.		090502	57	57
				(2) CROSS SECTIONS				

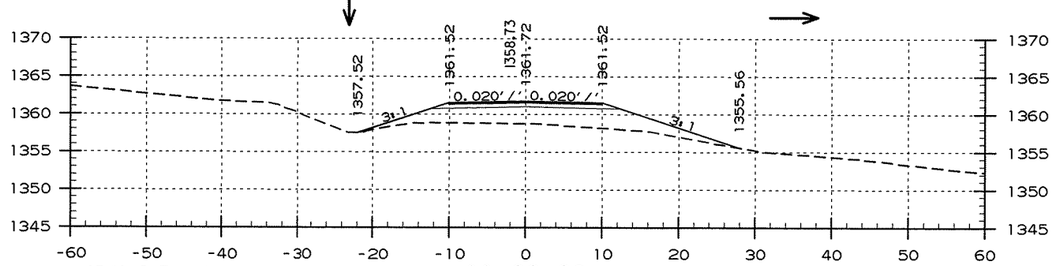

AREA CUT : 0 SQ.FT.
AREA FILL : 82 SQ.FT.

11+00.00

CUT VOLUME : 3 CU.YD.
FILL VOLUME : 58 CU.YD.

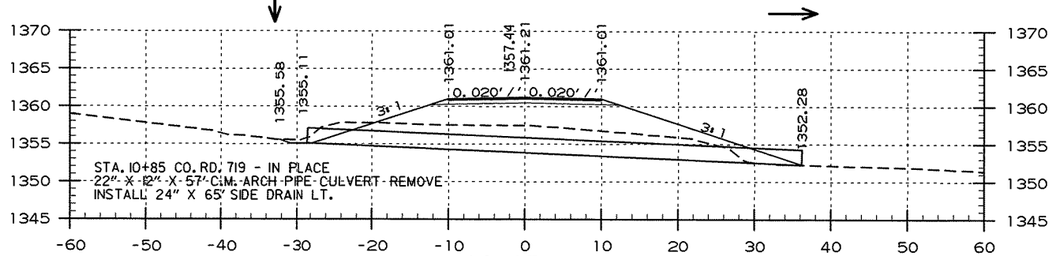

AREA CUT : 11 SQ.FT.
AREA FILL : 126 SQ.FT.

10+85.00

CUT VOLUME : 7 CU.YD.
FILL VOLUME : 185 CU.YD.

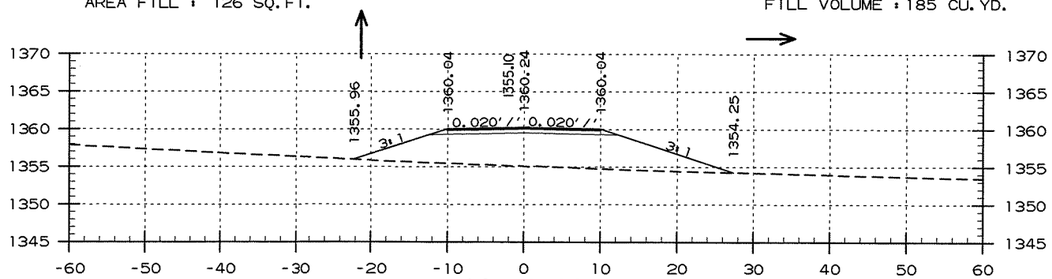

AREA CUT : 0 SQ.FT.
AREA FILL : 159 SQ.FT.

10+50.00

CUT VOLUME : 0 CU.YD.
FILL VOLUME : 561 CU.YD.

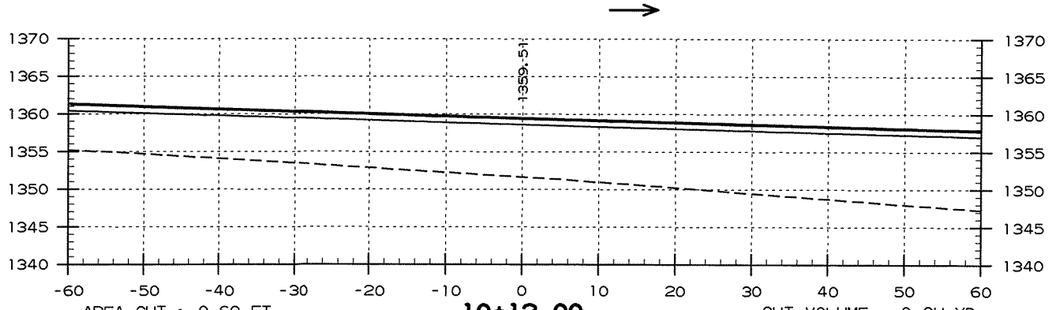

AREA CUT : 0 SQ.FT.
AREA FILL : 638 SQ.FT.

10+12.00
BEGIN CONST.
CO. RD. 719

CUT VOLUME : 0 CU.YD.
FILL VOLUME : 0 CU.YD.

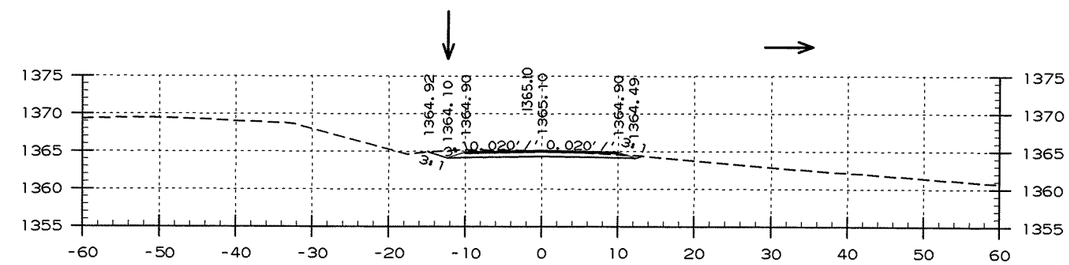

AREA CUT : 19 SQ.FT.
AREA FILL : 0 SQ.FT.

11+75.00
END CONST.
CO. RD. 719

CUT VOLUME : 18 CU.YD.
FILL VOLUME : 0 CU.YD.

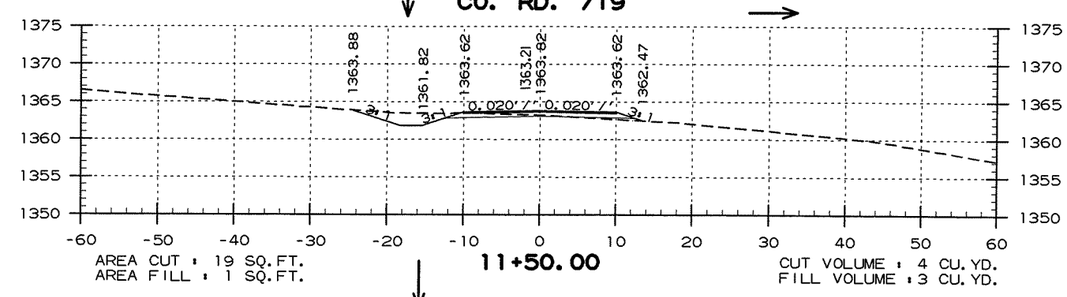

AREA CUT : 19 SQ.FT.
AREA FILL : 1 SQ.FT.

11+50.00

CUT VOLUME : 4 CU.YD.
FILL VOLUME : 3 CU.YD.

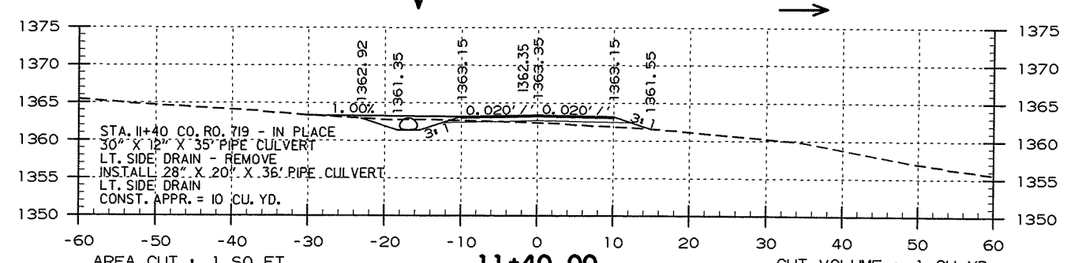

AREA CUT : 1 SQ.FT.
AREA FILL : 14 SQ.FT.

11+40.00

CUT VOLUME : 1 CU.YD.
FILL VOLUME : 71 CU.YD.

STA. 10+12 TO STA. 11+75

USER: JJ5206
DESIGN FILE: G:\810360L_090502\TRANSP\dgn\090502_Piney Creek\xsect\r090502_XS_Piney Creek 3-13-20.dgn
PLOTTED: 4/28/2020 14:53 MODEL: PROPOSED DESIGN SCALE: 1:20

G:\810360L_090502\TRANSP\dgn\090502_Piney Creek\xsect\r090502_XS_Piney Creek 3-13-20.dgn 4/28/2020 14:53

DATE REVISED	DATE FILMED	DATE REVISED	DATE FILMED	FED. ROAD DIST. NO.	STATE	FED. AID PROJ. NO.	SHEET NO.	TOTAL SHEETS
				6	ARK.			
				JOB NO.				
				1	EMBANKMENT & BACKFILL		55000	

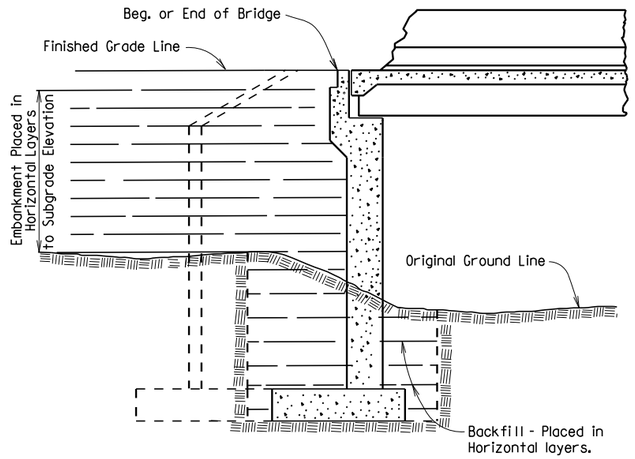

EMBANKMENT CONSTRUCTION AND FOOTING BACKFILL AT VERTICAL WALL ABUTMENTS

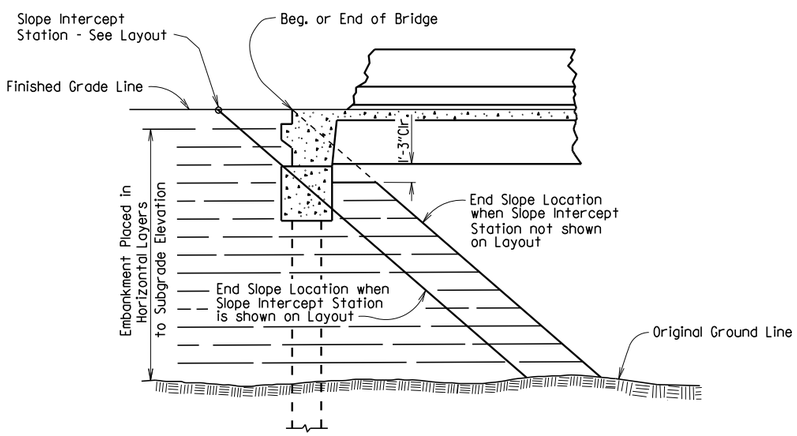

EMBANKMENT CONSTRUCTION AT SPILL-THROUGH PILE END BENTS

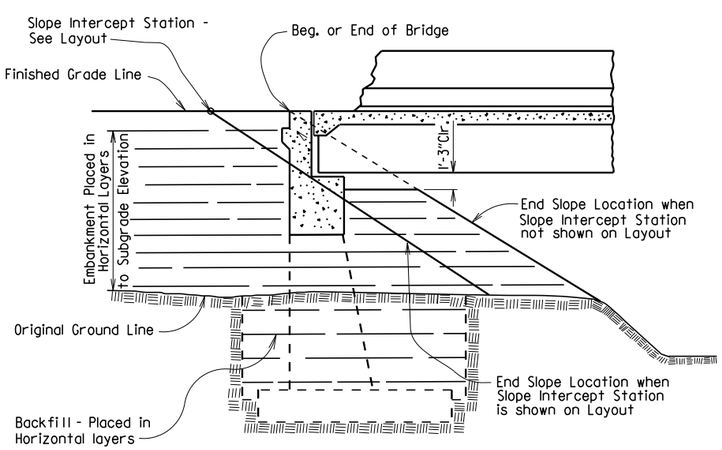

EMBANKMENT CONSTRUCTION AND FOOTING BACKFILL AT SPILL-THROUGH END BENTS

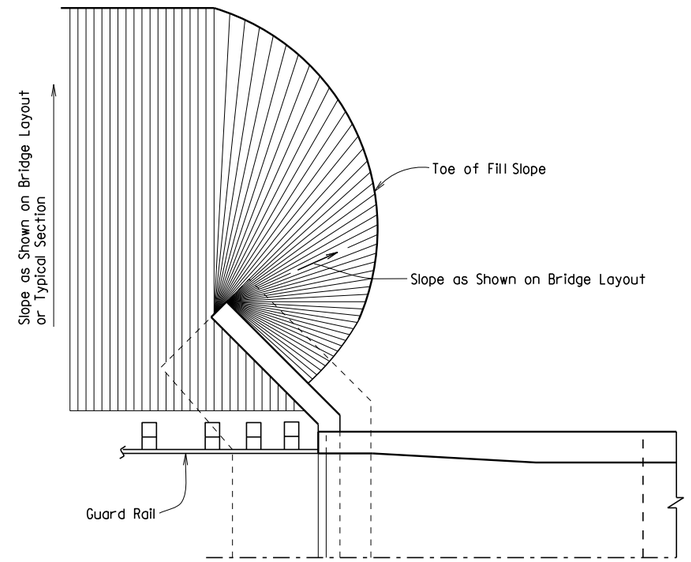

VERTICAL WALL ABUTMENTS

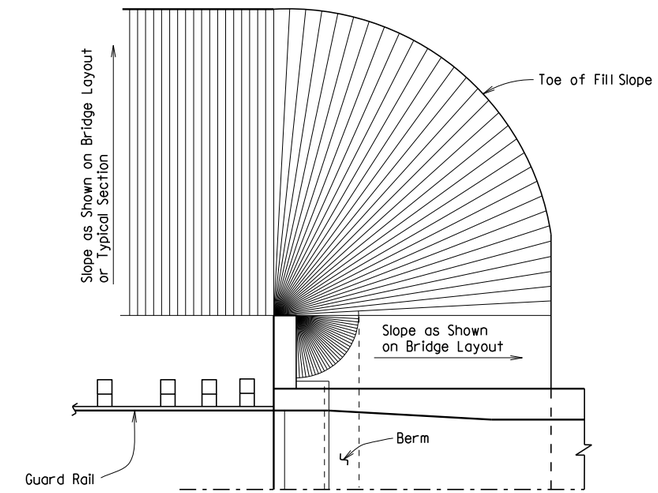

SPILL-THROUGH END BENTS WITH STUB WING

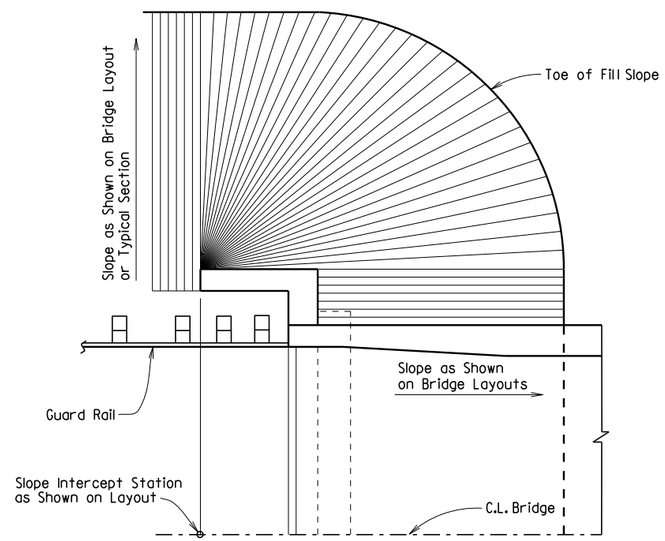

SPILL-THROUGH END BENTS WITH TURNBACK WING

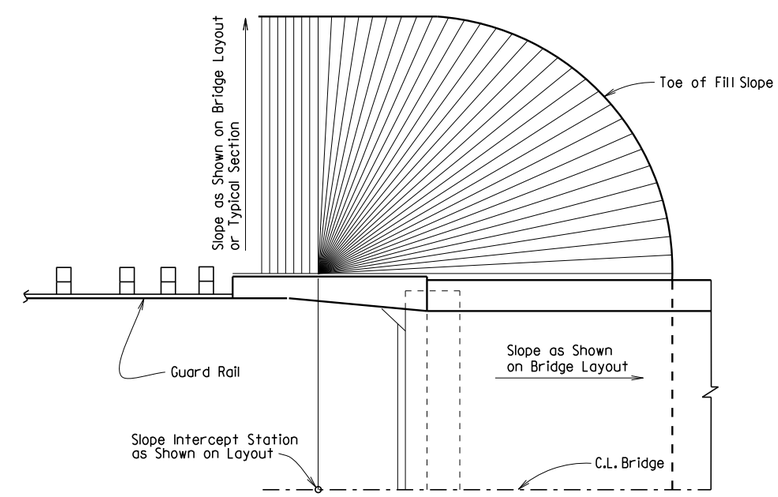

SPILL-THROUGH END BENTS WITH TRANSITION WING

METHOD OF DETERMINING FILL SLOPE LOCATION AT BRIDGE ENDS

GENERAL NOTES

The Bridge End Embankment shall be defined as a section of embankment, not less than 20 feet long adjacent to the bridge end, together with the side slopes and slopes under the bridge end including around the end of wingwalls. Embankment adjacent to structures shall be constructed in 6 inch horizontal layers (loose measure) and compacted by the use of mechanical equipment to the satisfaction of the Engineer. Refer to Subsections 210.09, 210.10 and 801.08 for construction requirements.

STANDARD DETAILS FOR EMBANKMENT CONSTRUCTION AND BACKFILL AT BRIDGE ENDS

ARKANSAS STATE HIGHWAY COMMISSION

LITTLE ROCK, ARK.

DRAWN BY:	KDH	DATE:	2-27-2014	FILENAME:	b55000.dgn
CHECKED BY:	BEF	DATE:	2-27-2014	SCALE:	NO SCALE
DESIGNED BY:	STD.	DATE:	-		

DRAWING NO. 55000

DATE REVISED	DATE FILMED	DATE REVISED	DATE FILMED	FED. ROAD DIST. NO.	STATE	FED. AID PROJ. NO.	SHEET NO.	TOTAL SHEETS
				6	ARK.			
				JOB NO.				
				1	RIPRAP & EXCAV. 55001			

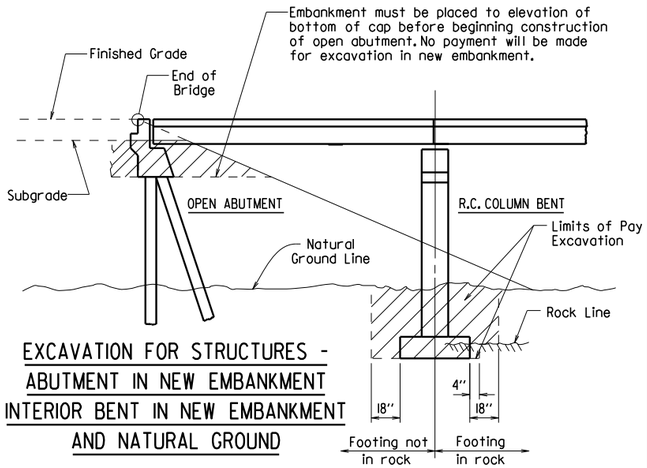

EXCAVATION FOR STRUCTURES - ABUTMENT IN NEW EMBANKMENT INTERIOR BENT IN NEW EMBANKMENT AND NATURAL GROUND

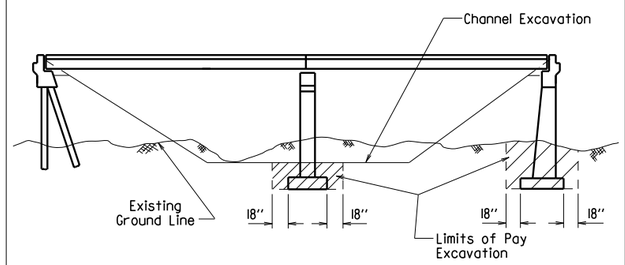

EXCAVATION FOR STRUCTURES - BRIDGE LOCATION WITH DESIGNATED CHANNEL CHANGE

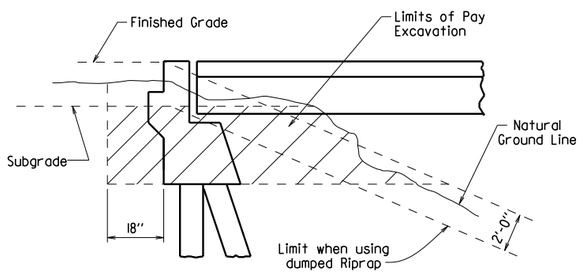

EXCAVATION FOR STRUCTURES - ABUTMENT IN NATURAL GROUND

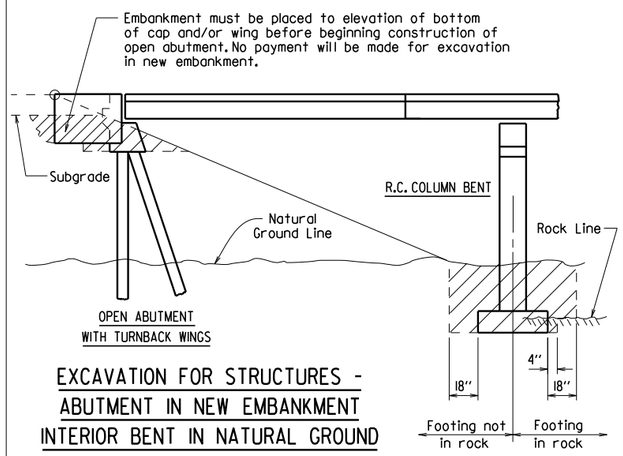

EXCAVATION FOR STRUCTURES - ABUTMENT IN NEW EMBANKMENT INTERIOR BENT IN NATURAL GROUND

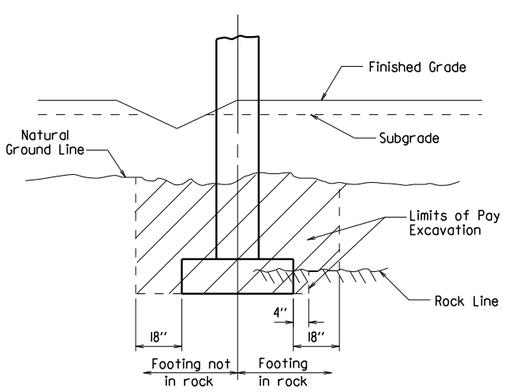

EXCAVATION FOR STRUCTURES - BENT IN ROADWAY FILL SECTION AND NATURAL GROUND

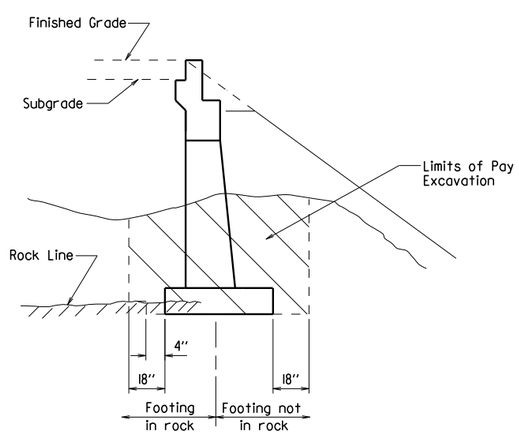

EXCAVATION FOR STRUCTURES - ABUTMENT IN NATURAL GROUND AND NEW EMBANKMENT

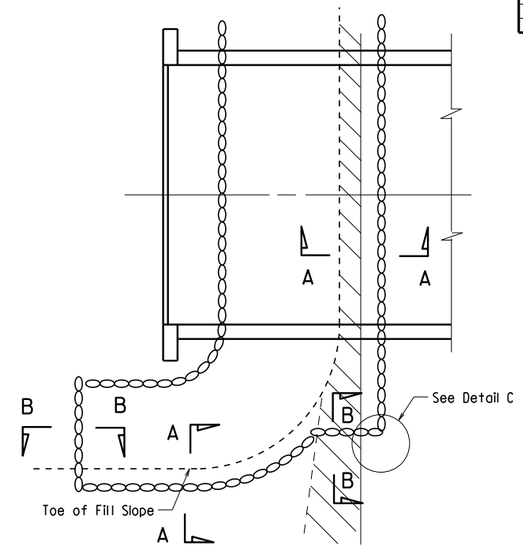

PLAN OF DUMPED RIPRAP

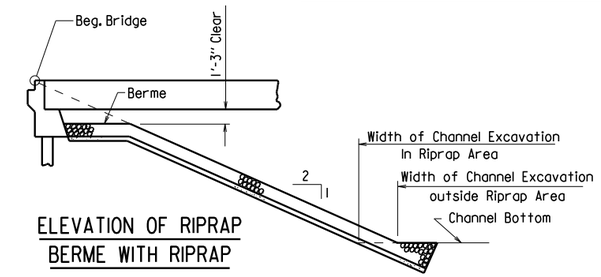

ELEVATION OF RIPRAP BERME WITH RIPRAP

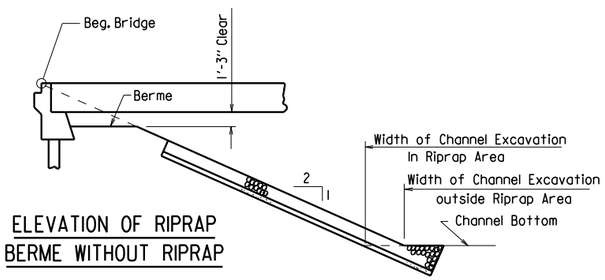

ELEVATION OF RIPRAP BERME WITHOUT RIPRAP

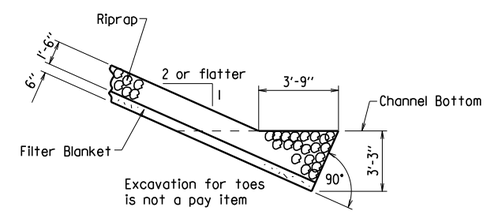

SECTION A-A

(Toe Excavation in Soil)

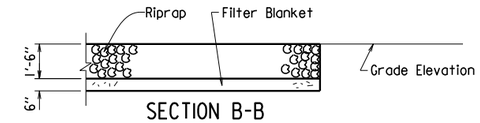

SECTION B-B

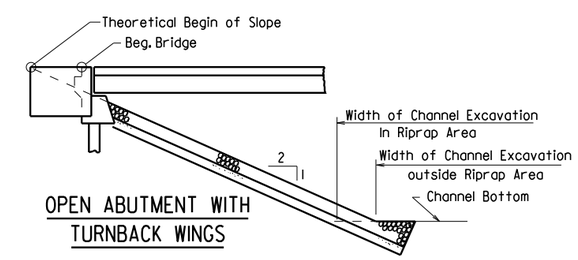

OPEN ABUTMENT WITH TURNBACK WINGS

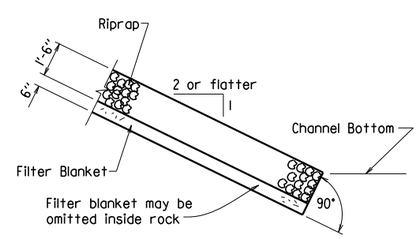

SECTION A-A

(Toe Excavation in Rock)

Note : Use this type of toe when rock is encountered which is in a stable condition.

Note : In lieu of an aggregate filter blanket, a synthetic fiber geotextile fabric complying with the requirements of Subsection 816.02(e) may be used.

Note : Details for computing excavation for structures are included for information as to how plan quantities were calculated and for use when adjusting quantities when changing footing elevation.

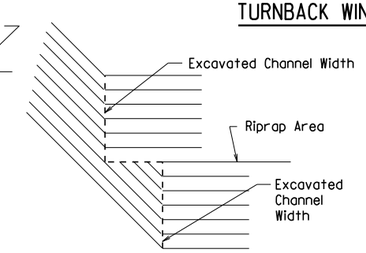

DETAIL C

STANDARD DETAILS FOR DUMPED RIPRAP AND FILTER BLANKET AND COMPUTING EXCAVATION FOR STRUCTURES

ARKANSAS STATE HIGHWAY COMMISSION

LITTLE ROCK, ARK.

DRAWN BY:	KDH	DATE:	2-27-2014	FILENAME:	b55001.dgn
CHECKED BY:	BEF	DATE:	2-27-2014	SCALE:	NO SCALE
DESIGNED BY:	STD.	DATE:			

DRAWING NO. 55001

DATE REVISED	DATE FILMED	DATE REVISED	DATE FILMED	FED. ROAD DIST. NO.	STATE	FED. AID PROJ. NO.	SHEET NO.	TOTAL SHEETS
3/24/16				6	ARK.			
				JOB NO.				
				① BRIDGE DECK FORMS			55005	

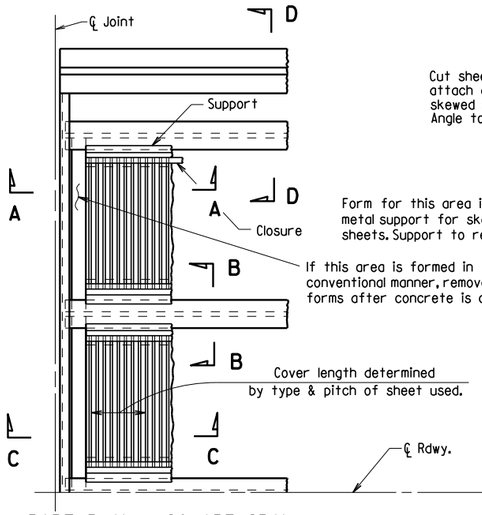

PART PLAN - SQUARE SPAN

3/8" = 1'-0"

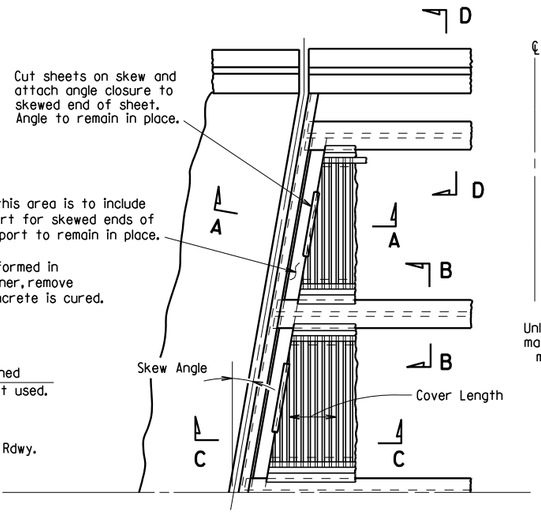

PART PLAN - SKEWED SPAN

3/8" = 1'-0"

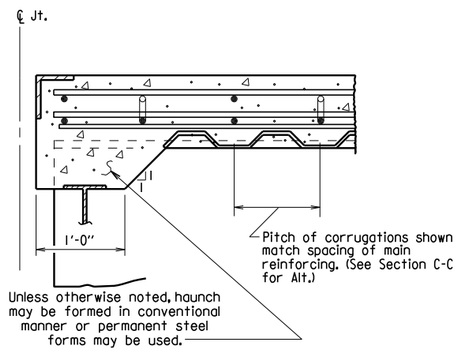

SECTION A-A

N.T.S.
(Angle at end of span)

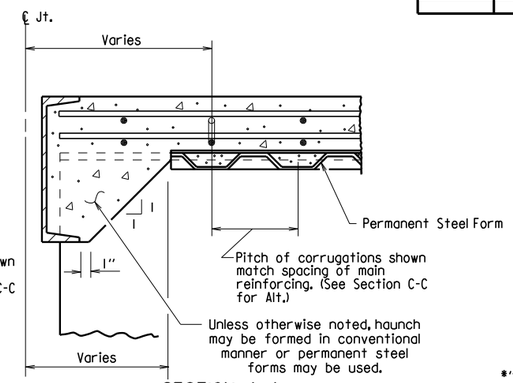

SECTION A-A

N.T.S.
(Channel at end of span)

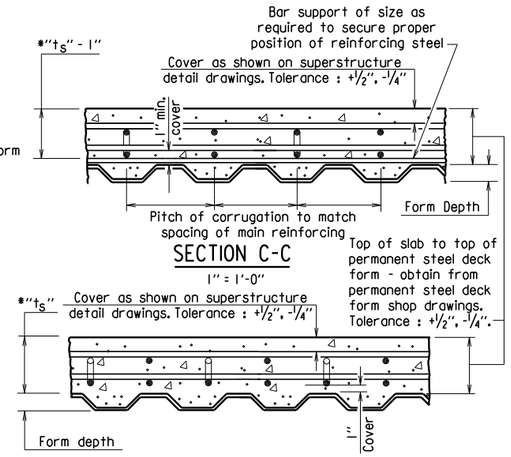

SECTION C-C

1" = 1'-0"

SECTION C-C - ALTERNATE

1" = 1'-0"
(Applicable when corrugations do not match spacing of main reinforcement)

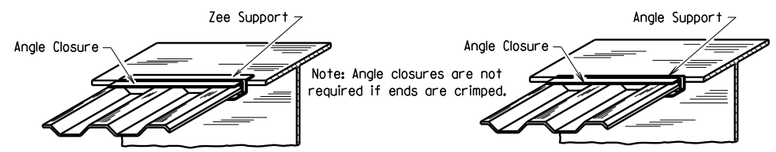

SKETCH OF PERMISSIBLE SUPPORTS

N.T.S.

$*t_s$ = slab thickness as shown on superstructure detail drawings.

GENERAL NOTES

Permanent steel deck forms may be used at the Contractor's option and shall be at no additional cost to the Department. Such use may result in changes to the dead load deflection of the girder. Any cost for adjustments due to a change in the dead load deflection will be borne by the Contractor. Payment for deck concrete and structural steel will not be increased due to use of permanent steel deck forms.

Permanent steel deck forms shall conform to Subsection 802.14(b). Detailed plans, including detailed calculations and manufacturer's technical brochure, shall be submitted to and approved by the Engineer before work of forming the bridge deck is started.

Welding of form supports to the tension flange of steel girders will be permitted only in areas where shear connectors are used. When welding is not allowed, the method of fastening Z or ∠ supports to the flange must be approved by the Engineer.

Form sheets shall be fastened to supporting members and to each other with galvanized metal screws sufficient in size and number to provide a secure attachment. Alternate methods of attachment must be approved by the Engineer.

When the pitch of form corrugations match the reinforcing spacing, transversely align form sheets across the bridge to maintain the correct orientation of continuous reinforcing bars in the corrugations.

Bar support rods, when used, shall be sized and spaced to adequately support the bottom reinforcing mat at the required position.

High chairs shall be sized to support the top mat of reinforcing at the proper position. High chairs shall be placed at locations shown on the detail drawings.

Specifications: Arkansas State Highway and Transportation Department Standard Specifications for Highway Construction (2014 Edition), with applicable Supplemental Specifications and Special Provisions.

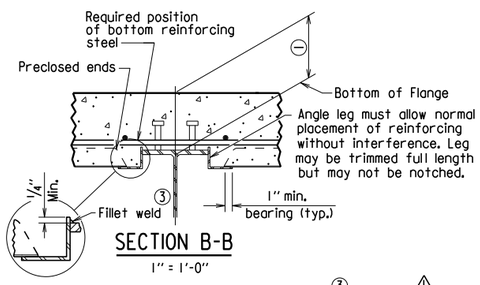

SECTION B-B

1" = 1'-0"
(Showing permissible support for tension flange where shear connectors are used, and for all compression flanges)

③ ⚠ Minimum weld: 1/8" x 1" @ 18". More weld may be required; maximum length per weld = 1 1/2" (typ.)

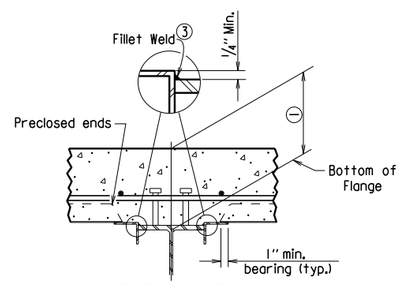

SECTION B-B

1" = 1'-0"
(Showing permissible support for tension flange where shear connectors are used and for all compression flanges)

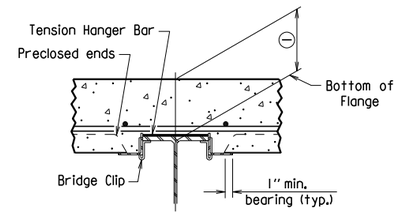

SECTION B-B

1" = 1'-0"
(Showing permissible support for tension flange where shear connectors are not used)

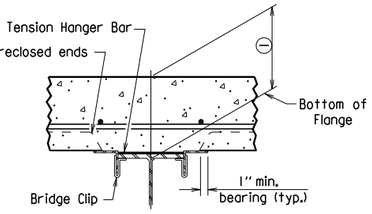

SECTION B-B

1" = 1'-0"
(Showing permissible support for tension flange where shear connectors are not used)

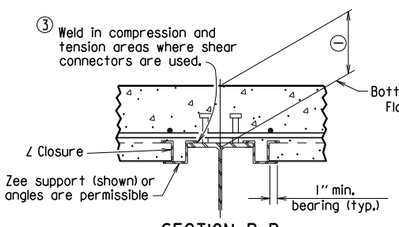

SECTION B-B

1" = 1'-0"
(Showing ∠ Closure)

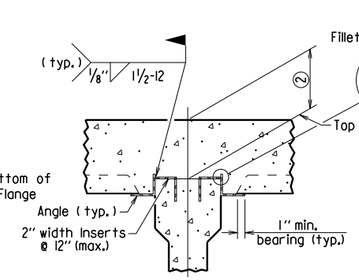

SECTION B-B
(FOR CONCRETE GIRDERS)

1" = 1'-0"
(Showing support by Insert cast in girder)

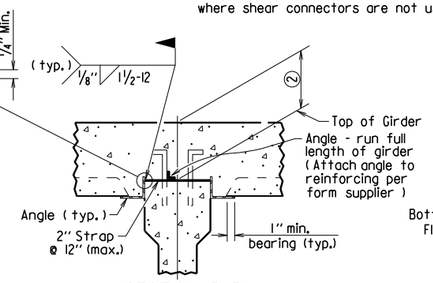

SECTION B-B
(FOR CONCRETE GIRDERS)

1" = 1'-0"
(Showing support by Strap)

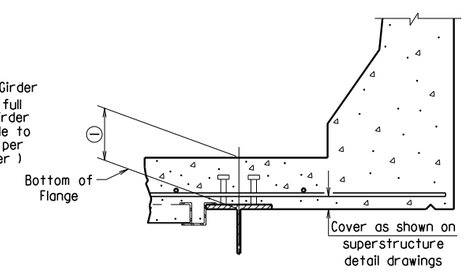

SECTION D-D

1" = 1'-0"
Note: Only Bottom Reinforcing is shown.

① Distance from top of slab to bottom of top flange as measured at centerline girder and as shown on superstructure detail drawings. This dimension may vary within the following limits to maintain the grade and slab thickness tolerances : Minimum - occurs when either the top flange or the support angle leg contacts the bottom reinforcing steel; Maximum = t_s + 1 3/4" + flange thickness. See Section C-C for slab thickness tolerance between adjacent girder flanges.

② Distance from top of slab to top of girder as measured at centerline girder and as shown on superstructure detail drawings. This dimension may vary within the following limits to maintain the grade and slab thickness tolerances : Minimum - occurs when either the top of girder or the support angle leg contacts the bottom reinforcing steel; Maximum - value shown on the superstructure detail drawings when removable forms are used. See Section C-C for slab thickness tolerance between adjacent girder flanges.

⚠ Revised weld dimension by KWY, Ck'd. by BEF, 3/24/16.

STANDARD DETAILS FOR PERMANENT STEEL BRIDGE DECK FORMS FOR STEEL & CONCRETE GIRDER SPANS

ARKANSAS STATE HIGHWAY COMMISSION

LITTLE ROCK, ARK.

DRAWN BY:	KDH	DATE:	2-27-2014	FILENAME:	b55005.dgn
CHECKED BY:	BEF	DATE:	2-27-2014	SCALE:	NONE
DESIGNED BY:	STD.	DATE:	—		

DRAWING NO. 55005

DATE REVISED	DATE FILMED	DATE REVISED	DATE FILMED	FED. ROAD DIST. NO.	STATE	FED. AID PROJ. NO.	SHEET NO.	TOTAL SHEETS
				6	ARK.			
				JOB NO.				
				1		GENERAL NOTES	55006	

GENERAL NOTES

These GENERAL NOTES are applicable unless otherwise shown in the Plan Details, Special Provisions, or Supplemental Specifications.

CONSTRUCTION SPECIFICATIONS: Arkansas State Highway and Transportation Department Standard Specifications for Highway Construction (2014 Edition) with applicable Supplemental Specifications and Special Provisions. Section and Subsection refer to the Standard Specifications.

DESIGN SPECIFICATIONS: See Bridge Layout(s).

SUPERSTRUCTURE NOTES:

MATERIALS AND STRENGTHS:

Class S(AE) Concrete	f'c =	4,000 psi
Reinforcing Steel (Gr. 60, AASHTO M 31 or M 322, Type A)	fy =	60,000 psi
Structural Steel (AASHTO M 270, Gr. 36)	Fy =	36,000 psi
Structural Steel (AASHTO M 270, Gr. 50)	Fy =	50,000 psi
Structural Steel (AASHTO M 270, Gr. 50W)	Fy =	50,000 psi
Structural Steel (AASHTO M 270, Gr. HPS70W)	Fy =	70,000 psi

See Plan Details for Grade(s) of Structural Steel required.

CONCRETE:

All concrete shall be Class S(AE) with a minimum 28 day compressive strength f'c = 4,000 psi. Concrete shall be poured in the dry and all exposed corners shall be chamfered 3/4" unless otherwise noted.

The superstructure details shown are for use when removable deck forming is used and are the basis for measurement of Class S(AE) Concrete. See Standard Drawing No. 55005 for allowable modifications and for tolerances when Permanent Steel Bridge Deck Forms are used.

Use of a longitudinal screed is not permitted on any span of a bridge deck with horizontal curvature.

The concrete deck (roadway surface) shall be given a tine finish in accordance with Subsection 802.19 for Class 5 Tined Bridge Roadway Surface Finish. Sidewalks shall receive a broomed finish as specified for final finishing in Subsection 802.19 for Class 6 Broomed Finish. Movement of the finishing machine across new concrete shall be on planks placed on the surface and shall be prohibited for 72 hours after finishing the pour. Sufficient concrete must be placed ahead of the strike-off to fully load the beam or girder. When permitted, the use of a longitudinal strike-off will require that a vertical camber adjustment be made in the strike-off to account for the future dead load deflection due to any railings, median barrier, and sidewalks.

REINFORCING STEEL:

All reinforcing steel shall be Grade 60 conforming to AASHTO M 31 or M 322, Type A, with mill test reports and shall be epoxy coated. The reinforcing steel is to be accurately located in the forms and firmly held in place by steel wire supports, sufficient in number and size to prevent displacement during the course of construction. The wire supports will not be paid for directly, but will be considered subsidiary to the item "Epoxy Coated Reinforcing Steel (Grade 60)".

STRUCTURAL STEEL (COMMON TO W-BEAMS AND PLATE GIRDERS):

Structural steel shall be AASHTO M 270 with grade and payment as specified in the plans. Grade 50W steel shall not be painted and all exposed surfaces shall be cleaned in accordance with Subsection 807.84(e). Grade 36 and Grade 50 steel shall be painted unless otherwise noted and all exposed surfaces shall be cleaned in accordance with Subsection 807.84. Structural steel completely embedded in concrete may be AASHTO M 270, Gr. 36, Gr. 50 or Gr. 50W unless otherwise noted.

Drawings show general features of design only. Shop drawings shall be made in accordance with the specifications, submitted and approval secured before fabrication is begun.

Requests for substitution of structural steel shapes shown with shapes of greater size must be submitted by the Contractor to the Engineer for approval. Steels of equal or greater strengths will be accepted only when shown on the approved shop drawings. Payment will be based on the basis of shapes and materials shown in the plans, and no additional compensation will be made for any adjustments due to substitutions.

All welding that is to be done during fabrication of structural steel, including temporary welds, shall be detailed on the shop drawings and submitted for approval. If additional welds are required, whether permanent or temporary, a formal request with detailed drawings shall be submitted to the Engineer for approval; however, additional welds used for attaching falsework support devices or screed rail supports to the structural steel that do not exceed the limitations of Subsection 802.13 will not require approval prior to construction. All welding shall conform to Subsection 807.26.

Unless otherwise noted, field connections shall be bolted with 3/4" ø high-strength bolts using 13/16" ø open holes. Holes for 3/4" ø high-strength bolts may be 15/16" ø if a washer is supplied for use under both the nut and head of the bolt. The use of oversized holes will not be allowed on main members unless otherwise noted. Bolts shall be placed with heads on the outside face of the exterior beam or girder webs and on the bottom of the beam or girder flanges.

All stud shear connectors shall be granular flux filled, solid fluxed, or equal and shall be automatically end welded in accordance with recommendations of the Manufacturer.

When painting is required, all structural steel except galvanized steel and steel completely encased in concrete shall be painted in accordance with Subsection 807.75. The color of paint shall be as specified in the plans.

STRUCTURAL STEEL (W-BEAMS):

All beams and field splice plates, and all diaphragms and connection plates attached to horizontally curved beams are considered main load carrying members and shall meet the Longitudinal Charpy V-Notch Test specified in Subsection 807.05. This work and material will not be paid for directly, but shall be considered subsidiary to the item "Structural Steel in Beam Spans (M 270, Gr. ___)".

All beams in continuous units and simple spans with field splices shall be blocked in their true position in the shop in groups as specified in Subsection 807.54(b)(2) with the webs horizontal. The camber, length of sections, distance between bearings, and openings of joints shall be measured and this information shall become part of the permanent records. The component parts shall be match marked in this assembly and these marks shall be shown on the erection diagram.

All beams in simple spans without field splices shall be blocked in their true position with webs horizontal. The camber, distance between bearings, and openings of joints shall be measured and this information shall become part of the permanent records.

Flange field splice plates shall be cut and fabricated so that the primary direction of rolling is parallel to the direction of the main tensile and/or compressive stresses.

All beam dimensions are based on a temperature of 60 degrees F. A tolerance of 1/4" +/- is allowed for camber.

Bent plate diaphragms for horizontally curved beams shall be cut and fabricated so that the primary direction of rolling is parallel to the direction of the main tensile and/or compressive stresses. Bent plate diaphragms for straight beams may be cut and fabricated in accordance with Subsection 807.35 or as required for horizontally curved beams.

Unless otherwise noted, diaphragms shall be installed as beams are erected. All bolts in diaphragms and field splices shall be installed and tightened in accordance with Subsection 807.71 prior to pouring the concrete deck.

STRUCTURAL STEEL (PLATE GIRDERS):

All references to cross-frames shall include "X" or "K" types.

All girder web and flange plates, all field splice plates, and all diaphragms, cross-frames and connection plates attached to horizontally curved girders are considered main load carrying members and shall meet the Longitudinal Charpy V-Notch Test specified in Subsection 807.05. This work and material will not be paid for directly, but shall be considered subsidiary to the item "Structural Steel in Plate Girder Spans (M 270, Gr. ___)".

All girders in continuous units and simple spans with field splices shall be assembled in the shop as specified in Subsection 807.54(b)(2) and blocked in their true position with webs horizontal. The camber, length of sections, distance between bearings, and openings of joints shall be measured and this information shall become part of the permanent records. The component parts shall be match marked in this assembly and these marks shall be shown on the erection diagram.

All girders in simple spans without field splices shall be blocked in their true position with webs horizontal. The camber, distance between bearings, and openings of joints shall be measured and this information shall become part of the permanent records.

Web and flange plates for main members and flange splice plates for main members shall be cut and fabricated so that the primary direction of rolling is parallel to the direction of the main tensile and/or compressive stresses.

Girder webs may be made by shop splicing with minimum lengths of 25 feet for sections. Flange plates longer than 50 feet may be made by shop splicing with minimum lengths of 25 feet for sections. No additional payment will be made for shop welded splices.

All girder dimensions are based on a temperature of 60 degrees F. A tolerance of 1/4" +/- is allowed for camber.

Groove welds in web and flange plates shall be Quality Control (Q.C.) tested by nondestructive testing, as required in Subsection 807.23(b). Fillet welds at flange to web plate connections shall be Q.C. tested by the magnetic particle method. All Q.C. testing shall be considered subsidiary to the item "Structural Steel in Plate Girder Spans (M 270, Gr. ___)".

Bent plate diaphragms for horizontally curved girders shall be cut and fabricated so that the primary direction of rolling is parallel to the direction of the main tensile and/or compressive stresses. Bent plate diaphragms for straight girders may be cut and fabricated in accordance with Subsection 807.35 or as required for horizontally curved girders.

Unless otherwise noted, cross-frames and diaphragms shall be installed as girders are erected. All bolts in cross-frames, diaphragms, and field splices shall be installed and tightened in accordance with Subsection 807.71 prior to pouring the concrete deck.

SUBSTRUCTURE NOTES:

CONCRETE:

Unless otherwise noted, concrete in caps, columns and footings (except seal footings) shall be Class "S" with a minimum 28 day compressive strength f'c = 3,500 psi and shall be poured in the dry. Seal Concrete for footings shall have a minimum 28 day compressive strength f'c = 2,100 psi.

Concrete in drilled shafts shall be Class "S" as modified by Job SP "Drilled Shaft Foundations".

All exposed corners shall be chamfered 3/4" unless otherwise noted.

REINFORCING STEEL:

All reinforcing steel shall be Grade 60 (yield strength = 60,000 psi) conforming to AASHTO M 31 or M 322, Type A, with mill test reports.

Top reinforcing bars in cap shall be properly placed to avoid interference with anchor bolts or sheet metal sleeves.

STRUCTURAL STEEL:

Structural steel in end bents shall be AASHTO M 270 with grade and payment as specified in the plans.

FOR ADDITIONAL INFORMATION AND NOTES, SEE LAYOUT(S) AND PLAN DETAILS.

STANDARD GENERAL NOTES
FOR STEEL BRIDGE STRUCTURES

ARKANSAS STATE HIGHWAY COMMISSION
LITTLE ROCK, ARK.

DRAWN BY:	A.M.S.	DATE:	9-2-2015	FILENAME:	b55006.dgn
CHECKED BY:	B.E.F.	DATE:	9-2-2015	SCALE:	NO SCALE
DESIGNED BY:	STD.	DATE:			

DRAWING NO. 55006

PRINT DATE: 11/7/2019

DATE REVISED	DATE FILMED	DATE REVISED	DATE FILMED	FED. ROAD DIST. NO.	STATE	FED. AID PROJ. NO.	SHEET NO.	TOTAL SHEETS
				6	ARK.			
				JOB NO.				
				1	STEEL BRIDGE STRUCTURES 55007			

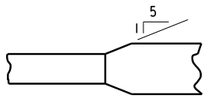

Plan-Unequal Width (Flg.)

FLANGE SPLICE

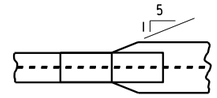

FLANGE SPLICE AT UNEQUAL BOTTOM FLANGE WIDTHS

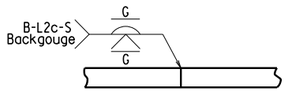

Equal Thickness

WEB & FLANGE SPLICE

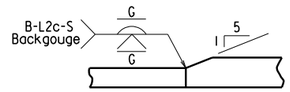

Unequal Thickness

FLANGE SPLICE

(Use when Base Metal Thickness is Equal to or Less than 2")

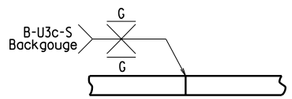

Equal Thickness

WEB & FLANGE SPLICE

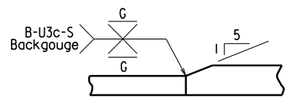

Unequal Thickness

FLANGE SPLICE

(Use when Base Metal Thickness is Greater than 2")

DETAILS OF WELDED SPLICES FOR PLATE GIRDERS

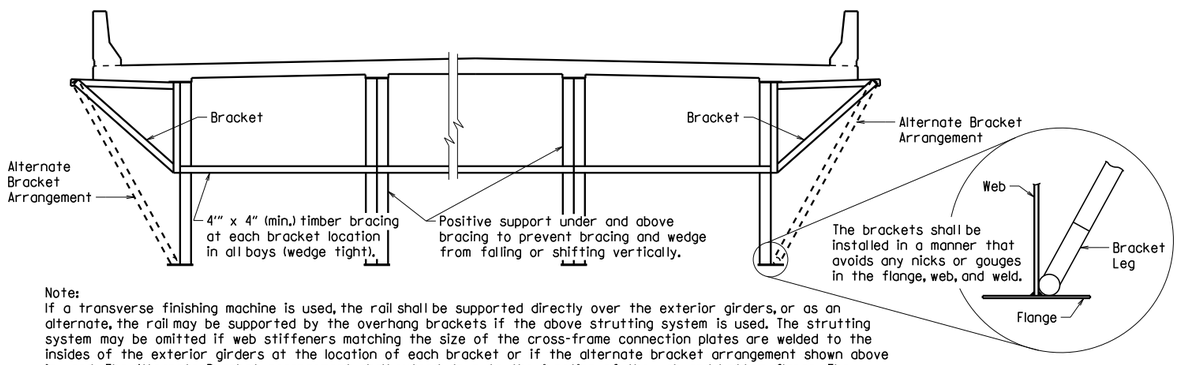

Note:
If a transverse finishing machine is used, the rail shall be supported directly over the exterior girders, or as an alternate, the rail may be supported by the overhang brackets if the above strutting system is used. The strutting system may be omitted if web stiffeners matching the size of the cross-frame connection plates are welded to the insides of the exterior girders at the location of each bracket or if the alternate bracket arrangement shown above is used. The Alternate Bracket arrangement shall extend down to the junction of the web and bottom flange. The stiffener shall conform to the details for cross frame connection plates shown on the plans. No direct payment will be made for brackets, timber bracing, supports, or welded stiffeners. Payment shall be subsidiary to "Structural Steel in Plate Girder Spans (____)".

SCREED RAIL SUPPORT FOR PLATE GIRDERS

(USE WHEN WEB DEPTHS ARE 48" OR GREATER)

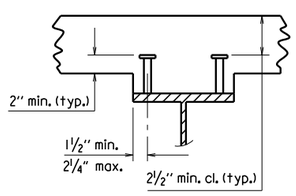

2 STUDS PER ROW

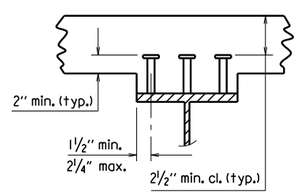

3 STUDS PER ROW

Stud Shear Connectors shall be automatically end welded to the beam or girder flange in accordance with the recommendations of the Manufacturer. See plan details for number and size.

SHEAR CONNECTOR DETAIL

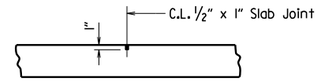

Use Type 3 or 4 Joint Sealer. See Subsections 501.02(h) and 501.05(j). Backer Rod filler will not be required. Joint Sealer shall be measured and paid for as Class S(AE) Concrete-Bridge. Slab Joints shall extend to the outside edge of the deck slab and shall align with open joints at the front face of the parapet. Slab joints shall be installed before the parapet railing is poured. If slab joints are to be sawed, they shall be sawed as soon as the concrete has sufficiently set to allow sawing of the joint without damage to the slab. Slab joints shall be placed at all pouring sequence construction joints and required slab joint locations. The joint sealer shall extend across the deck from gutterline to gutterline.

ADDITIONAL NOTES IF SIDEWALKS OR RAISED MEDIANS ARE REQUIRED:
Slab Joints shall be installed before the sidewalk or raised median is poured. After installation of the joint in the sidewalk or raised median and prior to pouring the parapet rail, the joint sealer shall be placed extending across the deck slab from gutterline to gutterline and acrosss the top of the sidwalk or raised median to the edge of the slab. No joint sealer shall be placed on the deck slab under the sidewalk or raised median.

TRANSVERSE SLAB JOINT DETAIL

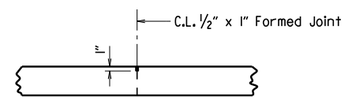

Use ½" x 1" Type 3 or 4 Joint Sealer. See Subsections 501.02(h) and 501.05(j). Backer Rod filler will not be required. Joint sealer shall be measured and paid for as Class S(AE) Concrete-Bridge. This joint shall be formed. Seal color shall be gray or other color similar to concrete.

LONGITUDINAL CONSTRUCTION JOINT

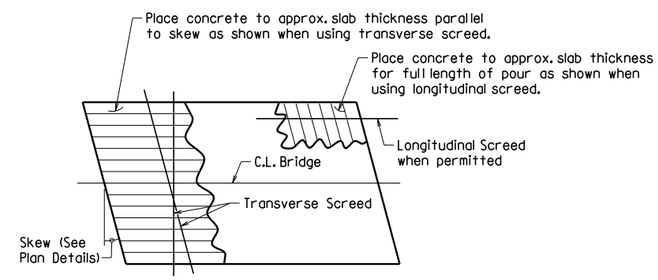

Note: At the Contractor's option, the transverse screed may be placed parallel to the skew or perpendicular to C.L. Bridge.

CONCRETE PLACEMENT PROCEDURE FOR BRIDGES WITH SKEW

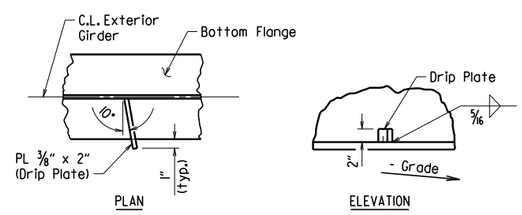

Drip Plate to be welded to the outer side of the bottom flange of the exterior girders.

Locate drip plate 5'-0" from C.L. Bearing on high side of each Bent, unless otherwise noted in the plans.

BOTTOM FLANGE DRIP PLATE

(USE WHEN WEB DEPTHS ARE 54" OR GREATER AND UNIT OR SPAN IS NOT IN LEVEL GRADE)

t_s = slab thickness. See "Typical Roadway Section" in the plans.

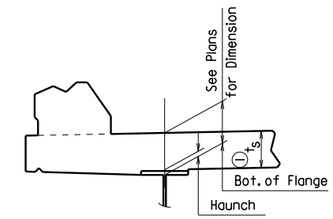

EXTERIOR BEAM OR GIRDER

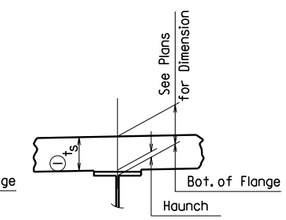

INTERIOR BEAM OR GIRDER

(1) Tolerance when removable deck forming is used is + ½", - ¼". Haunch forming is required and shall be adjusted to maintain slab thickness tolerance.

NOTES:
Haunch dimension may vary within the following limits to maintain the grade and slab thickness tolerance: Minimum occurs when top flange contacts bottom reinforcing steel; Maximum = top flange thickness plus 1¾" unless otherwise noted in the plans. No increase in concrete and structural steel quantities will be made to maintain tolerances.

Tolerances shown are applicable only when removable deck forming is used. See Std. Dwg. No. 55005 for tolerances when permanent steel deck forms are used. Payment for concrete shall be based on removable deck forming.

ADJUSTMENT FOR SLAB THICKNESS TOLERANCE

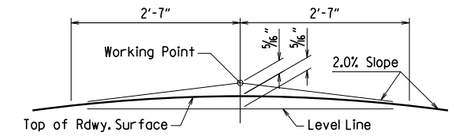

NOTE: Working Point matches Theoretical Roadway Grade.

ROUNDING DETAIL

BRIDGES IN NORMAL CROWN

WELD TABLE

Material Thickness of Thicker Part Joined (Inches)	Minimum Size of Fillet Weld (Inches)	Single Pass Weld Must Be Used
To ¾" Inclusive	¼"	
Over ¾"	5/16"	

NOTE: When a fillet weld size, as shown on the plans, is larger than the minimum, the first pass shall be that specified for minimum size of fillet weld.

SECTION AND SUBSECTION REFER TO THE ARKANSAS STATE HIGHWAY AND TRANSPORTATION DEPARTMENT STANDARD SPECIFICATIONS FOR HIGHWAY CONSTRUCTION (2014 EDITION).

THESE DETAILS ARE APPLICABLE UNLESS OTHERWISE SHOWN IN THE PLAN DETAILS, SPECIAL PROVISIONS, OR SUPPLEMENTAL SPECIFICATIONS.

STANDARD DETAILS FOR STEEL BRIDGE STRUCTURES

ARKANSAS STATE HIGHWAY COMMISSION

LITTLE ROCK, ARK.

DRAWN BY:	JYP	DATE:	2/11/2016	FILENAME:	b55007.dgn
CHECKED BY:	AMS	DATE:	2/11/2016	SCALE:	No Scale
DESIGNED BY:	STD.	DATE:	—		

DRAWING NO. 55007

DATE REVISED	DATE FILMED	DATE REVISED	DATE FILMED	FED. ROAD DIST. NO.	STATE	FED. AID PROJ. NO.	SHEET NO.	TOTAL SHEETS
12-1-14		1-15-19		6	ARK.			
1-14-15		3-24-2020		JOB NO.				
1-17-17								

1 TYPE D NAME PLATE - 55010

The name of the bridge as shown on the plans shall be placed on Lines 1-3 using ⅛" raised letters and numerals ⅜" high.

	Example 1	Example 2	Example 3	Example 4
Line 1	Red River	Southern	Saline	
Line 2	Relief	Railroad	River	Highway 5
Line 3		Overpass	Relief	

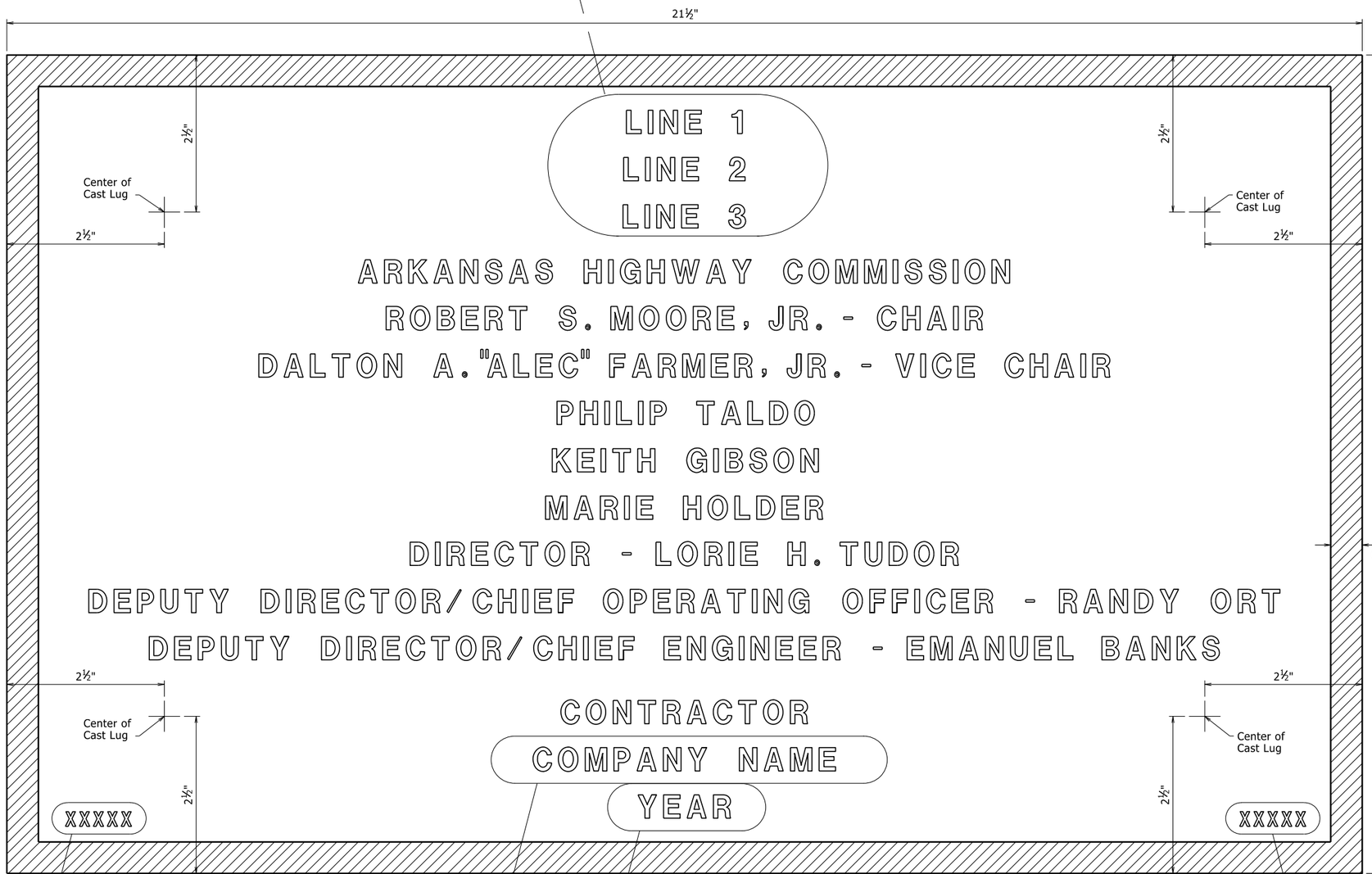

Place the design live loading here using ⅛" raised letters and numerals ¼" high. Examples: HS20 HL-93

Place the Year in which Contract was awarded here using ⅛" raised numerals ⅜" high. Example: 2001

Place the name of the company awarded the construction contract here using ⅛" raised letters and numerals ⅜" high. Example: ABCD CONSTRUCTION, INC.

Place the Bridge number here using ⅛" raised letters and numerals ¼" high. Examples: A1234 05432

TYPICAL BRIDGE NAME PLATE

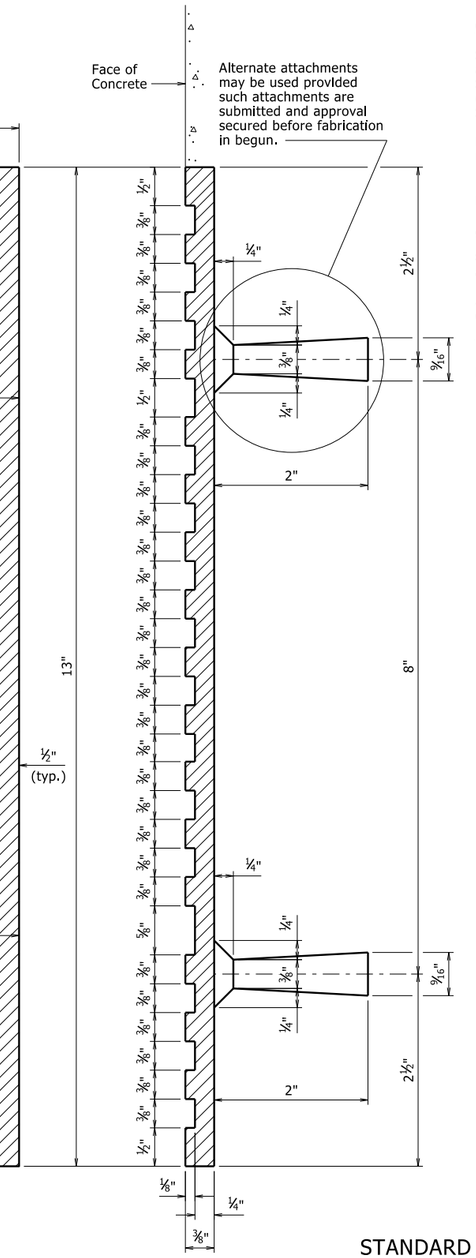

GENERAL NOTES

Specifications: Arkansas State Highway and Transportation Department Standard Specifications for Highway Construction, (2014 Edition) with applicable Supplemental Specifications and Special Provisions.

Name plates shall be cast bronze and shall meet the material requirements as specified in Section 812.

Body of plate shall be ¼" thick and shall include four tapering cone lugs ⅜" to 9/16" x 2" long. The border and all lettering shall be raised ⅛" above the face of plate and shall be polished.

All lettering shall be plain gothic, square cut and not tapered.

The number of plates required and the location and name on the plate for each bridge shall be as designated on the plans.

5 Revised Director, Deputy Director/Chief Operating Officer, Chair, Vice Chair and added New Commissioner
3-24-2020 CGP Checked By: CRE

4 Revised Chair and Vice Chair Added New Commissioner
1-15-19 CGP Checked By: CRE

3 Added New Commissioner
1-17-17 KDH Checked By: CRE

2 Revised Chair and Vice Chair Added New Commissioner
1-14-15 KDH Checked By: CRE

1 Revised Deputy Director/ Chief Engineer Added Deputy Director/ Chief Operating Officer
12-1-14 KDH Checked By: CRE

STANDARD DETAILS FOR
TYPE D BRIDGE NAME PLATE

ROUTE SEC.

ARKANSAS STATE HIGHWAY COMMISSION

LITTLE ROCK, ARK.

DRAWN BY: KDH DATE: 2-27-2014 FILENAME: b55010.dgn
CHECKED BY: BEF DATE: 2-27-2014 SCALE: NO SCALE
DESIGNED BY: STD. DATE:

DRAWING NO. 55010

PRINT DATE: 4/6/2020

DATE REVISED	DATE FILMED	DATE REVISED	DATE FILMED	FED. ROAD DIST. NO.	STATE	FED. AID PROJ. NO.	SHEET NO.	TOTAL SHEETS
3/24/16				6	ARK.			
				JOB NO.				
						STEEL H-PILES		55020

1

GENERAL NOTES FOR STEEL H-PILES:

Steel H-Piles shall conform to AASHTO M 270, Grade 36 or greater.

See Bridge Layout and Bent Details for pile size, estimated length, spacing, pile anchorage (if required) and for driving information.

Steel H-Piles that extend above the ground and are not protected by pile encasement shall be painted in accordance with Subsection 805.02.

Brackets, lugs, cap plates, pile tips, driving points, pile painting, splicing and welding shall not be paid for directly, but shall be considered subsidiary to the item "Steel Piling".

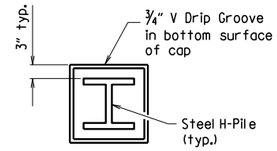

VIEW X-X

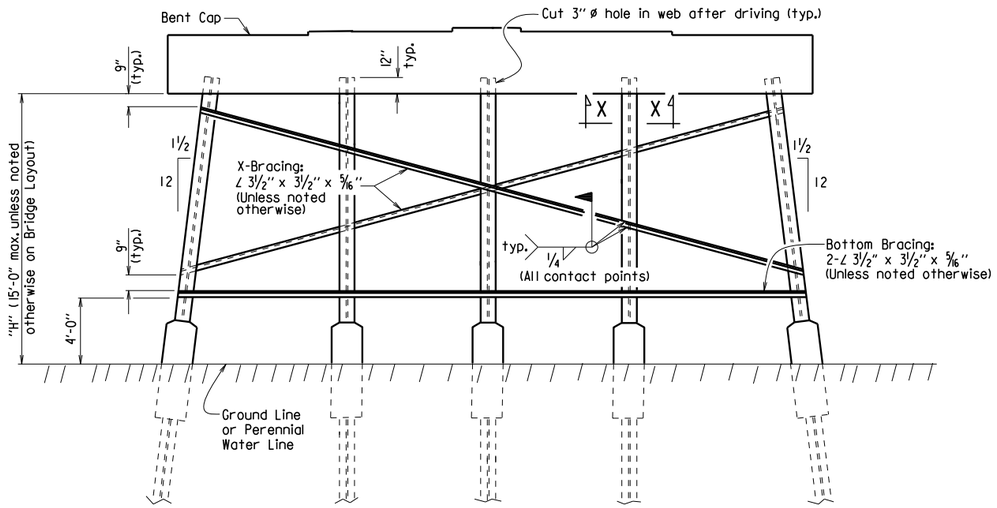

Notes:
All bracing shall be cut and welded in the field. Each brace shall be furnished in one piece. Payment shall be made under Item 807.

Unless noted otherwise, omit X-Bracing when "H" is less than 8 feet.

Omit X-Bracing and Bottom Bracing when "H" is 5 feet or less.

When required on the Bridge Layout sheet, pile encasements shall be constructed. See Notes and Details for H-Pile Encasements.

Omit all bracing (and V-groove in cap) when pile encasement is extended to bottom of bent cap.

TYPICAL DETAILS OF H-PILE TRESTLE INTERMEDIATE BENT

(Shown with Partial Height Encasement)

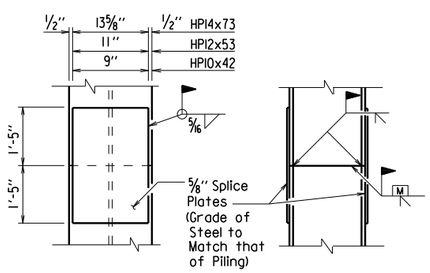

The Contractor may for his own convenience and at his own expense provide as many as three splices per pile. Minimum spacing between splices shall be 5 feet.

TYPICAL SPLICE DETAILS

⚠ H-pile splicers manufactured by Associated Pile and Fitting Corporation, LB Foster Piling, Skyline Steel or equivalent may be used in lieu of the "Typical Splice Details" shown. H-pile splicers shall match the same grade of steel specified for the piling and shall be welded to the pile with a 5/16" fillet weld around the entire perimeter of the splice. Flanges shall be welded with a complete penetration groove weld complying with AASHTO/AWS Joint Designation B-U4a or B-U4b. All welding shall conform to Subsection 807.26 of the AHTD Standard Specifcations for Highway Construction (2014 Edition).

Notes:
Steel pile tip reinforcing not required when approved H-Pile driving points are used.

Steel pile tip reinforcing shall not be paid for directly, but shall be considered subsidiary to the item "Steel Piling".

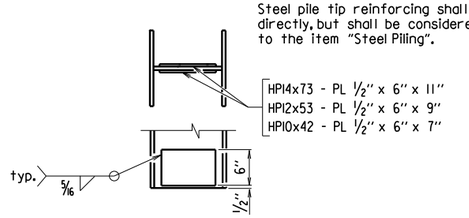

REINFORCING DETAIL FOR STEEL H-PILE TIP

GENERAL NOTES FOR H-PILE ENCASEMENTS:

⚠ See Bridge Layout for additional notes, any pile encasement restrictions and required location of pile encasements.

All concrete shall be Class S with a minimum 28-day compressive strength, f'c = 3,500 psi. If concrete cannot be placed in the dry, Seal Concrete may be used from top to bottom of encasement.

Reinforcing steel shall be Grade 60 conforming to AASHTO M 31 or M 322, Type A.

Welded Wire Fabric shall conform to AASHTO M 55 or M 221. Galvanized Corrugated Steel Pipe shall conform to AASHTO M 36 and M 218.

Concrete, welded wire fabric or reinforcing steel and galvanized pipe shall not be paid for directly, but shall be considered subsidiary to the item "Pile Encasement".

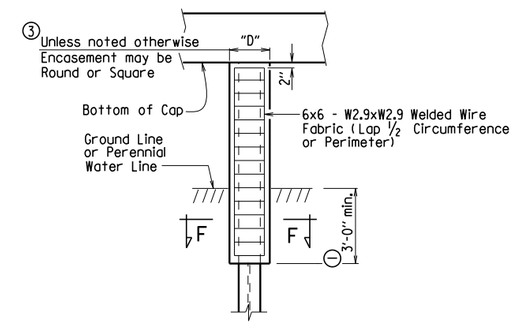

PILE ENCASEMENT DETAIL FOR STEEL H-PILES

4 (Shown with Encasement to Bottom of Cap)

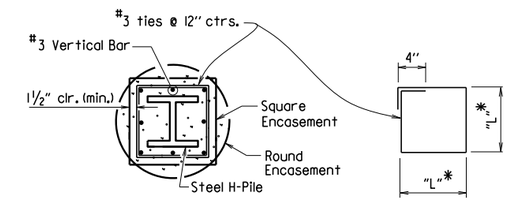

SECTION F-F

*Measured out-to-out of bar.

TABLE OF VARIABLES FOR PILE ENCASEMENT

Pile Size	"D" Square Encsmt.	"D" Round Encsmt.	"L"*
HP10x42	1'-7"	2'-0"	1'-4"
HP12x53	1'-8"	2'-2"	1'-5"
HP14x73	1'-11"	2'-6"	1'-8"

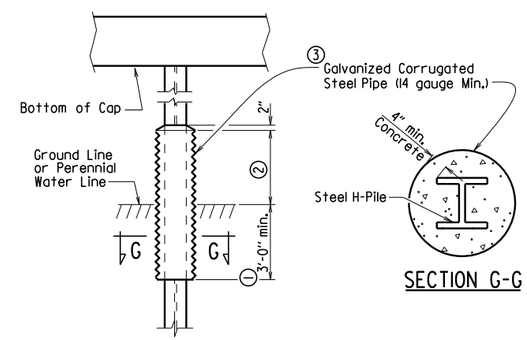

SECTION G-G

1 Unless otherwise noted on Bridge Layout.

2 3'-0" minimum or as shown on Bridge Layout.

3 Encasement dimensions shall be sized to maintain a minimum concrete cover of 4" from the H-Pile. Reinforcement shall be sized to provide a minimum concrete cover of 1 1/2" and a minimum clearance of 1 1/4" from the pile.

4 Alternate pile encasement, when not extended to bottom of cap, shall have 2" concrete taper for water runoff as shown in the Partial Height Encasement detail.

ALTERNATE PILE ENCASEMENT DETAIL FOR STEEL H-PILES

(Shown with Partial Height Encasement)

⚠ Added alternate method of splicing H-piles and revised pile encasement note.
3/24/2016 AMS

This document was originally issued and sealed by Charles R. Ellis, PE No. 9235, on March 24, 2016. This copy is not a signed and sealed document.

STATE OF ARKANSAS
REGISTERED PROFESSIONAL ENGINEER
No. 9235
CHARLES R. ELLIS

BRIDGE ENGINEER

STANDARD DETAILS FOR STEEL H-PILES AND PILE ENCASEMENTS

ARKANSAS STATE HIGHWAY COMMISSION

LITTLE ROCK, ARK.

DRAWN BY:	A.M.S.	DATE:	2/27/2014	FILENAME:	b55020.dgn
CHECKED BY:	B.E.F.	DATE:	2/27/2014	SCALE:	NO SCALE
DESIGNED BY:	STD.	DATE:	—		

DRAWING NO. 55020

DATE REVISED	DATE FILMED	DATE REVISED	DATE FILMED	FED. ROAD DIST. NO.	STATE	FED. AID PROJ. NO.	SHEET NO.	TOTAL SHEETS
				6	ARK.			
				JOB NO.				

1 TYPE CI APPROACH SLAB 55040CI

Notes:
The surface finish for Approach Slabs shall match that used on the bridge deck.

All longitudinal lines within the limits of horizontal curves shall be on curves concentric to C.L. Bridge. Adjustment to longitudinal bar lengths may be required. Transverse reinforcing shall be placed on radial lines to C.L. Bridge.

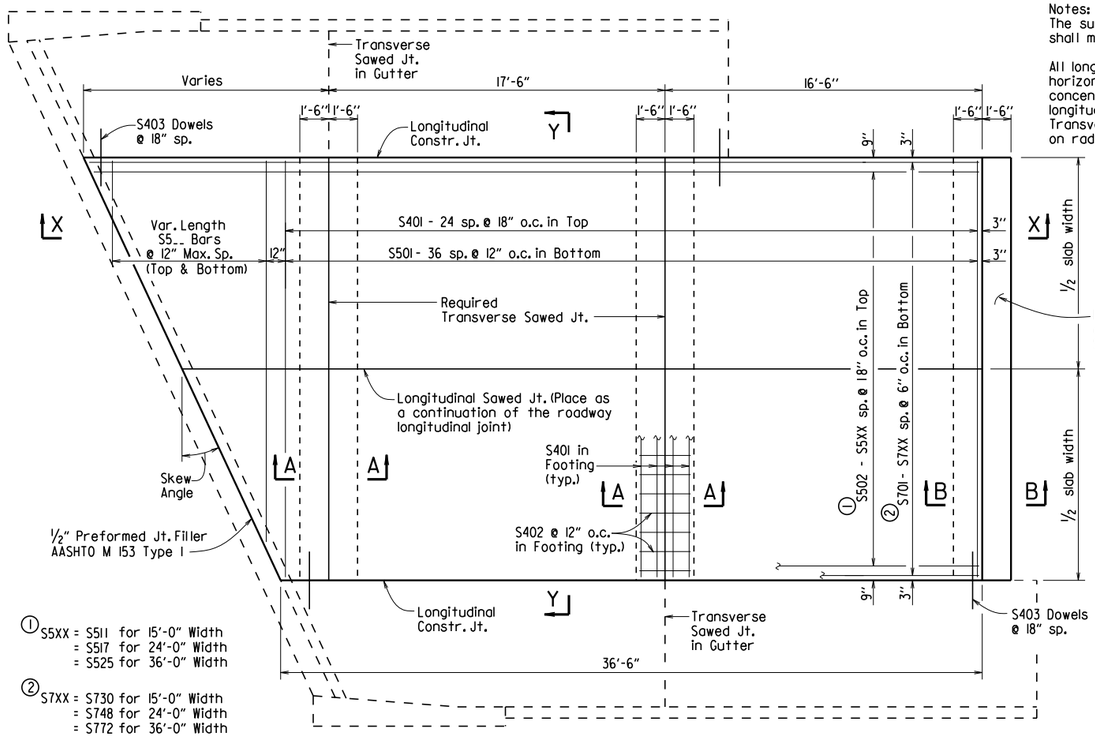

① S5XX = S511 for 15'-0" Width
= S517 for 24'-0" Width
= S525 for 36'-0" Width

② S7XX = S730 for 15'-0" Width
= S748 for 24'-0" Width
= S772 for 36'-0" Width

PLAN - SKEWED APPROACH SLAB WITH APPROACH GUTTERS

1/4" = 1'-0"

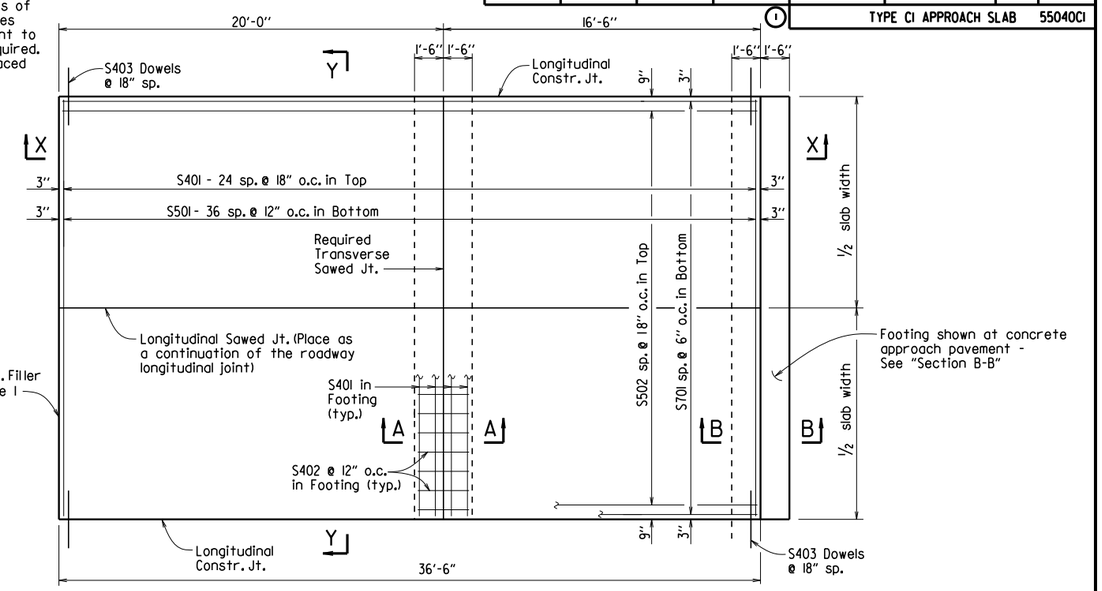

PLAN - SQUARE APPROACH SLAB

1/4" = 1'-0"

BAR LIST

(Square & Skewed Approach Slabs)

	Mark	Square No. Req'd.	Square Length	Skewed No. Req'd.	Skewed Length
15'-0" Slab Width	S401	33	14'-8"	37	14'-8"
	S402	30	2'-8"	45	2'-8"
	S403	50	3'-0"	*	3'-0"
	S501	37	14'-8"	37	14'-8"
	S502	10	36'-2"	—	—
	S502 - S511	—	—	1 Ea.	36.1' + 0.75' (tan skew angle) to 36.1' + 14.25' (tan skew angle)
	S5_	—	—	2 Ea.	14.7' - 0.75'/(tan skew angle) to 2'-0" Min.
	S701	30	36'-2"	—	—
	S701 - S730	—	—	1 Ea.	36.1' + 0.25' (tan skew angle) to 36.1' + 14.75' (tan skew angle)
24'-0" Slab Width	S401	33	23'-8"	37	23'-8"
	S402	48	2'-8"	72	2'-8"
	S403	50	3'-0"	*	3'-0"
	S501	37	23'-8"	37	23'-8"
	S502	16	36'-2"	—	—
	S502 - S517	—	—	1 Ea.	36.1' + 0.75' (tan skew angle) to 36.1' + 23.25' (tan skew angle)
	S5_	—	—	2 Ea.	23.7' - 0.75'/(tan skew angle) to 2'-0" Min.
	S701	48	36'-2"	—	—
	S701 - S748	—	—	1 Ea.	36.1' + 0.25' (tan skew angle) to 36.1' + 23.75' (tan skew angle)
36'-0" Slab Width	S401	33	35'-8"	37	35'-8"
	S402	72	2'-8"	108	2'-8"
	S403	50	3'-0"	*	3'-0"
	S501	37	35'-8"	37	35'-8"
	S502	24	36'-2"	—	—
	S502 - S525	—	—	1 Ea.	36.1' + 0.75' (tan skew angle) to 36.1' + 35.25' (tan skew angle)
	S5_	—	—	2 Ea.	35.7' - 0.75'/(tan skew angle) to 2'-0" Min.
	S701	72	36'-2"	—	—
	S701 - S772	—	—	1 Ea.	36.1' + 0.25' (tan skew angle) to 36.1' + 35.75' (tan skew angle)

* Varies with skew angle

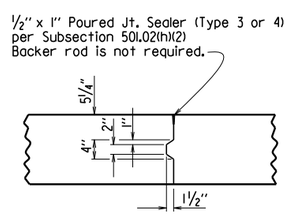

DETAILS OF LONGITUDINAL CONSTRUCTION JOINT

3/4" = 1'-0"

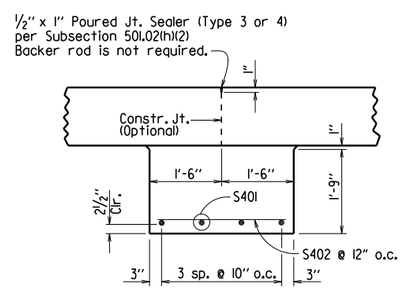

SECTION A-A

N.T.S.

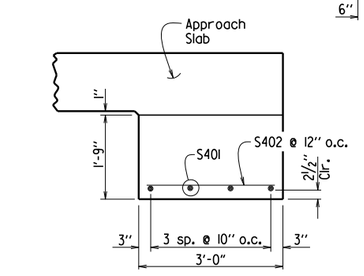

SECTION B-B

AT ASPHALT APPROACH PAVEMENT

N.T.S.

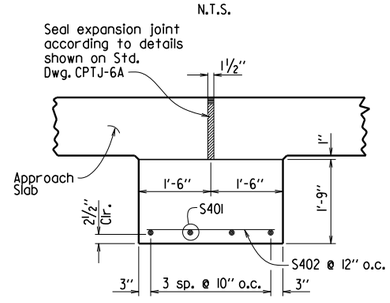

SECTION B-B

AT CONCRETE APPROACH PAVEMENT

N.T.S.

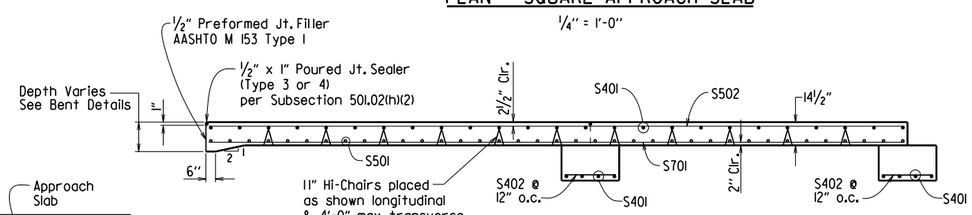

SECTION X-X

SQUARE APPROACH SLAB SHOWN

1/4" = 1'-0"

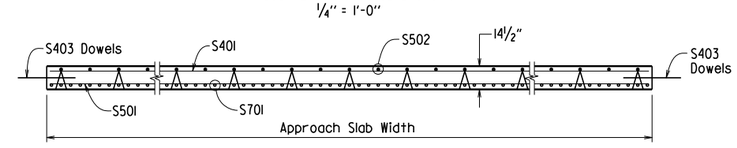

SECTION Y-Y

N.T.S.

TABLE OF QUANTITIES FOR ONE SQUARE APPROACH SLAB

(FOR INFORMATION ONLY)

Slab Width	Reinforcing Steel (Lbs.)	Concrete (Cu. Yds.)
15'-0"	3640	30.75
24'-0"	5775	49.15
36'-0"	8620	73.75

GENERAL NOTES

This drawing shall be used for Approach Slabs in Seismic Performance Zone 1 and for the maximum skew angles shown below:

15'-0" Slab Width: Maximum Skew Angle = 50°
24'-0" Slab Width: Maximum Skew Angle = 40°
36'-0" Slab Width: Maximum Skew Angle = 30°

All concrete shall be Class S (AE) with a minimum 28 day compressive strength f'c = 4,000 psi and shall be poured in the dry.

All reinforcing steel shall be Grade 60 (yield strength = 60,000 psi) conforming to AASHTO M 31 or M 322, Type A, with mill test reports.

Approach Slabs will be measured and paid for in accordance with Section 504.

STANDARD DETAILS FOR TYPE CI APPROACH SLAB

ARKANSAS STATE HIGHWAY COMMISSION

LITTLE ROCK, ARK.

DRAWN BY:	A.M.S.	DATE:	2/27/2014	FILENAME:	b55040ci.dgn
CHECKED BY:	K.W.Y.	DATE:	2/27/2014	SCALE:	AS SHOWN
DESIGNED BY:	STD.	DATE:			

DRAWING NO. 55040CI

REFER TO TABULATION OF QUANTITIES FOR "W" & "B" DIMENSIONS

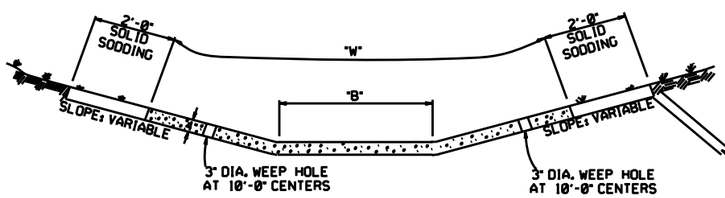

TYPE A

EXCAVATE TO NEAT LINES TO CONSTRUCT DITCH PAVING AND SOLID SODDING.

REFER TO TABULATION OF QUANTITIES FOR "W" DIMENSIONS

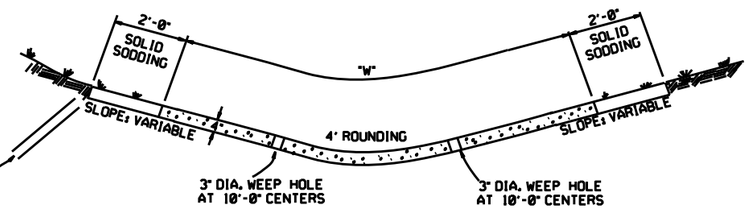

TYPE B

THE STEEL AND ADDITIONAL CONCRETE FOR THE WALLS SHALL NOT BE PAID FOR DIRECTLY, BUT SHALL BE CONSIDERED TO BE INCLUDED IN THE PRICE BID FOR "CONCRETE DITCH PAVING."

TOE WALL DEPTH MAY BE ALTERED TO 1'-0" WHEN DIRECTED BY THE ENGINEER IN ROCK EXCAVATION

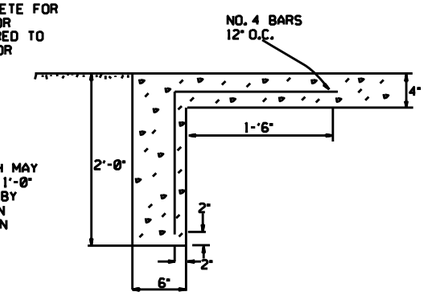

TOE WALL DETAIL FOR CONCRETE DITCH PAVING

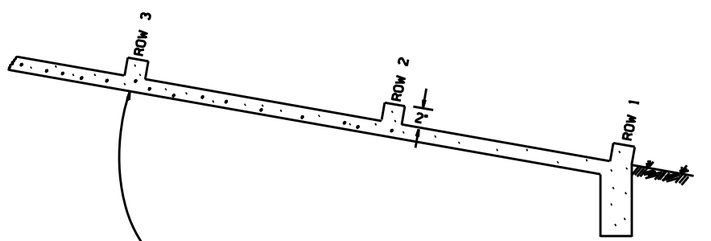

NUMBER OF ELEMENTS PER ROW VARIES WITH WIDTH OF PAVING SPECIFIED

ENERGY DISSIPATORS TO BE USED FOR THE ENTIRE LENGTH OF DITCH WHEN SLOPE OF DITCH PAVING EXCEEDS 7%. THE DISSIPATORS WILL NOT BE PAID FOR DIRECTLY, BUT SHALL BE CONSIDERED TO BE INCLUDED IN THE PRICE BID FOR CONCRETE DITCH PAVING.

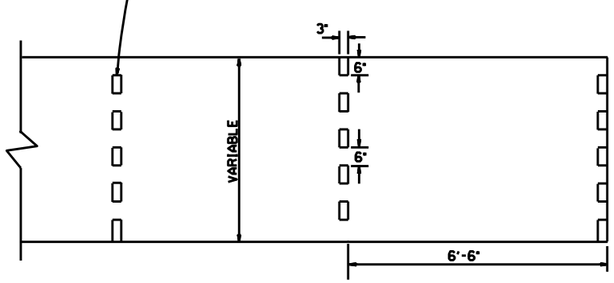

ENERGY DISSIPATORS
(NO SCALE)

GENERAL NOTES:

THE FULL WIDTH OF EACH SECTION SHALL BE POURED MONOLITHICALLY.

TOE WALLS TO BE CONSTRUCTED FULL WIDTH AT EACH END OF DITCH PAVING, AND POURED MONOLITHICALLY.

SOLID SOD ALONG DITCH PAVING TO BE PLACED WITHIN 14 DAYS OF DITCH PAVING CONSTRUCTION.

1" WIDE TRANSVERSE EXPANSION JOINTS SHALL BE PLACED IN CONCRETE DITCH PAVING AT 45' INTERVALS. THE SPACE SHALL BE FILLED WITH APPROVED JOINT FILLER COMPLYING WITH AASHTO M213.

DATE	REVISION	DATE FILMED
12-8-16	CORRECTED ENERGY DISSIPATOR DRAWING AND NOTE	
11-17-10	ADDED GENERAL NOTE	
6-2-94	ADDED GENERAL NOTE ABOUT SOLID SODDING	
11-30-8	ELIMINATED MIN. ROWS OF ELEMENTS	111-30-89
7-15-88	REVISED DISSIPATOR NOTE	653-7-15-88
4-3-87	REVISED ENERGY DISSIPATOR	671-4-3-87
1-9-87	MODIFIED NOTE ON ENERGY DISS.	532-1-9-87
11-3-86	ADDED NOTE TO ENERGY DISS.	599-12-1-86
11-1-84	ENERGY DISSIPATOR DETAILS ADDED	508-11-1-84
11-1-84	EXCAVATION DETAILS ADDED TYPED A & B	
10-2-72	REVISED AND REDRAWN	508-10-2-72

ARKANSAS STATE HIGHWAY COMMISSION

CONCRETE DITCH PAVING

STANDARD DRAWING CDP-1

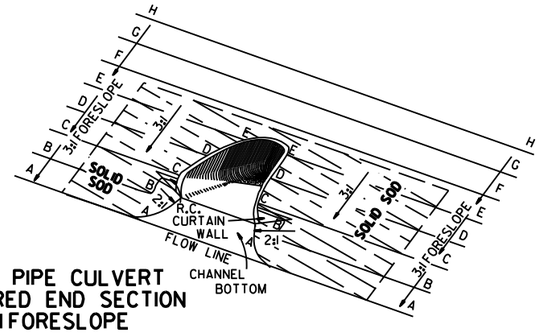

TYPICAL PIPE CULVERT
WITH FLARED END SECTION
& 3:1 FORESLOPE

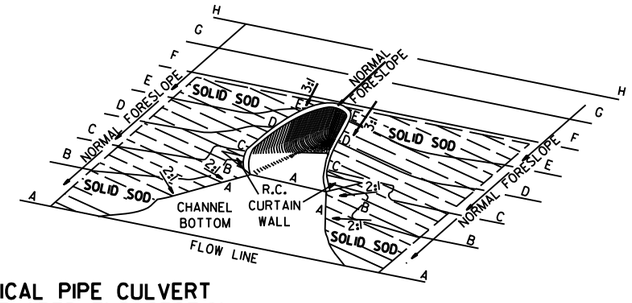

TYPICAL PIPE CULVERT
WITH FLARED END SECTION
& FLATTENED ADJACENT SLOPES

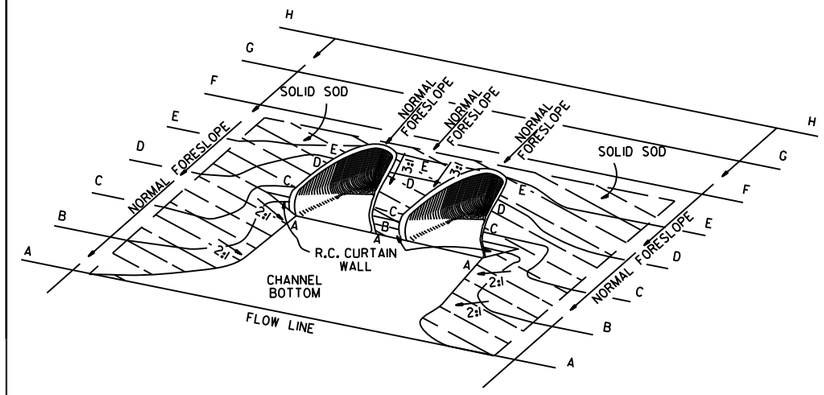

TYPICAL MULTIPLE PIPE CULVERT
WITH FLARED END SECTIONS
& FLATTENED ADJACENT SLOPES

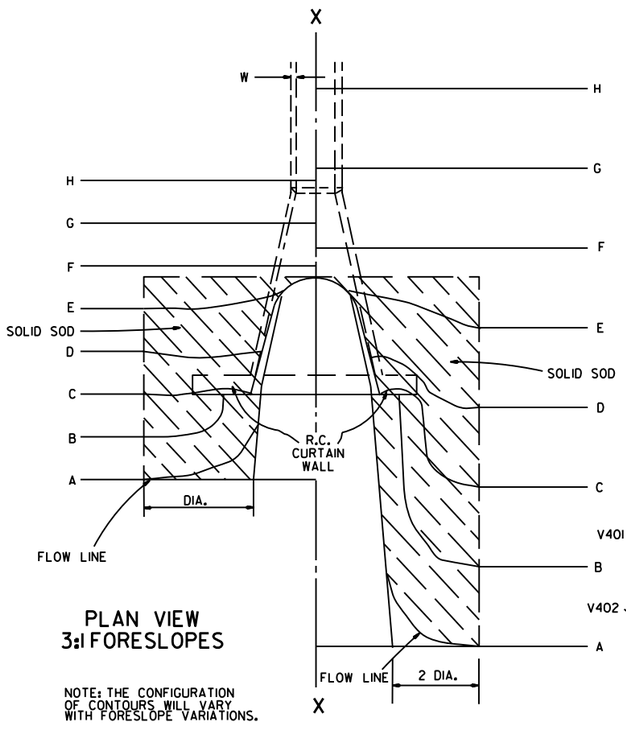

PLAN VIEW
3:1 FORESLOPES

NOTE: THE CONFIGURATION OF CONTOURS WILL VARY WITH FORESLOPE VARIATIONS.

PLAN VIEW
FLATTENED FORESLOPES

R.C. CURTAIN WALL DIMENSIONS & QUANTITIES

PIPE DIA.	H_1	L_1	L	L (DBL.)/2	SINGLE R.C.P.C. CONC.	SINGLE R.C.P.C. REINF. STEEL	DOUBLE R.C.P.C. CONC.	DOUBLE R.C.P.C. REINF. STEEL
					CU. YDS.	LBS.	CU. YDS.	LBS.
18"	11½"	3'-5"	8'-0"	6'-3"	0.31	27.7	0.45	39.5
24"	1'-0½"	4'-6"	9'-6"	7'-6"	0.37	33.4	0.53	48.0
30"	1'-3½"	5'-7"	11'-0"	9'-0"	0.45	39.0	0.67	59.0
36"	1'-7"	6'-8"	13'-0"	10'-6"	0.58	52.6	0.83	73.9
42"	2'-1½"	7'-3"	15'-6"	12'-0"	0.82	77.1	1.10	100.7
48"	2'-5"	7'-10"	17'-0"	13'-0"	0.98	94.9	1.27	120.4
54"	2'-9½"	8'-5"	18'-6"	14'-0"	1.16	115.8	1.47	143.7
60"	3'-4"	9'-0"	20'-6"	15'-6"	1.47	149.7	1.84	180.3
72"	4'-5"	10'-2"	25'-6"	18'-6"	2.31	232.6	2.73	271.0

NOTE: QUANTITIES SHOWN ARE FOR ONE (1) CURTAIN WALL.

REINFORCING STEEL SCHEDULE

PIPE DIA.	SINGLE R.C. PIPE CULVERT H401 L	H401 NO.	H402 L	H402 NO.	V401 L	V401 NO.	V402 L	V402 NO.	DOUBLE R.C. PIPE CULVERT H401 L	H401 NO.	H402 L	H402 NO.	H403 L	H403 NO.	V401 L	V401 NO.	V402 L	V402 NO.
18"	7'-8"	2	1'-11½"	4	1'-7½"	8	8"	8	12'-2"	2	1'-11½"	4	8"	2	1'-7½"	10	8"	14
24"	9'-2"	2	2'-2"	4	1'-8½"	10	8"	9	14'-8"	2	2'-2"	4	8"	2	1'-8½"	12	8"	18
30"	10'-8"	2	2'-4½"	4	1'-11½"	10	8"	12	17'-8"	2	2'-4½"	4	8"	2	1'-11½"	14	8"	22
36"	12'-8"	2	2'-10"	6	2'-3"	12	8"	14	20'-8"	2	2'-10"	6	8"	3	2'-3"	14	8"	28
42"	15'-2"	2	3'-9½"	8	2'-9½"	16	8"	15	23'-8"	2	3'-9½"	8	8"	4	2'-9½"	18	8"	30
48"	16'-8"	2	4'-3"	10	3'-1"	18	8"	16	25'-8"	2	4'-3"	10	8"	5	3'-1"	20	8"	32
54"	18'-2"	2	4'-8½"	12	3'-5½"	20	8"	17	27'-8"	2	4'-9"	12	8"	6	3'-5½"	22	8"	34
60"	20'-2"	2	5'-5"	14	4'-0"	24	8"	18	30'-8"	2	5'-5"	14	8"	7	4'-0"	26	8"	36
72"	25'-2"	2	7'-4"	18	5'-1"	30	8"	20	36'-8"	2	7'-4"	18	8"	9	5'-1"	33	8"	40

ALL REINFORCING STEEL #4 BARS @ 6" O.C.

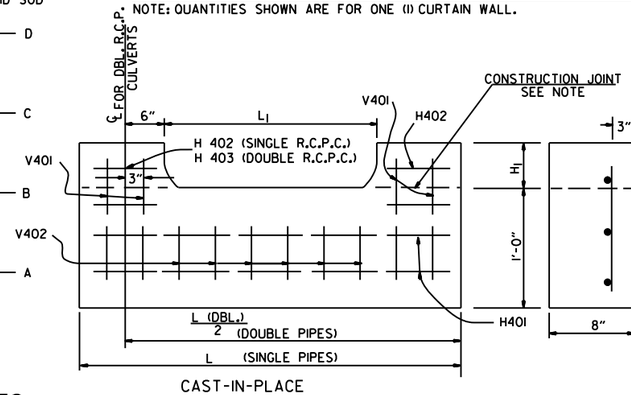

CAST-IN-PLACE

NOTE: THE PORTION OF THE R.C. CURTAIN WALL BENEATH THE FLARED END SECTION (LOWER 1'-0") SHALL BE PLACED MONOLITHICALLY. THE FLARED END SECTION SHALL THEN BE SET IN PLACE & THE REMAINING PORTIONS OF THE R.C. CURTAIN WALL PLACED.

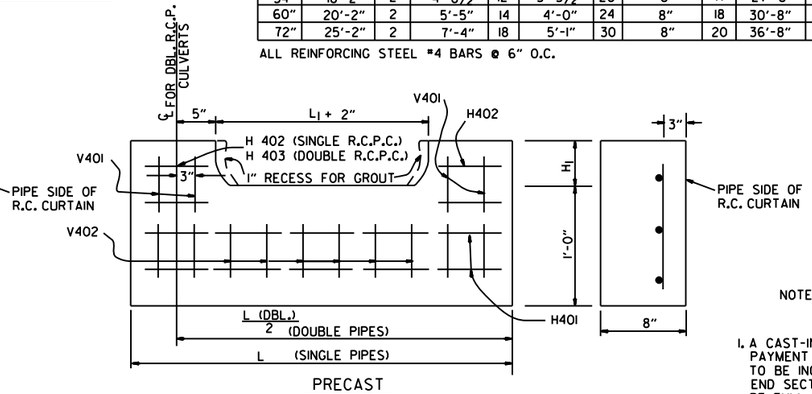

PRECAST

NOTE: THE PRECAST CURTAIN WALL WILL BE SET AND BACKFILLED WITH COMPACTED MATERIAL. THE FLARED END SECTION SHALL THEN BE SET IN PLACE AND THE 1" RECESS FILLED WITH GROUT. WHERE "L" EXCEEDS 11' THE CURTAIN WALL MAY BE CAST IN TWO (2) OR MORE SECTIONS. THE METHOD OF JOINING THE SECTIONS FOR INSTALLATION SHALL BE APPROVED BY THE ENGINEER.

R.C. CURTAIN WALL DETAILS

SOLID SODDING

PIPE DIA.	SINGLE R.C.P.C. 3:1	SINGLE R.C.P.C. 4:1	SINGLE R.C.P.C. 6:1	DOUBLE R.C.P.C. 3:1	DOUBLE R.C.P.C. 4:1	DOUBLE R.C.P.C. 6:1
	SQ. YDS.			SQ. YDS.		
18"	5	7	12	6	8	13
24"	8	12	19	9	13	20
30"	13	18	29	14	19	30
36"	17	26	41	18	28	43
42"	23	35	55	25	37	57
48"	29	46	68	31	48	70
54"	35	57	85	37	59	87
60"	45	62	104	48	65	107
72"	64	92	156	67	95	159

NOTE: QUANTITIES SHOWN ABOVE ARE FOR ONE (1) END OF F.E.S.

GENERAL NOTES

1. A CAST-IN-PLACE OR PRECAST CURTAIN WALL MAY BE USED. PAYMENT FOR THE CURTAIN WALL SHALL BE CONSIDERED TO BE INCLUDED IN THE UNIT PRICE BID EACH FOR FLARED END SECTIONS OF THE SEVERAL SIZES, WHICH PRICE SHALL BE FULL COMPENSATION FOR FURNISHING ALL MATERIALS INCLUDING REINFORCING STEEL AND CONCRETE; FOR FORMS, MIXING AND PLACING; FOR EXCAVATION AND BACKFILL, AND FOR ALL LABOR, TOOLS, EQUIPMENT AND INCIDENTALS NECESSARY TO COMPLETE THE WORK.
2. ALL EXPOSED EDGES SHALL BE CHAMFERED ¾".
3. CONCRETE FOR CURTAIN WALL SHALL MEET THE REQUIREMENTS FOR CLASS A OR S CONCRETE AS PROVIDED IN SECTION 802 OF THE STANDARD SPECIFICATIONS OR FOR PAVING CONCRETE AS PROVIDED IN SECTION 501 OF THE STANDARD SPECIFICATIONS.
4. WELDED WIRE MESH 3 x 3 W/10 x W10 MAY BE USED IN LIEU OF REINFORCING BARS.

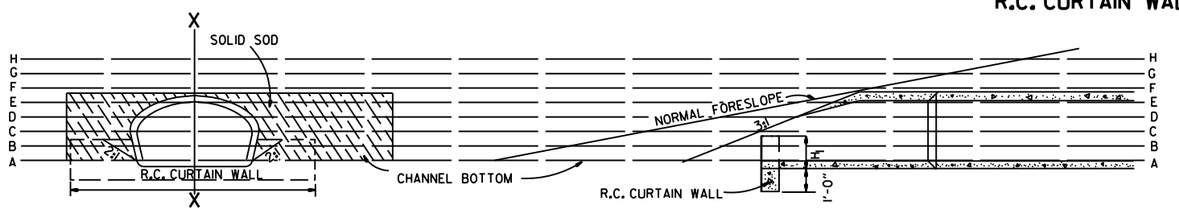

END VIEW

SECTIONAL VIEW "X-X"

DATE	REVISION	FILMED
10-18-96	ADDED NOTE TO SOLID SODDING	
10-12-95	CORRECTED SPELLING	
11- 3-94	ADDED GENERAL NOTE NO. 4	
8-15-91	REV. CURTAIN WALL QUANT. STEEL SCH. & SOLID SOD QUANT.	
3-2-81	ALLOW PRECAST IN 2 OR MORE PIECES CHAMFER EDGES	
5-15-80	ADDED PRECAST WALL & GENERAL NOTES	
10-2-72	REVISED AND REDRAWN	

ARKANSAS STATE HIGHWAY COMMISSION

FLARED END SECTION

STANDARD DRAWING FES-1

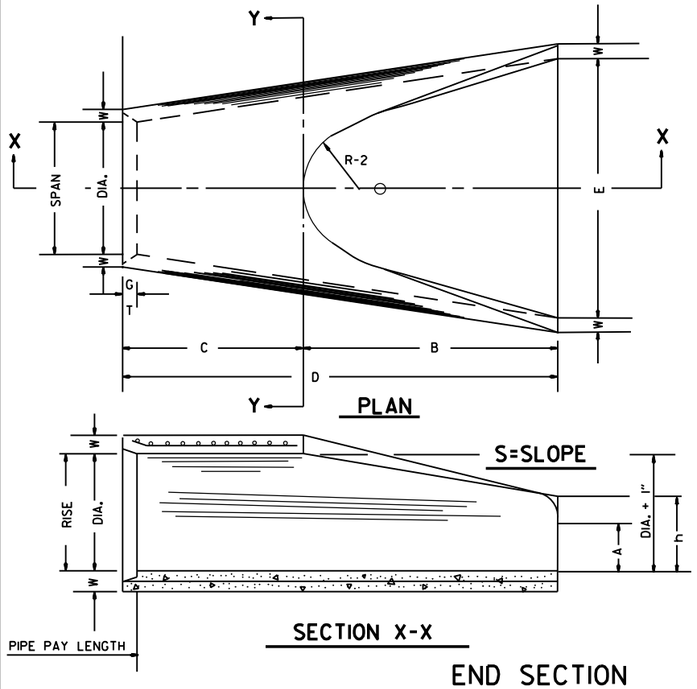

TABLE OF DIMENSIONS

DIA.	WALL	A	B	C	D	E	S	DIA. + 1"	P	R-1	R-2	G-T	WT.	h
18"	2½"	9"	2'-3"	3'-10"	6'-1"	3'-0"	3:1	19"	29"	15½"	12"	2"	1000	1'-0½"
24"	3"	9½"	3'-7½"	2'-6"	6'-1½"	4'-0"	3:1	25"	33 3/16"	16 15/16"	14"	2½"	1600	1'-1½"
30"	3½"	1'-0"	4'-6"	1'-7¾"	6'-1¾"	5'-0"	3:1	31"	37"	18½"	15"	3¼"	1940	1'-4⅝"
36"	4"	1'-3"	5'-3"	2'-10¾"	8'-1¾"	6'-0"	3:1	37"	47 13/16"	24 5/16"	20"	3½"	4100	1'-8"
42"	4½"	1'-9"	5'-3"	2'-11"	8'-2"	6'-6"	3:1	43"	53⅞"	27½"	22"	3½"	5380	2'-2½"
48"	5"	2'-0"	6'-0"	2'-2"	8'-2"	7'-0"	3:1	49"	56½"	28½"	22"	3½"	6550	2'-6"
54"	5½"	2'-4"	6'-6"	1'-10"	8'-4"	7'-6"	3:1	55"	65½"	33⅛"	24"	4"	8750	2'-10½"
60"	6"	2'-10"	6'-6"	1'-10"	8'-4"	8'-0"	3:1	61"	72½"	36 11/16"	24"	4"	9270	3'-5"
72"	7"	3'-10"	6'-6"	1'-10"	8'-4"	9'-0"	3:1	73"	77 13/16"	38 15/16"	24"	5"	13250	4'-6"

ARCH PIPE

EQUIV. DIA.	• SPAN AASHTO M 206	• SPAN AHD NOMINAL	• RISE AASHTO M 206	• RISE AHD NOMINAL	W	A	B	C	D	E	P	R2	G-T	S
INCHES														
15	18	18	11	11	2"	4"	2'-0"	4'-0"	6'-0"	3'-0"	29"	12"	1½"	2½:1
18	22	22	13½	14	2½"	5"	2'-0"	4'-1"	6'-1"	3'-6"	32⅛"	13"	2½"	2½:1
21	26	26	15½	16	2¾"	7"	2'-3"	3'-10"	6'-1"	4'-0"	34⅛"	14"	2½"	2½:1
24	28½	29	18	18	3"	9"	2'-3"	3'-10"	6'-1"	5'-0"	36 11/16"	15"	2½"	2½:1
30	36¼	36	22½	23	3½"	10"	3'-1"	3'-0½"	6'-1½"	6'-0"	47 11/16"	20"	3"	2½:1
36	43¾	44	26⅝	27	4"	10½"	4'-0"	2'-11½"	6'-1½"	6'-6"	54 5/16"	22"	3½"	2½:1
42	51⅛	51	31 5/16	31	4½"	11½"	4'-7"	1-10¼"	6'-5¼"	7'-2"	59½"	23"	3¾"	2½:1
48	58½	59	36	36	5"	1'-3"	5'-3"	2'-10¾"	8'-1¾"	7'-10"	70 5/16"	24"	4¼"	2½:1
54	65	65	40	40	5½"	1'-7"	5'-3"	2'-11"	8'-2"	8'-6"	72 1/16"	24"	4¾"	2¼:1
60	73	73	45	45	6"	1'-10"	5'-6"	2'-8"	8'-2"	9'-0"	77 13/16"	24"	5"	2¼:1

• THE MEASURED SPAN AND RISE SHALL NOT VARY MORE THAN ± 2 PER CENT FROM THE VALUES SPECIFIED BY AASHTO M 206.

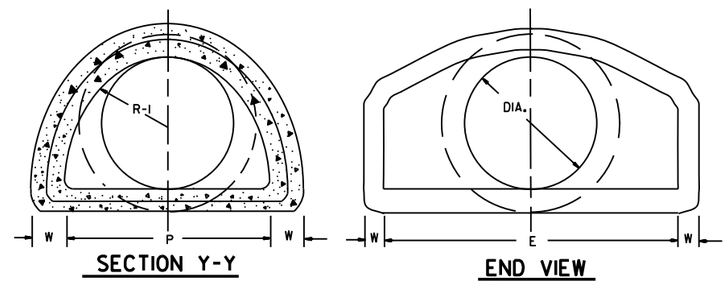

NOTE: TONGUE END ON UPSTREAM SECTION
GROOVE END ON DOWNSTREAM SECTION

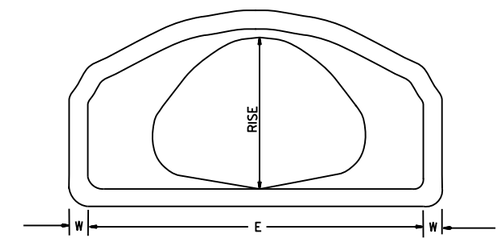

END VIEW
CONCRETE ARCH PIPE

END SECTION FOR REINFORCED CONCRETE PIPE CULVERTS

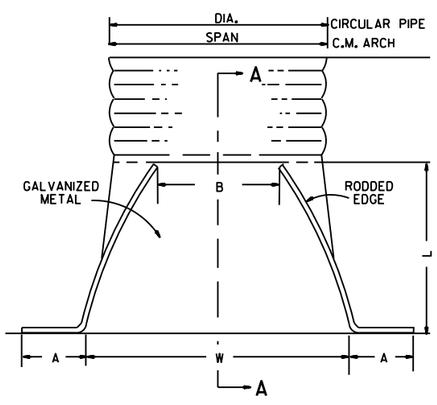

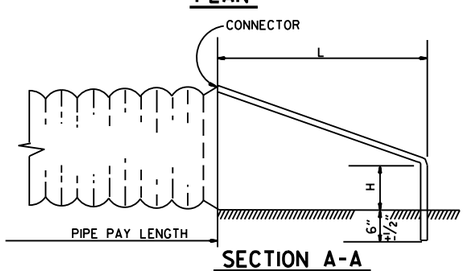

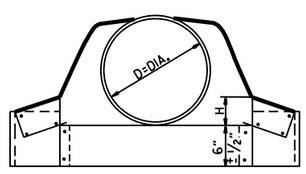

CIRCULAR PIPE

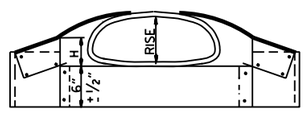

C.M. ARCH PIPE

CIRCULAR PIPE

D. DIA.	GAUGE	A 1" ±	B. MAX.	H 1" ±	L 1½" ±	W 2" ±	S
		INCHES					
12	16	6	6	6	21	24	2½:1
15	16	7	8	6	26	30	2½:1
18	16	8	10	6	31	36	2½:1
21	16	9	12	6	36	42	2½:1
24	16	10	13	6	41	48	2½:1
30	14	12	16	8	51	60	2½:1
36	14	14	19	9	60	72	2½:1
42	12	16	22	11	69	84	2½:1
48	12	18	27	12	78	90	2½:1
54	12	18	30	12	84	102	2:1
60	12	18	33	12	87	114	1¾:1
66	12	18	36	12	87	120	1½:1
72	12	18	39	12	87	126	1 1/3:1

C.M. ARCH PIPE

EQUIV. DIA.	SPAN	RISE	A 1" ±	B MAX.	H 1" ±	L 1½" ±	W 2" ±	S	GAUGE
	INCHES								
15"	17	13	7	9	6	19	30	2½:1	16
18"	21	15	7	10	6	23	36	2½:1	16
21"	24	18	8	12	6	28	42	2½:1	16
24"	28	20	9	14	6	32	48	2½:1	16
30"	35	24	10	16	6	39	60	2½:1	14
36"	42	29	12	18	8	46	75	2½:1	14
42"	49	33	13	21	9	53	85	2½:1	12
48"	57	38	18	26	12	63	90	2½:1	12
54"	64	43	18	30	12	70	102	2¼:1	12
60"	71	47	18	33	12	77	114	2¼:1	12

NOTE: ALTERNATE CONNECTIONS TO THE PIPE CULVERTS, IN ACCORDANCE WITH MANUFACTURER'S STANDARD PRACTICES, MAY BE MADE SUBJECT TO THE APPROVAL OF THE ENGINEER.

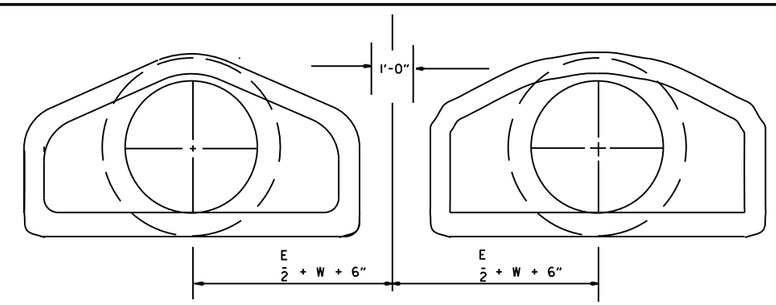

MULTIPLE R.C. PIPE CULVERTS

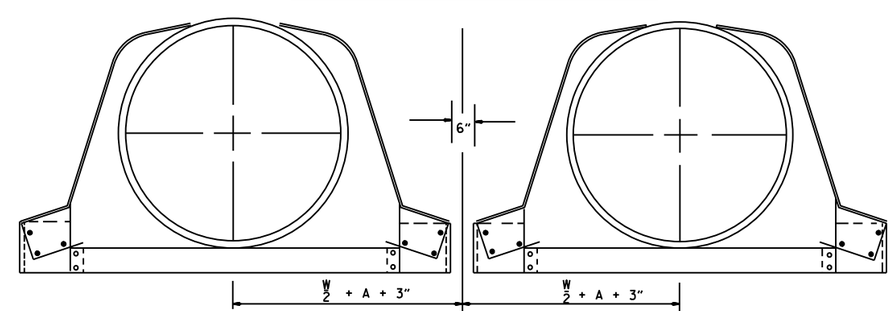

MULTIPLE C.M. PIPE CULVERTS

END SECTIONS FOR CORRUGATED METAL PIPE CULVERTS

DATE	REVISION	FILMED
10-18-96	REVISED ASTM REF. TO AASHTO	
5-15-80	REVISED DISTANCE BETWEEN MULTIPLE R.C.P. F.E.S.	664-5-15-80
7-14-78	C.M. ARCH SIZES TO CONFORM WITH AASHTO SIZES	752-7-14-78
8-22-75	ADDED MULTIPLE PIPE CULVERTS	517-8-22-75
12-5-74	REMOVED NOTE RE REINF. FOR R.C. F.E.S.	500-12-5-74
5-24-73	CMP END SECTION, SHOW PIPE PAY LENGTH	627-5-24-73
10-2-72	REVISED AND REDRAWN	760-10-2-72

ARKANSAS STATE HIGHWAY COMMISSION

FLARED END SECTION

STANDARD DRAWING FES-2

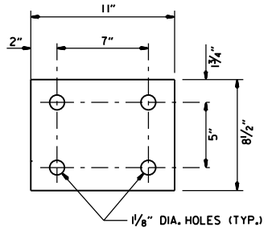

WASHER PLATE

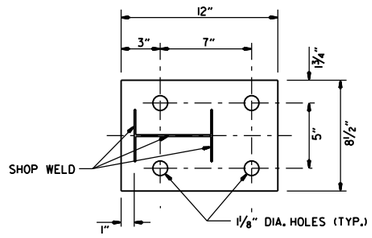

BASE PLATE

Note: Bolts, nuts, washers and plates shall be galvanized in accordance with Section 807 of the Standard Specifications.

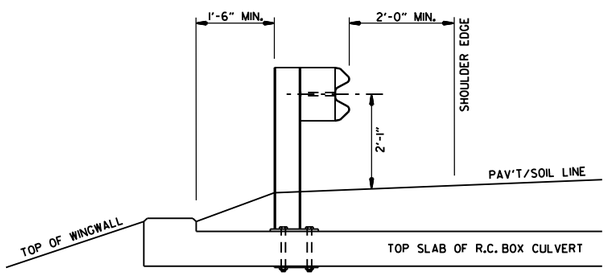

SECTION A-A

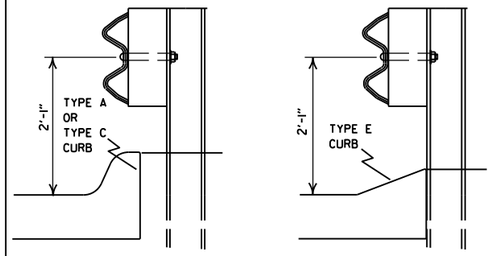

FOR DESIGN SPEEDS OF 50 MPH OR LESS

ALIGN FACE OF GUARDRAIL WITH FACE OF CURB.

FOR DESIGN SPEEDS OF 55 MPH OR MORE

PLACE GUARDRAIL POSTS AGAINST BACK OF CURB.

DETAIL OF GUARDRAIL PLACEMENT BEHIND CURB (W-BEAM)

FOR DESIGN SPEEDS OF 50 MPH OR LESS ALL CURB FACES, AS SHOWN ON STD. DRWG. CG-1, MAY BE USED. FOR DESIGN SPEEDS OF 55 MPH OR MORE TYPE "E" CURB FACE SHALL BE USED.

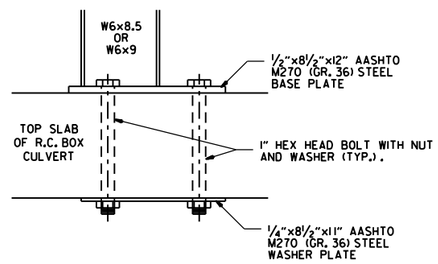

DETAIL OF CONNECTION

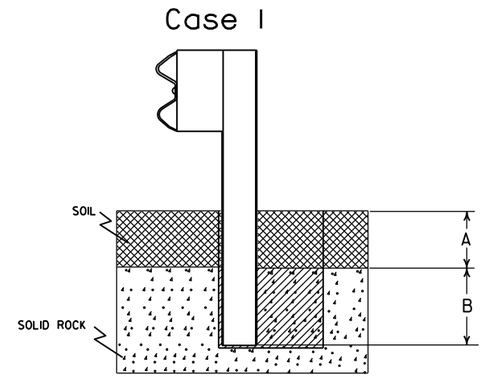

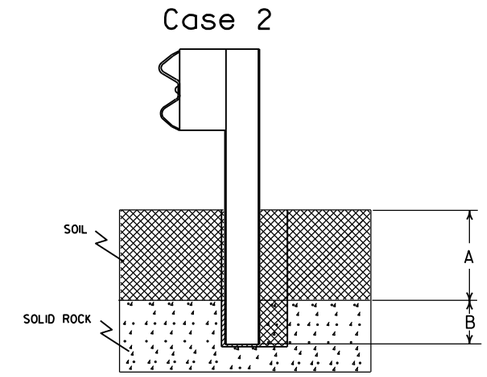

Plan View Steel Posts

Either hole configuration acceptable

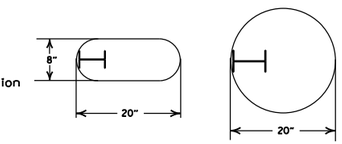

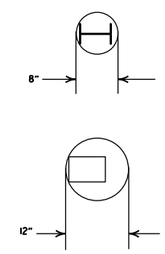

Plan View Wood Posts

Either hole configuration acceptable

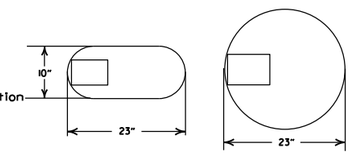

Notes: For overlying soil depths (A) ranging from 0 to 18", the depth of required drilling (B) is equal to 24".

Zone A:
Backfill according to Section 617.03(a).

Zone B:
Backfill hole in 6" lifts with material meeting the requirements of Section 802.02(c) - Alternate gradation. Compact to 95% maximum dry density per ASTM D-698.

Notes: For overlying soil depths (A) ranging from 18" to 44", the depth of required drilling (B) is equal to either 12" or 44" minus the depth of soil whichever is less.

Zone A & B:
Backfill according to Section 617.03(a).

DETAIL OF POST PLACEMENT IN SOLID ROCK (W-BEAM)

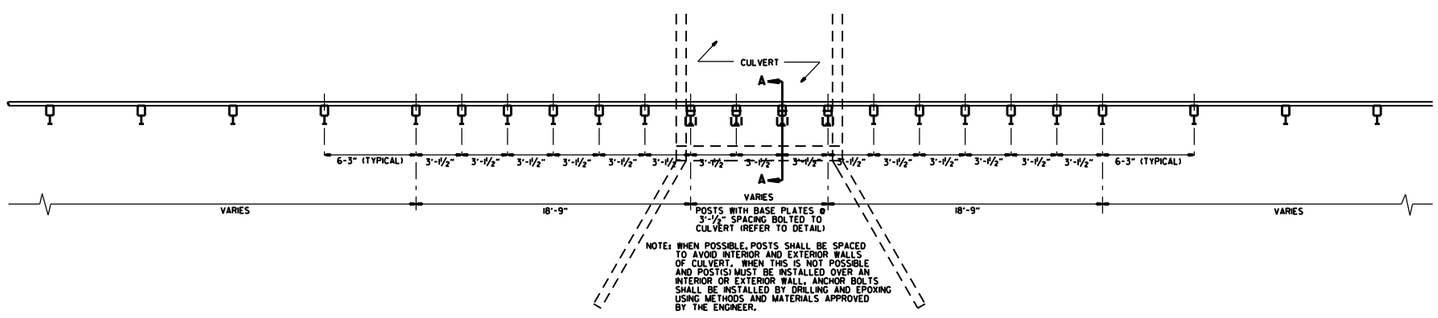

PLAN LAYOUT OF TYPE A GUARDRAIL AT LOW-FILL CULVERTS

NOTE: THIS DETAIL IS TO BE USED ONLY WHEN THE COVER OVER THE CULVERT DOES NOT PERMIT FULL EMBEDMENT OF GUARDRAIL POSTS AS SHOWN ON STD. DWG. GR-6.

DATE	REVISION	FILMED
11-07-19	RENUMBERED, RENAMED, REVISED REFERENCE	
11-16-17	REVISED GUARDRAIL HEIGHT	
07-14-10	RAISED HEIGHT OF GUARDRAIL 1"	
04-12-07	REVISED DETAIL OF GUARDRAIL PLACEMENT BEHIND CURB	
11-10-05	ADDED GUARDRAIL PLACEMENT BEHIND CURB; REVISED DETAIL OF CONNECTION	
11-18-04	REVISED POST PLACEMENT IN ROCK & CULVERT CONNECTION DETAILS. ADDED DETAIL FOR GUARDRAIL PLACEMENT AT LOW-FILL CULVERTS	
03-30-00	REMOVED CONCRETE INSERT ANCHOR	
08-12-98	CHANGED STEEL SPACER BLOCK TO WOOD BLOCKOUT. ADDED DET. OF GUARDRAIL CONNECTION TO R.C. BOX CULV'T., DELETED DET. OF STEEL LINE POST CONN. & ADDED DET. OF GUARDRAIL PLACE. BEHIND CURB & DET. OF POSTPLACE. IN SOLID ROCK	
04-03-96	PLACED ARROWS AT CUT STEEL WASHERS	4-3-96
10-18-96	REV. ASTM REF. TO AASHTO	
11-22-95	ADDED OPTIONAL HOLES	
06-02-94	REVISED ALTERNATE POST SIZE	
08-05-93	REVISED STEEL POST SIZE	
10-01-92	REDRAWN & REVISED	10-1-92
08-02-90	DEL. WASHER ON ANCHOR ASSEMBLY	8-2-90
07-15-88	CONFORMED TO 1988 SPECS	
03-04-88	REVISED ANCHOR NOTE	
10-30-87	REVISED ANCHOR ASSEMBLY	712-10-30-87
10-30-87	REVISED PLACEMENT BEHIND CURB	547-10-30-87
10-09-87	REDRAWN & REVISED	803-10-9-87

ARKANSAS STATE HIGHWAY COMMISSION

GUARDRAIL DETAILS

STANDARD DRAWING GR-7

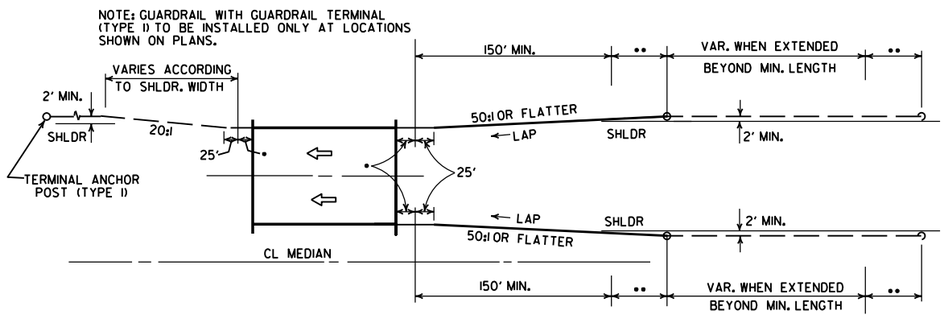

ONE-WAY TRAFFIC

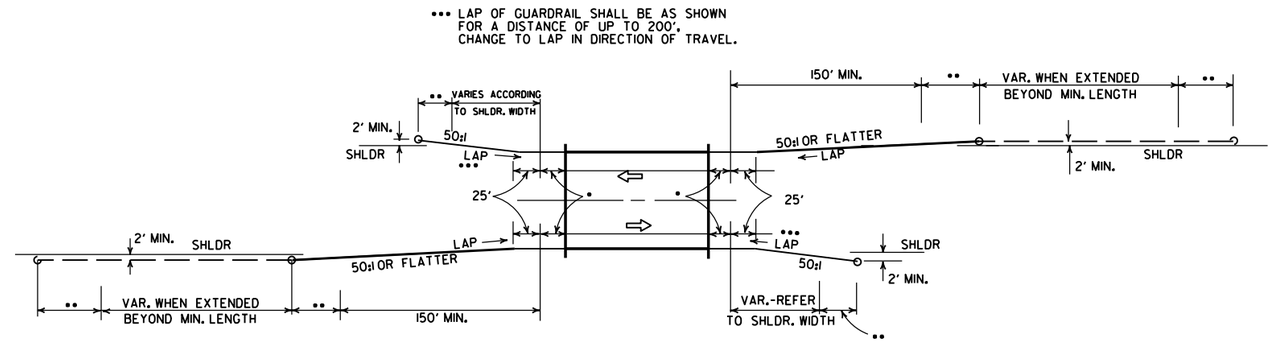

TWO-WAY TRAFFIC

METHODS OF INSTALLATION OF GUARDRAIL AT LESS THAN FULL SHOULDER WIDTH BRIDGES USING GUARDRAIL TERMINAL (TYPE 2)

••• LAP OF GUARDRAIL SHALL BE AS SHOWN FOR A DISTANCE OF UP TO 200'. CHANGE TO LAP IN DIRECTION OF TRAVEL.

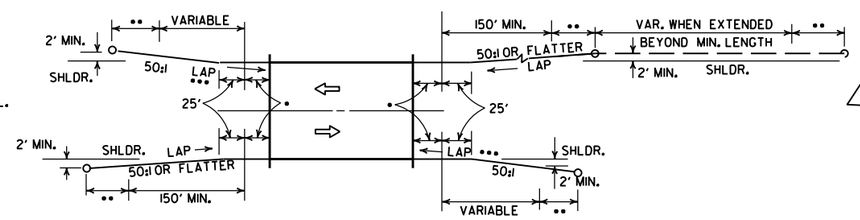

TWO-WAY TRAFFIC

NOTE: GUARDRAIL WITH GUARDRAIL TERMINAL (TYPE I) TO BE INSTALLED ONLY AT LOCATIONS SHOWN ON PLANS.

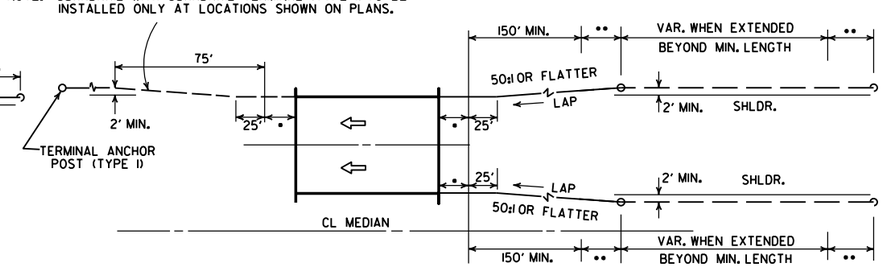

ONE-WAY TRAFFIC

METHOD OF INSTALLATION OF GUARDRAIL AT FULL SHOULDER WIDTH BRIDGES USING GUARDRAIL TERMINAL (TYPE 2)

••• LAP OF GUARDRAIL SHALL BE AS SHOWN FOR A DISTANCE OF UP TO 200'. CHANGE TO LAP IN DIRECTION OF TRAVEL.

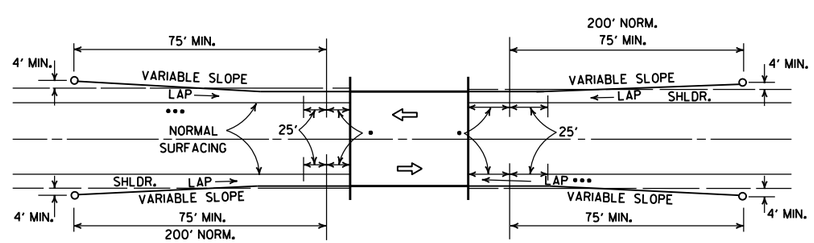

METHOD OF INSTALLATION OF GUARDRAIL USING GUARDRAIL TERMINAL (TYPE I) (FULL SHOULDER WIDTH OR LESS BRIDGES)

LEGEND

- • THRIE BEAM GUARDRAIL TERMINAL
- •• GUARDRAIL TERMINAL (TYPE 2)

DATE	REVISION	DATE FILM
11-07-19	RENUMBERED AND RENAMED	
4-17-08	REVISED LAYOUTS	
11-10-05	REMOVED GUARDRAIL NOTES AND DETAILS	
11-16-01	DELETED NOTE-METHOD OF INSTALLATION OF GUARDRAIL USING GUARDRAIL TERM. (TY. I)	
1-12-00	ADDED CONSTRUCTION NOTE	1-12-00
6-26-97	REVISED LAYOUT	
10-1-92	REDRAWN & REVISED	10-1-92
	ADDED NOTE	
10-9-87	REDRAWN & REVISED	

ARKANSAS STATE HIGHWAY COMMISSION

GUARDRAIL DETAILS

STANDARD DRAWING GR-8

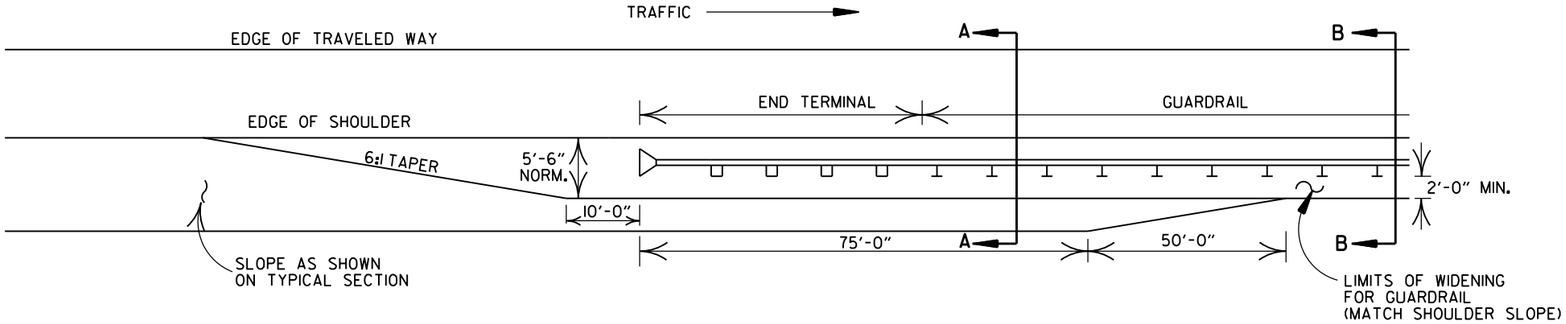

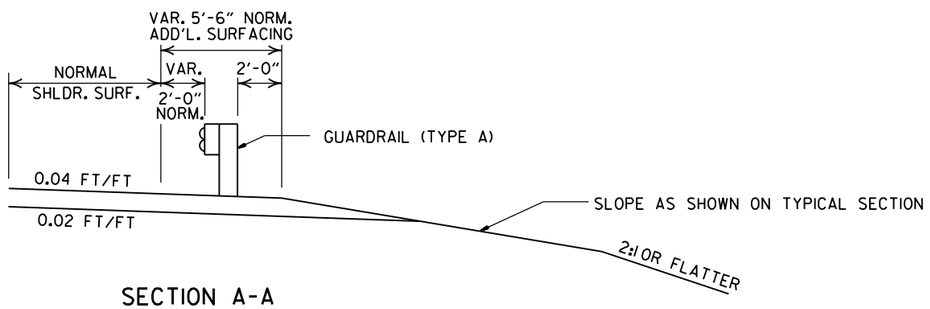

SECTION A-A

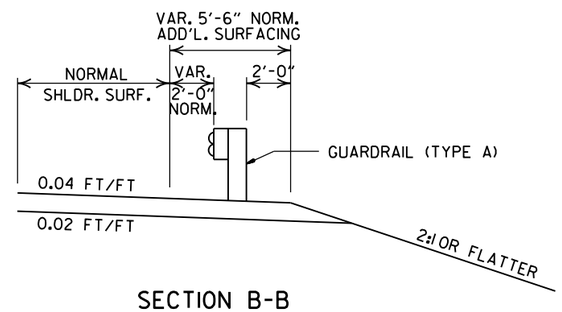

SECTION B-B

DETAILS OF WIDENING FOR GUARDRAIL

NOTE: NORMAL SECTION TO BE WIDENED APPROX. 5'-6" EACH SIDE TO SUPPORT GUARDRAIL.

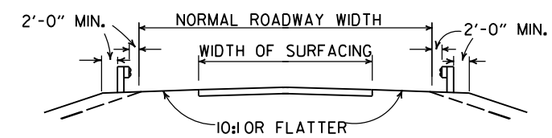

SECTION ON TANGENT

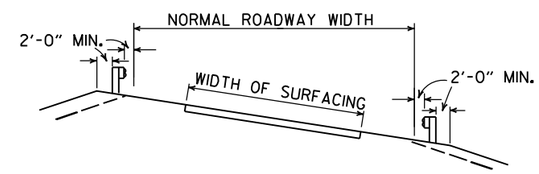

SECTION ON CURVE

DETAILS SHOWING POSITION OF GUARDRAIL ON HIGHWAY

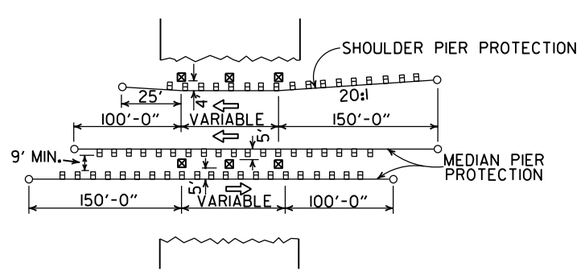

METHOD OF INSTALLATION OF GUARDRAIL AT FIXED OBSTACLE

DATE	REVISION	DATE FILM
11-07-19	RENUMBERED AND RENAMED	
4-17-08	MINOR REVISION	
11-10-05	DRAWN	

ARKANSAS STATE HIGHWAY COMMISSION

GUARDRAIL DETAILS

STANDARD DRAWING GR-9

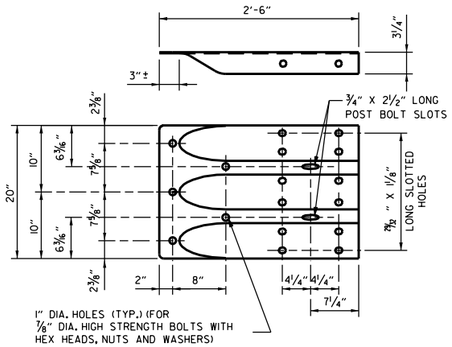

SPECIAL END SHOE

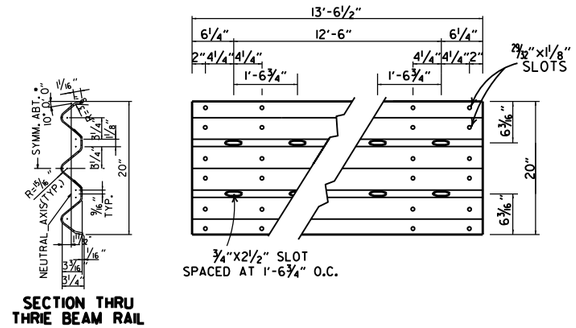

THRIE BEAM RAIL

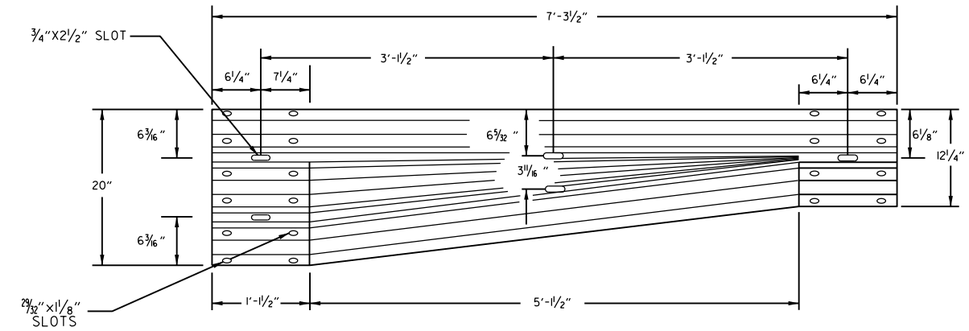

TRANSITION SECTION

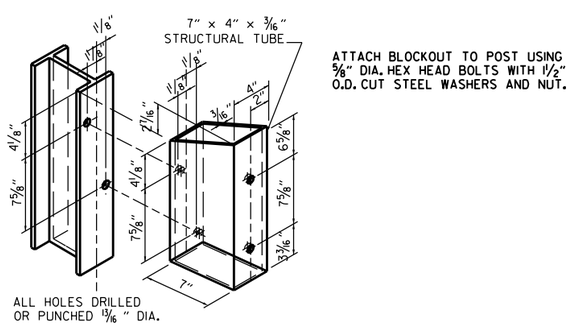

STRUCTURAL STEEL TUBING BLOCKOUT DETAIL

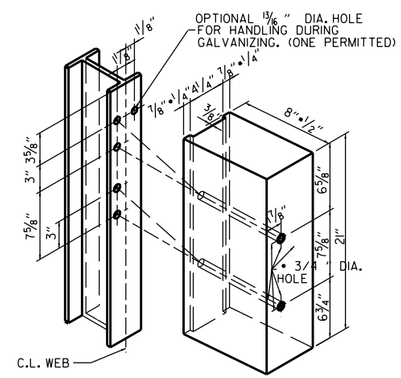

ALL HOLES 13/16" DIAMETER EXCEPT AS NOTED

HOLE PUNCHING DETAIL FOR STEEL POST & WOOD OR PLASTIC BLOCKOUTS

NOTE: BLOCKS SHALL BE THE SAME TYPE THROUGHOUT THE PROJECT LIMITS.

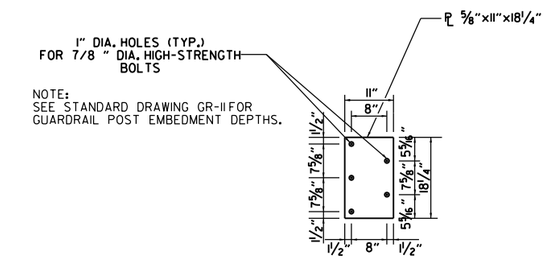

NOTE:
SEE STANDARD DRAWING GR-11 FOR GUARDRAIL POST EMBEDMENT DEPTHS.

CONNECTOR PLATE

CONNECTOR PLATE SHALL BE AASHTO M270, GR. 36 AND SHALL BE GALVANIZED AFTER FABRICATION. GALVANIZING SHALL CONFORM TO SUBSECTION 807.19 OF THE STANDARD SPECIFICATIONS. CONNECTOR PLATE TO BE BOLTED TO SPECIAL END SHOE USING 7/8" DIA. HIGH STRENGTH BOLTS, WITH THE HEADS PLACED ON THE TRAFFIC FACE. WASHERS SHALL BE USED UNDER THE HEAD AND NUT. BOLTS, NUTS AND WASHERS SHALL BE GALVANIZED AND SHALL CONFORM TO SUBSECTION 807.06.

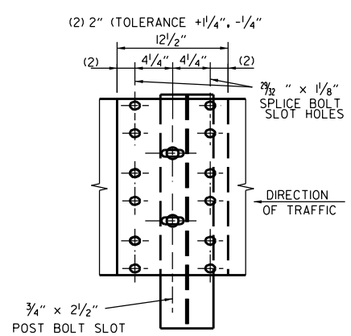

THRIE BEAM RAIL SPLICE AT POST

GENERAL NOTES:

THE THRIE BEAM RAIL, SPECIAL END SHOE, AND THE TRANSITION SECTION SHALL BE MADE OF STEEL AND SHALL BE 12 GAGE. ZINC COATING SHALL BE TYPE I.

RAIL POSTS SHALL BE SET PERPENDICULAR TO THE ROADWAY PROFILE GRADE AND VERTICALLY IN CROSS SECTION.

ALL BOLTS SHALL BE SUFFICIENT LENGTH TO EXTEND THROUGH THE FULL THICKNESS OF THE NUT AND NO MORE THAN 3*4" BEYOND IT.

ALL LAP SPLICES, INCLUDING SPECIAL END SHOES, SHALL BE MADE IN THE DIRECTION SHOWN ON STANDARD DRAWINGS GR-8 & GR-13.

REFER TO STD. DRWG. GR-11 FOR POST DETAILS.

USE THRIE BEAM GUARDRAIL COMPONENTS OF SAME MATERIAL FOR ENTIRE JOB.

THRIE BEAM POSTS SHALL BE SAME MATERIAL AS W-BEAM POSTS FOR ENTIRE JOB.

WOOD POSTS & WOOD BLOCKS SHALL BE EITHER DENSE NO. 1 STRUCTURAL OR BETTER 9.7f (1400 f) OR NO. 1 1350 f SOUTHERN PINE.

DATE	REVISION	FILMED
11-07-19	RENAMED AND REVISED REFERENCES	
11-16-17	REVISED TRANSITION SECTION, GUARD RAIL HEIGHT, AND GENERAL NOTES; MOVED THRIE BEAM GUARD RAIL CONNECTIONS AT BRIDGES ENDS TO STD. DRWG. GR-12	
07-14-10	RAISED HEIGHT OF W-BEAM 1"	
11-29-07	ADDED PLASTIC BLOCKOUTS	
11-10-05	ADDED NOTE FOR ATTACHING STEEL BLOCKOUT	
11-18-04	REVISED GENERAL NOTES	
10-9-03	REVISED GENERAL NOTES	
04-10-03	REVISED GENERAL NOTES	
08-22-02	REVISED NOTE (2)	
06-29-00	MOVED DIMENSION LINES	
05-18-00	ADDED NOTE	
03-30-00	DRAWN & ISSUED	

ARKANSAS STATE HIGHWAY COMMISSION

GUARDRAIL DETAILS

STANDARD DRAWING GR-10

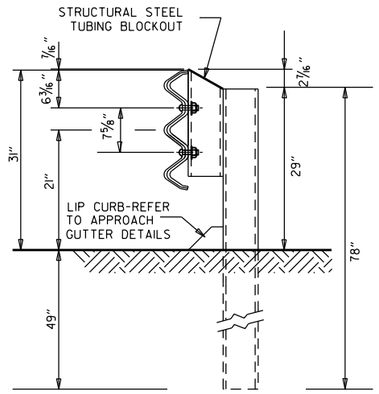

THRIE BEAM RAIL WITH STEEL TUBING BLOCKOUT
AND STEEL POST
POSTS 1-7

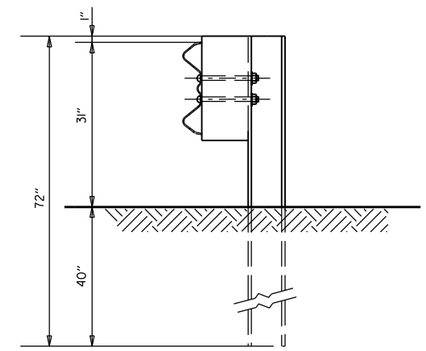

W-BEAM TO THRIE BEAM TRANSITION RAIL
WITH WOOD OR PLASTIC BLOCKOUT AND STEEL POST
POST 8

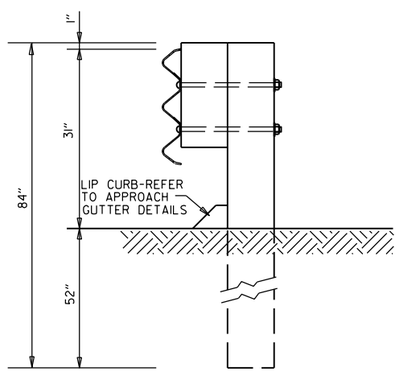

THRIE BEAM RAIL
WITH WOOD OR PLASTIC
BLOCKOUTS & WOOD POSTS
POSTS 1-6

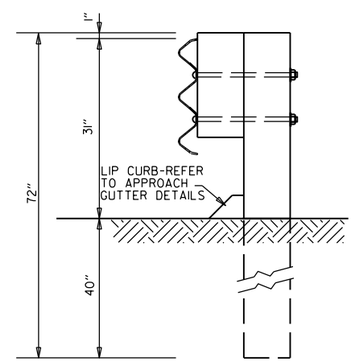

THRIE BEAM RAIL
WITH WOOD OR PLASTIC
BLOCKOUT & WOOD POST
POST 7

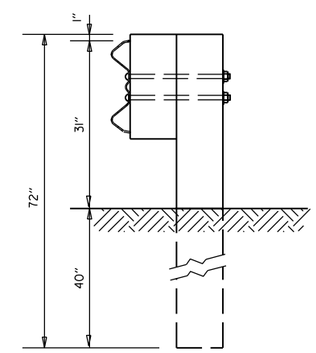

W-BEAM TO THRIE BEAM
TRANSITION RAIL WITH WOOD OR
PLASTIC BLOCKOUT & WOOD POST
POST 8

GENERAL NOTES:

RAIL POSTS SHALL BE SET PERPENDICULAR TO THE ROADWAY PROFILE GRADE AND VERTICALLY IN CROSS SECTION.

WOOD POSTS & WOOD BLOCKS SHALL BE EITHER DENSE NO. 1 STRUCTURAL OR BETTER 9.7f (1400 f) OR NO. 1 1350 f SOUTHERN PINE.

DATE	REVISION	FILMED
11-07-19	RENAMED	
11-16-17	REVISED GUARDRAIL HEIGHT, CHANGED STD. DWG. NUMBER FROM GR-10A TO GR-11	
07-14-10	REVISED POST 8 DIMENSIONS	
11-29-07	ADDED PLASTIC BLOCKOUTS	
08-22-02	REVISED LIP CURB NOTE	
03-30-00	DRAWN & ISSUED	

ARKANSAS STATE HIGHWAY COMMISSION

GUARDRAIL DETAILS

STANDARD DRAWING GR-11

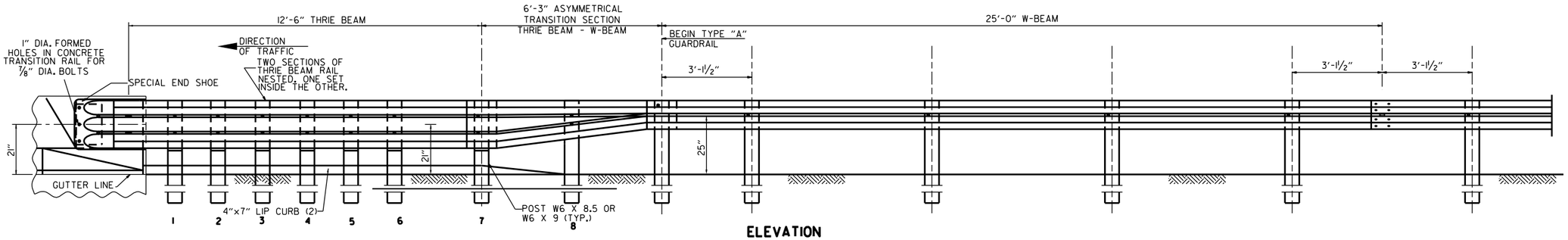

ELEVATION

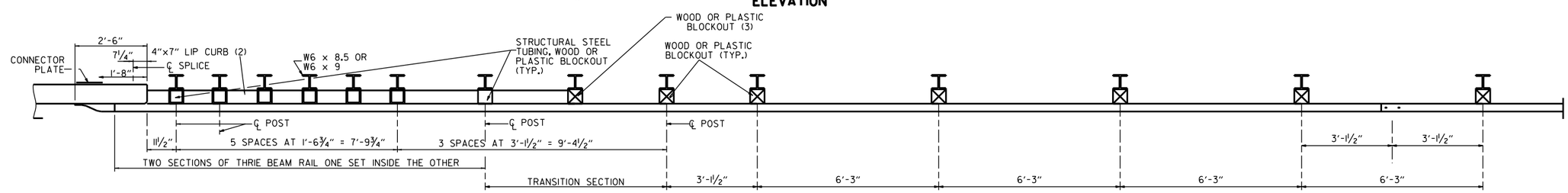

PLAN

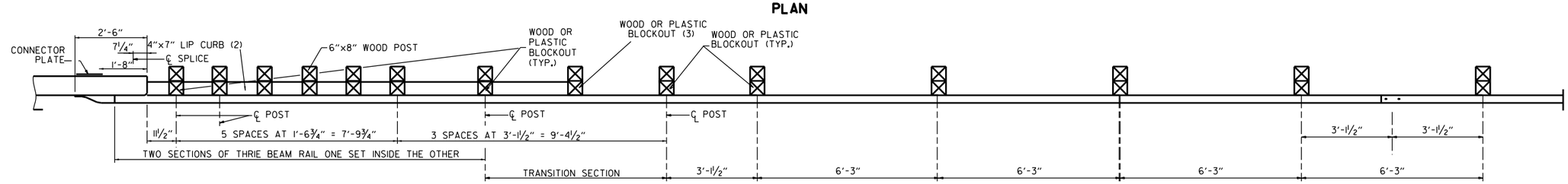

PLAN

(1) VERIFY BOLT SPACING FROM RAIL TRANSITION PRODUCER.
(2) REFER TO APPROACH GUTTER DETAILS.
(3) LENGTH OF BLOCKOUT ON POST 8 TO BE MODIFIED TO FIT RAIL WIDTH.

THRIE BEAM GUARDRAIL CONNECTION AT BRIDGE ENDS

GENERAL NOTES:

THE THRIE BEAM RAIL, SPECIAL END SHOE, AND THE TRANSITION SECTION SHALL BE MADE OF STEEL AND SHALL BE 12 GAGE. ZINC COATING SHALL BE TYPE I.

RAIL POSTS SHALL BE SET PERPENDICULAR TO THE ROADWAY PROFILE GRADE AND VERTICALLY IN CROSS SECTION.

ALL BOLTS SHALL BE SUFFICIENT LENGTH TO EXTEND THROUGH THE FULL THICKNESS OF THE NUT AND NO MORE THAN 3/4" BEYOND IT.

ALL LAP SPLICES, INCLUDING SPECIAL END SHOES, SHALL BE MADE IN THE DIRECTION SHOWN ON STANDARD DRAWINGS GR-8 & GR-13.

REFER TO STD. DRWG. GR-11 FOR POST DETAILS.

USE THRIE BEAM GUARDRAIL COMPONENTS OF SAME MATERIAL FOR ENTIRE JOB.

THRIE BEAM POSTS SHALL BE SAME MATERIAL AS W-BEAM POSTS FOR ENTIRE JOB.

POSTS SHALL NOT BE PLACED AT SPLICE LOCATIONS ALONG W-BEAM RAILS.

WOOD POSTS & WOOD BLOCKS SHALL BE EITHER DENSE NO. 1 STRUCTURAL OR BETTER 9.7f (1400 f) OR NO. 1 1350 f SOUTHERN PINE.

DATE	REVISION	FILMED
05-14-20	REVISED NOTES	
11-07-19	RENAMED & REVISED REFERENCES	
11-16-17	RE-DRAWN FROM STD. DWG. GR-10 & ISSUED	

ARKANSAS STATE HIGHWAY COMMISSION

GUARDRAIL DETAILS

STANDARD DRAWING GR-12

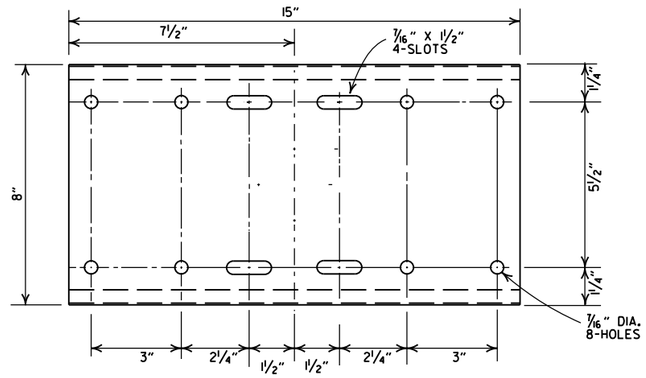

SHELF

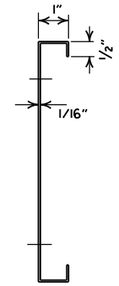

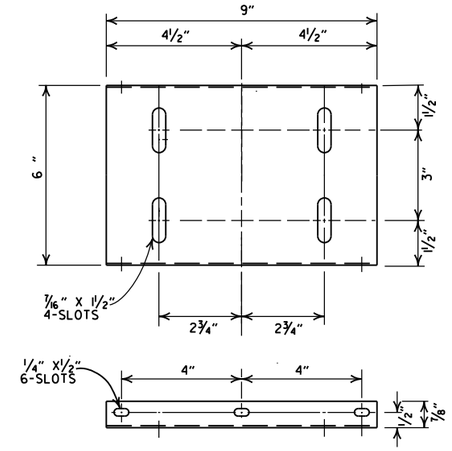

PLATFORM

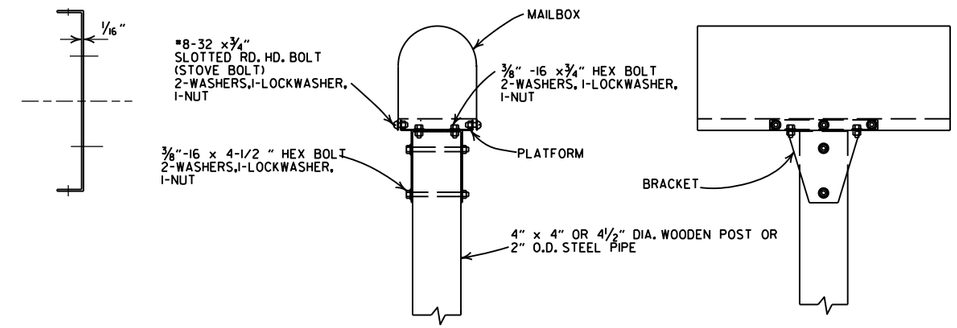

SINGLE INSTALLATION

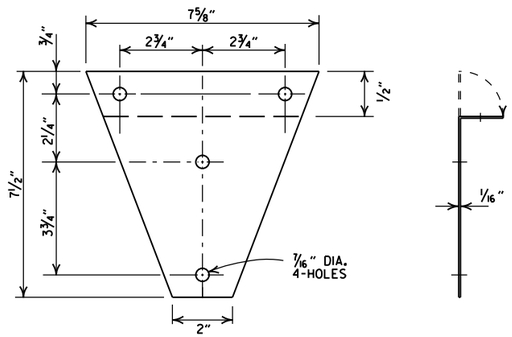

BRACKET

GENERAL NOTES

1. MAILBOX POSTS MAY BE WOOD OR METAL. WOOD POSTS SHALL BE PRESSURE TREATED FOR GROUND CONTACT IN ACCORDANCE WITH SECTION 637.02 OF THE STANDARD SPECIFICATIONS.
2. ANTI-TWIST PLATES SHALL BE USED ONLY ON METAL POSTS.
3. MAILBOX SHELF, BRACKET & PLATFORM SHALL BE GALVANIZED OR PAINTED STEEL, HOWEVER TREATED WOOD MAY BE USED WITH WOODEN POSTS. THE WOODEN SHELF, BRACKET & PLATFORM SHALL BE A MINIMUM OF ¾" THICK AND SHALL BE ASSEMBLED WITH BOLTS OF THE APPROPRIATE LENGTH WITH SIX 8 X ¾" FLATHEAD WOOD SCREWS USED TO ATTACH THE MAILBOX TO THE PLATFORM.
4. THE MAILBOX SHELF AND PLATFORM THAT IS SHOWN IS FOR STANDARD SIZE MAILBOXES. THE SHELF AND PLATFORM SIZE SHALL BE MODIFIED TO FIT MAILBOXES OF A DIFFERENT SIZE.
5. METAL PIPE FOR MAILBOX SUPPORT SHALL BE 2" OUTSIDE DIAMETER STEEL WITH A WALL THICKNESS OF 0.145" AND A WEIGHT OF 2.72 LBS PER FT. OUTSIDE DIAMETER AND WEIGHT SHALL HAVE A TOLERANCE OF +/- 5% ACCORDING TO AASHTO M 181.
6. MAILBOX SUPPORT SYSTEM DIFFERING FROM THOSE SHOWN MAY BE USED, PROVIDED THEY ARE ON THE ARDOT QUALIFIED PRODUCTS LIST FOR MAILBOX SUPPORTS.

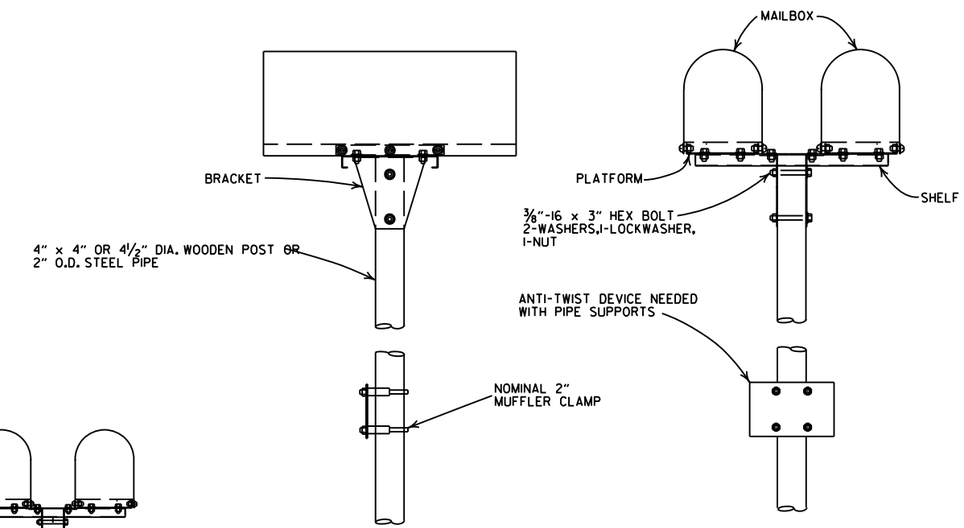

DOUBLE INSTALLATION

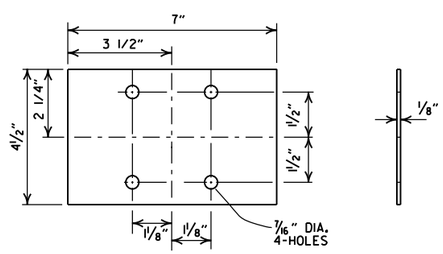

ANTI-TWIST PLATE

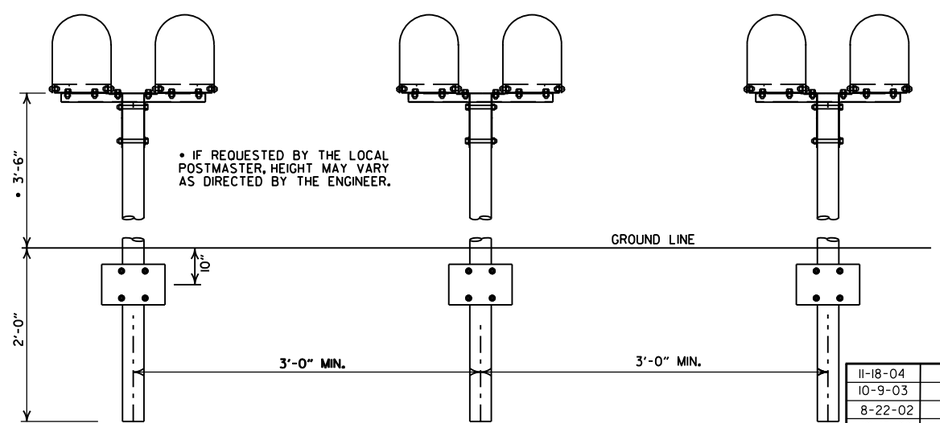

SPACING FOR MULTIPLE POST INSTALLATION

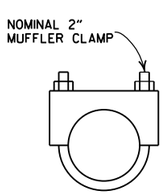

CLAMP

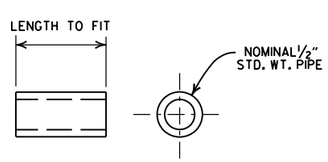

SPACER

DATE	FILMED	REVISION
11-18-04		REVISED NOTES
10-9-03		REVISED NOTE 6
8-22-02		REVISED NOTE 6
10-18-96		CORRECTED AASHTO
10-1-92		CORRECTED SPELLING
9-26-91		NEW PHONE NUMBER
8-15-91		ADDED NOTE
11-30-89		ADJUSTED HEIGHT & ADDED NOTE
2-16-89		DELETED SLOTS FROM SHELF & PLTF
11-17-88	10-1-92	ADJUSTED DIMENSIONS OF STEEL POSTS
7-15-88	20-7-15-88	ISSUED

ARKANSAS STATE HIGHWAY COMMISSION

MAILBOX DETAILS

STANDARD DRAWING MB-1

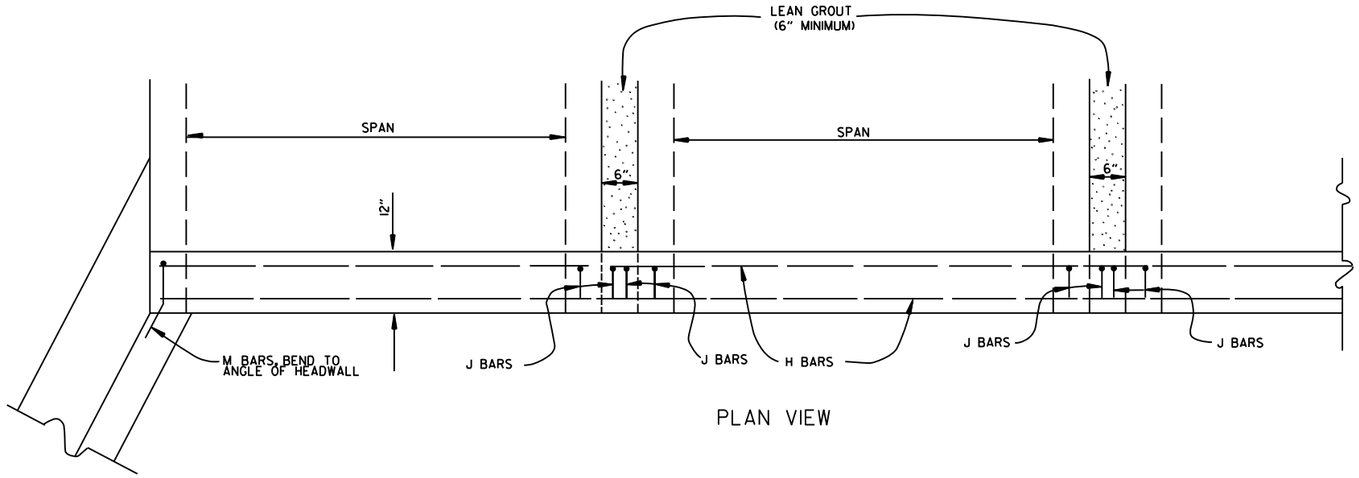

PLAN VIEW

BAR LIST

BAR	NO.	SIZE	LENGTH	BAR BENDING DIAGRAM
H	2	#4	•	
I	•	#4	•	
J	•	#4	1'-5"	
L	•	#4	3'-2"	
M	•	#4	1'-8"	

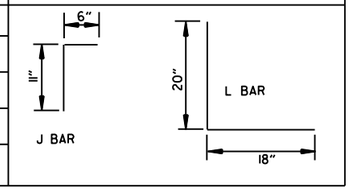

• NOTE: LENGTH AND NUMBER OF BARS VARIES WITH SIZE OF CULVERT

GENERAL NOTES

WINGS, CURTAIN WALLS AND APRONS SHALL BE TIED TO THE PRECAST CULVERT SECTION BY CASTING BARS IN CULVERT END SECTIONS AS SHOWN OR BY DOWELING AND GROUTING. J BARS AND M BARS SHALL BE EMBEDDED A MINIMUM OF 10" IN PRECAST BOX.

WINGS, FOOTINGS, APRONS AND CURTAIN WALLS SHALL BE CONSTRUCTED IN ACCORDANCE WITH THE APPLICABLE WING DRAWING. STEEL AND CONCRETE QUANTITIES WILL BE ADJUSTED TO FIT THE IN-PLACE WIDTH & HEIGHT OF THE PRECAST CONCRETE BOX CULVERTS.

ALL EXPOSED CORNERS TO HAVE ¾" CHAMFERS.

WINGWALLS AND FOOTINGS MAY BE ADJUSTED IN THE FIELD AS DIRECTED BY THE ENGINEER.

ALL CONCRETE, REINFORCING STEEL, LEAN GROUT, MEMBRANE WATERPROOFING, DRAINAGE FILL MATERIAL, GEOTEXTILE FILTER FABRIC, LABOR, MATERIALS AND EQUIPMENT REQUIRED FOR INSTALLING PRECAST BOX CULVERTS WILL NOT BE PAID FOR DIRECTLY BUT WILL BE CONSIDERED TO BE INCLUDED IN THE PRICE BID FOR THE ITEMS AS SPECIFIED IN SECTION 607 OF THE STANDARD SPECIFICATIONS.

LEAN GROUT SHALL CONSIST OF A SAND CEMENT MIXTURE MEETING THE FOLLOWING REQUIREMENTS:
PORTLAND CEMENT SHALL BE TYPE I AND SHALL MEET THE REQUIREMENTS OF AASHTO M 85.
SAND SHALL MEET THE REQUIREMENTS OF FINE AGGREGATE AS SPECIFIED IN SECTION 802.02 OF THE STANDARD SPECIFICATIONS.
THE SAND CEMENT MIXTURE SHALL CONSIST OF NOT LESS THAN 1.5 SACKS OF PORTLAND CEMENT PER TON OF MATERIAL MIXTURE.
THE MIXTURE SHALL CONTAIN SUFFICIENT WATER TO HYDRATE THE CEMENTS. THE SAND CEMENT MIXTURE SHALL BE PLACED IN MAXIMUM 8 INCH THICK LIFTS, LOOSE MEASURE, AND THOROUGHLY RODDED AND TAMPED AROUND BOX TO THOROUGHLY FILL ALL VOIDS.

MEMBRANE WATERPROOFING CONFORMING TO THE REQUIREMENTS OF SECTION 815 OF THE STANDARD SPECIFICATIONS SHALL BE APPLIED TO ALL BOX CULVERT JOINTS.

THE MEMBRANE WATERPROOFING WILL BE REQUIRED ON THE TOP EXTERNAL JOINT AND SHALL EXTEND 1 FOOT DOWN THE SIDES OF THE CULVERT.

IN OUTER BARRELS, ONE WEEP HOLE IS REQUIRED IN EXTERIOR WALLS OF EACH PRECAST CULVERT SECTION. WEEP HOLES SHALL HAVE A MAXIMUM HORIZONTAL SPACING OF 10'-0" IN THE ASSEMBLED CULVERT AND SHALL BE SPACED TO CLEAR ALL REINFORCING STEEL. THE DRAIN OPENING SHALL BE 4" DIAMETER AND SHALL BE PLACED 12" ABOVE THE TOP OF THE BOTTOM SLAB.

DRAINAGE FILL MATERIAL WITH GEOTEXTILE FABRIC IS REQUIRED AT THE EXTERIOR WALLS OF THE ASSEMBLED CULVERT, SEE DETAILS ON THIS DRAWING.

MINIMUM WIDTH SHALL BE 12" (6" ON EACH SIDE OF JOINT). ON MULTIPLE BARREL CULVERTS, MEMBRANE WATERPROOFING SHALL BE APPLIED TO EACH BARREL AS DESCRIBED ABOVE.

WITH THE APPROVAL OF THE ENGINEER, THE CONTRACTOR WILL BE ALLOWED TO SUBSTITUTE, AT NO ADDITIONAL COST TO THE DEPARTMENT, FLOWABLE SELECT MATERIAL CONFORMING TO SECTION 206 OF THE STANDARD SPECIFICATIONS IN LIEU OF LEAN GROUT.

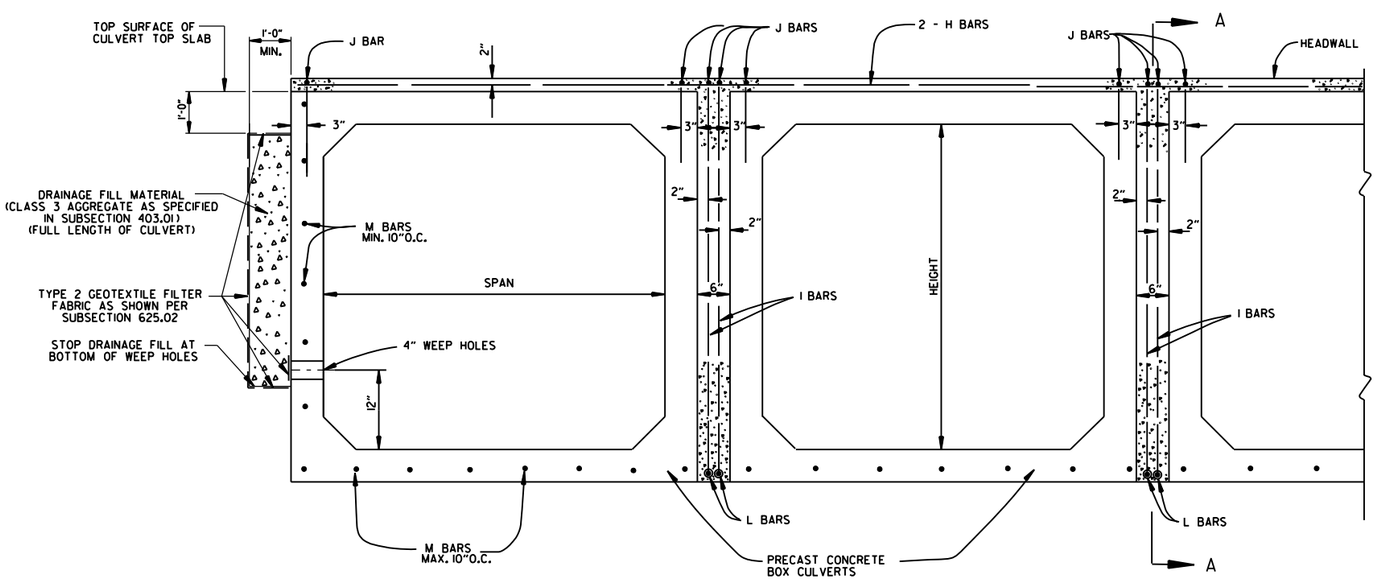

END VIEW

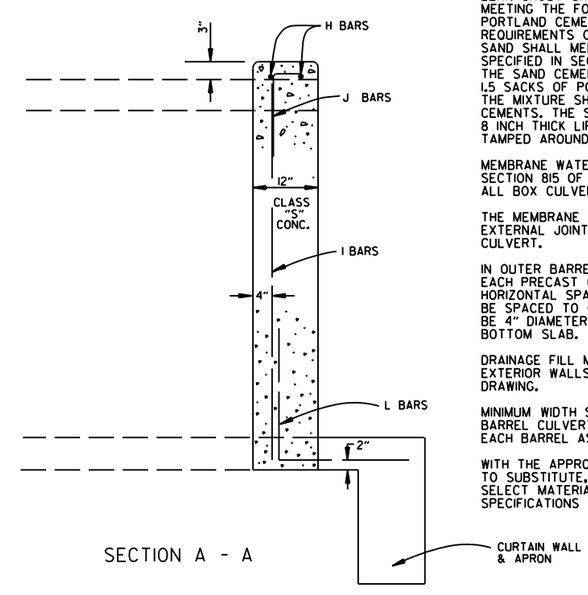

SECTION A - A

DATE	REVISION	DATE FILMED
1-28-15	REVISED GEOTEXTILE FABRIC PLACEMENT	
12-15-11	ADDED NOTE & DTLS FOR WEEP HOLE AND DRAINAGE FILL	
10-15-09	ADDED GENERAL NOTE	
11-10-05	REVISED SPACING OF "M" BARS	
4-10-03	REVISED GENERAL NOTES	
10-18-96	CORRECTED AASHTO REF.	
10-1-92	ADDED NOTE FOR MEMBRANE WATERPROOFING	
8-15-91	ADDED NOTE FOR LEAN GROUT	
11- 8-90	REVISED FOR 1991 SPECS	
11-30-89	ISSUED: JABE	

ARKANSAS STATE HIGHWAY COMMISSION

PRECAST CONCRETE BOX CULVERTS

STANDARD DRAWING PBC-1

REINFORCED CONCRETE ARCH PIPE DIMENSIONS

EQUIV. DIA.	SPAN		RISE	
	AASHTO M 206	ARDOT NOMINAL	AASHTO M 206	ARDOT NOMINAL
INCHES	INCHES			
15	18	18	11	11
18	22	22	13½	14
21	26	26	15½	16
24	28½	29	18	18
30	36¼	36	22½	23
36	43⅜	44	26⅝	27
42	51⅛	51	31⅝	31
48	58½	59	36	36
54	65	65	40	40
60	73	73	45	45
72	88	88	54	54
84	102	102	62	62
90	115	115	72	72
96	122	122	77½	77
108	138	138	87⅛	87
120	154	154	96⅞	97
132	168¾	169	106½	107

THE MEASURED SPAN AND RISE SHALL NOT VARY MORE THAN ± 2 PERCENT FROM THE VALUES SPECIFIED BY AASHTO M206.

REINFORCED CONCRETE HORIZONTAL ELLIPTICAL PIPE DIMENSIONS

EQUIV. DIA.	AASHTO M 207	
	SPAN	RISE
INCHES	INCHES	
18	23	14
24	30	19
27	34	22
30	38	24
33	42	27
36	45	29
39	49	32
42	53	34
48	60	38
54	68	43
60	76	48
66	83	53
72	91	58
78	98	63
84	106	68

THE MEASURED SPAN AND RISE SHALL NOT VARY MORE THAN ± 2 PERCENT FROM THE VALUES SPECIFIED BY AASHTO M207.

CONSTRUCTION SEQUENCE

1. PLACE STRUCTURAL BEDDING MATERIAL TO GRADE. DO NOT COMPACT.
2. INSTALL PIPE TO GRADE.
3. COMPACT STRUCTURAL BEDDING OUTSIDE THE MIDDLE THIRD OF THE PIPE.
4. PLACE AND COMPACT THE HAUNCH AREA UP TO THE MIDDLE OF THE PIPE.
5. COMPLETE BACKFILL ACCORDING TO SUBSECTION 606.03.(f)(1).

NOTE: HAUNCH AND STRUCTURAL BEDDING MATERIAL WILL NOT BE PAID FOR SEPARATELY, BUT COMPENSATION WILL BE CONSIDERED TO BE INCLUDED IN THE PRICE BID PER LINEAR FOOT OF CONCRETE PIPE.

- LEGEND -

D_1 = NORMAL INSIDE DIAMETER OF PIPE
D_O = OUTSIDE DIAMETER OF PIPE
H = FILL COVER HEIGHT OVER PIPE (FEET)
MIN. = MINIMUM
= UNDISTURBED SOIL

INSTALLATION TYPE	MATERIAL REQUIREMENTS FOR HAUNCH AND STRUCTURAL BEDDING
TYPE 1	AGGREGATE BASE COURSE (CLASS 5 OR CLASS 7)
TYPE 2	SELECTED MATERIALS (CLASS SM-1, SM-2, OR SM-4) OR TYPE 1 INSTALLATION MATERIAL*
TYPE 3**	AASHTO CLASSIFICATION A-1 THRU A-6 SOIL OR TYPE 1 OR 2 INSTALLATION MATERIAL

* SM-3 WILL NOT BE ALLOWED.

** MATERIALS SHALL NOT INCLUDE ORGANIC MATERIALS OR STONES LARGER THAN 3 INCHES.

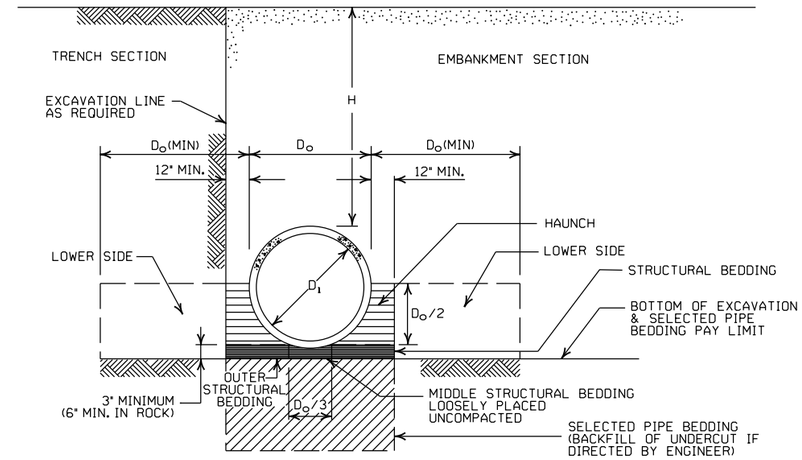

EMBANKMENT AND TRENCH INSTALLATIONS

1. MATERIAL IN THE HAUNCH AND OUTER STRUCTURAL BEDDING SHALL BE COMPACTED TO 95% OF THE MAXIMUM DENSITY ACCORDING TO THE TYPE OR CLASS OF MATERIAL USED.
2. FOR TRENCHES WITH WALLS OF NATURAL SOIL, THE DENSITY OF THE SOIL IN THE LOWER SIDE ZONE SHALL BE AS FIRM AS THE 95% DENSITY REQUIRED FOR THE HAUNCH. IF THE EXISTING SOIL DOES NOT MEET THIS CRITERIA, IT SHALL BE REMOVED AND RECOMPACTED TO 95% OF THE MAXIMUM DENSITY ACCORDING TO THE TYPE OF MATERIAL USED.
3. FOR EMBANKMENTS, THE MATERIAL IN THE LOWER SIDE ZONE SHALL BE COMPACTED TO 95% OF THE MAXIMUM DENSITY ACCORDING TO THE TYPE OR CLASS OF MATERIAL USED.

MINIMUM HEIGHT OF FILL "H" OVER CIRCULAR R.C. PIPE CULVERTS

	CLASS OF PIPE			
	CLASS III		CLASS IV	CLASS V
INSTALLATION TYPE	TYPE 1 OR 2	TYPE 3	ALL	ALL
PIPE ID (IN.)	FEET			
12-15	2	2.5	2	1
18-24	2.5	3	2	1
27-33	3	4	2	1
36-42	3.5	5	2	1
48	4.5	5.5	2	1
54-60	5	7	2	1
66-78	6	8	2	1
84-108	7.5	8	2	1

NOTE: FOR MINIMUM COVER VALUES, "H" SHALL INCLUDE A MINIMUM OF 12" OF PAVEMENT AND/OR BASE.

MAXIMUM HEIGHT OF FILL "H" OVER CIRCULAR R.C. PIPE CULVERTS

INSTALLATION TYPE	CLASS OF PIPE		
	CLASS III	CLASS IV	CLASS V
	FEET		
TYPE 1	21	32	50
TYPE 2	16	25	39
TYPE 3	12	20	30

NOTE: IF FILL HEIGHT EXCEEDS 50 FEET, A SPECIAL DESIGN CONCRETE PIPE WILL BE REQUIRED USING TYPE 1 INSTALLATION.

MINIMUM HEIGHT OF FILL "H" OVER R.C. ARCH & HORIZONTAL ELLIPTICAL PIPE CULVERTS

INSTALLATION TYPE	CLASS OF PIPE	
	CLASS III	CLASS IV
	FEET	
TYPE 2 OR TYPE 3	2.5	1.5

NOTE: TYPE 1 INSTALLATION WILL NOT BE ALLOWED FOR ARCH & HORIZONTAL ELLIPTICAL PIPE CULVERTS.

NOTE: FOR MINIMUM COVER VALUES, "H" SHALL INCLUDE A MINIMUM OF 12" OF PAVEMENT AND/OR BASE.

MAXIMUM HEIGHT OF FILL "H" OVER R.C. ARCH & HORIZONTAL ELLIPTICAL PIPE CULVERTS

INSTALLATION TYPE	CLASS OF PIPE	
	CLASS III	CLASS IV
	FEET	
TYPE 2	13	21
TYPE 3	10	16

NOTE: TYPE 1 INSTALLATION WILL NOT BE ALLOWED FOR ARCH & HORIZONTAL ELLIPTICAL PIPE CULVERTS.

GENERAL NOTES

1. CONCRETE PIPE CULVERT CONSTRUCTION SHALL CONFORM TO ARKANSAS DEPARTMENT OF TRANSPORTATION STANDARD SPECIFICATIONS FOR HIGHWAY CONSTRUCTION (CURRENT EDITION), WITH APPLICABLE SUPPLEMENTAL SPECIFICATIONS AND SPECIAL PROVISIONS. UNLESS OTHERWISE NOTED IN THE PLANS, SECTION AND SUBSECTION REFER TO THE STANDARD CONSTRUCTION SPECIFICATIONS.
2. CONCRETE PIPE CULVERT DESIGN SHALL CONFORM TO AASHTO LRFD BRIDGE DESIGN SPECIFICATIONS, FIFTH EDITION (2010) WITH 2010 INTERIMS.
3. ALL PIPE SHALL CONFORM TO SECTION 606. CIRCULAR R.C. PIPE CULVERTS SHALL CONFORM TO AASHTO M170. R.C. ARCH PIPE CULVERTS SHALL CONFORM TO AASHTO M206 AND HORIZONTAL ELLIPTICAL PIPE CULVERTS SHALL CONFORM TO AASHTO M207.
4. ALL PIPE SHALL BE PROTECTED DURING CONSTRUCTION BY A COVER SUFFICIENT TO PREVENT DAMAGE FROM PASSAGE OF EQUIPMENT.
5. THE MINIMUM TRENCH WIDTH SHALL BE THE OUTSIDE DIAMETER OF THE PIPE PLUS 24 INCHES. THE MAXIMUM ALLOWABLE TRENCH WIDTH SHALL BE THE MINIMUM WIDTH PRACTICABLE FOR WORKING CONDITIONS.
6. MULTIPLE PIPE CULVERTS SHALL BE INSTALLED WITH A MINIMUM CLEARANCE OF 24 INCHES BETWEEN STRINGS OF PIPE. REFER TO STD. DWG. FES-2 FOR MINIMUM CLEARANCE WHERE FLARED END SECTIONS ARE USED.
7. IMPERVIOUS MATERIAL SHOULD BE PLACED AS DIRECTED BY THE ENGINEER AT THE ENDS OF THE CULVERT TO PREVENT LOSS OF STRUCTURAL BEDDING WHEN PERVIOUS MATERIAL IS USED FOR STRUCTURAL BEDDING AND/OR BACKFILL.
8. NOT MORE THAN ONE LIFTING HOLE MAY BE PROVIDED IN CONCRETE PIPE TO FACILITATE HANDLING. HOLE MAY BE CAST IN PLACE, CUT INTO THE FRESH CONCRETE AFTER FORMS ARE REMOVED, OR DRILLED. THE HOLE SHALL NOT BE MORE THAN TWO INCHES IN DIAMETER OR TWO INCHES SQUARE. CUTTING OR DISPLACEMENT OF REINFORCEMENT WILL NOT BE PERMITTED. SPALLED AREAS AROUND THE HOLE SHALL BE REPAIRED IN A WORKMANLIKE MANNER. LIFTING HOLE SHALL BE FILLED WITH MORTAR, CONCRETE, OR OTHER METHOD AS APPROVED BY THE ENGINEER.
9. WHEN DIRECTED BY THE ENGINEER, UNSUITABLE MATERIAL THAT IS ENCOUNTERED AT THE BOTTOM OF THE EXCAVATED TRENCH (BELOW THE AREA IDENTIFIED AS "STRUCTURAL BEDDING" ABOVE) WILL BE EXCAVATED AND REPLACED WITH SELECTED PIPE BEDDING. THE QUANTITY OF MATERIAL REQUIRED TO BACKFILL THE UNDERCUT AREA UP TO THE SELECTED PIPE BEDDING PAY LIMIT DESIGNATED ABOVE WILL BE MEASURED AND PAID FOR AS "SELECTED PIPE BEDDING."
10. WHEN THE EXISTING MATERIAL EXCAVATED FOR THE PIPE TRENCH IS DETERMINED BY THE ENGINEER TO BE UNSUITABLE FOR BACKFILLING THE PIPE (ABOVE THE AREA IDENTIFIED ABOVE AS THE HAUNCH), BORROW MATERIAL OR MATERIAL FROM THE ROADWAY EXCAVATION WILL BE USED TO BACKFILL THE PIPE. IF SUITABLE MATERIAL IS NOT AVAILABLE, THE ENGINEER MAY AUTHORIZE THE USE OF "SELECTED PIPE BACKFILL."

DATE	REVISION	DATE FILMED
2-27-14	REVISED GENERAL NOTE 1.	
12-15-11	REVISED FOR LRFD DESIGN SPECIFICATIONS	
5-18-00	REVISED TYPE 3 BEDDING & ADDED NOTE	
3-30-00	REVISED INSTALLATIONS	
11-06-97	ISSUED	

ARKANSAS STATE HIGHWAY COMMISSION

CONCRETE PIPE CULVERT FILL HEIGHTS & BEDDING

STANDARD DRAWING PCC-1

CORRUGATED STEEL PIPE (ROUND)

PIPE DIAMETER (INCHES)	① MINUMUM COVER TOP OF PIPE TO TOP OF GROUND "H" (FEET)	MAX. FILL HEIGHT "H" ABOVE TOP OF PIPE (FEET)				
		METAL THICKNESS (INCHES)				
		0.064	0.079	0.109	0.138	0.168
2⅔ INCH BY ½ INCH CORRUGATION RIVETED, WELDED, OR HELICAL LOCK-SEAM						
12	1	84	91			
15	1	67	73			
18	1	56	61			
24	1	42	46	59		
30	2	34	36	47		
36	2		30	39	41	
42	2		43	67	70	73
48	2		37	58	61	64
② 3 INCH BY 1 INCH OR 5 INCH BY 1 INCH CORRUGATION RIVETED, WELDED, BOLTED, OR HELICAL LOCK-SEAM						
36	1	48	60	88	111	118
42	1	41	51	72	90	102
48	1	36	45	64	77	85
54	2	32	40	59	71	79
60	2	29	36	53	64	71
66	2	26	33	47	58	64
72	2	24	30	44	53	59
78	2		28	41	49	54
84	2		26	38	45	51
90	2		24	35	43	45
96	2		22	33	40	44
102	2			31	38	42
108	2			30	35	39
114	2			28	34	37
120	2			27	32	35

CORRUGATED ALUMINUM PIPE (ROUND)

PIPE DIAMETER (INCHES)	① MINUMUM COVER TOP OF PIPE TO TOP OF GROUND "H" (FEET)	MAX. FILL HEIGHT "H" ABOVE TOP OF PIPE (FEET)				
		METAL THICKNESS IN INCHES				
		0.060	0.075	0.105	0.135	0.164
		2 ⅔ INCH BY ½ INCH CORRUGATION RIVETED OR HELICAL LOCK-SEAM				
12	1	45	45			
18	2	30	30	52		
24	2	22	22	39	41	
30	2		18	31	32	34
36	2.5		15	26	27	28
42	2			43	43	44
48	2			40	41	43
54	2			35	37	38
60	2				33	34
66	2					31
72	2					29

CORRUGATED METAL PIPE ARCHES

EQUIV. DIA. (INCHES)	PIPE DIMENSION SPAN X RISE (INCHES)	MINUMUM CORNER RADIUS (INCHES)	STEEL				ALUMINUM		
			MIN. THICKNESS REQUIRED INCHES	① MIN. HEIGHT OF FILL, "H" (FT.)		MAX. HEIGHT OF FILL, "H" (FT.)	MIN. THICKNESS REQUIRED INCHES	① MIN. HEIGHT OF FILL, "H" (FT.)	MAX. HEIGHT OF FILL, "H" (FT.)
				INSTALLATION		INSTALLATION		INSTALLATION	INSTALLATION
				TYPE 1		TYPE 1		TYPE 1	TYPE 1
			2 ⅔ INCH BY ½ INCH CORRUGATION RIVETED, WELDED, OR HELICAL LOCK-SEAM				2 ⅔ INCH BY ½ INCH CORRUGATION RIVETED OR HELICAL LOCK-SEAM		
15	17x13	3	0.064	2		15	0.060	2	15
18	21x15	3	0.064	2		15	0.060	2	15
21	24x18	3	0.064	2.25		15	0.060	2.25	15
24	28x20	3	0.064	2.5		15	0.075	2.5	15
30	35x24	3	0.079	3		12	0.075	3	12
36	42x29	3½	0.079	3		12	0.105	3	12
42	49x33	4	0.079	3		12	0.105	3	12
48	57x38	5	0.109	3		13	0.135	3	13
54	64x43	6	0.109	3		14	0.135	3	14
60	71x47	7	0.138	3		15	0.164	3	15
66	77x52	8	0.168	3		15			
72	83x57	9	0.168	3		15			
			② 3 INCH BY 1 INCH OR 5 INCH BY 1 INCH CORRUGATION RIVETED, WELDED, OR HELICAL LOCK-SEAM						
				INSTALLATION		INSTALLATION			
				TYPE 2	TYPE 1	TYPE 2 TYPE 1			
36	40x31	5	0.079	3	2	12 15			
42	46x36	6	0.079	3	2	13 15			
48	53x41	7	0.079	3	2	13 15			
54	60x46	8	0.079	3	2	13 15			
60	66x51	9	0.079	3	2	13 15			
66	73x55	12	0.079	3	2	15 15			
72	81x59	14	0.079	3	2	15 15			
78	87x63	14	0.079	3	2	15 15			
84	95x67	16	0.109	3	2	15 15			
90	103x71	16	0.109	3	2	15 15			
96	112x75	18	0.109	3	2	15 15			
102	117x79	18	0.109	3	2	15 15			
108	128x83	18	0.138	3	2	15 15			

CONSTRUCTION SEQUENCE

1. PLACE STRUCTURAL BEDDING MATERIAL TO GRADE. DO NOT COMPACT.
2. INSTALL PIPE TO GRADE.
3. COMPACT STRUCTURAL BEDDING OUTSIDE THE MIDDLE THIRD OF THE PIPE.
4. COMPLETE STRUCTURAL BACKFILL OPERATION BY WORKING FROM SIDE TO SIDE OF THE PIPE. THE SIDE TO SIDE STRUCTURAL BACKFILL DIFFERENTIAL SHALL NOT EXCEED 24 INCHES OR 1/3 THE SIZE OF THE PIPE, WHICHEVER IS LESS.

NOTE: STRUCTURAL BACKFILL AND STRUCTURAL BEDDING MATERIAL WILL NOT BE PAID FOR SEPARATELY, BUT COMPENSATION WILL BE CONSIDERED TO BE INCLUDED IN THE PRICE BID PER LINEAR FOOT OF METAL PIPE.

INSTALLATION TYPE	MATERIAL REQUIREMENTS FOR STRUCTURAL BACKFILL AND STRUCTURAL BEDDING
TYPE 1	AGGREGATE BASE COURSE (CLASS 4, 5, 6, OR 7)
TYPE 2	SELECTED MATERIALS (CLASS SM-1, SM-2, OR SM-4) OR TYPE 1 INSTALLATION MATERIAL ③

③ SM-3 WILL NOT BE ALLOWED.

EQUIVALENT METAL THICKNESSES AND GAUGES

METAL THICKNESS IN INCHES			GAUGE NUMBER
STEEL			
ZINC COATED	UNCOATED	ALUMINUM	
0.064	0.0598	0.060	16
0.079	0.0747	0.075	14
0.109	0.1046	0.105	12
0.138	0.1345	0.135	10
0.168	0.1644	0.164	8

- LEGEND -

D_o = OUTSIDE DIAMETER OF PIPE
MAX. = MAXIMUM
MIN. = MINIMUM
= STRUCTURAL BACKFILL MATERIAL
= UNDISTURBED SOIL
EQUIV. DIA. = EQUIVALENT DIAMETER
H = FILL COVER HEIGHT OVER PIPE (FEET)

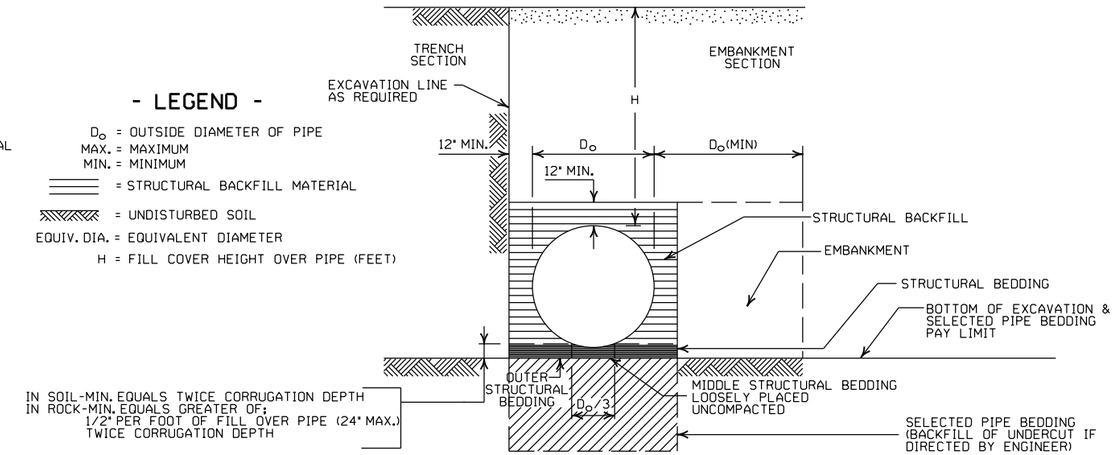

EMBANKMENT AND TRENCH INSTALLATIONS

1. STRUCTURAL BACKFILL, EMBANKMENT, AND OUTER STRUCTURAL BEDDING MATERIAL SHALL BE COMPACTED TO 95% OF THE MAXIMUM DENSITY ACCORDING TO THE TYPE OR CLASS OF MATERIAL USED.
2. INSTALLATION TYPE 1 OR 2 MAY BE USED FOR CORRUGATED STEEL OR ALUMINUM PIPE (ROUND).
3. INSTALALTION TYPE 1 SHALL BE USED FOR CORRUGATED STEEL OR ALUMINUM PIPE ARCHES WITH 2⅔" X ½" CORRUGATION.
4. INSTALLATION TYPE 1 OR 2 MAY BE USED FOR CORRUGATED STEEL OR ALUMINUM PIPE ARCHES WITH 3" X 1" OR 5" X 1" CORRUGATION.

GENERAL NOTES

1. METAL PIPE CULVERT CONSTRUCTION SHALL CONFORM TO ARKANSAS DEPARTMENT OF TRANSPORTATION STANDARD SPECIFICATIONS FOR HIGHWAY CONSTRUCTION (CURRENT EDITION), WITH APPLICABLE SUPPLEMENTAL SPECIFICATIONS AND SPECIAL PROVISIONS. UNLESS OTHERWISE NOTED IN THE PLANS, SECTION AND SUBSECTION REFER TO THE STANDARD CONSTRUCTION SPECIFICATIONS.
2. METAL PIPE CULVERT DESIGN SHALL CONFORM TO AASHTO LRFD BRIDGE DESIGN SPECIFICATIONS, FIFTH EDITION (2010) WITH 2010 INTERIMS.
3. METAL PIPE CULVERT MATERIALS AND INSTALLATIONS SHALL CONFORM TO SECTION 606 AND JOB SPECIAL PROVISION "METAL PIPE".
4. ALL PIPE SHALL BE PROTECTED DURING CONSTRUCTION BY A COVER SUFFICIENT TO PREVENT DAMAGE FROM PASSAGE OF EQUIPMENT.
5. THE MINIMUM TRENCH WIDTH SHALL BE THE OUTSIDE DIAMETER OF THE PIPE PLUS 24 INCHES. THE MAXIMUM ALLOWABLE TRENCH WIDTH SHALL BE THE MINIMUM WIDTH PRACTICABLE FOR WORKING CONDITIONS.
6. MULTIPLE PIPE CULVERTS SHALL BE INSTALLED WITH A MINIMUM CLEARANCE OF 24 INCHES BETWEEN STRINGS OF PIPE. REFER TO STD. DWG. FES-2 FOR MINIMUM CLEARANCE WHERE FLARED END SECTIONS ARE USED.
7. IMPERVIOUS MATERIAL SHOULD BE PLACED AS DIRECTED BY THE ENGINEER AT THE ENDS OF THE CULVERT TO PREVENT LOSS OF STRUCTURAL BEDDING WHEN PERVIOUS MATERIAL IS USED FOR STRUCTURAL BEDDING AND/OR BACKFILL.
8. WHEN DIRECTED BY THE ENGINEER, UNSUITABLE MATERIAL THAT IS ENCOUNTERED AT THE BOTTOM OF THE EXCAVATED TRENCH (BELOW THE AREA IDENTIFIED AS "STRUCTURAL BEDDING" ABOVE) WILL BE EXCAVATED AND REPLACED WITH SELECTED PIPE BEDDING. THE QUANTITY OF MATERIAL REQUIRED TO BACKFILL THE UNDERCUT AREA UP TO THE SELECTED PIPE BEDDING PAY LIMIT DESIGNATED ABOVE WILL BE MEASURED AND PAID FOR AS "SELECTED PIPE BEDDING."
9. WHEN THE EXISTING MATERIAL EXCAVATED FOR THE PIPE TRENCH IS DETERMINED BY THE ENGINEER TO BE UNSUITABLE FOR BACKFILLING THE PIPE (ABOVE THE AREA IDENTIFIED AS STRUCTURAL BACKFILL), BORROW MATERIAL OR MATERIAL FROM THE ROADWAY EXCAVATION WILL BE USED TO BACKFILL THE PIPE. IF SUITABLE MATERIAL IS NOT AVAILABLE, THE ENGINEER MAY AUTHORIZE THE USE OF "SELECTED PIPE BACKFILL."

① FOR MINIMUM COVER VALUES, "H" SHALL INCLUDE A MINIMUM 12" OF PAVEMENT AND/OR BASE.

② WHERE THE STANDARD 2 2/3"× ½" CORRUGATION AND GAUGE IS SPECIFIED FOR A GIVEN DIAMETER, A PIPE OF THE SAME DIAMETER WITH A 3" × 1" OR 5" × 1" CORRUGATION MAY BE SUBSTITUTED, PROVIDING IT IS GAUGED FOR A FILL HEIGHT CONDITION EQUAL TO OR GREATER THAN THE MAXIMUM FILL HEIGHT CONDITION FOR THE SPECIFIED GAUGE AND CORRUGATION.

DATE	REVISION	DATE FILMED
2-27-14	REVISED GENERAL NOTE 1.	
12-15-11	REVISED FOR LRFD DESIGN SPECS	
3-30-00	REVISED INSTALLATIONS	
11-06-97	ISSUED	

ARKANSAS STATE HIGHWAY COMMISSION

METAL PIPE CULVERT FILL HEIGHTS & BEDDING

STANDARD DRAWING PCM-1

INSTALLATION TYPE	•• MATERIAL REQUIREMENTS FOR STRUCTURAL BACKFILL AND STRUCTURAL BEDDING
TYPE 2	•SELECTED MATERIALS (CLASS SM-1, SM-2 OR SM-4)

• AGGREGATE BASE COURSE (CLASS 4, 5, 6, OR 7) MAY BE USED IN LIEU OF SELECTED MATERIAL.

SM3 WILL NOT BE ALLOWED.

•• STRUCTURAL BEDDING MATERIAL SHALL HAVE A MAXIMUM PARTICLE SIZE OF 1 INCH. STRUCTURAL BACKFILL MATERIAL SHALL BE FREE OF ORGANIC MATERIAL, STONES LARGER THAN 1.50 INCH IN GREATEST DIMENSION, OR FROZEN LUMPS.

STRUCTURAL BACKFILL AND STRUCTURAL BEDDING MATERIAL WILL NOT BE PAID FOR SEPARATELY, BUT COMPENSATION WILL BE CONSIDERED TO BE INCLUDED IN THE PRICE BID PER LINEAR FOOT OF HDPE PIPE.

MINIMUM TRENCH WIDTH BASED ON FILL HEIGHT "H"

PIPE DIAMETER	TRENCH WIDTH (FEET) "H" < 10'-0"	TRENCH WIDTH (FEET) "H" >OR= 10'-0"
18"	4'-6"	4'-6"
24"	5'-0"	6'-0"
30"	5'-6"	7'-6"
36"	6'-0"	9'-0"
42"	7'-0"	10'-6"
48"	8'-0"	12'-0"

①NOTE:
18" MIN. (18" - 30" DIAMETERS)
24" MIN. (36" - 48" DIAMETERS)

MINIMUM COVER VALUES, "H" SHALL INCLUDE A MINIMUM 12" OF PAVEMENT AND/OR BASE.

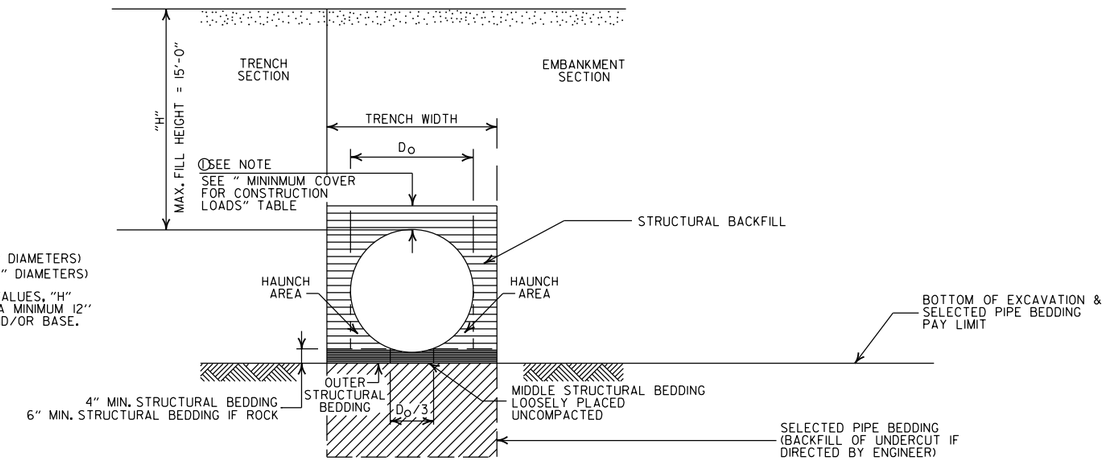

TYPE 2 EMBANKMENT AND TRENCH INSTALLATIONS

1. STRUCTURAL BACKFILL, EMBANKMENT, AND OUTER STRUCTURAL BEDDING MATERIAL SHALL BE COMPACTED TO 95% OF THE MAXIMUM DENSITY ACCORDING TO THE TYPE OR CLASS OF MATERIAL USED.

MULTIPLE INSTALLATION OF HIGH DENSITY POLYETHYLENE PIPES

PIPE DIAMETER	CLEAR DISTANCE BETWEEN PIPES
18"	1'-6"
24"	2'-0"
30"	2'-6"
36"	3'-0"
42"	3'-6"
48"	4'-0"

MINIMUM COVER FOR CONSTRUCTION LOADS

PIPE DIAMETER	② MIN. COVER (FEET) FOR INDICATED CONSTRUCTION LOADS 18.0-50.0 (KIPS)	50.0-75.0 (KIPS)	75.0-110.0 (KIPS)	110.0-175.0 (KIPS)
36" OR LESS	2'-0"	2'-6"	3'-0"	3'-0"
42" OR GREATER	3'-0"	3'-0"	3'-6"	4'-0"

②MINIMUM COVER SHALL BE MEASURED FROM TOP OF PIPE TO TOP OF THE MAINTAINED CONSTRUCTION ROADWAY SURFACE. THE SURFACE SHALL BE MAINTAINED.

CONSTRUCTION SEQUENCE

1. PLACE STRUCTURAL BEDDING MATERIAL TO GRADE. DO NOT COMPACT.
2. INSTALL PIPE TO GRADE.
3. COMPACT STRUCTURAL BEDDING OUTSIDE THE MIDDLE THIRD OF THE PIPE.
4. THE STRUCTURAL BACKFILL SHALL BE PLACED AND COMPACTED IN LAYERS NOT EXCEEDING 8". THE LAYERS SHALL BE BROUGHT UP EVENLY AND SIMULTANEOUSLY TO THE ELEVATION OF THE MINIMUM COVER.
5. PIPE INSTALLATION MAY REQUIRE THE USE OF RESTRAINTS, WEIGHTING OR OTHER APPROVED METHODS IN ORDER TO HELP MAINTAIN GRADE AND ALIGNMENT.

GENERAL NOTES

1. PIPE SHALL CONFORM TO AASHTO M294, TYPE S. INSTALLATION SHALL CONFORM TO JOB SPECIAL PROVISION "PLASTIC PIPE" AND SECTION 606 OF THE STANDARD SPECIFICIATIONS FOR HIGHWAY CONSTRUCTION (CURRENT EDITION).
2. PLASTIC PIPE CULVERT DESIGN SHALL CONFORM TO AASHTO LRFD BRIDGE DESIGN SPECIFICATIONS, FIFTH EDITION (2010) WITH 2010 INTERIMS.
3. THE MAXIMUM ALLOWABLE TRENCH WIDTH SHALL BE THE MINIMUM WIDTH PLUS A SUFFICIENT WIDTH TO ENSURE WORKING ROOM TO PROPERLY AND SAFELY PLACE AND COMPACT HAUNCHING AND OTHER BACKFILL MATERIAL.
4. IMPERVIOUS MATERIAL SHOULD BE PLACED AS DIRECTED BY THE ENGINEER AT THE ENDS OF THE CULVERT TO PREVENT LOSS OF STRUCTURAL BEDDING WHEN PERVIOUS MATERIAL IS USED FOR STRUCTURAL BEDDING AND/OR BACKFILL.
5. WHEN DIRECTED BY THE ENGINEER, UNSUITABLE MATERIAL THAT IS ENCOUNTERED AT THE BOTTOM OF THE EXCAVATED TRENCH (BELOW THE AREA IDENTIFIED AS "STRUCTURAL BEDDING" ABOVE) WILL BE EXCAVATED AND REPLACED WITH SELECTED PIPE BEDDING. THE QUANTITY OF MATERIAL REQUIRED TO BACKFILL THE UNDERCUT AREA UP TO THE SELECTED PIPE BEDDING PAY LIMIT DESIGNATED ABOVE WILL BE MEASURED AND PAID FOR AS "SELECTED PIPE BEDDING."
6. WHEN THE EXISTING MATERIAL EXCAVATED FOR THE PIPE TRENCH IS DETERMINED BY THE ENGINEER TO BE UNSUITABLE FOR BACKFILLING THE PIPE (ABOVE THE AREA IDENTIFIED ABOVE AS STRUCTURAL BACKFILL), BORROW MATERIAL OR MATERIAL FROM THE ROADWAY EXCAVATION WILL BE USED TO BACKFILL THE PIPE. IF SUITABLE MATERIAL IS NOT AVAILABLE, THE ENGINEER MAY AUTHORIZE THE USE OF "SELECTED PIPE BACKFILL."
7. FOR PIPE TYPES THAT ARE NOT SMOOTH ON THE OUTSIDE (CORRUGATED OR PROFILE WALLS), BACKFILL GRADATIONS SHOULD BE SELECTED THAT WILL PERMIT THE FILLING OF THE CORRUGATION OR PROFILE VALLEY.
8. HIGH DENSITY POLYETHYLENE PIPES OF DIAMETERS OTHER THAN SHOWN WILL NOT BE ALLOWED.
9. JOINTS FOR HDPE PIPE SHALL MEET THE REQUIREMENTS FOR SOIL TIGHTNESS AS SPECIFIED IN AASHTO SECTION 26.4.2.4 AND 30.4.2 "AASHTO LRFD BRIDGE CONSTRUCTION SPECIFICATIONS." JOINTS SHALL BE INSTALLED PER MANUFACTURER'S RECOMMENDATIONS.

- LEGEND -

H = FILL HEIGHT (FT.)
Ø = OUTSIDE DIAMETER OF PIPE
MAX. = MAXIMUM
MIN. = MINIMUM

= STRUCTURAL BACKFILL MATERIAL

= UNDISTURBED SOIL

DATE	REVISION	DATE FILMED
2-27-14	REVISED GENERAL NOTE 1.	
12-15-11	REVISED GENERAL NOTES & MINIMUM COVER NOTE	
11-17-10	ISSUED	

ARKANSAS STATE HIGHWAY COMMISSION

PLASTIC PIPE CULVERT (HIGH DENSITY POLYETHYLENE)

STANDARD DRAWING PCP-1

INSTALLATION TYPE	•• MATERIAL REQUIREMENTS FOR STRUCTURAL BACKFILL AND STRUCTURAL BEDDING
TYPE 2	•SELECTED MATERIALS (CLASS SM-1, SM-2, OR SM-4)

• AGGREGATE BASE COURSE (CLASS 4, 5, 6, OR 7) MAY BE USED IN LIEU OF SELECTED MATERIAL.

SM3 WILL NOT BE ALLOWED.

•• STRUCTURAL BEDDING MATERIAL SHALL HAVE A MAXIMUM PARTICLE SIZE OF 1INCH. STRUCTURAL BACKFILL MATERIAL SHALL BE FREE OF ORGANIC MATERIAL, STONES LARGER THAN 1.50 INCH IN GREATEST DIMENSION, OR FROZEN LUMPS.

STRUCTURAL BACKFILL AND STRUCTURAL BEDDING MATERIAL WILL NOT BE PAID FOR SEPARATELY, BUT COMPENSATION WILL BE CONSIDERED TO BE INCLUDED IN THE PRICE BID PER LINEAR FOOT OF PVC PIPE.

MINIMUM TRENCH WIDTH BASED ON FILL HEIGHT "H"

PIPE DIAMETER	TRENCH WIDTH (FEET) "H" < 10'-0"	TRENCH WIDTH (FEET) "H" >OR= 10'-0"
18"	4'-6"	4'-6"
24"	5'-0"	6'-0"
30"	5'-6"	7'-6"
36"	6'-0"	9'-0"

MULTIPLE INSTALLATION OF PVC PIPES

PIPE DIAMETER	CLEAR DISTANCE BETWEEN PIPES
18"	1'-6"
24"	2'-0"
30"	2'-6"
36"	3'-0"

MAXIMUM FILL HEIGHT BASED ON STRUCTURAL BACKFILL

PIPE DIAMETER	"H"
18"	45'-0"
24"	45'-0"
30"	40'-0"
36"	40'-0"

① NOTE:
12" MIN. (18" - 36" DIAMETERS)
MINIMUM COVER VALUE, "H" SHALL INCLUDE A MINIMUM 12" OF PAVEMENT AND/OR BASE.

MINIMUM COVER FOR CONSTRUCTION LOADS

PIPE DIAMETER	② MIN. COVER (FEET) FOR INDICATED CONSTRUCTION LOADS 18.0-50.0 (KIPS)	50.0-75.0 (KIPS)	75.0-110.0 (KIPS)	110.0-175.0 (KIPS)
18" THRU 36"	2'-0"	2'-6"	3'-0"	3'-0"

②MINIMUM COVER SHALL BE MEASURED FROM TOP OF PIPE TO TOP OF THE MAINTAINED CONSTRUCTION ROADWAY SURFACE. THE SURFACE SHALL BE MAINTAINED.

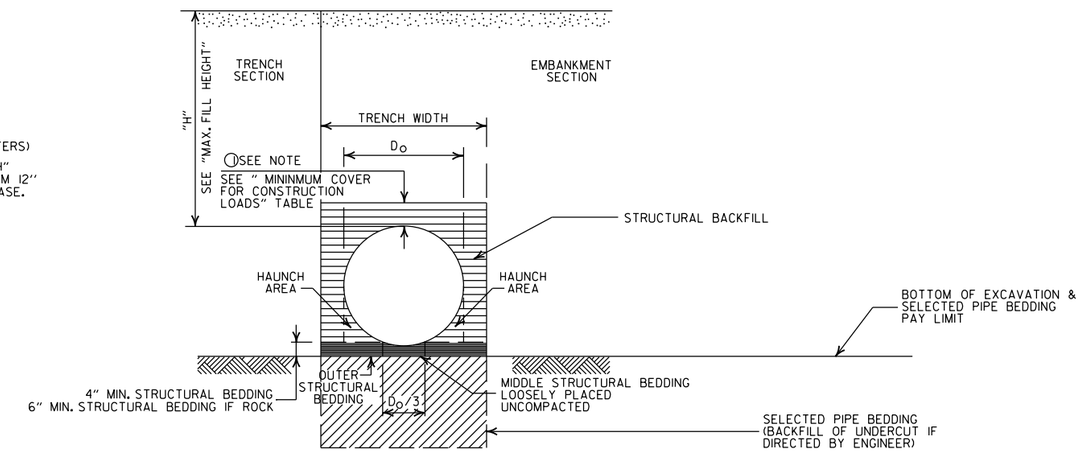

TYPE 2 EMBANKMENT AND TRENCH INSTALLATIONS

1. STRUCTURAL BACKFILL, EMBANKMENT, AND OUTER STRUCTURAL BEDDING MATERIAL SHALL BE COMPACTED TO 95% OF THE MAXIMUM DENSITY ACCORDING TO THE TYPE OR CLASS OF MATERIAL USED.

CONSTRUCTION SEQUENCE

1. PLACE STRUCTURAL BEDDING MATERIAL TO GRADE. DO NOT COMPACT.
2. INSTALL PIPE TO GRADE.
3. COMPACT STRUCTURAL BEDDING OUTSIDE THE MIDDLE THIRD OF THE PIPE.
4. THE STRUCTURAL BACKFILL SHALL BE PLACED AND COMPACTED IN LAYERS NOT EXCEEDING 8". THE LAYERS SHALL BE BROUGHT UP EVENLY AND SIMULTANEOUSLY TO THE ELEVATION OF THE MINIMUM COVER.
5. PIPE INSTALLATION MAY REQUIRE THE USE OF RESTRAINTS, WEIGHTING OR OTHER APPROVED METHODS IN ORDER TO HELP MAINTAIN GRADE AND ALIGNMENT.

GENERAL NOTES

1. PIPE SHALL CONFORM TO ASTM F949, CELL CLASS 12454. INSTALLATION SHALL CONFORM TO JOB SPECIAL PROVISION "PLASTIC PIPE" AND SECTION 606 OF THE STANDARD SPECIFICATIONS FOR HIGHWAY CONSTRUCTION (CURRENT EDITION).
2. PLASTIC PIPE CULVERT DESIGN SHALL CONFORM TO AASHTO LRFD BRIDGE DESIGN SPECIFICATIONS, FIFTH EDITION (2010) WITH 2010 INTERIMS.
3. THE MAXIMUM ALLOWABLE TRENCH WIDTH SHALL BE THE MINIMUM WIDTH PLUS A SUFFICIENT WIDTH TO ENSURE WORKING ROOM TO PROPERLY AND SAFELY PLACE AND COMPACT HAUNCHING AND OTHER BACKFILL MATERIAL.
4. IMPERVIOUS MATERIAL SHOULD BE PLACED AS DIRECTED BY THE ENGINEER AT THE ENDS OF THE CULVERT TO PREVENT LOSS OF STRUCTURAL BEDDING WHEN PERVIOUS MATERIAL IS USED FOR STRUCTURAL BEDDING AND/OR BACKFILL.
5. WHEN DIRECTED BY THE ENGINEER, UNSUITABLE MATERIAL THAT IS ENCOUNTERED AT THE BOTTOM OF THE EXCAVATED TRENCH (BELOW THE AREA IDENTIFIED AS "STRUCTURAL BEDDING" ABOVE) WILL BE EXCAVATED AND REPLACED WITH SELECTED PIPE BEDDING. THE QUANTITY OF MATERIAL REQUIRED TO BACKFILL THE UNDERCUT AREA UP TO THE SELECTED PIPE BEDDING PAY LIMIT DESIGNATED ABOVE WILL BE MEASURED AND PAID FOR AS "SELECTED PIPE BEDDING."
6. WHEN THE EXISTING MATERIAL EXCAVATED FOR THE PIPE TRENCH IS DETERMINED BY THE ENGINEER TO BE UNSUITABLE FOR BACKFILLING THE PIPE (ABOVE THE AREA IDENTIFIED ABOVE AS STRUCTURAL BACKFILL), BORROW MATERIAL OR MATERIAL FROM THE ROADWAY EXCAVATION WILL BE USED TO BACKFILL THE PIPE. IF SUITABLE MATERIAL IS NOT AVAILABLE, THE ENGINEER MAY AUTHORIZE THE USE OF "SELECTED PIPE BACKFILL."
7. FOR PIPE TYPES THAT ARE NOT SMOOTH ON THE OUTSIDE (CORRUGATED OR PROFILE WALLS), BACKFILL GRADATIONS SHOULD BE SELECTED THAT WILL PERMIT THE FILLING OF THE CORRUGATION OR PROFILE VALLEY.
8. PVC PIPES OF DIAMETERS OTHER THAN SHOWN WILL NOT BE ALLOWED.
9. JOINTS FOR PVC PIPE SHALL MEET THE REQUIREMENTS FOR SOIL TIGHTNESS AS SPECIFIED IN AASHTO SECTION 26.4.2.4 AND 30.4.2 "AASHTO LRFD BRIDGE CONSTRUCTION SPECIFICATIONS." JOINTS SHALL BE INSTALLED PER MANUFACTURER'S RECOMMENDATIONS.

- LEGEND -

H = FILL HEIGHT (FT.)
D_O = OUTSIDE DIAMETER OF PIPE
MAX. = MAXIMUM
MIN. = MINIMUM

= STRUCTURAL BACKFILL MATERIAL

= UNDISTURBED SOIL

DATE	REVISION	DATE FILMED
2-27-14	REVISED GENERAL NOTE 1.	
12-15-11	REV GENERAL NOTES & MINIMUM COVER NOTE; DELETED SM3 MATERIAL	
11-17-10	ISSUED	

ARKANSAS STATE HIGHWAY COMMISSION

PLASTIC PIPE CULVERT (PVC F949)

STANDARD DRAWING PCP-2

INSTALLATION TYPE	**MATERIAL REQUIREMENTS FOR STRUCTURAL BACKFILL AND STRUCTURAL BEDDING
TYPE 1	AGGREGATE BASE COURSE (CLASS 4, 5, 6, OR 7)
TYPE 2	*SELECTED MATERIALS (CLASS SM-1, SM-2 OR SM-4) OR TYPE 1 INSTALLATION MATERIAL

*SM3 WILL NOT BE ALLOWED.

** STRUCTURAL BEDDING MATERIAL SHALL HAVE A MAXIMUM PARTICLE SIZE OF 1 INCH. STRUCTURAL BACKFILL MATERIAL SHALL BE FREE OF ORGANIC MATERIAL, STONES LARGER THAN 1.50 INCH IN GREATEST DIMENSION, OR FROZEN LUMPS.

STRUCTURAL BACKFILL AND STRUCTURAL BEDDING MATERIAL WILL NOT BE PAID FOR SEPARATELY, BUT COMPENSATION WILL BE CONSIDERED TO BE INCLUDED IN THE PRICE BID PER LINEAR FOOT OF POLYPROPYLENE PIPE.

MINIMUM TRENCH WIDTH BASED ON FILL HEIGHT "H"

PIPE DIAMETER	TRENCH WIDTH (FEET) "H" < 10'-0"	TRENCH WIDTH (FEET) "H" >OR= 10'-0"
18"	4'-6"	4'-6"
24"	5'-0"	6'-0"
30"	5'-6"	7'-6"
36"	6'-0"	9'-0"
42"	7'-0"	10'-6"
48"	8'-0"	12'-0"
60"	10'-0"	15'-0"

(1) NOTE:
12" MIN. (18" - 42" DIAMETERS)
24" MIN. (60" DIAMETER)

MINIMUM COVER VALUES, "H" SHALL INCLUDE A MINIMUM 12" OF PAVEMENT AND/OR BASE.

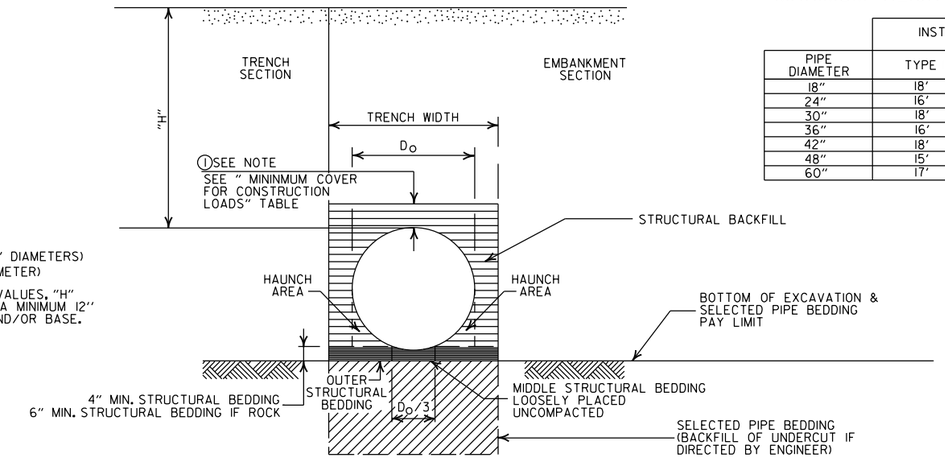

MAXIMUM HEIGHT OF FILL "H"

PIPE DIAMETER	INSTALLATION TYPE TYPE 1	INSTALLATION TYPE TYPE 2
18"	18'	14'
24"	16'	12'
30"	18'	14'
36"	16'	12'
42"	18'	13'
48"	15'	11'
60"	17'	12'

MULTIPLE INSTALLATION OF POLYPROPYLENE PIPES

PIPE DIAMETER	CLEAR DISTANCE BETWEEN PIPES
18"	1'-6"
24"	2'-0"
30"	2'-6"
36"	3'-0"
42"	3'-6"
48"	4'-0"
60"	5'-0"

MINIMUM COVER FOR CONSTRUCTION LOADS

PIPE DIAMETER	(2) MIN. COVER (FEET) FOR INDICATED CONSTRUCTION LOADS 18.0-50.0 (KIPS)	50.0-75.0 (KIPS)	75.0-110.0 (KIPS)	110.0-150.0 (KIPS)
36" OR LESS	2'-0"	2'-6"	3'-0"	3'-0"
42" OR GREATER	3'-0"	3'-0"	3'-6"	4'-0"

(2) MINIMUM COVER SHALL BE MEASURED FROM TOP OF PIPE TO TOP OF THE MAINTAINED CONSTRUCTION ROADWAY SURFACE. THE SURFACE SHALL BE MAINTAINED.

EMBANKMENT AND TRENCH INSTALLATIONS

1. STRUCTURAL BACKFILL, EMBANKMENT, AND OUTER STRUCTURAL BEDDING MATERIAL SHALL BE COMPACTED TO 95% OF THE MAXIMUM DENSITY ACCORDING TO THE TYPE OR CLASS OF MATERIAL USED.

CONSTRUCTION SEQUENCE

1. PLACE STRUCTURAL BEDDING MATERIAL TO GRADE. DO NOT COMPACT.
2. INSTALL PIPE TO GRADE.
3. COMPACT STRUCTURAL BEDDING OUTSIDE THE MIDDLE THIRD OF THE PIPE.
4. THE STRUCTURAL BACKFILL SHALL BE PLACED AND COMPACTED IN LAYERS NOT EXCEEDING 8". THE LAYERS SHALL BE BROUGHT UP EVENLY AND SIMULTANEOUSLY TO THE ELEVATION OF THE MINIMUM COVER.
5. PIPE INSTALLATION MAY REQUIRE THE USE OF RESTRAINTS, WEIGHTING OR OTHER APPROVED METHODS IN ORDER TO HELP MAINTAIN GRADE AND ALIGNMENT.

GENERAL NOTES

1. PIPE SHALL CONFORM TO AASHTO M330, TYPE S. INSTALLATION SHALL CONFORM TO JOB SPECIAL PROVISION "PLASTIC PIPE" AND SECTION 606 OF THE STANDARD SPECIFICIATIONS FOR HIGHWAY CONSTRUCTION (CURRENT EDITION).
2. PLASTIC PIPE CULVERT DESIGN SHALL CONFORM TO AASHTO LRFD BRIDGE DESIGN SPECIFICATIONS, SIXTH EDITION (2012) WITH 2013 INTERIMS.
3. THE MAXIMUM ALLOWABLE TRENCH WIDTH SHALL BE THE MINIMUM WIDTH PLUS A SUFFICIENT WIDTH TO ENSURE WORKING ROOM TO PROPERLY AND SAFELY PLACE AND COMPACT HAUNCHING AND OTHER BACKFILL MATERIAL.
4. IMPERVIOUS MATERIAL SHOULD BE PLACED AS DIRECTED BY THE ENGINEER AT THE ENDS OF THE CULVERT TO PREVENT LOSS OF STRUCTURAL BEDDING WHEN PERVIOUS MATERIAL IS USED FOR STRUCTURAL BEDDING AND/OR BACKFILL.
5. WHEN DIRECTED BY THE ENGINEER, UNSUITABLE MATERIAL THAT IS ENCOUNTERED AT THE BOTTOM OF THE EXCAVATED TRENCH (BELOW THE AREA IDENTIFIED AS "STRUCTURAL BEDDING" ABOVE) WILL BE EXCAVATED AND REPLACED WITH SELECTED PIPE BEDDING. THE QUANTITY OF MATERIAL REQUIRED TO BACKFILL THE UNDERCUT AREA UP TO THE SELECTED PIPE BEDDING PAY LIMIT DESIGNATED ABOVE WILL BE MEASURED AND PAID FOR AS "SELECTED PIPE BEDDING."
6. WHEN THE EXISTING MATERIAL EXCAVATED FOR THE PIPE TRENCH IS DETERMINED BY THE ENGINEER TO BE UNSUITABLE FOR BACKFILLING THE PIPE (ABOVE THE AREA IDENTIFIED ABOVE AS STRUCTURAL BACKFILL), BORROW MATERIAL OR MATERIAL FROM THE ROADWAY EXCAVATION WILL BE USED TO BACKFILL THE PIPE. IF SUITABLE MATERIAL IS NOT AVAILABLE, THE ENGINEER MAY AUTHORIZE THE USE OF "SELECTED PIPE BACKFILL."
7. FOR PIPE TYPES THAT ARE NOT SMOOTH ON THE OUTSIDE (CORRUGATED OR PROFILE WALLS), BACKFILL GRADATIONS SHOULD BE SELECTED THAT WILL PERMIT THE FILLING OF THE CORRUGATION OR PROFILE VALLEY.
8. POLYPROPYLENE PIPES OF DIAMETERS OTHER THAN SHOWN WILL NOT BE ALLOWED.
9. JOINTS FOR POLYPROPYLENE PIPE SHALL MEET THE REQUIREMENTS FOR SOIL TIGHTNESS AS SPECIFIED IN SECTION 26.4.2.4 AND 30.4.2 OF THE AASHTO LRFD BRIDGE CONSTRUCTION SPECIFICATIONS 3RD EDITION (2010) WITH 2012 INTERIMS. JOINTS SHALL BE INSTALLED PER MANUFACTURER'S RECOMMENDATIONS.

- LEGEND -

H = FILL HEIGHT (FT.)
D_O = OUTSIDE DIAMETER OF PIPE
MAX. = MAXIMUM
MIN. = MINIMUM

= STRUCTURAL BACKFILL MATERIAL
= UNDISTURBED SOIL

DATE	REVISION	DATE FILMED
02-27-20	REVISED	
11-07-19	ISSUED	

ARKANSAS STATE HIGHWAY COMMISSION

PLASTIC PIPE CULVERT (POLYPROPYLENE)

STANDARD DRAWING PCP-3

NOTES:

1. REFER TO THE STRIPING DETAILS FOR PAVEMENT MARKING LINE WIDTHS.
2. THIS DRAWING SHALL BE USED IN CONJUNCTION WITH THE LATEST REVISED ADDITION OF THE "MANUAL ON UNIFORM TRAFFIC CONTROL DEVICES."
3. RAISED PAVEMENT MARKERS SHALL BE PLACED ON AN 80 FEET SPACING UNLESS OTHERWISE SHOWN IN THE PLANS.

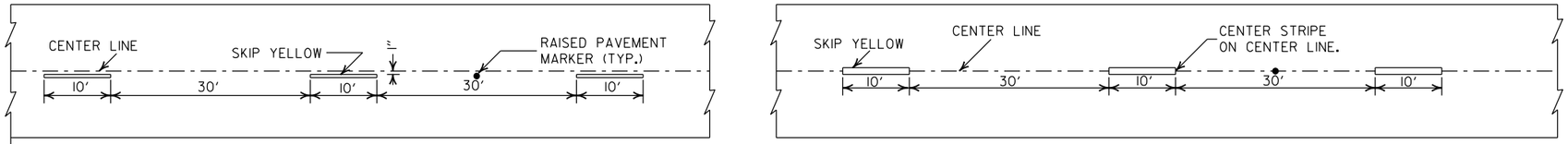

CONCRETE PAVEMENT

ASPHALT PAVEMENT

BROKEN LINE STRIPING

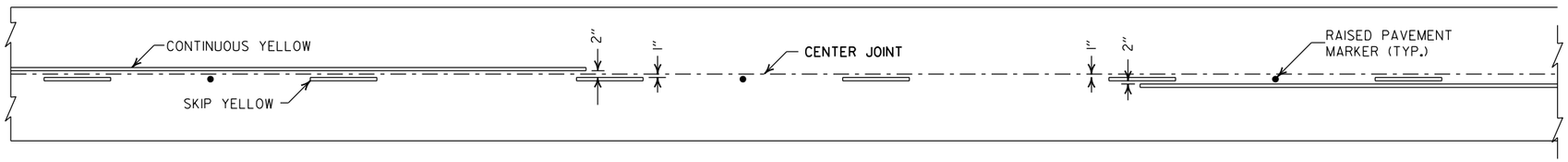

SOLID LINE STRIPING ON CONCRETE PAVEMENT

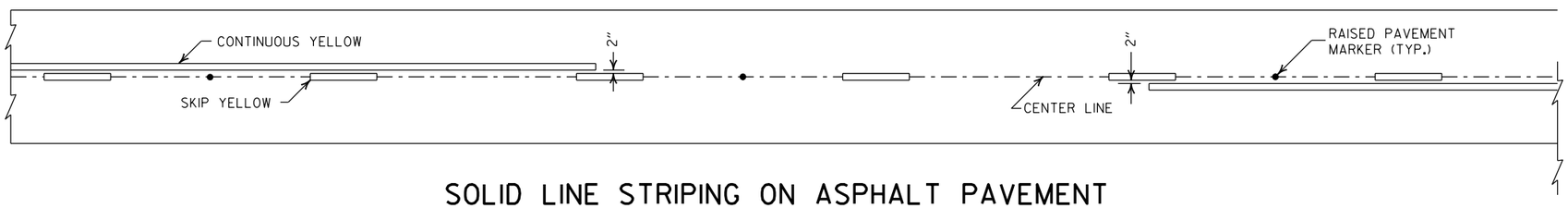

SOLID LINE STRIPING ON ASPHALT PAVEMENT

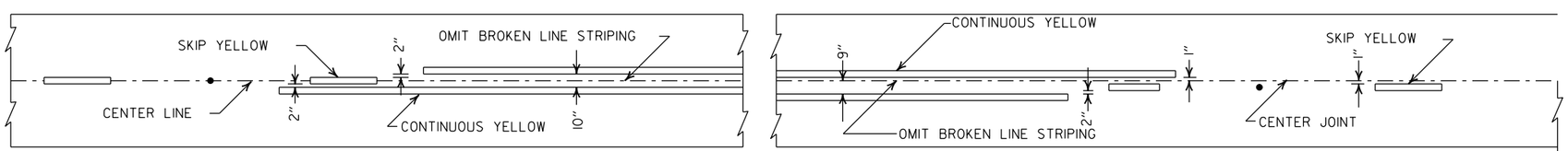

ASPHALT PAVEMENT

CONCRETE PAVEMENT

STRIPING AT ADJACENT NO PASSING LANES

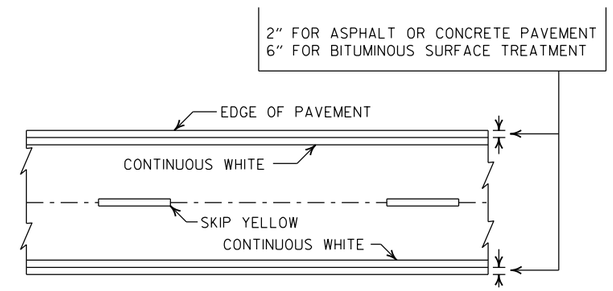

PAVEMENT EDGE LINE MARKING

NOTE:
THE RED LENS OF THE TYPE II R.P.M. SHALL FACE THE INCORRECT TRAFFIC MOVEMENT.

NOTE:
DIMENSIONS SHOWN FOR RAISED PAVEMENT MARKERS ARE TYPICAL. THE CONTRACTOR MAY SUBSTITUTE SIMILAR MARKERS WITH THE APPROVAL OF THE ENGINEER. REQUESTING APPROVAL FOR SIMILAR MARKERS MAY BE MADE BY REFERRING TO THE ARDOT QUALIFIED PRODUCTS LIST.

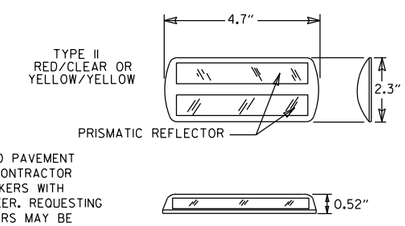

DETAIL OF STANDARD RAISED PAVEMENT MARKERS

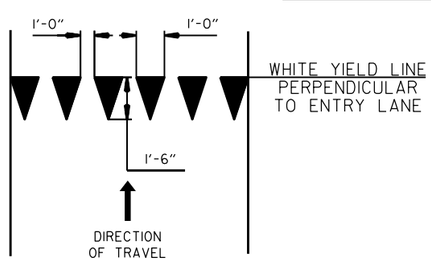

YIELD LINE DETAIL

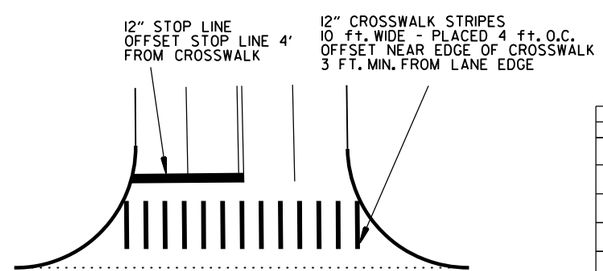

CROSSWALK AND STOP LINE DETAILS

DATE	REVISION	FILMED
2-27-20	REVISED STOP LINE DETAILS	
6-1-17	ADDED YIELD LINE DETAIL	
5-12-16	REVISED LINE WIDTHS, SPACING, & NOTES	
9-12-13	REVISED DETAIL OF STANDARD RAISED PAVEMENT MARKERS	
11-17-10	REVISED GENERAL NOTES & REMOVED PLOWABLE PVMT MRKRS	
11-18-04	REVISED NOTE 2 & GENERAL NOTES	
8-22-02	ADDED CROSSWALK & STOPBAR DTLS.	
7-02-98	ADDED DETAILS OF STD. RAISED PAV'T. MARKERS	
4-26-96	REV. NOTES 3&4; ADDED R.P.M.	
9-30-80	DRAWN	1-9-30-80

ARKANSAS STATE HIGHWAY COMMISSION

PAVEMENT MARKING DETAILS

STANDARD DRAWING PM-1

NOTE:

1. UNLESS OTHERWISE SPECIFIED ON THE PLANS, THE UNDERDRAIN COVER SHALL BE THOROUGHLY COMPACTED EARTH AND SHALL BE SUBSIDIARY TO PIPE UNDERDRAIN.

2. GRANULAR MATERIAL SHALL BE WRAPPED WITH GEOTEXTILE FABRIC. LAP FABRIC 12" OR THE WIDTH OF THE TRENCH AT THE TOP.

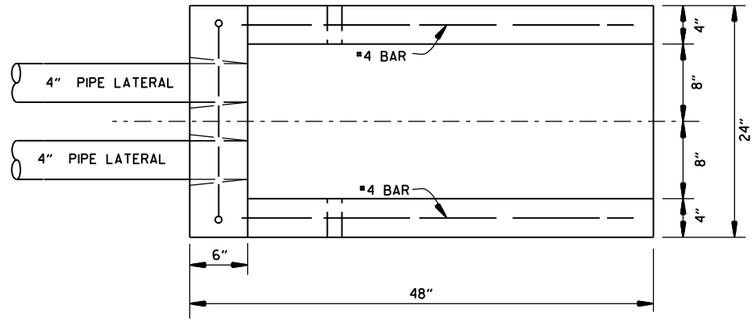

PLAN VIEW

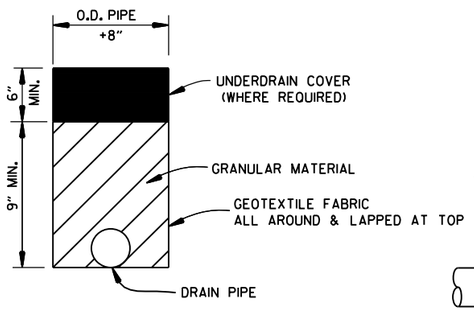

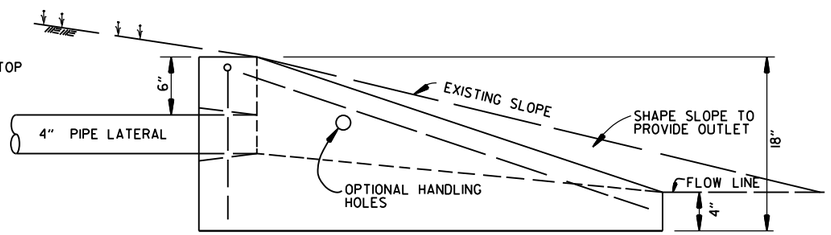

SIDE VIEW

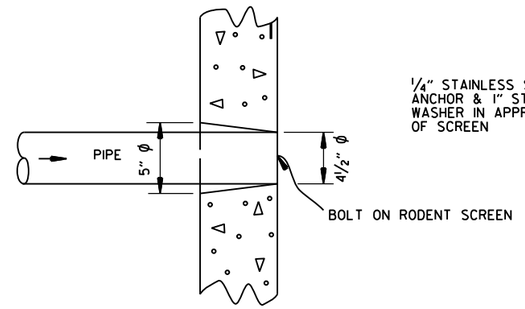

DETAIL OF HOLE
FOR 4" PIPE

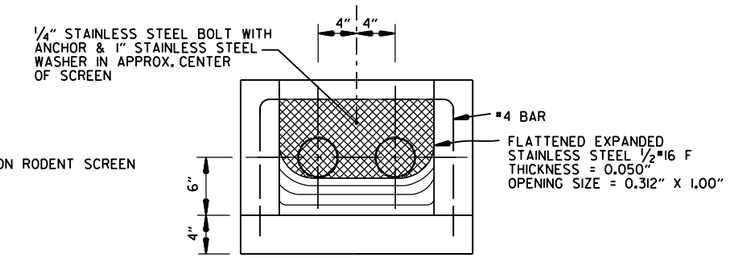

FRONT VIEW
(DETAIL OF RODENT SCREEN)

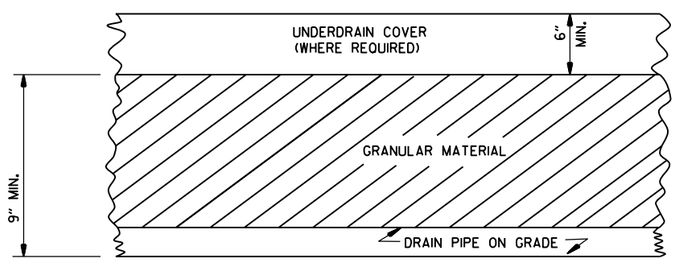

DETAILS OF PIPE UNDERDRAIN

UNDERDRAIN OUTLET PROTECTORS

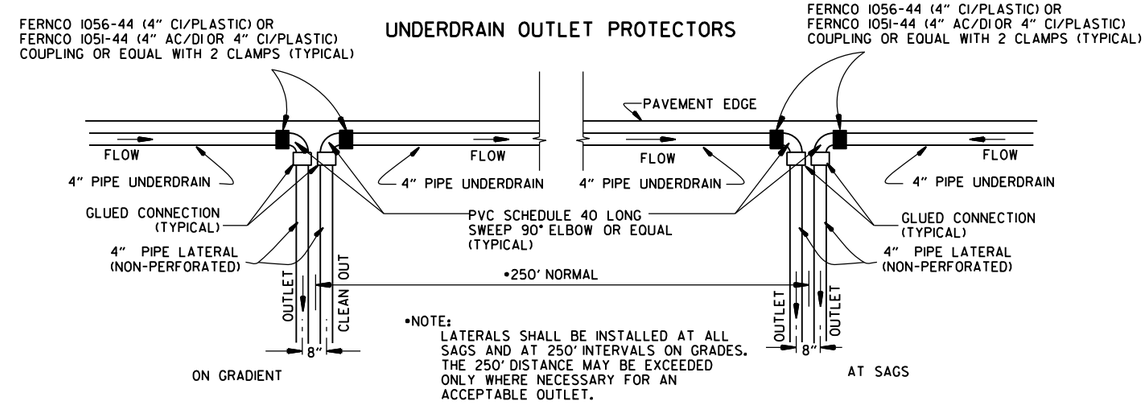

•NOTE:
LATERALS SHALL BE INSTALLED AT ALL SAGS AND AT 250' INTERVALS ON GRADES. THE 250' DISTANCE MAY BE EXCEEDED ONLY WHERE NECESSARY FOR AN ACCEPTABLE OUTLET.

DETAIL OF PIPE UNDERDRAIN LATERALS WHEN PLACED ALONG PAVEMENT EDGE

NOTE: PVC PIPE FOR LATERALS SHALL MEET THE REQUIREMENTS OF ASTM D 1785 (LATEST REVISION) FOR SCHEDULE 40 PIPE.

NOTES FOR PIPE UNDERDRAINS

1. GEOTEXTILE FABRIC SHALL MEET THE REQUIREMENTS OF SECTION 625 FOR TYPE I. PAYMENT FOR GEOTEXTILE FABRIC AND GRANULAR FILTER MATERIAL SHALL BE INCLUDED IN THE PRICE BID PER LIN. FT. FOR "4" PIPE UNDERDRAINS" IN ACCORDANCE WITH SECTION 611 OF THE STANDARD SPECIFICATIONS.

2. 4" NON-PERFORATED SCHEDULE 40 PVC PIPE LATERALS WITH OUTLET PROTECTORS SHALL BE INSTALLED AS SHOWN HEREON. LATERALS WILL BE MEASURED AND PAID FOR AS "4" PIPE UNDERDRAINS." UNDERDRAIN OUTLET PROTECTORS WILL BE MEASURED AND PAID FOR BY THE UNIT IN ACCORDANCE WITH SECTION 611 OF THE STANDARD SPECIFICATIONS.

3. EXISTING 4" PIPE UNDERDRAINS MAY BE CONNECTED TO PROPOSED DROP INLETS OR EXTENDED WHERE DIRECTED BY THE ENGINEER. PAYMENT FOR CONNECTING TO DROP INLETS SHALL BE CONSIDERED INCLUDED IN THE PRICE BID FOR "4" PIPE UNDERDRAINS."

4. THE LOCATION OF ALL LATERALS SHALL BE MARKED WITH 4" X 12" PERMANENT PAVEMENT MARKING TAPE (TYPE III WHITE) AT THE OUTSIDE EDGE OF THE SHOULDER, PLACED TRANSVERSE TO TRAFFIC. PAYMENT FOR THIS WORK SHALL BE INCLUDED IN THE PRICE BID FOR THE VARIOUS CONTRACT ITEMS.

5. PAYMENT FOR THE RODENT SCREEN SHALL BE INCLUDED IN THE PRICE BID PER EACH FOR "UNDERDRAIN OUTLET PROTECTORS."

6. ANY EXISTING UNDERDRAINS THAT INTERFERE WITH INSTALLATION OF THE NEW UNDERDRAIN SYSTEM SHALL BE REMOVED AND DISPOSED OF AS DIRECTED BY THE ENGINEER. PAYMENT WILL BE CONSIDERED INCLUDED IN THE PRICE BID FOR THE VARIOUS CONTRACT ITEMS. EXISTING UNDERDRAIN OUTLET PROTECTORS SHALL BE REMOVED UNDER THE ITEM "REMOVAL AND DISPOSAL OF UNDERDRAIN OUTLET PROTECTORS."

7. AT LOCATIONS WHERE A SINGLE LATERAL IS USED THE CONTRACTOR SHALL HAVE THE FOLLOWING OPTIONS: 1. INSTALL OUTLET PROTECTOR AS SHOWN ON STANDARD DRAWING PU-1 AND GROUT THE UNUSED HOLE OR 2. INSTALL AN OUTLET PROTECTOR WITH A SINGLE HOLE.

DATE	REVISION	DATE FILMED
12-8-16	ADDED NOTES FOR PIPE UNDERDRAINS, REVISED RODENT SCREEN DETAIL AND NOTES, REMOVED NOTE 1 FOR GRANULAR MATERIAL, ADDED NOTE FOR GEOTEXTILE FABRIC	
4-10-03	REVISED NOTE 3	
1-12-00	REVISED DETAIL OF UNDERDRAIN LATERALS	
11-18-98	REVISED NOTE	
10-18-96	REVISED MIN. DEPTH & GEOTEXTILE FABRIC	
4-26-96	ADDED LATERAL NOTE; 5½" TO 5"	
11-22-95	REVISED LATERALS	
7-20-95	REVISED LATERALS & ADDED NOTE	
11- 3-94	REVISED FOR DUAL LATERALS	11- 3-94
10- 1-92	SUBSTITUTED GEOTEXTILE	10- 1-92
8-15-91	ADDED POLYEDTHYLENE PIPE	8-15-91
11- 8-90	DELETED ALTERNATE NOTE	11- 8-90
1-25-90	ADDED 4" SNAP ADAPTER	1-25-90
11-30-89	DEL. (SUBGRADE); ADDED (WHERE REQUIRED)	11-30-89
7-15-88	ISSUED P.L.M.	647-7-15-88

ARKANSAS STATE HIGHWAY COMMISSION

DETAILS OF PIPE UNDERDRAIN

STANDARD DRAWING PU-1

STEEL FABRICATION: REINFORCING STEEL FABRICATION SHALL CONFORM TO THE DIMENSIONS LISTED IN THE TABLE BELOW:

BAR SIZE	PIN DIAMETER	HOOK EXTENSION "K"
3	2¼"	4"
4	3 "	4½"
5	3¾"	5"
6	4½"	6"
7	5¼"	7"
8	6"	8"

IF THE OVERALL HEIGHT OF THE HOOK (SEE DIAGRAM BELOW) FOR A "b", "b1", "b2" or "b3" BENT BAR IS GREATER THAN THE CORRESPONDING TOP OR BOTTOM SLAB THICKNESS, LESS 2¾ INCHES, EACH BENT BAR SHALL BE REPLACED WITH ONE HOOKED BAR AND ONE STRAIGHT BAR, USING LENGTHS AS SHOWN IN THE TABLE BELOW. THE TWO BARS SHALL BE THE SAME DIAMETER AS, AND PLACED AT THE SAME SPACING AS, THE "b", "b1", "b2" OR "b3" BENT BARS THEY REPLACE.

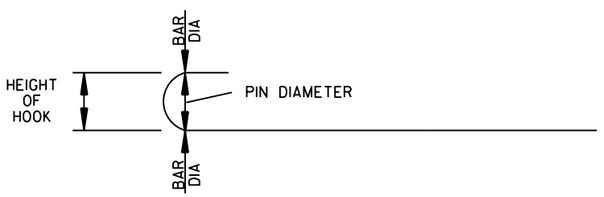

NOTE: DIMENSIONS OF BARS ARE MEASURED OUT TO OUT OF BARS.

OVERALL HEIGHT OF HOOKED BAR DIAGRAM

THE HOOKED BARS SHALL BE PLACED IN THE BOTTOM OF THE TOP SLAB AND THE TOP OF THE BOTTOM SLAB. THE STRAIGHT BARS SHALL BE PLACED IN THE TOP OF THE TOP SLAB AND THE BOTTOM OF THE BOTTOM SLAB. SEE TABLE BELOW FOR LENGTHS OF REPLACEMENT HOOKED AND STRAIGHT BARS.

FOR SKEWED CULVERTS, THE REPLACEMENT STRAIGHT BAR MAY HAVE TO BE CUT IN FIELD TO FIT.

REPLACEMENT BAR LENGTHS TABLE

BAR SIZE: "b", "b1", "b2" OR "b3"	LENGTH OF HOOKED BAR	LENGTH OF STRAIGHT BAR
#4	L + 1' - 0"	SEE "c" BAR LENGTH
#5	L + 1' - 2"	SEE "c" BAR LENGTH
#6	L + 1' - 4"	SEE "c" BAR LENGTH
#7	L + 1' - 8"	SEE "c" BAR LENGTH
#8	L + 1' - 10"	SEE "c" BAR LENGTH
#9	L + 2' - 6"	SEE "c" BAR LENGTH

L = "OW" - 3 INCHES

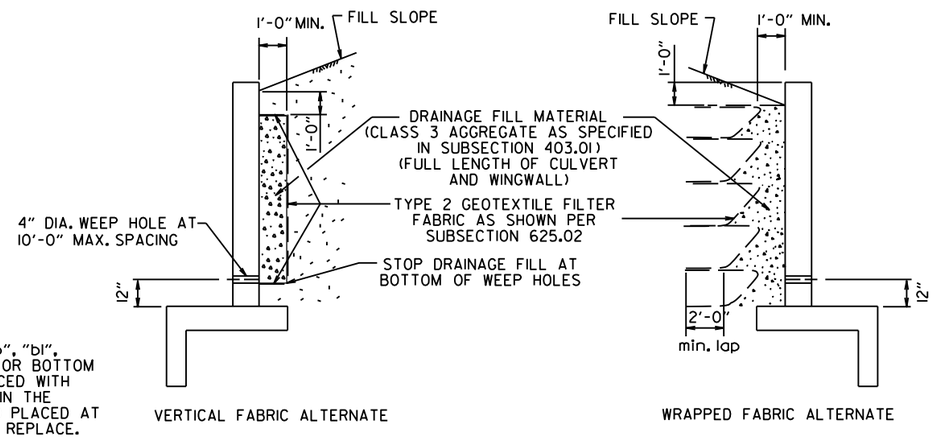

WINGWALL & CULVERT DRAINAGE DETAIL

REINFORCED CONCRETE BOX CULVERT GENERAL NOTES

CONCRETE SHALL BE CLASS S WITH A MINIMUM 28 DAY COMPRESSIVE STRENGTH OF 3500 PSI.

REINFORCING STEEL SHALL BE AASHTO M 31 OR M 53, GRADE 60.

CONSTRUCTION AND MATERIALS FOR WINGWALL & CULVERT DRAINAGE, INCLUDING WEEP HOLES AND GRANULAR MATERIAL, SHALL BE SUBSIDIARY TO THE BID ITEM, "CLASS S CONCRETE".

MEMBRANE WATERPROOFING SHALL CONFORM TO THE REQUIREMENTS OF SECTION 815 OF THE STANDARD SPECIFICATIONS.

MEMBRANE WATERPROOFING SHALL BE APPLIED TO ALL CONSTRUCTION JOINTS IN THE TOP SLAB AND THE SIDEWALLS OF R.C. BOX CULVERTS AS DIRECTED BY THE ENGINEER. NO PAYMENT SHALL BE MADE FOR THIS ITEM, BUT PAYMENT WILL BE CONSIDERED TO BE INCLUDED IN THE VARIOUS ITEMS BID FOR THE R.C. BOX CULVERT.

REINFORCING STEEL TOLERANCES: THE TOLERANCES FOR REINFORCING STEEL SHALL MEET THOSE LISTED IN "MANUAL OF STANDARD PRACTICE" PUBLISHED BY CONCRETE REINFORCING STEEL INSTITUTE (CRSI) EXCEPT THAT THE TOLERANCE FOR TRUSS BARS SUCH AS FIGURE 3 ON PAGE 7-4 OF THE CRSI MANUAL SHALL BE MINUS ZERO TO PLUS ½ INCH.

WEEP HOLES IN BOX CULVERT WALLS SHALL HAVE A MAXIMUM HORIZONTAL SPACING OF 10'-0" AND SHALL BE SPACED TO CLEAR ALL REINFORCING STEEL. THE DRAIN OPENING SHALL BE 4" DIAMETER AND SHALL BE PLACED 12" ABOVE THE TOP OF THE BOTTOM SLAB.

WEEP HOLES IN WINGWALLS SHALL HAVE A MAXIMUM HORIZONTAL SPACING OF 10'-0" AND SHALL BE SPACED TO CLEAR ALL REINFORCING STEEL. THERE SHALL BE A MINIMUM OF TWO (2) WEEP HOLES IN EACH WINGWALL. THE DRAIN OPENING SHALL BE 4" DIAMETER AND SHALL BE PLACED 12" ABOVE THE TOP OF THE WINGWALL FOOTING.

THE REQUIREMENTS SHOWN ON THIS DRAWING SHALL SUPERCEDE THE CORRESPONDING REQUIREMENTS ON ALL REINFORCED CONCRETE BOX CULVERT STANDARD DRAWINGS.

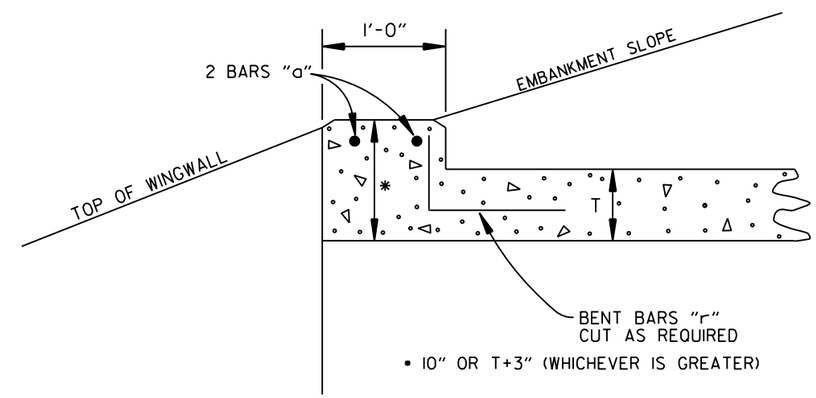

NOTE: FOR ALL SKEWED R.C. BOX CULVERTS THE LENGTH "K" OF THE MODIFIED HEADWALL SHALL BE EQUAL TO THE ROADWAY LENGTH "RL". THE ENDS OF THE HEADWALL SHALL BE CONSTRUCTED PARALLEL TO THE SKEW ANGLE OF THE BOX CULVERT.

R.C. BOX CULVERT HEADWALL MODIFICATIONS

DATE	REVISION	DATE FILMED
7/26/12	REV. DRAINAGE FILL MATERIAL & DETAIL	
12/15/11	REQUIRE WEEP HOLES IN BOX CULVERT WALLS	
5-25-06	REV. GEN. NOTES AND DETAILS FOR WEEP HOLES; BAR DIAGRAM	
11-16-01	ADDED WINGWALL DRAINAGE DETAIL/EDITED GEN. NOTES	
10-18-96	REV. ASTM REF. TO AASHTO & ADDED BAR DIAGRAM	
10-12-95	MOVED SOLID SODDING DETAIL TO RCB-2	
6-2-94	ADDED SOLID SODDING PLAN DETAIL	
8-5-93	REVISED PIN DIAMETER TO SPECS.	
8-15-91	DRAWN AND ISSUED	

ARKANSAS STATE HIGHWAY COMMISSION

REINFORCED CONCRETE BOX CULVERT DETAILS

STANDARD DRAWING RCB-1

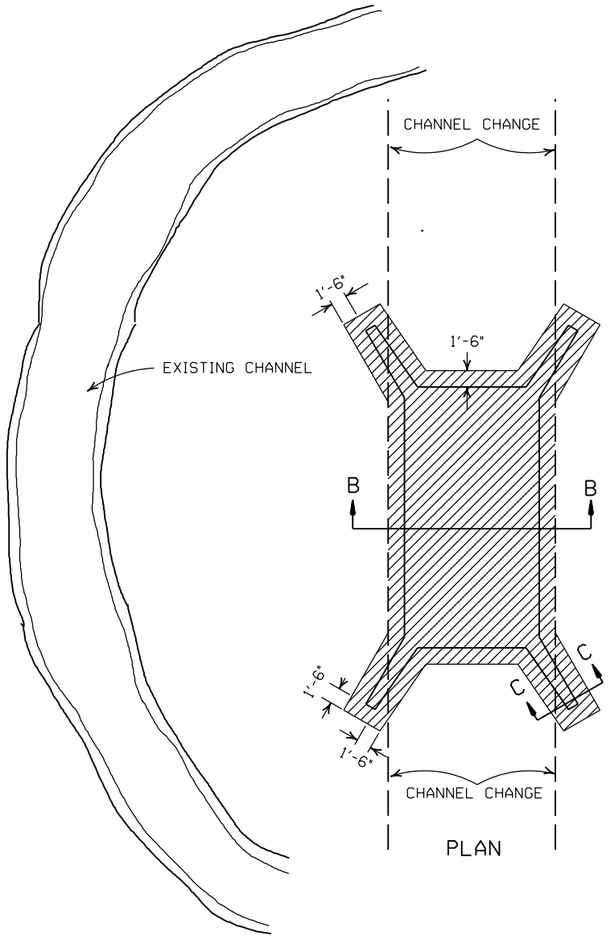

PLAN

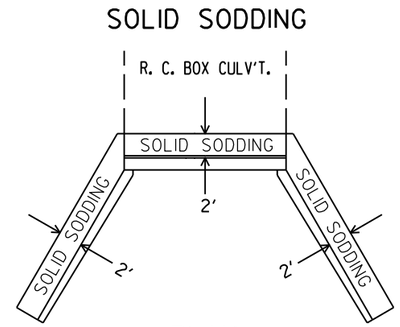

PLAN

PARTIAL SECTION SHOWING SOLID SODDING AT HEADWALLS AND WING WALLS

NOTE: LENGTH MEASURED ALONG THE CENTER OF 2' STRIP OF SOLID SODDING.

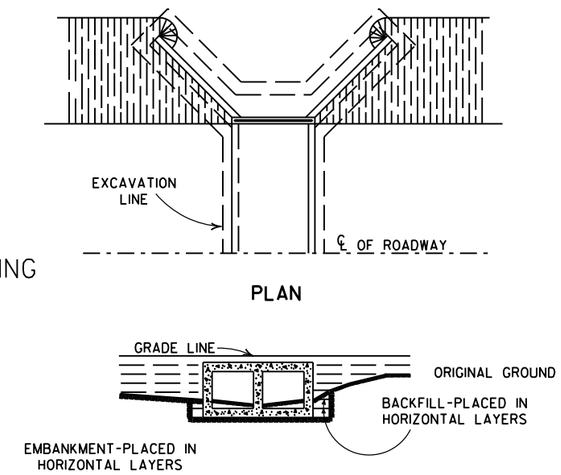

BACKFILL DETAILS FOR BOX CULVERT

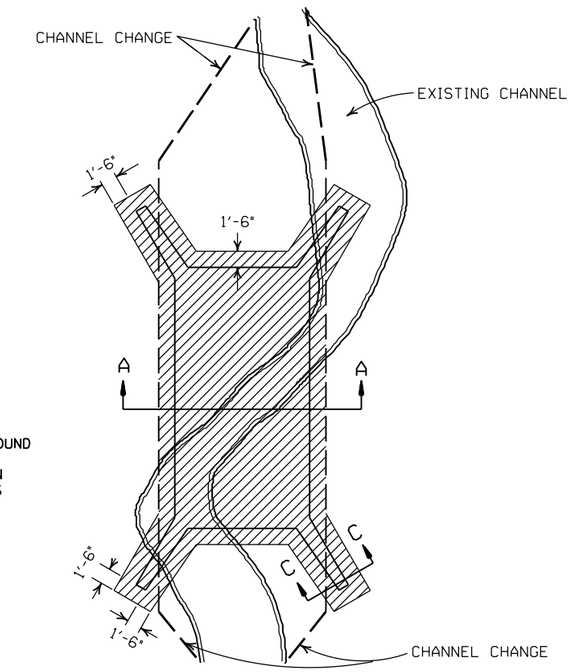

PLAN

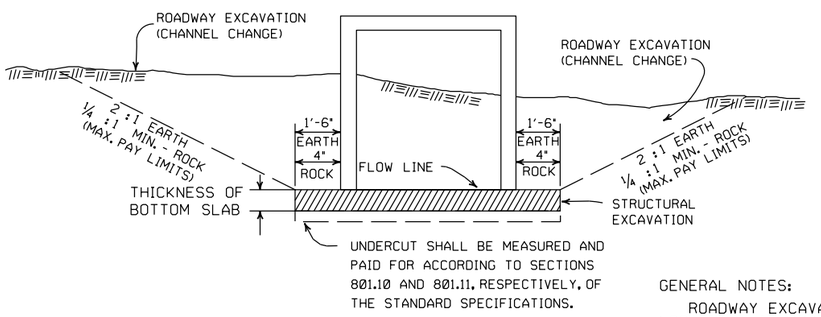

SECTION B-B

DETAILS FOR NEW CHANNELS

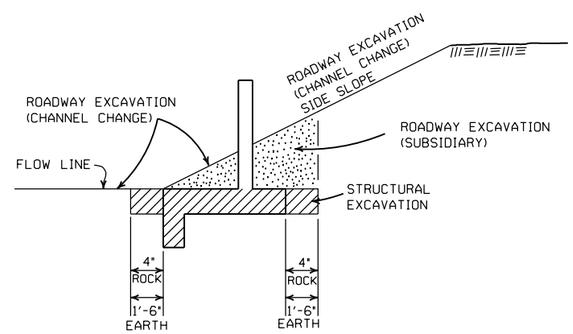

SECTION C-C

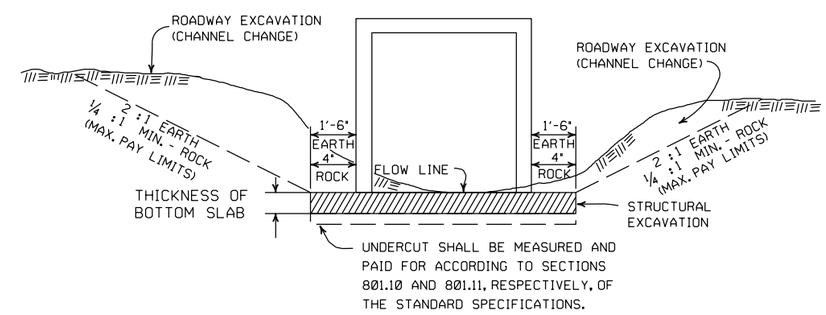

SECTION A-A

DETAILS THROUGH EXISTING CHANNELS

GENERAL NOTES:

ROADWAY EXCAVATION (CHANNEL CHANGE) WILL BE PAID FOR AT R.C. BOX CULVERT LOCATIONS. IT WILL BE PAID TO THE LIMITS ACTUALLY CUT AND WILL BE CONFINED TO THAT PORTION OF THE INDICATED AREA THAT IS ABOVE THE FLOW LINE. ROADWAY EXCAVATION (CHANNEL CHANGE) SHALL BE MEASURED BY CROSS SECTIONS AND VOLUMES COMPUTED BY AVERAGE END AREA METHOD. ALL CHANNEL CHANGES SHALL BE BROUGHT TO GRADE PRIOR TO MAKING ANY EXCAVATION FOR STRUCTURES.

EXCAVATION FOR STRUCTURES WILL BE PAID FOR AT ALL R.C. BOX CULVERT LOCATIONS. IT WILL BE PAID TO THE LIMITS SHOWN AND SHALL BE CONFINED TO THAT PORTION OF THE INDICATED AREA THAT IS BELOW THE CHANNEL FLOW LINE.

ROADWAY EXCAVATION SHOWN IN SECTION C-C ABOVE AS SUBSIDIARY WILL NOT BE MEASURED OR PAID FOR DIRECTLY, BUT PAYMENT WILL BE CONSIDERED TO BE INCLUDED IN THE VARIOUS ITEMS OF EXCAVATION.

DATE	REVISION	FILMED
11-20-03	REVISED SECTION A-A NOTE	
8-22-02	REVISED SECTION B-B NOTE	
10-12-95	COMBINED 1891B AND 1888A	
1-4-83	REVISED GENERAL NOTES	674-1-4-83
	AND ADDED MAXIMUM PAY	
	LIMIT NOTES.	
2-2-76	EXCAV. PAY LIMITS	917-2-2-76
10-2-72	REVISED AND REDRAWN	564-10-16-72

ARKANSAS STATE HIGHWAY COMMISSION

EXCAVATION PAY LIMITS, BACKFILL, & SOLID SODDING FOR BOX CULVERTS

STANDARD DRAWING RCB-2

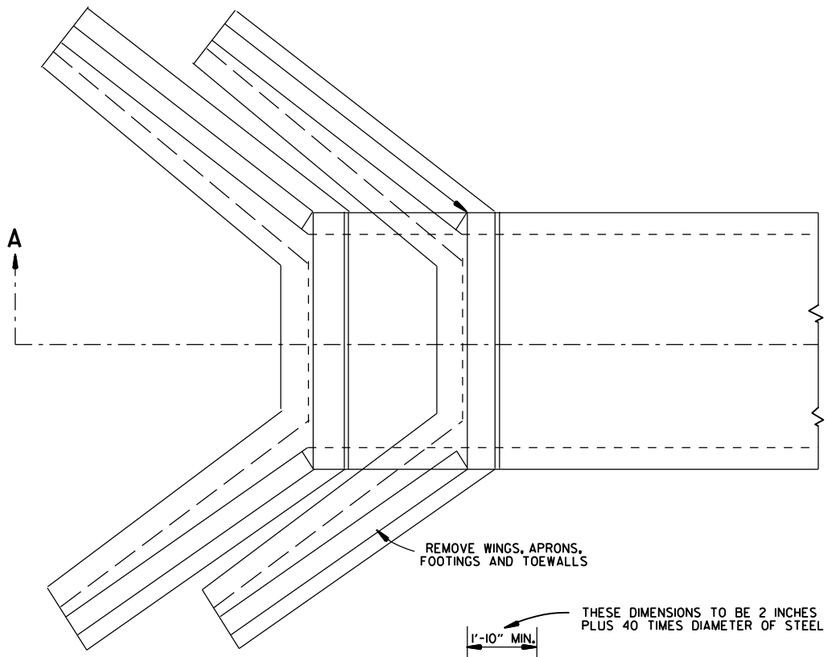

TOP VIEW
R.C. BOX CULVERT

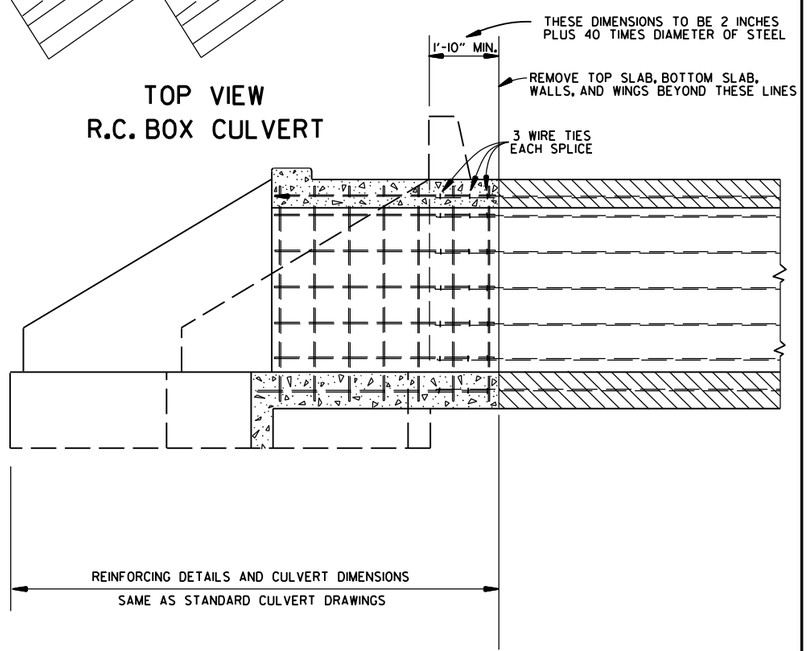

SECTION A-A

METHOD 1

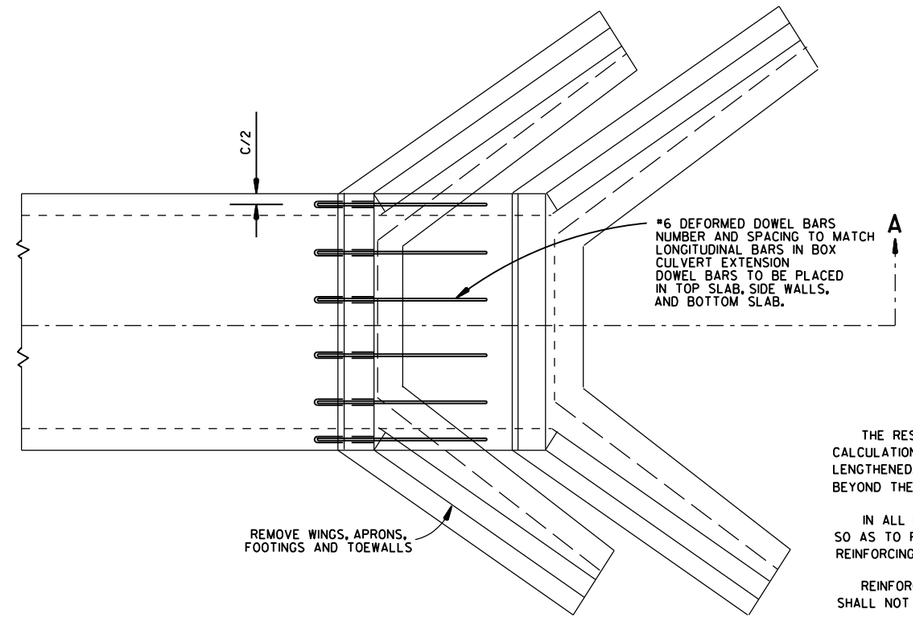

TOP VIEW
R.C. BOX CULVERT

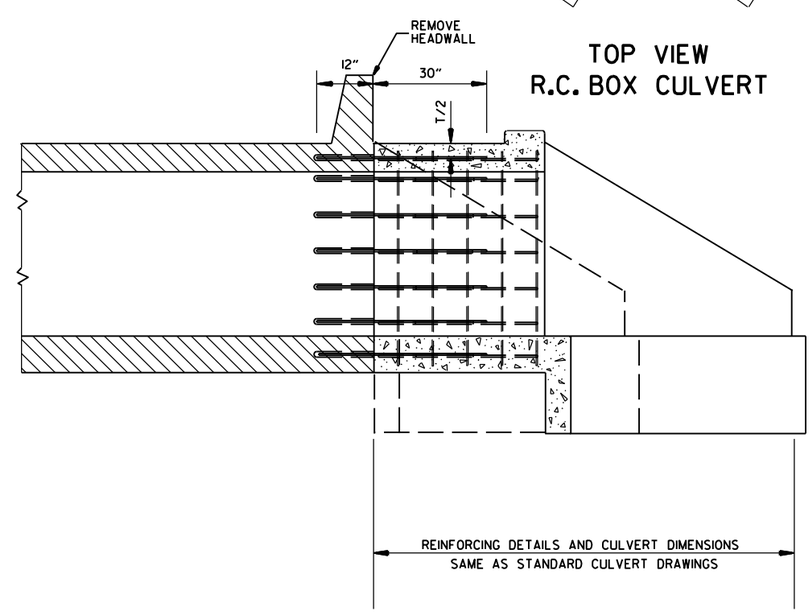

SECTION A-A

METHOD 2

GENERAL NOTES

	USE FOR METHOD
THE RESIDENT ENGINEER WILL MAKE INDIVIDUAL CALCULATIONS OF QUANTITIES FOR EACH STRUCTURE LENGTHENED, MAKING NO ALLOWANCE FOR OVERBREAKAGE BEYOND THE LINES INDICATED.	1
IN ALL INSTANCES CONCRETE SHALL BE REMOVED SO AS TO PERMIT FULL 40 DIAMETER SPLICE OF REINFORCING STEEL.	1
REINFORCING STEEL REMOVED FROM EXISTING STRUCTURE SHALL NOT BE REUSED IN CONSTRUCTING EXTENSION.	1&2
ON R.C. BOX CULVERTS THAT HAVE AN EXISTING CONCRETE APRON; THE CONCRETE APRON SHALL BE REMOVED WITH THE WINGS. THE COST OF REMOVING ALL OLD CONCRETE WILL BE INCLUDED IN THE PRICE BID PER CUBIC YARD FOR NEW CONCRETE OF THE CLASS SPECIFIED AND NO ADDITIONAL COMPENSATION WILL BE ALLOWED.	1&2
MATERIALS FOR SECURING DOWEL BARS SHALL MEET THE REQUIREMENTS OF SECTION 507.02 OF THE STANDARD SPECIFICATIONS.	2
DOWEL BARS SHALL BE INSTALLED AS FOLLOWS: THE DRILLING PROCEDURE SHALL BE APPROVED BY THE ENGINEER. THE FILLING SYSTEM SHALL BE APPROVED BY THE ENGINEER, AND SHALL BE AN INJECTION-TYPE SYSTEM WHICH WILL INSURE THAT SUFFICIENT MATERIAL IS INJECTED SO IT COMPLETELY SURROUNDS THE BARS AND FILLS THE HOLES.	2
THE CONTRACTOR SHALL HAVE THE OPTION OF USING EITHER METHOD 1 OR METHOD 2. REGARDLESS OF WHICH METHOD IS USED, PAY QUANTITIES WILL BE CALCULATED BASED ON METHOD 1.	1&2

NOTE:
NO PART OF THIS STANDARD IS TO BE USED FOR ANY DETAILS RELATIVE TO NEW CONSTRUCTION.

SEE STANDARD DRAWING LISTED IN TABULATION OF STRUCTURES FOR ALL NEW CONSTRUCTION DETAILS.

DATE	REVISION	DATE FILM
10-12-95	CHANGED DRAWING # FROM 144-A	
4-1-93	ADDED GENERAL NOTE	
10-1-92	ADDED ALT. METHOD OF EXTENSION	
11-30-89	REDRAWN	
1-4-83	ELIMINATED CONCRETE CLASS	
12-20-56	RETRACED	

ARKANSAS STATE HIGHWAY COMMISSION

METHOD OF EXTENDING EXISTING R.C. BOX CULVERTS

STANDARD DRAWING RCB-3

SUPERELEVATION TABLE FOR TWO - WAY TRAFFIC

DEGREE OF CURVE	30 MPH e	30 MPH Ls (FT) MINIMUM	30 MPH Ls (FT) DESIRABLE	35 MPH e	35 MPH Ls (FT) MINIMUM	35 MPH Ls (FT) DESIRABLE	40 MPH e	40 MPH Ls (FT) MINIMUM	40 MPH Ls (FT) DESIRABLE	45 MPH e	45 MPH Ls (FT) MINIMUM	45 MPH Ls (FT) DESIRABLE	50 MPH e	50 MPH Ls (FT) MINIMUM	50 MPH Ls (FT) DESIRABLE	55 MPH e	55 MPH Ls (FT) MINIMUM	55 MPH Ls (FT) DESIRABLE	60 MPH e	60 MPH Ls (FT) MINIMUM	60 MPH Ls (FT) DESIRABLE	65 MPH e	65 MPH Ls (FT) MINIMUM	65 MPH Ls (FT) DESIRABLE	70 MPH e	70 MPH Ls (FT) MINIMUM	70 MPH Ls (FT) DESIRABLE	75 MPH e	75 MPH Ls (FT) MINIMUM	75 MPH Ls (FT) DESIRABLE
0° 15'	NC			NC			NC			NC			NC			NC			NC			NC			NC			NC		
0° 30'	NC			NC			NC			NC			NC			NC			RC	96		RC	96		RC	96		0.022	101	
0° 45'	NC			NC			NC			NC			RC	96		RC	96		0.024	106		0.026	110		0.030	120		0.032	125	
1° 00'	NC			NC			NC			RC	90		0.022	101		0.026	110		0.030	120		0.034	130		0.038	139		0.042	149	300
1° 15'	NC			NC			RC	84		0.022	95		0.028	115		0.032	125		0.038	139		0.042	149		0.046	158	300	0.052	173	
1° 30'	NC			RC	78		0.022	88		0.028	108		0.032	125		0.038	139		0.044	154		0.050	168		0.056	182		0.062	197	
1° 45'	RC	72		RC	78		0.026	97		0.030	113		0.036	134		0.044	154		0.050	168	300	0.056	182	300	0.064	202		0.070	216	
2° 00'	RC	72		0.024	86		0.028	101		0.034	122		0.042	149		0.048	163		0.056	182		0.064	202		0.070	216		0.080	240	
2° 15'	RC	72		0.026	90		0.032	109		0.038	131		0.046	158		0.054	178	300	0.062	197		0.070	216		0.078	235		0.088	259	350
2° 30'	0.022	75		0.028	94		0.034	113		0.042	140		0.050	168		0.058	187		0.068	211		0.076	230		0.086	254	350	0.096	278	
2° 45'	0.024	79		0.030	98		0.038	122		0.046	149	200	0.054	178	250	0.064	202		0.072	221		0.082	245		0.092	269		0.100	288	400
3° 00'	0.026	83		0.034	105		0.040	126		0.050	158		0.058	187		0.068	211		0.078	235		0.088	259		0.098	283		D MAX = 2° 45'		
3° 15'	0.028	86		0.036	109		0.044	134	200	0.052	162		0.062	197		0.072	221		0.082	245		0.092	269		0.100	288	400			
3° 30'	0.030	90		0.038	113		0.046	139		0.056	171		0.066	206		0.076	230		0.086	254		0.096	278	350	D MAX = 3° 30'					
3° 45'	0.032	93		0.040	117		0.050	147		0.058	176		0.070	216		0.080	240		0.090	264		0.098	283							
4° 00'	0.034	97		0.042	121	200	0.052	151		0.062	185		0.072	221		0.084	250		0.094	274	350	0.100	288							
4° 15'	0.036	100		0.044	125		0.054	155		0.064	189		0.076	230		0.086	254		0.096	278		D MAX = 4° 15'								
4° 30'	0.036	100	200	0.046	129		0.056	160		0.068	198		0.078	235		0.090	264		0.098	283										
4° 45'	0.038	104		0.048	133		0.060	168		0.070	203		0.082	245		0.092	269	350	0.100	288										
5° 00'	0.040	108		0.050	137		0.062	172		0.072	207		0.084	250		0.094	274		D MAX = 5° 15'										
5° 30'	0.044	115		0.054	144		0.066	181		0.078	221	250	0.088	259		0.098	283													
6° 00'	0.046	119		0.058	152		0.070	189		0.082	230		0.092	269		0.100	288													
6° 30'	0.050	126		0.062	160		0.074	198		0.086	239		0.096	278	300	D MAX = 6° 30'														
7° 00'	0.052	130		0.064	164		0.078	206		0.090	248		0.098	283																
7° 30'	0.054	133		0.068	172		0.080	210		0.092	252	300	0.100	288																
8° 00'	0.058	140		0.070	176		0.084	219		0.094	257		D MAX = 8° 25'																	
8° 30'	0.060	144		0.072	179		0.086	223	250	0.096	261																			
9° 00'	0.062	148		0.076	187		0.088	227		0.098	266																			
9° 30'	0.064	151		0.078	191		0.092	235		0.100	270																			
10° 00'	0.066	155		0.080	195		0.094	240		D MAX = 10° 30'																				
11° 00'	0.070	162		0.084	203		0.096	244																						
12° 00'	0.074	169		0.088	211	250	0.098	248																						
13° 00'	0.076	173		0.090	215		0.100	252	300																					
14° 00'	0.080	180		0.094	222		D MAX = 13° 45'																							
15° 00'	0.082	184		0.096	226																									
16° 00'	0.086	191		0.098	230																									
17° 00'	0.088	194		0.100	234																									
18° 00'	0.090	198	250	D MAX = 19° 30'																										
19° 00'	0.092	202																												
20° 00'	0.094	205																												
21° 00'	0.096	209																												
22° 00'	0.096	209																												
23° 00'	0.098	212																												
24° 00'	0.098	212																												
25° 00'	0.100	216																												
D MAX = 28° 30'																														

ABBREVIATIONS

NC - NORMAL CROWN
RC - REVERSE CROWN, SUPERELEVATION AT NORMAL CROWN SLOPE
e - RATE OF SUPERELEVATION (FT. PER FT.)
Ls - LENGTH OF SUPERELEVATION TRANSITION (FT.)
L - DISTANCE FROM BEGINNING OF SUPERELEVATION TRANSITION TO ANY POINT (FT.)
d - WIDTH OF PAVEMENT (FT.) OR WIDTH OF SUBGRADE (FT.)
C - NORMAL CROWN (FT.)

GENERAL NOTES

1. ON PAVEMENT WITH TWO-WAY TRAFFIC, THE SUPERELEVATION SHALL BE REVOLVED ON THE INSIDE PAVEMENT EDGE UNLESS OTHERWISE NOTED ON THE PLANS
2. SUPERELEVATION VALUES SHOWN ON THE CROSS SECTIONS ARE VALUES (+) OR (-) TO BE ADDED TO OR SUBTRACTED FROM THE POINT OF CONTROL.
3. LENGTHS FOR L MAY BE ROUNDED IN MULTIPLES OF 25 FT. OR 50 FT. TO PERMIT SIMPLER CALCULATIONS.
4. PAVEMENTS WIDER THAN 2 LANES SHALL HAVE ADDITIONAL TRANSITION LENGTHS AS FOLLOWS:

3 LANE UNDIVIDED - - - - - +20%
4 LANE UNDIVIDED - - - - - +50%
5 LANE UNDIVIDED - - - - - +80%
6 LANE UNDIVIDED - - - - - +100%

NOTE: MAINTAIN NORMAL CROWN ON INSIDE UNTIL SUPERELEVATION EXCEEDS 2C.

RATE OF SUPERELEVATION SHALL BE COMPUTED ON STRAIGHT LINE METHOD USING APPLICABLE Ls.

SUPERELEVATION FORMULA $= \frac{Lde}{Ls}$

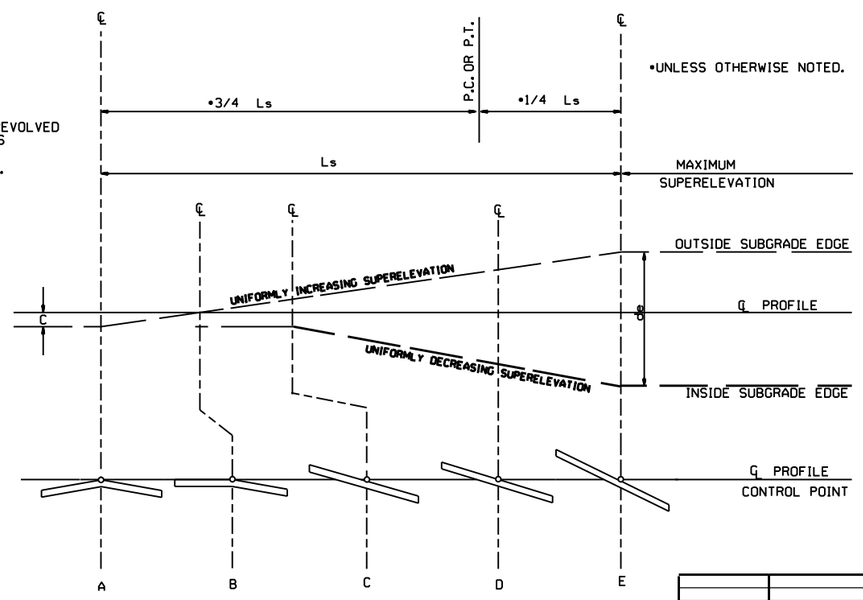

STANDARD METHOD WHEN SUPERELEVATION REVOLVES AROUND CENTER LINE

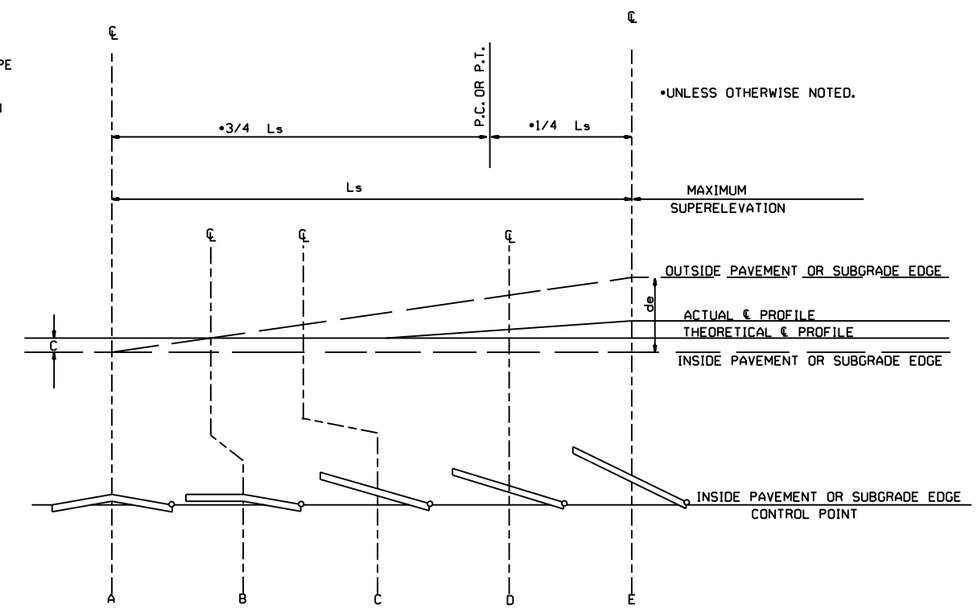

STANDARD METHOD WHEN SUPERELEVATION REVOLVES AROUND INNER SUBGRADE POINT OR INNER PAVEMENT EDGE

NOTE: MAINTAIN NORMAL CROWN ON INSIDE UNTIL SUPERELEVATION EXCEEDS 2C.

DATE	REVISION	DATE FILMED
11-07-19	REVISED SUPERELEVATION TABLE	
10-18-96	ADDED FORMULA	
01-09-87	ISSUED	534-1-9-87

ARKANSAS STATE HIGHWAY COMMISSION

TABLES AND METHOD OF SUPERELEVATION FOR TWO-WAY TRAFFIC

STANDARD DRAWING SE-2

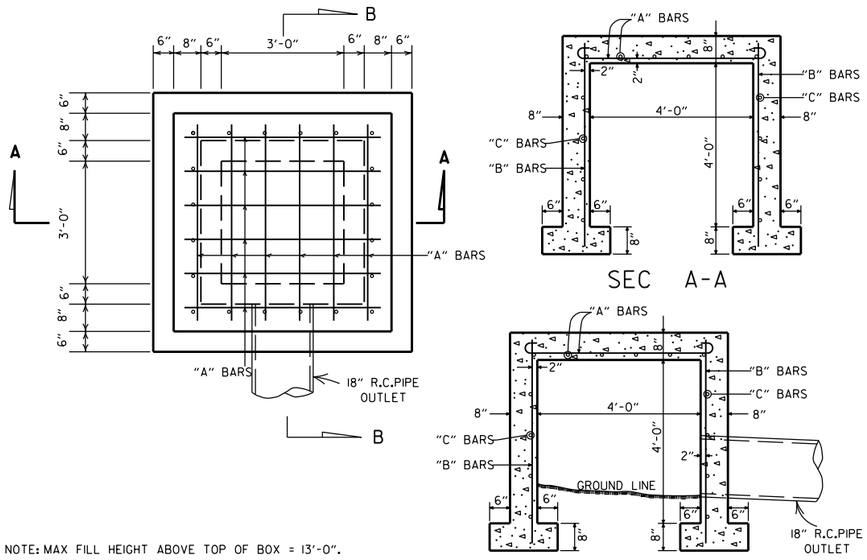

NOTE: MAX FILL HEIGHT ABOVE TOP OF BOX = 13'-0".

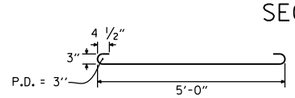

STEEL SCHEDULE

BARS	NUMBER	LENGTH	SPACING
"A"	12	6'-0"	10"
"B"	20	5'-0"	10 1/2"
"C"	16	5'-0"	12"

ALL STEEL TO BE #4 BARS

QUANTITIES

CONCRETE 3.31 CU. YDS.
REINFORCING STEEL 168 LB.

GENERAL NOTE:

THE PAY ITEMS FOR REINFORCED CONCRETE SPRING BOXES SHALL BE FOR THE QUANTITIES OF CONCRETE OF THE CLASS SPECIFIED, REINFORCING STEEL, EXCAVATION FOR STRUCTURES AND 18" R.C. PIPE CULVERT.

REINFORCED CONCRETE SPRING BOX

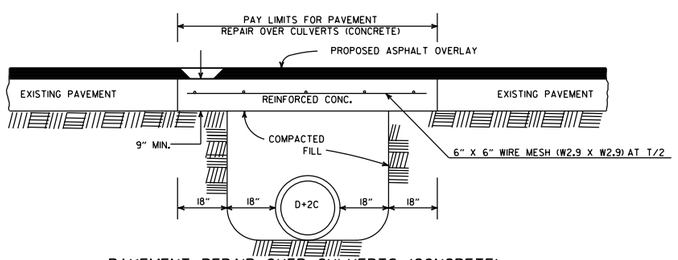

PAVEMENT REPAIR OVER CULVERTS (CONCRETE)

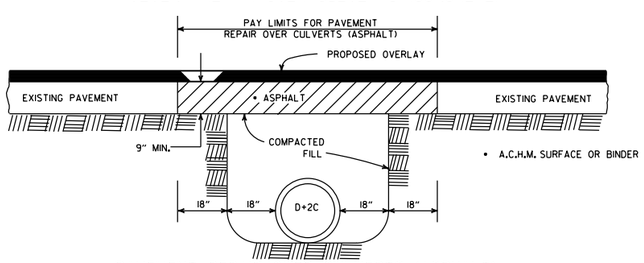

PAVEMENT REPAIR OVER CULVERTS (ASPHALT)

DETAIL SHOWING REPAIR OF EXISTING PAVEMENT AT CULVERT INSTALLATIONS

* A 2" MIN. HIGH CURB IS REQUIRED WHEN CONCRETE WALK IS ADJACENT TO THE HAND RAILING. PAYMENT FOR CURB SHALL BE CONSIDERED INCLUDED IN THE PRICE BID FOR CONCRETE WALKS.

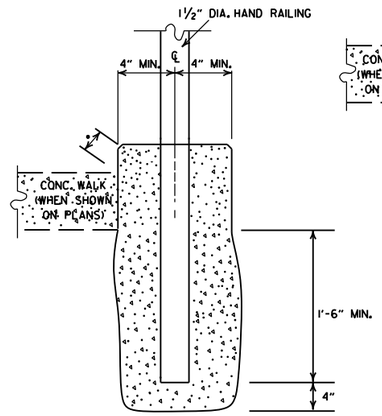

DETAIL OF HAND RAILING SET IN CONCRETE

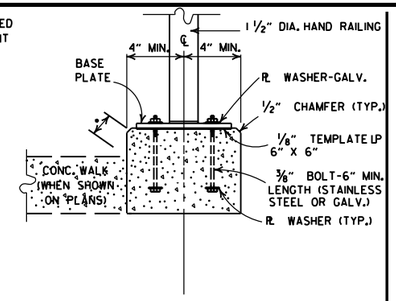

POST CONNECTION TO WALL

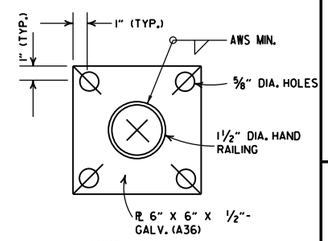

BASE PLATE

POST CONNECTION DETAILS

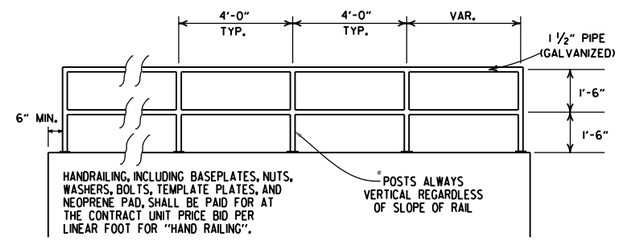

HAND RAILING SHALL CONFORM TO SECTION 633.

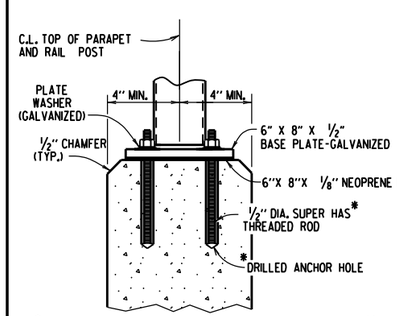

*HILTI HIT RE 500 EPOXY ADHESIVE ANCHOR SYSTEM WITH 4 1/2" EMBEDMENT OR APPROVED EQUAL.

THE ADHESIVE ANCHOR SYSTEM SHALL BE INSTALLED IN ACCORDANCE WITH MANUFACTURER'S RECOMMENDATIONS.

POST CONNECTION TO WALL

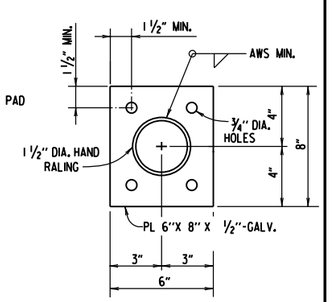

BASE PLATE

DETAILS OF ALTERNATE POST ANCHOR SYSTEM
(EPOXY ADHESIVE ANCHORS)

HAND RAILING DETAILS

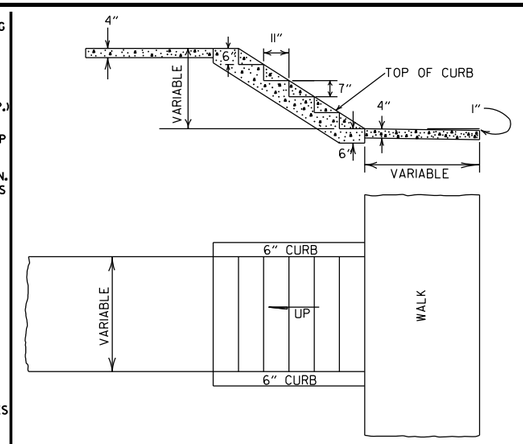

GENERAL NOTES

1. RISE AND TREAD DIMENSIONS OF STEPS MAY BE VARIED AS DIRECTED BY THE ENGINEER, HOWEVER, TREAD WIDTHS SHALL BE 11" MIN. ALL STEPS IN A FLIGHT SHALL HAVE CONSISTENT TREAD & RISER DIMENSIONS.
2. 1" TRANSVERSE EXPANSION JOINTS SHALL BE PLACED IN CONCRETE WALKS AT 45' INTERVALS.

DETAILS OF CONCRETE STEPS & WALKS

DATE	REVISION	DATE FILMED
10-25-18	REVISED DETAIL SHOWING REPAIR OF EXISTING PAVEMENT AT CULVERT INSTALLATIONS	
9-12-13	REVISED REINFORCED CONCRETE SPRING BOX	
7-26-12	REMOVED RETAINING WALL DETAILS & REVISED HAND RAILING DETAILS	
4-17-08	REV. JOINT & FOOTING STEP DETAILS	
11-29-07	REVISED RETAINING WALL DRAINAGE	
5-25-06	REVISED PVMT REPAIR OVER CULVERTS (CONC); REVISED REINFORCED CONC SPRING BOX	
10-9-03	REVISED PIPE RAILING DETAILS TO HAND RAILING DETAILS	
4-10-03	REVISED RETAINING WALL DRAWING	
8-22-02	ADDED HAND RAILING DETAIL	
11-16-01	REVISED PVMT REPAIR OVER CULVERTS (CONC); CORRECTED SPELLING IN GENERAL NOTES	
11-18-98	ADDED GENERAL NOTES TO CONCRETE STEPS & WALKS	
7-02-98	ENLARGED PIPE	
4-03-97	ADDED NOTE TO STEEL BAR SCHED.	
10-18-96	CORRECTED SPELLING	
4-26-96	ADD WEEP HOLE;REV. JOINT SPACING IN RET. WALL	
6-2-94	CHANGED CONST. TO CONTRACTION JOINT	
10-1-92	CHANGED MESH FABRIC TO WIRE MESH	10-1-92
8-15-91	DELETED HDWL MODIFICATION DETAIL	8-15-91
11-8-90	DELETED COLD MIX FROM CULV'T. REPAIR	11-8-90
11-30-89	REV. RETAINING WALL STEEL SCHEDULE	11-30-89
11-17-88	V. BARS BEHIND ARROW	665-11-17-88
7-15-88	REV. PAVEMENT REPAIR ADDED HDWL. MODS, DEL. PIPE UNDERDRAINS	649-7-15-88
11-1-84	REV. TRENCH FOR PIPE UNDERDRAIN	510-11-1-84
1-4-83	ELIMINATED CONC. CLASS & ADDED CHAMFER NOTE	682-1-4-83
3-2-81	SPELLING OF "UNDERDRAIN"	721-3-2-81
4-20-79	REV. UNDERDRAIN DET& PAVEMENT REPAIR	674-4-20-79
2-2-76	12"MIN. GRAN. MAT'L. OVER PIPE	919-2-2-76
4-10-75	REM. SPECS. FOR GRAN. MAT'L.	568-4-10-75-853
5-22-74	GRANULAR MAT'L. TO BE SB-3	567-5-22-74-740
10-2-72	REVISED AND REDRAWN	564-10-16-72

ARKANSAS STATE HIGHWAY COMMISSION

DETAILS OF SPECIAL ITEMS

STANDARD DRAWING SI - 1

R1-1

STANDARD 30"X30"
EXPRESSWAY 36"X36"
SPECIAL 48"X48"

R1-2

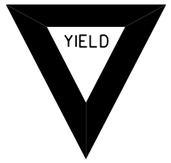

STD. 36"X36"X36"
EXPWY. 48"X48"X48"
FWY. 60"X60"X60"

R2-1

STD. 24"X30"
EXPWY. 36"X48"
FWY. 48"X60"

W3-5

STD. 36"X36"
EXPWY. 48"X48"
FWY. 48"X48"

W3-5a

STD. 36"X36"
EXPWY. 48"X48"
FWY. 48"X48"

R4-1

STD. 24"X30"
EXPWY. 36"X48"
FWY. 48"X60"

R4-2

STD. 24"X30"
EXPWY. 36"X48"
FWY. 48"X60"

R5-1

STD. 30"X30"
EXPWY. 36"X36"
SPECIAL 48"X48"

R11-2

48"X30"

R11-3A

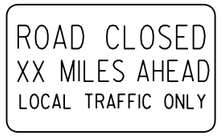

60"X30"

R11-4

60"X30"

W21-5a

STD. 36"X36"
FWY. 48"X48"

W1-1

STD. 36"X36"
FWY. 48"X48"

W1-2

STD. 36"X36"
FWY. 48"X48"

W1-3

STD. 48"X48"

W1-4

STD. 48"X48"

W1-6

STD. 48"X24"
SPECIAL 60"X30"

W1-8

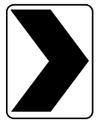

STD. 18"X24"
SPECIAL 24"X30"
EXPWY. 30"X36"
FWY. 36"X48"

W3-1

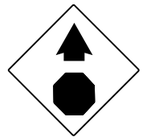

STD. 36"X36"
SPECIAL 48"X48"

W3-2

STD. 36"X36"
SPECIAL 48"X48"

W4-2

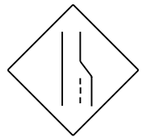

STD. 36"X36"
FWY. 48"X48"

W5-1

STD. 36"X36"
SPECIAL 48"X48"

W6-3

EXPWY. 36"X36"
SPECIAL 48"X48"

W8-7

EXPWY. 36"X36"
FWY. 48"X48"

W9-2

STD. 36"X36"
FWY. 48"X48"

W13-1

STD. 24"X24"

W20-1

STD. 48"X48"

W20-2

STD. 48"X48"

W20-3

STD. 48"X48"

W20-4

STD. 48"X48"

W20-5

STD. 48"X48"

W20-7a

STD. 36"X36"
FWY. 48"X48"

W21-2

STD. 30"X30"
SPECIAL 36"X36"

W21-5

STD. 30"X30"
SPECIAL 36"X36"

W24-1

STD. 36"X36"

W1-4b

STD. 48"X48"

R56-1

STD. 18"X18"

W8-11

STD. 36"X36"
FWY. 48"X48"

W8-9

STD. 36"X36"
FWY. 48"X48"

G20-1

60"X24"

G20-2

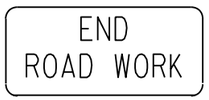

48"X24"

OM-3L OM-3R

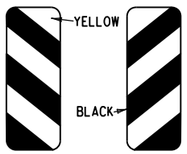

12"X36"

M4-9

STD. 30"X24"
SPECIAL 48"X36"
SPECIAL 60"X48"

M4-10

48"X18"

R55-1

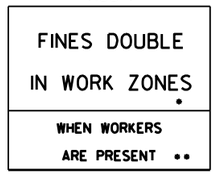

36"X60"

• USE 6" C LETTERS
•• USE 4" D LETTERS

ADVANCE DISTANCES
(XXXX)

500 FT	½ MILE
1000 FT	¾ MILE
1500 FT	1 MILE AHEAD

GENERAL NOTES:

1. ALL TRAFFIC CONTROL DEVICES USED ON ROAD CONSTRUCTION SHALL CONFORM TO THE MANUAL ON UNIFORM TRAFFIC CONTROL DEVICES, LATEST EDITION, AND TO THE STANDARD HIGHWAY SIGNS, LATEST EDITION, OR AS APPROVED BY THE FEDERAL HIGHWAY ADMINISTRATION.

2. TRAFFIC CONTROL DEVICES SHALL BE SET UP JUST BEFORE THE START OF CONSTRUCTION OPERATIONS AND SHALL BE PROPERLY MAINTAINED DURING THE TIME SUCH CONDITIONS EXIST. THEY SHALL REMAIN IN PLACE ONLY AS LONG AS NEEDED AND REMOVED THEREAFTER.

3. EXISTING SIGNS AND CONSTRUCTION SIGNS SHALL BE KEPT IN PROPER POSITION, AND BE CLEAN AND LEGIBLE AT ALL TIMES. SIGNS THAT DO NOT APPLY TO EXISTING CONDITIONS SHALL BE REMOVED. SIGNS THAT ARE DAMAGED, DEFACED, OR THAT ACCUMULATE DIRT DURING CONSTRUCTION SHALL BE CLEANED, REPAIRED, OR REPLACED.

• 4. SIGNS ARE USUALLY MOUNTED ON A SINGLE POST, ALTHOUGH THOSE WIDER THAN 36" OR LARGER THAN 10 SQ. FT. SHALL BE MOUNTED ON TWO POSTS OR ABOVE A TYPE III BARRICADE.

• 5. SIGN POSTS DIRECT BURIED IN SOIL SHALL BE 2 LB. MINIMUM CHANNEL POST OR 4"x4" WOOD POSTS. CHANNEL POSTS SHALL BE PAINTED GREEN. WOOD POSTS SHALL BE PAINTED WHITE. ALL POSTS SHALL BE NEATLY CONSTRUCTED, AND SHALL BE REPLUMBED, CLEANED, OR REPAIRED AS NEEDED FOR THE DURATION OF THE JOB. THERE SHALL NOT BE MORE THAN 2 POSTS IN A 7' PATH FOR WOOD OR CHANNEL POSTS. ANY CHANNEL POST SPLICE SHALL BE IN ACCORDANCE WITH STANDARD DRAWING TC-3.

6. POST MOUNTED SIGNS IN RURAL AREAS SHALL BE CONSTRUCTED WITH THE NEAR EDGE OF THE SIGN FROM 6 TO 12 FEET FROM THE PAVEMENT EDGE. SIGNS IN URBAN AREAS AND BARRICADE MOUNTED SIGNS SHALL BE MOUNTED A MINIMUM OF 2 FEET FROM THE PAVEMENT EDGE.

7. ALL POST AND BARRICADE MOUNTED SIGNS MOUNTED IN URBAN AREAS SHALL BE MOUNTED A MINIMUM DISTANCE OF 7' FROM THE BOTTOM OF THE SIGN TO THE ROADWAY SURFACE. ALL POST AND BARRICADE MOUNTED SIGNS MOUNTED IN RURAL AREAS SHALL BE MOUNTED A MINIMUM DISTANCE OF 7' FROM THE BOTTOM OF THE SIGN TO THE ROADWAY SURFACE, EXCEPT A MINIMUM OF 6' SHALL BE USED WHEN MOUNTING AN ADVISORY SIGN BELOW A WARNING SIGN. TEMPORARY SIGNS MAY BE MOUNTED ON PORTABLE SUPPORTS FOR INTERMEDIATE TERM STATIONARY WORK CONDITIONS. THE SIGNS MINIMUM MOUNTING HEIGHT SHALL BE 5'. RETROREFLECTIVE DEVICES SHALL BE USED. TEMPORARY SIGNS MAY BE MOUNTED ON PORTABLE SUPPORTS FOR SHORT-TERM, SHORT DURATION, AND MOBILE CONDITIONS. THEY SHALL BE NO LESS THAN ONE (1) FOOT ABOVE THE TRAVELED WAY. LONG-TERM STATIONARY SIGNS SHALL BE DIRECT BURIED IN SOIL, UNLESS CONDITIONS NECESSITATE THE USE OF PORTABLE SIGNS, OR AS APPROVED BY THE ENGINEER. CONCRETE PADS, CONCRETE OR ROCK BALLAST, OR OTHER SOLID MATERIALS SHALL NOT BE UTILIZED WITH PORTABLE SIGN SUPPORTS.

8. FLAGGERS SHALL USE REFLECTORIZED STOP-SLOW PADDLES. FLAGS MAY BE USED ONLY FOR EMERGENCY SITUATIONS.

9. MOST OF THE SIGNS SHOWN ARE ORIENTED TO THE RIGHT. HOWEVER, THIS DOES NOT PRECLUDE THE USE OF MIRROR IMAGES OF THESE SIGNS WHERE THE REVERSE ORIENTATION MIGHT BETTER CONVEY TO MOTORISTS THE PROPER DIRECTION OF MOVEMENT.

10. R55-1 SIGNS SHALL BE PLACED AT LEAST 1500' BUT NOT MORE THAN 1 MILE IN ADVANCE OF THE WORK ZONE. IF A SPEED LIMIT REDUCTION IS IN EFFECT, THE SIGN SHALL BE PLACED A MINIMUM OF 500' IN ADVANCE OF THE "REDUCED SPEED AHEAD" SIGN.

• NOTE: SUPPORTS FOR SIGNS, BARRICADES, AND VERTICAL PANELS THAT ARE DIFFERENT FROM THE REQUIREMENTS SHOWN IN NOTES 4 & 5, BUT MEET THE REQUIREMENTS OF MANUAL FOR ASSESSING SAFETY HARDWARE (MASH), WILL BE ACCEPTED. COMPLIANCE WITH THE REQUIREMENTS OF MANUAL FOR ASSESSING SAFETY HARDWARE (MASH) IS REQUIRED FOR ALL PROJECTS.

DATE	REVISION	FILMED
11-07-19	REVISED FOR MASH	
4-13-17	DELETED RSP-1 & ADDED W21-5a	
9-2-15	REVISED REDUCED SPEED LIMIT AHEAD SIGNS REVISED ROAD WORK NEXT XX MILES	
12-15-11	REVISED W24-1	
11-17-10	DELETED W8-9a & ADDED W8-9	
10-15-09	ADDED REFERENCE TO MASH & ADDED SIGN W24-1	
4-17-08	REVISED SIGN DESIGNATIONS	
11-18-04	REVISED NOTES	
10-9-03	REVISED NOTE 1	
11-16-01	REVISED NOTE 7	
9-28-00	REVISED NOTE	
11-18-98	ADDED NOTE	
6-26-97	REVISED NOTE 5	
4-03-97	REVISED NOTE 5	
10-18-96	ADDED CONTROLLED ACCESS HWY. SIGN & TO NOTE 7	
10-12-95	ADDED R55-1	
6-8-95	REVISED TO CORRECT SIGN ILLUSTRATIONS	6-8-95
2-2-95	REVISED PER PART VI, MUTCD SEPT. 3, 1993	
8-15-91	DRAWN AND PLACED IN USE	

ARKANSAS STATE HIGHWAY COMMISSION

STANDARD TRAFFIC CONTROLS FOR HIGHWAY CONSTRUCTION

STANDARD DRAWING TC-1

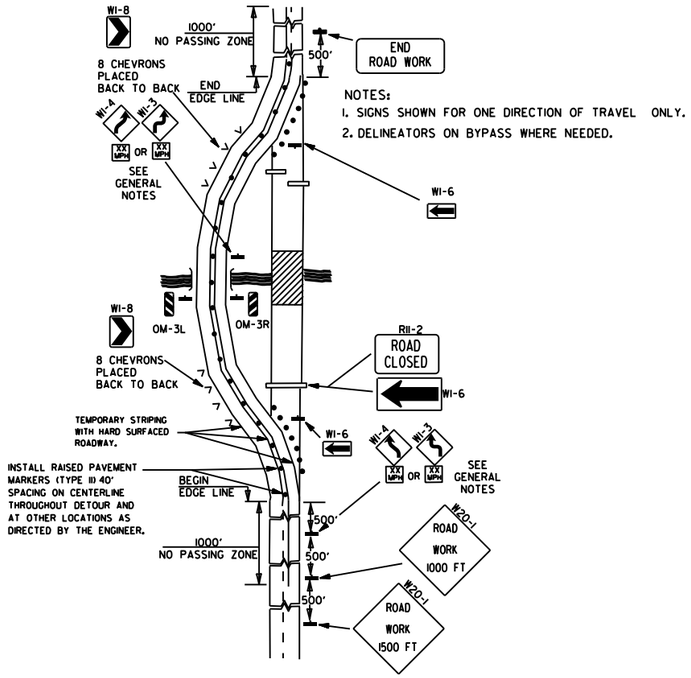

NOTES:
1. SIGNS SHOWN FOR ONE DIRECTION OF TRAVEL ONLY.
2. DELINEATORS ON BYPASS WHERE NEEDED.

(A) TYPICAL APPLICATION OF TRAFFIC CONTROL DEVICES ON A 2-LANE HIGHWAY WHERE THE ENTIRE ROADWAY IS CLOSED AND A BYPASS DETOUR IS PROVIDED.

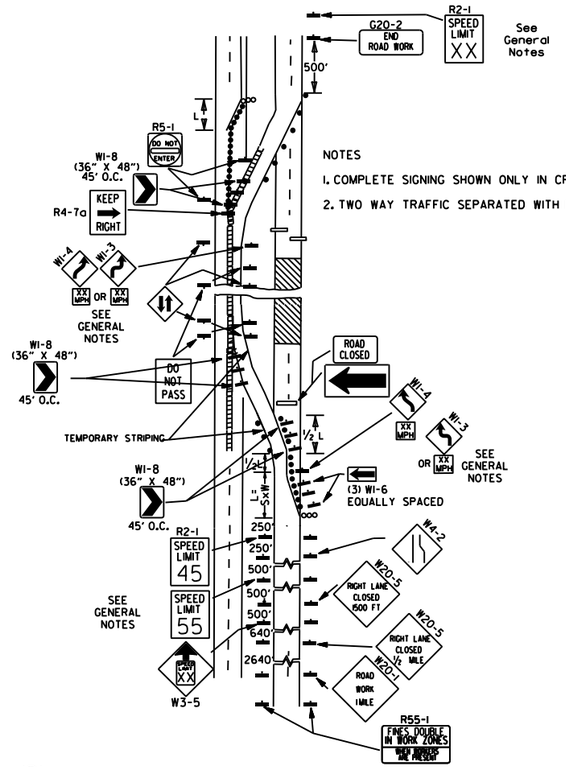

NOTES
1. COMPLETE SIGNING SHOWN ONLY IN CROSSOVER DIRECTION.
2. TWO WAY TRAFFIC SEPARATED WITH POSITIVE BARRIER.

(B) TYPICAL APPLICATION - 4-LANE DIVIDED ROADWAY WHERE ONE ROADWAY IS CLOSED.

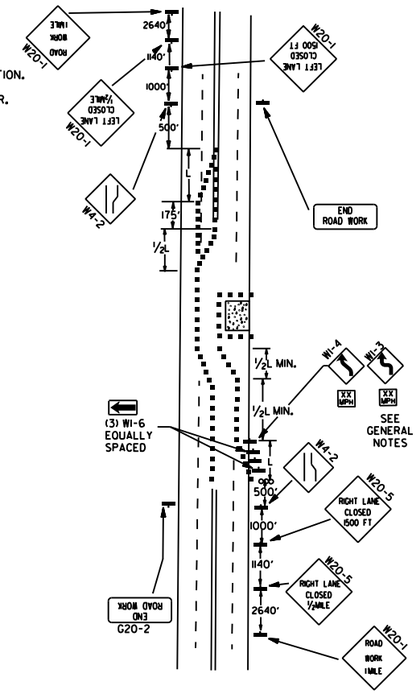

(C) TYPICAL APPLICATION - 4-LANE UNDIVIDED ROADWAY WHERE HALF OF THE ROADWAY IS CLOSED.

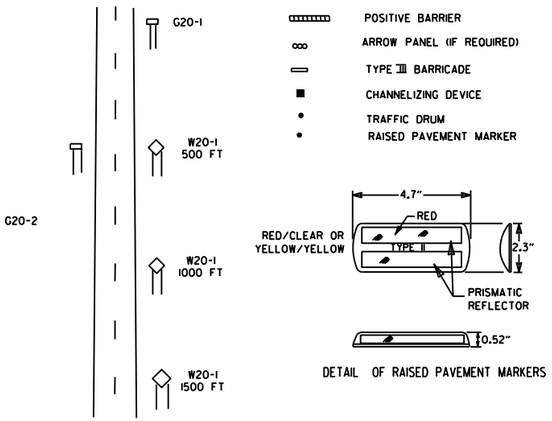

TYPICAL ADVANCE WARNING SIGN PLACEMENT

TAPER FORMULAE:

L=SXW FOR SPEEDS OF 45MPH OR MORE.

$L = \frac{WS^2}{60}$ FOR SPEEDS OF 40MPH OR LESS.

WHERE:

L= MINIMUM LENGTH OF TAPER.

S= NUMERICAL VALUE OF POSTED SPEED LIMIT PRIOR TO WORK OR 85TH PERCENTILE SPEED.

W= WIDTH OF OFFSET.

GENERAL NOTES:

1. THE MAINTENANCE DIVISION SHALL CONDUCT A BALL BANK STUDY TO DETERMINE THE ADVISORY SPEED LIMIT PRIOR TO OPENING TO TRAFFIC. THE ADVISORY SPEED WILL BE POSTED ON W1-3 OR W1-4 CURVE WARNING SIGNS. USE W1-4 WHEN SPEED IS GREATER THAN 30MPH AND W1-3 WHEN 30MPH OR LESS
2. WHEN THE EXISTING SPEED LIMIT IS 55MPH AND THE PLANS REQUIRE A SPEED LIMIT OF 45MPH, THE R2-1(55) SHALL BE OMITTED AND THE W3-5 SHALL BE INSTALLED AT THAT LOCATION. ADDITIONAL R2-1 45MPH SPEED LIMIT SIGNS SHALL BE INSTALLED AT A MAXIMUM OF 1MILE INTERVALS. AT THE END OF THE WORK AREA A R2-1(XX) SHALL BE INSTALLED TO MATCH ORIGINAL SPEED LIMIT.
3. WHEN THE EXISTING SPEED LIMIT IS 65MPH AND THE PLANS REQUIRE A SPEED LIMIT OF 55MPH, THE R2-1(45) SHALL BE OMITTED. ADDITIONAL R2-1 55MPH SPEED LIMIT SIGNS SHALL BE INSTALLED AT A MAXIMUM OF 1MILE INTERVALS. AT THE END OF THE WORK AREA A R2-1(XX) SHALL BE INSTALLED TO MATCH ORIGINAL SPEED LIMIT.
4. THE MAXIMUM SPACING BETWEEN CHANNELIZING DEVICES IN A TAPER SHOULD BE APPROXIMATELY EQUAL IN FEET TO THE SPEED LIMIT. BEYOND THE TAPER, MAXIMUM SPACING SHALL BE TWO TIMES THE SPEED LIMIT, OR AS DIRECTED BY THE ENGINEER.
5. WARNING LIGHTS AND/OR FLAGS MAY BE MOUNTED TO SIGNS OR CHANNELIZING DEVICES AT NIGHT AS NEEDED.
6. PAVEMENT MARKINGS NO LONGER APPLICABLE WHICH MIGHT CREATE CONFUSION IN THE MINDS OF VEHICLE OPERATORS SHALL BE REMOVED OR OBLITERATED AS SOON AS PRACTICABLE.
7. TRAILER MOUNTED DEVICES SUCH AS ARROW PANELS AND PORTABLE CHANGEABLE MESSAGE SIGNS SHALL BE DELINEATED BY AFFIXING CONSPICUITY MATERIAL IN A CONTINUOUS LINE ON THE FACE OF THE TRAILER. WHEN PLACED ON OR ADJACENT TO THE SHOULDER AND NOT BEHIND A POSITIVE BARRIER, THESE DEVICES SHALL BE DELINEATED BY PLACING FIVE (5) TRAFFIC DRUMS, EQUALLY SPACED ALONG THE TRAFFIC SIDE OF THE DEVICE.
8. DIMENSIONS SHOWN FOR RAISED PAVEMENT MARKERS ARE TYPICAL. THE CONTRACTOR MAY SUBSTITUTE SIMILAR MARKERS WITH THE APPROVAL OF THE ENGINEER. REQUESTING APPROVAL FOR SIMILAR MARKERS MAY BE MADE BY REFERRING TO THE ARDOT QUALIFIED PRODUCTS LIST.
9. ALL TRAILER MOUNTED DEVICES SUCH AS ARROW PANELS AND PORTABLE CHANGEABLE MESSAGE SIGNS SHALL MEET THE REQUIREMENTS OF THE MANUAL FOR ASSESSING SAFETY HARDWARE (MASH).

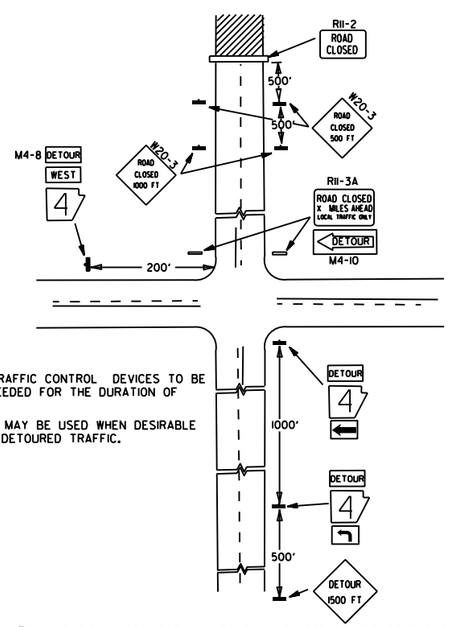

NOTES:
1. REGULATORY TRAFFIC CONTROL DEVICES TO BE MODIFIED AS NEEDED FOR THE DURATION OF THE DETOUR.
2. STREET NAMES MAY BE USED WHEN DESIRABLE FOR DIRECTING DETOURED TRAFFIC.

(D) TYPICAL APPLICATION - ROADWAY CLOSED BEYOND DETOUR POINT.

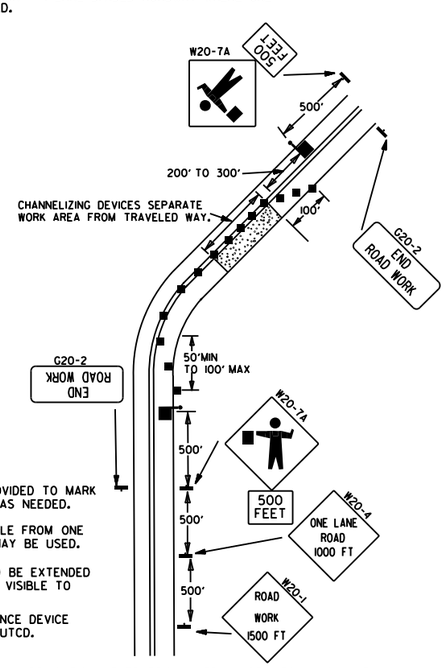

NOTES:
1. FLOOD LIGHTS SHOULD BE PROVIDED TO MARK FLAGGER STATIONS AT NIGHT AS NEEDED.
2. IF ENTIRE WORK AREA IS VISIBLE FROM ONE STATION, A SINGLE FLAGGER MAY BE USED.
3. CHANNELIZING DEVICES ARE TO BE EXTENDED TO A POINT WHERE THEY ARE VISIBLE TO APPROACHING TRAFFIC.
4. AUTOMATED FLAGGER ASSISTANCE DEVICE (AFAD) OPTIONAL. REFER TO MUTCD.

(E) TYPICAL APPLICATION OF TRAFFIC CONTROL DEVICES ON 2-LANE HIGHWAY WHERE ONE LANE IS CLOSED AND FLAGGING IS PROVIDED.

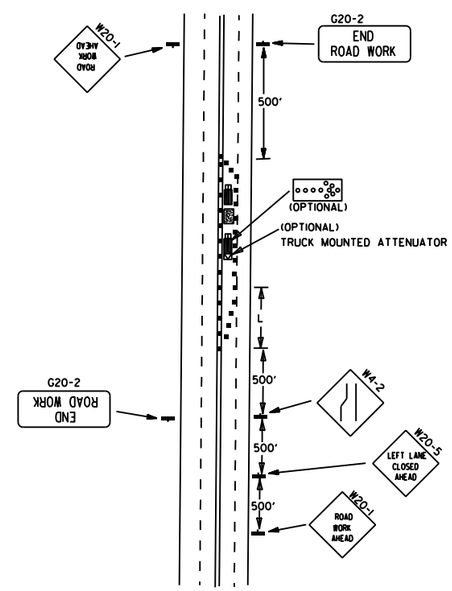

(F) TYPICAL APPLICATION - 4-LANE UNDIVIDED ROADWAY WITH INSIDE LANE CLOSED.

DATE	REVISION	FILMED
11-07-19	REVISED NOTE 1, ADDED NOTE 9	
9-2-15	REVISED NOTE 2, ADDED NOTE 8, REVISED DRAWING (A) & REPLACED R2-5A WITH W3-5	
9-12-13	REVISED DETAIL OF RAISED PAVEMENT MARKERS	
3-11-10	ADDED (AFAD)	
11-20-08	REVISED SIGN DESIGNATIONS	
11-18-04	ADDED GENERAL NOTE	
10-18-96	ADDED R55-1	
4-26-96	CORRECTED (a) BEHIND G20-2	
6-8-95	CORRECTED SIGN IDENT. ON W1-4A	6-8-95
2-2-95	REVISED PER PART VI, MUTCD, SEPT. 3, 1993	
8-15-91	DRAWN AND PLACED IN USE	

ARKANSAS STATE HIGHWAY COMMISSION

STANDARD TRAFFIC CONTROLS FOR HIGHWAY CONSTRUCTION

STANDARD DRAWING TC-2

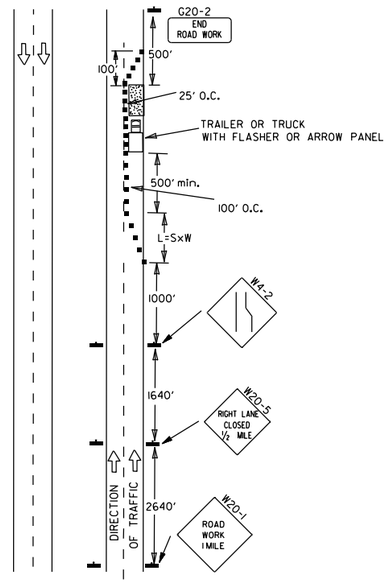

(A) TYPICAL APPLICATION - DAYTIME MAINTENANCE OPERATIONS OF SHORT DURATION ON A 4-LANE DIVIDED ROADWAY WHERE HALF OF THE ROADWAY IS CLOSED.

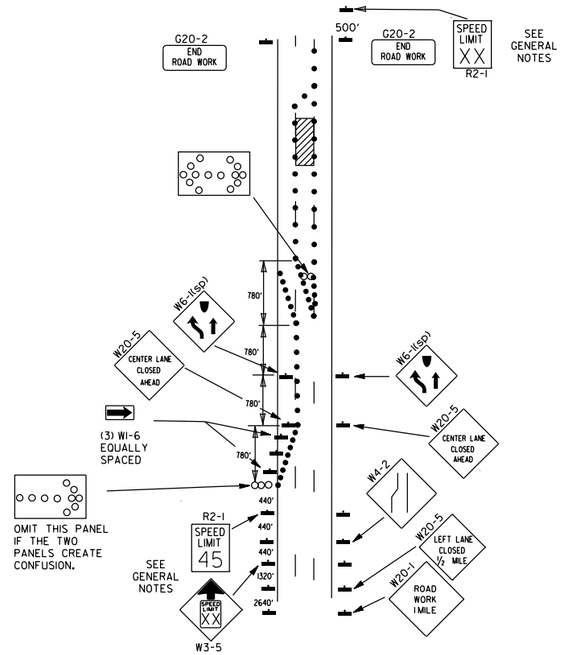

(B) TYPICAL APPLICATION - 3-LANE ONEWAY ROADWAY WHERE CENTER LANE IS CLOSED.

KEY:

ooo ARROW PANEL (IF REQUIRED)

■ CHANNELIZING DEVICE

● TRAFFIC DRUM

GENERAL NOTES:

1. A SPEED LIMIT REDUCTION MAY BE IMPLEMENTED ONLY WHEN DESIGNATED IN THE PLAN OR WHEN RECOMMENDED BY THE ROADWAY DESIGN DIVISION.
2. WHEN THE EXISTING SPEED LIMIT IS 55MPH AND THE PLANS REQUIRE A SPEED LIMIT OF 45MPH, THE R2-1(55) SHALL BE OMITTED AND THE W3-5 SHALL BE INSTALLED AT THAT LOCATION. ADDITIONAL R2-1 45MPH SPEED LIMIT SIGNS SHALL BE INSTALLED AT A MAXIMUM OF 1MILE INTERVALS. AT THE END OF THE WORK AREA A R2-1(XX) SHALL BE INSTALLED TO MATCH ORIGINAL SPEED LIMIT.
3. WHEN THE EXISTING SPEED LIMIT IS 65MPH AND THE PLANS REQUIRE A SPEED LIMIT OF 55MPH, THE R2-1(45) SHALL BE OMITTED. ADDITIONAL R2-1 55MPH SPEED LIMIT SIGNS SHALL BE INSTALLED AT A MAXIMUM OF 1MILE INTERVALS. AT THE END OF THE WORK AREA A R2-1(XX) SHALL BE INSTALLED TO MATCH ORIGINAL SPEED LIMIT.
4. THE MAXIMUM SPACING BETWEEN CHANNELIZING DEVICES IN A TAPER SHOULD BE APPROXIMATELY EQUAL IN FEET TO THE SPEED LIMIT. BEYOND THE TAPER, MAXIMUM SPACING SHALL BE TWO TIMES THE SPEED LIMIT OR AS DIRECTED BY THE ENGINEER.
5. WARNING LIGHTS AND/OR FLAGS MAY BE MOUNTED TO SIGNS OR CHANNELIZING DEVICES AT NIGHT AS NEEDED.
6. PAVEMENT MARKINGS NO LONGER APPLICABLE WHICH MIGHT CREATE CONFUSION IN THE MINDS OF VEHICLE OPERATORS SHALL BE REMOVED OR OBLITERATED AS SOON AS PRACTICABLE.
7. THE G20-1 SIGN WILL BE REQUIRED ON JOBS OF OVER TWO MILES IN LENGTH. WHEN THE LANE CLOSURE IS NOT AT THE BEGINNING OF THE PROJECT, THE G20-1 SIGN SHALL BE ERECTED 125' IN ADVANCE OF THE JOB LIMIT. ADDITIONAL W20-1 (1 MILE) SIGNS ARE NOT REQUIRED IN ADVANCE OF LANE CLOSURES THAT BEGIN INSIDE THE PROJECT LIMITS.
8. FLAGGERS SHALL USE STOP/SLOW PADDLES FOR CONTROLLING TRAFFIC THROUGH WORK ZONES. FLAGS MAY BE USED ONLY FOR EMERGENCY SITUATIONS.
9. ALL PLASTIC DRUMS AND CONES SHALL MEET THE REQUIREMENTS OF MANUAL FOR ASSESSING SAFETY HARDWARE (MASH).
10. TRAILER MOUNTED DEVICES SUCH AS ARROW PANELS AND PORTABLE CHANGEABLE MESSAGE SIGNS SHALL BE DELINEATED BY AFFIXING CONSPICUITY MATERIAL IN A CONTINUOUS LINE ON THE FACE OF THE TRAILER. WHEN PLACED ON OR ADJACENT TO THE SHOULDER AND NOT BEHIND A POSITIVE BARRIER, THESE DEVICES SHALL BE DELINEATED BY PLACING FIVE (5) TRAFFIC DRUMS, EQUALLY SPACED ALONG THE TRAFFIC SIDE OF THE DEVICE.
11. ALL TRAILER MOUNTED DEVICES SUCH AS ARROW PANELS AND PORTABLE CHANGEABLE MESSAGE SIGNS SHALL MEET THE REQUIREMENTS OF THE MANUAL FOR ASSESSING SAFETY HARDWARE (MASH).

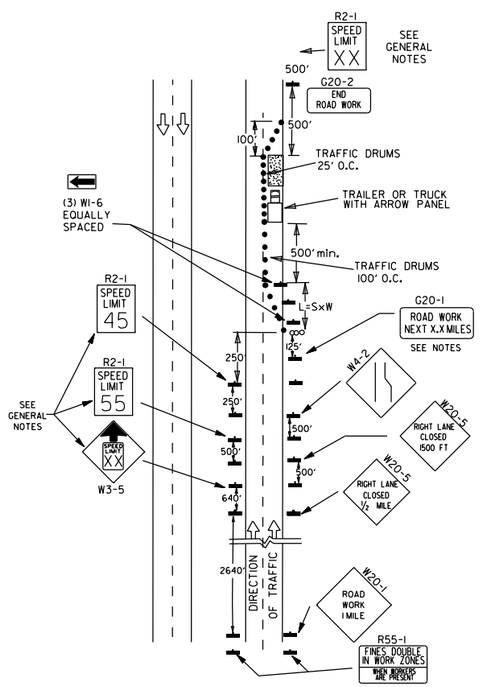

(C) TYPICAL APPLICATION - CONSTRUCTION OPERATIONS OF INTERMEDIATE TO LONG TERM DURATION ON A 4-LANE DIVIDED ROADWAY WHERE HALF OF THE ROADWAY IS CLOSED.

CHANNELIZING DEVICES

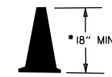

- WHEN CONES ARE USED ON FREEWAYS AND MULTI-LANE HIGHWAYS, THEY SHALL BE 28" MIN. DURING HOURS OF DARKNESS, 28" CONES SHALL BE USED ON ALL ROADWAYS, AND SHALL BE REFLECTORIZED IN ACCORDANCE WITH THE M.U.T.C.D.

CONES

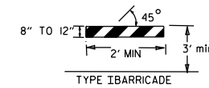

TYPE I BARRICADE

PLASTIC DRUM

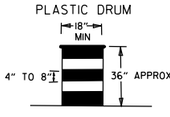

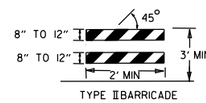

TYPE II BARRICADE

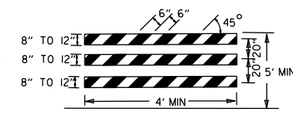

TYPE III BARRICADE

NOTE:
FOR ALL ROAD CLOSURES, THE TYPE III BARRICADES SHALL BE OF SUFFICIENT LENGTH TO EXTEND ACROSS ENTIRE ROADWAY.

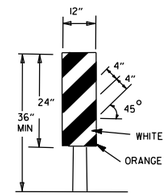

VERTICAL PANEL
VP-1R

VERTICAL PANEL PLACEMENT

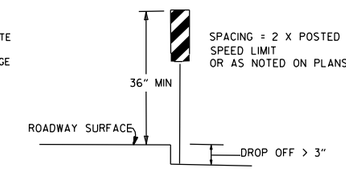

FLAG

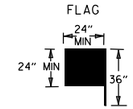

FLAG SHALL BE OF GOOD GRADE RED MATERIAL

TRAFFIC CONTROL DEVICES

NON-INTERSTATE			
VERTICAL DIFFERENTIAL	LOCATION	TRAFFIC CONTROL	
		≤ 45 MPH	> 45 MPH
≤ 2"	CENTERLINE	W8-11 AND LANE STRIPING	W8-11 AND LANE STRIPING
> 2"	CENTERLINE	STANDARD LANE CLOSURE	STANDARD LANE CLOSURE
≤ 3"	EDGE OF TRAVELED LANE OR EDGE OF SHOULDER	W8-9, EDGE LINE STRIPING, AND VERTICAL PANELS	W8-9, EDGE LINE STRIPING, AND VERTICAL PANELS
> 3" ≤ 6"	EDGE OF TRAVELED LANE OR EDGE OF SHOULDER	W8-17, EDGE LINE STRIPING, AND VERTICAL PANELS	W8-17, EDGE LINE STRIPING, AND VERTICAL PANELS
> 6" ≤ 18"	EDGE OF TRAVELED LANE OR EDGE OF SHOULDER	W8-17, EDGE LINE STRIPING, AND TRAFFIC DRUMS(1)	W8-17, EDGE LINE STRIPING, AND TRAFFIC DRUMS(2)
> 18" ≤ 24"	EDGE OF TRAVELED LANE OR EDGE OF SHOULDER	W8-17, EDGE LINE STRIPING, AND TRAFFIC DRUMS(1)	A STABILIZED WEDGE, W8-17, EDGE LINE STRIPING AND TRAFFIC DRUMS(3)
> 24"	EDGE OF TRAVELED LANE OR EDGE OF SHOULDER	PRECAST CONCRETE BARRIER(4) & EDGE LINES	PRECAST CONCRETE BARRIER(4) & EDGE LINES

INTERSTATE		
VERTICAL DIFFERENTIAL	LOCATION	TRAFFIC CONTROL
≤ 2"	CENTERLINE	W8-11 AND LANE STRIPING
≤ 2"	EDGE OF TRAVELED LANE OR EDGE OF SHOULDER	W8-9, EDGE LINE STRIPING, AND TRAFFIC DRUMS(2)
> 2" ≤ 6"	EDGE OF TRAVELED LANE OR EDGE OF SHOULDER	W8-17, EDGE LINE STRIPING, AND TRAFFIC DRUMS(2)
> 6"	EDGE OF TRAVELED LANE OR EDGE OF SHOULDER	PRECAST CONCRETE BARRIER & EDGE LINES

INTERSTATE AND NON-INTERSTATE		
FORESLOPE	HEIGHT	TRAFFIC CONTROL
1:1	> 2 FT	PRECAST CONCRETE BARRIER
2:1	≤ 5 FT	TRAFFIC DRUMS
2:1	> 5 FT	PRECAST CONCRETE BARRIER
Flatter than 2:1	N/A	TRAFFIC DRUMS

GENERAL NOTES:

1. WHEN THE SHOULDER AREA IS USED AS PART OF THE TRAVELED LANE AND THERE IS INSUFFICIENT WIDTH TO PLACE TRAFFIC DRUMS ON THE REMAINING SHOULDER WIDTH, THEN VERTICAL PANELS SHALL BE USED.
2. WHEN THERE IS INSUFFICIENT WIDTH TO PLACE TRAFFIC DRUMS ON THE REMAINING SHOULDER WIDTH, A STABILIZED WEDGE SHALL BE USED.
3. PRECAST CONCRETE BARRIER WALL CAN BE USED IN LIEU OF A STABILIZED WEDGE, W8-17 SIGN, EDGE LINE STRIPING, AND TRAFFIC DRUMS, IF AND WHERE DIRECTED BY THE ENGINEER.
4. A STABILIZED WEDGE, W8-17 SIGN, EDGE LINE STRIPING, AND TRAFFIC DRUMS CAN BE USED IN LIEU OF PRECAST CONCRETE BARRIER WALL, IF AND WHERE DIRECTED BY THE ENGINEER.
5. W21-5, W21-5a, AND/OR W21-5b SIGNS SHALL BE USED WHERE THE ROADWAY IS UNOBSTRUCTED IF AND WHERE DIRECTED BY THE ENGINEER.

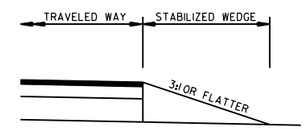

STABILIZED WEDGE

NOTE:
MATERIALS FOR THE STABILIZED WEDGE SHALL MEET THE REQUIREMENTS PROVIDED IN SECTION 603.02 OF THE STANDARD SPECIFICATIONS.

STOP SLOW PADDLE

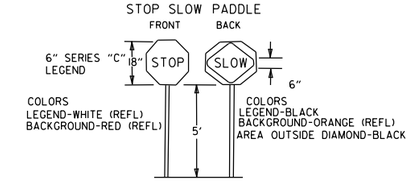

DETAIL OF SPLICES

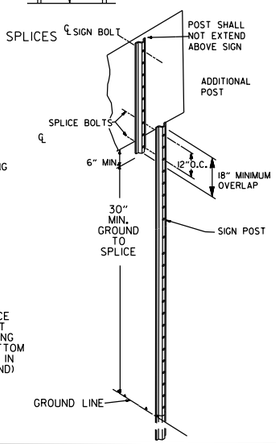

NOTES: USE SPLICES ONLY WHEN NECESSARY FOR INSTALLATION. TYPICAL INSTALLATION SHOULD HAVE NO SPLICES (SEE STD. DRAWING NO. SHS-2)

NORMAL INSTALLATIONS WILL REQUIRE 1/4" DIA. BOLTS TO MOUNT SIGNS TO POST AND 5/16" DIA. BOLTS TO ASSEMBLE THE VARIOUS POST SUPPORTS. EACH OF THESE BOLTS SHALL BE CARRIAGE BOLTS.

SIGN POSTS SHALL BE PAINTED GREEN; SIGNS SHALL NOT BE PAINTED, AND ALL SIGN POSTS SHALL BE PLUMB.

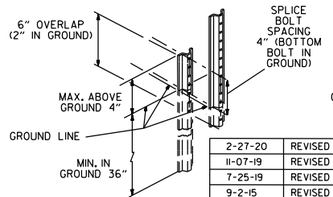

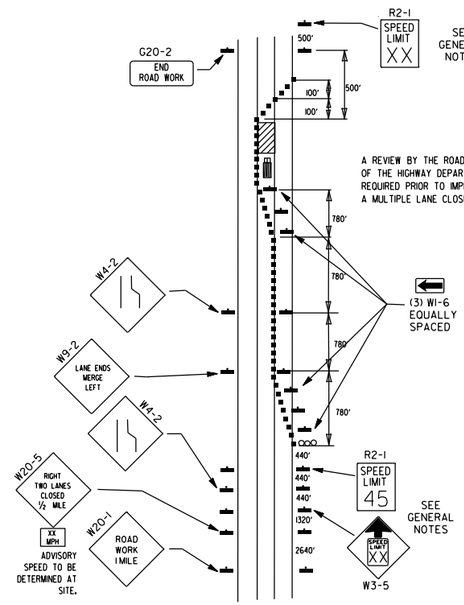

A REVIEW BY THE ROADWAY DESIGN DIVISION OF THE HIGHWAY DEPARTMENT WILL BE REQUIRED PRIOR TO IMPLEMENTING A MULTIPLE LANE CLOSURE.

(D) TYPICAL APPLICATION - CLOSING MULTIPLE LANES OF A MULTILANE HIGHWAY.

DATE	REVISION	FILMED
2-27-20	REVISED TRAFFIC CONTROL DEVICES DETAILS	
11-07-19	REVISED NOTE 9, ADDED NOTE 11	
7-25-19	REVISED TRAFFIC CONTROL DEVICES DETAILS	
9-2-15	REVISED NOTE 2 & REPLACED R2-5A WITH W3-5	
10-15-09	ADDED REFERENCE TO MASH	
11-20-08	REVISED SIGN DESIGNATIONS	
11-18-04	ADDED NOTE	
10-1-98	ADDED NOTE	
4-03-97	ADDED (SP) TO W6-1 & REVISED TRAFFIC CONTROL DEVICES NOTE	
10-18-96	ADDED R55-1	
10-12-95	MOVED UPPER SPLICE	
6-8-95	REVISED SPLICE DETAIL, TEXT	6-8-95
2-2-95	REVISED PER PART VI, MUTCD, SEPT. 3, 1993	
8-15-91	DRAWN AND PLACED IN USE	

ARKANSAS STATE HIGHWAY COMMISSION

STANDARD TRAFFIC CONTROLS FOR HIGHWAY CONSTRUCTION

STANDARD DRAWING TC-3

REINFORCING BAR TABLE PER BARRIER UNIT

MARK	LOCATION	BAR SIZE	(NO. BARS)	SKETCH
H-1	HORIZONTAL IN BARRIER TIED INSIDE V-1 BARS	#5	(6)	19'-3"
H-2	CENTERED ABOVE DRAIN SLOTS LONG. & TRANSVERSELY	#5	(6)	6'-6"
H-3	TIED ABOVE H-1 BARS TO SUPPORT H-2, TIED TO V-1	#4	(2)	1'-6"
S-1	OVER LIFT HOLES	#4	(2)	2'-5", 90°, 3 3/8" R, LIFTING HOLE
S-2	HORIZ. AROUND SLOTS BETWEEN V-1'S @ DRAIN SLOTS	#4	(2)	1 1/2" R, SLOTS, 7", 1'-6", 1" MIN. CLEAR TO BAR; 5'-1" BAR W/(4) 1 1/2" R BENDS & MIN. 1'-0" OVERLAP
V-1	VERTICAL IN BARRIER(3) EACH END & (2) AT EACH DRAIN SLOTS	#5	(16)	TOTAL LENGTH 4'-9"; 2 3/16" R; 12°; 1 1/2"; 9"; 2'-1 3/8"; 4 3/8"

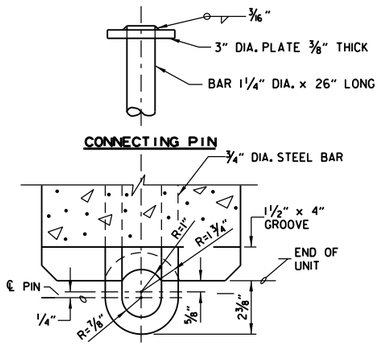

CONNECTION DETAILS

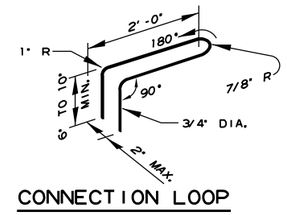

CONNECTION LOOP

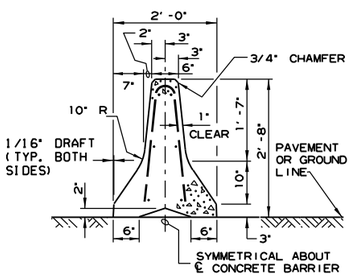

SECTION A-A

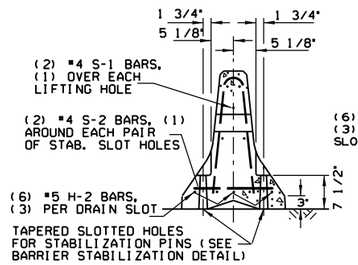

SECTION B-B

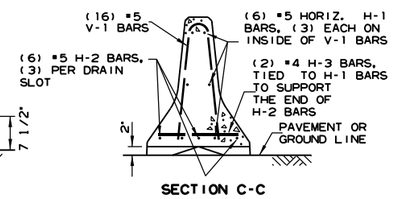

SECTION C-C

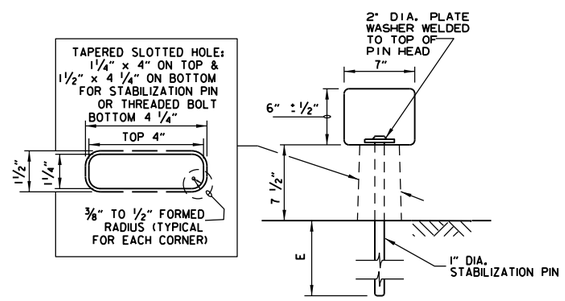

BARRIER STABILIZATION DETAIL

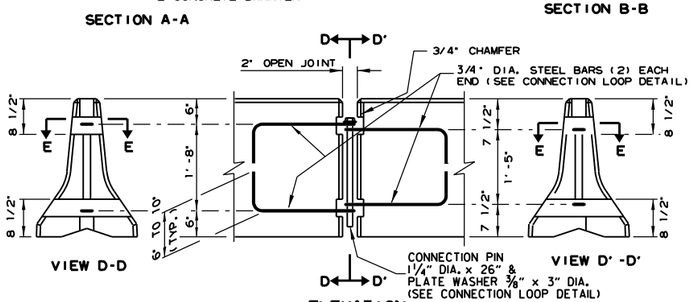

ELEVATION

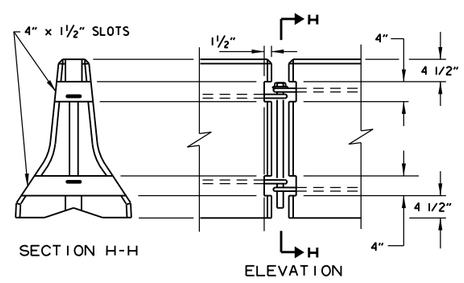

BARRIER REMOVAL SLOT DETAILS

ROADWAY SECTION

(E) 4" - CONCRETE PAVEMENT
8" - ASPHALT PAVEMENT
12" - SHOULDER AREAS

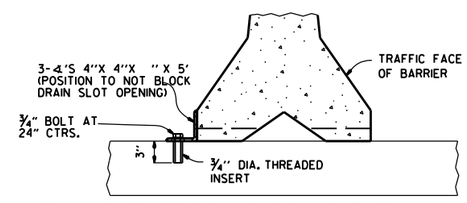

NOTE: " THREADED INSERTS SHALL BE CAST IN PLACE FOR ALL NEW BRIDGE DECKS AND DRILLED AND GROUTED FOR EXISTING BRIDGE DECKS. INSERTS SHALL HAVE A MINIMUM ULTIMATE LOAD CAPACITY OF 8000 LBS. IN TENSION. AFTER REMOVAL OF BARRIER, BOLTS, AND ANGLES, THE INSERTS SHALL BE FILLED WITH APPROVED NON-SHRINK EPOXY.

BARRIER STABILIZATION DETAIL

BRIDGE DECKS

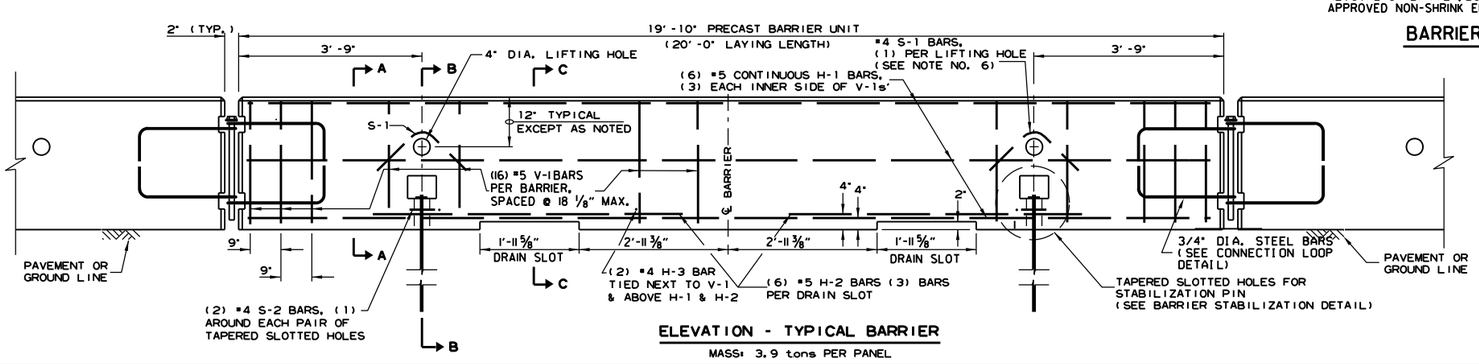

ELEVATION - TYPICAL BARRIER

MASS: 3.9 tons PER PANEL

GENERAL NOTES

1. THE CONTRACTOR SHALL FURNISH THE PRECAST CONCRETE BARRIER UNITS AND SHALL BE RESPONSIBLE FOR THE MANUFACTURE, SHIPMENT, STORAGE, PLACEMENT AND REMOVAL. AT THE COMPLETION OF THE PROJECT, THE PRECAST UNITS WILL REMAIN THE PROPERTY OF THE CONTRACTOR.

2. MATERIALS SHALL MEET THE FOLLOWING MINIMUM REQUIREMENTS:
   CONCRETE: 2500 PSI COMPRESSIVE STRENGTH AT 28 DAYS.
   REINFORCING STEEL: AASHTO M 31 OR M 53, GRADE 60
   STRUCTURAL STEEL: AASHTO-M270 GRADE 36 SHALL BE USED FOR THE CONNECTION PIN, CONNECTION LOOPS, AND STABILIZATION PINS. A ONE PIECE PIN WITH A 3" ROUNDED TOP MAY BE USED IN PLACE OF THE DETAILED CONNECTION PIN.
   DELINEATORS: DELINEATORS SHALL BE MOUNTED AT 10' SPACING ON TOP OF PRECAST BARRIER.

   IN APPLICATIONS WHERE BARRIER WALL IS WITHIN 6 FEET OF A TRAFFIC LANE, ADDITIONAL DELINEATORS SHALL BE PLACED ON THE BARRIER AT 10' SPACING APPROXIMATELY ONE (1) FOOT FROM THE TOP OF THE BARRIER. DELINEATORS SHALL BE ON THE ARDOT QUALIFIED PRODUCTS LIST FOR CONSTRUCTION CONCRETE BARRIER MARKERS.
   DELINEATOR COLOR SHALL BE IN ACCORDANCE WITH THE MANUAL ON UNIFORM TRAFFIC CONTROL DEVICES.
   PAYMENT FOR DELINEATORS SHALL BE CONSIDERED INCLUDED IN THE PRICE BID PER LIN. FT. FOR "FURNISHING AND INSTALLING PRECAST CONCRETE BARRIER". THE CONTRACTOR SHALL CERTIFY TO THE ENGINEER THAT THE MATERIAL AND THE DESIGN USED IN THE PRECAST BARRIER UNITS MEETS THE REQUIREMENTS AS SHOWN ON THIS STANDARD DRAWING.

3. OTHER PRECAST CONCRETE BARRIERS THAT HAVE BEEN CRASH TESTED AND APPROVED BY THE FEDERAL HIGHWAY ADMINISTRATION TO MEET THE REQUIREMENTS OF MANUAL FOR ASSESSING SAFETY HARDWARE (MASH) WILL BE ACCEPTED IN LIEU OF THE BARRIER SHOWN. DRAIN SLOTS SHALL BE PROVIDED AS NEEDED OR AS DIRECTED BY THE ENGINEER. THE CONTRACTOR SHALL FURNISH A CERTIFICATION OF MANUAL FOR ASSESSING SAFETY HARDWARE (MASH) COMPLIANCE FOR ANY OTHER TYPES OF PRECAST BARRIER TO BE USED. THE CERTIFICATION SHALL STATE THAT THE PRECAST CONCRETE BARRIER MEETS THE REQUIREMENTS OF MANUAL FOR ASSESSING SAFETY HARDWARE (MASH). MIXING OF SHAPES WILL NOT BE ALLOWED IN A CONTINUOUS LINE OF UNITS.

4. DOWEL HOLES IN PAVEMENT OR BRIDGE SLABS THAT ARE TO REMAIN IN PLACE SHALL BE FILLED. HOLES IN CONCRETE PAVEMENT AND BRIDGE SLABS SHALL BE FILLED WITH AN APPROVED NON-SHRINK EPOXY GROUT. HOLES IN ASPHALT PAVEMENT SHALL BE FILLED WITH AN APPROVED ASPHALT JOINT FILLER. PAYMENT FOR DRILLING AND FILLING HOLES TO BE INCLUDED IN THE PRICE FOR VARIOUS BARRIER ITEMS.

5. ATTACH UNITS TO ROADWAY SURFACE WITH STABILIZATION PINS AND TO DECK SLABS USING BOLTS WHEN REQUIRED.

6. A 4" WHITE PVC SLEEVE MAY BE USED TO FORM THE LIFTING HOLE AND IF USED THE SLEEVE IS TO BE LEFT IN PLACE.

DATE	REVISION	FILMED
11-07-19	REVISED NOTE 3	
2-27-14	REVISED BARRIER STABILIZATION DETAIL	
10-15-09	ADDED REFERENCE TO MASH	
8-5-09	REV. NOTE 3 CONCERNING DRAIN SLOTS	
11-29-07	REVISED NOTE 3	
5-25-06	DELETED GENERAL NOTE 7	
11-18-04	REVISED BARRIER STABILIZATION DETAIL BRIDGE DECKS	
4-10-03	REVISED GENERAL NOTE 2	
8-22-02	ISSUED NEW DRAWING	

ARKANSAS STATE HIGHWAY COMMISSION

STANDARD TRAFFIC CONTROLS FOR HIGHWAY CONSTRUCTION - TEMPORARY PRECAST BARRIER

STANDARD DRAWING TC-4

Ⓐ 4 feet or greater preferred. If less than 4 feet, Precast Units shall be connected to slab (SEE BARRIER STABILIZATION DETAIL-BRIDGE DECKS STD. DRWG. TC-4)

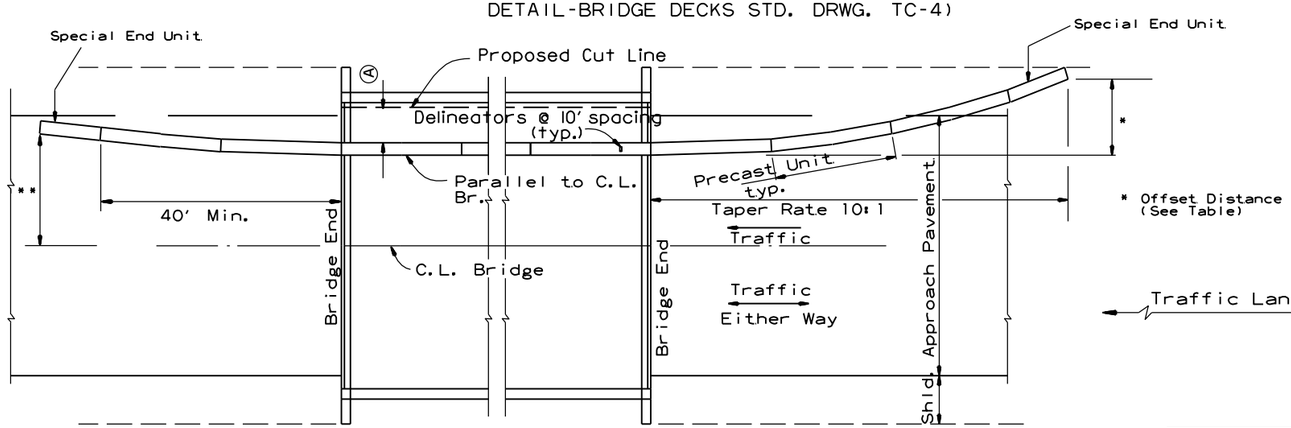

BARRIER PLACEMENT ALONG BRIDGE WITH OFFSET

No Scale

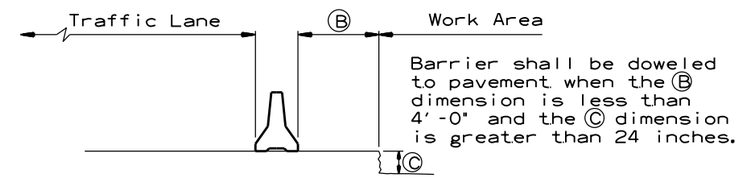

Barrier shall be doweled to pavement when the Ⓑ dimension is less than 4'-0" and the Ⓒ dimension is greater than 24 inches.

SECTION J-J

No Scale

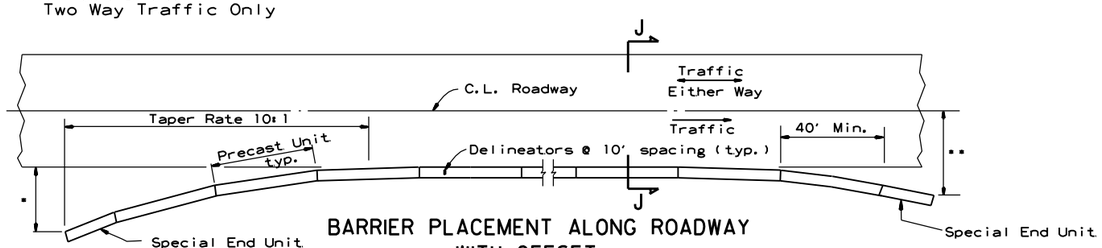

BARRIER PLACEMENT ALONG ROADWAY WITH OFFSET

No Scale

* Offset Distance (See Table)

** Offset Distance For Two Way Traffic Only

Offset Distance Table

Speed (MPH)	Offset Distance (FT.)
≤ 45	12
> 45	18

If offset distance is not attainable, then see "Barrier Placement With Attenuator" Detail shown below.

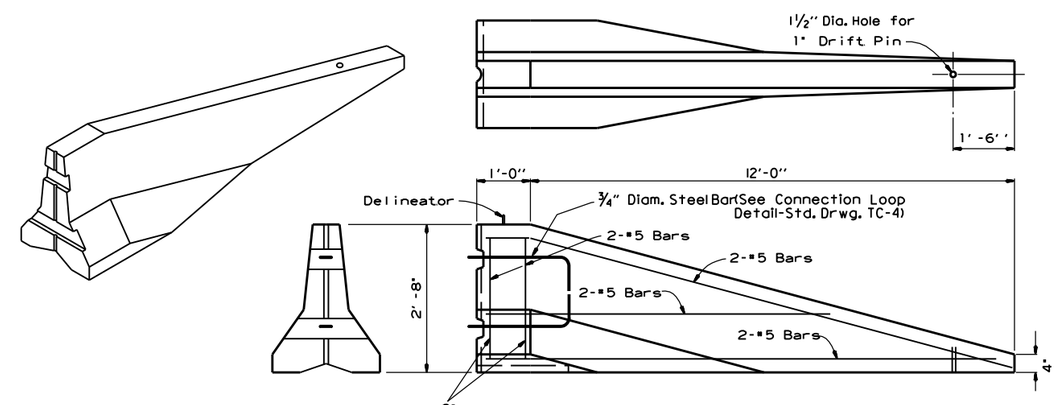

SPECIAL END UNIT

No Scale

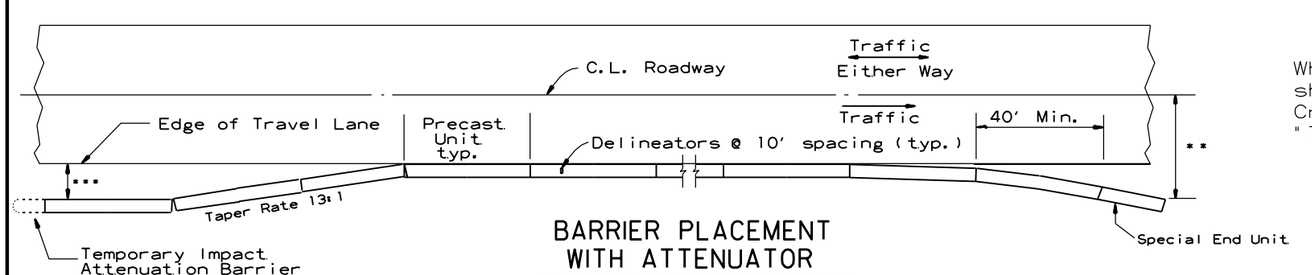

BARRIER PLACEMENT WITH ATTENUATOR

No Scale

*** Min. 3'-0" From Edge of Travel Lane to Nearest Edge of Attenuator

** Offset Distance For Two Way Traffic Only

General Notes

When shown on the Plans, the ends of the Temporary Precast Concrete Barrier shall be protected with a Manual For Assessing Safety Hardware (MASH) approved Crash Cushion. Payment for Crash Cushions shall be made under the item of "Temporary Impact Attenuation Barrier."

DATE	REVISION	FILMED
11-07-19	REVISED NOTE	
10-15-09	ADDED REFERENCE TO MASH	
5-25-06	REVISED BARRIER PLACEMENT	
8-22-02	ISSUED NEW DRAWING	

ARKANSAS STATE HIGHWAY COMMISSION

STANDARD TRAFFIC CONTROLS FOR HIGHWAY CONSTRUCTION - TEMPORARY PRECAST BARRIER

STANDARD DRAWING TC-5

GENERAL NOTES

INSTALL A MINIMUM OF 2 UPSLOPE STAKES AND 4 DOWNSLOPE STAKES AT AN ANGLE TO WEDGE WATTLE TO BOTTOM OF DITCH.

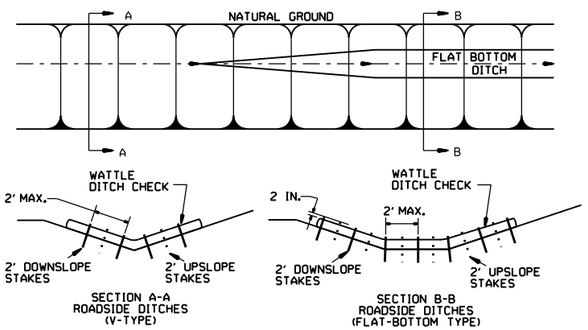

WATTLE DITCH CHECK (E-1)

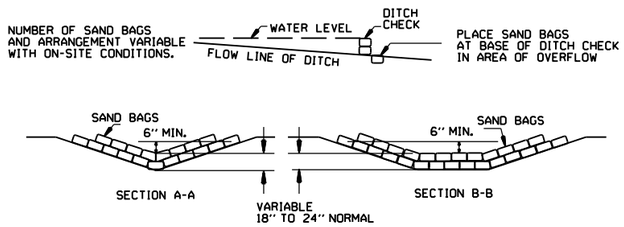

SAND BAG DITCH CHECK (E-5)

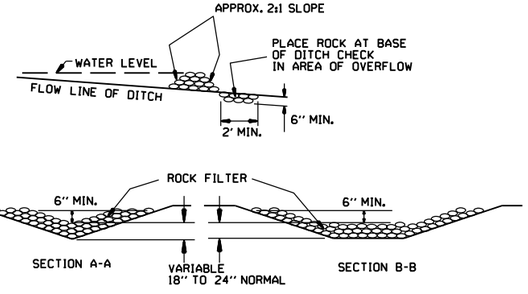

ROCK DITCH CHECK (E-6)

GENERAL NOTES

GEOTEXTILE FABRIC (TYPE 4) IN ACCORDANCE WITH SECTION 625

GEOTEXTILE FABRIC SHALL BE SPLICED TOGETHER WITH A SEWN SEAM ONLY AT A SUPPORT POST OR TWO SECTIONS OF FENCE MAY BE OVERLAPPED INSTEAD. PAYMENT OF ADDITIONAL MATERIAL FOR OVERLAP WILL NOT BE MADE.

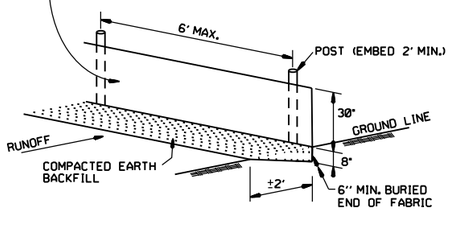

SILT FENCE (E-11)

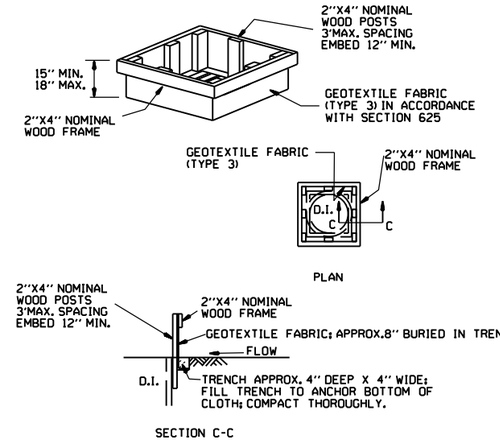

DROP INLET SILT FENCE (E-7)

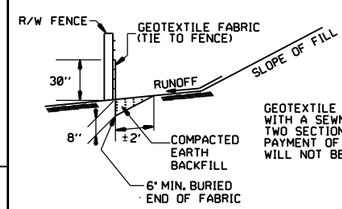

GENERAL NOTES

GEOTEXTILE FABRIC SHALL BE SPLICED TOGETHER WITH A SEWN SEAM ONLY AT A SUPPORT POST, OR TWO SECTIONS OF FENCE MAY BE OVERLAPPED INSTEAD. PAYMENT OF ADDITIONAL MATERIAL FOR OVERLAP WILL NOT BE MADE.

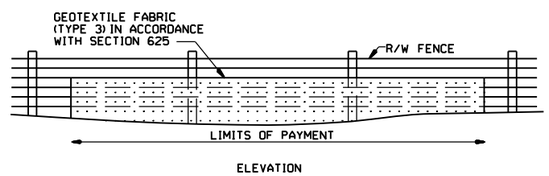

SILT FENCE ON R/W FENCE (E-4)

GENERAL NOTES

1. STRAW BALES SHALL BE INSTALLED SO THAT THE BINDINGS ARE ORIENTED AROUND THE SIDES RATHER THAN ALONG THE TOPS AND BOTTOMS OF THE BALES. THE BALES SHALL BE A MINIMUM OF 30 INCHES IN LENGTH.

2. NO GAPS SHALL BE LEFT BETWEEN BALES.

3. BALED STRAW FILTER BARRIERS COMPLETED AND ACCEPTED WILL BE MEASURED BY THE BALE IN PLACE AS AUTHORIZED BY THE ENGINEER AND WILL BE PAID FOR AT THE CONTRACT UNIT PRICE BID PER BALE FOR BALED STRAW DITCH CHECKS.

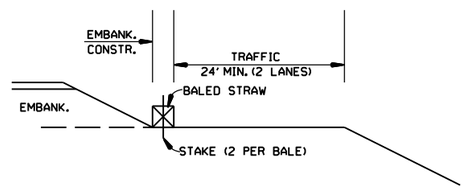

BALED STRAW FILTER BARRIER (E-2)

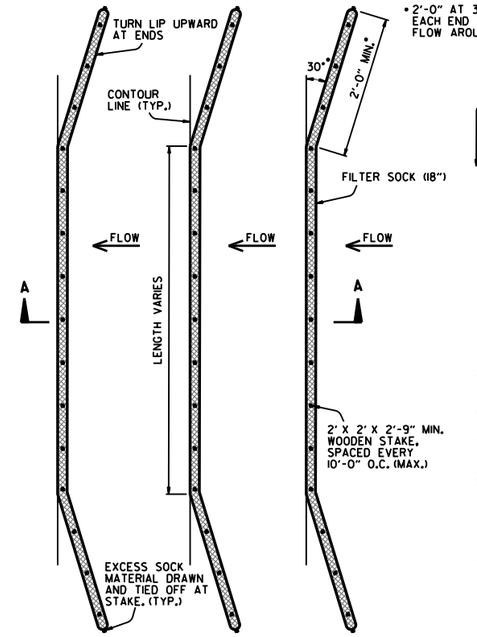

PLAN VIEW
N.T.S.

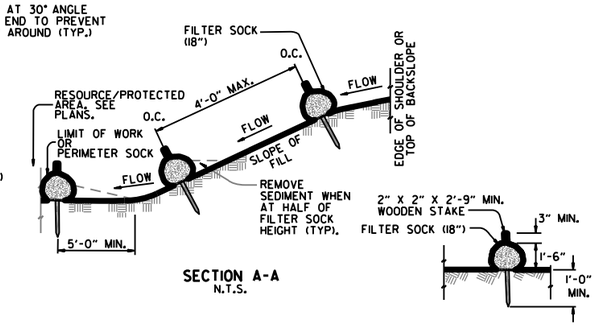

SECTION A-A
N.T.S.

STAKING DETAIL
N.T.S.

NOTES:

1. FILTER SOCKS CAN BE PLACED AT THE TOP, ON THE FACE, AND AT THE TOE OF SLOPES AS SEDIMENT-TRAPPING DEVICES FOR SHEET FLOW RUNOFF.

2. FILTER SOCKS ARE TYPICALLY SUPPLIED AND INSTALLED WITH 18 INCH DIAMETERS. DIAMETER TOLERANCE IS 2 INCHES, AS FILTER SOCKS TEND TO FLATTEN OUT WHEN PLACED.

3. STEEL POSTS MAY BE USED AND SHALL BE ROLLED FROM HIGH CARBON STEEL AND HAVE A MINIMUM OF 1.25 LB./FT. POSTS SHALL BE HOT-DIPPED GALVANIZED OR PAINTED WITH HIGH-GRADE WEATHER RESISTANT BROWN OR BLACK STEEL PAINT. STEEL POSTS SHALL BE EQUIPPED WITH ANCHOR PLATE HAVING A MINIMUM AREA OF 14 SQUARE INCHES. POSTS SHALL BE STUDDED, EMBOSSED, OR PUNCHED. POSTS AND ANCHOR PLATES SHALL CONFORM TO THE REQUIREMENTS OF ASTM A702. NO ADDITIONAL PAYMENT WILL BE PROVIDED FOR STEEL POSTS, BUT PRICE WILL BE CONSIDERED SUBIDIARY TO "FILTER SOCK (18")."

4. FILTER SOCKS MAY BE UP TO 250 FEET LONG. WHEN USED ON LONG SLOPES, FILTER SOCKS MAY BE JOINTED OR STAGGERED AS SHOWN IN DETAILS.

5. INSPECT FILTER SOCKS AFTER EACH RUNOFF EVENT. REMOVE AND REPLACE IF SIGNS OF UNDERCUTTING OR DOWNSTREAM RILLS ARE OBSERVED.

FILTER SOCK ALONG SLOPE (E-3)

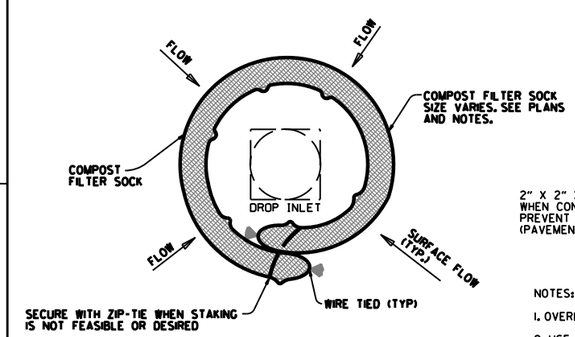

DROP INLET PLAN VIEW
N.T.S.

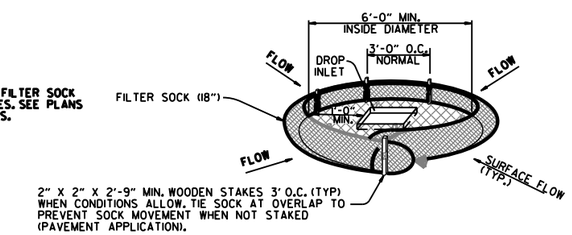

DROP INLET PERSPECTIVE VIEW
N.T.S.

NOTES:

1. OVERLAP ENDS OF SOCK (1' MIN. 3' MAX.).

2. USE 18" DIA. SOCK IN NON-TRAFFIC AREAS OR AREAS WHERE SAFETY IS NOT A CONCERN.

COMPOST FILTER SOCK DROP INLET PROTECTION (E-13)

DATE	REVISION	FILMED
11-16-17	ADDED FILTER SOCK E-3 AND E-13	
12-15-11	DELETED BALED STRAW DITCH CHECK & ADDED WATTLE DITCH CHECK	
11-18-98	ADDED NOTES	
07-02-98	ADDED BALED STRAW FILTER BARRIER (E-2)	
07-20-95	REVISED SILT FENCE E-4 AND E-11	7-20-95
07-15-94	REV. E-4 & E-11 MIN. 13" BURIED END OF FABRIC	
06-02-94	REVISED E-1,4,7 & 11; DELETED E-2 & 3	6-2-94
04-01-93	REDRAWN	
10-01-92	REDRAWN	
08-02-76	ISSUED R.D.M.	298-7-28-76

ARKANSAS STATE HIGHWAY COMMISSION

TEMPORARY EROSION CONTROL DEVICES

STANDARD DRAWING TEC-1

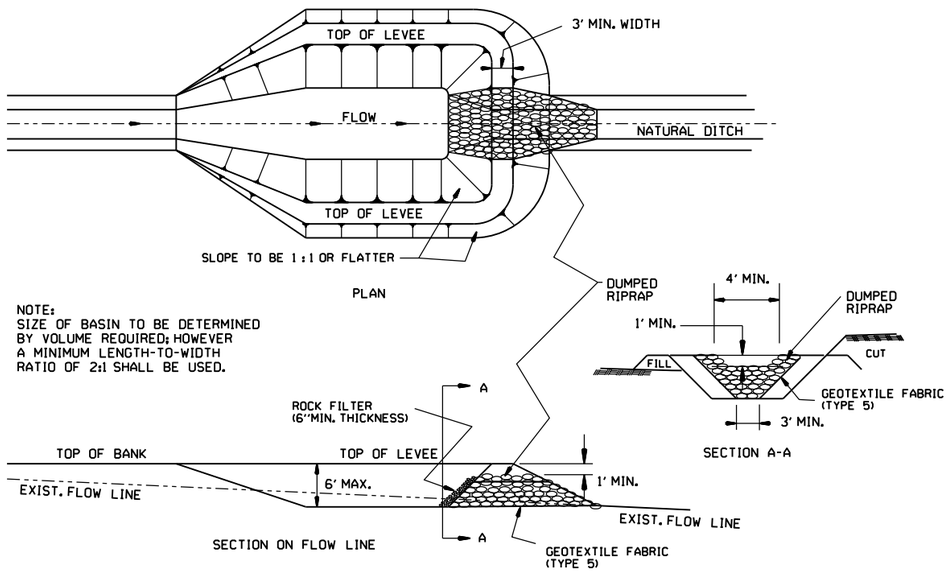

SEDIMENT BASIN WITH RIPRAP OUTLET (E-9)

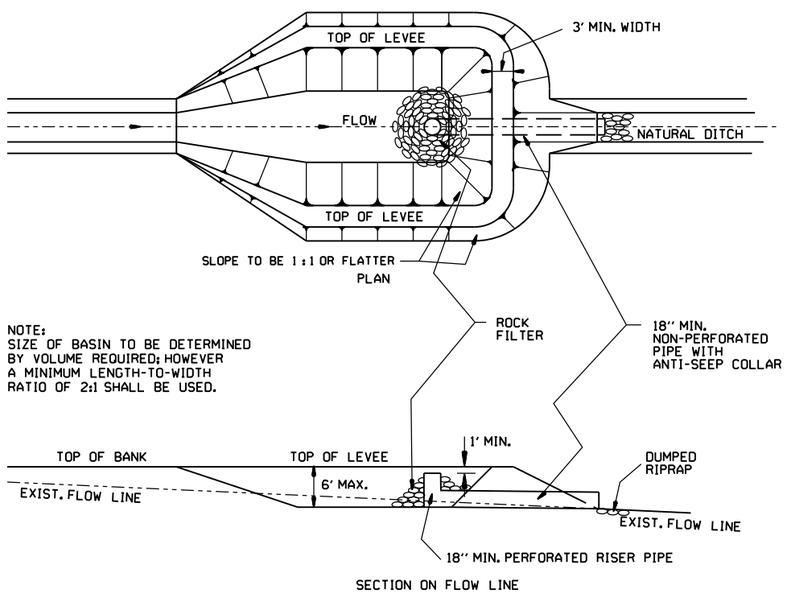

SEDIMENT BASIN WITH PIPE OUTLET (E-10)

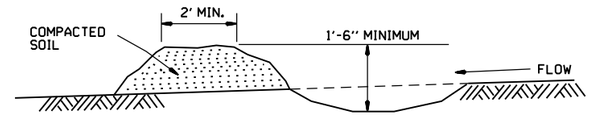

DIVERSION DITCH (E-8)

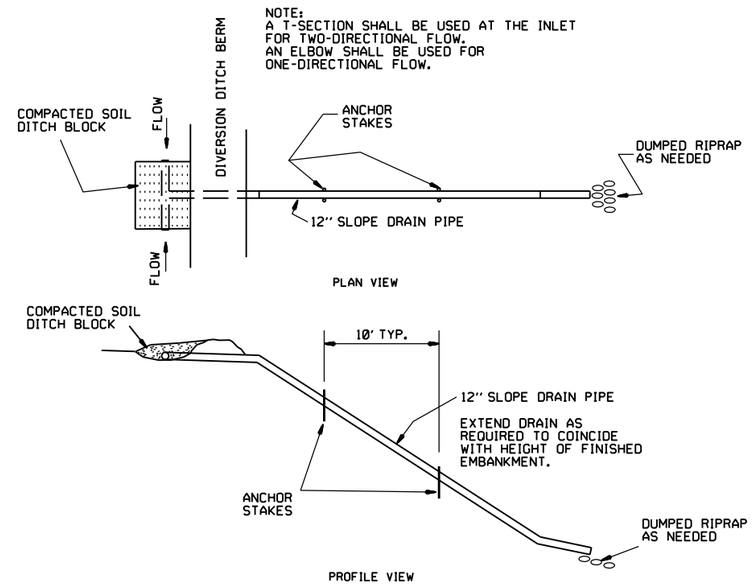

SLOPE DRAIN (E-12)

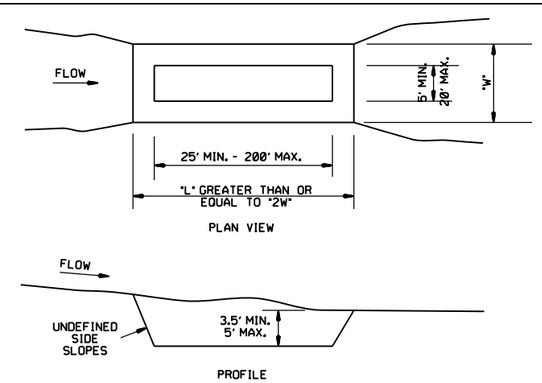

SEDIMENT BASIN (E-14)

DATE	REVISION	FILMED
6-2-94	Revised E-8 & E-12; Added E-14 & Deleted E-13	
4-1-93	ISSUED	

ARKANSAS STATE HIGHWAY COMMISSION

TEMPORARY EROSION CONTROL DEVICES

STANDARD DRAWING TEC-2

CLEARING AND GRUBBING

CONSTRUCTION SEQUENCE

1. PLACE PERIMETER CONTROLS (I.E. SILT FENCES , DIVERSION DITCHES, SEDIMENT BASINS, ETC.)
2. PERFORM CLEARING AND GRUBBING OPERATION.

EXCAVATION

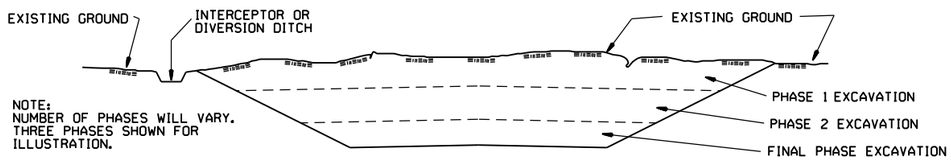

GENERAL NOTE

ALL CUT SLOPES SHALL BE DRESSED, PREPARED, SEEDED, AND MULCHED AS THE WORK PROGRESSES. SLOPES SHALL BE EXCAVATED AND STABILIZED IN EQUAL INCREMENTS NOT TO EXCEED 25 FEET, MEASURED VERTICALLY.

CONSTRUCTION SEQUENCE

1. EXCAVATE AND STABILIZE INTERCEPTOR AND/OR DIVERSION DITCHES.
2. PERFORM PHASE 1 EXCAVATION. PLACE PERMANENT OR TEMPORARY SEEDING.
3. PERFORM PHASE 2 EXCAVATION. PLACE PERMANENT OR TEMPORARY SEEDING.
4. PERFORM FINAL PHASE OF EXCAVATION. PLACE PERMANENT OR TEMPORARY SEEDING. STABILIZE DITCHES. CONSTRUCT DITCH CHECKS, DIVERSION DITCHES, SEDIMENT BASINS, OR OTHER EROSION CONTROL DEVICES AS REQUIRED.

EMBANKMENT

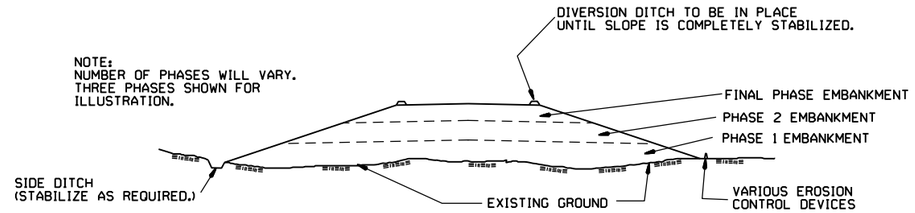

GENERAL NOTE

ALL EMBANKMENT SLOPES SHALL BE DRESSED, PREPARED, SEEDED, AND MULCHED AS THE WORK PROGRESSES. SLOPES SHALL BE CONSTRUCTED AND STABILIZED IN EQUAL INCREMENTS NOT TO EXCEED 25 FEET, MEASURED VERTICALLY.

CONSTRUCTION SEQUENCE

1. CONSTRUCT DIVERSION DITCHES, DITCH CHECKS, SEDIMENT BASINS, SILT FENCES, OR OTHER EROSION CONTROL DEVICES AS SPECIFIED.
2. PLACE PHASE 1 EMBANKMENT WITH PERMANENT OR TEMPORARY SEEDING. PROVIDE DIVERSION DITCHES AND SLOPE DRAINS IF EMBANKMENT CONSTRUCTION IS TO BE TEMPORARILY ABANDONED FOR A PERIOD OF GREATER THAN 21 DAYS.
3. PLACE PHASE 2 EMBANKMENT WITH PERMANENT OR TEMPORARY SEEDING. PROVIDE DIVERSION DITCHES AND SLOPE DRAINS IF EMBANKMENT CONSTRUCTION IS TO BE TEMPORARILY ABANDONED FOR A PERIOD OF GREATER THAN 21 DAYS.
4. PLACE FINAL PHASE OF EMBANKMENT WITH PERMANENT OR TEMPORARY SEEDING. PLACE DIVERSION DITCHES AND SLOPE DRAINS AND MAINTAIN UNTIL ENTIRE SLOPE IS STABILIZED.

DATE	REVISION	FILMED
11-03-94	CORRECTED SPELLING	
6-2-94	Drawn & Issued	6-2-94

ARKANSAS STATE HIGHWAY COMMISSION

TEMPORARY EROSION CONTROL DEVICES

STANDARD DRAWING TEC-3

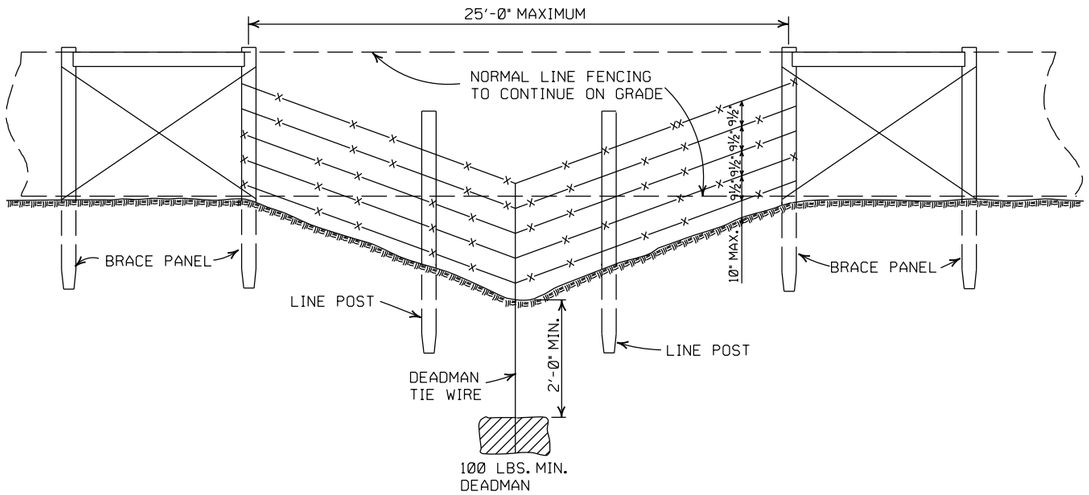

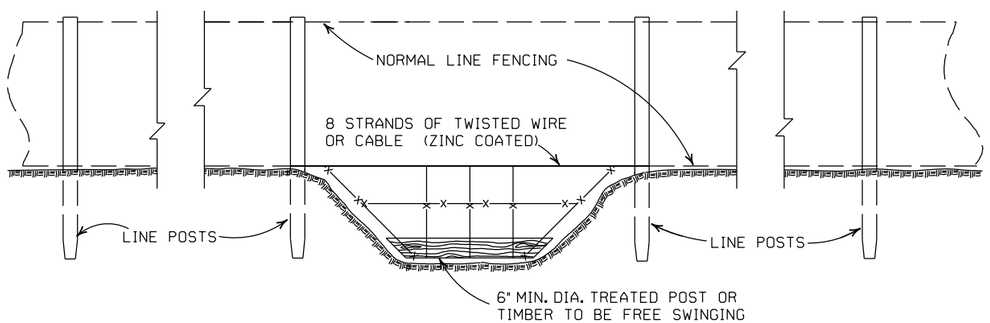

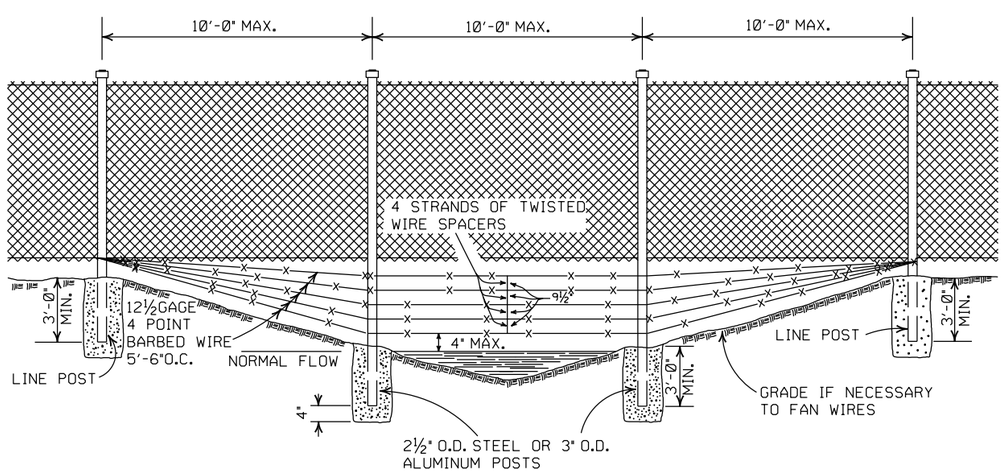

GENERAL NOTES:

THESE INSTALLATIONS TO BE USED WHERE NORMAL FENCING INSTALLATION WOULD CAUSE THE COLLECTING OF DRIFT IN THE CHANNEL OR THE DEPRESSION WILL NOT PERMIT NORMAL INSTALLATION. INSTALLATIONS WILL BE MADE ONLY WHERE DIRECTED BY THE ENGINEER.

WHEN A FENCE LINE APPROACHES A DITCH, GULLY OR DEPRESSION, THE LAST POST ON LEVEL GROUND SHALL BE PLACED CLOSE ENOUGH TO THE EDGE OF THE DROP OFF THAT THE FENCE MAY BE STRUNG TO THE POST IN THE DEPRESSION WITHOUT TOUCHING THE GROUND.

IN TERRAIN OF SUCH EXTREME IRREGULARITY THAT MINOR GRADING WILL NOT BE FEASIBLE, THE NORMAL FENCE SHALL CONTINUE ON GRADE AND THE GULLIES OR DEPRESSIONS TREATED BY AUXILIARY FENCES AS SHOWN.

PAYMENT FOR THE TYPE INSTALLATION USED WILL NOT BE MADE DIRECTLY BUT WILL BE INCLUDED IN THE CONTRACT UNIT PRICE BID FOR WIRE FENCE OR CHAIN LINK FENCE.

DATE	REVISION	FILMED
4-20-79	REVISED TOP RAIL & TENSION WIRE	696-4-20-79
10-2-72	REVISED AND REDRAWN	529-10-2-72

ARKANSAS STATE HIGHWAY COMMISSION

WIRE FENCE WATER GAPS

STANDARD DRAWING WF-2

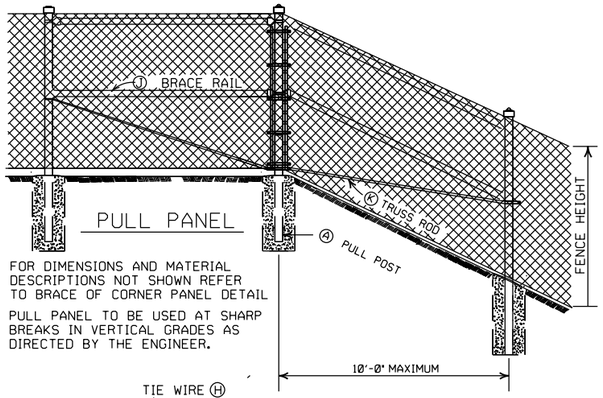

PULL PANEL

NOTE: FOR DIMENSIONS AND MATERIAL DESCRIPTIONS NOT SHOWN REFER TO BRACE OF CORNER PANEL DETAIL

PULL PANEL TO BE USED AT SHARP BREAKS IN VERTICAL GRADES AS DIRECTED BY THE ENGINEER.

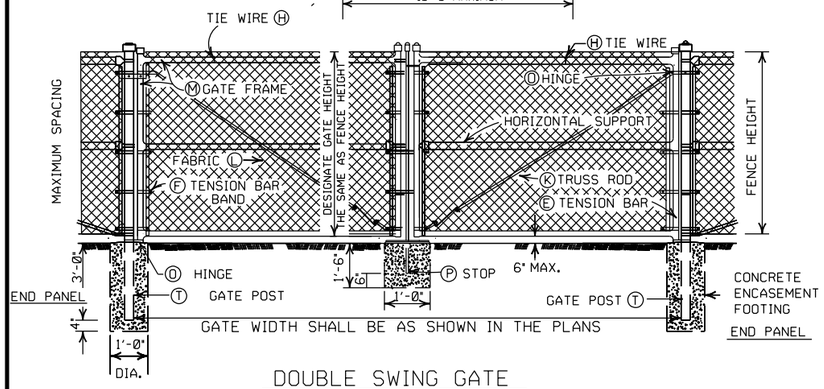

DOUBLE SWING GATE

POST SPACING DETAIL

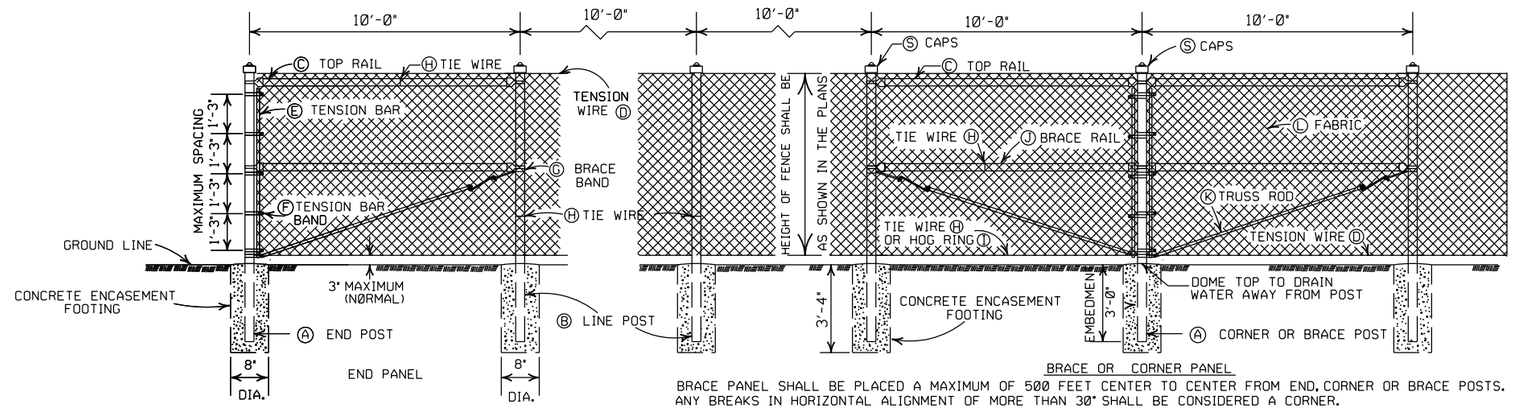

BRACE OR CORNER PANEL

BRACE PANEL SHALL BE PLACED A MAXIMUM OF 500 FEET CENTER TO CENTER FROM END, CORNER OR BRACE POSTS. ANY BREAKS IN HORIZONTAL ALIGNMENT OF MORE THAN 30° SHALL BE CONSIDERED A CORNER.

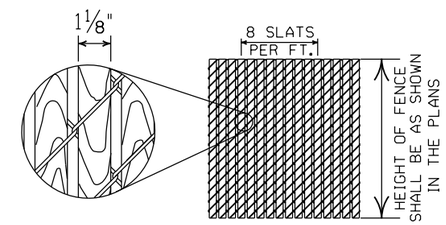

1⅛" X ¼" REDWOOD SLATS(LENGTH TO MATCH HEIGHT OF FENCE)

DETAIL OF REDWOOD SLAT INSTALLATION

(WHERE APPLICABLE)

GENERAL NOTES:

(C) CHAIN LINK FENCE BEING PLACED ON PRIVATE PROPERTY SHALL INCLUDE A TOP RAIL. ALL LABOR, MATERIALS, EQUIPMENT, TOOLS, AND INCIDENTALS NECESSARY TO COMPLETE THE WORK WILL BE PAID FOR AT THE CONTRACT UNIT PRICE BID PER LIN. FT. OF CHAIN LINK FENCE.

(D) TENSION WIRE: SHALL BE SECURED TO ALL TERMINAL, PULL, BRACE OR CORNER POSTS WITH TENSION BAR BANDS.

(J) BRACE RAIL: BRACE RAILS SHALL BE PROVIDED AT ALL TERMINAL, PULL, BRACE OR CORNER POSTS HALFWAY BETWEEN THE TOP RAIL AND GROUND LEVEL WHEN TOPRAIL IS SPECIFIED AND TWELVE INCHES (12") DOWN FROM TOP OF FABRIC WHEN TOP TENSION WIRE IS SPECIFIED. BRACE RAIL SHALL EXTEND FROM SUCH POST TO THE FIRST ADJACENT LINE POST.

(L) FABRIC: SHALL CONFORM TO THE SPECIFICATIONS.

(M) GATE FRAMES: SHALL BE CONSTRUCTED OF TUBULAR MEMBERS ASSEMBLED BY USE OF HEAVY PRESSED STEEL, MALLEABLE FITTINGS OR BY WELDING. ALL GATES SHALL HAVE ONE HORIZONTAL SUPPORT EXTENDING THE WIDTH OF THE GATE AT THE MIDPOINTS OF VERTICAL FRAME MEMBERS. THE COMPLETE FRAME SHALL BE RIGID AND HAVE AMPLE STRENGTH TO BE FREE FROM SAG AND TWIST.

(O) HINGES: SHALL BE OF HEAVY PATTERN, OF ADEQUATE STRENGTH FOR GATE, AND WITH LARGE BEARING SURFACES FOR CLAMPING IN POSITION. THE HINGE SHALL BE OF THE PROPER TYPE TO ALLOW FOR THE DESIGNATED DEGREE OF SWING. THE HINGE SHALL NOT TWIST OR TURN UNDER THE ACTION OF THE GATE. THE GATES SHALL BE CAPABLE OF BEING OPENED AND CLOSED EASILY BY ONE PERSON.

(P) LATCHES AND STOPS: SHALL BE PROVIDED FOR ALL GATES. GATES SHALL HAVE A DROP BAR LATCH. LATCHES SHALL BE ARRANGED FOR LOCKING. THE STOP FOR DROP BAR LATCHES SHALL BE SET IN CONCRETE AND ENGAGE THE PLUNGER OF THE BAR LATCH.

(S) CAPS: ALL POSTS, EXCEPT ROLL FORMED POSTS AND "T" POSTS SHALL BE CAPPED OVER THE EXTERIOR OF THE POST, AND SHALL CONFORM TO ASTM F626.

CONCRETE REQUIRED FOR THE EMBEDMENT OF ALL POSTS SHALL NOT BE PAID FOR DIRECTLY BUT SHALL BE INCLUDED IN THE CONTRACT UNIT PRICE BID FOR CHAIN LINK FENCE.

POSTS SHALL BE SPACED EQUIDISTANT ON A MAXIMUM OF 10' CENTERS.

EXCAVATION FOR POSTS: IN OTHER THAN ROCK SHALL BE OF THE DIMENSIONS INDICATED. IF ROCK IS ENCOUNTERED BEFORE REACHING THE REQUIRED DEPTH, THE EXCAVATION SHALL BE CONTINUED TO THE DEPTH INDICATED OR 1'-6" INTO THE ROCK, WHICHEVER IS LESS, AND SHALL BE A MINIMUM OF 8 INCHES IN DIAMETER.

HEIGHT OF FENCE FABRIC	(A) END, PULL, CORNER OR BRACE POST	(B) LINE POSTS		(C) TOP RAIL			(D) TENSION WIRE		(E) TENSION BAR		(F) TENSION BAR BAND			(G) BRACE BAND	
		SIZE	TIE SPACING	SIZE	TIE SPACING	MIN. LENGTH	SIZE	TIE SPACING	SIZE	LENGTH	SIZE	BOLT SIZE	SPACING	SIZE	BOLT SIZE
6' AND LESS	2½" O.D.	2" O.D.	1 TIE EVERY 1'-2" OF FABRIC HEIGHT	1⅝" O.D.	1 TIE EVERY 2'-0"	10'-0"	7 GAUGE COIL SPRING WIRE	1 TIE EVERY 1'-0"	MIN. OF 3/16" X ¾"	MIN. OF 2" LESS THAN FABRIC HEIGHT	MIN. OF ¾" X 0.074	5/16" X 1¼"	1 BAND AT TOP AND BOTTOM 15" MAX. INTERVAL BETWEEN BANDS	MIN. OF ¾" X 0.105	5/16" X 1¼"
OVER 6' TO 12' INCL.	3 " O.D.	2½" O.D.													

HEIGHT OF FENCE FABRIC	(H) TIE WIRE	(I) HOG RING	(J) BRACE RAIL		(K) TRUSS ROD	(L) FABRIC			(M) GATE FRAME		(N) HORIZONTAL SUPPORT		(O) HINGE TYPE 180° SWING	(T) GATE POST	
			SIZE	TIE SPACING		SIZE	MESH	SELVAGE	SIZE	TIE SPACING	SIZE	TIE SPACING		GATE WIDTH 12' AND LESS	GATE WIDTH OVER 12' TO 24' INCL.
6' AND LESS	MIN. OF 12 GA. STEEL OR 9 GA. ALUM.	SAME GAUGE AS FABRIC	1⅝" O.D.	1 TIE EVERY 2'-0"	MIN. OF 5/16" ROUND WITH TIGHTNERS AND FITTINGS	9 GA.	2"	KNUCK-ING AND/OR TWIST-ING	2" O.D.	1 TIE EVERY 1'-0"	2" O.D.	1 TIE EVERY 1'-0"	OFFSET	3" O.D.	4" O.D.
OVER 6' TO 12' INCL.														4" O.D.	

NOTE: POST SIZES SHOWN ARE FOR STEEL. WHERE ALUMINUM IS PROVIDED, LINE POSTS SHALL HAVE AN OUT SIDE DIAMETER OF 2½" FOR FENCE HEIGHT OF 6' AND LESS, AN OUTSIDE DIAMETER OF 3" FOR FENCE HEIGHT OF 6' TO 12'. END, PULL, CORNER OR BRACE POSTS SHALL HAVE AN OUTSIDE DIAMETER OF 3" FOR FENCE HEIGHT OF 6' AND LESS; AN OUTSIDE DIAMETER OF 3½" FOR FENCE HEIGHTS OF 6' TO 12'. GATE POSTS WHERE GATE WIDTH IS 12' AND LESS SHALL HAVE AN OUTSIDE DIAMETER OF 3½" FOR FENCE HEIGHT OF 6' AND LESS. ALUMINUM TENSION WIRE SHALL BE 0.192" IN DIAMETER. MINIMUM THICKNESS OF MATERIAL FROM WHICH EXPANSION SLEEVES SHALL BE MADE WILL BE 0.078". POSTS AND RAILS MAY HAVE ANY CROSS-SECTIONAL SHAPE THAT WILL MEET THE SPECIFICATIONS.

OTHER DETAILS APPLY TO BOTH STEEL AND ALUMINUM FENCE.

ALL MISCELLANEOUS FITTINGS AND HARDWARE SHALL MEET THE REQUIREMENTS AND PRODUCTION TOLERANCES AS SET FORTH IN THE SPECIFICATIONS. 9 GAUGE ALUMINUM WIRE SHALL BE ACCEPTABLE FOR TIEING FABRIC TO TUBULAR AND ROLL FORMED MEMBERS OF STEEL FENCE.

POSTS AND RAILS

SIZE O.D.	GRADE 1 AND ALUMINUM ALLOY				GRADE 2		
	O.D. INCHES	WALL THICKNESS	LBS. PER LINEAR FT. STEEL	LBS. PER LINEAR FT. ALUMINUM	O.D. INCHES	WALL THICKNESS	LBS. PER LINEAR FT.
1⅝	1.660	0.140	2.27	0.786	1.660	0.111	1.84
2	1.900	0.145	2.72	0.940	1.900	0.120	2.28
2½	2.375	0.154	3.65	1.264	2.375	0.130	3.11
3	2.875	0.203	5.79	2.004	2.875	0.160	4.64
3½	3.500	0.216	7.58	2.621	3.500	0.160	5.71
4	4.000	0.226	9.11	3.151	4.000	0.160	6.56

TOLERANCES ON DIMENSIONS AND WEIGHTS ACCORDING TO AASHTO M 181

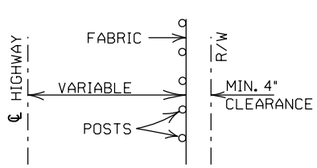

INSTALLATION MAY BE MODIFIED AS SHOWN IN THE PLANS

TYPICAL INSTALLATION DIAGRAM

DATE	REVISION	FILMED
11-17-10	REVISED TRUSS ROD	
12-10-09	REVISED POSTS & RAILS TABLE	
5-21-09	ADDED TABLE & GEN. NOTE (C)	
8-22-02	REVISED NOTES, REMOVED TABLE, & REMOVED FENCE ALTERNATE	
4-3-97	REVISED BRACE RAIL NOTE	
10-18-96	REVISED AASHTO & ASTM REF.	
11-3-94	REVISED NOTE (L)	
10-1-92	DELETED ALTERNATE POST	10-1-92
8-15-91	DELETED ROLL FORMED POST	8-15-91
	DETAIL & ADDED NOTE	8-15-91
11-30-89	DELETED CLASS CONCRETE	11-30-89
11-17-88	REVISED O.D. SIZES	668-11-17-88
10-30-87	GENERAL REVISIONS	548-10-30-87
4-20-79	REVISED TOP RAIL & TENSION WIRE	695-4-20-79
10-2-72	REVISED AND REDRAWN	530-10-2-72

ARKANSAS STATE HIGHWAY COMMISSION

CHAIN LINK FENCE

STANDARD DRAWING WF-3

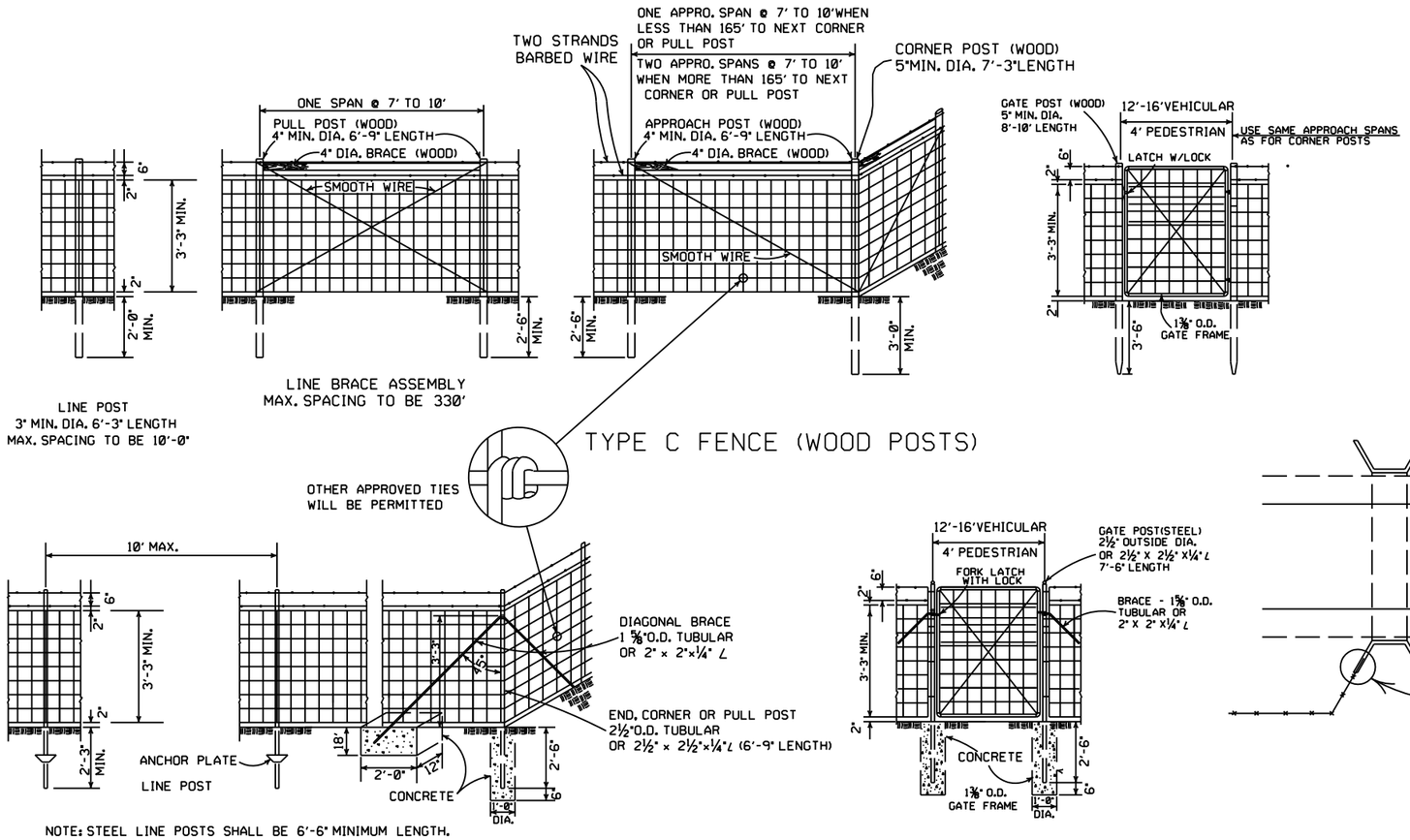

TYPE C FENCE (WOOD POSTS)

TYPE C FENCE (STEEL POSTS)

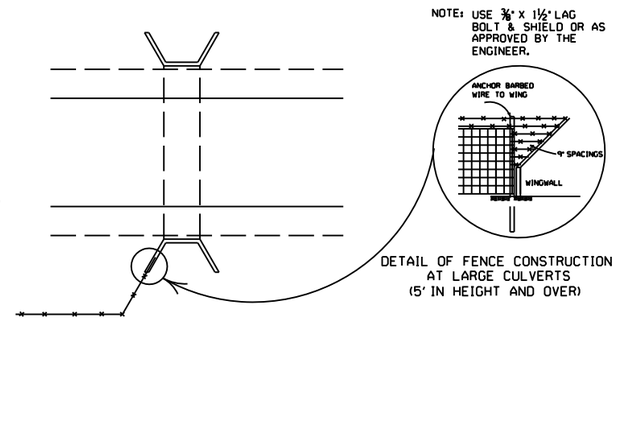

GENERAL NOTES:

STEEL LINE POSTS SHALL BE PAINTED OR GALVANIZED.
TUBULAR END, CORNER, PULL, OR DIAGONAL BRACES MUST CONFORM TO THE DIMENSIONS AND WEIGHTS SPECIFIED ON STANDARD DRAWING WF-3 (CHAIN LINK). APPROVED ALTERNATES ARE ACCEPTABLE.
AN ACCEPTABLE TOLERANCE IN LENGTH OF TUBULAR OR WOODEN POSTS SHALL BE - 1" TO +2".
TUBULAR POSTS MUST BE PAINTED OR GALVANIZED.

THE CONTRACTOR SHALL FURNISH AT LEAST 25% OF TIMBER LINE POSTS OF 7 FOOT LENGTHS IN ORDER TO PROVIDE SUFFICIENT SET IN SOFT GROUND OR SMALL DEPRESSIONS.

DRIVEWAY GATES, EITHER SINGLE 12' TO 16' OR DOUBLE 6' TO 8' OPENING OF THE SAME TYPE AS THE PEDESTRIAN GATE, SHALL BE INSTALLED ON THE RIGHT SIDE OF EACH THROUGH LANE ROAD AT LARGE CULVERTS OR BRIDGE CROSS FENCE, FOR USE OF MAINTENANCE EQUIPMENT. LOCATION OF GATES TO BE SHOWN ON PLANS OR AS DESIGNATED BY THE ENGINEER.

AT STREAM CROSSINGS, THE FENCE SHALL NOT BE CONSTRUCTED ACROSS LARGE STREAMS. WHERE CLEARANCE IS SUFFICIENT FROM THE TOP OF THE BANK TO THE BRIDGE STRUCTURE A CROSS CONNECTION SHALL BE CONSTRUCTED BETWEEN THE FENCE ON EACH SIDE OF THE ROAD. WHERE THE CLEARANCE IS NOT SUFFICIENT, THE FENCE SHALL BE TERMINATED WITH CROSS CONNECTIONS AND END POSTS ADJACENT TO BRIDGE ABUTMENTS OR CULVERT WINGWALLS.

SPLICE FOR BARBED WIRE BETWEEN PULL POST ASSEMBLY SHALL BE BY THE "EYE METHOD" AS DESCRIBED AS FOLLOWS:
THE ENDS OF THE BARBED WIRE SHALL BE BENT TO FORM A LOOP. THE LOOPS SHALL BE CONNECTED. AFTER THE LOOPS ARE CONNECTED THE ENDS OF THE WIRE SHALL BE WRAPPED AROUND THE PROJECTING WIRES A MINIMUM OF 4 TIMES FOR EACH WIRE LOOP.

SPLICE FOR WOVEN WIRE BETWEEN PULL POST SHALL BE BY THE "WESTERN UNION METHOD" AS DESCRIBED AS FOLLOWS: THE VERTICAL WIRES FOR EACH END OF THE FENCE FABRIC SHALL BE PLACED SIDE BY SIDE AND THE PROJECTING HORIZONTAL WIRES SHALL BE WRAPPED A MINIMUM OF 4 TIMES AROUND THE HORIZONTAL WIRES OF THE FIRST WEB.

STAPLE AT LEAST TOP, BOTTOM AND ALTERNATE WIRES OF WOVEN FABRIC FOR WOOD LINE POSTS.

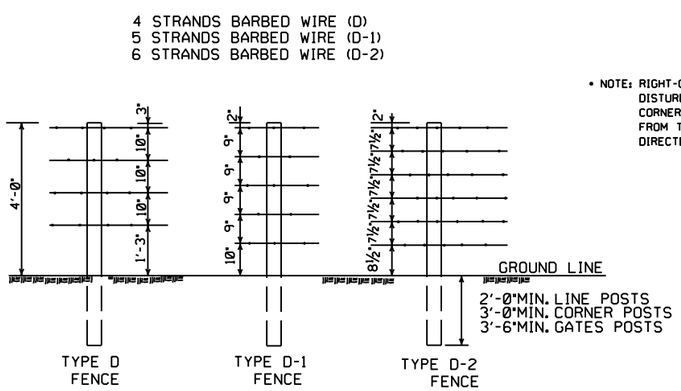

NOTE: SPACING AND SIZE (EXCEPT LENGTH) OF POSTS, APPROACH SPANS, PULL POST ASSEMBLIES, AND CORNER BRACING FOR TYPE D FENCE SHALL CONFORM TO TYPE C FENCE. USE GALVANIZED STAPLES ON WOOD POSTS AND APPROVED FASTENERS ON STEEL POSTS.

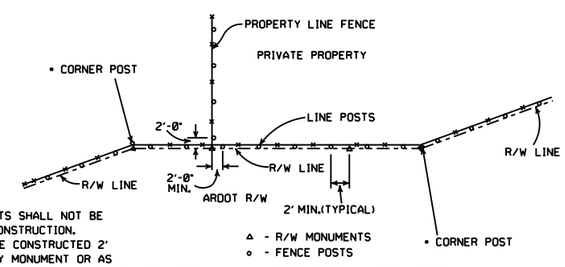

• NOTE: RIGHT-OF-WAY MONUMENTS SHALL NOT BE DISTURBED BY FENCE CONSTRUCTION. CORNER POSTS SHALL BE CONSTRUCTED 2' FROM THE RIGHT-OF-WAY MONUMENT OR AS DIRECTED BY THE ENGINEER.

RIGHT-OF-WAY FENCE LOCATION

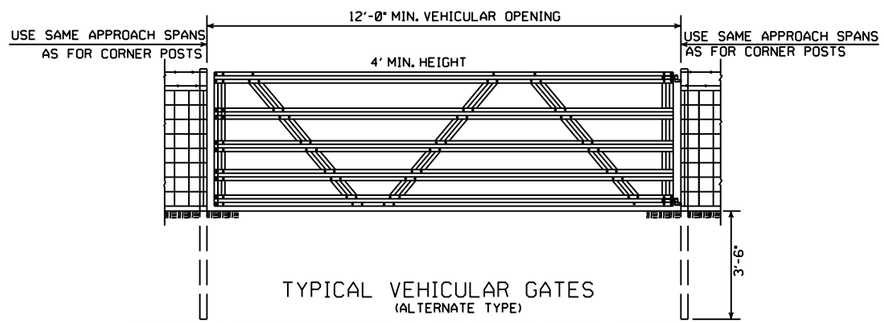

TYPICAL VEHICULAR GATES
(ALTERNATE TYPE)

OTHER STYLE VEHICULAR GATES MAY BE USED WITH THE APPROVAL OF THE ENGINEER.
THE METHOD OF SECURING GATE (LATCH AND/OR LOCK) SHALL MEET THE APPROVAL OF THE ENGINEER.

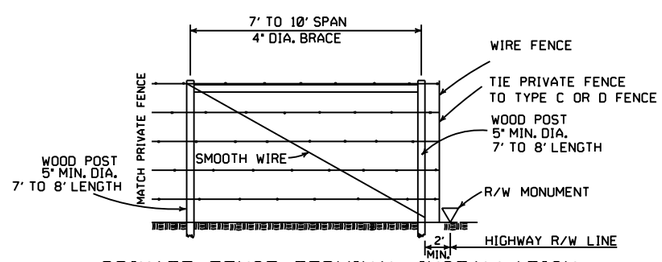

PRIVATE FENCE TERMINAL INSTALLATION
WHERE EXISTING FENCE CONSISTS OF STEEL POSTS, USE END POST ASSEMBLY AS SHOWN IN TYPE C FENCE OR OTHER END POST ASSEMBLY AS APPROVED BY THE ENGINEER.

DATE	REVISION	FILMED
8-22-02	REVISED GENERAL NOTES	
10-18-96	REVISED AASHTO	
11-22-95	REVISED R-O-W LOCATION DETAIL	
6-2-94	REVISED BARB WIRE AND ADDED CORNER POST NOTES	6-2-94
8-5-93	REVISED R/W INSTALLATION FENCE	8-5-93
10-1-92	ADDED STAPLE NOTE	10-1-92
8-15-91	ADDED TYPE D-2 FENCE	8-15-91
11-30-89	DELETED CLASS CONCRETE	11-30-89
7-15-88	ADDED SPLICE NOTE	700-7-15-88
10-30-87	GENERAL REVISIONS	549-10-30-87
11-1-84	MAX. POST SPACING MIN. WIRE GAUGE	507-11-1-84
1-4-83	MIN. DIA. LINE POST	648-1-4-83
3-2-81	TOLERANCE FOR POST LENGTH	722-3-2-81
12-1-72	ADDED D-1 & FENCE INSTALLATION	564-12-1-72
10-2-72	REVISED AND REDRAWN	540-10-2-72

ARKANSAS STATE HIGHWAY COMMISSION

WIRE FENCE TYPE C AND D

STANDARD DRAWING WF-4

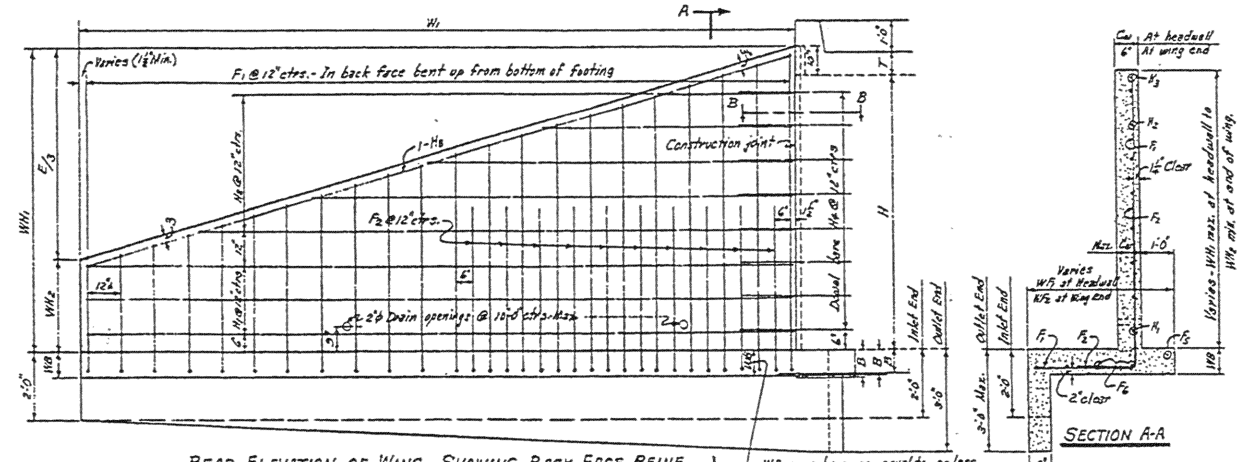

REAR ELEVATION OF WING - SHOWING BACK FACE REINF.

SECTION A-A

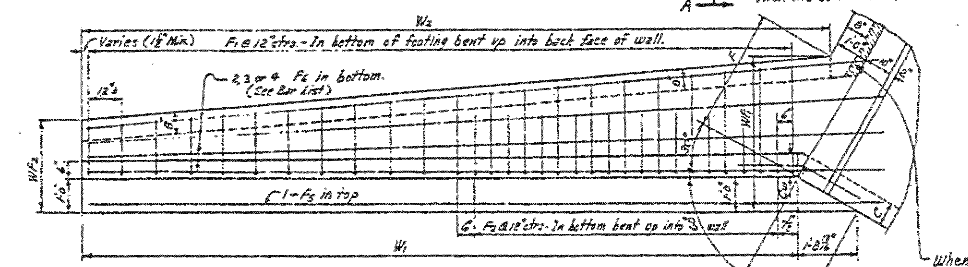

PLAN OF WING - SHOWING FOOTING REINF.

When B is more than WB, the shaded portion of the apron shall be made the same thickness as the barrel base B.

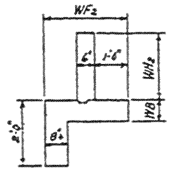

END VIEW OF WING

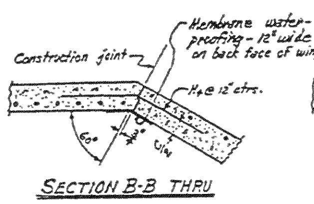

SECTION B-B THRU CONSTRUCTION JOINT

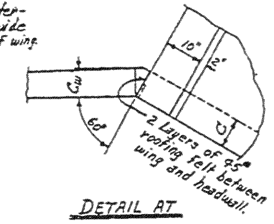

DETAIL AT TOP OF WING

NOTE:- Payment for membrane waterproofing and roofing felt to be included in the price bid for Class S Concrete.

WING DIMENSIONS

CLEAR HEIGHT OF BOX H	THICKNESS OF WING FOOTING WB	THICKNESS OF WING AT HEADWALL = C Cw	WINGWALL HEIGHTS AT HEADWALL WH1	WINGWALL HEIGHTS AT END OF WING WH2	WIDTHS OF WING FOOTINGS AT HEADWALL WF1	WIDTHS OF WING FOOTINGS AT END OF WING WF2	PERPENDICULAR FOOTING DIMENSION F	PERPENDICULAR DIST. FROM HDWL. TO END OF WING E	LENGTH OF WINGWALLS W1	INSIDE FOOTING DIMENSION W2	* QUANTITY PER WING CLASS S CONCRETE INLET END CU.YD.	OUTLET END CU.YD.
2'	7"	6"	2'-10"	0'-8"	2'-4"	2'-0"	0'-11¾"	6'-6"	7'-6"	7'-1½"	0.889	0.996
3'	7"	6"	3'-10"	1'-0"	2'-8"	2'-1½"	1'-4⅜"	8'-6"	9'-9¾"	9'-7½"	1.338	1.466
4'	7"	6"	4'-10"	1'-4"	3'-0"	2'-3"	1'-9"	10'-6"	12'-1½"	12'-1½"	1.868	2.027
5'	7"	6"	5'-10"	1'-8"	3'-4"	2'-4½"	2'-1⅝"	12'-6"	14'-5¼"	14'-7½"	2.478	2.668
		7"	5'-10"	1'-8"	3'-4"	2'-4½"	2'-1⅝"	12'-6"	14'-5¼"	14'-7½"	2.582	2.772
6'	8"	7"	6'-10"	2'-0"	3'-8"	2'-6"	2'-6½"	14'-6"	16'-9"	17'-1½"	3.440	3.661
		7½"	6'-10"	2'-0"	3'-8"	2'-6"	2'-6½"	14'-6"	16'-9"	17'-1½"	3.511	3.732
		8"	6'-10"	2'-0"	3'-8"	2'-6"	2'-6½"	14'-6"	16'-9"	17'-1½"	3.582	3.803
7'	8½"	7½"	7'-10"	2'-4"	4'-2"	2'-7½"	3'-1¼"	16'-6"	19'-0½"	19'-8¾"	4.505	4.758
		8"	7'-10"	2'-4"	4'-2"	2'-7½"	3'-1¼"	16'-6"	19'-0½"	19'-8¾"	4.597	4.851
8'	9"	8"	8'-10"	2'-8"	4'-8"	2'-9"	3'-8"	18'-6"	21'-4¼"	22'-4"	5.761	6.047

* Quantity per wing does not include headwall or that portion of apron or toewall for the length W3.

APRON DIMENSION W3

W3 = (OW - 2F)

CLEAR SPAN S	CLEAR HEIGHT H	2 × FOOTING DIMENSION 2F	SINGLE BARREL CULVERT OW	SINGLE W3	DOUBLE BARREL CULVERT OW	DOUBLE W3	TRIPLE BARREL CULVERT OW	TRIPLE W3	QUADRUPLE BARREL CULVERT OW	QUADRUPLE W3	QUINTUPLE BARREL CULVERT OW	QUINTUPLE W3
4'	2'	1'-11½"	5'-0"	3'-0½"	9'-8"	7'-8½"	14'-4"	12'-4½"	19'-0"	17'-0½"	23'-8"	21'-8½"
	3'	2'-8¾"	5'-0"	2'-3¼"	9'-8"	6'-11¼"	14'-4"	11'-7¼"	19'-0"	16'-3¼"	23'-8"	20'-11¼"
	4'	3'-6"	5'-0"	1'-6"	9'-8"	6'-2"	14'-4"	10'-10"	19'-0"	15'-6"	23'-8"	20'-2"
	5'	4'-3¼"	5'-0"	0'-8¾"	9'-8"	5'-4¾"	14'-4"	10'-0¾"	19'-0"	14'-8¾"	23'-8"	19'-4¾"
	6'	5'-0½"	5'-2"	0'-1½"	9'-11"	4'-10½"	14'-8"	9'-7½"	19'-5"	14'-4½"	24'-2"	19'-1½"
5'	3'	2'-8¾"	6'-0"	3'-3¼"	11'-8"	8'-11¼"	17'-4"	14'-7¼"	23'-0"	20'-3¼"	28'-8"	25'-11¼"
	4'	3'-6"	6'-0"	2'-6"	11'-8"	8'-2"	17'-4"	13'-10"	23'-0"	19'-6"	28'-8"	25'-2"
	5'	4'-3¼"	6'-0"	1'-8¾"	11'-8"	7'-4¾"	17'-4"	13'-0¾"	23'-0"	18'-8¾"	28'-8"	24'-4¾"
	6'	5'-0½"	6'-2"	1'-1½"	11'-11"	6'-10½"	17'-8"	12'-7½"	23'-5"	18'-4½"	29'-2"	24'-1½"
	7'	6'-2½"	6'-3"	0'-0½"	12'-1"	5'-10½"	17'-11"	11'-8½"	23'-9"	17'-6½"	29'-7"	23'-4½"
6'	3'	2'-8¾"	7'-0"	4'-3¼"	13'-8"	10'-11¼"	20'-4"	17'-7¼"	27'-0"	24'-3¼"	33'-8"	30'-11¼"
	4'	3'-6"	7'-0"	3'-6"	13'-8"	10'-2"	20'-4"	16'-10"	27'-0"	23'-6"	33'-8"	30'-2"
	5'	4'-3¼"	7'-0"	2'-8¾"	13'-8"	9'-4¾"	20'-4"	16'-0¾"	27'-0"	22'-8¾"	33'-8"	29'-4¾"
	6'	5'-0½"	7'-2"	2'-1½"	13'-11"	8'-10½"	20'-8"	15'-7½"	27'-5"	22'-4½"	34'-2"	29'-1½"
	7'	6'-2½"	7'-3"	1'-0½"	14'-1"	7'-10½"	20'-11"	14'-8½"	27'-9"	21'-6½"	34'-7"	28'-4½"
	8'	7'-4"	7'-4"	0'-0"	14'-2"	6'-10"	21'-0"	13'-8"	27'-10"	20'-6"	34'-8"	27'-4"
7'	4'	3'-6"	8'-0"	4'-6"	15'-8"	12'-2"	23'-4"	19'-10"	31'-0"	27'-6"	38'-8"	35'-2"
	5'	4'-3¼"	8'-0"	3'-8¾"	15'-8"	11'-4¾"	23'-4"	19'-0¾"	31'-0"	26'-8¾"	38'-8"	34'-4¾"
	6'	5'-0½"	8'-2"	3'-1½"	15'-11"	10'-10½"	23'-8"	18'-7½"	31'-5"	26'-4½"	39'-2"	34'-1½"
	7'	6'-2½"	8'-3"	2'-0½"	16'-1"	9'-10½"	23'-11"	17'-8½"	31'-9"	25'-6½"	39'-7"	33'-4½"
	8'	7'-4"	8'-4"	1'-0"	16'-2"	8'-10"	24'-0"	16'-8"	31'-10"	24'-6"	39'-8"	32'-4"
8'	4'	3'-6"	9'-0"	5'-6"	17'-8"	14'-2"	26'-4"	22'-10"	35'-0"	31'-6"	43'-8"	40'-2"
	5'	4'-3¼"	9'-2"	4'-10¾"	17'-11"	13'-7¾"	26'-8"	22'-4¾"	35'-5"	31'-1¾"	44'-2"	39'-10¾"
	6'	5'-0½"	9'-2"	4'-1½"	17'-11"	12'-10½"	26'-8"	21'-7½"	35'-5"	30'-4½"	44'-2"	39'-1½"
	7'	6'-2½"	9'-3"	3'-0½"	18'-1"	11'-10½"	26'-11"	20'-8½"	35'-9"	29'-6½"	44'-7"	38'-4½"
	8'	7'-4"	9'-4"	2'-0"	18'-2"	10'-10"	27'-0"	19'-8"	35'-10"	28'-6"	44'-8"	37'-4"
9'	5'	4'-3¼"	10'-2"	5'-10¾"	19'-11"	15'-7¾"	29'-8"	25'-4¾"	39'-5"	35'-1¾"	49'-2"	44'-10¾"
	6'	5'-0½"	10'-3"	5'-2½"	20'-1"	15'-0½"	29'-11"	24'-10½"	39'-9"	34'-8½"	49'-7"	44'-6½"
	7'	6'-2½"	10'-3"	4'-0½"	20'-1"	13'-10½"	29'-11"	23'-8½"	39'-9"	33'-6½"	49'-7"	43'-4½"
	8'	7'-4"	10'-4"	3'-0"	20'-2"	12'-10"	30'-0"	22'-8"	39'-10"	32'-6"	49'-8"	42'-4"
10'	5'	4'-3¼"	11'-2"	6'-10¾"	21'-11"	17'-7¾"	32'-8"	28'-4¾"	43'-5"	39'-1¾"	54'-2"	49'-10¾"
	6'	5'-0½"	11'-3"	6'-2½"	22'-1"	17'-0½"	32'-11"	27'-10½"	43'-9"	38'-8½"	54'-7"	49'-6½"
	7'	6'-2½"	11'-3"	5'-0½"	22'-1"	15'-10½"	32'-11"	26'-8½"	43'-9"	37'-6½"	54'-7"	48'-4½"
	8'	7'-4"	11'-4"	4'-0"	22'-2"	14'-10"	33'-0"	25'-8"	43'-10"	36'-6"	54'-8"	47'-4"
11'	6'	5'-0½"	12'-4"	7'-3½"	24'-2"	19'-1½"	36'-0"	30'-11½"	47'-10"	42'-9½"		
	7'	6'-2½"	12'-4"	6'-1½"	24'-2"	17'-11½"	36'-0"	29'-9½"	47'-10"	41'-7½"		
	8'	7'-4"	12'-4"	5'-0"	24'-2"	16'-10"	36'-0"	28'-8"	47'-10"	40'-6"		
12'	6'	5'-0½"	13'-4"	8'-3½"	26'-2"	21'-1½"	39'-0"	33'-11½"	51'-10"	46'-9½"		
	7'	6'-2½"	13'-4"	7'-1½"	26'-2"	19'-11½"	39'-0"	32'-9½"	51'-10"	45'-7½"		
	8'	7'-4"	13'-4"	6'-0"	26'-2"	18'-10"	39'-0"	31'-8"	51'-10"	44'-6"		

JOB No.

QUANTITIES

CLEAR SPAN S	CLEAR HEIGHT H	THICKNESS OF WING AT HEADWALL Cw	THICKNESS OF WING FOOTING WB	⊗ REINFORCING STEEL - FOR 4 WINGS LB.	CLASS S CONCRETE - 4 WINGS (HEADWALLS, WINGWALLS, FOOTINGS, TOEWALLS AND APRONS) SINGLE BARREL CULVERT CU.YD.	DOUBLE BARREL CULVERT CU.YD.	TRIPLE BARREL CULVERT CU.YD.	QUADRUPLE BARREL CULVERT CU.YD.	QUINTUPLE BARREL CULVERT CU.YD.
4'	2'	6"	7"	108.0	4.50	5.46	6.42	7.38	8.34
	3'	6"	7"	164.4	6.26	7.21	8.17	9.13	10.09
	4'	6"	7"	254.6	8.33	9.28	10.24	11.20	12.16
	5'	6"	7"	357.8	10.72	11.68	12.64	13.60	14.56
	6'	7"	8"	583.1	14.55	15.53	16.52	17.51	18.49
5'	3'	6"	7"	164.4	6.47	7.63	8.79	9.96	11.12
	4'	6"	7"	254.6	8.54	9.70	10.87	10.03	13.20
	5'	6"	7"	357.8	10.94	12.10	13.26	14.43	15.59
	6'	7"	8"	583.1	14.77	15.96	17.15	18.34	19.54
	7'	7½"	8½"	1134.6	18.94	20.15	21.37	22.59	23.80
6'	3'	6"	7"	164.4	6.68	8.06	9.42	10.80	12.18
	4'	6"	7"	254.6	8.75	10.14	11.49	12.87	14.25
	5'	6"	7"	357.8	11.15	12.53	13.39	15.27	16.65
	6'	7"	8"	583.1	14.98	16.39	17.73	19.18	20.59
	7'	7½"	8½"	1134.6	19.15	20.58	22.00	23.43	24.86
	8'	8"	9"	1425.6	24.09	25.53	26.96	28.39	29.83
7'	4'	6"	7"	254.6	8.97	10.53	12.15	13.76	15.35
	5'	6"	7"	357.8	11.36	12.37	14.54	16.15	17.75
	6'	7"	8"	583.1	15.20	16.32	17.92	20.06	21.66
	7'	7½"	8½"	1134.6	19.38	21.02	22.67	24.28	25.92
	8'	8"	9"	1425.6	24.32	25.97	27.60	29.25	32.89
8'	4'	6"	7"	254.6	9.19	11.03	12.82	14.65	16.45
	5'	7"	7"	357.8	12.03	13.89	15.72	17.55	19.36
	6'	7"	8"	583.1	15.42	17.27	19.03	20.93	22.75
	7'	7½"	8½"	1134.6	19.59	21.46	23.30	25.16	26.99
	8'	8"	9"	1425.6	24.52	26.41	28.24	30.11	31.96
9'	5'	7"	7"	357.8	12.26	14.37	16.37	18.45	20.47
	6'	7½"	8"	583.1	15.97	18.04	20.09	22.19	24.23
	7'	7½"	8½"	1134.6	19.81	21.91	23.96	26.06	28.10
	8'	8"	9"	1425.6	24.76	26.86	28.91	31.00	33.05
10'	5'	7"	7"	357.8	12.49	14.80	17.05	19.26	21.52
	6'	7½"	8"	583.1	16.17	18.50	20.77	22.99	25.28
	7'	7½"	8½"	1134.6	20.04	22.37	24.64	26.87	29.15
	8'	8"	9"	1425.6	24.98	27.31	29.58	31.81	34.10
11'	6'	8"	8"	583.1	16.69	19.27	21.76	24.23	
	7'	8"	8½"	1134.6	20.64	23.22	25.71	28.18	
	8'	8"	9"	1425.6	25.13	27.77	30.27	32.74	
12'	6'	8"	8"	583.1	16.92	19.75	22.45	25.18	
	7'	8"	8½"	1134.6	20.87	23.69	26.40	29.13	
	8'	8"	9"	1425.6	25.42	28.25	30.96	33.69	

⊗ For reinforcing steel in Headwalls and Aprons. See Details of Standard Barrel Sections for R.C. Box Culverts for the desired Span and Height.

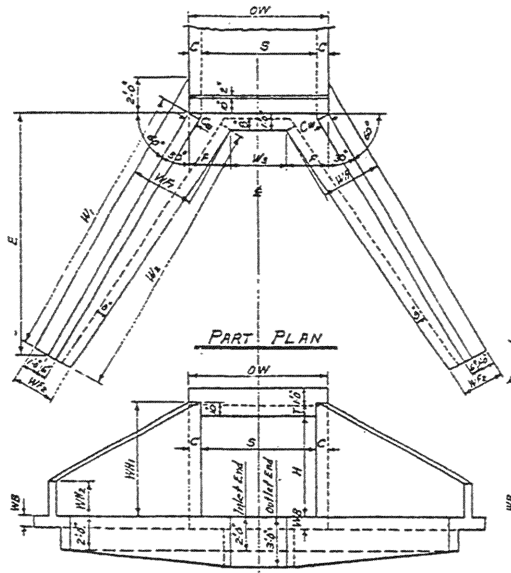

PART PLAN

END ELEVATION

SINGLE BARREL CULVERT

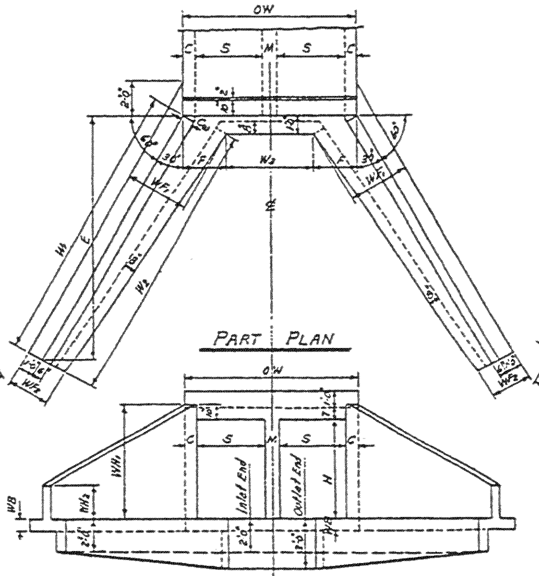

PART PLAN

END ELEVATION

DOUBLE BARREL CULVERT

NOTE:- Plans and Elevations are not to scale.

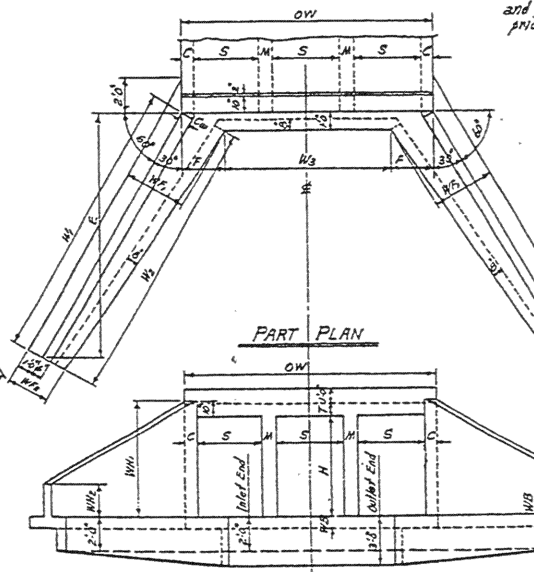

PART PLAN

END ELEVATION

TRIPLE BARREL CULVERT

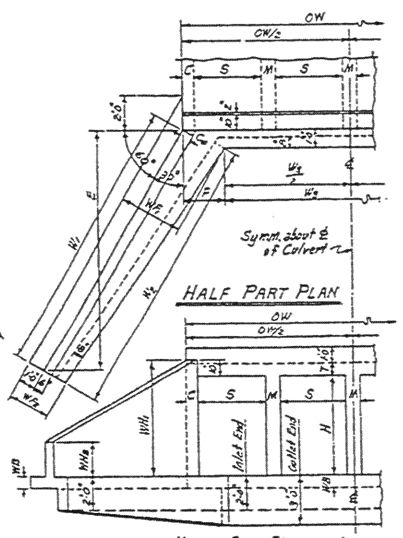

HALF PART PLAN

HALF END ELEVATION

QUADRUPLE BARREL CULVERT

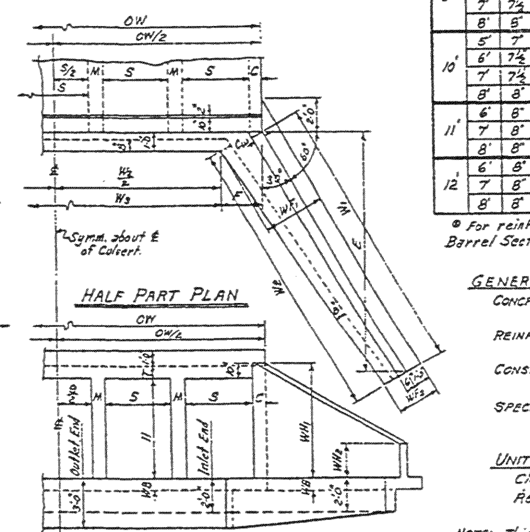

HALF PART PLAN

HALF END ELEVATION

QUINTUPLE BARREL CULVERT

MEMBRANE:- A membrane waterproofing 12" wide, consisting of three moppings of waterproofing asphalt and two alternate layers of treated cotton fabric shall be applied to the back face of wing to cover the construction joints in wings.

GENERAL NOTES:-

CONCRETE:- All concrete to be Class S, and shall be poured in the dry. All exposed corners to have ¾" chamfers.

REINFORCING STEEL:- Reinforcing steel to be deformed bars of intermediate or hard grade.

CONSTRUCTION JOINTS:- Construction joints between wingwall, footings and sidewalls shall be only where shown on plans.

SPECIFICATIONS:- Arkansas State Highway Commission Standard Specifications for Highway Construction and applicable Special Provisions.

UNIT STRESSES:-

Class S Concrete (n=10) 1200#/□"

Reinforcing Steel 20,000#/□"

NOTE:- This drawing to be used in conjunction with Standard Barrel Sections, Drawing Nos. as listed below.

SINGLES	DOUBLES	TRIPLES	QUADRUPLES	QUINTUPLES
R-100X-0	R-200X-0	R-300X-0	R-400X-0	R-500X-0
R-100X-X1	R-200X-X1	R-300X-X1	R-400X-X1	R-500X-X1
R-100X-X2	R-200X-X2	R-300X-X2	R-400X-X2	
	R-200X-X3	R-300X-X3		

BAR LIST FOR ONE WING - 4 REQUIRED

CLEAR HEIGHT H	F1 BENT (In bottom of footing, bent up into back face of wing. One bar of each length.) SIZE	F1 SPACING	F1 No. REQ'D	F1 LENGTHS VARY MIN.	F1 LENGTHS VARY MAX.	F1 X MIN.	F1 X MAX.	F1 Y MIN.	F1 Y MAX.	F2 BENT (In bottom of footing, bent up into back face of wing. Alt. with F1 bars.) SIZE	F2 SPACING	F2 No. REQ'D	F2 LENGTH	F2 X	F2 Y	F5 STRAIGHT (Longitudinal in top of wing footing heel.) SIZE	F5 No. REQ'D	F5 LENGTH	F6 STRAIGHT (Longitudinal in bottom of wing footing toe.) SIZE	F6 No. REQ'D	F6 LENGTH	H1 STRAIGHT (Horizontal in back face of wing.) SIZE	H1 SPACING	H1 No. REQ'D	H1 LENGTH	H2 STRAIGHT (Horizontal in back face of wing. One bar of each length.) SIZE	H2 SPACING	H2 No. REQ'D	H2 LENGTHS VARY MAX.	H2 LENGTHS VARY MIN.	H3 STRAIGHT (In back face of wing at top - on slope.) SIZE	H3 No. REQ'D	H3 LENGTH	H4 BENT (Dowels thru construction joint at headwall.) SIZE	H4 SPACING	H4 No. REQ'D	H4 LENGTH	H4 X	QUANTITY REINFORCING STEEL PER WING LB.
2'	#3	12"	8	1'-6"	3'-10"	0'-8"	1'-0"	0'-11"	2'-11"	—	—	—	—	—	—	#3	1	9'-8"	#3	2	8'-6"	#3	12"	1	7'-2"	#3	12"	1	—	4'-0"	#3	1	7'-4"	#3	12"	2	2'-8"	1'-4"	27.0
3'	#3	12"	10	2'-2"	5'-2"	0'-10"	1'-3"	1'-5"	4'-0"	—	—	—	—	—	—	#3	1	12'-0"	#3	2	11'-0"	#3	12"	1	9'-6"	#3	12"	2	7'-6"	4'-0"	#3	1	9'-9"	#3	12"	3	2'-8"	1'-4"	41.1
4'	#3	12"	13	2'-4"	6'-6"	0'-11"	1'-7"	1'-6"	5'-0"	—	—	—	—	—	—	#3	1	14'-4"	#3	3	13'-6"	#3	12"	1	11'-10"	#3	12"	3	10'-11"	4'-0"	#3	1	12'-2"	#3	12"	4	2'-8"	1'-4"	63.7
5'	#3	12"	15	2'-11"	7'-10"	1'-1"	1'-11"	1'-11"	6'-0"	#3	12"	4	3'-6"	1'-1"	2'-6"	#3	1	16'-8"	#3	3	16'-0"	#3	12"	2	14'-2"	#3	12"	3	10'-11"	4'-0"	#3	1	14'-7"	#3	12"	5	2'-8"	1'-4"	89.5
6'	#4	12"	17	3'-6"	9'-3"	1'-2"	2'-3"	2'-5"	7'-1"	#3	12"	4	4'-6"	1'-4"	3'-3"	#3	1	19'-0"	#3	3	18'-6"	#3	12"	2	16'-6"	#3	12"	4	14'-4"	4'-0"	#3	1	17'-0"	#3	12"	6	2'-8"	1'-4"	145.8
7'	#4	12"	20	3'-9"	10'-9"	1'-3"	2'-9"	2'-7"	8'-1"	#4	12"	7	5'-6"	1'-7"	4'-0"	#4	1	21'-4"	#4	4	21'-6"	#4	12"	2	18'-9"	#4	12"	5	17'-9"	4'-0"	#4	1	19'-5"	#4	12"	7	3'-6"	1'-9"	283.7
8'	#4	12"	22	4'-4"	12'-3"	1'-5"	3'-2"	3'-0"	9'-2"	#4	12"	10	6'-6"	1'-10"	4'-9"	#4	1	23'-8"	#4	4	23'-9"	#4	12"	3	21'-1"	#4	12"	5	17'-9"	4'-0"	#4	1	21'-10"	#4	12"	8	3'-6"	1'-9"	356.4

BAR BENDING DIAGRAMS

F1 & F2 — Y, X, 3" Pin

H4 — X, 7, 12, X

NOTE:- Dimensions are to bar centers.

CLASS S CONCRETE

ARKANSAS STATE HIGHWAY COMMISSION

DETAILS OF STANDARD WINGS FOR REINFORCED CONCRETE BOX CULVERTS

4', 5', 6', 7', 8', 9', 10', 11' & 12' SPANS — 3:1 SLOPES

SINGLES, DOUBLES, TRIPLES, QUADRUPLES & QUINTUPLES. — ALL DEPTHS OF COVER FOR H = 8'-0" OR LESS

STANDARD DRAWING NO. W-X003-1

REVISIONS:- Membrane added 5-10-66 W.C.H.

Designed By:- J.C. — Checked — RHS 1-9-63
Drawn By:- W.C.H. 12-4-62 — Checked By:- RHS 1-31-63
Quantities By:- W.C.H. 12-19-62 — Rechecked By:- RHS 3-29-63

FED. ROAD No.	STATE	FED. AID PROJECT	FISCAL YEAR	SHEET No.	TOTAL SHEETS
6	ARK.				
JOB No.					

BAR LIST FOR BARREL SECTION 60'-0" IN LENGTH

DEPTH OF COVER	CLEAR SPAN	CLEAR HEIGHT	"a" bars — STRAIGHT — In Top and Bottom Slabs of Barrel. 2 Add'l in Apron and Headwall - Each.					"b" bars — BENT - See Diagram below. — In Top and Bottom Slabs of Barrel. Alternate with "a" bars.						"d" bars — STRAIGHT — Longitudinal in Top Slab of Barrel				"d₁" bars — STRAIGHT — Longitudinal in Sidewalls				"e" bars — STRAIGHT — Longitudinal in Bottom Slab of Barrel				"f" bars — STRAIGHT — Verticals in Sidewalls				
D	S	H	SIZE	SPACING	NUMBER REQ'D 3:1	NUMBER REQ'D 4:1	LENGTH	SIZE	SPACING	NUMBER REQ'D 3:1	NUMBER REQ'D 4:1	LENGTH	X	SIZE	SPACING	NO. REQ'D	LENGTH	SIZE	SPACING	NO. REQ'D	LENGTH	SIZE	SPACING	NO. REQ'D	LENGTH	SIZE	SPACING	NUMBER REQ'D 3:1	NUMBER REQ'D 4:1	LENGTH
0'-0" TO 5'-0" MAXIMUM	1 @ 4'	2'	#5	13"	120	120	4'-9"	#6	13"	110	110	5'-10"	4'-8"	#5	10½"	6	2 @ 30'-8" for 60'-0" Length Barrel. (1'-0" Lap)	#4	12"	4	2 @ 30'-6" for 60'-0" Length Barrel. (1'-3" Lap)	#4	12"	5	2 @ 31'-6" for 60'-0" Length Barrel. (1'-3" Lap)	#4	12"	120	120	2'-11"
		3'			120	120	4'-9"			110	110	5'-10"	4'-8"			6				6				5				120	120	3'-11"
		4'			120	120	4'-9"			110	110	5'-10"	4'-8"			6				8				5				120	120	4'-11"
		5'			120	120	4'-9"			110	110	5'-10"	4'-8"			6				10				5				120	120	5'-11"
		6'			120	120	4'-11"			110	110	6'-0"	4'-10"			6				12				5				120	120	6'-11"
	1 @ 5'	3'	#6	13"	120	120	5'-9"	#6	13"	110	110	6'-10"	5'-8"	#5	10½"	7		#4	12"	6		#4	12"	6		#4	12"	120	120	4'-0"
		4'			120	120	5'-9"			110	110	6'-10"	5'-8"			7				8				6				120	120	5'-0"
		5'			120	120	5'-9"			110	110	6'-10"	5'-8"			7				10				6				120	120	6'-0"
		6'			120	120	5'-11"			110	110	7'-0"	5'-10"			7				12				6				120	120	7'-0"
		7'			120	120	6'-0"			110	110	7'-1"	5'-11"			7				14				6				120	120	8'-0"
	1 @ 6'	3'	#6	12"	128	128	6'-9"	#6	12"	118	118	7'-10"	6'-8"	#5	10½"	8		#4	12"	6		#4	12"	7		#4	12"	120	120	4'-1"
		4'			128	128	6'-9"			118	118	7'-10"	6'-8"			8				8				7				120	120	5'-1"
		5'			128	128	6'-9"			118	118	7'-10"	6'-8"			8				10				7				120	120	6'-1"
		6'			128	128	6'-11"			118	118	8'-0"	6'-10"			8				12				7				120	120	7'-1"
		7'			128	128	7'-0"			118	118	8'-1"	6'-11"			8				14				7				120	120	8'-1"
		8'			128	128	7'-1"			118	118	8'-2"	7'-0"			8				16				7		#5	12"	120	120	9'-1"
	1 @ 7'	4'	#6	11"	140	140	7'-9"	#6	11"	130	130	8'-10"	7'-8"	#5	10½"	9		#4	12"	8		#4	12"	8		#4	12"	120	120	5'-2"
		5'			140	140	7'-9"			130	130	8'-10"	7'-8"			9				10				8				120	120	6'-2"
		6'			140	140	7'-11"			130	130	9'-0"	7'-10"			9				12				8				120	120	7'-2"
		7'			140	140	8'-0"			130	130	9'-1"	7'-11"			9				14				8				120	120	8'-2"
		8'			140	140	8'-1"			130	130	9'-2"	8'-0"			9				16				8			10"	144	144	9'-2"
		9'			140	140	8'-3"			130	130	9'-4"	8'-2"			9				18				8		#5	12"	120	120	10'-2"
	1 @ 8'	4'	#7	12"	128	128	8'-9"	#6	12"	118	118	9'-10"	8'-8"	#5	10"	11		#4	12"	8		#4	12"	9		#4	12"	120	120	5'-4"
		5'			128	128	8'-11"			118	118	10'-0"	8'-10"			11				10				9				120	120	6'-4"
		6'			128	128	8'-11"			118	118	10'-0"	8'-10"			11				12				9				120	120	7'-4"
		7'			128	128	9'-0"			118	118	10'-1"	8'-11"			11				14				9				120	120	8'-4"
		8'			128	128	9'-1"			118	118	10'-2"	9'-0"			11				16				9			10"	144	144	9'-4"
		9'			128	128	9'-3"			118	118	10'-4"	9'-2"			11				18				9		#5	12"	120	120	10'-4"
		10'			128	128	9'-5"			118	118	10'-6"	9'-4"			11				20				9			11"	132	132	11'-4"
	1 @ 9'	5'	#7	11"	140	140	9'-11"	#6	11"	130	130	11'-0"	9'-10"	#5	10"	12		#4	12"	10		#4	12"	10		#4	12"	120	120	6'-5"
		6'			140	140	10'-0"			130	130	11'-1"	9'-11"			12				12				10				120	120	7'-5"
		7'			140	140	10'-0"			130	130	11'-1"	9'-11"			12				14				10				120	120	8'-5"
		8'			140	140	10'-1"			130	130	11'-2"	10'-0"			12				16				10			10"	144	144	9'-5"
		9'			140	140	10'-3"			130	130	11'-4"	10'-2"			12				18				10		#5	12"	120	120	10'-5"
		10'			140	140	10'-5"			130	130	11'-6"	10'-4"			12				20				10			11"	132	132	11'-5"
		11'			140	140	10'-7"			130	130	11'-8"	10'-6"			12				22				10			10"	144	144	12'-5"
	1 @ 10'	5'	#7	12"	128	128	10'-11"	#7	12"	118	118	12'-2"	10'-10"	#5	10"	13		#4	12"	10		#4	12"	11		#4	12"	120	120	6'-6"
		6'			128	128	11'-0"			118	118	12'-3"	10'-11"			13				12				11				120	120	7'-6"
		7'			128	128	11'-0"			118	118	12'-3"	10'-11"			13				14				11				120	120	8'-6"
		8'			128	128	11'-1"			118	118	12'-4"	11'-0"			13				16				11			10"	144	144	9'-6"
		9'			128	128	11'-3"			118	118	12'-6"	11'-2"			13				18				11		#5	12"	120	120	10'-6"
		10'			128	128	11'-5"			118	118	12'-8"	11'-4"			13				20				11			11"	132	132	11'-6"
		11'			128	128	11'-7"			118	118	12'-10"	11'-6"			13				22				11			10"	144	144	12'-6"
		12'			128	128	11'-9"			118	118	13'-0"	11'-8"			13				24				11		#6	12"	120	120	13'-6"
	1 @ 11'	6'	#7	11"	140	140	12'-1"	#7	11"	130	130	13'-4"	12'-0"	#5	9½"	15		#4	12"	12		#4	12"	12		#4	12"	120	120	7'-7"
		7'			140	140	12'-1"			130	130	13'-4"	12'-0"			15				14				12				120	120	8'-7"
		8'			140	140	12'-1"			130	130	13'-4"	12'-0"			15				16				12			10"	144	144	9'-7"
		9'			140	140	12'-3"			130	130	13'-6"	12'-2"			15				18				12		#5	12"	120	120	10'-7"
		10'			140	140	12'-5"			130	130	13'-8"	12'-4"			15				20				12			11"	132	132	11'-7"
		11'			140	140	12'-7"			130	130	13'-10"	12'-6"			15				22				12			10"	144	144	12'-7"
		12'			140	140	12'-9"			130	130	14'-0"	12'-8"			15				24				12		#6	12"	120	120	13'-7"
	1 @ 12'	6'	#8	12"	128	128	13'-1"	#7	12"	118	118	14'-4"	13'-0"	#5	9½"	16		#4	12"	12		#4	12"	13		#4	12"	120	120	7'-9"
		7'			128	128	13'-1"			118	118	14'-4"	13'-0"			16				14				13				120	120	8'-9"
		8'			128	128	13'-1"			118	118	14'-4"	13'-0"			16				16				13			10"	144	144	9'-9"
		9'			128	128	13'-3"			118	118	14'-6"	13'-2"			16				18				13		#5	12"	120	120	10'-9"
		10'			128	128	13'-5"			118	118	14'-8"	13'-4"			16				20				13			11"	132	132	11'-9"
		11'			128	128	13'-7"			118	118	14'-10"	13'-6"			16				22				13			10"	144	144	12'-9"
		12'			128	128	13'-9"			118	118	15'-0"	13'-8"			16				24				13		#6	12"	120	120	13'-9"

BAR SIZE	PIN DIAM.	K	ADD FOR 2 HOOKS	BENDING DIAGRAM Bars "b".
#6	3"	5"	1'-2"	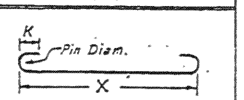
#7	3½"	5¾"	1'-4"	

NOTE:- Dimensions are to centers of bars.

DOWEL BARS FOR TWO HEADWALLS

SPAN	SIZE	SPACING	NO. REQ'D	LENGTH	X	Bars "r" Dowel bars in Headwalls.
4'	#4	11"±	12	2'-6"	1'-3"	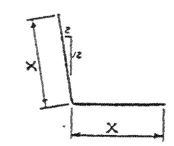
5'	#4	11"±	14	2'-7"	1'-3½"	
6'	#4	11"±	16	2'-8"	1'-4"	
7'	#4	11"±	18	2'-9"	1'-4½"	
8'	#4	11½"±	20	2'-11"	1'-5½"	
9'	#4	11½"±	22	3'-0"	1'-6"	
10'	#4	11½"±	24	3'-1"	1'-6½"	
11'	#4	12"±	26	3'-2"	1'-7"	
12'	#4	12"±	28	3'-3"	1'-7½"	

DIMENSIONS / QUANTITIES

MAX. DESIGN DEPTH OF COVER	BARREL DIMENSIONS — CLEAR SPAN	CLEAR HEIGHT	SQ. FT. OPENING	OVERALL WIDTH	THICKNESS OF TOP SLAB	THICKNESS OF SIDEWALLS	THICKNESS OF BOTTOM SLAB	OVERALL HEIGHT	UNIT QUANTITIES — CLASS S CONC. PER LIN. FT. OF BARREL	REINFORCING STEEL — PER LIN. FT. OF BARREL	ADDITIONAL — PER LAP	ADDITIONAL — TWO HEADWALLS & APRONS
D	S	H	A	OW	T	C	B	OH	CU.YD.	LB.	LB.	LB.
5'-0"	1 @ 4'	2'	8	5'-0"	7"	6"	6½"	3'-1½"	0.282	41.49	17.95	66.35
		3'	12	5'-0"		6"		4'-1½"	0.319	44.16	19.62	66.35
		4'	16	5'-0"		6"		5'-1½"	0.356	46.83	21.29	66.35
		5'	20	5'-0"		6"		6'-1½"	0.394	49.50	22.96	66.35
		6'	24	5'-2"		7"		7'-1½"	0.474	52.96	24.63	67.75
	1 @ 5'	3'	15	6'-0"	7½"	6"	7"	4'-2½"	0.380	55.55	22.19	101.27
		4'	20	6'-0"		6"		5'-2½"	0.417	58.23	23.86	101.27
		5'	25	6'-0"		6"		6'-2½"	0.454	60.90	25.53	101.27
		6'	30	6'-2"		7"		7'-2½"	0.535	64.99	27.20	103.27
		7'	35	6'-3"		7½"		8'-2½"	0.604	67.63	28.87	104.27
	1 @ 6'	3'	18	7'-0"	8"	6"	7½"	4'-3½"	0.446	66.29	24.76	118.96
		4'	24	7'-0"		6"		5'-3½"	0.483	68.96	26.93	118.96
		5'	30	7'-0"		6"		6'-3½"	0.520	71.64	28.10	118.96
		6'	36	7'-2"		7"		7'-3½"	0.602	75.31	29.77	120.96
		7'	42	7'-3"		7½"		8'-3½"	0.671	78.48	31.44	121.97
		8'	48	7'-4"		8"		9'-3½"	0.746	88.47	33.11	122.97
	1 @ 7'	4'	28	8'-0"	8½"	6"	8½"	5'-5"	0.568	81.32	29.01	136.88
		5'	35	8'-0"		6"		6'-5"	0.605	84.00	30.68	136.88
		6'	42	8'-2"		7"		7'-5"	0.688	87.76	32.35	138.88
		7'	49	8'-3"		7½"		8'-5"	0.757	90.98	34.02	139.88
		8'	56	8'-4"		8"		9'-5"	0.832	96.65	35.69	140.83
		9'	63	8'-6"		9"		10'-5"	0.946	105.59	32.36	142.83
	1 @ 8'	4'	32	9'-0"	9½"	6"	9½"	5'-7"	0.676	95.26	33.32	194.07
		5'	40	9'-2"		7"		6'-7"	0.759	99.12	34.99	196.80
		6'	48	9'-2"		7"		7'-7"	0.797	101.79	36.66	196.80
		7'	56	9'-3"		7½"		8'-7"	0.867	105.05	38.33	198.16
		8'	64	9'-4"		8"		9'-7"	0.942	110.81	40.00	199.52
		9'	72	9'-6"		9"		10'-7"	1.057	119.92	41.67	202.25
		10'	80	9'-8"		10"		11'-7"	1.184	126.67	43.34	204.97
	1 @ 9'	5'	45	10'-2"	10"	7"	10"	6'-8"	0.844	114.72	37.56	219.61
		6'	54	10'-3"		7½"		7'-8"	0.910	118.04	39.23	220.97
		7'	63	10'-3"		7½"		8'-8"	0.957	120.71	40.90	220.97
		8'	72	10'-4"		8"		9'-8"	1.033	126.54	42.57	222.33
		9'	81	10'-6"		9"		10'-8"	1.148	135.80	44.24	225.06
		10'	90	10'-8"		10"		11'-8"	1.276	142.68	45.91	227.78
		11'	99	10'-10"		11"		12'-8"	1.416	150.40	47.58	230.51
	1 @ 10'	5'	50	11'-2"	10½"	7"	11"	6'-9½"	0.957	130.64	40.13	242.64
		6'	60	11'-3"		7½"		7'-9½"	1.024	133.99	41.80	244.00
		7'	70	11'-3"		7½"		8'-9½"	1.071	136.66	43.47	244.00
		8'	80	11'-4"		8"		9'-9½"	1.147	142.55	45.14	245.36
		9'	90	11'-6"		9"		10'-9½"	1.263	151.92	46.81	248.09
		10'	100	11'-8"		10"		11'-9½"	1.391	158.89	48.48	250.81
		11'	110	11'-10"		11"		12'-9½"	1.532	166.71	50.15	253.57
		12'	120	12'-0"		12"		13'-9½"	1.685	178.67	51.82	256.26
	1 @ 11'	6'	66	12'-4"	11"	8"	11½"	7'-10½"	1.153	155.16	46.12	268.62
		7'	77	12'-4"		8"		8'-10½"	1.202	157.93	47.79	268.62
		8'	88	12'-4"		8"		9'-10½"	1.252	162.66	49.46	268.62
		9'	99	12'-6"		9"		10'-10½"	1.368	172.60	51.13	271.34
		10'	110	12'-8"		10"		11'-10½"	1.497	179.70	52.80	274.07
		11'	121	12'-10"		11"		12'-10½"	1.638	187.67	54.47	276.79
		12'	132	13'-0"		12"		13'-10½"	1.792	193.73	56.14	279.52
	1 @ 12'	6'	72	13'-4"	11¾"	8"	12¼"	8'-0"	1.284	172.20	48.69	357.62
		7'	84	13'-4"		8"		9'-0"	1.333	174.87	50.36	357.62
		8'	96	13'-4"		8"		10'-0"	1.383	180.15	52.03	357.62
		9'	108	13'-6"		9"		11'-0"	1.500	189.85	53.70	361.13
		10'	120	13'-8"		10"		12'-0"	1.630	197.07	55.37	364.74
		11'	132	13'-10"		11"		13'-0"	1.772	205.16	57.04	368.30
		12'	144	14'-0"		12"		14'-0"	1.926	217.95	58.71	371.86

NOTE:- For details of wings and bar lists, see Drawing Nos. W-X002-1 or W-X002-1, W-X003-1 or W-X003-2 and W-X004-1 or W-X004-2.

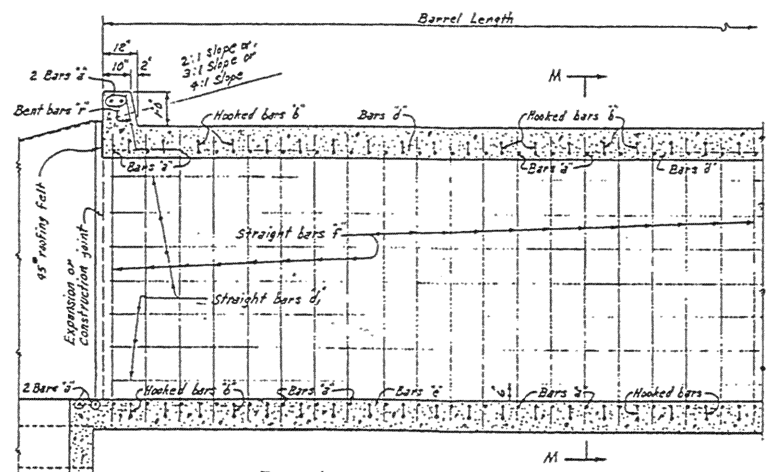

PART LONGITUDINAL SECTION

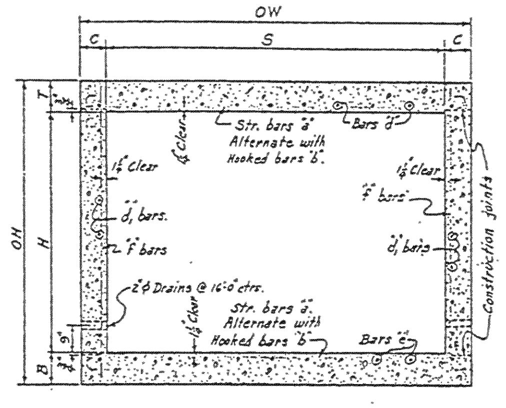

TYPICAL SECTION M-M

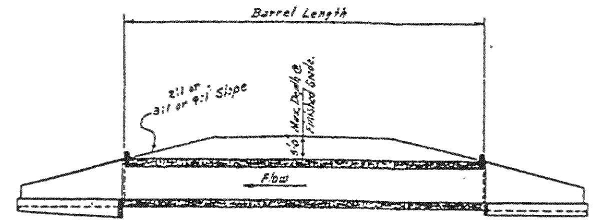

LONGITUDINAL SECTION

GENERAL NOTES:-

CONCRETE:- All concrete to be Class S, and shall be poured in the dry. All exposed corners to have ¾" chamfers.

REINFORCING STEEL:- Reinforcing to be deformed bars of intermediate or hard grade.

BAR LAP:- In computing the quantities of steel from the tables add one lap for each additional 33'-0" length of barrel over 32'-0". Lap longitudinal bars 30 diameters.

CONSTRUCTION JOINTS:- Construction joints between wingwalls, sidewalls and slabs shall be only where shown on plans.

SPECIFICATIONS:- Arkansas State Highway Commission Standard Specifications for Highway Construction and applicable Special Provisions.

DESIGN LIVE LOAD

H20-S16 LOADING A.A.S.H.O. 1961

AND

SPECIAL MILITARY LOADING

Two 24,000 Lb. Axles @ 4'-0" ctrs.

UNIT STRESSES:-

Class S Concrete (n=10) 1200#/□"

Reinforcing Steel 20,000#/□"

NOTE:- This drawing to be used in conjunction with Standard Drawing Nos. W-X003-1 or W-X003-2 and W-X004-1 or W-X004-2. Also Drawing Nos. W-X002-1 or W-X002-2.

CLASS S CONCRETE

ARKANSAS STATE HIGHWAY COMMISSION

DETAILS OF STANDARD BARREL SECTIONS

FOR

REINFORCED CONCRETE BOX CULVERTS

4,5,6,7,8,9,10,11 & 12' SPANS SINGLES

3:1 OR 4:1 SLOPES UNDER 5'-0" COVER

STANDARD DRAWING NO. R-100X-O

Designed By: W.C.H. 1-23-63 Checked By: [illegible]
Drawn By: W. 2- Ch. By: [illegible] 5-24-63
Quantities By: [illegible] 2- Ch. By: [illegible] 5-24-63