DATE REVISED	DATE FILMED	DATE REVISED	DATE FILMED	FED.RD. DIST.NO.	STATE	FED.AID PROJ.NO.	SHEET NO.	TOTAL SHEETS
				6	ARK.			
				JOB NO.		012318	1	92

(2) MIDDLE FORK SALINE RIVER & DRY RUN CREEK STRS. & APPRS. (S)

ARKANSAS DEPARTMENT OF TRANSPORTATION
CONSTRUCTION PLANS FOR STATE HIGHWAY

MIDDLE FORK SALINE RIVER & DRY RUN CREEK STRS. & APPRS. (S)

GARLAND & PERRY COUNTIES

ROUTE 7 SECTIONS 10 & 11

JOB 012318

FED. AID PROJ. NHPP-2653(1)

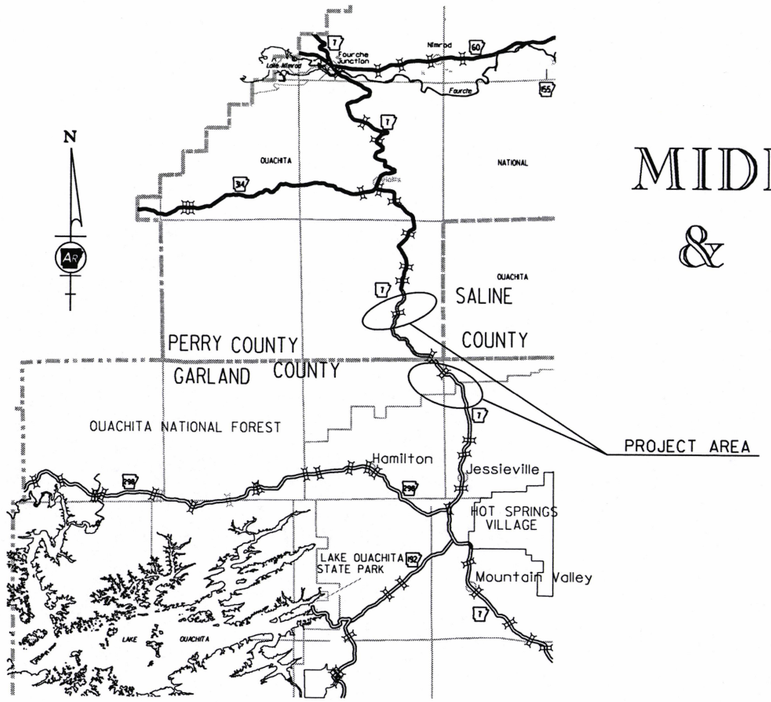

VICINITY MAP

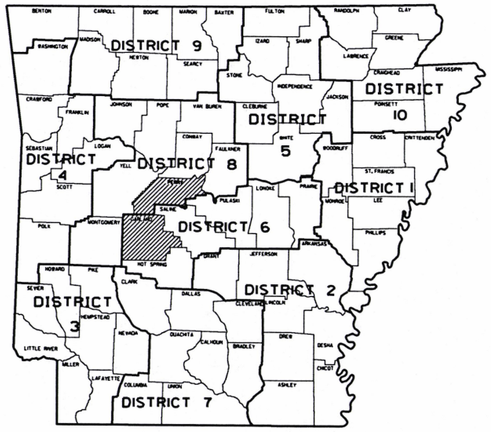

ARK. HWY. DIST. NOS. 6 & 8

NOT TO SCALE

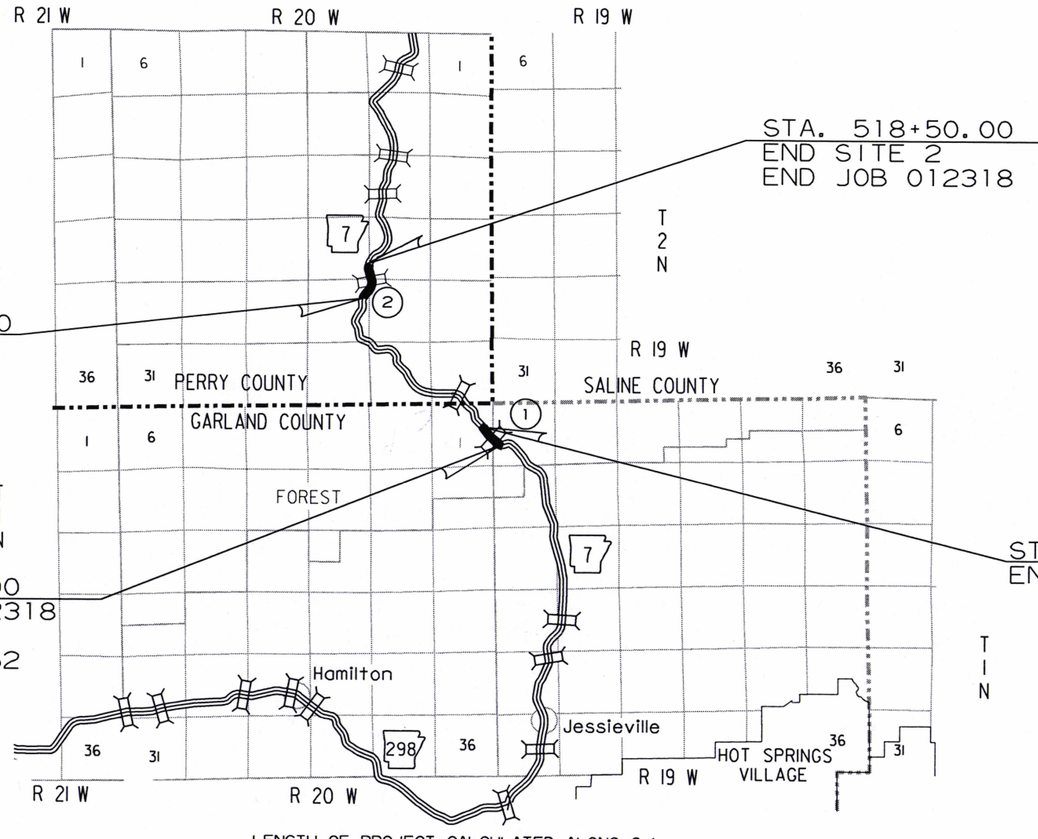

DESIGN TRAFFIC DATA

	SITE 1	SITE 2
DESIGN YEAR	2039	2039
2019 ADT	1200	1100
2039 ADT	1500	1200
2039 DHV	165	132
DIRECTIONAL DISTRIBUTION	0.60	0.60
TRUCKS	12%	10%
DESIGN SPEED	55 MPH	55 MPH

BRIDGE DATA

(1) STA. 312+25.47 BR. END
BR. NO. 07464
200'-0" CONTINUOUS COMP. W-BEAM
UNIT (60', 80', 60')
34'-0" CLEAR ROADWAY
203'-0 3/4" TOTAL LENGTH
STA. 314+28.53 BR. END

(2) STA. 510+30.00 BR. END
BR. NO. 07465
105'-0" CONTINUOUS R.C. SLAB
UNIT (35', 35', 35')
34'-0" CLEAR ROADWAY
105'-0" TOTAL LENGTH
STA. 511+35.00 BR. END

	BEGIN PROJECT	MID-POINT OF PROJECT	END PROJECT
SITE 1			
LATITUDE	N 34°45'45"	N 34°45'48"	N 34°45'52"
LONGITUDE	W 93°04'27"	W 93°04'31"	W 93°04'36"
SITE 2			
LATITUDE	N 34°47'58"	N 34°48'04"	N 34°48'10"
LONGITUDE	W 93°06'34"	W 93°06'33"	W 93°06'35"

LENGTH OF PROJECT CALCULATED ALONG C.L.

GROSS LENGTH OF	PROJECT	2375.00	FEET	OR	0.450	MILES
NET	ROADWAY	2066.94			0.392	MILES
NET	BRIDGES	308.06			0.058	MILES
NET	PROJECT	2375.00			0.450	MILES

APPROVED

STATE OF ARKANSAS
LICENSED PROFESSIONAL ENGINEER
No. 7836
M. E. BANKS

10-2-19

DEPUTY DIRECTOR
AND CHIEF ENGINEER

7/12/2018

R012318.DGN

DATE REVISED	DATE FILMED	DATE REVISED	DATE FILMED	FED.RD. DIST.NO.	STATE	FED.AID PROJ.NO.	SHEET NO.	TOTAL SHEETS
				6	ARK.			
				JOB NO.		012318	2	92
				(2) INDEX OF SHEETS				

STATE OF ARKANSAS
LICENSED PROFESSIONAL ENGINEER
No. 11425
TRINITY D. SMITH
10-1-19

INDEX OF SHEETS

SHEET NO.			TITLE	BRIDGE NO.	DRWG.NO.
1			TITLE SHEET		
2			INDEX OF SHEETS		
3			STANDARD DRAWINGS		
4			GOVERNING SPECIFICATIONS AND GENERAL NOTES		
5	-	11	TYPICAL SECTIONS OF IMPROVEMENT		
12	-	13	SPECIAL DETAILS		
14	-	21	TEMPORARY EROSION CONTROL DETAILS		
22	-	28	MAINTENANCE OF TRAFFIC DETAILS		
29	-	30	PERMANENT PAVEMENT MARKING DETAILS		
31	-	36	QUANTITIES		
37			SCHEDULE OF BRIDGE QUANTITIES	07464 & 07465	61186
38			SUMMARY OF QUANTITIES AND REVISIONS		
39	-	43	SURVEY CONTROL DETAILS		
44	-	46	PLAN AND PROFILE SHEETS		
47			LAYOUT OF BRIDGE HIGHWAY 7 OVER MIDDLE FORK SALINE RIVER (SHEET 1 OF 2)	07464	61187
48			LAYOUT OF BRIDGE HIGHWAY 7 OVER MIDDLE FORK SALINE RIVER (SHEET 2 OF 2)	07464	61188
49			DETAILS OF END BENTS (SHEET 1 OF 4)	07464	61189
50			DETAILS OF END BENTS (SHEET 2 OF 4)	07464	61190
51			DETAILS OF END BENTS (SHEET 3 OF 4)	07464	61191
52			DETAILS OF END BENTS (SHEET 4 OF 4)	07464	61192
53			DETAILS OF INTERMEDIATE BENTS (SHEET 1 OF 2)	07464	61193
54			DETAILS OF INTERMEDIATE BENTS (SHEET 2 OF 2)	07464	61194
55			DETAILS OF ELASTOMERIC BEARINGS	07464	61195
56			DETAILS OF 200'-0" CONTINUOUS W-BEAM UNIT (SHEET 1 OF 3)	07464	61196
57			DETAILS OF 200'-0" CONTINUOUS W-BEAM UNIT (SHEET 2 OF 3)	07464	61197
58			DETAILS OF 200'-0" CONTINUOUS W-BEAM UNIT (SHEET 3 OF 3)	07464	61198
59			DETAILS OF DECORATIVE CONCRETE PARAPET RAILING (SHEET 1 OF 3)	07464 & 07465	61199
60			DETAILS OF DECORATIVE CONCRETE PARAPET RAILING (SHEET 2 OF 3)	07464 & 07465	61200
61			DETAILS OF DECORATIVE CONCRETE PARAPET RAILING (SHEET 3 OF 3)	07464 & 07465	61201
62			DETAILS OF TYPE 1 SPECIAL APPROACH GUTTERS	07464	61202
63			DETAILS OF TYPE SPECIAL APPROACH SLAB	07464 & 07465	61203
64			LAYOUT OF BRIDGE HIGHWAY 7 OVER DRY RUN CREEK (SHEET 1 OF 2)	07465	61204
65			LAYOUT OF BRIDGE HIGHWAY 7 OVER DRY RUN CREEK (SHEET 2 OF 2)	07465	61205
66			DETAILS OF END BENTS	07465	61206
67			DETAILS OF INTERMEDIATE BENTS (SHEET 1 OF 2)	07465	61207
68			DETAILS OF INTERMEDIATE BENTS (SHEET 2 OF 2)	07465	61208
69			DETAILS OF 105'-0" CONTINUOUS R.C. SLAB UNIT (SHEET 1 OF 2)	07465	61209
70			DETAILS OF 105'-0" CONTINUOUS R.C. SLAB UNIT (SHEET 2 OF 2)	07465	61210
71			DETAILS OF TYPE 2 SPECIAL APPROACH GUTTERS (SHEET 1 OF 2)	07465	61211
72			DETAILS OF TYPE 2 SPECIAL APPROACH GUTTERS (SHEET 2 OF 2)	07465	61212
73	-	92	CROSS SECTIONS		

NOTE: CROSS SECTIONS NOT NORMALLY INCLUDED IN PLANS SOLD TO PROSPECTIVE BIDDERS, BUT MAY BE HAD UPON REQUEST.

8/28/2019

R012318.DGN

DATE REVISED	DATE FILMED	DATE REVISED	DATE FILMED	FED.RD. DIST.NO.	STATE	FED.AID PROJ.NO.	SHEET NO.	TOTAL SHEETS
12/19/19				6	ARK.			
				JOB NO.		012318	3	92

(2) STANDARD DRAWINGS

STATE OF ARKANSAS
LICENSED PROFESSIONAL ENGINEER
No. 11425
TRINITY D. SMITH

12-2019

BRIDGE STANDARD DRAWINGS

DRWG.NO.	TITLE	DATE
55000	STANDARD DETAILS FOR EMBANKMENT CONSTRUCTION AND BACKFILL AT BRIDGE ENDS	02-27-14
55001	STANDARD DETAILS FOR DUMPED RIPRAP AND FILTER BLANKET AND COMPUTING EXCAVATION FOR STRUCTURES	02-27-14
55005	STANDARD DETAILS FOR PERMANENT STEEL BRIDGE DECK FORMS FOR STEEL & CONCRETE GIRDER SPANS	03-24-16
55006	STANDARD GENERAL NOTES FOR STEEL BRIDGE STRUCTURES	09-02-15
55007	STANDARD DETAILS FOR STEEL BRIDGE STRUCTURES	02-11-16
55008	STANDARD DETAILS FOR POURED SILICONE JOINTS	02-11-16
55010	STANDARD DETAILS FOR TYPE D BRIDGE NAME PLATE	01-15-19
55020	STANDARD DETAILS FOR STEEL H-PILES AND PILE ENCASEMENTS	03-24-16
55054	STANDARD DETAILS FOR TEMPORARY BRIDGE STRUCTURE BRIDGE END PROTECTION SYSTEM	04-17-14
55055	STANDARD DETAILS FOR TEMPORARY BRIDGE STRUCTURE PRECAST CONCRETE SPANS 24' ROADWAY WIDTH (SHEET 1 OF 2)	04-17-14
55056	STANDARD DETAILS FOR TEMPORARY BRIDGE STRUCTURE PRECAST CONCRETE SPANS 24' ROADWAY WIDTH (SHEET 2 OF 2)	04-17-14

ROADWAY STANDARD DRAWINGS

DRWG.NO.	TITLE	DATE
CDP-1	CONCRETE DITCH PAVING	12-08-16
FES-1	FLARED END SECTION	10-18-96
FES-2	FLARED END SECTION	10-18-96
GR-6	GUARDRAIL DETAILS	11-07-19
GR-7	GUARDRAIL DETAILS	11-07-19
GR-8	GUARDRAIL DETAILS	11-07-19
GR-9	GUARDRAIL DETAILS	11-07-19
GR-10	GUARDRAIL DETAILS	11-07-19
GR-11	GUARDRAIL DETAILS	11-07-19
GR-12	GUARDRAIL DETAILS	11-07-19
PCC-1	CONCRETE PIPE CULVERT FILL HEIGHTS & BEDDING	02-27-14
PCM-1	METAL PIPE CULVERT FILL HEIGHTS & BEDDING	02-27-14
PCP-1	PLASTIC PIPE CULVERT (HIGH DENSITY POLYETHYLENE)	02-27-14
PCP-2	PLASTIC PIPE CULVERT (PVC F949)	02-27-14
PCP-3	PLASTIC PIPE CULVERT (POLYPROPYLENE)	11-07-19
PM-1	PAVEMENT MARKING DETAILS	06-01-17
PU-1	DETAILS OF PIPE UNDERDRAIN	12-08-16
SE-2	TABLES AND METHOD OF SUPERELEVATION FOR TWO-WAY TRAFFIC	11-07-19
TC-1	STANDARD TRAFFIC CONTROLS FOR HIGHWAY CONSTRUCTION	11-07-19
TC-2	STANDARD TRAFFIC CONTROLS FOR HIGHWAY CONSTRUCTION	11-07-19
TC-3	STANDARD TRAFFIC CONTROLS FOR HIGHWAY CONSTRUCTION	11-07-19
TEC-1	TEMPORARY EROSION CONTROL DEVICES	11-16-17
TEC-2	TEMPORARY EROSION CONTROL DEVICES	06-02-94
TEC-3	TEMPORARY EROSION CONTROL DEVICES	11-03-94

8/28/2019

R012318.DGN

DATE REVISED	DATE FILMED	DATE REVISED	DATE FILMED	FED.RD. DIST.NO.	STATE	FED.AID PROJ.NO.	SHEET NO.	TOTAL SHEETS
12/3/19				6	ARK.			
12/19/19				JOB NO.		012318	4	92
				(2) GOVERNING SPECS. AND GENERAL NOTES				

GOVERNING SPECIFICATIONS

ARKANSAS STATE HIGHWAY COMMISSION STANDARD SPECIFICATIONS FOR HIGHWAY CONSTRUCTION, EDITION OF 2014, AND THE FOLLOWING SPECIAL PROVISIONS AND SUPPLEMENTAL SPECIFICATIONS:

NUMBER	TITLE
ERRATA____	ERRATA FOR THE BOOK OF STANDARD SPECIFICATIONS
FHWA-1273__	REQUIRED CONTRACT PROVISIONS FEDERAL-AID CONSTRUCTION CONTRACTS
FHWA-1273__	SUPPLEMENT - EQUAL EMPLOYMENT OPPORTUNITY - NOTICE TO CONTRACTORS
FHWA-1273__	SUPPLEMENT - SPECIFIC EQUAL EMPLOYMENT OPPORTUNITY RESPONSIBILITIES (23 U.S.C. 140)
FHWA-1273__	SUPPLEMENT - EQUAL EMPLOYMENT OPPORTUNITY - GOALS AND TIMETABLES
FHWA-1273__	SUPPLEMENT - EQUAL EMPLOYMENT OPPORTUNITY - FEDERAL STANDARDS
FHWA-1273__	SUPPLEMENT - POSTERS AND NOTICES REQUIRED FOR FEDERAL-AID PROJECTS
FHWA-1273__	SUPPLEMENT - WAGE RATE DETERMINATION
100-3_____	CONTRACTOR'S LICENSE
100-4_____	DEPARTMENT NAME CHANGE
102-2_____	ISSUANCE OF PROPOSALS
108-1_____	LIQUIDATED DAMAGES
108-2_____	WORK ALLOWED PRIOR TO ISSUANCE OF WORK ORDER
110-1_____	PROTECTION OF WATER QUALITY AND WETLANDS
303-1_____	AGGREGATE BASE COURSE
306-1_____	QUALITY CONTROL AND ACCEPTANCE
400-1_____	TACK COATS
400-4_____	DESIGN AND QUALITY CONTROL OF ASPHALT MIXTURES
400-5_____	PERCENT AIR VOIDS FOR ACHM MIX DESIGNS
400-6_____	LIQUID ANTI-STRIP ADDITIVE
410-1_____	CONSTRUCTION REQUIREMENTS AND ACCEPTANCE OF ASPHALT CONCRETE PLANT MIX COURSES
410-2_____	DEVICES FOR MEASURING DENSITY FOR ROLLING PATTERNS
600-2_____	INCIDENTAL CONSTRUCTION
603-1_____	LANE CLOSURE NOTIFICATION
604-1_____	RETROREFLECTIVE SHEETING FOR TRAFFIC CONTROL DEVICES IN CONSTRUCTION ZONES
605-1_____	CONCRETE DITCH PAVING
606-1_____	PIPE CULVERTS FOR SIDE DRAINS
617-1_____	GUARDRAIL TERMINAL (TYPE 2)
620-1_____	MULCH COVER
800-1_____	STRUCTURES
802-3_____	CONCRETE FOR STRUCTURES
804-2_____	REINFORCING STEEL FOR STRUCTURES
808-1_____	INSTALLATION OF ELASTOMERIC BEARINGS
808-2_____	ELASTOMERIC BEARINGS
JOB 012318__	ARCHITECTURAL FINISH
JOB 012318__	BIDDING REQUIREMENTS AND CONDITIONS
JOB 012318__	BROADBAND INTERNET SERVICE FOR ASPHALT CONCRETE PLANT
JOB 012318__	BROADBAND INTERNET SERVICE FOR FIELD OFFICE
JOB 012318__	CARGO PREFERENCE ACT REQUIREMENTS
JOB 012318__	CLASS C FLY ASH IN PORTLAND CEMENT CONCRETE PAVEMENT AND CLASS S(AE) CONCRETE
JOB 012318__	CONSTRUCTION IN SPECIAL FLOOD HAZARD AREAS
JOB 012318__	DELAY IN RIGHT OF WAY OCCUPANCY
JOB 012318__	DIRECT TENSION INDICATORS FOR HIGH STRENGTH BOLT ASSEMBLIES
JOB 012318__	DISADVANTAGED BUSINESS ENTERPRISE BIDDER'S RESPONSIBILITIES
JOB 012318__	EXTENSION FOR PIPE CULVERTS
JOB 012318__	FLEXIBLE BEGINNING OF WORK
JOB 012318__	FOREST SERVICE REQUIREMENTS
JOB 012318__	GOALS FOR DISADVANTAGED BUSINESS ENTERPRISE PARTICIPATION
JOB 012318__	HEADED STEEL BARS FOR CONCRETE REINFORCEMENT
JOB 012318__	MANDATORY ELECTRONIC CONTRACT
JOB 012318__	MANDATORY ELECTRONIC DOCUMENT SUBMITTAL
JOB 012318__	NESTING SITES OF MIGRATORY BIRDS
JOB 012318__	OFF-SITE RESTRAINING CONDITIONS FOR NORTHERN LONG-EARED BATS
JOB 012318__	PARTNERING REQUIREMENTS
JOB 012318__	PLASTIC PIPE
JOB 012318__	PRICE ADJUSTMENT FOR ASPHALT BINDER
JOB 012318__	REMOVING AND REPLACING TOPSOIL
JOB 012318__	RESTRAINING CONDITION
JOB 012318__	SECTION 404 NATIONWIDE 14 PERMIT REQUIREMENTS
JOB 012318__	SHORING FOR CULVERTS
JOB 012318__	SOIL STABILIZATION
JOB 012318__	SPECIAL SEEDING REQUIREMENTS
JOB 012318__	STAINING CONCRETE SURFACES
JOB 012318__	STORM WATER POLLUTION PREVENTION PLAN
JOB 012318__	SUBMISSION OF ASPHALT CONCRETE HOT MIX ACCEPTANCE TEST RESULTS
JOB 012318__	TRAFFIC CONTROL DEVICES IN CONSTRUCTION ZONES (MASH)
JOB 012318__	UTILITY ADJUSTMENTS
JOB 012318__	VALUE ENGINEERING
JOB 012318__	VEGETATED BUFFER
JOB 012318__	WARM MIX ASPHALT
JOB 012318__	WATER POLLUTION CONTROL & RESTRAINING CONDITION

STATE OF ARKANSAS
LICENSED PROFESSIONAL ENGINEER
No. 11425
TRINITY D. SMITH
12-20-19

GENERAL NOTES

1. GRADE LINE DENOTES FINISHED GRADE WHERE SHOWN ON PLANS.
2. ALL PIPE LINES, POWER, TELEPHONE, AND TELEGRAPH LINES TO BE MOVED OR LOWERED BY THE RESPECTIVE OWNERS AS PER AGREEMENT WITH SUCH OWNERS.
3. ANY EQUIPMENT OR APPURTENANCE THAT INTERFERES WITH THE PROPOSED CONSTRUCTION AND WHICH MAY BE THE PROPERTY OF UTILITY SERVICE ORGANIZATIONS SHALL BE MOVED BY THE OWNERS UNLESS OTHERWISE PROVIDED.
4. THE CONTRACTOR SHALL BE RESPONSIBLE FOR MAINTAINING U. S. MAILBOXES WITHIN THE PROJECT LIMITS IN SUCH A MANNER THAT THE PUBLIC MAY RECEIVE CONTINUED MAIL SERVICE. PAYMENT WILL BE CONSIDERED INCLUDED IN THE PRICE BID FOR THE VARIOUS BID ITEMS.
5. ALL LAND MONUMENTS LOCATED WITHIN THE CONSTRUCTION AREA SHALL BE PROTECTED IN ACCORDANCE WITH SECTION 107.12 OF THE STANDARD SPECIFICATIONS.
6. ALL TREES THAT DO NOT DIRECTLY INTERFERE WITH THE PROPOSED CONSTRUCTION SHALL BE SPARED AS DIRECTED BY THE ENGINEER. CARE AND DISCRETION SHALL BE USED TO ENSURE THAT ALL TREES NOT TO BE REMOVED SHALL BE HARMED AS LITTLE AS POSSIBLE DURING THE CONSTRUCTION OPERATIONS.
7. THE CONTRACTOR SHALL BE RESPONSIBLE FOR PROVIDING A FENCE TO CONTROL LIVESTOCK IN AREAS WHERE PASTURES ARE SEVERED. WIRE FENCE MAY BE CONSTRUCTED INITIALLY, OR IN LIEU THEREOF, THE CONTRACTOR AT HIS OWN EXPENSE, MAY ELECT TO PROVIDE TEMPORARY FENCING SUITABLE TO CONTAIN LIVESTOCK.
8. THE SEQUENCE AS SHOWN ON THE MAINTENANCE OF TRAFFIC PLANS IS A GENERAL OUTLINE FOR THE CONSTRUCTION OF THIS PROJECT, AND IN NO WAY IS IT INTENDED TO COVER EVERY ITEM IN THE PROJECT. ITEMS NOT CRITICAL TO THE CONSTRUCTION SEQUENCE MAY BE CONSTRUCTED IN ANY STAGE AS APPROVED BY THE RESIDENT ENGINEER.
9. ALL FLEXIBLE BASE AND ASPHALTIC PAVEMENTS REMOVED SHALL BE PAID FOR UNDER THE ITEM NO. 210 - UNCLASSIFIED EXCAVATION.
10. THE EXISTING ASPHALT PAVEMENT TO BE REMOVED FROM THE REMAINING PAVEMENT SHALL BE SEPARATED BY SAWING ALONG A NEAT LINE. AFTER SAWING, THE PAVEMENT TO BE REMOVED SHALL BE CAREFULLY REMOVED IN A MANNER THAT WILL NOT DAMAGE THE PAVEMENT THAT IS TO REMAIN. ANY DAMAGE OF THE ASPHALT PAVEMENT THAT IS TO REMAIN IN PLACE SHALL BE REPAIRED AT THE CONTRACTOR'S EXPENSE.

8/28/2019

R012318.DGN

DATE REVISED	DATE FILMED	DATE REVISED	DATE FILMED	FED.RD. DIST.NO.	STATE	FED.AID PROJ.NO.	SHEET NO.	TOTAL SHEETS
				6	ARK.			
				JOB NO.		012318	5	92

(2) TYPICAL SECTIONS OF IMPROVEMENT

STATE OF ARKANSAS
LICENSED PROFESSIONAL ENGINEER
No. 11425
TRINITY D. SMITH
10-1-19

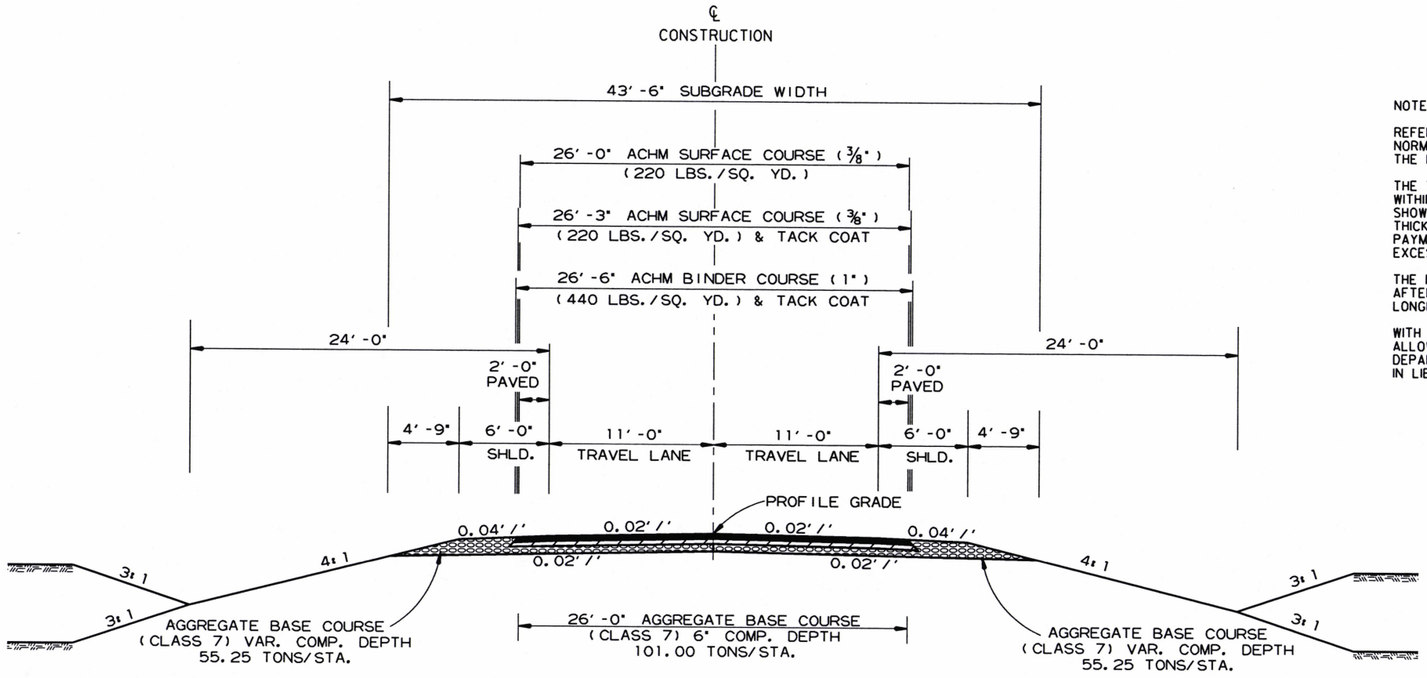

TWO LANE FULL DEPTH
OPEN SHOULDER

STA. 311+25.00 TO STA. 312+21.00
STA. 314+42.00 TO STA. 317+10.00

NOTES:

REFER TO CROSS SECTIONS FOR DEVIATION FROM THE NORMAL SLOPES. NO CHANGES SHALL BE MADE FROM THE PLANNED SLOPES WITHOUT THE APPROVAL OF THE ENGINEER.

THE THICKNESS OF AGGREGATE BASE COURSE SHALL BE WITHIN PLUS OR MINUS ONE INCH OF THE PLAN THICKNESS SHOWN. THE CONTRACTOR WILL CORRECT ANY DEFICIENT THICKNESS THAT DOES NOT MEET TOLERANCE INDICATED. PAYMENT WILL NOT BE MADE FOR MATERIAL PLACED IN EXCESS OF THE TOLERANCE INDICATED.

THE FINAL 2" OF SURFACE COURSE IS TO BE PLACED AFTER ALL OTHER COURSES HAVE BEEN LAID. LONGITUDINAL JOINTS SHALL BE AT LANE LINES.

WITH APPROVAL OF THE ENGINEER, THE CONTRACTOR WILL BE ALLOWED TO SUBSTITUTE, AT NO ADDITIONAL COST TO THE DEPARTMENT, THE FIRST LIFT OF ACHM SURFACE COURSE (3/8") IN LIEU OF AGGREGATE BASE COURSE ON THE SHOULDERS.

8/28/2018

R012318.DGN

TYPICAL SECTIONS OF IMPROVEMENT

DATE REVISED	DATE FILMED	DATE REVISED	DATE FILMED	FED.RD. DIST.NO.	STATE	FED.AID PROJ.NO.	SHEET NO.	TOTAL SHEETS
				6	ARK.			
				JOB NO.		012318	6	92

(2) TYPICAL SECTIONS OF IMPROVEMENT

STATE OF ARKANSAS
LICENSED PROFESSIONAL ENGINEER
No. 11425
TRINITY D. SMITH
10-1-19

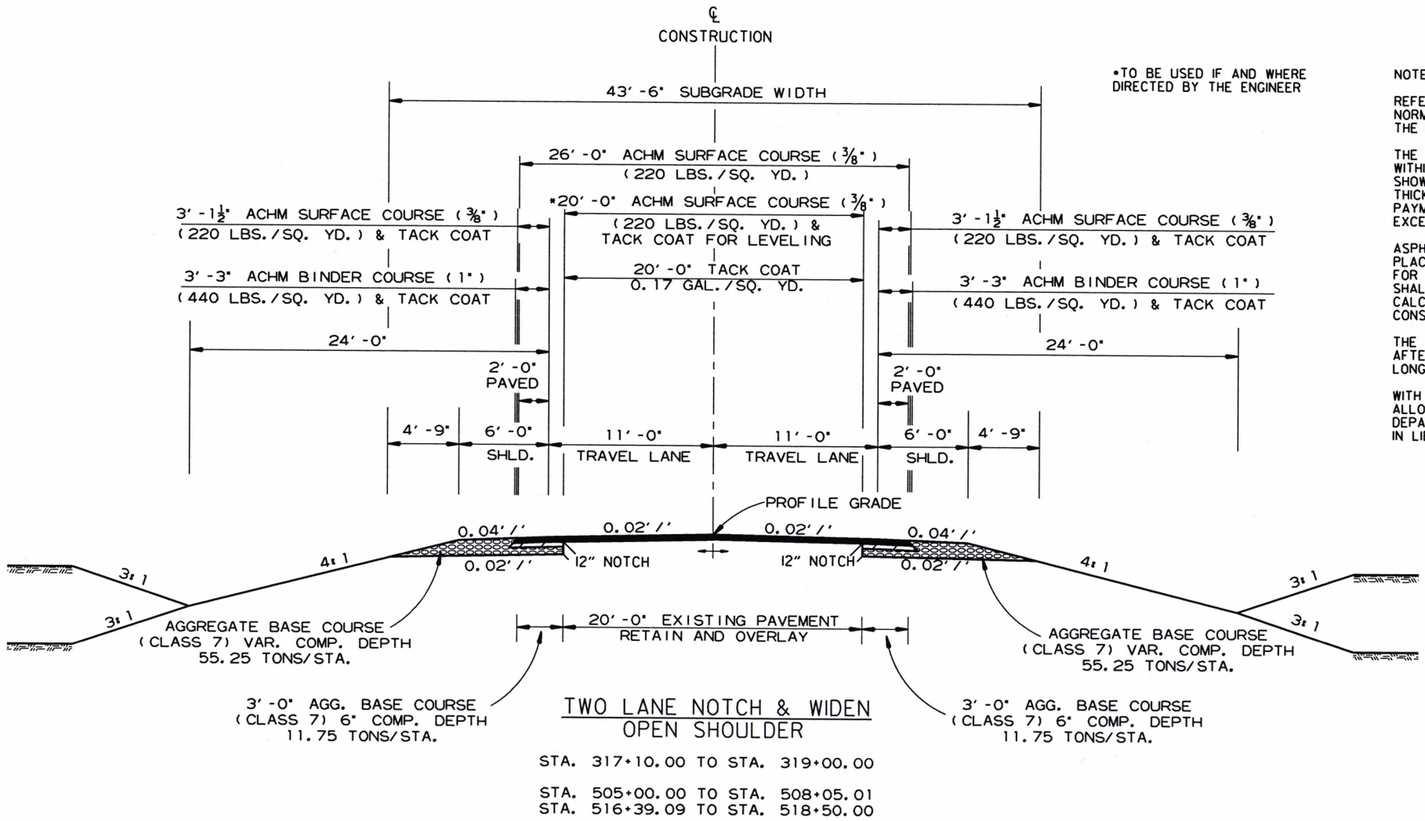

*TO BE USED IF AND WHERE DIRECTED BY THE ENGINEER

TWO LANE NOTCH & WIDEN OPEN SHOULDER

STA. 317+10.00 TO STA. 319+00.00

STA. 505+00.00 TO STA. 508+05.01
STA. 516+39.09 TO STA. 518+50.00

NOTES:

REFER TO CROSS SECTIONS FOR DEVIATION FROM THE NORMAL SLOPES. NO CHANGES SHALL BE MADE FROM THE PLANNED SLOPES WITHOUT THE APPROVAL OF THE ENGINEER.

THE THICKNESS OF AGGREGATE BASE COURSE SHALL BE WITHIN PLUS OR MINUS ONE INCH OF THE PLAN THICKNESS SHOWN. THE CONTRACTOR WILL CORRECT ANY DEFICIENT THICKNESS THAT DOES NOT MEET TOLERANCE INDICATED. PAYMENT WILL NOT BE MADE FOR MATERIAL PLACED IN EXCESS OF THE TOLERANCE INDICATED.

ASPHALT FOR LEVELING OF EXISTING PAVEMENT SHALL BE PLACED ONLY IF AND WHERE DIRECTED BY THE ENGINEER. CALCULATIONS FOR THE AMOUNT OF LEVELING AND/OR LEVELING OPERATIONS SHALL BE PERFORMED BEFORE CONSTRUCTING NOTCH AND WIDENING. CALCULATIONS WILL NOT BE PAID FOR DIRECTLY, BUT PAYMENT WILL BE CONSIDERED INCLUDED IN THE VARIOUS PAY ITEMS.

THE FINAL 2" OF SURFACE COURSE IS TO BE PLACED AFTER ALL OTHER COURSES HAVE BEEN LAID. LONGITUDINAL JOINTS SHALL BE AT LANE LINES.

WITH APPROVAL OF THE ENGINEER, THE CONTRACTOR WILL BE ALLOWED TO SUBSTITUTE, AT NO ADDITIONAL COST TO THE DEPARTMENT, THE FIRST LIFT OF ACHM SURFACE COURSE (3/8") IN LIEU OF AGGREGATE BASE COURSE ON THE SHOULDERS.

8/28/2018

R012318.DGN

TYPICAL SECTIONS OF IMPROVEMENT

DATE REVISED	DATE FILMED	DATE REVISED	DATE FILMED	FED.RD. DIST.NO.	STATE	FED.AID PROJ.NO.	SHEET NO.	TOTAL SHEETS
				6	ARK.			
				JOB NO.		012318	7	92

(2) TYPICAL SECTIONS OF IMPROVEMENT

STATE OF ARKANSAS
LICENSED PROFESSIONAL ENGINEER
No. 11425
TRINITY D. SMITH
10-1-19

ON ALL SUPERELEVATED CURVES AND THROUGH SUPERELEVATION TRANSITIONS, THE ALGEBRAIC DIFFERENCE BETWEEN PAVEMENT SLOPE AND SHOULDER SLOPE SHALL NOT EXCEED 0.08'/'.

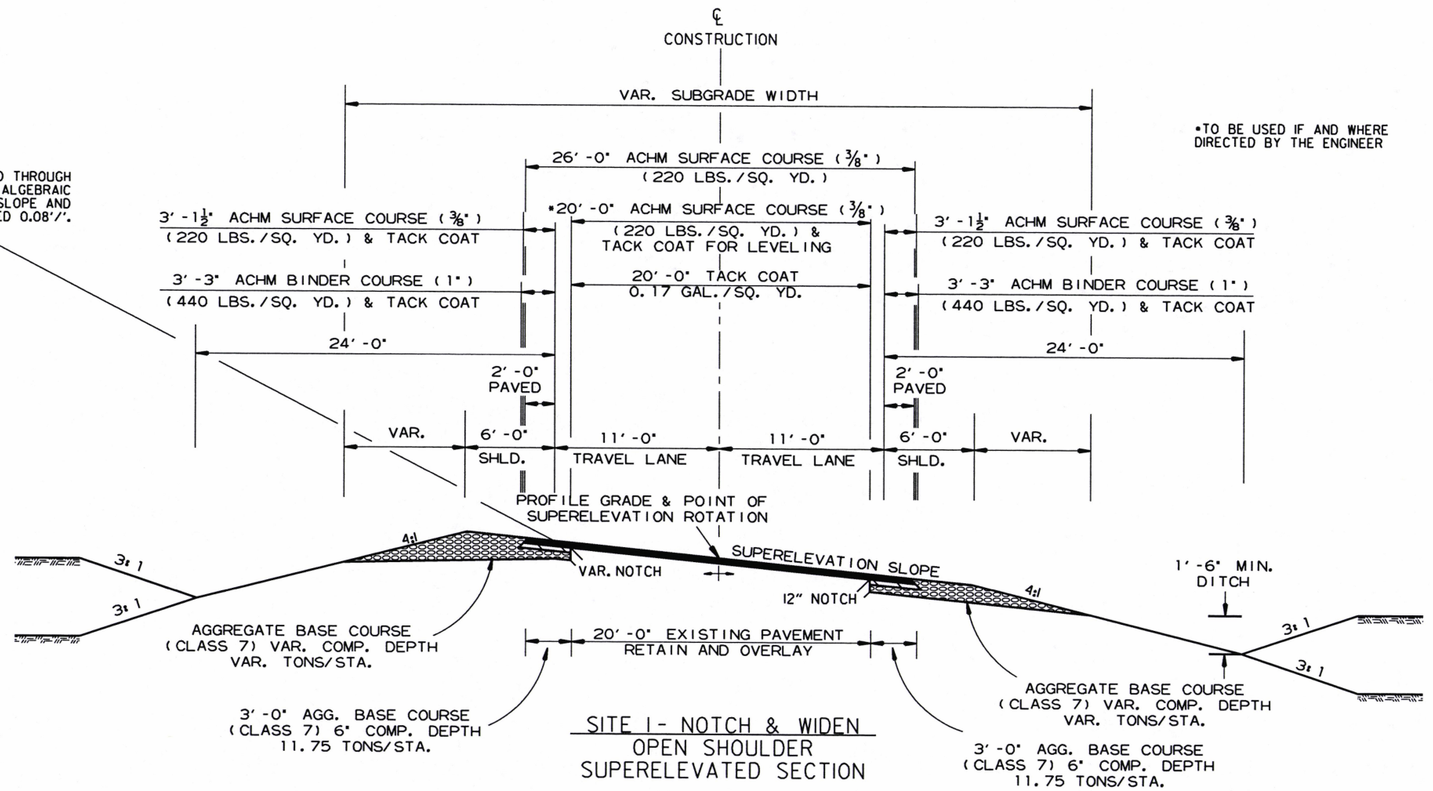

SITE I - NOTCH & WIDEN
OPEN SHOULDER
SUPERELEVATED SECTION

STA. 308+75.00 TO STA. 310+75.00

*TO BE USED IF AND WHERE DIRECTED BY THE ENGINEER

NOTES:

REFER TO CROSS SECTIONS FOR DEVIATION FROM THE NORMAL SLOPES. NO CHANGES SHALL BE MADE FROM THE PLANNED SLOPES WITHOUT THE APPROVAL OF THE ENGINEER.

THE THICKNESS OF AGGREGATE BASE COURSE SHALL BE WITHIN PLUS OR MINUS ONE INCH OF THE PLAN THICKNESS SHOWN. THE CONTRACTOR WILL CORRECT ANY DEFICIENT THICKNESS THAT DOES NOT MEET TOLERANCE INDICATED. PAYMENT WILL NOT BE MADE FOR MATERIAL PLACED IN EXCESS OF THE TOLERANCE INDICATED.

ASPHALT FOR LEVELING OF EXISTING PAVEMENT SHALL BE PLACED ONLY IF AND WHERE DIRECTED BY THE ENGINEER. CALCULATIONS FOR THE AMOUNT OF LEVELING AND/OR LEVELING OPERATIONS SHALL BE PERFORMED BEFORE CONSTRUCTING NOTCH AND WIDENING. CALCULATIONS WILL NOT BE PAID FOR DIRECTLY, BUT PAYMENT WILL BE CONSIDERED INCLUDED IN THE VARIOUS PAY ITEMS.

THE FINAL 2" OF SURFACE COURSE IS TO BE PLACED AFTER ALL OTHER COURSES HAVE BEEN LAID. LONGITUDINAL JOINTS SHALL BE AT LANE LINES.

WITH APPROVAL OF THE ENGINEER, THE CONTRACTOR WILL BE ALLOWED TO SUBSTITUTE, AT NO ADDITIONAL COST TO THE DEPARTMENT, THE FIRST LIFT OF ACHM SURFACE COURSE (3/8") IN LIEU OF AGGREGATE BASE COURSE ON THE SHOULDERS.

8/28/2018

R012318.DGN

TYPICAL SECTIONS OF IMPROVEMENT

DATE REVISED	DATE FILMED	DATE REVISED	DATE FILMED	FED.RD. DIST.NO.	STATE	FED.AID PROJ.NO.	SHEET NO.	TOTAL SHEETS
				6	ARK.			
				JOB NO.		012318	8	92

(2) TYPICAL SECTIONS OF IMPROVEMENT

STATE OF ARKANSAS
LICENSED PROFESSIONAL ENGINEER
No. 11425
TRINITY D. SMITH
10-1-19

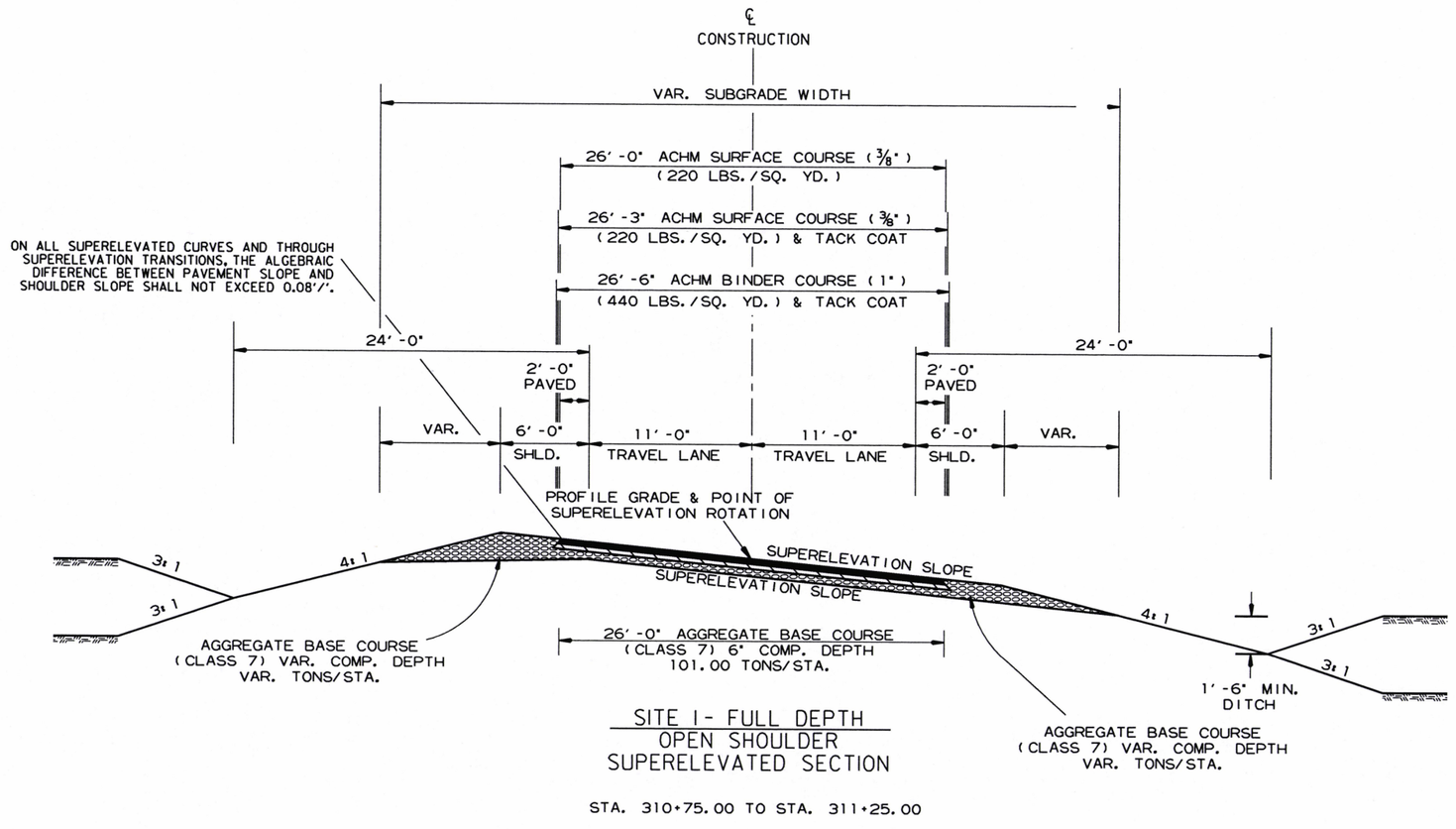

SITE 1- FULL DEPTH
OPEN SHOULDER
SUPERELEVATED SECTION

STA. 310+75.00 TO STA. 311+25.00

NOTES:

REFER TO CROSS SECTIONS FOR DEVIATION FROM THE NORMAL SLOPES. NO CHANGES SHALL BE MADE FROM THE PLANNED SLOPES WITHOUT THE APPROVAL OF THE ENGINEER.

THE THICKNESS OF AGGREGATE BASE COURSE SHALL BE WITHIN PLUS OR MINUS ONE INCH OF THE PLAN THICKNESS SHOWN. THE CONTRACTOR WILL CORRECT ANY DEFICIENT THICKNESS THAT DOES NOT MEET TOLERANCE INDICATED. PAYMENT WILL NOT BE MADE FOR MATERIAL PLACED IN EXCESS OF THE TOLERANCE INDICATED.

ASPHALT FOR LEVELING OF EXISTING PAVEMENT SHALL BE PLACED ONLY IF AND WHERE DIRECTED BY THE ENGINEER. CALCULATIONS FOR THE AMOUNT OF LEVELING AND/OR LEVELING OPERATIONS SHALL BE PERFORMED BEFORE CONSTRUCTING NOTCH AND WIDENING. CALCULATIONS WILL NOT BE PAID FOR DIRECTLY, BUT PAYMENT WILL BE CONSIDERED INCLUDED IN THE VARIOUS PAY ITEMS.

THE FINAL 2" OF SURFACE COURSE IS TO BE PLACED AFTER ALL OTHER COURSES HAVE BEEN LAID. LONGITUDINAL JOINTS SHALL BE AT LANE LINES.

WITH APPROVAL OF THE ENGINEER, THE CONTRACTOR WILL BE ALLOWED TO SUBSTITUTE, AT NO ADDITIONAL COST TO THE DEPARTMENT, THE FIRST LIFT OF ACHM SURFACE COURSE (3/8") IN LIEU OF AGGREGATE BASE COURSE ON THE SHOULDERS.

8/28/2018

R012318.DGN

TYPICAL SECTIONS OF IMPROVEMENT

DATE REVISED	DATE FILMED	DATE REVISED	DATE FILMED	FED.RD. DIST.NO.	STATE	FED.AID PROJ.NO.	SHEET NO.	TOTAL SHEETS
				6	ARK.			
				JOB NO.		012318	9	92

(2) TYPICAL SECTIONS OF IMPROVEMENT

STATE OF ARKANSAS
LICENSED PROFESSIONAL ENGINEER
No. 11425
TRINITY D. SMITH
10-1-19

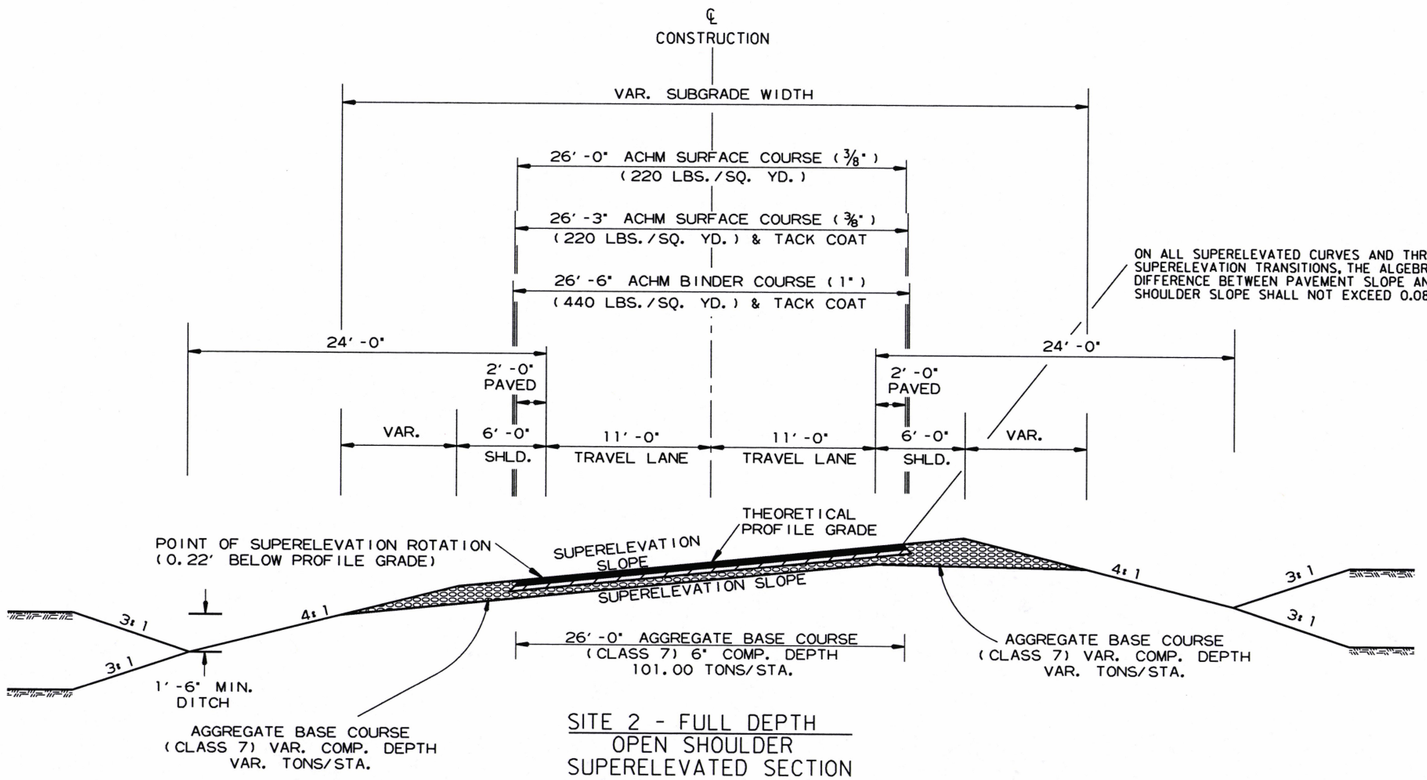

SITE 2 - FULL DEPTH
OPEN SHOULDER
SUPERELEVATED SECTION

STA. 508+05.01 TO STA. 510+30.00
STA. 511+35.00 TO STA. 514+82.87

NOTES:

REFER TO CROSS SECTIONS FOR DEVIATION FROM THE NORMAL SLOPES. NO CHANGES SHALL BE MADE FROM THE PLANNED SLOPES WITHOUT THE APPROVAL OF THE ENGINEER.

THE THICKNESS OF AGGREGATE BASE COURSE SHALL BE WITHIN PLUS OR MINUS ONE INCH OF THE PLAN THICKNESS SHOWN. THE CONTRACTOR WILL CORRECT ANY DEFICIENT THICKNESS THAT DOES NOT MEET TOLERANCE INDICATED. PAYMENT WILL NOT BE MADE FOR MATERIAL PLACED IN EXCESS OF THE TOLERANCE INDICATED.

ASPHALT FOR LEVELING OF EXISTING PAVEMENT SHALL BE PLACED ONLY IF AND WHERE DIRECTED BY THE ENGINEER. CALCULATIONS FOR THE AMOUNT OF LEVELING AND/OR LEVELING OPERATIONS SHALL BE PERFORMED BEFORE CONSTRUCTING NOTCH AND WIDENING. CALCULATIONS WILL NOT BE PAID FOR DIRECTLY, BUT PAYMENT WILL BE CONSIDERED INCLUDED IN THE VARIOUS PAY ITEMS.

THE FINAL 2" OF SURFACE COURSE IS TO BE PLACED AFTER ALL OTHER COURSES HAVE BEEN LAID. LONGITUDINAL JOINTS SHALL BE AT LANE LINES.

WITH APPROVAL OF THE ENGINEER, THE CONTRACTOR WILL BE ALLOWED TO SUBSTITUTE, AT NO ADDITIONAL COST TO THE DEPARTMENT, THE FIRST LIFT OF ACHM SURFACE COURSE (1/8") IN LIEU OF AGGREGATE BASE COURSE ON THE SHOULDERS.

8/28/2018

R012318.DGN

TYPICAL SECTIONS OF IMPROVEMENT

DATE REVISED	DATE FILMED	DATE REVISED	DATE FILMED	FED.RD. DIST.NO.	STATE	FED.AID PROJ.NO.	SHEET NO.	TOTAL SHEETS
				6	ARK.			
				JOB NO.		012318	10	92

(2) TYPICAL SECTIONS OF IMPROVEMENT

STATE OF ARKANSAS
LICENSED PROFESSIONAL ENGINEER
No. 11425
TRINITY D. SMITH
10-1-19

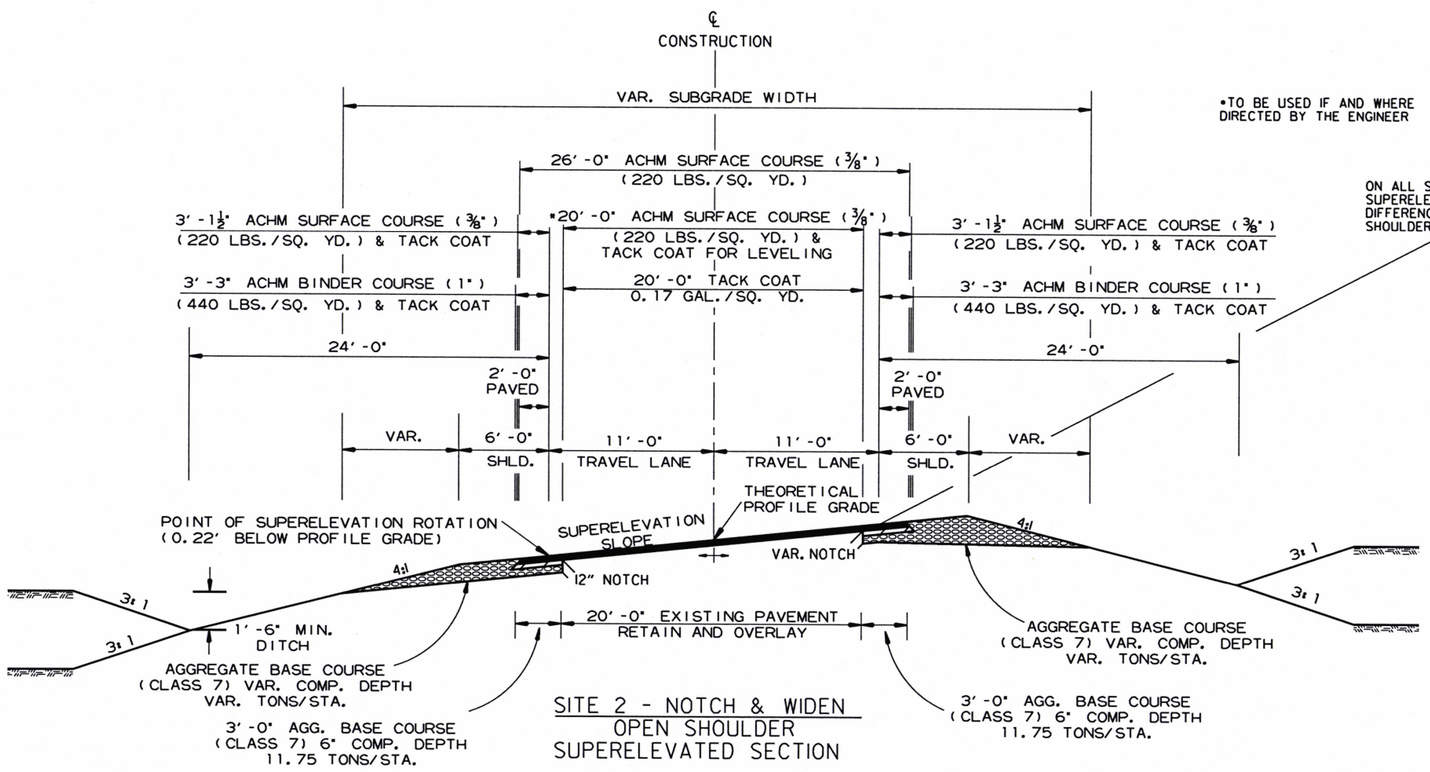

SITE 2 - NOTCH & WIDEN
OPEN SHOULDER
SUPERELEVATED SECTION

STA. 514+82.87 TO STA. 516+39.09

*TO BE USED IF AND WHERE DIRECTED BY THE ENGINEER

ON ALL SUPERELEVATED CURVES AND THROUGH SUPERELEVATION TRANSITIONS, THE ALGEBRAIC DIFFERENCE BETWEEN PAVEMENT SLOPE AND SHOULDER SLOPE SHALL NOT EXCEED 0.08'/'.

NOTES:

REFER TO CROSS SECTIONS FOR DEVIATION FROM THE NORMAL SLOPES. NO CHANGES SHALL BE MADE FROM THE PLANNED SLOPES WITHOUT THE APPROVAL OF THE ENGINEER.

THE THICKNESS OF AGGREGATE BASE COURSE SHALL BE WITHIN PLUS OR MINUS ONE INCH OF THE PLAN THICKNESS SHOWN. THE CONTRACTOR WILL CORRECT ANY DEFICIENT THICKNESS THAT DOES NOT MEET TOLERANCE INDICATED. PAYMENT WILL NOT BE MADE FOR MATERIAL PLACED IN EXCESS OF THE TOLERANCE INDICATED.

ASPHALT FOR LEVELING OF EXISTING PAVEMENT SHALL BE PLACED ONLY IF AND WHERE DIRECTED BY THE ENGINEER. CALCULATIONS FOR THE AMOUNT OF LEVELING AND/OR LEVELING OPERATIONS SHALL BE PERFORMED BEFORE CONSTRUCTING NOTCH AND WIDENING. CALCULATIONS WILL NOT BE PAID FOR DIRECTLY, BUT PAYMENT WILL BE CONSIDERED INCLUDED IN THE VARIOUS PAY ITEMS.

THE FINAL 2" OF SURFACE COURSE IS TO BE PLACED AFTER ALL OTHER COURSES HAVE BEEN LAID. LONGITUDINAL JOINTS SHALL BE AT LANE LINES.

WITH APPROVAL OF THE ENGINEER, THE CONTRACTOR WILL BE ALLOWED TO SUBSTITUTE, AT NO ADDITIONAL COST TO THE DEPARTMENT, THE FIRST LIFT OF ACHM SURFACE COURSE (⅜") IN LIEU OF AGGREGATE BASE COURSE ON THE SHOULDERS.

8/28/2018

R012318.DGN

TYPICAL SECTIONS OF IMPROVEMENT

DATE REVISED	DATE FILMED	DATE REVISED	DATE FILMED	FED.RD. DIST.NO.	STATE	FED.AID PROJ.NO.	SHEET NO.	TOTAL SHEETS
				6	ARK.			
				JOB NO.		012318	11	92

(2) TYPICAL SECTIONS OF IMPROVEMENT

STATE OF ARKANSAS
LICENSED PROFESSIONAL ENGINEER
No. 11425
TRINITY D. SMITH
10-1-19

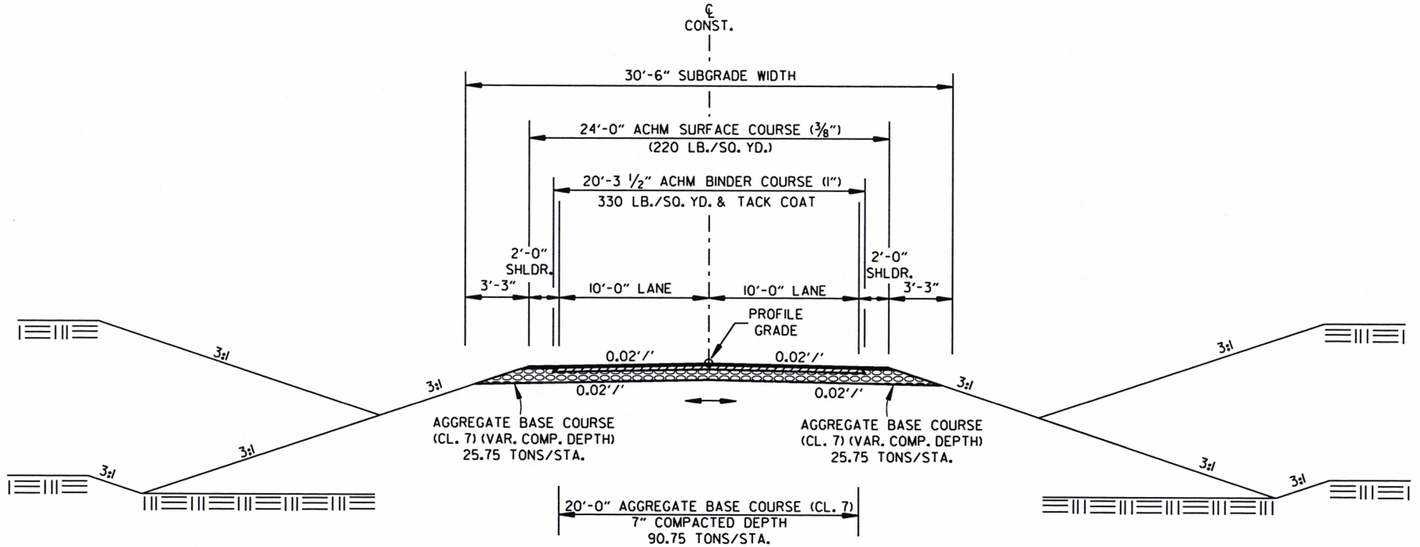

DETOUR
TANGENT SECTION

NOTES:

REFER TO CROSS SECTIONS FOR DEVIATION FROM THE NORMAL SLOPES. NO CHANGES SHALL BE MADE FROM THE PLANNED SLOPES WITHOUT THE APPROVAL OF THE ENGINEER.

THE THICKNESS OF AGGREGATE BASE COURSE SHALL BE WITHIN PLUS OR MINUS ONE INCH OF THE PLAN THICKNESS SHOWN. THE CONTRACTOR WILL CORRECT ANY DEFICIENT THICKNESS THAT DOES NOT MEET TOLERANCE INDICATED. PAYMENT WILL NOT BE MADE FOR MATERIAL PLACED IN EXCESS OF THE TOLERANCE INDICATED.

THE FINAL 2" OF SURFACE COURSE IS TO BE PLACED AFTER ALL OTHER COURSES HAVE BEEN LAID. LONGITUDINAL JOINTS SHALL BE AT LANE LINES.

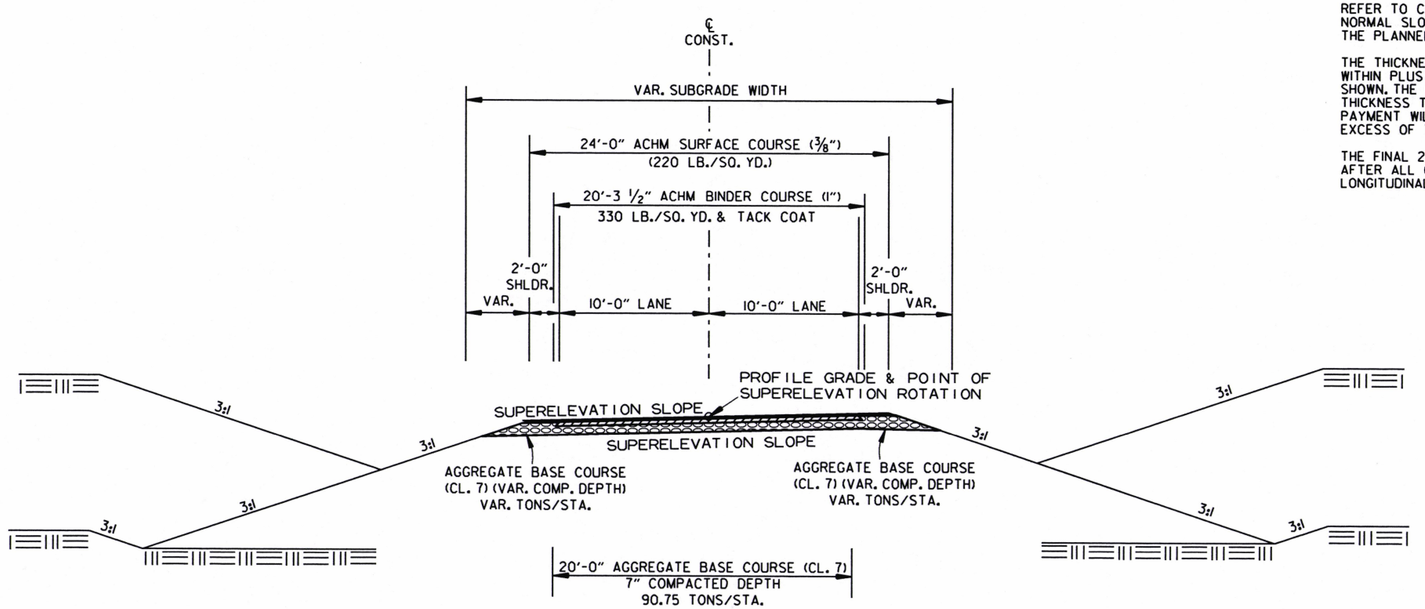

DETOUR
SUPERELEVATED SECTION

8/28/2018

R012318.DGN

TYPICAL SECTIONS OF IMPROVEMENT

DATE REVISED	DATE FILMED	DATE REVISED	DATE FILMED	FED.RD. DIST.NO.	STATE	FED.AID PROJ.NO.	SHEET NO.	TOTAL SHEETS
				6	ARK.			
				JOB NO.		012318	12	92

(2) SPECIAL DETAILS

STATE OF ARKANSAS
LICENSED PROFESSIONAL ENGINEER
No. 11425
TRINITY D. SMITH
10-1-19

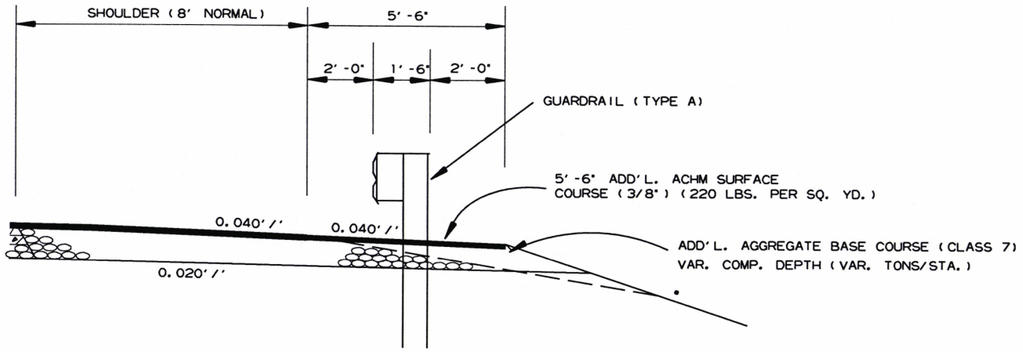

WIDENING FOR GUARDRAIL

* NOTE: REFER TO STD. DWG. GR-9A AND CROSS SECTIONS FOR SLOPE REQUIREMENTS BEHIND GUARDRAIL.

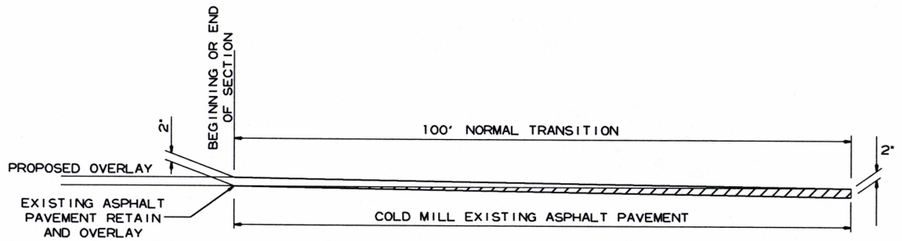

DETAIL FOR TRANSITIONS

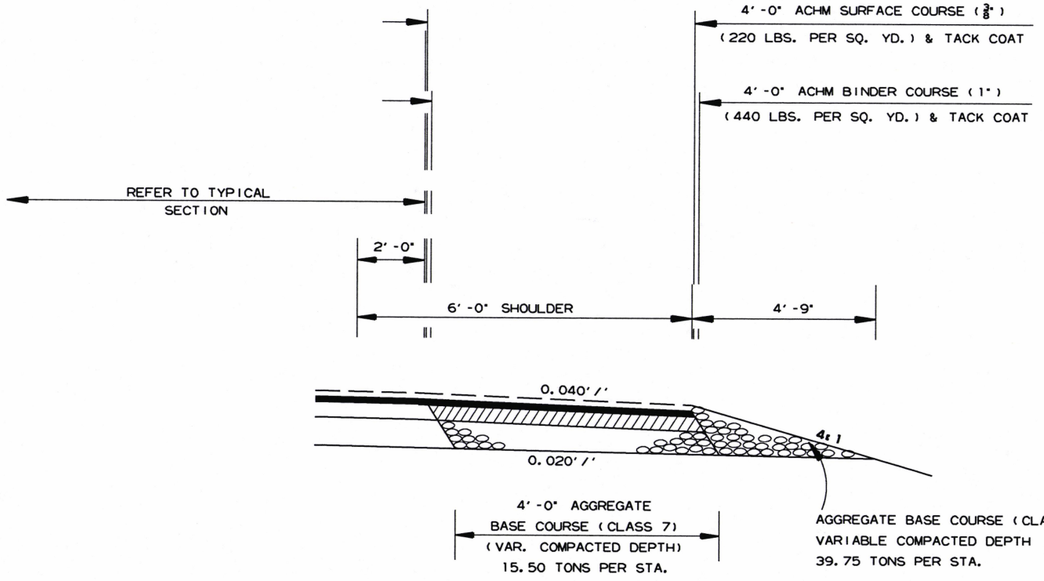

FULL DEPTH SHOULDER FOR MAINTENANCE OF TRAFFIC

STATIONS: 234+00-253+75

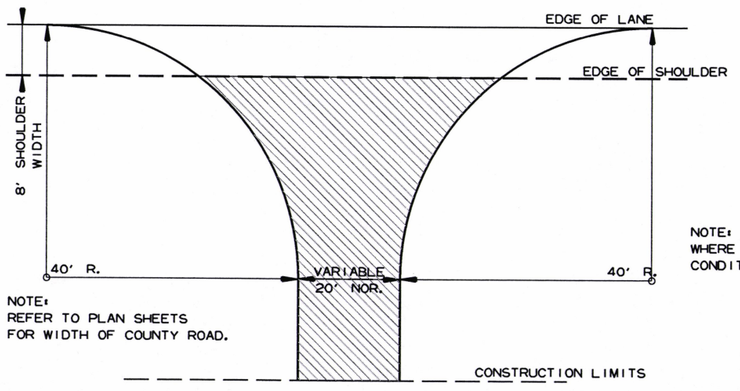

NOTE: TURNOUTS SHALL BE MODIFIED WHERE NECESSARY TO MEET LOCAL CONDITIONS AS DIRECTED BY THE ENGINEER.

ACHM SURFACE COURSE (3/8") (220 LBS. PER SQ. YD.) AND AGGREGATE BASE COURSE (CLASS 7) 7" COMP. DEPTH

DETAIL FOR COUNTY ROAD TURNOUTS OPEN SHOULDER SECTION

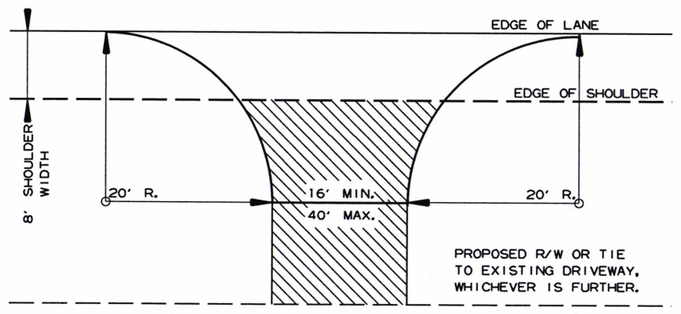

NOTE: TURNOUTS AND PRIVATE DRIVES SHALL BE MODIFIED WHERE NECESSARY TO MEET LOCAL CONDITIONS AS DIRECTED BY THE ENGINEER.

ACHM SURFACE COURSE (3/8") (220 LBS. PER SQ. YD.) AND AGGREGATE BASE COURSE (CLASS 7) 7" COMP. DEPTH IF ASPHALT OR GRAVEL DRIVE EXISTING; OR 6" CONCRETE IF CONCRETE DRIVE EXISTING.

DETAIL FOR DRIVEWAY TURNOUTS OPEN SHOULDER SECTION

mh39735 8/28/2019
R012318.DGN

DATE REVISED	DATE FILMED	DATE REVISED	DATE FILMED	FED.RD. DIST.NO.	STATE	FED.AID PROJ.NO.	SHEET NO.	TOTAL SHEETS
				6	ARK.			
				JOB NO.		012318	13	92

(2) SPECIAL DETAILS

STATE OF ARKANSAS
LICENSED PROFESSIONAL ENGINEER
No. 11425
TRINITY D. SMITH
10-1-19

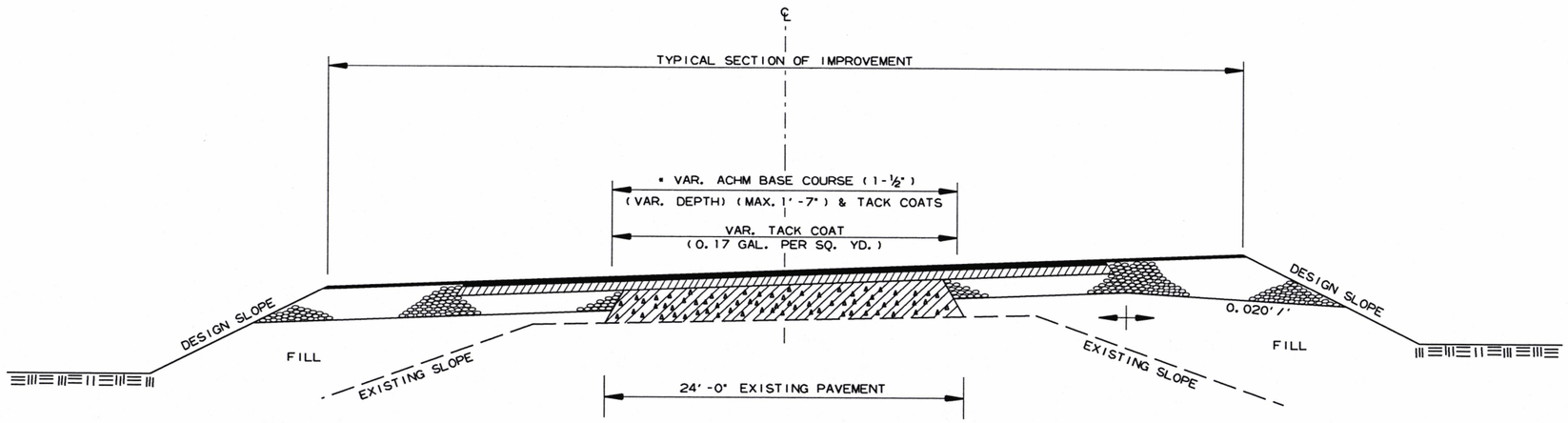

* 7" AGGREGATE BASE COURSE (CLASS 7)
TO BE REPLACED WITH ACHM BASE COURSE (1-½")

METHOD OF RAISING GRADE

NOTES:

(1) THIS DETAIL TO BE USED ONLY WHERE DIRECTED BY THE ENGINEER.

(2) QUANTITIES FOR METHOD OF GRADE RAISE USING ASPHALT WERE CALCULATED ON THIS PROJECT AT LOCATIONS WHERE THE DISTANCE BETWEEN THE EXISTING ASPHALT ROADWAY AND THE PROPOSED SUBGRADE WAS ONE FOOT OR LESS.

(3) IN LOCATIONS WHERE THE DISTANCE BETWEEN THE PROPOSED SUBGRADE AND THE EXISTING ASPHALT ROADWAY IS MORE THAN ONE FOOT, SCARIFICATION OF THE EXISTING ASPHALT ROADWAY WILL BE REQUIRED AS STATED IN SECTION 210, SUBSECTION 210.09, OF THE STANDARD SPECIFICATIONS.

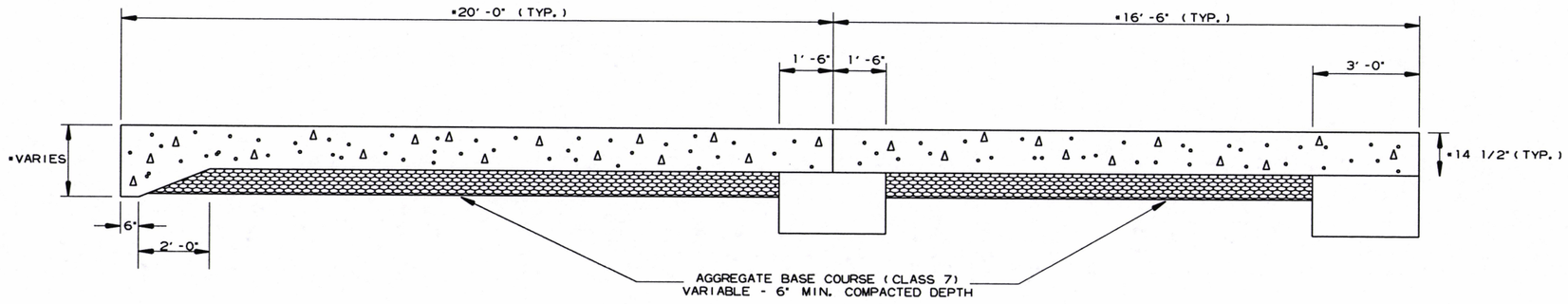

* SEE APPROACH SLAB DETAILS IN BRIDGE DRAWINGS

SECTION OF APPROACH SLAB

mh39735 8/28/2019
R012318.DGN

DATE REVISED	DATE FILMED	DATE REVISED	DATE FILMED	FED.RD. DIST.NO.	STATE	FED.AID PROJ.NO.	SHEET NO.	TOTAL SHEETS
				6	ARK.			
				JOB NO.		012318	14	92

(2) TEMPORARY EROSION CONTROL DETAILS

STATE OF ARKANSAS
LICENSED PROFESSIONAL ENGINEER
No. 11425
TRINITY D. SMITH
10-1-19

STA. 308+75.00
BEGIN JOB 012318
SITE 1
LOG MILE 16.58

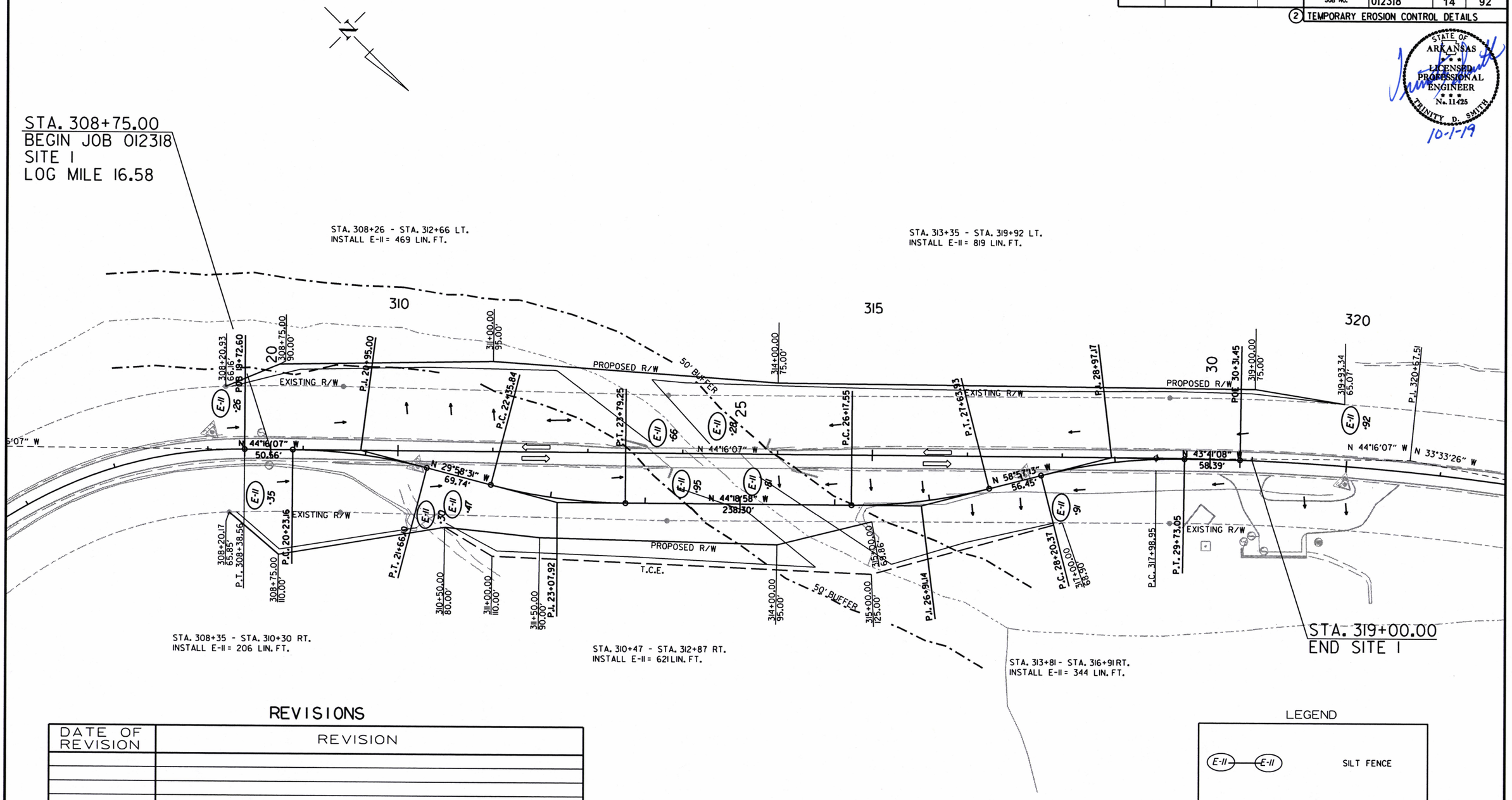

REVISIONS

DATE OF REVISION	REVISION

LEGEND

E-II — E-II SILT FENCE

NOTE: PERIMETER CONTROLS SHALL BE PLACED AS CLEARING AND GRUBBING OPERATIONS ARE STARTED. MAINTAIN ALL EROSION CONTROL DEVICES UNTIL THE END OF THE JOB, UNLESS OTHERWISE SPECIFIED.

SITE 1
CLEARING AND GRUBBING
TEMPORARY EROSION CONTROL DETAILS

8/30/2019

R012318.DGN

REVISIONS

DATE OF REVISION	REVISION

DATE REVISED	DATE FILMED	DATE REVISED	DATE FILMED	FED.RD. DIST.NO.	STATE	FED.AID PROJ.NO.	SHEET NO.	TOTAL SHEETS
				6	ARK.			
				JOB NO.		012318	15	92

(2) TEMPORARY EROSION CONTROL DETAILS

STATE OF ARKANSAS
LICENSED PROFESSIONAL ENGINEER
No. 11425
TRINITY D. SMITH
10-1-19

STA. 505+00.00
BEGIN SITE 2
LOG MILE 3.10

STA. 516+11 - STA. 517+99 LT.
INSTALL E-11 = 469 LIN. FT.

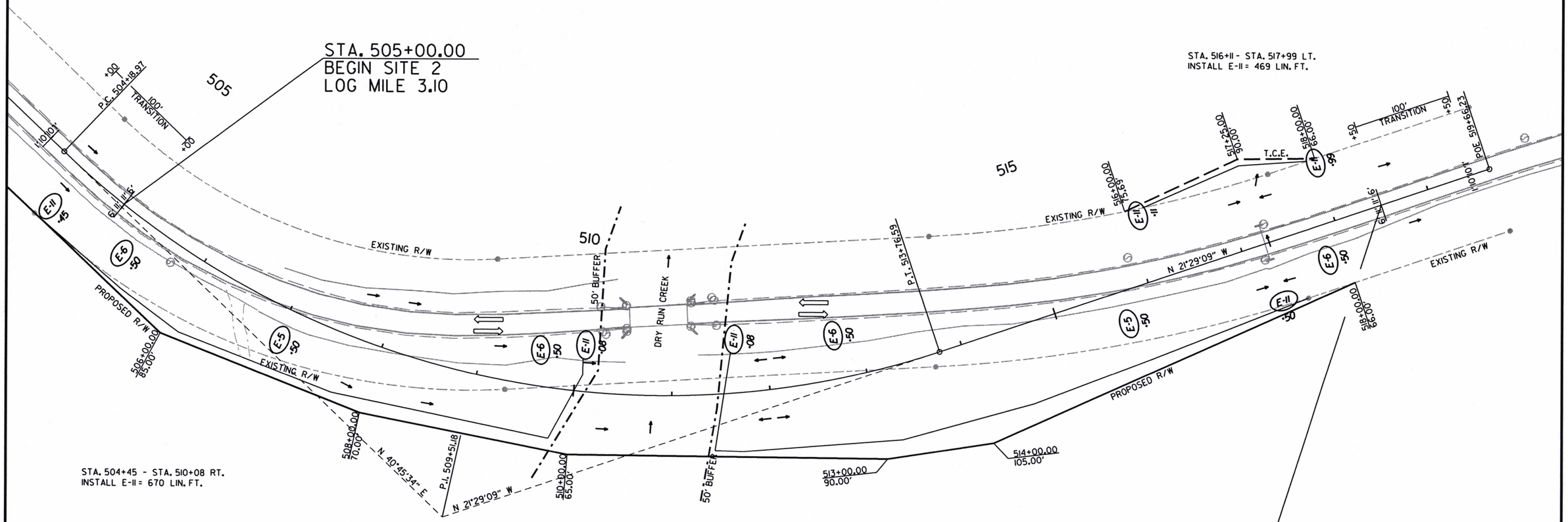

STA. 504+45 - STA. 510+08 RT.
INSTALL E-11 = 670 LIN. FT.

STA. 511+68 - STA. 517+50 RT.
INSTALL E-11 = 727 LIN. FT.

STA. 518+50.00
END SITE 2
END JOB 012318

LEGEND

E-5	SAND BAG DITCH CHECKS
E-6	ROCK DITCH CHECKS
E-11 — E-11	SILT FENCE

NOTE: PERIMETER CONTROLS SHALL BE PLACED AS CLEARING AND GRUBBING OPERATIONS ARE STARTED. MAINTAIN ALL EROSION CONTROL DEVICES UNTIL THE END OF THE JOB, UNLESS OTHERWISE SPECIFIED.

8/30/2019

R012318.DGN

SITE 2
CLEARING AND GRUBBING
TEMPORARY EROSION CONTROL DETAILS

DATE REVISED	DATE FILMED	DATE REVISED	DATE FILMED

FED.RD. DIST.NO.	STATE	FED.AID PROJ.NO.	SHEET NO.	TOTAL SHEETS
6	ARK.			
JOB NO.		012318	16	92

(2) TEMPORARY EROSION CONTROL DETAILS

STATE OF ARKANSAS
LICENSED PROFESSIONAL ENGINEER
No. 11425
TRINITY D. SMITH
10-1-19

STA. 308+75.00
BEGIN JOB 012318
SITE I
LOG MILE 16.58

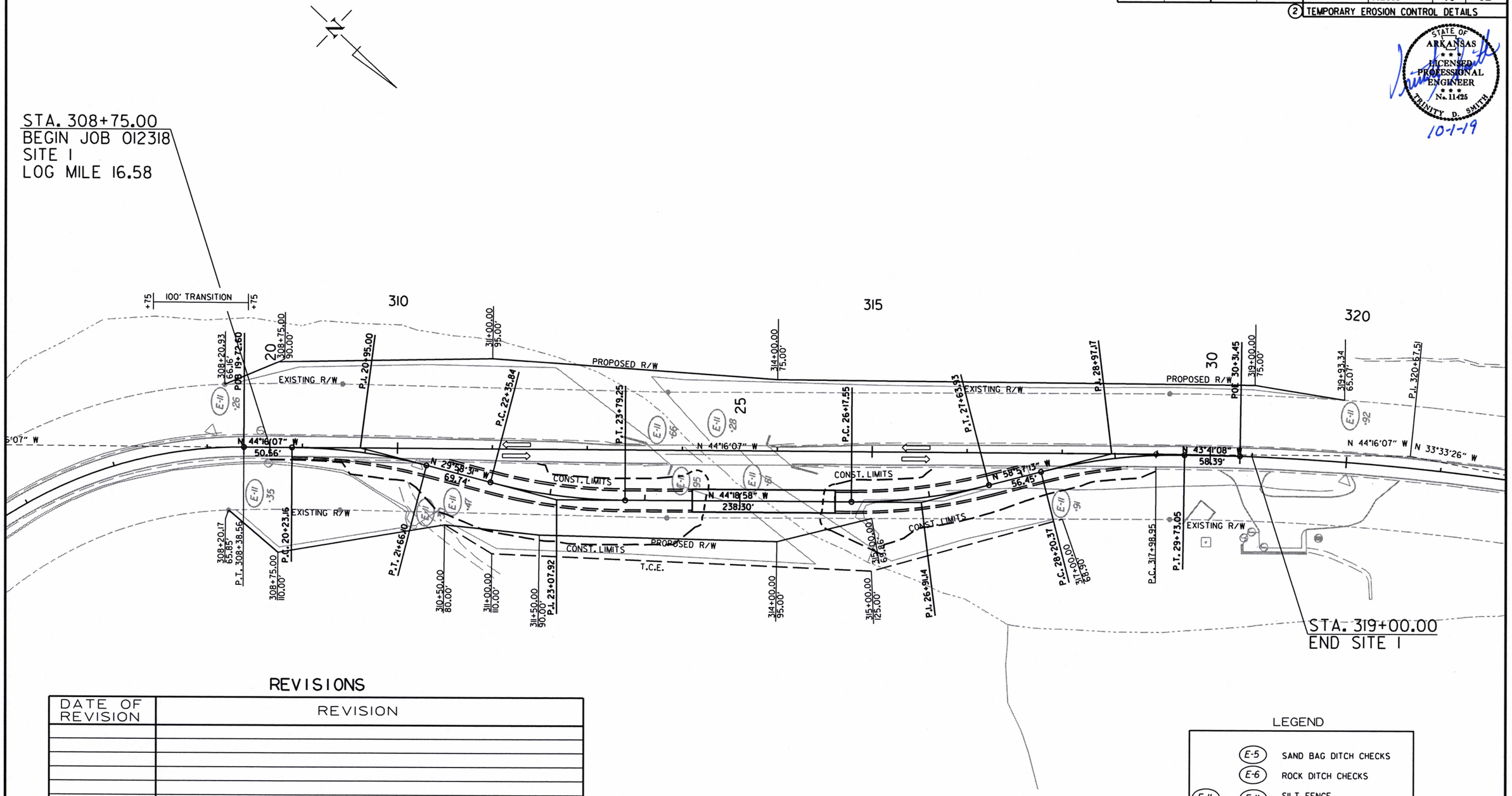

REVISIONS

DATE OF REVISION	REVISION

LEGEND

- E-5 SAND BAG DITCH CHECKS
- E-6 ROCK DITCH CHECKS
- E-11 — E-11 SILT FENCE

NOTE: PERIMETER CONTROLS SHALL BE PLACED AS CLEARING AND GRUBBING OPERATIONS ARE STARTED. MAINTAIN ALL EROSION CONTROL DEVICES UNTIL THE END OF THE JOB, UNLESS OTHERWISE SPECIFIED.

SITE I
STAGE I
TEMPORARY EROSION CONTROL DETAILS

8/30/2019

R012318.DGN

DATE REVISED	DATE FILMED	DATE REVISED	DATE FILMED	FED.RD. DIST.NO.	STATE	FED.AID PROJ.NO.	SHEET NO.	TOTAL SHEETS
				6	ARK.			
				JOB NO.		012318	17	92

(2) TEMPORARY EROSION CONTROL DETAILS

STATE OF ARKANSAS
LICENSED PROFESSIONAL ENGINEER
No. 11425
TRINITY D. SMITH
10-1-19

REVISIONS

DATE OF REVISION	REVISION

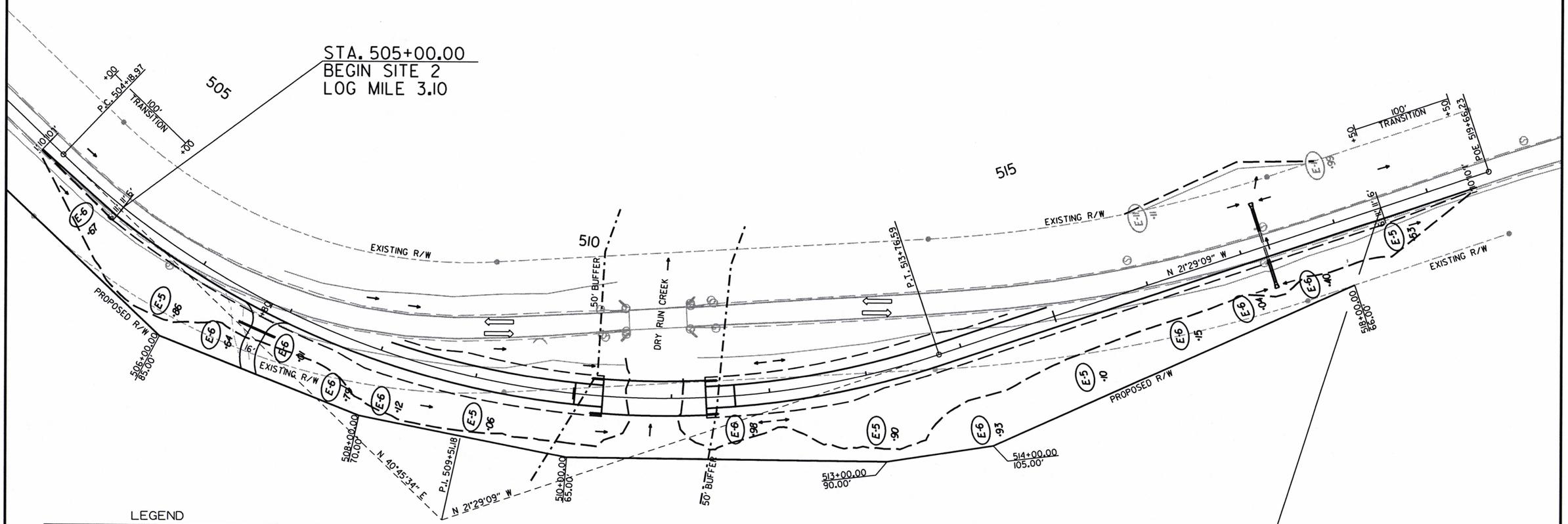

LEGEND

E-5	SAND BAG DITCH CHECKS
E-6	ROCK DITCH CHECKS
E-11	SILT FENCE

NOTE: PERIMETER CONTROLS SHALL BE PLACED AS CLEARING AND GRUBBING OPERATIONS ARE STARTED. MAINTAIN ALL EROSION CONTROL DEVICES UNTIL THE END OF THE JOB, UNLESS OTHERWISE SPECIFIED.

8/30/2019

R012318.DGN

SITE 2
STAGE I
TEMPORARY EROSION CONTROL DETAILS

DATE REVISED	DATE FILMED	DATE REVISED	DATE FILMED	FED.RD. DIST.NO.	STATE	FED.AID PROJ.NO.	SHEET NO.	TOTAL SHEETS
				6	ARK.			
				JOB NO.		012318	18	92

(2) TEMPORARY EROSION CONTROL DETAILS

STATE OF ARKANSAS
LICENSED PROFESSIONAL ENGINEER
No. 11425
TRINITY D. SMITH
10-1-19

STA. 308+75.00
BEGIN JOB 012318
SITE 1
LOG MILE 16.58

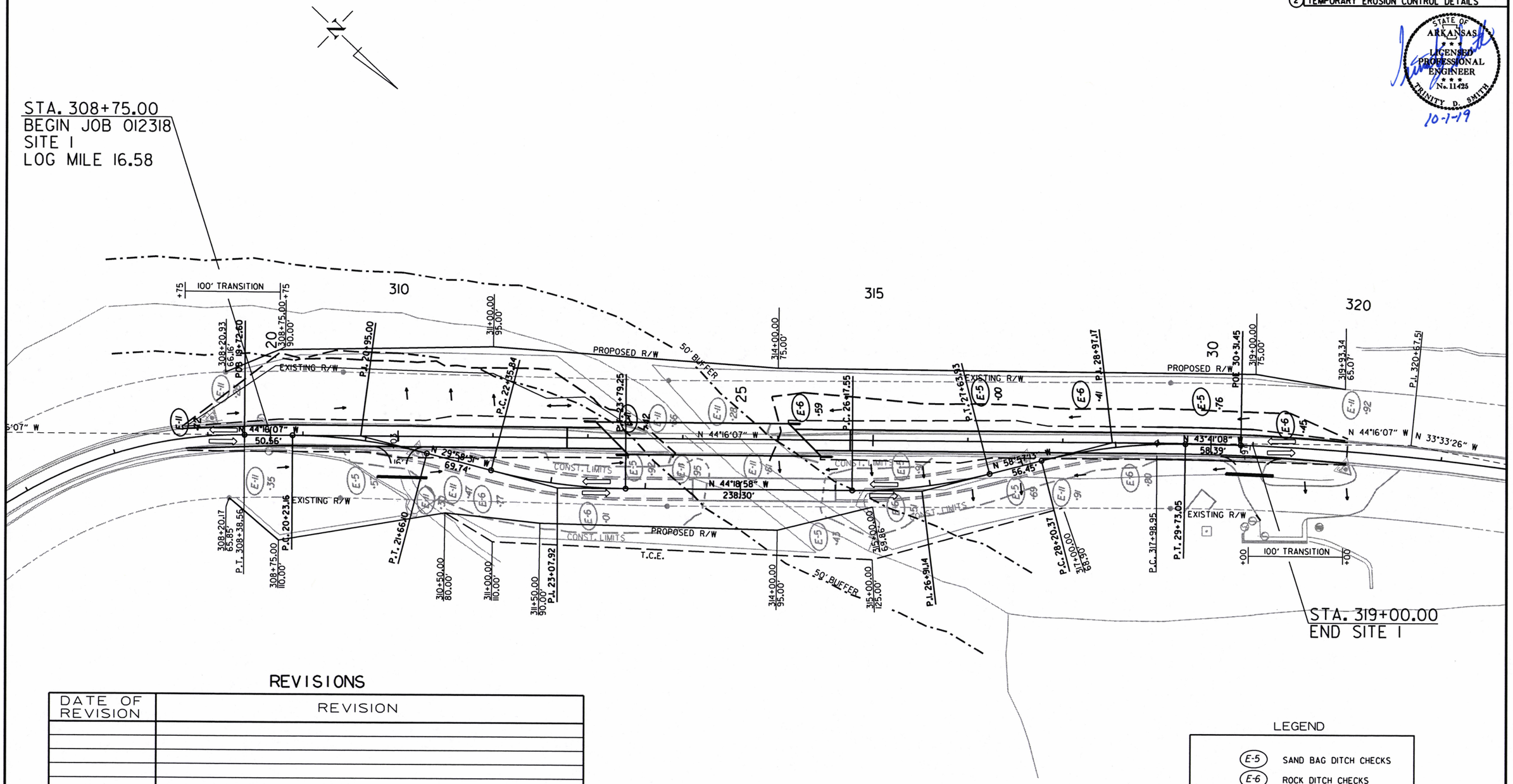

REVISIONS

DATE OF REVISION	REVISION

LEGEND

- E-5 SAND BAG DITCH CHECKS
- E-6 ROCK DITCH CHECKS
- E-11 — E-11 SILT FENCE

NOTE: PERIMETER CONTROLS SHALL BE PLACED AS CLEARING AND GRUBBING OPERATIONS ARE STARTED. MAINTAIN ALL EROSION CONTROL DEVICES UNTIL THE END OF THE JOB, UNLESS OTHERWISE SPECIFIED.

SITE 1
STAGE 2
TEMPORARY EROSION CONTROL DETAILS

8/30/2019

R012318.DGN

DATE REVISED	DATE FILMED	DATE REVISED	DATE FILMED	FED.RD. DIST.NO.	STATE	FED.AID PROJ.NO.	SHEET NO.	TOTAL SHEETS
				6	ARK.			
				JOB NO.		012318	19	92

(2) TEMPORARY EROSION CONTROL DETAILS

STATE OF ARKANSAS
LICENSED PROFESSIONAL ENGINEER
No. 11425
TRINITY D. SMITH
10-1-19

REVISIONS

DATE OF REVISION	REVISION

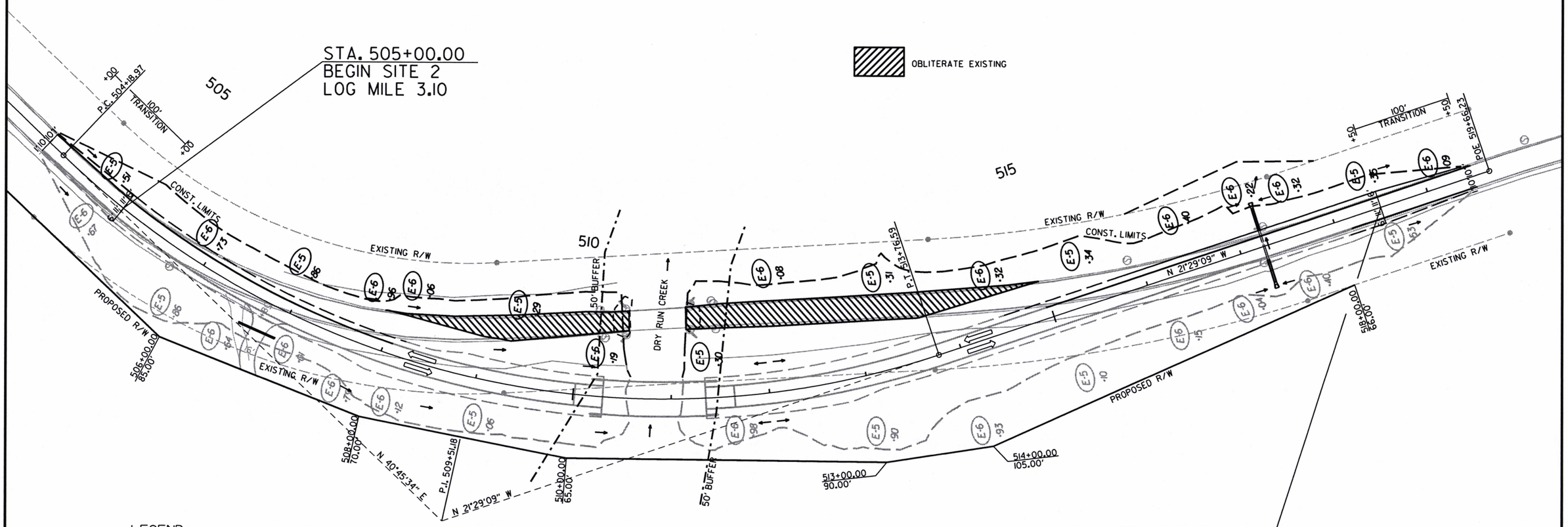

OBLITERATE EXISTING

LEGEND

E-5 SAND BAG DITCH CHECKS

E-6 ROCK DITCH CHECKS

NOTE: PERIMETER CONTROLS SHALL BE PLACED AS CLEARING AND GRUBBING OPERATIONS ARE STARTED. MAINTAIN ALL EROSION CONTROL DEVICES UNTIL THE END OF THE JOB, UNLESS OTHERWISE SPECIFIED.

8/30/2019

R012318.DGN

SITE 2
STAGE 2
TEMPORARY EROSION CONTROL DETAILS

DATE REVISED	DATE FILMED	DATE REVISED	DATE FILMED	FED.RD. DIST.NO.	STATE	FED.AID PROJ.NO.	SHEET NO.	TOTAL SHEETS
				6	ARK.			
				JOB NO.		012318	20	92

(2) TEMPORARY EROSION CONTROL DETAILS

STATE OF ARKANSAS
LICENSED PROFESSIONAL ENGINEER
No. 11425
TRINITY D. SMITH
10-1-19

STA. 308+75.00
BEGIN JOB 012318
SITE 1
LOG MILE 16.58

OBLITERATE DETOUR

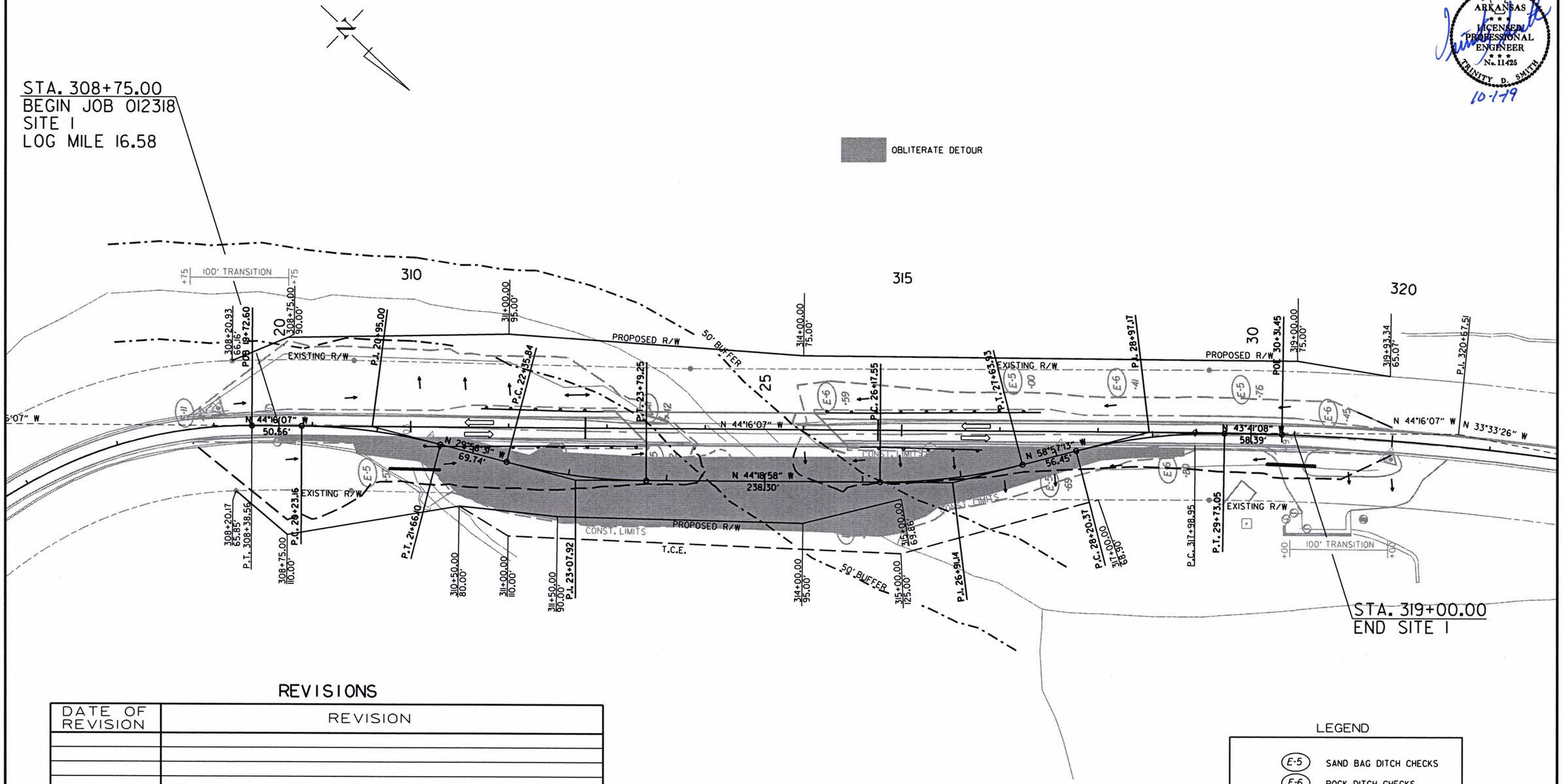

REVISIONS

DATE OF REVISION	REVISION

LEGEND

E-5	SAND BAG DITCH CHECKS
E-6	ROCK DITCH CHECKS
E-11 — E-11	SILT FENCE

NOTE: PERIMETER CONTROLS SHALL BE PLACED AS CLEARING AND GRUBBING OPERATIONS ARE STARTED. MAINTAIN ALL EROSION CONTROL DEVICES UNTIL THE END OF THE JOB, UNLESS OTHERWISE SPECIFIED.

SITE 1
STAGE 3
TEMPORARY EROSION CONTROL DETAILS

8/30/2019

R012318.DGN

DATE REVISED	DATE FILMED	DATE REVISED	DATE FILMED	FED.RD. DIST.NO.	STATE	FED.AID PROJ.NO.	SHEET NO.	TOTAL SHEETS
				6	ARK.			
				JOB NO.		012318	21	92

(2) TEMPORARY EROSION CONTROL DETAILS

STATE OF ARKANSAS
LICENSED PROFESSIONAL ENGINEER
No. 11425
TRINITY D. SMITH
10-1-19

REVISIONS

DATE OF REVISION	REVISION

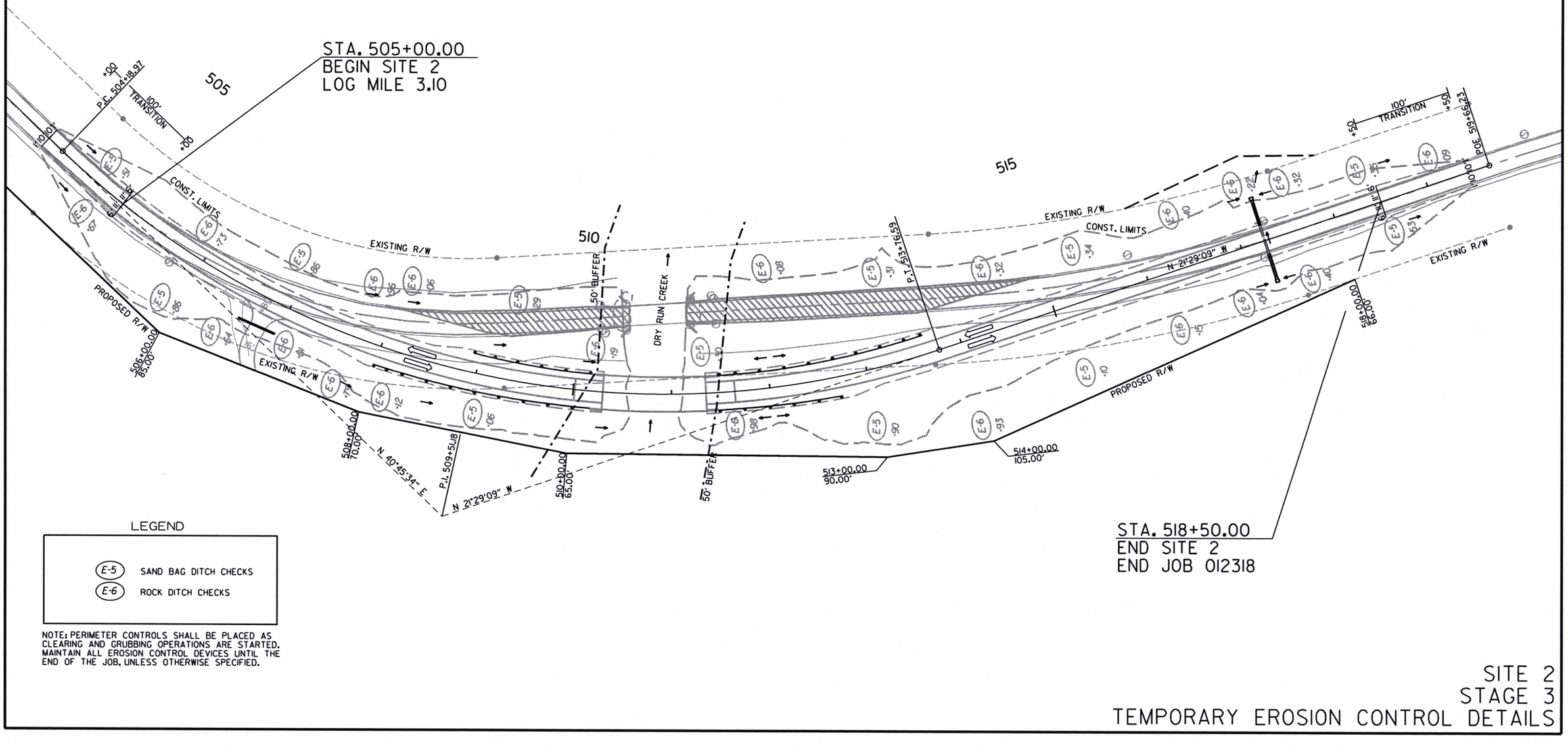

LEGEND

E-5 SAND BAG DITCH CHECKS

E-6 ROCK DITCH CHECKS

NOTE: PERIMETER CONTROLS SHALL BE PLACED AS CLEARING AND GRUBBING OPERATIONS ARE STARTED. MAINTAIN ALL EROSION CONTROL DEVICES UNTIL THE END OF THE JOB, UNLESS OTHERWISE SPECIFIED.

8/30/2019

R012318.DGN

SITE 2
STAGE 3
TEMPORARY EROSION CONTROL DETAILS

DATE REVISED	DATE FILMED	DATE REVISED	DATE FILMED	FED.RD. DIST.NO.	STATE	FED.AID PROJ.NO.	SHEET NO.	TOTAL SHEETS
				6	ARK.			
				JOB NO.		012318	22	92

(2) MAINTENANCE OF TRAFFIC DETAILS

ADVANCE WARNING (ALL STAGES)

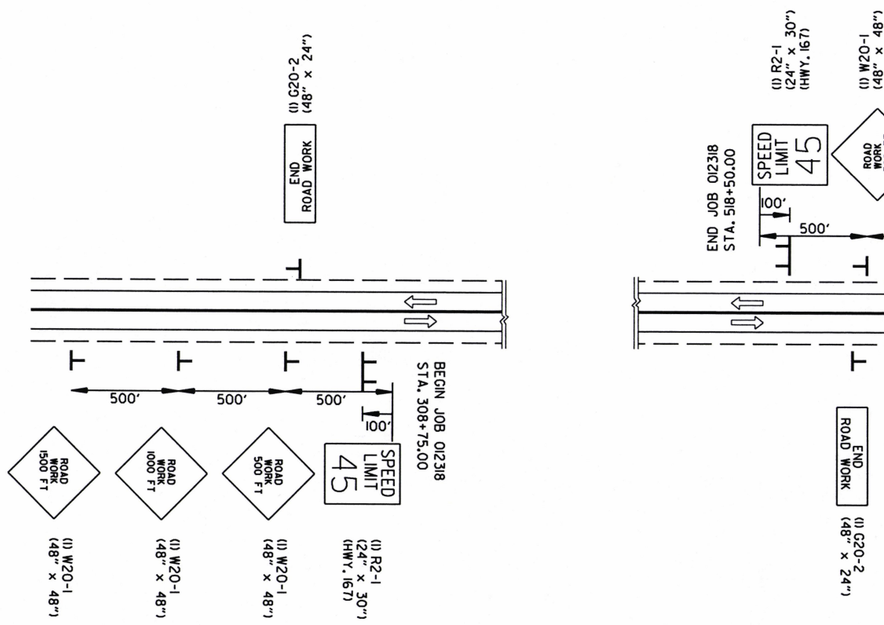

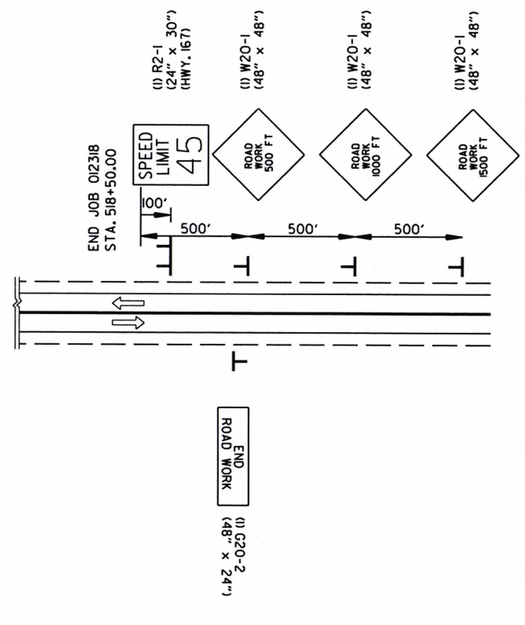

RIGHT SHOULDER CLOSED	(2) W21-5a (36" X 36")	ALL STAGES TO BE USED IF AND WHERE DIRECTED BY THE ENGINEER
DO NOT PASS	(2) R4-1 (24" X 30")	ALL STAGES TO BE USED IF AND WHERE DIRECTED BY THE ENGINEER
BUMP	(2) W8-1 (30" X 30")	ALL STAGES TO BE USED IF AND WHERE DIRECTED BY THE ENGINEER

STAGE I CONSTRUCTION SEQUENCE

INSTALL ADVANCE WARNING SIGNS, END ROAD WORK SIGNS, AND INSTALL ROAD WORK AHEAD (W20-1) SIGN AS SHOWN ON THE ADVANCE WARNING MAINTENANCE OF TRAFFIC DETAIL.

USE VERTICAL PANELS AND TRAFFIC DRUMS SPACED 45' ON CENTER TO DELINEATE THE WORK ZONE. USE TRAFFIC DRUMS TO DELINEATE DRIVEWAYS.

SITE 1: CONSTRUCT DETOUR FROM STA. 20+00.00 TO STA. 29+31.90 AS SHOWN IN THE STAGE I MAINTENANCE OF TRAFFIC DETAILS.

SITE 2: CONSTRUCT STRUCTURES AND EMBANKMENT RT. FROM STA. 505+00.00 TO STA. 518+50.00 AS SHOWN IN STAGE I OF THE MAINTENANCE OF TRAFFIC DETAILS.

STAGE 2 CONSTRUCTION SEQUENCE

MAINTAIN ADVANCE WARNING SIGNS AS SHOWN ON THE ADVANCE WARNING MAINTENANCE OF TRAFFIC DETAIL.

USE VERTICAL PANELS AND TRAFFIC DRUMS SPACED 45' ON CENTER TO DELINEATE THE WORK ZONE. USE TRAFFIC DRUMS TO DELINEATE DRIVEWAYS.

SHIFT TRAFFIC ONTO THE DETOUR AND NEW ROADWAY AS SHOWN IN THE STAGE 2 MAINTENANCE OF TRAFFIC DETAILS.

REMOVE EXISTING BRIDGE STRUCTURES.

SITE 1: CONSTRUCT STRUCTURE AND EMBANKMENT ON LT. FROM STA. 308+75.00 TO STA. 319+00.00 AS SHOWN IN THE STAGE 2 MAINTENANCE OF TRAFFIC DETAILS.

SITE 2: OBLITERATE EXISTING ROADWAY.

STAGE 3 CONSTRUCTION SEQUENCE

MAINTAIN ADVANCE WARNING SIGNS AS SHOWN ON THE ADVANCE WARNING MAINTENANCE OF TRAFFIC DETAIL.

USE VERTICAL PANELS AND TRAFFIC DRUMS SPACED 45' ON CENTER TO DELINEATE THE WORK ZONE. USE TRAFFIC DRUMS TO DELINEATE DRIVEWAYS.

SITE 1: SHIFT TRAFFIC ONTO THE MAIN LANES AS SHOWN IN THE STAGE 3 MAINTENANCE OF TRAFFIC DETAILS.

SITE 1: OBLITERATE DETOUR.

SITE 1 & 2: CONSTRUCT FINAL PORTIONS OF EMBANKMENT, STRUCTURES, AND GUARDRAIL AS SHOWN IN THE STAGE 3 MAINTENANCE OF TRAFFIC DETAILS.

STAGE I QUANTITIES

SIGNS = 234.5 SQ. FT.
TRAFFIC DRUMS = 19 EACH
VERTICAL PANELS = 37 EACH
TYPE III BARRICADE-RT. = 32 LIN. FT.
TYPE III BARRICADE-LT. = 32 LIN. FT.

STAGE 2 QUANTITIES

SIGNS = 266.5 SQ. FT.
TRAFFIC DRUMS = 31 EACH
VERTICAL PANELS = 17 EACH
TYPE III BARRICADE-RT. = 64 LIN. FT.
TYPE III BARRICADE-LT. = 64 LIN. FT.

STAGE 3 QUANTITIES

SIGNS = 234.5 SQ. FT.
TRAFFIC DRUMS = 40 EACH
TYPE III BARRICADE-RT. = 64 LIN. FT.
TYPE III BARRICADE-LT. = 64 LIN. FT.

STATE OF ARKANSAS
LICENSED PROFESSIONAL ENGINEER
No. 11425
TRINITY D. SMITH
10-3-19

9/3/2019

R012318.DGN

ADVANCE WARNING MAINTENANCE OF TRAFFIC DETAILS

DATE REVISED	DATE FILMED	DATE REVISED	DATE FILMED	FED.RD. DIST.NO.	STATE	FED.AID PROJ.NO.	SHEET NO.	TOTAL SHEETS
				6	ARK.			
				JOB NO.		012318	23	92

(2) MAINTENANCE OF TRAFFIC DETAILS

STATE OF ARKANSAS
LICENSED PROFESSIONAL ENGINEER
No. 11425
TRINITY D. SMITH
10-1-19

STA. 308+75.00
BEGIN JOB 012318
SITE I
LOG MILE 16.58

(4) VERTICAL PANELS SPACED 45' ON CENTER

ROAD CLOSED
(1) R11-2 (48" X 30")
8' BARR. TYP. III RT.
8' BARR. TYP. III RT.

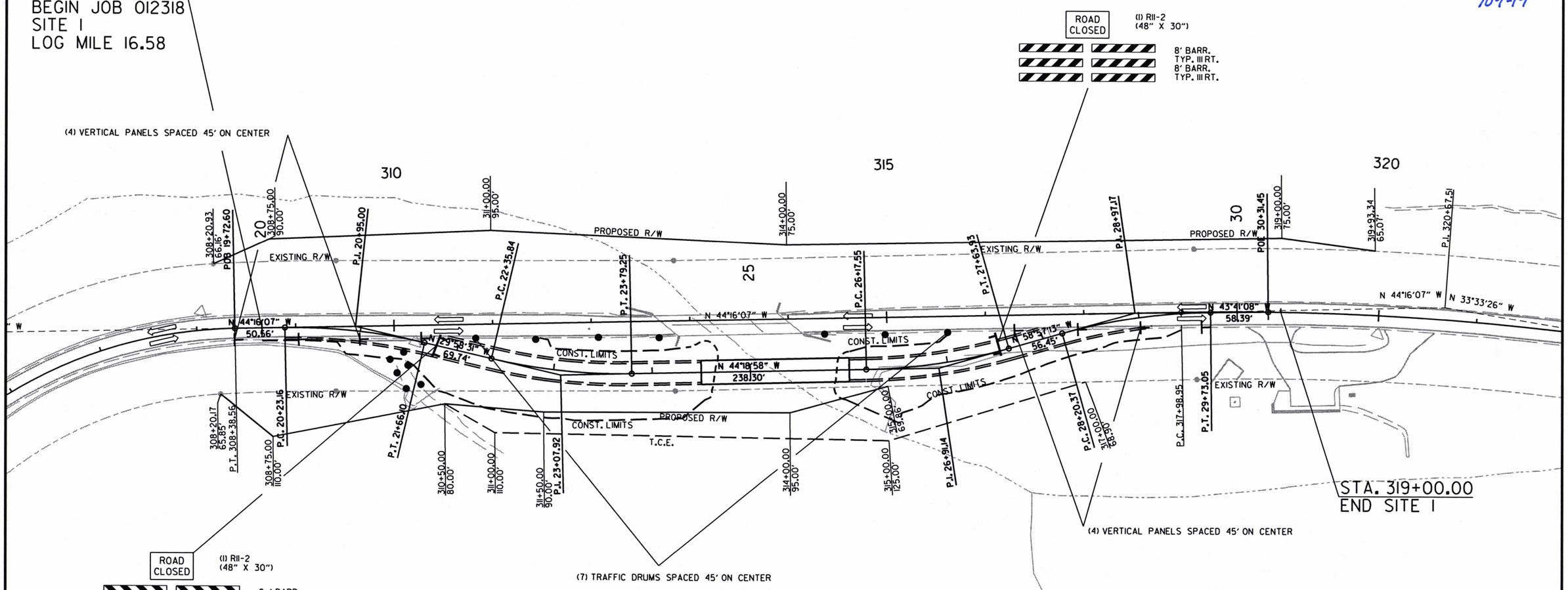

ROAD CLOSED
(1) R11-2 (48" X 30")
8 ' BARR. TYP. III LT.
8 ' BARR. TYP. III LT.

(6) TRAFFIC DRUMS AT DRIVEWAY TURNOUTS

(7) TRAFFIC DRUMS SPACED 45' ON CENTER

STA. 319+00.00
END SITE I

(4) VERTICAL PANELS SPACED 45' ON CENTER

STAGE I CONSTRUCTION SEQUENCE

INSTALL ADVANCE WARNING SIGNS, END ROAD WORK SIGNS, AND INSTALL ROAD WORK AHEAD (W20-1) SIGN AS SHOWN ON THE ADVANCE WARNING MAINTENANCE OF TRAFFIC DETAIL.

USE VERTICAL PANELS AND TRAFFIC DRUMS SPACED 45' ON CENTER TO DELINEATE THE WORK ZONE. USE TRAFFIC DRUMS TO DELINEATE DRIVEWAYS.

SITE I: CONSTRUCT DETOUR FROM STA. 20+00.00 TO STA. 29+31.90 AS SHOWN IN THE STAGE I MAINTENANCE OF TRAFFIC DETAILS.

SITE I
STAGE I
MAINTENANCE OF TRAFFIC DETAILS

9/3/2019

R012318.DGN

DATE REVISED	DATE FILMED	DATE REVISED	DATE FILMED	FED.RD. DIST.NO.	STATE	FED.AID PROJ.NO.	SHEET NO.	TOTAL SHEETS
				6	ARK.			
				JOB NO.		012318	24	92

(2) MAINTENANCE OF TRAFFIC DETAILS

STATE OF ARKANSAS
LICENSED PROFESSIONAL ENGINEER
No. 11425
TRINITY D. SMITH
10-1-19

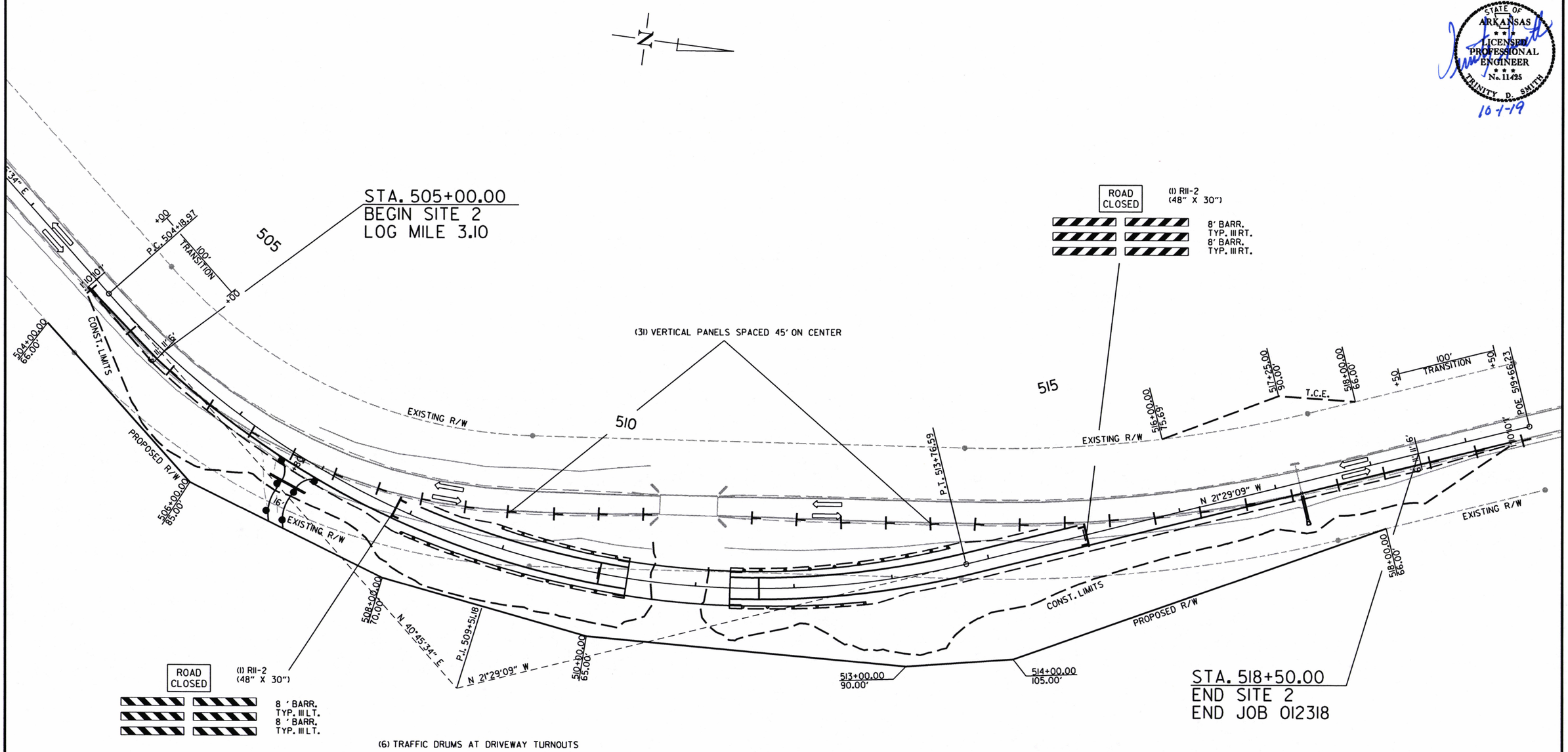

STAGE I CONSTRUCTION SEQUENCE

INSTALL ADVANCE WARNING SIGNS, END ROAD WORK SIGNS, AND INSTALL ROAD WORK AHEAD (W20-1) SIGN AS SHOWN ON THE ADVANCE WARNING MAINTENANCE OF TRAFFIC DETAIL.

USE VERTICAL PANELS AND TRAFFIC DRUMS SPACED 45' ON CENTER TO DELINEATE THE WORK ZONE. USE TRAFFIC DRUMS TO DELINEATE DRIVEWAYS.

SITE 2: CONSTRUCT STRUCTURES AND EMBANKMENT RT. FROM STA. 505+00.00 TO STA. 518+50.00 AS SHOWN IN STAGE I OF THE MAINTENANCE OF TRAFFIC DETAILS.

SITE 2
STAGE I
MAINTENANCE OF TRAFFIC DETAILS

9/3/2019

R012318.DGN

DATE REVISED	DATE FILMED	DATE REVISED	DATE FILMED	FED.RD. DIST.NO.	STATE	FED.AID PROJ.NO.	SHEET NO.	TOTAL SHEETS
				6	ARK.			
				JOB NO.		012318	25	92

(2) MAINTENANCE OF TRAFFIC DETAILS

STATE OF ARKANSAS
LICENSED PROFESSIONAL ENGINEER
No. 11425
TRINITY D. SMITH
10-3-19

STA. 308+75.00
BEGIN JOB 012318
SITE 1
LOG MILE 16.58

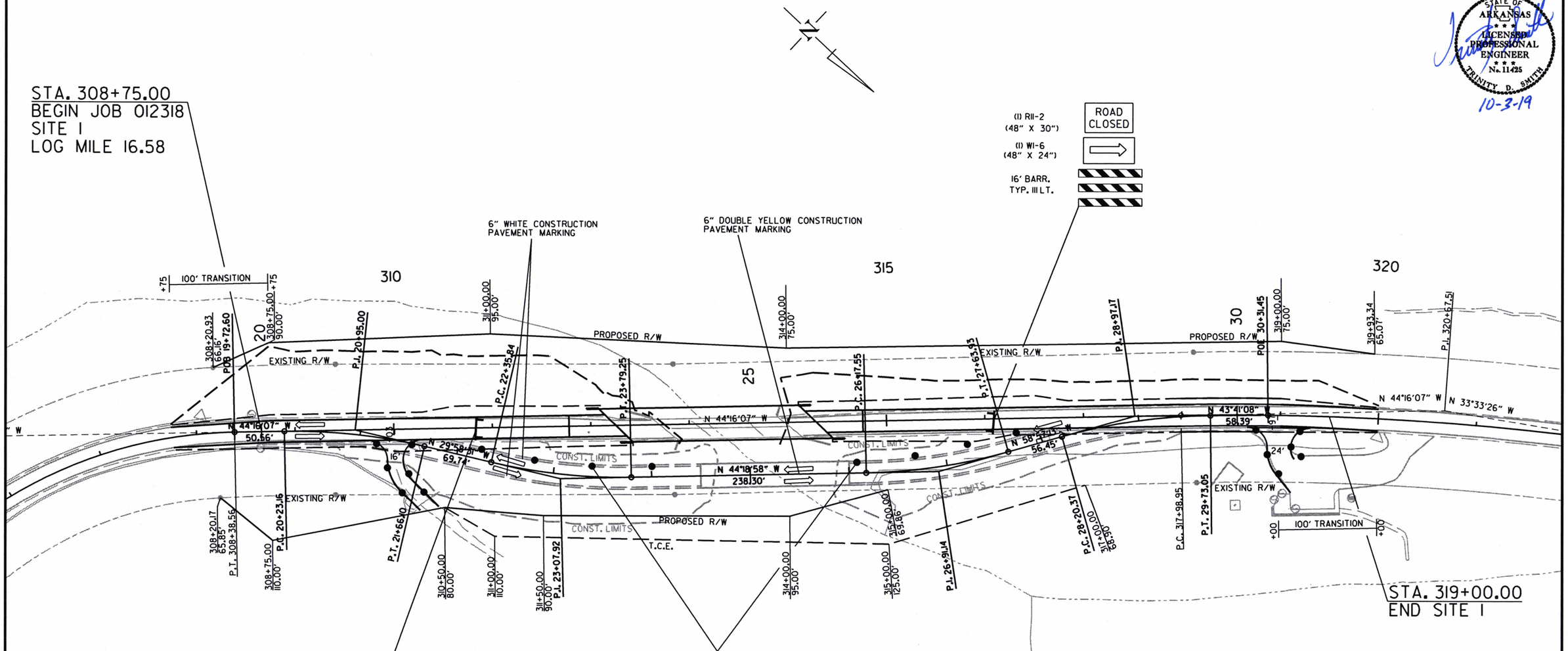

STA. 319+00.00
END SITE 1

(8) TRAFFIC DRUMS SPACED 45' ON CENTER

ROAD CLOSED
(1) RII-2 (48" X 30")
(1) WI-6 (48" X 24")
16' BARR. TYP. III RT.

(6) TRAFFIC DRUMS AT DRIVEWAY TURNOUTS

STAGE 2: CONSTRUCTION SEQUENCE

MAINTAIN ADVANCE WARNING SIGNS AS SHOWN ON THE ADVANCE WARNING MAINTENANCE OF TRAFFIC DETAIL.

USE VERTICAL PANELS AND TRAFFIC DRUMS SPACED 45' ON CENTER TO DELINEATE THE WORK ZONE. USE TRAFFIC DRUMS TO DELINEATE DRIVEWAYS.

SHIFT TRAFFIC ONTO THE DETOUR AS SHOWN IN THE STAGE 2 MAINTENANCE OF TRAFFIC DETAILS.

REMOVE EXISTING BRIDGE STRUCTURE.

CONSTRUCT STRUCTURES AND EMBANKMENT ON LT. FROM STA. 308+75.00 TO STA. 319+00.00 AS SHOWN IN THE STAGE 2 MAINTENANCE OF TRAFFIC DETAILS.

SITE 1
STAGE 2
MAINTENANCE OF TRAFFIC DETAILS

9/3/2019

R012318.DGN

DATE REVISED	DATE FILMED	DATE REVISED	DATE FILMED

FED.RD. DIST.NO.	STATE	FED.AID PROJ.NO.	SHEET NO.	TOTAL SHEETS
6	ARK.			
JOB NO.		012318	26	92

(2) MAINTENANCE OF TRAFFIC DETAILS

STATE OF ARKANSAS
LICENSED PROFESSIONAL ENGINEER
No. 11425
TRINITY D. SMITH
10-3-19

N

OBLITERATE EXISTING

STA. 505+00.00
BEGIN SITE 2
LOG MILE 3.10

(11) TRAFFIC DRUMS SPACED 45' ON CENTER

(9) VERTICAL PANELS SPACED 45' ON CENTER

(8) VERTICAL PANELS SPACED 45' ON CENTER

(6) TRAFFIC DRUMS AT DRIVEWAY TURNOUTS

(1) RII-2 (48" X 30")
(1) WI-6 (48" X 24")
16' BARR. TYP. III LT.

(1) RII-2 (48" X 30")
(1) WI-6 (48" X 24")
16' BARR. TYP. III RT.

ROAD CLOSED

505
510
515

504+00.00 66.00'
505+00.00 85.00'
506+00.00 85.00'
508+00.00 70.00'
510+00.00 65.00'
513+00.00 90.00'
514+00.00 105.00'
516+00.00 75.69'
517+25.00 90.00'
518+00.00 99.69'
519+66.23 POE

+00 P.C. 504+18.97
100' TRANSITION
+50
100' TRANSITION
+50
T.C.E.

P.I. 509+51.18
N 40°45'34" E
N 21°29'09" W
P.T. 513+76.59
N 21°29'09" W

EXISTING R/W
PROPOSED R/W
CONST. LIMITS

6" WHITE CONSTRUCTION PAVEMENT MARKING

6" DOUBLE YELLOW CONSTRUCTION PAVEMENT MARKING

STA. 518+50.00
END SITE 2
END JOB 012318

STAGE 2 CONSTRUCTION SEQUENCE

MAINTAIN ADVANCE WARNING SIGNS AS SHOWN ON THE ADVANCE WARNING MAINTENANCE OF TRAFFIC DETAIL.

USE VERTICAL PANELS AND TRAFFIC DRUMS SPACED 45' ON CENTER TO DELINEATE THE WORK ZONE. USE TRAFFIC DRUMS TO DELINEATE DRIVEWAYS.

SHIFT TRAFFIC ONTO NEW ROADWAY AS SHOWN IN STAGE 2 OF THE MAINTENANCE OF TRAFFIC DETAILS.

REMOVE EXISTING BRIDGE STRUCTURE.

OBLITERATE EXISTING ROADWAY.

SITE 2
STAGE 2
MAINTENANCE OF TRAFFIC DETAILS

9/3/2019

R012318.DGN

DATE REVISED	DATE FILMED	DATE REVISED	DATE FILMED	FED.RD. DIST.NO.	STATE	FED.AID PROJ.NO.	SHEET NO.	TOTAL SHEETS
				6	ARK.			
				JOB NO.		012318	27	92

(2) MAINTENANCE OF TRAFFIC DETAILS

STATE OF ARKANSAS
LICENSED PROFESSIONAL ENGINEER
No. 11425
TRINITY D. SMITH
10-3-19

STA. 308+75.00
BEGIN JOB 012318
SITE 1
LOG MILE 16.58

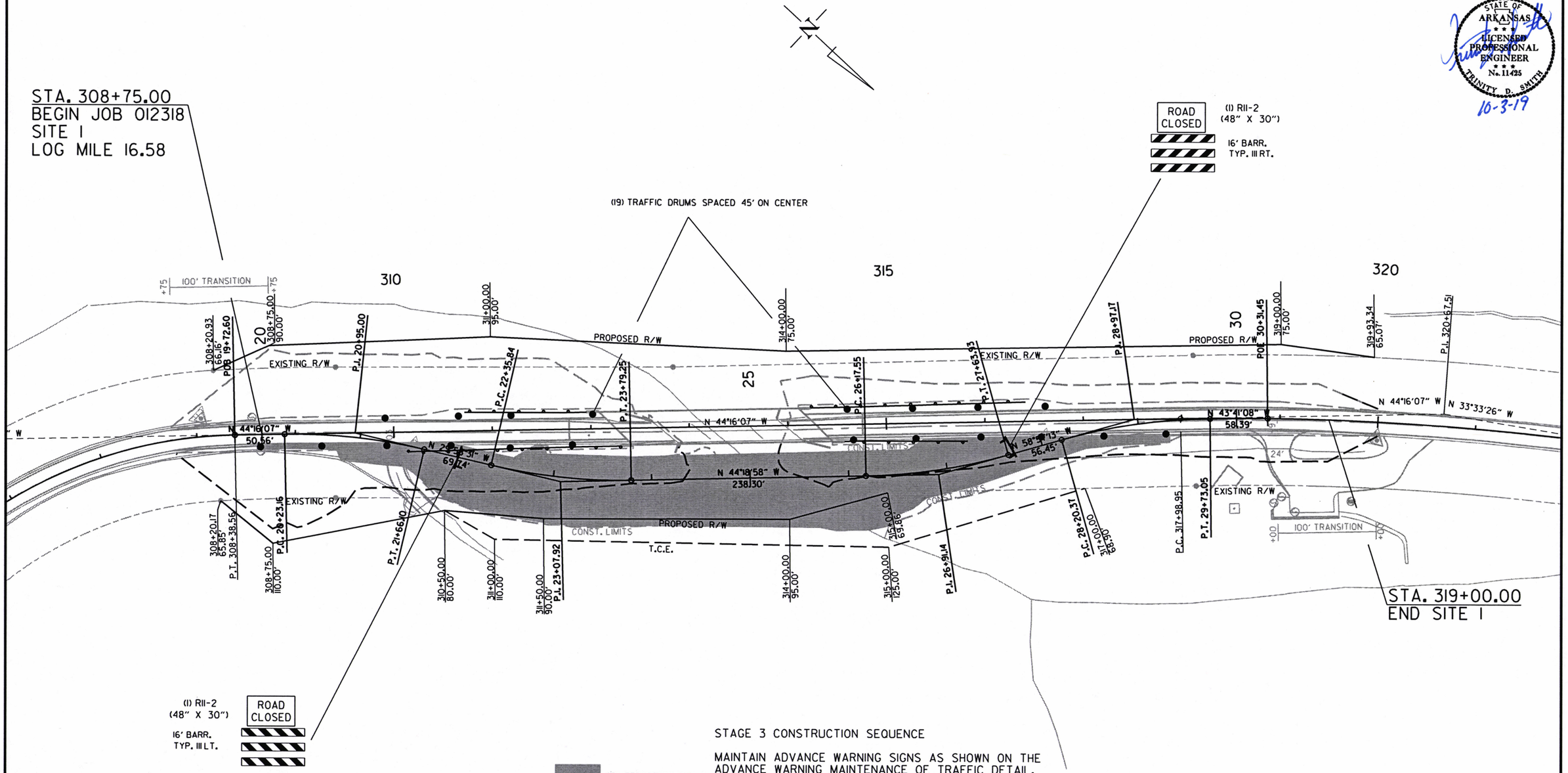

STAGE 3 CONSTRUCTION SEQUENCE

MAINTAIN ADVANCE WARNING SIGNS AS SHOWN ON THE ADVANCE WARNING MAINTENANCE OF TRAFFIC DETAIL.

USE VERTICAL PANELS AND TRAFFIC DRUMS SPACED 45' ON CENTER TO DELINEATE THE WORK ZONE. USE TRAFFIC DRUMS TO DELINEATE DRIVEWAYS.

SHIFT TRAFFIC ONTO THE MAIN LANES AS SHOWN IN THE STAGE 3 MAINTENANCE OF TRAFFIC DETAILS.

OBLITERATE DETOUR AND CONSTRUCT FINAL PORTIONS OF EMBANKMENT, STRUCTURES, AND GUARDRAIL AS SHOWN IN THE STAGE 3 MAINTENANCE OF TRAFFIC DETAILS.

SITE 1
STAGE 3
MAINTENANCE OF TRAFFIC DETAILS

9/3/2019

R012318.DGN

DATE REVISED	DATE FILMED	DATE REVISED	DATE FILMED	FED.RD. DIST.NO.	STATE	FED.AID PROJ.NO.	SHEET NO.	TOTAL SHEETS
				6	ARK.			
				JOB NO.		012318	28	92

(2) MAINTENANCE OF TRAFFIC DETAILS

STATE OF ARKANSAS
LICENSED PROFESSIONAL ENGINEER
No. 11425
TRINITY D. SMITH
10-3-19

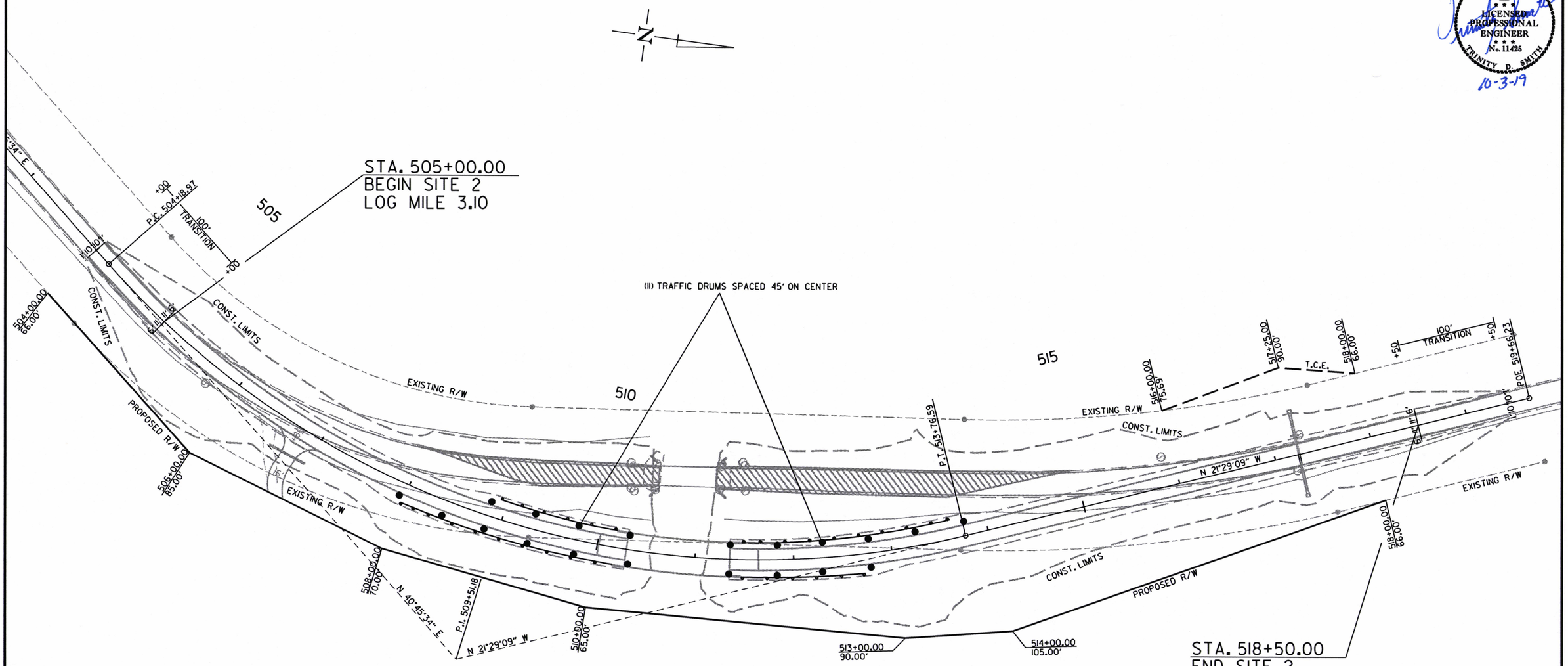

STA. 518+50.00
END SITE 2
END JOB 012318

STAGE 3 CONSTRUCTION SEQUENCE

MAINTAIN ADVANCE WARNING SIGNS AS SHOWN ON THE ADVANCE WARNING MAINTENANCE OF TRAFFIC DETAIL.

USE VERTICAL PANELS AND TRAFFIC DRUMS SPACED 45' ON CENTER TO DELINEATE THE WORK ZONE. USE TRAFFIC DRUMS TO DELINEATE DRIVEWAYS.

CONSTRUCT FINAL PORTIONS OF EMBANKMENT, STRUCTURES, AND GUARDRAIL AS SHOWN IN THE STAGE 3 MAINTENANCE OF TRAFFIC DETAILS.

9/3/2019

R012318.DGN

SITE 2
STAGE 3
MAINTENANCE OF TRAFFIC DETAILS

DATE REVISED	DATE FILMED	DATE REVISED	DATE FILMED	FED.RD. DIST.NO.	STATE	FED.AID PROJ.NO.	SHEET NO.	TOTAL SHEETS
				6	ARK.			
				JOB NO.		012318	29	92

(2) PERMANENT PAVEMENT MARKING DETAILS

STATE OF ARKANSAS
LICENSED PROFESSIONAL ENGINEER
No. 11425
TRINITY D. SMITH
10-1-19

STA. 308+75.00
BEGIN JOB 012318
SITE I
LOG MILE 16.58

PERMANENT PAVEMENT MARKINGS

REFLECTORIZED PAINT PAVEMENT MARKINGS WHITE (6") = 2450 LIN. FT.
REFLECTORIZED PAINT PAVEMENT MARKINGS YELLOW (6") = 2450 LIN. FT.
RAISED PAVEMENT MARKERS (TYPE II)(YELLOW/YELLOW)(80' O.C.) = 16 EACH

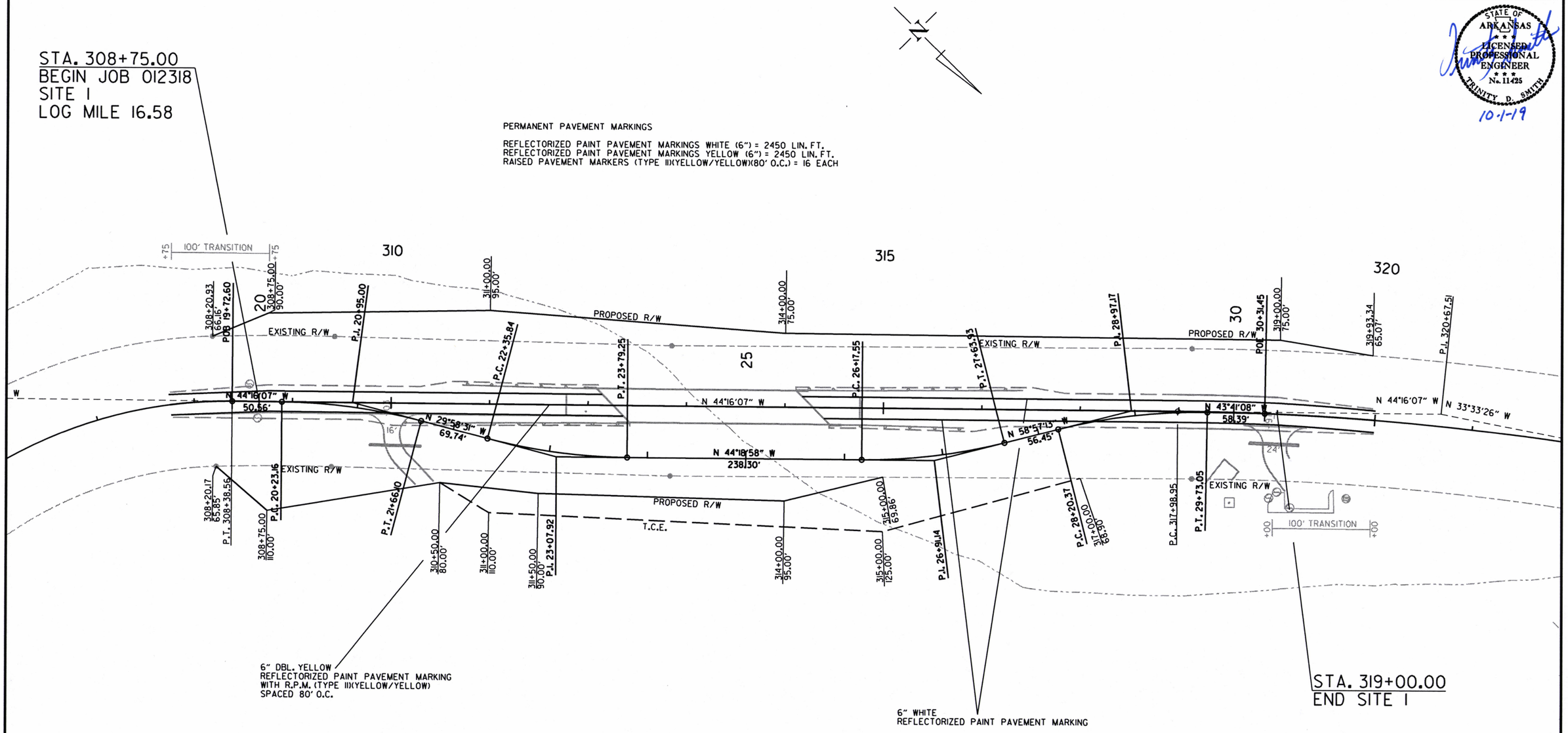

NOTE: THE 6" YELLOW STRIPING QUANTITY HAS BEEN ESTIMATED BASED ON A DOUBLE YELLOW CENTERLINE STRIPE FOR THE ENTIRE PROJECT. THE PROJECT MUST BE MARKED FOR PASSING/NO PASSING ZONES PRIOR TO THE PLACEMENT OF ANY FINAL STRIPING. CONTACT THE MAINTENANCE DIVISION AFTER THE FINAL LIFT OF SURFACE COURSE HAS BEEN PLACED TO SCHEDULE THE ZONING OF THE PROJECT.

9/3/2019

R012318.DGN

SITE I
PERMANENT PAVEMENT MARKING DETAILS

DATE REVISED	DATE FILMED	DATE REVISED	DATE FILMED	FED.RD. DIST.NO.	STATE	FED.AID PROJ.NO.	SHEET NO.	TOTAL SHEETS
				6	ARK.			
				JOB NO.		012318	30	92

(2) PERMANENT PAVEMENT MARKING DETAILS

STATE OF ARKANSAS
LICENSED PROFESSIONAL ENGINEER
No. 11425
TRINITY D. SMITH
10-1-19

STA. 505+00.00
BEGIN SITE 2
LOG MILE 3.10

PERMANENT PAVEMENT MARKINGS

REFLECTORIZED PAINT PAVEMENT MARKINGS WHITE (6") = 3100 LIN. FT.
REFLECTORIZED PAINT PAVEMENT MARKINGS YELLOW (6") = 3100 LIN. FT.
RAISED PAVEMENT MARKERS (TYPE II)(YELLOW/YELLOW)(80' O.C.) = 20 EACH

6" DBL. YELLOW
REFLECTORIZED PAINT PAVEMENT MARKING
WITH R.P.M. (TYPE II)(YELLOW/YELLOW)
SPACED 80' O.C.

6" WHITE
REFLECTORIZED PAINT PAVEMENT MARKING

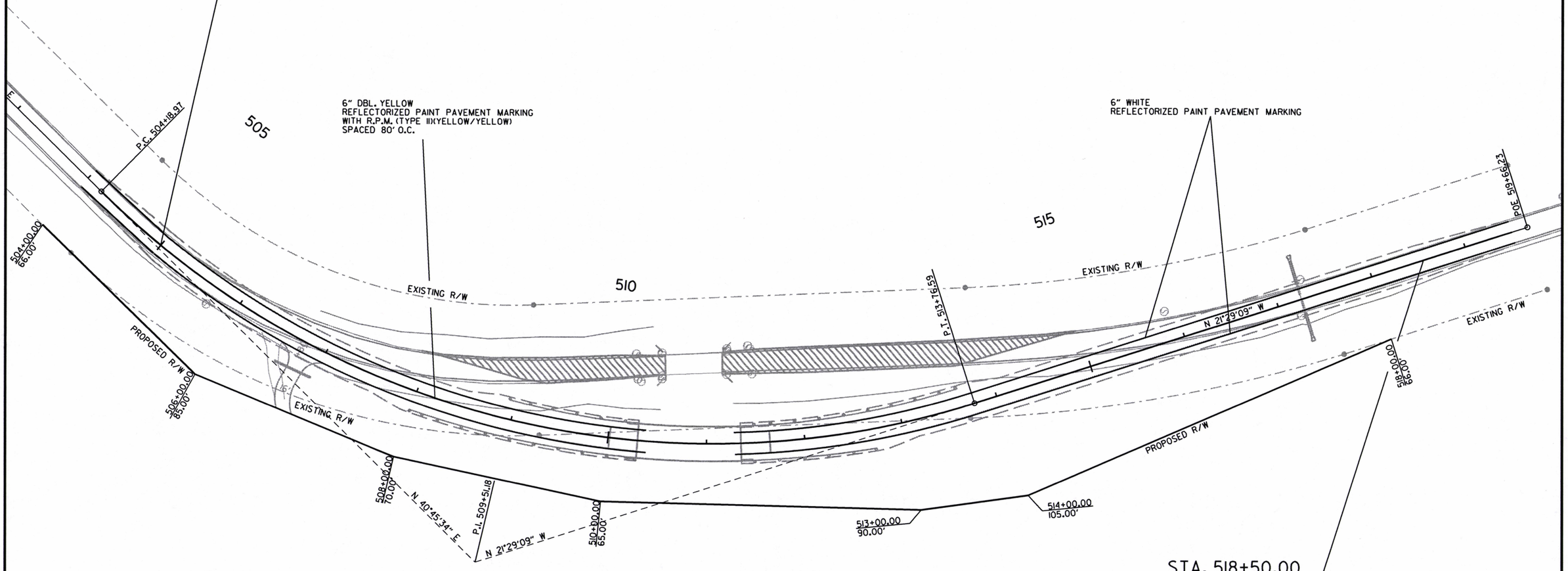

STA. 518+50.00
END SITE 2
END JOB 012318

NOTE: THE 6" YELLOW STRIPING QUANTITY HAS BEEN ESTIMATED BASED ON A DOUBLE YELLOW CENTERLINE STRIPE FOR THE ENTIRE PROJECT. THE PROJECT MUST BE MARKED FOR PASSING/NO PASSING ZONES PRIOR TO THE PLACEMENT OF ANY FINAL STRIPING. CONTACT THE MAINTENANCE DIVISION AFTER THE FINAL LIFT OF SURFACE COURSE HAS BEEN PLACED TO SCHEDULE THE ZONING OF THE PROJECT.

9/3/2019

R012318.DGN

SITE 2
PERMANENT PAVEMENT MARKING DETAILS

DATE REVISED	DATE FILMED	DATE REVISED	DATE FILMED	FED.RD. DIST.NO.	STATE	FED.AID PROJ.NO.	SHEET NO.	TOTAL SHEETS
				6	ARK.			
				JOB NO.		012318	31	92

(2) QUANTITIES

STATE OF ARKANSAS
LICENSED PROFESSIONAL ENGINEER
No. 11425
TRINITY D. SMITH
10-1-19

ADVANCE WARNING SIGNS AND DEVICES

SIGN NUMBER	DESCRIPTION	SIGN SIZE	STAGE 1	STAGE 2	STAGE 3	END OF JOB	MAXIMUM NUMBER REQUIRED	TOTAL SIGNS REQUIRED		VERTICAL PANELS	TRAFFIC DRUMS	BARRICADES (TYPE III)	
												RIGHT	LEFT
			LIN. FT. - EACH					NO.	SQ. FT.	EACH		LIN. FT.	
W20-1	ROAD WORK 1500 FT.	48"x48"	2	2	2		2	2	32.0				
W20-1	ROAD WORK 1000 FT.	48"x48"	2	2	2		2	2	32.0				
W20-1	ROAD WORK 500 FT.	48"x48"	2	2	2		2	2	32.0				
W20-1	ROAD WORK AHEAD	48"x48"	2	2	2		2	2	32.0				
G20-2	END ROAD WORK	48"x24"	2	2	2		2	2	16.0				
R11-2	ROAD CLOSED	48"x30"	4	4	4		4	4	40.0				
R2-1	SPEED LIMIT 45	24"x30"	2	2	2		2	2	10.0				
W1-6	LARGE ARROW	48"x24"		4			4	4	32.0				
R4-1	DO NOT PASS	24"x30"	2	2	2		2	2	10.0				
W21-5a	RIGHT SHOULDER CLOSED	36"x36"	2	2	2		2	2	18.0				
W8-1	BUMP	30"x30"	2	2	2		2	2	12.5				
	VERTICAL PANELS		31	17			31			31			
	TRAFFIC DRUMS		19	31	40		40				40		
	TYPE III BARRICADE-RT. (8')		4				4					32	
	TYPE III BARRICADE-LT. (8')		4				4						32
	TYPE III BARRICADE-RT. (16')			4	4		4					64	
	TYPE III BARRICADE-LT. (16')			4	4		4						64
TOTALS:									266.5	31	40	96	96

NOTE: THIS IS A LOW TRAFFIC VOLUME ROAD AS DEFINED IN SECTION 604.03, STANDARD SPECIFICATIONS FOR HIGHWAY CONSTRUCTION.

CONSTRUCTION PAVEMENT MARKINGS AND PERMANENT PAVEMENT MARKINGS

DESCRIPTION	STAGE 1	STAGE 2	END OF JOB	REMOVAL OF PERMANENT PAVEMENT MARKINGS	CONSTRUCTION PAVEMENT MARKINGS	REMOVABLE CONSTRUCTION PAVEMENT MARKINGS	RAISED PAVEMENT MARKERS	REFLECTORIZED PAINT PAVEMENT MARKING	
							TYPE II	6"	
							(YELLOW/YELLOW)	WHITE	YELLOW
	LIN. FT. - EACH			LIN. FT.		LIN. FT.	EACH	LIN. FT.	
REMOVAL OF PERMANENT PAVEMENT MARKINGS	5400			5400					
CONSTRUCTION PAVEMENT MARKINGS		10084			10084				
REMOVABLE CONSTRUCTION PAVEMENT MARKINGS		500				500			
RAISED PAVEMENT MARKERS TYPE II (WHITE/RED)									
RAISED PAVEMENT MARKERS TYPE II (YELLOW/YELLOW)			36				36		
REFLECTORIZED PAINT PAVEMENT MARKING WHITE (6")			5550					5550	
REFLECTORIZED PAINT PAVEMENT MARKING YELLOW (6")			5550						5550
TOTALS:				5400	10084	500	36	5550	5550

NOTE: THIS IS A LOW TRAFFIC VOLUME ROAD AS DEFINED IN SECTION 604.03, STANDARD SPECIFICATIONS FOR HIGHWAY CONSTRUCTION.

NOTE: THE 6" YELLOW STRIPING QUANTITY HAS BEEN ESTIMATED BASED ON A DOUBLE YELLOW CENTERLINE STRIPE FOR THE ENTIRE PROJECT.
THE PROJECT MUST BE MARKED FOR PASSING/NO PASSING ZONES PRIOR TO THE PLACEMENT OF ANY FINAL STRIPING.
CONTACT THE MAINTENANCE DIVISION AFTER THE FINAL LIFT OF SURFACE COURSE HAS BEEN PLACED TO SCHEDULE THE ZONING OF THE PROJECT.

8/28/2019

R012318.DGN

QUANTITIES

DATE REVISED	DATE FILMED	DATE REVISED	DATE FILMED	FED.RD. DIST.NO.	STATE	FED.AID PROJ.NO.	SHEET NO.	TOTAL SHEETS
				6	ARK.			
				JOB NO.		012318	32	92

(2) QUANTITIES

STATE OF ARKANSAS
LICENSED PROFESSIONAL ENGINEER
No. 11425
TRINITY D. SMITH
10-1-19

REMOVING AND REPLACING TOPSOIL

	STATION	STATION	LOCATION / DESCRIPTION	*REMOVING AND REPLACING TOPSOIL
				CU. YD.
*	308+75.00	319+00.00	HWY. 7 - SITE 1 - STAGE 2	772
*	505+00.00	518+50.00	HWY. 7 - SITE 2 - STAGE 2	1200
	TOTAL:			1972

* QUANTITY ESTIMATED.
SEE SECTION 104.03 OF THE STD. SPECS.

CLEARING AND GRUBBING

STATION	STATION	LOCATION	CLEARING	GRUBBING
			STATION	
307+75	320+00	HWY. 7 - SITE 1	13	13
504+00	519+50	HWY. 7 - SITE 2	16	16
TOTALS:			29	29

REMOVAL AND DISPOSAL OF CULVERTS

STATION	DESCRIPTION	PIPE CULVERTS
		EACH
318+99	HWY. 7 - SITE 1	1
506+49	HWY. 7 - SITE 2	1
TOTALS:		2

NOTE: QUANTITIES SHOWN ABOVE SHALL INCLUDE REMOVAL & DISPOSAL OF ALL HEADWALLS AND FLARED END SECTIONS IF APPLICABLE.

EARTHWORK

	STATION	STATION	LOCATION / DESCRIPTION	UNCLASSIFIED EXCAVATION	COMPACTED EMBANKMENT	* SOIL STABILIZATION
				CU. YD.		TON
	308+75.00	319+00.00	HWY. 7 - SITE 1 - STAGE 1	1	5604	
	308+75.00	319+00.00	HYW. 7 - SITE 1 - STAGE 2	29	7006	
	308+75.00	319+00.00	HWY. 7 - SITE 1 - STAGE 3	11316	35	
	505+00.00	518+50.00	HWY. 7 - SITE 2 - STAGE 1	3512	9820	
	505+00.00	518+50.00	HWY. 7 - SITE 2 - STAGE 2	5547	301	
	ENTIRE	PROJECT	APPROACHES	5	595	
			BRIDGE EXCAVATION - SITE 1	609		
*	ENTIRE	PROJECT	TO BE USED IF AND WHERE			500
			DIRECTED BY THE ENGINEER			
	TOTALS:			21019	23361	500

* QUANTITY ESTIMATED.
SEE SECTION 104.03 OF THE STD. SPECS.

NOTE: EARTHWORK QUANTITIES SHOWN ABOVE SHALL BE PAID AS PLAN QUANTITY.

CULVERT CLEAN OUT

STATION	LOCATION	EACH
517+25	HWY. 7 - SITE 2	1
TOTAL:		1

BENCH MARKS

STATION	LOCATION	BENCH MARKS
		EACH
312+08	BRIDGE END	1
510+38	BRIDGE END	1
TOTAL:		2

NOTE: SHOWN FOR INFORMATION ONLY. BENCH MARKS SHALL BE FURNISHED AND PLACED BY STATE FORCES.

GUARDRAIL

STATION	STATION	LOCATION	GUARDRAIL (TYPE A)	THRIE BEAM GUARDRAIL TERMINAL	GUARDRAIL TERMINAL (TYPE 2)
			LIN. FT.	EACH	
310+72.07	311+97.07	HWY. 7 - SITE 1 LT.	75	1	1
310+12.32	312+31.07	HWY. 7 - SITE 1 RT.	150	1	1
314+22.93	316+41.68	HWY. 7 - SITE 1 LT.	150	1	1
314+56.93	315+81.93	HWY. 7 - SITE 1 RT.	75	1	1
508+93.60	510+18.60	HWY. 7 - SITE 2 LT.	75	1	1
507+99.85	510+18.60	HWY. 7 - SITE 2 RT.	150	1	1
511+46.40	513+65.15	HWY. 7 - SITE 2 LT.	150	1	1
511+46.40	512+71.40	HWY. 7 - SITE 2 RT.	75	1	1
TOTALS:			900	8	8

SOIL LOG

STATION	LATITUDE			LONGITUDE			LOCATION	DEPTH	LIQUID LIMIT	PLASTICITY INDEX	AASHTO CLASSIFICATION	COLOR
	DEG	MIN	SEC	DEG	MIN	SEC		FEET				
310+00	34	45	46.00	93	4	28.00	6' RT.	0-5	41	20	A-7-6(3)	GRAY
310+00	34	45	46.00	93	4	28.00	24' RT.	0-5	32	13	A-2-6(0)	BR/GR
317+00	34	45	51.00	93	4	34.00	18' LT.	0-3	32	11	A-6(3)	BROWN
317+00	34	45	51.00	93	4	34.00	6' LT.	0-3	34	17	A-6(8)	BROWN
317+00	34	45	51.00	93	4	35.00	18' LT.	0-5	30	11	A-2-6(0)	BROWN
407+00	34	47	60.00	93	6	33.00	18' RT.	0-5	26	7	A-4(1)	BROWN
407+00	34	47	60.00	93	6	33.00	06' RT.	0-5	24	10	A-4(2)	BR/GR
407+00	34	47	60.00	93	6	33.00	18' RT.	0-5	26	11	A-6(2)	BR/GR
414+00	34	48	7.00	93	6	34.00	06' LT.	0-5	41	22	A-7-6(12)	BROWN
414+00	34	48	7.00	93	6	34.00	18' LT.	0-5	33	16	A-6(6)	BROWN

SOIL CHARACTERISTICS TABULATED ABOVE ARE REPRESENTATIVE AT THE LOCATION OF THE SAMPLE, AND FROM SURFACE INDICATIONS ARE TYPICAL FOR THE LIMITS SHOWN. THESE DATA ARE SHOWN FOR INFORMATION ONLY. THE STATE WILL NOT BE RESPONSIBLE FOR VARIATIONS IN THE SOIL CHARACTERISTICS AND/OR EXTENT OF SAME DIFFERING FROM THE ABOVE TABULATIONS.

8/28/2019

R012318.DGN

DATE REVISED	DATE FILMED	DATE REVISED	DATE FILMED	FED.RD. DIST.NO.	STATE	FED.AID PROJ.NO.	SHEET NO.	TOTAL SHEETS
				6	ARK.			
				JOB NO.		012318	33	92

(2) QUANTITIES

STATE OF ARKANSAS
LICENSED PROFESSIONAL ENGINEER
No. 11425
TRINITY D. SMITH
10-1-19

ACHM PATCHING OF EXISTING ROADWAY

DESCRIPTION	TON
ENTIRE PROJECT - TO BE USED IF AND WHERE	100
DIRECTED BY THE ENGINEER	
TOTAL:	**100**

NOTE: QUANTITY ESTIMATED.
SEE SECTION 104.03 OF THE STD. SPECS.

DUMPED RIPRAP AND FILTER BLANKET

STATION	LOCATION	DUMPED RIPRAP	FILTER BLANKET
		CU. YD.	SQ. YD.
508+00	OUTLET OF PIPE CULVERT	8	16
517+25	OUTLET OF PIPE CULVERT	5	10
TOTALS:		**13**	**26**

NOTE: FILTER BLANKET SHALL BE GEOTEXTILE FABRIC (TYPE 5).

ASPHALT CONCRETE PATCHING FOR MAINTENANCE OF TRAFFIC

LOCATION	TON	TACK COAT
		GALLON
ENTIRE PROJECT - TO BE USED IF AND WHERE	15	30
DIRECTED BY THE ENGINEER		
TOTALS:	**15**	**30**

BASIS OF ESTIMATE:
ASPHALT CONCRETE PATCHING FOR MAINTENANCE OF TRAFFIC...25 TON/MILE
TACK COAT FOR MAINTENANCE OF TRAFFIC.....50 GAL./MILE
NOTE: QUANTITY ESTIMATED.
SEE SECTION 104.03 OF THE STD. SPECS.

4" PIPE UNDERDRAIN

STATION	STATION	LOCATIONS	4" PIPE UNDERDRAINS	UNDERDRAIN OUTLET PROTECTORS
			LIN. FT.	EACH
* ENTIRE PROJECT TO BE USED IF AND			1000	4
WHERE DIRECTED BY THE ENGINEER				
TOTALS:			**1000**	**4**

* NOTE: QUANTITIES ESTIMATED.
SEE SECTION 104.03 OF THE STD. SPECS.

CONCRETE DITCH PAVING

STATION	STATION	LOCATION	LENGTH	"W"	CONC. DITCH PAVING (TYPE B)	SOLID SODDING	WATER
			LIN. FT.	FEET	SQ. YD.	SQ. YD.	M. GAL.
309+00.00	310+50.00	HWY. 7 - SITE 1	150.00	6.33	105.50	66.67	0.84
517+25.00	518+00.00	HWY. 7 - SITE 2	75.00	6.33	52.75	33.33	0.42
TOTALS:					**158.25**	**100.00**	**1.26**

BASIS OF ESTIMATE:
WATER.....12.6 GAL. / SQ. YD. OF SOLID SODDING.

EROSION CONTROL MATTING

STATION	STATION	LOCATION	LENGTH	CLASS 3
			LIN. FT.	SQ. YD.
317+00.00	319+00.00	HWY. 7 - SITE 1	200.00	177.78
506+00.00	510+54.00	HWY. 7 - SITE 2 LT.	454.00	403.56
511+17.00	512+00.00	HWY. 7 - SITE 2 LT.	83.00	73.78
512+00.00	517+00.00	HWY. 7 - SITE 2 LT.	500.00	444.44
516+00.00	517+25.00	HWY. 7 - SITE 2 RT.	125.00	111.11
TOTAL:				**1210.67**

NOTE: AVERAGE WIDTH = 8'-0"

EROSION CONTROL

STATION	STATION	LOCATION	PERMANENT EROSION CONTROL: SPECIAL SEEDING	LIME	SPECIAL MULCH COVER	WATER	SPECIAL SECOND SEEDING APPLICATION	TEMPORARY EROSION CONTROL: TEMPORARY SEEDING	MULCH COVER	WATER	WATTLE (20") DITCH CHECKS (E-1)	SAND BAG DITCH CHECKS (E-5)	ROCK DITCH CHECKS (E-6)	SILT FENCE (E-11)	SEDIMENT BASIN (E-14)	OBLITERATION OF SEDIMENT BASIN	*SEDIMENT REMOVAL & DISPOSAL
			ACRE	TON	ACRE	M.GAL.	ACRE	ACRE	ACRE	M.GAL.	LIN. FT.	BAG	CU.YD.	LIN. FT.	CU.YD.	CU.YD.	CU. YD.
308+75	319+00	CLEARING AND GRUBBING - SITE 1						3.68	3.68	75.1				2459			91
505+00	518+50	CLEARING AND GRUBBING - SITE 2						4.01	4.01	81.8		44	12	1866			75
308+75	319+00	HWY. 7 - SITE 1 - STAGE 1						1.29	1.29	26.3		110	12				15
505+00	518+50	HWY. 7 - SITE 2 - STAGE 1						3.80	3.80	77.5		110	30				5
308+75	319+00	HWY. 7 - SITE 1 - STAGE 2						2.69	2.69	54.9		44	9	486			18
505+00	518+50	HWY. 7 - SITE 2 - STAGE 2						1.39	1.39	28.4		154	30				
308+75	319+00	HWY. 7 - SITE 1 - STAGE 3	1.64	3.28	1.64	167.3	1.64	1.03	1.03	21.0							
505+00	518+50	HYW. 7 - SITE 2 - STAGE 3	2.55	5.10	2.55	260.1	2.55										
*ENTIRE PROJECT TO BE USED IF AND WHERE DIRECTED BY THE ENGINEER.			0.41	0.82	0.41	41.8	0.41	4.47	4.47	91.2	100	77	16	1203	300	300	345
TOTALS:			**4.60**	**9.20**	**4.60**	**469.2**	**4.60**	**22.36**	**22.36**	**456.2**	**100**	**539**	**109**	**6014**	**300**	**300**	**549**

BASIS OF ESTIMATE:
LIME .....2 TONS / ACRE OF SEEDING
WATER.....102.0 M.G. / ACRE OF SEEDING
WATER.....20.4 M.G. / ACRE OF TEMPORARY SEEDING
WATTLE DITCH CHECKS.....9 LIN. FT. / LOCATION
SAND BAG DITCH CHECKS.....22 BAGS / LOCATION
ROCK DITCH CHECKS.....3 CU.YD./LOCATION

NOTE: THE TEMPORARY EROSION CONTROL DEVICES SHOWN ABOVE AND ON THE PLANS SHALL BE INSTALLED IN SUCH A SEQUENCE AS TO DETER EROSION AND SEDIMENTATION ON U.S. WATERWAYS AS EXPLAINED BY THE NATIONAL POLLUTANT DISCHARGE ELIMINATION SYSTEM PERMIT.

*QUANTITIES ESTIMATED.
SEE SECTION 104.03 OF THE STD. SPECS.

8/28/2019

R012318.DGN

QUANTITIES

DATE REVISED	DATE FILMED	DATE REVISED	DATE FILMED	FED.RD. DIST.NO.	STATE	FED.AID PROJ.NO.	SHEET NO.	TOTAL SHEETS
12/19/19				6	ARK.			
				JOB NO.		012318	34	92

(2) QUANTITIES

STATE OF ARKANSAS
LICENSED PROFESSIONAL ENGINEER
No. 11425
TRINITY D. SMITH
12-20-19

APPROACH GUTTERS AND SLABS

STATION	STATION	LOCATION	APPROACH GUTTER (TYPE 1)	APPROACH GUTTER (TYPE 2)	APPROACH SLABS (TYPE SPECIAL)	REINFORCING STEEL-RDWY. (GR. 60)
			CU. YD.	CU. YD.	CU. YD.	POUND
312+08.47	312+08.47	HWY. 7 - SITE 1	9.60			550
312+08.47	312+08.47	HWY. 7 - SITE 1			62.50	7070
312+42.47	312+42.47	HWY. 7 - SITE 1	11.30			650
314+11.53	314+11.53	HWY. 7 - SITE 1	11.30			650
314+11.53	314+11.53	HWY. 7 - SITE 1			62.50	7070
314+45.53	314+45.53	HWY. 7 - SITE 1	9.60			550
510+30.00	510+30.00	HWY. 7 - SITE 2		12.10		895
510+30.00	510+30.00	HWY. 7 - SITE 2			44.90	5310
510+30.00	510+30.00	HWY. 7 - SITE 2		12.10		895
511+35.00	511+35.00	HWY. 7 - SITE 2		12.10		895
511+35.00	511+35.00	HWY. 7 - SITE 2			44.90	5310
511+35.00	511+35.00	HWY. 7 - SITE 2		12.10		895
TOTALS:			41.80	48.40	214.80	30740

NOTE: USE T =14" FOR 6' SHOULDER.

SELECTED PIPE BEDDING

LOCATION	SELECTED PIPE BEDDING
	CU.YD.
ENTIRE PROJECT TO BE USED IF	
AND WHERE DIRECTED BY THE	30
ENGINEER	
TOTAL:	30

NOTE: QUANTITY ESTIMATED.
SEE SECTION 104.03 OF THE STD. SPECS.

DRIVEWAYS & TURNOUTS

STATION	SIDE	LOCATION	WIDTH	ACHM SURFACE COURSE (3/8") 220 LBS. PER SQ. YD. (PG 64-22)		AGGREGATE BASE COURSE (CLASS 7)	SIDE DRAINS		STANDARD DRAWINGS
							18"	24"	
			FEET	SQ. YD.	TON	TON	LIN. FT.		
310+03	RT	HWY. 7 - SITE 1	16	142.09	15.63	58.02	52		PCC-1, PCM-1, PCP-1, PCP-2, PCP-3
318+97	RT	HWY. 7 - SITE 1	24	184.00	20.24	75.13		50	PCC-1, PCM-1, PCP-1, PCP-2, PCP-3
506+50	RT	HWY. 7 - SITE 2	16	107.62	11.84	43.94	44		PCC-1, PCM-1, PCP-1, PCP-2, PCP-3
* ENTIRE PROJECT TEMPORARY DRIVES						60.00			
TOTALS:				433.71	47.71	237.09	96	50	

BASIS OF ESTIMATE:
ACHM SURFACE COURSE (3/8").....94.5% MIN. AGGR.....5.5% ASPHALT BINDER
MAXIMUM NUMBER OF GYRATIONS = 115 FOR PG 64-22

* QUANTITY ESTIMATED
SEE SECTION 104.03 OF THE STD. SPECS.
TO BE USED IF AND WHERE DIRECTED BY THE ENGINEER.

COLD MILLING ASPHALT PAVEMENT

STATION	STATION	LOCATION	AVG. WIDTH	COLD MILLING ASPHALT PAVEMENT
			FEET	SQ. YD.
307+75.00	308+75.00	HWY. 7 - SITE 1	20.00	222.22
319+00.00	320+00.00	HWY. 7 - SITE 1	20.00	222.22
504+00.00	505+00.00	HWY. 7 - SITE 2	20.00	222.22
518+50.00	519+50.00	HWY. 7 - SITE 2	20.00	222.22
TOTAL:				888.88

NOTE: AVERAGE MILLING DEPTH 1".

STRUCTURES

STATION	DESCRIPTION	REINFORCED CONCRETE PIPE (CLASS III) 24"	FLARED END SECTIONS FOR R.C. PIPE 24"	SOLID SODDING	WATER	STD. DWG. NOS.
		LIN. FT.	EACH	SQ.YD.	M.GAL.	
517+25	HWY. 7 - SITE 2 - EXTEND 24" x 38' R.C. PIPE CULVERT LT. & RT.	26	2	8	0.10	FES-1, FES-2, PCC-1
TOTALS:		26	2	8	0.10	

BASIS OF ESTIMATE:
WATER.....12.6 GAL. / SQ. YD. OF SOLID SODDING

NOTE: FOR R.C. PIPE CULVERT INSTALLATIONS USE TYPE 3 BEDDING UNLESS OTHERWISE SPECIFIED.

8/28/2019

R012318.DGN

QUANTITIES

DATE REVISED	DATE FILMED	DATE REVISED	DATE FILMED	FED.RD. DIST.NO.	STATE	FED.AID PROJ.NO.	SHEET NO.	TOTAL SHEETS
				6	ARK.			
				JOB NO.		012318	35	92

(2) QUANTITIES

STATE OF ARKANSAS
LICENSED PROFESSIONAL ENGINEER
No. 11425
TRINITY D. SMITH
10-1-19

BASE AND SURFACING (BOX 1 OF 2)

STATION	STATION	LOCATION	LENGTH	AGGREGATE BASE COURSE (CLASS 7)		TACK COAT (0.05 GAL. PER SQ. YD.)			TACK COAT (0.17 GAL. PER SQ. YD.)			TACK COAT	ACHM BINDER COURSE (1")				ACHM SURFACE COURSE (3/8")								
				TON / STATION	TON	TOTAL WID.	SQ.YD.	GALLON	TOTAL WID.	SQ.YD.	GALLON	TOTAL GALLONS	AVG. WID.	SQ.YD.	POUND / SQ.YD.	PG 64-22	AVG. WID.	SQ.YD.	POUND / SQ.YD.	PG 64-22	AVG. WID.	SQ.YD.	POUND / SQ.YD.	PG 64-22	TOTAL PG 64-22
			FEET			FEET			FEET				FEET			TON	FEET			TON	FEET			TON	TON
MAIN LANES																									
307+75.00	308+75.00	HWY. 7 - SITE 1 TRANSITION	100.00						20.00	222.22	37.78	37.78									VAR.	329.54	220.00	36.25	36.25
308+75.00	310+75.00	HWY. 7 - SITE 1 NOTCH AND WIDEN	200.00	134.00	268.00	32.75	727.78	36.39				36.39	6.50	144.44	440.00	31.78	6.25	138.89	220.00	15.28	26.00	577.78	220.00	63.56	78.84
310+75.00	311+77.97	HWY. 7 - SITE 1 FULL DEPTH	102.97	211.50	217.78	52.71	603.06	30.15				30.15	26.46	302.73	440.00	66.60	26.25	300.33	220.00	33.04	26.00	297.47	220.00	32.72	65.76
314+76.03	317+10.00	HWY. 7 - SITE 1 FULL DEPTH	233.97	211.50	494.85	52.71	1370.28	68.51				68.51	26.46	687.87	440.00	151.33	26.25	682.41	220.00	75.07	26.00	675.91	220.00	74.35	149.42
317+10.00	319+00.00	HWY. 7 - SITE 1 NOTCH AND WIDEN	190.00	134.00	254.60	32.75	691.39	34.57				34.57	6.50	137.22	440.00	30.19	6.25	131.94	220.00	14.51	26.00	548.89	220.00	60.38	74.89
319+00.00	320+00.00	HWY. 7 - SITE 1 TRANSITION	100.00						20.00	222.22											VAR.	329.42	220.00	36.24	36.24
504+00.00	505+00.00	HWY. 7 - SITE 2 TRANSITION	100.00																		VAR.	321.70	220.00	35.39	35.39
505+00.00	505+85.81	HWY. 7 - SITE 2 NOTCH AND WIDEN	85.81	134.00	114.99	26.25	250.28	12.51	20.00	190.69	32.42	44.93					26.25	250.28	220.00	27.53	26.00	247.90	220.00	27.27	54.80
505+85.81	508+05.01	HWY. 7 - SITE 2 NOTCH AND WIDEN	219.20	VAR.	226.96	VAR.	1036.26	51.81	VAR.	223.54	38.00	89.81	VAR.	390.82	440.00	85.98	VAR.	645.44	220.00	71.00	26.00	633.24	220.00	69.66	140.66
508+05.01	510+01.49	HWY. 7 - SITE 2 FULL DEPTH	196.48	211.50	415.56	52.71	1150.72	57.54				57.54	26.46	577.65	440.00	127.08	26.25	573.07	220.00	63.04	26.00	567.61	220.00	62.44	125.48
511+64.46	514+82.87	HWY. 7 - SITE 2 FULL DEPTH	318.41	211.50	673.44	52.71	1864.82	93.24				93.24	26.46	936.13	440.00	205.95	26.25	928.70	220.00	102.16	26.00	919.85	220.00	101.18	203.34
514+82.87	516+55.86	HWY. 7 - SITE 2 NOTCH AND WIDEN	172.99	VAR.		VAR.	819.05	40.95	VAR.	204.15	34.71	75.66	VAR.	309.67	440.00	68.13	VAR.	509.38	220.00	56.03	26.00	499.75	220.00	54.97	111.00
516+55.86	518+50.00	HWY. 7 - SITE 2 NOTCH AND WIDEN	194.14	134.00	260.15	26.25	566.24	28.31	20.00	431.42	73.34	101.65					26.25	566.24	220.00	62.29	26.00	560.85	220.00	61.69	123.98
518+50.00	519+50.00	HWY. 7 - SITE 2 TRANSITION	100.00																		VAR.	335.59	220.00	36.91	36.91
DETOUR - SITE 1																									
20+00.00	21+97.37	DETOUR - NOTCH & WIDEN	197.37	VAR.	88.14	VAR.	177.73	8.89				8.89	VAR.	173.62	330.00	28.65					VAR.	135.29	220.00	14.88	14.88
21+97.37	24+50.00	DETOUR - FULL DEPTH	252.63	142.25	359.37	20.29	569.54	28.48				28.48	20.29	569.54	330.00	93.97					24.00	673.68	220.00	74.10	74.10
26+00.00	27+57.55	DETOUR - FULL DEPTH	157.55	142.25	224.11	20.29	355.19	17.76				17.76	20.29	355.19	330.00	58.61					24.00	420.13	220.00	46.21	46.21
27+57.55	29+31.90	DETOUR - NOTCH & WIDEN	174.35	VAR.	88.14	VAR.	137.38	6.87				6.87	VAR.	137.38	330.00	22.67					VAR.	108.78	220.00	11.97	11.97
ADDITIONAL FOR MAINTENANCE OF TRAFFIC																									
506+60.00	508+20.00	HWY. 7 - SITE 2 ON RT.	160.00	40.00	64.00	13.02	231.47	11.57				11.57	6.77	120.36	440.00	26.48	6.25	111.11	220.00	12.22	6.00	106.67	220.00	11.73	23.95
514+50.00	516+00.00	HWY. 7 - SITE 2 ON RT.	150.00	40.00	60.00	13.02	217.00	10.85				10.85	6.77	112.83	440.00	24.82	6.25	104.17	220.00	11.46	6.00	100.00	220.00	11.00	22.46
ADDITIONAL FOR LEVELING AND GRADE RAISE																									
308+75.00	310+75.00	HWY. 7 - SITE 1 LEVELING	200.00						20.00	444.44	75.55	75.55									20.00	444.44	220.00	48.89	48.89
310+75.00	311+77.97	HWY. 7 - SITE 2 GRADE RAISE	102.97						20.00	228.82	38.90	38.90	20.00	228.82	VAR.	41.37									
314+76.03	317+10.00	HWY. 7 - SITE 2 GRADE RAISE	233.97						20.00	519.93	88.39	88.39	20.00	519.93	VAR.	94.78									
317+10.00	319+00.00	HWY. 7 - SITE 1 LEVELING	190.00						20.00	422.22	71.78	71.78									20.00	422.22	220.00	46.44	46.44
505+00.00	508+05.01	HWY. 7 - SITE 2 LEVELING	305.01						VAR.	881.14	149.79	149.79									VAR.	881.14	220.00	96.93	96.93
514+82.87	518+50.00	HWY. 7 - SITE 2 LEVELING	367.13						VAR.	1060.60	180.30	180.30									VAR.	1060.60	220.00	116.67	116.67
SUBTOTALS:					**3810.09**		**10768.19**	**538.40**		**5051.39**	**820.96**	**1359.36**		**5704.20**		**1158.39**		**4941.96**		**543.63**		**11198.45**		**1231.83**	**1775.46**

BASIS OF ESTIMATE:
ACHM SURFACE COURSE (3/8").....94.5% MIN. AGGR.....5.5% ASPHALT BINDER
ACHM BINDER COURSE (1").....95.6% MIN. AGGR.....4.4% ASPHALT BINDER
MAXIMUM NUMBER OF GYRATIONS = 115 FOR PG 64-22
TACK COAT QUANTITIES WERE CALCULATED USING THE EMULSIFIED ASPHALT RATES. REFER TO SS-400-1 FOR THE RESIDUAL ASPHALT APPLICATION RATES.

8/28/2019

R012318.DGN

QUANTITIES

DATE REVISED	DATE FILMED	DATE REVISED	DATE FILMED	FED.RD. DIST.NO.	STATE	FED.AID PROJ.NO.	SHEET NO.	TOTAL SHEETS
				6	ARK.			
				JOB NO.		012318	36	92

(2) QUANTITIES

STATE OF ARKANSAS
LICENSED PROFESSIONAL ENGINEER
No. 11425
TRINITY D. SMITH
10-1-19

BASE AND SURFACING (BOX 2 OF 2)

STATION	STATION	LOCATION	LENGTH	AGGREGATE BASE COURSE (CLASS 7)		TACK COAT							ACHM BINDER COURSE (1")				ACHM SURFACE COURSE (3/8")							
				TON / STATION	TON	(0.05 GAL. PER SQ. YD.)			(0.17 GAL. PER SQ. YD.)			TOTAL GALLONS	AVG. WID.	SQ.YD.	POUND / SQ.YD.	PG 64-22	AVG. WID.	SQ.YD.	POUND / SQ.YD.	PG 64-22	AVG. WID.	SQ.YD.	POUND / SQ.YD.	PG 64-22	TOTAL PG 64-22
			FEET			TOTAL WID. FEET	SQ.YD.	GALLON	TOTAL WID. FEET	SQ.YD.	GALLON		FEET			TON	FEET			TON	FEET			TON	TON
ADDITIONAL FOR SUPERELEVATION																								
22+00.97	23+05.47	HWY. 7 - SITE 1 DETOUR SUPER TRANSITION	104.50	3.50	3.66																			
23+05.47	26+87.65	HWY. 7 - SITE 1 DETOUR FULL SUPER (0.036'/')	382.18	7.00	26.75																			
26+87.65	27+92.15	HWY. 7 - SITE 1 DETOUR SUPER TRANSITION	104.50	3.50	3.66																			
307+75.00	311+01.50	HWY. 7 - SITE 1 MAIN LANES MATCH EXIST. (0.093'/')	326.50	18.25	59.59																			
317+93.75	320+00.00	HWY. 7 - SITE 1 MAIN LANES MATCH EXIST. (0.033'/')	206.25	16.25	33.52																			
504+00.00	506+34.50	HWY. 7 - SITE 2 SUPER TRANSITION (MATCH 0.067'/')	234.50	10.50	24.62																			
506+34.50	512+89.09	HWY. 7 - SITE 2 FULL SUPER (0.100'/')	654.59	21.00	137.46																			
512+89.09	516+39.09	HWY. 7 - SITE 2 SUPER TRANSITION	350.00	10.50	36.75																			
ADDITIONAL FOR GUARDRAIL WIDENING																								
309+69.32	310+02.32	HWY. 7 - SITE 1 RT. - TAPER	33.00	23.13	7.63																2.75	10.08	220.00	1.11	1.11
310+02.32	310+12.32	HWY. 7 - SITE 1 RT.	10.00	46.25	4.63																5.50	6.11	220.00	0.67	0.67
310+12.32	311+87.32	HWY. 7 - SITE 1 RT.	175.00	23.13	40.48																4.50	87.50	220.00	9.63	9.63
311+87.32	312+31.07	HWY. 7 - SITE 1 RT.	43.75	46.25	20.23																3.50	17.01	220.00	1.87	1.87
310+29.07	310+62.07	HWY. 7 - SITE 1 LT. - TAPER	33.00	46.25	15.26																2.75	10.08	220.00	1.11	1.11
310+62.07	310+72.07	HWY. 7 - SITE 1 LT.	10.00	23.13	2.31																5.50	6.11	220.00	0.67	0.67
310+72.07	311+72.07	HWY. 7 - SITE 1 LT.	100.00	46.25	46.25																4.50	50.00	220.00	5.50	5.50
311+72.07	312+15.82	HWY. 7 - SITE 1 LT.	43.75	23.13	10.12																3.50	17.01	220.00	1.87	1.87
314+56.93	315+00.68	HWY. 7 - SITE 1 RT.	43.75	23.13	10.12																3.50	17.01	220.00	1.87	1.87
315+00.68	316+00.68	HWY. 7 - SITE 1 RT.	100.00	23.13	23.13																4.50	50.00	220.00	5.50	5.50
316+00.68	316+10.68	HWY. 7 - SITE 1 RT.	10.00	46.25	4.63																5.50	6.11	220.00	0.67	0.67
316+10.68	316+43.68	HWY. 7 - SITE 1 RT. - TAPER	33.00	23.13	7.63																2.75	10.08	220.00	1.11	1.11
314+22.93	314+66.68	HWY. 7 - SITE 1 LT.	43.75	46.25	20.23																3.50	17.01	220.00	1.87	1.87
314+66.68	316+41.68	HWY. 7 - SITE 1 LT.	175.00	46.25	80.94																4.50	87.50	220.00	9.63	9.63
316+41.68	316+51.68	HWY. 7 - SITE 1 LT.	10.00	23.13	2.31																5.50	6.11	220.00	0.67	0.67
316+51.68	316+84.68	HWY. 7 - SITE 1 LT. - TAPER	33.00	46.25	15.26																2.75	10.08	220.00	1.11	1.11
507+56.85	507+89.85	HWY. 7 - SITE 2 RT. - TAPER	33.00	23.13	7.63																2.75	10.08	220.00	1.11	1.11
507+89.85	507+99.85	HWY. 7 - SITE 2 RT.	10.00	46.25	4.63																5.50	6.11	220.00	0.67	0.67
507+99.85	509+74.85	HWY. 7 - SITE 2 RT.	175.00	23.13	40.48																4.50	87.50	220.00	9.63	9.63
509+74.85	510+18.60	HWY. 7 - SITE 2 RT.	43.75	46.25	20.23																3.50	17.01	220.00	1.87	1.87
508+50.60	508+83.60	HWY. 7 - SITE 2 LT. - TAPER	33.00	46.25	15.26																2.75	10.08	220.00	1.11	1.11
508+83.60	508+93.60	HWY. 7 - SITE 2 LT.	10.00	23.13	2.31																5.50	6.11	220.00	0.67	0.67
508+93.60	509+93.60	HWY. 7 - SITE 2 LT.	100.00	46.25	46.25																4.50	50.00	220.00	5.50	5.50
509+93.60	510+37.10	HWY. 7 - SITE 2 LT.	43.50	23.13	10.06																3.50	16.92	220.00	1.86	1.86
511+46.40	511+90.15	HWY. 7 - SITE 2 RT.	43.75	23.13	10.12																3.50	17.01	220.00	1.87	1.87
511+90.15	512+90.15	HWY. 7 - SITE 2 RT.	100.00	23.13	23.13																4.50	50.00	220.00	5.50	5.50
512+90.15	513+00.15	HWY. 7 - SITE 2 RT.	10.00	46.25	4.63																5.50	6.11	220.00	0.67	0.67
513+00.15	513+33.15	HWY. 7 - SITE 2 RT. - TAPER	33.00	23.13	7.63																2.75	10.08	220.00	1.11	1.11
511+46.40	511+90.15	HWY. 7 - SITE 2 LT.	43.75	46.25	20.23																3.50	17.01	220.00	1.87	1.87
511+90.15	513+65.15	HWY. 7 - SITE 2 LT.	175.00	46.25	80.94																4.50	87.50	220.00	9.63	9.63
513+65.15	513+75.15	HWY. 7 - SITE 2 LT.	10.00	23.13	2.31																5.50	6.11	220.00	0.67	0.67
513+75.15	514+08.15	HWY. 7 - SITE 2 LT. - TAPER	33.00	46.25	15.26																2.75	10.08	220.00	1.11	1.11
SUBTOTALS (BOX 1 OF 2):					**3810.09**		**10768.19**	**538.40**		**5051.39**	**820.96**	**1359.36**		**5704.20**		**1158.39**		**4941.96**		**543.63**		**11198.45**		**1231.83**	**1775.46**
SUBTOTALS (BOX 2 OF 2):					**948.27**																	**815.51**		**89.71**	**89.71**
TOTALS:					**4758.36**		**10768.19**	**538.40**		**5051.39**	**820.96**	**1359.36**		**5704.20**		**1158.39**		**4941.96**		**543.63**		**12013.96**		**1321.54**	**1865.17**

BASIS OF ESTIMATE:
ACHM SURFACE COURSE (3/8").....94.5% MIN. AGGR.....5.5% ASPHALT BINDER
ACHM BINDER COURSE (1").....95.6% MIN. AGGR.....4.4% ASPHALT BINDER
MAXIMUM NUMBER OF GYRATIONS = 115 FOR PG 64-22
TACK COAT QUANTITIES WERE CALCULATED USING THE EMULSIFIED ASPHALT RATES. REFER TO SS-400-1 FOR THE RESIDUAL ASPHALT APPLICATION RATES.

8/28/2019

R012318.DGN

QUANTITIES

DATE REVISED	DATE FILMED	DATE REVISED	DATE FILMED	FED. ROAD DIST. NO.	STATE	FED. AID PROJ. NO.	SHEET NO.	TOTAL SHEETS
				6	ARK.			
				JOB NO.		012318	37	92
				① 07464 & 07465 - QUANTITIES - 61186				

SCHEDULE OF BRIDGE QUANTITIES - JOB NO. 012318

BRIDGE NO.	NAME PLATE TITLE	UNIT OF STRUCTURE / ITEM NO. / ITEM / UNIT	205 REMOVAL OF EXISTING BRIDGE STRUCTURE (SITE NO. _)	603 TEMPORARY BRIDGE STRUCTURE (24' ROADWAY WIDTH)	801 UNCLASSIFIED EXCAVATION FOR STRUCTURES-BRIDGE	SS & 802 CLASS S CONCRETE-BRIDGE	SP, SS, & 802 CLASS S(AE) CONCRETE-BRIDGE	803 CLASS 1 PROTECTIVE SURFACE TREATMENT	SP, SS, & 804 REINFORCING STEEL-BRIDGE (GRADE 60)	SS & 804 EPOXY COATED REINFORCING STEEL (GRADE 60)	SS & 805 ③ STEEL PILING (HP 12X53)	SP, SS, & 807 STRUCTURAL STEEL IN BEAM SPANS (A709, GR. 50W)	SS & 807 PAINTING STRUCTURAL STEEL	SS & 808 ELASTOMERIC BEARINGS	SS & 809 SILICONE JOINT SEALANT	812 BRIDGE NAME PLATE (TYPE D)	816 FILTER BLANKET	816 DUMPED RIPRAP	SP JOB 012318 ARCHITECTURAL FINISH	SP JOB 012318 STAINING CONCRETE SURFACES
		UNIT	LUMP SUM	LIN. FT.	CU. YD.	CU. YD.	CU. YD.	GAL.	LB.	LB.	LIN. FT.	LB.	TON	CU. IN.	LIN. FT.	EACH	SQ. YD.	CU. YD.	SQ. FT.	SQ. FT.
07464	HIGHWAY 7 OVER MIDDLE FORK SALINE RIVER	BENT 1			47	53.76		0.1	7,086		132	920	0.5	1,800			283	156	189	422
		BENT 2			④ 348	98.24			13,569					1,835						
		BENT 3			476	98.24			13,569					1,835						
		BENT 4			47	53.76		0.1	7,086		123	920	0.5	1,800			248	139	189	422
		200'-0" CONTINUOUS W-BEAM UNIT					228.10	15.1		82,930		190,600	7.2		104	1			2,927	4,206
		EXISTING BRIDGE NO. 01782 (SITE NO. 1)	④ 1	150																
		TOTALS FOR BRIDGE NO. 07464			918	304.00	228.10	15.3	41,310	82,930	255	192,440	8.2	7,270	104	1	531	295	3,305	5,050
07465	HIGHWAY 7 OVER DRY RUN CREEK	BENT 1				14.15			1,623		65						220	123		54
		BENT 2			96	48.95			7,412	485										
		BENT 3			112	48.95			7,412	485										
		BENT 4				14.15			1,623		70						227	126		54
		105'-0" CONTINUOUS R.C. SLAB UNIT					290.00	7.9		78,150						1			1,600	2,085
		EXISTING BRIDGE NO. 01116 (SITE NO. 2)	1																	
		TOTALS FOR BRIDGE NO. 07465			208	126.20	290.00	7.9	18,070	79,120	135					1	447	249	1,600	2,193
TOTALS FOR JOB NO. 012318				150	① 1,126	430.20	② 518.10	23.2	59,380	162,050	390	192,440	8.2	7,270	104	2	978	544	4,905	7,243

① Includes approx. 587 Cu. Yd. of rock excavation.

② Based upon neat lines of Decorative Concrete Railing, and the dimension of deck edge being 9¾". Payment will be based upon plan quantities shown.

③ All steel piling shall be Grade 50 and are required to have approved driving points which will not be paid for directly, but will be considered subsidiary to the item "Steel Piling (HP 12x53)". All piles shall conform to Standard Drawing No. 55020.

④ Excavation during the construction of Bent 2 is expected to expose a portion of the spread footing of the eastern most abutment of the existing bridge. Removal of this footing, in whole or in part, as necessary, will be required to facilitate the construction of Bent 2. This work shall be considered subsidiary to the item "Removal of Existing Bridge Structure (Site No. _)".

JIM POOL
DESIGN SECTION SUPERVISOR

STATE OF ARKANSAS
CHARLES R. ELLIS
LICENSED PROFESSIONAL ENGINEER
No. 9235
9-13-19
BRIDGE ENGINEER

SCHEDULE OF BRIDGE QUANTITIES
MIDDLE FORK SALINE RIVER & DRY RUN CREEK
STRS. & APPRS. (S)
GARLAND AND PERRY COUNTIES

ROUTE 7 SEC. 10 & 11
ARKANSAS STATE HIGHWAY COMMISSION
LITTLE ROCK, ARK.

DRAWN BY: BHS DATE: 8/22/19 FILENAME: b012318_ql.dgn
CHECKED BY: KAP DATE: 9/13/19 SCALE: No Scale
DESIGNED BY: — DATE: —

BRIDGE NO. 07464 & 07465 DRAWING NO. 61186

PRINT DATE: 9/13/2019

SUMMARY OF QUANTITIES

ITEM NUMBER	ITEM	QUANTITY	UNIT
SP & 201	CLEARING	29	STATION
SP & 201	GRUBBING	29	STATION
202	REMOVAL AND DISPOSAL OF PIPE CULVERTS	2	EACH
210	UNCLASSIFIED EXCAVATION	21019	CU. YD.
210	COMPACTED EMBANKMENT	23361	CU. YD.
SP	REMOVING AND REPLACING TOPSOIL	1972	CU. YD.
SP & 210	SOIL STABILIZATION	500	TON
SS & 303	AGGREGATE BASE COURSE (CLASS 7)	4995	TON
SS & 401	TACK COAT	1389	GAL.
SP, SS, & 406	MINERAL AGGREGATE IN ACHM BINDER COURSE (1")	1107	TON
SP, SS, & 406	ASPHALT BINDER (PG 64-22) IN ACHM BINDER COURSE (1")	51	TON
SP, SS, & 407	MINERAL AGGREGATE IN ACHM SURFACE COURSE (3/8")	1808	TON
SP, SS, & 407	ASPHALT BINDER (PG 64-22) IN ACHM SURFACE COURSE (3/8")	105	TON
412	COLD MILLING ASPHALT PAVEMENT	889	SQ. YD.
SP, SS, & 414	ASPHALT CONCRETE PATCHING FOR MAINTENANCE OF TRAFFIC	15	TON
SP, SS, & 415	ACHM PATCHING OF EXISTING ROADWAY	100	TON
504	APPROACH SLABS	214.80	CU. YD.
504	APPROACH GUTTERS	90.20	CU. YD.
601	MOBILIZATION	1.00	LUMP SUM
SP & 602	FURNISHING FIELD OFFICE	1	EACH
SS & 603	MAINTENANCE OF TRAFFIC	1.00	LUMP SUM
SP, SS, & 604	SIGNS	267	SQ. FT.
SP, SS, & 604	BARRICADES	192	LIN. FT.
SP, SS, & 604	TRAFFIC DRUMS	40	EACH
604	CONSTRUCTION PAVEMENT MARKINGS	10084	LIN. FT.
604	REMOVABLE CONSTRUCTION PAVEMENT MARKINGS	500	LIN. FT.
604	REMOVAL OF PERMANENT PAVEMENT MARKINGS	5400	LIN. FT.
SP, SS, & 604	VERTICAL PANELS	31	EACH
SS & 605	CONCRETE DITCH PAVING (TYPE B)	158	SQ. YD.
SP	CULVERT CLEAN OUT	1	EACH
606	24" REINFORCED CONCRETE PIPE CULVERTS (CLASS III)	26	LIN. FT.
SP, SS, & 606	18" SIDE DRAIN	96	LIN. FT.
SP, SS, & 606	24" SIDE DRAIN	50	LIN. FT.
606	24" FLARED END SECTIONS FOR REINFORCED CONCRETE PIPE CULVERTS	2	EACH
606	SELECTED PIPE BEDDING	30	CU. YD.
SS & 611	4" PIPE UNDERDRAINS	1000	LIN. FT.
SS & 611	UNDERDRAIN OUTLET PROTECTORS	4	EACH
SS & 617	GUARDRAIL (TYPE A)	900	LIN. FT.
SS & 617	GUARDRAIL TERMINAL (TYPE 2)	8	EACH
SS & 617	THRIE BEAM GUARDRAIL TERMINAL	8	EACH
620	LIME	9	TON
SP & 620	SPECIAL SEEDING	4.60	ACRE
SS & 620	MULCH COVER	22.36	ACRE
SP, SS, & 620	SPECIAL MULCH COVER	4.60	ACRE
620	WATER	926.8	M. GAL.
621	TEMPORARY SEEDING	22.36	ACRE
621	SILT FENCE	6014	LIN. FT.
621	SAND BAG DITCH CHECKS	539	BAG
621	SEDIMENT BASIN	300	CU. YD.
621	OBLITERATION OF SEDIMENT BASIN	300	CU. YD.
621	SEDIMENT REMOVAL AND DISPOSAL	549	CU. YD.
621	ROCK DITCH CHECKS	109	CU. YD.
621	WATTLE (20")	100	LIN. FT.
SP & 623	SPECIAL SECOND SEEDING APPLICATION	4.60	ACRE
624	SOLID SODDING	108	SQ. YD.
626	EROSION CONTROL MATTING (CLASS 3)	1211	SQ. YD.
635	ROADWAY CONSTRUCTION CONTROL	1.00	LUMP SUM
718	REFLECTORIZED PAINT PAVEMENT MARKING WHITE (6")	5550	LIN. FT.
718	REFLECTORIZED PAINT PAVEMENT MARKING YELLOW (6")	5550	LIN. FT.
721	RAISED PAVEMENT MARKERS (TYPE II)	38	EACH
SS & 804	REINFORCING STEEL-ROADWAY (GRADE 60)	30740	POUND
816	FILTER BLANKET	26	SQ. YD.
816	DUMPED RIPRAP	13	CU. YD.
	STRUCTURES OVER 20' SPAN		
205	REMOVAL OF EXISTING BRIDGE STRUCTURE (SITE NO. 1)	1.00	LUMP SUM
205	REMOVAL OF EXISTING BRIDGE STRUCTURE (SITE NO. 2)	1.00	LUMP SUM
603	TEMPORARY BRIDGE STRUCTURE (24' ROADWAY WIDTH)	150	LIN. FT.
636	BRIDGE CONSTRUCTION CONTROL	1.00	LUMP SUM
801	UNCLASSIFIED EXCAVATION FOR STRUCTURES-BRIDGE	1126	CU. YD.
SS & 802	CLASS S CONCRETE-BRIDGE	430.20	CU. YD.
SP, SS, & 802	CLASS S(AE) CONCRETE-BRIDGE	518.10	CU. YD.
SP	ARCHITECTURAL FINISH	4905	SQ. FT.
SP	STAINING CONCRETE SURFACES	7243	SQ. FT.
803	CLASS 1 PROTECTIVE SURFACE TREATMENT	23.2	GAL.
SP, SS, & 804	REINFORCING STEEL-BRIDGE (GRADE 60)	59380	POUND
SS & 804	EPOXY COATED REINFORCING STEEL (GRADE 60)	162050	POUND
SS & 805	STEEL PILING (HP 12X53)	390	LIN. FT.
SP, SS, & 807	STRUCTURAL STEEL IN BEAM SPANS (A709-GR50W)	192440	POUND
SS & 807	PAINTING STRUCTURAL STEEL	8.2	TON
SS & 808	ELASTOMERIC BEARINGS	7270	CU. IN.
SS & 809	SILICONE JOINT SEALANT	104	LIN. FT.
812	BRIDGE NAME PLATE (TYPE D)	2	EACH
816	FILTER BLANKET	978	SQ. YD.
816	DUMPED RIPRAP	544	CU. YD.

REVISIONS

DATE	REVISION	SHEET NUMBER
11/20/2019	REVISED THE DELAY IN RIGHT OF WAY OCCUPANCY AND FLEXIBLE BEGINNING OF WORK SPECIAL PROVISIONS.	38
12/3/2019	ADDED THE SUPPLEMENTAL SPECIFICATION 603-1 LANE CLOSURE NOTIFICATION TO GOVERNING SPECIFICATIONS; ADDED "SS &" TO MAINTENANCE OF TRAFFIC PAY ITEM.	4 & 38
12/19/2019	REVISED ROADWAY STANDARD DRAWINGS. REVISED "FOREST SERVICE REQUIREMENTS' AND "PLASTIC PIPE" SPECIAL PROVISIONS. ADDED "TRAFFIC CONTROL DEVICES IN CONSTRUCTION ZONES (MASH)" SPECIAL PROVISION.	3, 4, 34 & 38

SUMMARY OF QUANTITIES & REVISIONS

STATE OF ARKANSAS LICENSED PROFESSIONAL ENGINEER No. 11435 TIMOTHY D. SMITH 12-2019

DATE REVISED	DATE FILMED	DATE REVISED	DATE FILMED
11/20/19			
12/3/19			
12/19/19			

(2) SUMMARY OF QUANTITIES & REVISIONS

FEDERAL DIST.NO.	STATE	FED.AID PROJ.NO.	SHEET NO.	TOTAL SHEETS
6	ARK.	0023(8)	38	92

JOB NO.

DATE REVISED	DATE FILMED	DATE REVISED	DATE FILMED	FED.RD. DIST.NO.	STATE	FED.AID PROJ.NO.	SHEET NO.	TOTAL SHEETS
				6	ARK.			
				JOB NO.		012318	39	92

(2) SURVEY CONTROL DETAILS

STATE OF ARKANSAS
LICENSED PROFESSIONAL ENGINEER
No. 11425
TRINITY D. SMITH
10-1-19

SURVEY CONTROL COORDINATES

Project Name: s061501
Date: 11/9/2016
Coordinate System: ARKANSAS STATE PLANE - SOUTH ZONE BASED ON GPS CONTROL, 260036 - 260036A PROJECTED TO GROUND.
Units: U.S. SURVEY FOOT

Point Name	Northing	Easting	Elev	Feature	Description
1	2076731.7368	990484.8591	879.636	CTL	AHTD STD. MON. STAMPED PN: 1
2	2076593.5724	990104.2979	888.359	CTL	AHTD STD. MON. STAMPED PN: 2
3	2076711.8008	989763.5884	891.905	CTL	AHTD STD. MON. STAMPED PN: 3
4	2077351.0227	989191.9979	891.115	CTL	AHTD STD. MON. STAMPED PN: 4
5	2078112.0557	988595.4203	905.361	CTL	AHTD STD. MON. STAMPED PN: 5
100	2076890.8379	989636.6691	890.775	GPS	AHTD GPS # 260036
101	2077596.8655	988960.8889	898.822	GPS	AHTD GPS # 260036A
900	2078816.0929	987922.8065	924.285	TBM	CHSLED SQ S END OF HDWL
901	2078060.0064	988628.0040	905.678	TBM	CHIS SQUARE IN CL OF HW NORTH S
902	2076648.1275	990214.9367	884.800	TBM	CH SQ NW COR HW N. SIDE HWY7

*Note - Rebar and Cap - Standard - 5/8" Rebar with 2" Aluminum Cap stamped
*(standard markings common to all caps), or as indicated
(other markings indicated in the point description of the individual point).
ALL DISTANCES ARE GROUND.
USE CAF = 1.0 FOR STAKEOUT FOR THIS PROJECT.
A PROJECT CAF OF 0.999961087529 HAS BEEN USED TO COMPUTE THE ABOVE GROUND COORDINATES.
THIS CAF IS INTENDED FOR USE WITHIN THE PROJECT LIMITS.
GRID DISTANCE = GROUND DISTANCE X CAF.
GRID COORDINATES ARE STORED UNDER FILE NAME s061501gi.CTL
HORIZONTAL DATUM: NAD 83 (2011)
VERTICAL DATUM: NAVD 88 POSITIONAL ACCURACY THIRD ORDER, UNLESS SPECIFIED OTHERWISE AT A SPECIFIC POINT.

REFERENCE POINTS (1500 SERIES) ARE TO BE USED TO ESTABLISH CONTROL IF THE PRIMARY CONTROL POINTS LISTED ABOVE HAVE BEEN DESTROYED.
REFERENCE POINTS ARE NOT TO BE USED FOR VERTICAL CONTROL

BASIS OF BEARING:
ARKANSAS STATE PLANE GRID BEARINGS - 0302-SOUTH ZONE
DETERMINED FROM GPS CONTROL POINTS: 260036 - 260036A
CONVERGENCE ANGLE: 00 36 08.02 LEFT AT LT: N 34 45 50.64 LG: W093-04-33.60
GRID AZIMUTH = ASTRONOMICAL AZIMUTH - CONVERGENCE ANGLE.

8/29/2019

R012318.DGN

SURVEY CONTROL DETAILS

DATE REVISED	DATE FILMED	DATE REVISED	DATE FILMED	FED.RD. DIST.NO.	STATE	FED.AID PROJ.NO.	SHEET NO.	TOTAL SHEETS
				6	ARK.			
				JOB NO.		012318	40	92

(2) SURVEY CONTROL DETAILS

STATE OF ARKANSAS
LICENSED PROFESSIONAL ENGINEER
No. 11425
TRINITY D. SMITH
10-1-19

SURVEY CONTROL COORDINATES

Project Name: s080501
Date: 9/6/2016
Coordinate System: ARKANSAS STATE PLANE - NORTH ZONE BASED ON GPS CONTROL,
PROJECTED TO GROUND.
Units: U.S. SURVEY FOOT

Point Name	Northing	Easting	Elev	Feature	Description
1	171140.1917	978944.9011	778.916	CTL	AHTD STD. MON. STAMPED PN: 1
2	172146.2813	979331.2932	765.572	CTL	AHTD STD. MON. STAMPED PN: 2
3	172737.7913	979163.7966	753.478	CTL	AHTD STD. MON. STAMPED PN: 3
4	173184.6851	979039.7441	761.488	CTL	AHTD STD. MON. STAMPED PN: 4
5	173572.5049	979127.6600	760.193	CTL	AHTD STD. MON. STAMPED PN: 5
100	170788.4152	978624.9397	795.620	GPS	AHTD GPS # 530018
101	171665.6928	979326.6179	772.132	GPS	AHTD GPS # 530018A
999	172050.6252	979303.5561	767.397	BM	NGS 2ND ORDER BM C 104

*Note - Rebar and Cap - Standard - 5/8" Rebar with 2" Aluminum Cap stamped
*(standard markings common to all caps), or as indicated
(other markings indicated in the point description of the individual point).
USE CAF = 1.0 FOR STAKEOUT FOR THIS PROJECT
A PROJECT CAF OF 0.999994163075 HAS BEEN USED TO COMPUTE THE ABOVE GROUND COORDINATES.
THIS CAF IS INTENDED FOR USE WITHIN THE PROJECT LIMITS.
GRID DISTANCE = GROUND DISTANCE X CAF.
GRID COORDINATES ARE STORED UNDER FILE NAME s080501gi.ctl
HORIZONTAL DATUM: NAD 83 (2011)
VERTICAL DATUM: NAVD 88 POSITIONAL ACCURACY THIRD ORDER, UNLESS SPECIFIED OTHERWISE
AT A SPECIFIC POINT.

REFERENCE POINTS (1500 SERIES) ARE TO BE USED TO ESTABLISH CONTROL
IF THE PRIMARY CONTROL POINTS LISTED ABOVE HAVE BEEN DESTROYED.
REFERENCE POINTS ARE NOT TO BE USED FOR VERTICAL CONTROL

BASIS OF BEARING:
ARKANSAS STATE PLANE GRID BEARINGS - 0301-NORTH ZONE
DETERMINED FROM GPS CONTROL POINTS: 530018 - 530018A
CONVERGENCE ANGLE: 00-38-43.57 LEFT AT LT: 34-48-04.04 LG: 093-06-33.08
GRID AZIMUTH = ASTRONOMICAL AZIMUTH - CONVERGENCE ANGLE.

8/29/2019
R012318.DGN

DATE REVISED	DATE FILMED	DATE REVISED	DATE FILMED	FED.RD. DIST.NO.	STATE	FED.AID PROJ.NO.	SHEET NO.	TOTAL SHEETS
				6	ARK.			
				JOB NO.		012318	41	92

(2) SURVEY CONTROL DETAILS

STATE OF ARKANSAS
LICENSED PROFESSIONAL ENGINEER
No. 11425
TRINITY D. SMITH
10-1-19

HWY. 7 SITE 1

POINT NO.	TYPE	STATION	NORTHING	EASTING
8000	POB	300+00.00	2076728.7316	990536.2072
8002	PC	303+32.91	2076631.0485	990217.9788
8004	PT	308+38.56	2076748.3109	989752.1156
8005	PC	317+98.95	2077436.0188	989081.7433
8007	PT	323+34.51	2077852.1363	988745.8228
8008	POE	324+96.47	2077987.0996	988656.2981

HWY. 7 SITE 1 DETOUR

POINT NO.	TYPE	STATION	NORTHING	EASTING
8004	POB	19+72.60	2076748.3109	989752.1156
8014	PC	20+23.16	2076784.5177	989716.8215
8016	PT	21+66.10	2076898.1904	989630.7828
8017	PC	22+35.84	2076958.6050	989595.9370
8019	PT	23+79.25	2077072.6176	989509.5668
8020	PC	26+17.55	2077243.1236	989343.0830
8022	PT	27+63.93	2077333.7275	989228.6262
8023	PC	28+20.37	2077362.8388	989180.2655
8025	PT	29+73.05	2077457.9778	989061.4289
8005	POE	30+31.45	2077500.2051	989021.0959

HWY. 7 SITE 2

POINT NO.	TYPE	STATION	NORTHING	EASTING
8009	POB	500+00.00	171151.9230	978912.2743
8010	PC	504+18.97	171469.2770	979185.8143
8012	PT	513+76.59	172367.6328	979338.3537
8013	POE	519+66.23	172916.2994	979122.3864

8/29/2019

R012318.DGN

SURVEY CONTROL DETAILS

DATE REVISED	DATE FILMED	DATE REVISED	DATE FILMED	FED.RD. DIST.NO.	STATE	FED.AID PROJ.NO.	SHEET NO.	TOTAL SHEETS
				6	ARK.			
				JOB NO.		012318	42	92

(2) SURVEY CONTROL DETAILS

STATE OF ARKANSAS
LICENSED PROFESSIONAL ENGINEER
No. 11425
TRINITY D. SMITH
10-1-19

P.I. 306+14.93

STA. 20+00.00
BEGIN DETOUR
SITE 1

PN:2
PD:AHTD STD. MON. STAMPED PN:2

HWY. 7 SITE 1

360.64'
SURVEY BASELINE N 70°51'46" W

PN:3
PD:AHTD STD. MON. STAMPED PN:3

POB 19+72.60

8002

PN:902
PD:CH SQ NW COR HW N.SIDE HWY7

C.L. CONST.
PI = 306+14.93
Δ = 63°12'21"RT.
D = 12°30'00"
T = 282.02'
L = 505.65'
PC = 303+32.91
PT = 308+38.56

P.C. 303+32.91

P.I. 300+72.82

S 72°31'32" W
260.10'
SURVEY BASELINE S 70°02'47" W

POB 300+00.00

8000

PN:1
PD:AHTD STD. MON. STAMPED PN:1

S 74°24'03" W
72.82'

P.I. 20+95.00

P.T. 308+38.56

P.C. 20+23.16

8014

SURVEY BASELINE N 35°19'58" W
139.46'

STA. 308+75.00
BEGIN JOB 012318
SITE 1
LOG MILE 16.62

C.L. DETOUR
PI = 20+95.00
Δ = 14°17'36"RT.
D = 10°00'00"
T = 71.84'
L = 142.93'
PC = 20+23.16
PT = 21+66.10

P.T. 21+66.10

801

N 29°58'31" W
69.14'

PN:100
PD:AHTD GPS 260036

P.C. 22+35.84

P.T. 23+79.25

HWY. 7 SITE 1
DETOUR

P.I. 23+07.92

801

N 44°16'07" W
639.92'
SURVEY BASELINE

C.L. DETOUR
PI = 23+07.92
Δ = 14°20'27"LT.
D = 10°00'00"
T = 72.08'
L = 143.41'
PC = 22+35.84
PT = 23+79.25

305 | 300 | 20 | 310 | 25 | 315

PI = 26+91.14
Δ = 14°38'14"LT.
D = 10°00'00"
T = 73.59'
L = 146.38'
PC = 26+17.55
PT = 27+63.93

STA. 319+00.00
END SITE 1

315 | 25 | 30 | 320

P.C. 26+17.55

P.T. 27+63.93

P.I. 28+97.17

POE 30+31.45

P.I. 320+67.51

HWY. 7 SITE 1

8005 | 8025 | N 43°41'08" W | 8005
58.39'

331.42'
SURVEY BASELINE N 43°13'50" W

802

8022

N 58°57'13" W
56.45'

PN:4
PD:AHTD STD. MON. STAMPED PN:4

8020

N 44°18'58" W
238.30'

HWY. 7 SITE 1
DETOUR

P.I. 26+91.14

P.C. 28+20.37

C.L. DETOUR
PI = 28+97.17
Δ = 15°16'05"RT.
D = 10°00'00"
T = 76.80'
L = 152.68'
PC = 28+20.37
PT = 29+73.05

P.C. 317+98.95

P.T. 29+73.05

STA. 29+31.90
END DETOUR
SITE 1

PN:101
PD:AHTD GPS 260036A

HWY. 7 SITE 1

800

161.96'
N 33°33'26" W

8008

631.66'
SURVEY BASELINE N 35°21'05" W

POE 324+96.47

P.T. 323+34.51

C.L. CONST.
PI = 320+67.51
Δ = 10°42'41"RT.
D = 02°00'00"
T = 268.57'
L = 535.57'
PC = 317+98.95
PT = 323+34.51

PN:901
PD:CHIS SQUARE IN CL OF HW NORTH S

PN:5
PD:AHTD STD. MON. STAMPED PN:5

8/29/2019

R012318.DGN

SURVEY CONTROL DETAILS

DATE REVISED	DATE FILMED	DATE REVISED	DATE FILMED	FED.RD. DIST.NO.	STATE	FED.AID PROJ.NO.	SHEET NO.	TOTAL SHEETS
				6	ARK.			
				JOB NO.		012318	43	92

(2) SURVEY CONTROL DETAILS

C.L. CONST
P.I. = 509+51.18
Δ = 62°14'42" LT.
D = 6°30'00"
T = 532.21'
L = 957.62'
P.C. = 504+18.97
P.T. = 513+76.59

STATE OF ARKANSAS
LICENSED PROFESSIONAL ENGINEER
No. 11425
TRINITY D. SMITH
10-1-19

POB 500+00.00
500
8009
HWY. 7 SITE 2
N 40°45'34" E
418.97'
SURVEY BASELINE N42°17'18"E
475.52'
PDAHTD GPS # 530008
ALUM PNH PDAHTD STD. MON. STAMPED PNH
SURVEY BASELINE N35°59'39"E
649.51'
P.C. 504+18.97
505
8010
SURVEY BASELINE N00°33'21"E
480.68'
HWY. 7 SITE 2
PDAHTD GPS # 530016A
P.I. 509+51.18
STA. 505+00.00
BEGIN SITE 2
LOG MILE 3.10

510
PDAH2 PDAHTD STD. MON. STAMPED PNH
P.I. 513+76.59
515
SURVEY BASELINE N15°48'37"W
614.77'
PDAH3 PDAHTD STD. MON. STAMPED PNH
N 21°29'09" W
589.64'
8012
HWY. 7 SITE 2
POE 519+66.23
8013
SURVEY BASELINE N15°30'51"W
463.79'
PDAH4 PDAHTD STD. MON. STAMPED PNH
SURVEY BASELINE N12°46'22"E
397.66'
PDAH5 PDAHTD STD. MON.
STA. 518+50.00
END SITE 2
END JOB 012318

C.L. CONST
P.I. = 509+51.18
Δ = 62°14'42" LT.
D = 6°30'00"
T = 532.21'
L = 957.62'
P.C. = 504+18.97
P.T. = 513+76.59

8/29/2019
R012318.DGN

SURVEY CONTROL DETAILS

STA. 312+75.40 TO STA. 314+01.95 IN PLACE
131.0' X 23.33' CL. ROADWAY
BRIDGE NO. 01782 CONCRETE T-BEAM
REMOVE AS EXISTING BRIDGE
STRUCTURE (SITE NO. 1) = 1.00 LUMP SUM

STA. 312+25.47 BR. END
BRIDGE NO. 07464
200'-0" CONTINUOUS COMP. W-BEAM
UNIT (60', 80', 60')
34'-0" CLEAR ROADWAY
203'-0¾" TOTAL LENGTH
45° RT. FWD. SKEW
STA. 314+28.53 BR. END
050= 7180 C.F.S. D.A.= 3.43 SQ. MI.

GUARDRAIL

STA.	STA.	SIDE	GUARDRAIL (TYPE A) LIN. FT.	GUARDRAIL TERMINAL (TYPE 2) EACH	THRIE BEAM GUARDRAIL TERMINAL EACH
310+72.07	311+97.07	LT.	75	1	1
310+12.32	312+31.07	RT.	150	1	1
314+22.93	316+41.68	LT.	150	1	1
314+56.93	315+81.93	RT.	75	1	1

DATE REVISED	DATE FILMED	DATE REVISED	DATE FILMED	FED.RD. DIST.NO.	STATE	FED.AID PROJ.NO.	SHEET NO.	TOTAL SHEETS
				6	ARK.			
				JOB NO.		012318	44	92

(2) PLAN AND PROFILE SHEETS

STATE OF ARKANSAS
LICENSED PROFESSIONAL ENGINEER
No. 11425
TRINITY D. SMITH
10-1-19

310

315

320

100' TRANSITION

MIDDLE FORK SALINE RIVER

EXISTING R/W

PROPOSED R/W

50' BUFFER

N 44°16'07" W

N 33°33'26" W

C.L. CONST.
PI = 306+14.93
Δ = 63°12'21"RT.
D = 12°30'00"
T = 282.02'
L = 505.65'
PC = 303+32.91
PT = 308+38.56
e = MATCH EXIST.

C.L. CONST.
PI = 320+67.51
Δ = 10°42'41"RT.
D = 02°00'00"
T = 268.57'
L = 535.57'
PC = 317+98.95
PT = 323+34.51
e = MATCH EXIST.

STA. 308+75.00
BEGIN JOB 012318
& SITE 1
LOG MILE 16.62

STA. 319+00.00
END SITE 1

T.C.E.

STA. 310+03.00 IN PLACE
21" X 15" X 20' C.M.A.P.
PIPE CULVERT
RT. SIDE DRAIN
REMOVE AND INSTALL
18" X 52' PIPE CULVERT
RT. SIDE DRAIN
CONST. APPROACH
ON RT. = 225 CU. YDS. EMB.
= 5 CU. YDS. EXC.

STA. 318+97.00 IN PLACE
24" X 34' C.M. PIPE CULVERT
RT. SIDE DRAIN
REMOVE AND INSTALL
24" X 50' PIPE CULVERT
RT. SIDE DRAIN
CONST. APPROACH ON RT. = 165 CU. YDS.

APPROXIMATE FLOODPLAIN BOUNDARIES

REFER TO SURVEY CONTROL DETAIL SHEETS FOR HORIZONTAL AND VERTICAL CONTROL DATA.

SITE 1- HWY. 7
MAIN LANES

(ALL SITE 1 MAIN LANE SUPERELEVATION ABOUT CENTERLINE)
STA. 307+75.00 MATCH EXISTING SUPERELEVATION (0.093'/')
STA. 311+01.50 END SUPERELEVATION

(ALL SITE 1 MAIN LANE SUPERELEVATION ABOUT CENTERLINE)
STA. 315+73.95 BEGIN SUPERELEVATION (N.C.)
STA. 317+80.20 MAX SUPERELEVATION (0.033'/')
STA. 320+00.00 MATCH EXISTING SUPERELEVATION (0.033'/')

P.V.I. 308+75.00 892.37'
P.V.C. 309+25.00 892.40'
P.V.I. 310+00.00 892.46'
P.V.T. 310+75.00 893.23'
P.V.C. 310+87.50 893.36'
P.V.I. 311+50.00 894.00'
BRIDGE END STA. 312+25.47 ELEV. 894.00
P.V.T. 312+42.50 894.00'
BRIDGE END STA. 314+28.53 ELEV. 894.00
P.V.C. 315+75.00 894.00'
P.V.I. 317+50.00 894.00'
P.V.T. 319+25.00 898.66'
P.V.I. 319+75.24 899.99'

VC= 150'
e= 0.18'
K= 156.04

VC= 125'
e= 0.16'
K= 121.40

VC= 350'
e= 1.16'
K= 131.55

0.07%
1.03%
0.00%
2.66%

-00.00 RT. DT. GR. ELEV. 885.93
-3.09% RT. DT. GR.
-50.00 RT. DT. GR. ELEV. 881.30

050 DESIGN H.W. ELEVATION 886.20'

NOTE:
FOR THE CONSTRUCTION OF TEMPORARY WORK RAMPS OR HAUL ROADS, THIS STREAM, STA. 312+87 TO STA. 313+75 , IS CLASSIFIED AS A PERENNIAL STREAM. THE TOP OF CHANNEL ELEVATION IS 880 FT. MSL. REFER TO SECTION 110.06(c) OF THE 2014 STANDARD SPECIFICATIONS.

905 900 895 890 885 880 875 870 865 860

307+00 308+00 309+00 310+00 311+00 312+00 313+00 314+00 315+00 316+00 317+00 318+00 319+00 320+00 321+00 322+00

10/1/2019

R012318.DGN

DATE REVISED	DATE FILMED	DATE REVISED	DATE FILMED	FED.RD. DIST.NO.	STATE	FED.AID PROJ.NO.	SHEET NO.	TOTAL SHEETS
				6	ARK.			
				JOB NO.		012318	45	92

(2) PLAN AND PROFILE SHEETS

STATE OF ARKANSAS
LICENSED PROFESSIONAL ENGINEER
No. 11425
TRINITY D. SMITH
10-1-19

STA. 312+75.40 TO STA. 314+01.95 IN PLACE
131.0' X 23.33' CL. ROADWAY
BRIDGE NO. 01782 CONCRETE T-BEAM
REMOVE AS EXISTING BRIDGE
STRUCTURE (SITE NO. 1) = 1.00 LUMP SUM

C.L. DETOUR
PI = 23+07.92
Δ = 14°20'27"LT.
D = 10°00'00"
T = 72.08'
L = 143.41'
PC = 22+35.84
PT = 23+79.25
e = 0.100'/'
Ls = 275'

C.L. DETOUR
PI = 26+91.14
Δ = 14°38'14"LT.
D = 10°00'00"
T = 73.59'
L = 146.38'
PC = 26+17.55
PT = 27+63.93
e = 0.100'/'
Ls = 275'

310 315

100' TRANSITION

MIDDLE FORK SALINE RIVER

PROPOSED R/W

50' BUFFER

EXISTING R/W

CONST. LIMITS

T.C.E.

N 44°16'07" W 50.66'

N 29°58'31" W 69.74'

N 44°18'58" W 238.30'

N 58°53'13" W 56.45'

N 43°41'08" W 58.39'

308+20.93 66.16' POB 19+72.60

308+75.00 90.00'

P.I. 20+95.00

311+00.00 96.00'

P.C. 22+35.84

P.T. 23+79.25

314+00.00 75.00'

P.C. 26+17.55

P.T. 27+63.93

P.I. 28+97.17

POB 30+31.45

319+00.00 75.00'

110.00'

308+20.17 65.85'

P.T. 308+38.56

P.C. 20+23.46

P.T. 21+66.10

310+50.00 80.00'

311+00.00 110.00'

311+50.00 90.00'

P.I. 23+07.92

314+00.00 95.00'

315+00.00 125.00'

315+00.00 69.86'

P.I. 26+91.14

P.C. 28+20.37

317+00.00 68.63'

P.C. 317+98.95

P.T. 29+73.05

EXISTING R/W

100' TRANSITION

C.L. CONST.
PI = 306+14.93
Δ = 63°12'21"RT.
D = 12°30'00"
T = 282.02'
L = 505.65'
PC = 303+32.91
PT = 308+38.56
e = 0.100'/'
Ls = 350'

STA. 20+00.00
BEGIN DETOUR
SITE 1

C.L. DETOUR
PI = 20+95.00
Δ = 14°17'36"RT.
D = 10°00'00"
T = 71.84'
L = 142.93'
PC = 20+23.16
PT = 21+66.10
NO SUPER

APPROXIMATE FLOODPLAIN BOUNDARIES

C.L. DETOUR
PI = 28+97.17
Δ = 15°16'05"RT.
D = 10°00'00"
T = 76.80'
L = 152.68'
PC = 28+20.37
PT = 29+73.05
NO SUPER

STA. 29+31.90
END DETOUR
SITE 1

C.L. CONST.
PI = 320+67.51
Δ = 10°42'41"RT.
D = 02°00'00"
T = 268.57'
L = 535.57'
PC = 317+98.95
PT = 323+34.51
e = 0.048'/'
Ls = 300'

REFER TO SURVEY CONTROL DETAIL SHEETS FOR HORIZONTAL AND VERTICAL CONTROL DATA.

SITE 1 - HWY. 7
DETOUR

(ALL SITE 1 DETOUR SUPERELEVATION ABOUT CENTERLINE)
STA. 22+00.97 BEGIN SUPERELEVATION
STA. 23+05.47 MAX. SUPERELEVATION (0.036'/')
STA. 26+90.74 MAX. SUPERELEVATION (0.036'/')
STA. 27+95.24 END SUPERELEVATION

P.V.I. 20+00.00
892.33'

-0.49%

P.V.C. 20+75.00
891.96'

VC= 200'
e= 0.13'
K= 392.21

P.V.I. 21+75.00
891.47'

P.V.T. 22+75.00
891.50'

STA. 24+50.00
TEMP. B.E.

0.02%

STA. 26+00.00
TEMP. B.E.

P.V.C. 26+62.50
891.59'

P.V.I. 27+75.00
891.61'

VC= 225'
e= 0.55'
K= 114.73

P.V.T. 28+87.50
893.84'

1.98%

P.V.I. 29+31.90
894.72'

905 900 895 890 885 880 875 870 865 860

17+00 18+00 19+00 20+00 21+00 22+00 23+00 24+00 25+00 26+00 27+00 28+00 29+00 30+00 31+00 32+00

NOTE:

FOR THE CONSTRUCTION OF TEMPORARY WORK RAMPS OR HAUL ROADS, THIS STREAM, STA. 312+87 TO STA. 313+75 , IS CLASSIFIED AS A PERENNIAL STREAM. THE TOP OF CHANNEL ELEVATION IS 880 FT. MSL. REFER TO SECTION 110.06(c) OF THE 2014 STANDARD SPECIFICATIONS.

R012318.DGN 10/1/2019

DATE REVISED	DATE FILMED	DATE REVISED	DATE FILMED	FED.RD. DIST.NO.	STATE	FED.AID PROJ.NO.	SHEET NO.	TOTAL SHEETS
				6	ARK.			
				JOB NO.		012318	46	92

(2) PLAN AND PROFILE SHEETS

OBLITERATION

STA. 510+53.78 TO STA. 511+17.97 IN PLACE
60' X 23.4' CL. ROADWAY
BRIDGE NO. 01116 CONSISTING OF 2 - 30' R.C. DECK GIRDER SPANS
REMOVE AS EXISTING BRIDGE
STRUCTURE (SITE NO. 2) = 1.00 LUMP SUM

GUARDRAIL

STA.	STA.	SIDE	GUARDRAIL (TYPE A) LIN. FT.	GUARDRAIL TERMINAL (TYPE 2) EACH	THRIE BEAM GUARDRAIL TERMINAL EACH
508+93.60	510+18.60	LT.	75	1	1
507+99.85	510+18.60	RT.	150	1	1
511+46.40	513+65.15	LT.	150	1	1
511+46.40	512+71.40	RT.	75	1	1

C.L. CONST
P.I. = 509+51.18
Δ = 62°14'42" LT.
D = 6°30'00"
T = 532.21'
L = 957.62'
P.C. = 504+18.97
P.T. = 513+76.59
e = 0.100'/'
Ls = 350'

STA. 510+30.00 BR. END
BRIDGE NO. 07465
105'-0" CONTINOUS R.C. SLAB
UNIT (35', 35', 35')
34'-0" CLEAR ROADWAY
105'-0" TOTAL LENGTH
STA. 511+35 BR. END
Q50 = 2750 C.F.S. D.A. = 1.93 SQ. MI.

STA. 517+24.79 IN PLACE
24" X 38' R.C. PIPE CULVERT
WITH HDWLS. LT. & RT.
RETAIN & EXTEND
10' LT. & 8' RT.
WITH F.E.S. LT. & RT.
24" R.C. PIPE
(CLASS IV) (TYPE III BEDDING) = 26 LIN. FT.
24" F.E.S. = 2 EACH
TO A COMPLETED LENGTH OF 56 LIN. FT.
Q50 = 26.18 C.F.S. D.A. = 8.89 ACRES

STATE OF ARKANSAS
LICENSED PROFESSIONAL ENGINEER
No. 11425
TRINITY D. SMITH
10-1-19

STA. 505+00.00
BEGIN SITE 2
LOG MILE 3.10

STA. 506+50.04 IN PLACE
18" X 39' CM PIPE CULVERT
RT. SIDE DRAIN
REMOVE & INSTALL @ +80
18" X 44' PIPE CULVERT
RT. SIDE DRAIN
CONST. APPROACH
ON RT. = 205 CU. YD. EMB.

STA. 518+50.00
END SITE 2
END JOB 012318 SITE 2 - HWY. 7 MAIN LANES

REFER TO SURVEY CONTROL DETAIL SHEETS FOR HORIZONTAL AND VERTICAL CONTROL DATA.

STA. 504+00.00 MATCH EXIST (0.067'/')
STA. 505+15.50 MAX. SUPERELEVATION (0.100'/')
STA. 512+89.09 MAX. SUPERELEVATION (0.100'/')
STA. 516+39.09 END SUPERELEVATION

NOTE:

FOR THE CONSTRUCTION OF TEMPORARY WORK RAMPS OR HAUL ROADS, THIS STREAM, STA. 410+35 TO STA. 410+91, IS CLASSIFIED AS A PERENNIAL STREAM. THE TOP OF CHANNEL ELEVATION IS 759 FT. MSL. REFER TO SECTION 110.06(c) OF THE 2014 STANDARD SPECIFICATIONS.

F.L. OUTLET ELEV. LT. = 751.95
F.L. INLET ELEV. RT. = 754.49

10/1/2019
R012318.DGN

DATE REVISED	DATE FILMED	DATE REVISED	DATE FILMED	FED. ROAD DIST. NO.	STATE	FED. AID PROJ. NO.	SHEET NO.	TOTAL SHEETS
				6	ARK.			
				JOB NO.		012318	47	92
				①		07464 - LAYOUT - 61187		

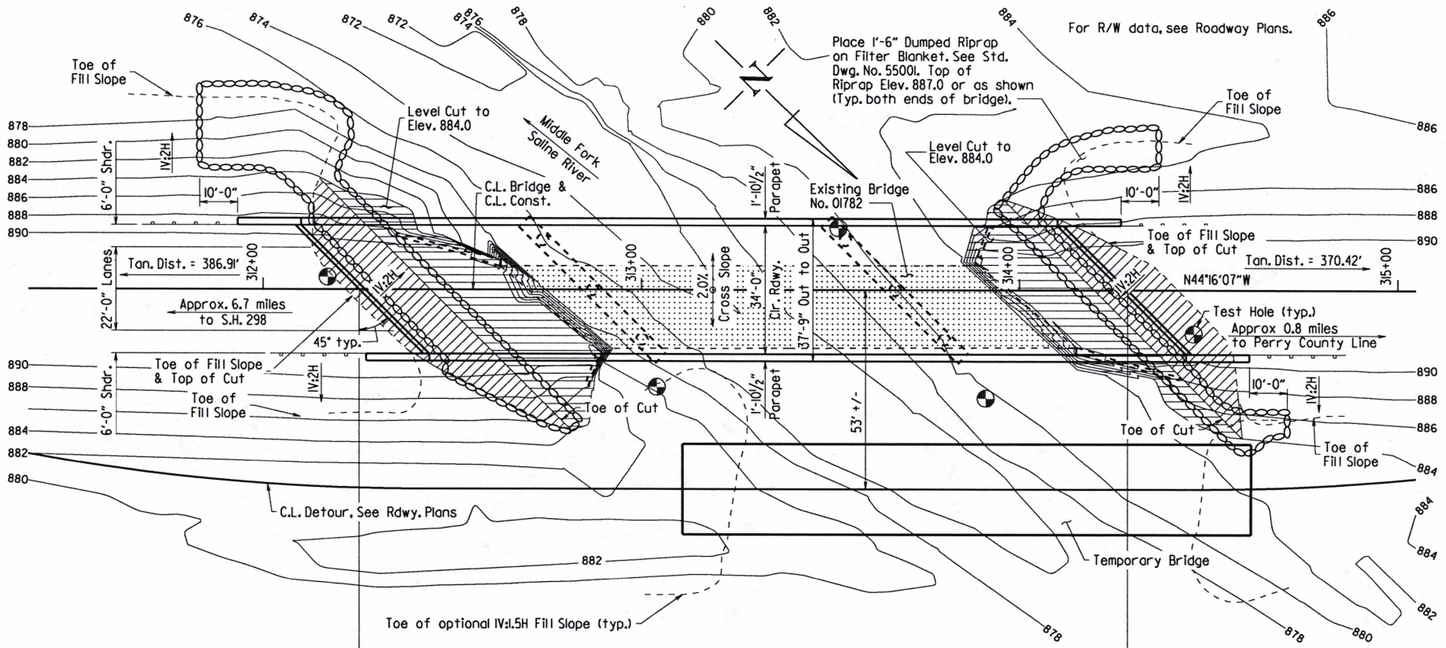

PLAN VIEW

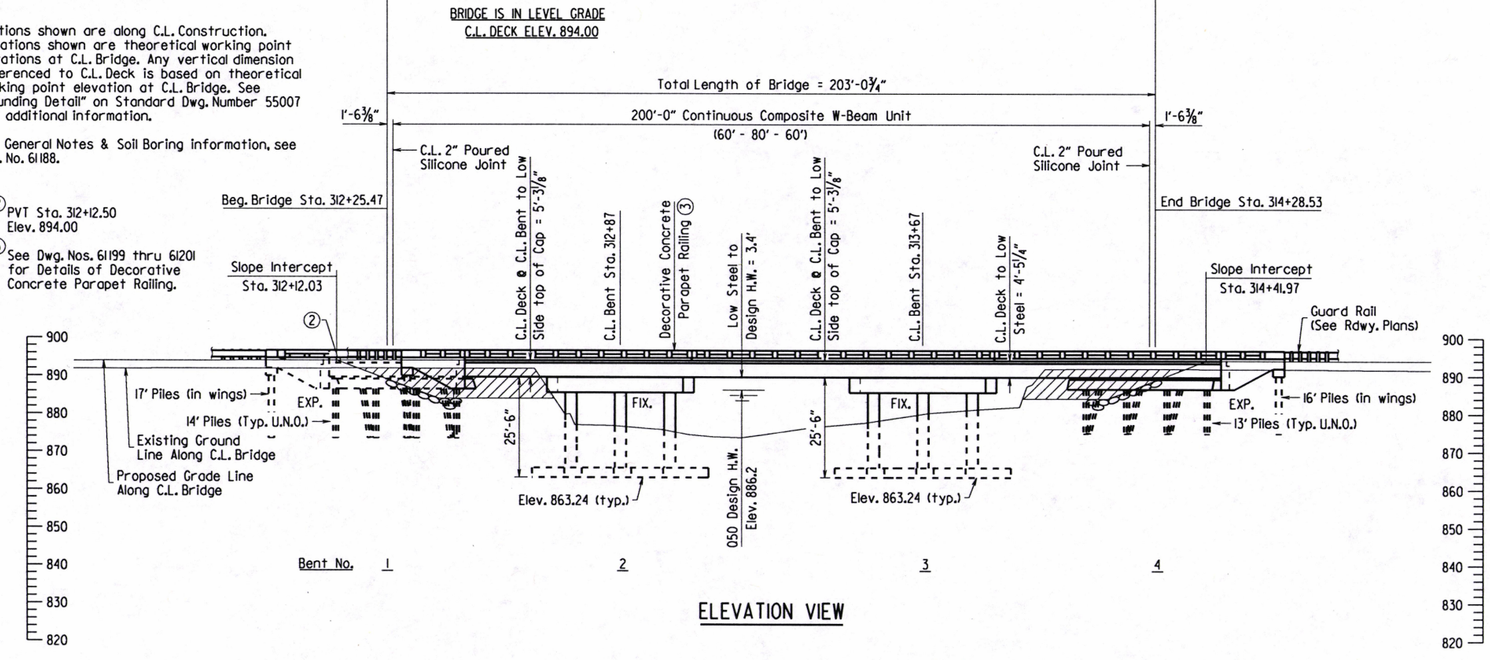

ELEVATION VIEW

Stations shown are along C.L. Construction. Elevations shown are theoretical working point elevations at C.L. Bridge. Any vertical dimension referenced to C.L. Deck is based on theoretical working point elevation at C.L. Bridge. See "Rounding Detail" on Standard Dwg. Number 55007 for additional information.

For General Notes & Soil Boring information, see Dwg. No. 61188.

② PVT Sta. 312+12.50 Elev. 894.00

③ See Dwg. Nos. 61199 thru 61201 for Details of Decorative Concrete Parapet Railing.

The Contractor shall excavate the existing embankment as shown at each end of the bridge. Approx. 609 cubic yards of excavation.

Use Type I Special Approach Gutters ("W" = 6'-0") and Type Special Approach Slab (width = 22'-0") at both ends of bridge. For Details, see Dwg. No. 61202 and Dwg. No. 61203, respectively.

HYDRAULIC DATA

Flood Description	Frequency	Discharge	① Natural Water Surface Elevation	Water Surface Elevation With Backwater
	Years	CFS	Feet	Feet
Design	50	7180	885.1	886.2
Base	100	8620	886.2	887.2
Extreme	500	12450	888.7	891.7
Overtopping	>500	N/A	N/A	N/A

① Unconstricted water surface without structure or roadway approaches.

Q100 backwater elevation for Existing Structure = 890.4 feet
Proposed Low Bridge Chord Elev. = 889.56 feet
Drainage area = 3.43 square miles
Historical H.W. Elevation = N/A

PRINT DATE: 9/11/2019

STATE OF ARKANSAS
LICENSED PROFESSIONAL ENGINEER
No. 9235
9-13-19
CHARLES R. ELLIS
BRIDGE ENGINEER

SHEET 1 OF 2
LAYOUT OF BRIDGE
HIGHWAY 7 OVER MIDDLE FORK SALINE RIVER
MIDDLE FORK SALINE RIVER & DRY RUN CREEK
STRS. & APPRS. (S)
GARLAND COUNTY

ROUTE 7 SEC. 10

ARKANSAS STATE HIGHWAY COMMISSION
LITTLE ROCK, ARK.

DRAWN BY: KAW DATE: 3-15-19 FILENAME: b012318x1_1l.dgn
CHECKED BY: JNP DATE: 9-11-19 SCALE: 1" = 20'
DESIGNED BY: KAW DATE: 3-19

BRIDGE NO. 07464 DRAWING NO. 61187

DATE REVISED	DATE FILMED	DATE REVISED	DATE FILMED	FED. ROAD DIST. NO.	STATE	FED. AID PROJ. NO.	SHEET NO.	TOTAL SHEETS
				6	ARK.			
				JOB NO.		012318	48	92
				①		07464 - LAYOUT - 61188		

GENERAL NOTES

BENCHMARK: Vertical Control Data are shown on the Survey Control Data Sheets.

CONSTRUCTION SPECIFICATIONS: Arkansas State Highway and Transportation Department Standard Specifications for Highway Construction (2014 Edition) with applicable Supplemental Specifications and Special Provisions. Section and Subsection refer to the Standard Construction Specifications unless otherwise noted in the Plans.

DESIGN SPECIFICATIONS: AASHTO LRFD Bridge Design Specifications, Seventh Edition (2014) with 2015 Interims.

LIVE LOADING: HL-93

SEISMIC PERFORMANCE ZONE: I S_{DI} = 0.12 SITE CLASS: C

MATERIALS AND STRENGTHS:

Class S(AE) Concrete (superstructure)	f'c = 4,000 psi
Class S Concrete (substructure)	f'c = 3,500 psi
Reinforcing Steel (AASHTO M 31 or M 322, Type A)	fy = 60,000 psi
Structural Steel (ASTM A709, Gr. 50W)	Fy = 50,000 psi
Structural Steel (ASTM A709, Gr. 36)	Fy = 36,000 psi

BORING LOGS: Boring logs may be obtained from the Construction Contract Procurement Section of the Program Management Division.

STEEL PILING: All piling shall be HP 12X53 (Grade 50) and shall be driven with an approved air, steam, or diesel hammer to a minimum safe bearing capacity of 95 tons per pile and into the material designated as Sandstone or Shale on the boring legend. Minimum penetration shall be 8' below bottom of cap. Piling shall be driven after embankment to bottom of cap is in place. Lengths shown are for estimating quantities and for use in determining payment for cut-off and build-up in accordance with Section 805. Actual pile lengths are to be determined in the field. The Contractor shall use approved steel H-Pile driving points on all piles.

SPREAD FOOTINGS: Footings shall be set a minimum of 2' into material designated as Slightly Weathered Shale on the boring legend. The top of the footings at Bents 2 and 3 shall be set a minimum of 4' below the channel bottom as determined by the lowest channel elevation within the footprint of the footing. Foundations for footings shall be prepared in accordance with Subsection 801.04. Rock excavations shall be made to neat lines of the concrete footings. Care shall be exercised to avoid shattering of rock faces by excessive blasting. Concrete in footings shall be poured directly against excavated surfaces of rock. Excavations shall be backfilled and compacted to the level of the existing ground in accordance with Subsection 801.08.

PAINTING: All Grade 50W structural steel, except galvanized members, surfaces in contact with concrete, and the expansion device, within five feet of bridge deck expansion joints shall be painted as specified in Subsection 807.75. The color of paint shall be Brown equal or close to Federal Std. 595B, Color Chip No. 30070 and as approved by the Engineer. The finish system may be applied in the shop. Any damage to the paint system occurring during transport or installation shall be corrected according to the manufacturer's recommendations at no cost to the Department.

BRIDGE DECK: The concrete bridge deck shall be given a tine finish as specified for final finishing in Subsection 802.19 for Class 5 Tined Bridge Roadway Surface Finish.

PROTECTIVE SURFACE TREATMENT: Class I Protective Surface Treatment shall be applied to the roadway surface.

STAINING CONCRETE SURFACES: A concrete penetrating stain shall be applied to bridge surfaces as specified in Special Provision Job No. 012318 "Staining Concrete Surfaces". The concrete penetrating stain shall not be applied on surfaces where Class I Protective Surface Treatment is applied. The color of the stain shall be as specified in Special Provision Job No. 012318 "Staining Concrete Surfaces".

DETAIL DRAWINGS:	DRAWING NOS.
End Bents	61189-61192
Intermediate Bents	61193-61194
Elastomeric Bearings	61195
200'-0" Continuous W-Beam Unit	61196-61198
Decorative Concrete Parapet Railing	61199-61201
Type I Special Approach Gutters	61202
Type Special Approach Slab	61203
General Notes for Steel Bridge Structures	55006
Details for Steel Bridge Structures	55007
Poured Silicone Joints	55008
Steel H-Piling	55020

EXISTING BRIDGE: Existing Bridge No. 01782 (Log Mile 16.70) is 23.3' wide (20.0' Roadway) and 131.0' long and consists of haunched continuous concrete tee girders on concrete piers and abutments. The new bridge is on the same location as existing. Plans of the existing structure, if available, may be obtained upon request to the Construction Contract Procurement Section of the Program Management Division.

REMOVAL AND SALVAGE: After traffic has switched to the detour, the Contractor shall remove existing Bridge No. 01782 in accordance with Section 205. Excavation during the construction of Bent 2 is expected to expose a portion of the spread footing of the eastern most abutment of the existing bridge. Removal of this footing, in whole or in part, as necessary, will be required to facilitate the construction of Bent 2. All material from the existing bridge shall become the property of the Contractor except the bridge guard rail system (including rails, posts, bolts and related accessories), which shall remain the property of the State. The Contractor shall notify the Department prior to removal to determine the specific pieces deemed salvageable. The Contractor shall provide temporary storage and on site loading onto ARDOT equipment for removal of salvage items from the site. This work shall be considered subsidiary to the item "Removal of Existing Bridge Structure (Site No.)".

TEMPORARY BRIDGE: Construct a minimum 150' long detour bridge approximately 50' upstream with a minimum deck elevation of 889.90. See Roadway Plans for actual detour grade and alignment. The temporary bridge shall have a minimum roadway width of 24' and a minimum live load capacity of HI5 in accordance with AASHTO Standard Specifications for Highway Bridges, 2002 Edition. See Section 603 and Drawing Nos. 55054-55056 for standard temporary bridge details. If timber piling and pine timber are used on this temporary bridge structure, the materials shall be treated with a preservative in accordance with the Standard Specifications. A timber deck is not allowed.

MAINTENANCE OF TRAFFIC: See Roadway Plans.

PRINT DATE: 9/11/2019

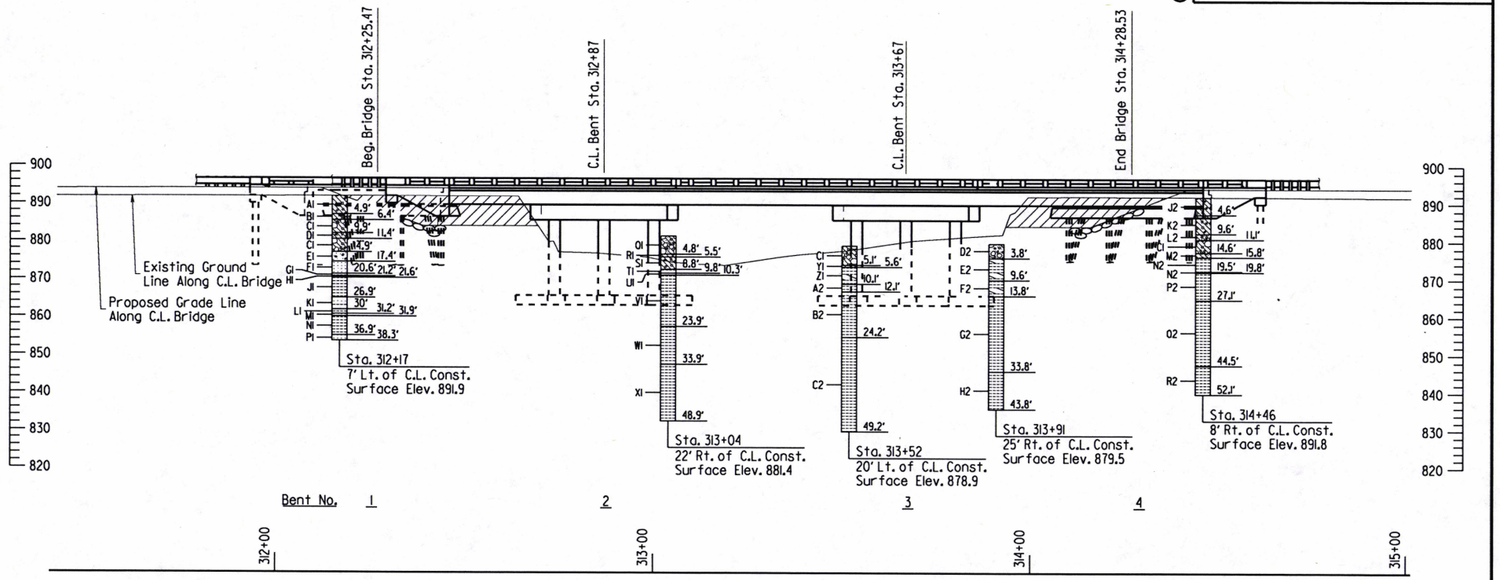

ELEVATION OF SOIL BORINGS

BORING LEGEND

Al-Clay with Gravel
Bl-Dry, Medium Stiff, Brown Clay with Gravel
Cl-Clay with Gravel, Cobbles, and Boulders
Dl-Dry, Stiff, Brown Clay with Sand and Gravel
El-Moist, Very Dense, Brown Sand with Gravel (Rock Fragments)
Fl-SANDSTONE - Highly Weathered, Poorly Cemented, Brown and Gray
Gl-SANDSTONE - Slightly Weathered, Well Cemented, Gray
Hl-Quartz
Jl-SHALE - Slightly Weathered, Medium Hard, Frequent Fractures and Slickensides, Steeply Dipping, Dark Gray
Kl-SANDSTONE INTERBEDDED WITH SHALE - Slightly Weathered, Well Cemented, Slightly Calcareous, Steeply Dipping, Light Gray
Ll-SHALE - Weathered, Hard, Occasional Quartz Seams, Steeply Dipping, Dark Gray
Ml-SANDSTONE - Slightly Weathered, Well Cemented, Frequent Quartz Veins, Steeply Dipping, Light Gray
Nl-SHALE - Slightly Weathered, Soft, Frequent Fractures and Slickensides, Steeply Dipping, Dark Gray
Pl-SANDSTONE WITH OCCASIONAL SHALE SEAMS AND LAYERS - Slightly Weathered, Well Cemented, Steeply Dipping, Light Gray
Ql-Dark Brown Clay with Sand, Gravel, Cobbles, and Boulders
Rl-Moist, Very Stiff, Brown and Gray Clay with Gravel
Sl-Wet, Very Stiff, Reddish Brown Clay with Gravel
Tl-SHALE
Ul-SHALE - Highly Weathered, Medium Hard, Dark Gray
Vl-SHALE - Slightly Weathered, Medium Hard, Occasional Quartz Veins, Occasional Fractures and Slickensides, Dark Gray
Wl-SHALE - Slightly Weathered, Medium Hard, Occasional Quartz Seams and Layers, Frequent Fractures, Frequent Slickensides, Moderately Dipping, Dark Gray
Xl-SHALE - Slightly Weathered, Medium Hard, Occasional Quartz Veins, Occasional Fractures and Slickensides, Moderately Dipping, Dark Gray
Yl-Moist, Hard, Brown Clay with Gravel (Rock Fragments)
Zl-SHALE - Highly Weathered, Soft, Gray
A2-SHALE - Slightly Weathered, Medium Hard, Gray
B2-SHALE - Slightly Weathered, Medium Hard, Frequent Fractures and Slickensides, Occasional Quartz Veins, Gray
C2-SHALE - Slightly Weathered, Medium Hard, Occasional Fractures and Slickensides, Occasional Quartz Veins, Moderately Dipping, Gray
D2-Sand, Gravel, Cobbles, and Boulders
E2-SHALE - Highly Weathered, Soft, Gray
F2-SHALE - Highly Weathered, Soft, Frequent Fractures and Slickensides, Gray
G2-SHALE - Slightly Weathered, Medium Hard, Frequent Fractures and Slickensides, Moderately Dipping, Gray
H2-SHALE - Slightly Weathered, Medium Hard, Occasional Fractures and Slickensides, Frequent Quartz Veins, Moderately Dipping, Gray
J2-Moist, Brown Clay with Gravel (Rock Fragments)
K2-Moist, Stiff, Brown Clay with Gravel (Rock Fragments)
L2-Moist, Stiff, Brown Sandy Clay with Gravel (Rock Fragments)
M2-Wet, Very Hard, Brown Sandy Clay with Gravel (Rock Fragments)
N2-SHALE - Weathered, Medium Hard, Dark Gray
P2-SHALE - Slightly Weathered, Medium Hard, Occasional Fractures and Slickensides, Moderately Dipping, Dark Gray
Q2-SHALE - Slightly Weathered, Medium Hard, Frequent Fractures and Slickensides, Moderately Dipping, Dark Gray
R2-SHALE - Unweathered, Medium Hard, Occasional Fractures, Occasional Slickensides, Moderately Dipping, Dark Gray

"N" VALUES

Sta. 312+17 - 7' Lt. of C.L. Const.
5, 4- 6, 4, N=8
10, 4- 11, 4, N=12
15, 4- 16, 4, N=63

Sta. 313+04 - 22' Rt. of C.L. Const.
5, 3- 6, 3, N=22
9, 8- 10, 2, N=60 (5")

Sta. 313+52 - 20' Lt. of C.L. Const.
5, 6- 6, 6, N=45
10, 1- 10, 5, N=60 (5")

Sta. 313+91 - 25' Rt. of C.L. Const.
5, 1- 6, 1, N=55
10, 1- 10, 3, N=60 (2")

Sta. 314+46 - 8' Rt. of C.L. Const.
5, 1- 6, 1, N=10
10, 1- 11, 1, N=11
15, 1- 16, 1, N=61
19, 5- 19, 8, N=60 (4")

STATE OF ARKANSAS
LICENSED PROFESSIONAL ENGINEER
No. 9235
9-13-19
CHARLES R. ELLIS
BRIDGE ENGINEER

SHEET 2 OF 2
LAYOUT OF BRIDGE
HIGHWAY 7 OVER MIDDLE FORK SALINE RIVER
MIDDLE FORK SALINE RIVER & DRY RUN CREEK
STRS. & APPRS. (S)
GARLAND COUNTY

ROUTE 7 SEC. 10
ARKANSAS STATE HIGHWAY COMMISSION
LITTLE ROCK, ARK.

DRAWN BY: KAW DATE: 3-15-19 FILENAME: b012318x1_11.dgn
CHECKED BY: JNP DATE: 9-11-19 SCALE: 1" = 20'
DESIGNED BY: KAW DATE: 3-19

BRIDGE NO. 07464 DRAWING NO. 61188

DATE REVISED	DATE FILMED	DATE REVISED	DATE FILMED	FED. ROAD DIST. NO.	STATE	FED. AID PROJ. NO.	SHEET NO.	TOTAL SHEETS
				6	ARK.			
				JOB NO.		012318	49	92
				①		07464 - END BENTS - 61189		

Class I Protective Surface Treatment shall be applied to the top of the backwall only. Class I Protective Surface Treatment shall not be applied to any portion of the railings (including rail, post, & curb) or wings.

For details of wings and rails, See Dwg. Nos. 61190-61192.

No portion of the backwall shall be poured before beams are in place. The portion of the backwall above the optional construction joint at the paving bracket shall not be placed until the deck pour has been made. Refer to the "Expansion Device Installation at End Bents" note on Std. Dwg. No. 55008. No heavy construction equipment or backfill shall be allowed within 10' of the backwall until the concrete for the span has been completed.

Structural Steel in end bents shall be ASTM A709 Gr. 50W and shall be paid for as "Structural Steel in Beam Spans (ASTM A709, Gr. 50W)."

All piling shall be Grade 50 and shall conform to Std. Dwg. No. 55020.

See Std. Dwg. No. 55006 for additional notes.

For additional information, see Layout.

① See "Rounding Detail" on Std. Dwg. No. 55007.

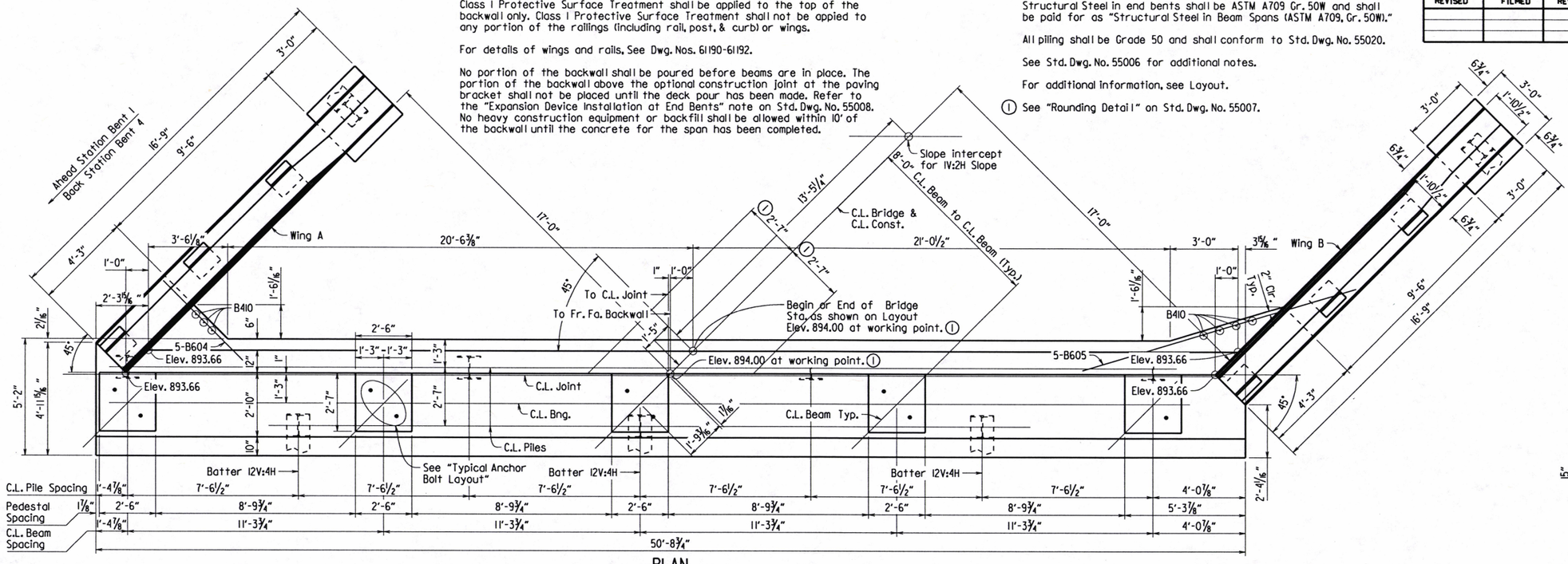

PLAN

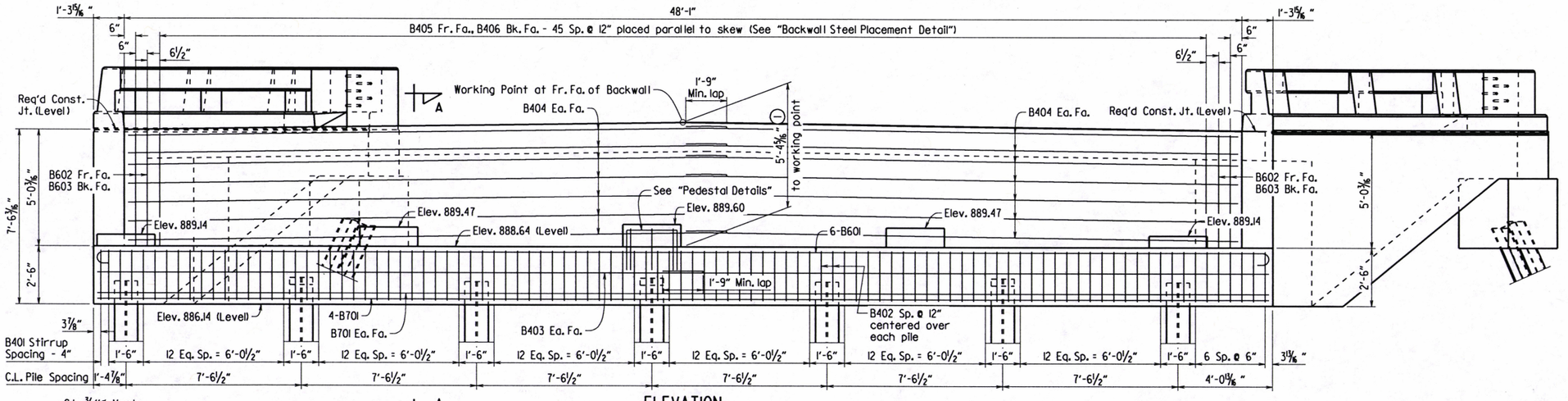

ELEVATION

Looking Back - Bent 1
Looking Ahead - Bent 4

For details of Elastomeric Bearings, See Dwg. No. 61195.

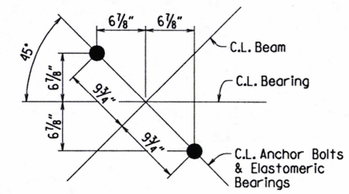

TYPICAL ANCHOR BOLT LAYOUT

No Scale

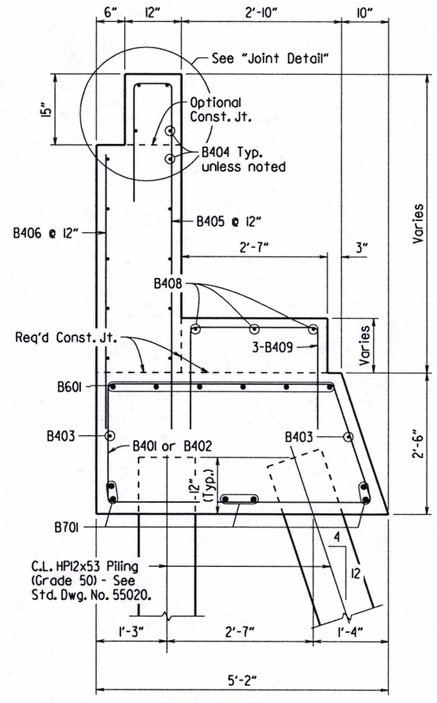

SECTION A-A

No Scale

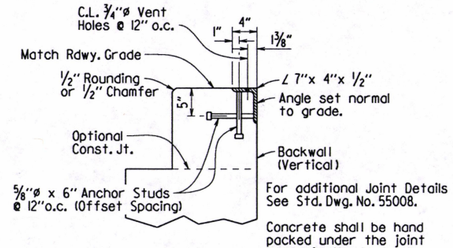

JOINT DETAIL

No Scale

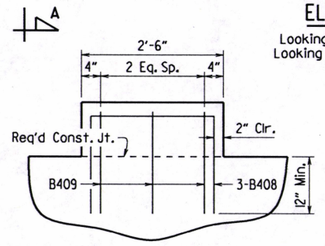

PEDESTAL DETALS

¾" = 1'-0"

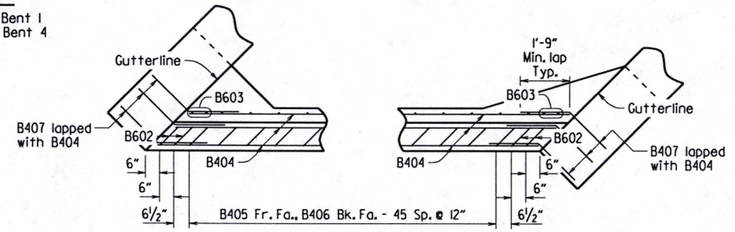

BACKWALL STEEL PLACEMENT DETAIL

STATE OF ARKANSAS
LICENSED PROFESSIONAL ENGINEER
No. 9235
CHARLES R. ELLIS
9-13-19

BRIDGE ENGINEER

PRINT DATE: 9/11/2019

SHEET 1 OF 4
DETAILS OF END BENTS
MIDDLE FORK SALINE RIVER

ROUTE SEC.

ARKANSAS STATE HIGHWAY COMMISSION

LITTLE ROCK, ARK.

DRAWN BY: BHS	DATE: 7/8/2019	FILENAME: b012318x1_bl.dgn	
CHECKED BY: JSR	DATE: 9/4/19	SCALE: ⅜" = 1'-0" or As Shown	
DESIGNED BY: BHS	DATE: 6/2019		

BRIDGE NO. 07464 DRAWING NO. 61189

DATE REVISED	DATE FILMED	DATE REVISED	DATE FILMED	FED. ROAD DIST. NO.	STATE	FED. AID PROJ. NO.	SHEET NO.	TOTAL SHEETS
				6	ARK.			
				JOB NO.		012318	50	92
				(1)	07464 - END BENTS - 61190			

(1) Dimension is allowance for Fieldstone Finish. Allowance for Roughsawn Wood is 1/4". See Dwg. No. 61192.

(2) Includes allowance for 3/4" Fieldstone Finish each side

(3) 5-1" ø formed holes for 7/8"ø bolts. See Std. Dwgs. GR-10 & GR-12 for bolt spacing and additional details.

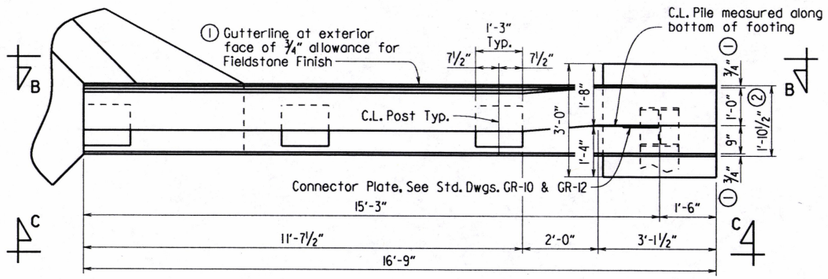

PLAN OF RAIL

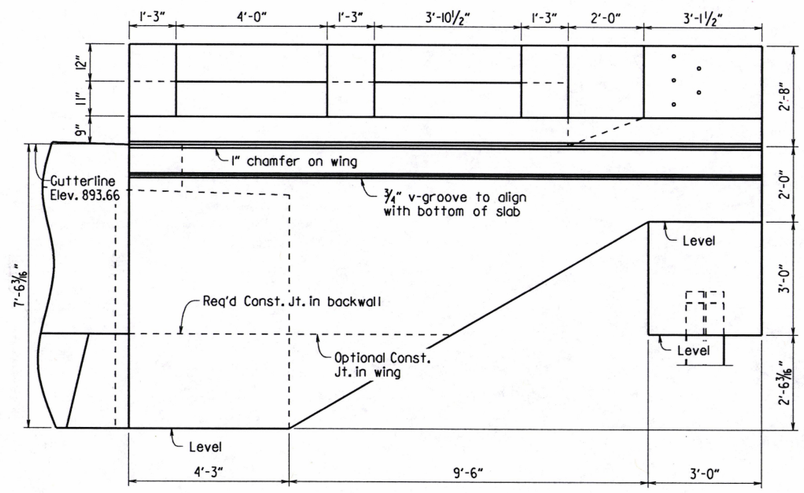

VIEW C-C

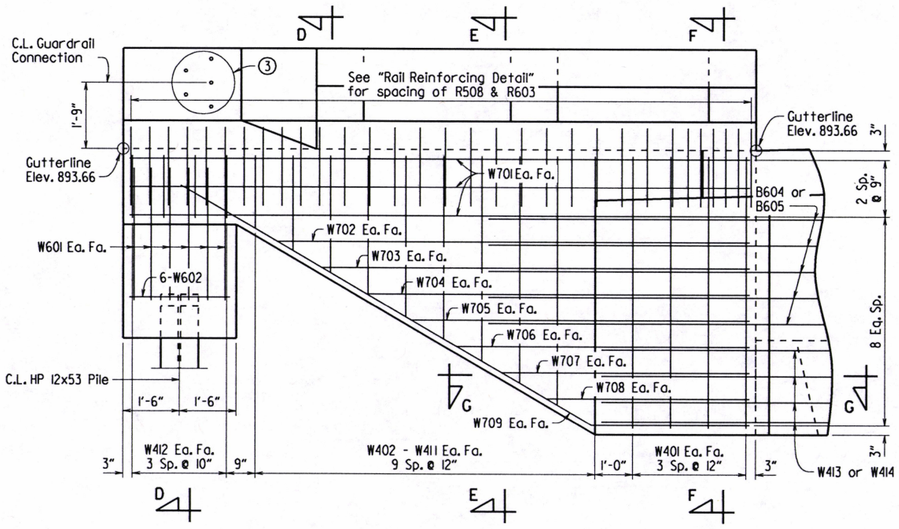

VIEW B-B

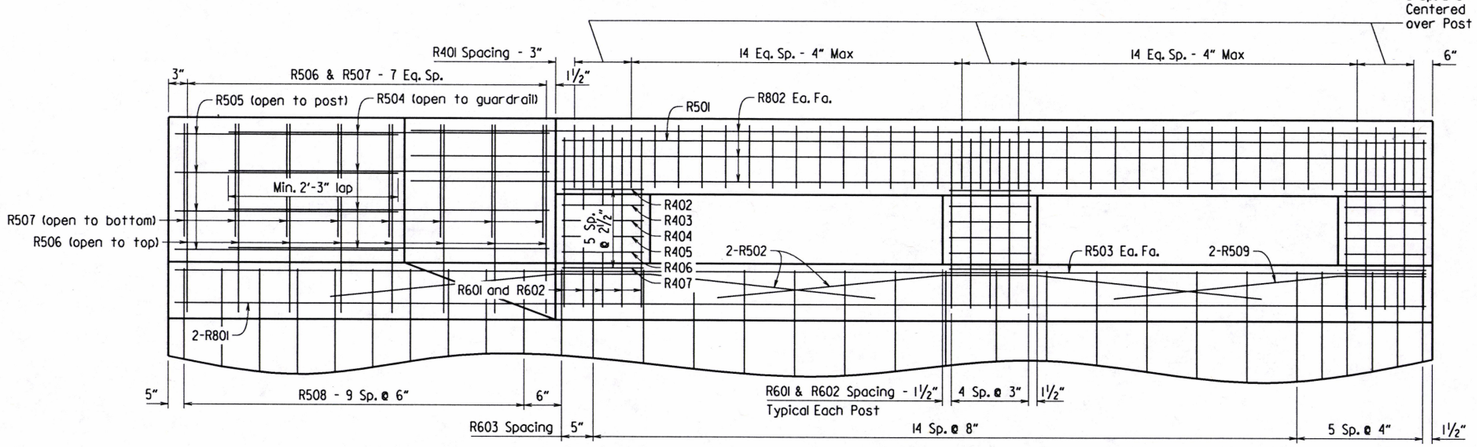

RAIL REINFORCING DETAIL

1" = 1'-0"

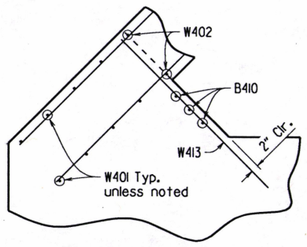

SECTION G-G

Wing A

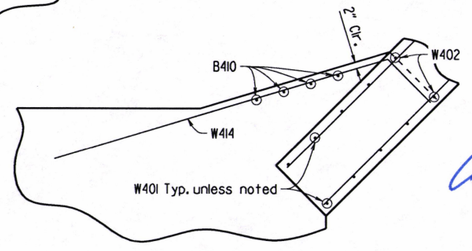

SECTION G-G

Wing B

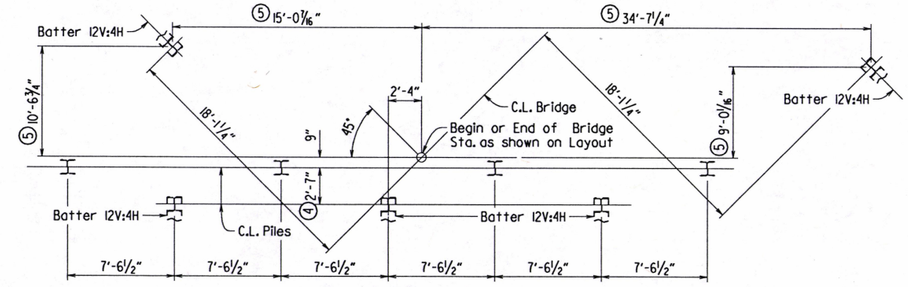

(4) Dimension along bottom of cap.

(5) Dimensions to C.L. Pile at bottom of footing.

FOUNDATION PLAN

No Scale

STATE OF ARKANSAS
LICENSED PROFESSIONAL ENGINEER
No. 9235
9-13-19
CHARLES R. ELLIS
BRIDGE ENGINEER

SHEET 2 OF 4
DETAILS OF END BENTS
MIDDLE FORK SALINE RIVER

ROUTE SEC.

ARKANSAS STATE HIGHWAY COMMISSION
LITTLE ROCK, ARK.

DRAWN BY: BHS DATE: 7/31/2019
CHECKED BY: JSQ DATE: 9/11/19
DESIGNED BY: BHS DATE: 8/2019

FILENAME: b012318x1_bl.dgn
SCALE: 1/2" = 1'-0" or As Shown

BRIDGE NO. 07464

DRAWING NO. 61190

PRINT DATE: 9/11/2019

DATE REVISED	DATE FILMED	DATE REVISED	DATE FILMED	FED. ROAD DIST. NO.	STATE	FED. AID PROJ. NO.	SHEET NO.	TOTAL SHEETS
				6	ARK.			
				JOB NO.		012318	51	92
				①		07464 - END BENTS - 61191		

① A typical clear cover of 1" shall be provided for the Railing (includes Rail, Post and Curb) reinforcement, unless otherwise noted.

② Typ. for wings unless noted otherwise

③ Does not include the ¾" allowance for architectural finish. See Dwg. No. 61192.

④ All exposed corners for the Railing components (Rail, Post, Curb & Wall) shall be chamfered 1" unless otherwise noted.

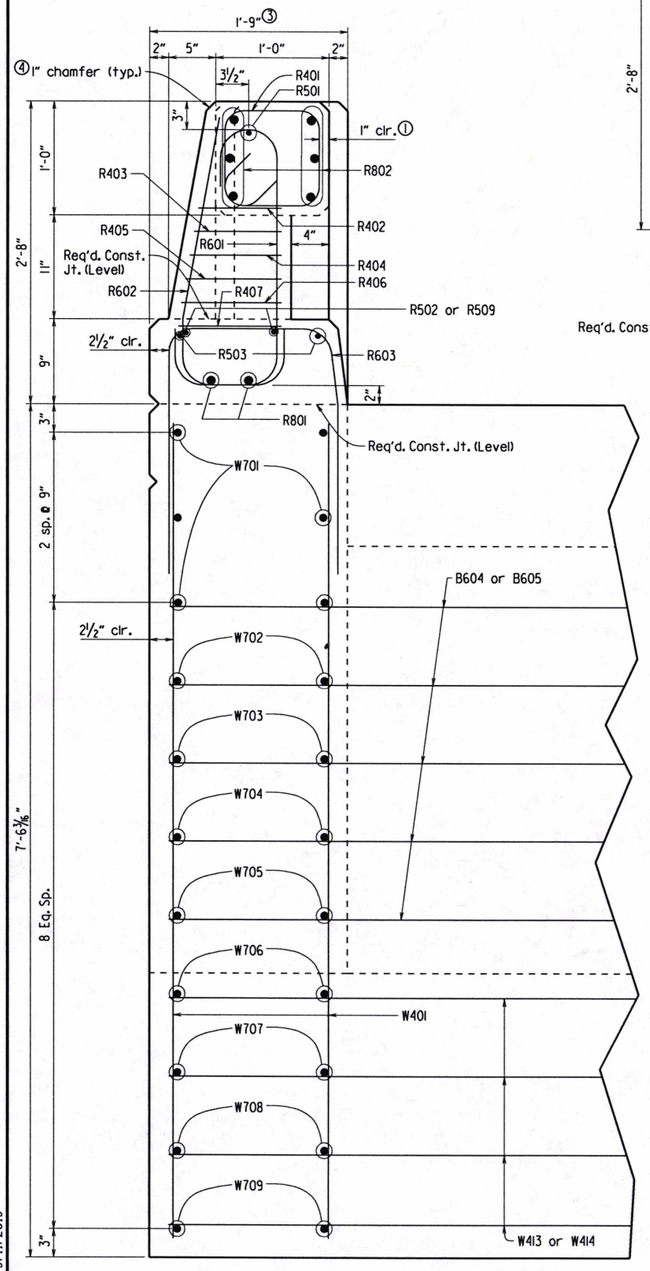

SECTION F-F

1½" = 1'-0"

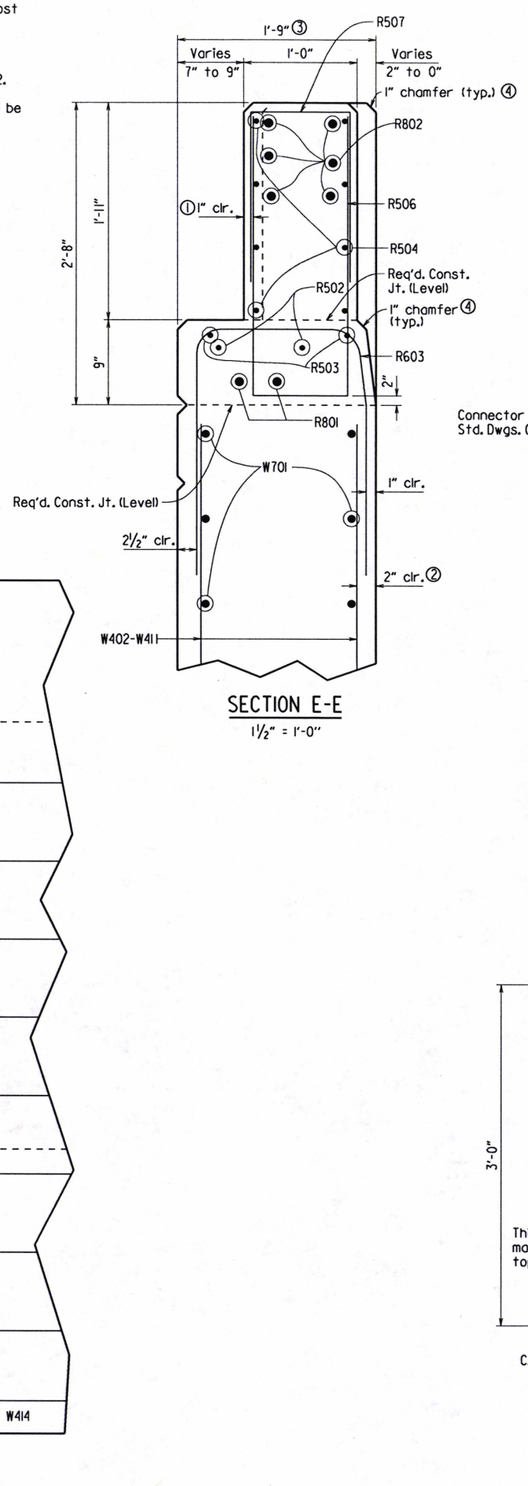

SECTION E-E

1½" = 1'-0"

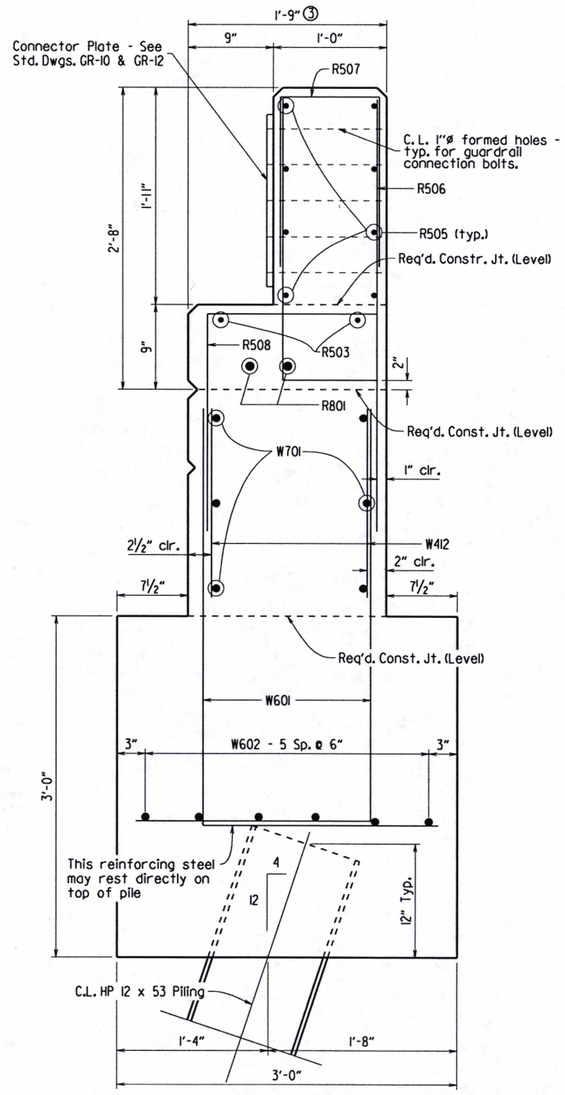

SECTION D-D

1½" = 1'-0"

BAR LIST - PER BENT

MARK	NO. REQ'D.	LENGTH	"A"	P.D.
B401	87	13'-7"		2"
B402	14	8'-3"		2"
B403	4	26'-1"		Str.
B404	28	24'-11"		Str.
B405	46	8'-10"		2"
B406	46	5'-0"		Str.
B407	28	3'-7"		3"
B408	15	5'-8"	2'-2"	2"
B409	15	5'-9"	2'-3"	2"
B410	7	5'-11"		Str.
B601	6	51'-8"		4½"
B602	4	9'-4"		4½"
B603	4	5'-2"		Str.
B604	5	5'-6"		Str.
B605	5	12'-7"		Str.
B701	6	50'-4"		Str.
R401	76	3'-10"		2"
R402	6	4'-2"	9"	2"
R403	6	4'-3"	9½"	2"
R404	6	4'-4"	10"	2"
R405	6	4'-5"	10½"	2"
R406	6	4'-6"	11"	2"
R407	6	4'-7"	11½"	2"
R501	2	11'-5"		Str.
R502	8	7'-3"		3¾"
R503	4	16'-7"		Str.
R504	8	9'-1"	4'-3"	3¾"
R505	8	6'-1"	2'-9"	3¾"
R506	16	5'-7"	2'-6"	3¾"
R507	16	3'-7"	1'-6"	3¾"
R508	20	5'-1"		3¾"
R509	4	4'-2"		3¾"
R601	30	4'-2"		4½"
R602	30	3'-7"		4½"
R603	42	6'-0"		4½"
R801	4	16'-7"		Str.
R802	12	13'-5"		Str.
W401	16	7'-2"		Str.
W402 - W411	4 ea.	7'-1" to 1'-11"		Str.
W412	16	1'-8"		Str.
W413	4	5'-6"		Str.
W414	4	10'-9"		3"
W601	24	5'-6"		4½"
W602	12	2'-8"		Str.
W701	12	16'-5"		Str.
W702-W708	4 ea.	12'-6" - 5'-4"		Str.
W709	4	16'-9"		5¼"

BENDING DIAGRAMS

Dimensions are out to out of bars unless noted otherwise.

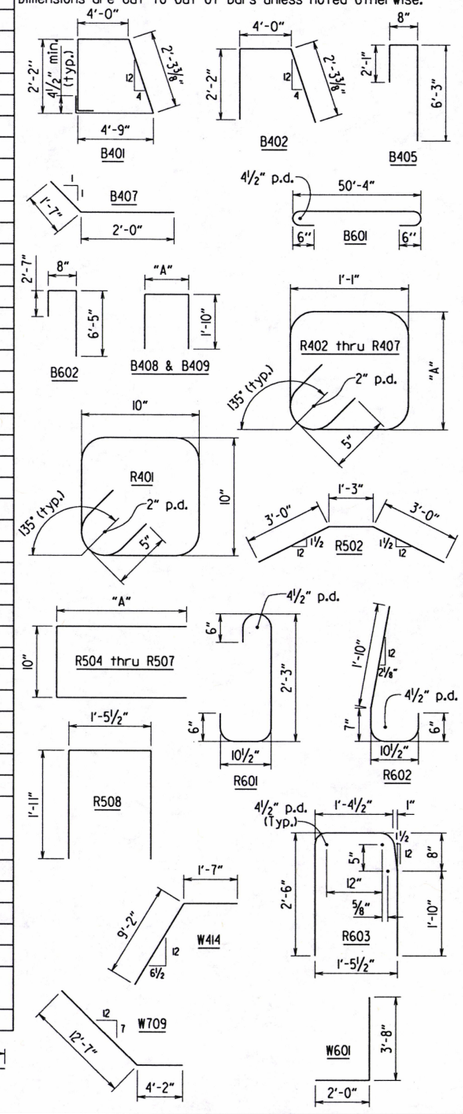

STATE OF ARKANSAS
Charles R. Ellis
LICENSED PROFESSIONAL ENGINEER
No. 9235
9-13-19
CHARLES R. ELLIS
BRIDGE ENGINEER

SHEET 3 OF 4
DETAILS OF END BENTS
MIDDLE FORK SALINE RIVER

ROUTE SEC.

ARKANSAS STATE HIGHWAY COMMISSION

LITTLE ROCK, ARK.

DRAWN BY: BHS DATE: 8/1/2019 FILENAME: b012318x1_bl.dgn
CHECKED BY: JSQ DATE: 9/11/19 SCALE: As Shown
DESIGNED BY: BHS DATE: 8/1/2019

BRIDGE NO. 07464 DRAWING NO. 61191

PRINT DATE: 9/11/2019

① Dimension is allowance for Fieldstone Finish. Allowance for Roughsawn Wood is 1/4", see "SECTION X-X" & "SECTION Y-Y".

② Includes 3/4" allowance for Fieldstone Finish each side.

All exposed corners for the Railing components (Rail, Post, Curb & Wall) shall be chamfered 1" unless otherwise noted.

DATE REVISED	DATE FILMED	DATE REVISED	DATE FILMED	FED. ROAD DIST. NO.	STATE	FED. AID PROJ. NO.	SHEET NO.	TOTAL SHEETS
				6	ARK.			
				JOB NO.		012318	52	92
				①	07464 - END BENTS - 61192			

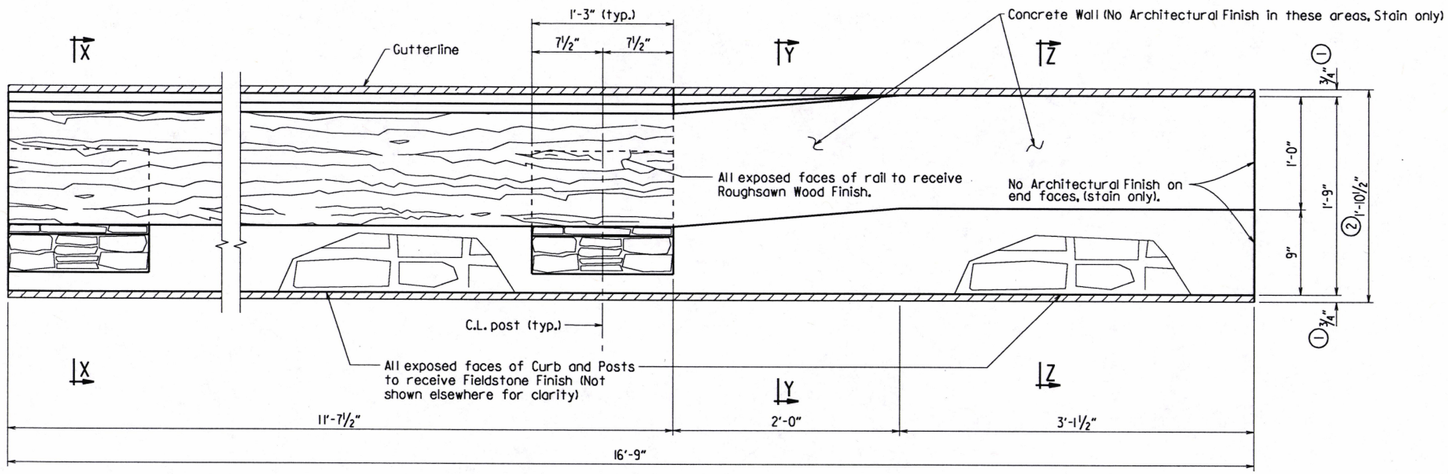

PLAN OF DECORATIVE CONCRETE PARAPET RAILING AT END BENTS

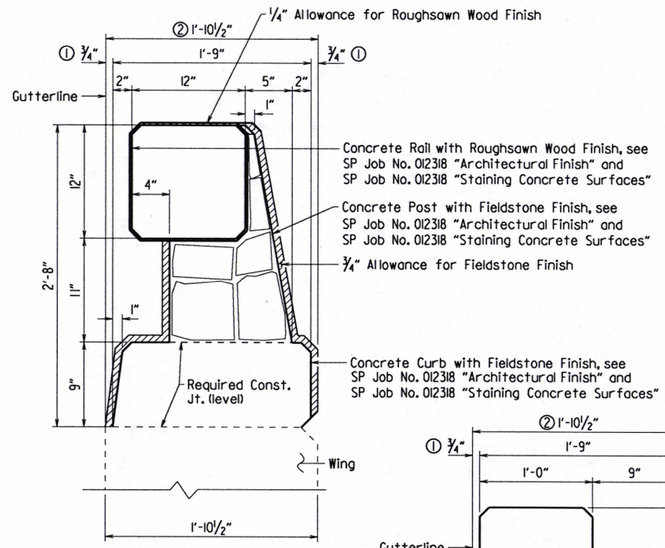

SECTION X-X

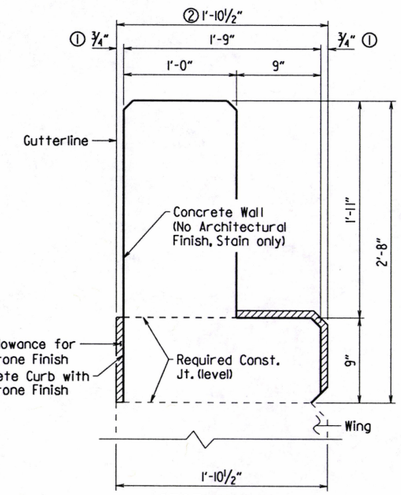

SECTION Z-Z

Concrete Rail — All exposed faces of rail to receive Roughsawn Wood Finish. — Concrete Wall (No Architectural Finish in these areas, Stain only) — See Dwg. Nos. 61190, 61191, & Std. Dwgs. GR-10 & GR-12 for details of guardrail connection. — All exposed faces of Curb and Posts to receive Fieldstone Finish — No Architectural Finish on end faces, (stain only). — Concrete Post (typ.) — Concrete Curb — 2'-8"

ELEVATION OF DECORATIVE CONCRETE PARAPET RAILING (TRAFFIC SIDE) AT END BENTS

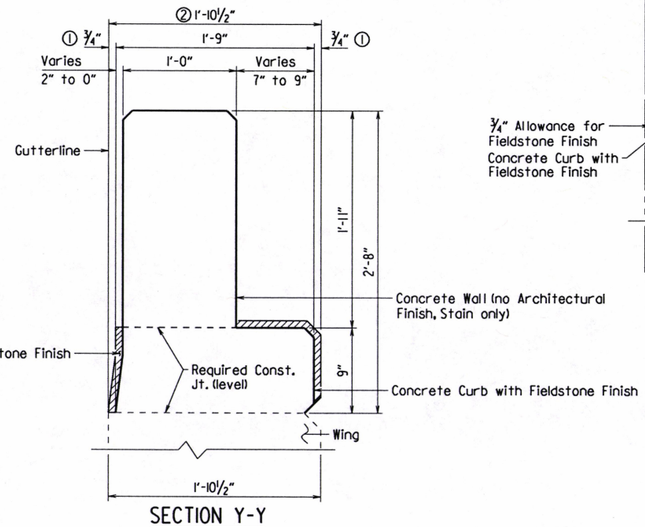

SECTION Y-Y

Concrete Rail — All exposed faces of rail to receive Roughsawn Wood Finish. — Concrete Wall (No Architectural Finish in these areas, Stain only) — See Dwg. Nos. 61190, 61191, & Std. Dwgs. GR-10 & GR-12 for details of guardrail connection. — All exposed faces of Curb and Posts to receive Fieldstone Finish — No Architectural Finish on end faces, (stain only). — Concrete Post (typ.) — Concrete Curb — 2'-8"

ELEVATION OF DECORATIVE CONCRETE PARAPET RAILING (BACK SIDE) AT END BENTS

STATE OF ARKANSAS
LICENSED PROFESSIONAL ENGINEER
No. 9235
9-13-19
CHARLES R. ELLIS
BRIDGE ENGINEER

SHEET 4 OF 4
DETAILS OF END BENTS
MIDDLE FORK SALINE RIVER

ROUTE SEC.

ARKANSAS STATE HIGHWAY COMMISSION

LITTLE ROCK, ARK.

DRAWN BY: BHS DATE: 8/20/19 FILENAME: b012318xl_bl.dgn

CHECKED BY: JSR DATE: 9/11/19 SCALE: No Scale

DESIGNED BY: BHS DATE: 8/2019

BRIDGE NO. 07464 DRAWING NO. 61192

PRINT DATE: 9/11/2019

DATE REVISED	DATE FILMED	DATE REVISED	DATE FILMED	FED. ROAD DIST. NO.	STATE	FED. AID PROJ. NO.	SHEET NO.	TOTAL SHEETS
				6	ARK.			
				JOB NO.		012318	53	92
				① 07464 - INTERMEDIATE BENTS - 61193				

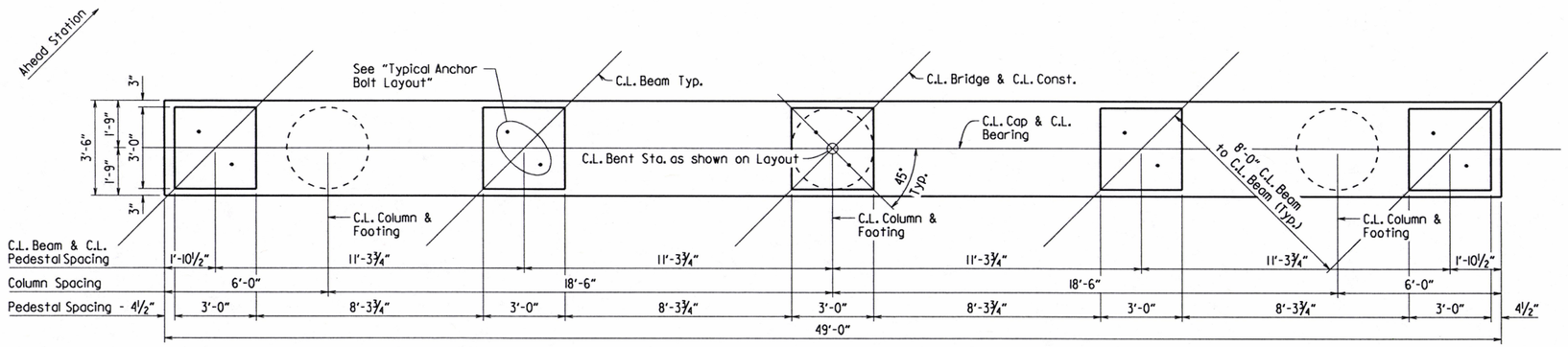

PLAN

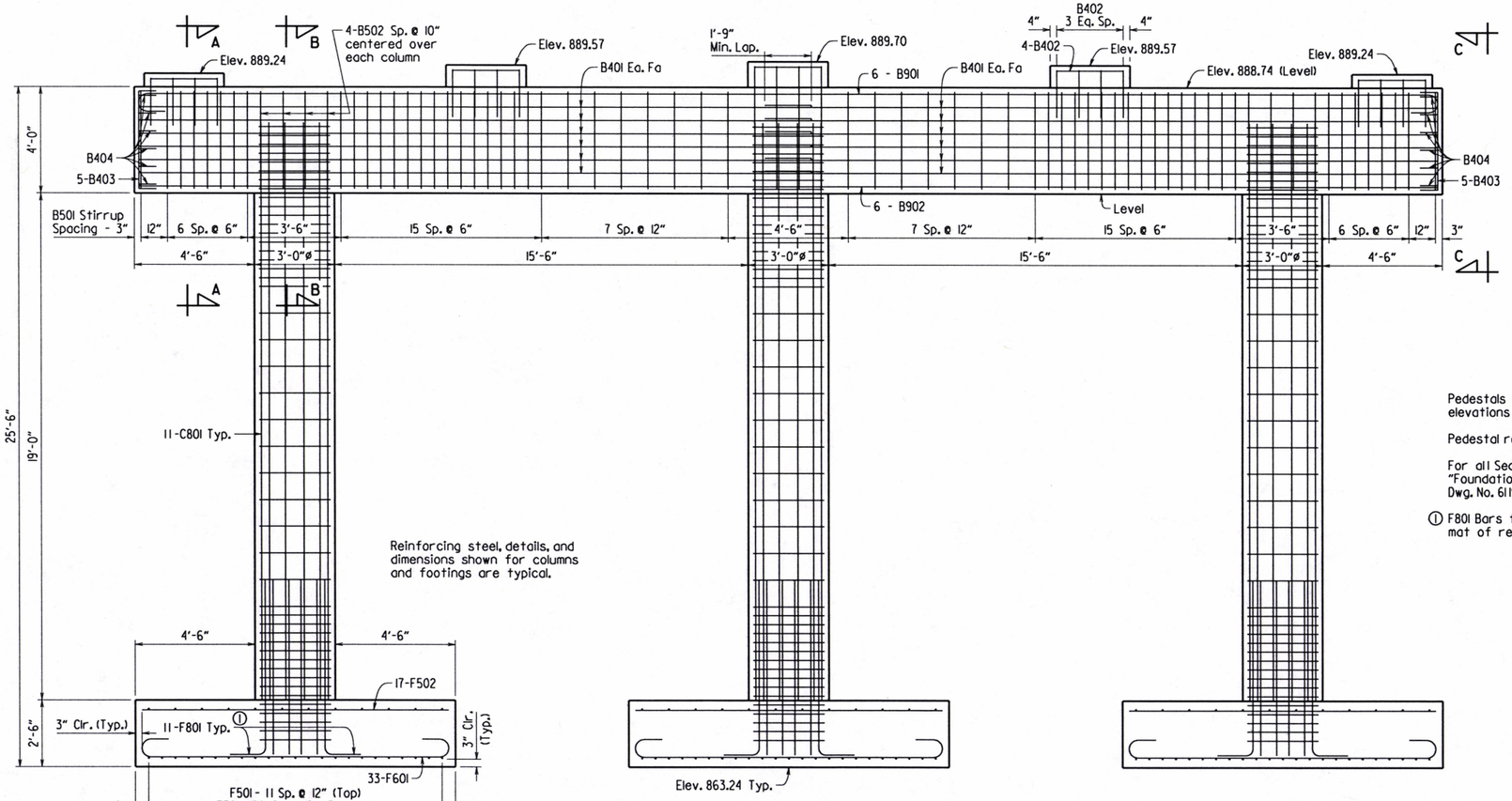

ELEVATION

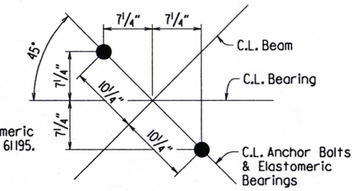

For details of Elastomeric Bearings, See Dwg. No. 61195.

TYPICAL ANCHOR BOLT LAYOUT

No Scale

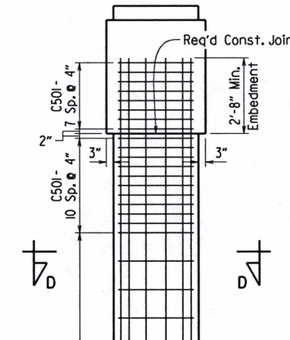

Pedestals shall be cast level at the elevations shown.

Pedestal reinforcing is typical.

For all Sections, "View C-C", "Foundation Plan", and Bar List, See Dwg. No. 61194.

① F801 Bars to rest on bottom footing mat of reinforcing as shown.

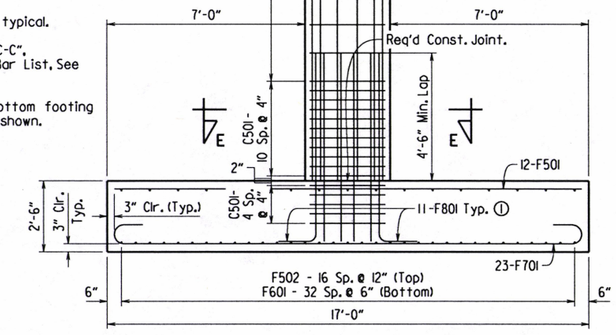

END VIEW

STATE OF ARKANSAS
LICENSED PROFESSIONAL ENGINEER
No. 9235
CHARLES R. ELLIS
9-13-19

BRIDGE ENGINEER

SHEET 1 OF 2
DETAILS OF INTERMEDIATE BENTS MIDDLE FORK SALINE RIVER

ROUTE SEC.

ARKANSAS STATE HIGHWAY COMMISSION

LITTLE ROCK, ARK.

DRAWN BY: BHS DATE: 7/8/2019
CHECKED BY: CMW DATE: 9/11/19
DESIGNED BY: BHS DATE: 6/2019

FILENAME: b012318x1_b2.dgn
SCALE: 3/8" = 1'-0" or As Shown

BRIDGE NO. 07464 DRAWING NO. 61193

PRINT DATE: 9/11/2019

DATE REVISED	DATE FILMED	DATE REVISED	DATE FILMED	FED. ROAD DIST. NO.	STATE	FED. AID PROJ. NO.	SHEET NO.	TOTAL SHEETS
				6	ARK.			
				JOB NO.		012318	54	92

(1) 07464 - INTERMEDIATE BENTS - 61194

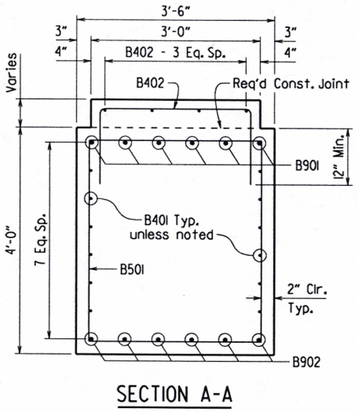

SECTION A-A

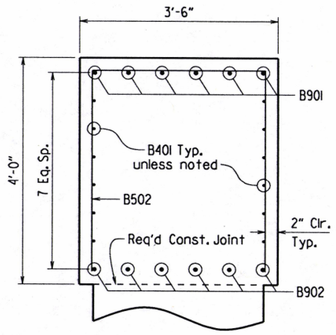

SECTION B-B

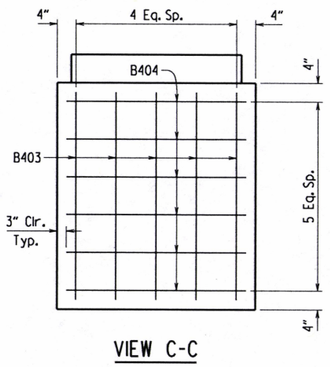

VIEW C-C

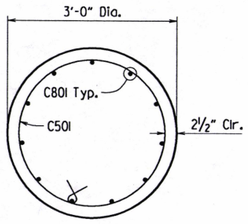

SECTION D-D

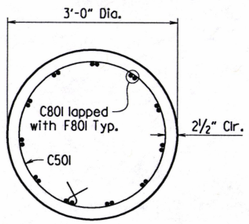

SECTION E-E

BAR LIST - PER BENT

MARK	NO. REQ'D.	LENGTH	"X"	"Y"	P.D.
B401	24	25'-3"			Str.
B402	40	6'-6"	2'-8"	2'-0"	2"
B403	10	4'-8"	3'-6"	8"	3"
B404	12	4'-2"	3'-0"	8"	3"
B501	62	14'-2"			2½"
B502	12	10'-3"			2½"
B901	6	51'-2"	48'-8"	10"	9"
B902	6	48'-8"			Str.
C501	138	9'-6"			3¾"
C801	33	21'-8"			Str.
F501	36	16'-6"			Str.
F502	51	11'-6"			Str.
F601	99	12'-10"	11'-6"	6"	4½"
F701	69	18'-2"	16'-6"	7"	5¼"
F801	33	9'-10"			6"

BENDING DIAGRAMS

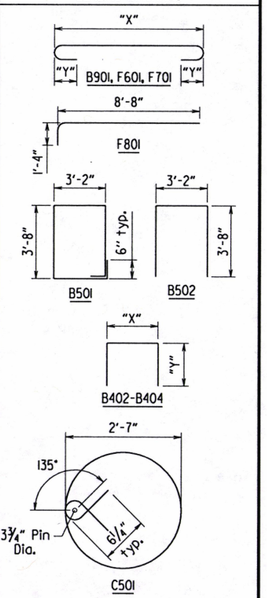

Dimensions are out to out of bars.

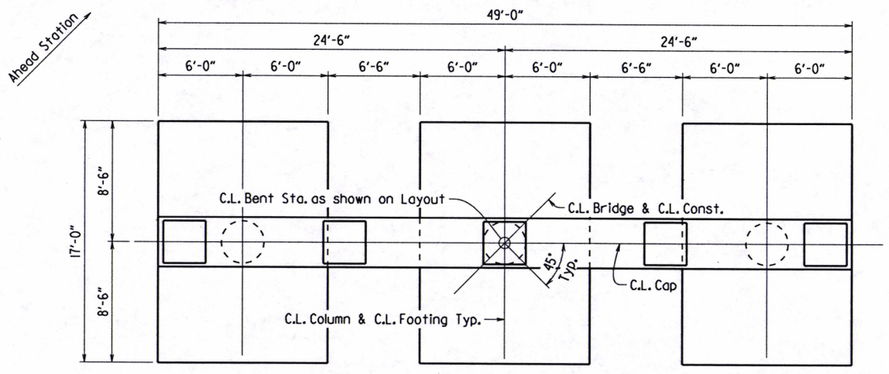

FOUNDATION PLAN

3/16" = 1'-0"

General Notes:

See Std. Dwg. No. 55006 for Standard General Notes.

For additional information, See Layout.

STATE OF ARKANSAS
LICENSED PROFESSIONAL ENGINEER
No. 9235
CHARLES R. ELLIS
9-13-19

Charles R. Ellis

BRIDGE ENGINEER

SHEET 2 OF 2
DETAILS OF INTERMEDIATE BENTS
MIDDLE FORK SALINE RIVER

ROUTE SEC.

ARKANSAS STATE HIGHWAY COMMISSION

LITTLE ROCK, ARK.

DRAWN BY: BHS DATE: 8/6/2019 FILENAME: b012318xl_b2.dgn

CHECKED BY: CMW DATE: 9/11/19 SCALE: 3/4" = 1'-0" or As Shown

DESIGNED BY: BHS DATE: 6/2019

BRIDGE NO. 07464 DRAWING NO. 61194

PRINT DATE: 9/11/2019

DATE REVISED	DATE FILMED	DATE REVISED	DATE FILMED	FED. ROAD DIST. NO.	STATE	FED. AID PROJ. NO.	SHEET NO.	TOTAL SHEETS
				6	ARK.			
				JOB NO.		012318	55	92
				①		07464 - ELASTO BRGS. - 61195		

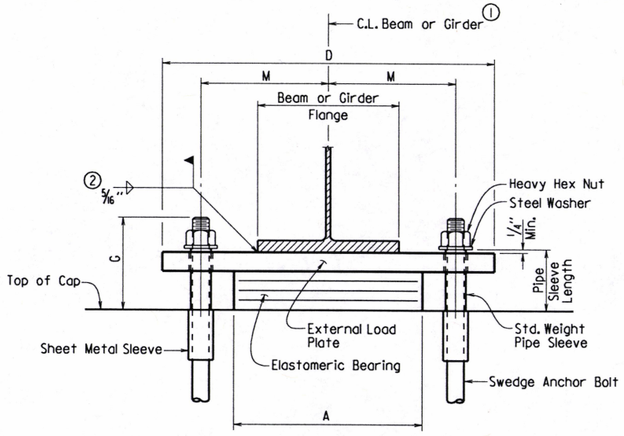

FRONT VIEW

① C.L Elastomeric Pad shall be aligned with C.L. Beam or Girder.

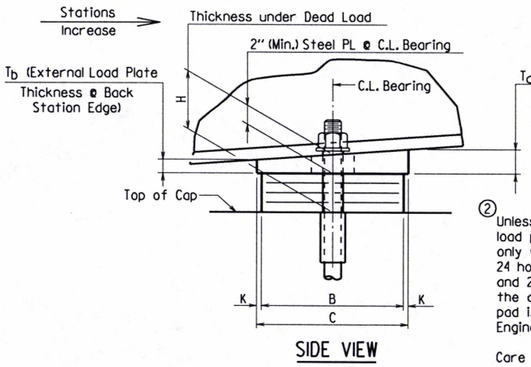

SIDE VIEW

The direction of bevel of the external load plate may not be accurately depicted with respect to Ta and Tb values shown in the "Table of Fabricator Variables".

② Unless otherwise approved by the Engineer, welding of the external load plate at expansion bearings to the beam or girder will be allowed only when: 1) the approximate average air temperature during the 24 hour period immediately preceding welding is between 40° F and 80° F; and 2) the slots in the external load plate are positioned to center on the anchor bolts; and 3) no horizontal deformation of the elastomeric pad is evident. If welding at other temperatures is required, the Engineer will provide adjustment data.

Care shall be taken to ensure that the external load plate is in full and complete contact with the beam or girder flange before welding begins.

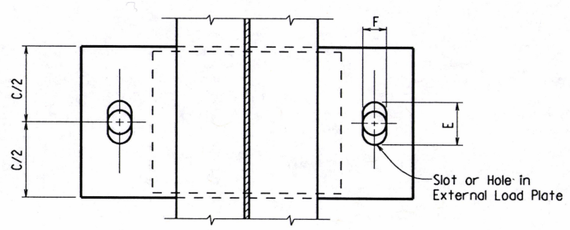

PLAN VIEW

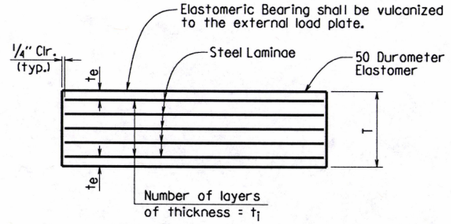

t_e = Thickness of elastomer cover on top and bottom of pad

t_i = Thickness of elastomer between steel laminae

N = Number of elastomer layers of thickness t_i

ELASTOMERIC BEARING

Prior to erection of the beams, the Contractor shall verify the orientation of the bearings with respect to Ta and Tb.

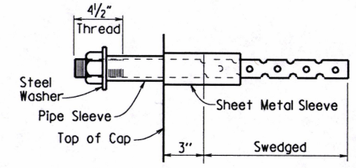

ANCHOR BOLT DETAIL

Anchor Bolts may be cast in place or drilled and grouted into place. If Anchor Bolts are to be cast in place, the Galvanized Sheet Metal Sleeves will not be required.

If Anchor Bolts are to be drilled and grouted in place, the Galvanized Sheet Metal Sleeves shall be cast in place as shown. Sleeves shall be dry packed with styrofoam, urethane foam or approved equal prior to pouring of concrete. After pouring of the cap and prior to erection of Structural Steel, the dry pack shall be removed and holes for the anchor bolts shall be accurately drilled into the concrete. Bolts placed in drilled holes shall be accurately set and fixed using a QPL approved epoxy or non-shrink grout that completely fills the holes. Galvanized Sheet Metal Sleeves will not be paid for directly, but will be considered subsidiary to the item "Structural Steel in Beam Spans (A709, Gr. 50W)."

TABLE OF FABRICATOR VARIABLES

③ Maximum Design Load = Service I Limit State

BRIDGE NO.	LOCATION		BEARING TYPE	NO. of BEARINGS EACH BENT	③ MAXIMUM DESIGN LOAD (KIPS)	G	H	ELASTOMERIC PAD							EXTERNAL LOAD PLATE								ANCHOR BOLT				
	BENT NO (S).	BEAM OR GIRDER NO.						A	B	N	t_i	t_e	NO. & THICKNESS OF STEEL LAMINAE	T	C	D	E	F	K	M	T_a	T_b	ANCHOR BOLT (ø x L)	GRADE	PIPE SLEEVE SIZE (ø x L)	SHEET METAL SLEEVE SIZE (ø x L)	STEEL WASHER SIZE (O.D.)
07464	1 & 4	All	Exp	5	104	7 3/4"	5"	15"	8"	4	1/2"	1/4"	5 @ 12 ga.	3"	9"	25"	3 7/8"	2 1/4"	1/2"	9 3/4"	2.00"	2.00"	1 1/2" x 26 1/2"	55	1 1/2" x 5 1/4"	3" x 15"	3"
	2 & 3	All	Fix	5	230	7 1/8"	3 13/16"	15"	13 1/2"	2	1/2"	1/4"	3 @ 12 ga.	1 13/16"	14 1/2"	27"	3 1/8"	3 1/8"	1/2"	10 1/4"	2.00"	2.00"	2" x 31 1/2"	55	2 1/2" x 4 1/8"	4" x 16"	3 3/4"

GENERAL NOTES

Elastomeric Bearings shall conform to Section 808 and shall be paid for at the unit price bid for "Elastomeric Bearings".

External load plates shall conform to ASTM A709, Grade 50W. Pipe sleeves shall be ASTM A500, Grade B, and shall be galvanized to conform to AASHTO M 232, Class C or ASTM B695, Class 50.

External load plates shall be completely fabricated (including bevel and bolt holes) and shall be cleaned before vulcanizing to the elastomeric bearing. The surface in contact with the elastomeric bearing shall be cleaned in accordance with Subsection 808.03. Other surfaces shall be blast cleaned in accordance with Subsection 807.84(b) for painted steel and 807.84(e) for unpainted Grade 50W steel.

Anchor Bolts, Washers and Nuts shall conform to Subsection 807.07. The anchor bolt grade of steel shall be as specified in the "Table of Fabricator Variables". Indentations shall be circular with rounded bottoms and staggered as shown in the details.

Pipe Sleeves, Anchor Bolts, Washers and Nuts shall be paid for at the unit price bid for "Structural Steel in Beam Spans (A709, Gr. 50W)." External load plates will not be measured and paid for separately, but will be considered incidental to the unit price bid for "Elastomeric Bearings".

Bearings shall be seated in accordance with Subsection 808.08. This work and materials are considered subsidiary to the item "Elastomeric Bearings" and will not be paid for directly.

STATE OF ARKANSAS
LICENSED PROFESSIONAL ENGINEER
No. 9235
CHARLES R. ELLIS
9-13-19

BRIDGE ENGINEER

DETAILS OF ELASTOMERIC BEARINGS MIDDLE FORK SALINE RIVER

ROUTE SEC.

ARKANSAS STATE HIGHWAY COMMISSION

LITTLE ROCK, ARK.

DRAWN BY: BHS DATE: 6/27/2019
CHECKED BY: JNP DATE: 9/11/19
DESIGNED BY: BHS DATE: 6/2019
FILENAME: b012318xl_el.dgn
SCALE: None

BRIDGE NO. 07464 DRAWING NO. 61195

PRINT DATE: 9/11/2019

DATE REVISED	DATE FILMED	DATE REVISED	DATE FILMED	FED. ROAD DIST. NO.	STATE	FED. AID PROJ. NO.	SHEET NO.	TOTAL SHEETS
				6	ARK.			
				JOB NO.		012318	56	92
				(1)	07464 - 200' UNIT - 61196			

Slab Reinforcing:

Longitudinal: S402E as shown
S601E as shown over int. supports, see "Reinforcing Plan & Pouring Sequence", Dwg. No. 61198.

Transverse: S502E @ 12" o.c. bent up over beams — Alternate
S501E @ 12" o.c. in top, S401E @ 12" o.c. in bottom
S801E @ 6" in top of overhangs (bundled with #5 bars)

At the Contractor's option, two straight epoxy coated #5 bars may be substituted for bar S502E. Payment for reinforcing will be based on the weight of Bar S502E.

Class I Protective Surface Treatment shall be applied to the Roadway Surface only. CLASS I PROTECTIVE SURFACE TREATMENT SHALL NOT be applied to any portion of the Railings (including Rail, Post, & Curb).

Bar positions and clearances from the forms shall be maintained by means of stays, ties, hangers or other approved devices per Subsection 804.06. Placement of slab bolsters or hi-chairs with full-length lower runners directly on removable deck forms will not be allowed.

(1) Working point to gutterline.

(2) Tolerance: Minus = 1/4"; Plus equal to the amount of slab thickening used to meet slab thickness tolerance. See "Adjustment for Slab Thickness Tolerance."

(3) See "Adjustment for Slab Thickness Tolerance."

(4) S801E shall be placed in a 45° angle to satisfy the specified minimum clearance, see "View D-D", Dwg. No. 61198. Epoxy-coated Threaded End Anchor (LENTON® TERMINATOR - D6 or approved equal) may be used as an alternate to hooked rebar. In this case, the edge of deck dimension shall be detailed to a thickness of 8 3/4". See "Alternate Overhang Detail". Payment for reinforcing shall be based on hooked S801E. No adjustment will be made for concrete volume. Payment for concrete shall be based on the edge thickness of 9 3/4".

(5) See "Rounding Detail" on Std. Dwg. No. 55007.

(6) See Dwg. No. 61198.

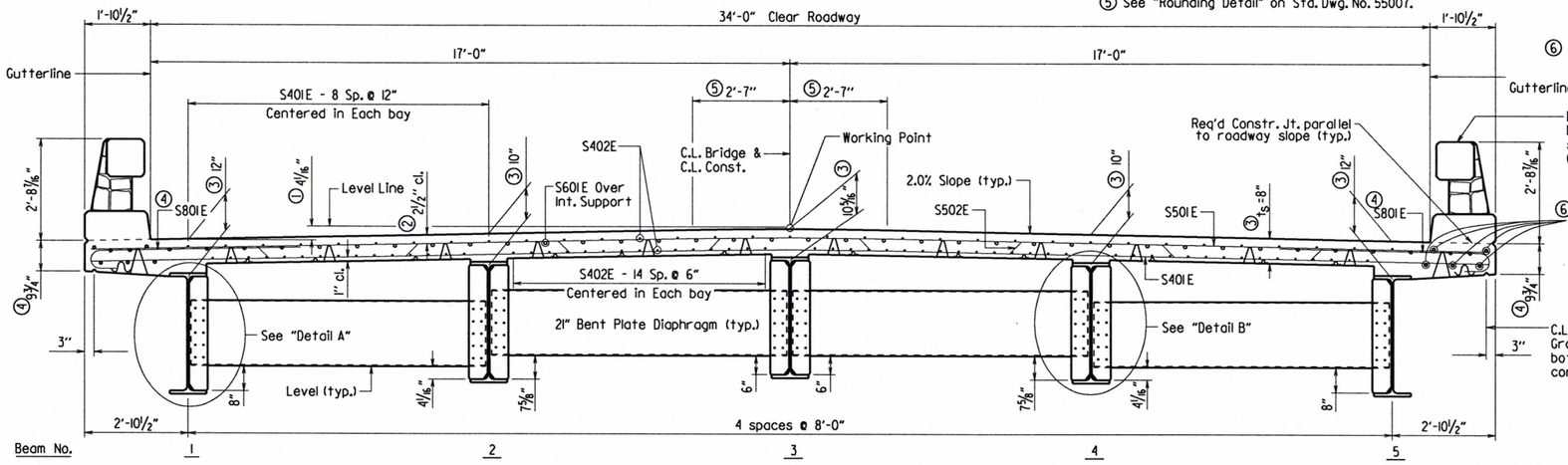

TYPICAL ROADWAY SECTION

Looking Ahead
½" = 1'-0"

t_s = slab thickness as shown in "Typical Roadway Section"

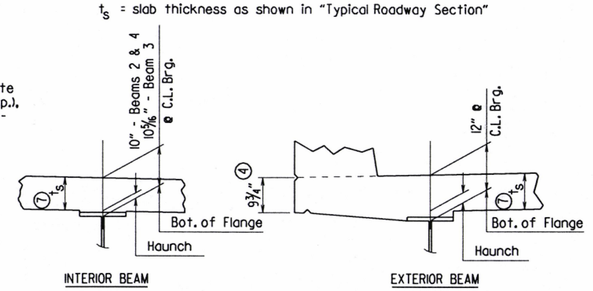

(7) Tolerance when removable deck forming is used is + ½", - ¼". Haunch forming is required and shall be adjusted to maintain slab thickness tolerance.

ADJUSTMENT FOR SLAB THICKNESS TOLERANCE

No Scale

For both removable and permanent steel deck forms, the haunch dimension may vary +/- 1½" to maintain grade and slab thickness requirements. No increase in concrete and structural steel quantities will be made to maintain tolerances. Payment for concrete shall be based on removable deck forming. For additional details related to the use of permanent steel deck forms, see Std. Dwg. No. 55005.

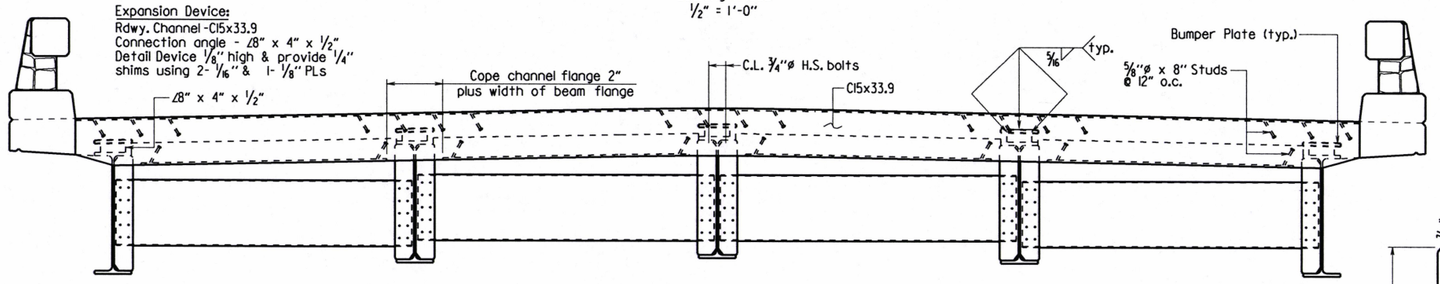

TYPICAL ROADWAY SECTION NEAR JOINT

Looking Ahead
½" = 1'-0"

(8) If permanent steel bridge deck forms are used, the Fabricator shall clip plates as necessary to accommodate the deck form supports.

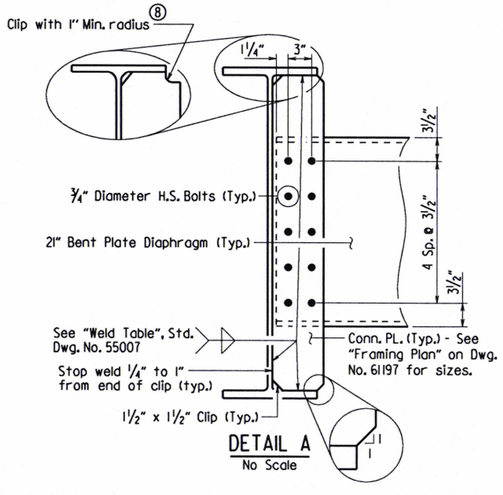

DETAIL A

No Scale

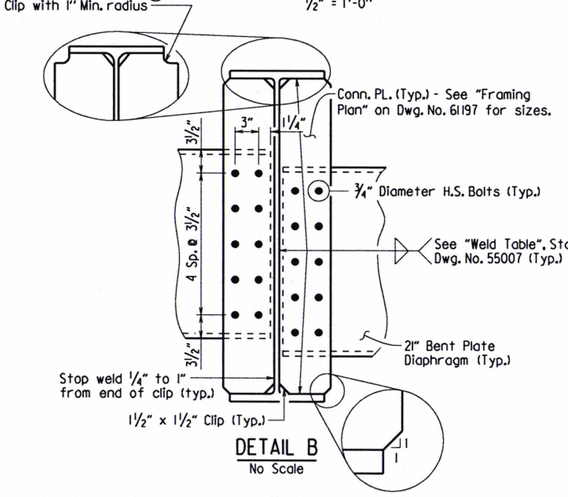

DETAIL B

No Scale

SILICONE JOINT DATA

"A" Width Perpendicular to Joint at 24 Hour Average Temperature of: (9)			"B" Perpendicular to Joint at 60°F	Bumper Plate Size
40°F	60°F	80°F		
2⅛"	2"	1⅞"	2¼" ±	1" x 1" x 12"

For details of poured silicone joints, See Std. Dwg. No. 55008.

(9) The temperature used to set the joint opening shall be the approximate average air temperature during the 24 hour period immediately before the bolts are tightened. The Engineer shall establish the temperature. Interpolation of the table may be necessary.

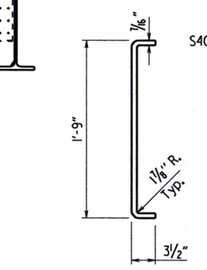

SECTION THRU DIAPHRAGM

No Scale

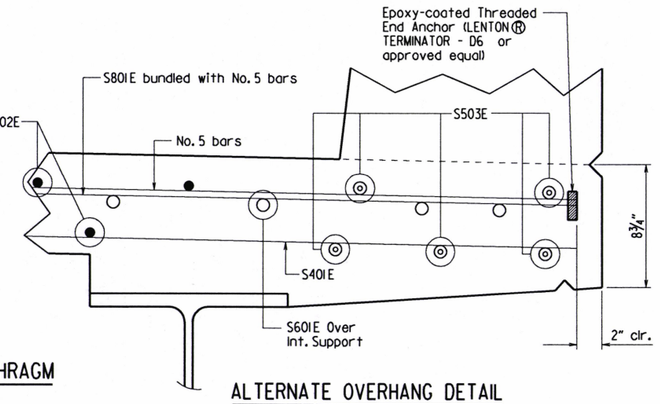

ALTERNATE OVERHANG DETAIL

No Scale

STATE OF ARKANSAS
LICENSED PROFESSIONAL ENGINEER
No. 9235
9-13-19
CHARLES R. ELLIS
BRIDGE ENGINEER

SHEET 1 OF 3
DETAILS OF 200'-0" CONTINUOUS W-BEAM UNIT MIDDLE FORK SALINE RIVER

ROUTE SEC.

ARKANSAS STATE HIGHWAY COMMISSION

LITTLE ROCK, ARK.

DRAWN BY: BHS DATE: 7/1/2019 FILENAME: b012318xl_sl.dgn
CHECKED BY: JHP DATE: 9/13/19 SCALE: As Shown
DESIGNED BY: BHS DATE: 6/2019

BRIDGE NO. 07464 DRAWING NO. 61196

PRINT DATE: 9/13/2019

All structural steel shall be ASTM A709, Gr. 50W unless otherwise noted and shall be paid for as "Structural Steel in Beam Spans (A709, Gr. 50W)". See Std. Dwg. Nos. 55006 & 55007 for additional notes and details.

① See "Detail A" on Dwg. No. 61196
② See "Detail B" on Dwg. No. 61196
③ See "Silicone Joint Data" on Dwg. No. 61196

DATE REVISED	DATE FILMED	DATE REVISED	DATE FILMED	FED. ROAD DIST. NO.	STATE	FED. AID PROJ. NO.	SHEET NO.	TOTAL SHEETS
				6	ARK.			
				JOB NO.		012318	57	92
				①	07464 - 200' UNIT - 61197			

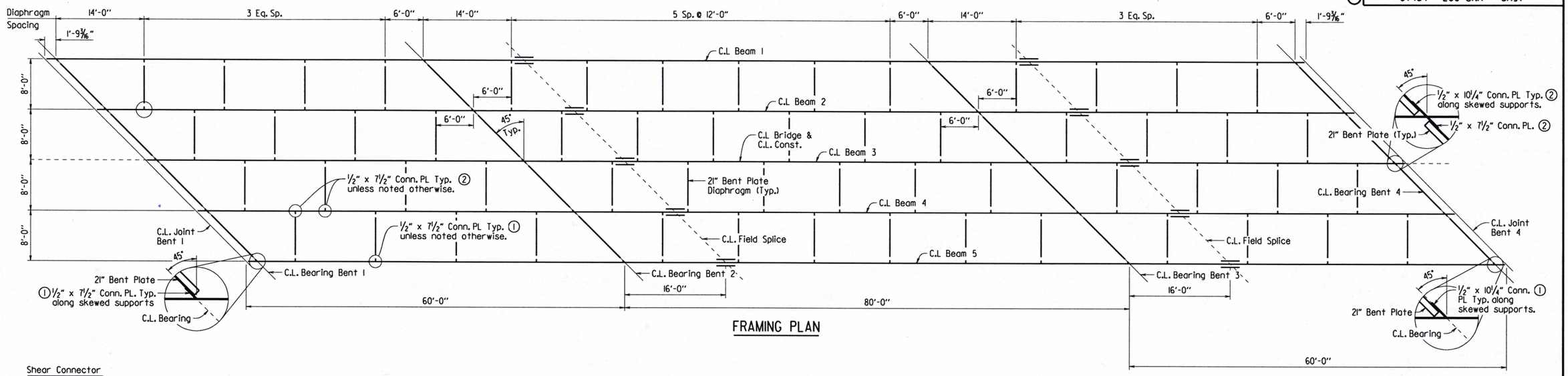

FRAMING PLAN

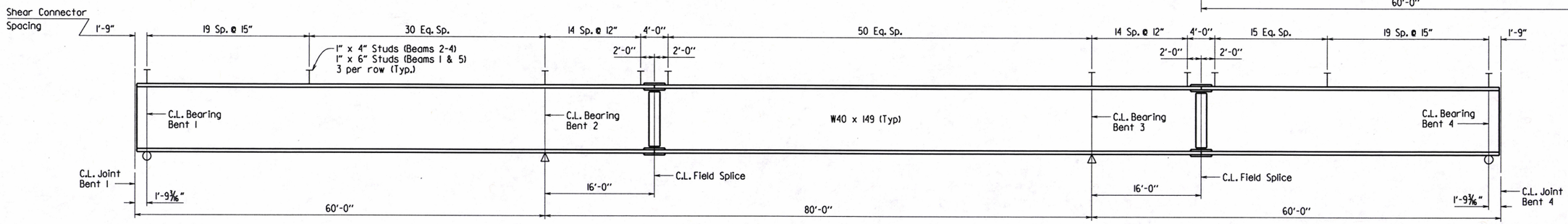

BEAM ELEVATION

No Scale

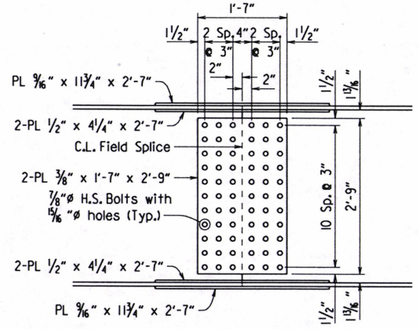

Web Splice

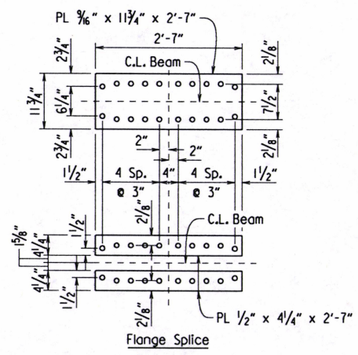

Flange Splice

FIELD SPLICE DETAILS

3/4" = 1'-0"

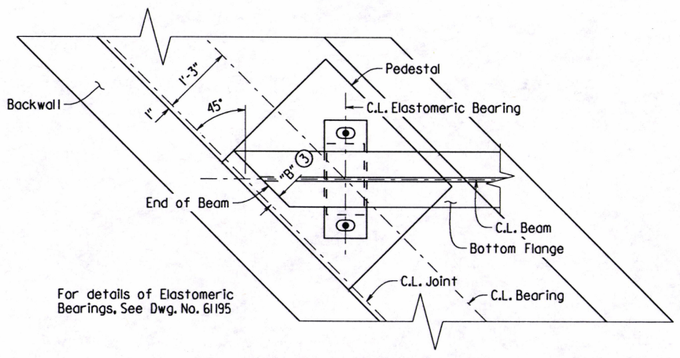

For details of Elastomeric Bearings, See Dwg. No. 61195

PLAN OF BEARING AT END BENT

3/4" = 1'-0"

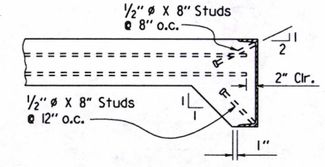

As an alternate to 5/8" ø studs, 1/2"ø x 8" studs spaced as shown may be used. Use weight of 5/8"ø stud as basis of measurement of structural steel in anchors.

DETAILS OF ALTERNATE ANCHORS AND PLACEMENT OF LONGITUDINAL REINFORCEMENT

No Scale

Bolted field splices may be eliminated or shop welded splices may be substituted with the approval of the Engineer. Payment will be made on the basis of plan quantities.

All field splice bolts shall be 7/8" Hi-str. bolts. All holes for splice bolts shall be 15/16" ø.

STATE OF ARKANSAS
LICENSED PROFESSIONAL ENGINEER
No. 9235
9-13-19
CHARLES R. ELLIS
BRIDGE ENGINEER

SHEET 2 OF 3
DETAILS OF 200'-0" CONTINUOUS W-BEAM UNIT MIDDLE FORK SALINE RIVER

ROUTE SEC.

ARKANSAS STATE HIGHWAY COMMISSION
LITTLE ROCK, ARK.

DRAWN BY: BHS DATE: 7/1/2019 FILENAME: b012318x1_sl.dgn
CHECKED BY: JHP DATE: 9/11/19 SCALE: 1/8" = 1'-0" or As Shown
DESIGNED BY: BHS DATE: 6/26/19

BRIDGE NO. 07464 DRAWING NO. 61197

PRINT DATE: 9/11/2019

② Edge of deck thickness shall be detailed to a thickness of 8¾" if Alternate Overhang Detail is used. See Dwg. No. 61196 for details.

③ Railing Joint. See Dwg. Nos. 61199 & 61200 for details.

④ Place Type D Bridge Name Plate centered in curb between posts. Place at beginning of bridge, right side of roadway only.

See Dwg. No. 61201 for parapet rail reinforcing.

DATE REVISED	DATE FILMED	DATE REVISED	DATE FILMED	FED. ROAD DIST. NO.	STATE	FED. AID PROJ. NO.	SHEET NO.	TOTAL SHEETS
				6	ARK.			
				JOB NO.		012318	58	92
				①	07464 - 200' UNIT - 61198			

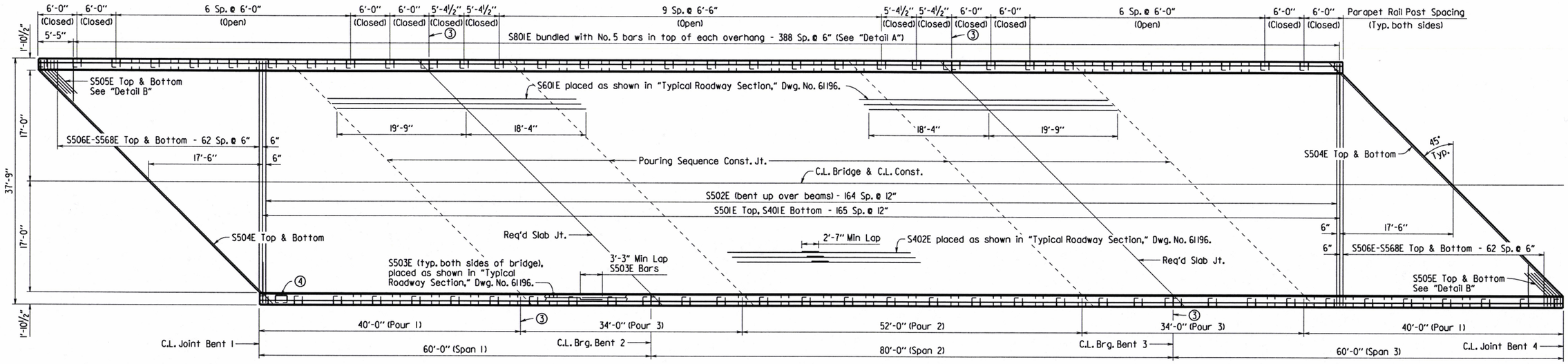

REINFORCING PLAN & POURING SEQUENCE

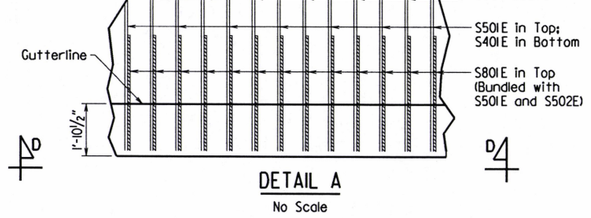

DETAIL A
No Scale

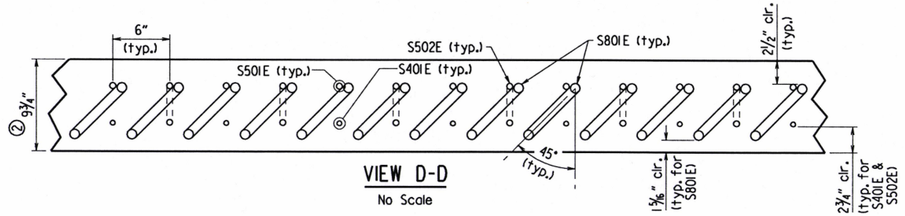

VIEW D-D
No Scale

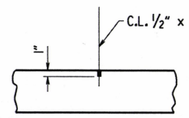

SLAB JOINT DETAIL
No Scale

Use ½" X 1" Type 3 or 4 Joint Sealer. See Subsections 501.02(h) and 501.05(j). Backer rod shall not be installed. Joint Sealer shall be measured and paid for as Class S(AE) Concrete-Bridge. Slab joints shall extend to the outside edge of the deck slab. Slab joints shall be installed before the parapet railing is poured. If slab joints are to be sawed, they shall be sawed as soon as the concrete has sufficiently set to allow sawing of the joint without damage to the slab. Slab joints shall be placed at all pouring sequence construction joints and required slab joint locations. The joint sealer shall extend across the deck from gutterline to gutterline.

Slab Pouring Sequence Notes:
Pours with the same number may be place simultaneously or separately. All Pours (1) must be placed before Pour (2) can be placed. Pour (2) must be placed before Pours (3) can be placed. 48 hours shall elapse between the end of a pour and the start of the next pour. 72 hours shall elapse between adjacent pours. No deviations from the pouring sequence shown will be allowed.

Concrete in bridge superstructure shall be placed, consolidated, and screeded off for the entire pour before any concrete has taken its initial set. This may require the use of a retarding agent.

A minimum of 72 hours shall elapse between completion of the slab and the pouring of the parapet railing. Any railing pours made before the entire slab unit has been placed must be approved by the Engineer.

TABLE OF DEAD LOAD DEFLECTIONS (INCHES)

Span	Point of Deflection	Structural Steel		Structural Steel + Slab		Structural Steel + Slab + Parapet	
		Ext. Beam	Int. Beam	Ext. Beam	Int. Beam	Ext. Beam	Int. Beam
Span 1	0	0	0	0	0	0	0
	0.1	0.019	0.022	0.118	0.131	0.129	0.138
	0.2	0.035	0.039	0.215	0.238	0.236	0.251
	0.3	0.046	0.050	0.277	0.306	0.304	0.323
	0.4	0.049	0.054	0.296	0.328	0.325	0.346
	0.5	0.045	0.050	0.273	0.302	0.299	0.319
	0.6	0.035	0.039	0.213	0.236	0.234	0.249
	0.7	0.022	0.024	0.132	0.146	0.145	0.154
	0.8	0.008	0.009	0.049	0.054	0.054	0.057
	0.9	-0.001	-0.001	-0.006	-0.007	-0.007	-0.007
Span 2 ½	0	0	0	0	0	0	0
	0.1	0.024	0.027	0.148	0.164	0.162	0.173
	0.2	0.063	0.069	0.381	0.421	0.418	0.444
	0.3	0.100	0.111	0.609	0.675	0.668	0.712
	0.4	0.127	0.141	0.772	0.855	0.846	0.902
	0.5	0.137	0.151	0.831	0.919	0.911	0.970

Symmetrical about half-point of unit

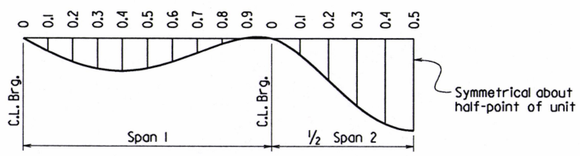

DEAD LOAD DEFLECTION DIAGRAM
No Scale

Camber for dead load deflection plus vertical curve +/- ¼" tolerance. Deflections shown are along C.L. Beam from a chord from C.L. Bearing to C.L. Bearing. Negative sign (-) indicates point above chord. Vertical curve corrections not included.

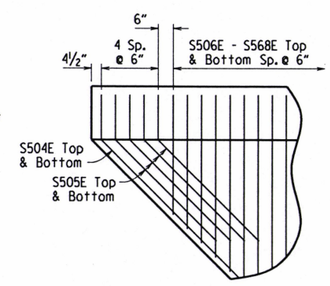

DETAIL B
No Scale

BAR LIST

MARK	NO. REQ'D.	LENGTH	P.D.	BENDING DIAGRAMS
S401E	166	37'-5"	Str.	
S402E	465	42'-0"	Str.	
S501E	166	37'-5"	Str.	
S502E	165	38'-3"	3"	
S503E	40	52'-6"	Str.	
S504E	4	52'-2"	3¾"	
S505E	16	6'-9"	3¾"	
S506E-S568E	4 Eq.	35'-4"-4'-4"	Str.	
S601E	76	38'-1"	Str.	
S801E	778	7'-4"	6"	

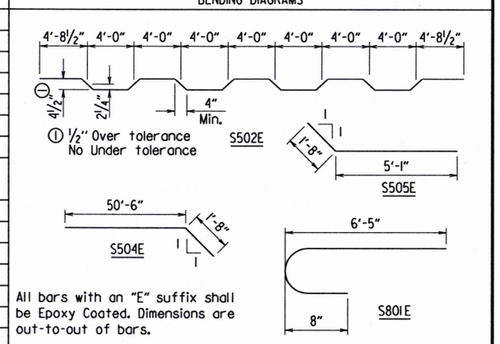

All bars with an "E" suffix shall be Epoxy Coated. Dimensions are out-to-out of bars.

STATE OF ARKANSAS
LICENSED PROFESSIONAL ENGINEER
No. 9235
9-13-19
CHARLES R. ELLIS
BRIDGE ENGINEER

SHEET 3 OF 3
DETAILS OF 200'-0" CONTINUOUS W-BEAM UNIT MIDDLE FORK SALINE RIVER

ROUTE SEC.

ARKANSAS STATE HIGHWAY COMMISSION
LITTLE ROCK, ARK.

DRAWN BY: BHS DATE: 7/1/2019
CHECKED BY: JHP DATE: 9/13/19
DESIGNED BY: BHS DATE: 6/7/2019
FILENAME: b012318xl_sl.dgn
SCALE: ⅛" = 1'-0" or As Shown

BRIDGE NO. 07464
DRAWING NO. 61198

PRINT DATE: 9/13/2019

Unless noted otherwise, Rail, Post, and Curb dimensions do not include additional allowance for architectural finish.

① Dimension includes 3/4" allowance for Fieldstone Finish.

② Dimension includes 1/4" allowance for Roughsawn Wood.

③ Each Open Panel shall have a 1'-2" x 1 3/4" Drain opening.

④ See Dwg. No. 61200 for Railing Joint details.

⑤ Place Type D Bridge Name Plate centered in curb and between posts. Place at beginning of bridge, right side of roadway only.

For all Sections, See Dwg. No. 61201.

DATE REVISED	DATE FILMED	DATE REVISED	DATE FILMED	FED. ROAD DIST. NO.	STATE	FED. AID PROJ. NO.	SHEET NO.	TOTAL SHEETS
				6	ARK.			
				JOB NO.		012318	59	92
				①	07464 & 07465 - RAILING - 61199			

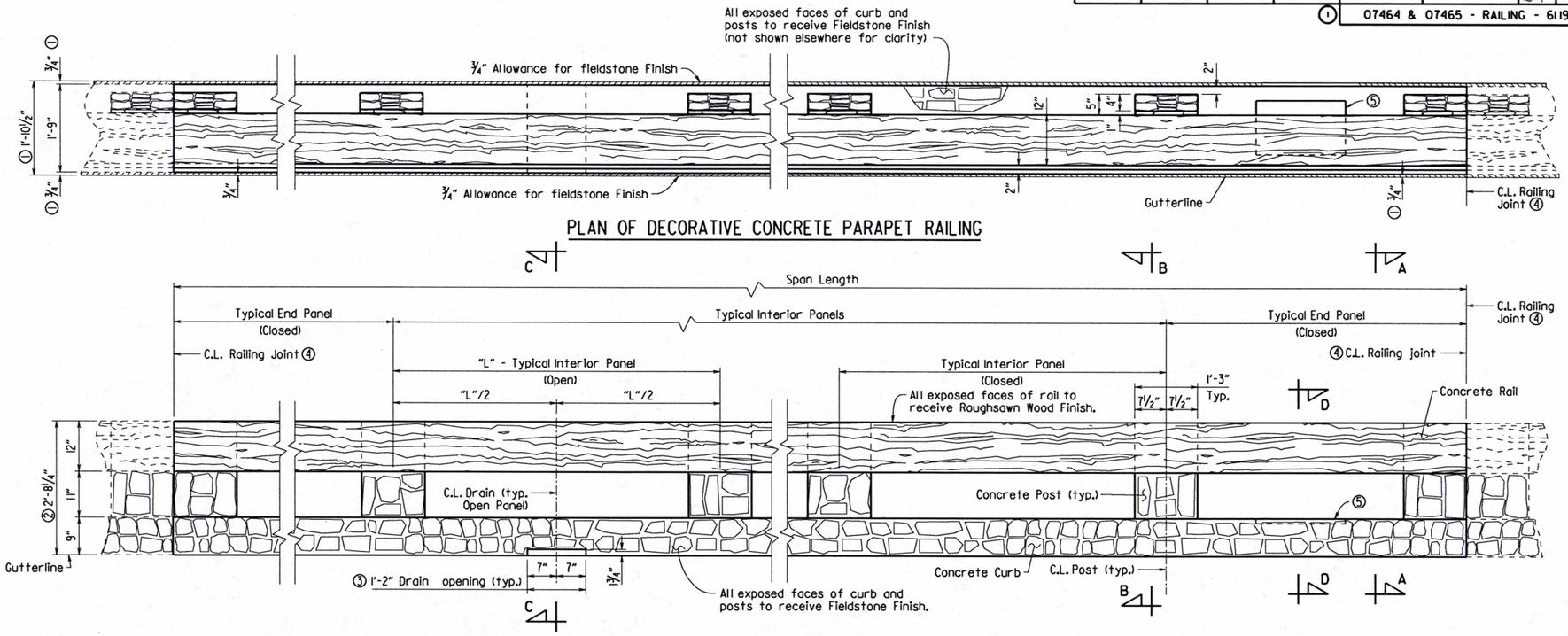

PLAN OF DECORATIVE CONCRETE PARAPET RAILING

ELEVATION OF DECORATIVE CONCRETE PARAPET RAILING (FROM TRAFFIC SIDE)

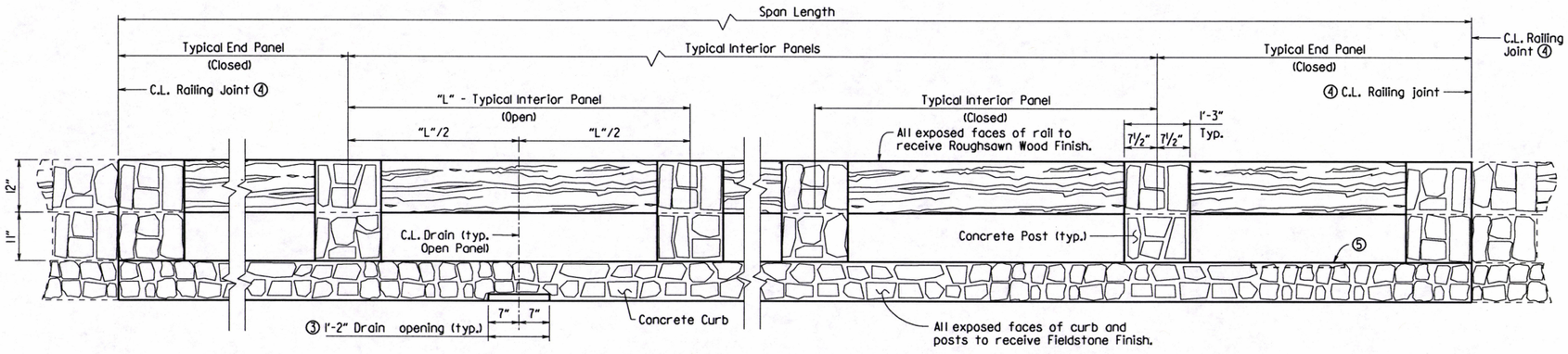

ELEVATION OF DECORATIVE CONCRETE PARAPET RAILING (FROM BACK SIDE)

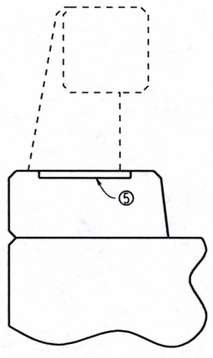

SECTION D-D
No Scale

STATE OF ARKANSAS
LICENSED PROFESSIONAL ENGINEER
No. 9235
9-13-19
CHARLES R. ELLIS
BRIDGE ENGINEER

SHEET 1 OF 3
DETAILS OF DECORATIVE CONCRETE PARAPET RAILING

ROUTE SEC.

ARKANSAS STATE HIGHWAY COMMISSION
LITTLE ROCK, ARK.

DRAWN BY: BHS DATE: 8/12/2019
CHECKED BY: SHP DATE: 9/11/19
DESIGNED BY: BHS DATE: 6/2019

FILENAME: b012318_rldgn
SCALE: 3/4" = 1'-0" or As Shown

BRIDGE NO. 07464 & 07465 DRAWING NO. 61199

PRINT DATE: 9/11/2019

DATE REVISED	DATE FILMED	DATE REVISED	DATE FILMED	FED. ROAD DIST. NO.	STATE	FED. AID PROJ. NO.	SHEET NO.	TOTAL SHEETS
				6	ARK.			
				JOB NO.		012318	60	92
				①	07464 & 07465 - RAILING - 61200			

Railing Joint shall extend from the top of the Rail to the top of the Deck or Slab.

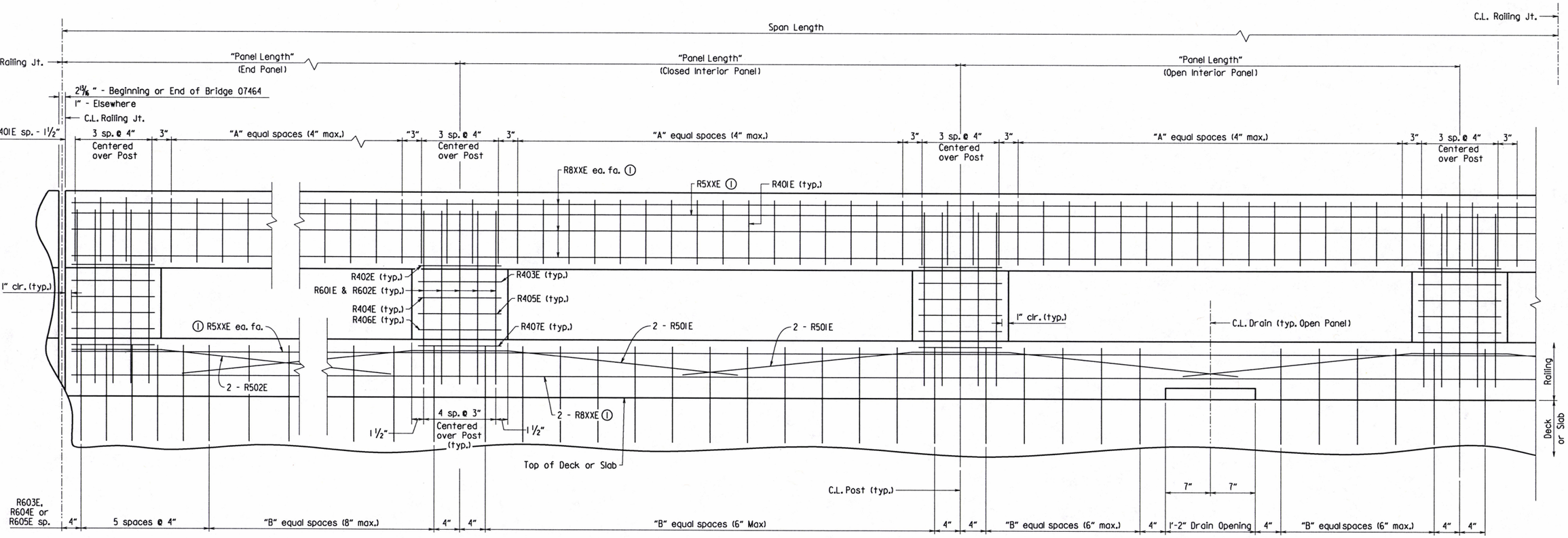

PARTIAL - LONGITUDINAL SECTION OF DECORATIVE CONCRETE PARAPET RAILING

① Splicing of continuous longitudinal rail reinforcing shall be staggered. Min. lap length for No. 8 bars = 6'-4", Min. lap length for No. 5 bars = 3'-3". Maximum bar length = 60'-0".

TABLE OF VARIABLES

Bridge Number	Panel Length	Panel Type	"A"	"B"	R5XXE	R8XXE
07464	6'-0"	End	12	6	R503E	R801E
	6'-0"	Closed Interior	14	11	R503E	R801E
	6'-0"	Open Interior	14	4	R503E	R801E
	5'-4 1/2"	End	10	5	① R504E	① R802E
	5'-4 1/2"	Closed Interior	12	10	① R504E	① R802E
	6'-6"	Open Interior	15	4	① R504E	① R802E
07465	6'-0"	Open Interior	14	4	R505E	R803E
	6'-0"	Closed Interior	14	11	R506E	R804E
	5'-11 15/16"	End	9	5	R505E	R803E
	5'-10 1/16"	End	11	6	R506E	R804E

Panel lengths are measured along gutterline.

See Dwg. No. 61198 for panel locations on Bridge No. 07464.
See Dwg. No. 61209 for panel locations on Bridge No. 07465.

STATE OF ARKANSAS
LICENSED PROFESSIONAL ENGINEER
No. 9235
9-13-19
CHARLES R. ELLIS
BRIDGE ENGINEER

SHEET 2 OF 3
DETAILS OF DECORATIVE CONCRETE PARAPET RAILING

ROUTE SEC.

ARKANSAS STATE HIGHWAY COMMISSION
LITTLE ROCK, ARK.

DRAWN BY: BHS DATE: 8/8/19
CHECKED BY: CRE DATE: 9/11/19
DESIGNED BY: BHS DATE: 6/2019
FILENAME: b012318_rl.dgn
SCALE: No Scale

BRIDGE NO. 07464 & 07465 DRAWING NO. 61200

PRINT DATE: 9/11/2019

DATE REVISED	DATE FILMED	DATE REVISED	DATE FILMED	FED. ROAD DIST. NO.	STATE	FED. AID PROJ. NO.	SHEET NO.	TOTAL SHEETS
				6	ARK.			
				JOB NO.		012318	61	92
				(1)		07464 & 07465 - RAILING - 61201		

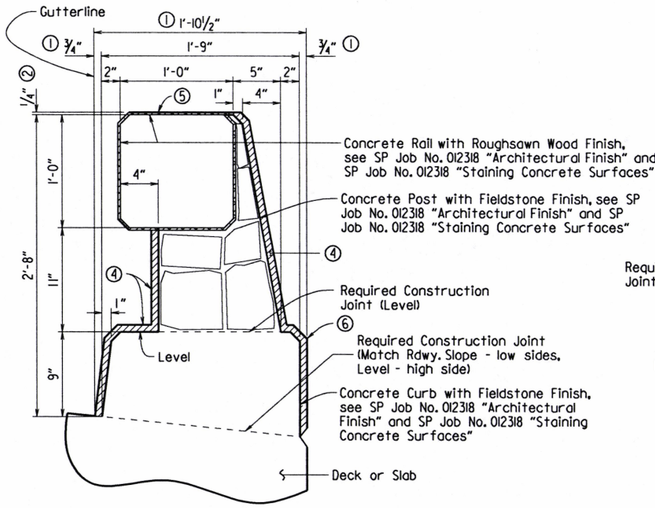

VIEW A-A

1½" = 1'-0"

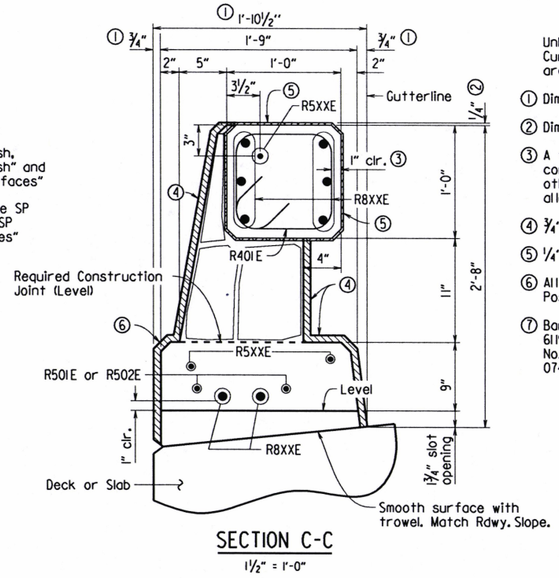

SECTION C-C

1½" = 1'-0"

Unless noted otherwise, Railing component (includes Rail, Post, and Curb) dimensions do not include additional allowance for architectural finish.

① Dimension includes ¾" allowance for Fieldstone Finish.

② Dimension includes ¼" allowance for Roughsawn Wood Finish.

③ A typical clear cover of 1" shall be provided for the Railing components (includes Rail, Post, and Curb) reinforcement, unless otherwise noted. This clear cover does not include any allowance for architectural finish.

④ ¾" allowance for Fieldstone Finish, typ. for Post and Curb.

⑤ ¼" allowance for Roughsawn Wood Finish, typ. for Rail.

⑥ All exposed corners for the Railing components (includes Rail, Post, and Curb) shall be chamfered 1" unless otherwise noted.

⑦ Bar list is for reinforcement of Span Railing only. See Dwg. No. 61191 for bar list of wing railing for Bridge No. 07464. See Dwg. No. 61211 for bar list of approach gutter railing on Bridge No. 07465.

⑦ BAR LIST

	MARK	NO. REQ'D.	LENGTH	"A"	P.D.
Bridge No. 07464	R401E	1,256	3'-10"		2"
	R402E	72	4'-2"	9"	2"
	R403E	72	4'-3"	9¼"	2"
	R404E	72	4'-4"	9¾"	2"
	R405E	72	4'-4"	10"	2"
	R406E	72	4'-5"	10½"	2"
	R407E	72	4'-7"	11½"	2"
	R501E	120	7'-3"		3¾"
	R502E	24	4'-2"		3¾"
	R503E	12	59'-8"		Str.
	R504E	12	41'-7"		Str.
	R601E	360	4'-0"		4½"
	R602E	360	3'-6"		4½"
	R603E	700	5'-6"		4½"
	R801E	32	59'-8"		Str.
	R802E	32	43'-0"		Str.
Bridge No. 07465	R401E	660	3'-10"		2"
	R402E	42	4'-2"	9"	2"
	R403E	42	4'-3"	9¼"	2"
	R404E	42	4'-4"	9¾"	2"
	R405E	42	4'-4"	10"	2"
	R406E	42	4'-5"	10½"	2"
	R407E	42	4'-7"	11½"	2"
	R501E	60	7'-3"		3¾"
	R502E	24	4'-2"		3¾"
	R505E	9	34'-1"		Str.
	R506E	9	35'-5"		Str.
	R601E	210	4'-0"		4½"
	R602E	210	3'-6"		4½"
	R604E	186	7'-9"		4½"
	R605E	216	7'-6"		4½"
	R803E	24	34'-1"		Str.
	R804E	24	35'-5"		Str.

BENDING DIAGRAMS

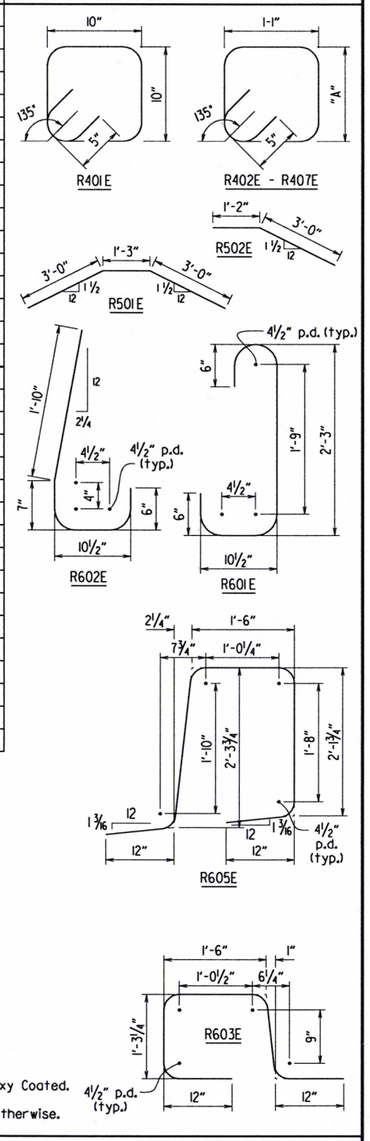

All bars designated with an "E" suffix shall be Epoxy Coated.

Dimensions are out to out of bars unless noted otherwise.

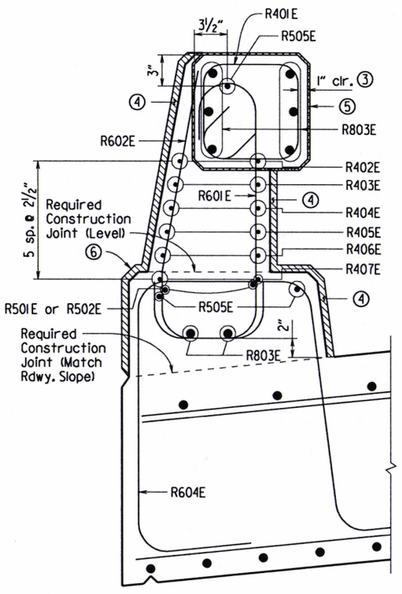

SECTION B-B

1½" = 1'-0"

Bridge No. 07465

Low Side

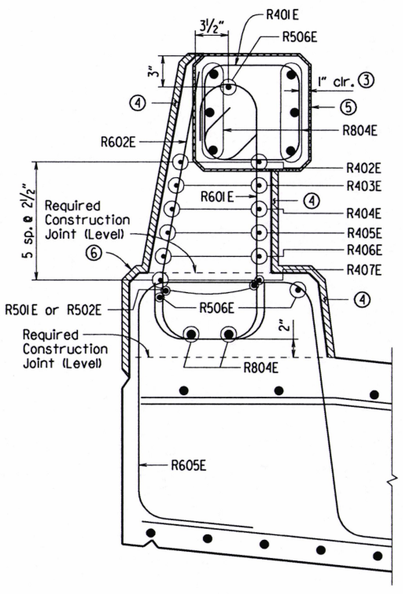

SECTION B-B

1½" = 1'-0"

Bridge No. 07465

High Side

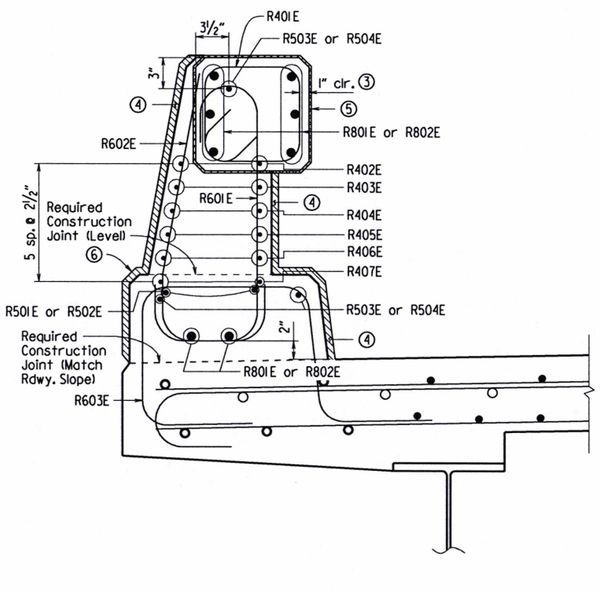

SECTION B-B

1½" = 1'-0"

Bridge No. 07464

STATE OF ARKANSAS
LICENSED PROFESSIONAL ENGINEER
No. 9235
CHARLES R. ELLIS
9-13-19

BRIDGE ENGINEER

SHEET 3 OF 3
DETAILS OF DECORATIVE CONCRETE PARAPET RAILING

ROUTE SEC.

ARKANSAS STATE HIGHWAY COMMISSION

LITTLE ROCK, ARK.

DRAWN BY: BHS DATE: 8/12/2019 FILENAME: b012318_rl.dgn

CHECKED BY: JHP DATE: 9/13/19 SCALE: As Shown

DESIGNED BY: BHS DATE: 6/2019

BRIDGE NO. 07464 & 07465 DRAWING NO. 61201

PRINT DATE: 9/13/2019

DATE REVISED	DATE FILMED	DATE REVISED	DATE FILMED	FED. ROAD DIST. NO.	STATE	FED. AID PROJ. NO.	SHEET NO.	TOTAL SHEETS
				6	ARK.			
				JOB NO.		012318	62	92

(1) 07464 - APPROACH GUTTERS - 61202

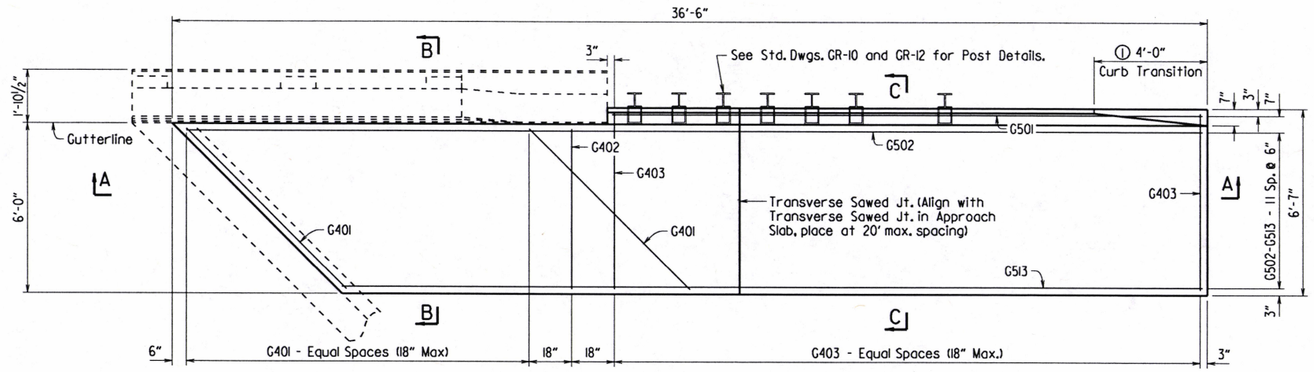

PLAN OF TYPE I SPECIAL APPROACH GUTTER A

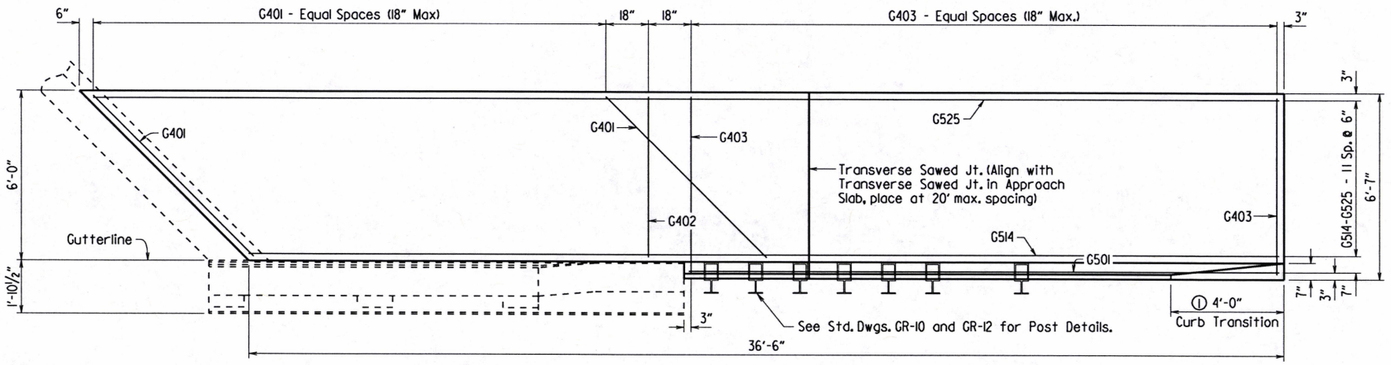

PLAN OF TYPE I SPECIAL APPROACH GUTTER B

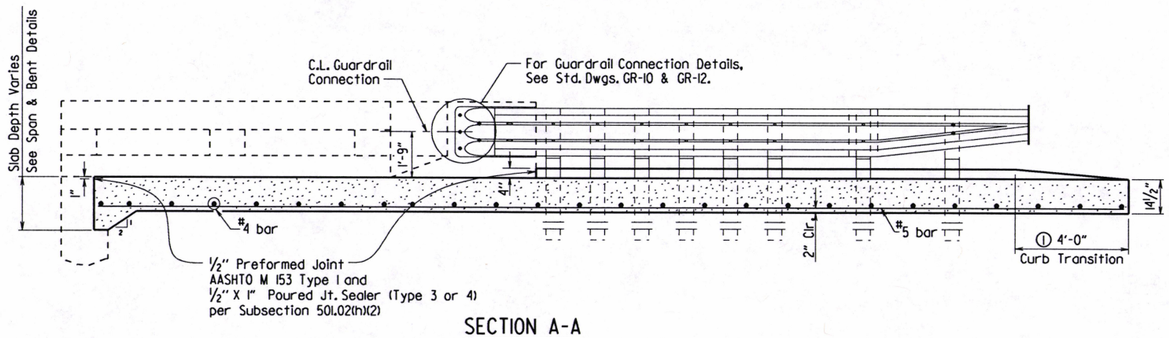

SECTION A-A

(1) Construct gutter curb with height-transition as shown if drop inlet is not placed at end of gutter.

Construct gutter curb full height (no height-transition) if drop inlet is placed at end of gutter. Curb height transition placed on drop inlet. See drop inlet details.

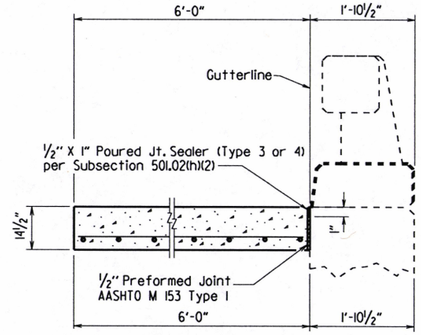

SECTION B-B

No Scale

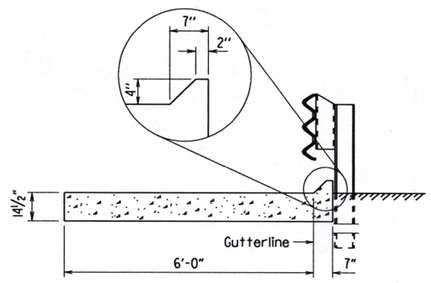

SECTION C-C

No Scale

BAR LIST FOR ONE TYPE I SPECIAL APPROACH GUTTER

	Mark	No. Req'd.	Length
Gutter A	G401	9	8'-0"
	G402	1	5'-8"
	G403	15	6'-3"
	G501	1	20'-10"
	G502-G513	1 Ea.	35'-10"-30'-4"
Gutter B	G401	14	8'-0"
	G402	1	5'-8"
	G403	15	6'-3"
	G501	1	20'-10"
	G514-G525	1 Ea.	36'-4"-41'-10"

QUANTITIES FOR ONE TYPE I SPECIAL APPROACH GUTTER

(For Information Only)

	Reinforcing Steel (Lbs.)	Concrete (Cu. Yds.)
Gutter A	550	9.60
Gutter B	650	11.30

GENERAL NOTES

All concrete shall be Class S or Class S(AE) or mixture used for Portland Cement Concrete Pavement and shall be poured in the dry.

All reinforcing steel shall be Grade 60 (yield strength = 60,000 psi) conforming to AASHTO M 31 or M 322, Type A, with mill test reports.

Approach Gutters will be measured and paid for in accordance with Section 504.

STATE OF ARKANSAS
LICENSED PROFESSIONAL ENGINEER
No. 9235
9-13-19
CHARLES R. ELLIS
BRIDGE ENGINEER

DETAILS OF TYPE I SPECIAL APPROACH GUTTERS MIDDLE FORK SALINE RIVER

ROUTE SEC.

ARKANSAS STATE HIGHWAY COMMISSION

LITTLE ROCK, ARK.

DRAWN BY: BHS DATE: 8/28/2019 FILENAME: b012318x1_agl.dgn
CHECKED BY: JNP DATE: 9/11/19 SCALE: ⅜" = 1'-0" or As Shown
DESIGNED BY: STD DATE: —

BRIDGE NO. 07464 DRAWING NO. 61202

PRINT DATE: 9/11/2019

DATE REVISED	DATE FILMED	DATE REVISED	DATE FILMED	FED. ROAD DIST. NO.	STATE	FED. AID PROJ. NO.	SHEET NO.	TOTAL SHEETS
				6	ARK.			
				JOB NO.		012318	63	92

(1) 07464 & 07465 - APPR. SLAB - 61203

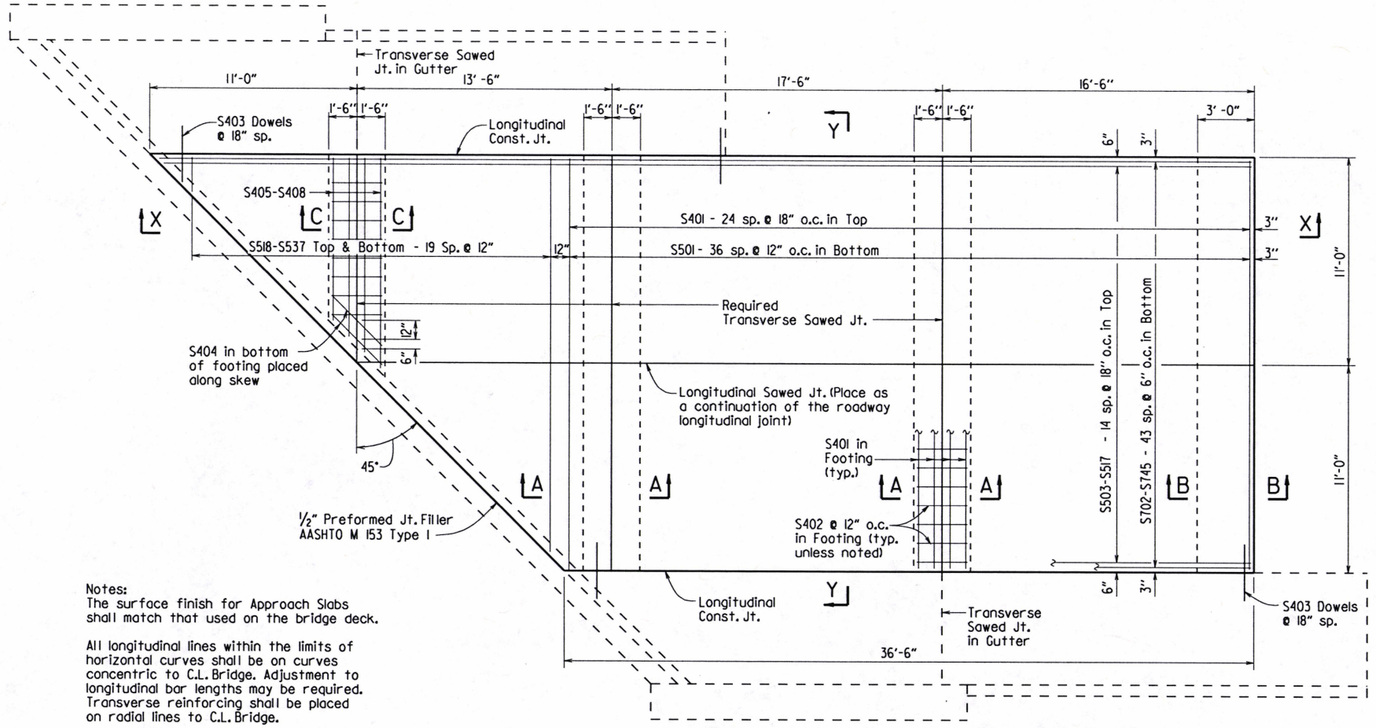

PLAN - SKEWED APPROACH SLAB WITH APPROACH GUTTERS

Bridge 07464

Notes:
The surface finish for Approach Slabs shall match that used on the bridge deck.

All longitudinal lines within the limits of horizontal curves shall be on curves concentric to C.L. Bridge. Adjustment to longitudinal bar lengths may be required. Transverse reinforcing shall be placed on radial lines to C.L. Bridge.

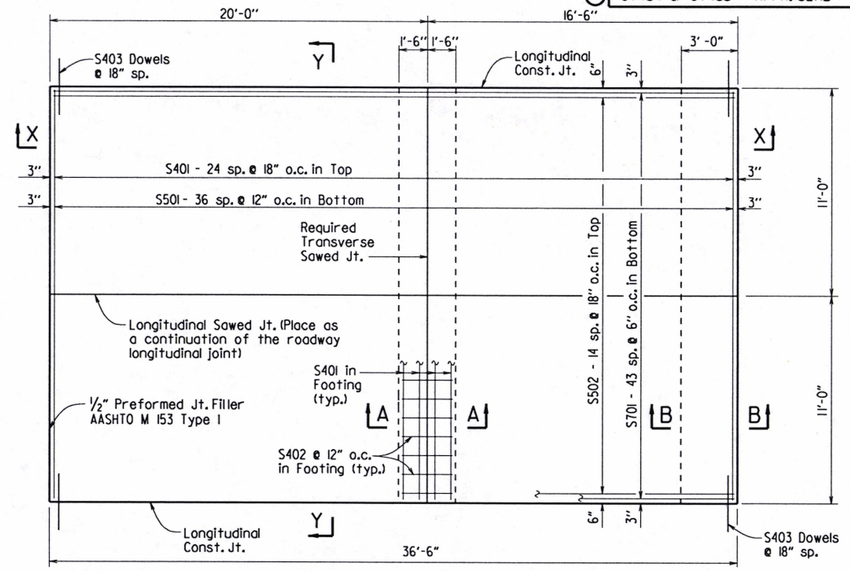

PLAN - SQUARE APPROACH SLAB

Bridge 07465

SECTION X-X

Square Approach Slab Shown

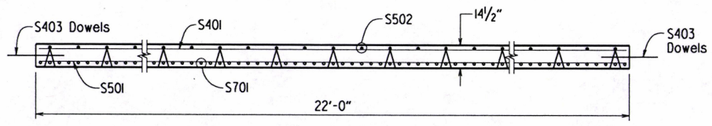

SECTION Y-Y

No Scale

TABLE OF QUANTITIES FOR ONE APPROACH SLAB

For Information Only

Bridge	Reinforcing Steel (Lbs.)	Concrete (Cu. Yds.)
07464	7,070	62.50
07465	5,310	44.90

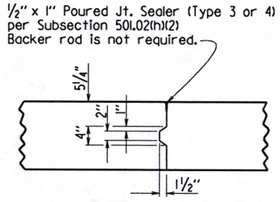

DETAILS OF LONGITUDINAL CONSTRUCTION JOINT

¾" = 1'-0"

BAR LIST

	Mark	Bridge 07464 No. Req'd	Bridge 07464 Length	Bridge 07465 No. Req'd	Bridge 07465 Length
22'-0" Slab Width	S401	37	21'-8"	33	21'-8"
	S402	75	2'-8"	44	2'-8"
	S403	44	3'-0"	50	3'-0"
	S404	2	3'-9"	—	—
	S405-S408	1 Ea.	8'-7" - 11'-1"	—	—
	S501	37	21'-8"	37	21'-8"
	S502	—	—	15	36'-2"
	S503-S517	1 Ea.	36'-7" - 57'-7"	—	—
	S518-S537	2 Ea.	20'-10" - 1'-10"	—	—
	S701	—	—	44	36'-2"
	S702 - S745	1 Ea.	36'-4" - 57'-10"	—	—

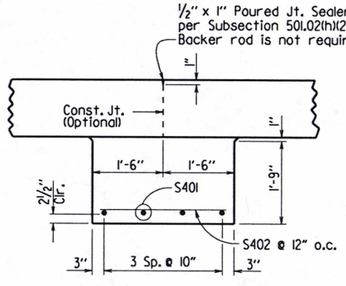

SECTION A-A

No Scale

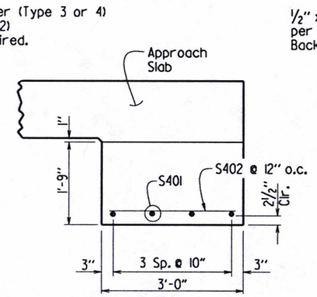

SECTION B-B

No Scale

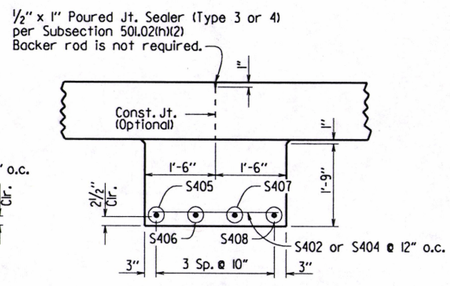

SECTION C-C

No Scale

GENERAL NOTES

All concrete shall be Class S (AE) with a minimum 28 day compressive strength f'c = 4,000 psi and shall be poured in the dry.

All reinforcing steel shall be Grade 60 (yield strength = 60,000 psi) conforming to AASHTO M 31 or M 322, Type A, with mill test reports.

Approach Slabs will be measured and paid for in accordance with Section 504.

STATE OF ARKANSAS
Charles R. Ellis
LICENSED PROFESSIONAL ENGINEER
No. 9235
9-13-19
CHARLES R. ELLIS

BRIDGE ENGINEER

DETAILS OF TYPE SPECIAL APPROACH SLAB

ROUTE SEC.

ARKANSAS STATE HIGHWAY COMMISSION

LITTLE ROCK, ARK.

DRAWN BY: BHS DATE: 8/27/2019 FILENAME: b012318_asl.dgn
CHECKED BY: JNP DATE: 9/10/19 SCALE: 1/4" = 1'-0" or As Shown
DESIGNED BY: STD. DATE:

BRIDGE NO. 07464 & 07465 DRAWING NO. 61203

DATE REVISED	DATE FILMED	DATE REVISED	DATE FILMED	FED. ROAD DIST. NO.	STATE	FED. AID PROJ. NO.	SHEET NO.	TOTAL SHEETS
				6	ARK.			
				JOB NO.		012318	64	92
				(1)		07465 - LAYOUT - 61204		

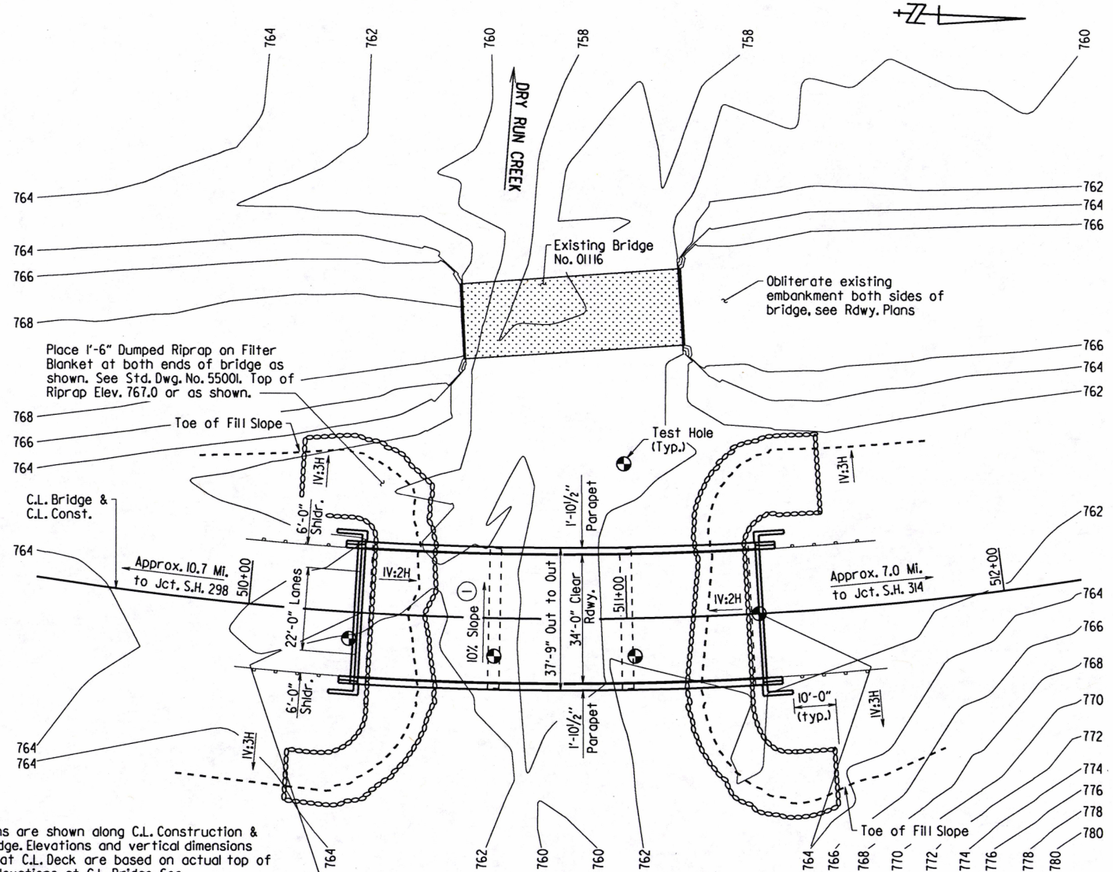

PLAN

Stations are shown along C.L. Construction & C.L Bridge. Elevations and vertical dimensions shown at C.L. Deck are based on actual top of deck elevations at C.L. Bridge. See "Superelevation Sketch."

(2) See Dwg. Nos. 61199 thru 61201 for Details of Decorative Concrete Parapet Railing.

(3) Low Bridge chord elevation of 768.05 occurs 18'-10½" Left of C.L. Construction Sta. 511+35.00.

For Soil Boring Information, see Dwg. No. 61205.

Total Length of Bridge = 105'-0"
105'-0" Continuous R.C. Slab Unit (35', 35', 35')

C.L. Bridge is on a 6°30' curve left. The longitudinal lines of the bridge shall be constructed on curves concentric with C.L. Bridge. Bents shall be constructed on radial lines to C.L. Bridge.

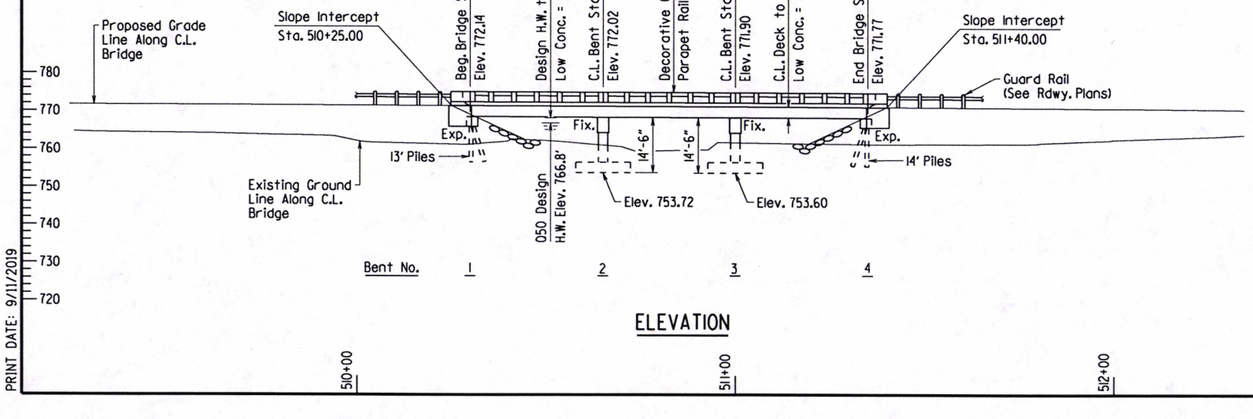

ELEVATION

(1) See "Superelevation Sketch".

For R/W Data, see Roadway Plans.

Use Type 2 Special Approach Gutters ("W" = 6'-0") and Type Special Approach Slab (width = 22'-0) at both ends of bridge. For details, see Dwg. No. 61211 and Dwg. No. 61203, respectively.

HORIZONTAL ALIGNMENT DATA

PI Sta. 509+51.18
Delta = 62° 14'42" Lt.
D = 6°30'00"
L = 957.62'
T = 532.21'
R = 881.47'
PC Sta. 504+18.97
PT Sta. 513+76.59

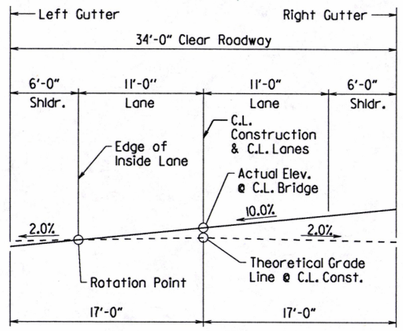

SUPERELEVATION SKETCH

Looking Ahead

HYDRAULIC DATA

FLOOD DESCRIPTION	FREQUENCY	DISCHARGE	(4) NATURAL WATER SURFACE ELEVATION	WATER SURFACE ELEV. WITH BACKWATER
	YEARS	CFS	FEET	FEET
Design	50	2750	765.7	766.8
Base	100	3270	766.8	767.8
Extreme	500	4650	769.2	770.8
Overtopping	>500	N/A	N/A	N/A

(4) Unconstricted water surface elevation without structure or roadway approaches.

0100 Backwater Elevation for Existing Structure = 768.0 feet
Proposed Low Bridge Chord Elevation = 768.05 feet
Drainage Area = 1.9 square miles
Historical H.W. Elevation = 765.3 feet

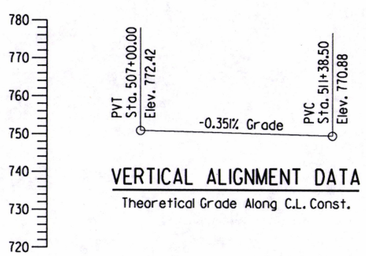

VERTICAL ALIGNMENT DATA

Theoretical Grade Along C.L. Const.

GENERAL NOTES

BENCHMARK: Vertical Control Data are shown on the Survey Control Data Sheets.

CONSTRUCTION SPECIFICATIONS: Arkansas State Highway and Transportation Department Standard Specifications for Highway Construction (2014 edition) with applicable Supplemental Specifications and Special Provisions. Section and Subsection refer to the Standard Construction Specifications unless otherwise noted in the Plans.

DESIGN SPECIFICATIONS: AASHTO LRFD Bridge Design Specifications, Seventh Edition (2014) with 2015 Interims.

LIVE LOADING: HL-93

SEISMIC PERFORMANCE ZONE: 1 S_{D1} = 0.12 Site Class: C

MATERIALS AND STRENGTHS:
Class S(AE) Concrete (superstructure) f'c = 4,000 psi
Class S Concrete (substructure) f'c = 3,500 psi
Reinforcing Steel (AASHTO M 31 or M 322, Type A) fy = 60,000 psi

BORING LOGS: Boring logs may be obtained from the Construction Contract Procurement Section of the Program Management Division.

STEEL PILING: All piling shall be HP 12x53 (Grade 50) and shall be driven with an approved air, steam, or diesel hammer to a minimum safe bearing capacity of 95 tons per pile and into the material designated as Shale on the boring legend. Minimum penetration shall be 8' below bottom of cap. Piling shall be driven after embankment to bottom of cap is in place. Lengths shown are for estimating quantities and for use in determining payment for cut-off and build-up in accordance with Section 805. Actual pile lengths are to be determined in the field. The Contractor shall use approved steel H-Pile driving points on all piles.

SPREAD FOOTINGS: Footings shall be set a minimum of 2' into material designated as Sandstone or Shale on the boring legend. The top of the footings at Bents 2 and 3 shall be set a minimum 2' below the channel bottom as determined by the lowest channel elevation within the footprint of the footing. Foundations for footings shall be prepared in accordance with Subsection 801.04. Rock excavations shall be made to neat lines of the concrete footings. Care shall be exercised to avoid shattering of rock faces by excessive blasting. Concrete in footings shall be poured directly against excavated surfaces of rock. Excavations shall be backfilled and compacted to the level of the existing ground in accordance with Subsection 801.08.

BRIDGE DECK: The concrete bridge deck shall be given a tine finish as specified for final finishing in Subsection 802.19 for Class 5 Tined Bridge Roadway Surface Finish.

PROTECTIVE SURFACE TREATMENT: Class I Protective Surface Treatment shall be applied to the roadway surface.

STAINING CONCRETE SURFACES: A concrete penetrating stain shall be applied to bridge surfaces as specified in Special Provision Job No. 012318 "Staining Concrete Surfaces". The concrete penetrating stain shall not be applied on surfaces where Class I Protective Surface Treatment is applied. The color of the stain shall be as specified in Special Provision Job No. 012318 "Staining Concrete Surfaces".

DETAIL DRAWINGS:	DRAWING NOS.
End Bents	61206
Intermediate Bents	61207-61208
105'-0" Continuous R.C. Slab Unit	61209-61210
Type 2 Special Approach Gutters	61211-61212
Type Special Approach Slab	61203
Steel H-Piling	55020

EXISTING BRIDGE: Existing Bridge No. 01116 (Log Mile 3.20) is 23.4' wide (20.0' Roadway) and 60.0' long and consists of two 30' R.C. Deck Girder Spans supported by a concrete wall bent and abutments. The existing bridge is located approximately 80' downstream from the proposed new bridge. Plans of the existing structure, if available, may be obtained upon request to the Construction Contract Procurement Section of the Program Management Division.

REMOVAL AND SALVAGE: After the new bridge is open to traffic, existing Bridge No. 01116 shall be removed in accordance with Section 205. All material from the existing structure shall become the property of the Contractor.

MAINTENANCE OF TRAFFIC: See Roadway Plans.

STATE OF ARKANSAS
LICENSED PROFESSIONAL ENGINEER
No. 9235
9-13-19
CHARLES R. ELLIS

BRIDGE ENGINEER

SHEET 1 OF 2
LAYOUT OF BRIDGE
HIGHWAY 7 OVER DRY RUN CREEK
MIDDLE FORK SALINE RIVER & DRY RUN CREEK
STRS. & APPRS. (S)
PERRY COUNTY

ROUTE 7 SEC. 11

ARKANSAS STATE HIGHWAY COMMISSION
LITTLE ROCK, ARK.

DRAWN BY: DKS DATE: 1/25/18 FILENAME: b012318x2_11.dgn
CHECKED BY: JSB DATE: 9/11/19 SCALE: 1" = 20'
DESIGNED BY: DKS DATE: 1/2018

BRIDGE NO. 07465 DRAWING NO. 61204

PRINT DATE: 9/11/2019

DATE REVISED	DATE FILMED	DATE REVISED	DATE FILMED	FED. ROAD DIST. NO.	STATE	FED. AID PROJ. NO.	SHEET NO.	TOTAL SHEETS
				6	ARK.			
				JOB NO.		012318	65	92
				①		07465 - LAYOUT - 61205		

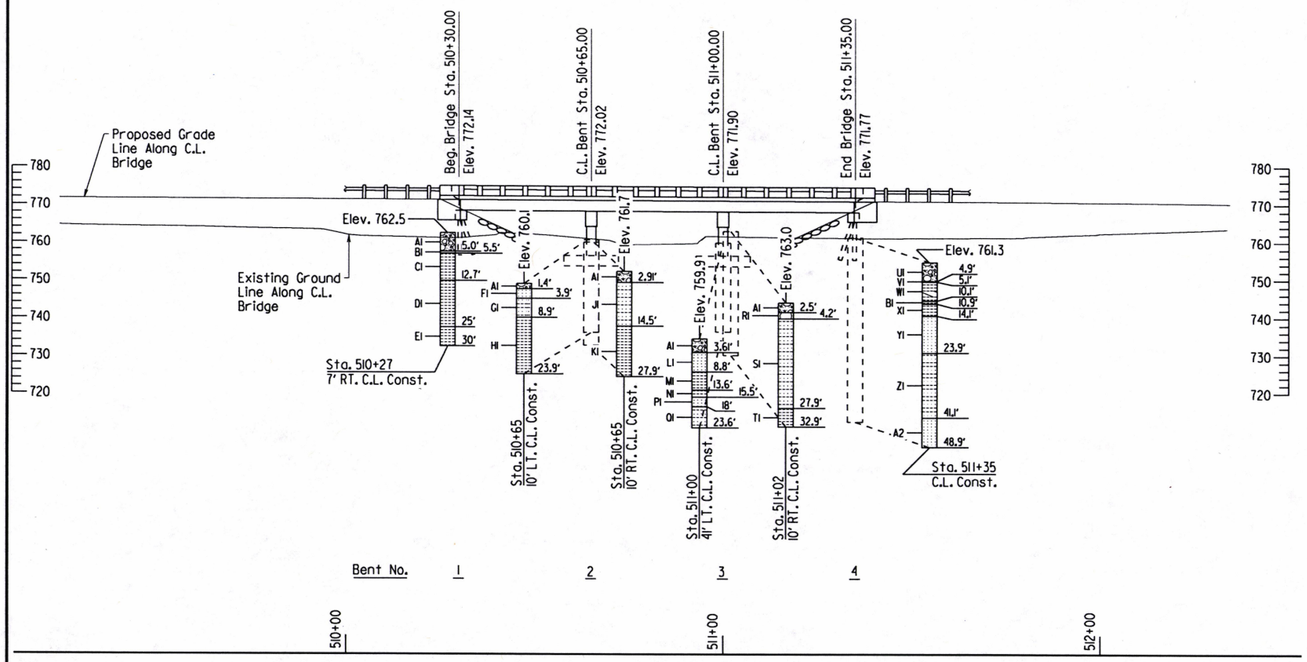

ELEVATION OF SOIL BORINGS

BORING LEGEND

AI-Sand, Gravel, Cobbles, and Boulders
BI-SHALE - Weathered, Medium Hard, Gray
CI-SHALE - Slightly Weathered, Medium Hard, Frequent Fractures, Occasional Slickensides and Mineral Veins, Gray
DI-SHALE - Unweathered, Medium Hard, Occasional Fractures and Sandstone Clasts, Moderate Dip, Slickensided, Gray
EI-SHALE - Unweathered, Medium Hard, Occasional Calcite Veins, Moderate Dip, Slickensided, Gray
FI-SANDSTONE - Weathered, Cemented, Frequent Fractures, Moderate Dip, Brown and Gray
GI-SHALE WITH INTERBEDDED SANDSTONE - Slightly Weathered, Medium Hard, Frequent Fractures and Calcite Veins, Slickensided, Moderate Dip, Gray
HI-SHALE - Unweathered, Medium Hard, Frequent to Occasional Fractures, Frequent Calcite Veins, Slickensided, Moderate to Steep Dip, Gray
JI-SANDSTONE WITH INTERBEDDED SHALE - Slightly Weathered, Cemented, Frequent Fractures and Mineral Veins, Slickensided, Steep Dip, Gray
KI-SHALE - Unweathered, Medium Hard, Frequent to Occasional Fractures and Calcite Veins, Moderate Dip, Slickensided, Gray
LI-SANDSTONE - Unweathered, Well Cemented, Occasional Fractures, Frequent Calcite Veins, Slight to Moderate Dip, Light Gray
MI-SHALE - Weathered, Medium Hard, Gray
NI-SHALE - Unweathered, Medium Hard, Occasional Sandstone Layers and Seams, Moderate Dip, Slickensided, Gray
PI-SANDSTONE - Unweathered, Well Cemented, Occasional Shale Clast, Moderate Dip, Gray
QI-SANDSTONE WITH INTERBEDDED SHALE - Unweathered, Well Cemented, Frequent Fractures and Calcite Veins, Steep Dip, Gray
RI-Sandstone Boulders
SI-SANDSTONE WITH INTERBEDDED SHALE - Unweathered, Well Cemented, Frequent Calcite Layers and Seams, Slickensided, Moderate Dip, Gray
TI-SHALE - Unweathered, Medium Hard, Occasional Calcite Veins, Slickensided, Gray
UI-Sandy Clay, Gravel, Cobbles, and Boulders
VI-Moist, Very Stiff, Brown Clay
WI-SHALE - Highly Weathered, Medium Hard, Gray
XI-SHALE - Slightly Weathered to Unweathered, Medium Hard, Frequent Fractures, Slickensided, Gray
YI-SANDSTONE - Unweathered, Well Cemented, Frequent Fractures and Mineral Veins, Gray
ZI-SHALE WITH INTERBEDDED SANDSTONE - Unweathered, Medium Hard, Frequent Fractures, Slickensided, Gray
A2-SANDSTONE - Unweathered, Well Cemented, Frequent Fractures, Gray

"N" VALUES

Sta. 510+27 - 7' Right of C.L. Const.
5.5- 5.5, N=100 (6")

Sta. 510+65 - 10' Right of C.L. Const.
2.9- 2.9, N=15 (0")

Sta. 511+00 - 41' Left of C.L. Const.
4.1- 5.1, N=15 (0")

Sta. 511+02 - 10' Right of C.L. Const.
2.5- 2.9, N=100 (5")

Sta. 511+35 - C.L. Const.
5.4- 6.4, N=60
10.6- 11.0, N=60 (4")

STATE OF ARKANSAS
LICENSED PROFESSIONAL ENGINEER
No. 9235
CHARLES R. ELLIS
9-13-19
BRIDGE ENGINEER

SHEET 2 OF 2
LAYOUT OF BRIDGE
HIGHWAY 7 OVER DRY RUN CREEK
MIDDLE FORK SALINE RIVER & DRY RUN CREEK
STRS. & APPRS. (S)
PERRY COUNTY

ROUTE 7 SEC. 11
ARKANSAS STATE HIGHWAY COMMISSION
LITTLE ROCK, ARK.

DRAWN BY: DKS DATE: 1/25/18 FILENAME: b012318x2_11
CHECKED BY: JSR DATE: 9/11/19 SCALE: 1" = 20'
DESIGNED BY: DWS DATE: 1/2018

BRIDGE NO. 07465 DRAWING NO. 61205

PRINT DATE: 9/11/2019

DATE REVISED	DATE FILMED	DATE REVISED	DATE FILMED	FED. ROAD DIST. NO.	STATE	FED. AID PROJ. NO.	SHEET NO.	TOTAL SHEETS
				6	ARK.			
				JOB NO.		012318	66	92
				①		07467 - END BENTS - 61206		

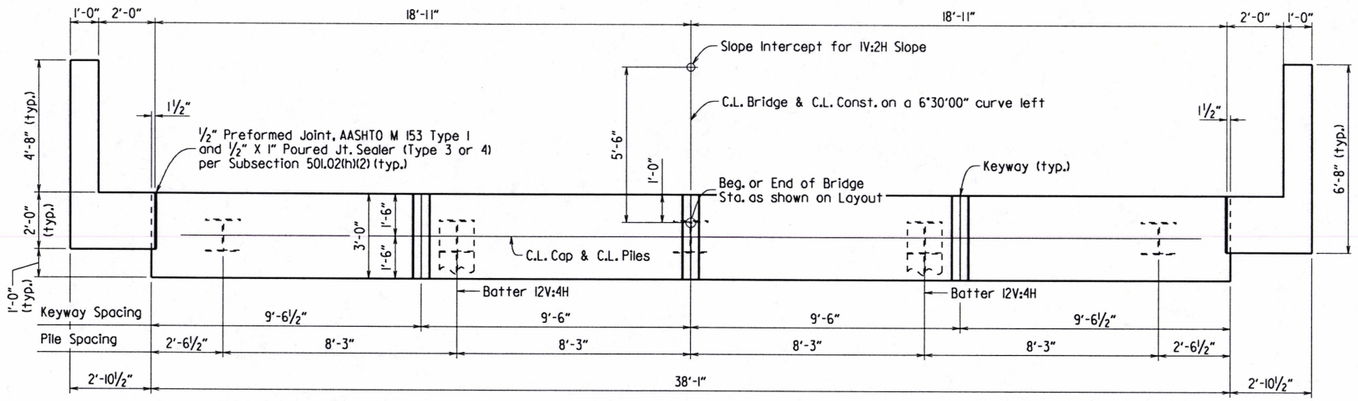

PLAN - END BENT

⅜" = 1'-0"

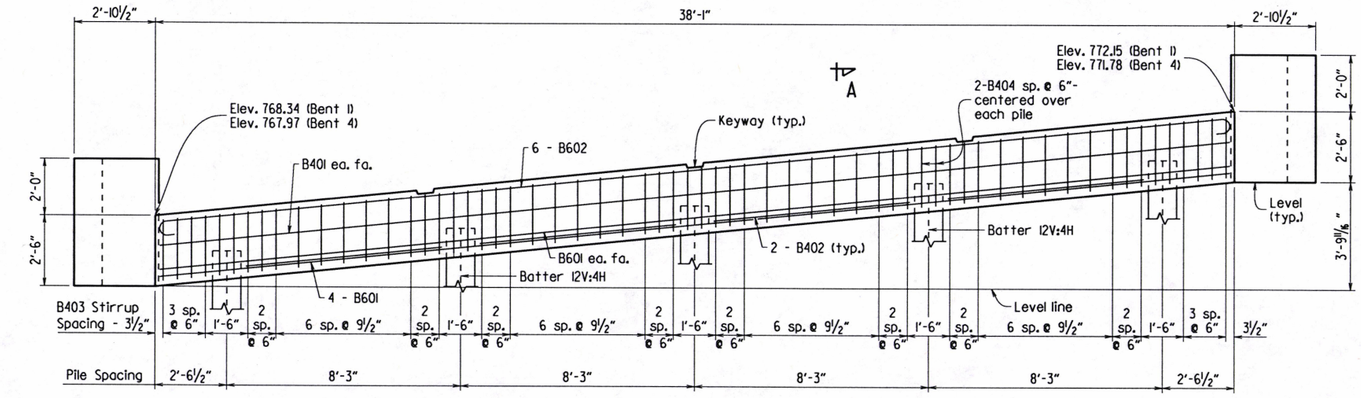

ELEVATION - END BENT

Bent 4 - Looking Ahead shown
Bent 1 - Similar

A ⊣⊢ A

⅜" = 1'-0"

Ahead Station - Bent 1
Back Station - Bent 4

GENERAL NOTES:

All concrete shall be Class "S" with a minimum 28 day compressive strength f'c = 3,500 psi. Concrete shall be poured in the dry and all exposed corners to be chamfered ¾" unless otherwise noted.

All reinforcing steel shall be Grade 60 (yield strength = 60,000 psi) conforming to AASHTO M 31 or M 322, Type A, with mill test reports.

Preformed joint filler and joint sealer shall be subsidiary to the item "Class S Concrete - Bridge."

All piling shall conform to ASTM A709, Grade 50. See Std. Dwg. No. 55020 for additional details.

For additional information, See Layout.

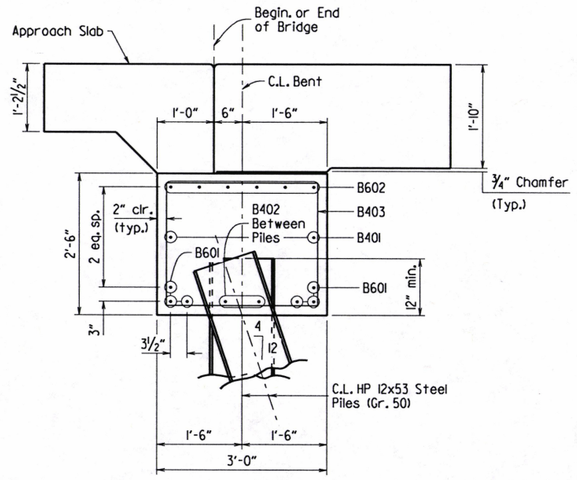

SECTION A-A

¾" = 1'-0"

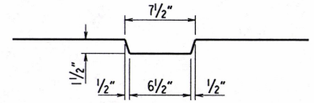

DETAIL OF KEYWAY

1½" = 1'-0"

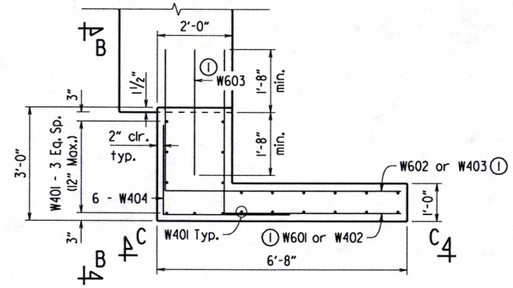

PLAN OF WING

½" = 1'-0"

BAR LIST - PER BENT

	No. Req'd	Length	"X"	"Y"	Pin Dia.	Bending Diagrams Dimensions are out to out of bars
B401	2	37'-11"	-	-	Str.	
B402	8	7'-11"	-	-	Str.	
B403	52	10'-0"	-	-	2"	
B404	10	6'-10"	-	-	2"	
B601	6	37'-11"	-	-	Str.	
B602	6	39'-3"	-	-	4½"	
W401	40	4'-2"	-	-	Str.	
W402	4	7'-2"	4'-8"	2'-8"	3"	
W403	4	8'-2"	6'-4"	2'-0"	3"	
W404	12	5'-8"	2'-5"	3'-4"	3"	
1 W601	8	9'-0"	4'-8"	4'-5"	4½"	
1 W602	8	10'-0"	6'-4"	3'-10"	4½"	
1 W603	2	3'-4"	-	-	Str.	

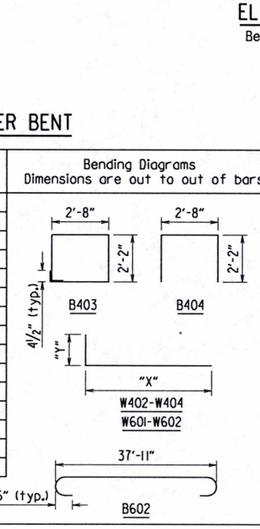

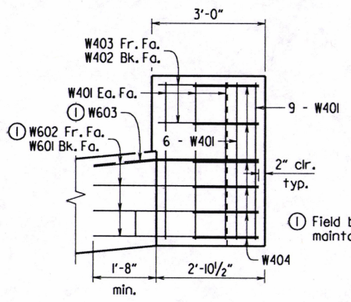

VIEW B-B

½" = 1'-0"

1 Field bend as necessary to maintain 2" Clear Cover.

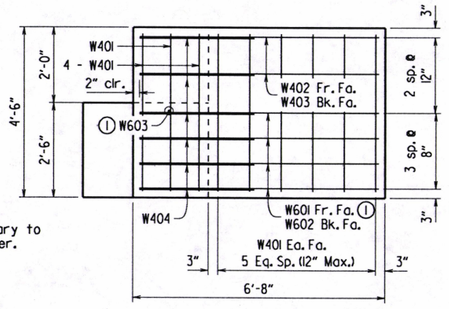

VIEW C-C

½" = 1'-0"

STATE OF ARKANSAS
LICENSED PROFESSIONAL ENGINEER
No. 9235
9-13-19
CHARLES R. ELLIS

BRIDGE ENGINEER

DETAILS OF END BENTS DRY RUN CREEK

ROUTE SEC.

ARKANSAS STATE HIGHWAY COMMISSION

LITTLE ROCK, ARK.

DRAWN BY: JSO DATE: 03/27/2019 FILENAME: b012318x2_bi.dgn
CHECKED BY: BHS DATE: 9/11/19 SCALE: As Shown
DESIGNED BY: JSQ DATE: 3/2019

BRIDGE NO. 07465 DRAWING NO. 61206

PRINT DATE: 9/10/2019

DATE REVISED	DATE FILMED	DATE REVISED	DATE FILMED	FED. ROAD DIST. NO.	STATE	FED. AID PROJ. NO.	SHEET NO.	TOTAL SHEETS
				6	ARK.			
				JOB NO.		012318	67	92

① 07465 - INTERMEDIATE BENTS - 61207

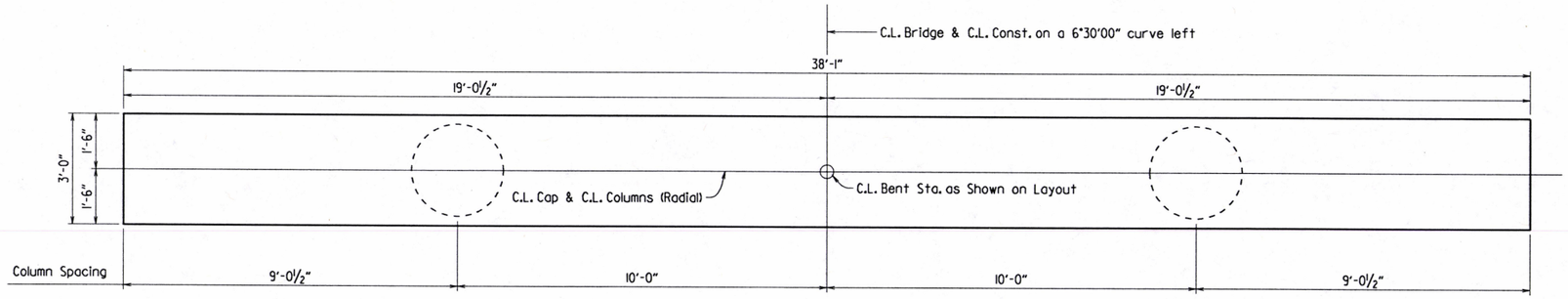

PLAN
½" = 1'-0"

GENERAL NOTES:

All concrete shall be Class "S" with a minimum 28 day compressive strength f'c = 3,500 psi. Concrete shall be poured in the dry and all exposed corners to be chamfered ¾" unless otherwise noted.

All reinforcing steel shall be Grade 60 (yield strength = 60,000 psi) conforming to AASHTO M 31 or M 322, Type A, with mill test reports.

For all Sections and "View G-G", see Dwg. No. 61208.

For additional information, See Layout.

① Measured at C.L. Column

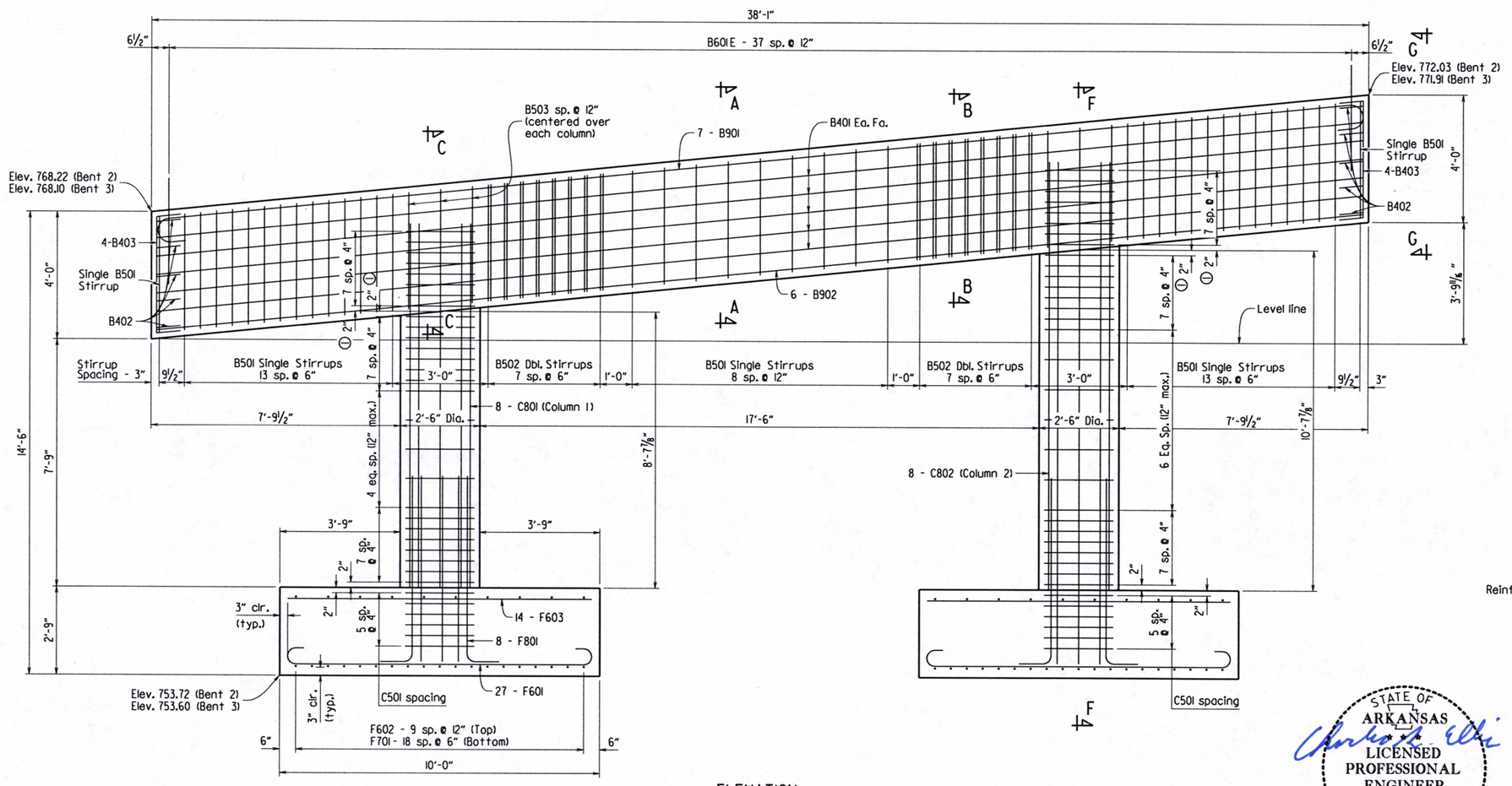

ELEVATION
Looking Ahead
½" = 1'-0"

Reinforcing steel, details and dimensions for footings are typical.

STATE OF ARKANSAS
LICENSED PROFESSIONAL ENGINEER
No. 9235
9-13-19
CHARLES R. ELLIS
BRIDGE ENGINEER

SHEET 1 OF 2
DETAILS OF INTERMEDIATE BENTS
DRY RUN CREEK

ROUTE SEC.

ARKANSAS STATE HIGHWAY COMMISSION
LITTLE ROCK, ARK.

DRAWN BY: JSO DATE: 3/27/2019 FILENAME: b012318x2_b2.dgn
CHECKED BY: BHS DATE: 9/11/19 SCALE: As Shown
DESIGNED BY: JSO DATE: 3/2019
BRIDGE NO. 07465 DRAWING NO. 61207

PRINT DATE: 9/10/2019

DATE REVISED	DATE FILMED	DATE REVISED	DATE FILMED	FED. ROAD DIST. NO.	STATE	FED. AID PROJ. NO.	SHEET NO.	TOTAL SHEETS
				6	ARK.			
				JOB NO.		012318	68	92
				(1)	07465 - INTERMEDIATE BENTS - 61208			

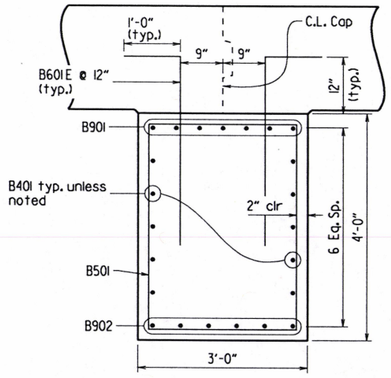

SECTION A-A
¾" = 1'-0"

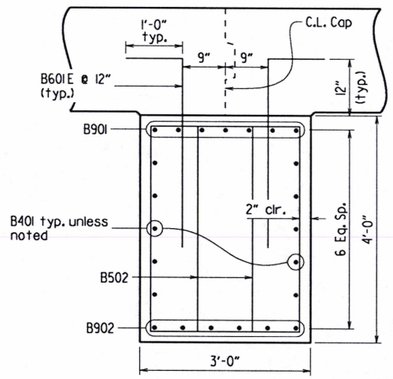

SECTION B-B
¾" = 1'-0"

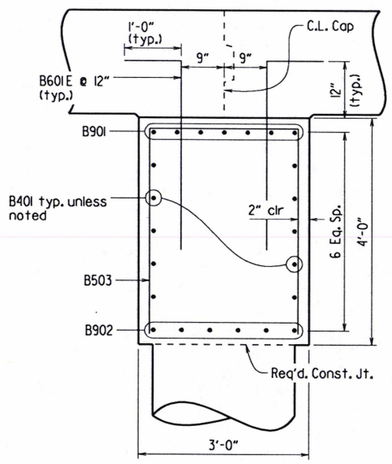

SECTION C-C
¾" = 1'-0"

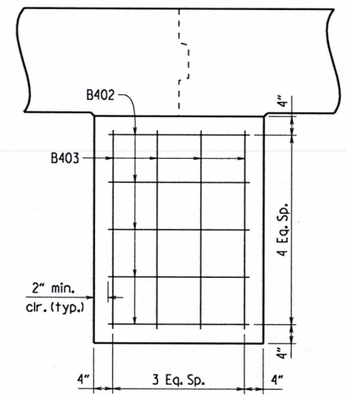

VIEW G-G
¾" = 1'-0"

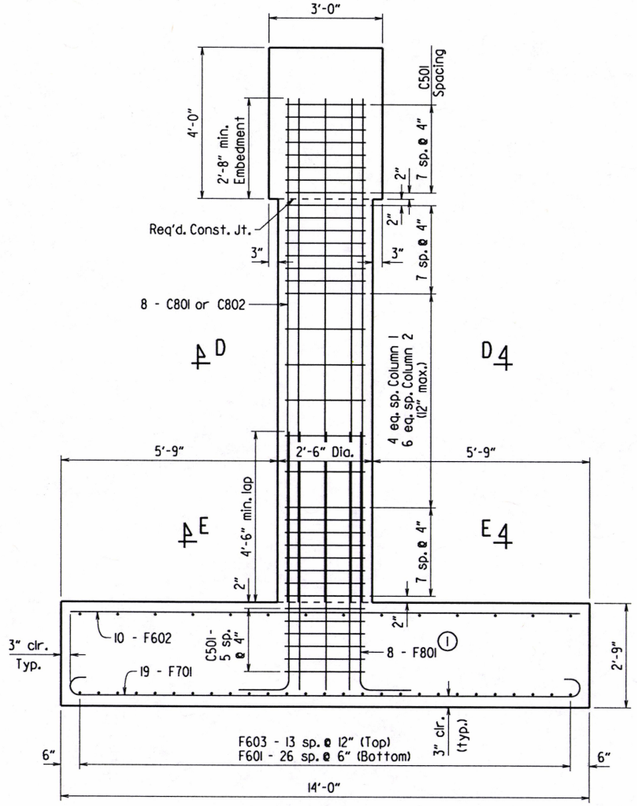

SECTION F-F
½" = 1'-0"

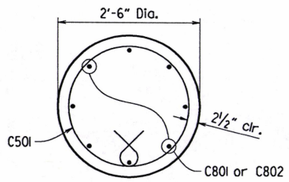

SECTION D-D
¾" = 1'-0"

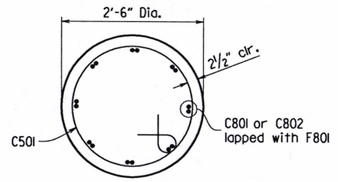

SECTION E-E
¾" = 1'-0"

(1) F801 Bars to rest on footing bottom mat of reinforcing as shown.

BAR LIST - PER BENT

	No. Req'd	Length	Pin Dia.
B401	10	37'-11"	Str.
B402	10	3'-8"	3"
B403	8	4'-8"	3"
B501	39	13'-2"	2½"
B502	32	11'-8"	2½"
B503	6	9'-9"	2½"
B601E	76	4'-3"	4½"
B901	7	40'-5"	9"
B902	6	37'-11"	Str.
C501	68	7'-11"	3¾"
C801	8	11'-6"	Str.
C802	8	13'-6"	Str.
F601	54	10'-10"	4½"
F602	20	13'-6"	Str.
F603	28	9'-6"	Str.
F701	38	15'-2"	5¼"
F801	16	10'-1"	6"

Bending Diagrams
Dimensions are out to out of bars

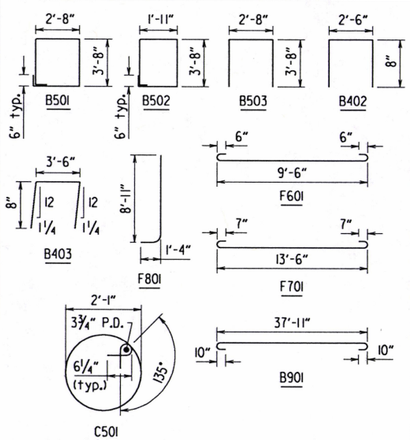

All bars with "E" suffix shall be epoxy coated.

STATE OF ARKANSAS
Charles R. Ellis
LICENSED PROFESSIONAL ENGINEER
No. 9235
9-13-19
CHARLES R. ELLIS
BRIDGE ENGINEER

SHEET 2 OF 2
DETAILS OF INTERMEDIATE BENTS
DRY RUN CREEK

ROUTE SEC.

ARKANSAS STATE HIGHWAY COMMISSION
LITTLE ROCK, ARK.

DRAWN BY: JSO DATE: 03/27/2019 FILENAME: b012318x2_b2.dgn
CHECKED BY: CRS DATE: 9/11/19 SCALE: As Shown
DESIGNED BY: JSO DATE: 3/2019
BRIDGE NO. 07465 DRAWING NO. 61208

PRINT DATE: 9/10/2019

DATE REVISED	DATE FILMED	DATE REVISED	DATE FILMED	FED. ROAD DIST. NO.	STATE	FED. AID PROJ. NO.	SHEET NO.	TOTAL SHEETS
				6	ARK.			
				JOB NO.		012318	69	92
				①	07465 -	105'-0" Unit	- 61209	

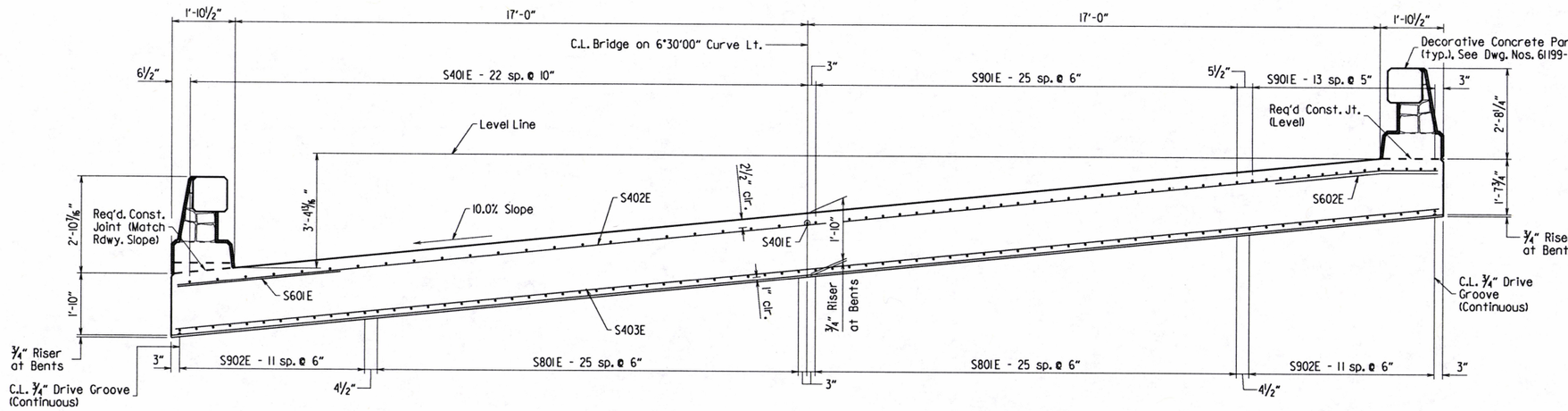

TYP. HALF-SECTION THROUGH ROADWAY NEAR BRIDGE ENDS

Looking Ahead
½" = 1'-0"

TYP. HALF-SECTION THROUGH ROADWAY @ INT. BENTS

Looking Ahead
½" = 1'-0"

BAR LIST

	MARK	NO. REQ'D	LENGTH	P.D.	BENDING DIAGRAMS
TOP	S401E	90	15'-3"	Str.	
	S402E	210	37'-7"	3"	
	S601E	210	3'-2"	Str.	
	S602E	210	3'-2"	4½"	
	S901E	160	45'-9"	Str.	
BOTTOM	S403E	210	37'-7"	Str.	
	S801E	104	56'-4"	Str.	
	S902E	48	57'-6"	Str.	

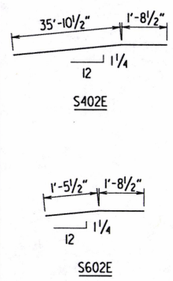

Bars with an "E" suffix are to be Epoxy Coated.
Dimensions are out to out of bars.

① ½" x 1" Type 3 or 4 Joint Sealer. See Subsections 501.02(h) and 501.05(j). Backer Rod filler will not be required. Joint Sealer shall be measured and paid for as "Class S(AE) Concrete - Bridge." Slab joints shall extend to the outside edge of the deck slab. Slab joints shall be installed before the falsework is removed and before the parapet railing is poured. If slab joints are to be sawed, they shall be sawed as soon as the concrete has sufficiently set to allow sawing of the joint without damage to the slab. Slab joints shall be placed at all pouring sequence construction joints and required slab joint locations. Slab joints shall align with parapet open joints.

Class 1 Protective Surface Treatment shall be applied to the Roadway Surface only. Class 3 Textured Coating Finish shall be applied to the areas as specified in Special Provision Job No. 012318 "Textured Coating Finish".

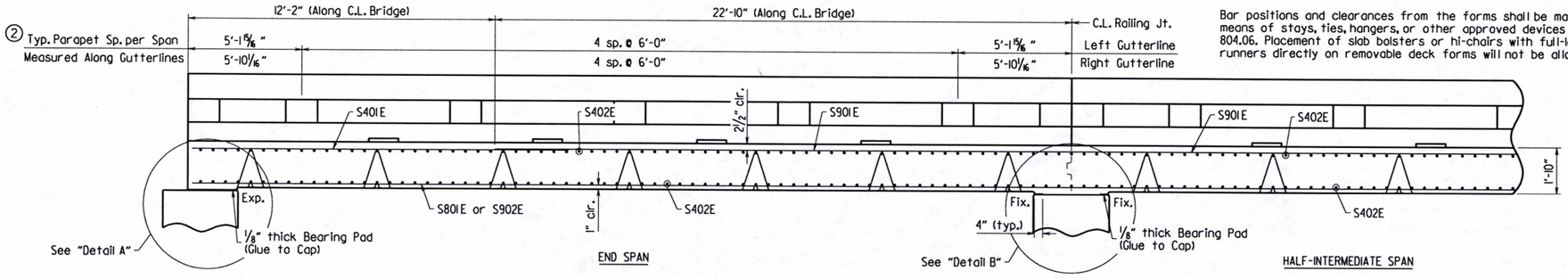

Bar positions and clearances from the forms shall be maintained by means of stays, ties, hangers, or other approved devices per Subsection 804.06. Placement of slab bolsters or hi-chairs with full-length lower runners directly on removable deck forms will not be allowed.

② 6'-0" Panels are open along Left Gutterline and closed along Right Gutterline

LONGITUDINAL SECTION ALONG C.L. BRIDGE

⅜" = 1'-0"

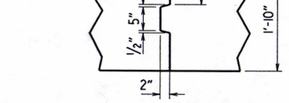

Unit can be built with partial pours terminating at ends of spans only.

OPTIONAL DECK SLAB CONST. JT. DETAIL

¾" = 1'-0"

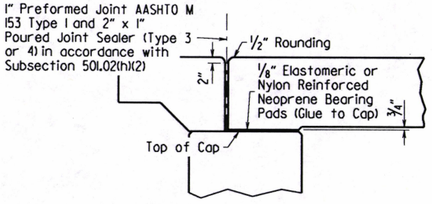

DETAIL A

½" = 1'-0"

Deflections shown are from a chord from C.L. Bent to C.L. Bent. Vertical curve corrections are not included. Tolerance + ¼" for camber and vertical alignment.

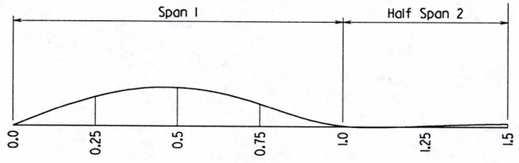

DEAD LOAD CAMBER DIAGRAM

No Scale

DEAD LOAD DEFLECTIONS

POINT	TOTAL DEFLECTION
0.0	0"
0.25	0.368"
0.5	0.472"
0.75	0.264"
1.0	0"
1.25	0"
1.5	0.036"

Symmetrical About This Point

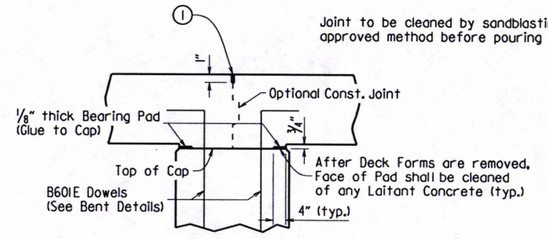

Joint to be cleaned by sandblasting or other approved method before pouring joint.

DETAIL B

½" = 1'-0"

STATE OF ARKANSAS
LICENSED PROFESSIONAL ENGINEER
No. 9235
9-13-19
CHARLES R. ELLIS

BRIDGE ENGINEER

SHEET 1 OF 2
DETAILS OF 105'-0" CONTINUOUS R.C. SLAB UNIT DRY RUN CREEK

ROUTE SEC.

ARKANSAS STATE HIGHWAY COMMISSION
LITTLE ROCK, ARK.

DRAWN BY: JSO DATE: 07/02/2019 FILENAME: b012318x2_sl.dgn
CHECKED BY: JAP DATE: 9/10/19 SCALE: As Shown
DESIGNED BY: JSO DATE: 12/2018
BRIDGE NO. 07465 DRAWING NO. 61209

PRINT DATE: 9/10/2019

DATE REVISED	DATE FILMED	DATE REVISED	DATE FILMED	FED. ROAD DIST. NO.	STATE	FED. AID PROJ. NO.	SHEET NO.	TOTAL SHEETS
				6	ARK.			
				JOB NO.		012318	70	92
				①	07465 -	105'-0" Unit -	61210	

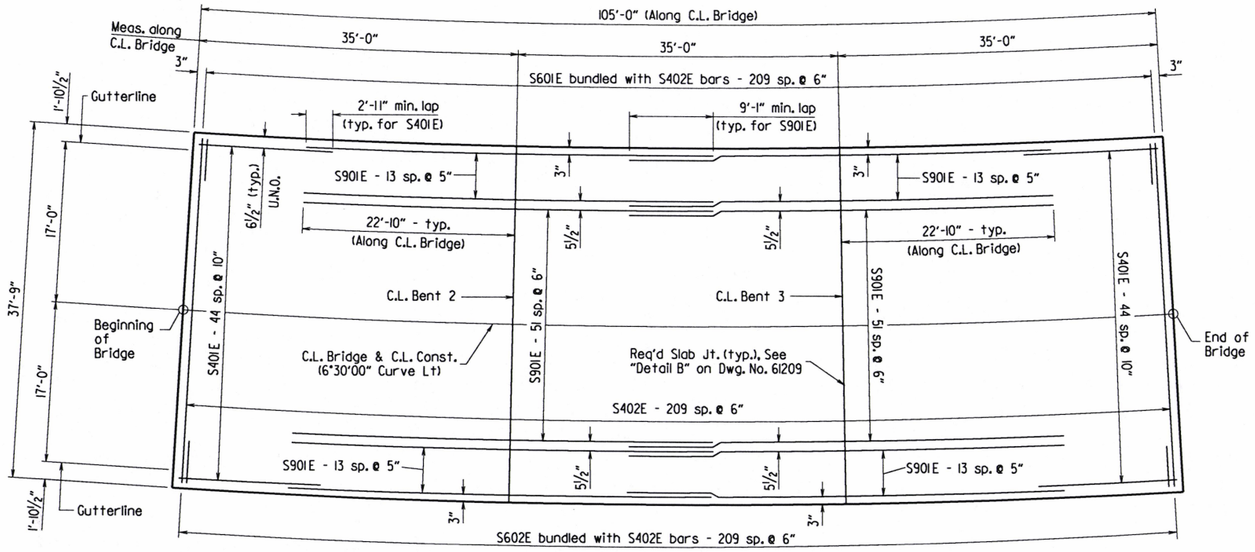

REINFORCING PLAN - TOP OF SLAB

⅛" = 1'-0"

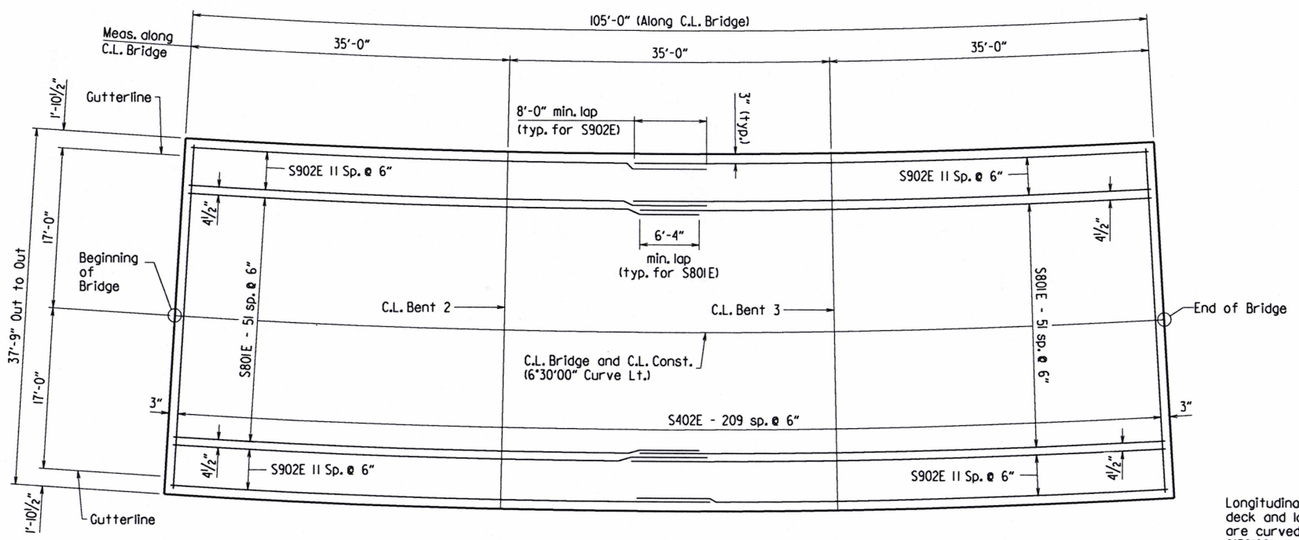

REINFORCING PLAN - BOTTOM OF SLAB

⅛" = 1'-0"

Longitudinal lines of concrete bridge deck and longitudinal reinforcing bars are curved and concentric to a 6°30'00" curve left which is located along centerline of bridge. Transverse reinforcing bars are placed on radial lines. Spacing shown for transverse reinforcing bars is measured along centerline of bridge.

GENERAL NOTES:

CONSTRUCTION SPECIFICATIONS: Arkansas State Highway and Transportation Department Standard Specifications for Highway Construction (2014 edition) with applicable Supplemental Specifications and Special Provisions. Section and Subsection refer to the Standard Construction Specifications unless otherwise noted in the Plans.

DESIGN SPECIFICATIONS: AASHTO LRFD Bridge Design Specifications, Seventh Edition (2014) with 2015 interim revisions.

LIVE LOADING: HL93

MATERIALS AND STRENGTHS:

Class S(AE) Concrete	f'c = 4,000 psi
Reinforcing Steel (AASHTO M 31 or M 322, Type A)	fy = 60,000 psi

CONCRETE: All concrete shall be Class S(AE) with a minimum 28 day compressive strength f'c = 4,000 psi. Concrete shall be poured in the dry and all exposed corners shall be chamfered ¾" unless otherwise noted.

Concrete in bridge superstructure shall be placed, consolidated, and screeded off for the entire pour before any concrete has taken its initial set. This may require the use of a retarding agent.

The concrete deck shall be given a tine finish in accordance with Subsection 802.19 for Class 5 Tined Bridge Roadway Surface Finish. Movement of the finishing machine across new concrete shall be on planks placed on the surface and shall be prohibited for 72 hours after finishing the pour.

BEARING PAD: The ⅛" bearing pad shall be an unreinforced pad meeting the requirements of Section 808, or shall be nylon reinforced neoprene meeting the requirements of Subsection 807.20. The pad shall be furnished in one piece for the required width and full length of the bearing and glued to the bent cap with an adhesive approved by the Engineer. Pads and adhesive will not be paid for directly, but will be considered subsidiary to the item "Class S(AE) Concrete-Bridge".

REINFORCING STEEL: All reinforcing steel shall be Grade 60 conforming to AASHTO M 31 or M 322, Type A, with mill test reports and shall be epoxy coated. The reinforcing steel is to be accurately located in the forms and firmly held in place by steel wire supports, sufficient in number and size to prevent displacement during the course of construction. The wire supports will not be paid for directly, but will be considered subsidiary to the item "Epoxy Coated Reinforcing Steel (Grade 60)".

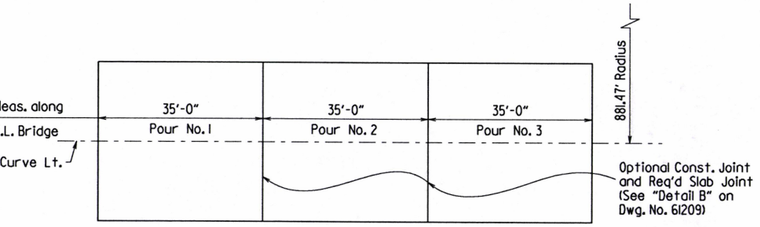

The Contractor may pour the entire bridge slab unit at once or may elect to form and pour the slab unit in three separate pours according to the pouring sequence shown. No part of the falsework for the entire unit shall be removed until all of the concrete in the slab has been placed and cured. Before removal of falsework begins, both the time and strength requirements of Subsection 802.15 must be met. All pours shall begin at one end of the bridge and proceed in sequence to the other end of the bridge. 72 hours shall elapse between the end of a pour and the start of the next pour.

Concrete in the bridge superstructure shall be placed and consolidated for the entire pour before any concrete has taken its initial set. This may require the use of a retarding agent. The Contractor must obtain approval from the Engineer for any deviation from the pouring sequence shown and for any railing pours made before the entire bridge slab has been poured.

POURING SEQUENCE FOR CONTINUOUS R.C. SLAB UNITS

No Scale

STATE OF ARKANSAS
Charles R. Ellis
LICENSED PROFESSIONAL ENGINEER
No. 9235
9-13-19
CHARLES R. ELLIS
BRIDGE ENGINEER

SHEET 2 OF 2
DETAILS OF 105'-0" CONTINUOUS R.C. SLAB UNIT
DRY RUN CREEK

ROUTE SEC.

ARKANSAS STATE HIGHWAY COMMISSION

LITTLE ROCK, ARK.

DRAWN BY: JSQ DATE: 07/02/2019 FILENAME: b012318x2_sl.dgn
CHECKED BY: JHP DATE: 9/13/19 SCALE: As Shown
DESIGNED BY: JSQ DATE: 12/2018

BRIDGE NO. 07465 DRAWING NO. 61210

PRINT DATE: 9/13/2019

DATE REVISED	DATE FILMED	DATE REVISED	DATE FILMED	FED. ROAD DIST. NO.	STATE	FED. AID PROJ. NO.	SHEET NO.	TOTAL SHEETS
				6	ARK.			
				JOB NO.		012318	71	92
				①		07465 - APPR. GUTTER - 61211		

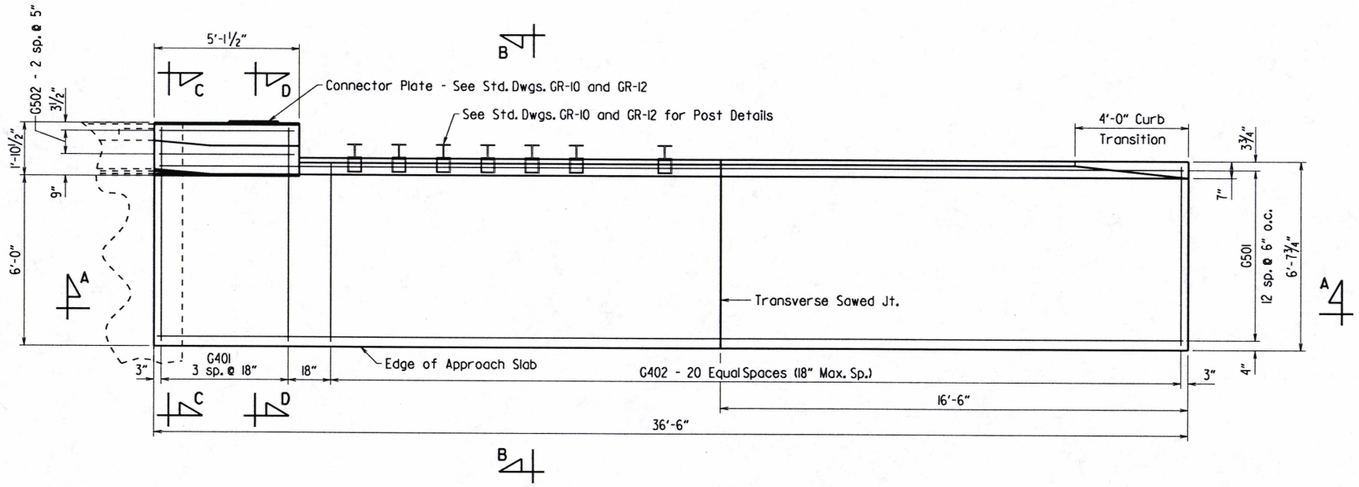

HALF PLAN OF TYPE 2 SPECIAL APPROACH GUTTERS

⅜" = 1'-0"

SECTION A-A

⅜" = 1'-0"

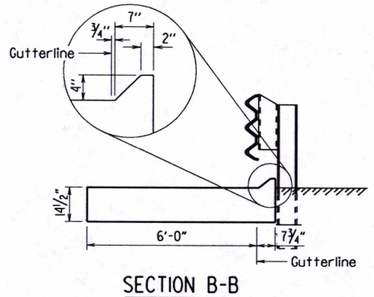

SECTION B-B

No Scale

For "Section C-C" and "Section D-D", see Dwg. No. 6212.

QUANTITIES FOR ONE TYPE 2 SPECIAL APPROACH GUTTER

Reinforcing Steel (Lbs.)	Concrete (Cu. Yds.)
895	12.10

BAR LIST FOR ONE TYPE 2 SPECIAL APPROACH GUTTER

Mark	No. Req'd.	Length	P.D.
G401	4	7'-6"	Str.
G402	21	6'-3"	Str.
G501	13	36'-2"	Str.
G502	3	4'-9"	Str.
R501	8	4'-9"	3¾"
R502	4	6'-0"	3¾"
R503	9	5'-5"	3¾"
R504	9	3'-7"	3¾"
R505	6	5'-11"	3¾"
R506	2	4'-11"	Str.
R601	3	6'-1"	4½"
R801	6	1'-11"	Str.
R802	2	4'-11"	Str.

Dimensions are out to out of bars.

Bending Diagrams

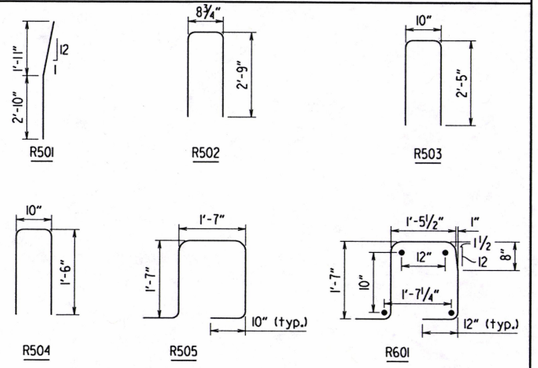

GENERAL NOTES

All concrete shall be Class S or Class S(AE) or mixture used for Portland Cement Concrete Pavement and shall be poured in the dry.

All reinforcing steel shall be Grade 60 (fy = 60,000 psi) conforming to AASHTO M 31 or M 322, Type A, with mill test reports.

Approach Gutters will be measured and paid in accordance with Section 504.

All longitudinal lines within the limits of horizontal curves shall be on curves concentric to C.L. Bridge. Adjustment to longitudinal bar lengths may be required. Transverse reinforcing shall be placed on radial lines to C.L. Bridge.

Aesthetics shall be applied to the railing as shown in the plans and as specified in SP Job No. 012318 "Architectural Finish" and SP Job No. 012318 "Staining Concrete Surfaces". Payment for this work shall be included in the superstructure quantities for Architectural Finish and Staining Concrete Surfaces.

STATE OF ARKANSAS
LICENSED PROFESSIONAL ENGINEER
No. 9235
CHARLES R. ELLIS
9-13-19

BRIDGE ENGINEER

SHEET 1 OF 2
DETAILS OF TYPE 2 SPECIAL APPROACH GUTTERS DRY RUN CREEK

ROUTE SEC.

ARKANSAS STATE HIGHWAY COMMISSION

LITTLE ROCK, ARK.

DRAWN BY: JSO DATE: 8/20/2019 FILENAME: b012318x2_aglddgn
CHECKED BY: JNP DATE: 9/10/19 SCALE: As Shown
DESIGNED BY: STD. DATE:

BRIDGE NO. 07465 DRAWING NO. 61211

PRINT DATE: 9/10/2019

DATE REVISED	DATE FILMED	DATE REVISED	DATE FILMED	FED. ROAD DIST. NO.	STATE	FED. AID PROJ. NO.	SHEET NO.	TOTAL SHEETS
				6	ARK.			
				JOB NO.		012318	72	92
				(1) 07465 - APPR. GUTTER - 61212				

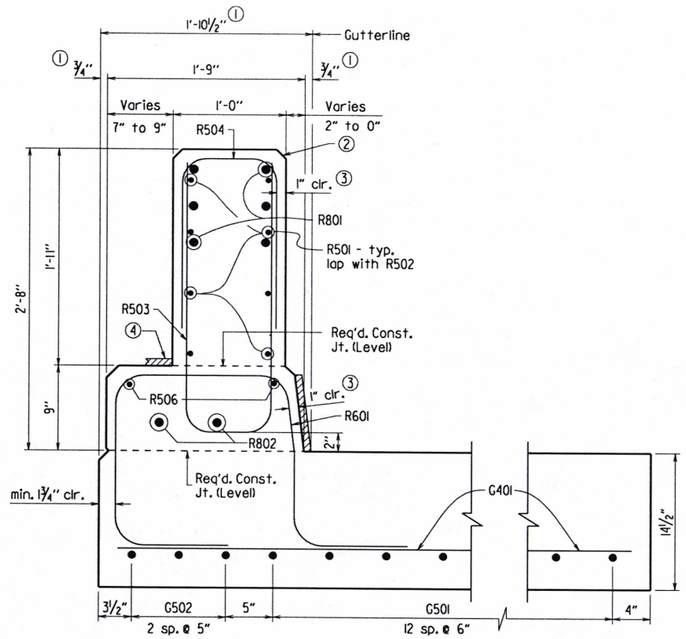

SECTION C-C

1½" = 1'-0"

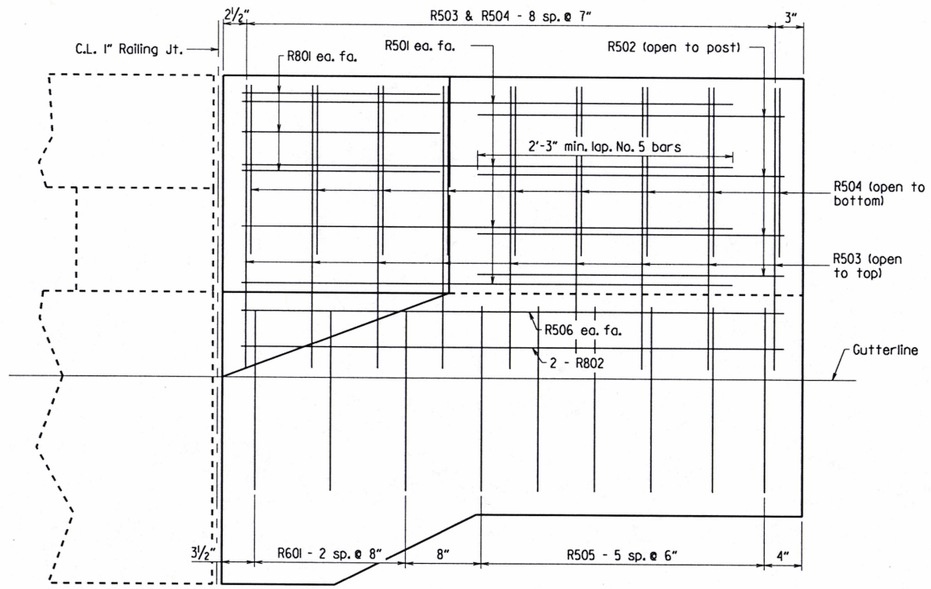

SECTION E-E

1½" = 1'-0"

Unless noted otherwise, Railing component (includes Rail, Post, Curb, and Wall) dimensions do not include additional allowance for architectural finish.

(1) Dimension includes ¾" allowance for Fieldstone Finish.

(2) All exposed corners for the Railing components (Curb and Wall) shall be chamfered 1" unless otherwise noted.

(3) A typical clear cover of 1" shall be provided for the Railing components (includes Curb and Wall) reinforcement, unless otherwise noted. This clear cover does not include any allowance for architectural finish.

(4) ¾" allowance for Fieldstone Finish, typ. for Curb.

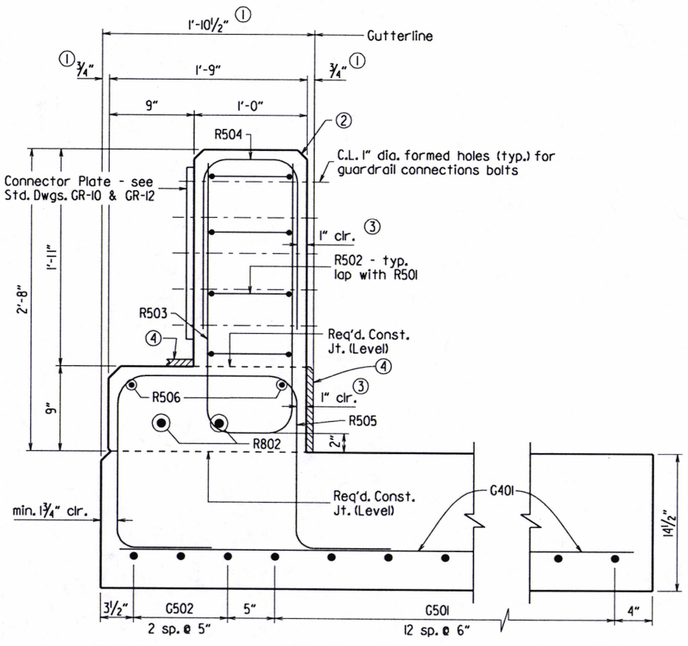

SECTION D-D

1½" = 1'-0"

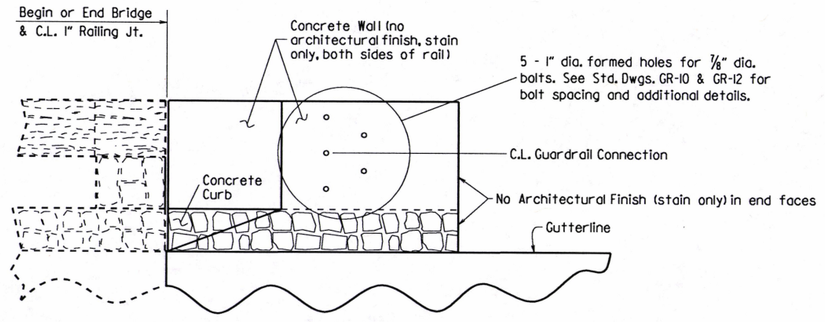

ELEVATION OF DECORATIVE CONCRETE PARAPET RAILING ON GUTTERS

¾" = 1'-0"

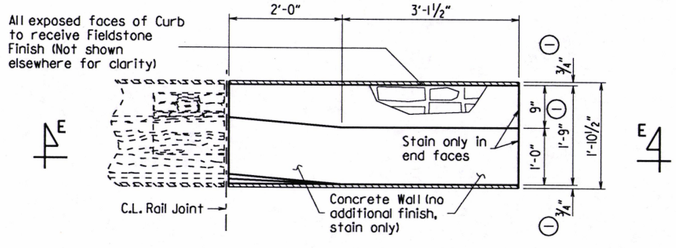

PLAN OF DECORATIVE CONCRETE PARAPET RAILING ON GUTTERS

¾" = 1'-0"

STATE OF ARKANSAS
LICENSED PROFESSIONAL ENGINEER
No. 9235
CHARLES R. ELLIS
9-13-19

BRIDGE ENGINEER

SHEET 2 OF 2
DETAILS OF TYPE 2 SPECIAL APPROACH GUTTERS DRY RUN CREEK

ROUTE SEC.

ARKANSAS STATE HIGHWAY COMMISSION

LITTLE ROCK, ARK.

DRAWN BY: JSO DATE: 8/21/2019 FILENAME: b012318x2.dgl.dgn

CHECKED BY: JNP DATE: 9/10/19 SCALE: As Shown

DESIGNED BY: STD. DATE:

BRIDGE NO. 07465 DRAWING NO. 61212

PRINT DATE: 9/10/2019

DATE REVISED	DATE FILMED	DATE REVISED	DATE FILMED	FED.RD. DIST.NO.	STATE	FED.AID PROJ.NO.	SHEET NO.	TOTAL SHEETS
				6	ARK.			
				JOB NO.		012318	73	92

(2) CROSS SECTIONS

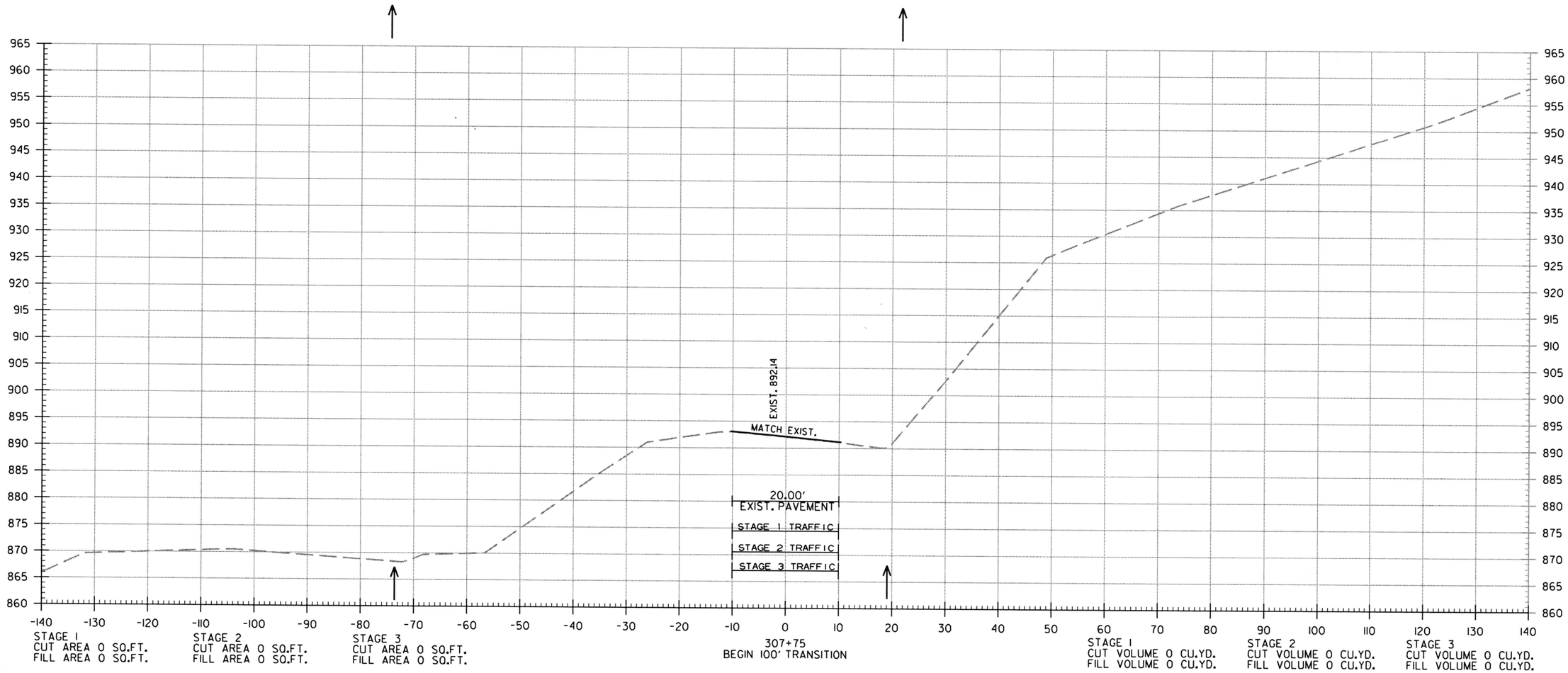

SITE 1

CROSS SECTION STA. 307+75 TO STA. 307+75

lw39665 9/26/2019
R012318.DGN

DATE REVISED	DATE FILMED	DATE REVISED	DATE FILMED	FED.RD. DIST.NO.	STATE	FED.AID PROJ.NO.	SHEET NO.	TOTAL SHEETS
				6	ARK.			
				JOB NO.		012318	74	92

(2) CROSS SECTIONS

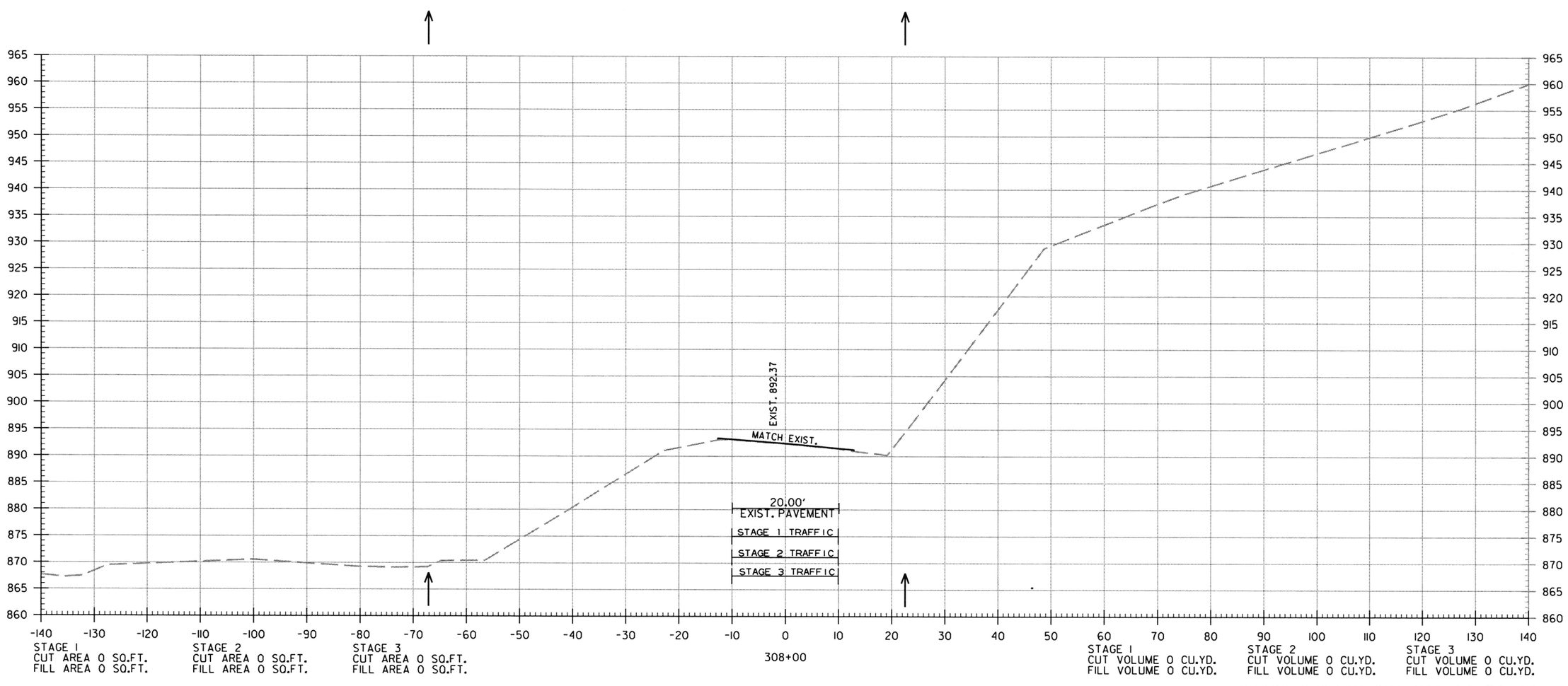

SITE 1
CROSS SECTION STA. 308+00 TO STA. 308+00

lw39665 9/26/2019
R012318.DGN

DATE REVISED	DATE FILMED	DATE REVISED	DATE FILMED	FED.RD. DIST.NO.	STATE	FED.AID PROJ.NO.	SHEET NO.	TOTAL SHEETS
				6	ARK.			
				JOB NO.		012318	75	92

(2) CROSS SECTIONS

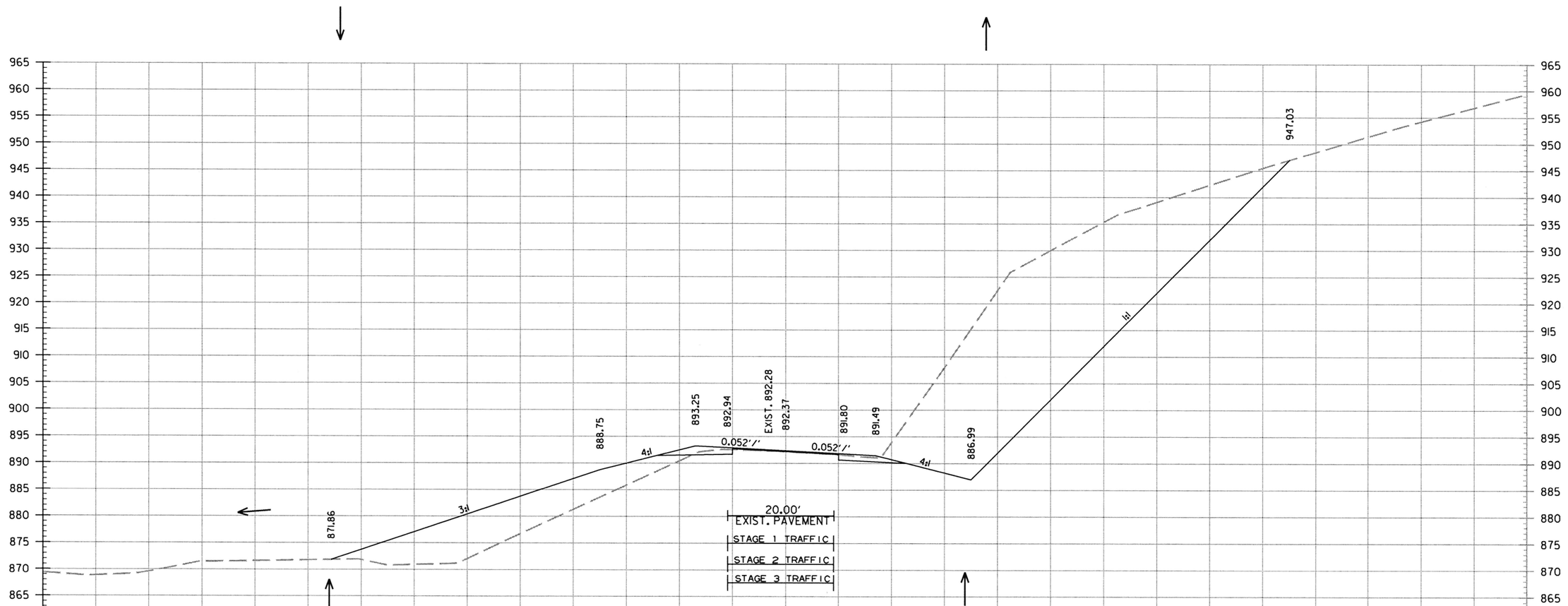

STAGE 1
CUT AREA 0 SQ.FT.
FILL AREA 0 SQ.FT.

STAGE 2
CUT AREA 5 SQ.FT.
FILL AREA 345 SQ.FT.

STAGE 3
CUT AREA 1372 SQ.FT.
FILL AREA 0 SQ.FT.

STA. 308+75.00 END 100' TRANSITION &
BEGIN JOB 012318 & SITE 1

STAGE 1
CUT VOLUME 0 CU.YD.
FILL VOLUME 0 CU.YD.

STAGE 2
CUT VOLUME 0 CU.YD.
FILL VOLUME 479 CU.YD.

STAGE 3
CUT VOLUME 1905 CU.YD.
FILL VOLUME 0 CU.YD.

SITE 1
CROSS SECTION STA. 308+75 TO STA. 308+75

lw39665 9/26/2019
R012318.DGN

DATE REVISED	DATE FILMED	DATE REVISED	DATE FILMED	FED.RD. DST.NO.	STATE	FED.AID PROJ.NO.	SHEET NO.	TOTAL SHEETS
				6	ARK.			
				JOB NO.		012318	76	92

(2) CROSS SECTIONS

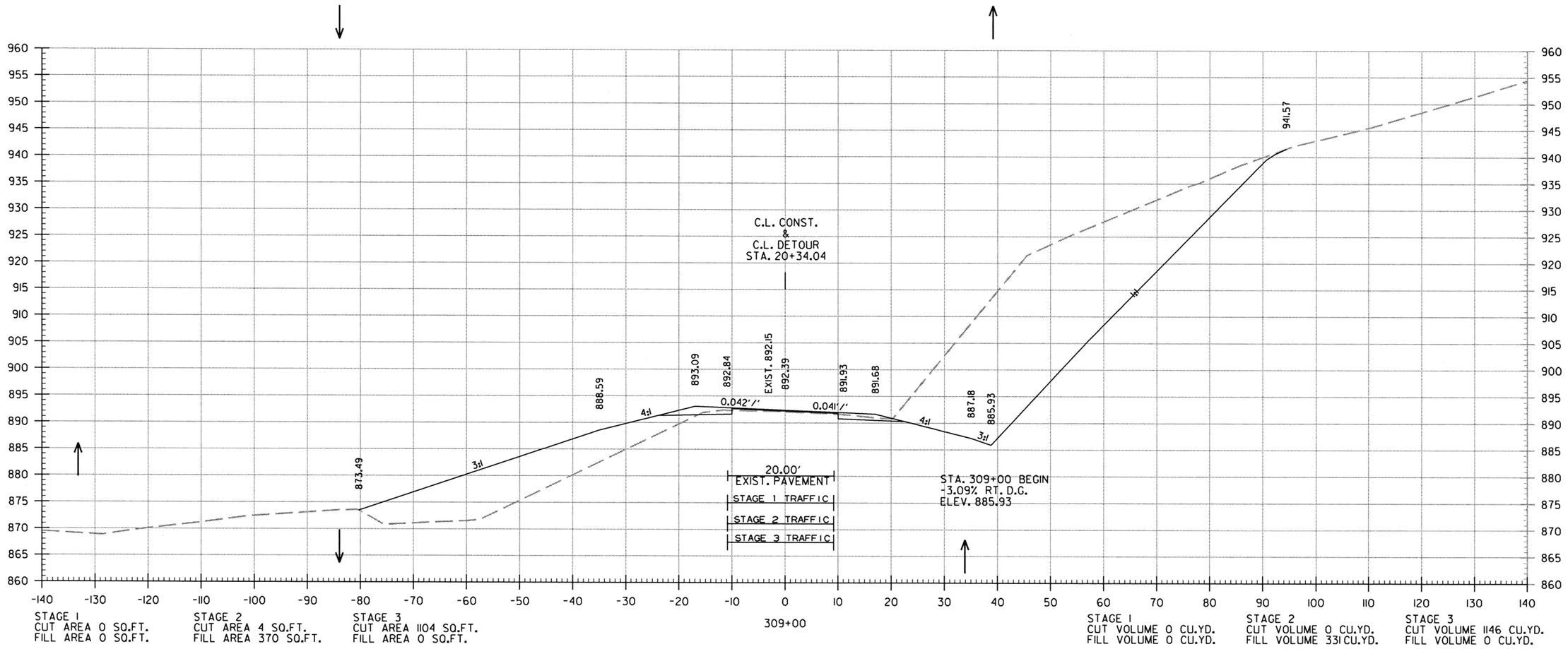

SITE 1
CROSS SECTION STA. 309+00 TO STA. 309+00

lw39665 9/26/2019
R012318.DGN

DATE REVISED	DATE FILMED	DATE REVISED	DATE FILMED	FED.RD. DIST.NO.	STATE	FED.AID PROJ.NO.	SHEET NO.	TOTAL SHEETS
				6	ARK.			
				JOB NO.		012318	77	92

(2) CROSS SECTIONS

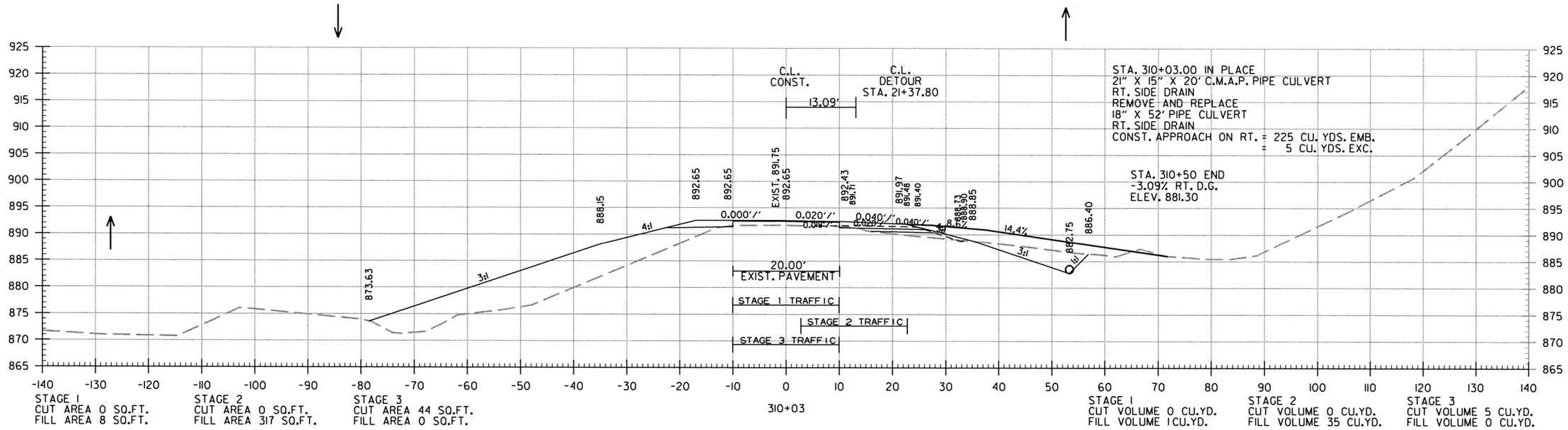

SITE 1
CROSS SECTION STA. 310+00 TO STA. 310+03

lw39665 9/26/2019
R012318.DGN

DATE REVISED	DATE FILMED	DATE REVISED	DATE FILMED	FED.RD. DIST.NO.	STATE	FED.AID PROJ.NO.	SHEET NO.	TOTAL SHEETS
				6	ARK.			
				JOB NO.		012318	78	92

(2) CROSS SECTIONS

STAGE 1
CUT AREA 0 SQ.FT.
FILL AREA 0 SQ.FT.

STAGE 2
CUT AREA 0 SQ.FT.
FILL AREA 0 SQ.FT.

STAGE 3
CUT AREA 0 SQ.FT.
FILL AREA 0 SQ.FT.

313+99.97 TOE OF SLOPE

STAGE 1
CUT VOLUME 0 CU.YD.
FILL VOLUME 0 CU.YD.

STAGE 2
CUT VOLUME 0 CU.YD.
FILL VOLUME 0 CU.YD.

STAGE 3
CUT VOLUME 0 CU.YD.
FILL VOLUME 0 CU.YD.

STAGE 1
CUT AREA 0 SQ.FT.
FILL AREA 0 SQ.FT.

STAGE 2
CUT AREA 0 SQ.FT.
FILL AREA 0 SQ.FT.

STAGE 3
CUT AREA 0 SQ.FT.
FILL AREA 0 SQ.FT.

313+00.88 TOE OF SLOPE

STAGE 1
CUT VOLUME 0 CU.YD.
FILL VOLUME 0 CU.YD.

STAGE 2
CUT VOLUME 0 CU.YD.
FILL VOLUME 643 CU.YD.

STAGE 3
CUT VOLUME 611 CU.YD.
FILL VOLUME 0 CU.YD.

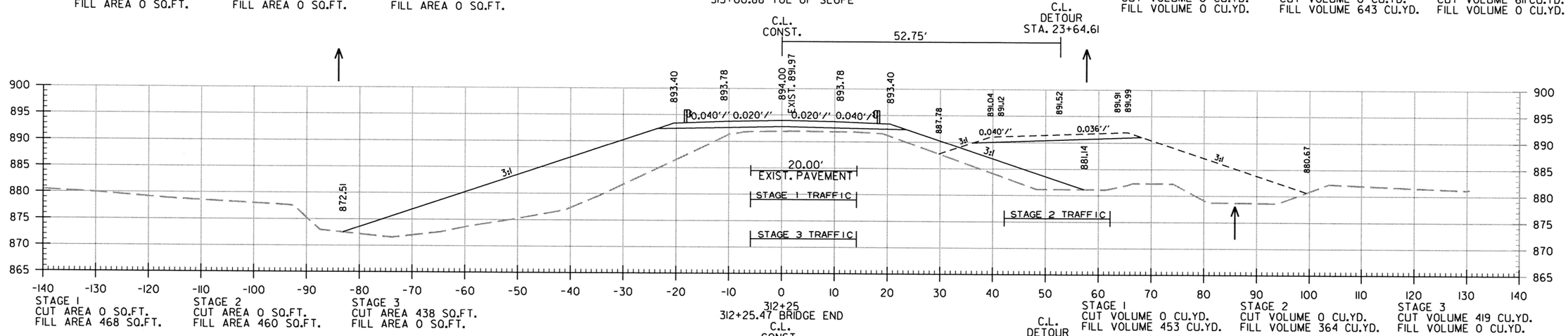

STAGE 1
CUT AREA 0 SQ.FT.
FILL AREA 468 SQ.FT.

STAGE 2
CUT AREA 0 SQ.FT.
FILL AREA 460 SQ.FT.

STAGE 3
CUT AREA 438 SQ.FT.
FILL AREA 0 SQ.FT.

STAGE 1
CUT VOLUME 0 CU.YD.
FILL VOLUME 453 CU.YD.

STAGE 2
CUT VOLUME 0 CU.YD.
FILL VOLUME 364 CU.YD.

STAGE 3
CUT VOLUME 419 CU.YD.
FILL VOLUME 0 CU.YD.

STAGE 1
CUT AREA 0 SQ.FT.
FILL AREA 492 SQ.FT.

STAGE 2
CUT AREA 0 SQ.FT.
FILL AREA 311 SQ.FT.

STAGE 3
CUT AREA 451 SQ.FT.
FILL AREA 0 SQ.FT.

STAGE 1
CUT VOLUME 0 CU.YD.
FILL VOLUME 1654 CU.YD.

STAGE 2
CUT VOLUME 0 CU.YD.
FILL VOLUME 1169 CU.YD.

STAGE 3
CUT VOLUME 1380 CU.YD.
FILL VOLUME 0 CU.YD.

STAGE 1
CUT AREA 0 SQ.FT.
FILL AREA 389 SQ.FT.

STAGE 2
CUT AREA 0 SQ.FT.
FILL AREA 320 SQ.FT.

STAGE 3
CUT AREA 294 SQ.FT.
FILL AREA 0 SQ.FT.

STAGE 1
CUT VOLUME 0 CU.YD.
FILL VOLUME 735 CU.YD.

STAGE 2
CUT VOLUME 0 CU.YD.
FILL VOLUME 1146 CU.YD.

STAGE 3
CUT VOLUME 607 CU.YD.
FILL VOLUME 6 CU.YD.

lw39665 9/26/2019
R012318.DGN

SITE 1
CROSS SECTION STA. 311+00 TO STA. 312+25

DATE REVISED	DATE FILMED	DATE REVISED	DATE FILMED	FED.RD. DIST.NO.	STATE	FED.AID PROJ.NO.	SHEET NO.	TOTAL SHEETS
				6	ARK.			
				JOB NO.		012318	79	92

(2) CROSS SECTIONS

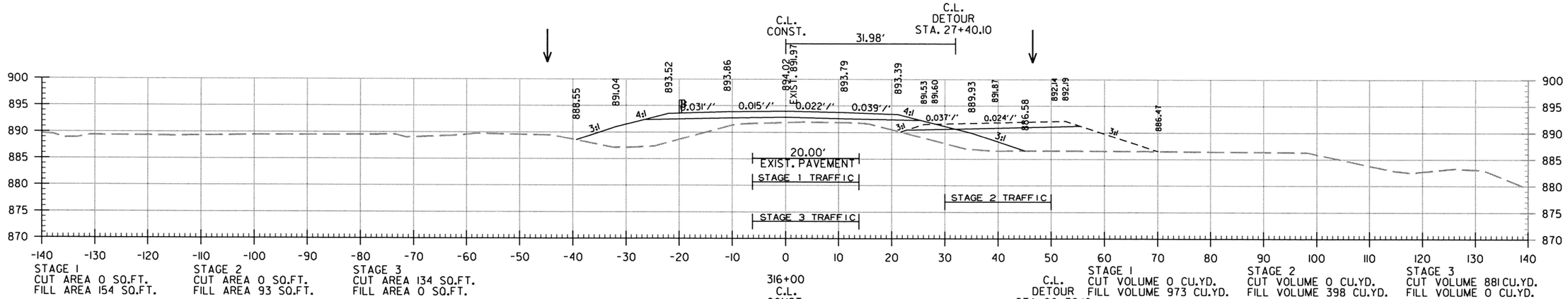

SITE 1
CROSS SECTION STA. 314+29 TO STA. 316+00

lw39665 9/26/2019
R012318.DGN

DATE REVISED	DATE FILMED	DATE REVISED	DATE FILMED	FED.RD. DIST.NO.	STATE	FED.AID PROJ.NO.	SHEET NO.	TOTAL SHEETS
				6	ARK.			
				JOB NO.		012318	80	92

(2) CROSS SECTIONS

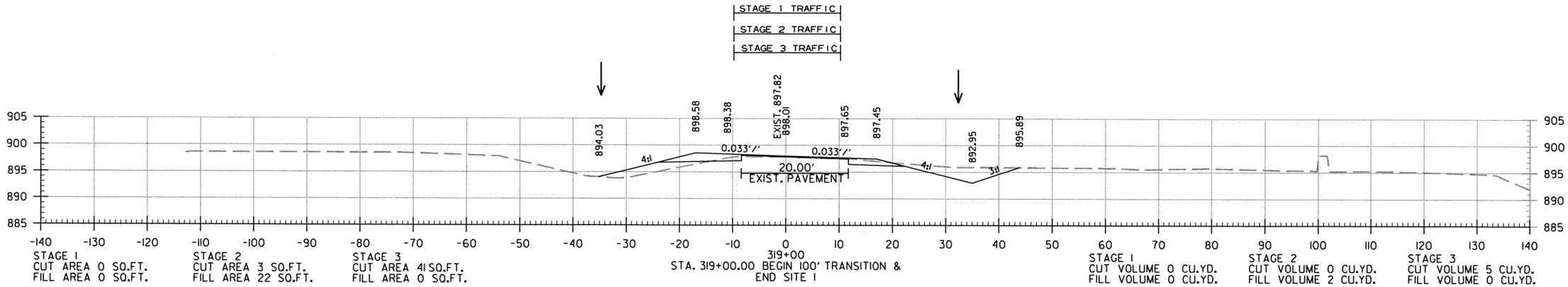

SITE 1
CROSS SECTION STA. 317+00 TO STA. 319+00

lw39665 9/26/2019
R012318.DGN

DATE REVISED	DATE FILMED	DATE REVISED	DATE FILMED

FED.RD. DIST.NO.	STATE	FED.AID PROJ.NO.	SHEET NO.	TOTAL SHEETS
6	ARK.			
JOB NO.		012318	81	92

(2) CROSS SECTIONS

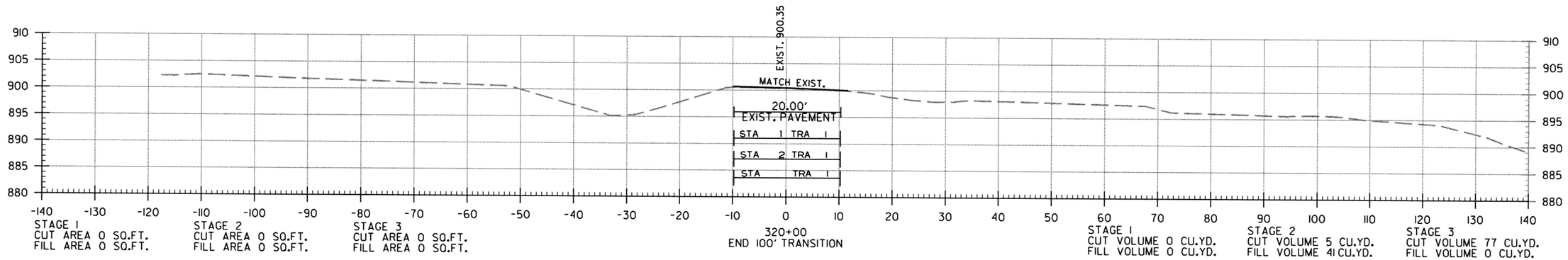

SITE 1
CROSS SECTION STA. 320+00 TO STA. 320+00

lw39665 9/26/2019
R012318.DGN

DATE REVISED	DATE FILMED	DATE REVISED	DATE FILMED	FED.RD. DIST.NO.	STATE	FED.AID PROJ.NO.	SHEET NO.	TOTAL SHEETS
				6	ARK.			
				JOB NO.		012318	82	92

(2) CROSS SECTIONS

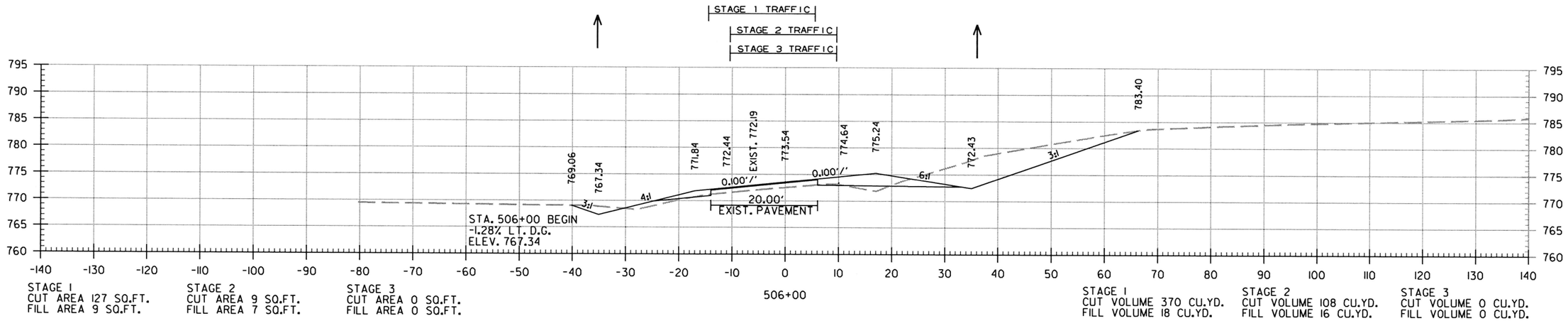

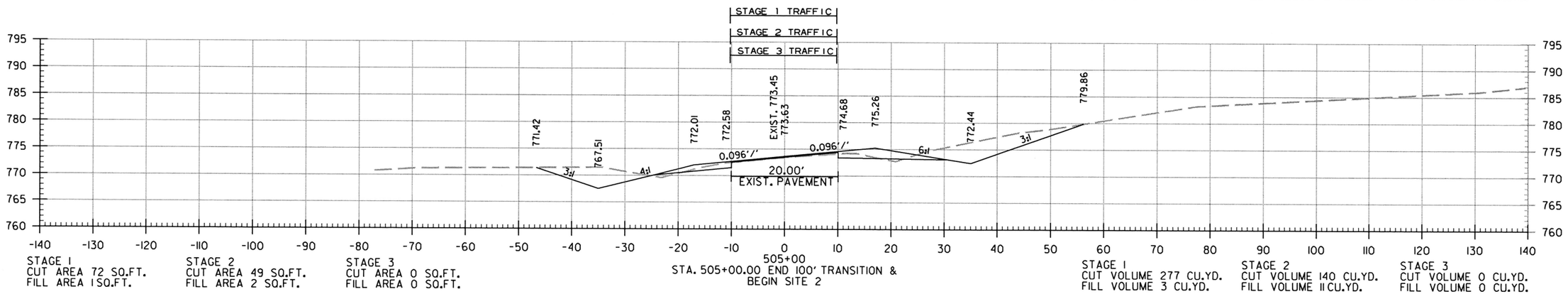

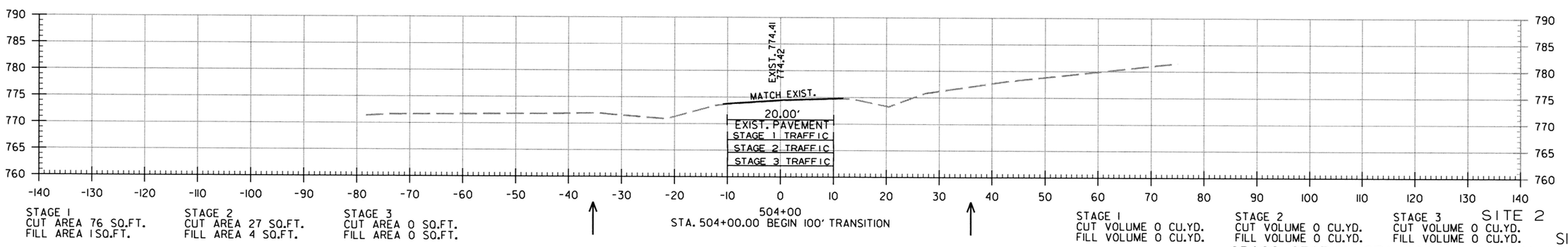

SITE 2

SITE 2
CROSS SECTION STA. 504+00 TO STA. 506+00

lw39665 9/26/2019
R012318.DGN

DATE REVISED	DATE FILMED	DATE REVISED	DATE FILMED	FED.RD. DIST.NO.	STATE	FED.AID PROJ.NO.	SHEET NO.	TOTAL SHEETS
				6	ARK.			
				JOB NO.		012318	83	92

(2) CROSS SECTIONS

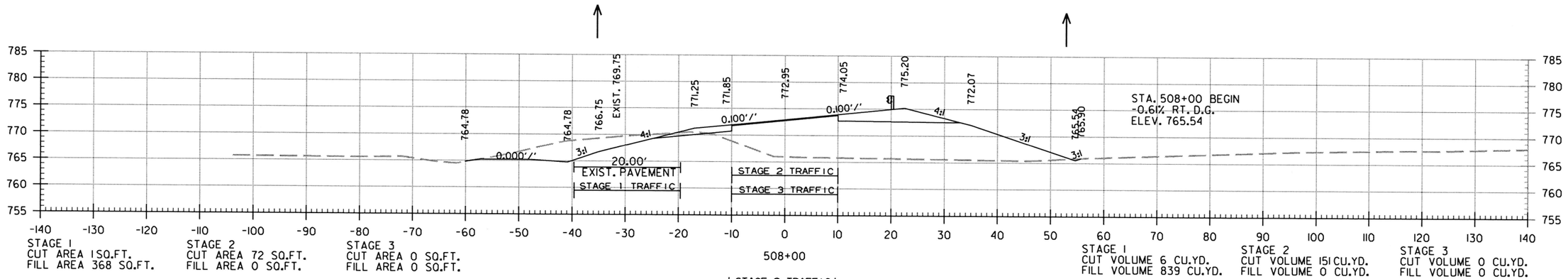

SITE 2
CROSS SECTION STA. 506+80 TO STA. 508+00

lw39665 9/26/2019
R012318.DGN

DATE REVISED	DATE FILMED	DATE REVISED	DATE FILMED	FED.RD. DIST.NO.	STATE	FED.AID PROJ.NO.	SHEET NO.	TOTAL SHEETS
				6	ARK.			
				JOB NO.		012318	84	92

(2) CROSS SECTIONS

STAGE 1
CUT AREA 0 SQ.FT.
FILL AREA 0 SQ.FT.

STAGE 2
CUT AREA 0 SQ.FT.
FILL AREA 0 SQ.FT.

STAGE 3
CUT AREA 0 SQ.FT.
FILL AREA 0 SQ.FT.

511+17.95 TOE OF SLOPE

STAGE 1
CUT VOLUME 0 CU.YD.
FILL VOLUME 0 CU.YD.

STAGE 2
CUT VOLUME 0 CU.YD.
FILL VOLUME 0 CU.YD.

STAGE 3
CUT VOLUME 0 CU.YD.
FILL VOLUME 0 CU.YD.

STAGE 1
CUT AREA 0 SQ.FT.
FILL AREA 0 SQ.FT.

STAGE 2
CUT AREA 0 SQ.FT.
FILL AREA 0 SQ.FT.

STAGE 3
CUT AREA 0 SQ.FT.
FILL AREA 0 SQ.FT.

510+45.79 TOE OF SLOPE

STAGE 1
CUT VOLUME 0 CU.YD.
FILL VOLUME 191 CU.YD.

STAGE 2
CUT VOLUME 76 CU.YD.
FILL VOLUME 0 CU.YD.

STAGE 3
CUT VOLUME 0 CU.YD.
FILL VOLUME 0 CU.YD.

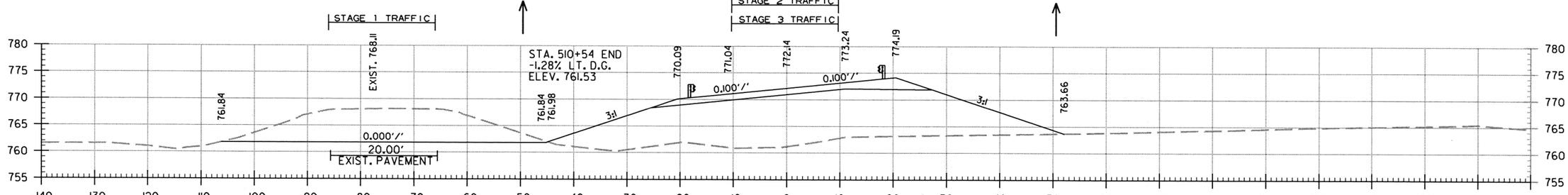

STAGE 1
CUT AREA 0 SQ.FT.
FILL AREA 653 SQ.FT.

STAGE 2
CUT AREA 261 SQ.FT.
FILL AREA 0 SQ.FT.

STAGE 3
CUT AREA 0 SQ.FT.
FILL AREA 0 SQ.FT.

510+30 BRIDGE END

STAGE 1
CUT VOLUME 0 CU.YD.
FILL VOLUME 700 CU.YD.

STAGE 2
CUT VOLUME 293 CU.YD.
FILL VOLUME 0 CU.YD.

STAGE 3
CUT VOLUME 0 CU.YD.
FILL VOLUME 0 CU.YD.

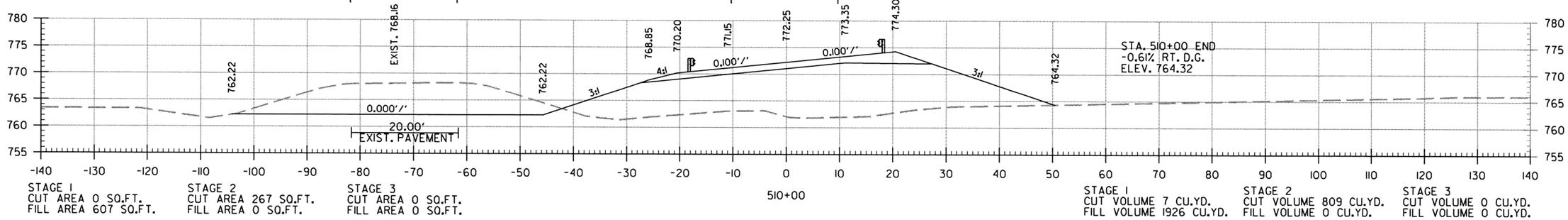

STAGE 1
CUT AREA 0 SQ.FT.
FILL AREA 607 SQ.FT.

STAGE 2
CUT AREA 267 SQ.FT.
FILL AREA 0 SQ.FT.

STAGE 3
CUT AREA 0 SQ.FT.
FILL AREA 0 SQ.FT.

STAGE 1
CUT VOLUME 7 CU.YD.
FILL VOLUME 1926 CU.YD.

STAGE 2
CUT VOLUME 809 CU.YD.
FILL VOLUME 0 CU.YD.

STAGE 3
CUT VOLUME 0 CU.YD.
FILL VOLUME 0 CU.YD.

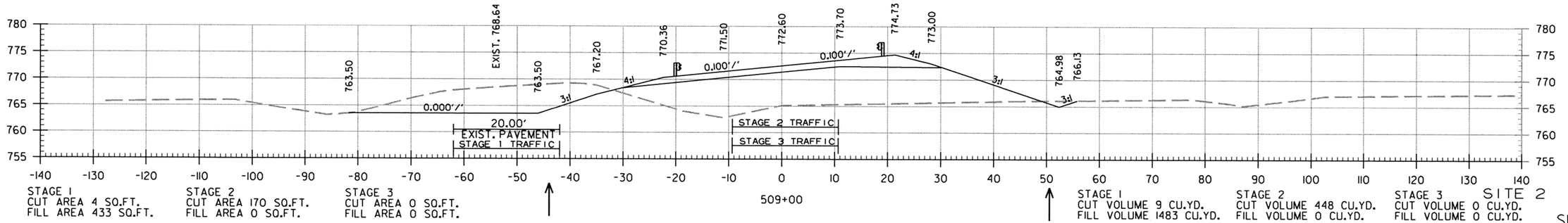

STAGE 1
CUT AREA 4 SQ.FT.
FILL AREA 433 SQ.FT.

STAGE 2
CUT AREA 170 SQ.FT.
FILL AREA 0 SQ.FT.

STAGE 3
CUT AREA 0 SQ.FT.
FILL AREA 0 SQ.FT.

STAGE 1
CUT VOLUME 9 CU.YD.
FILL VOLUME 1483 CU.YD.

STAGE 2
CUT VOLUME 448 CU.YD.
FILL VOLUME 0 CU.YD.

STAGE 3
CUT VOLUME 0 CU.YD.
FILL VOLUME 0 CU.YD.

SITE 2

SITE 2
CROSS SECTION STA. 509+00 TO STA. 510+30

lw39665 9/26/2019
R012318.DGN

DATE REVISED	DATE FILMED	DATE REVISED	DATE FILMED	FED.RD. DIST.NO.	STATE	FED.AID PROJ.NO.	SHEET NO.	TOTAL SHEETS
				6	ARK.			
				JOB NO.		012318	85	92

(2) CROSS SECTIONS

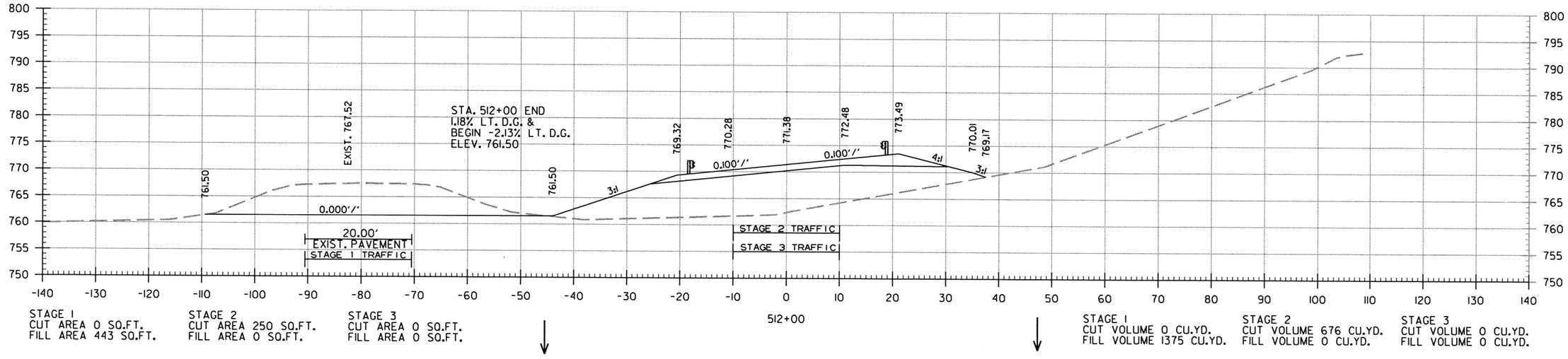

SITE 2

CROSS SECTION STA. 511+35 TO STA. 512+00

lw39665 9/26/2019
R012318.DGN

DATE REVISED	DATE FILMED	DATE REVISED	DATE FILMED	FED.RD. DIST.NO.	STATE	FED.AID PROJ.NO.	SHEET NO.	TOTAL SHEETS
				6	ARK.			
				JOB NO.		012318	86	92

(2) CROSS SECTIONS

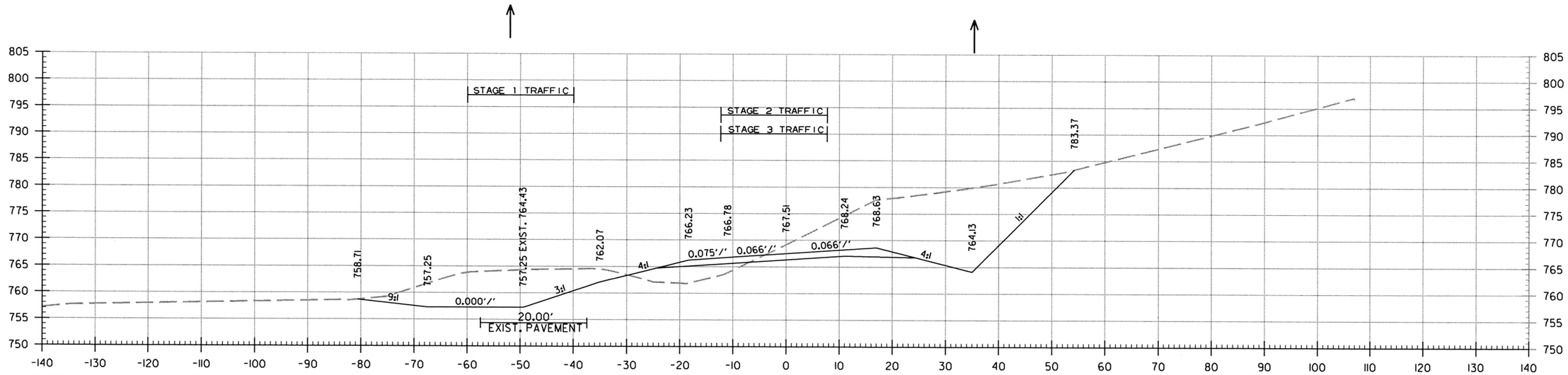

STAGE 1
CUT AREA 500 SQ.FT.
FILL AREA 48 SQ.FT.

STAGE 2
CUT AREA 216 SQ.FT.
FILL AREA 0 SQ.FT.

STAGE 3
CUT AREA 0 SQ.FT.
FILL AREA 0 SQ.FT.

STAGE 1
CUT VOLUME 926 CU.YD.
FILL VOLUME 292 CU.YD.

STAGE 2
CUT VOLUME 947 CU.YD.
FILL VOLUME 0 CU.YD.

STAGE 3
CUT VOLUME 0 CU.YD.
FILL VOLUME 0 CU.YD.

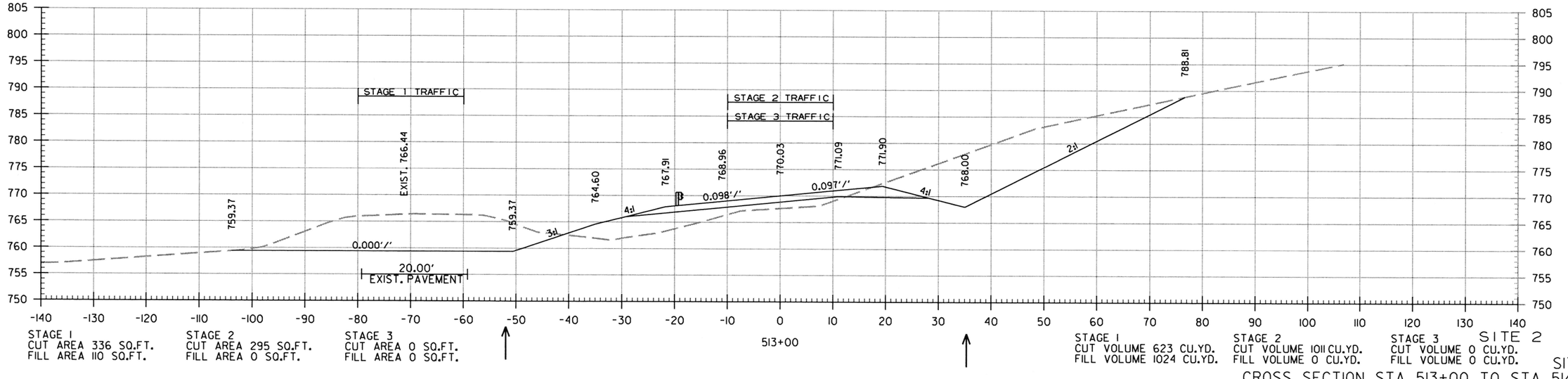

STAGE 1
CUT AREA 336 SQ.FT.
FILL AREA 110 SQ.FT.

STAGE 2
CUT AREA 295 SQ.FT.
FILL AREA 0 SQ.FT.

STAGE 3
CUT AREA 0 SQ.FT.
FILL AREA 0 SQ.FT.

STAGE 1
CUT VOLUME 623 CU.YD.
FILL VOLUME 1024 CU.YD.

STAGE 2
CUT VOLUME 1011 CU.YD.
FILL VOLUME 0 CU.YD.

STAGE 3
CUT VOLUME 0 CU.YD.
FILL VOLUME 0 CU.YD.

SITE 2

SITE 2
CROSS SECTION STA. 513+00 TO STA. 514+00

lw39665 9/26/2019
R012318.DGN

DATE REVISED	DATE FILMED	DATE REVISED	DATE FILMED	FED.RD. DIST.NO.	STATE	FED.AID PROJ.NO.	SHEET NO.	TOTAL SHEETS
				6	ARK.			
				JOB NO.		012318	87	92

(2) CROSS SECTIONS

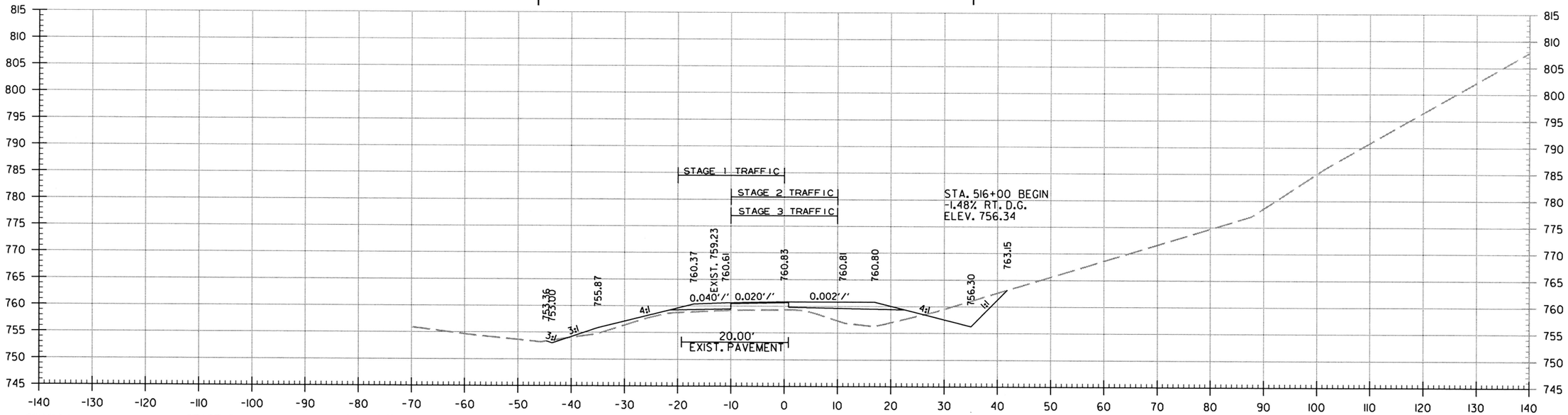

STAGE 1
CUT AREA 37 SQ.FT.
FILL AREA 40 SQ.FT.

STAGE 2
CUT AREA 1SQ.FT.
FILL AREA 17 SQ.FT.

STAGE 3
CUT AREA 0 SQ.FT.
FILL AREA 0 SQ.FT.

STAGE 1
CUT VOLUME 199 CU.YD.
FILL VOLUME 312 CU.YD.

STAGE 2
CUT VOLUME 159 CU.YD.
FILL VOLUME 31CU.YD.

STAGE 3
CUT VOLUME 0 CU.YD.
FILL VOLUME 0 CU.YD.

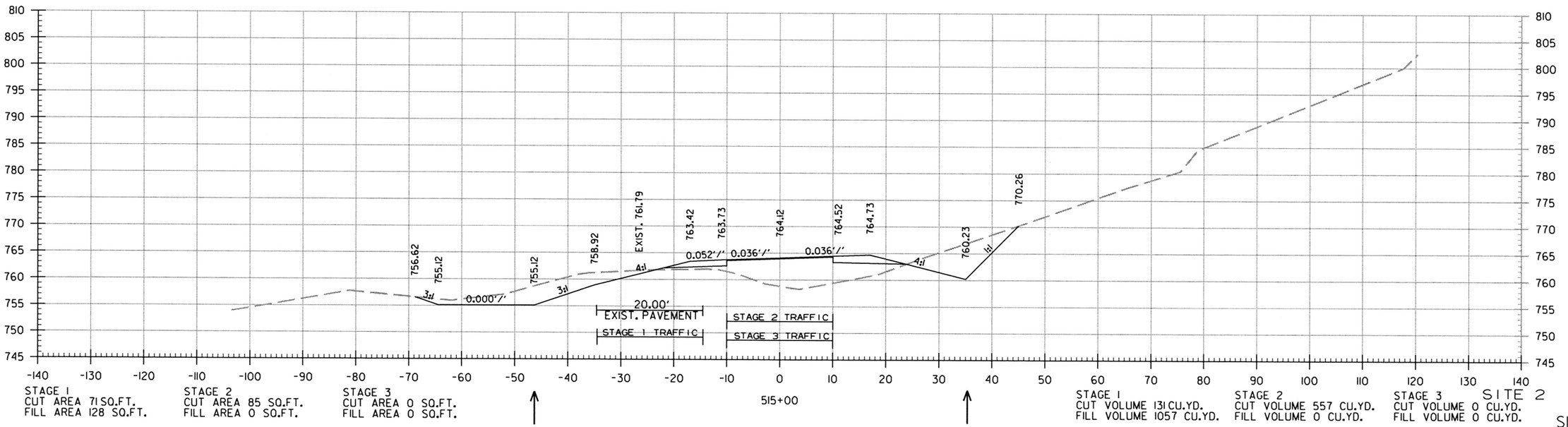

STAGE 1
CUT AREA 71SQ.FT.
FILL AREA 128 SQ.FT.

STAGE 2
CUT AREA 85 SQ.FT.
FILL AREA 0 SQ.FT.

STAGE 3
CUT AREA 0 SQ.FT.
FILL AREA 0 SQ.FT.

STAGE 1
CUT VOLUME 131CU.YD.
FILL VOLUME 1057 CU.YD.

STAGE 2
CUT VOLUME 557 CU.YD.
FILL VOLUME 0 CU.YD.

STAGE 3
CUT VOLUME 0 CU.YD.
FILL VOLUME 0 CU.YD.

SITE 2

SITE 2
CROSS SECTION STA. 515+00 TO STA. 516+00

lw39665 9/26/2019
R012318.DGN

DATE REVISED	DATE FILMED	DATE REVISED	DATE FILMED

FED.RD. DIST.NO.	STATE	FED.AID PROJ.NO.	SHEET NO.	TOTAL SHEETS
6	ARK.			
JOB NO.		012318	88	92

(2) CROSS SECTIONS

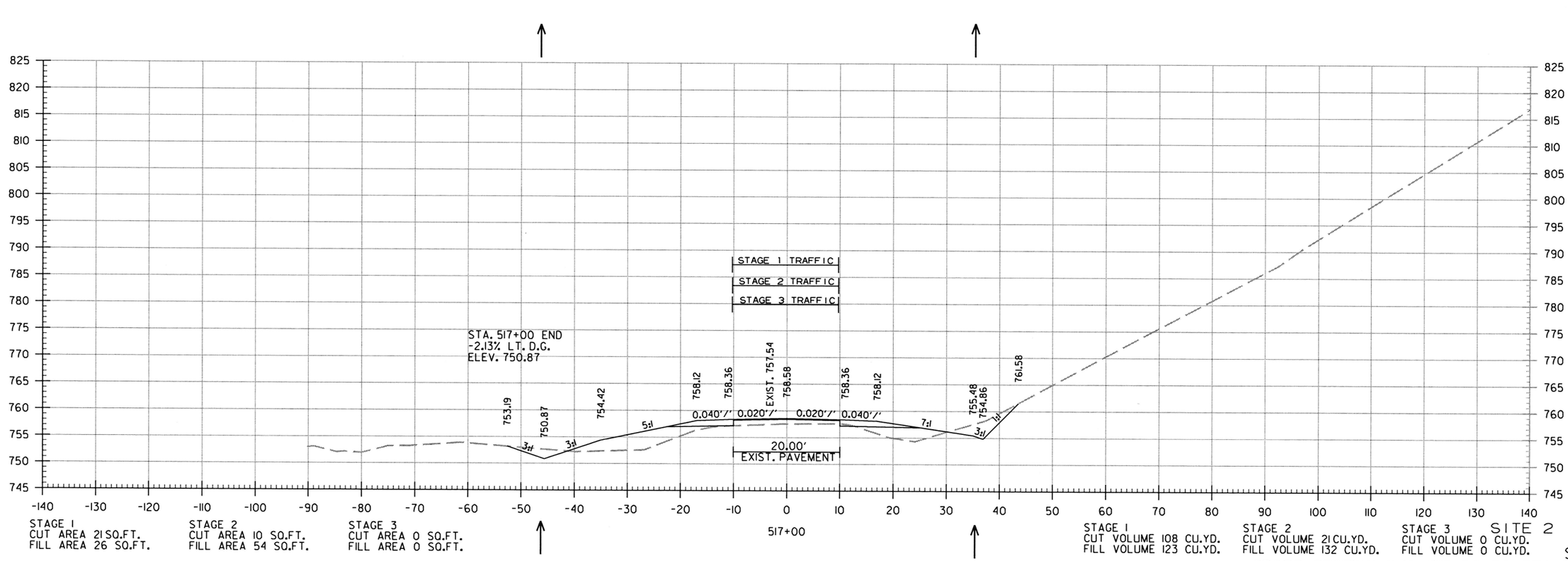

STAGE 1
CUT AREA 21 SQ.FT.
FILL AREA 26 SQ.FT.

STAGE 2
CUT AREA 10 SQ.FT.
FILL AREA 54 SQ.FT.

STAGE 3
CUT AREA 0 SQ.FT.
FILL AREA 0 SQ.FT.

STAGE 1
CUT VOLUME 108 CU.YD.
FILL VOLUME 123 CU.YD.

STAGE 2
CUT VOLUME 21 CU.YD.
FILL VOLUME 132 CU.YD.

STAGE 3
CUT VOLUME 0 CU.YD.
FILL VOLUME 0 CU.YD.

SITE 2

SITE 2
CROSS SECTION STA. 517+00 TO STA. 517+00

lw39665 9/26/2019
R012318.DGN

DATE REVISED	DATE FILMED	DATE REVISED	DATE FILMED	FED.RD. DIST.NO.	STATE	FED.AID PROJ.NO.	SHEET NO.	TOTAL SHEETS
				6	ARK.			
				JOB NO.		012318	89	92

(2) CROSS SECTIONS

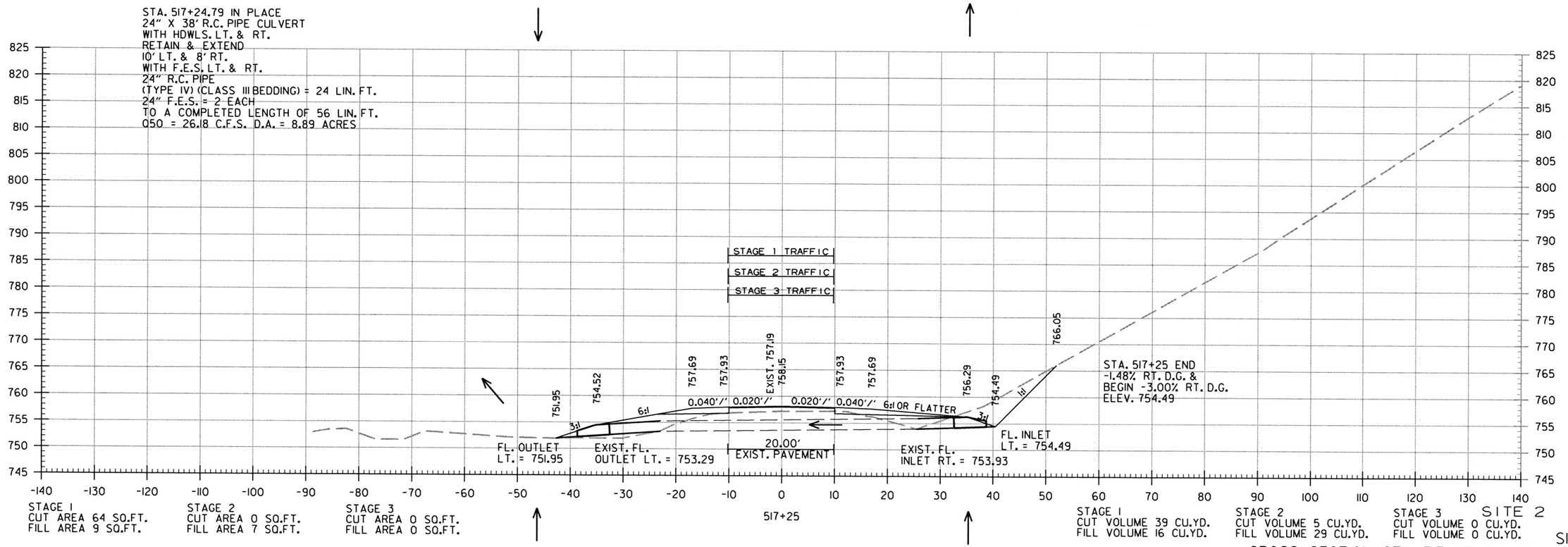

SITE 2
CROSS SECTION STA. 517+25 TO STA. 517+25

lw39665 9/26/2019
R012318.DGN

DATE REVISED	DATE FILMED	DATE REVISED	DATE FILMED	FED.RD. DIST.NO.	STATE	FED.AID PROJ.NO.	SHEET NO.	TOTAL SHEETS
				6	ARK.			
				JOB NO.		012318	90	92

(2) CROSS SECTIONS

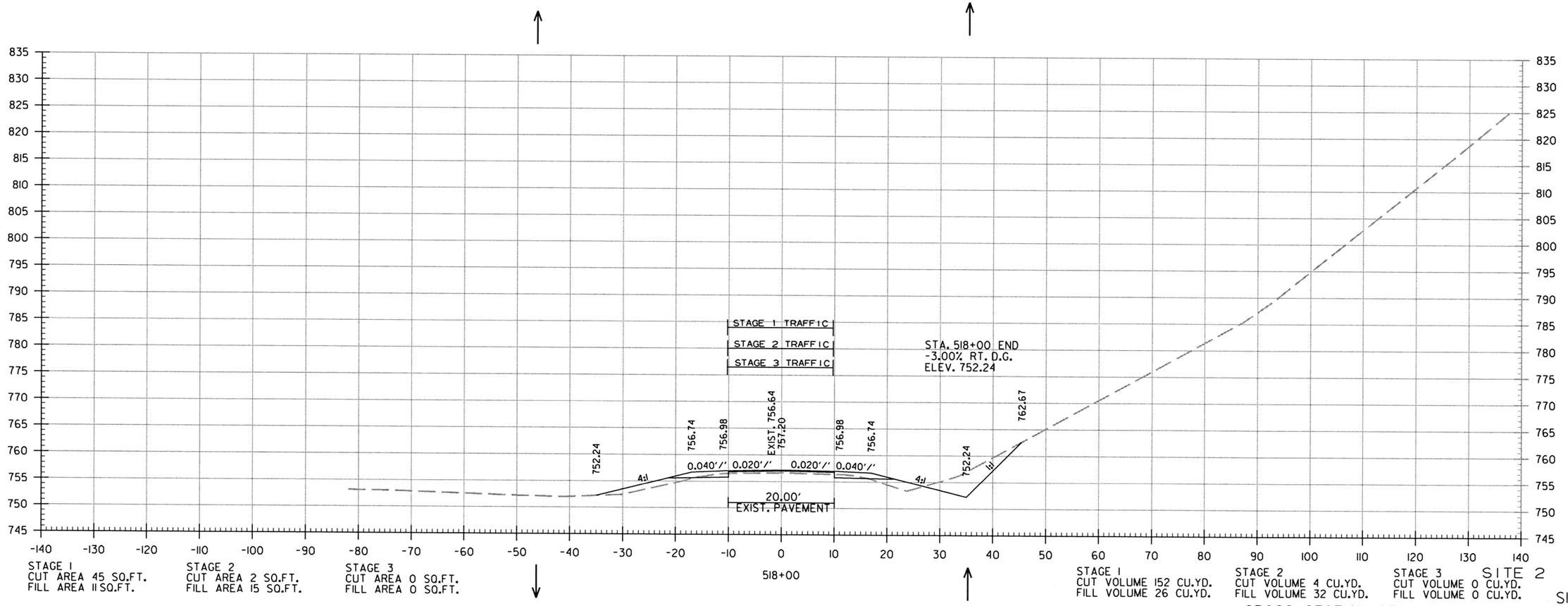

SITE 2
CROSS SECTION STA. 518+00 TO STA. 518+00

lw39665 9/26/2019
R012318.DGN

DATE REVISED	DATE FILMED	DATE REVISED	DATE FILMED

FED.RD. DIST.NO.	STATE	FED.AID PROJ.NO.	SHEET NO.	TOTAL SHEETS
6	ARK.			
JOB NO.		012318	91	92

(2) CROSS SECTIONS

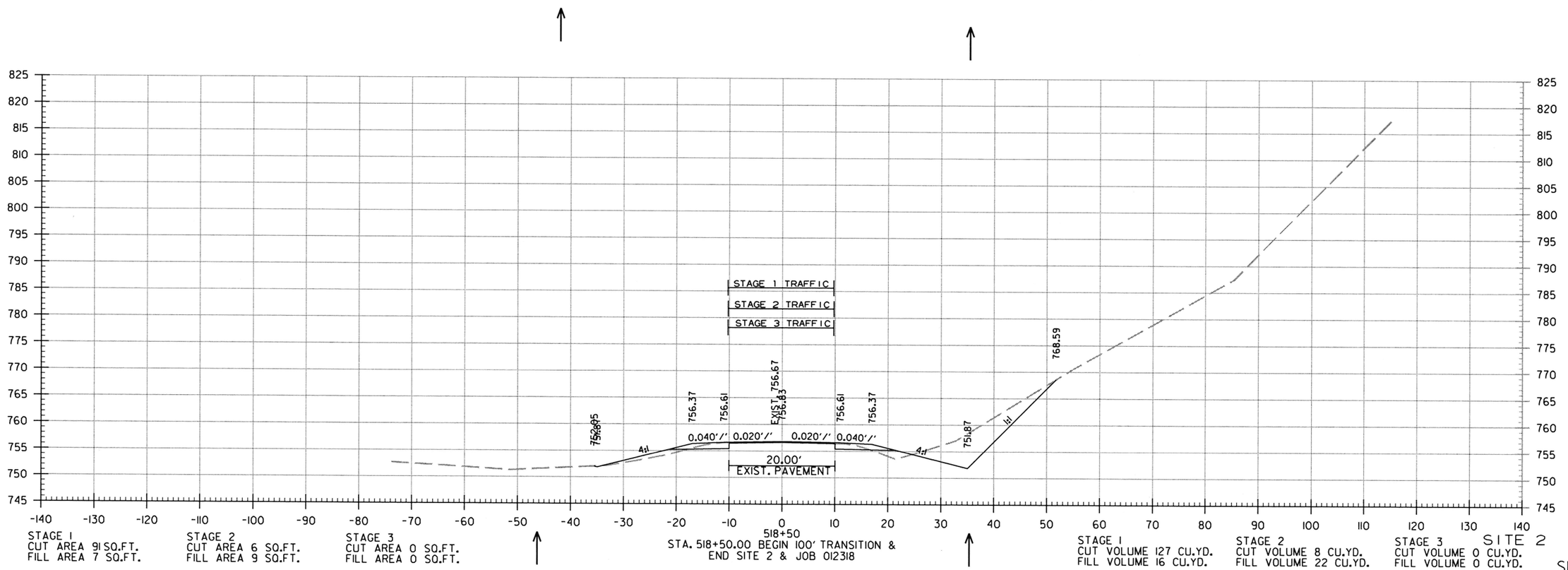

SITE 2
CROSS SECTION STA. 518+50 TO STA. 518+50

lw39665 9/26/2019
R012318.DGN

DATE REVISED	DATE FILMED	DATE REVISED	DATE FILMED

FED.RD. DIST.NO.	STATE	FED.AID PROJ.NO.	SHEET NO.	TOTAL SHEETS
6	ARK.			
JOB NO.		012318	92	92

(2) CROSS SECTIONS

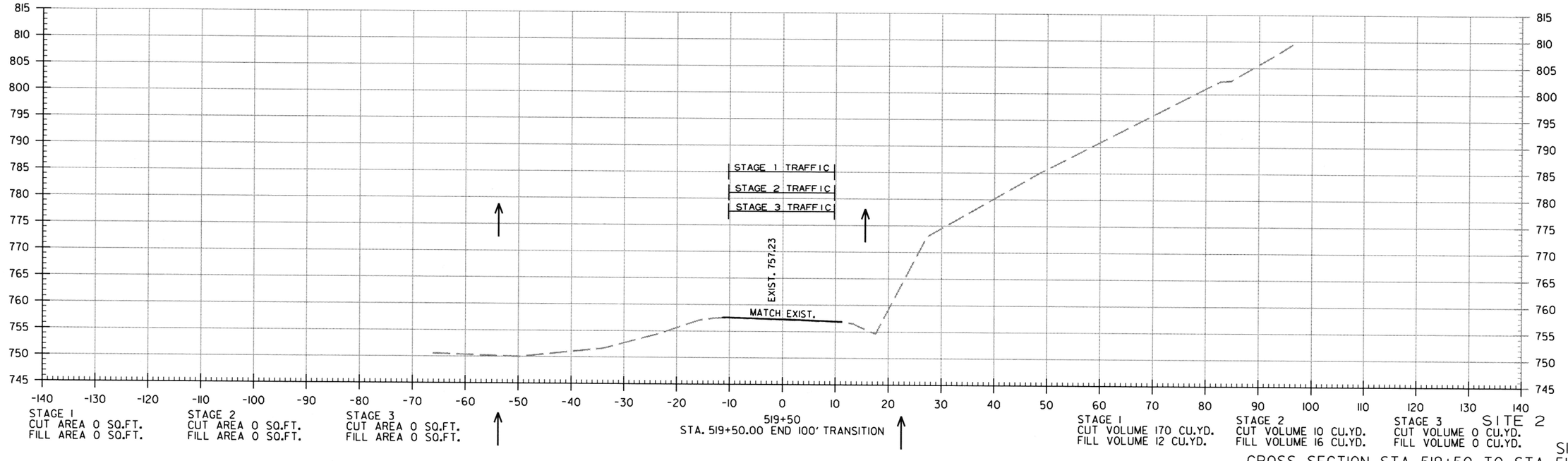

SITE 2
CROSS SECTION STA. 519+50 TO STA. 519+50

lw39665 9/26/2019
R012318.DGN

DATE REVISED	DATE FILMED	DATE REVISED	DATE FILMED	FED. ROAD DIST. NO.	STATE	FED. AID PROJ. NO.	SHEET NO.	TOTAL SHEETS
				6	ARK.			
				JOB NO.				
				(1) EMBANKMENT & BACKFILL 55000				

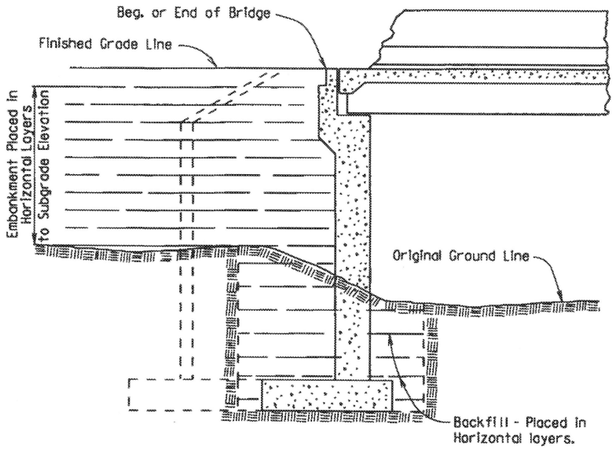

EMBANKMENT CONSTRUCTION AND FOOTING BACKFILL AT VERTICAL WALL ABUTMENTS

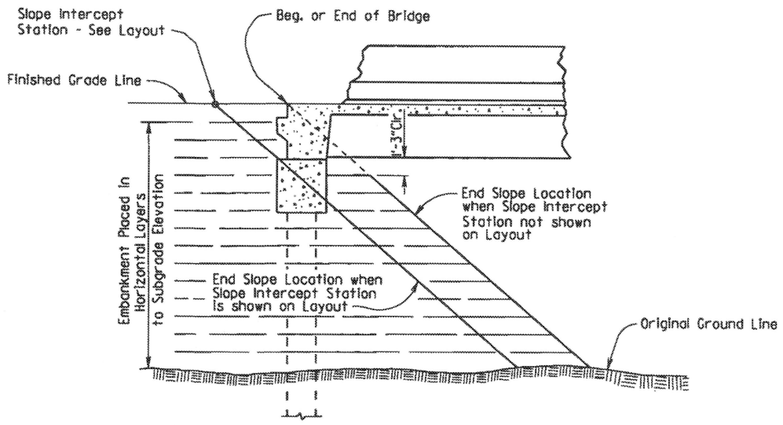

EMBANKMENT CONSTRUCTION AT SPILL-THROUGH PILE END BENTS

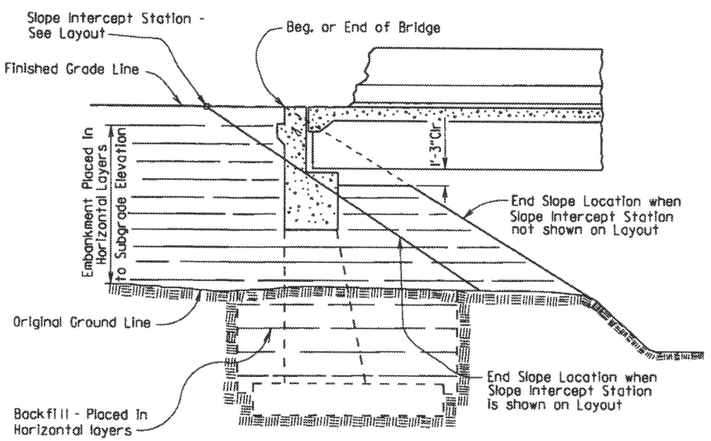

EMBANKMENT CONSTRUCTION AND FOOTING BACKFILL AT SPILL-THROUGH END BENTS

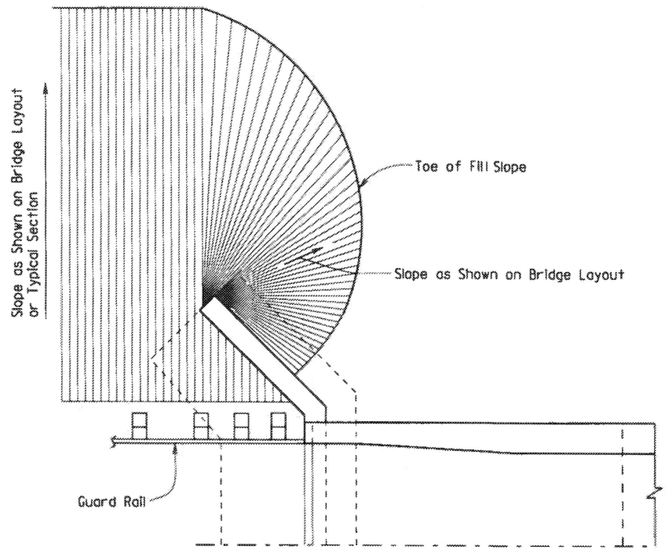

VERTICAL WALL ABUTMENTS

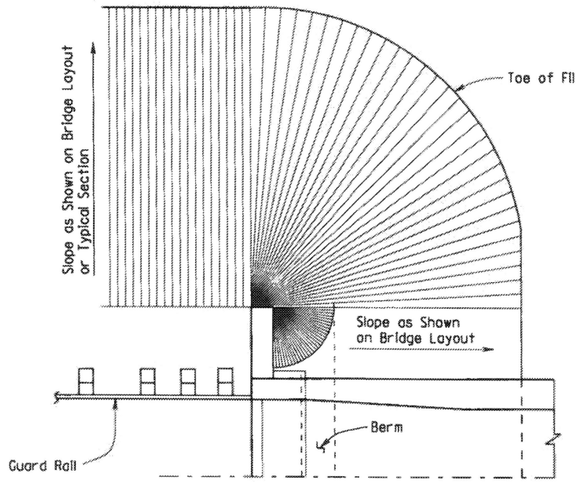

SPILL-THROUGH END BENTS WITH STUB WING

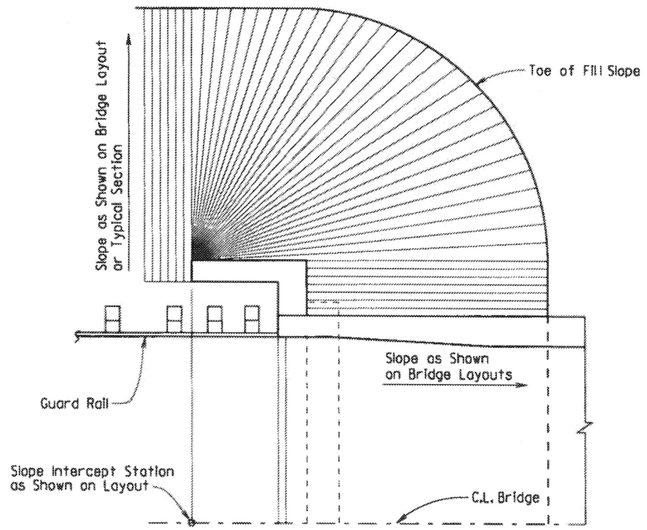

SPILL-THROUGH END BENTS WITH TURNBACK WING

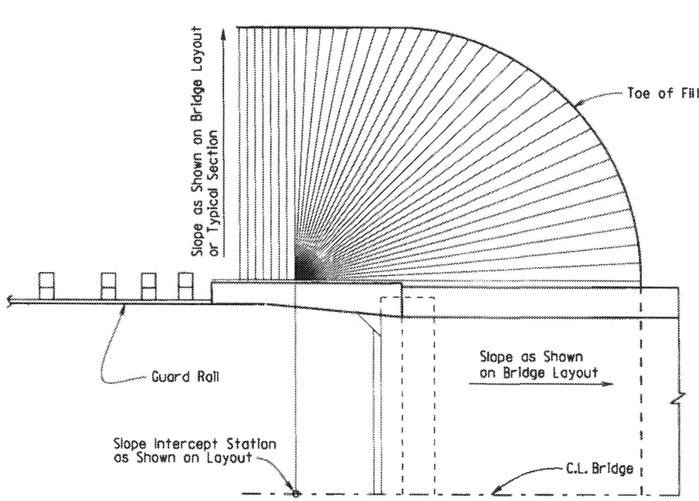

SPILL-THROUGH END BENTS WITH TRANSITION WING

METHOD OF DETERMINING FILL SLOPE LOCATION AT BRIDGE ENDS

GENERAL NOTES

The Bridge End Embankment shall be defined as a section of embankment, not less than 20 feet long adjacent to the bridge end, together with the side slopes and slopes under the bridge end including around the end of wingwalls. Embankment adjacent to structures shall be constructed in 6 inch horizontal layers (loose measure) and compacted by the use of mechanical equipment to the satisfaction of the Engineer. Refer to Subsections 210.09, 210.10 and 801.08 for construction requirements.

STANDARD DETAILS FOR EMBANKMENT CONSTRUCTION AND BACKFILL AT BRIDGE ENDS

ARKANSAS STATE HIGHWAY COMMISSION

LITTLE ROCK, ARK.

DRAWN BY: KDH DATE: 2-27-2014 FILENAME: b55000.dgn

CHECKED BY: BEF DATE: 2-27-2014 SCALE: NO SCALE

DESIGNED BY: STD. DATE: -

DRAWING NO. 55000

DATE REVISED	DATE FILMED	DATE REVISED	DATE FILMED	FED. ROAD DIST. NO.	STATE	FED. AID PROJ. NO.	SHEET NO.	TOTAL SHEETS
				6	ARK.			
				JOB NO.				

(1) RIPRAP & EXCAV. 55001

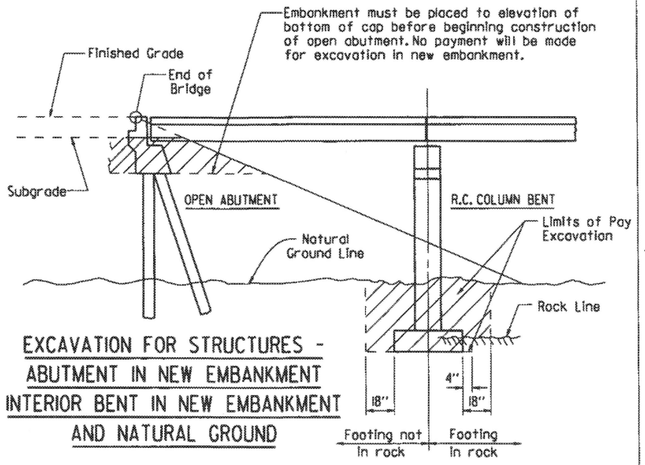

EXCAVATION FOR STRUCTURES - ABUTMENT IN NEW EMBANKMENT INTERIOR BENT IN NEW EMBANKMENT AND NATURAL GROUND

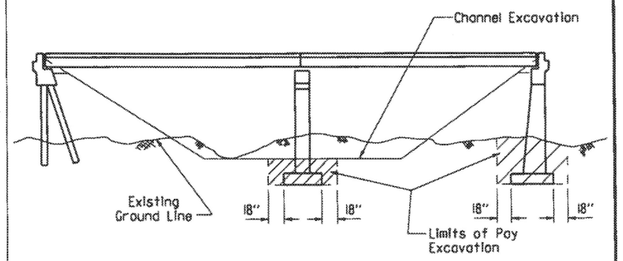

EXCAVATION FOR STRUCTURES - BRIDGE LOCATION WITH DESIGNATED CHANNEL CHANGE

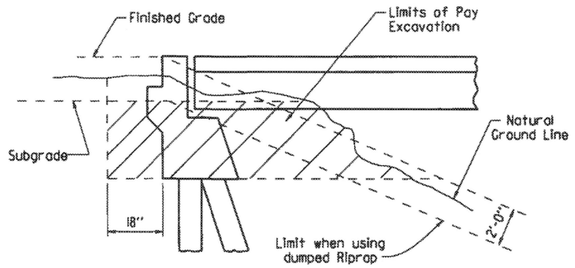

EXCAVATION FOR STRUCTURES - ABUTMENT IN NATURAL GROUND

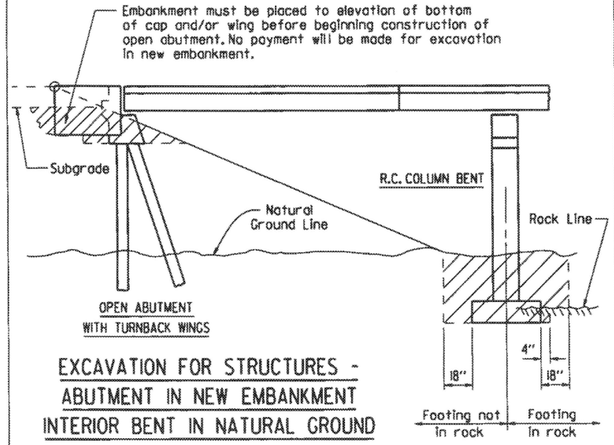

EXCAVATION FOR STRUCTURES - ABUTMENT IN NEW EMBANKMENT INTERIOR BENT IN NATURAL GROUND

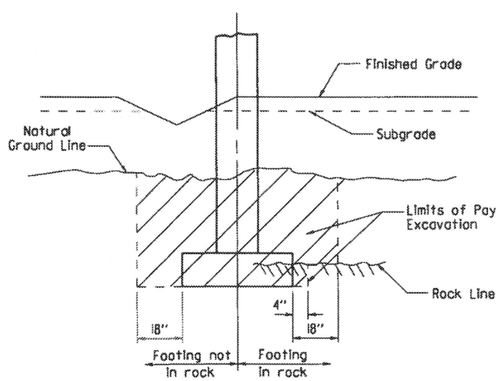

EXCAVATION FOR STRUCTURES - BENT IN ROADWAY FILL SECTION AND NATURAL GROUND

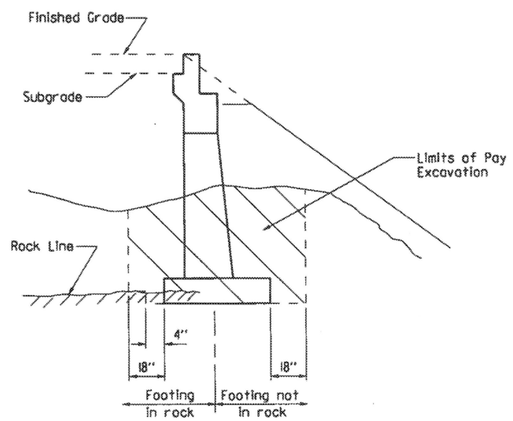

EXCAVATION FOR STRUCTURES - ABUTMENT IN NATURAL GROUND AND NEW EMBANKMENT

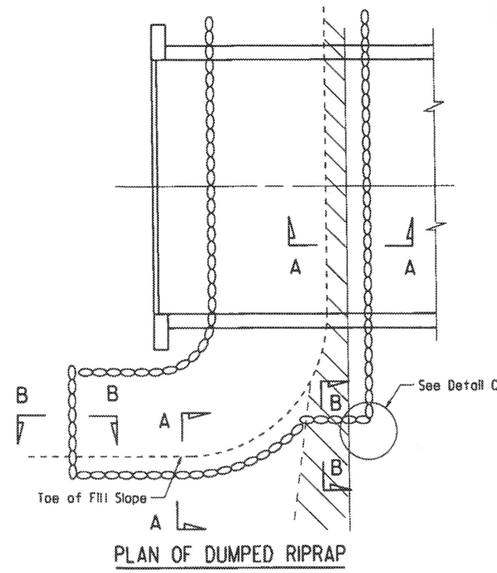

PLAN OF DUMPED RIPRAP

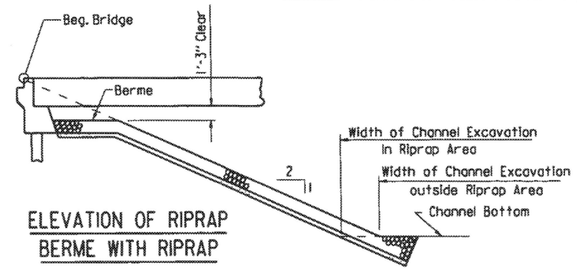

ELEVATION OF RIPRAP BERME WITH RIPRAP

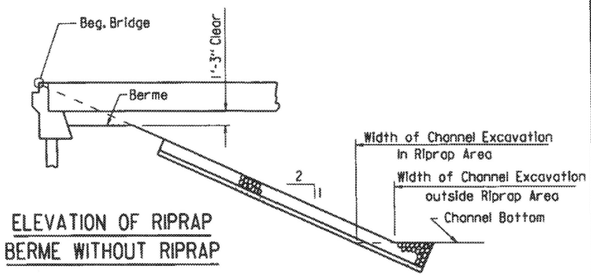

ELEVATION OF RIPRAP BERME WITHOUT RIPRAP

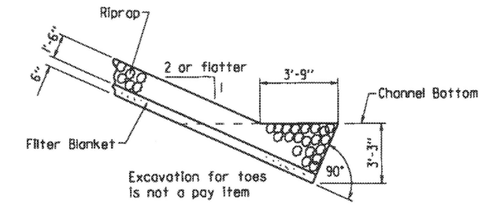

SECTION A-A
(Toe Excavation in Soil)

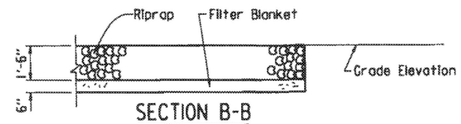

SECTION B-B

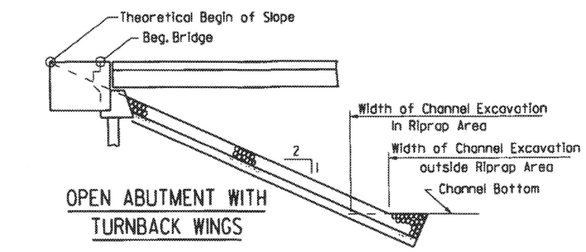

OPEN ABUTMENT WITH TURNBACK WINGS

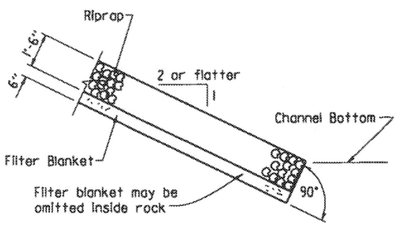

SECTION A-A
(Toe Excavation in Rock)

Note : Use this type of toe when rock is encountered which is in a stable condition.

Note : In lieu of an aggregate filter blanket, a synthetic fiber geotextile fabric complying with the requirements of Subsection 816.02(e) may be used.

Note : Details for computing excavation for structures are included for information as to how plan quantities were calculated and for use when adjusting quantities when changing footing elevation.

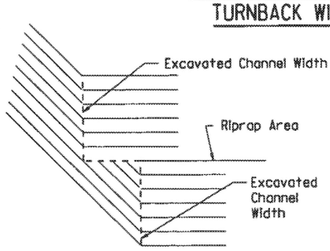

DETAIL C

STANDARD DETAILS FOR DUMPED RIPRAP AND FILTER BLANKET AND COMPUTING EXCAVATION FOR STRUCTURES

ARKANSAS STATE HIGHWAY COMMISSION

LITTLE ROCK, ARK.

DRAWN BY:	KDH	DATE:	2-27-2014	FILENAME:	b55001.dgn
CHECKED BY:	BEF	DATE:	2-27-2014	SCALE:	NO SCALE
DESIGNED BY:	STD.	DATE:			

DRAWING NO. 55001

DATE REVISED	DATE FILMED	DATE REVISED	DATE FILMED	FED. ROAD DIST. NO.	STATE	FED. AID PROJ. NO.	SHEET NO.	TOTAL SHEETS
3/24/16				6	ARK.			
				JOB NO.				

① BRIDGE DECK FORMS 55005

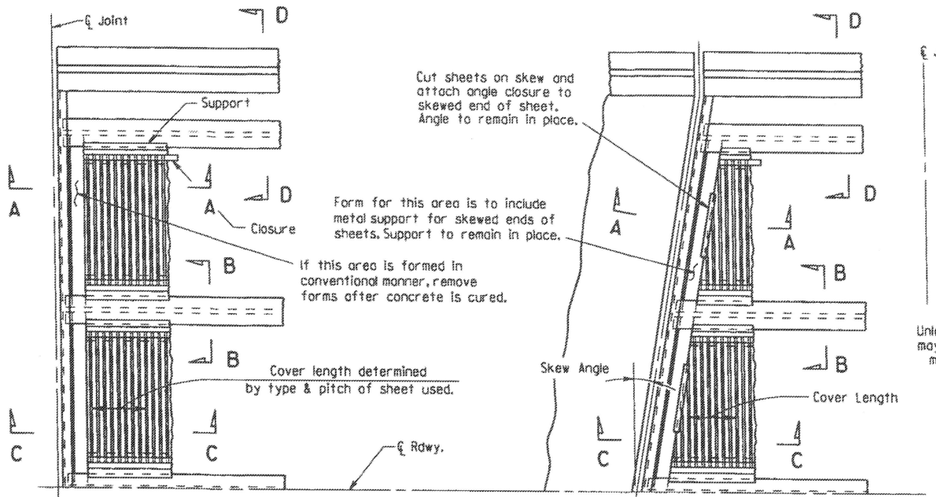

PART PLAN - SQUARE SPAN

3/8" = 1'-0"

PART PLAN - SKEWED SPAN

3/8" = 1'-0"

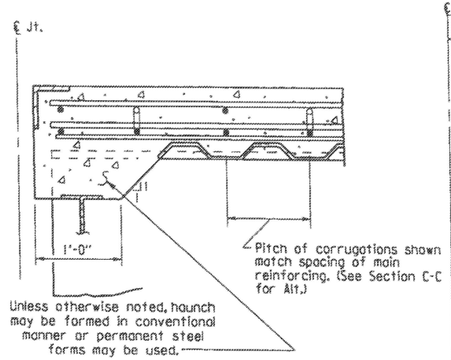

SECTION A-A

N.T.S.

(Angle at end of span)

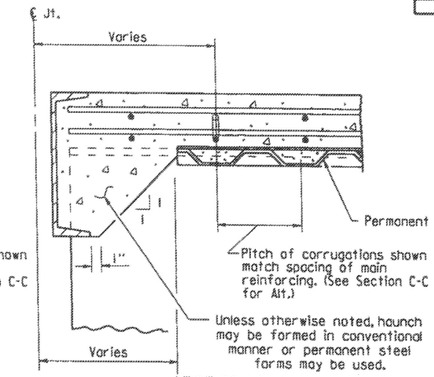

SECTION A-A

N.T.S.

(Channel at end of span)

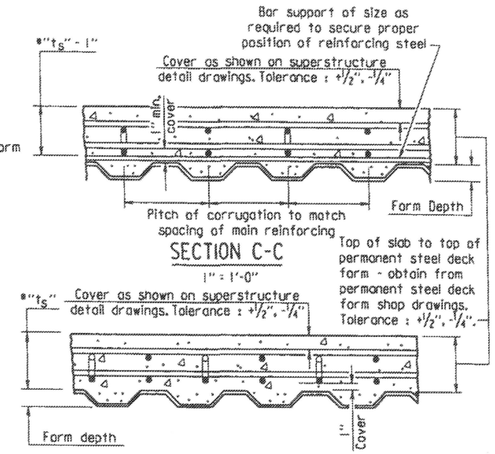

SECTION C-C

1" = 1'-0"

SECTION C-C - ALTERNATE

1" = 1'-0"

(Applicable when corrugations do not match spacing of main reinforcement)

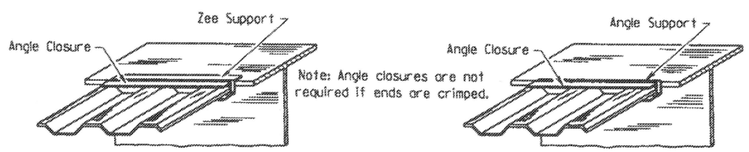

SKETCH OF PERMISSIBLE SUPPORTS

N.T.S.

*t_S = slab thickness as shown on superstructure detail drawings.

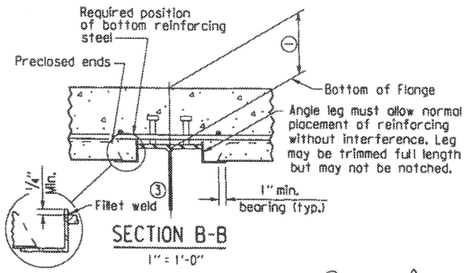

SECTION B-B

1" = 1'-0"

(Showing permissible support for tension flange where shear connectors are used, and for all compression flanges)

③ ⚠ Minimum weld: 1/8" x 1" @ 18". More weld may be required; maximum length per weld = 1 1/2" (typ.)

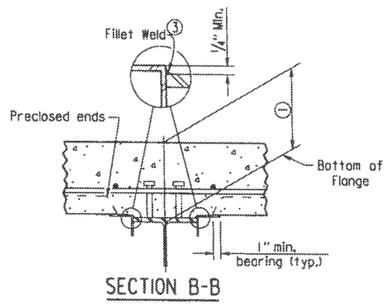

SECTION B-B

1" = 1'-0"

(Showing permissible support for tension flange where shear connectors are used and for all compression flanges)

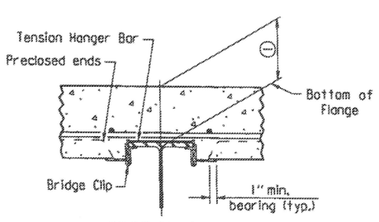

SECTION B-B

1" = 1'-0"

(Showing permissible support for tension flange where shear connectors are not used)

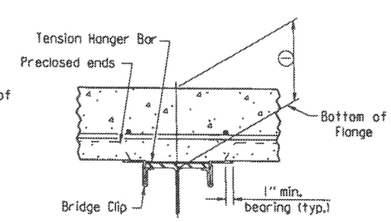

SECTION B-B

1" = 1'-0"

(Showing permissible support for tension flange where shear connectors are not used)

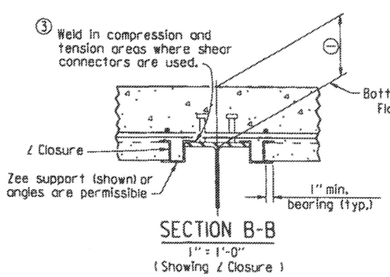

SECTION B-B

1" = 1'-0"

(Showing ∠ Closure)

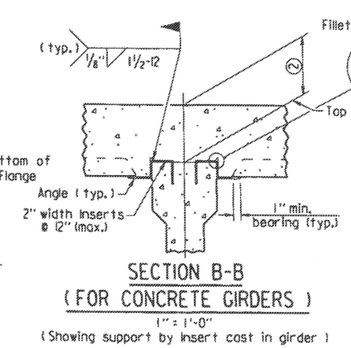

SECTION B-B

(FOR CONCRETE GIRDERS)

1" = 1'-0"

(Showing support by insert cast in girder)

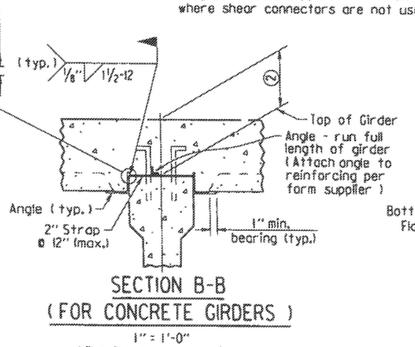

SECTION B-B

(FOR CONCRETE GIRDERS)

1" = 1'-0"

(Showing support by Strap)

① Distance from top of slab to bottom of top flange as measured at centerline girder and as shown on superstructure detail drawings. This dimension may vary within the following limits to maintain the grade and slab thickness tolerances: Minimum - occurs when either the top flange or the support angle leg contacts the bottom reinforcing steel; Maximum = t_S + 1 1/4" + flange thickness. See Section C-C for slab thickness tolerance between adjacent girder flanges.

② Distance from top of slab to top of girder as measured at centerline girder and as shown on superstructure detail drawings. This dimension may vary within the following limits to maintain the grade and slab thickness tolerances: Minimum - occurs when either the top of girder or the support angle leg contacts the bottom reinforcing steel; Maximum - value shown on the superstructure detail drawings when removable forms are used. See Section C-C for slab thickness tolerance between adjacent girder flanges.

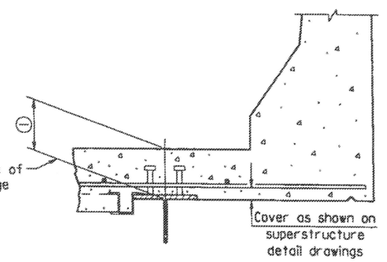

SECTION D-D

1" = 1'-0"

Note: Only Bottom Reinforcing is shown.

⚠ Revised weld dimension by KWY, Ck'd. by BEF, 3/24/16.

GENERAL NOTES

Permanent steel deck forms may be used at the Contractor's option and shall be at no additional cost to the Department. Such use may result in changes to the dead load deflection of the girder. Any cost for adjustments due to a change in the dead load deflection will be borne by the Contractor. Payment for deck concrete and structural steel will not be increased due to use of permanent steel deck forms.

Permanent steel deck forms shall conform to Subsection 802.14(b). Detailed plans, including detailed calculations and manufacturer's technical brochure, shall be submitted to and approved by the Engineer before work of forming the bridge deck is started.

Welding of form supports to the tension flange of steel girders will be permitted only in areas where shear connectors are used. When welding is not allowed, the method of fastening Z or ∠ supports to the flange must be approved by the Engineer.

Form sheets shall be fastened to supporting members and to each other with galvanized metal screws sufficient in size and number to provide a secure attachment. Alternate methods of attachment must be approved by the Engineer.

When the pitch of form corrugations match the reinforcing spacing, transversely align form sheets across the bridge to maintain the correct orientation of continuous reinforcing bars in the corrugations.

Bar support rods, when used, shall be sized and spaced to adequately support the bottom reinforcing mat at the required position.

High chairs shall be sized to support the top mat of reinforcing at the proper position. High chairs shall be placed at locations shown on the detail drawings.

Specifications: Arkansas State Highway and Transportation Department Standard Specifications for Highway Construction (2014 Edition), with applicable Supplemental Specifications and Special Provisions.

STANDARD DETAILS FOR PERMANENT STEEL BRIDGE DECK FORMS FOR STEEL & CONCRETE GIRDER SPANS

ARKANSAS STATE HIGHWAY COMMISSION

LITTLE ROCK, ARK.

DRAWN BY: KDH DATE: 2-27-2014 FILENAME: b55005.dgn

CHECKED BY: BEF DATE: 2-27-2014 SCALE: NONE

DESIGNED BY: STD. DATE: —

DRAWING NO. 55005

DATE REVISED	DATE FILMED	DATE REVISED	DATE FILMED	FED. ROAD DIST. NO.	STATE	FED. AID PROJ. NO.	SHEET NO.	TOTAL SHEETS
				6	ARK.			
				JOB NO.				
				1	GENERAL NOTES		55006	

GENERAL NOTES

These GENERAL NOTES are applicable unless otherwise shown in the Plan Details, Special Provisions, or Supplemental Specifications.

CONSTRUCTION SPECIFICATIONS: Arkansas State Highway and Transportation Department Standard Specifications for Highway Construction (2014 Edition) with applicable Supplemental Specifications and Special Provisions. Section and Subsection refer to the Standard Specifications.

DESIGN SPECIFICATIONS: See Bridge Layout(s).

SUPERSTRUCTURE NOTES:

MATERIALS AND STRENGTHS:

Class S(AE) Concrete	f'c =	4,000 psi
Reinforcing Steel (Gr. 60, AASHTO M 31 or M 322, Type A)	fy =	60,000 psi
Structural Steel (AASHTO M 270, Gr. 36)	Fy =	36,000 psi
Structural Steel (AASHTO M 270, Gr. 50)	Fy =	50,000 psi
Structural Steel (AASHTO M 270, Gr. 50W)	Fy =	50,000 psi
Structural Steel (AASHTO M 270, Gr. HPS70W)	Fy =	70,000 psi

See Plan Details for Grade(s) of Structural Steel required.

CONCRETE:

All concrete shall be Class S(AE) with a minimum 28 day compressive strength f'c = 4,000 psi. Concrete shall be poured in the dry and all exposed corners shall be chamfered ¾" unless otherwise noted.

The superstructure details shown are for use when removable deck forming is used and are the basis for measurement of Class S(AE) Concrete. See Standard Drawing No. 55005 for allowable modifications and for tolerances when Permanent Steel Bridge Deck Forms are used.

Use of a longitudinal screed is not permitted on any span of a bridge deck with horizontal curvature.

The concrete deck (roadway surface) shall be given a tine finish in accordance with Subsection 802.19 for Class 5 Tined Bridge Roadway Surface Finish. Sidewalks shall receive a broomed finish as specified for final finishing in Subsection 802.19 for Class 6 Broomed Finish. Movement of the finishing machine across new concrete shall be on planks placed on the surface and shall be prohibited for 72 hours after finishing the pour. Sufficient concrete must be placed ahead of the strike-off to fully load the beam or girder. When permitted, the use of a longitudinal strike-off will require that a vertical camber adjustment be made in the strike-off to account for the future dead load deflection due to any railings, median barrier, and sidewalks.

REINFORCING STEEL:

All reinforcing steel shall be Grade 60 conforming to AASHTO M 31 or M 322, Type A, with mill test reports and shall be epoxy coated. The reinforcing steel is to be accurately located in the forms and firmly held in place by steel wire supports, sufficient in number and size to prevent displacement during the course of construction. The wire supports will not be paid for directly, but will be considered subsidiary to the item "Epoxy Coated Reinforcing Steel (Grade 60)".

STRUCTURAL STEEL (COMMON TO W-BEAMS AND PLATE GIRDERS):

Structural steel shall be AASHTO M 270 with grade and payment as specified in the plans. Grade 50W steel shall not be painted and all exposed surfaces shall be cleaned in accordance with Subsection 807.84(e). Grade 36 and Grade 50 steel shall be painted unless otherwise noted and all exposed surfaces shall be cleaned in accordance with Subsection 807.84. Structural steel completely embedded in concrete may be AASHTO M 270, Gr. 36, Gr. 50 or Gr. 50W unless otherwise noted.

Drawings show general features of design only. Shop drawings shall be made in accordance with the specifications, submitted and approval secured before fabrication is begun.

Requests for substitution of structural steel shapes shown with shapes of greater size must be submitted by the Contractor to the Engineer for approval. Steels of equal or greater strengths will be accepted only when shown on the approved shop drawings. Payment will be based on the basis of shapes and materials shown in the plans, and no additional compensation will be made for any adjustments due to substitutions.

All welding that is to be done during fabrication of structural steel, including temporary welds, shall be detailed on the shop drawings and submitted for approval. If additional welds are required, whether permanent or temporary, a formal request with detailed drawings shall be submitted to the Engineer for approval; however, additional welds used for attaching falsework support devices or screed rail supports to the structural steel that do not exceed the limitations of Subsection 802.13 will not require approval prior to construction. All welding shall conform to Subsection 807.26.

Unless otherwise noted, field connections shall be bolted with ¾" ø high-strength bolts using 15/16" ø open holes. Holes for ¾" ø high-strength bolts may be 15/16" ø if a washer is supplied for use under both the nut and head of the bolt. The use of oversized holes will not be allowed on main members unless otherwise noted. Bolts shall be placed with heads on the outside face of the exterior beam or girder webs and on the bottom of the beam or girder flanges.

All stud shear connectors shall be granular flux filled, solid fluxed, or equal and shall be automatically end welded in accordance with recommendations of the Manufacturer.

When painting is required, all structural steel except galvanized steel and steel completely encased in concrete shall be painted in accordance with Subsection 807.75. The color of paint shall be as specified in the plans.

STRUCTURAL STEEL (W-BEAMS):

All beams and field splice plates, and all diaphragms and connection plates attached to horizontally curved beams are considered main load carrying members and shall meet the Longitudinal Charpy V-Notch Test specified in Subsection 807.05. This work and material will not be paid for directly, but shall be considered subsidiary to the item "Structural Steel in Beam Spans (M 270, Gr. ___)".

All beams in continuous units and simple spans with field splices shall be blocked in their true position in the shop in groups as specified in Subsection 807.54(b)(2) with the webs horizontal. The camber, length of sections, distance between bearings, and openings of joints shall be measured and this information shall become part of the permanent records. The component parts shall be match marked in this assembly and these marks shall be shown on the erection diagram.

All beams in simple spans without field splices shall be blocked in their true position with webs horizontal. The camber, distance between bearings, and openings of joints shall be measured and this information shall become part of the permanent records.

Flange field splice plates shall be cut and fabricated so that the primary direction of rolling is parallel to the direction of the main tensile and/or compressive stresses.

All beam dimensions are based on a temperature of 60 degrees F. A tolerance of ¼" +/- is allowed for camber.

Bent plate diaphragms for horizontally curved beams shall be cut and fabricated so that the primary direction of rolling is parallel to the direction of the main tensile and/or compressive stresses. Bent plate diaphragms for straight beams may be cut and fabricated in accordance with Subsection 807.35 or as required for horizontally curved beams.

Unless otherwise noted, diaphragms shall be installed as beams are erected. All bolts in diaphragms and field splices shall be installed and tightened in accordance with Subsection 807.71 prior to pouring the concrete deck.

STRUCTURAL STEEL (PLATE GIRDERS):

All references to cross-frames shall include "X" or "K" types.

All girder web and flange plates, all field splice plates, and all diaphragms, cross-frames and connection plates attached to horizontally curved girders are considered main load carrying members and shall meet the Longitudinal Charpy V-Notch Test specified in Subsection 807.05. This work and material will not be paid for directly, but shall be considered subsidiary to the item "Structural Steel in Plate Girder Spans (M 270, Gr. ___)".

All girders in continuous units and simple spans with field splices shall be assembled in the shop as specified in Subsection 807.54(b)(2) and blocked in their true position with webs horizontal. The camber, length of sections, distance between bearings, and openings of joints shall be measured and this information shall become part of the permanent records. The component parts shall be match marked in this assembly and these marks shall be shown on the erection diagram.

All girders in simple spans without field splices shall be blocked in their true position with webs horizontal. The camber, distance between bearings, and openings of joints shall be measured and this information shall become part of the permanent records.

Web and flange plates for main members and flange splice plates for main members shall be cut and fabricated so that the primary direction of rolling is parallel to the direction of the main tensile and/or compressive stresses.

Girder webs may be made by shop splicing with minimum lengths of 25 feet for sections. Flange plates longer than 50 feet may be made by shop splicing with minimum lengths of 25 feet for sections. No additional payment will be made for shop welded splices.

All girder dimensions are based on a temperature of 60 degrees F. A tolerance of ¼" +/- is allowed for camber.

Groove welds in web and flange plates shall be Quality Control (Q.C.) tested by nondestructive testing, as required in Subsection 807.23(b). Fillet welds at flange to web plate connections shall be Q.C. tested by the magnetic particle method. All Q.C. testing shall be considered subsidiary to the item "Structural Steel in Plate Girder Spans (M 270, Gr. ___)".

Bent plate diaphragms for horizontally curved girders shall be cut and fabricated so that the primary direction of rolling is parallel to the direction of the main tensile and/or compressive stresses. Bent plate diaphragms for straight girders may be cut and fabricated in accordance with Subsection 807.35 or as required for horizontally curved girders.

Unless otherwise noted, cross-frames and diaphragms shall be installed as girders are erected. All bolts in cross-frames, diaphragms, and field splices shall be installed and tightened in accordance with Subsection 807.71 prior to pouring the concrete deck.

SUBSTRUCTURE NOTES:

CONCRETE:

Unless otherwise noted, concrete in caps, columns and footings (except seal footings) shall be Class "S" with a minimum 28 day compressive strength f'c = 3,500 psi and shall be poured in the dry. Seal Concrete for footings shall have a minimum 28 day compressive strength f'c = 2,100 psi.

Concrete in drilled shafts shall be Class "S" as modified by Job SP "Drilled Shaft Foundations".

All exposed corners shall be chamfered ¾" unless otherwise noted.

REINFORCING STEEL:

All reinforcing steel shall be Grade 60 (yield strength = 60,000 psi) conforming to AASHTO M 31 or M 322, Type A, with mill test reports.

Top reinforcing bars in cap shall be properly placed to avoid interference with anchor bolts or sheet metal sleeves.

STRUCTURAL STEEL:

Structural steel in end bents shall be AASHTO M 270 with grade and payment as specified in the plans.

FOR ADDITIONAL INFORMATION AND NOTES, SEE LAYOUT(S) AND PLAN DETAILS.

STANDARD GENERAL NOTES
FOR STEEL BRIDGE STRUCTURES

ARKANSAS STATE HIGHWAY COMMISSION
LITTLE ROCK, ARK.

DRAWN BY:	A.M.S.	DATE:	9-2-2015	FILENAME:	b55006.dgn
CHECKED BY:	B.E.F.	DATE:	9-2-2015	SCALE:	NO SCALE
DESIGNED BY:	STD.	DATE:			

DRAWING NO. 55006

PRINT DATE: 9/21/2015

DATE REVISED	DATE FILMED	DATE REVISED	DATE FILMED	FED. ROAD DIST. NO.	STATE	FED. AID PROJ. NO.	SHEET NO.	TOTAL SHEETS
				6	ARK.			
				JOB NO.				

① STEEL BRIDGE STRUCTURES 55007

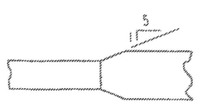

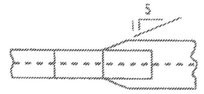

FLANGE SPLICE AT UNEQUAL BOTTOM FLANGE WIDTHS

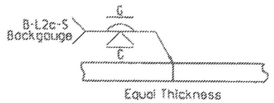

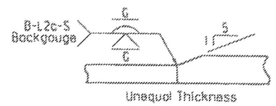

(Use when Base Metal Thickness is Equal to or Less than 2")

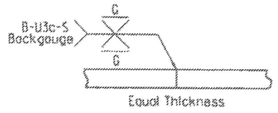

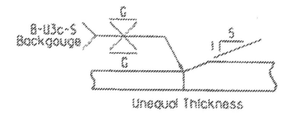

(Use when Base Metal Thickness is Greater than 2")

DETAILS OF WELDED SPLICES FOR PLATE GIRDERS

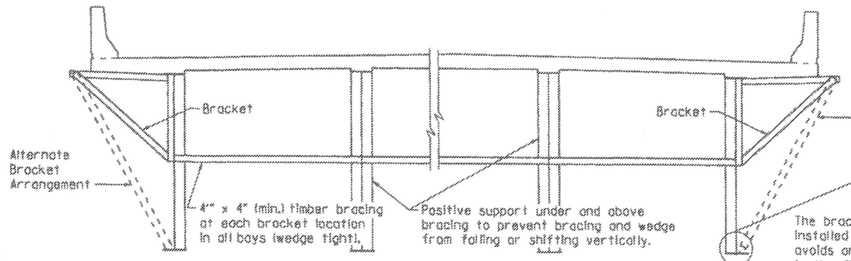

Note:
If a transverse finishing machine is used, the rail shall be supported directly over the exterior girders, or as an alternate, the rail may be supported by the overhang brackets if the above strutting system is used. The strutting system may be omitted if web stiffeners matching the size of the cross-frame connection plates are welded to the insides of the exterior girders at the location of each bracket or if the alternate bracket arrangement shown above is used. The Alternate Bracket arrangement shall extend down to the junction of the web and bottom flange. The stiffener shall conform to the details for cross frame connection plates shown on the plans. No direct payment will be made for brackets, timber bracing, supports, or welded stiffeners. Payment shall be subsidiary to "Structural Steel in Plate Girder Spans (____)".

SCREED RAIL SUPPORT FOR PLATE GIRDERS

(USE WHEN WEB DEPTHS ARE 48" OR GREATER)

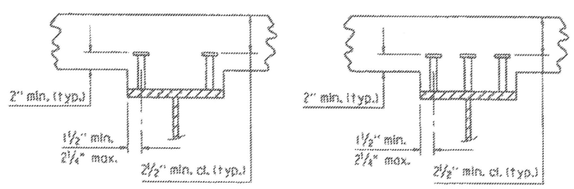

Stud Shear Connectors shall be automatically and welded to the beam or girder flange in accordance with the recommendations of the Manufacturer. See plan details for number and size.

SHEAR CONNECTOR DETAIL

Use Type 3 or 4 Joint Sealer. See Subsections 501.02(h) and 501.05(j). Backer Rod filler will not be required. Joint Sealer shall be measured and paid for as Class S(AE) Concrete-Bridge. Slab Joints shall extend to the outside edge of the deck slab and shall align with open joints at the front face of the parapet. Slab joints shall be installed before the parapet railing is poured. If slab joints are to be sawed, they shall be sawed as soon as the concrete has sufficiently set to allow sawing of the joint without damage to the slab. Slab joints shall be placed at all pouring sequence construction joints and required slab joint locations. The joint sealer shall extend across the deck from gutterline to gutterline.

ADDITIONAL NOTES IF SIDEWALKS OR RAISED MEDIANS ARE REQUIRED:
Slab joints shall be installed before the sidewalk or raised median is poured. After installation of the joint in the sidewalk or raised median and prior to pouring the parapet rail, the joint sealer shall be placed extending across the deck slab from gutterline to gutterline and acrosss the top of the sidwalk or raised median to the edge of the slab. No joint sealer shall be placed on the deck slab under the sidewalk or raised median.

TRANSVERSE SLAB JOINT DETAIL

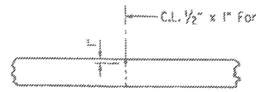

Use ½" x 1" Type 3 or 4 Joint Sealer. See Subsections 501.02(h) and 501.05(j). Backer Rod filler will not be required. Joint sealer shall be measured and paid for as Class S(AE) Concrete-Bridge. This joint shall be formed. Seal color shall be gray or other color similar to concrete.

LONGITUDINAL CONSTRUCTION JOINT

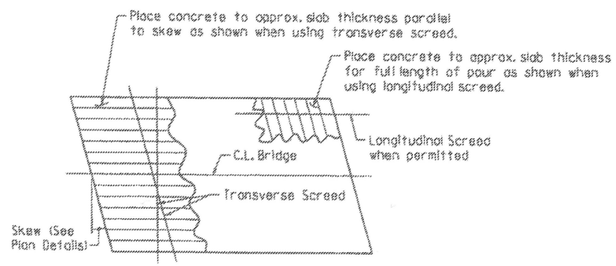

Note: At the Contractor's option, the transverse screed may be placed parallel to the skew or perpendicular to C.L. Bridge.

CONCRETE PLACEMENT PROCEDURE FOR BRIDGES WITH SKEW

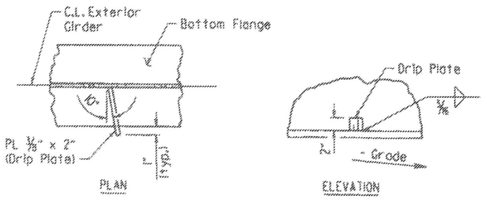

Drip Plate to be welded to the outer side of the bottom flange of the exterior girders.

Locate drip plate 5'-0" from C.L. Bearing on high side of each Bent, unless otherwise noted in the plans.

BOTTOM FLANGE DRIP PLATE

(USE WHEN WEB DEPTHS ARE 54" OR GREATER AND UNIT OR SPAN IS NOT IN LEVEL GRADE)

t_s = slab thickness. See "Typical Roadway Section" in the plans.

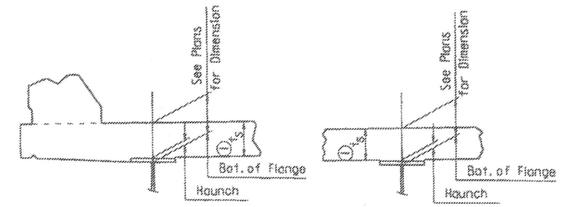

① Tolerance when removable deck forming is used is + ½", - ¼". Haunch forming is required and shall be adjusted to maintain slab thickness tolerance.

NOTES:
Haunch dimension may vary within the following limits to maintain the grade and slab thickness tolerance: Minimum occurs when top flange contacts bottom reinforcing steel; Maximum = top flange thickness plus 1¾" unless otherwise noted in the plans. No increase in concrete and structural steel quantities will be made to maintain tolerances.

Tolerances shown are applicable only when removable deck forming is used. See Std. Dwg. No. 55005 for tolerances when permanent steel deck forms are used. Payment for concrete shall be based on removable deck forming.

ADJUSTMENT FOR SLAB THICKNESS TOLERANCE

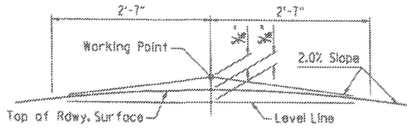

NOTE: Working Point matches Theoretical Roadway Grade.

ROUNDING DETAIL

BRIDGES IN NORMAL CROWN

WELD TABLE

Material Thickness of Thicker Part Joined (Inches)	Minimum Size of Fillet Weld (Inches)	Single Pass Weld Must Be Used
To ¾" Inclusive	⅛"	
Over ¾"	3/16"	

NOTE: When a fillet weld size, as shown on the plans, is larger than the minimum, the first pass shall be that specified for minimum size of fillet weld.

SECTION AND SUBSECTION REFER TO THE ARKANSAS STATE HIGHWAY AND TRANSPORTATION DEPARTMENT STANDARD SPECIFICATIONS FOR HIGHWAY CONSTRUCTION (2014 EDITION).

THESE DETAILS ARE APPLICABLE UNLESS OTHERWISE SHOWN IN THE PLAN DETAILS, SPECIAL PROVISIONS, OR SUPPLEMENTAL SPECIFICATIONS.

STANDARD DETAILS FOR STEEL BRIDGE STRUCTURES

ARKANSAS STATE HIGHWAY COMMISSION

LITTLE ROCK, ARK.

DRAWN BY: JYP DATE: 2/11/2016 FILENAME: b55007.dgn
CHECKED BY: AMS DATE: 2/11/2016 SCALE: No Scale
DESIGNED BY: STD. DATE: —

DRAWING NO. 55007

DATE REVISED	DATE FILMED	DATE REVISED	DATE FILMED	FED. ROAD DIST. NO.	STATE	FED. AID PROJ. NO.	SHEET NO.	TOTAL SHEETS
				6	ARK.			
				JOB NO.				
				①	POURED SILICONE JOINT			55008

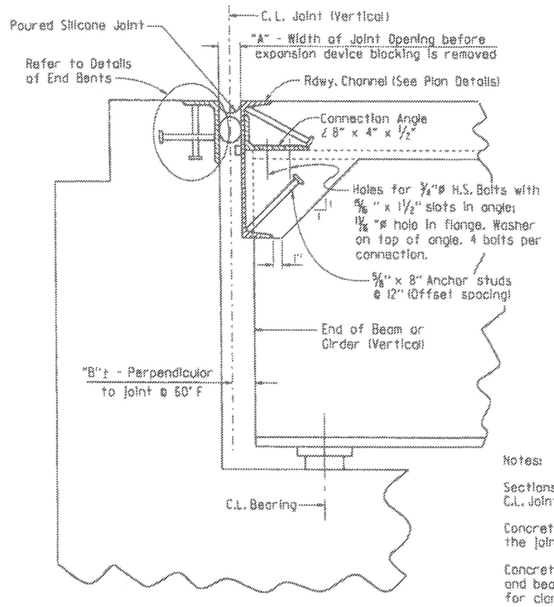

SECTION THRU JOINT AT END BENT

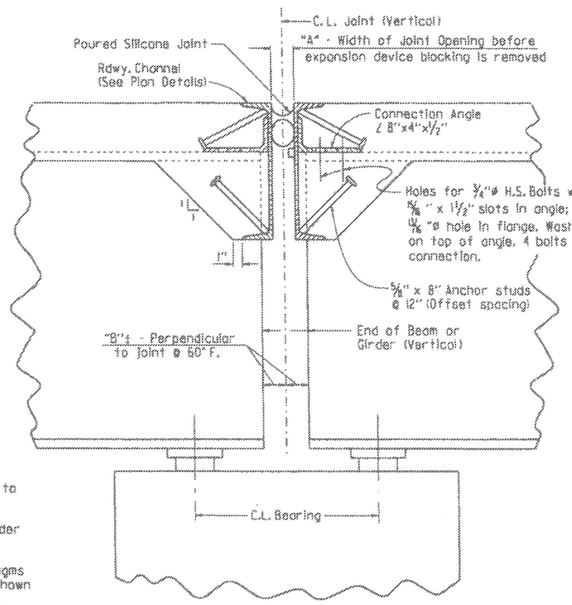

Notes:

Sections are taken perpendicular to C.L. Joint.

Concrete shall be hand packed under the joint armor.

Concrete diaphragms, steel diaphragms and bearing stiffeners are not shown for clarity. See plans for details.

SECTION THRU JOINT AT INTERMEDIATE BENT

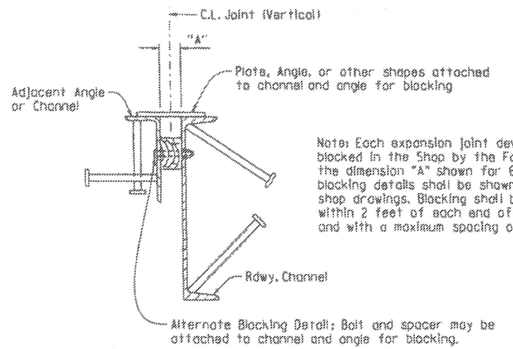

Note: Each expansion joint device shall be blocked in the Shop by the Fabricator to the dimension "A" shown for 60° F and the blocking details shall be shown on the shop drawings. Blocking shall be placed within 2 feet of each end of the device and with a maximum spacing of 8 feet.

DETAILS FOR BLOCKING EXPANSION JOINT DEVICE

EXPANSION DEVICE INSTALLATION AT END BENTS:

The Contractor may elect to install the expansion device using one of the following two alternatives:

1) The concrete span pour adjacent to joint shall be placed before the end bent backwall is placed. After the end bent backwall forms are in place and the beams or girders erected, the blocked expansion device shall be installed and adjusted for grade. All connection bolts shall be fully tightened prior to placing the deck concrete adjacent to the bent. Immediately prior to pouring the backwall concrete, the blocking shall be removed, and the opening adjusted for temperature and grade.

2) The backwall shall be poured to the optional construction joint after beams or girders are erected. The blocked expansion device shall be installed and adjusted for grade. All connection bolts shall be fully tightened prior to placing the deck concrete adjacent to the bent. Immediately prior to pouring the remainder of the backwall concrete, the blocking shall be removed and the opening adjusted for temperature and grade.

EXPANSION DEVICE INSTALLATION AT INTERMEDIATE BENTS:

After all beams or girders on each side of the joint are erected the blocked expansion device shall be installed and adjusted for grade. Deck concrete shall be placed for the entire unit or span on one side of the joint before deck concrete on the other side is placed. Connection bolts for the first side to have deck concrete placed shall be completely bolted. Bolts on the other side shall be loosely installed so that thermal and rotational movements will not be restricted during concrete placement on the first side.

Connection bolts on the second side shall remain loose until the concrete pour adjacent to the joint is to be placed. Immediately prior to pouring the span concrete on the second side, the blocking shall be removed, the joint adjusted for temperature and grade, and the connection bolts tightened.

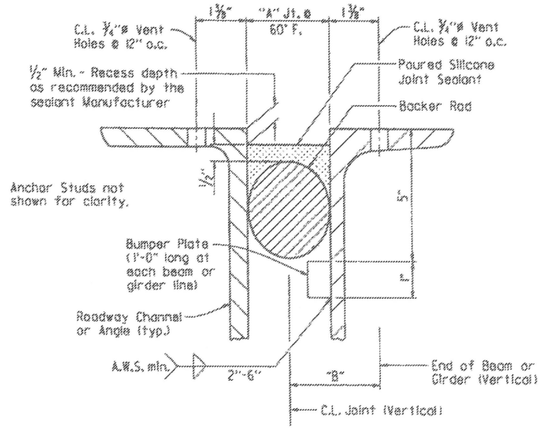

DETAIL OF POURED SILICONE JOINT

Silicone joint material and installation shall conform to Section 809. The temperature limitations recommended by the sealant Manufacturer shall be observed. The sealant shall be installed only when the average 24 hour air temperature is between 40° and 80° F.

Use an appropriately sized backer rod at the depth shown in the Manufacturer's literature based on the joint width at the time of sealing. Unless otherwise noted, do not install more backer rod than can be sealed in the same day.

The Contractor shall verify separation of the backer rod from the joint material after the joint material has set.

When bridge deck is constructed in stages, backer rods shall be extended beyond length of poured joint in initial construction stage so that the two pieces can be properly spliced together prior to installing sealant in subsequent stages. Manufacturer's recommendations shall be followed to prevent sealant from "running out of joint" during stage construction.

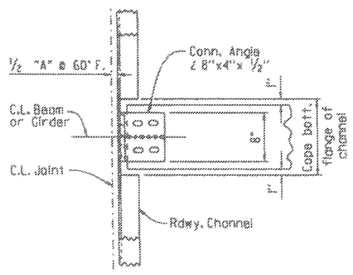

CHANNEL CONNECTION DETAIL

BENTS WITHOUT SKEW

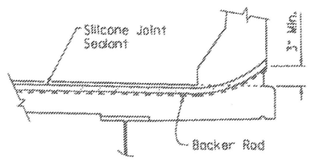

JOINT SEAL PLACEMENT AT RAIL

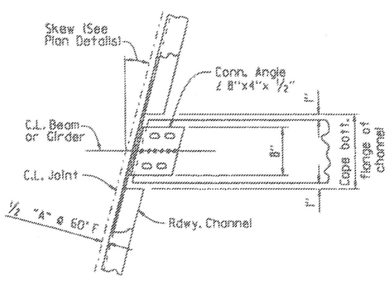

CHANNEL CONNECTION DETAIL

BENTS WITH SKEW

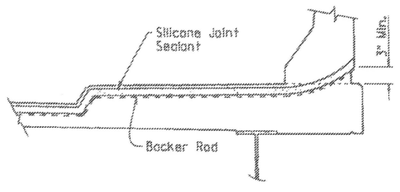

JOINT SEAL PLACEMENT AT SIDEWALK

SECTION AND SUBSECTION REFER TO THE ARKANSAS STATE HIGHWAY AND TRANSPORTATION DEPARTMENT STANDARD SPECIFICATIONS FOR HIGHWAY CONSTRUCTION (2014 EDITION).

THESE DETAILS ARE APPLICABLE UNLESS OTHERWISE SHOWN IN THE PLAN DETAILS, SPECIAL PROVISIONS, OR SUPPLEMENTAL SPECIFICATIONS. SEE "TABLE OF SILICONE JOINT DATA" IN PLAN DETAILS FOR VARIABLES "A" AND "B", AND BUMPER PLATE SIZE.

STANDARD DETAILS FOR POURED SILICONE JOINTS

ARKANSAS STATE HIGHWAY COMMISSION

LITTLE ROCK, ARK.

DRAWN BY: A.C.P. DATE: 2/11/2016 FILENAME: b55008.dgn

CHECKED BY: A.M.S. DATE: 2/11/2016 SCALE: No Scale

DESIGNED BY: S.T.D. DATE: ---

DRAWING NO. 55008

DATE REVISED	DATE FILMED	DATE REVISED	DATE FILMED
12-1-14		1-15-19	
1-14-15			
1-17-17			

FED. ROAD DIST. NO.	STATE	FED. AID PROJ. NO.	SHEET NO.	TOTAL SHEETS
6	ARK.			
JOB NO.				

① TYPE D NAME PLATE 55010

The name of the bridge as shown on the plans shall be placed on Lines 1 - 3 using 1/8" raised letters and numerals 3/8" high.

	Example 1	Example 2	Example 3	Example 4
Line 1	Red River	Southern	Saline	
Line 2	Relief	Railroad	River	Highway 5
Line 3		Overpass	Relief	

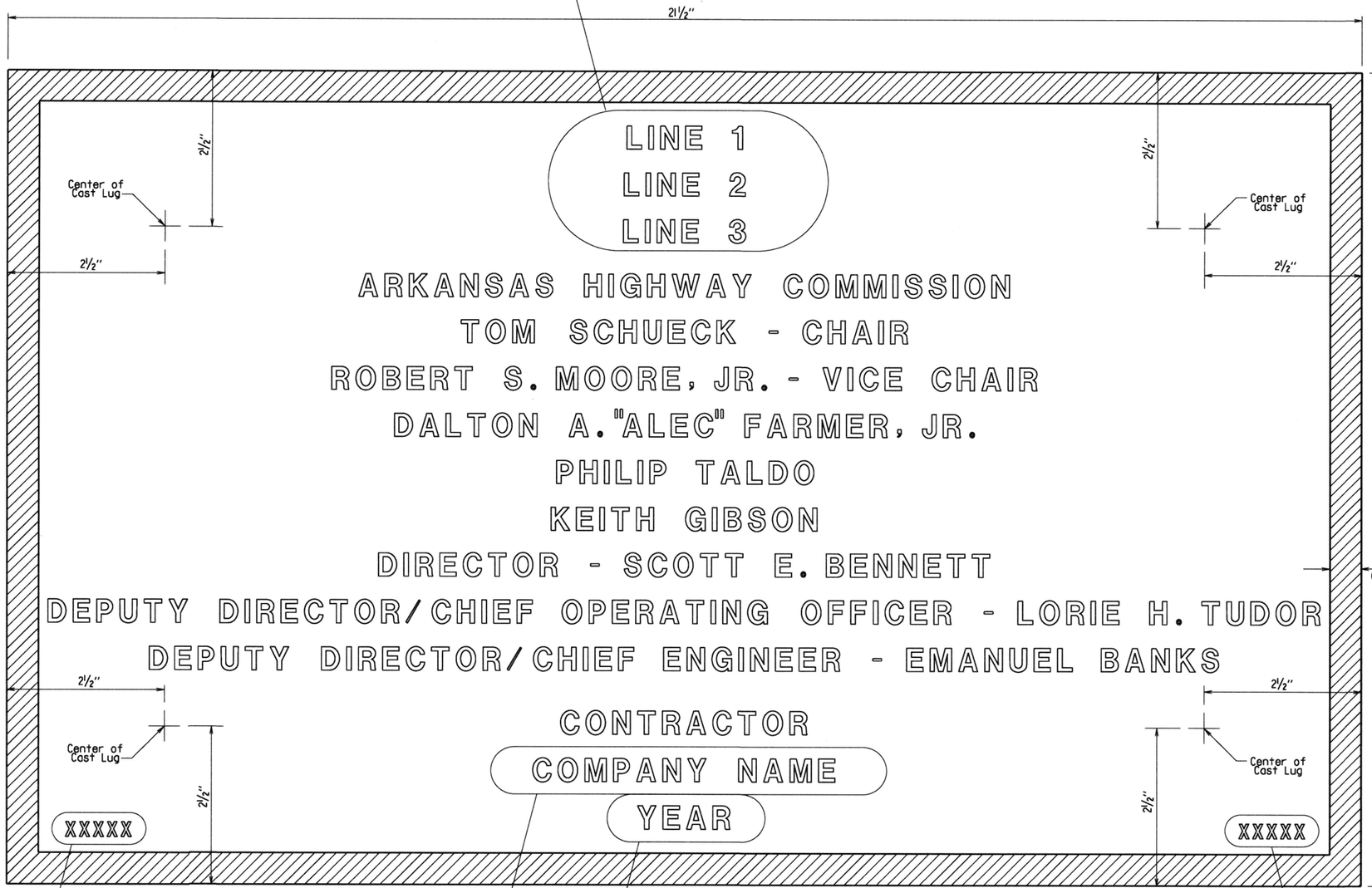

Place the design live loading here using 1/8" raised letters and numerals 1/4" high. Examples : HS 20
HL-93

Place the Year in which Contract was awarded here using 1/8" raised numerals 3/8" high. Example : 2001

Place the name of the company awarded the construction contract here using 1/8" raised letters and numerals 3/8" high. Example : ABCD CONSTRUCTION, INC.

Place the Bridge number here using 1/8" raised letters and numerals 1/4" high. Examples : A1234
05432

TYPICAL BRIDGE NAME PLATE

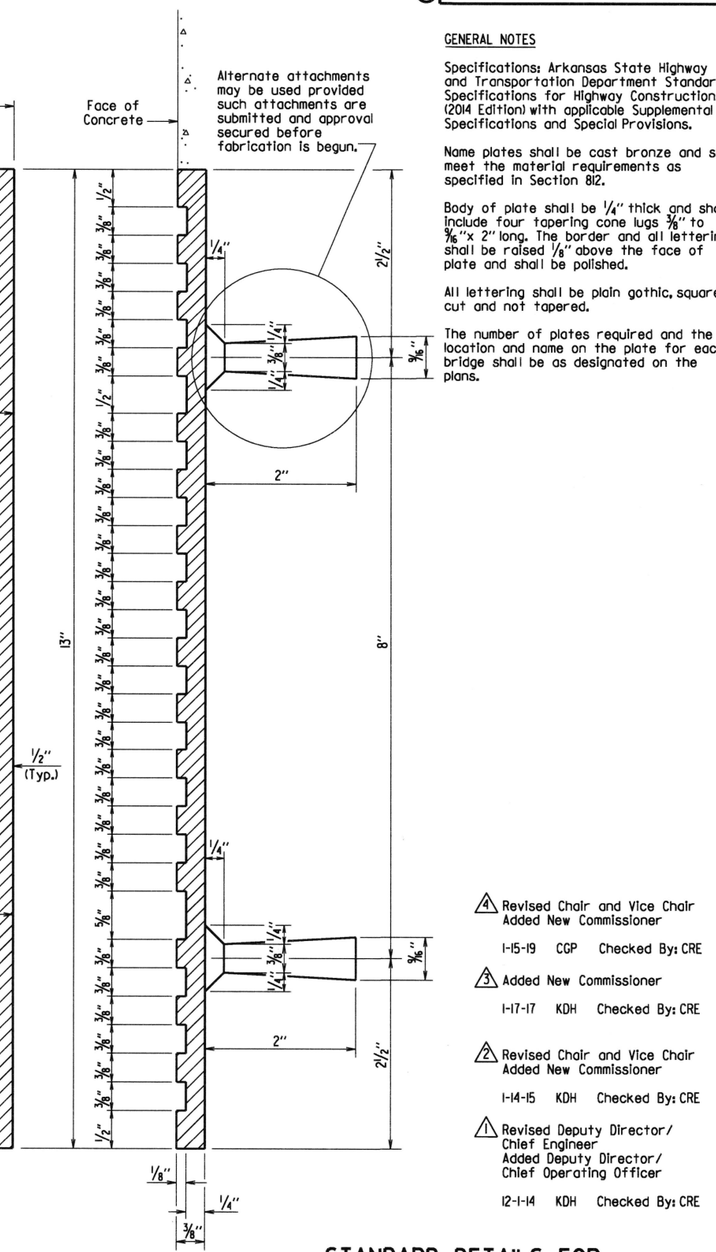

GENERAL NOTES

Specifications: Arkansas State Highway and Transportation Department Standard Specifications for Highway Construction, (2014 Edition) with applicable Supplemental Specifications and Special Provisions.

Name plates shall be cast bronze and shall meet the material requirements as specified in Section 812.

Body of plate shall be 1/4" thick and shall include four tapering cone lugs 3/8" to 9/16"x 2" long. The border and all lettering shall be raised 1/8" above the face of plate and shall be polished.

All lettering shall be plain gothic, square cut and not tapered.

The number of plates required and the location and name on the plate for each bridge shall be as designated on the plans.

④ Revised Chair and Vice Chair
Added New Commissioner
1-15-19 CGP Checked By: CRE

③ Added New Commissioner
1-17-17 KDH Checked By: CRE

② Revised Chair and Vice Chair
Added New Commissioner
1-14-15 KDH Checked By: CRE

① Revised Deputy Director/
Chief Engineer
Added Deputy Director/
Chief Operating Officer
12-1-14 KDH Checked By: CRE

STANDARD DETAILS FOR TYPE D BRIDGE NAME PLATE

ARKANSAS STATE HIGHWAY COMMISSION
LITTLE ROCK, ARK.

DRAWN BY: KDH DATE: 2-27-2014 FILENAME: b55010.dgn
CHECKED BY: BEF DATE: 2-27-2014 SCALE: NO SCALE
DESIGNED BY: STD. DATE: —

DRAWING NO. 55010

DATE REVISED	DATE FILMED	DATE REVISED	DATE FILMED	FED. ROAD DIST. NO.	STATE	FED. AID PROJ. NO.	SHEET NO.	TOTAL SHEETS
3/24/16				8	ARK.			
				JOB NO.				
				①		STEEL H-PILES		55020

GENERAL NOTES FOR STEEL H-PILES:

Steel H-Piles shall conform to AASHTO M 270, Grade 36 or greater.

See Bridge Layout and Bent Details for pile size, estimated length, spacing, pile anchorage (if required) and for driving information.

Steel H-Piles that extend above the ground and are not protected by pile encasement shall be painted in accordance with Subsection 805.02.

Brackets, lugs, cap plates, pile tips, driving points, pile painting, splicing and welding shall not be paid for directly, but shall be considered subsidiary to the item "Steel Piling".

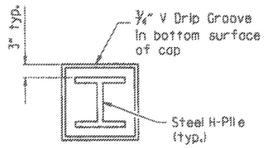

VIEW X-X

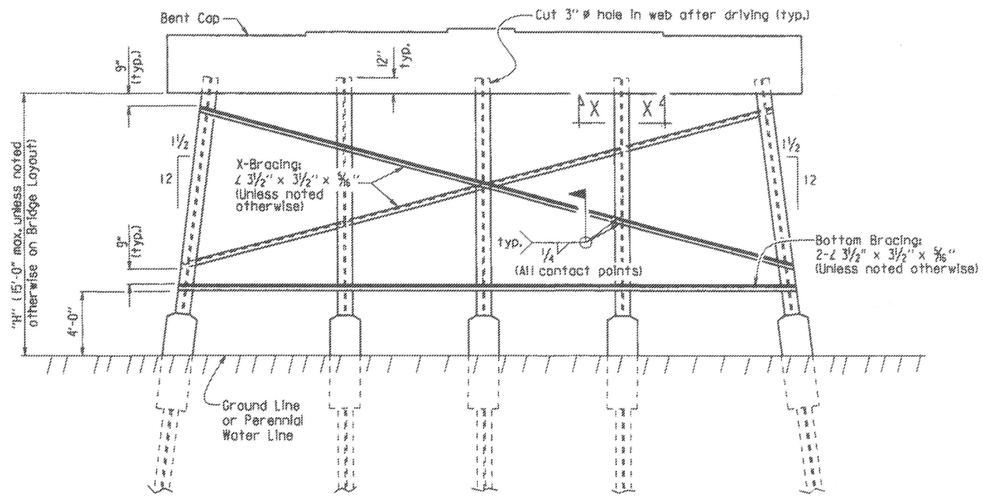

Notes:
All bracing shall be cut and welded in the field. Each brace shall be furnished in one piece. Payment shall be made under Item 807.

Unless noted otherwise, omit X-Bracing when "H" is less than 8 feet.

Omit X-Bracing and Bottom Bracing when "H" is 5 feet or less.

When required on the Bridge Layout sheet, pile encasements shall be constructed. See Notes and Details for H-Pile Encasements.

Omit all bracing (and V-groove in cap) when pile encasement is extended to bottom of bent cap.

TYPICAL DETAILS OF H-PILE TRESTLE INTERMEDIATE BENT

(Shown with Partial Height Encasement)

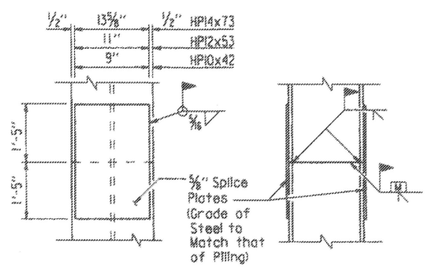

The Contractor may for his own convenience and at his own expense provide as many as three splices per pile. Minimum spacing between splices shall be 5 feet.

TYPICAL SPLICE DETAILS

⚠ H-pile splicers manufactured by Associated Pile and Fitting Corporation, LB Foster Piling, Skyline Steel or equivalent may be used in lieu of the "Typical Splice Details" shown. H-pile splicers shall match the same grade of steel specified for the piling and shall be welded to the pile with a 5/16" fillet weld around the entire perimeter of the splice. Flanges shall be welded with a complete penetration groove weld complying with AASHTO/AWS Joint Designation B-U4a or B-U4b. All welding shall conform to Subsection 807.26 of the AHTD Standard Specifications for Highway Construction (2014 Edition).

Notes:
Steel pile tip reinforcing not required when approved H-Pile driving points are used.

Steel pile tip reinforcing shall not be paid for directly, but shall be considered subsidiary to the item "Steel Piling".

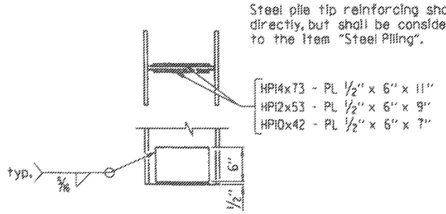

REINFORCING DETAIL FOR STEEL H-PILE TIP

GENERAL NOTES FOR H-PILE ENCASEMENTS:

⚠ See Bridge Layout for additional notes, any pile encasement restrictions and required location of pile encasements.

All concrete shall be Class S with a minimum 28-day compressive strength, f'c = 3,500 psi. If concrete cannot be placed in the dry, Seal Concrete may be used from top to bottom of encasement.

Reinforcing steel shall be Grade 60 conforming to AASHTO M 31 or M 322, Type A.

Welded Wire Fabric shall conform to AASHTO M 55 or M 221. Galvanized Corrugated Steel Pipe shall conform to AASHTO M 36 and M 218.

Concrete, welded wire fabric or reinforcing steel and galvanized pipe shall not be paid for directly, but shall be considered subsidiary to the item "Pile Encasement".

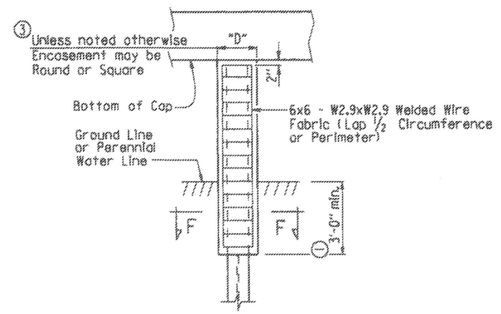

PILE ENCASEMENT DETAIL FOR STEEL H-PILES

④ (Shown with Encasement to Bottom of Cap)

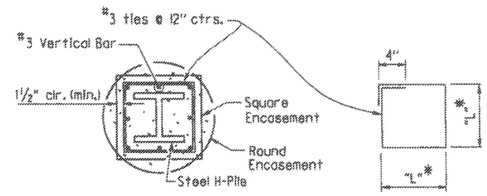

SECTION F-F

*Measured out-to-out of bar.

TABLE OF VARIABLES FOR PILE ENCASEMENT

Pile Size	"D" Square Encsmt.	"D" Round Encsmt.	"L"*
HP10x42	1'-7"	2'-0"	1'-4"
HP12x53	1'-8"	2'-2"	1'-5"
HP14x73	1'-11"	2'-6"	1'-8"

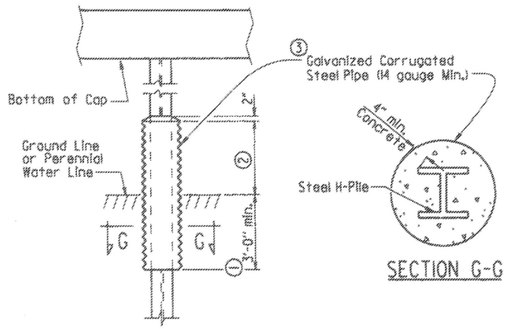

SECTION G-G

① Unless otherwise noted on Bridge Layout.

② 3'-0" minimum or as shown on Bridge Layout.

③ Encasement dimensions shall be sized to maintain a minimum concrete cover of 4" from the H-Pile. Reinforcement shall be sized to provide a minimum concrete cover of 1½" and a minimum clearance of 1¼" from the pile.

④ Alternate pile encasement, when not extended to bottom of cap, shall have 2" concrete taper for water runoff as shown in the Partial Height Encasement detail.

ALTERNATE PILE ENCASEMENT DETAIL FOR STEEL H-PILES

(Shown with Partial Height Encasement)

⚠ Added alternate method of splicing H-piles and revised pile encasement note. 3/24/2016 AMS

This document was originally issued and sealed by Charles R. Ellis, PE No. 9235, on March 24, 2016. This copy is not a signed and sealed document.

STATE OF ARKANSAS
REGISTERED PROFESSIONAL ENGINEER
No. 9235
CHARLES R. ELLIS

BRIDGE ENGINEER

STANDARD DETAILS FOR STEEL H-PILES AND PILE ENCASEMENTS

ARKANSAS STATE HIGHWAY COMMISSION

LITTLE ROCK, ARK.

DRAWN BY: A.M.S. DATE: 2/27/2014 FILENAME: b55020.dgn
CHECKED BY: B.E.F. DATE: 2/27/2014 SCALE: NO SCALE
DESIGNED BY: STD. DATE: —

DRAWING NO. 55020

DATE REVISED	DATE FILMED	DATE REVISED	DATE FILMED	FED. ROAD DIST. NO.	STATE	FED. AID PROJ. NO.	SHEET NO.	TOTAL SHEETS
				6	ARK.			
				JOB NO.				
				TEMP. BRIDGE		55054		

Note: Post spacing shown to be used for all guard rail types.

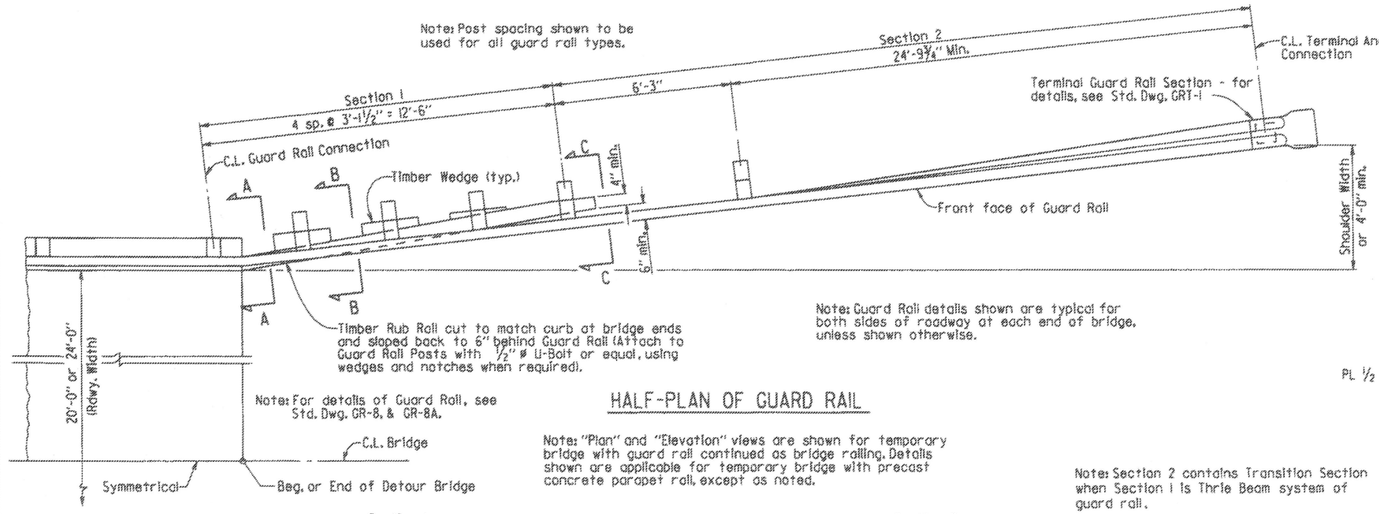

Note: For details of Guard Rail, see Std. Dwg. GR-8, & GR-8A.

HALF-PLAN OF GUARD RAIL

Note: Guard Rail details shown are typical for both sides of roadway at each end of bridge, unless shown otherwise.

Note: "Plan" and "Elevation" views are shown for temporary bridge with guard rail continued as bridge railing. Details shown are applicable for temporary bridge with precast concrete parapet rail, except as noted.

Note: Section 2 contains Transition Section when Section 1 is Thrie Beam system of guard rail.

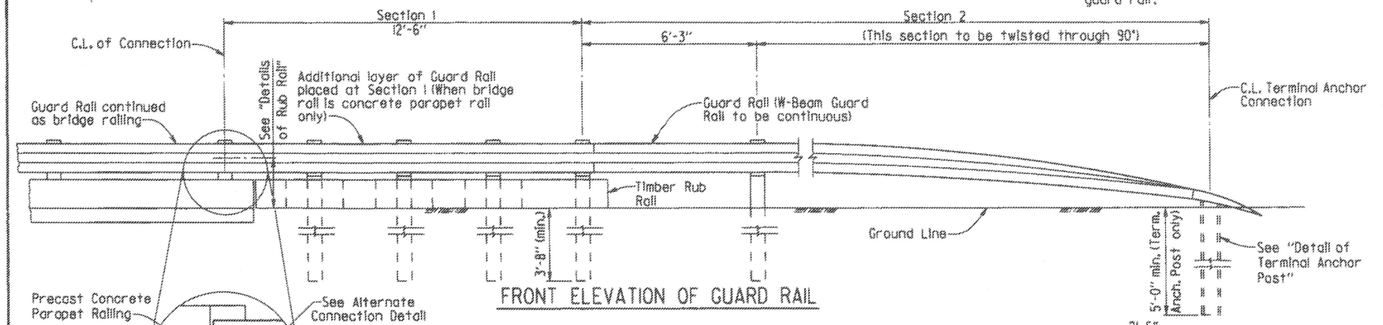

FRONT ELEVATION OF GUARD RAIL

Note: For details of Thrie Beam system of guard rail, see Std. Dwg. GR-10 & GR-10A. Thrie Beam rail and five bolt connection as shown on GR-10 are required when precast rail has five cast holes for guard rail connection.

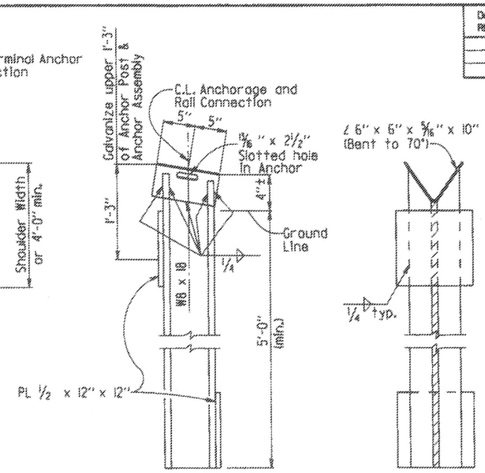

Note: Post shall be driven or set in dug hole and compacted.

DETAILS OF TERMINAL ANCHOR POST

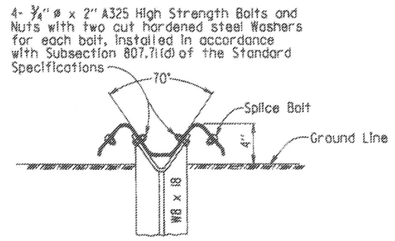

DETAILS OF TERMINAL ANCHOR CONNECTION

GENERAL NOTES

Bridge End Protection is required on both sides of roadway at both ends of temporary bridge. The end protection system shall consist of a minimum of two end sections (Section 1 and Section 2). If additional guard rail is used, it shall be placed in Section 2 and shall have a maximum post spacing of 6'-3".

If W-Beam Guard Rail is also used as Bridge Rail, it shall be continuous from terminal anchor post to terminal anchor post with splices as shown on Std. Drwg. GR-8.

A doubled guard rail beam section (One W-Beam Rail section or one Thrie Beam Rail section nested inside the other) shall be required for Section 1 if the guard rail is not continued as bridge rail, but connects directly to a precast concrete parapet bridge rail end.

Rub rails shown in Section 1 are representative of members required to transition the curb or wheel guard section to a minimum distance behind the face of guard rail.

Timber rub rail, regardless of species, must be of equal or better strength than no. 2 southern pine or douglas fir, graded by the standard grading rules. All timber widths and thicknesses are shown as nominal.

Except as noted, bolts shall conform to the requirements of ASTM A 307 and minimum dimensions as shown. Malleable or cast iron washers to be used under all bolt heads and nuts bearing on timber. High strength bolts shall conform to Section 807.

Guard rail as described in Subsection 617.01 of the Standard Specifications and these plans shall be constructed in accordance with Subsection 617.03. Subsection 617.02 is modified to allow the use of materials consistent with the requirements of Section 603.

Payment: The bridge end protection system completed and accepted will not be paid for directly, but shall be included in the contract unit price bid per linear foot for temporary bridge structure, which price shall be full compensation for furnishing materials and erecting guard rail, line posts, blackouts, rub rails, terminal anchor posts, etc.; and for all labor, tools, equipment and incidentals necessary to complete the work.

GUARD RAIL CONNECTION COMBINATIONS

BRIDGE RAIL TYPE	GUARD RAIL AND CONNECTION TYPE
Guard Rail continued as bridge railing	W-Beam Guard Rail. See Std. Drwg. GR-8 for splice details.
Concrete Parapet with 12½" x 14" x 3⅜" notch and two cast in holes	W-Beam Guard Rail fastened with two high-strength bolts as shown; blunt end on guard rail. Guard Rail doubled at Section 1.
Concrete Parapet with Concrete Insert Anchor assembly (4-Bolt embedded Anchor) flush with rail face	W-Beam Guard Rail fastened with four high-strength bolts; Special End Shoe. Guard Rail doubled at Section 1.
Concrete Parapet with 5 cast in holes	Thrie Beam Guard Rail; five high-strength through bolts with back-up plate; special end shoe as shown on Std. Dwg. GR-10. Guard Rail doubled at Section 1. Section 2 contains transitional rail and W-Beam Guard Rail.

** Two ¾" ø H.S. Bolts are required. Use 7" x 2½" x ⅜" washer with two ⅞" ø holes against back of parapet and on roadway face of guard rail (Bend to fit guard rail) with 1½" o.d. steel washer under heads and nuts (Clipped to 1⅝" x 1½" at nuts).

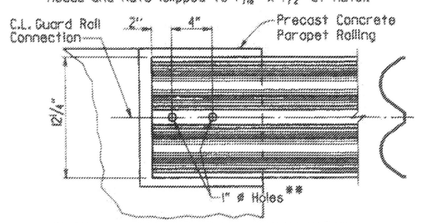

W-BEAM GUARD RAIL CONNECTION AT CONCRETE PARAPET RAIL

Note: This guard rail connection will only be allowed on precast concrete parapet rail units with a 12½" x 14" x 3⅜" notch at the end of the unit for connection of guard rails.

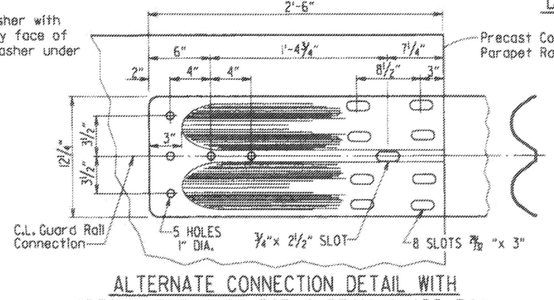

ALTERNATE CONNECTION DETAIL WITH SPECIAL END SHOE FOR W-BEAM GUARD RAIL CONNECTION AT CONCRETE PARAPET RAIL

Note: Special End Shoe and four ⅞" ø x 2½" H.S. Bolts are required when concrete insert anchor assembly is present in precast rail unit.

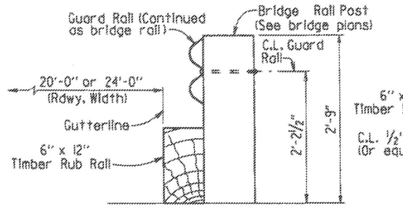

(SECTION A-A)

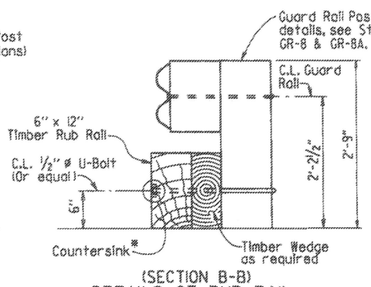

(SECTION B-B)

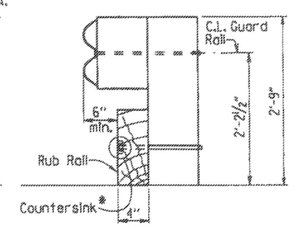

(SECTION C-C)

DETAILS OF RUB RAIL (CONTINUOUS W-BEAM RAIL)

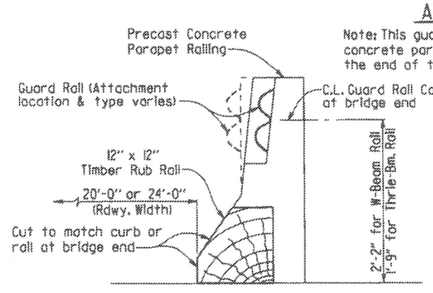

(SECTION A-A)

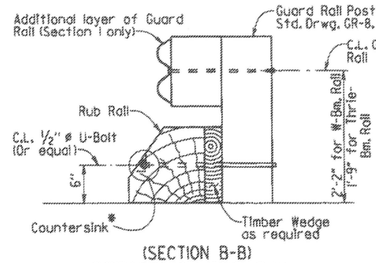

(SECTION B-B)

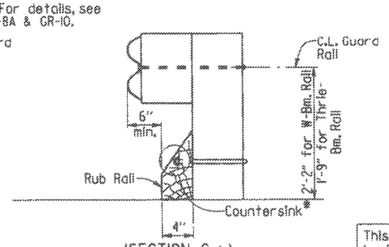

(SECTION C-L)

DETAILS OF RUB RAIL (CONC. PARAPET BRIDGE RAIL)

* U-Bolt Assembly, or equal, shall not project beyond rdwy. face of Rub Rail at any location.

This document was originally issued and sealed by Carl J. Fuselier, PE No. 7510, on April 17, 2014. This copy is not a signed and sealed document.

STATE OF ARKANSAS
REGISTERED PROFESSIONAL ENGINEER
No. 7510
CARL J. FUSELIER

BRIDGE ENGINEER

STANDARD DETAILS FOR TEMPORARY BRIDGE STRUCTURE BRIDGE END PROTECTION SYSTEM

ROUTE SEC.

ARKANSAS STATE HIGHWAY COMMISSION

LITTLE ROCK, ARK.

DRAWN BY: JYP DATE: 4-17-14 FILENAME: b55054.dgn

CHECKED BY: AMS DATE: 4-17-14 SCALE: No Scale

DESIGNED BY: STD. DATE: ------

DRAWING NO. 55054

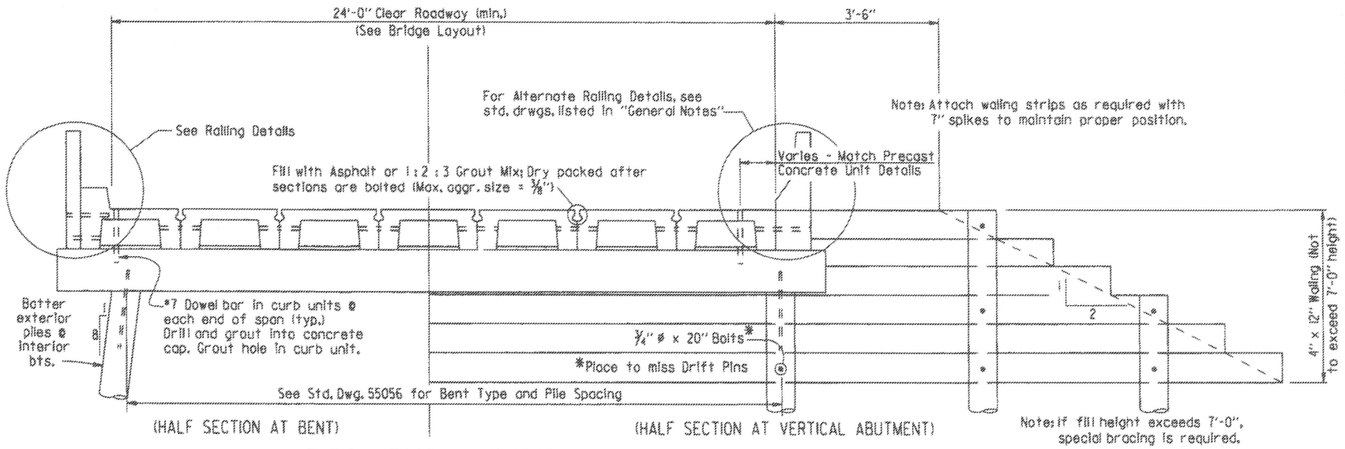

TYPICAL ROADWAY SECTION

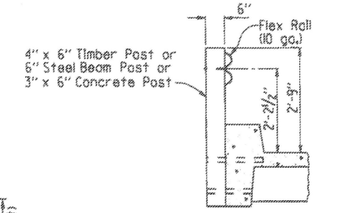

RAILING DETAILS

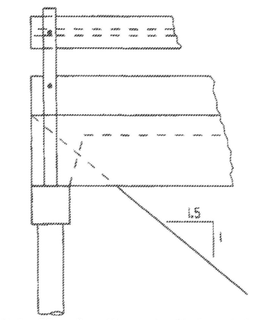

Note: Piles for Alternate Abutment to be driven after embankment is in place.

ALTERNATE SPILL-THRU ABUTMENT

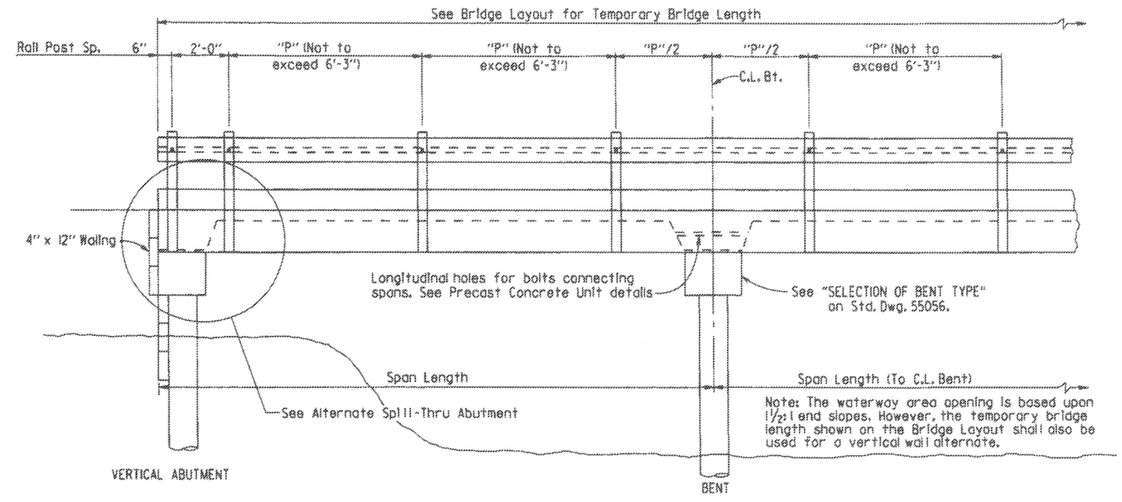

LONGITUDINAL SECTION

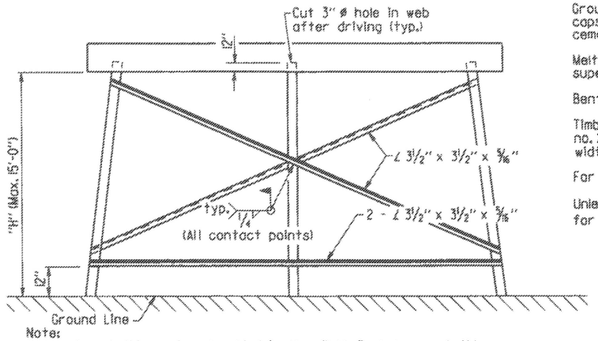

Note:
All bracing shall be cut and welded in the field. Each brace shall be furnished in one piece. Payment for any bracing required shall be considered incidental to Item 603 "Temporary Bridge Structure".

Omit bottom bracing when "H" is less than 10'. Omit all bracing when "H" is less than 5'. When "H" exceeds 15', additional X-bracing is required to provide a maximum unbraced pile length of 14'.

DETAILS OF BRACING FOR STEEL PILES

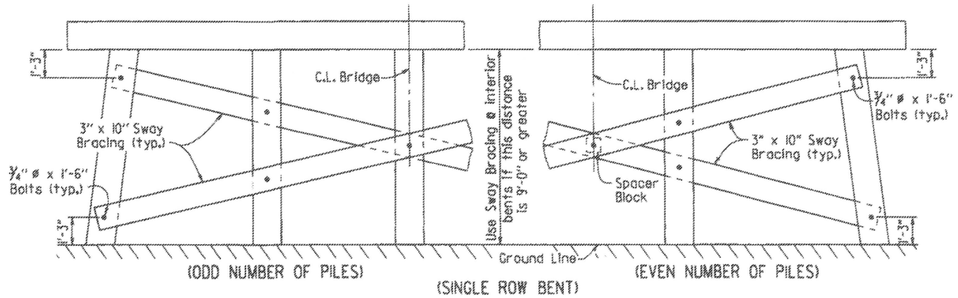

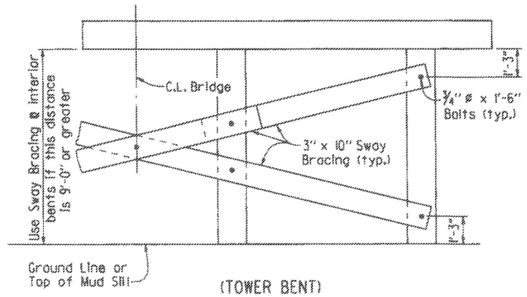

DETAILS OF SWAY BRACING FOR TIMBER PILES

Note: Sway Bracing, if required, shall be used on both lines of piles for Tower Bents.

DATE REVISED	DATE FILMED	DATE REVISED	DATE FILMED	FED. ROAD DIST. NO.	STATE	FED. AID PROJ. NO.	SHEET NO.	TOTAL SHEETS
				6	ARK.			
				JOB NO.				

GENERAL NOTES (1) TEMP. BRIDGE 55055

DESIGN SPECIFICATIONS: AASHTO Standard Specifications for Highway Bridges, 2002 Edition, with current interim specifications.

CONSTRUCTION SPECIFICATIONS: Arkansas State Highway and Transportation Department Standard Specifications for Highway Construction, 2014 Edition, with applicable special provisions and supplemental specifications.

SEISMIC PERFORMANCE ZONE: 1

DESIGN LIVE LOADS: H 15-44 (No Overload).

DESIGN DEAD LOADS: 50 lbs. per cu. ft. for lumber
150 lbs. per cu. ft. for concrete

Precast Concrete Units shall comply with the requirements of AHTD standard drawings and special provisions. Drawings for old style units are within the drawing series 5291 thru 5307 and 14800 thru 14899. New style units (Current Design) are within the drawing series 15190 thru 15400.

Load Factor Design is used for the new style precast concrete units. Allowable Stress Design is used for the old style precast concrete units and timber components. The allowable unit stresses used assume normal duration of loading for stress grades of sawn lumber and are as follows:

fb=1200 psi
fv=85 psi

Concrete shall be Class S with a minimum 28 day compressive strength f'c = 3500 psi unless otherwise noted.

All reinforcing steel shall be Grade 60 (yield strength = 60,000 psi) conforming to AASHTO M31 or M322, Type A, with mill test reports.

Structural Steel shall be AASHTO M 270, Grade 36 unless otherwise noted.

Timber piling shall comply with Section 818 of the Standard Specifications and shall be driven to a minimum bearing capacity of 20 tons per pile. Steel piling shall be HP12x53 and shall be driven to a minimum bearing capacity of 44 tons per pile.

Malleable or cast iron washers shall be used under all bolt heads and nuts bearing on timber. Standard washers shall be provided under all bolt heads and nuts in connection with concrete.

Bolts shall conform to the requirements of ASTM A 307. ASTM A 307 Threaded Rods may be used in lieu of bolts. Minimum dimensions are shown for bolts, dowels, and drift pins.

Grout placed around Drift Pins in piles shall be allowed to cure for 72 hours before caps are used to support the superstructure. Grout to consist of one part portland cement to two parts sand.

Melted sulfur may be used in lieu of grout placed around drift pins. The superstructure may be placed as soon as the sulfur has hardened.

Bent caps to be handled from points approximately 5' from the ends.

Timber material, regardless of species, must be of equal or better strength than no. 2 southern pine or douglas fir, graded by the standard grading rules. All timber widths and thicknesses are shown as nominal.

For additional notes concerning "Bridge End Protection System", see Std. Dwg. 55054.

Unless otherwise noted, the Temporary Bridge Structure shall comply with and be paid for in accordance with Section 603.

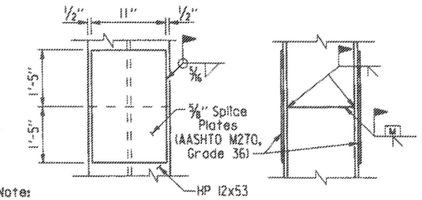

Note:
The Contractor may for his own convenience and at his own expense provide as many as three splices per pile for steel bearing piling. Minimum spacing between splices shall be 5 ft. A proprietary steel pile splicer sufficient to develop the full strength of the section may be substituted for the details shown. Pile splicers shall be installed in accordance with manufacturer's recommendations.

PILE SPLICE DETAIL

SHEET 1 OF 2

This document was originally issued and sealed by Carl J. Fuselier, PE No. 7510, on April 17, 2014. This copy is not a signed and sealed document.

STATE OF ARKANSAS
REGISTERED PROFESSIONAL ENGINEER
No. 7510
CARL J. FUSELIER

BRIDGE ENGINEER

STANDARD DETAILS FOR TEMPORARY BRIDGE STRUCTURE PRECAST CONCRETE SPANS 24' ROADWAY WIDTH

ROUTE SEC.

ARKANSAS STATE HIGHWAY COMMISSION
LITTLE ROCK, ARK.

DRAWN BY: JYP DATE: 4-17-14 FILENAME: b55055.dgn
CHECKED BY: AMS DATE: 4-17-14 SCALE: No Scale
DESIGNED BY: STD. DATE: ——

DRAWING NO. 55055

DATE REVISED	DATE FILMED	DATE REVISED	DATE FILMED	FED. ROAD DIST. NO.	STATE	FED. AID PROJ. NO.	SHEET NO.	TOTAL SHEETS
				6	ARK.			
				JOB NO.				
				①	TEMP. BRIDGE		55056	

Note: Reinforcing steel in cap shall be placed to not interfere with dowel bars.

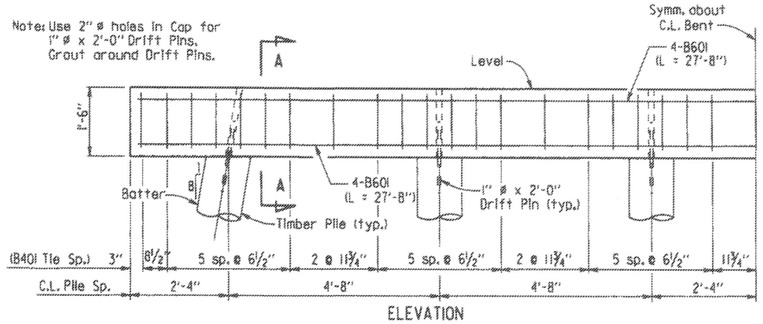

PRECAST CAP & TIMBER PILES
("S1" + "S2" ≤ 38')

"S" = Span Length

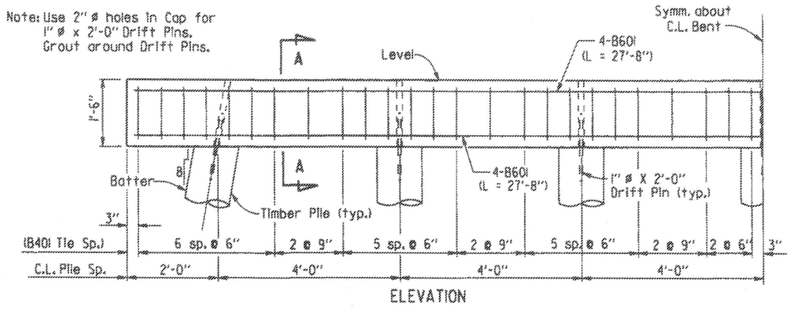

PRECAST CAP & TIMBER PILES
(38' < "S1" + "S2" ≤ 50')

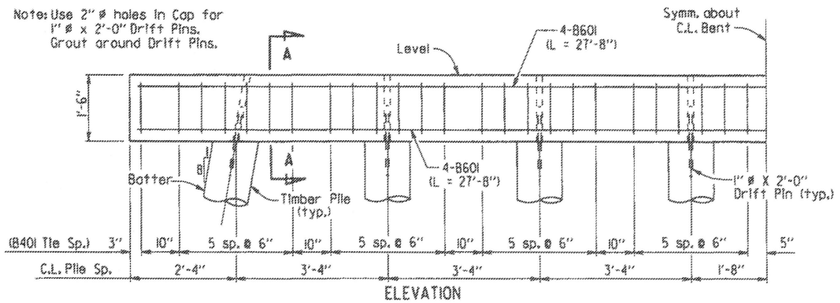

PRECAST CAP & TIMBER PILES
(50' < "S1" + "S2" ≤ 62')

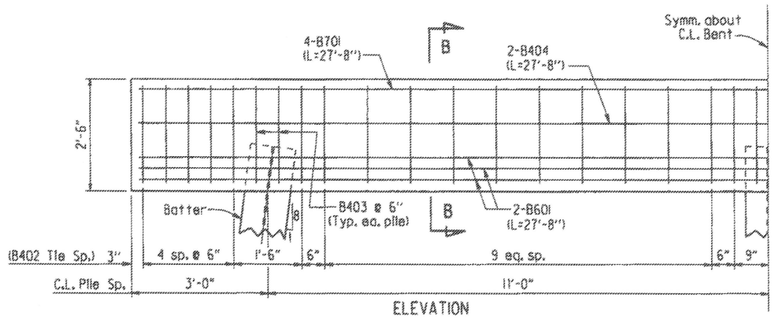

CAST IN PLACE CAP & HP 12X53 PILES

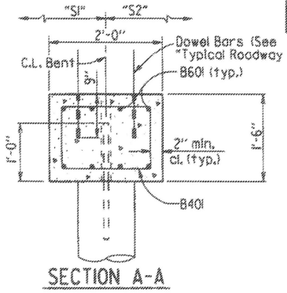

SECTION A-A

NOTE: THE ENDS OF ALL PRECAST SPANS SHALL BE FIXED TO THE CAP USING 1 DOWEL BAR IN EACH OF THE CURB UNITS.

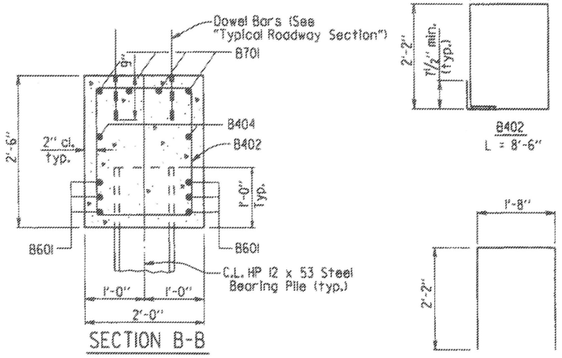

SECTION B-B

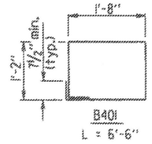

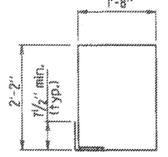

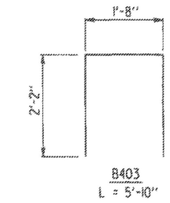

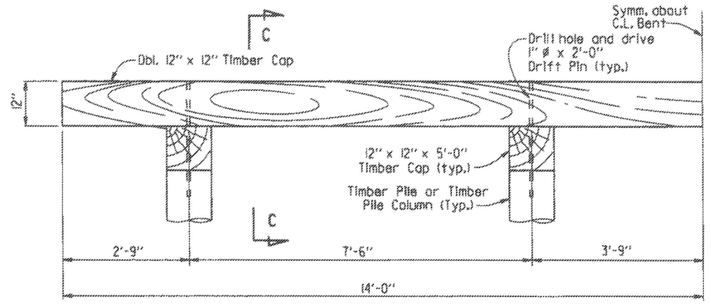

ELEVATION
TOWER BENT - TIMBER CAP & PILES

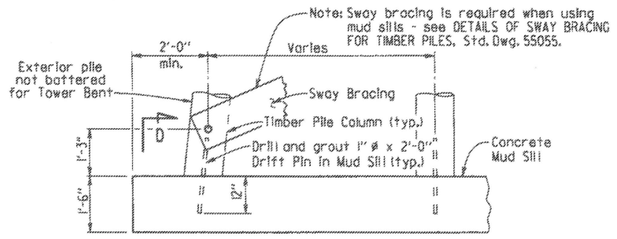

PART ELEVATION
MUD SILL DETAILS

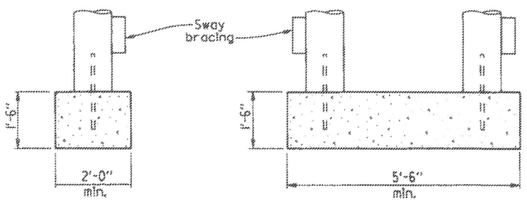

SECTION D-D
(When bottom of cap to top of mud sill is 10' or less)

SECTION D-D
(When bottom of cap to top of mud sill is greater than 10')

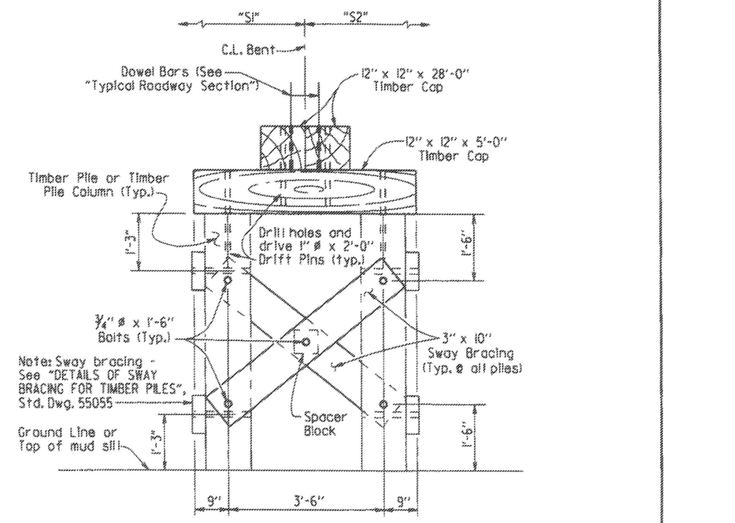

SECTION C-C

SELECTION OF BENT TYPES

These temporary bridge drawings provide the following bent types:
- Driven timber piles with precast concrete cap.
- Driven steel HP 12x53 piles with cast in place concrete cap.
- Tower bent with driven timber piles and timber cap.
- Mud sill with timber pile columns and precast concrete cap.
- Tower bent with mud sill and timber pile columns and timber cap.

Guidelines to be used in determining the appropriate bent type are:

1) Driven piles may be used at intermediate bents if a pile penetration of at least 15' below the ground line can be obtained. At end bents, a pile penetration of at least 5' below the bottom of cap is required. Pile penetration measurements at end bents can include embankment, but fill material may not be placed around intermediate bent piles in order to meet the 15' requirement.

2) If driven timber piles are used at intermediate bents and the distance from the bottom of cap to ground line exceeds 15' at any intermediate bent, tower bents must be used at the minimum rate of one tower bent for every 160' of total bridge length. Tower bent(s), when required, shall be placed at the bent location(s) having the greatest distance from bottom of cap to ground line.

3) If piles cannot be practically driven at a bent, mud sills shall be used. All soft and yielding material shall be removed from the bearing area before placing the sill concrete.

4) Timber piles shall be used as columns in mud sills. The column spacing shall be the same as that used for driven timber pile bents for the appropriate span lengths involved.

5) If a mud sill is to be used and the distance from the bottom of cap to ground line is more than 10', a tower bent with mud sill must be used at that location.

6) A timber cap may be used only if tower bents are used.

This document was originally issued and sealed by Carl J. Fuselier, PE No. 7510, on April 17, 2014. This copy is not a signed and sealed document.

STATE OF ARKANSAS
REGISTERED PROFESSIONAL ENGINEER
No. 7510
CARL J. FUSELIER

BRIDGE ENGINEER

SHEET 2 OF 2

STANDARD DETAILS FOR TEMPORARY BRIDGE STRUCTURE PRECAST CONCRETE SPANS 24' ROADWAY WIDTH

ROUTE SEC.

ARKANSAS STATE HIGHWAY COMMISSION

LITTLE ROCK, ARK.

DRAWN BY:	JYP	DATE:	4-17-14	FILENAME:	b55055.dgn
CHECKED BY:	AMS	DATE:	4-17-14	SCALE:	No Scale
DESIGNED BY:	STD.	DATE:			

DRAWING NO. 55056

REFER TO TABULATION OF QUANTITIES FOR "W" & "B" DIMENSIONS

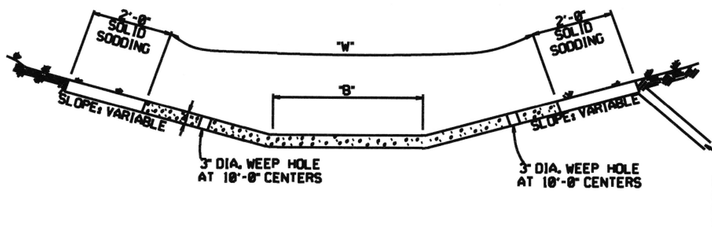

TYPE A

REFER TO TABULATION OF QUANTITIES FOR "W" DIMENSIONS

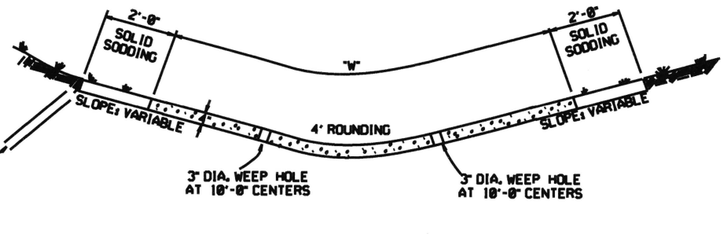

TYPE B

THE STEEL AND ADDITIONAL CONCRETE FOR THE WALLS SHALL NOT BE PAID FOR DIRECTLY, BUT SHALL BE CONSIDERED TO BE INCLUDED IN THE PRICE BID FOR "CONCRETE DITCH PAVING."

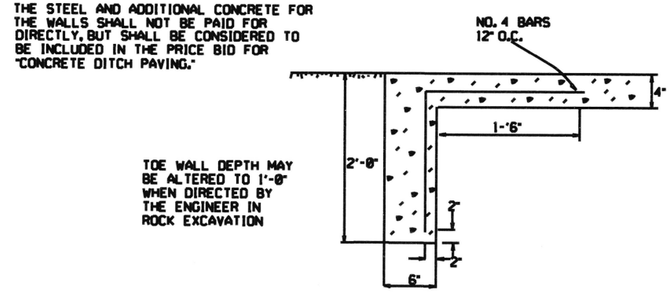

TOE WALL DETAIL FOR CONCRETE DITCH PAVING

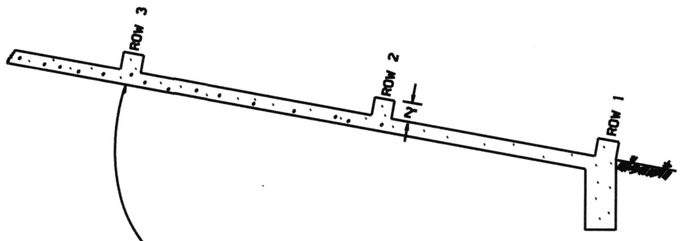

ENERGY DISSIPATORS
(NO SCALE)

ENERGY DISSIPATORS TO BE USED FOR THE ENTIRE LENGTH OF DITCH WHEN SLOPE OF DITCH PAVING EXCEEDS 7%. THE DISSIPATORS WILL NOT BE PAID FOR DIRECTLY, BUT SHALL BE CONSIDERED TO BE INCLUDED IN THE PRICE BID FOR CONCRETE DITCH PAVING.

GENERAL NOTES:

THE FULL WIDTH OF EACH SECTION SHALL BE POURED MONOLITHICALLY.

TOE WALLS TO BE CONSTRUCTED FULL WIDTH AT EACH END OF DITCH PAVING, AND POURED MONOLITHICALLY.

SOLID SOD ALONG DITCH PAVING TO BE PLACED WITHIN 14 DAYS OF DITCH PAVING CONSTRUCTION.

1" WIDE TRANSVERSE EXPANSION JOINTS SHALL BE PLACED IN CONCRETE DITCH PAVING AT 45' INTERVALS. THE SPACE SHALL BE FILLED WITH APPROVED JOINT FILLER COMPLYING WITH AASHTO M213.

DATE	REVISION	DATE FILM'D
12-8-16	CORRECTED ENERGY DISSIPATOR DRAWING AND NOTE	
11-17-10	ADDED GENERAL NOTE	
5-2-94	ADDED GENERAL NOTE ABOUT SOLID SODDING	
11-30-8	ELIMINATED MIN. ROWS OF ELEMENTS	111-30-89
7-15-88	REVISED DISSIPATOR NOTE	663-7-15-88
4-4-87	REVISED ENERGY DISSIPATOR	671-4-4-87
1-9-87	MODIFIED NOTE ON ENERGY DISS.	532-1-9-87
11-3-86	ADDED NOTE TO ENERGY DISS.	599-12-1-86
11-1-84	ENERGY DISSIPATOR DETAILS ADDED	508-11-1-84
11-1-84	EXCAVATION DETAILS ADDED TYPES A & B	
10-2-72	REVISED AND REDRAWN	508-10-2-72

ARKANSAS STATE HIGHWAY COMMISSION

CONCRETE DITCH PAVING

STANDARD DRAWING CDP-1

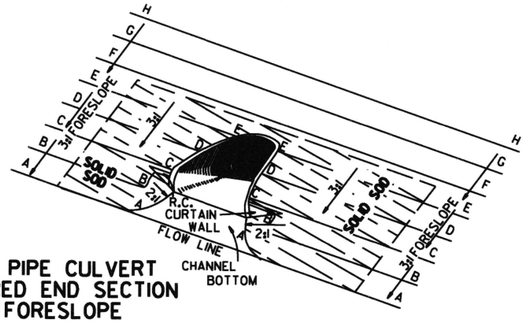

TYPICAL PIPE CULVERT
WITH FLARED END SECTION
& 3:1 FORESLOPE

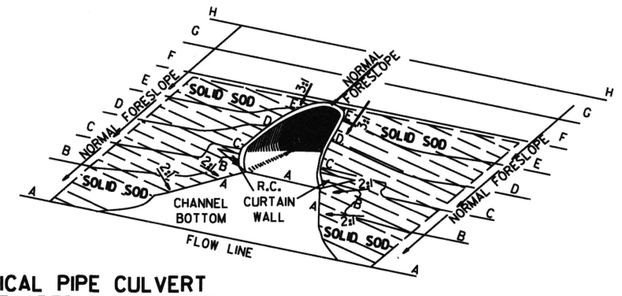

TYPICAL PIPE CULVERT
WITH FLARED END SECTION
& FLATTENED ADJACENT SLOPES

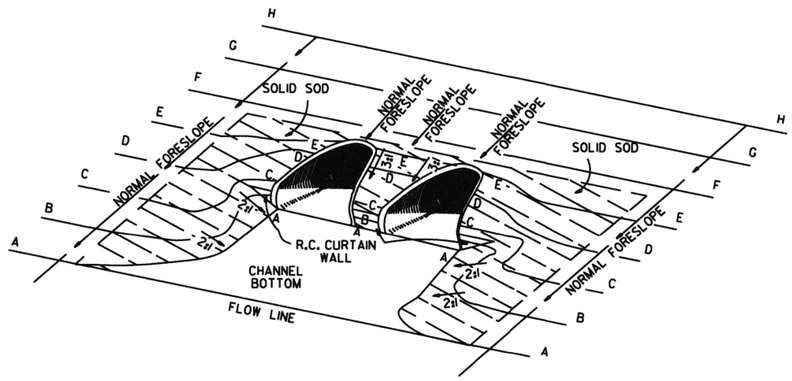

TYPICAL MULTIPLE PIPE CULVERT
WITH FLARED END SECTIONS
& FLATTENED ADJACENT SLOPES

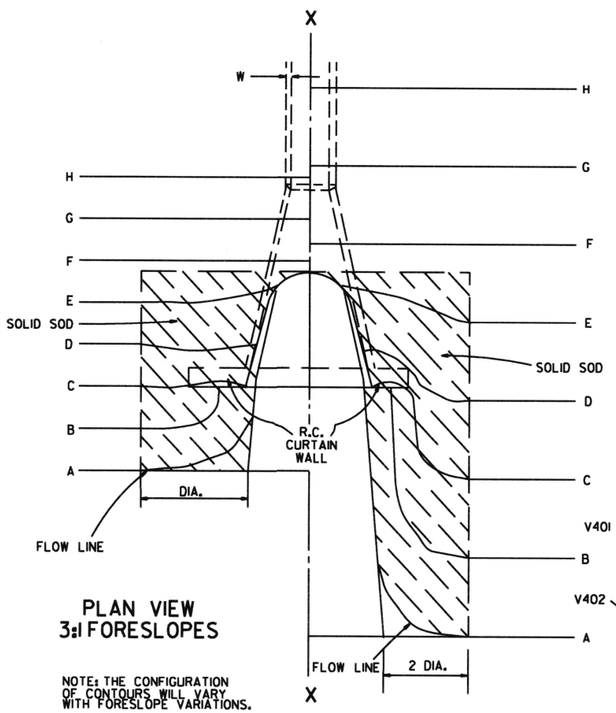

PLAN VIEW
3:1 FORESLOPES

NOTE: THE CONFIGURATION OF CONTOURS WILL VARY WITH FORESLOPE VARIATIONS.

PLAN VIEW
FLATTENED FORESLOPES

R.C. CURTAIN WALL
DIMENSIONS & QUANTITIES

PIPE DIA.	H_1	L_1	L	L (DBL.)/2	SINGLE R.C.P.C.		DOUBLE R.C.P.C.	
					CONC.	REINF. STEEL	CONC.	REINF. STEEL
					CU. YDS.	LBS.	CU. YDS.	LBS.
18"	11½"	3'-5"	8'-0"	6'-3"	0.31	27.7	0.45	39.5
24"	1'-0½"	4'-6"	9'-6"	7'-6"	0.37	33.4	0.53	48.0
30"	1'-3½"	5'-7"	11'-0"	9'-0"	0.45	39.0	0.67	59.0
36"	1'-7"	6'-8"	13'-0"	10'-6"	0.58	52.6	0.83	73.9
42"	2'-1½"	7'-3"	15'-6"	12'-0"	0.82	77.1	1.10	100.7
48"	2'-5"	7'-10"	17'-0"	13'-0"	0.98	94.9	1.27	120.4
54"	2'-9½"	8'-5"	18'-6"	14'-0"	1.16	115.8	1.47	143.7
60"	3'-4"	9'-0"	20'-6"	15'-6"	1.47	149.7	1.84	180.3
72"	4'-5"	10'-2"	25'-6"	18'-6"	2.31	232.6	2.73	271.0

NOTE: QUANTITIES SHOWN ARE FOR ONE (1) CURTAIN WALL.

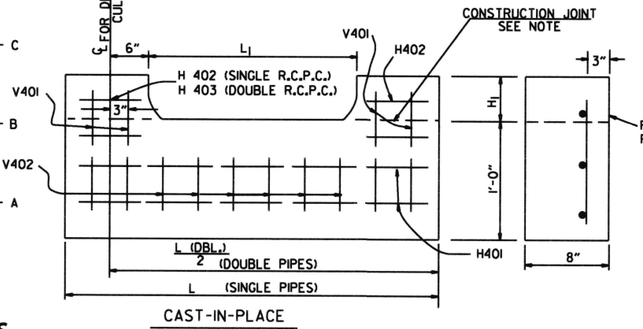

CAST-IN-PLACE

NOTE: THE PORTION OF THE R.C. CURTAIN WALL BENEATH THE FLARED END SECTION (LOWER 1'-0") SHALL BE PLACED MONOLITHICALLY. THE FLARED END SECTION SHALL THEN BE SET IN PLACE & THE REMAINING PORTIONS OF THE R.C. CURTAIN WALL PLACED.

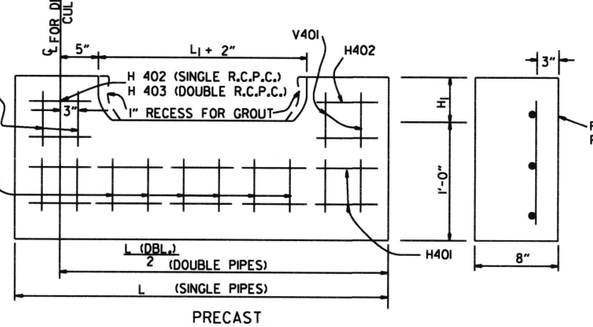

PRECAST

NOTE: THE PRECAST CURTAIN WALL WILL BE SET AND BACKFILLED WITH COMPACTED MATERIAL. THE FLARED END SECTION SHALL THEN BE SET IN PLACE AND THE 1" RECESS FILLED WITH GROUT. WHERE "L" EXCEEDS 11' THE CURTAIN WALL MAY BE CAST IN TWO (2) OR MORE SECTIONS. THE METHOD OF JOINING THE SECTIONS FOR INSTALLATION SHALL BE APPROVED BY THE ENGINEER.

R.C. CURTAIN WALL DETAILS

REINFORCING STEEL SCHEDULE

PIPE DIA.	SINGLE R.C. PIPE CULVERT								DOUBLE R.C. PIPE CULVERT									
	H401		H402		V401		V402		H401		H402		H403		V401		V402	
	L	NO.	L	NO.	L	NO.	L	NO.	L	NO.	L	NO.	L	NO.	L	NO.	L	NO.
18"	7'-8"	2	1'-11½"	4	1'-7½"	8	8"	8	12'-2"	2	1'-11½"	4	8"	2	1'-7½"	10	8"	14
24"	9'-2"	2	2'-2"	4	1'-8½"	10	8"	9	14'-8"	2	2'-2"	4	8"	2	1'-8½"	12	8"	18
30"	10'-8"	2	2'-4½"	4	1'-11½"	10	8"	12	17'-8"	2	2'-4½"	4	8"	2	1'-11½"	14	8"	22
36"	12'-8"	2	2'-10"	6	2'-3"	12	8"	14	20'-8"	2	2'-10"	6	8"	3	2'-3"	14	8"	28
42"	15'-2"	2	3'-9½"	8	2'-9½"	16	8"	15	23'-8"	2	3'-9½"	8	8"	4	2'-9½"	18	8"	30
48"	16'-8"	2	4'-3"	10	3'-1"	18	8"	16	25'-8"	2	4'-3"	10	8"	5	3'-1"	20	8"	32
54"	18'-2"	2	4'-8½"	12	3'-5½"	20	8"	17	27'-8"	2	4'-9"	12	8"	6	3'-5½"	22	8"	34
60"	20'-2"	2	5'-5"	14	4'-0"	24	8"	18	30'-8"	2	5'-5"	14	8"	7	4'-0"	26	8"	36
72"	25'-2"	2	7'-4"	18	5'-1"	30	8"	20	36'-8"	2	7'-4"	18	8"	9	5'-1"	33	8"	40

ALL REINFORCING STEEL #4 BARS @ 6" O.C.

SOLID SODDING

PIPE DIA.	SINGLE R.C.P.C.			DOUBLE R.C.P.C.		
	3:1	4:1	6:1	3:1	4:1	6:1
	SQ. YDS.			SQ. YDS.		
18"	5	7	12	6	8	13
24"	8	12	19	9	13	20
30"	13	18	29	14	19	30
36"	17	26	41	18	28	43
42"	23	35	55	25	37	57
48"	29	46	68	31	48	70
54"	35	57	85	37	59	87
60"	45	62	104	48	65	107
72"	64	92	156	67	95	159

NOTE: QUANTITIES SHOWN ABOVE ARE FOR ONE (1) END OF F.E.S.

GENERAL NOTES

1. A CAST-IN-PLACE OR PRECAST CURTAIN WALL MAY BE USED. PAYMENT FOR THE CURTAIN WALL SHALL BE CONSIDERED TO BE INCLUDED IN THE UNIT PRICE BID EACH FOR FLARED END SECTIONS OF THE SEVERAL SIZES, WHICH PRICE SHALL BE FULL COMPENSATION FOR FURNISHING ALL MATERIALS INCLUDING REINFORCING STEEL AND CONCRETE; FOR FORMS, MIXING AND PLACING; FOR EXCAVATION AND BACKFILL, AND FOR ALL LABOR, TOOLS, EQUIPMENT AND INCIDENTALS NECESSARY TO COMPLETE THE WORK.
2. ALL EXPOSED EDGES SHALL BE CHAMFERED ¾".
3. CONCRETE FOR CURTAIN WALL SHALL MEET THE REQUIREMENTS FOR CLASS A OR S CONCRETE AS PROVIDED IN SECTION 802 OF THE STANDARD SPECIFICATIONS OR FOR PAVING CONCRETE AS PROVIDED IN SECTION 501 OF THE STANDARD SPECIFICATIONS.
4. WELDED WIRE MESH 3 x 3 W/10 x W10 MAY BE USED IN LIEU OF REINFORCING BARS.

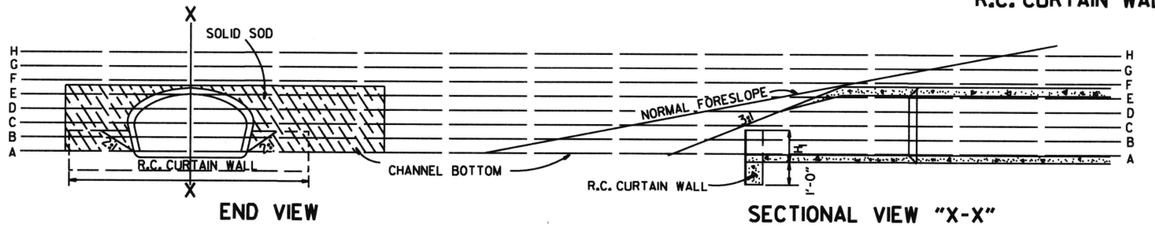

END VIEW

SECTIONAL VIEW "X-X"

DATE	REVISION	FILMED
10-18-96	ADDED NOTE TO SOLID SODDING	
10-12-95	CORRECTED SPELLING	
11- 3-94	ADDED GENERAL NOTE NO. 4	
8-15-91	REV. CURTAIN WALL QUANT. STEEL SCH. & SOLID SOD QUANT.	
3-2-81	ALLOW PRECAST IN 2 OR MORE PIECES CHAMFER EDGES	
5-15-80	ADDED PRECAST WALL & GENERAL NOTES	
10-2-72	REVISED AND REDRAWN	

ARKANSAS STATE HIGHWAY COMMISSION

FLARED END SECTION

STANDARD DRAWING FES-1

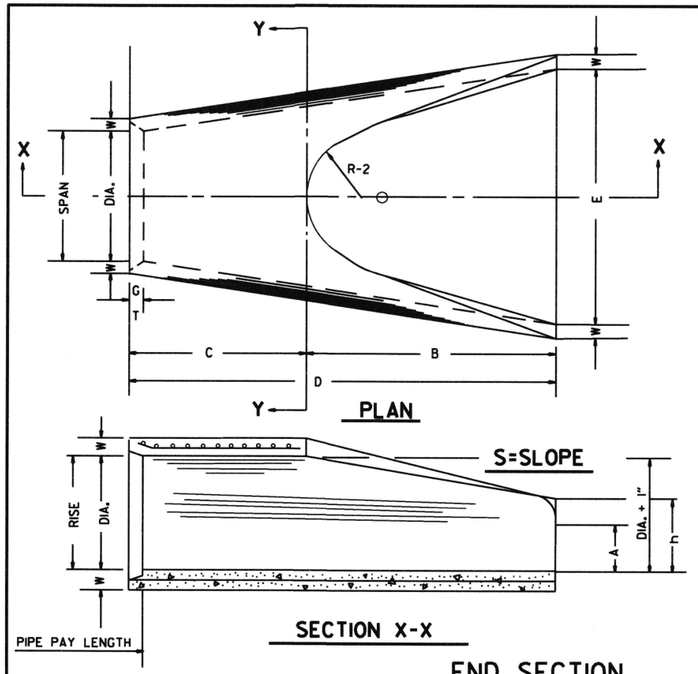

TABLE OF DIMENSIONS

DIA.	WALL	A	B	C	D	E	S	DIA. + 1"	P	R-1	R-2	G-T	WT.	h
18"	2½"	9"	2'-3"	3'-10"	6'-1"	3'-0"	3±1	19"	29"	15½"	12"	2"	1000	1'-0½"
24"	3"	9½"	3'-7½"	2'-6"	6'-1½"	4'-0"	3±1	25"	33 3/16"	16 15/16"	14"	2½"	1600	1'-1½"
30"	3½"	1'-0"	4'-6"	1'-7¾"	6'-1¾"	5'-0"	3±1	31"	37"	18½"	15"	3¼"	1940	1'-4⅝"
36"	4"	1'-3"	5'-3"	2'-10¾"	8'-1¾"	6'-0"	3±1	37"	47 11/16"	24 5/16"	20"	3½"	4100	1'-8"
42"	4½"	1'-9"	5'-3"	2'-11"	8'-2"	6'-6"	3±1	43"	53⅞"	27½"	22"	3½"	5380	2'-2½"
48"	5"	2'-0"	6'-0"	2'-2"	8'-2"	7'-0"	3±1	49"	56½"	28½"	22"	3½"	6550	2'-6"
54"	5½"	2'-4"	6'-6"	1'-10"	8'-4"	7'-6"	3±1	55"	65½"	33⅛"	24"	4"	8750	2'-10½"
60"	6"	2'-10"	6'-6"	1'-10"	8'-4"	8'-0"	3±1	61"	72½"	36 11/16"	24"	4"	9270	3'-5"
72"	7"	3'-10"	6'-6"	1'-10"	8'-4"	9'-0"	3±1	73"	77 13/16"	38 15/16"	24"	5"	13250	4'-6"

ARCH PIPE

EQUIV. DIA.	• SPAN		• RISE		W	A	B	C	D	E	P	R2	G-T	S
	AASHTO M 206	AHD NOMINAL	AASHTO M 206	AHD NOMINAL										
	INCHES													
15	18	18	11	11	2"	4"	2'-0"	4'-0"	6'-0"	3'-0"	29"	12"	1½"	2½±1
18	22	22	13½	14	2½"	5"	2'-0"	4'-1"	6'-1"	3'-6"	32⅛"	13"	2½"	2½±1
21	26	26	15½	16	2¾"	7"	2'-3"	3'-10"	6'-1"	4'-0"	34⅛"	14"	2½"	2½±1
24	28½	29	18	18	3"	9"	2'-3"	3'-10"	6'-1"	5'-0"	36 5/16"	15"	2½"	2½±1
30	36¼	36	22½	23	3½"	10"	3'-1"	3'-0½"	6'-1½"	6'-0"	47 13/16"	20"	3"	2½±1
36	43¾	44	26⅝	27	4"	10½"	4'-0"	2'-1½"	6'-1½"	6'-6"	54 5/16"	22"	3½"	2½±1
42	51⅛	51	31 5/16	31	4½"	11½"	4'-7"	1-10¼"	6'-5¼"	7'-2"	59½"	23"	3¾"	2½±1
48	58½	59	36	36	5"	1'-3"	5'-3"	2'-10¾"	8'-1¾"	7'-10"	70 5/16"	24"	4¼"	2½±1
54	65	65	40	40	5½"	1'-7"	5'-3"	2'-11"	8'-2"	8'-6"	72 1/16"	24"	4¾"	2½±1
60	73	73	45	45	6"	1'-10"	5'-6"	2'-8"	8'-2"	9'-0"	77 13/16"	24"	5"	2½±1

• THE MEASURED SPAN AND RISE SHALL NOT VARY MORE THAN ± 2 PER CENT FROM THE VALUES SPECIFIED BY AASHTO M 206.

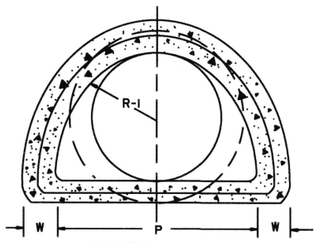

SECTION Y-Y

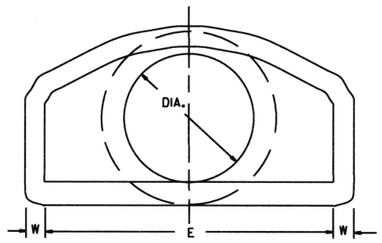

END VIEW

NOTE: TONGUE END ON UPSTREAM SECTION
GROOVE END ON DOWNSTREAM SECTION

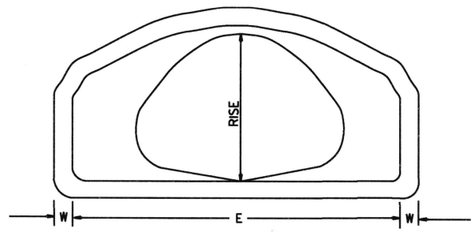

END VIEW
CONCRETE ARCH PIPE

END SECTION FOR REINFORCED CONCRETE PIPE CULVERTS

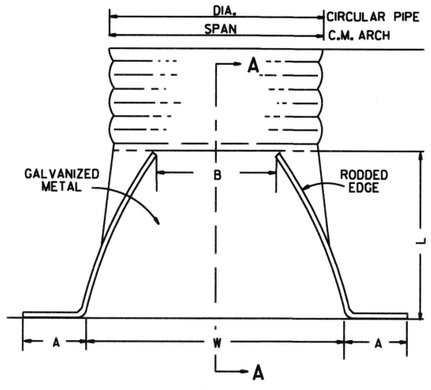

PLAN

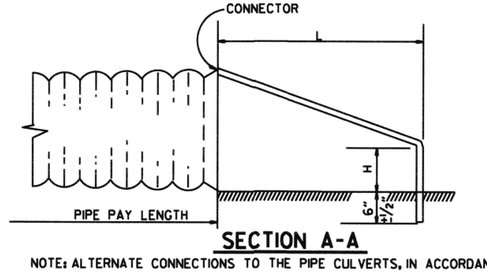

SECTION A-A

NOTE: ALTERNATE CONNECTIONS TO THE PIPE CULVERTS, IN ACCORDANCE WITH MANUFACTURER'S STANDARD PRACTICES, MAY BE MADE SUBJECT TO THE APPROVAL OF THE ENGINEER.

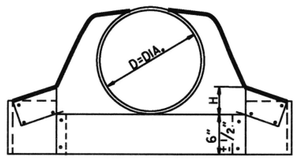

CIRCULAR PIPE

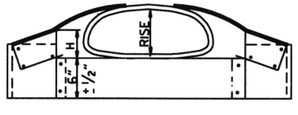

C.M. ARCH PIPE

CIRCULAR PIPE

D. DIA.	GAUGE	A 1" ±	B. MAX.	H 1" ±	L 1½" ±	W 2" ±	S
		INCHES					
12	16	6	6	6	21	24	2½±1
15	16	7	8	6	26	30	2½±1
18	16	8	10	6	31	36	2½±1
21	16	9	12	6	36	42	2½±1
24	16	10	13	6	41	48	2½±1
30	14	12	16	8	51	60	2½±1
36	14	14	19	9	60	72	2½±1
42	12	16	22	11	69	84	2½±1
48	12	18	27	12	78	90	2½±1
54	12	18	30	12	84	102	2±1
60	12	18	33	12	87	114	1½±1
66	12	18	36	12	87	120	1½±1
72	12	18	39	12	87	126	1 1/3±1

C.M. ARCH PIPE

EQUIV. DIA.	SPAN	RISE	A 1" ±	B MAX.	H 1" ±	L 1½" ±	W 2" ±	S	GAUGE
	INCHES								
15"	17	13	7	9	6	19	30	2½±1	16
18"	21	15	7	10	6	23	36	2½±1	16
21"	24	18	8	12	6	28	42	2½±1	16
24"	28	20	9	14	6	32	48	2½±1	16
30"	35	24	10	16	6	39	60	2½±1	14
36"	42	29	12	18	8	46	75	2½±1	14
42"	49	33	13	21	9	53	85	2½±1	12
48"	57	38	18	26	12	63	90	2½±1	12
54"	64	43	18	30	12	70	102	2¼±1	12
60"	71	47	18	33	12	77	114	2¼±1	12

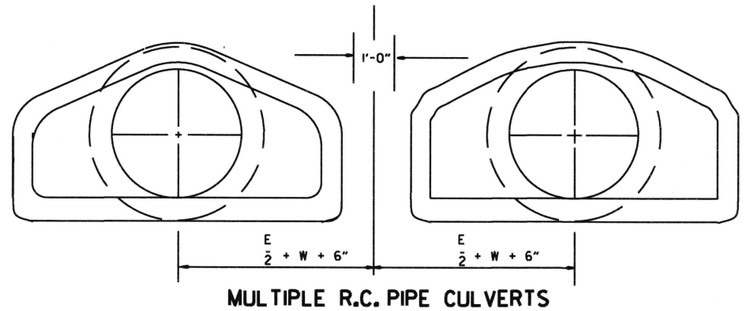

MULTIPLE R.C. PIPE CULVERTS

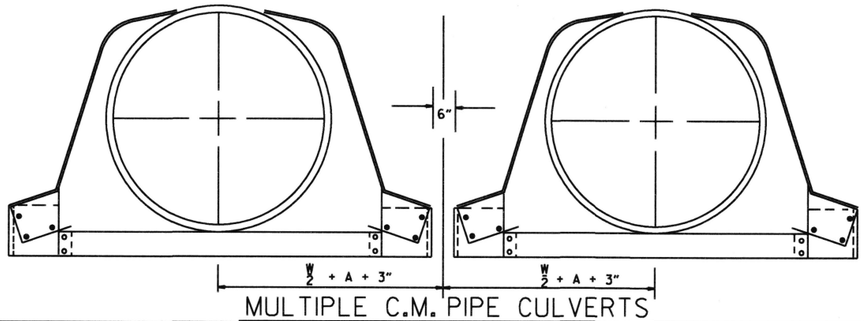

MULTIPLE C.M. PIPE CULVERTS

END SECTIONS FOR CORRUGATED METAL PIPE CULVERTS

DATE	REVISION	FILMED
10-18-96	REVISED ASTM REF. TO AASHTO	
5-15-80	REVISED DISTANCE BETWEEN MULTIPLE R.C.P. F.E.S.	664-5-15-80
7-14-78	C.M. ARCH SIZES TO CONFORM WITH AASHTO SIZES	752-7-14-78
8-22-75	ADDED MULTIPLE PIPE CULVERTS	517-8-22-75
12-5-74	REMOVED NOTE RE REINF. FOR R.C. F.E.S.	500-12-5-74
5-24-73	CMP END SECTION, SHOW PIPE PAY LENGTH	627-5-24-73
10-2-72	REVISED AND REDRAWN	760-10-2-72

ARKANSAS STATE HIGHWAY COMMISSION

FLARED END SECTION

STANDARD DRAWING FES-2

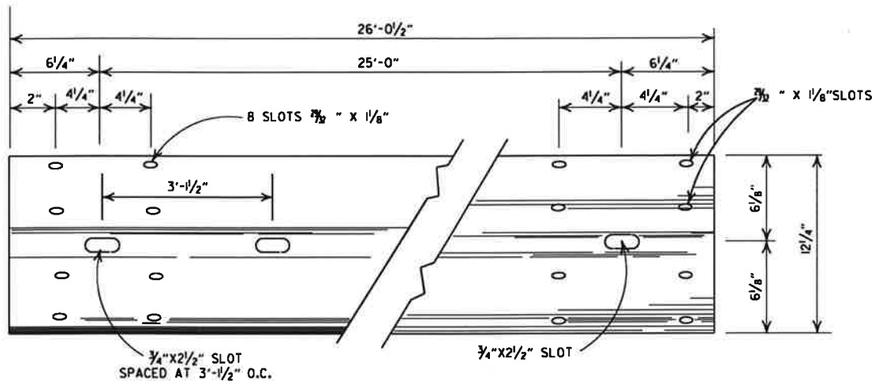

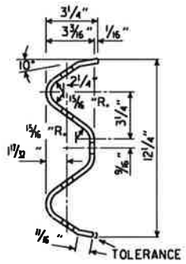

DETAILS OF W-BEAM GUARDRAIL

RAIL SECTION OF CLOSELY SIMILAR DIMENSIONS AND COMPARABLE STRENGTH MAY BE SUBSTITUTED IF APPROVED BY THE ENGINEER.

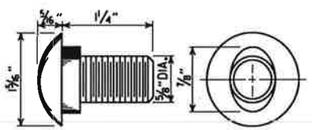

SPLICE BOLT
POST BOLT - SAME EXCEPT LENGTH

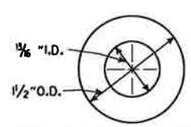

CUT STEEL WASHER

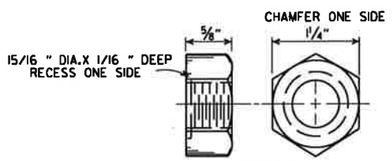

NUT

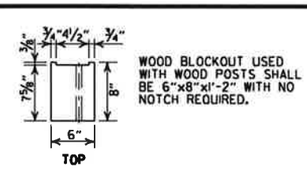

WOOD BLOCKOUT USED WITH WOOD POSTS SHALL BE 6"x8"x1'-2" WITH NO NOTCH REQUIRED.

WOOD BLOCKOUT (W-BEAM)

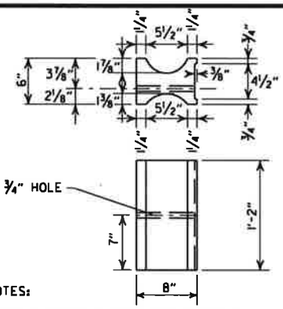

NOTES:

1. SIMILAR SHAPED PLASTIC BLOCKOUTS MAY BE USED AS LONG AS THEY MEET REQUIREMENTS FOR MANUAL FOR ASSESSING SAFETY HARDWARE (MASH).
2. DIMENSIONS ARE SUBJECT TO MANUFACTURERS TOLERANCES.

PLASTIC BLOCKOUT (W-BEAM)

HOLES IN POSTS AND BLOCKS TO BE ¾" DIA.

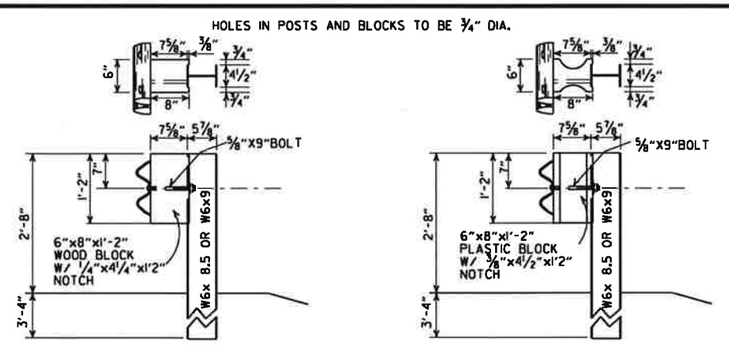

WOOD BLOCKOUT CONNECTIONS

PLASTIC BLOCKOUT CONNECTIONS

DETAILS OF STEEL LINE POST CONNECTIONS (W-BEAM)

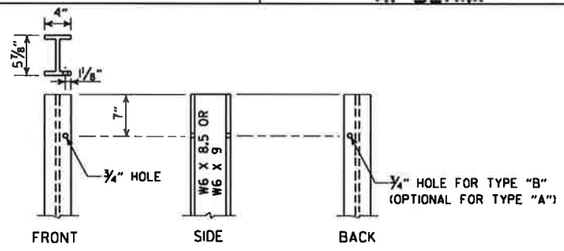

STEEL POST

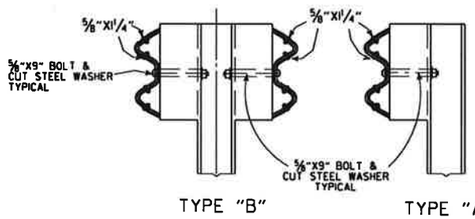

TYPE "B" TYPE "A"

DETAILS OF STEEL LINE POST CONNECTIONS (W-BEAM)

HOLES IN POSTS AND BLOCKS TO BE ¾" DIA.

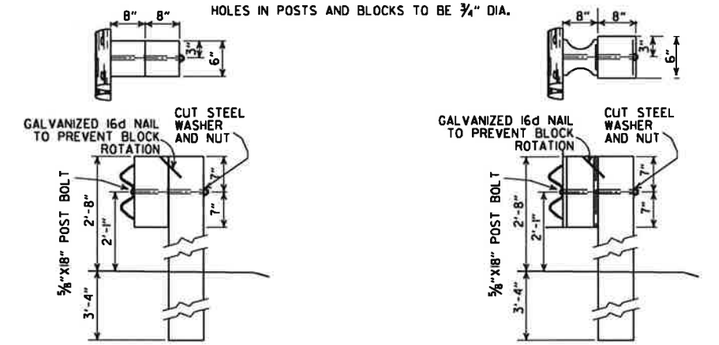

POSTS AND BLOCKS TO BE ROUGH SAWN 6"X8" WITH A TOLERANCE OF + OR - ¼".

WOOD BLOCKOUT CONNECTIONS

PLASTIC BLOCKOUT CONNECTIONS

DETAILS OF WOOD LINE POST CONNECTIONS (W-BEAM)

-GENERAL NOTES-

ALL BOLTS SHALL BE SUFFICIENT LENGTH TO EXTEND THROUGH THE FULL THICKNESS OF THE NUT AND NO MORE THAN ¾" BEYOND IT.

WHERE W-BEAM GUARDRAIL CONTINUES, THE INTERMEDIATE SECTIONS SHALL HAVE A POST SPACING OF 6'-3" UNLESS OTHERWISE NOTED.

W-BEAM GUARDRAIL REPRESENTING INTERMEDIATE SECTIONS WILL BE MEASURED ALONG THE ROADWAY FACE FROM CENTERLINE OF POST TO CENTERLINE OF POST.

USE W-BEAM GUARDRAIL COMPONENTS OF SAME MATERIAL FOR ENTIRE JOB. FOR EXTENSIONS OR MODIFICATION OF EXISTING GUARDRAIL, W-BEAM GUARDRAIL COMPONENTS OF THE SAME TYPE AS THOSE EXISTING SHALL BE USED.

ANY BACKFILLING UNDER OR AROUND POST SHALL BE DAMP SAND THOROUGHLY TAMPED IN PLACE.

WOOD POSTS & WOOD BLOCKS SHALL BE EITHER DENSE NO. 1 STRUCTURAL OR BETTER 9.7# (1400 f) OR NO. 1 1350 f SOUTHERN PINE.

CONTRACTOR SHALL HAVE THE OPTION OF USING WOOD BLOCKOUTS FOR W-BEAM GUARDRAIL OR PLASTIC BLOCKOUTS, AS LONG AS BLOCKOUT USED MEETS REQUIREMENTS FOR MANUAL FOR ASSESSING SAFETY HARDWARE (MASH) FOR W-BEAM GUARDRAIL.

DATE	REVISION	FILMED
11-07-19	RENUMBERED AND RENAMED	
11-16-17	REVISED GENERAL NOTES AND RAISED GUARDRAIL HEIGHT 3"	
07-14-10	RAISED HEIGHT OF GUARDRAIL 1"	
10-15-09	ADDED REFERENCE TO MASH	
04-10-03	REVISED GENERAL NOTES	
08-22-02	REVISED DIMENSION ON WOOD & PLASTIC BLOCKOUT CONNECTIONS & STEEL POST	
11-16-01	REVISED WOOD BLOCKOUT & DETAILS OF WOOD LINE POST CONNECTIONS	
03-30-00	REMOVED GUARDRAIL AT BRIDGE ENDS	
01-12-00	ADDED PLASTIC BLOCKOUT	
08-12-98	REV. BLOCKOUTS TO WOOD, DELETED CONC. POST & REV. GENERAL NOTE, DELETED DET. OF GUARDRAIL REPLACE. BEHIND CURB & DET. OF POST PLACE. IN SOLID ROCK, & ADDED DETAILS OF STEEL LINE POST CONN. REMOVED BACK-UP PLATE. REVISED HOLES IN STEEL POLES	
04-03-97	REMOVED "LAP IN DIRECTION OF TRAFFIC" NOTE & PLACED ARROWS ON WASHERS	
10-18-96	REVISED WOOD POST NOTE	
06-02-94	ADDED ALT. STEEL POST SIZE	
08-05-93	REVISED STEEL POST SIZE	8-5-93
10-01-92	REDRAWN & REVISED	10-1-92
08-15-91	REVISED WASHER NOTE	8-15-91
08-02-90	REV. GEN. NOTE & DEPTH OF ANC. POST IN ROCK	8-2-90
07-15-88	REVISED SECTION 3 & GENERAL NOTES	
03-04-88	REV. ANCHOR POST ,ELEV. NOTES & POST IN ROCK	780-3-4-88
10-30-87	REVISED WOOD LINE POST DETAIL	546-10-30-87
10-09-87	REDRAWN & REVISED	802-10-9-87

ARKANSAS STATE HIGHWAY COMMISSION

GUARDRAIL DETAILS

STANDARD DRAWING GR-6

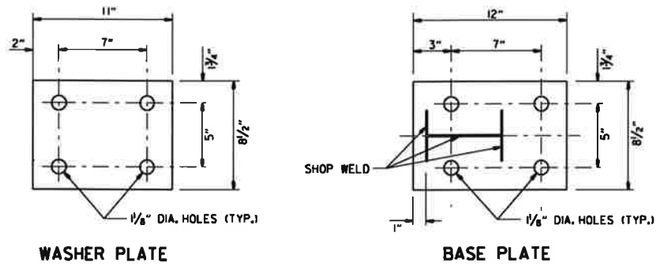

WASHER PLATE

BASE PLATE

Note: Bolts, nuts, washers and plates shall be galvanized in accordance with Section 807 of the Standard Specifications.

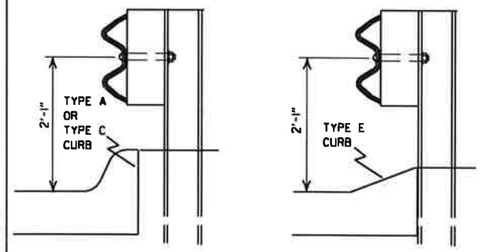

DETAIL OF GUARDRAIL PLACEMENT BEHIND CURB (W-BEAM)

FOR DESIGN SPEEDS OF 50 MPH OR LESS ALL CURB FACES, AS SHOWN ON STD. DRWG. CG-1, MAY BE USED. FOR DESIGN SPEEDS OF 55 MPH OR MORE TYPE "E" CURB FACE SHALL BE USED.

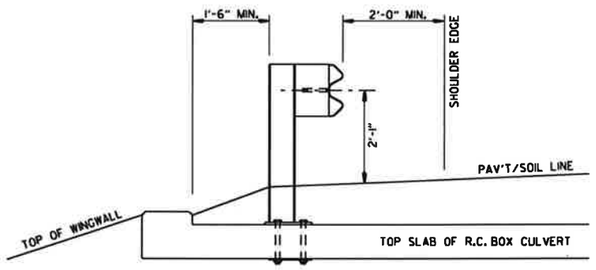

SECTION A-A

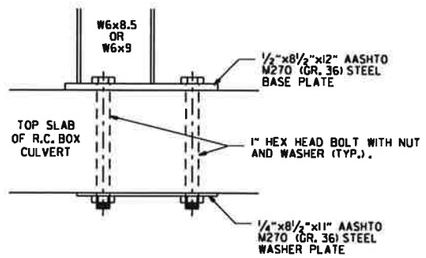

DETAIL OF CONNECTION

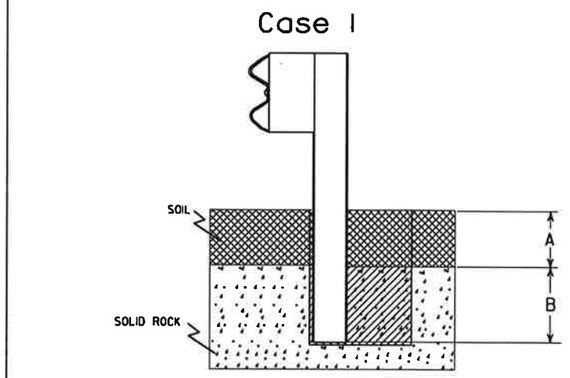

Plan View Steel Posts

Either hole configuration acceptable

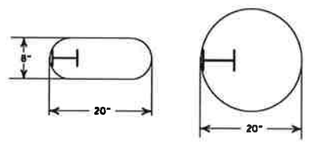

Plan View Wood Posts

Either hole configuration acceptable

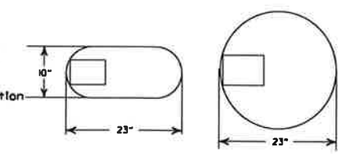

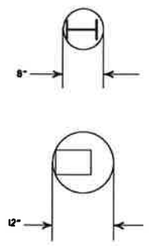

Notes: For overlying soil depths (A) ranging from 0 to 18", the depth of required drilling (B) is equal to 24".

Zone A:
Backfill according to Section 617.03(a).

Zone B:
Backfill hole in 6" lifts with material meeting the requirements of Section 802.02(c) - Alternate gradation. Compact to 95% maximum dry density per ASTM D-698.

Notes: For overlying soil depths (A) ranging from 18" to 44", the depth of required drilling (B) is equal to either 12" or 44" minus the depth of soil whichever is less.

Zone A & B:
Backfill according to Section 617.03(a).

DETAIL OF POST PLACEMENT IN SOLID ROCK (W-BEAM)

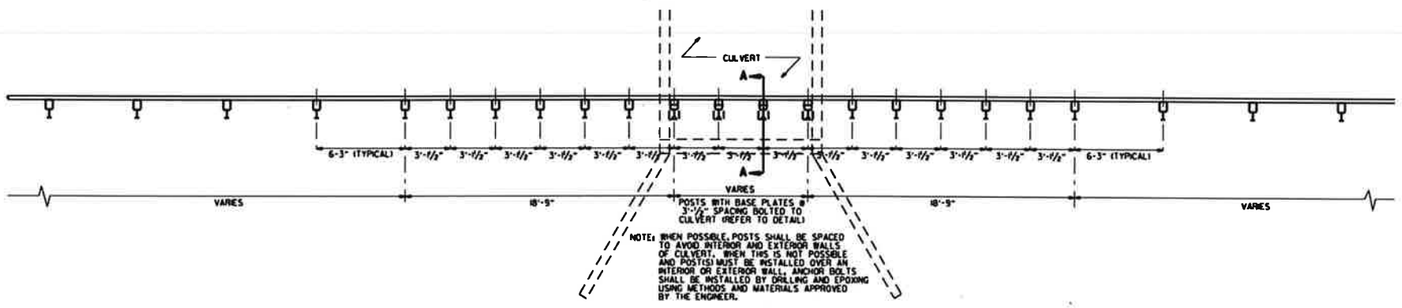

PLAN LAYOUT OF TYPE A GUARDRAIL AT LOW-FILL CULVERTS

NOTE: THIS DETAIL IS TO BE USED ONLY WHEN THE COVER OVER THE CULVERT DOES NOT PERMIT FULL EMBEDMENT OF GUARDRAIL POSTS AS SHOWN ON STD. DRG. GR-6.

DATE	REVISION	FILMED
11-07-19	RENUMBERED, RENAMED, REVISED REFERENCE	
11-16-17	REVISED GUARDRAIL HEIGHT	
07-14-10	RAISED HEIGHT OF GUARDRAIL 1"	
04-12-07	REVISED DETAIL OF GUARDRAIL PLACEMENT BEHIND CURB	
11-10-05	ADDED GUARDRAIL PLACEMENT BEHIND CURB; REVISED DETAIL OF CONNECTION	
11-18-04	REVISED POST PLACEMENT IN ROCK & CULVERT CONNECTION DETAILS. ADDED DETAIL FOR GUARDRAIL PLACEMENT AT LOW-FILL CULVERTS	
03-30-00	REMOVED CONCRETE INSERT ANCHOR	
08-12-98	CHANGED STEEL SPACER BLOCK TO WOOD BLOCKOUT, ADDED DET. OF GUARDRAIL CONNECTION TO R.C. BOX CULV'T., DELETED DET. OF STEEL LINE POST CONN. & ADDED DET. OF GUARDRAIL PLACE. BEHIND CURB & DET. OF POSTPLACE. IN SOLID ROCK	
04-03-96	PLACED ARROWS AT CUT STEEL WASHERS	4-3-96
10-18-96	REV. ASTM REF. TO AASHTO	
11-22-95	ADDED OPTIONAL HOLES	
06-02-94	REVISED ALTERNATE POST SIZE	
08-05-93	REVISED STEEL POST SIZE	
10-01-92	REDRAWN & REVISED	10-1-92
08-02-90	DEL. WASHER ON ANCHOR ASSEMBLY	8-2-90
07-15-88	CONFORMED TO 1988 SPECS	
03-04-88	REVISED ANCHOR NOTE	
10-30-87	REVISED ANCHOR ASSEMBLY	712-10-30-87
10-30-87	REVISED PLACEMENT BEHIND CURB	547-10-30-87
10-09-87	REDRAWN & REVISED	803-10-9-87

ARKANSAS STATE HIGHWAY COMMISSION

GUARDRAIL DETAILS

STANDARD DRAWING GR-7

NOTE: GUARDRAIL WITH GUARDRAIL TERMINAL (TYPE I) TO BE INSTALLED ONLY AT LOCATIONS SHOWN ON PLANS.

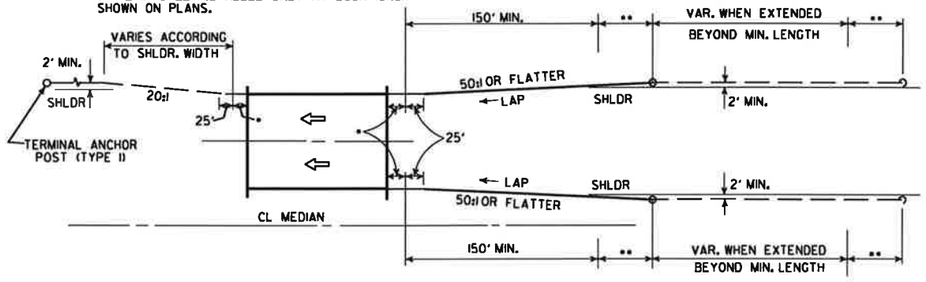

ONE-WAY TRAFFIC

••• LAP OF GUARDRAIL SHALL BE AS SHOWN FOR A DISTANCE OF UP TO 200', CHANGE TO LAP IN DIRECTION OF TRAVEL.

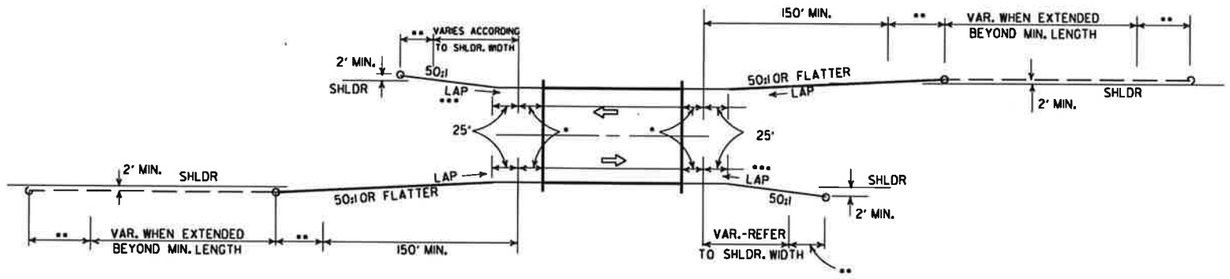

TWO-WAY TRAFFIC

METHODS OF INSTALLATION OF GUARDRAIL AT LESS THAN FULL SHOULDER WIDTH BRIDGES USING GUARDRAIL TERMINAL (TYPE 2)

••• LAP OF GUARDRAIL SHALL BE AS SHOWN FOR A DISTANCE OF UP TO 200', CHANGE TO LAP IN DIRECTION OF TRAVEL.

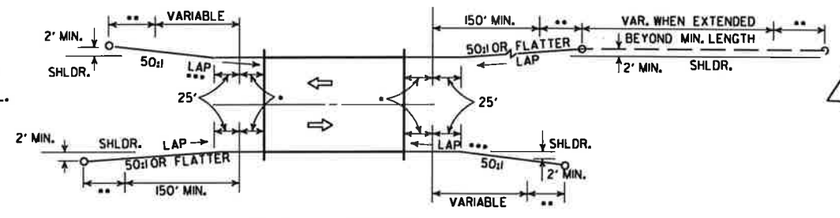

TWO-WAY TRAFFIC

NOTE: GUARDRAIL WITH GUARDRAIL TERMINAL (TYPE I) TO BE INSTALLED ONLY AT LOCATIONS SHOWN ON PLANS.

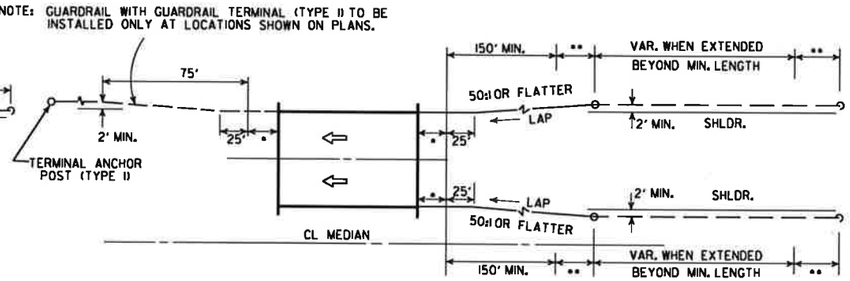

ONE-WAY TRAFFIC

METHOD OF INSTALLATION OF GUARDRAIL AT FULL SHOULDER WIDTH BRIDGES USING GUARDRAIL TERMINAL (TYPE 2)

••• LAP OF GUARDRAIL SHALL BE AS SHOWN FOR A DISTANCE OF UP TO 200', CHANGE TO LAP IN DIRECTION OF TRAVEL.

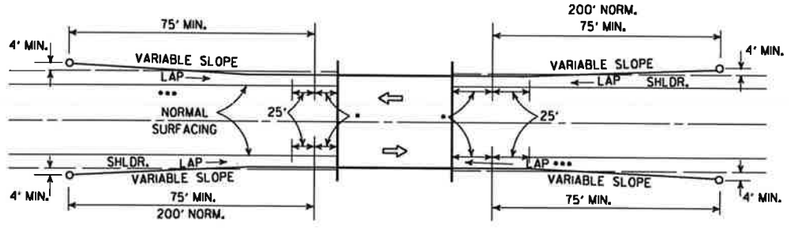

METHOD OF INSTALLATION OF GUARDRAIL USING GUARDRAIL TERMINAL (TYPE I) (FULL SHOULDER WIDTH OR LESS BRIDGES)

LEGEND

- ▪ THRIE BEAM GUARDRAIL TERMINAL
- •• GUARDRAIL TERMINAL (TYPE 2)

DATE	REVISION	DATE FILM
11-07-19	RENUMBERED AND RENAMED	
4-17-08	REVISED LAYOUTS	
11-10-05	REMOVED GUARDRAIL NOTES AND DETAILS	
11-16-01	DELETED NOTE-METHOD OF INSTALLATION OF GUARDRAIL USING GUARDRAIL TERM. (TY. I)	
1-12-00	ADDED CONSTRUCTION NOTE	1-12-00
6-26-97	REVISED LAYOUT	
10-1-92	REDRAWN & REVISED	10-1-92
	ADDED NOTE	
10-9-87	REDRAWN & REVISED	

ARKANSAS STATE HIGHWAY COMMISSION

GUARDRAIL DETAILS

STANDARD DRAWING GR-8

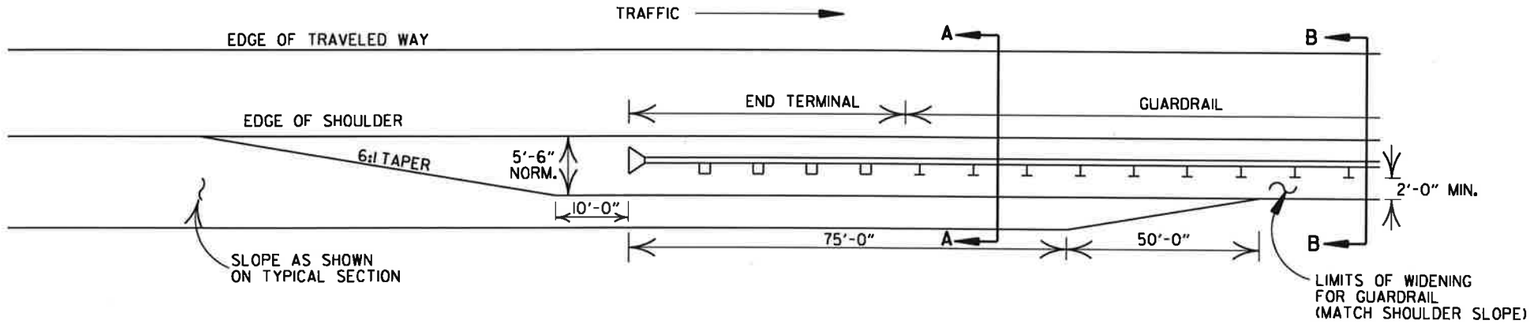

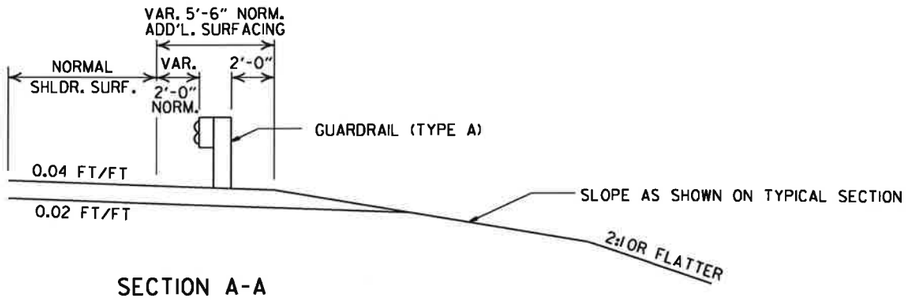

SECTION A-A

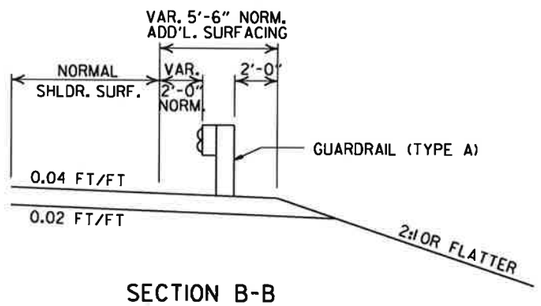

SECTION B-B

DETAILS OF WIDENING FOR GUARDRAIL

NOTE: NORMAL SECTION TO BE WIDENED APPROX. 5'-6" EACH SIDE TO SUPPORT GUARDRAIL.

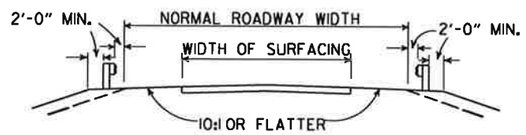

SECTION ON TANGENT

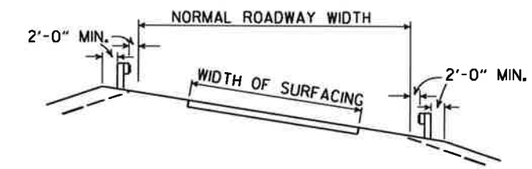

SECTION ON CURVE

DETAILS SHOWING POSITION OF GUARDRAIL ON HIGHWAY

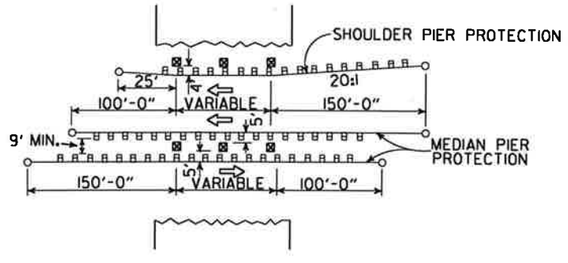

METHOD OF INSTALLATION OF GUARDRAIL AT FIXED OBSTACLE

DATE	REVISION	DATE FILM
11-07-19	RENUMBERED AND RENAMED	
4-17-08	MINOR REVISION	
11-10-05	DRAWN	

ARKANSAS STATE HIGHWAY COMMISSION

GUARDRAIL DETAILS

STANDARD DRAWING GR-9

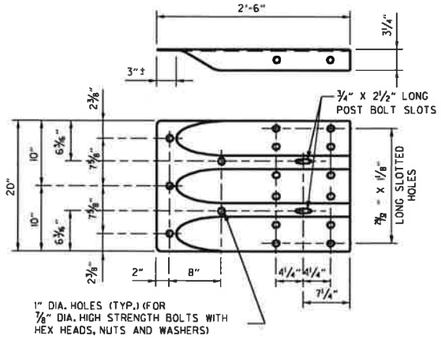

SPECIAL END SHOE

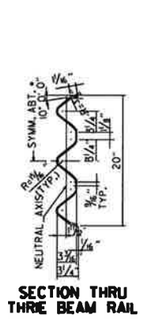

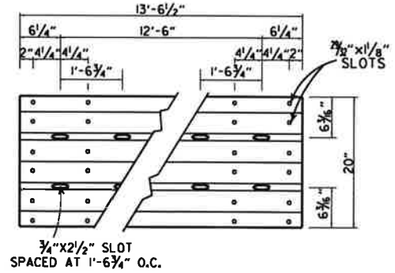

THRIE BEAM RAIL

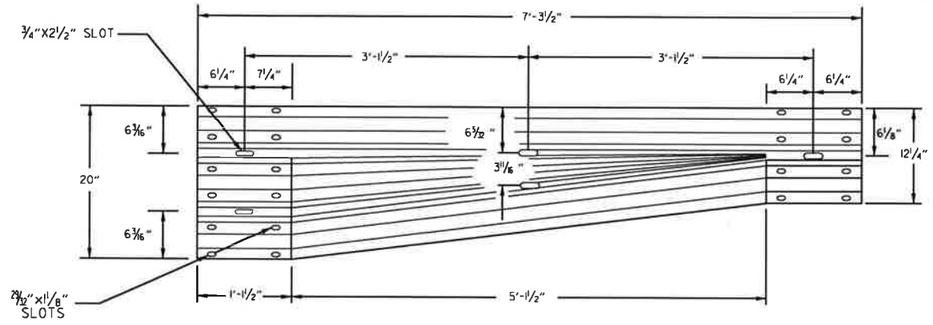

TRANSITION SECTION

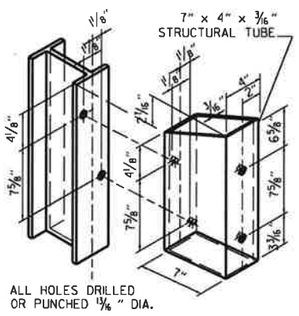

ATTACH BLOCKOUT TO POST USING ⅝" DIA. HEX HEAD BOLTS WITH 1½" O.D. CUT STEEL WASHERS AND NUT.

STRUCTURAL STEEL TUBING BLOCKOUT DETAIL

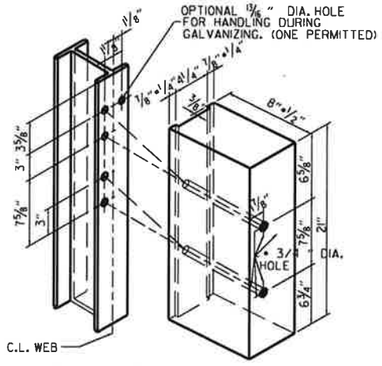

ALL HOLES 13/16" DIAMETER EXCEPT AS NOTED

HOLE PUNCHING DETAIL FOR STEEL POST & WOOD OR PLASTIC BLOCKOUTS

NOTE: BLOCKS SHALL BE THE SAME TYPE THROUGHOUT THE PROJECT LIMITS.

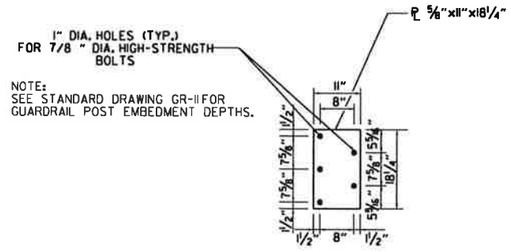

NOTE:
SEE STANDARD DRAWING GR-11 FOR GUARDRAIL POST EMBEDMENT DEPTHS.

CONNECTOR PLATE

CONNECTOR PLATE SHALL BE AASHTO M270, GR. 36 AND SHALL BE GALVANIZED AFTER FABRICATION. GALVANIZING SHALL CONFORM TO SUBSECTION 807.19 OF THE STANDARD SPECIFICATIONS. CONNECTOR PLATE TO BE BOLTED TO SPECIAL END SHOE USING ⅞" DIA. HIGH STRENGTH BOLTS, WITH THE HEADS PLACED ON THE TRAFFIC FACE. WASHERS SHALL BE USED UNDER THE HEAD AND NUT. BOLTS, NUTS AND WASHERS SHALL BE GALVANIZED AND SHALL CONFORM TO SUBSECTION 807.06.

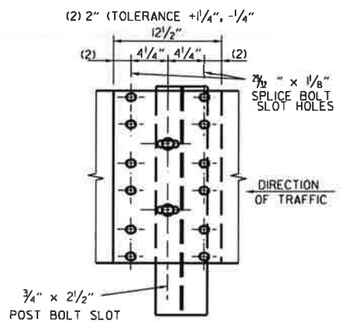

THRIE BEAM RAIL SPLICE AT POST

GENERAL NOTES:

THE THRIE BEAM RAIL, SPECIAL END SHOE, AND THE TRANSITION SECTION SHALL BE MADE OF STEEL AND SHALL BE 12 GAGE. ZINC COATING SHALL BE TYPE I.

RAIL POSTS SHALL BE SET PERPENDICULAR TO THE ROADWAY PROFILE GRADE AND VERTICALLY IN CROSS SECTION.

ALL BOLTS SHALL BE SUFFICIENT LENGTH TO EXTEND THROUGH THE FULL THICKNESS OF THE NUT AND NO MORE THAN 3"4" BEYOND IT.

ALL LAP SPLICES, INCLUDING SPECIAL END SHOES, SHALL BE MADE IN THE DIRECTION SHOWN ON STANDARD DRAWINGS GR-8 & GR-13.

REFER TO STD. DRWG. GR-11 FOR POST DETAILS.

USE THRIE BEAM GUARDRAIL COMPONENTS OF SAME MATERIAL FOR ENTIRE JOB.

THRIE BEAM POSTS SHALL BE SAME MATERIAL AS W-BEAM POSTS FOR ENTIRE JOB.

WOOD POSTS & WOOD BLOCKS SHALL BE EITHER DENSE NO. 1 STRUCTURAL OR BETTER 9.7 f (1400 f) OR NO. 1 1350 f SOUTHERN PINE.

DATE	REVISION	FILMED
11-07-19	RENAMED AND REVISED REFERENCES	
11-16-17	REVISED TRANSITION SECTION, GUARD RAIL HEIGHT, AND GENERAL NOTES; MOVED THRIE BEAM GUARD RAIL CONNECTIONS AT BRIDGES ENDS TO STD. DRWG. GR-12	
07-14-10	RAISED HEIGHT OF W-BEAM 1"	
11-29-07	ADDED PLASTIC BLOCKOUTS	
11-10-05	ADDED NOTE FOR ATTACHING STEEL BLOCKOUT	
11-18-04	REVISED GENERAL NOTES	
10-9-03	REVISED GENERAL NOTES	
04-10-03	REVISED GENERAL NOTES	
08-22-02	REVISED NOTE (2)	
06-29-00	MOVED DIMENSION LINES	
05-18-00	ADDED NOTE	
03-30-00	DRAWN & ISSUED	

ARKANSAS STATE HIGHWAY COMMISSION

GUARDRAIL DETAILS

STANDARD DRAWING GR-10

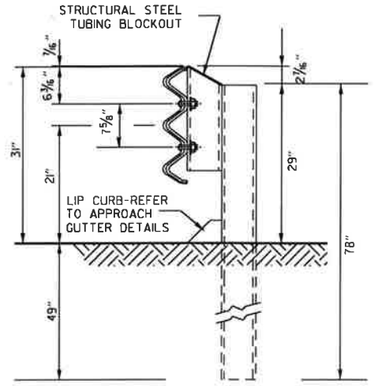

THRIE BEAM RAIL WITH STEEL TUBING BLOCKOUT
AND STEEL POST
POSTS 1-7

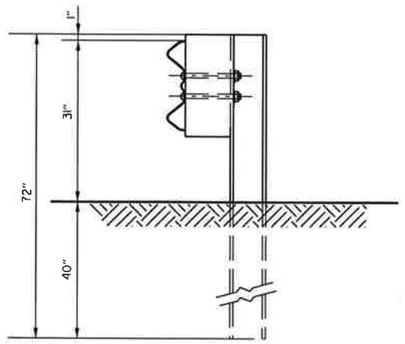

W-BEAM TO THRIE BEAM TRANSITION RAIL
WITH WOOD OR PLASTIC BLOCKOUT AND STEEL POST
POST 8

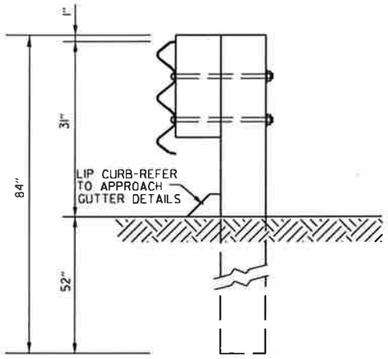

THRIE BEAM RAIL
WITH WOOD OR PLASTIC
BLOCKOUTS & WOOD POSTS
POSTS 1-6

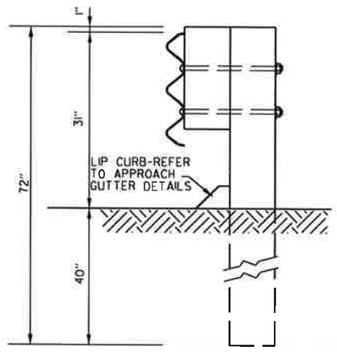

THRIE BEAM RAIL
WITH WOOD OR PLASTIC
BLOCKOUT & WOOD POST
POST 7

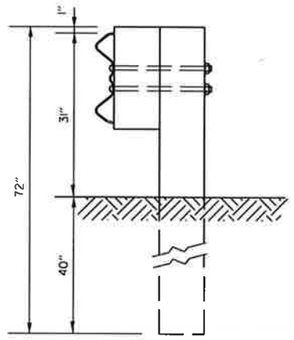

W-BEAM TO THRIE BEAM
TRANSITION RAIL WITH WOOD OR
PLASTIC BLOCKOUT & WOOD POST
POST 8

GENERAL NOTES:

RAIL POSTS SHALL BE SET PERPENDICULAR TO THE ROADWAY PROFILE GRADE AND VERTICALLY IN CROSS SECTION.

WOOD POSTS & WOOD BLOCKS SHALL BE EITHER DENSE NO. 1 STRUCTURAL OR BETTER 9.7f (1400 f) OR NO. 1 1350 f SOUTHERN PINE.

DATE	REVISION	FILMED
11-16-17	REVISED GUARDRAIL HEIGHT, CHANGED STD. DRG. NUMBER FROM GR-10A TO GR-11	
07-14-10	REVISED POST & DIMENSIONS	
11-29-07	ADDED PLASTIC BLOCKOUTS	
08-22-02	REVISED LIP CURB NOTE	
03-30-00	DRAWN & ISSUED	

ARKANSAS STATE HIGHWAY COMMISSION

GUARDRAIL DETAILS

STANDARD DRAWING GR-11

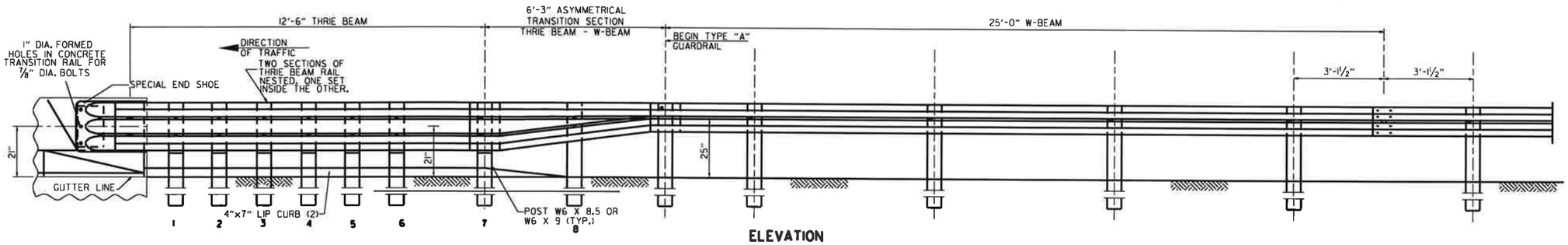

ELEVATION

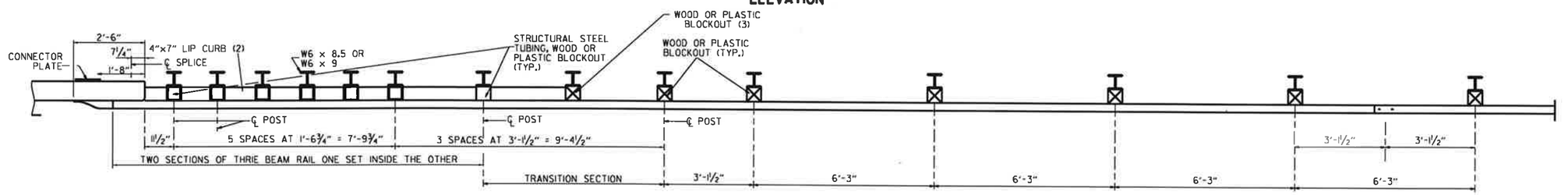

PLAN

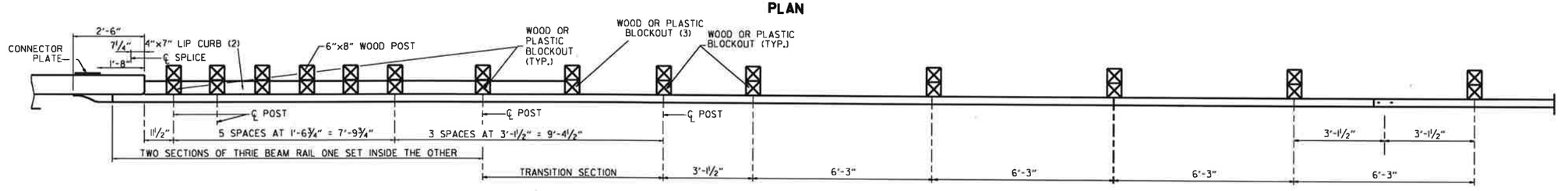

PLAN

(1) VERIFY BOLT SPACING FROM RAIL TRANSITION PRODUCER.
(2) REFER TO APPROACH GUTTER DETAILS.
(3) LENGTH OF BLOCKOUT ON POST 8 TO BE MODIFIED TO FIT RAIL WIDTH.

THRIE BEAM GUARDRAIL CONNECTION AT BRIDGE ENDS

GENERAL NOTES:

THE THRIE BEAM RAIL, SPECIAL END SHOE, AND THE TRANSITION SECTION SHALL BE MADE OF STEEL AND SHALL BE 12 GAGE. ZINC COATING SHALL BE TYPE I.

RAIL POSTS SHALL BE SET PERPENDICULAR TO THE ROADWAY PROFILE GRADE AND VERTICALLY IN CROSS SECTION.

ALL BOLTS SHALL BE SUFFICIENT LENGTH TO EXTEND THROUGH THE FULL THICKNESS OF THE NUT AND NO MORE THAN 3/4" BEYOND IT.

ALL LAP SPLICES, INCLUDING SPECIAL END SHOES, SHALL BE MADE IN THE DIRECTION SHOWN ON STANDARD DRAWINGS GR-8 & GR-13.

REFER TO STD. DRWG. GR-11 FOR POST DETAILS.

USE THRIE BEAM GUARDRAIL COMPONENTS OF SAME MATERIAL FOR ENTIRE JOB.

THRIE BEAM POSTS SHALL BE SAME MATERIAL AS W-BEAM POSTS FOR ENTIRE JOB.

POSTS SHALL BE PLACED AT THE MID-SPAN OF THE W-BEAM.

WOOD POSTS & WOOD BLOCKS SHALL BE EITHER DENSE NO. 1 STRUCTURAL OR BETTER 9.7# (1400 f) OR NO. 1 1350 f SOUTHERN PINE.

DATE	REVISION	FILMED
11-07-19	RENAMED & REVISED REFERENCES	
11-16-17	RE-DRAWN FROM STD. DWG. GR-10 & ISSUED	

ARKANSAS STATE HIGHWAY COMMISSION

GUARDRAIL DETAILS

STANDARD DRAWING GR-12

REINFORCED CONCRETE ARCH PIPE DIMENSIONS

EQUIV. DIA.	SPAN		RISE	
	AASHTO M 206	AHTD NOMINAL	AASHTO M 206	AHTD NOMINAL
INCHES	INCHES			
15	18	18	11	11
18	22	22	13½	14
21	26	26	15½	16
24	28½	29	18	18
30	36¼	36	22½	23
36	43⅜	44	26⅝	27
42	51⅛	51	31⅝	31
48	58½	59	36	36
54	65	65	40	40
60	73	73	45	45
72	88	88	54	54
84	102	102	62	62
90	115	115	72	72
96	122	122	77½	77
108	138	138	87⅛	87
120	154	154	96⅞	97
132	168¾	169	106½	107

THE MEASURED SPAN AND RISE SHALL NOT VARY MORE THAN ± 2 PERCENT FROM THE VALUES SPECIFIED BY AASHTO M206.

REINFORCED CONCRETE HORIZONTAL ELLIPTICAL PIPE DIMENSIONS

EQUIV. DIA.	AASHTO M 207	
	SPAN	RISE
INCHES	INCHES	
18	23	14
24	30	19
27	34	22
30	38	24
33	42	27
36	45	29
39	49	32
42	53	34
48	60	38
54	68	43
60	76	48
66	83	53
72	91	58
78	98	63
84	106	68

THE MEASURED SPAN AND RISE SHALL NOT VARY MORE THAN ± 2 PERCENT FROM THE VALUES SPECIFIED BY AASHTO M207.

CONSTRUCTION SEQUENCE

1. PLACE STRUCTURAL BEDDING MATERIAL TO GRADE. DO NOT COMPACT.
2. INSTALL PIPE TO GRADE.
3. COMPACT STRUCTURAL BEDDING OUTSIDE THE MIDDLE THIRD OF THE PIPE.
4. PLACE AND COMPACT THE HAUNCH AREA UP TO THE MIDDLE OF THE PIPE.
5. COMPLETE BACKFILL ACCORDING TO SUBSECTION 606.03.(f)(1).

NOTE: HAUNCH AND STRUCTURAL BEDDING MATERIAL WILL NOT BE PAID FOR SEPARATELY, BUT COMPENSATION WILL BE CONSIDERED TO BE INCLUDED IN THE PRICE BID PER LINEAR FOOT OF CONCRETE PIPE.

- LEGEND -

D_i = NORMAL INSIDE DIAMETER OF PIPE
D_o = OUTSIDE DIAMETER OF PIPE
H = FILL COVER HEIGHT OVER PIPE (FEET)
MIN. = MINIMUM
▨ = UNDISTURBED SOIL

INSTALLATION TYPE	MATERIAL REQUIREMENTS FOR HAUNCH AND STRUCTURAL BEDDING
TYPE 1	AGGREGATE BASE COURSE (CLASS 5 OR CLASS 7)
TYPE 2	SELECTED MATERIALS (CLASS SM-1, SM-2, OR SM-4) OR TYPE 1 INSTALLATION MATERIAL*
TYPE 3**	AASHTO CLASSIFICATION A-1 THRU A-6 SOIL OR TYPE 1 OR 2 INSTALLATION MATERIAL

*SM-3 WILL NOT BE ALLOWED.

**MATERIALS SHALL NOT INCLUDE ORGANIC MATERIALS OR STONES LARGER THAN 3 INCHES.

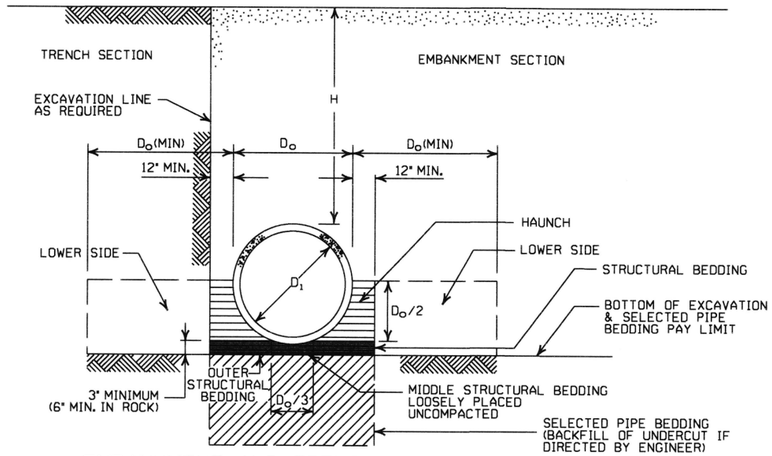

EMBANKMENT AND TRENCH INSTALLATIONS

1. MATERIAL IN THE HAUNCH AND OUTER STRUCTURAL BEDDING SHALL BE COMPACTED TO 95% OF THE MAXIMUM DENSITY ACCORDING TO THE TYPE OR CLASS OF MATERIAL USED.
2. FOR TRENCHES WITH WALLS OF NATURAL SOIL, THE DENSITY OF THE SOIL IN THE LOWER SIDE ZONE SHALL BE AS FIRM AS THE 95% DENSITY REQUIRED FOR THE HAUNCH. IF THE EXISTING SOIL DOES NOT MEET THIS CRITERIA, IT SHALL BE REMOVED AND RECOMPACTED TO 95% OF THE MAXIMUM DENSITY ACCORDING TO THE TYPE OF MATERIAL USED.
3. FOR EMBANKMENTS, THE MATERIAL IN THE LOWER SIDE ZONE SHALL BE COMPACTED TO 95% OF THE MAXIMUM DENSITY ACCORDING TO THE TYPE OR CLASS OF MATERIAL USED.

MINIMUM HEIGHT OF FILL "H" OVER CIRCULAR R.C. PIPE CULVERTS

	CLASS OF PIPE			
	CLASS III		CLASS IV	CLASS V
INSTALLATION TYPE	TYPE 1 OR 2	TYPE 3	ALL	ALL
PIPE ID (IN.)	FEET			
12-15	2	2.5	2	1
18-24	2.5	3	2	1
27-33	3	4	2	1
36-42	3.5	5	2	1
48	4.5	5.5	2	1
54-60	5	7	2	1
66-78	6	8	2	1
84-108	7.5	8	2	1

NOTE: FOR MINIMUM COVER VALUES, "H" SHALL INCLUDE A MINIMUM OF 12" OF PAVEMENT AND/OR BASE.

MAXIMUM HEIGHT OF FILL "H" OVER CIRCULAR R.C. PIPE CULVERTS

INSTALLATION TYPE	CLASS OF PIPE		
	CLASS III	CLASS IV	CLASS V
	FEET		
TYPE 1	21	32	50
TYPE 2	16	25	39
TYPE 3	12	20	30

NOTE: IF FILL HEIGHT EXCEEDS 50 FEET, A SPECIAL DESIGN CONCRETE PIPE WILL BE REQUIRED USING TYPE 1 INSTALLATION.

MINIMUM HEIGHT OF FILL "H" OVER R.C. ARCH & HORIZONTAL ELLIPTICAL PIPE CULVERTS

INSTALLATION TYPE	CLASS OF PIPE	
	CLASS III	CLASS IV
	FEET	
TYPE 2 OR TYPE 3	2.5	1.5

NOTE: TYPE 1 INSTALLATION WILL NOT BE ALLOWED FOR ARCH & HORIZONTAL ELLIPTICAL PIPE CULVERTS.

NOTE: FOR MINIMUM COVER VALUES, "H" SHALL INCLUDE A MINIMUM OF 12" OF PAVEMENT AND/OR BASE.

MAXIMUM HEIGHT OF FILL "H" OVER R.C. ARCH & HORIZONTAL ELLIPTICAL PIPE CULVERTS

INSTALLATION TYPE	CLASS OF PIPE	
	CLASS III	CLASS IV
	FEET	
TYPE 2	13	21
TYPE 3	10	16

NOTE: TYPE 1 INSTALLATION WILL NOT BE ALLOWED FOR ARCH & HORIZONTAL ELLIPTICAL PIPE CULVERTS.

GENERAL NOTES

1. CONCRETE PIPE CULVERT CONSTRUCTION SHALL CONFORM TO ARKANSAS STATE HIGHWAY AND TRANSPORTATION DEPARTMENT STANDARD SPECIFICATIONS FOR HIGHWAY CONSTRUCTION (CURRENT EDITION), WITH APPLICABLE SUPPLEMENTAL SPECIFICATIONS AND SPECIAL PROVISIONS. UNLESS OTHERWISE NOTED IN THE PLANS, SECTION AND SUBSECTION REFER TO THE STANDARD CONSTRUCTION SPECIFICATIONS.
2. CONCRETE PIPE CULVERT DESIGN SHALL CONFORM TO AASHTO LRFD BRIDGE DESIGN SPECIFICATIONS, FIFTH EDITION (2010) WITH 2010 INTERIMS.
3. ALL PIPE SHALL CONFORM TO SECTION 606. CIRCULAR R.C. PIPE CULVERTS SHALL CONFORM TO AASHTO M170. R.C. ARCH PIPE CULVERTS SHALL CONFORM TO AASHTO M206 AND HORIZONTAL ELLIPTICAL PIPE CULVERTS SHALL CONFORM TO AASHTO M207.
4. ALL PIPE SHALL BE PROTECTED DURING CONSTRUCTION BY A COVER SUFFICIENT TO PREVENT DAMAGE FROM PASSAGE OF EQUIPMENT.
5. THE MINIMUM TRENCH WIDTH SHALL BE THE OUTSIDE DIAMETER OF THE PIPE PLUS 24 INCHES. THE MAXIMUM ALLOWABLE TRENCH WIDTH SHALL BE THE MINIMUM WIDTH PRACTICABLE FOR WORKING CONDITIONS.
6. MULTIPLE PIPE CULVERTS SHALL BE INSTALLED WITH A MINIMUM CLEARANCE OF 24 INCHES BETWEEN STRINGS OF PIPE. REFER TO STD. DWG. FES-2 FOR MINIMUM CLEARANCE WHERE FLARED END SECTIONS ARE USED.
7. IMPERVIOUS MATERIAL SHOULD BE PLACED AS DIRECTED BY THE ENGINEER AT THE ENDS OF THE CULVERT TO PREVENT LOSS OF STRUCTURAL BEDDING WHEN PERVIOUS MATERIAL IS USED FOR STRUCTURAL BEDDING AND/OR BACKFILL.
8. NOT MORE THAN ONE LIFTING HOLE MAY BE PROVIDED IN CONCRETE PIPE TO FACILITATE HANDLING. HOLE MAY BE CAST IN PLACE, CUT INTO THE FRESH CONCRETE AFTER FORMS ARE REMOVED, OR DRILLED. THE HOLE SHALL NOT BE MORE THAN TWO INCHES IN DIAMETER OR TWO INCHES SQUARE. CUTTING OR DISPLACEMENT OF REINFORCEMENT WILL NOT BE PERMITTED. SPALLED AREAS AROUND THE HOLE SHALL BE REPAIRED IN A WORKMANLIKE MANNER. LIFTING HOLE SHALL BE FILLED WITH MORTAR, CONCRETE, OR OTHER METHOD AS APPROVED BY THE ENGINEER.
9. WHEN DIRECTED BY THE ENGINEER, UNSUITABLE MATERIAL THAT IS ENCOUNTERED AT THE BOTTOM OF THE EXCAVATED TRENCH (BELOW THE AREA IDENTIFIED AS "STRUCTURAL BEDDING" ABOVE) WILL BE EXCAVATED AND REPLACED WITH SELECTED PIPE BEDDING. THE QUANTITY OF MATERIAL REQUIRED TO BACKFILL THE UNDERCUT AREA UP TO THE SELECTED PIPE BEDDING PAY LIMIT DESIGNATED ABOVE WILL BE MEASURED AND PAID FOR AS "SELECTED PIPE BEDDING."
10. WHEN THE EXISTING MATERIAL EXCAVATED FOR THE PIPE TRENCH IS DETERMINED BY THE ENGINEER TO BE UNSUITABLE FOR BACKFILLING THE PIPE (ABOVE THE AREA IDENTIFIED ABOVE AS THE HAUNCH), BORROW MATERIAL OR MATERIAL FROM THE ROADWAY EXCAVATION WILL BE USED TO BACKFILL THE PIPE. IF SUITABLE MATERIAL IS NOT AVAILABLE, THE ENGINEER MAY AUTHORIZE THE USE OF "SELECTED PIPE BACKFILL."

DATE	REVISION	DATE FILMED
2-27-14	REVISED GENERAL NOTE 1.	
12-15-11	REVISED FOR LRFD DESIGN SPECIFICATIONS	
5-18-00	REVISED TYPE 3 BEDDING & ADDED NOTE	
3-30-00	REVISED INSTALLATIONS	
11-06-97	ISSUED	

ARKANSAS STATE HIGHWAY COMMISSION

CONCRETE PIPE CULVERT FILL HEIGHTS & BEDDING

STANDARD DRAWING PCC-1

CORRUGATED STEEL PIPE (ROUND)

PIPE DIAMETER (INCHES)	① MINUMUM COVER TOP OF PIPE TO TOP OF GROUND "H" (FEET)	MAX. FILL HEIGHT "H" ABOVE TOP OF PIPE (FEET)				
		METAL THICKNESS (INCHES)				
		0.064	0.079	0.109	0.138	0.168
2⅔ INCH BY ½ INCH CORRUGATION RIVETED, WELDED, OR HELICAL LOCK-SEAM						
12	1	84	91			
15	1	67	73			
18	1	56	61			
24	1	42	46	59		
30	2	34	36	47		
36	2		30	39	41	
42	2		43	67	70	73
48	2		37	58	61	64
② 3 INCH BY 1 INCH OR 5 INCH BY 1 INCH CORRUGATION RIVETED, WELDED, BOLTED, OR HELICAL LOCK-SEAM						
36	1	48	60	88	111	118
42	1	41	51	72	90	102
48	1	36	45	64	77	85
54	2	32	40	59	71	79
60	2	29	36	53	64	71
66	2	26	33	47	58	64
72	2	24	30	44	53	59
78	2		28	41	49	54
84	2		26	38	45	51
90	2		24	35	43	45
96	2		22	33	40	44
102	2			31	38	42
108	2			30	35	39
114	2			28	34	37
120	2			27	32	35

CORRUGATED ALUMINUM PIPE (ROUND)

PIPE DIAMETER (INCHES)	① MINUMUM COVER TOP OF PIPE TO TOP OF GROUND "H" (FEET)	MAX. FILL HEIGHT "H" ABOVE TOP OF PIPE (FEET)				
		METAL THICKNESS IN INCHES				
		0.060	0.075	0.105	0.135	0.164
		2 ⅔ INCH BY ½ INCH CORRUGATION RIVETED OR HELICAL LOCK-SEAM				
12	1	45	45			
18	2	30	30	52		
24	2	22	22	39	41	
30	2		18	31	32	34
36	2.5		15	26	27	28
42	2			43	43	44
48	2			40	41	43
54	2			35	37	38
60	2				33	34
66	2					31
72	2					29

CORRUGATED METAL PIPE ARCHES

EQUIV. DIA. (INCHES)	PIPE DIMENSION SPAN X RISE (INCHES)	MINUMUM CORNER RADIUS (INCHES)	STEEL				ALUMINUM		
			MIN. THICKNESS REQUIRED INCHES	① MIN. HEIGHT OF FILL, "H" (FT.)		MAX. HEIGHT OF FILL, "H" (FT.)	MIN. THICKNESS REQUIRED INCHES	① MIN. HEIGHT OF FILL, "H" (FT.)	MAX. HEIGHT OF FILL, "H" (FT.)
				INSTALLATION		INSTALLATION		INSTALLATION	INSTALLATION
				TYPE 1		TYPE 1		TYPE 1	TYPE 1
			2 ⅔ INCH BY ½ INCH CORRUGATION RIVETED, WELDED, OR HELICAL LOCK-SEAM				2 ⅔ INCH BY ½ INCH CORRUGATION RIVETED OR HELICAL LOCK-SEAM		
15	17x13	3	0.064	2		15	0.060	2	15
18	21x15	3	0.064	2		15	0.060	2	15
21	24x18	3	0.064	2.25		15	0.060	2.25	15
24	28x20	3	0.064	2.5		15	0.075	2.5	15
30	35x24	3	0.079	3		12	0.075	3	12
36	42x29	3½	0.079	3		12	0.105	3	12
42	49x33	4	0.079	3		12	0.105	3	12
48	57x38	5	0.109	3		13	0.135	3	13
54	64x43	6	0.109	3		14	0.135	3	14
60	71x47	7	0.138	3		15	0.164	3	15
66	77x52	8	0.168	3		15			
72	83x57	9	0.168	3		15			
			② 3 INCH BY 1 INCH OR 5 INCH BY 1 INCH CORRUGATION RIVETED, WELDED, OR HELICAL LOCK-SEAM						
				INSTALLATION		INSTALLATION			
				TYPE 2	TYPE 1	TYPE 2	TYPE 1		
36	40x31	5	0.079	3	2	12	15		
42	46x36	6	0.079	3	2	13	15		
48	53x41	7	0.079	3	2	13	15		
54	60x46	8	0.079	3	2	13	15		
60	66x51	9	0.079	3	2	13	15		
66	73x55	12	0.079	3	2	15	15		
72	81x59	14	0.079	3	2	15	15		
78	87x63	14	0.079	3	2	15	15		
84	95x67	16	0.109	3	2	15	15		
90	103x71	16	0.109	3	2	15	15		
96	112x75	18	0.109	3	2	15	15		
102	117x79	18	0.109	3	2	15	15		
108	128x83	18	0.138	3	2	15	15		

CONSTRUCTION SEQUENCE

1. PLACE STRUCTURAL BEDDING MATERIAL TO GRADE. DO NOT COMPACT.
2. INSTALL PIPE TO GRADE.
3. COMPACT STRUCTURAL BEDDING OUTSIDE THE MIDDLE THIRD OF THE PIPE.
4. COMPLETE STRUCTURAL BACKFILL OPERATION BY WORKING FROM SIDE TO SIDE OF THE PIPE. THE SIDE TO SIDE STRUCTURAL BACKFILL DIFFERENTIAL SHALL NOT EXCEED 24 INCHES OR 1/3 THE SIZE OF THE PIPE, WHICHEVER IS LESS.

NOTE: STRUCTURAL BACKFILL AND STRUCTURAL BEDDING MATERIAL WILL NOT BE PAID FOR SEPARATELY, BUT COMPENSATION WILL BE CONSIDERED TO BE INCLUDED IN THE PRICE BID PER LINEAR FOOT OF METAL PIPE.

INSTALLATION TYPE	MATERIAL REQUIREMENTS FOR STRUCTURAL BACKFILL AND STRUCTURAL BEDDING
TYPE 1	AGGREGATE BASE COURSE (CLASS 4, 5, 6, OR 7)
TYPE 2	SELECTED MATERIALS (CLASS SM-1, SM-2, OR SM-4) OR TYPE 1 INSTALLATION MATERIAL ③

③ SM-3 WILL NOT BE ALLOWED.

EQUIVALENT METAL THICKNESSES AND GAUGES

METAL THICKNESS IN INCHES			GAUGE NUMBER
STEEL			
ZINC COATED	UNCOATED	ALUMINUM	
0.064	0.0598	0.060	16
0.079	0.0747	0.075	14
0.109	0.1046	0.105	12
0.138	0.1345	0.135	10
0.168	0.1644	0.164	8

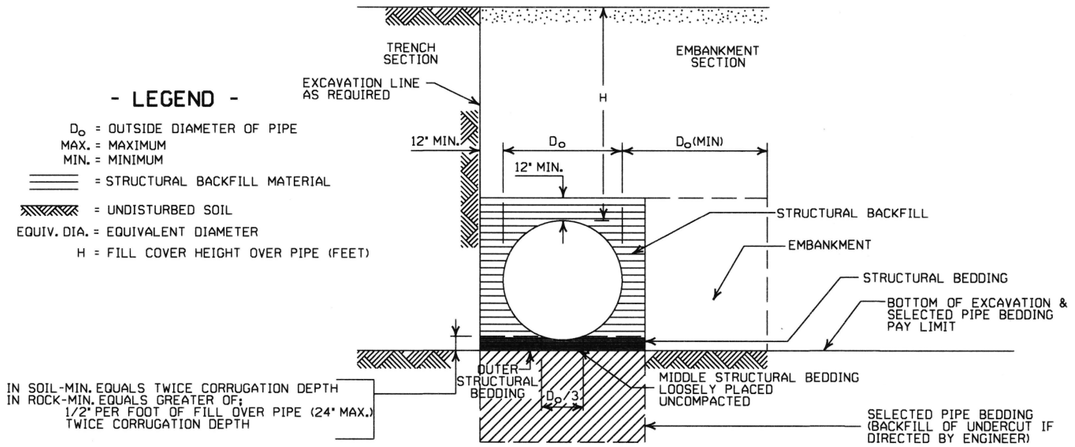

EMBANKMENT AND TRENCH INSTALLATIONS

1. STRUCTURAL BACKFILL, EMBANKMENT, AND OUTER STRUCTURAL BEDDING MATERIAL SHALL BE COMPACTED TO 95% OF THE MAXIMUM DENSITY ACCORDING TO THE TYPE OR CLASS OF MATERIAL USED.
2. INSTALLATION TYPE 1 OR 2 MAY BE USED FOR CORRUGATED STEEL OR ALUMINUM PIPE (ROUND).
3. INSTALALTION TYPE 1 SHALL BE USED FOR CORRUGATED STEEL OR ALUMINUM PIPE ARCHES WITH 2⅔" X ½" CORRUGATION.
4. INSTALLATION TYPE 1 OR 2 MAY BE USED FOR CORRUGATED STEEL OR ALUMINUM PIPE ARCHES WITH 3" X 1" OR 5" X 1" CORRUGATION.

GENERAL NOTES

1. METAL PIPE CULVERT CONSTRUCTION SHALL CONFORM TO ARKANSAS STATE HIGHWAY AND TRANSPORTATION DEPARTMENT STANDARD SPECIFICATIONS FOR HIGHWAY CONSTRUCTION (CURRENT EDITION), WITH APPLICABLE SUPPLEMENTAL SPECIFICATIONS AND SPECIAL PROVISIONS. UNLESS OTHERWISE NOTED IN THE PLANS, SECTION AND SUBSECTION REFER TO THE STANDARD CONSTRUCTION SPECIFICATIONS.
2. METAL PIPE CULVERT DESIGN SHALL CONFORM TO AASHTO LRFD BRIDGE DESIGN SPECIFICATIONS, FIFTH EDITION (2010) WITH 2010 INTERIMS.
3. METAL PIPE CULVERT MATERIALS AND INSTALLATIONS SHALL CONFORM TO SECTION 606 AND JOB SPECIAL PROVISION "METAL PIPE".
4. ALL PIPE SHALL BE PROTECTED DURING CONSTRUCTION BY A COVER SUFFICIENT TO PREVENT DAMAGE FROM PASSAGE OF EQUIPMENT.
5. THE MINIMUM TRENCH WIDTH SHALL BE THE OUTSIDE DIAMETER OF THE PIPE PLUS 24 INCHES. THE MAXIMUM ALLOWABLE TRENCH WIDTH SHALL BE THE MINIMUM WIDTH PRACTICABLE FOR WORKING CONDITIONS.
6. MULTIPLE PIPE CULVERTS SHALL BE INSTALLED WITH A MINIMUM CLEARANCE OF 24 INCHES BETWEEN STRINGS OF PIPE. REFER TO STD. DWG. FES-2 FOR MINIMUM CLEARANCE WHERE FLARED END SECTIONS ARE USED.
7. IMPERVIOUS MATERIAL SHOULD BE PLACED AS DIRECTED BY THE ENGINEER AT THE ENDS OF THE CULVERT TO PREVENT LOSS OF STRUCTURAL BEDDING WHEN PERVIOUS MATERIAL IS USED FOR STRUCTURAL BEDDING AND/OR BACKFILL.
8. WHEN DIRECTED BY THE ENGINEER, UNSUITABLE MATERIAL THAT IS ENCOUNTERED AT THE BOTTOM OF THE EXCAVATED TRENCH (BELOW THE AREA IDENTIFIED AS "STRUCTURAL BEDDING" ABOVE) WILL BE EXCAVATED AND REPLACED WITH SELECTED PIPE BEDDING. THE QUANTITY OF MATERIAL REQUIRED TO BACKFILL THE UNDERCUT AREA UP TO THE SELECTED PIPE BEDDING PAY LIMIT DESIGNATED ABOVE WILL BE MEASURED AND PAID FOR AS "SELECTED PIPE BEDDING."
9. WHEN THE EXISTING MATERIAL EXCAVATED FOR THE PIPE TRENCH IS DETERMINED BY THE ENGINEER TO BE UNSUITABLE FOR BACKFILLING THE PIPE (ABOVE THE AREA IDENTIFIED AS STRUCTURAL BACKFILL), BORROW MATERIAL OR MATERIAL FROM THE ROADWAY EXCAVATION WILL BE USED TO BACKFILL THE PIPE. IF SUITABLE MATERIAL IS NOT AVAILABLE, THE ENGINEER MAY AUTHORIZE THE USE OF "SELECTED PIPE BACKFILL."

① FOR MINIMUM COVER VALUES, "H" SHALL INCLUDE A MINIMUM 12" OF PAVEMENT AND/OR BASE.

② WHERE THE STANDARD 2 2/3"x ½" CORRUGATION AND GAUGE IS SPECIFIED FOR A GIVEN DIAMETER, A PIPE OF THE SAME DIAMETER WITH A 3" x 1" OR 5" x 1" CORRUGATION MAY BE SUBSTITUTED, PROVIDING IT IS GAUGED FOR A FILL HEIGHT CONDITION EQUAL TO OR GREATER THAN THE MAXIMUM FILL HEIGHT CONDITION FOR THE SPECIFIED GAUGE AND CORRUGATION.

DATE	REVISION	DATE FILMED
2-27-14	REVISED GENERAL NOTE 1.	
12-15-11	REVISED FOR LRFD DESIGN SPECS	
3-30-00	REVISED INSTALLATIONS	
11-06-97	ISSUED	

ARKANSAS STATE HIGHWAY COMMISSION

METAL PIPE CULVERT FILL HEIGHTS & BEDDING

STANDARD DRAWING PCM-1

INSTALLATION TYPE	•• MATERIAL REQUIREMENTS FOR STRUCTURAL BACKFILL AND STRUCTURAL BEDDING
TYPE 2	•SELECTED MATERIALS (CLASS SM-1, SM-2 OR SM-4)

• AGGREGATE BASE COURSE (CLASS 4, 5, 6, OR 7) MAY BE USED IN LIEU OF SELECTED MATERIAL.

SM3 WILL NOT BE ALLOWED.

•• STRUCTURAL BEDDING MATERIAL SHALL HAVE A MAXIMUM PARTICLE SIZE OF 1INCH. STRUCTURAL BACKFILL MATERIAL SHALL BE FREE OF ORGANIC MATERIAL. STONES LARGER THAN 1.50 INCH IN GREATEST DIMENSION, OR FROZEN LUMPS.

STRUCTURAL BACKFILL AND STRUCTURAL BEDDING MATERIAL WILL NOT BE PAID FOR SEPARATELY, BUT COMPENSATION WILL BE CONSIDERED TO BE INCLUDED IN THE PRICE BID PER LINEAR FOOT OF HDPE PIPE.

MULTIPLE INSTALLATION OF HIGH DENSITY POLYETHYLENE PIPES

PIPE DIAMETER	CLEAR DISTANCE BETWEEN PIPES
18"	1'-6"
24"	2'-0"
30"	2'-6"
36"	3'-0"
42"	3'-6"
48"	4'-0"

MINIMUM TRENCH WIDTH BASED ON FILL HEIGHT "H"

PIPE DIAMETER	TRENCH WIDTH (FEET)	
	"H" < 10'-0"	"H" >OR= 10'-0"
18"	4'-6"	4'-6"
24"	5'-0"	6'-0"
30"	5'-6"	7'-6"
36"	6'-0"	9'-0"
42"	7'-0"	10'-6"
48"	8'-0"	12'-0"

①NOTE:
18" MIN. (18" - 30" DIAMETERS)
24" MIN. (36" - 48" DIAMETERS)

MINIMUM COVER VALUES, "H" SHALL INCLUDE A MINIMUM 12" OF PAVEMENT AND/OR BASE.

MINIMUM COVER FOR CONSTRUCTION LOADS

PIPE DIAMETER	② MIN. COVER (FEET) FOR INDICATED CONSTRUCTION LOADS			
	18.0-50.0 (KIPS)	50.0-75.0 (KIPS)	75.0-110.0 (KIPS)	110.0-175.0 (KIPS)
36" OR LESS	2'-0"	2'-6"	3'-0"	3'-0"
42" OR GREATER	3'-0"	3'-0"	3'-6"	4'-0"

②MINIMUM COVER SHALL BE MEASURED FROM TOP OF PIPE TO TOP OF THE MAINTAINED CONSTRUCTION ROADWAY SURFACE. THE SURFACE SHALL BE MAINTAINED.

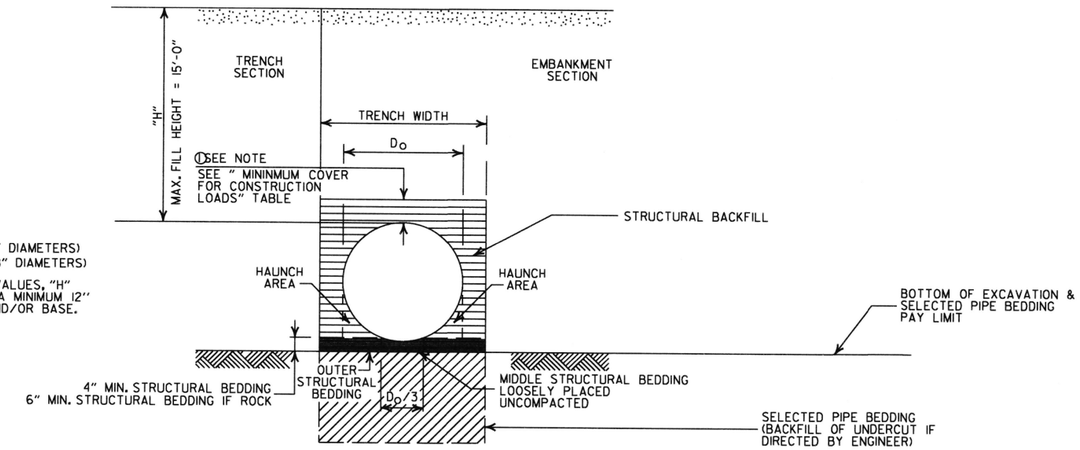

TYPE 2 EMBANKMENT AND TRENCH INSTALLATIONS

1. STRUCTURAL BACKFILL, EMBANKMENT, AND OUTER STRUCTURAL BEDDING MATERIAL SHALL BE COMPACTED TO 95% OF THE MAXIMUM DENSITY ACCORDING TO THE TYPE OR CLASS OF MATERIAL USED.

CONSTRUCTION SEQUENCE

1. PLACE STRUCTURAL BEDDING MATERIAL TO GRADE. DO NOT COMPACT.
2. INSTALL PIPE TO GRADE.
3. COMPACT STRUCTURAL BEDDING OUTSIDE THE MIDDLE THIRD OF THE PIPE.
4. THE STRUCTURAL BACKFILL SHALL BE PLACED AND COMPACTED IN LAYERS NOT EXCEEDING 8". THE LAYERS SHALL BE BROUGHT UP EVENLY AND SIMULTANEOUSLY TO THE ELEVATION OF THE MINIMUM COVER.
5. PIPE INSTALLATION MAY REQUIRE THE USE OF RESTRAINTS, WEIGHTING OR OTHER APPROVED METHODS IN ORDER TO HELP MAINTAIN GRADE AND ALIGNMENT.

GENERAL NOTES

1. PIPE SHALL CONFORM TO AASHTO M294, TYPE S. INSTALLATION SHALL CONFROM TO JOB SPECIAL PROVISION "PLASTIC PIPE" AND SECTION 606 OF THE STANDARD SPECIFICIATIONS FOR HIGHWAY CONSTRUCTION (CURRENT EDITION).
2. PLASTIC PIPE CULVERT DESIGN SHALL CONFORM TO AASHTO LRFD BRIDGE DESIGN SPECIFICATIONS, FIFTH EDITION (2010) WITH 2010 INTERIMS.
3. THE MAXIMUM ALLOWABLE TRENCH WIDTH SHALL BE THE MINIMUM WIDTH PLUS A SUFFICIENT WIDTH TO ENSURE WORKING ROOM TO PROPERLY AND SAFELY PLACE AND COMPACT HAUNCHING AND OTHER BACKFILL MATERIAL.
4. IMPERVIOUS MATERIAL SHOULD BE PLACED AS DIRECTED BY THE ENGINEER AT THE ENDS OF THE CULVERT TO PREVENT LOSS OF STRUCTURAL BEDDING WHEN PERVIOUS MATERIAL IS USED FOR STRUCTURAL BEDDING AND/OR BACKFILL.
5. WHEN DIRECTED BY THE ENGINEER, UNSUITABLE MATERIAL THAT IS ENCOUNTERED AT THE BOTTOM OF THE EXCAVATED TRENCH (BELOW THE AREA IDENTIFIED AS "STRUCTURAL BEDDING" ABOVE) WILL BE EXCAVATED AND REPLACED WITH SELECTED PIPE BEDDING. THE QUANTITY OF MATERIAL REQUIRED TO BACKFILL THE UNDERCUT AREA UP TO THE SELECTED PIPE BEDDING PAY LIMIT DESIGNATED ABOVE WILL BE MEASURED AND PAID FOR AS "SELECTED PIPE BEDDING."
6. WHEN THE EXISTING MATERIAL EXCAVATED FOR THE PIPE TRENCH IS DETERMINED BY THE ENGINEER TO BE UNSUITABLE FOR BACKFILLING THE PIPE (ABOVE THE AREA IDENTIFIED ABOVE AS STRUCTURAL BACKFILL), BORROW MATERIAL OR MATERIAL FROM THE ROADWAY EXCAVATION WILL BE USED TO BACKFILL THE PIPE. IF SUITABLE MATERIAL IS NOT AVAILABLE, THE ENGINEER MAY AUTHORIZE THE USE OF "SELECTED PIPE BACKFILL."
7. FOR PIPE TYPES THAT ARE NOT SMOOTH ON THE OUTSIDE (CORRUGATED OR PROFILE WALLS), BACKFILL GRADATIONS SHOULD BE SELECTED THAT WILL PERMIT THE FILLING OF THE CORRUGATION OR PROFILE VALLEY.
8. HIGH DENSITY POLYETHYLENE PIPES OF DIAMETERS OTHER THAN SHOWN WILL NOT BE ALLOWED.
9. JOINTS FOR HDPE PIPE SHALL MEET THE REQUIREMENTS FOR SOIL TIGHTNESS AS SPECIFIED IN AASHTO SECTION 26.4.2.4 AND 30.4.2 "AASHTO LRFD BRIDGE CONSTRUCTION SPECIFICATIONS." JOINTS SHALL BE INSTALLED PER MANUFACTURER'S RECOMMENDATIONS.

- LEGEND -

H = FILL HEIGHT (FT.)
Ø = OUTSIDE DIAMETER OF PIPE
MAX. = MAXIMUM
MIN. = MINIMUM

= STRUCTURAL BACKFILL MATERIAL

= UNDISTURBED SOIL

DATE	REVISION	DATE FILMED
2-27-14	REVISED GENERAL NOTE 1.	
12-15-11	REVISED GENERAL NOTES & MINIMUM COVER NOTE	
11-17-10	ISSUED	

ARKANSAS STATE HIGHWAY COMMISSION

PLASTIC PIPE CULVERT (HIGH DENSITY POLYETHYLENE)

STANDARD DRAWING PCP-1

INSTALLATION TYPE	•• MATERIAL REQUIREMENTS FOR STRUCTURAL BACKFILL AND STRUCTURAL BEDDING
TYPE 2	•SELECTED MATERIALS (CLASS SM-1, SM-2, OR SM-4)

• AGGREGATE BASE COURSE (CLASS 4, 5, 6, OR 7) MAY BE USED IN LIEU OF SELECTED MATERIAL.

SM3 WILL NOT BE ALLOWED.

•• STRUCTURAL BEDDING MATERIAL SHALL HAVE A MAXIMUM PARTICLE SIZE OF 1 INCH. STRUCTURAL BACKFILL MATERIAL SHALL BE FREE OF ORGANIC MATERIAL, STONES LARGER THAN 1.50 INCH IN GREATEST DIMENSION, OR FROZEN LUMPS.

STRUCTURAL BACKFILL AND STRUCTURAL BEDDING MATERIAL WILL NOT BE PAID FOR SEPARATELY, BUT COMPENSATION WILL BE CONSIDERED TO BE INCLUDED IN THE PRICE BID PER LINEAR FOOT OF PVC PIPE.

MINIMUM TRENCH WIDTH BASED ON FILL HEIGHT "H"

PIPE DIAMETER	TRENCH WIDTH (FEET)	
	"H" < 10'-0"	"H" >OR= 10'-0"
18"	4'-6"	4'-6"
24"	5'-0"	6'-0"
30"	5'-6"	7'-6"
36"	6'-0"	9'-0"

MULTIPLE INSTALLATION OF PVC PIPES

PIPE DIAMETER	CLEAR DISTANCE BETWEEN PIPES
18"	1'-6"
24"	2'-0"
30"	2'-6"
36"	3'-0"

MAXIMUM FILL HEIGHT BASED ON STRUCTURAL BACKFILL

PIPE DIAMETER	"H"
18"	45'-0"
24"	45'-0"
30"	40'-0"
36"	40'-0"

① NOTE:
12" MIN. (18" - 36" DIAMETERS)
MINIMUM COVER VALUE, "H" SHALL INCLUDE A MINIMUM 12" OF PAVEMENT AND/OR BASE.

MINIMUM COVER FOR CONSTRUCTION LOADS

PIPE DIAMETER	② MIN. COVER (FEET) FOR INDICATED CONSTRUCTION LOADS			
	18.0-50.0 (KIPS)	50.0-75.0 (KIPS)	75.0-110.0 (KIPS)	110.0-175.0 (KIPS)
18" THRU 36"	2'-0"	2'-6"	3'-0"	3'-0"

②MINIMUM COVER SHALL BE MEASURED FROM TOP OF PIPE TO TOP OF THE MAINTAINED CONSTRUCTION ROADWAY SURFACE. THE SURFACE SHALL BE MAINTAINED.

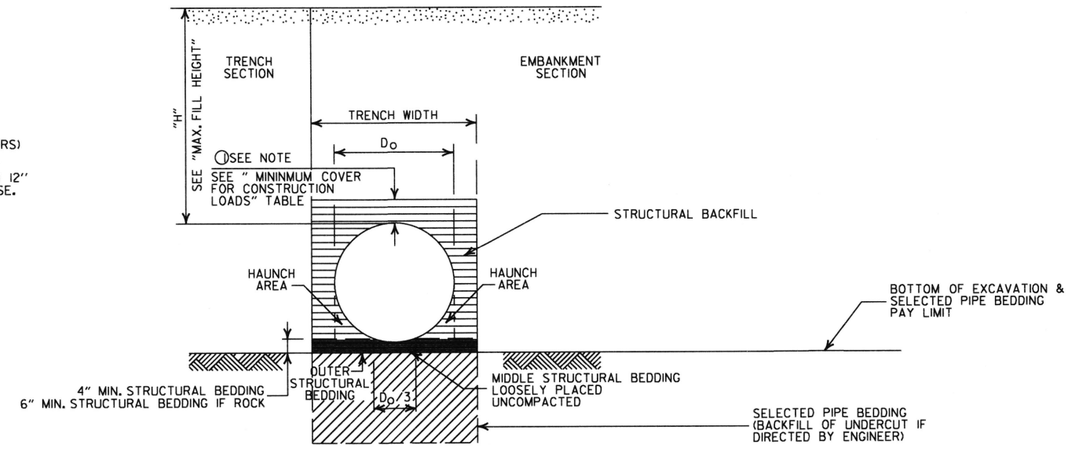

TYPE 2 EMBANKMENT AND TRENCH INSTALLATIONS

1. STRUCTURAL BACKFILL, EMBANKMENT, AND OUTER STRUCTURAL BEDDING MATERIAL SHALL BE COMPACTED TO 95% OF THE MAXIMUM DENSITY ACCORDING TO THE TYPE OR CLASS OF MATERIAL USED.

CONSTRUCTION SEQUENCE

1. PLACE STRUCTURAL BEDDING MATERIAL TO GRADE. DO NOT COMPACT.
2. INSTALL PIPE TO GRADE.
3. COMPACT STRUCTURAL BEDDING OUTSIDE THE MIDDLE THIRD OF THE PIPE.
4. THE STRUCTURAL BACKFILL SHALL BE PLACED AND COMPACTED IN LAYERS NOT EXCEEDING 8". THE LAYERS SHALL BE BROUGHT UP EVENLY AND SIMULTANEOUSLY TO THE ELEVATION OF THE MINIMUM COVER.
5. PIPE INSTALLATION MAY REQUIRE THE USE OF RESTRAINTS, WEIGHTING OR OTHER APPROVED METHODS IN ORDER TO HELP MAINTAIN GRADE AND ALIGNMENT.

GENERAL NOTES

1. PIPE SHALL CONFORM TO ASTM F949, CELL CLASS 12454. INSTALLATION SHALL CONFROM TO JOB SPECIAL PROVISION "PLASTIC PIPE" AND SECTION 606 OF THE STANDARD SPECIFICIATIONS FOR HIGHWAY CONSTRUCTION (CURRENT EDITION).
2. PLASTIC PIPE CULVERT DESIGN SHALL CONFORM TO AASHTO LRFD BRIDGE DESIGN SPECIFICATIONS, FIFTH EDITION (2010) WITH 2010 INTERIMS.
3. THE MAXIMUM ALLOWABLE TRENCH WIDTH SHALL BE THE MINIMUM WIDTH PLUS A SUFFICIENT WIDTH TO ENSURE WORKING ROOM TO PROPERLY AND SAFELY PLACE AND COMPACT HAUNCHING AND OTHER BACKFILL MATERIAL.
4. IMPERVIOUS MATERIAL SHOULD BE PLACED AS DIRECTED BY THE ENGINEER AT THE ENDS OF THE CULVERT TO PREVENT LOSS OF STRUCTURAL BEDDING WHEN PERVIOUS MATERIAL IS USED FOR STRUCTURAL BEDDING AND/OR BACKFILL.
5. WHEN DIRECTED BY THE ENGINEER, UNSUITABLE MATERIAL THAT IS ENCOUNTERED AT THE BOTTOM OF THE EXCAVATED TRENCH (BELOW THE AREA IDENTIFIED AS "STRUCTURAL BEDDING" ABOVE) WILL BE EXCAVATED AND REPLACED WITH SELECTED PIPE BEDDING. THE QUANTITY OF MATERIAL REQUIRED TO BACKFILL THE UNDERCUT AREA UP TO THE SELECTED PIPE BEDDING PAY LIMIT DESIGNATED ABOVE WILL BE MEASURED AND PAID FOR AS "SELECTED PIPE BEDDING."
6. WHEN THE EXISTING MATERIAL EXCAVATED FOR THE PIPE TRENCH IS DETERMINED BY THE ENGINEER TO BE UNSUITABLE FOR BACKFILLING THE PIPE (ABOVE THE AREA IDENTIFIED ABOVE AS STRUCTURAL BACKFILL), BORROW MATERIAL OR MATERIAL FROM THE ROADWAY EXCAVATION WILL BE USED TO BACKFILL THE PIPE. IF SUITABLE MATERIAL IS NOT AVAILABLE, THE ENGINEER MAY AUTHORIZE THE USE OF "SELECTED PIPE BACKFILL."
7. FOR PIPE TYPES THAT ARE NOT SMOOTH ON THE OUTSIDE (CORRUGATED OR PROFILE WALLS), BACKFILL GRADATIONS SHOULD BE SELECTED THAT WILL PERMIT THE FILLING OF THE CORRUGATION OR PROFILE VALLEY.
8. PVC PIPES OF DIAMETERS OTHER THAN SHOWN WILL NOT BE ALLOWED.
9. JOINTS FOR PVC PIPE SHALL MEET THE REQUIREMENTS FOR SOIL TIGHTNESS AS SPECIFIED IN AASHTO SECTION 26.4.2.4 AND 30.4.2 "AASHTO LRFD BRIDGE CONSTRUCTION SPECIFICATIONS." JOINTS SHALL BE INSTALLED PER MANUFACTURER'S RECOMMENDATIONS.

- LEGEND -

H = FILL HEIGHT (FT.)
D_O = OUTSIDE DIAMETER OF PIPE
MAX. = MAXIMUM
MIN. = MINIMUM

= STRUCTURAL BACKFILL MATERIAL

= UNDISTURBED SOIL

DATE	REVISION	DATE FILMED
2-27-14	REVISED GENERAL NOTE 1.	
12-15-11	REV GENERAL NOTES & MINIMUM COVER NOTE; DELETED SM3 MATERIAL	
11-17-10	ISSUED	

ARKANSAS STATE HIGHWAY COMMISSION

PLASTIC PIPE CULVERT (PVC F949)

STANDARD DRAWING PCP-2

INSTALLATION TYPE	•• MATERIAL REQUIREMENTS FOR STRUCTURAL BACKFILL AND STRUCTURAL BEDDING
TYPE 1	AGGREGATE BASE COURSE (CLASS 4, 5, 6, OR 7)
TYPE 2	•SELECTED MATERIALS (CLASS SM-1, SM-2, OR SM-4)

• SM3 WILL NOT BE ALLOWED.

•• STRUCTURAL BEDDING MATERIAL SHALL HAVE A MAXIMUM PARTICLE SIZE OF 1 INCH. STRUCTURAL BACKFILL MATERIAL SHALL BE FREE OF ORGANIC MATERIAL, STONES LARGER THAN 1.50 INCH IN GREATEST DIMENSION, OR FROZEN LUMPS.

STRUCTURAL BACKFILL AND STRUCTURAL BEDDING MATERIAL WILL NOT BE PAID FOR SEPARATELY, BUT COMPENSATION WILL BE CONSIDERED TO BE INCLUDED IN THE PRICE BID PER LINEAR FOOT OF PVC PIPE.

MAXIMUM HEIGHT OF FILL "H"

PIPE DIAMETER	INSTALLATION TYPE	
	TYPE 1	TYPE 2
18"	18'	14'
24"	16'	12'
30"	18'	14'
36"	16'	12'
42"	18'	13'
48"	15'	11'
60"	17'	12'

MULTIPLE INSTALLATION OF PVC PIPES

PIPE DIAMETER	CLEAR DISTANCE BETWEEN PIPES
18"	1'-6"
24"	2'-0"
30"	2'-6"
36"	3'-0"
42"	3'-6"
48"	4'-0"
60"	5'-0"

MINIMUM TRENCH WIDTH BASED ON FILL HEIGHT "H"

PIPE DIAMETER	TRENCH WIDTH (FEET)	
	"H" < 10'-0"	"H" >OR= 10'-0"
18"	4'-6"	4'-6"
24"	5'-0"	6'-0"
30"	5'-6"	7'-6"
36"	6'-0"	9'-0"
42"	7'-0"	10'-6"
48"	8'-0"	12'-0"
60"	10'-0"	15'-0"

MINIMUM COVER FOR CONSTRUCTION LOADS

PIPE DIAMETER	② MIN. COVER (FEET) FOR INDICATED CONSTRUCTION LOADS			
	18.0-50.0 (KIPS)	50.0-75.0 (KIPS)	75.0-110.0 (KIPS)	110.0-175.0 (KIPS)
36" OR LESS	2'-0"	2'-6"	3'-0"	3'-0"
42" OR GREATER	3'-0"	3'-0"	3'-6"	4'-0"

②MINIMUM COVER SHALL BE MEASURED FROM TOP OF PIPE TO TOP OF THE MAINTAINED CONSTRUCTION ROADWAY SURFACE. THE SURFACE SHALL BE MAINTAINED.

① NOTE:
12" MIN. (18" - 36" DIAMETERS)
MINIMUM COVER VALUE, "H" SHALL INCLUDE A MINIMUM 12" OF PAVEMENT AND/OR BASE.

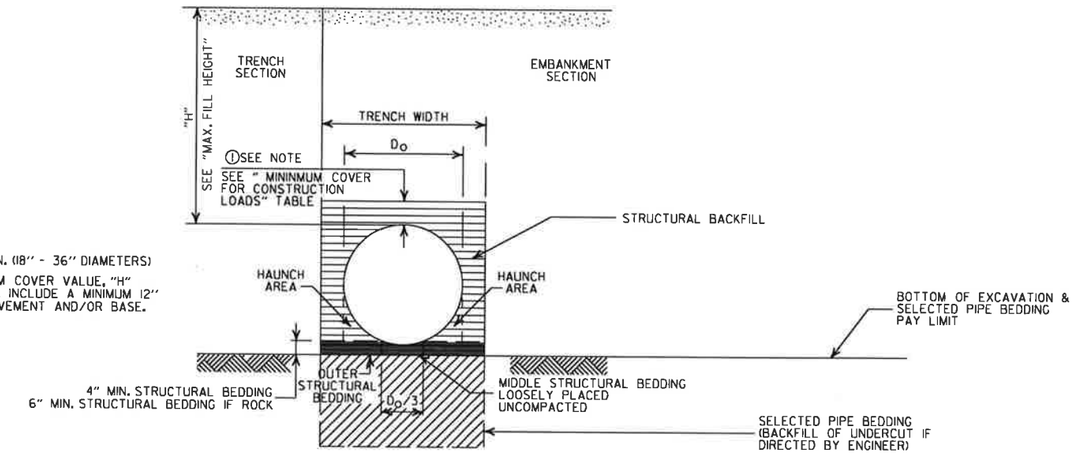

TYPE 2 EMBANKMENT AND TRENCH INSTALLATIONS

1. STRUCTURAL BACKFILL, EMBANKMENT, AND OUTER STRUCTURAL BEDDING MATERIAL SHALL BE COMPACTED TO 95% OF THE MAXIMUM DENSITY ACCORDING TO THE TYPE OR CLASS OF MATERIAL USED.

CONSTRUCTION SEQUENCE

1. PLACE STRUCTURAL BEDDING MATERIAL TO GRADE. DO NOT COMPACT.
2. INSTALL PIPE TO GRADE.
3. COMPACT STRUCTURAL BEDDING OUTSIDE THE MIDDLE THIRD OF THE PIPE.
4. THE STRUCTURAL BACKFILL SHALL BE PLACED AND COMPACTED IN LAYERS NOT EXCEEDING 8". THE LAYERS SHALL BE BROUGHT UP EVENLY AND SIMULTANEOUSLY TO THE ELEVATION OF THE MINIMUM COVER.
5. PIPE INSTALLATION MAY REQUIRE THE USE OF RESTRAINTS, WEIGHTING OR OTHER APPROVED METHODS IN ORDER TO HELP MAINTAIN GRADE AND ALIGNMENT.

GENERAL NOTES

1. PIPE SHALL CONFORM TO ASTM F949, CELL CLASS 12454. INSTALLATION SHALL CONFORM TO JOB SPECIAL PROVISION "PLASTIC PIPE" AND SECTION 606 OF THE STANDARD SPECIFICIATIONS FOR HIGHWAY CONSTRUCTION (CURRENT EDITION).
2. PLASTIC PIPE CULVERT DESIGN SHALL CONFORM TO AASHTO LRFD BRIDGE DESIGN SPECIFICATIONS, FIFTH EDITION (2010) WITH 2010 INTERIMS.
3. THE MAXIMUM ALLOWABLE TRENCH WIDTH SHALL BE THE MINIMUM WIDTH PLUS A SUFFICIENT WIDTH TO ENSURE WORKING ROOM TO PROPERLY AND SAFELY PLACE AND COMPACT HAUNCHING AND OTHER BACKFILL MATERIAL.
4. IMPERVIOUS MATERIAL SHOULD BE PLACED AS DIRECTED BY THE ENGINEER AT THE ENDS OF THE CULVERT TO PREVENT LOSS OF STRUCTURAL BEDDING WHEN PERVIOUS MATERIAL IS USED FOR STRUCTURAL BEDDING AND/OR BACKFILL.
5. WHEN DIRECTED BY THE ENGINEER, UNSUITABLE MATERIAL THAT IS ENCOUNTERED AT THE BOTTOM OF THE EXCAVATED TRENCH (BELOW THE AREA IDENTIFIED AS "STRUCTURAL BEDDING" ABOVE) WILL BE EXCAVATED AND REPLACED WITH SELECTED PIPE BEDDING. THE QUANTITY OF MATERIAL REQUIRED TO BACKFILL THE UNDERCUT AREA UP TO THE SELECTED PIPE BEDDING PAY LIMIT DESIGNATED ABOVE WILL BE MEASURED AND PAID FOR AS "SELECTED PIPE BEDDING."
6. WHEN THE EXISTING MATERIAL EXCAVATED FOR THE PIPE TRENCH IS DETERMINED BY THE ENGINEER TO BE UNSUITABLE FOR BACKFILLING THE PIPE (ABOVE THE AREA IDENTIFIED ABOVE AS STRUCTURAL BACKFILL), BORROW MATERIAL OR MATERIAL FROM THE ROADWAY EXCAVATION WILL BE USED TO BACKFILL THE PIPE. IF SUITABLE MATERIAL IS NOT AVAILABLE, THE ENGINEER MAY AUTHORIZE THE USE OF "SELECTED PIPE BACKFILL."
7. FOR PIPE TYPES THAT ARE NOT SMOOTH ON THE OUTSIDE (CORRUGATED OR PROFILE WALLS), BACKFILL GRADATIONS SHOULD BE SELECTED THAT WILL PERMIT THE FILLING OF THE CORRUGATION OR PROFILE VALLEY.
8. PVC PIPES OF DIAMETERS OTHER THAN SHOWN WILL NOT BE ALLOWED.
9. JOINTS FOR PVC PIPE SHALL MEET THE REQUIREMENTS FOR SOIL TIGHTNESS AS SPECIFIED IN AASHTO SECTION 26.4.2.4 AND 30.4.2 "AASHTO LRFD BRIDGE CONSTRUCTION SPECIFICATIONS." JOINTS SHALL BE INSTALLED PER MANUFACTURER'S RECOMMENDATIONS.

- LEGEND -

H = FILL HEIGHT (FT.)
D_O = OUTSIDE DIAMETER OF PIPE
MAX. = MAXIMUM
MIN. = MINIMUM

= STRUCTURAL BACKFILL MATERIAL

= UNDISTURBED SOIL

DATE	REVISION	DATE FILMED
11-07-19	ISSUED	

ARKANSAS STATE HIGHWAY COMMISSION

PLASTIC PIPE CULVERT (POLYPROPYLENE)

STANDARD DRAWING PCP-3

NOTES:
1. REFER TO THE STRIPING DETAILS FOR PAVEMENT MARKING LINE WIDTHS.
2. THIS DRAWING SHALL BE USED IN CONJUNCTION WITH THE LATEST REVISED ADDITION OF THE "MANUAL ON UNIFORM TRAFFIC CONTROL DEVICES."
3. RAISED PAVEMENT MARKERS SHALL BE PLACED ON AN 80 FEET SPACING UNLESS OTHERWISE SHOWN IN THE PLANS.

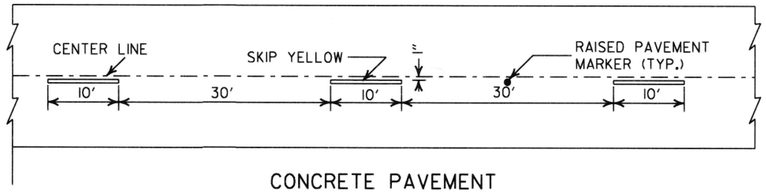

CONCRETE PAVEMENT

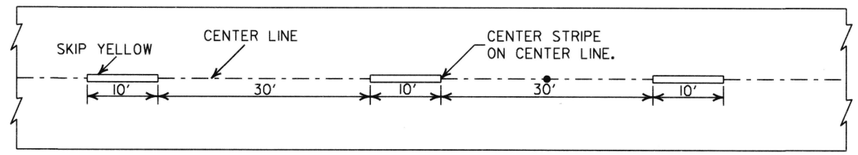

ASPHALT PAVEMENT

BROKEN LINE STRIPING

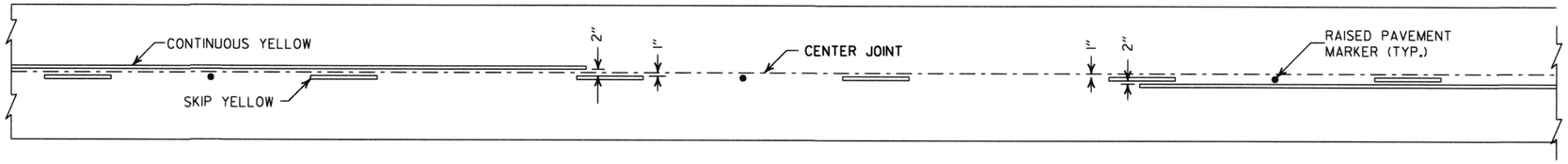

SOLID LINE STRIPING ON CONCRETE PAVEMENT

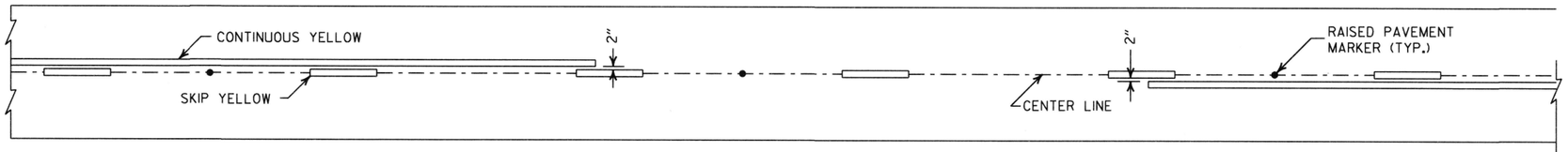

SOLID LINE STRIPING ON ASPHALT PAVEMENT

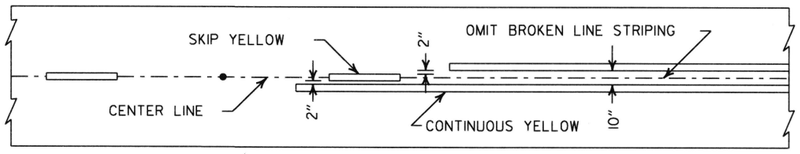

ASPHALT PAVEMENT

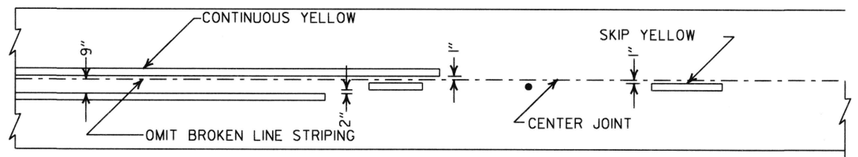

CONCRETE PAVEMENT

STRIPING AT ADJACENT NO PASSING LANES

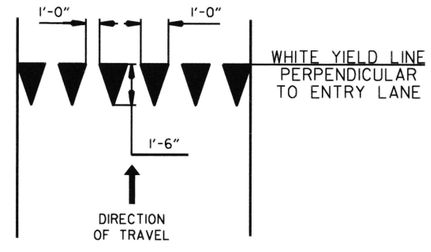

YIELD LINE DETAIL

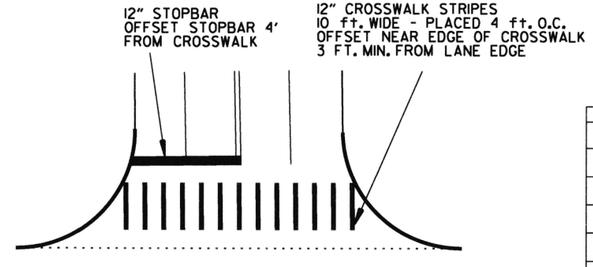

CROSSWALK AND STOPBAR DETAILS

2" FOR ASPHALT OR CONCRETE PAVEMENT
6" FOR BITUMINOUS SURFACE TREATMENT

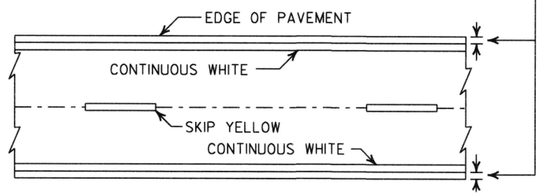

PAVEMENT EDGE LINE MARKING

NOTE:
THE RED LENS OF THE TYPE II R.P.M. SHALL FACE THE INCORRECT TRAFFIC MOVEMENT.

TYPE II
RED/CLEAR OR
YELLOW/YELLOW

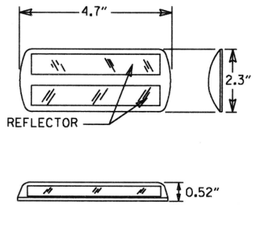

NOTE:
DIMENSIONS SHOWN FOR RAISED PAVEMENT MARKERS ARE TYPICAL. THE CONTRACTOR MAY SUBSTITUTE SIMILAR MARKERS WITH THE APPROVAL OF THE ENGINEER. REQUESTING APPROVAL FOR SIMILAR MARKERS MAY BE MADE BY REFERRING TO THE AHTD QUALIFIED PRODUCTS LIST.

DETAIL OF STANDARD RAISED PAVEMENT MARKERS

DATE	REVISION	FILMED
6-1-17	ADDED YIELD LINE DETAIL	
5-12-16	REVISED LINE WIDTHS, SPACING, & NOTES	
9-12-13	REVISED DETAIL OF STANDARD RAISED PAVEMENT MARKERS	
11-17-10	REVISED GENERAL NOTES & REMOVED PLOWABLE PVMT MRKRS	
11-18-04	REVISED NOTE 2 & GENERAL NOTES	
8-22-02	ADDED CROSSWALK & STOPBAR DTLS.	
7-02-98	ADDED DETAILS OF STD. RAISED PAV'T. MARKERS	
4-26-96	REV. NOTES 3&4; ADDED R.P.M.	
9-30-80	DRAWN	1-9-30-80

ARKANSAS STATE HIGHWAY COMMISSION

PAVEMENT MARKING DETAILS

STANDARD DRAWING PM-1

NOTE:

1. UNLESS OTHERWISE SPECIFIED ON THE PLANS, THE UNDERDRAIN COVER SHALL BE THOROUGHLY COMPACTED EARTH AND SHALL BE SUBSIDIARY TO PIPE UNDERDRAIN.

2. GRANULAR MATERIAL SHALL BE WRAPPED WITH GEOTEXTILE FABRIC. LAP FABRIC 12" OR THE WIDTH OF THE TRENCH AT THE TOP.

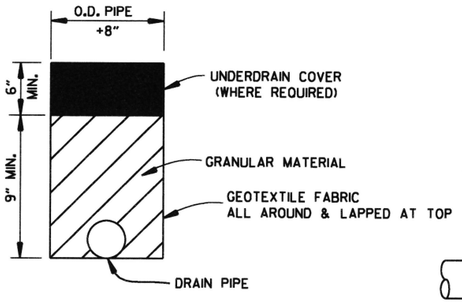

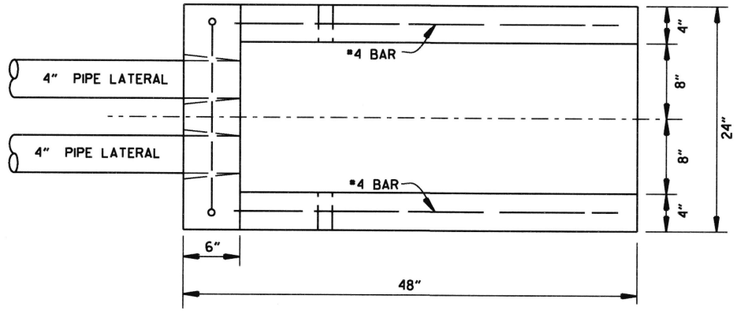

PLAN VIEW

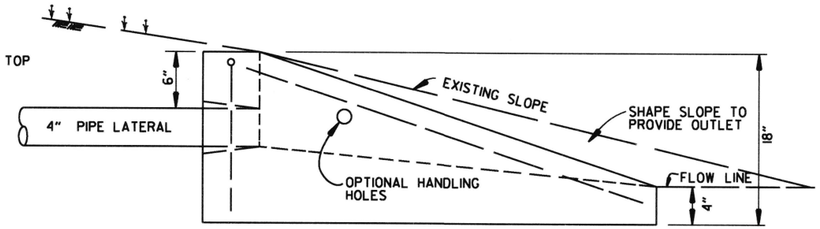

SIDE VIEW

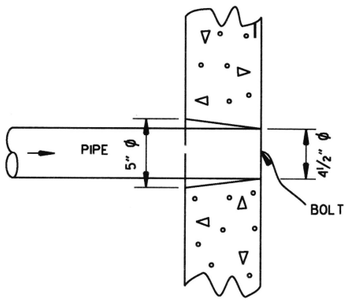

DETAIL OF HOLE
FOR 4" PIPE

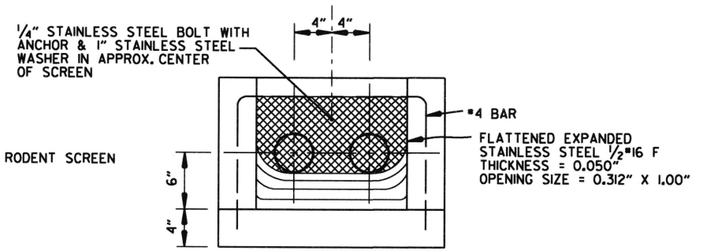

FRONT VIEW
(DETAIL OF RODENT SCREEN)

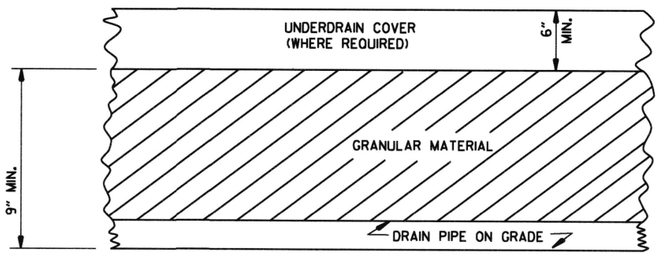

DETAILS OF PIPE UNDERDRAIN

UNDERDRAIN OUTLET PROTECTORS

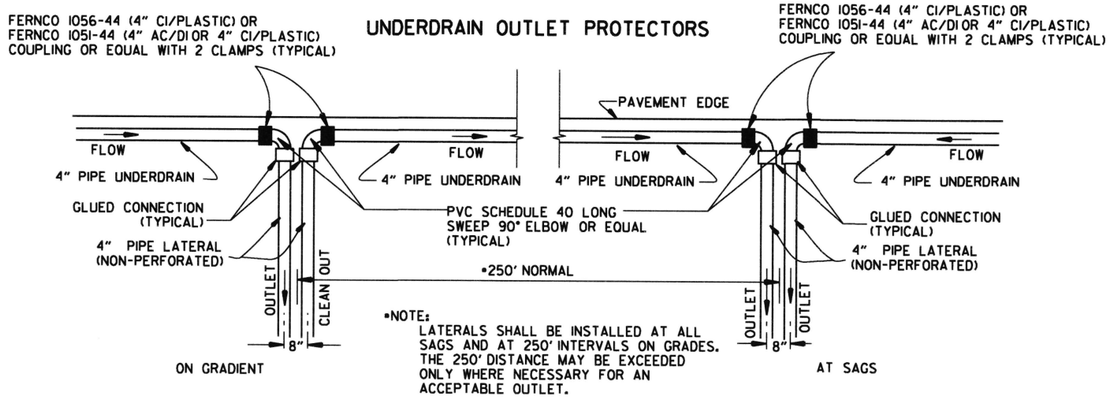

DETAIL OF PIPE UNDERDRAIN LATERALS WHEN PLACED ALONG PAVEMENT EDGE

NOTE: PVC PIPE FOR LATERALS SHALL MEET THE REQUIREMENTS OF ASTM D 1785 (LATEST REVISION) FOR SCHEDULE 40 PIPE.

NOTES FOR PIPE UNDERDRAINS

1. GEOTEXTILE FABRIC SHALL MEET THE REQUIREMENTS OF SECTION 625 FOR TYPE I. PAYMENT FOR GEOTEXTILE FABRIC AND GRANULAR FILTER MATERIAL SHALL BE INCLUDED IN THE PRICE BID PER LIN. FT. FOR "4" PIPE UNDERDRAINS" IN ACCORDANCE WITH SECTION 611 OF THE STANDARD SPECIFICATIONS.

2. 4" NON-PERFORATED SCHEDULE 40 PVC PIPE LATERALS WITH OUTLET PROTECTORS SHALL BE INSTALLED AS SHOWN HEREON. LATERALS WILL BE MEASURED AND PAID FOR AS "4" PIPE UNDERDRAINS." UNDERDRAIN OUTLET PROTECTORS WILL BE MEASURED AND PAID FOR BY THE UNIT IN ACCORDANCE WITH SECTION 611 OF THE STANDARD SPECIFICATIONS.

3. EXISTING 4" PIPE UNDERDRAINS MAY BE CONNECTED TO PROPOSED DROP INLETS OR EXTENDED WHERE DIRECTED BY THE ENGINEER. PAYMENT FOR CONNECTING TO DROP INLETS SHALL BE CONSIDERED INCLUDED IN THE PRICE BID FOR "4" PIPE UNDERDRAINS."

4. THE LOCATION OF ALL LATERALS SHALL BE MARKED WITH 4" X 12" PERMANENT PAVEMENT MARKING TAPE (TYPE III WHITE) AT THE OUTSIDE EDGE OF THE SHOULDER, PLACED TRANSVERSE TO TRAFFIC. PAYMENT FOR THIS WORK SHALL BE INCLUDED IN THE PRICE BID FOR THE VARIOUS CONTRACT ITEMS.

5. PAYMENT FOR THE RODENT SCREEN SHALL BE INCLUDED IN THE PRICE BID PER EACH FOR "UNDERDRAIN OUTLET PROTECTORS."

6. ANY EXISTING UNDERDRAINS THAT INTERFERE WITH INSTALLATION OF THE NEW UNDERDRAIN SYSTEM SHALL BE REMOVED AND DISPOSED OF AS DIRECTED BY THE ENGINEER. PAYMENT WILL BE CONSIDERED INCLUDED IN THE PRICE BID FOR THE VARIOUS CONTRACT ITEMS. EXISTING UNDERDRAIN OUTLET PROTECTORS SHALL BE REMOVED UNDER THE ITEM "REMOVAL AND DISPOSAL OF UNDERDRAIN OUTLET PROTECTORS."

7. AT LOCATIONS WHERE A SINGLE LATERAL IS USED THE CONTRACTOR SHALL HAVE THE FOLLOWING OPTIONS: 1. INSTALL OUTLET PROTECTOR AS SHOWN ON STANDARD DRAWING PU-1 AND GROUT THE UNUSED HOLE OR 2. INSTALL AN OUTLET PROTECTOR WITH A SINGLE HOLE.

DATE	REVISION	DATE FILMED
12-8-16	ADDED NOTES FOR PIPE UNDERDRAINS, REVISED RODENT SCREEN DETAIL AND NOTES, REMOVED NOTE 1 FOR GRANULAR MATERIAL, ADDED NOTE FOR GEOTEXTILE FABRIC	
4-10-03	REVISED NOTE 3	
1-12-00	REVISED DETAIL OF UNDERDRAIN LATERALS	
11-18-98	REVISED NOTE	
10-18-96	REVISED MIN. DEPTH & GEOTEXTILE FABRIC	
4-26-96	ADDED LATERAL NOTE; 5½" TO 5"	
11-22-95	REVISED LATERALS	
7-20-95	REVISED LATERALS & ADDED NOTE	
11- 3-94	REVISED FOR DUAL LATERALS	11- 3-94
10- 1-92	SUBSTITUTED GEOTEXTILE	10- 1-92
8-15-91	ADDED POLYEDTHYLENE PIPE	8-15-91
11- 8-90	DELETED ALTERNATE NOTE	11- 8-90
1-25-90	ADDED 4" SNAP ADAPTER	1-25-90
11-30-89	DEL. (SUBGRADE); ADDED (WHERE REQUIRED)	11-30-89
7-15-88	ISSUED P.L.M.	647-7-15-88

ARKANSAS STATE HIGHWAY COMMISSION

DETAILS OF PIPE UNDERDRAIN

STANDARD DRAWING PU-1

SUPERELEVATION TABLE FOR TWO - WAY TRAFFIC

DEGREE OF CURVE	30 MPH			35 MPH			40 MPH			45 MPH			50 MPH			55 MPH			60 MPH			65 MPH			70 MPH			75 MPH		
	e	Ls (FT)		e	Ls (FT)		e	Ls (FT)		e	Ls (FT)		e	Ls (FT)		e	Ls (FT)		e	Ls (FT)		e	Ls (FT)		e	Ls (FT)		e	Ls (FT)	
		MINIMUM	DESIRABLE		MINIMUM	DESIRABLE		MINIMUM	DESIRABLE		MINIMUM	DESIRABLE		MINIMUM	DESIRABLE		MINIMUM	DESIRABLE		MINIMUM	DESIRABLE		MINIMUM	DESIRABLE		MINIMUM	DESIRABLE		MINIMUM	DESIRABLE
0° 15'	NC			NC			NC			NC			NC			NC			NC			NC			NC			NC		
0° 30'	NC			NC			NC			NC			NC			RC	96		RC	96		RC	96		RC	96		0.022	101	
0° 45'	NC			NC			NC			RC	90		RC	96		0.026	110		0.024	108		0.026	110		0.030	120		0.032	125	
1° 00'	NC			NC			RC	84		0.022	95		0.022	101		0.030	120		0.030	120		0.034	130		0.038	139		0.042	149	300
1° 15'	NC			NC			0.022	88		0.028	108		0.028	115		0.032	125		0.038	139		0.042	149		0.046	158	300	0.052	173	
1° 30'	NC			RC	78		0.026	97		0.030	113		0.032	125		0.038	139		0.044	154		0.050	168	300	0.056	182		0.062	197	
1° 45'	RC	72		RC	78		0.028	101		0.034	122		0.036	134		0.044	154		0.048	163		0.056	182		0.064	202		0.070	216	
2° 00'	RC	72		0.024	86		0.032	109		0.038	131		0.042	149		0.048	163		0.054	178		0.062	197		0.070	216		0.078	235	
2° 15'	RC	72		0.026	90		0.034	113		0.042	140		0.048	158		0.054	178		0.058	187		0.068	211		0.076	230	350	0.086	254	350
2° 30'	0.022	75		0.028	94		0.038	122		0.046	149		0.050	158		0.058	187		0.064	202		0.072	221		0.082	245		0.092	269	
2° 45'	0.024	79		0.030	98		0.040	126		0.050	158		0.054	178		0.064	202		0.068	211		0.078	235		0.088	259		0.098	283	400
3° 00'	0.026	83		0.034	105		0.044	134		0.052	162		0.056	187		0.068	211		0.072	221		0.078	235		0.088	259		0.100	288	
3° 15'	0.028	86		0.036	109		0.046	139		0.056	171		0.062	197		0.070	216		0.076	230		0.086	254		0.096	278				
3° 30'	0.030	90		0.038	113		0.050	147		0.058	176		0.066	206		0.072	221		0.078	235		0.088	259		0.098	283				
3° 45'	0.032	93		0.040	117		0.052	151		0.062	185		0.070	216		0.076	230		0.082	245		0.092	269		0.100	288				
4° 00'	0.034	97		0.042	121		0.054	155		0.064	189		0.072	221		0.080	240		0.084	250		0.094	274							
4° 15'	0.036	100		0.044	125		0.056	160		0.068	198		0.076	230		0.084	250		0.086	254		0.096	278							
4° 30'	0.038	100		0.046	129		0.060	168		0.070	203		0.078	235		0.086	254		0.090	264		0.098	283							
4° 45'	0.038	104	200	0.048	133	200	0.062	172	200	0.072	207	250	0.082	245	250	0.090	264	300	0.092	269	300	0.100	288	350							
5° 00'	0.040	108		0.050	137		0.066	181		0.078	221		0.084	250		0.092	269		0.094	274										
5° 30'	0.044	115		0.054	144		0.070	189		0.082	230		0.088	259		0.098	283		0.100	288										
6° 00'	0.046	119		0.058	152		0.074	198		0.086	239		0.092	269		0.100	288													
6° 30'	0.050	126		0.062	160		0.078	206		0.090	248		0.096	278																
7° 00'	0.052	130		0.064	164		0.080	210		0.092	252		0.098	283																
7° 30'	0.054	133		0.068	172		0.084	219		0.094	257		0.100	288																
8° 00'	0.058	140		0.070	176		0.086	223	250	0.096	261	300																		
8° 30'	0.060	144		0.072	179		0.088	227		0.098	266																			
9° 00'	0.062	148		0.076	187		0.092	235		0.100	270																			
9° 30'	0.064	151		0.078	191		0.094	240																						
10° 00'	0.066	155		0.080	195		0.096	244																						
11° 00'	0.070	162		0.084	203		0.098	248																						
12° 00'	0.074	169		0.088	211	250	0.100	252	300																					
13° 00'	0.076	173		0.090	215																									
14° 00'	0.080	180		0.094	222																									
15° 00'	0.082	184		0.096	226																									
16° 00'	0.086	191		0.098	230																									
17° 00'	0.088	194		0.100	234																									
18° 00'	0.090	198	250																											
19° 00'	0.092	202																												
20° 00'	0.094	205																												
21° 00'	0.096	209																												
22° 00'	0.098	209																												
23° 00'	0.098	212																												
24° 00'	0.098	212																												
25° 00'	0.100	216																												

D MAX = 28° 30' | D MAX = 19° 30' | D MAX = 13° 45' | D MAX = 10° 30' | D MAX = 8° 25' | D MAX = 6° 30' | D MAX = 5° 15' | D MAX = 4° 15' | D MAX = 3° 30' | D MAX = 2° 45'

GENERAL NOTES

1. ON PAVEMENT WITH TWO-WAY TRAFFIC, THE SUPERELEVATION SHALL BE REVOLVED ON THE INSIDE PAVEMENT EDGE UNLESS OTHERWISE NOTED ON THE PLANS
2. SUPERELEVATION VALUES SHOWN ON THE CROSS SECTIONS ARE VALUES (+) OR (-) TO BE ADDED TO OR SUBTRACTED FROM THE POINT OF CONTROL.
3. LENGTHS FOR L MAY BE ROUNDED IN MULTIPLES OF 25 FT. OR 50 FT. TO PERMIT SIMPLER CALCULATIONS.
4. PAVEMENTS WIDER THAN 2 LANES SHALL HAVE ADDITIONAL TRANSITION LENGTHS AS FOLLOWS:

3 LANE UNDIVIDED - - - - - +20%
4 LANE UNDIVIDED - - - - - +50%
5 LANE UNDIVIDED - - - - - +80%
6 LANE UNDIVIDED - - - - - +100%

NOTE: MAINTAIN NORMAL CROWN ON INSIDE UNTIL SUPERELEVATION EXCEEDS 2C.

RATE OF SUPERELEVATION SHALL BE COMPUTED ON STRAIGHT LINE METHOD USING APPLICABLE Ls.

SUPERELEVATION FORMULA = $\frac{Lde}{Ls}$

ABBREVIATIONS

NC - NORMAL CROWN
RC - REVERSE CROWN, SUPERELEVATION AT NORMAL CROWN SLOPE
e - RATE OF SUPERELEVATION (FT. PER FT.)
Ls - LENGTH OF SUPERELEVATION TRANSITION (FT.)
L - DISTANCE FROM BEGINNING OF SUPERELEVATION TRANSITION TO ANY POINT (FT.)
d - WIDTH OF PAVEMENT (FT.) OR WIDTH OF SUBGRADE (FT.)
C - NORMAL CROWN (FT.)

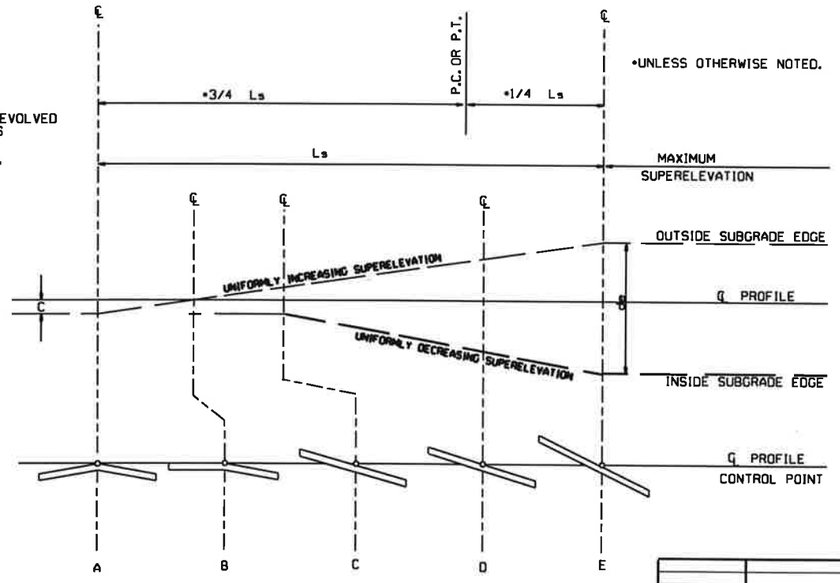

STANDARD METHOD WHEN SUPERELEVATION REVOLVES AROUND CENTER LINE

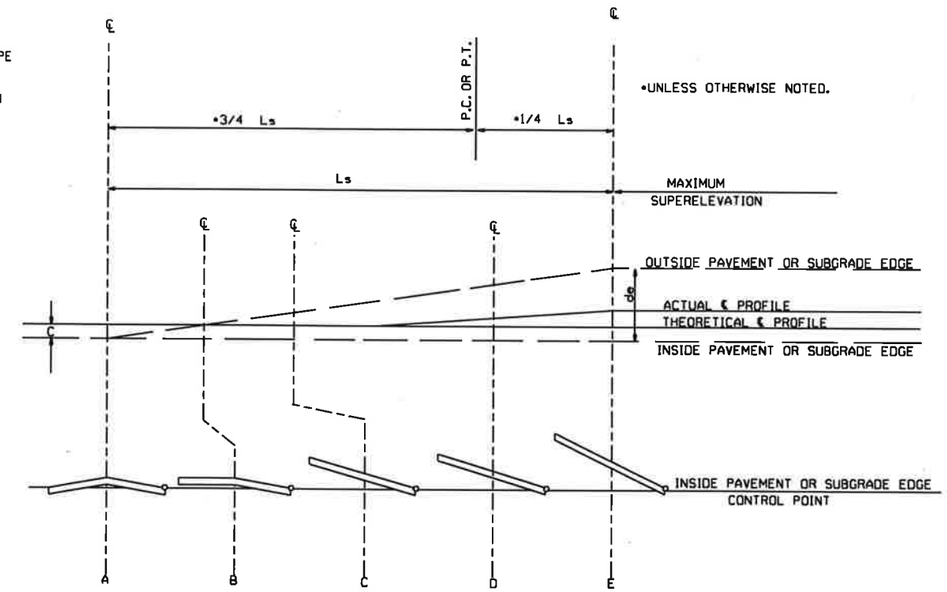

STANDARD METHOD WHEN SUPERELEVATION REVOLVES AROUND INNER SUBGRADE POINT OR INNER PAVEMENT EDGE

NOTE: MAINTAIN NORMAL CROWN ON INSIDE UNTIL SUPERELEVATION EXCEEDS 2C.

DATE	REVISION
11-07-19	REVISED SUPERELEVATION TABLE
10-18-96	ADDED FORMULA
01-09-87	ISSUED

534-1-9-87
DATE FILMED

ARKANSAS STATE HIGHWAY COMMISSION

TABLES AND METHOD OF SUPERELEVATION FOR TWO-WAY TRAFFIC

STANDARD DRAWING SE-2

R1-1

STANDARD 30"X30"
EXPRESSWAY 36"X36"
SPECIAL 48"X48"

R1-2

STD. 36"X36"X36"
EXPWY. 48"X48"X48"
FWY. 60"X60"X60"

R2-1

STD. 24"X30"
EXPWY. 36"X48"
FWY. 48"X60"

W3-5

STD. 36"X36"
EXPWY. 48"X48"
FWY. 48"X48"

W3-5a

STD. 36"X36"
EXPWY. 48"X48"
FWY. 48"X48"

R4-1

STD. 24"X30"
EXPWY. 36"X48"
FWY. 48"X60"

R4-2

STD. 24"X30"
EXPWY. 36"X48"
FWY. 48"X60"

R5-1

STD. 30"X30"
EXPWY. 36"X36"
SPECIAL 48"X48"

RII-2

48"X30"

RII-3A

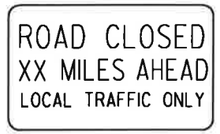

60"X30"

RII-4

60"X30"

W21-5a

STD. 36"X36"
FWY. 48"X48"

WI-1

STD. 36"X36"
FWY. 48"X48"

WI-2

STD. 36"X36"
FWY. 48"X48"

WI-3

STD. 48"X48"

WI-4

STD. 48"X48"

WI-6

STD. 48"X24"
SPECIAL 60"X30"

WI-8

STD. 18"X24"
SPECIAL 24"X30"
EXPWY. 30"X36"
FWY. 36"X48"

W3-1

STD. 36"X36"
SPECIAL 48"X48"

W3-2

STD. 36"X36"
SPECIAL 48"X48"

W4-2

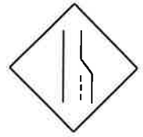

STD. 36"X36"
FWY. 48"X48"

W5-1

STD. 36"X36"
SPECIAL 48"X48"

W6-3

EXPWY. 36"X36"
SPECIAL 48"X48"

W8-7

EXPWY. 36"X36"
FWY. 48"X48"

W9-2

STD. 36"X36"
FWY. 48"X48"

WI3-1

STD. 24"X24"

W20-1

STD. 48"X48"

W20-2

STD. 48"X48"

W20-3

STD. 48"X48"

W20-4

STD. 48"X48"

W20-5

STD. 48"X48"

W20-7a

STD. 36"X36"
FWY. 48"X48"

W21-2

STD. 30"X30"
SPECIAL 36"X36"

W21-5

STD. 30"X30"
SPECIAL 36"X36"

W24-1

STD. 36"X36"

WI-4b

STD. 48"X48"

R56-1

STD. 18"X18"

W8-11

STD. 36"X36"
FWY. 48"X48"

W8-9

STD. 36"X36"
FWY. 48"X48"

G20-1

60"X24"

G20-2

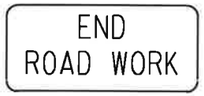

48"X24"

OM-3L OM-3R

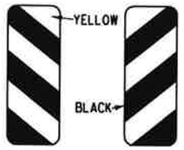

12"X36"

M4-9

STD. 30"X24"
SPECIAL 48"X36"
SPECIAL 60"X48"

M4-10

48"X18"

R55-1

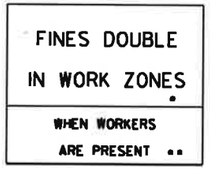

36"X60"

* USE 6" C LETTERS
** USE 4" D LETTERS

ADVANCE DISTANCES
(XXXX)

500 FT	½ MILE
1000 FT	¾ MILE
1500 FT	1 MILE AHEAD

GENERAL NOTES:

1. ALL TRAFFIC CONTROL DEVICES USED ON ROAD CONSTRUCTION SHALL CONFORM TO THE MANUAL ON UNIFORM TRAFFIC CONTROL DEVICES, LATEST EDITION, AND TO THE STANDARD HIGHWAY SIGNS, LATEST EDITION, OR AS APPROVED BY THE FEDERAL HIGHWAY ADMINISTRATION.
2. TRAFFIC CONTROL DEVICES SHALL BE SET UP JUST BEFORE THE START OF CONSTRUCTION OPERATIONS AND SHALL BE PROPERLY MAINTAINED DURING THE TIME SUCH CONDITIONS EXIST. THEY SHALL REMAIN IN PLACE ONLY AS LONG AS NEEDED AND REMOVED THEREAFTER.
3. EXISTING SIGNS AND CONSTRUCTION SIGNS SHALL BE KEPT IN PROPER POSITION, AND BE CLEAN AND LEGIBLE AT ALL TIMES. SIGNS THAT DO NOT APPLY TO EXISTING CONDITIONS SHALL BE REMOVED. SIGNS THAT ARE DAMAGED, DEFACED, OR THAT ACCUMULATE DIRT DURING CONSTRUCTION SHALL BE CLEANED, REPAIRED, OR REPLACED.
- 4. SIGNS ARE USUALLY MOUNTED ON A SINGLE POST, ALTHOUGH THOSE WIDER THAN 36" OR LARGER THAN 10 SQ. FT. SHALL BE MOUNTED ON TWO POSTS OR ABOVE A TYPE III BARRICADE.
- 5. SIGN POSTS DIRECT BURIED IN SOIL SHALL BE 2 LB. MINIMUM CHANNEL POST OR 4"x4" WOOD POSTS. CHANNEL POSTS SHALL BE PAINTED GREEN. WOOD POSTS SHALL BE PAINTED WHITE. ALL POSTS SHALL BE NEATLY CONSTRUCTED, AND SHALL BE REPLUMBED, CLEANED, OR REPAIRED AS NEEDED FOR THE DURATION OF THE JOB. THERE SHALL NOT BE MORE THAN 2 POSTS IN A 7' PATH FOR WOOD OR CHANNEL POSTS. ANY CHANNEL POST SPLICE SHALL BE IN ACCORDANCE WITH STANDARD DRAWING TC-3.
6. POST MOUNTED SIGNS IN RURAL AREAS SHALL BE CONSTRUCTED WITH THE NEAR EDGE OF THE SIGN FROM 6 TO 12 FEET FROM THE PAVEMENT EDGE. SIGNS IN URBAN AREAS AND BARRICADE MOUNTED SIGNS SHALL BE MOUNTED A MINIMUM OF 2 FEET FROM THE PAVEMENT EDGE.
7. ALL POST AND BARRICADE MOUNTED SIGNS MOUNTED IN URBAN AREAS SHALL BE MOUNTED A MINIMUM DISTANCE OF 7' FROM THE BOTTOM OF THE SIGN TO THE ROADWAY SURFACE. ALL POST AND BARRICADE MOUNTED SIGNS MOUNTED IN RURAL AREAS SHALL BE MOUNTED A MINIMUM DISTANCE OF 7' FROM THE BOTTOM OF THE SIGN TO THE ROADWAY SURFACE, EXCEPT A MINIMUM OF 6' SHALL BE USED WHEN MOUNTING AN ADVISORY SIGN BELOW A WARNING SIGN. TEMPORARY SIGNS MAY BE MOUNTED ON PORTABLE SUPPORTS FOR INTERMEDIATE TERM STATIONARY WORK CONDITIONS. THE SIGNS MINIMUM MOUNTING HEIGHT SHALL BE 5'. RETROREFLECTIVE DEVICES SHALL BE USED. TEMPORARY SIGNS MAY BE MOUNTED ON PORTABLE SUPPORTS FOR SHORT-TERM, SHORT DURATION, AND MOBILE CONDITIONS. THEY SHALL BE NO LESS THAN ONE (1) FOOT ABOVE THE TRAVELED WAY. LONG-TERM STATIONARY SIGNS SHALL BE DIRECT BURIED IN SOIL, UNLESS CONDITIONS NECESSITATE THE USE OF PORTABLE SIGNS, OR AS APPROVED BY THE ENGINEER. CONCRETE PADS, CONCRETE OR ROCK BALLAST, OR OTHER SOLID MATERIALS SHALL NOT BE UTILIZED WITH PORTABLE SIGN SUPPORTS.
8. FLAGGERS SHALL USE REFLECTORIZED STOP-SLOW PADDLES. FLAGS MAY BE USED ONLY FOR EMERGENCY SITUATIONS.
9. MOST OF THE SIGNS SHOWN ARE ORIENTED TO THE RIGHT. HOWEVER, THIS DOES NOT PRECLUDE THE USE OF MIRROR IMAGES OF THESE SIGNS WHERE THE REVERSE ORIENTATION MIGHT BETTER CONVEY TO MOTORISTS THE PROPER DIRECTION OF MOVEMENT.
10. R55-1 SIGNS SHALL BE PLACED AT LEAST 1500' BUT NOT MORE THAN 1 MILE IN ADVANCE OF THE WORK ZONE. IF A SPEED LIMIT REDUCTION IS IN EFFECT, THE SIGN SHALL BE PLACED A MINIMUM OF 500' IN ADVANCE OF THE "REDUCED SPEED AHEAD" SIGN.

- NOTE: SUPPORTS FOR SIGNS, BARRICADES, AND VERTICAL PANELS THAT ARE DIFFERENT FROM THE REQUIREMENTS SHOWN IN NOTES 4 & 5, BUT MEET THE REQUIREMENTS OF MANUAL FOR ASSESSING SAFETY HARDWARE (MASH), WILL BE ACCEPTED. COMPLIANCE WITH THE REQUIREMENTS OF MANUAL FOR ASSESSING SAFETY HARDWARE (MASH) IS REQUIRED FOR ALL PROJECTS.

DATE	REVISION	FILMED
11-07-19	REVISED FOR MASH	
4-13-17	DELETED RSP-1 & ADDED W21-5a	
9-2-15	REVISED REDUCED SPEED LIMIT AHEAD SIGNS REVISED ROAD WORK NEXT XX MILES	
12-15-11	REVISED W24-1	
11-17-10	DELETED W8-9a & ADDED W8-9	
10-15-09	ADDED REFERENCE TO MASH & ADDED SIGN W24-1	
4-17-08	REVISED SIGN DESIGNATIONS	
11-18-04	REVISED NOTES	
10-9-03	REVISED NOTE 1	
11-16-01	REVISED NOTE 7	
9-28-00	REVISED NOTE	
8-18-98	ADDED NOTE	
6-26-97	REVISED NOTE 5	
4-03-97	REVISED NOTE 5	
10-18-96	ADDED CONTROLLED ACCESS HWY. SIGN & TO NOTE 7	
10-12-95	ADDED R55-1	
6-8-95	REVISED TO CORRECT SIGN ILLUSTRATIONS	6-8-95
2-2-95	REVISED PER PART VI, MUTCD SEPT. 3, 1993	
8-15-91	DRAWN AND PLACED IN USE	

ARKANSAS STATE HIGHWAY COMMISSION

STANDARD TRAFFIC CONTROLS FOR HIGHWAY CONSTRUCTION

STANDARD DRAWING TC-1

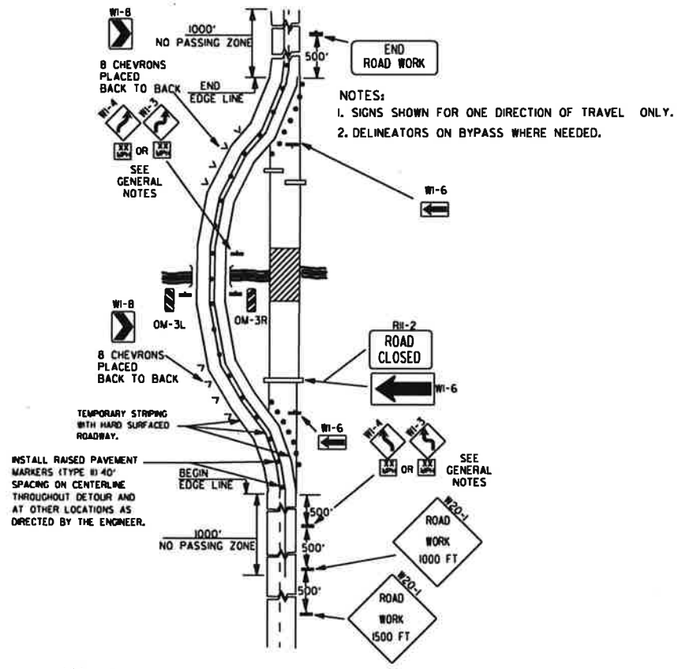

(A) TYPICAL APPLICATION OF TRAFFIC CONTROL DEVICES ON A 2-LANE HIGHWAY WHERE THE ENTIRE ROADWAY IS CLOSED AND A BYPASS DETOUR IS PROVIDED.

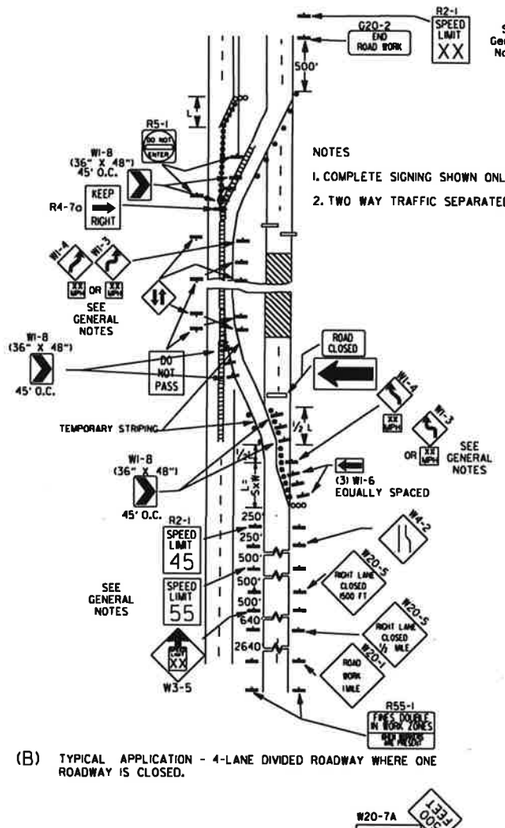

(B) TYPICAL APPLICATION - 4-LANE DIVIDED ROADWAY WHERE ONE ROADWAY IS CLOSED.

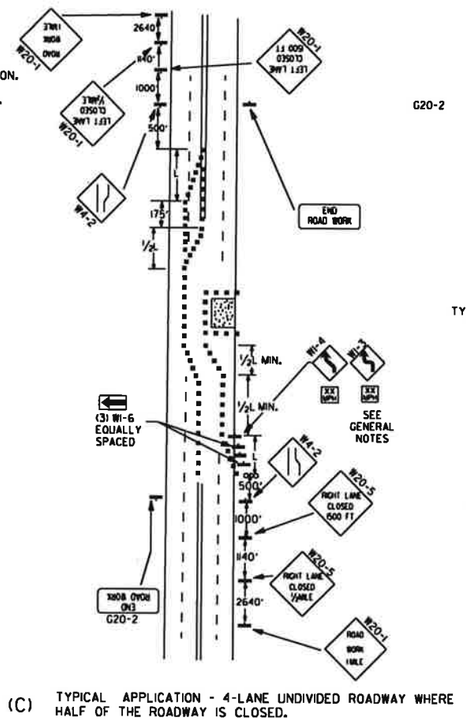

(C) TYPICAL APPLICATION - 4-LANE UNDIVIDED ROADWAY WHERE HALF OF THE ROADWAY IS CLOSED.

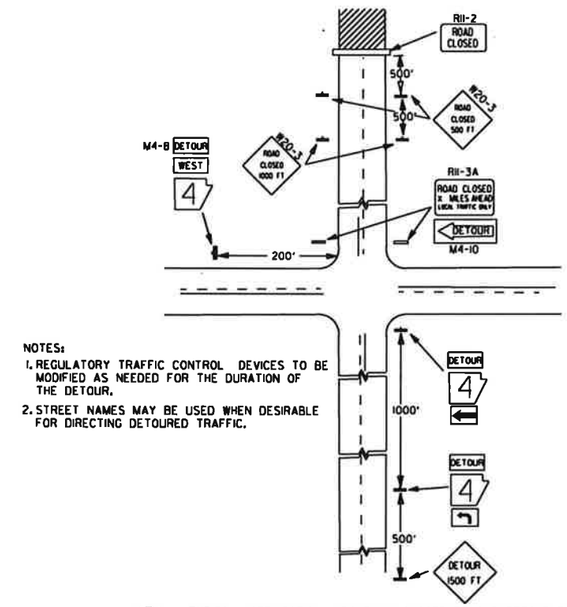

(D) TYPICAL APPLICATION - ROADWAY CLOSED BEYOND DETOUR POINT.

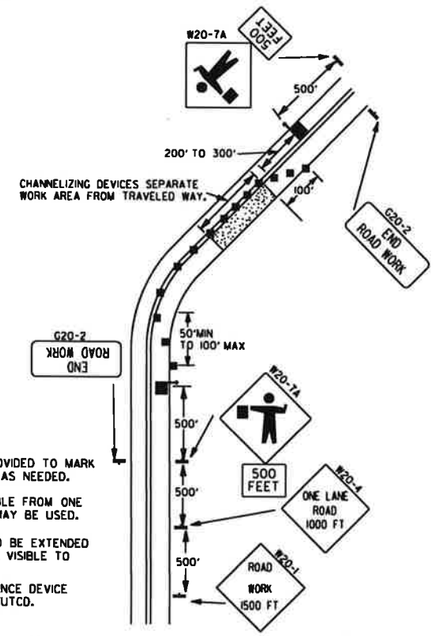

(E) TYPICAL APPLICATION OF TRAFFIC CONTROL DEVICES ON 2-LANE HIGHWAY WHERE ONE LANE IS CLOSED AND FLAGGING IS PROVIDED.

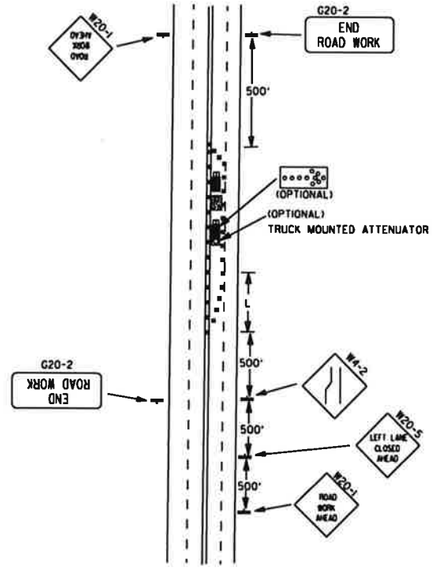

(F) TYPICAL APPLICATION - 4-LANE UNDIVIDED ROADWAY WITH INSIDE LANE CLOSED.

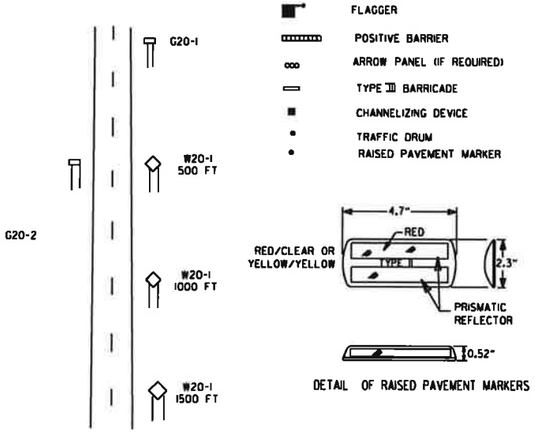

DETAIL OF RAISED PAVEMENT MARKERS

TYPICAL ADVANCE WARNING SIGN PLACEMENT

TAPER FORMULAE:

L=SXW FOR SPEEDS OF 45MPH OR MORE.

$L = \frac{WS^2}{60}$ FOR SPEEDS OF 40MPH OR LESS.

WHERE:

L= MINIMUM LENGTH OF TAPER.

S= NUMERICAL VALUE OF POSTED SPEED LIMIT PRIOR TO WORK OR 85TH PERCENTILE SPEED.

W= WIDTH OF OFFSET.

GENERAL NOTES:

1. THE MAINTENANCE DIVISION SHALL CONDUCT A BALL BANK STUDY TO DETERMINE THE ADVISORY SPEED LIMIT PRIOR TO OPENING TO TRAFFIC. THE ADVISORY SPEED WILL BE POSTED ON W1-3 OR W1-4 CURVE WARNING SIGNS. USE W1-4 WHEN SPEED IS GREATER THAN 30MPH AND W1-3 WHEN 30MPH OR LESS
2. WHEN THE EXISTING SPEED LIMIT IS 55MPH AND THE PLANS REQUIRE A SPEED LIMIT OF 45MPH, THE R2-1(55) SHALL BE OMITTED AND THE W3-5 SHALL BE INSTALLED AT THAT LOCATION. ADDITIONAL R2-1 45MPH SPEED LIMIT SIGNS SHALL BE INSTALLED AT A MAXIMUM OF 1 MILE INTERVALS. AT THE END OF THE WORK AREA A R2-1(XX) SHALL BE INSTALLED TO MATCH ORIGINAL SPEED LIMIT.
3. WHEN THE EXISTING SPEED LIMIT IS 65MPH AND THE PLANS REQUIRE A SPEED LIMIT OF 55MPH, THE R2-1(45) SHALL BE OMITTED. ADDITIONAL R2-1 55MPH SPEED LIMIT SIGNS SHALL BE INSTALLED AT A MAXIMUM OF 1 MILE INTERVALS. AT THE END OF THE WORK AREA A R2-1(XX) SHALL BE INSTALLED TO MATCH ORIGINAL SPEED LIMIT.
4. THE MAXIMUM SPACING BETWEEN CHANNELIZING DEVICES IN A TAPER SHOULD BE APPROXIMATELY EQUAL IN FEET TO THE SPEED LIMIT. BEYOND THE TAPER, MAXIMUM SPACING SHALL BE TWO TIMES THE SPEED LIMIT, OR AS DIRECTED BY THE ENGINEER.
5. WARNING LIGHTS AND/OR FLAGS MAY BE MOUNTED TO SIGNS OR CHANNELIZING DEVICES AT NIGHT AS NEEDED.
6. PAVEMENT MARKINGS NO LONGER APPLICABLE WHICH MIGHT CREATE CONFUSION IN THE MINDS OF VEHICLE OPERATORS SHALL BE REMOVED OR OBLITERATED AS SOON AS PRACTICABLE.
7. TRAILER MOUNTED DEVICES SUCH AS ARROW PANELS AND PORTABLE CHANGEABLE MESSAGE SIGNS SHALL BE DELINEATED BY AFFIXING CONSPICUITY MATERIAL IN A CONTINUOUS LINE ON THE FACE OF THE TRAILER. WHEN PLACED ON OR ADJACENT TO THE SHOULDER AND NOT BEHIND A POSITIVE BARRIER, THESE DEVICES SHALL BE DELINEATED BY PLACING FIVE (5) TRAFFIC DRUMS, EQUALLY SPACED ALONG THE TRAFFIC SIDE OF THE DEVICE.
8. DIMENSIONS SHOWN FOR RAISED PAVEMENT MARKERS ARE TYPICAL. THE CONTRACTOR MAY SUBSTITUTE SIMILAR MARKERS WITH THE APPROVAL OF THE ENGINEER, REQUESTING APPROVAL FOR SIMILAR MARKERS MAY BE MADE BY REFERRING TO THE ARDOT QUALIFIED PRODUCTS LIST.
9. ALL TRAILER MOUNTED DEVICES SUCH AS ARROW PANELS AND PORTABLE CHANGEABLE MESSAGE SIGNS SHALL MEET THE REQUIREMENTS OF THE MANUAL FOR ASSESSING SAFETY HARDWARE (MASH).

DATE	REVISION	FILMED
11-07-19	REVISED NOTE 1, ADDED NOTE 9	
9-2-15	REVISED NOTE 2, ADDED NOTE 8, REVISED DRAWING (A) & REPLACED R2-5A WITH W3-5	
9-12-13	REVISED DETAIL OF RAISED PAVEMENT MARKERS	
3-8-10	ADDED (AFAD)	
8-20-08	REVISED SIGN DESIGNATIONS	
8-18-04	ADDED GENERAL NOTE	
10-18-96	ADDED R55-1	
4-26-96	CORRECTED (a) BEHIND G20-2	
6-8-95	CORRECTED SIGN IDENT. ON W1-4A	6-8-95
2-2-95	REVISED PER PART VI, MUTCD, SEPT. 3, 1993	
8-15-91	DRAWN AND PLACED IN USE	

ARKANSAS STATE HIGHWAY COMMISSION

STANDARD TRAFFIC CONTROLS FOR HIGHWAY CONSTRUCTION

STANDARD DRAWING TC-2

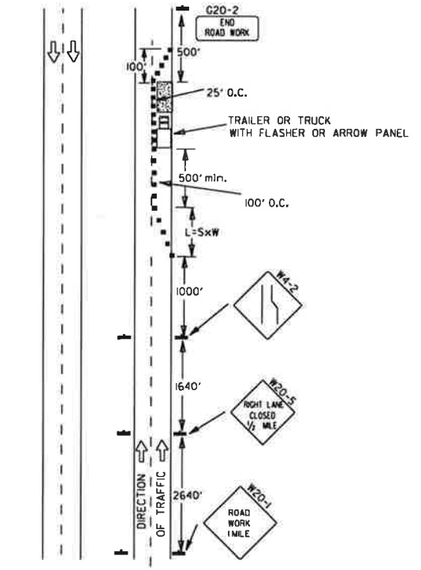

(A) TYPICAL APPLICATION - DAYTIME MAINTENANCE OPERATIONS OF SHORT DURATION ON A 4-LANE DIVIDED ROADWAY WHERE HALF OF THE ROADWAY IS CLOSED.

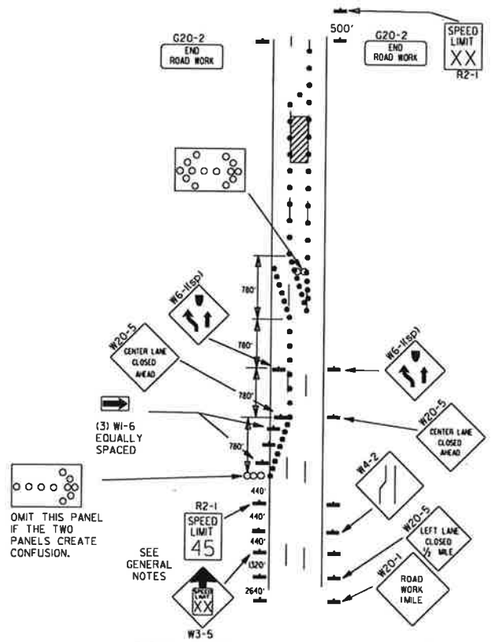

(B) TYPICAL APPLICATION - 3-LANE ONEWAY ROADWAY WHERE CENTER LANE IS CLOSED.

KEY:

ooo ARROW PANEL (IF REQUIRED)

■ CHANNELIZING DEVICE

● TRAFFIC DRUM

GENERAL NOTES:

1. A SPEED LIMIT REDUCTION MAY BE IMPLEMENTED ONLY WHEN DESIGNATED IN THE PLAN OR WHEN RECOMMENDED BY THE ROADWAY DESIGN DIVISION.
2. WHEN THE EXISTING SPEED LIMIT IS 55MPH AND THE PLANS REQUIRE A SPEED LIMIT OF 45MPH, THE R2-1(55) SHALL BE OMITTED AND THE W3-5 SHALL BE INSTALLED AT THAT LOCATION. ADDITIONAL R2-1 45MPH SPEED LIMIT SIGNS SHALL BE INSTALLED AT A MAXIMUM OF 1MILE INTERVALS. AT THE END OF THE WORK AREA A R2-1(XX) SHALL BE INSTALLED TO MATCH ORIGINAL SPEED LIMIT.
3. WHEN THE EXISTING SPEED LIMIT IS 65MPH AND THE PLANS REQUIRE A SPEED LIMIT OF 55MPH, THE R2-1(45) SHALL BE OMITTED. ADDITIONAL R2-1 55MPH SPEED LIMIT SIGNS SHALL BE INSTALLED AT A MAXIMUM OF 1MILE INTERVALS, AT THE END OF THE WORK AREA A R2-1(XX) SHALL BE INSTALLED TO MATCH ORIGINAL SPEED LIMIT.
4. THE MAXIMUM SPACING BETWEEN CHANNELIZING DEVICES IN A TAPER SHOULD BE APPROXIMATELY EQUAL IN FEET TO THE SPEED LIMIT. BEYOND THE TAPER, MAXIMUM SPACING SHALL BE TWO TIMES THE SPEED LIMIT OR AS DIRECTED BY THE ENGINEER.
5. WARNING LIGHTS AND/OR FLAGS MAY BE MOUNTED TO SIGNS OR CHANNELIZING DEVICES AT NIGHT AS NEEDED.
6. PAVEMENT MARKINGS NO LONGER APPLICABLE WHICH MIGHT CREATE CONFUSION IN THE MINDS OF VEHICLE OPERATORS SHALL BE REMOVED OR OBLITERATED AS SOON AS PRACTICABLE.
7. THE G20-1 SIGN WILL BE REQUIRED ON JOBS OF OVER TWO MILES IN LENGTH. WHEN THE LANE CLOSURE IS NOT AT THE BEGINNING OF THE PROJECT, THE G20-1 SIGN SHALL BE ERECTED 125' IN ADVANCE OF THE JOB LIMIT. ADDITIONAL W20-1 (1 MILE) SIGNS ARE NOT REQUIRED IN ADVANCE OF LANE CLOSURES THAT BEGIN INSIDE THE PROJECT LIMITS.
8. FLAGGERS SHALL USE STOP/SLOW PADDLES FOR CONTROLLING TRAFFIC THROUGH WORK ZONES. FLAGS MAY BE USED ONLY FOR EMERGENCY SITUATIONS.
9. ALL PLASTIC DRUMS AND CONES SHALL MEET THE REQUIREMENTS OF MANUAL FOR ASSESSING SAFETY HARDWARE (MASH).
10. TRAILER MOUNTED DEVICES SUCH AS ARROW PANELS AND PORTABLE CHANGEABLE MESSAGE SIGNS SHALL BE DELINEATED BY AFFIXING CONSPICUITY MATERIAL IN A CONTINUOUS LINE ON THE FACE OF THE TRAILER. WHEN PLACED ON OR ADJACENT TO THE SHOULDER AND NOT BEHIND A POSITIVE BARRIER, THESE DEVICES SHALL BE DELINEATED BY PLACING FIVE (5) TRAFFIC DRUMS, EQUALLY SPACED ALONG THE TRAFFIC SIDE OF THE DEVICE.
11. ALL TRAILER MOUNTED DEVICES SUCH AS ARROW PANELS AND PORTABLE CHANGEABLE MESSAGE SIGNS SHALL MEET THE REQUIREMENTS OF THE MANUAL FOR ASSESSING SAFETY HARDWARE (MASH).

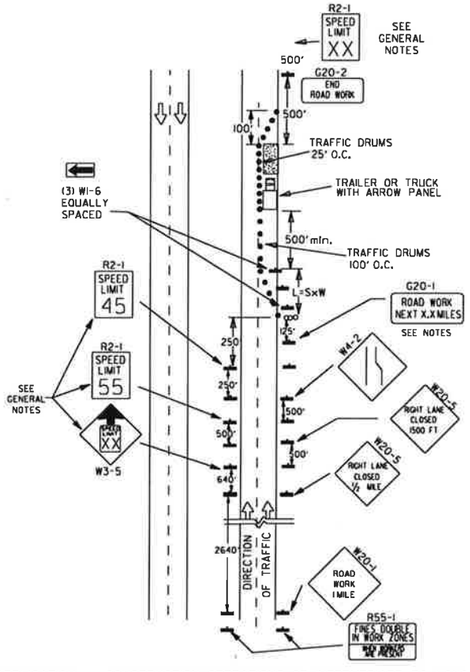

(C) TYPICAL APPLICATION - CONSTRUCTION OPERATIONS OF INTERMEDIATE TO LONG TERM DURATION ON A 4-LANE DIVIDED ROADWAY WHERE HALF OF THE ROADWAY IS CLOSED.

CHANNELIZING DEVICES

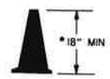

* WHEN CONES ARE USED ON FREEWAYS AND MULTI-LANE HIGHWAYS, THEY SHALL BE 28" MIN. DURING HOURS OF DARKNESS, 28" CONES SHALL BE USED ON ALL ROADWAYS, AND SHALL BE REFLECTORIZED IN ACCORDANCE WITH THE M.U.T.C.D.

CONES

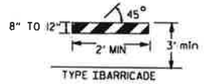

PLASTIC DRUM

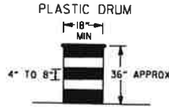

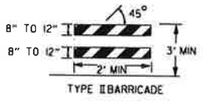

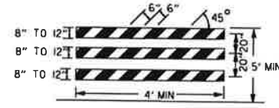

NOTE:
FOR ALL ROAD CLOSURES, THE TYPE III BARRICADES SHALL BE OF SUFFICIENT LENGTH TO EXTEND ACROSS ENTIRE ROADWAY.

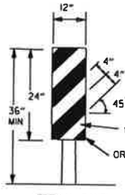

VERTICAL PANEL PLACEMENT

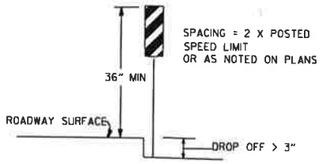

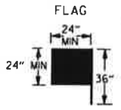

FLAG SHALL BE OF GOOD GRADE RED MATERIAL

TRAFFIC CONTROL DEVICES

NON-INTERSTATE

VERTICAL DIFFERENTIAL	LOCATION	TRAFFIC CONTROL	
		≤ 45 MPH	> 45 MPH
≤ 2"	CENTERLINE	W8-11 AND LANE STRIPING	W8-11 AND LANE STRIPING
> 2"	CENTERLINE	STANDARD LANE CLOSURE	STANDARD LANE CLOSURE
≤ 3"	EDGE OF TRAVELED LANE OR EDGE OF SHOULDER	W8-9, EDGE LINE STRIPING, AND VERTICAL PANELS	W8-9, EDGE LINE STRIPING, AND VERTICAL PANELS
> 3" ≤ 6"	EDGE OF TRAVELED LANE OR EDGE OF SHOULDER	W8-17, EDGE LINE STRIPING, AND VERTICAL PANELS	W8-17, EDGE LINE STRIPING, AND VERTICAL PANELS
> 6" ≤ 12"	EDGE OF TRAVELED LANE OR EDGE OF SHOULDER	W8-17, EDGE LINE STRIPING, AND TRAFFIC DRUMS[1]	W8-17, EDGE LINE STRIPING, AND TRAFFIC DRUMS[1]
> 12" ≤ 24"	EDGE OF TRAVELED LANE OR EDGE OF SHOULDER	W8-17, EDGE LINE STRIPING, AND TRAFFIC DRUMS[2]	PRECAST CONCRETE BARRIER[3] & EDGE LINES
> 24"	EDGE OF TRAVELED LANE OR EDGE OF SHOULDER	PRECAST CONCRETE BARRIER[3] & EDGE LINES	PRECAST CONCRETE BARRIER[3] & EDGE LINES

INTERSTATE

VERTICAL DIFFERENTIAL	LOCATION	TRAFFIC CONTROL
≤ 2"	CENTERLINE	W8-11 AND LANE STRIPING
≤ 2"	EDGE OF TRAVELED LANE OR EDGE OF SHOULDER	W8-9, EDGE LINE STRIPING, AND TRAFFIC DRUMS[2]
> 2" ≤ 6"	EDGE OF TRAVELED LANE OR EDGE OF SHOULDER	W8-17, EDGE LINE STRIPING, AND TRAFFIC DRUMS[2]
> 6"	EDGE OF TRAVELED LANE OR EDGE OF SHOULDER	PRECAST CONCRETE BARRIER & EDGE LINES

INTERSTATE AND NON-INTERSTATE

FORESLOPE	HEIGHT	TRAFFIC CONTROL
1:1	> 2 FT	PRECAST CONCRETE BARRIER
2:1	≤ 5 FT	TRAFFIC DRUMS
2:1	> 5 FT	PRECAST CONCRETE BARRIER
Flatter than 2:1	N/A	TRAFFIC DRUMS

GENERAL NOTES:

1. WHEN THE SHOULDER AREA IS USED AS PART OF THE TRAVELED LANE AND THERE IS INSUFFICIENT WIDTH TO PLACE TRAFFIC DRUMS ON THE REMAINING SHOULDER WIDTH, THEN VERTICAL PANELS SHALL BE USED.
2. WHEN THERE IS INSUFFICIENT WIDTH TO PLACE TRAFFIC DRUMS ON THE REMAINING SHOULDER WIDTH, A STABILIZED WEDGE SHALL BE USED.
3. A STABILIZED WEDGE, W8-17 SIGN, EDGE LINE STRIPING, AND TRAFFIC DRUMS CAN BE USED IN LIEU OF PRECAST CONCRETE BARRIER WALL, IF AND WHERE DIRECTED BY THE ENGINEER.
4. W21-5, W21-5a, AND/OR W21-5b SIGNS SHALL BE USED WHERE THE ROADWAY IS UNOBSTRUCTED IF AND WHERE DIRECTED BY THE ENGINEER.

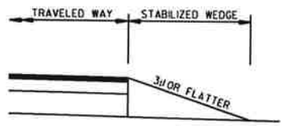

STABILIZED WEDGE

NOTE:
MATERIALS FOR THE STABILIZED WEDGE SHALL MEET THE REQUIREMENTS PROVIDED IN SECTION 603.02 OF THE STANDARD SPECIFICATIONS.

STOP SLOW PADDLE

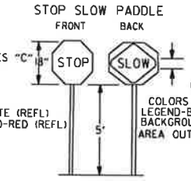

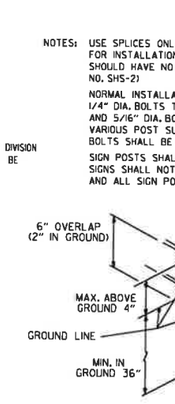

A REVIEW BY THE ROADWAY DESIGN DIVISION OF THE HIGHWAY DEPARTMENT WILL BE REQUIRED PRIOR TO IMPLEMENTING A MULTIPLE LANE CLOSURE.

(D) TYPICAL APPLICATION - CLOSING MULTIPLE LANES OF A MULTILANE HIGHWAY.

DETAIL OF SPLICES

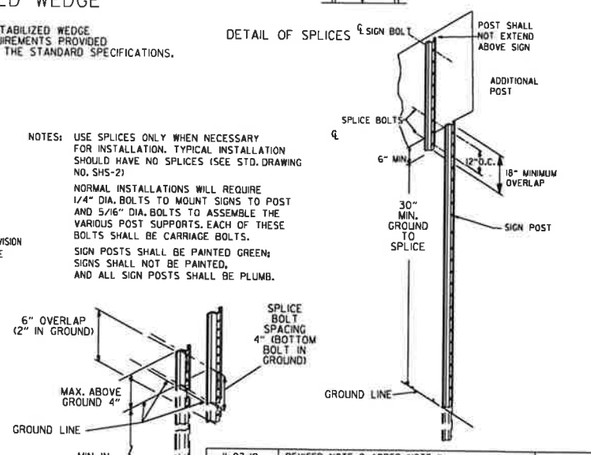

NOTES: USE SPLICES ONLY WHEN NECESSARY FOR INSTALLATION. TYPICAL INSTALLATION SHOULD HAVE NO SPLICES (SEE STD. DRAWING NO. SHS-2)

NORMAL INSTALLATIONS WILL REQUIRE 1/4" DIA. BOLTS TO MOUNT SIGNS TO POST AND 5/16" DIA. BOLTS TO ASSEMBLE THE VARIOUS POST SUPPORTS. EACH OF THESE BOLTS SHALL BE CARRIAGE BOLTS.

SIGN POSTS SHALL BE PAINTED GREEN; SIGNS SHALL NOT BE PAINTED, AND ALL SIGN POSTS SHALL BE PLUMB.

DATE	REVISION	FILMED
11-07-19	REVISED NOTE 9, ADDED NOTE 11	
7-25-19	REVISED TRAFFIC CONTROL DEVICES DETAILS	
9-2-15	REVISED NOTE 2 & REPLACED R2-5A WITH W3-5	
10-15-09	ADDED REFERENCE TO MASH	
11-20-08	REVISED SIGN DESIGNATIONS	
11-18-04	ADDED NOTE	
10-1-98	ADDED NOTE	
4-03-97	ADDED (SP) TO W6-1 & REVISED TRAFFIC CONTROL DEVICES NOTE	
10-18-96	ADDED R55-1	
10-12-95	MOVED UPPER SPLICE	
6-8-95	REVISED SPLICE DETAIL, TEXT	6-8-95
2-2-95	REVISED PER PART VI, MUTCD, SEPT. 3, 1993	
8-15-91	DRAWN AND PLACED IN USE	

ARKANSAS STATE HIGHWAY COMMISSION

STANDARD TRAFFIC CONTROLS FOR HIGHWAY CONSTRUCTION

STANDARD DRAWING TC-3

GENERAL NOTES

INSTALL A MINIMUM OF 2 UPSLOPE STAKES AND 4 DOWNSLOPE STAKES AT AN ANGLE TO WEDGE WATTLE TO BOTTOM OF DITCH.

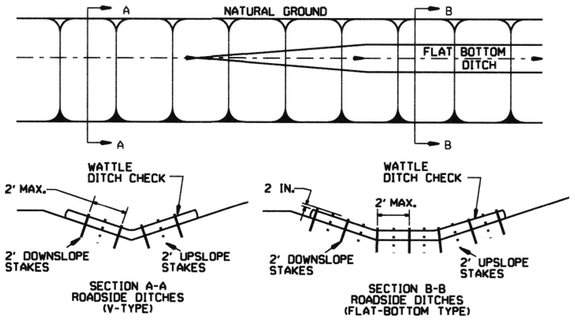

WATTLE DITCH CHECK (E-1)

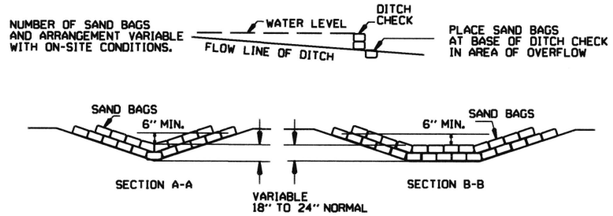

SAND BAG DITCH CHECK (E-5)

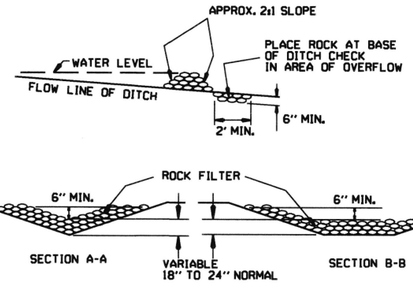

ROCK DITCH CHECK (E-6)

GENERAL NOTES

GEOTEXTILE FABRIC (TYPE 4) IN ACCORDANCE WITH SECTION 625

GEOTEXTILE FABRIC SHALL BE SPLICED TOGETHER WITH A SEWN SEAM ONLY AT A SUPPORT POST OR TWO SECTIONS OF FENCE MAY BE OVERLAPPED INSTEAD. PAYMENT OF ADDITIONAL MATERIAL FOR OVERLAP WILL NOT BE MADE.

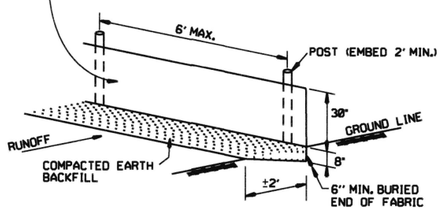

SILT FENCE (E-11)

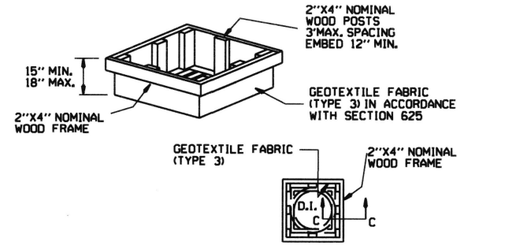

DROP INLET SILT FENCE (E-7)

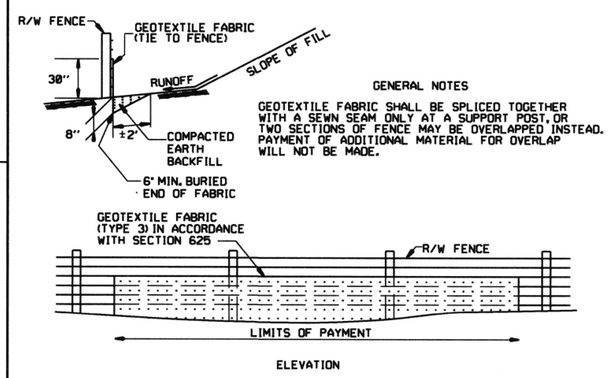

GENERAL NOTES

GEOTEXTILE FABRIC SHALL BE SPLICED TOGETHER WITH A SEWN SEAM ONLY AT A SUPPORT POST, OR TWO SECTIONS OF FENCE MAY BE OVERLAPPED INSTEAD. PAYMENT OF ADDITIONAL MATERIAL FOR OVERLAP WILL NOT BE MADE.

SILT FENCE ON R/W FENCE (E-4)

GENERAL NOTES

1. STRAW BALES SHALL BE INSTALLED SO THAT THE BINDINGS ARE ORIENTED AROUND THE SIDES RATHER THAN ALONG THE TOPS AND BOTTOMS OF THE BALES. THE BALES SHALL BE A MINIMUM OF 30 INCHES IN LENGTH.

2. NO GAPS SHALL BE LEFT BETWEEN BALES.

3. BALED STRAW FILTER BARRIERS COMPLETED AND ACCEPTED WILL BE MEASURED BY THE BALE IN PLACE AS AUTHORIZED BY THE ENGINEER AND WILL BE PAID FOR AT THE CONTRACT UNIT PRICE BID PER BALE FOR BALED STRAW DITCH CHECKS.

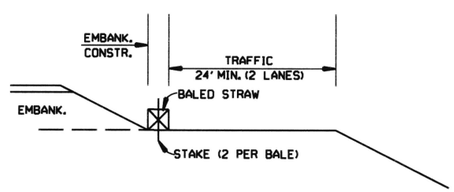

BALED STRAW FILTER BARRIER (E-2)

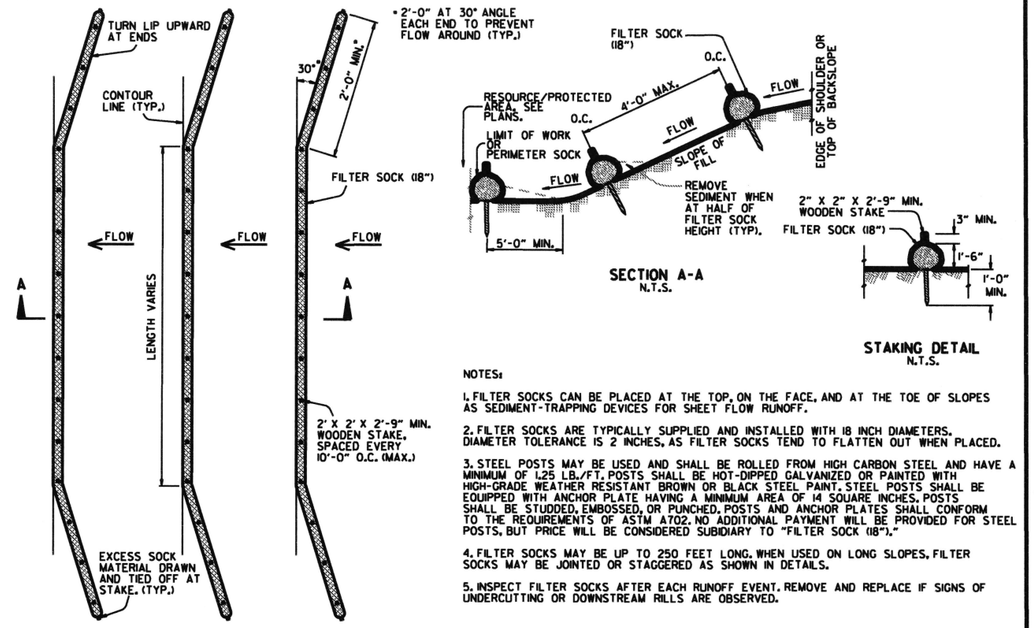

NOTES:

1. FILTER SOCKS CAN BE PLACED AT THE TOP, ON THE FACE, AND AT THE TOE OF SLOPES AS SEDIMENT-TRAPPING DEVICES FOR SHEET FLOW RUNOFF.

2. FILTER SOCKS ARE TYPICALLY SUPPLIED AND INSTALLED WITH 18 INCH DIAMETERS. DIAMETER TOLERANCE IS 2 INCHES, AS FILTER SOCKS TEND TO FLATTEN OUT WHEN PLACED.

3. STEEL POSTS MAY BE USED AND SHALL BE ROLLED FROM HIGH CARBON STEEL AND HAVE A MINIMUM OF 1.25 LB./FT. POSTS SHALL BE HOT-DIPPED GALVANIZED OR PAINTED WITH HIGH-GRADE WEATHER RESISTANT BROWN OR BLACK STEEL PAINT. STEEL POSTS SHALL BE EQUIPPED WITH ANCHOR PLATE HAVING A MINIMUM AREA OF 14 SQUARE INCHES. POSTS SHALL BE STUDDED, EMBOSSED, OR PUNCHED. POSTS AND ANCHOR PLATES SHALL CONFORM TO THE REQUIREMENTS OF ASTM A702. NO ADDITIONAL PAYMENT WILL BE PROVIDED FOR STEEL POSTS, BUT PRICE WILL BE CONSIDERED SUBIDIARY TO "FILTER SOCK (18")."

4. FILTER SOCKS MAY BE UP TO 250 FEET LONG. WHEN USED ON LONG SLOPES, FILTER SOCKS MAY BE JOINTED OR STAGGERED AS SHOWN IN DETAILS.

5. INSPECT FILTER SOCKS AFTER EACH RUNOFF EVENT. REMOVE AND REPLACE IF SIGNS OF UNDERCUTTING OR DOWNSTREAM RILLS ARE OBSERVED.

FILTER SOCK ALONG SLOPE (E-3)

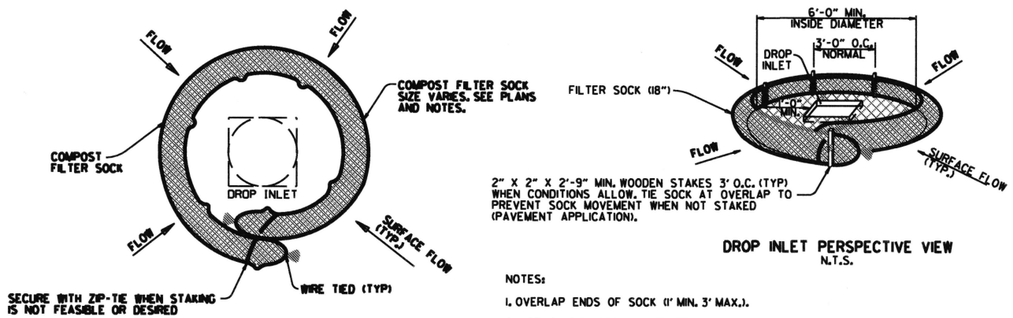

NOTES:

1. OVERLAP ENDS OF SOCK (1' MIN. 3' MAX.).

2. USE 18" DIA. SOCK IN NON-TRAFFIC AREAS OR AREAS WHERE SAFETY IS NOT A CONCERN.

COMPOST FILTER SOCK DROP INLET PROTECTION (E-13)

DATE	REVISION	FILMED
11-16-17	ADDED FILTER SOCK E-3 AND E-13	
12-15-11	DELETED BALED STRAW DITCH CHECK & ADDED WATTLE DITCH CHECK	
11-18-98	ADDED NOTES	
07-02-98	ADDED BALED STRAW FILTER BARRIER (E-2)	
07-20-95	REVISED SILT FENCE E-4 AND E-11	7-20-95
07-15-94	REV. E-4 & E-11 MIN. 13" BURIED END OF FABRIC	
06-02-94	REVISED E-1,4,7 & 11; DELETED E-2 & 3	6-2-94
04-01-93	REDRAWN	
10-01-92	REDRAWN	
08-02-76	ISSUED R.D.M.	298-7-28-76

ARKANSAS STATE HIGHWAY COMMISSION

TEMPORARY EROSION CONTROL DEVICES

STANDARD DRAWING TEC-1

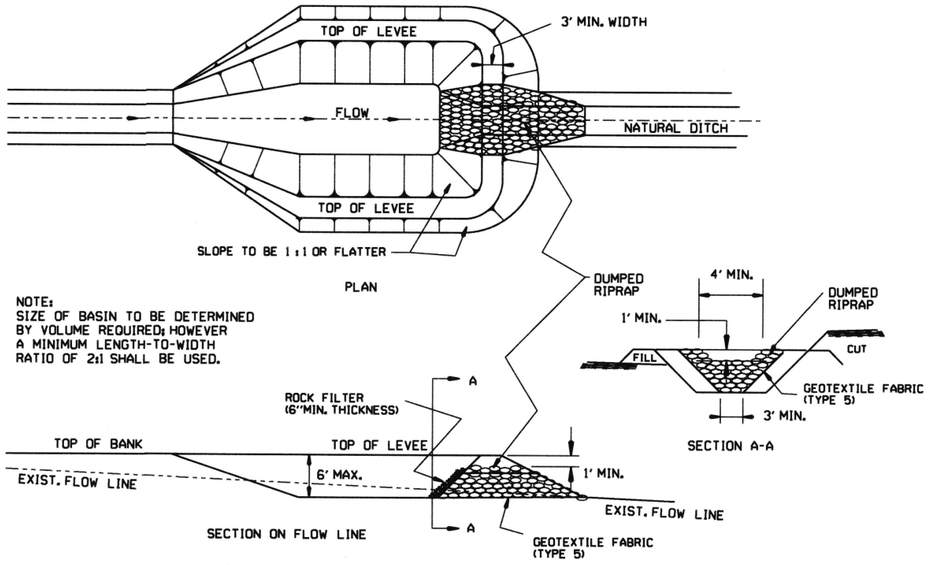

SEDIMENT BASIN WITH RIPRAP OUTLET (E-9)

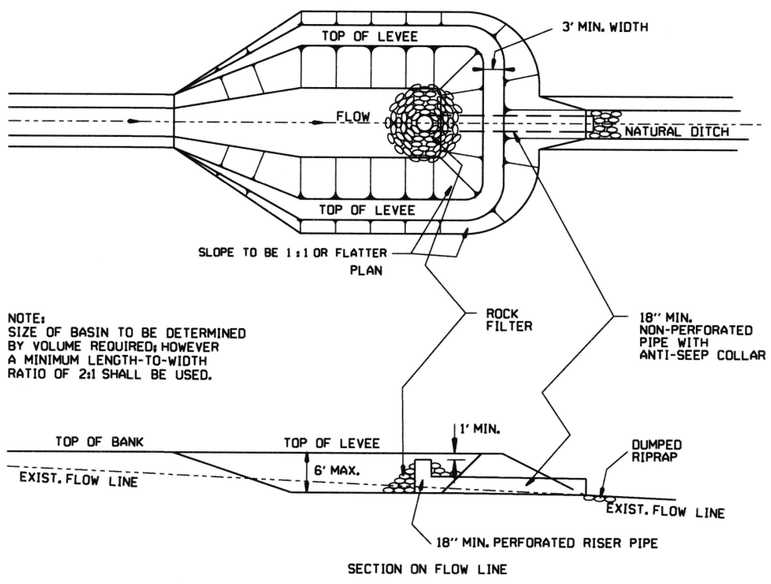

SEDIMENT BASIN WITH PIPE OUTLET (E-10)

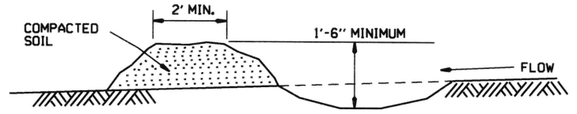

DIVERSION DITCH (E-8)

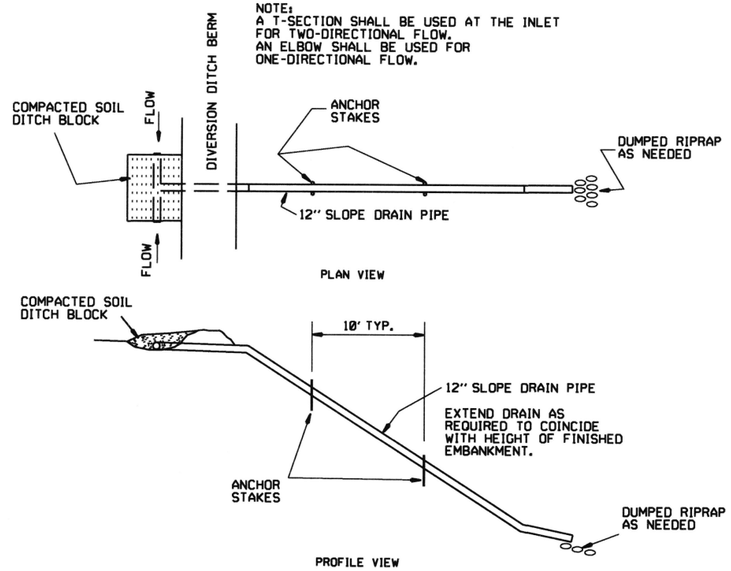

SLOPE DRAIN (E-12)

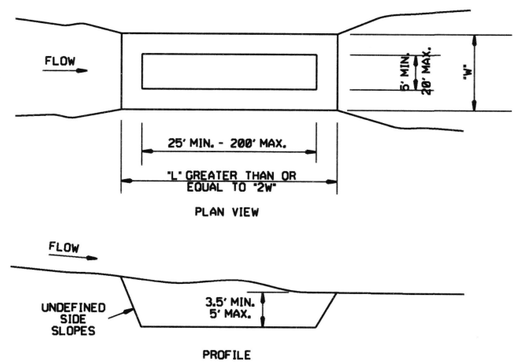

SEDIMENT BASIN (E-14)

DATE	REVISION	FILMED
6-2-94	Revised E-8 & E-12; Added E-14 & Deleted E-13	
4-1-93	ISSUED	

ARKANSAS STATE HIGHWAY COMMISSION

TEMPORARY EROSION CONTROL DEVICES

STANDARD DRAWING TEC-2

CLEARING AND GRUBBING

CONSTRUCTION SEQUENCE

1. PLACE PERIMETER CONTROLS (I.E. SILT FENCES , DIVERSION DITCHES, SEDIMENT BASINS, ETC.)
2. PERFORM CLEARING AND GRUBBING OPERATION.

EXCAVATION

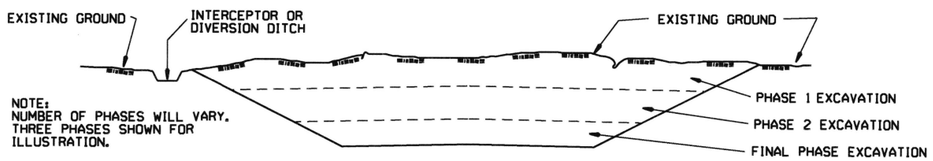

GENERAL NOTE

ALL CUT SLOPES SHALL BE DRESSED, PREPARED, SEEDED, AND MULCHED AS THE WORK PROGRESSES. SLOPES SHALL BE EXCAVATED AND STABILIZED IN EQUAL INCREMENTS NOT TO EXCEED 25 FEET, MEASURED VERTICALLY.

CONSTRUCTION SEQUENCE

1. EXCAVATE AND STABILIZE INTERCEPTOR AND/OR DIVERSION DITCHES.
2. PERFORM PHASE 1 EXCAVATION. PLACE PERMANENT OR TEMPORARY SEEDING.
3. PERFORM PHASE 2 EXCAVATION. PLACE PERMANENT OR TEMPORARY SEEDING.
4. PERFORM FINAL PHASE OF EXCAVATION. PLACE PERMANENT OR TEMPORARY SEEDING. STABILIZE DITCHES. CONSTRUCT DITCH CHECKS, DIVERSION DITCHES, SEDIMENT BASINS, OR OTHER EROSION CONTROL DEVICES AS REQUIRED.

EMBANKMENT

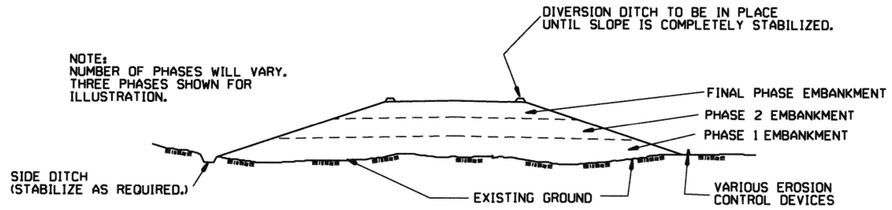

GENERAL NOTE

ALL EMBANKMENT SLOPES SHALL BE DRESSED, PREPARED, SEEDED, AND MULCHED AS THE WORK PROGRESSES. SLOPES SHALL BE CONSTRUCTED AND STABILIZED IN EQUAL INCREMENTS NOT TO EXCEED 25 FEET, MEASURED VERTICALLY.

CONSTRUCTION SEQUENCE

1. CONSTRUCT DIVERSION DITCHES, DITCH CHECKS, SEDIMENT BASINS, SILT FENCES, OR OTHER EROSION CONTROL DEVICES AS SPECIFIED.
2. PLACE PHASE 1 EMBANKMENT WITH PERMANENT OR TEMPORARY SEEDING. PROVIDE DIVERSION DITCHES AND SLOPE DRAINS IF EMBANKMENT CONSTRUCTION IS TO BE TEMPORARILY ABANDONED FOR A PERIOD OF GREATER THAN 21 DAYS.
3. PLACE PHASE 2 EMBANKMENT WITH PERMANENT OR TEMPORARY SEEDING. PROVIDE DIVERSION DITCHES AND SLOPE DRAINS IF EMBANKMENT CONSTRUCTION IS TO BE TEMPORARILY ABANDONED FOR A PERIOD OF GREATER THAN 21 DAYS.
4. PLACE FINAL PHASE OF EMBANKMENT WITH PERMANENT OR TEMPORARY SEEDING. PLACE DIVERSION DITCHES AND SLOPE DRAINS AND MAINTAIN UNTIL ENTIRE SLOPE IS STABILIZED.

DATE	REVISION	FILMED
11-03-94	CORRECTED SPELLING	
6-2-94	Drawn & Issued	6-2-94

ARKANSAS STATE HIGHWAY COMMISSION

TEMPORARY EROSION CONTROL DEVICES

STANDARD DRAWING TEC-3