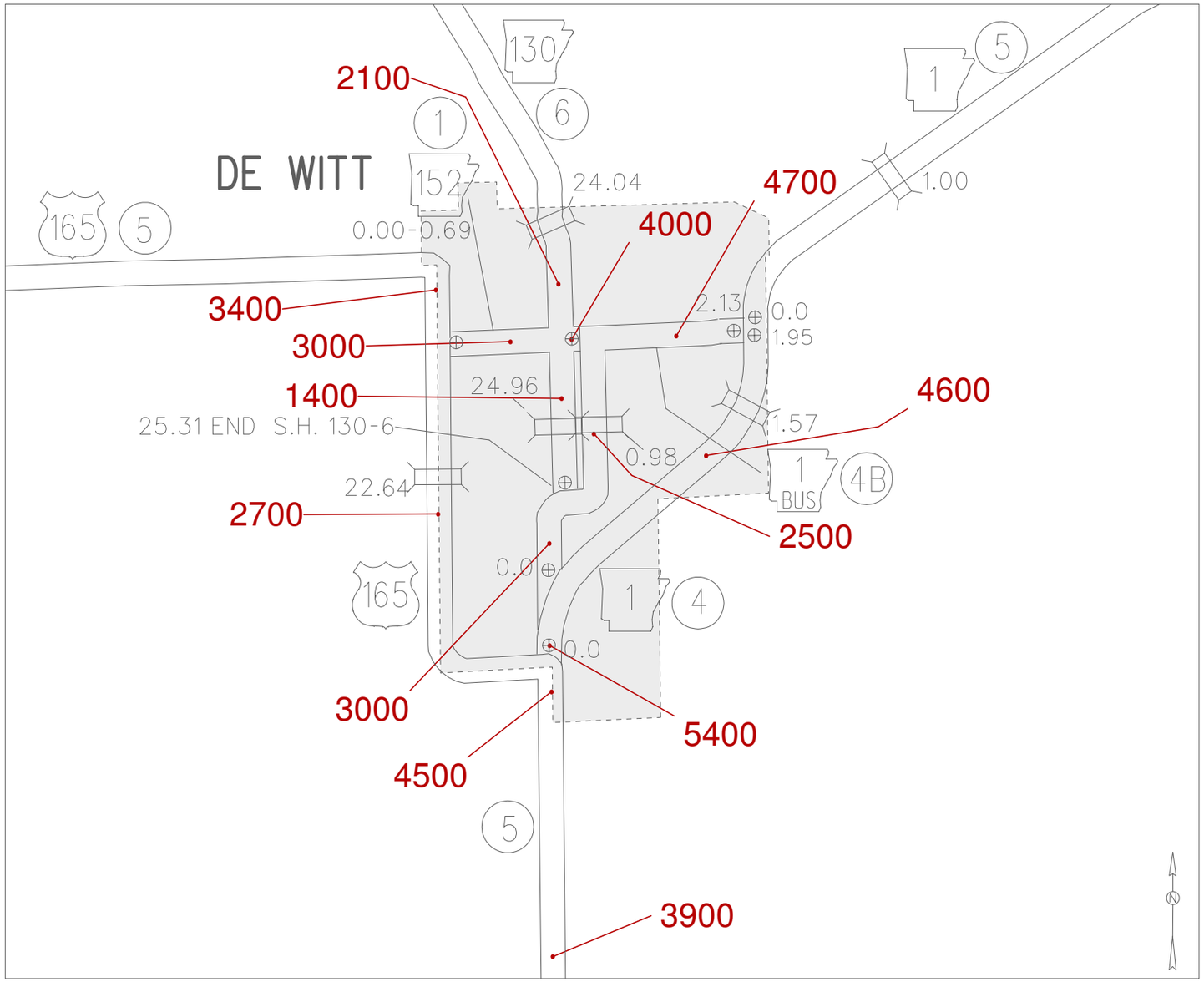

2012 ANNUAL AVERAGE
2011 ANNUAL AVERAGE
DAILY TRAFFIC ESTIMATES