DATE REVISED	DATE FILMED	DATE REVISED	DATE FILMED	FED. ROAD DIST. NO.	STATE	FED. AID PROJ. NO.	SHEET NO.	TOTAL SHEETS
9/2/15				6	ARK.			
				JOB NO.				
				①	TYPE A GUTTERS		55030A	

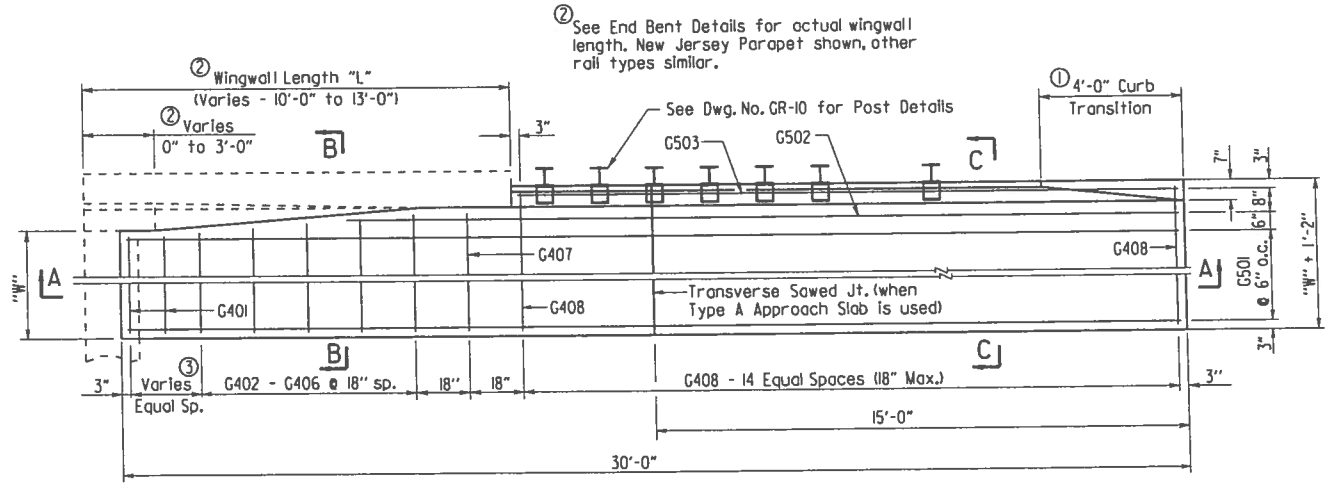

③ Number of G401 bars vary with wingwall length - See Bar List

HALF PLAN OF APPROACH GUTTERS FOR SQUARE BRIDGE

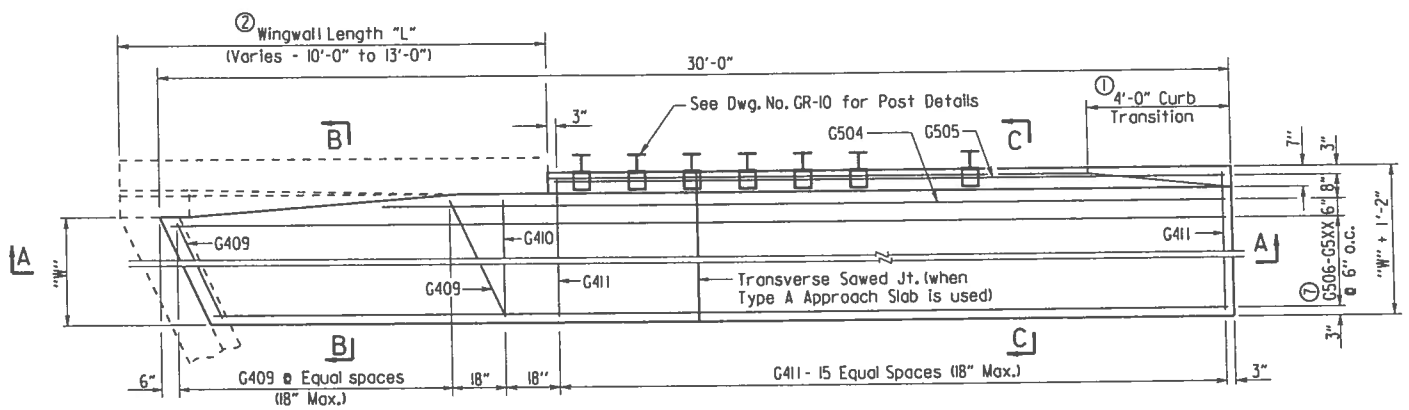

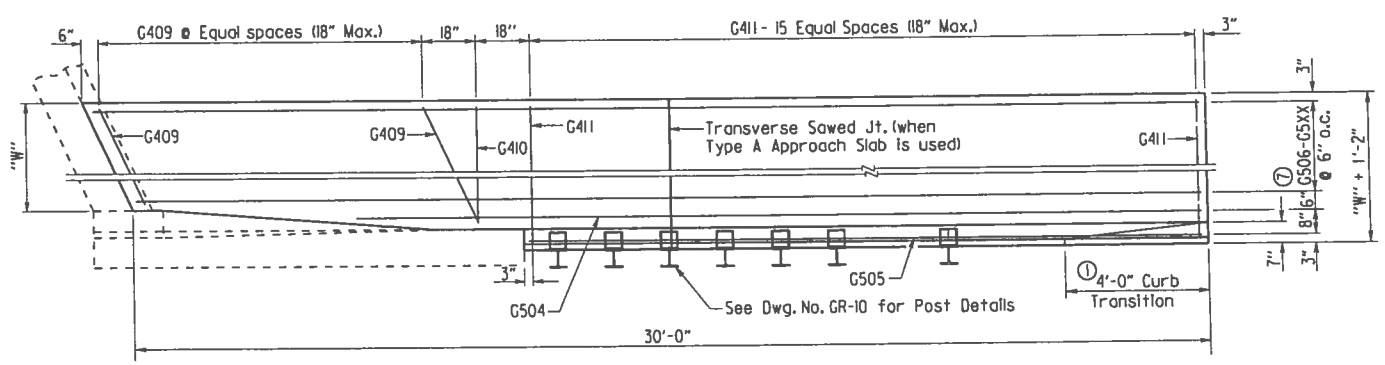

PLAN OF APPROACH GUTTERS FOR SKEWED BRIDGE

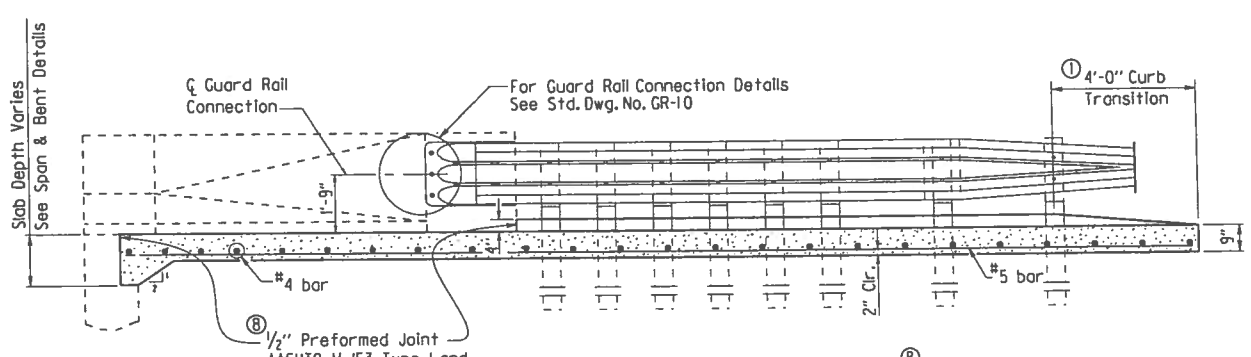

SECTION A-A

① Construct gutter curb with height-transition as shown if drop inlet is not placed at end of gutter.

Construct gutter curb full height (no height-transition) if drop inlet is placed at end of gutter. Curb height transition placed on drop inlet. See drop inlet details.

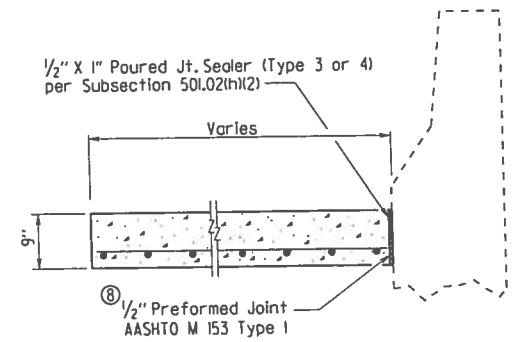

SECTION B-B

N.T.S.

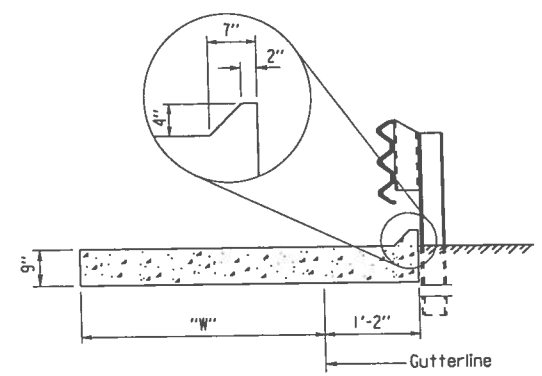

SECTION C-C

N.T.S.

BAR LIST FOR ONE TYPE A GUTTER

	Mark	No. Req'd. for Width "W" △ 2'-0"	3'-0"	4'-0"	6'-0"	8'-0"	Length
Square Bridge	G401	④	④	④	④	④	"W" - 4"
	G402-G406	1 each	1 each	1 each	1 each	1 each	"W"-3" to "W"+2"
	G407	1	1	1	1	1	"W"+3"
	G408	15	15	15	15	15	"W"+ 10"
	G501	4	6	8	12	16	29'-8"
	G502	1	1	1	1	1	(35'-5") - "L"
	G503	1	1	1	1	1	30'-8"-"L"
Skewed Bridge	G409	⑥	⑥	⑥	⑥	⑥	⑤
	G410	1	1	1	1	1	"W"+3"
	G411	16	16	16	16	16	"W"+ 10"
	G504	1	1	1	1	1	⑤
	G505	1	1	1	1	1	⑤
	G506 - G5XX ⑦	1 each	1 each	1 each	1 each	1 each	⑤

④ 0 for "L" = 10'
1 for "L" = 11'
2 for "L" = 12'
2 for "L" = 13'

⑦ G509 for "W" = 2' △
G511 for "W" = 3'
G513 for "W" = 4'
G517 for "W" = 6'
G521 for "W" = 8'

⑤ Bar Lengths vary with Skew and Wingwall Length.

⑥ No. Req'd. varies with Skew and Wingwall length.

QUANTITIES FOR ONE SQUARE APPROACH GUTTER

(FOR INFORMATION ONLY)

"W" Width (ft.)	Reinforcing Steel (Lbs.)	Concrete (Cu. Yds.)
△ 2	210	2.55
3	285	3.40
4	360	4.25
6	515	5.90
8	665	7.55

Quantities are based on "L" = 10'-0".

Note:
All longitudinal lines within the limits of horizontal curves shall be on curves concentric to C.L. Bridge. Adjustment to longitudinal bar lengths may be required. Transverse reinforcing shall be placed on radial lines to C.L. Bridge.

⑧ Eliminate Type I Preformed Joint at end bent backwall and at face of wingwalls when gutters used with Type A Approach Slabs. Poured joint sealer is required, however backer rod shall be eliminated.

△ Revised to add "W" = 2'-0"; By LJB
Checked By: KWY 9/2/15

GENERAL NOTES

All concrete shall be Class S or Class S(AE) or mixture used for Portland Cement Concrete Pavement and shall be poured in the dry.

All reinforcing steel shall be Grade 60 (yield strength = 60,000 psi) conforming to AASHTO M 31 or M 322, Type A, with mill test reports.

Approach Gutters will be measured and paid for in accordance with Section 504.

STANDARD DETAILS FOR TYPE A APPROACH GUTTERS

ARKANSAS STATE HIGHWAY COMMISSION

LITTLE ROCK, ARK.

DRAWN BY:	A.M.S.	DATE:	2/27/2014	FILENAME:	b55030a.dgn
CHECKED BY:	K.W.Y.	DATE:	2/27/2014	SCALE:	3/8" = 1'-0" or As Shown
DESIGNED BY:	STD.	DATE:			

DRAWING NO. 55030A