DATE REVISED	DATE FILMED	DATE REVISED	DATE FILMED	FED. ROAD DIST. NO.	STATE	FED. AID PROJ. NO.	SHEET NO.	TOTAL SHEETS
				6	ARK.			
				JOB NO.				
				①	TYPE D GUTTERS		55030D	

① Construct gutter curb with height-transition as shown if drop inlet is not placed at end of gutter.

Construct gutter curb full height (no height-transition) if drop inlet is placed at end of gutter. Curb height transition placed on drop inlet. See drop inlet details.

② Eliminate Type I Preformed Joint at end bent when gutters are used with Type D Approach Slabs. Poured joint sealer is required, however backer rod shall be eliminated.

③ See Span Details

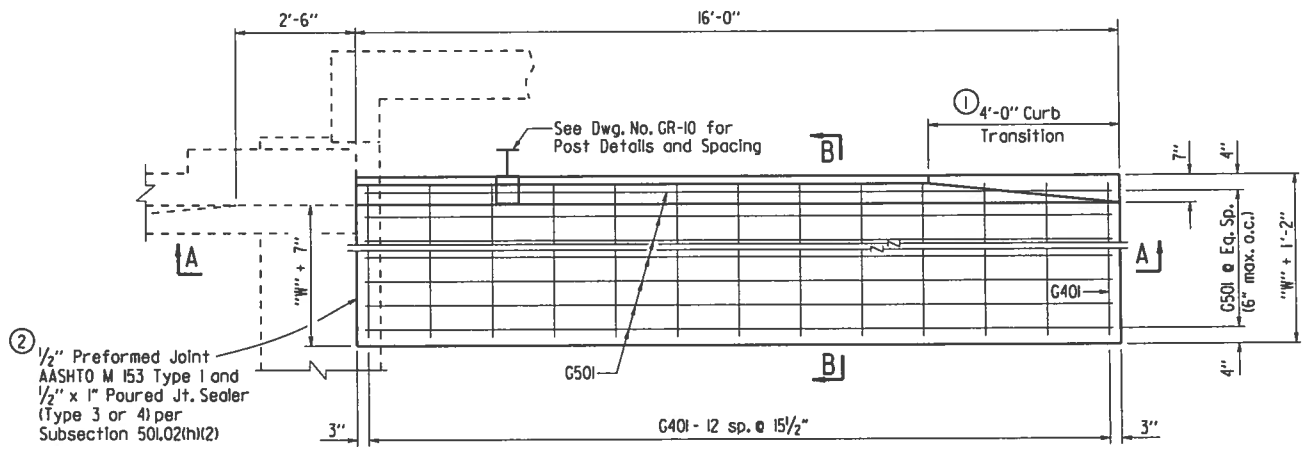

HALF PLAN OF APPROACH GUTTERS FOR SQUARE BRIDGE

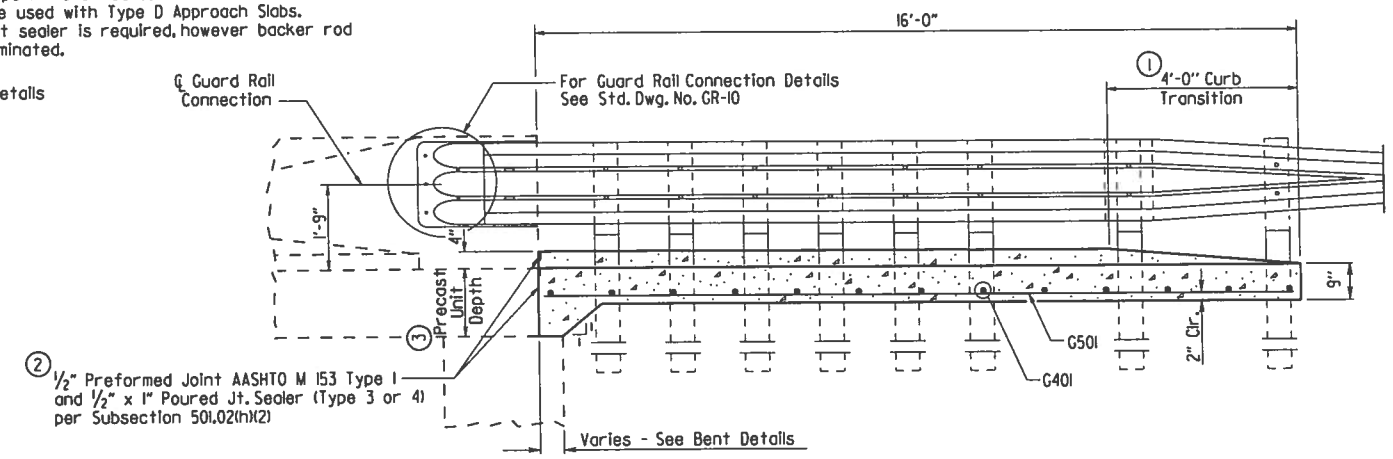

SECTION A-A

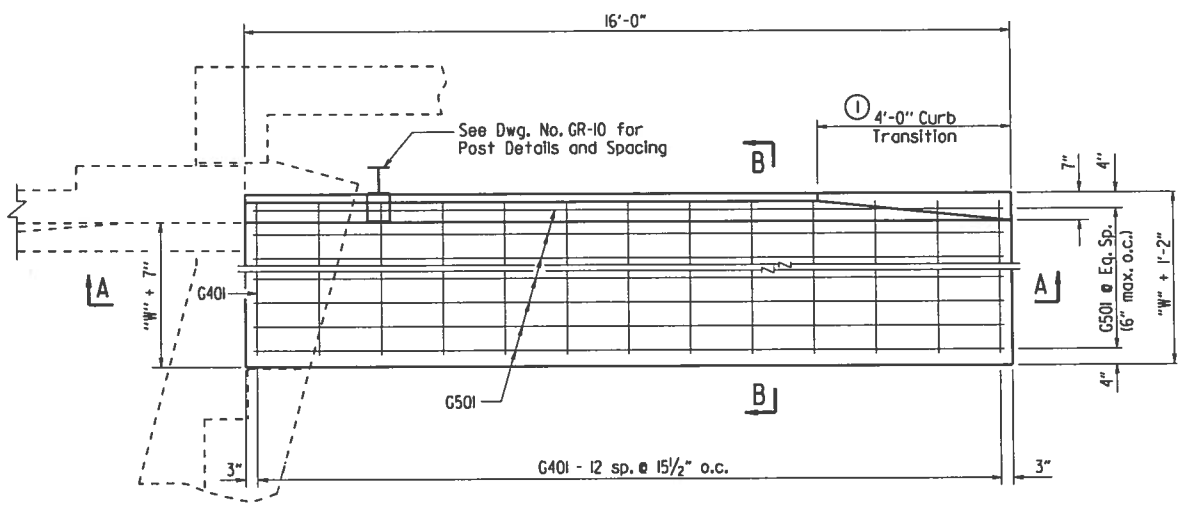

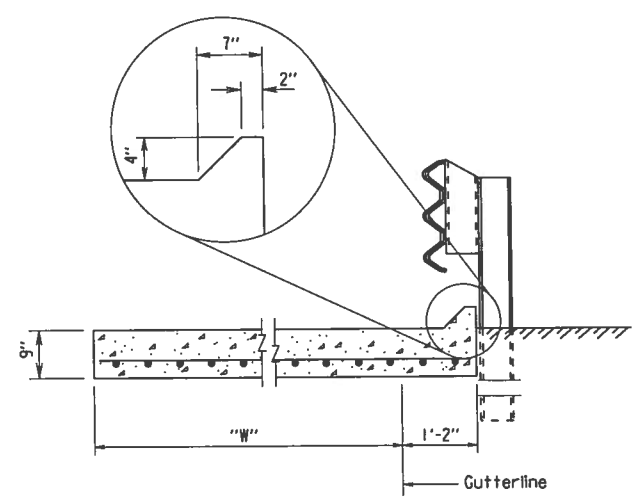

SECTION B-B
N.T.S.

BAR LIST FOR ONE TYPE D GUTTER

Mark	No. Req'd. for Width "W"						Length
	2'-3"	3'-0"	3'-9"	4'-0"	4'-9"	5'-0"	
G401	13	13	13	13	13	13	"W" + 10"
G501	7	8	10	10	12	12	15'-8"

QUANTITIES FOR ONE SQUARE APPROACH GUTTER

(FOR INFORMATION ONLY)

"W" Width	No Approach Slab		With Approach Slab	
	Reinforcing Steel (Lbs.)	Concrete (Cu. Yds.)	Reinforcing Steel (Lbs.)	Concrete (Cu. Yds.)
2'-3"	—	—	141	1.66
3'-0"	164	2.01	164	2.01
3'-9"	—	—	203	2.36
4'-0"	205	2.48	205	2.48
4'-9"	—	—	245	2.83
5'-0"	247	2.94	—	—

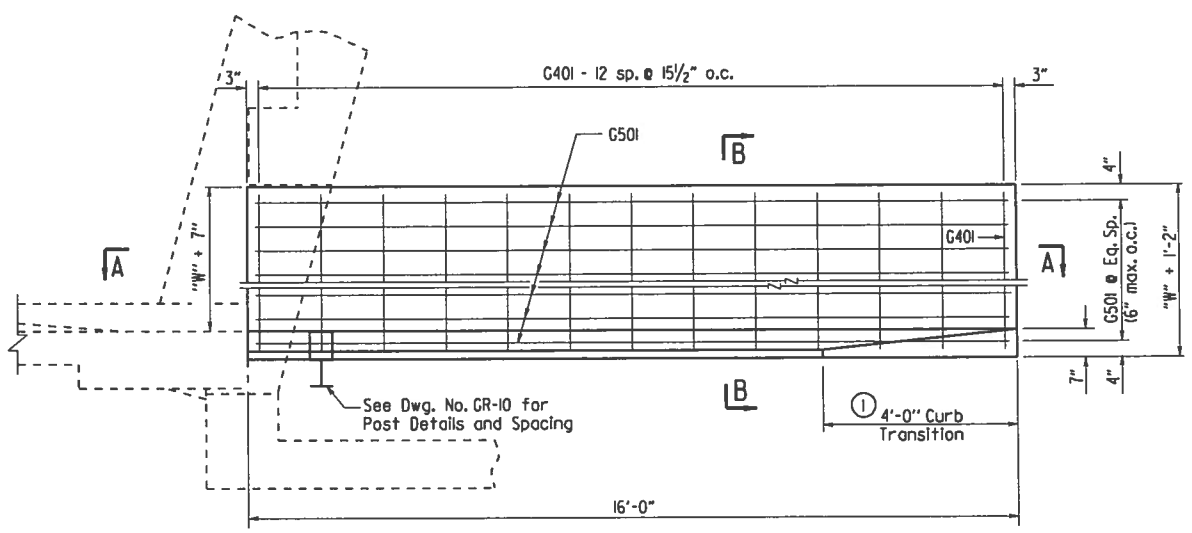

PLAN OF APPROACH GUTTERS FOR SKEWED BRIDGE

GENERAL NOTES

This drawing is for use with Precast Concrete Spans.

All concrete shall be Class S or Class S(AE) or mixture used for Portland Cement Concrete Pavement and shall be poured in the dry.

All reinforcing steel shall be Grade 60 (yield strength = 60,000 psi) conforming to AASHTO M 31 or M 322, Type A, with mill test reports.

Approach Gutters will be measured and paid for in accordance with Section 504.

STANDARD DETAILS FOR TYPE D APPROACH GUTTERS

ARKANSAS STATE HIGHWAY COMMISSION

LITTLE ROCK, ARK.

DRAWN BY: A.M.S. DATE: 2/27/2014 FILENAME: b55030d.dgn
CHECKED BY: K.W.Y. DATE: 2/27/2014 SCALE: 1/2" = 1'-0" or As Shown
DESIGNED BY: STD. DATE:

DRAWING NO. 55030D