| DATE REVISED | DATE FILMED | DATE REVISED | DATE FILMED | FED. ROAD DIST. NO. | STATE | FED. AID PROJ. NO. | SHEET NO. | TOTAL SHEETS |
|---|---|---|---|---|---|---|---|---|
| 9/2/15 | | | | 6 | ARK. | | | |
| | | | | JOB NO. | | | | |
| | | | | TYPE PT GUTTERS | | | 55035 | |

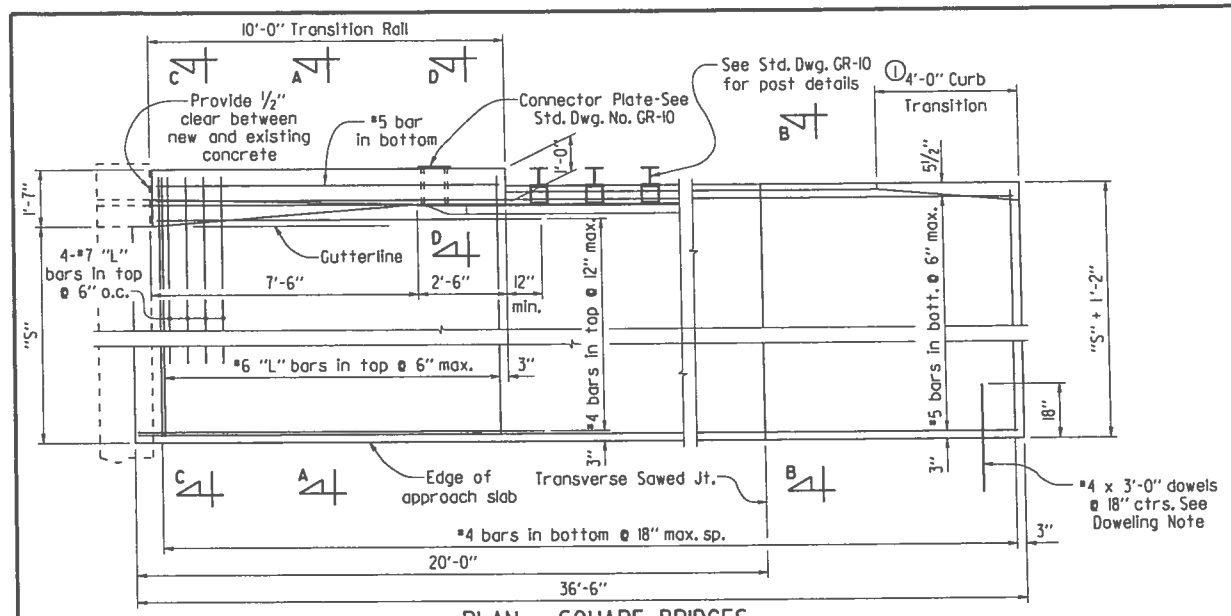


## PLAN - SQUARE BRIDGES

3/8" = 1'-0"

"S" = Distance from gutterline to edge of approach slab.

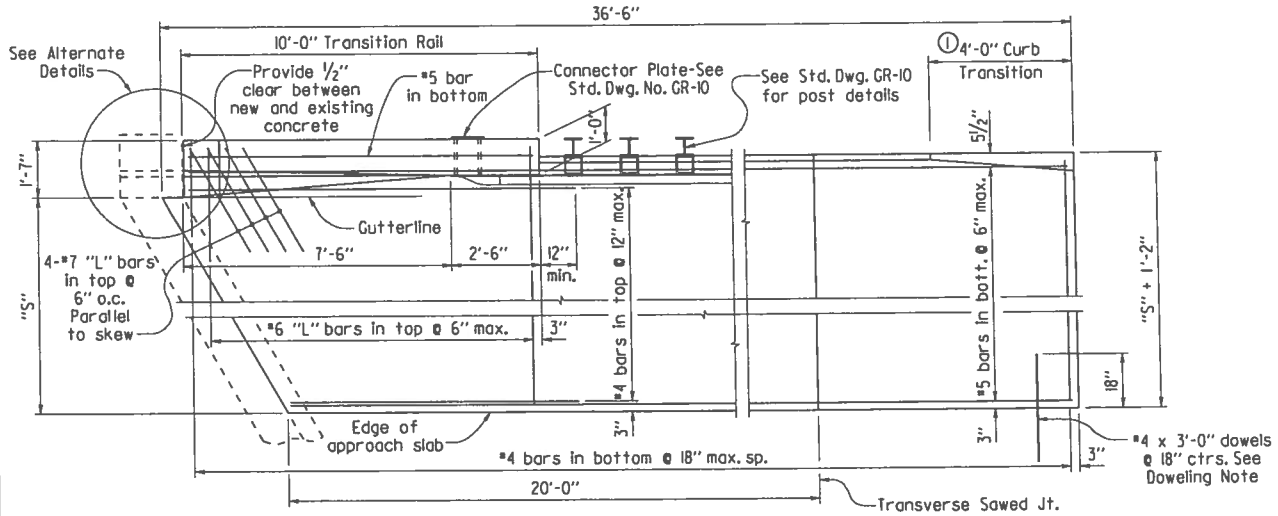


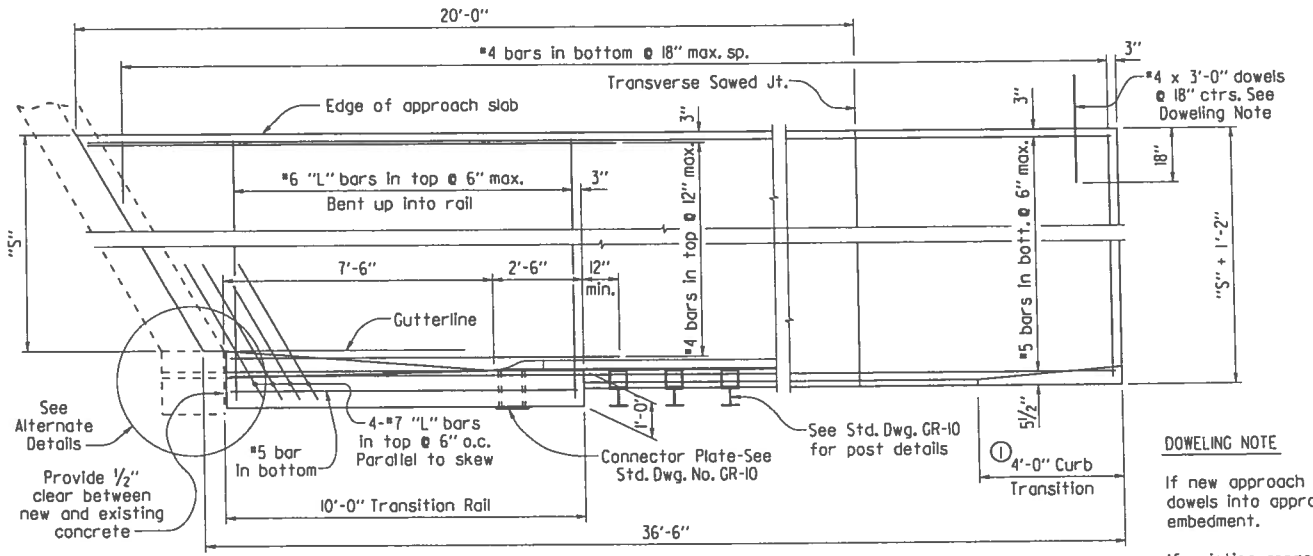


## PLAN - SKEWED BRIDGES

3/8" = 1'-0"

⚠1 Note:
All longitudinal lines within the limits of horizontal curves shall be on curves concentric to C.L. Bridge. Adjustment to longitudinal bar lengths may be required. Transverse reinforcing shall be placed on radial lines to C.L. Bridge.

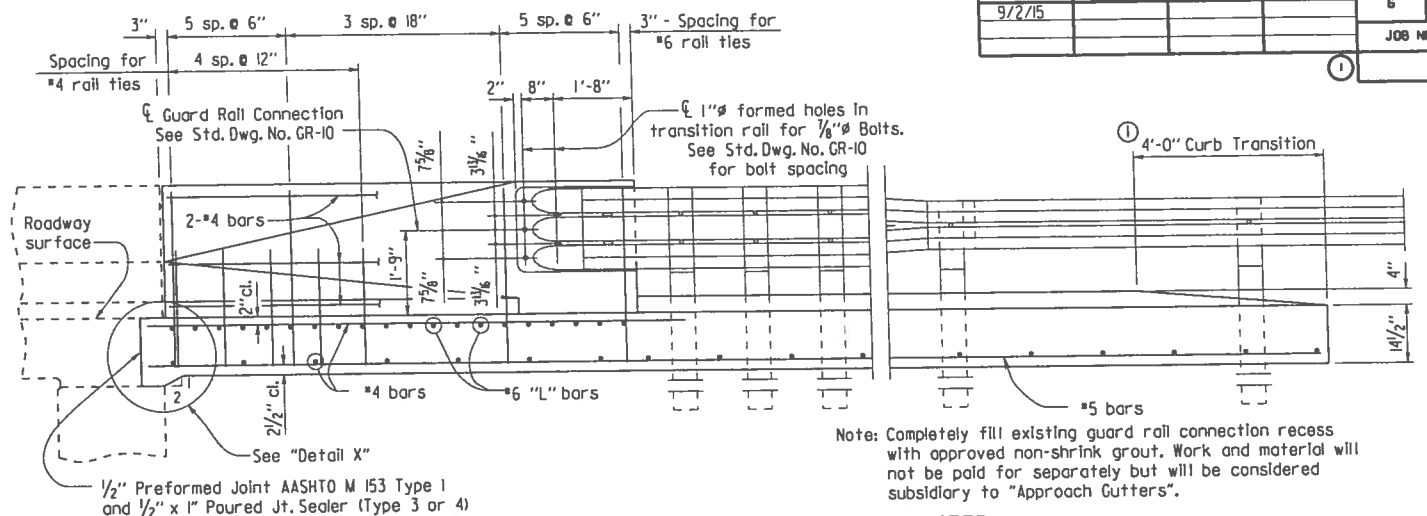


Note: Completely fill existing guard rail connection recess with approved non-shrink grout. Work and material will not be paid for separately but will be considered subsidiary to "Approach Gutters".

① Construct curb with height-transition as shown if drop inlet is not used at end of gutter.

Construct curb full height (no height-transition) if drop inlet is used at end of gutter. Curb height transition placed on drop inlet. See drop inlet details.

## LONGITUDINAL SECTION THRU GUTTER

1/2" = 1'-0"

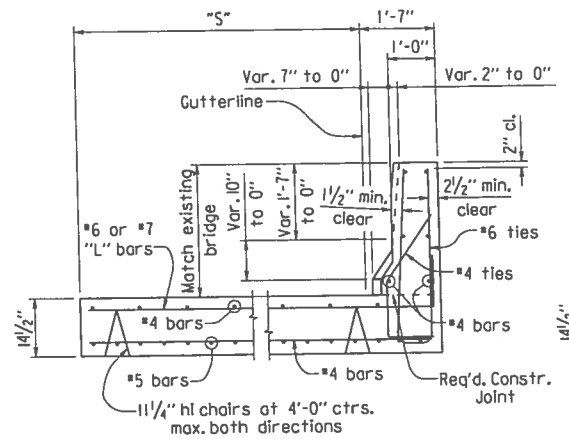


## SECTION A-A

1/2" = 1'-0"

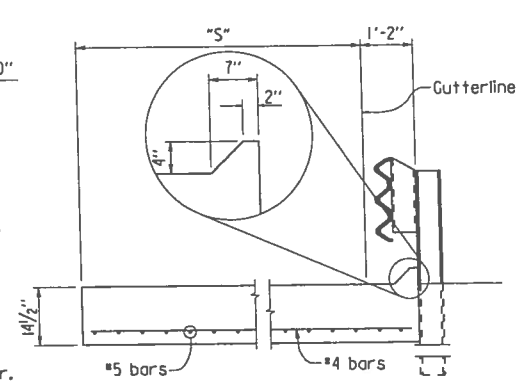


## SECTION B-B

1/2" = 1'-0"

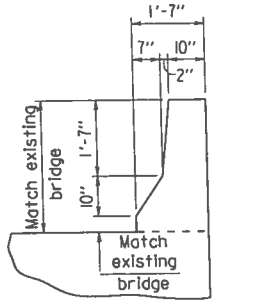


## SECTION C-C

At End of Transition Rail
1/2" = 1'-0"

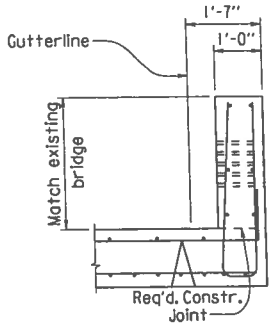


## SECTION D-D

1/2" = 1'-0"

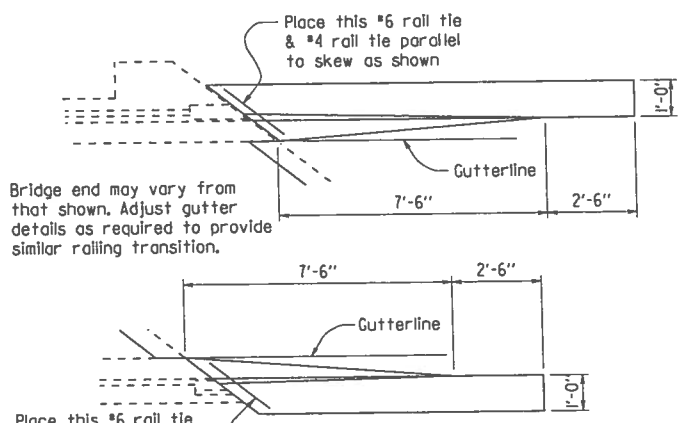


## ALTERNATE DETAILS

3/8" = 1'-0"

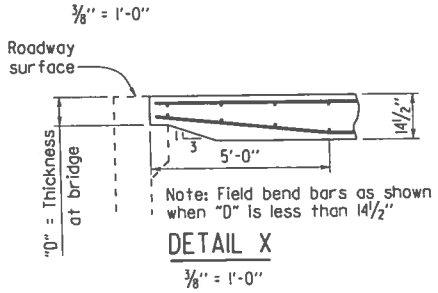


## DETAIL X

3/8" = 1'-0"

This document was originally issued and sealed by Charles R. Ellis, PE No. 9235, on September 2, 2015. This copy is not a signed and sealed document.

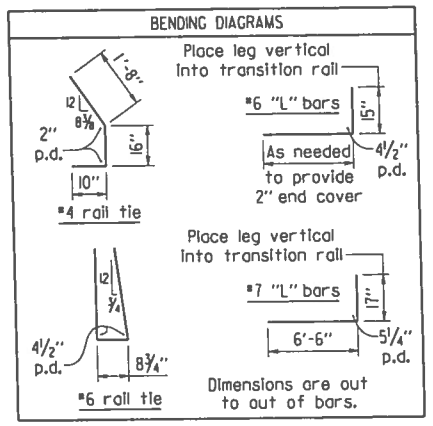


⚠1 Added note for gutters within the limits of horizontal curves. By: AMS
Checked By: KWY 9/2/15

### DOWELING NOTE

If new approach slab is used, place dowels into approach slab using 18" embedment.

If existing approach slab is retained, dowels shall be drilled and grouted 18" into existing slab. At the Contractor's option, existing dowels may be retained, cleaned and incorporated into new gutters. Work for drilling and grouting, or retaining and cleaning will not be paid for separately but will be considered subsidiary to "Approach Gutters".

### GENERAL NOTES

All concrete shall be Class S or S(AE) or mixture used for Portland Cement Concrete Pavement and shall be poured in the dry.

All reinforcing steel shall be Grade 60 (yield strength = 60,000 psi) conforming to AASHTO M 31 or M 322, Type A, with mill test reports. Fabricate bar lengths to provide 2" minimum cover at each end.

Approach gutters will be measured and paid for in accordance with Section 504.

## QUANTITIES FOR ONE SQUARE APPROACH GUTTER

(FOR INFORMATION ONLY)

| "S" | Concrete | Reinforcing Steel |
|---|---|---|
| 5'-6" | 12.49 cu.yd. | 1227 lb. |
| 5'-9" | 12.91 cu.yd. | 1276 lb. |
| 6'-0" | 13.34 cu.yd. | 1296 lb. |
| 9'-6" | 19.23 cu.yd. | 1746 lb. |
| 9'-9" | 19.65 cu.yd. | 1795 lb. |
| 10'-0" | 20.07 cu.yd. | 1815 lb. |

STATE OF ARKANSAS
REGISTERED PROFESSIONAL ENGINEER
No. 9235
CHARLES R. ELLIS

BRIDGE ENGINEER

# STANDARD DETAILS FOR TYPE 'PT' APPROACH GUTTERS ( BRIDGES WITH CONCRETE PARAPET RAILING )

ARKANSAS STATE HIGHWAY COMMISSION

LITTLE ROCK, ARK.

| | | | | | |
|---|---|---|---|---|---|
| DRAWN BY: | KDH | DATE: | 2/27/2014 | FILENAME: | b55035.dgn |
| CHECKED BY: | KWY | DATE: | 2/27/2014 | SCALE: | AS SHOWN |
| DESIGNED BY: | STD. | DATE: | | | |

DRAWING NO. 55035