DATE REVISED	DATE FILMED	DATE REVISED	DATE FILMED	FED. ROAD DIST. NO.	STATE	FED. AID PROJ. NO.	SHEET NO.	TOTAL SHEETS
				6	ARK.			
				JOB NO.				

TYPE B APPROACH SLAB 55040B

Notes:
The surface finish for Approach Slabs shall match that used on the bridge deck.

All longitudinal lines within the limits of horizontal curves shall be on curves concentric to C.L. Bridge. Adjustment to longitudinal bar lengths may be required. Transverse reinforcing shall be placed on radial lines to C.L. Bridge.

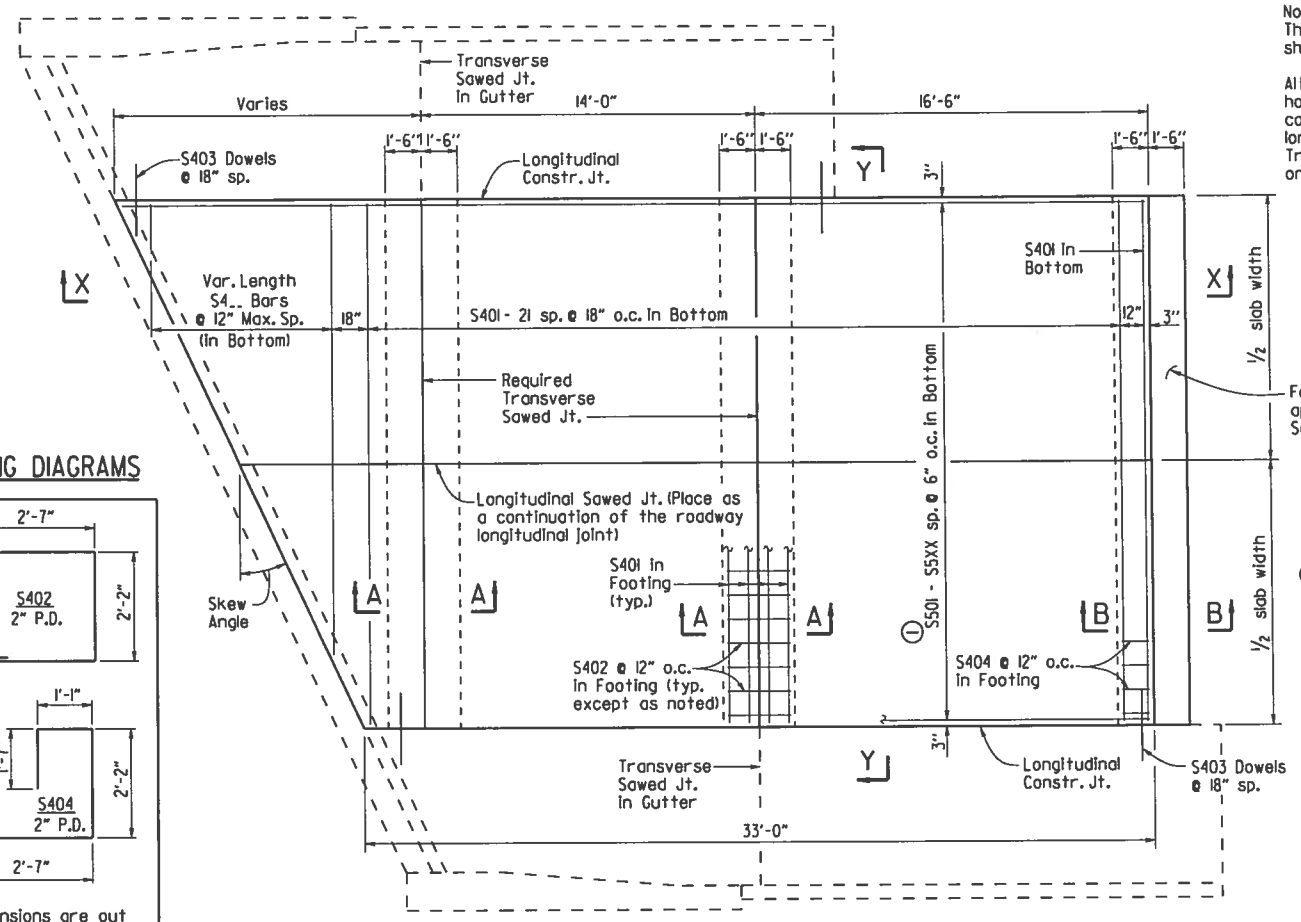

① S5XX = S540 for 20'-0" Width
= S544 for 22'-0" Width
= S548 for 24'-0" Width
= S572 for 36'-0" Width

PLAN - SKEWED APPROACH SLAB WITH APPROACH GUTTERS

¼" = 1'-0"

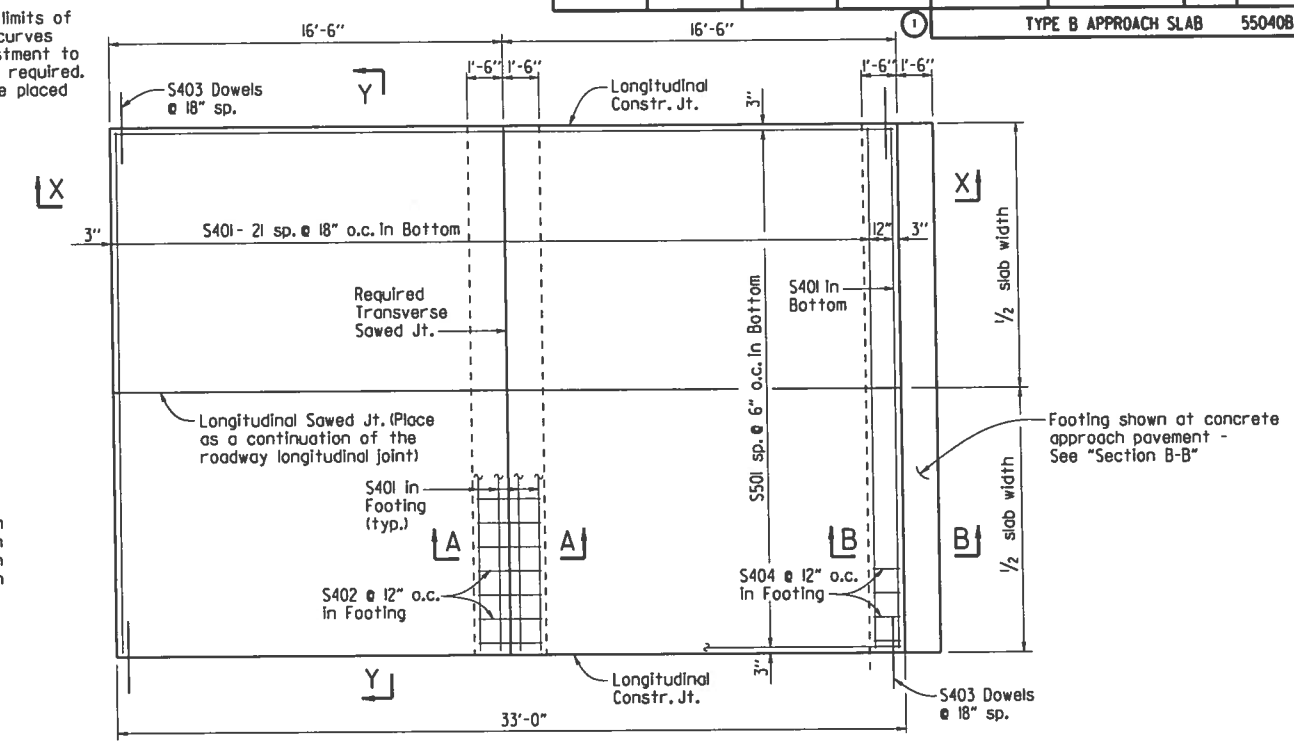

PLAN - SQUARE APPROACH SLAB

¼" = 1'-0"

BENDING DIAGRAMS

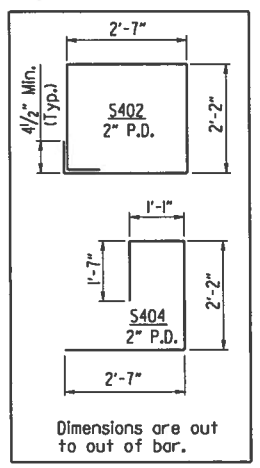

BAR LIST

(Square & Skewed Approach Slabs)

	Mark	Square No. Req'd.	Square Length	Skewed No. Req'd.	Skewed Length
20'-0" Slab Width	S401	31	19'-8"	35	19'-8"
	S402	20	9'-10"	40	9'-10"
	S403	44	3'-0"	*	3'-0"
	S404	20	7'-2"	20	7'-2"
	S4..	—	—	1 Ea.	19.7' - 1.25'/(tan skew angle) to 2'-0" Min.
	S501	40	32'-8"	—	—
	S501 - S540	—	—	1 Ea.	32.6' + 0.25' (tan skew angle) to 32.6' + 19.75' (tan skew angle)
22'-0" Slab Width	S401	31	21'-8"	35	21'-8"
	S402	22	9'-10"	44	9'-10"
	S403	44	3'-0"	*	3'-0"
	S404	22	7'-2"	22	7'-2"
	S4..	—	—	1 Ea.	21.7' - 1.25'/(tan skew angle) to 2'-0" Min.
	S501	44	32'-8"	—	—
	S501 - S544	—	—	1 Ea.	32.6' + 0.25' (tan skew angle) to 32.6' + 21.75' (tan skew angle)
24'-0" Slab Width	S401	31	23'-8"	35	23'-8"
	S402	24	9'-10"	48	9'-10"
	S403	44	3'-0"	*	3'-0"
	S404	24	7'-2"	24	7'-2"
	S4..	—	—	1 Ea.	23.7' - 1.25'/(tan skew angle) to 2'-0" Min.
	S501	48	32'-8"	—	—
	S501 - S548	—	—	1 Ea.	32.6' + 0.25' (tan skew angle) to 32.6' + 23.75' (tan skew angle)
36'-0" Slab Width	S401	31	35'-8"	35	35'-8"
	S402	36	9'-10"	72	9'-10"
	S403	44	3'-0"	*	3'-0"
	S404	36	7'-2"	36	7'-2"
	S4..	—	—	1 Ea.	35.7' - 1.25'/(tan skew angle) to 2'-0" Min.
	S501	72	32'-8"	—	—
	S501 - S572	—	—	1 Ea.	32.6' + 0.25' (tan skew angle) to 32.6' + 35.75' (tan skew angle)

*Varies with skew angle

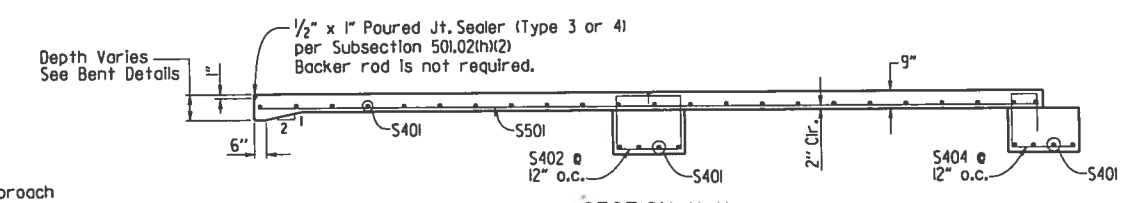

SECTION X-X

SQUARE APPROACH SLAB SHOWN

¼" = 1'-0"

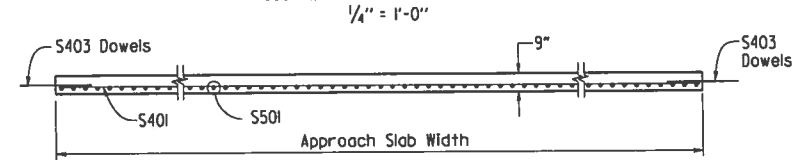

SECTION Y-Y

N.T.S.

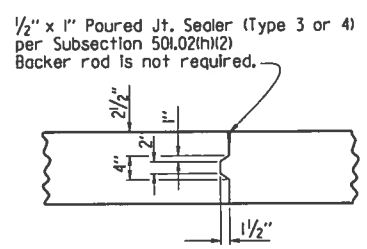

DETAILS OF LONGITUDINAL CONSTRUCTION JOINT

1" = 1'-0"

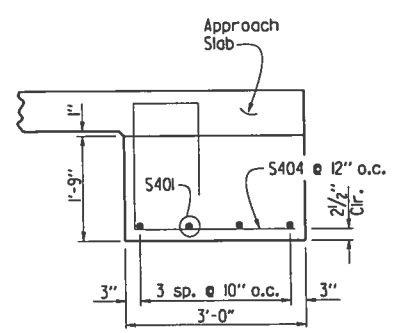

SECTION B-B

AT ASPHALT APPROACH PAVEMENT

N.T.S.

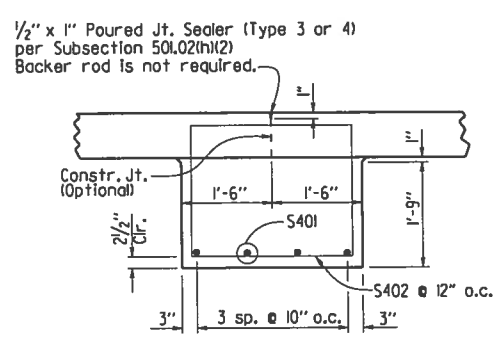

SECTION A-A

N.T.S.

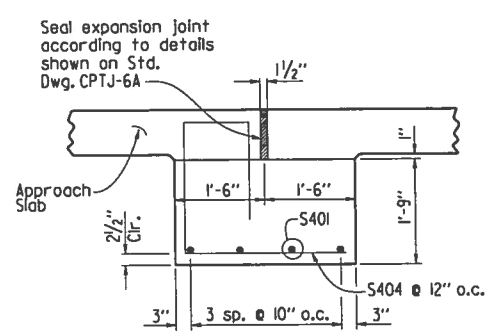

SECTION B-B

AT CONCRETE APPROACH PAVEMENT

N.T.S.

TABLE OF QUANTITIES FOR ONE SQUARE APPROACH SLAB

(FOR INFORMATION ONLY)

Slab Width	Reinforcing Steel (Lbs.)	Concrete (Cu. Yds.)
20'-0"	2085	26.60
22'-0"	2285	29.25
24'-0"	2490	31.90
36'-0"	3690	47.85

GENERAL NOTES

This drawing shall be used for Approach Slabs in Seismic Performance Zones 2, 3 & 4 and for the maximum skew angles shown below:

20'-0" Slab Width: Maximum Skew Angle = 45°
22'-0" Slab Width: Maximum Skew Angle = 45°
24'-0" Slab Width: Maximum Skew Angle = 40°
36'-0" Slab Width: Maximum Skew Angle = 30°

All concrete shall be Class S (AE) with a minimum 28 day compressive strength f'c = 4,000 psi and shall be poured in the dry.

All reinforcing steel shall be Grade 60 (yield strength = 60,000 psi) conforming to AASHTO M 31 or M 322, Type A, with mill test reports.

Approach Slabs will be measured and paid for in accordance with Section 504.

STANDARD DETAILS FOR TYPE B APPROACH SLAB

ARKANSAS STATE HIGHWAY COMMISSION

LITTLE ROCK, ARK.

DRAWN BY: A.M.S. DATE: 2/27/2014 FILENAME: b55040b.dgn
CHECKED BY: K.W.Y. DATE: 2/27/2014 SCALE: AS SHOWN
DESIGNED BY: STD. DATE:

DRAWING NO. 55040B