DATE REVISED	DATE FILMED	DATE REVISED	DATE FILMED	FED. ROAD DIST. NO.	STATE	FED. AID PROJ. NO.	SHEET NO.	TOTAL SHEETS
				6	ARK.			
				JOB NO.				

① TYPE C2 APPROACH SLAB 55040C2

Notes:
The surface finish for Approach Slabs shall match that used on the bridge deck.

All longitudinal lines within the limits of horizontal curves shall be on curves concentric to C.L. Bridge. Adjustment to longitudinal bar lengths may be required. Transverse reinforcing shall be placed on radial lines to C.L. Bridge.

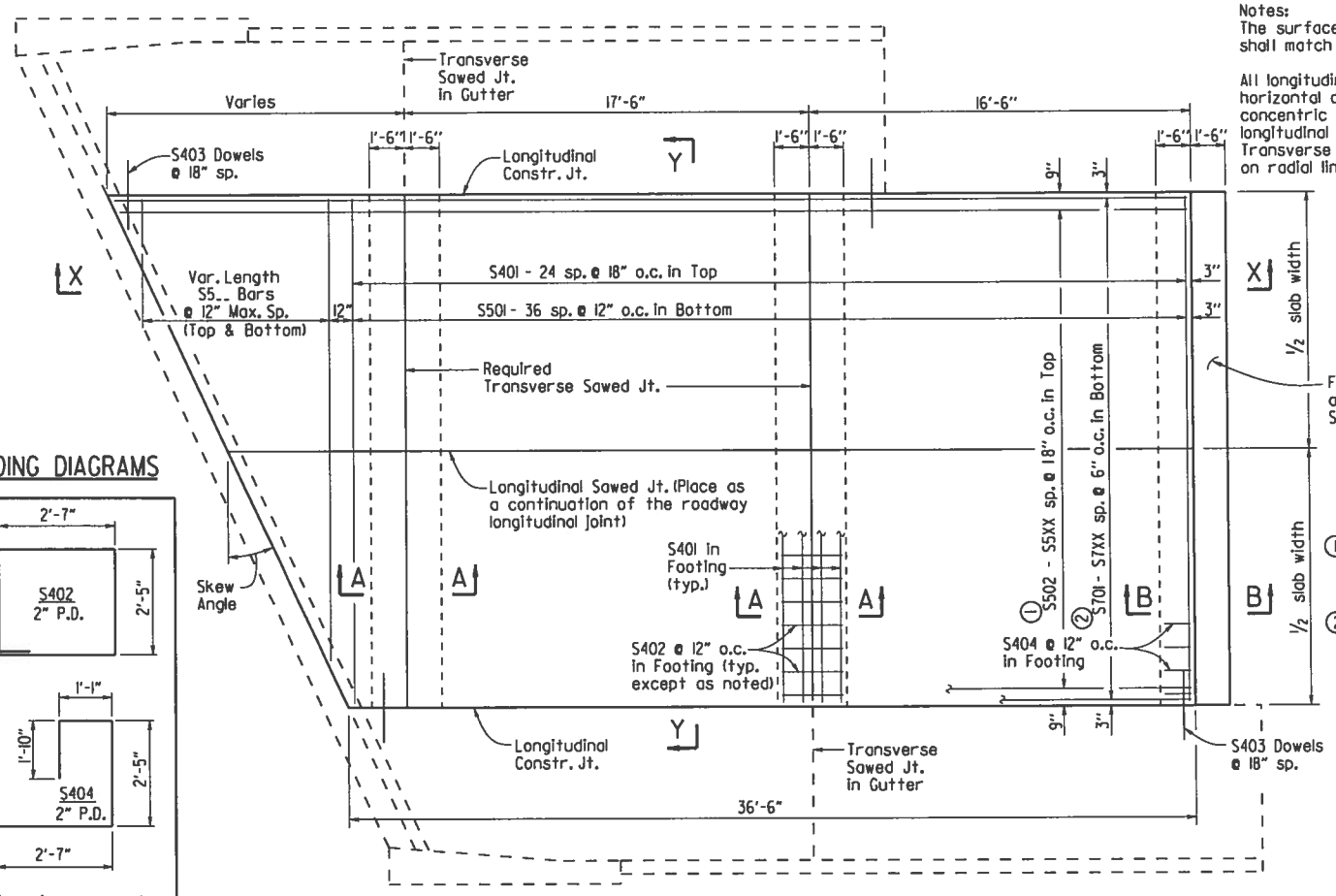

① S5XX = S511 for 15'-0" Width
= S517 for 24'-0" Width
= S525 for 36'-0" Width

② S7XX = S730 for 15'-0" Width
= S748 for 24'-0" Width
= S772 for 36'-0" Width

PLAN - SKEWED APPROACH SLAB WITH APPROACH GUTTERS

¼" = 1'-0"

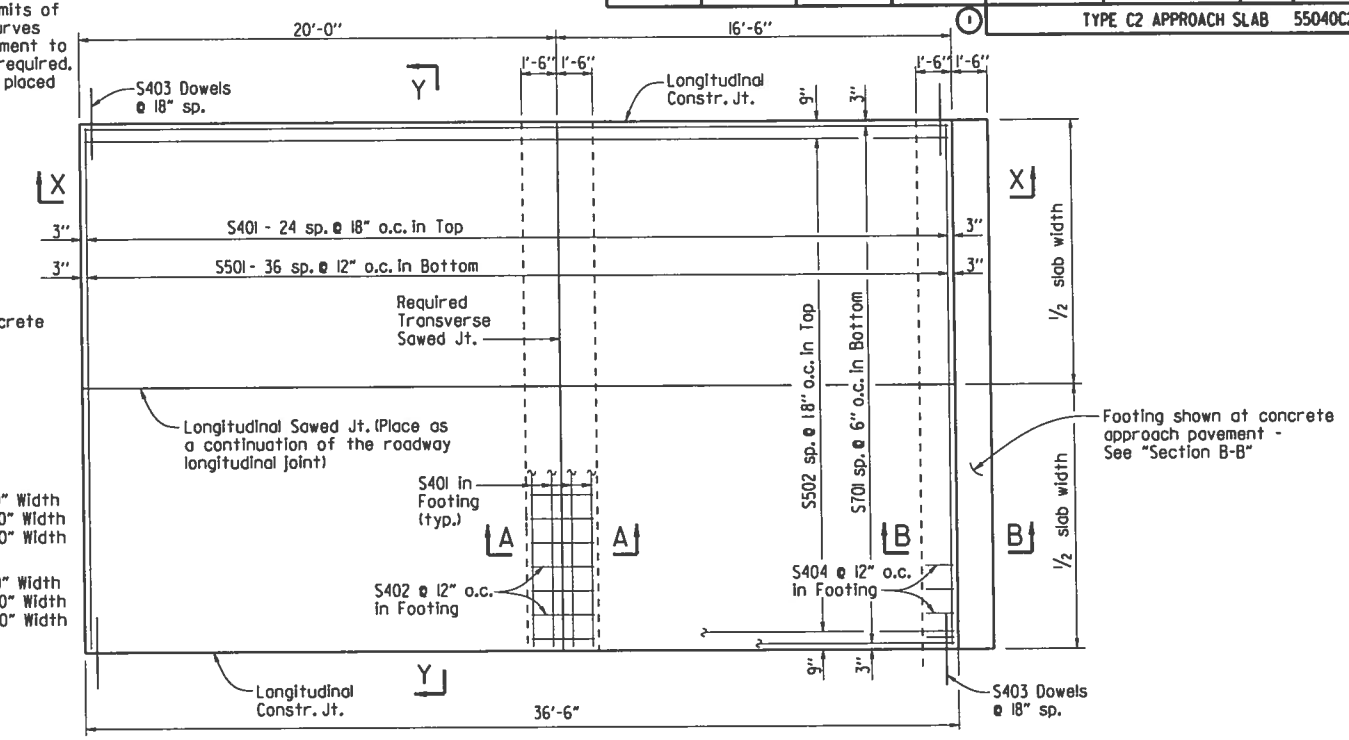

PLAN - SQUARE APPROACH SLAB

¼" = 1'-0"

BENDING DIAGRAMS

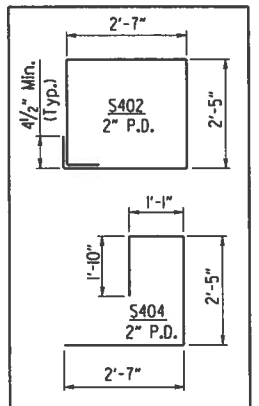

Dimensions are out to out of bar.

BAR LIST

(Square & Skewed Approach Slabs)

	Mark	Square No. Req'd.	Square Length	Skewed No. Req'd.	Skewed Length
15'-0" Slab Width	S401	33	14'-8"	37	14'-8"
	S402	15	10'-4"	30	10'-4"
	S403	50	3'-0"	*	3'-0"
	S404	15	7'-8"	15	7'-8"
	S501	37	14'-8"	37	14'-8"
	S502	10	36'-2"	—	—
	S502 - S511	—	—	1 Ea.	36.1' + 0.75' (tan skew angle) to 36.1' + 14.25' (tan skew angle)
	S5__	—	—	2 Ea.	14.7' - 0.75'/(tan skew angle) to 2'-0" Min.
	S701	30	36'-2"	—	—
	S701 - S730	—	—	1 Ea.	36.1' + 0.25' (tan skew angle) to 36.1' + 14.75' (tan skew angle)
24'-0" Slab Width	S401	33	23'-8"	37	23'-8"
	S402	24	10'-4"	48	10'-4"
	S403	50	3'-0"	*	3'-0"
	S404	24	7'-8"	24	7'-8"
	S501	37	23'-8"	37	23'-8"
	S502	16	36'-2"	—	—
	S502 - S517	—	—	1 Ea.	36.1' + 0.75' (tan skew angle) to 36.1' + 23.25' (tan skew angle)
	S5__	—	—	2 Ea.	23.7' - 0.75'/(tan skew angle) to 2'-0" Min.
	S701	48	36'-2"	—	—
	S701 - S748	—	—	1 Ea.	36.1' + 0.25' (tan skew angle) to 36.1' + 23.75' (tan skew angle)
36'-0" Slab Width	S401	33	35'-8"	37	35'-8"
	S402	36	10'-4"	72	10'-4"
	S403	50	3'-0"	*	3'-0"
	S404	36	7'-8"	36	7'-8"
	S501	37	35'-8"	37	35'-8"
	S502	24	36'-2"	—	—
	S502 - S525	—	—	1 Ea.	36.1' + 0.75' (tan skew angle) to 36.1' + 35.25' (tan skew angle)
	S5__	—	—	2 Ea.	35.7' - 0.75'/(tan skew angle) to 2'-0" Min.
	S701	72	36'-2"	—	—
	S701 - S772	—	—	1 Ea.	36.1' + 0.25' (tan skew angle) to 36.1' + 35.75' (tan skew angle)

*Varies with skew angle

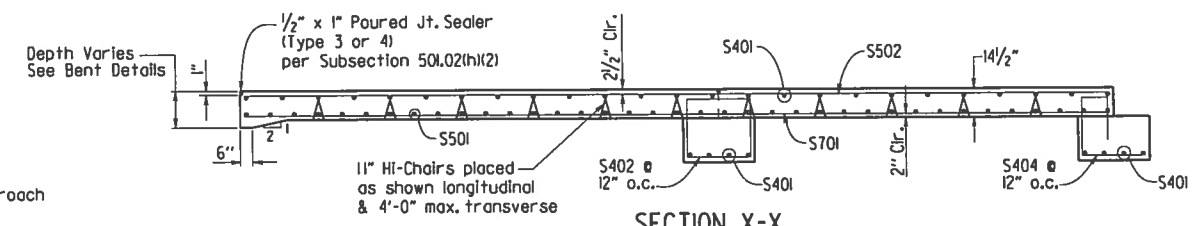

SECTION X-X

SQUARE APPROACH SLAB SHOWN

¼" = 1'-0"

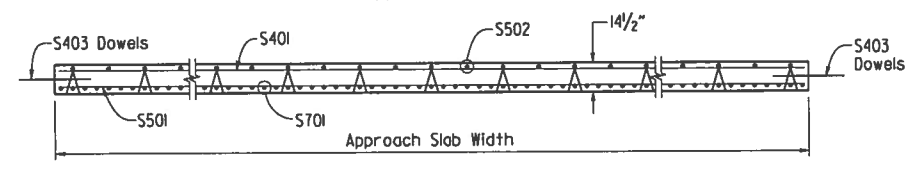

SECTION Y-Y

N.T.S.

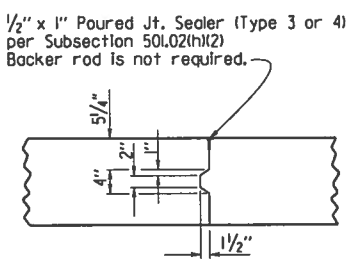

DETAILS OF LONGITUDINAL CONSTRUCTION JOINT

¾" = 1'-0"

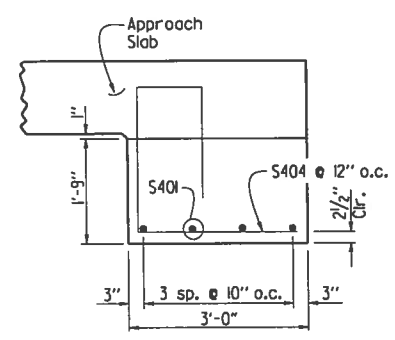

SECTION B-B

AT ASPHALT APPROACH PAVEMENT

N.T.S.

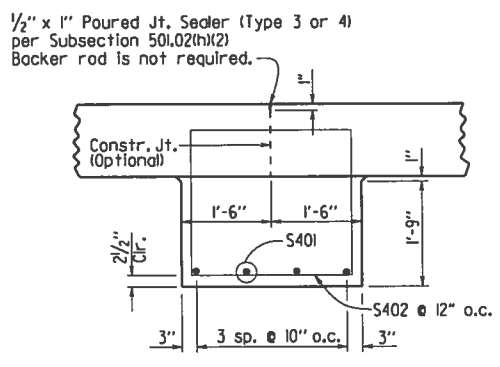

SECTION A-A

N.T.S.

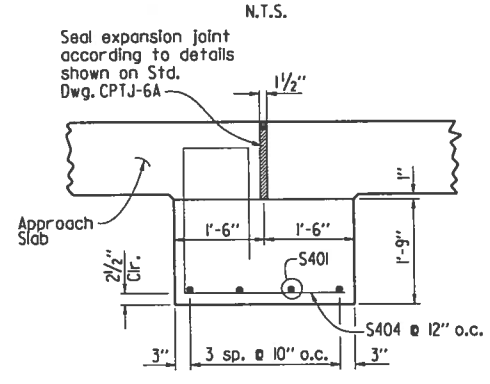

SECTION B-B

AT CONCRETE APPROACH PAVEMENT

N.T.S.

TABLE OF QUANTITIES FOR ONE SQUARE APPROACH SLAB

(FOR INFORMATION ONLY)

Slab Width	Reinforcing Steel (Lbs.)	Concrete (Cu. Yds.)
15'-0"	3765	30.75
24'-0"	5980	49.15
36'-0"	8925	73.75

GENERAL NOTES

This drawing shall be used for Approach Slabs in Seismic Performance Zones 2, 3 & 4 and for the maximum skew angles shown below:

15'-0" Slab Width: Maximum Skew Angle = 50°
24'-0" Slab Width: Maximum Skew Angle = 40°
36'-0" Slab Width: Maximum Skew Angle = 30°

All concrete shall be Class S (AE) with a minimum 28 day compressive strength f'c = 4,000 psi and shall be poured in the dry.

All reinforcing steel shall be Grade 60 (yield strength = 60,000 psi) conforming to AASHTO M 31 or M 322, Type A, with mill test reports.

Approach Slabs will be measured and paid for in accordance with Section 504.

STANDARD DETAILS FOR TYPE C2 APPROACH SLAB

ARKANSAS STATE HIGHWAY COMMISSION

LITTLE ROCK, ARK.

DRAWN BY:	A.M.S.	DATE:	2/27/2014	FILENAME:	b55040c2.dgn
CHECKED BY:	K.W.Y.	DATE:	2/27/2014	SCALE:	AS SHOWN
DESIGNED BY:	STD.	DATE:			

DRAWING NO. 55040C2