DATE REVISED	DATE FILMED	DATE REVISED	DATE FILMED	FED. ROAD DIST. NO.	STATE	FED. AID PROJ. NO.	SHEET NO.	TOTAL SHEETS
				6	ARK.			
				JOB NO.				
				1	TEMP. BRIDGE		55050	

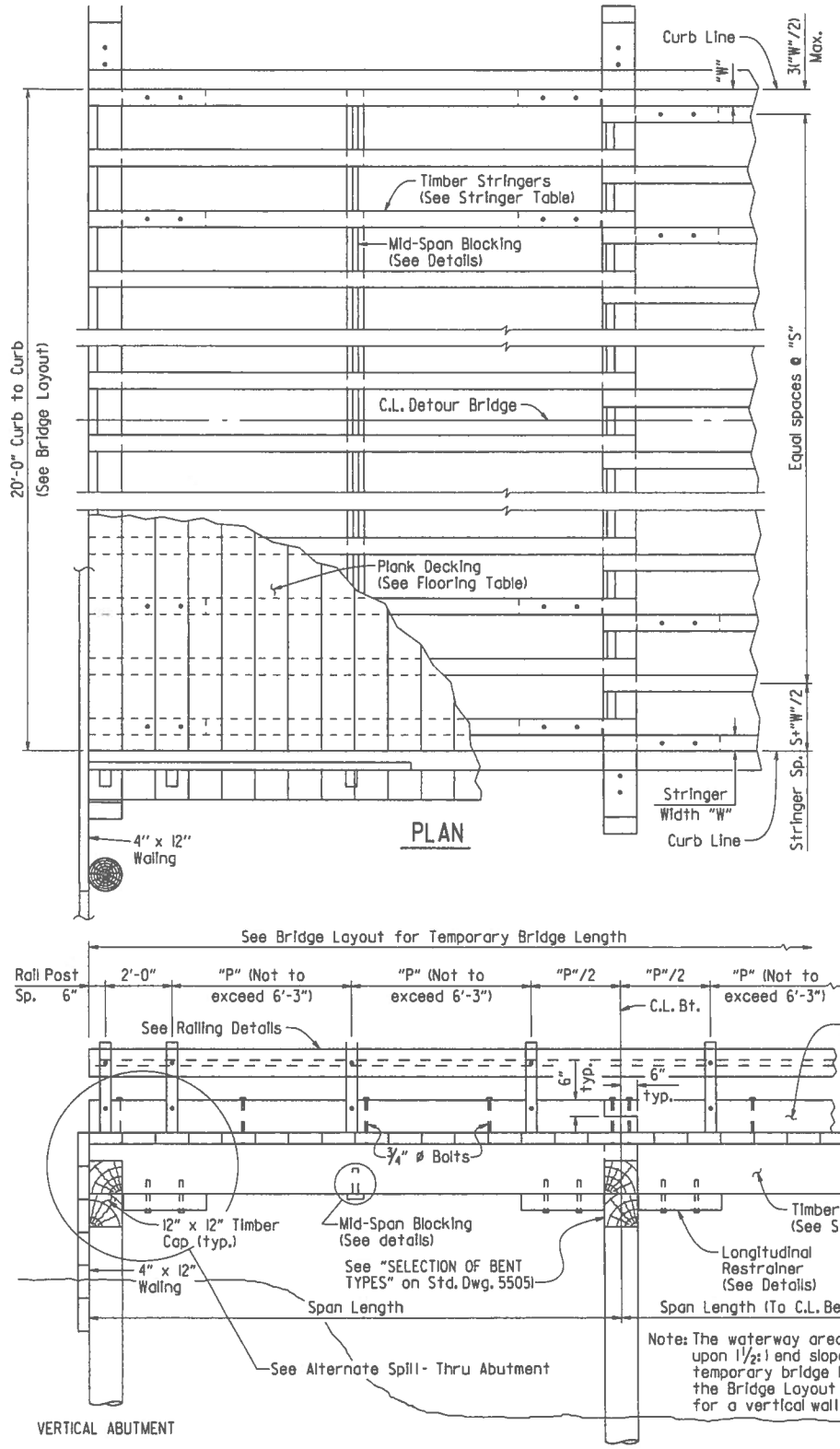

PLAN

Note: The waterway area opening is based upon 1 1/2:1 end slopes. However, the temporary bridge length shown on the Bridge Layout shall also be used for a vertical wall alternate.

LONGITUDINAL SECTION

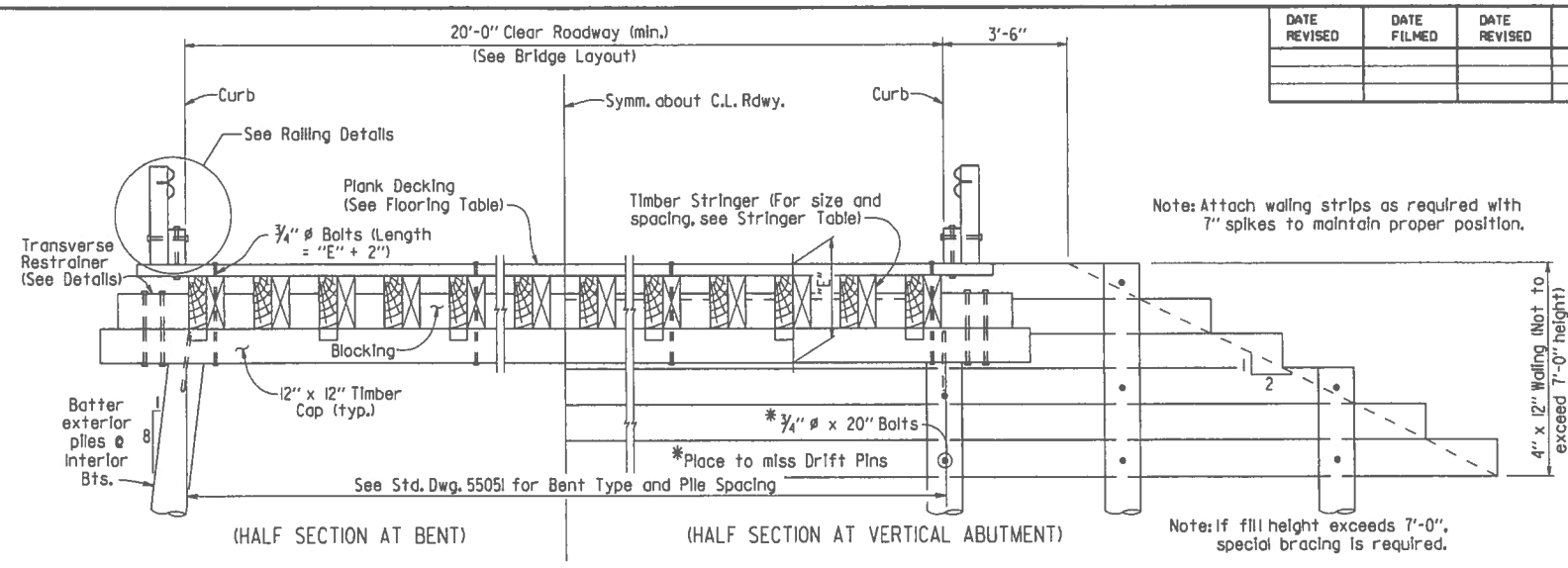

Note: Attach waling strips as required with 7" spikes to maintain proper position.

Note: If fill height exceeds 7'-0", special bracing is required.

TYPICAL ROADWAY SECTION

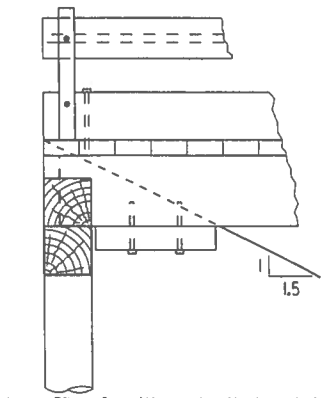

Note: Piles for Alternate Abutment to be driven after embankment is in place.

ALTERNATE SPILL-THRU ABUTMENT

Max. Stringer Spacing "S"	Plank Size (Nominal)
14.5"	3" X 6"
16.5"	3" X 8"
18.0"	3" X 10"
19.5"	3" X 12"
21.5"	4" X 8"
24.0"	4" X 10"
26.5"	4" X 12"

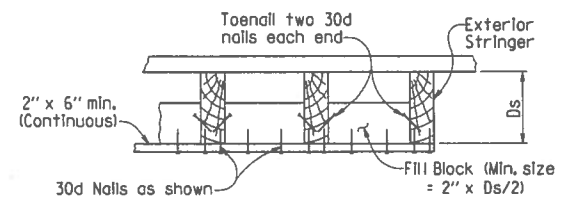

BLOCKING DETAILS AT MID-SPAN

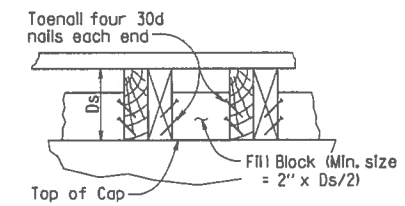

BLOCKING DETAIL AT BENTS

Note: Blocking details shown are for Bents. Details of blocking at Abutments are similar, except that depth of fill block shall be equal to Ds if Alternate Spill-Thru Abutment is used.

STRINGER SIZE (NOMINAL)	8.0	10.0	12.0	14.5	15.0	16.5	18.0	19.5	21.5	24.0	26.5
4" X 12"	16										
4" X 14"	21	17	15								
6" X 12"			16								
4" X 16"	26	22	19	16							
6" X 14"			21	18	17	16	15				
6" X 16"			26	23	22	20	19	18	16		
6" X 18"			31	28	27	25	23	22	20	18	16
6" X 24"								31	31	30	27

c. to c. Bearing (feet)

MAX. STRINGER SPACING (Inches)

STRINGER & FLOORING TABLES

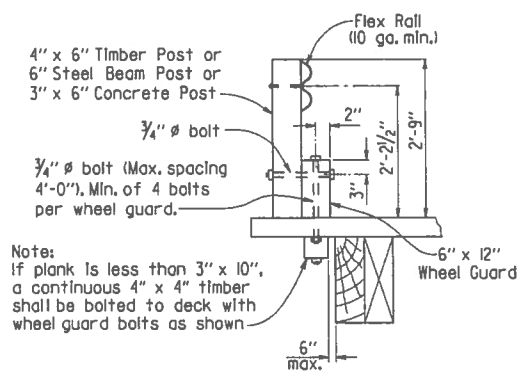

Note: If plank is less than 3" x 10", a continuous 4" x 4" timber shall be bolted to deck with wheel guard bolts as shown

RAILING DETAILS

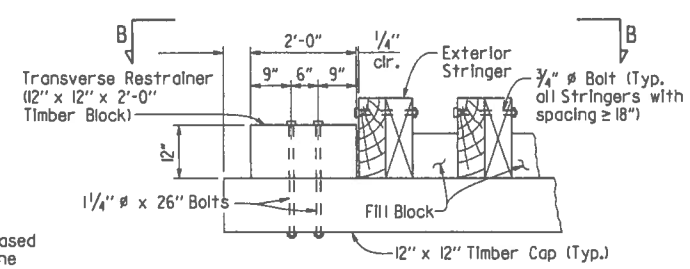

TRANSVERSE RESTRAINER DETAIL

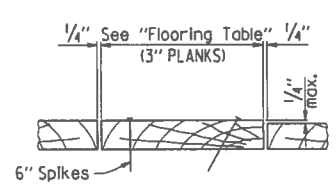

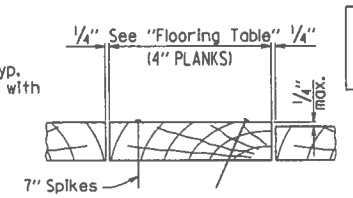

FLOOR NAILING DETAILS

Note: Planks used in plank floors shall be graded as to thickness and so laid that no two adjacent planks shall vary in thickness by more than 1/4".

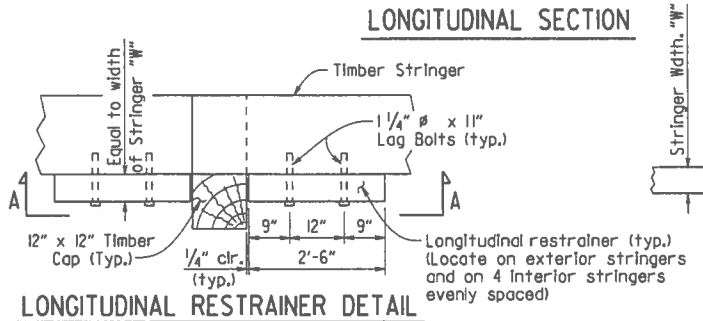

LONGITUDINAL RESTRAINER DETAIL

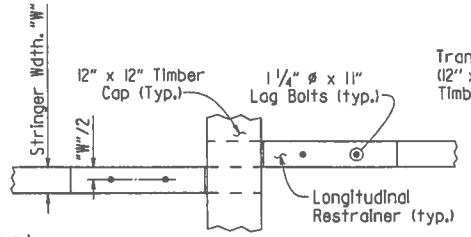

VIEW A-A

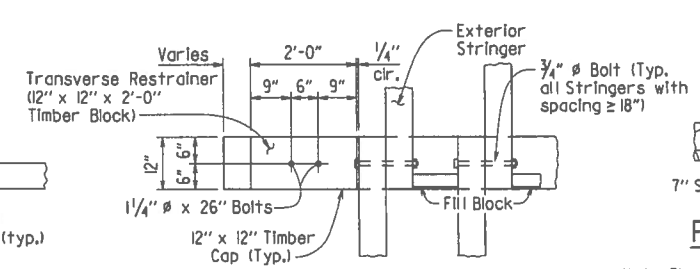

VIEW B-B

GENERAL NOTES

DESIGN SPECIFICATIONS: AASHTO Standard Specifications for Highway Bridges, 2002 Edition, with current Interim specifications.

CONSTRUCTION SPECIFICATIONS: Arkansas State Highway and Transportation Department Standard Specifications for Highway Construction, 2014 Edition, with applicable Special Provisions and Supplemental Specifications.

SEISMIC PERFORMANCE ZONE: I

DESIGN LIVE LOADS: H 15-44 (No Overload). Impact was not included in the design of superstructure for timber bridges.

DESIGN DEAD LOADS: 50 lbs. per cu. ft. for lumber
150 lbs. per cu. ft. for concrete

Allowable Stress Design is used for the standard timber bridges. The allowable unit stresses used assume normal duration of loading for stress grades of sawn lumber and are as follows: fb= 1200 psi
fv= 85 psi

Concrete shall be Class S with a minimum 28 day compressive strength f'c= 3500 psi unless otherwise noted.

All reinforcing steel shall be Grade 60 (yield strength = 60,000 psi) conforming to AASHTO M31 or M322, Type A, with mill test reports.

Structural Steel shall be AASHTO M 270, Grade 36 unless otherwise noted.

Timber piling shall comply with Section 818 of the Standard Specifications and shall be driven to a minimum bearing capacity of 20 tons per pile. Steel piling shall be HP12X53 and shall be driven to a minimum bearing capacity of 44 tons per pile.

Malleable or cast iron washers to be used under all bolt heads and nuts bearing on timber. Standard washers shall be provided under all bolt heads and nuts in connection with concrete.

Bolts shall conform to the requirements of ASTM A 307. ASTM A 307 Threaded Rods may be used in lieu of bolts. Minimum dimensions are shown for bolts, dowels, and drift pins.

Bent caps to be handled from points approximately 5' from the ends.

Timber material, regardless of species, must be of equal or better strength than no. 2 southern pine or douglas fir, graded by the standard grading rules. All timber widths and thicknesses are shown as nominal.

For additional notes concerning "Bridge End Protection System", see Std. Dwg. 55054.

Unless otherwise noted, the Temporary Bridge Structure shall comply with and be paid for in accordance with Section 603.

This document was originally issued and sealed by Carl J. Fuselier, PE No. 7510, on April 17, 2014. This copy is not a signed and sealed document.

STATE OF ARKANSAS
REGISTERED PROFESSIONAL ENGINEER
No. 7510
CARL J. FUSELIER

BRIDGE ENGINEER

SHEET 1 OF 2

STANDARD DETAILS FOR TEMPORARY BRIDGE STRUCTURE TIMBER SPANS 20' ROADWAY WIDTH

ROUTE SEC.

ARKANSAS STATE HIGHWAY COMMISSION

LITTLE ROCK, ARK.

DRAWN BY: JYP	DATE: 4-17-14	FILENAME: b55050.dgn			
CHECKED BY: AMS	DATE: 4-17-14	SCALE: No Scale			
DESIGNED BY: STD.	DATE: —				

DRAWING NO. 55050