DATE REVISED	DATE FILMED	DATE REVISED	DATE FILMED	FED. ROAD DIST. NO.	STATE	FED. AID PROJ. NO.	SHEET NO.	TOTAL SHEETS
				6	ARK.			
				JOB NO.				
				1		TEMP. BRIDGE	55051	

"S1" + "S2"	No. of Piles	Pile Spacing "A"	Overhang "B"
0 to 31'	4	3 @ 6'-0"	3'-6"
31' to 40'	5	4 @ 5'-0"	2'-6"
40' to 52'	6	5 @ 4'-0"	2'-6"
52' to 63'	7	6 @ 3'-7"	1'-9"

"S" = Span Length

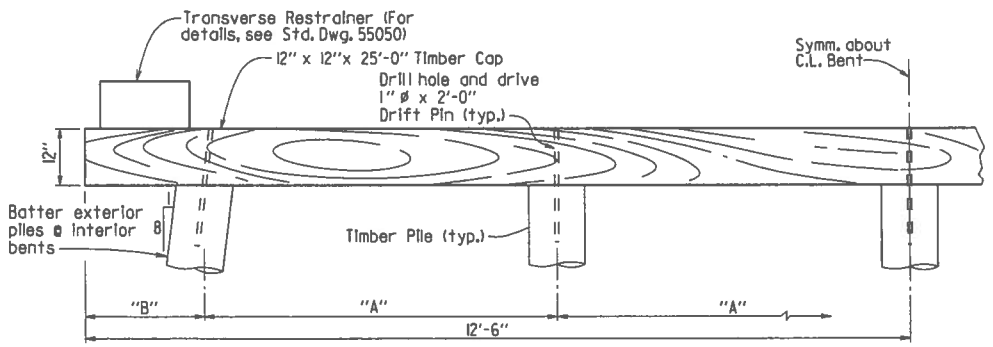

ELEVATION

TIMBER CAP & PILES

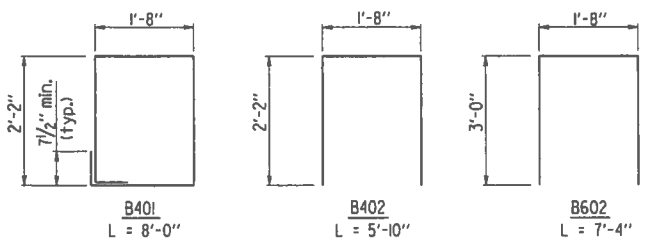

BENDING DIAGRAMS FOR POURED CAP

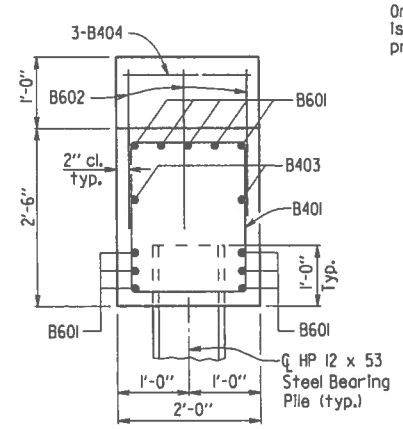

VIEW B-B

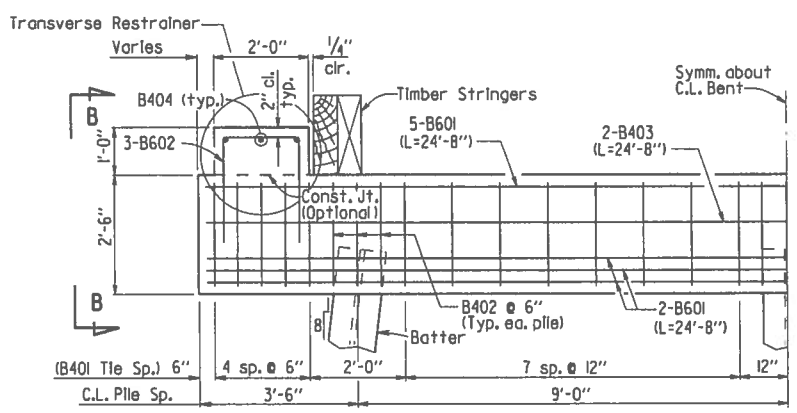

ELEVATION

CAST IN PLACE CAP & HP 12 X 53 PILES

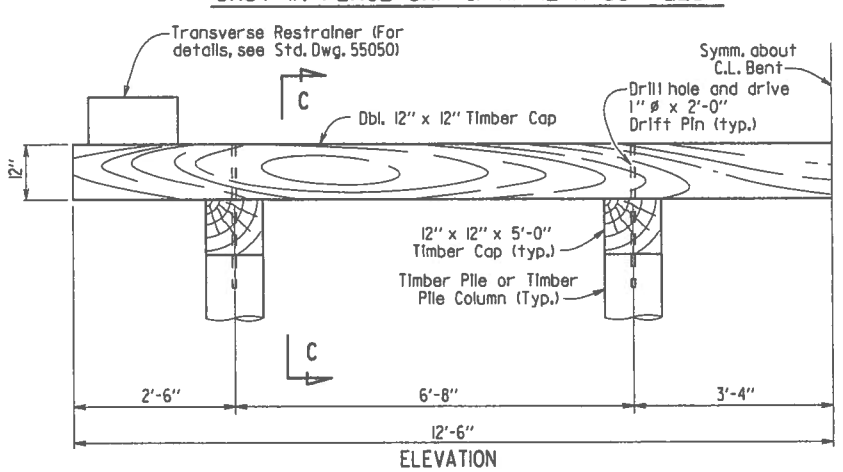

ELEVATION

TOWER BENT - TIMBER CAP & PILES

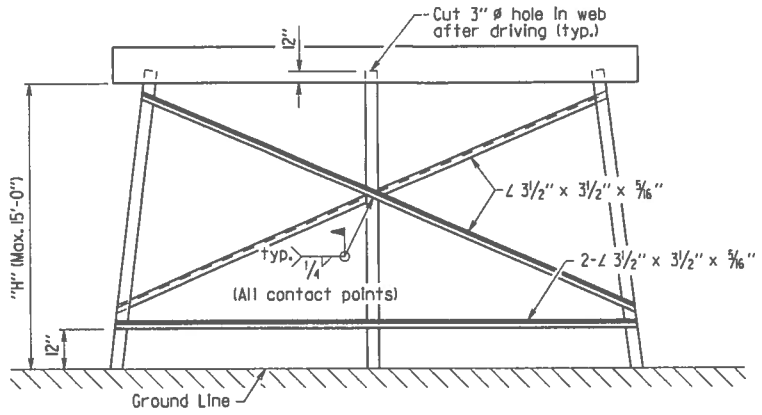

Note:
All bracing shall be cut and welded in the field. Each brace shall be furnished in one piece. Payment for any bracing required shall be considered incidental to item 603 "Temporary Bridge Structure".

Omit bottom bracing when "H" is less than 10'. Omit all bracing when "H" is less than 5'. When "H" exceeds 15', additional X-bracing is required to provide a maximum unbraced pile length of 14'.

DETAILS OF BRACING FOR STEEL PILES

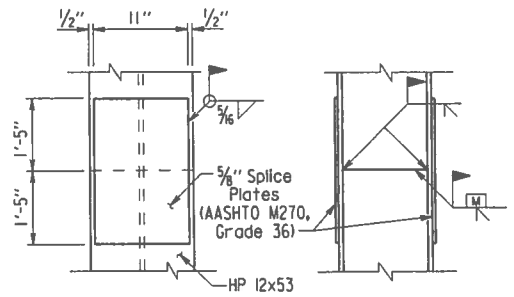

Note:
The Contractor may for his own convenience and at his own expense provide as many as three splices per pile for steel bearing piling. Minimum spacing between splices shall be 5 ft. A proprietary steel pile splicer sufficient to develop the full strength of the section may be substituted for the details shown. Pile splicers shall be installed in accordance with manufacturer's recommendations.

PILE SPLICE DETAIL

SELECTION OF BENT TYPES

These temporary bridge drawings provide the following bent types:
- Driven timber piles with timber cap.
- Driven steel HP 12x53 piles with cast in place concrete cap.
- Tower bent with driven timber piles and timber cap.
- Mud sill with timber pile columns and timber cap
- Tower bent with mud sill and timber pile columns and timber cap.

Guidelines to be used in determining the appropriate bent type are:

1) Driven piles may be used at intermediate bents if a pile penetration of at least 15' below the ground line can be obtained. At end bents, a pile penetration of at least 5' below the bottom of cap is required. Pile penetration measurements at end bents can include embankment, but fill material may not be placed around intermediate bent piles in order to meet the 15' requirement.

2) If driven timber piles are used at intermediate bents and the distance from the bottom of cap to ground line exceeds 15' at any intermediate bent, tower bents must be used at the minimum rate of one tower bent for every 160' of total bridge length. Tower bent(s), when required, shall be placed at the bent location(s) having the greatest distance from bottom of cap to ground line.

3) If piles cannot be practically driven at a bent, mud sills shall be used. All soft and yielding material shall be removed from the bearing area before placing the sill concrete.

4) Timber piles shall be used as columns in mud sills. The column spacing shall be the same as that used for driven timber pile bents for the appropriate span lengths involved.

5) If a mud sill is to be used and the distance from the bottom of cap to ground line is more than 10', a tower bent with mud sill must be used at that location.

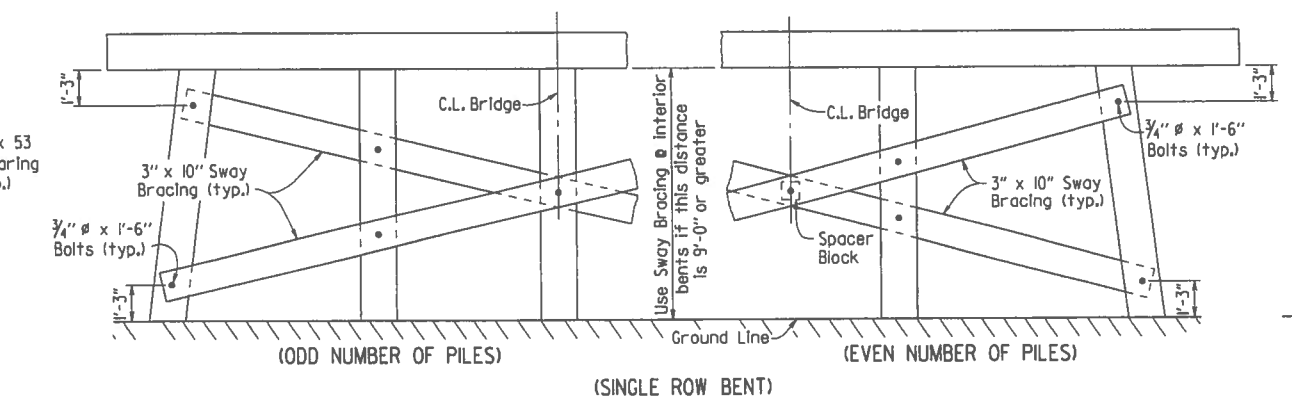

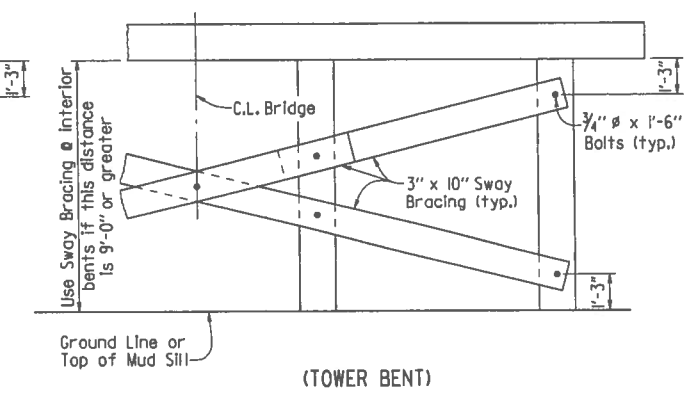

DETAILS OF SWAY BRACING FOR TIMBER PILES

Note: Sway Bracing, if required, shall be used on both lines of piles for Tower Bents.

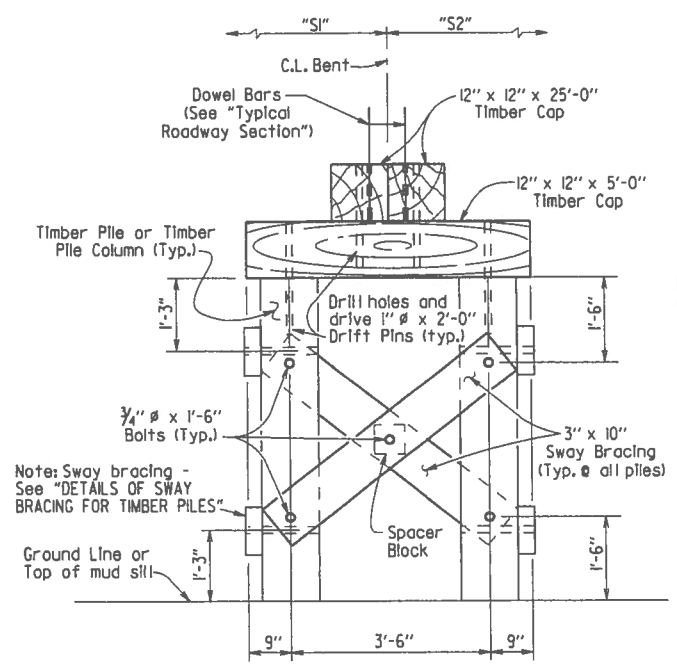

SECTION C-C

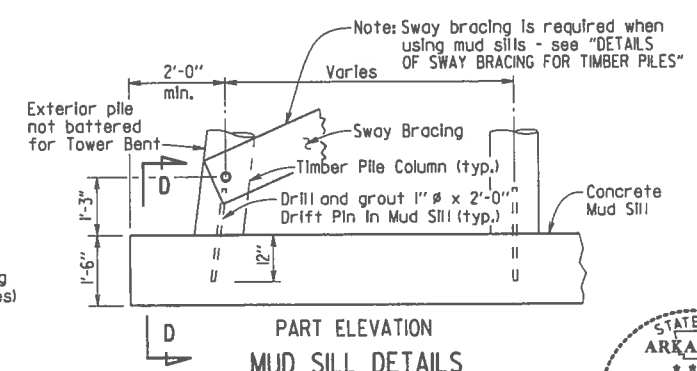

PART ELEVATION

MUD SILL DETAILS

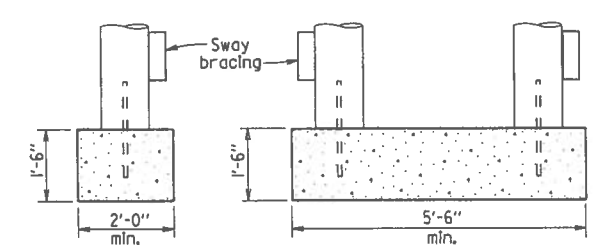

SECTION D-D

(When bottom of cap to top of mud sill is 10'-0" or less)

SECTION D-D

(When bottom of cap to top of mud sill is greater than 10'-0")

This document was originally issued and sealed by Carl J. Fuselier, PE No. 7510, on April 17, 2014. This copy is not a signed and sealed document.

STATE OF ARKANSAS
REGISTERED PROFESSIONAL ENGINEER
No. 7510
CARL J. FUSELIER

BRIDGE ENGINEER

SHEET 2 OF 2

STANDARD DETAILS FOR TEMPORARY BRIDGE STRUCTURE TIMBER SPANS 20' ROADWAY WIDTH

ROUTE SEC.

ARKANSAS STATE HIGHWAY COMMISSION

LITTLE ROCK, ARK.

DRAWN BY:	JYP	DATE:	4-17-14	FILENAME:	b55050.dgn
CHECKED BY:	AMS	DATE:	4-17-14	SCALE:	No Scale
DESIGNED BY:	STD.	DATE:	—		

DRAWING NO. 55051