DATE REVISED	DATE FILMED	DATE REVISED	DATE FILMED	FED. ROAD DIST. NO.	STATE	FED. AID PROJ. NO.	SHEET NO.	TOTAL SHEETS
				6	ARK.			
				JOB NO.				
				1		TEMP. BRIDGE	55053	

Note: Reinforcing steel in cap shall be placed to not interfere with dowel bars.

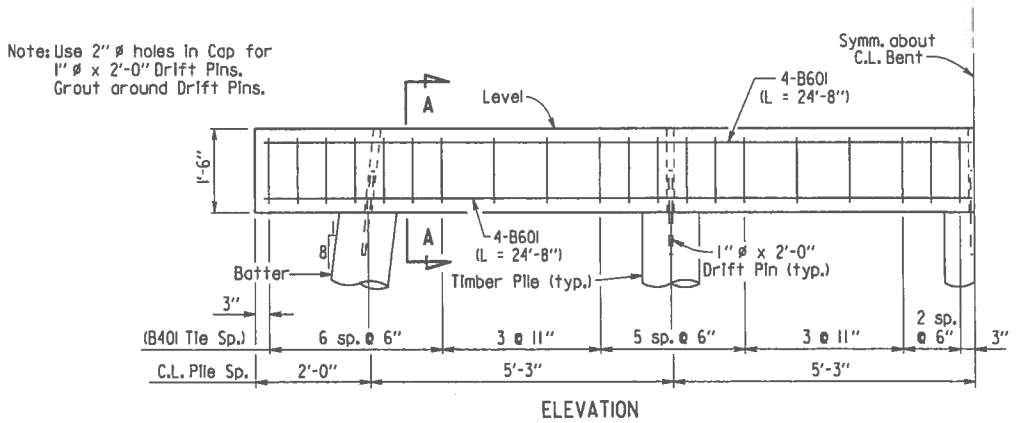

ELEVATION

PRECAST CAP & TIMBER PILES

("S1" + "S2" ≤ 44')

"S" = Span Length

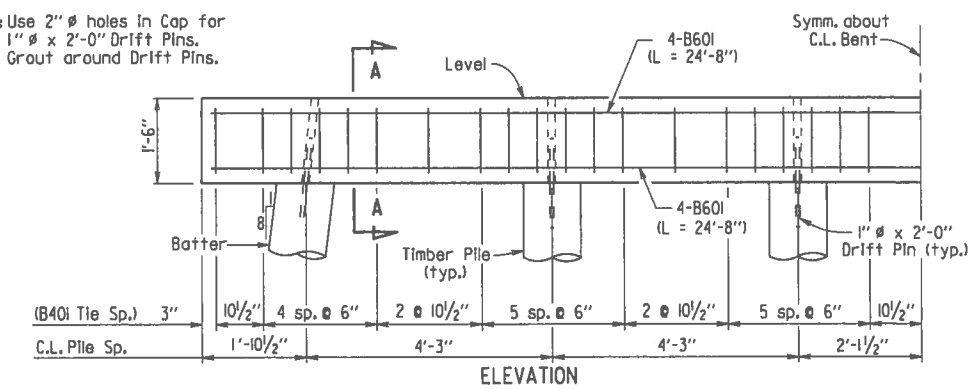

ELEVATION

PRECAST CAP & TIMBER PILES

(44' < "S1" + "S2" ≤ 62')

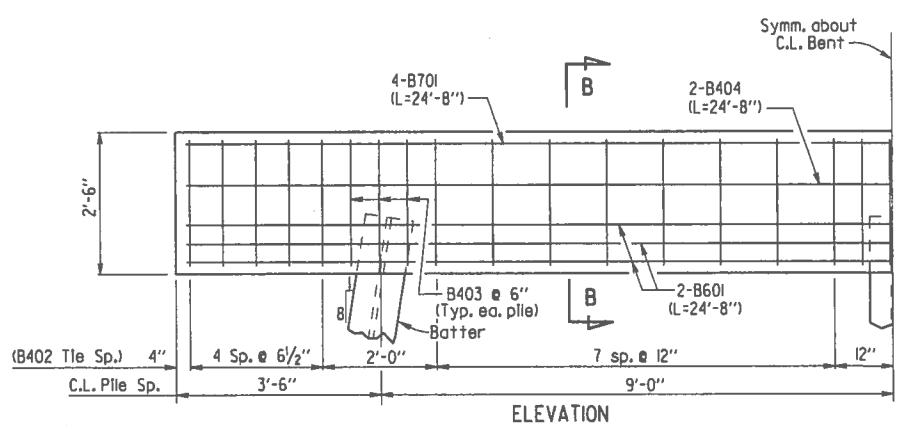

ELEVATION

CAST IN PLACE CAP & HP 12X53 PILES

NOTE: THE ENDS OF ALL PRECAST SPANS SHALL BE FIXED TO THE CAP USING 1 DOWEL BAR IN EACH OF THE CURB UNITS.

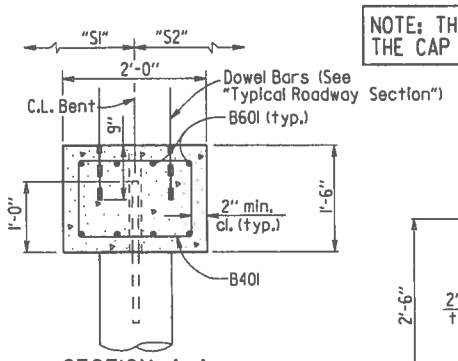

SECTION A-A

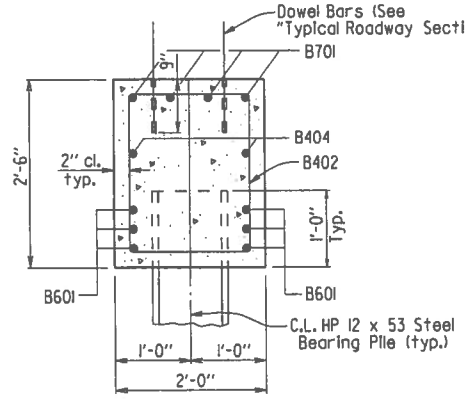

SECTION B-B

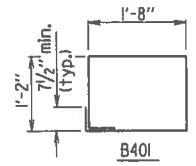

B401
L = 6'-6"

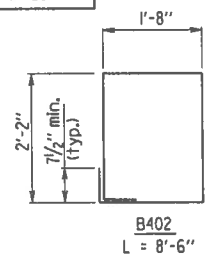

B402
L = 8'-6"

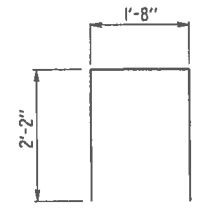

B403
L = 5'-10"

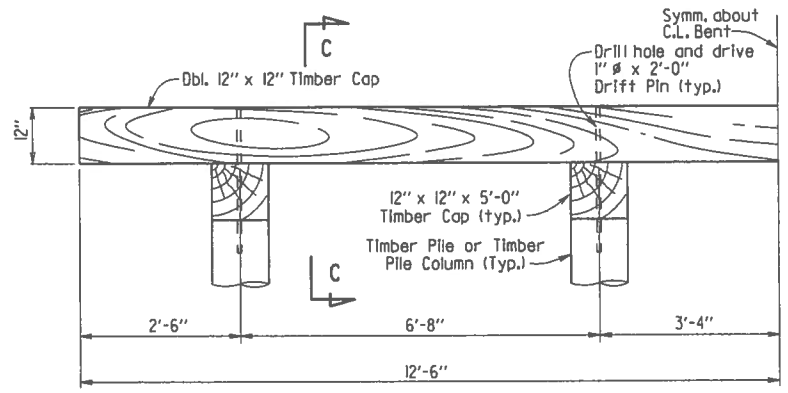

ELEVATION

TOWER BENT - TIMBER CAP & PILES

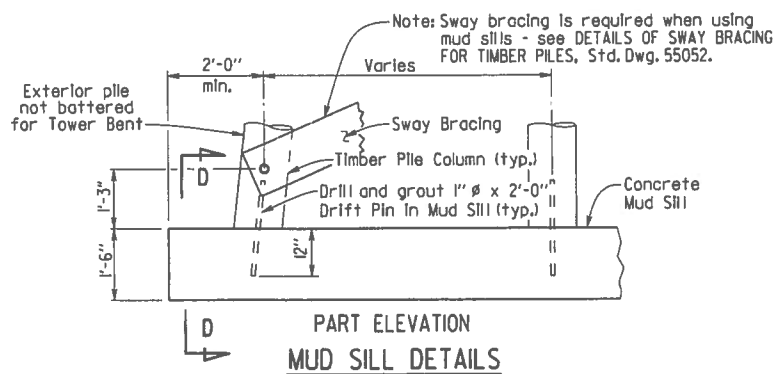

PART ELEVATION

MUD SILL DETAILS

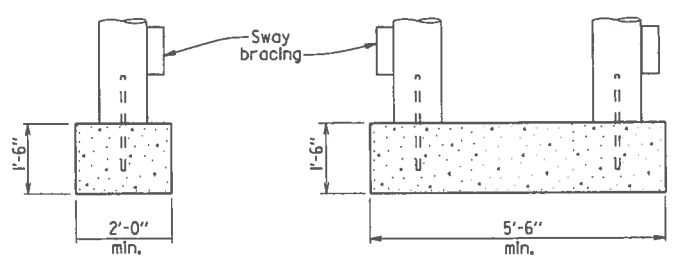

SECTION D-D
(When bottom of cap to top of mud sill is 10' or less)

SECTION D-D
(When bottom of cap to top of mud sill is greater than 10')

SELECTION OF BENT TYPES

These temporary bridge drawings provide the following bent types:
- Driven timber piles with precast concrete cap.
- Driven steel HP 12x53 piles with cast in place concrete cap.
- Tower bent with driven timber piles and timber cap.
- Mud sill with timber pile columns and precast concrete cap.
- Tower bent with mud sill and timber pile columns and timber cap.

Guidelines to be used in determining the appropriate bent type are:

1) Driven piles may be used at intermediate bents if a pile penetration of at least 15' below the ground line can be obtained. At end bents, a pile penetration of at least 5' below the bottom of cap is required. Pile penetration measurements at end bents can include embankment, but fill material may not be placed around intermediate bent piles in order to meet the 15' requirement.

2) If driven timber piles are used at intermediate bents and the distance from the bottom of cap to ground line exceeds 15' at any intermediate bent, tower bents must be used at the minimum rate of one tower bent for every 160' of total bridge length. Tower bent(s), when required, shall be placed at the bent location(s) having the greatest distance from bottom of cap to ground line.

3) If piles cannot be practically driven at a bent, mud sills shall be used. All soft and yielding material shall be removed from the bearing area before placing the sill concrete.

4) Timber piles shall be used as columns in mud sills. The column spacing shall be the same as that used for driven timber pile bents for the appropriate span lengths involved.

5) If a mud sill is to be used and the distance from the bottom of cap to ground line is more than 10', a tower bent with mud sill must be used at that location.

6) A timber cap may be used only if tower bents are used.

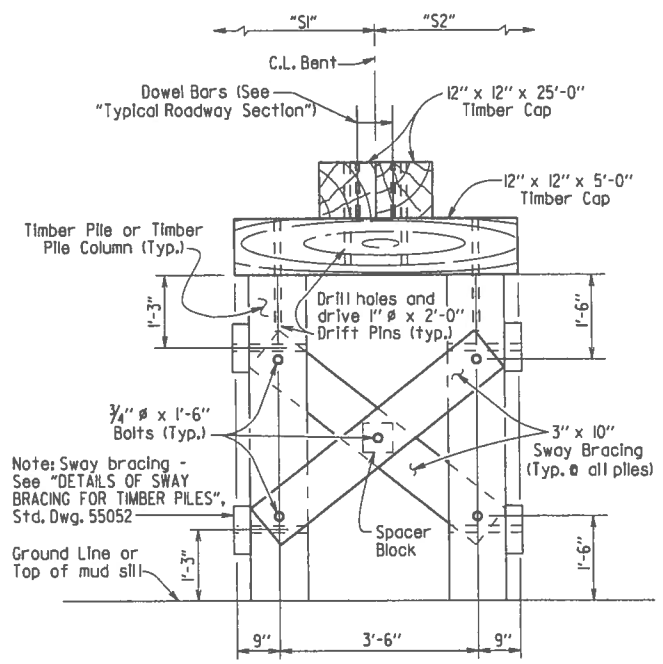

SECTION C-C

This document was originally issued and sealed by Carl J. Fuselier, PE No. 7510, on April 17, 2014. This copy is not a signed and sealed document.

STATE OF ARKANSAS
REGISTERED PROFESSIONAL ENGINEER
No. 7510
CARL J. FUSELIER

BRIDGE ENGINEER

SHEET 2 OF 2

STANDARD DETAILS FOR TEMPORARY BRIDGE STRUCTURE PRECAST CONCRETE SPANS 20' ROADWAY WIDTH

ROUTE SEC.

ARKANSAS STATE HIGHWAY COMMISSION

LITTLE ROCK, ARK.

DRAWN BY:	JYP	DATE:	4-17-14	FILENAME:	b55052.dgn
CHECKED BY:	AMS	DATE:	4-17-14	SCALE:	No Scale
DESIGNED BY:	STD.	DATE:	—		

DRAWING NO. 55053