DATE REVISED	DATE FILMED	DATE REVISED	DATE FILMED	FED. ROAD DIST. NO.	STATE	FED. AID PROJ. NO.	SHEET NO.	TOTAL SHEETS
				6	ARK.			
				JOB NO.				
						TEMP. BRIDGE	55054	

1

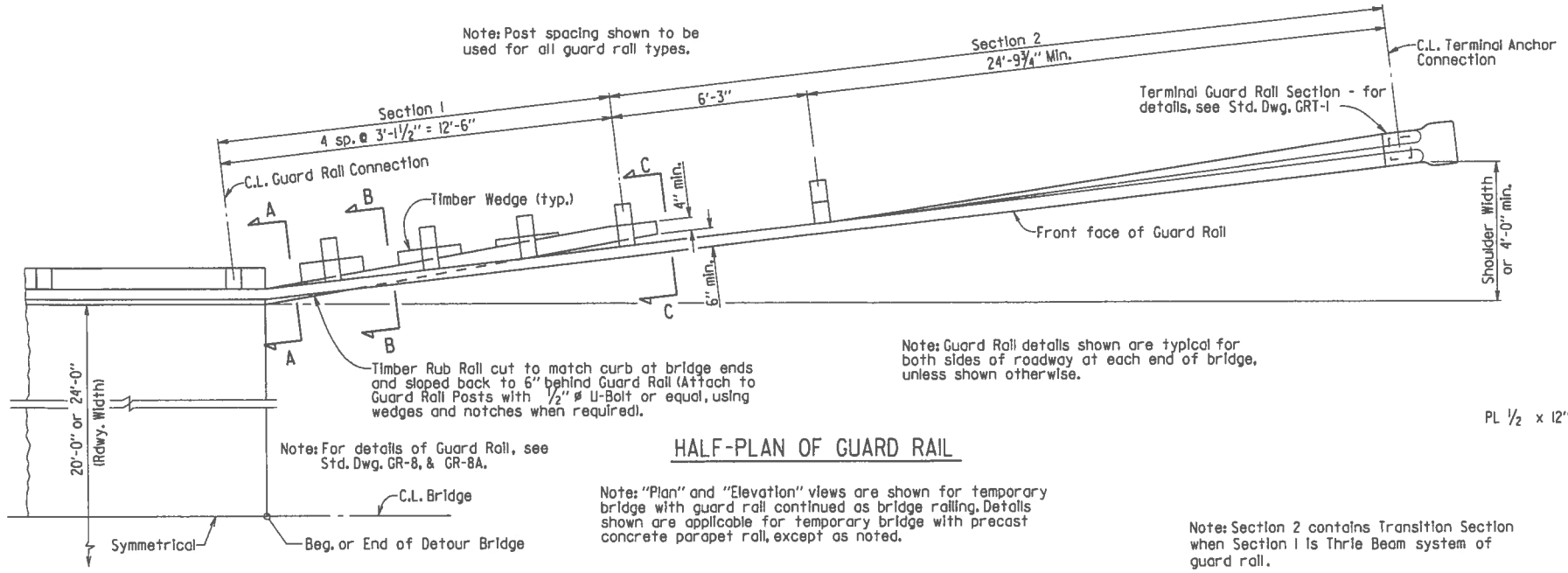

Note: Guard Rail details shown are typical for both sides of roadway at each end of bridge, unless shown otherwise.

HALF-PLAN OF GUARD RAIL

Note: "Plan" and "Elevation" views are shown for temporary bridge with guard rail continued as bridge railing. Details shown are applicable for temporary bridge with precast concrete parapet rail, except as noted.

Note: Section 2 contains Transition Section when Section 1 is Thrie Beam system of guard rail.

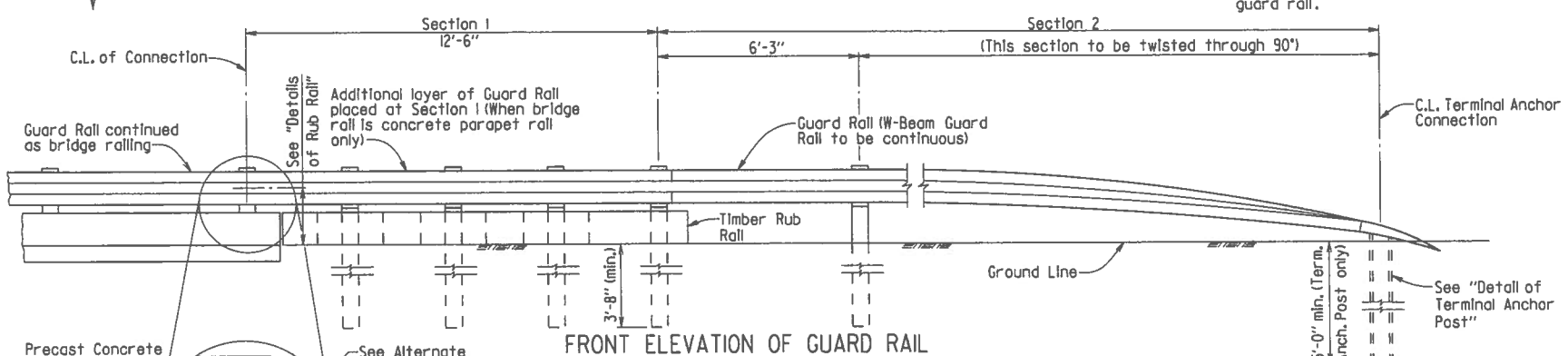

FRONT ELEVATION OF GUARD RAIL

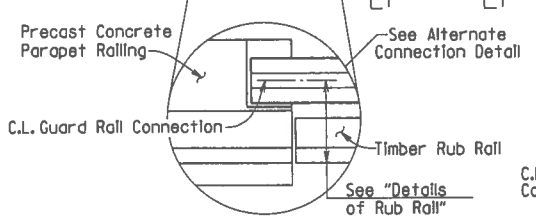

Note: For details of Thrie Beam system of guard rail, see Std. Dwg. GR-10 & GR-10A. Thrie Beam rail and five bolt connection as shown on GR-10 are required when precast rail has five cast holes for guard rail connection.

** Two ¾" ø H.S. Bolts are required. Use 7" x 2½" x 3/16" washer with two 7/8" ø holes against back of parapet and on roadway face of guard rail (Bend to fit guard rail) with 1½" o.d. steel washer under heads and nuts (Clipped to 1 5/16" x 1½" at nuts).

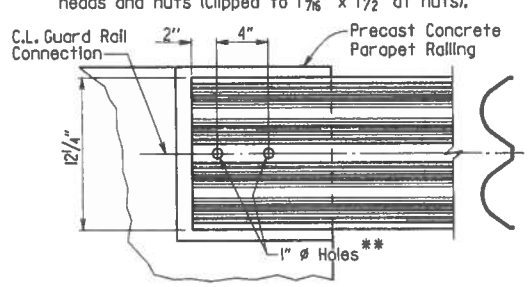

W-BEAM GUARD RAIL CONNECTION AT CONCRETE PARAPET RAIL

Note: This guard rail connection will only be allowed on precast concrete parapet rail units with a 12½" x 14" x 3⅜" notch at the end of the unit for connection of guard rails.

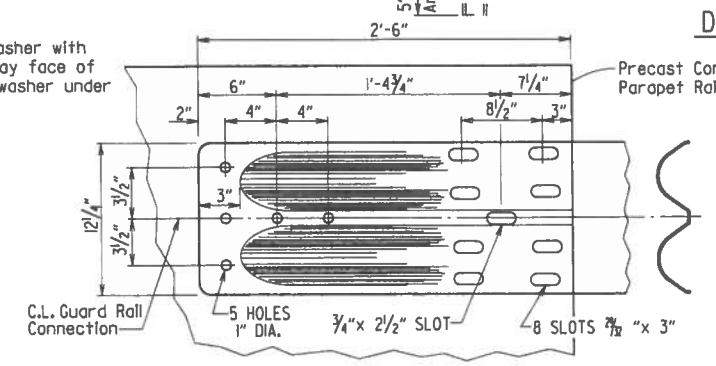

ALTERNATE CONNECTION DETAIL WITH SPECIAL END SHOE FOR W-BEAM GUARD RAIL CONNECTION AT CONCRETE PARAPET RAIL

Note: Special End Shoe and four ⅞" ø x 2½" H.S. Bolts are required when concrete insert anchor assembly is present in precast rail unit.

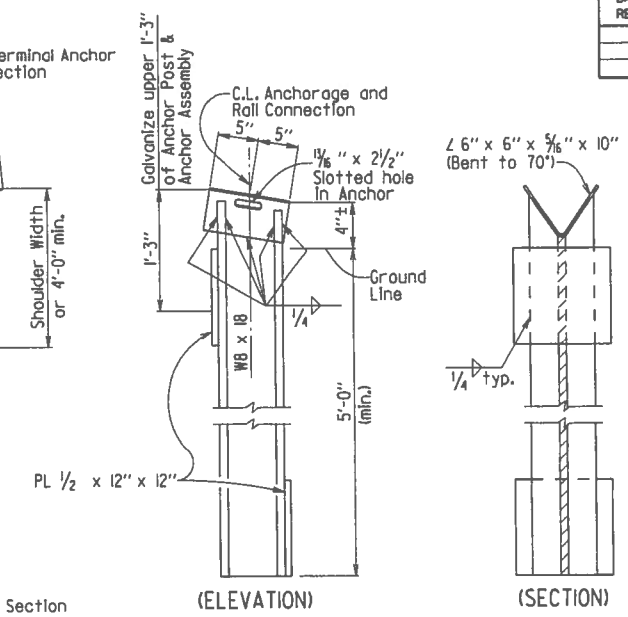

Note: Post shall be driven or set in dug hole and compacted.

DETAILS OF TERMINAL ANCHOR POST

4- ¾" ø x 2" A325 High Strength Bolts and Nuts with two cut hardened steel Washers for each bolt, installed in accordance with Subsection 807.7(d) of the Standard Specifications

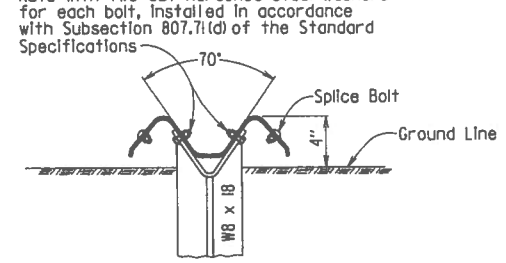

DETAILS OF TERMINAL ANCHOR CONNECTION

GENERAL NOTES

Bridge End Protection is required on both sides of roadway at both ends of temporary bridge. The end protection system shall consist of a minimum of two end sections (Section 1 and Section 2). If additional guard rail is used, it shall be placed in Section 2 and shall have a maximum post spacing of 6'-3".

If W-Beam Guard Rail is also used as Bridge Rail, it shall be continuous from terminal anchor post to terminal anchor post with splices as shown on Std. Drwg. GR-8.

A doubled guard rail beam section (One W-Beam Rail section or one Thrie Beam Rail section nested inside the other) shall be required for Section 1 if the guard rail is not continued as bridge rail, but connects directly to a precast concrete parapet bridge rail end.

Rub rails shown in Section 1 are representative of members required to transition the curb or wheel guard section to a minimum distance behind the face of guard rail.

Timber rub rail, regardless of species, must be of equal or better strength than no. 2 southern pine or douglas fir, graded by the standard grading rules. All timber widths and thicknesses are shown as nominal.

Except as noted, bolts shall conform to the requirements of ASTM A 307 and minimum dimensions as shown. Malleable or cast iron washers to be used under all bolt heads and nuts bearing on timber. High strength bolts shall conform to Section 807.

Guard rail as described in Subsection 617.01 of the Standard Specifications and these plans shall be constructed in accordance with Subsection 617.03. Subsection 617.02 is modified to allow the use of materials consistent with the requirements of Section 603.

Payment: The bridge end protection system completed and accepted will not be paid for directly, but shall be included in the contract unit price bid per linear foot for temporary bridge structure, which price shall be full compensation for furnishing materials and erecting guard rail, line posts, blockouts, rub rails, terminal anchor posts, etc.; and for all labor, tools, equipment and incidentals necessary to complete the work.

GUARD RAIL CONNECTION COMBINATIONS

BRIDGE RAIL TYPE	GUARD RAIL AND CONNECTION TYPE
Guard Rail continued as bridge railing	W-Beam Guard Rail. See Std. Drwg. GR-8 for splice details.
Concrete Parapet with 12½" x 14" x 3⅜" notch and two cast in holes	W-Beam Guard Rail fastened with two high-strength bolts as shown; blunt end on guard rail. Guard Rail doubled at Section 1.
Concrete Parapet with Concrete Insert Anchor assembly (4-Bolt embedded Anchor) flush with rail face	W-Beam Guard Rail fastened with four high-strength bolts; Special End Shoe. Guard Rail doubled at Section 1.
Concrete Parapet with 5 cast in holes	Thrie Beam Guard Rail; five high-strength through bolts with back-up plate; special end shoe as shown on Std. Dwg. GR-10. Guard Rail doubled at Section 1. Section 2 contains transitional rail and W-Beam Guard Rail.

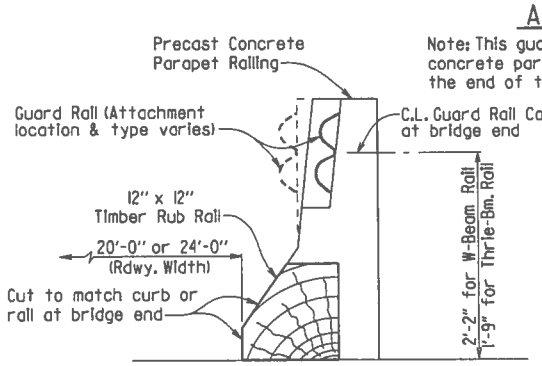

(SECTION A-A)

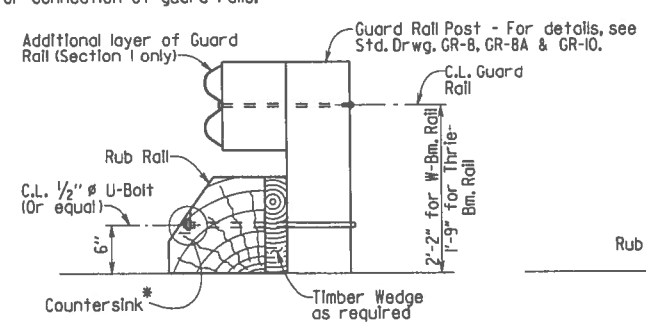

(SECTION B-B)

DETAILS OF RUB RAIL

(CONC. PARAPET BRIDGE RAIL)

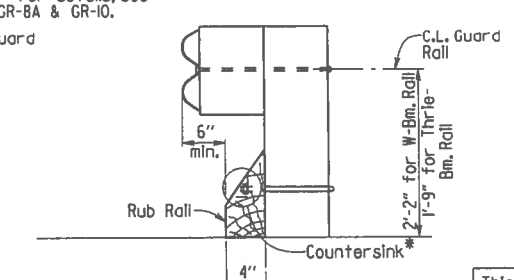

(SECTION C-C)

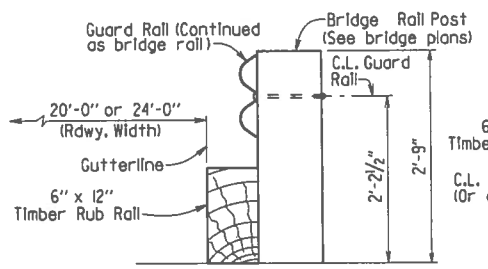

(SECTION A-A)

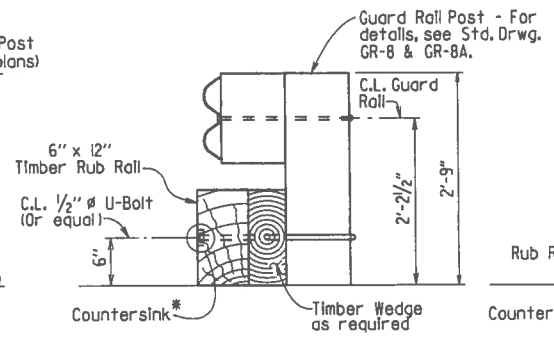

(SECTION B-B)

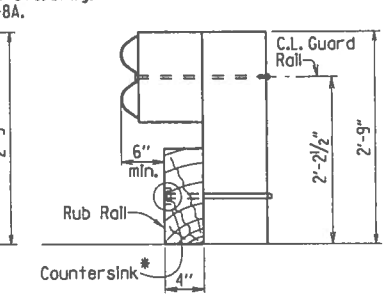

(SECTION C-C)

DETAILS OF RUB RAIL

(CONTINUOUS W-BEAM RAIL)

* U-Bolt Assembly, or equal, shall not project beyond rdwy. face of Rub Rail at any location.

This document was originally issued and sealed by Carl J. Fuselier, PE No. 7510, on April 17, 2014. This copy is not a signed and sealed document.

STATE OF ARKANSAS
REGISTERED PROFESSIONAL ENGINEER
No. 7510
CARL J. FUSELIER

BRIDGE ENGINEER

STANDARD DETAILS FOR TEMPORARY BRIDGE STRUCTURE BRIDGE END PROTECTION SYSTEM

ROUTE SEC.

ARKANSAS STATE HIGHWAY COMMISSION

LITTLE ROCK, ARK.

DRAWN BY:	JYP	DATE:	4-17-14	FILENAME:	b55054.dgn
CHECKED BY:	AMS	DATE:	4-17-14	SCALE:	No Scale
DESIGNED BY:	STD.	DATE:	—		

DRAWING NO. 55054